Edition: August 2000
Revision: November 2001
Publication No. SM1E-1D22U2

NISSAN FRONTIER

MODEL D22 SERIES

© 2001 NISSAN NORTH AMERICA, INC.
All rights reserved. No part of this Service Manual may be reproduced or stored in a retrieval system, or transmitted in any form, or by any means, electronic, mechanical, photo-copying, recording or otherwise, without the prior written permission of Nissan North America, Inc., Gardena, California.

QUICK REFERENCE INDEX

GENERAL INFORMATION	GI
MAINTENANCE	MA
ENGINE MECHANICAL	EM
ENGINE LUBRICATION & COOLING SYSTEMS	LC
ENGINE CONTROL SYSTEM	EC
ACCELERATOR CONTROL, FUEL & EXHAUST SYSTEMS	FE
CLUTCH	CL
MANUAL TRANSMISSION	MT
AUTOMATIC TRANSMISSION	AT
TRANSFER	TF
PROPELLER SHAFT & DIFFERENTIAL CARRIER	PD
FRONT & REAR AXLE	AX
FRONT & REAR SUSPENSION	SU
BRAKE SYSTEM	BR
STEERING SYSTEM	ST
RESTRAINT SYSTEM	RS
BODY & TRIM	BT
HEATER & AIR CONDITIONER	HA
STARTING & CHARGING SYSTEM	SC
ELECTRICAL SYSTEM	EL
ALPHABETICAL INDEX	IDX

FOREWORD

This manual contains maintenance and repair procedures for the 2001 NISSAN FRONTIER.

In order to assure your safety and the efficient functioning of the vehicle, this manual should be read thoroughly. It is especially important that the PRECAUTIONS in the GI section be completely understood before starting any repair task.

All information in this manual is based on the latest product information at the time of publication. The right is reserved to make changes in specifications and methods at any time without notice.

IMPORTANT SAFETY NOTICE

The proper performance of service is essential for both the safety of the technician and the efficient functioning of the vehicle.
The service methods in this Service Manual are described in such a manner that the service may be performed safely and accurately.
Service varies with the procedures used, the skills of the technician and the tools and parts available. Accordingly, anyone using service procedures, tools or parts which are not specifically recommended by NISSAN must first be completely satisfied that neither personal safety nor the vehicle's safety will be jeopardized by the service method selected.

NISSAN NORTH AMERICA, INC.
Technical Service Information Department
Gardena, California

PLEASE HELP MAKE THIS SERVICE MANUAL BETTER!

Your comments are important to NISSAN and will help us to improve our Service Manuals.
Use this form to report any issues or comments you may have regarding our Service Manuals.
Please print this form and type or write your comments below. Mail or fax to:

Nissan North America, Inc.
Technical Service Information
39001 Sunrise Drive, P.O. Box 9200
Farmington Hills, MI USA 48331
FAX: (248) 488-3910

SERVICE MANUAL: Model: _____ **Year:** _____

PUBLICATION NO. (Please photocopy back cover): _____

VEHICLE INFORMATION VIN: _____ **Production Date:** _____

Please describe any issues or problems in detail:

Page number(s) _____ *Note: Please include a copy of each page, marked with your comments.*

_____

_____

_____

_____

_____

_____

Are the trouble diagnosis procedures logical and easy to use? (circle your answer) YES NO

If no, what page number(s)?_____*Note: Please include a copy of each page, marked with your comments.*

Please describe the issue or problem in detail: _____

_____

_____

_____

Is the organization of the manual clear and easy to follow? (circle your answer) YES NO

Please comment: _____

_____

_____

_____

_____

What information should be included in NISSAN Service Manuals to better support you in servicing or repairing customer vehicles?

_____

_____

_____

_____

DATE: _____ YOUR NAME: _____ POSITION: _____

DEALER: _____ DEALER NO.: _____ ADDRESS: _____

CITY:_____ STATE/PROV./COUNTRY: _____ ZIP/POSTAL CODE: _____

NOTES

TEST VALUE AND TEST LIMIT (GST ONLY — NOT APPLICABLE TO CONSULT-II)

The following is the information specified in Mode 6 of SAE J1979.
The test value is a parameter used to determine whether a system/circuit diagnostic test is “OK” or “NG” while being monitored by the ECM during self-diagnosis. The test limit is a reference value which is specified as the maximum or minimum value and is compared with the test value being monitored.
Items for which these data (test value and test limit) are displayed are the same as SRT code items.
These data (test value and test limit) are specified by Test ID (TID) and Component ID (CID) and can be displayed on the GST screen.

: Applicable ·: Not applicable

SRT item	Self-diagnostic test item	DTC	Test value (GST display)		Te s t limit	Application	Unit
			TID	CID			
CATALYST	Three way catalyst function	P0420	01H	01H	Max.	X	−
		P0420	02H	81H	Min.	X	−
EVAP SYSTEM	EVAP control system (Small leak)	P0440	05H	03H	Max.	X	−
		P1440*2	05H	03H	Max.	X	−
	EVAP control system purge flow monitoring	P1447	06H	83H	Min.	X	mV
	EVAP control system (Very small leak)	P1441*1	07H	03H	Max.	X	−
HO2S	Heated oxygen sensor 1	P0133	09H	04H	Max.	X	ms
		P0131	0AH	84H	Min.	X	mV
		P0130	0BH	04H	Max.	X	mV
		P0132	0CH	04H	Max.	X	mV
		P0134	0DH	04H	Max.	X	s
	Heated oxygen sensor 2	P0139	19H	86H	Min.	X	mV/500ms
		P0137	1AH	86H	Min.	X	mV
		P0140	1BH	06H	Max.	X	mV
		P0138	1CH	06H	Max.	X	mV
HO2S HTR	Heated oxygen sensor 1 heater	P0135	29H	08H	Max.	X	mV
		P0135	2AH	88H	Min.	X	mV
	Heated oxygen sensor 2 heater	P0141	2DH	0AH	Max.	X	mV
		P0141	2EH	8AH	Min.	X	mV
EGR SYSTEM	EGR function	P0400	31H	8CH	Min.	X	℃
		P0400	32H	8CH	Min.	X	℃
		P0400	33H	8CH	Min.	X	℃
		P0400	34H	8CH	Min.	X	℃
		P1402	35H	0CH	Max.	X	℃
	EGRC-BPT valve function	P0402*2	36H	0CH	Max.	X	−
		P0402*2	37H	8CH	Min.	X	−

*1 : Except models D22 KA24DE engine, WD22 KA24DE engine 2000MY.
*2 : Except models L30 KA24DE engine 2000MY.

TEST VALUE AND TEST LIMIT (GST ONLY — NOT APPLICABLE TO CONSULT-II)

The following is the information specified in Mode 6 of SAE J1979.
The test value is a parameter used to determine whether a system/circuit diagnostic test is “OK” or “NG” while being monitored by the ECM during self-diagnosis. The test limit is a reference value which is specified as the maximum or minimum value and is compared with the test value being monitored.
Items for which these data (test value and test limit) are displayed are the same as SRT code items.
These data (test value and test limit) are specified by Test ID (TID) and Component ID (CID) and can be displayed on the GST screen.

: Applicable ·: Not applicable

SRT item	Self-diagnostic test item	DTC	Test value (GST display)		Te s t limit	Application	Unit
			TID	CID			
CATALYST	Three way catalyst function (Bank 1)	P0420	01H	01H	Max.	X	–
		P0420	02H	81H	Min.	X	–
	Three way catalyst function (Bank 2)	P0430	03H	02H	Max.	X	–
		P0430	04H	82H	Min.	X	–
EVAP SYSTEM	EVAP control system (Small leak)	P0440	05H	03H	Max.	X	–
		P1440*1	05H	03H	Max.	X	–
	EVAP control system purge flow monitoring	P1447	06H	83H	Min.	X	mV
	EVAP control system (Very small leak)	P1441*2	07H	03H	Max.	X	–
HO2S	Heated oxygen sensor 1(Bank 1)	P0133	09H	04H	Max.	X	ms
		P0131	0AH	84H	Min.	X	mV
		P0130	0BH	04H	Max.	X	mV
		P0132	0CH	04H	Max.	X	mV
		P0134	0DH	04H	Max.	X	s
	Heated oxygen sensor 1(Bank 2)	P0153	11H	05H	Max.	X	ms
		P0151	12H	85H	Min.	X	mV
		P0150	13H	05H	Max.	X	mV
		P0152	14H	05H	Max.	X	mV
		P0154	15H	05H	Max.	X	s
	Heated oxygen sensor 2(Bank 1)	P0139	19H	86H	Min.	X	mV/500ms
		P0137	1AH	86H	Min.	X	mV
		P0140	1BH	06H	Max.	X	mV
		P0138	1CH	06H	Max.	X	mV
	Heated oxygen sensor 2(Bank 2)	P0159	21H	87H	Min.	X	mV/500ms
		P0157	22H	87H	Min.	X	mV
		P0160	23H	07H	Max.	X	mV
		P0158	24H	07H	Max.	X	mV
H02S HTR	Heated oxygen sensor 1 heater(Bank 1)	P0135	29H	08H	Max.	X	mV
		P0135	2AH	88H	Min.	X	mV
	Heated oxygen sensor 2 heater(Bank 2)	P0155	2BH	09H	Max.	X	mV
		P0155	2CH	89H	Min.	X	mV
	Heated oxygen sensor 2 heater(Bank 1)	P0141	2DH	0AH	Max.	X	mV
		P0141	2EH	8AH	Min.	X	mV
	Heated oxygen sensor 2 heater(Bank 2)	P0161	2FH	0BH	Max.	X	mV
		P0161	30H	8BH	Min.	X	mV

*1 : Except models D22 VG33E engine, WD22 VG33E engine, R50 VQ35DE engine, JR50 VQ35DE engine 2001
*2 : Except models A33 VQ30DE engine, CA33 VQ30DE engine 2001MY.

GENERAL INFORMATION

SECTION GI

CONTENTS

PRECAUTIONS 3
Precautions 3
SUPPLEMENTAL RESTRAINT SYSTEM (SRS) ″AIR BAG″ AND ″SEAT BELT PRE-TENSIONER″ 3
GENERAL PRECAUTIONS 4
PRECAUTIONS FOR MULTIPORT FUEL INJECTION SYSTEM OR ENGINE CONTROL SYSTEM 5
PRECAUTIONS FOR THREE WAY CATALYST 6
PRECAUTIONS FOR HOSES 6
PRECAUTIONS FOR ENGINE OILS 7
PRECAUTIONS FOR FUEL 7
PRECAUTIONS FOR AIR CONDITIONING 8
HOW TO USE THIS MANUAL 9
HOW TO READ WIRING DIAGRAMS 11
Sample/Wiring Diagram - EXAMPL - 11
OPTIONAL SPLICE 12
Description 13
CONNECTOR SYMBOLS 15
SWITCH POSITIONS 16
DETECTABLE LINES AND NON-DETECTABLE LINES 16
MULTIPLE SWITCH 17
REFERENCE AREA 18
HOW TO CHECK TERMINAL 20
Connector and Terminal Pin Kit 20
How to Probe Connectors 20
PROBING FROM HARNESS SIDE 20
PROBING FROM TERMINAL SIDE 20
How to Check Enlarged Contact Spring of Terminal 21
Waterproof Connector Inspection 22
RUBBER SEAL INSPECTION 22
WIRE SEAL INSPECTION 22
Terminal Lock Inspection 22
HOW TO PERFORM EFFICIENT DIAGNOSIS FOR AN ELECTRICAL INCIDENT 23
Work Flow 23
Incident Simulation Tests 24
INTRODUCTION 24
VEHICLE VIBRATION 24
HEAT SENSITIVE 25
FREEZING 25
WATER INTRUSION 26
ELECTRICAL LOAD 26
COLD OR HOT START UP 26
Circuit Inspection 26
INTRODUCTION 26
TESTING FOR ″OPENS″ IN THE CIRCUIT 27
TESTING FOR ″SHORTS″ IN THE CIRCUIT 28
GROUND INSPECTION 29
VOLTAGE DROP TESTS 30
CONTROL UNIT CIRCUIT TEST 31
HOW TO FOLLOW TROUBLE DIAGNOSES 33
How to Follow Test Groups in Trouble Diagnoses 34
Harness Wire Color and Connector Number Indication 35
TYPE 1: HARNESS WIRE COLOR AND CONNECTOR NUMBER ARE SHOWN IN ILLUSTRATION 35
TYPE 2: HARNESS WIRE COLOR AND CONNECTOR NUMBER ARE SHOWN IN TEXT 36
Key to Symbols Signifying Measurements or Procedures 36
CONSULT–II CHECKING SYSTEM 38
Function and System Application 38
Nickel Metal Hydride Battery Replacement 38
Checking Equipment 39
Loading Procedure 39
CONSULT-II Data Link Connector (DLC) Circuit 39
INSPECTION PROCEDURE 39
IDENTIFICATION INFORMATION 40
Model Variation 40
Identification Number 42
VEHICLE IDENTIFICATION NUMBER ARRANGEMENT 42
ENGINE SERIAL NUMBER 43
TRANSFER SERIAL NUMBER 43
MANUAL TRANSMISSION NUMBER 43
AUTOMATIC TRANSMISSION NUMBER 44
Dimensions 44
Wheels & Tires 45

CONTENTS (Cont'd)

LIFTING POINTS AND TOW TRUCK TOWING 46
Pantograph Jack.....46
Garage Jack and Safety Stand 46
2-pole Lift.....47
Tow Truck Towing 47
2-WHEEL DRIVE MODELS.....48
4-WHEEL DRIVE MODELS.....48
TOWING POINT.....49
VEHICLE RECOVERY (FREEING A STUCK VEHICLE).....49
TIGHTENING TORQUE OF STANDARD BOLTS 50
SAE J1930 TERMINOLOGY LIST 51
SAE J1930 Terminology List 51

Precautions

NEGI0001

Observe the following precautions to ensure safe and proper servicing.


SGI646

SUPPLEMENTAL RESTRAINT SYSTEM (SRS) "AIR BAG" AND "SEAT BELT PRE-TENSIONER"

NEGI0001S01

The Supplemental Restraint System such as "AIR BAG"and "SEAT BELT PRE-TENSIONER" used along with a seat belt, helps to reduce the risk or severity of injury to the driver and front passenger in a frontal collision. The Supplemental Restraint System consists of air bag modules (located in the center of the steering wheel and in the instrument panel on the passenger side), seat belt pretensioners, a diagnosis sensor unit, warning lamp, wiring harness and spiral cable.

The vehicle (except Crew Cab model) is equipped with a passenger air bag deactivation switch. Because no rear seat exists where a rear-facing child restraint can be placed, the switch is designed to turn off the passenger air bag so that a rear-facing child restraint can be used in the front passenger seat. The switch is located in the center of the instrument panel, near the ashtray. When the switch is turned to the ON position, the passenger air bag is enabled and could inflate in a frontal collision. When the switch is turned to the OFF position, the passenger air bag is disabled and will not inflate in a frontal collision. A passenger air bag OFF indicator on the instrument panel lights up when the passenger air bag is switched OFF. The driver air bag always remains enabled and is not affected by the passenger air bag deactivation switch.

Information necessary to service the system safely is included in the **RS section** of this Service Manual.

WARNING:

- **To avoid rendering the SRS inoperative, which could increase the risk of personal injury or death in the event of a collision which would result in air bag inflation, all maintenance should be performed by an authorized NISSAN dealer.**
- **Improper maintenance, including incorrect removal and installation of the SRS, can lead to personal injury caused by unintentional activation of the system. For removal of Spiral Cable and Air Bag Module, see the RS section.**
- **Do not use electrical test equipment on any circuit related to the SRS unless instructed to in this Service Manual. Spiral cable and wiring harnesses (except "SEAT BELT PRE-TENSIONER") covered with yellow insulation either just before the harness connectors or for the complete harness are related to the SRS.**
- **The vehicle (except Crew Cab model) is equipped with a passenger air bag deactivation switch which can be operated by the customer. When the passenger air bag is switched OFF, the passenger air bag is disabled and will not inflate in a frontal collision. When the passenger air bag is switched ON, the passenger air bag is enabled and could inflate in a frontal collision. After SRS maintenance**

or repair, make sure the passenger air bag deactivation switch is in the same position (ON or OFF) as when the vehicle arrived for service.

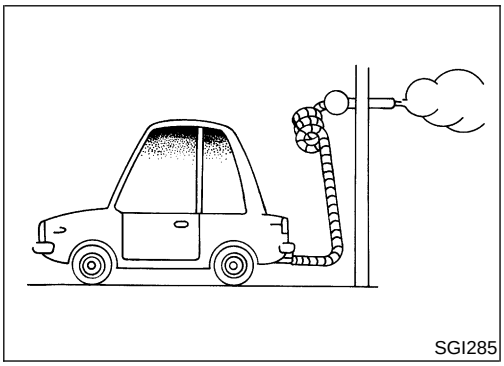
SGI285

GENERAL PRECAUTIONS

NEGI0001S02

- Do not operate the engine for an extended period of time without proper exhaust ventilation.
  Keep the work area well ventilated and free of any inflammable materials. Special care should be taken when handling any inflammable or poisonous materials, such as gasoline, refrigerant gas, etc. When working in a pit or other enclosed area, be sure to properly ventilate the area before working with hazardous materials.
  Do not smoke while working on the vehicle.

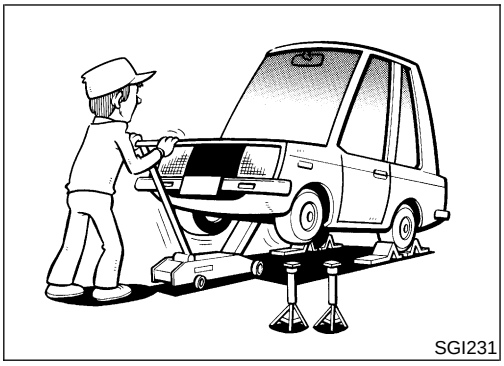
SGI231

- Before jacking up the vehicle, apply wheel chocks or other tire blocks to the wheels to prevent the vehicle from moving. After jacking up the vehicle, support the vehicle weight with safety stands at the points designated for proper lifting before working on the vehicle.
  These operations should be done on a level surface.
- When removing a heavy component such as the engine or transaxle/transmission, be careful not to lose your balance and drop it. Also, do not allow it to strike adjacent parts, especially the brake tubes and master cylinder.

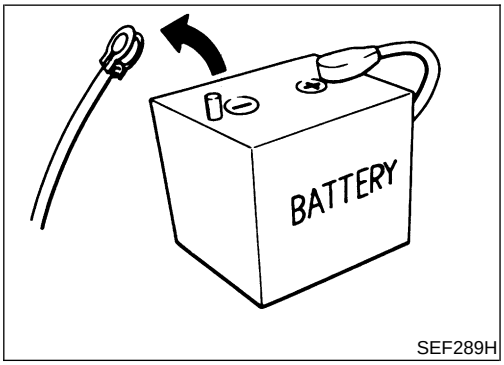

SEF289H

- Before starting repairs which do not require battery power:
  Turn off ignition switch.
  Disconnect the negative battery terminal.


SGI233

- To prevent serious burns:
  Avoid contact with hot metal parts.
  Do not remove the radiator cap when the engine is hot.

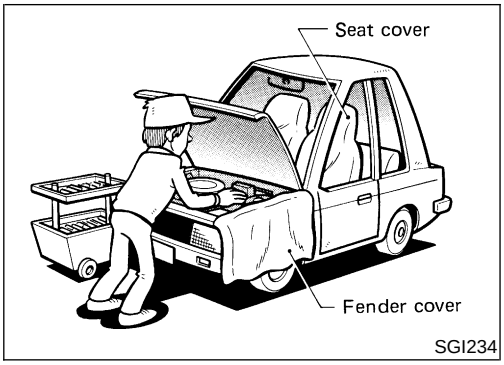

- Before servicing the vehicle:
  Protect fenders, upholstery and carpeting with appropriate covers.
  Take caution that keys, buckles or buttons do not scratch paint.
- Clean all disassembled parts in the designated liquid or solvent prior to inspection or assembly.
- Replace oil seals, gaskets, packings, O-rings, locking washers, cotter pins, self-locking nuts, etc. with new ones.
- Replace inner and outer races of tapered roller bearings and needle bearings as a set.
- Arrange the disassembled parts in accordance with their assembled locations and sequence.
- Do not touch the terminals of electrical components which use microcomputers (such as ECMs).
  Static electricity may damage internal electronic components.
- After disconnecting vacuum or air hoses, attach a tag to indicate the proper connection.
- Use only the fluids and lubricants specified in this manual.
- Use approved bonding agents, sealants or their equivalents when required.
- Use tools and recommended special tools where specified for safe and efficient service repairs.
- When repairing fuel, oil, water, vacuum or exhaust systems, check all affected lines for leaks.
- Dispose of drained oil or the solvent used for cleaning parts in an appropriate manner.
- Do not attempt to top off the fuel tank after the fuel pump nozzle shuts off automatically. Continued refueling may cause fuel overflow resulting in fuel spray and possibly a fire.

WARNING:

To prevent ECM from storing the diagnostic trouble codes, do not carelessly disconnect the harness connectors which are related to the engine control system and TCM (Transmission Control Module) system. The connectors should be disconnected only when working according to the WORK FLOW of TROUBLE DIAGNOSES in EC section and AT section.



PRECAUTIONS FOR MULTIPORT FUEL INJECTION SYSTEM OR ENGINE CONTROL SYSTEM

NEGI0001S03

- Before connecting or disconnecting any harness connector for the multiport fuel injection system or ECM:
  Turn ignition switch to OFF position.
  Disconnect negative battery terminal.
  Otherwise, there may be damage to ECM.
- Before disconnecting pressurized fuel line from fuel pump to injectors, be sure to release fuel pressure.
- Be careful not to jar components such as ECM and mass air flow sensor.

PRECAUTIONS FOR THREE WAY CATALYST

NEGI0001S04

If a large amount of unburned fuel flows into the catalyst, the catalyst temperature will be excessively high. To prevent this, follow the instructions below:

- Use unleaded gasoline only. Leaded gasoline will seriously damage the three way catalyst.
- When checking for ignition spark or measuring engine compression, make tests quickly and only when necessary.
- Do not run engine when the fuel tank level is low, otherwise the engine may misfire causing damage to the catalyst.

Do not place the vehicle on flammable material. Keep flammable material off the exhaust pipe and the three way catalyst.

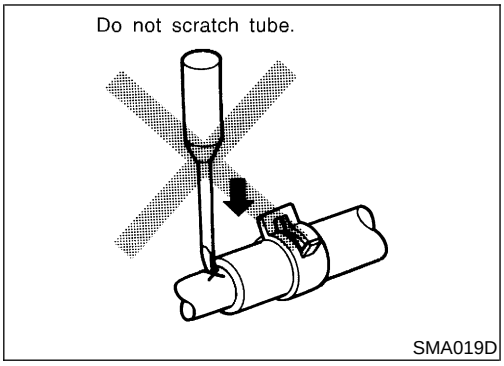

PRECAUTIONS FOR HOSES

NEGI0001S08

Hose removal and installation

NEGI0001S0801

- To prevent damage to rubber hose, do not pry off rubber hose with tapered tool or screwdriver.

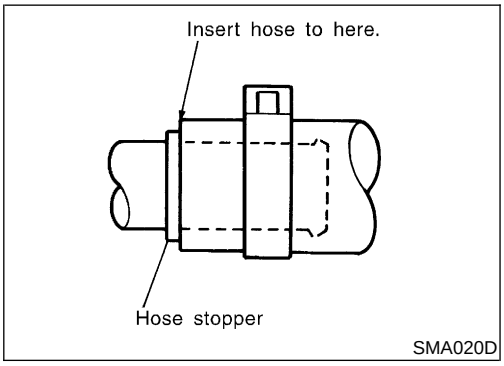

- To reinstall the rubber hose securely, make sure of hose insertion length and clamp orientation. (If tube is equipped with hose stopper, insert rubber hose into tube until it butts up against hose stopper.)

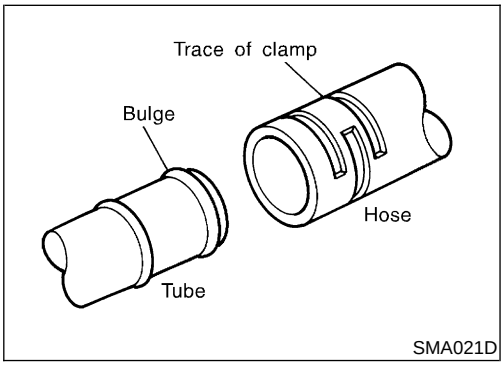

Hose clamping

NEGI0001S0802

- If old rubber hose is re-used, install hose clamp in its original position (at the indentation where the old clamp was). If there is a trace of tube bulging left on the old rubber hose, align rubber hose at that position.
- Discard old clamps; replace with new ones.

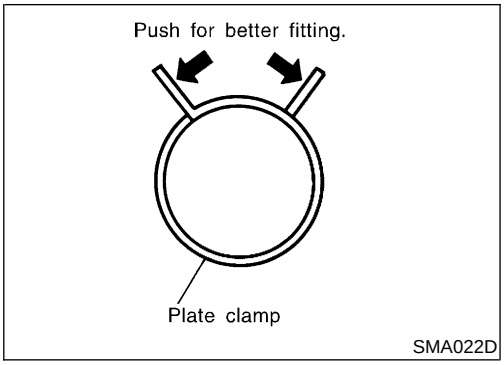

- After installing leaf spring clamps, apply force to them in the direction of the arrow, tightening rubber hose equally all around.

PRECAUTIONS FOR ENGINE OILS

NEGI0001S05

Prolonged and repeated contact with used engine oil may cause skin cancer. Try to avoid direct skin contact with used oil.
If skin contact is made, wash thoroughly with soap or hand cleaner as soon as possible.

Health Protection Precautions

NEGI0001S0501

- Avoid prolonged and repeated contact with oils, particularly used engine oils.
- Wear protective clothing, including impervious gloves where practicable.
- Do not put oily rags in pockets.
- Avoid contaminating clothes, particularly underpants, with oil.
- Heavily soiled clothing and oil-impregnated footwear should not be worn. Overalls must be cleaned regularly.
- First Aid treatment should be obtained immediately for open cuts and wounds.
- Use barrier creams, applying them before each work period, to help the removal of oil from the skin.
- Wash with soap and water to ensure all oil is removed (skin cleansers and nail brushes will help). Preparations containing lanolin replace the natural skin oils which have been removed.
- Do not use gasoline, kerosene, diesel fuel, gas oil, thinners or solvents for cleaning skin.
- If skin disorders develop, obtain medical advice without delay.
- Where practicable, degrease components prior to handling.
- Where there is a risk of eye contact, eye protection should be worn, for example, chemical goggles or face shields, in addition, an eye wash facility should be provided.

Environmental Protection Precautions

NEGI0001S0502

Burning used engine oil in small space heaters or boilers can be recommended only for units of approved design. The heating system must meet the requirements of HM Inspectorate of Pollution for small burners of less than 0.4 MW. If in doubt check with the appropriate local authority and/or manufacturer of the approved appliance.
Dispose of used oil and used oil filters through authorized waste disposal contractors to licensed waste disposal sites, or to the waste oil reclamation trade. If in doubt, contact the local authority for advice on disposal facilities.
It is illegal to pour used oil onto the ground, down sewers or drains, or into water courses.
The regulations concerning the pollution vary from country to country.

PRECAUTIONS FOR FUEL

NEGI0001S06

KA24DE and VG33E Engines

NEGI0001S0601

Use unleaded gasoline with an octane rating of at least 87 AKI (Anti-Knock Index) number (research octane number 91) for the KA24DE and VG33E engines.

VG33ER Engines

NEGI0001S0602

Use unleaded premium gasoline with an octane rating of at least 91 AKI (Anti-Knock Index) number (research octane number 96) for the VG33ER engine.

If premium gasoline is not available, unleaded regular gasoline with an octane rating of 87 AKI number (research octane number 91) may be temporarily used, but only under the following precautions:

- Have the fuel tank filled only partially with unleaded regular gasoline, and fill up with unleaded premium gasoline as soon as possible.
- Avoid full throttle driving and abrupt acceleration.

CAUTION:

Use unleaded fuel only. Under no circumstances should leaded gasoline be used. It will damage the three way catalyst and increase dangerous emissions from the vehicle exhaust. Using a fuel other than that specified could adversely affect the emission control devices and systems, and could also affect the warranty coverage validity.

PRECAUTIONS FOR AIR CONDITIONING

NEGI0001S07

Use an approved refrigerant recovery unit any time the air conditioning system must be discharged. Refer to ***HA-66***, "HFC-134a (R-134a) Service Procedure" for specific instructions.

- The captions **WARNING** and **CAUTION** warn you of steps that must be followed to prevent personal injury and/or damage to some part of the vehicle.
  WARNING indicates the possibility of personal injury if instructions are not followed.
  CAUTION indicates the possibility of component damage if instructions are not followed.
  BOLD TYPED STATEMENTS except **WARNING** and **CAUTION** give you helpful information.
- **ALPHABETICAL INDEX** is provided at the end of this manual so that you can rapidly find the item and page you are searching for.
- **A QUICK REFERENCE INDEX**, a black tab (e.g. BR) is provided on the first page. You can quickly find the first page of each section by matching it to the section's black tab.
- **THE CONTENTS** are listed on the first page of each section.
- **THE TITLE** is indicated on the upper portion of each page and shows the part or system.
- **THE PAGE NUMBER** of each section consists of two letters which designate the particular section and a number (e.g. "BR-5").
- **THE LARGE ILLUSTRATIONS** are exploded views (See below) and contain tightening torques, lubrication points, section number of the **PARTS CATALOG** (e.g. SEC.440) and other information necessary to perform repairs.
  The illustrations should be used in reference to service matters only. When ordering parts, refer to the appropriate **PARTS CATALOG**.

"Example"

SEC. 440

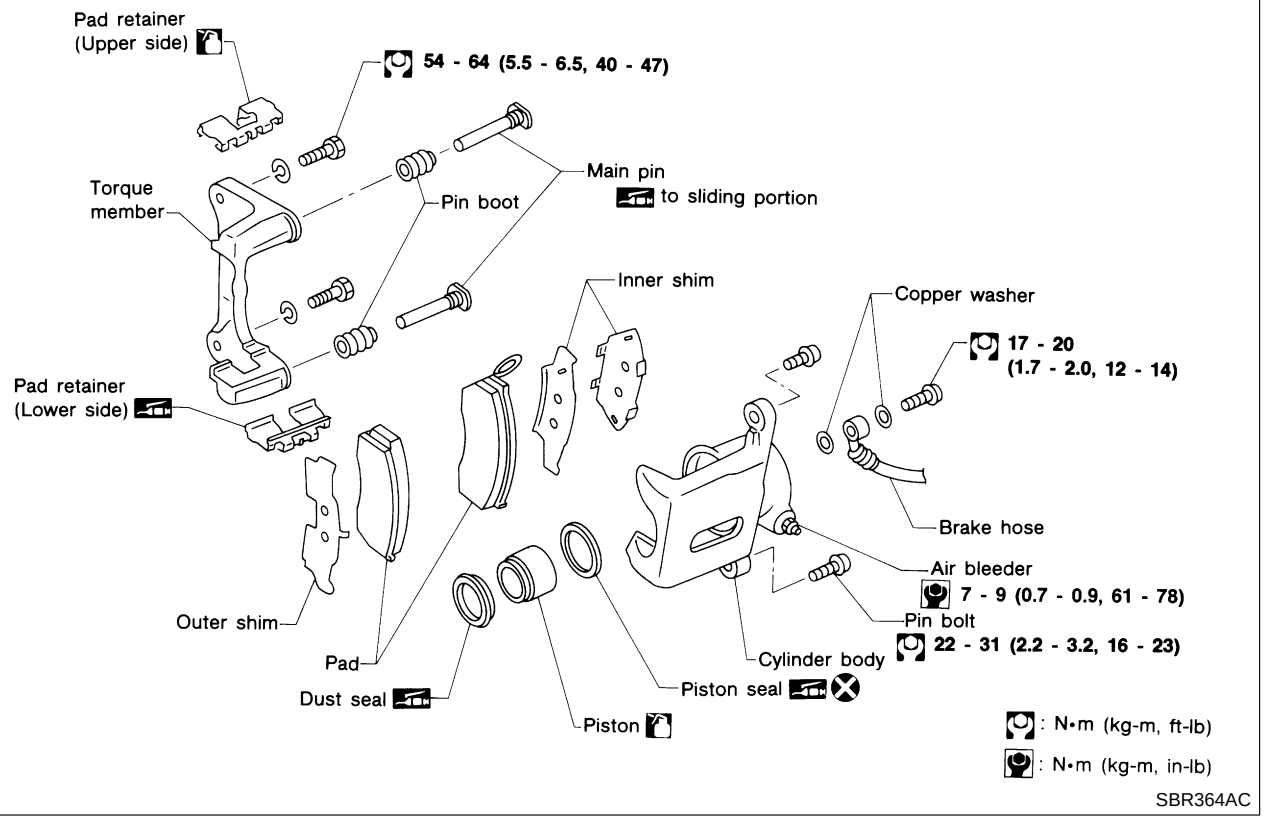

- **THE SMALL ILLUSTRATIONS** show the important steps such as inspection, use of special tools, knacks of work and hidden or tricky steps which are not shown in the previous large illustrations.
  Assembly, inspection and adjustment procedures for the complicated units such as the automatic transaxle or transmission, etc. are presented in a step-by-step format where necessary.
- The **UNITS** given in this manual are primarily expressed as the SI UNIT (International System of Unit), and alternatively expressed in the metric system and in the yard/pound system.
  "Example"
  Tightening torque:
  59 - 78 N·m (6.0 - 8.0 kg-m, 43 - 58 ft-lb)
- **TROUBLE DIAGNOSES** are included in sections dealing with complicated components.

- **SERVICE DATA AND SPECIFICATIONS** are contained at the end of each section for quick reference of data.
- The following **SYMBOLS AND ABBREVIATIONS** are used:

SYMBOL	ABBREVIATION	SYMBOL	ABBREVIATION
	Tightening torque	A/C	Air Conditioner
	Should be lubricated with grease. Unless otherwise indicated, use recommended multi-purpose grease.	P/S	Power Steering
	Should be lubricated with oil.	Tool	Special Service Tools
	Sealing point	SAE	Society of Automotive Engineers, Inc.
	Checking point	ATF	Automatic Transmission Fluid
	Always replace after every disassembly.	D_1	Drive range 1st gear
	Apply petroleum jelly.	D_2	Drive range 2nd gear
	Apply ATF.	D_3	Drive range 3rd gear
SDS	Service Data and Specifications	D_4	Drive range 4th gear
LH, RH	Left-hand, Right-hand	O/D	Overdrive
FR, RR	Front, Rear	2_2	2nd range 2nd gear
A/T	Automatic Transaxle/Transmission	2_1	2nd range 1st gear
 , 4WD	4-Wheel Drive	1_2	1st range 2nd gear
2WD	2-Wheel Drive	1_1	1st range 1st gear

Sample/Wiring Diagram — EXAMPL —

NEGI0003S01

- For Description, refer to GI-13.

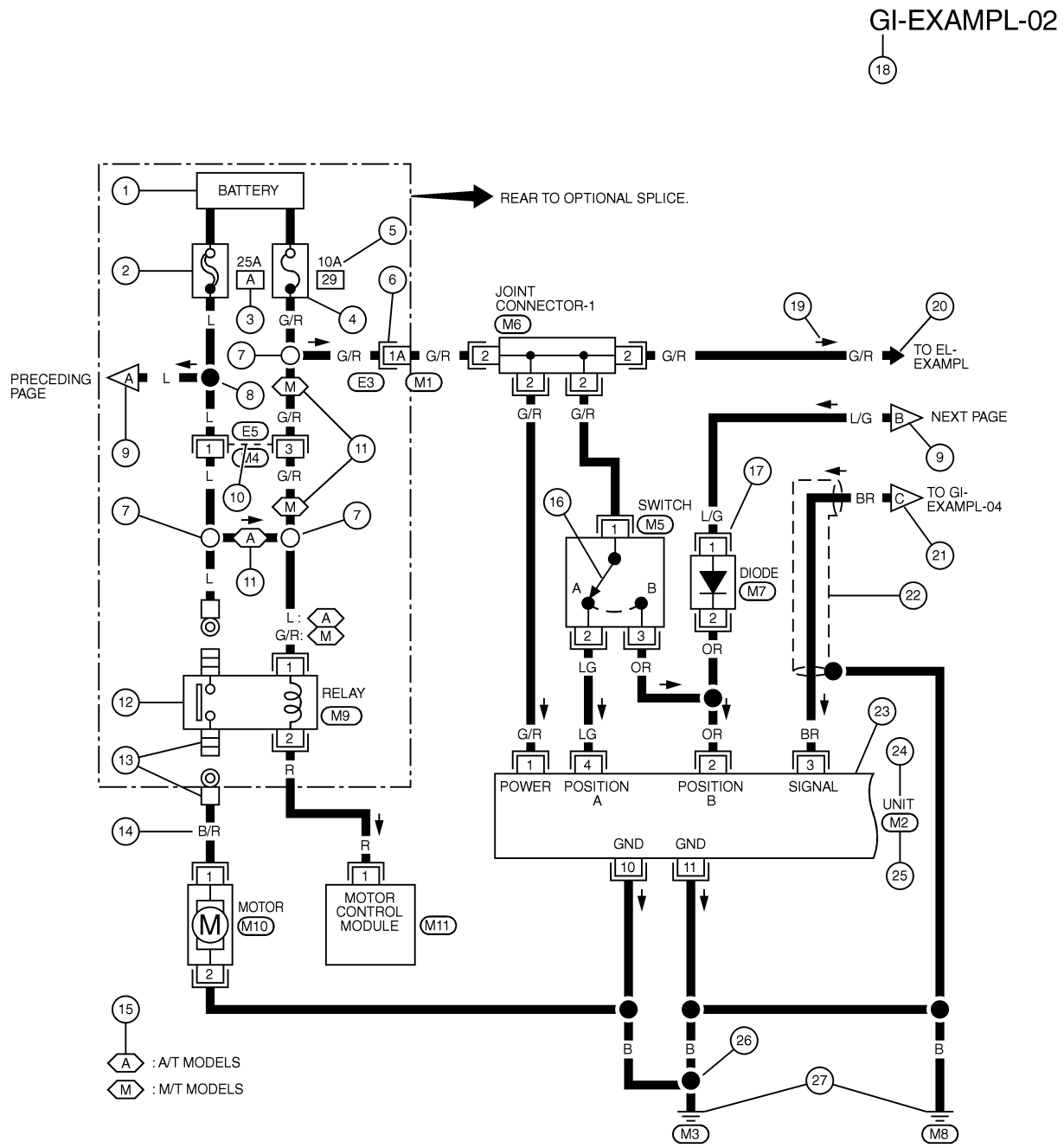

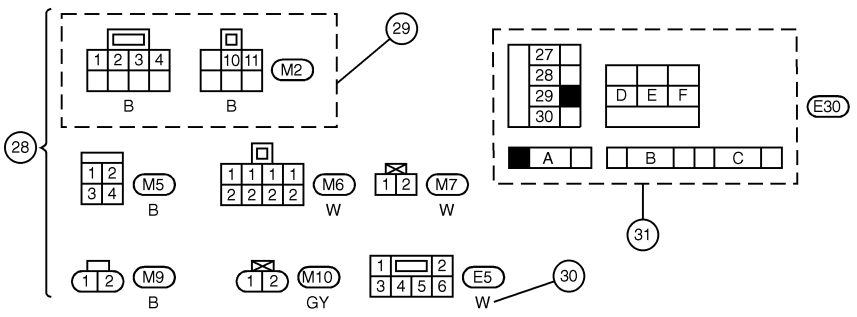

REFER TO THE FOLLOWING.
E3 -SUPER MULTIPLE JUNCTION (SMJ)
M11 -ELECTRICAL UNITS

SGI091A

OPTIONAL SPLICE

NEGI0003S0101

Optional splice

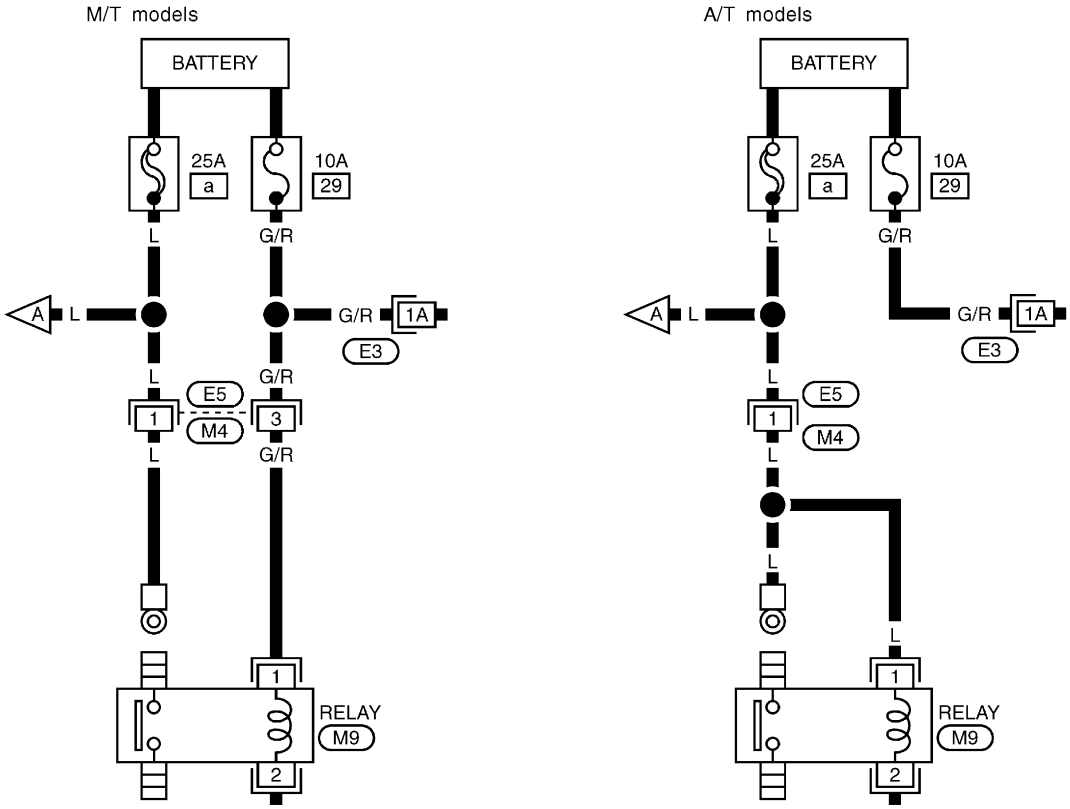

Description

=NEGI0003S02

Number	Item	Description
1	Power condition	• This shows the condition when the system receives battery positive voltage (can be operated).
2	Fusible link	• The double line shows that this is a fusible link. • The open circle shows current flow in, and the shaded circle shows current flow out.
3	Fusible link/fuse location	• This shows the location of the fusible link or fuse in the fusible link or fuse box. For arrangement, refer to ***EL-9***, “POWER SUPPLY ROUTING”.
4	Fuse	• The single line shows that this is a fuse. • The open circle shows current flow in, and the shaded circle shows current flow out.
5	Current rating	• This shows the current rating of the fusible link or fuse.
6	Connectors	• This shows that connector E3 is female and connector M1 is male. • The G/R wire is located in the 1A terminal of both connectors. • Terminal number with an alphabet (1A, 5B, etc.) indicates that the connector is SMJ connector. Refer to “Super Multiple Junction (SMJ)”, GI-18.
7	Optional splice	• The open circle shows that the splice is optional depending on vehicle application.
8	Splice	• The shaded circle shows that the splice is always on the vehicle.
9	Page crossing	• This arrow shows that the circuit continues to an adjacent page. • The A will match with the A on the preceding or next page.
10	Common connector	• The dotted lines between terminals show that these terminals are part of the same connector.
11	Option abbreviation	• This shows that the circuit is optional depending on vehicle application.
12	Relay	• This shows an internal representation of the relay. For details, refer to ***EL-7***, “STANDARDIZED RELAY”.
13	Connectors	• This shows that the connector is connected to the body or a terminal with bolt or nut.
14	Wire color	• This shows a code for the color of the wire. B = Black W = White R = Red G = Green L = Blue Y = Yellow LG = Light Green BR = Brown OR = Orange P = Pink PU = Purple GY = Gray SB = Sky Blue CH = Dark Brown DG = Dark Green When the wire color is striped, the base color is given first, followed by the stripe color as shown below: Example: L/W = Blue with White Stripe
15	Option description	• This shows a description of the option abbreviation used on the page.
16	Switch	• This shows that continuity exists between terminals 1 and 2 when the switch is in the A position. Continuity exists between terminals 1 and 3 when the switch is in the B position.
17	Assembly parts	• Connector terminal in component shows that it is a harness incorporated assembly.
18	Cell code	• This identifies each page of the wiring diagram by section, system and wiring diagram page number.
19	Current flow arrow	• Arrow indicates electric current flow, especially where the direction of standard flow (vertically downward or horizontally from left to right) is difficult to follow. • A double arrow “ ↔ ” shows that current can flow in either direction depending on circuit operation.

Description (Cont'd)

Number	Item	Description
20	System branch	• This shows that the system branches to another system identified by cell code (section and system).
21	Page crossing	• This arrow shows that the circuit continues to another page identified by cell code. • The C will match with the C on another page within the system other than the next or preceding pages.
22	Shielded line	• The line enclosed by broken line circle shows shield wire.
23	Component box in wave line	• This shows that another part of the component is also shown on another page (indicated by wave line) within the system.
24	Component name	• This shows the name of a component.
25	Connector number	• This shows the connector number. • The letter shows which harness the connector is located in. • Example: **M**: main harness. For detail and to locate the connector, refer to ***EL-240***, "MAIN HARNESS". A coordinate grid is included for complex harnesses to aid in locating connectors.
26	Ground (GND)	• The line spliced and grounded under wire color shows that ground line is spliced at the grounded connector.
27	Ground (GND)	• This shows the ground connection. For detailed ground distribution information, refer to ***EL-17***, "GROUND DISTRIBUTION".
28	Connector views	• This area shows the connector faces of the components in the wiring diagram on the page.
29	Common component	• Connectors enclosed in broken line show that these connectors belong to the same component.
30	Connector color	• This shows a code for the color of the connector. For code meaning, refer to wire color codes, Number 14 of this chart.
31	Fusible link and fuse box	• This shows the arrangement of fusible link(s) and fuse(s), used for connector views of the power supply routing. Refer to ***EL-9***, "POWER SUPPLY ROUTING". The open square shows current flow in, and the shaded square shows current flow out.
32	Reference area	• This shows that more information on the Super Multiple Junction (SMJ), Electrical Units, etc. exists on the at the end of the manual. Refer to "REFERENCE AREA", GI-18 for details.

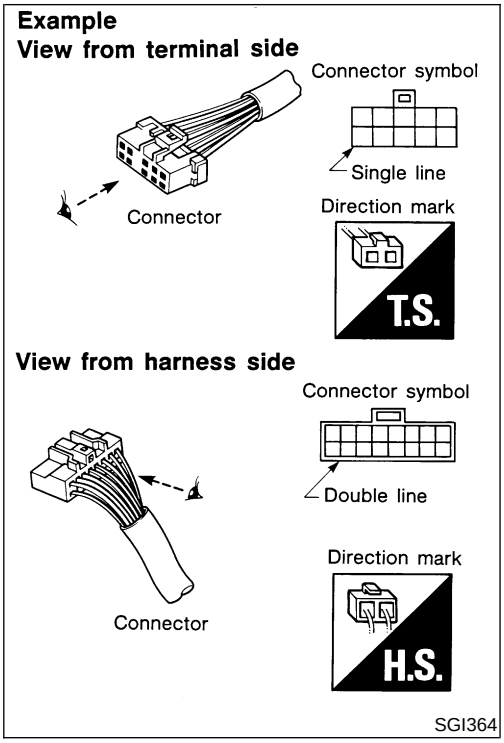

CONNECTOR SYMBOLS

=NEGI0003S0201

Most of connector symbols in wiring diagrams are shown from the terminal side.

- Connector symbols shown from the terminal side are enclosed by a single line and followed by the direction mark.
- Connector symbols shown from the harness side are enclosed by a double line and followed by the direction mark.
- Certain systems and components, especially related to OBD, may use a new style slide-locking type harness connector. For description and how to disconnect, refer to ***EL-5***, "HARNESS CONNECTOR".

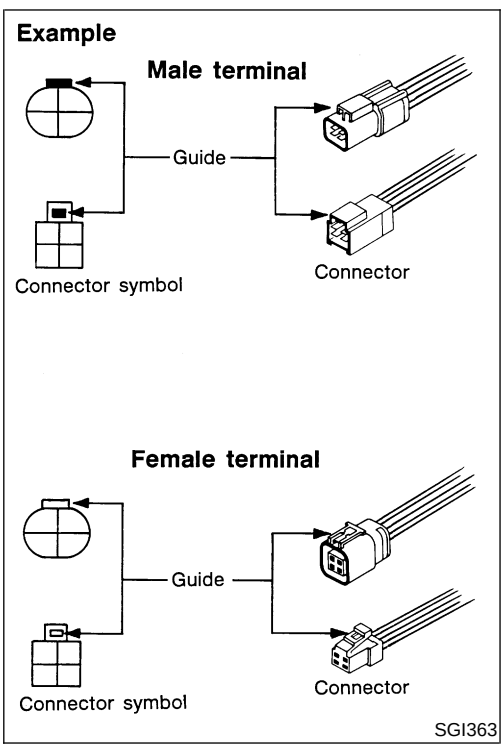

- Male and female terminals
  Connector guides for male terminals are shown in black and female terminals in white in wiring diagrams.

Description (Cont'd)

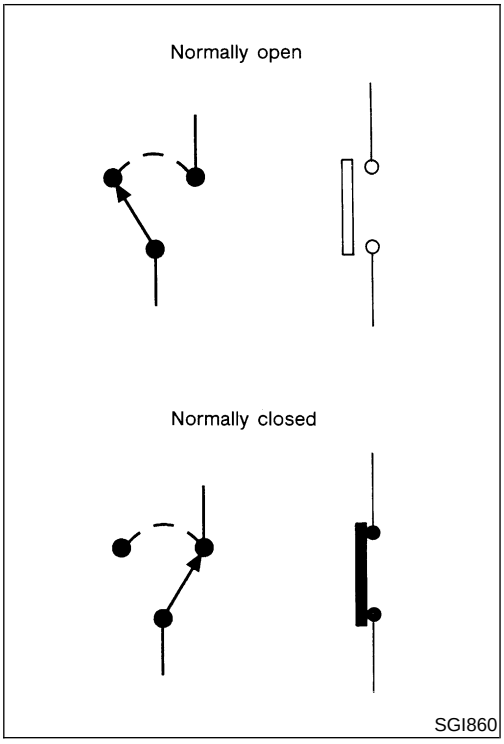

SWITCH POSITIONS

NEGI0003S0202

Switches are shown in wiring diagrams as if the vehicle is in the "normal" condition.

A vehicle is in the "normal" condition when:

- Ignition switch is OFF.
- Doors, hood and trunk lid/back door are closed.
- Pedals are not depressed.
- Parking brake is released.

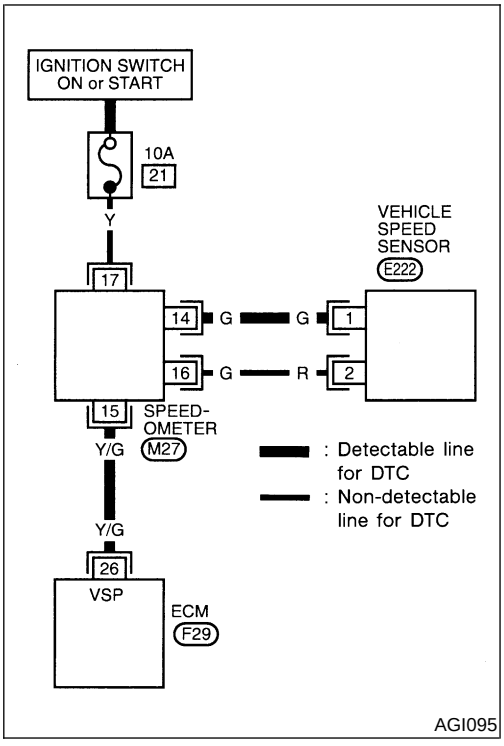

DETECTABLE LINES AND NON-DETECTABLE LINES

NEGI0003S0203

In some wiring diagrams, two kinds of lines, representing wires, with different weight are used.

- A line with regular weight (wider line) represents a "detectable line for DTC (Diagnostic Trouble Code)". A "detectable line for DTC" is a circuit in which ECM can detect its malfunctions with the on board diagnostic system.
- A line with less weight (thinner line) represents a "non-detectable line for DTC". A "non-detectable line for DTC" is a circuit in which ECM cannot detect its malfunctions with the on board diagnostic system.

MULTIPLE SWITCH

=NEGI0003S0204

The continuity of multiple switch is described in two ways as shown below.

- The switch chart is used in schematic diagrams.
- The switch diagram is used in wiring diagrams.

Example

(SWITCH CHART)

WIPER SWITCH

	OFF	INT	LO	HI	WASH
1					○
2				○	
3	○	○	○		
4	○	○			
5		○			
6		○	○	○	○

(SWITCH DIAGRAM)

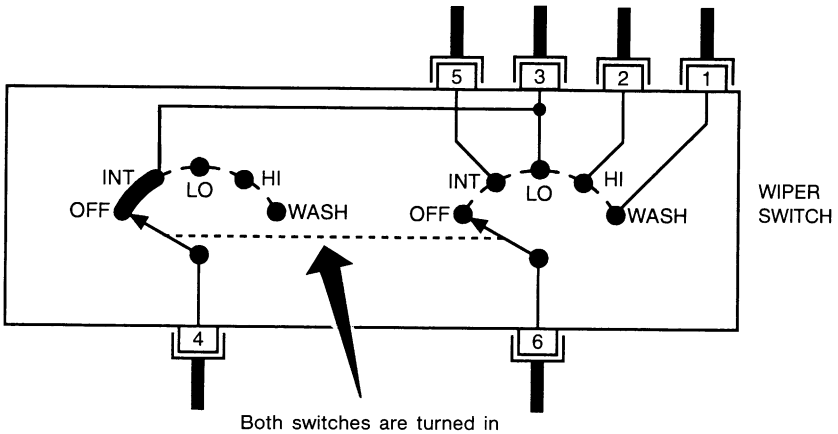

Continuity circuit of wiper switch

SWITCH POSITION	CONTINUITY CIRCUIT
OFF	3 - 4
INT	3 - 4, 5 - 6
LO	3 - 6
HI	2 - 6
WASH	1 - 6

SGI875

REFERENCE AREA

=NEGI0003S0205

The Reference Area of the wiring diagram contains references to additional electrical reference pages at the end of the manual. If connector numbers and titles are shown in the Reference Area of the wiring diagram, these connectors symbols are not shown in the Connector Area.

Example

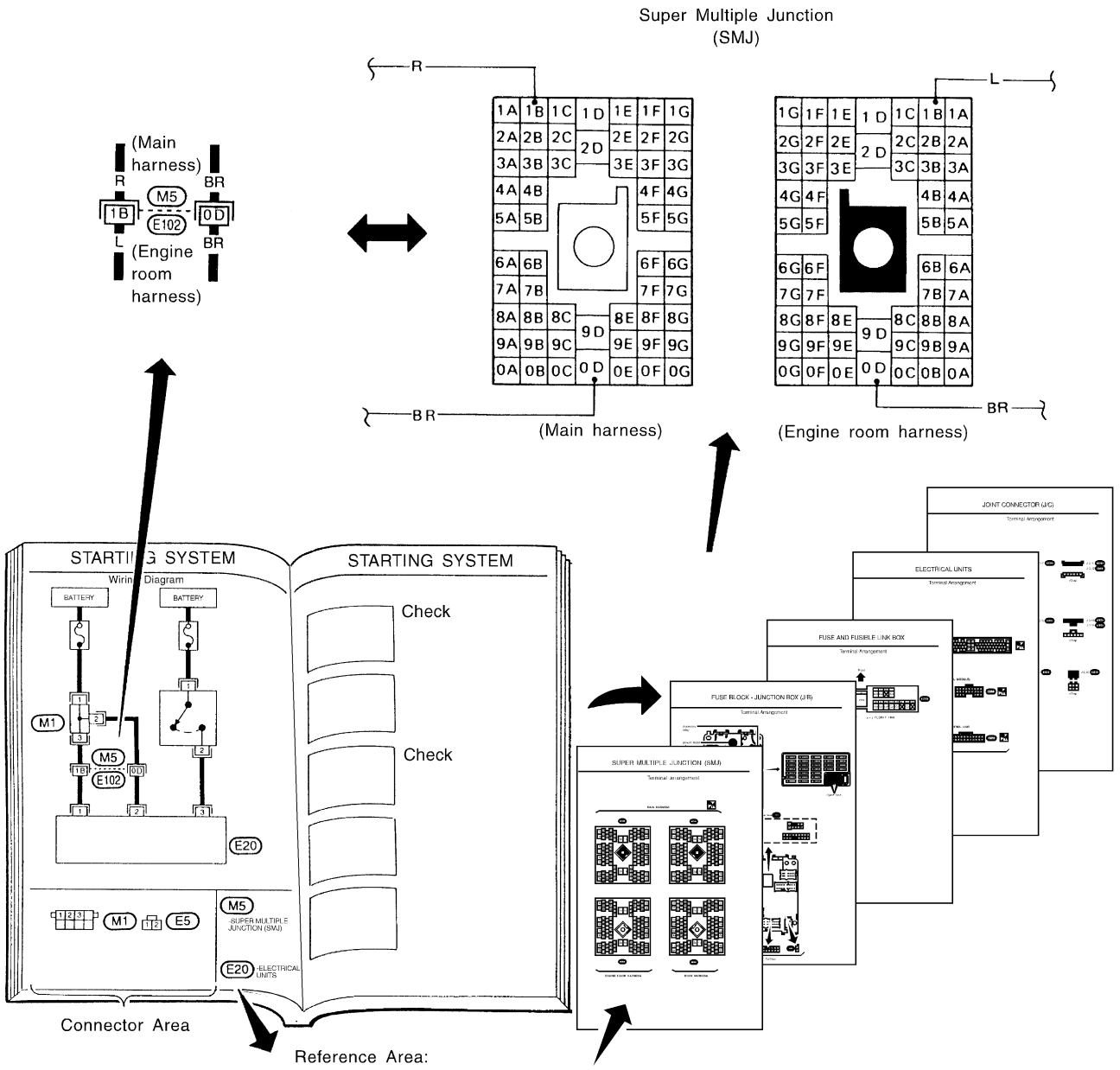

Super Multiple Junction (SMJ)

In a wiring diagram, the SMJ connectors include a letter of the alphabet in the terminal number. SMJ connector numbers are shown in the Reference Area of the wiring diagram. SMJ terminal arrangement can be found on the electrical reference pages at the end of the manual. For terminal arrangement of these connectors, refer to the "SUPER MULTIPLE JUNCTION (SMJ)" electrical reference page at the end of the manual.

Fuse block—Junction Box (J/B)
Fuse block—Junction Box (J/B) connector number is shown in the Reference Area of the wiring diagram. For connector terminal and fuse arrangement, refer to the "FUSE BLOCK—Junction Box (J/B)" electrical reference page at the end of the manual.

Fuse and fusible link box
For fuse arrangement in the fuse and fusible link box, refer to the "FUSE AND FUSIBLE LINK BOX" electrical reference page at the end of the manual.

Electrical units
Electrical unit connector symbols are shown in the Connector Area of the wiring diagram. However, when there is not enough space to show the connector terminal arrangement in the Connector Area of the wiring diagram, the electrical unit connector number is shown in the Reference Area of the wiring diagram. For electrical unit connector terminal arrangement, refer to the "ELECTRICAL UNITS" electrical reference page at the end of the manual. Most of the electrical unit connectors on this page are shown from the harness side forth connector.

Joint Connector (J/C)
Joint Connector (J/C) symbols are shown in the connector area of the wiring diagram. For connector internal wiring layout and joint connector terminal arrangement, refer to the "JOINT CONNECTOR (J/C)" electrical reference page at the end of the manual.

Connector and Terminal Pin Kit

NEGI0011S01

Use the connector and terminal pin kit listed below when replacing connectors or terminals.

The connector and terminal pin kit contains some of the most commonly used NISSAN connectors and terminals.

Tool number (Kent-Moore No.) Tool name	Description
(J38751-95NI) Connector and terminal pin kit (J42992-98KIT) OBD Terminal Repair Kit	J42992-98KIT J38751-95NI 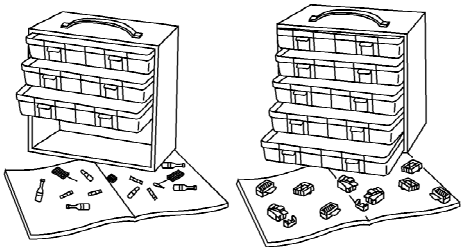 AGI121

How to Probe Connectors

NEGI0011S02

Connector damage and an intermittent connection can result from improperly probing of the connector during circuit checks.

The probe of a digital multimeter (DMM) may not correctly fit the connector cavity. To correctly probe the connector, follow the procedures below using a “T” pin. For the best contact grasp the “T” pin using an alligator clip.

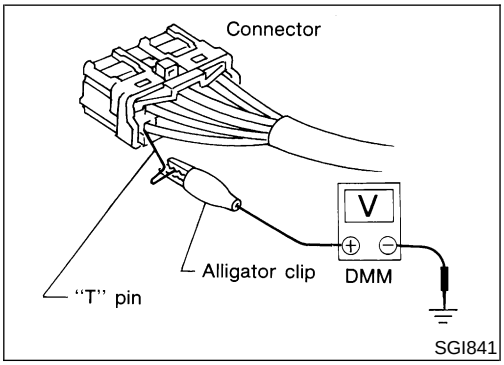

SGI841

PROBING FROM HARNESS SIDE

NEGI0011S0201

Standard type (not waterproof type) connector should be probed from harness side with “T” pin.

- **If the connector has a rear cover such as an ECM connector, remove the rear cover before probing the terminal.**
- **Do not probe waterproof connector from harness side. Damage to the seal between wire and connector may result.**

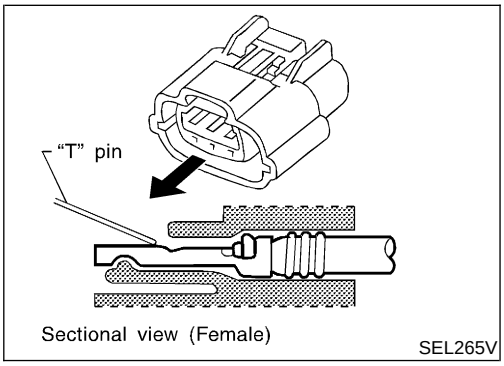

SEL265V

PROBING FROM TERMINAL SIDE

NEGI0011S0202

Female Terminal

- There is a small notch above each female terminal. Probe each terminal with the “T” pin through the notch.
  Do not insert any object other than the same type male terminal into female terminal.

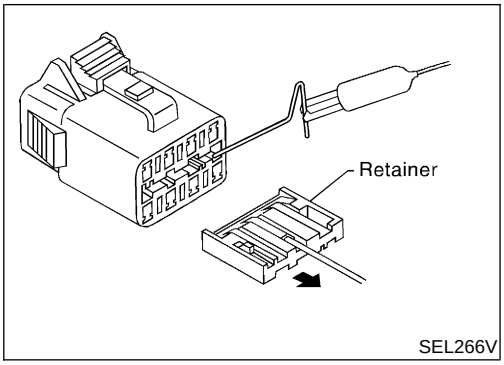

SEL266V

- Some connectors do not have a notch above each terminal. To probe each terminal, remove the connector retainer to make contact space for probing.

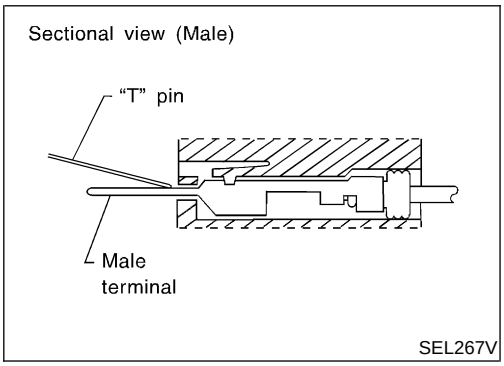

SEL267V

Male Terminal
Carefully probe the contact surface of each terminal using a "T" pin.
Do not bend terminal.

How to Check Enlarged Contact Spring of Terminal

NEGI0011S03

An enlarged contact spring of a terminal may create intermittent signals in the circuit.
If the intermittent open circuit occurs, follow the procedure below to inspect for open wires and enlarged contact spring of female terminal.

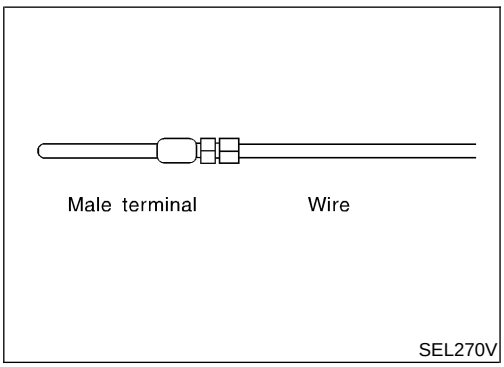

SEL270V

1. Assemble a male terminal and approx. 10 cm (3.9 in) of wire. **Use a male terminal which matches the female terminal.**
2. Disconnect the suspected faulty connector and hold it terminal side up.

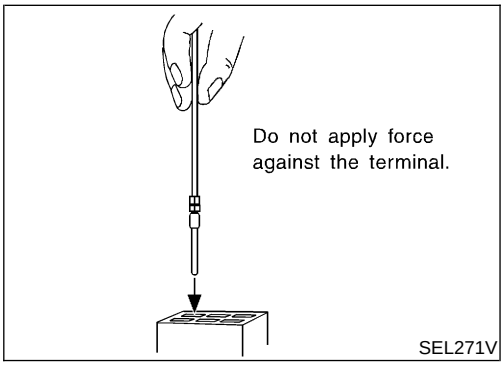

SEL271V

3. While holding the wire of the male terminal, try to insert the male terminal into the female terminal.
Do not force the male terminal into the female terminal with your hands.

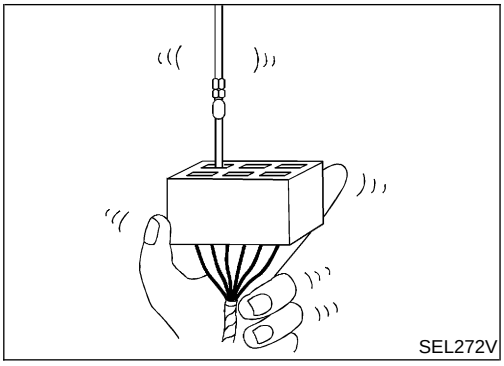
SEL272V

4. While moving the connector, check whether the male terminal can be easily inserted or not.

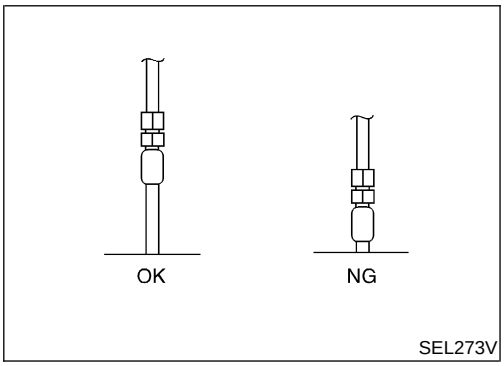

SEL273V

- If the male terminal can be easily inserted into the female terminal, replace the female terminal.

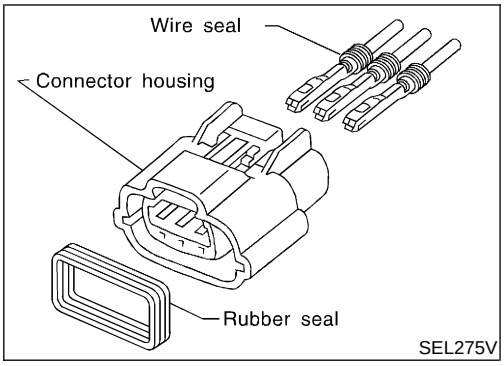

SEL275V

Waterproof Connector Inspection

NEGI0011S04

If water enters the connector, it can short interior circuits. This may lead to intermittent problems.
Check the following items to maintain the original waterproof characteristics.

RUBBER SEAL INSPECTION

NEGI0011S0401

- Most waterproof connectors are provided with a rubber seal between the male and female connectors. If the seal is missing, the waterproof performance may not meet specifications.
- The rubber seal may come off when connectors are disconnected. Whenever connectors are reconnected, make sure the rubber seal is properly installed on either side of male or female connector.

WIRE SEAL INSPECTION

NEGI0011S0402

The wire seal must be installed on the wire insertion area of a waterproof connector. Be sure that the seal is installed properly.

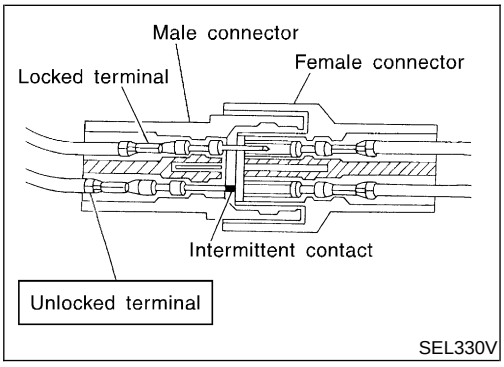

SEL330V

Terminal Lock Inspection

NEGI0011S05

Check for unlocked terminals by pulling wire at the end of connector. An unlocked terminal may create intermittent signals in the circuit.

Work Flow

NEGI0004S01

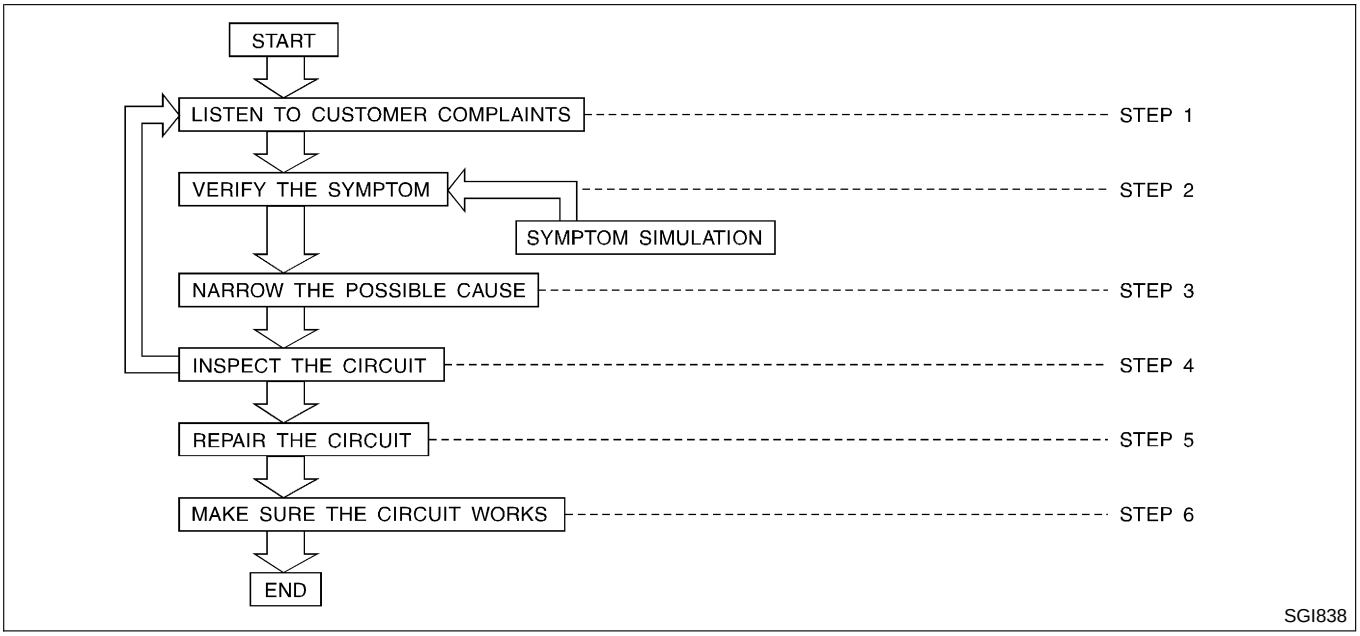

STEP	DESCRIPTION	
STEP 1	Get detailed information about the conditions and the environment when the incident occurred. The following are key pieces of information required to make a good analysis:	
	WHAT	Vehicle Model, Engine, Transmission and the System (i.e., Radio).
	WHEN	Date, Time of Day, Weather Conditions, Frequency.
	WHERE	Road Conditions, Altitude and Traffic Situation.
	HOW	System Symptoms, Operating Conditions (Other Components Interaction). Service History and if any Aftermarket Accessories have been installed.
STEP 2	Operate the system, road test if necessary. Verify the parameter of the incident. If the problem cannot be duplicated, refer to “Incident Simulation Tests”, GI-24.	
STEP 3	Get the proper diagnosis materials together including: POWER SUPPLY ROUTING System Operation Descriptions Applicable Service Manual Sections Check for any Service Bulletin. Identify where to begin diagnosis based upon your knowledge of the system operation and the customer comments.	
STEP 4	Inspect the system for mechanical binding, loose connectors or wiring damage. Determine which circuits and components are involved and diagnose using the Power Supply Routing and Harness Layouts.	
STEP 5	Repair or replace the incident circuit or component.	
STEP 6	Operate the system in all modes. Verify the system works properly under all conditions. Make sure you have not inadvertently created a new incident during your diagnosis or repair steps.	

Incident Simulation Tests

NEGI0004S02

INTRODUCTION

NEGI0004S0201

Sometimes the symptom is not present when the vehicle is brought in for service. If possible, re-create the conditions present at the time of the incident. Doing so may help avoid a No Trouble Found Diagnosis. The following section illustrates ways to simulate the conditions/environment under which the owner experiences an electrical incident.

The section is broken into the six following topics:

- Vehicle vibration
- Heat sensitive
- Freezing
- Water intrusion
- Electrical load
- Cold or hot start up

Get a thorough description of the incident from the customer. It is important for simulating the conditions of the problem.

VEHICLE VIBRATION

NEGI0004S0202

The problem may occur or become worse while driving on a rough road or when engine is vibrating (idle with A/C on). In such a case, you will want to check for a vibration related condition. Refer to the illustration below.

Connectors and Harness

Determine which connectors and wiring harness would affect the electrical system you are inspecting. **Gently** shake each connector and harness while monitoring the system for the incident you are trying to duplicate. This test may indicate a loose or poor electrical connection.

Hint

Connectors can be exposed to moisture. It is possible to get a thin film of corrosion on the connector terminals. A visual inspection may not reveal this without disconnecting the connector. If the problem occurs intermittently, perhaps the problem is caused by corrosion. It is a good idea to disconnect, inspect and clean the terminals on related connectors in the system.

Sensors and Relays

Gently apply a slight vibration to sensors and relays in the system you are inspecting.

This test may indicate a loose or poorly mounted sensor or relay.

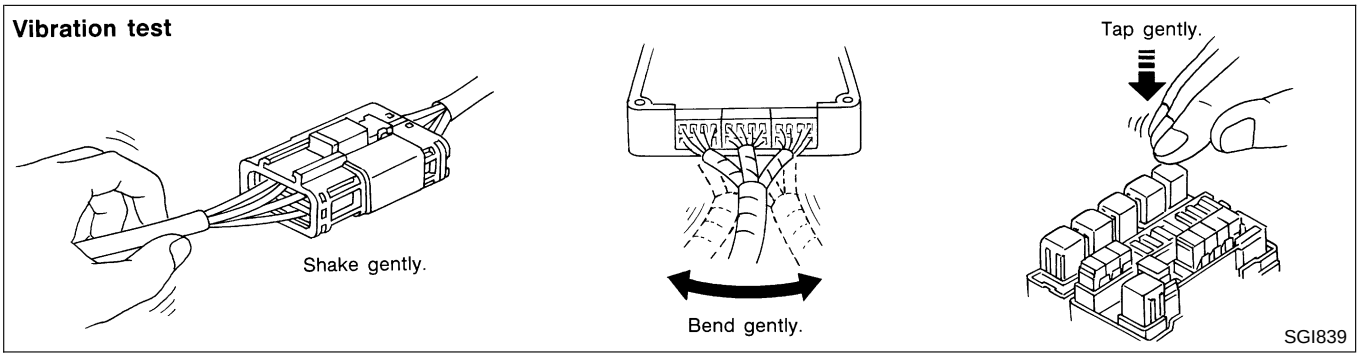

Engine Compartment
There are several reasons a vehicle or engine vibration could cause an electrical complaint. Some of the things to check for are:

- Connectors not fully seated.
- Wiring harness not long enough and is being stressed due to engine vibrations or rocking.
- Wires laying across brackets or moving components.
- Loose, dirty or corroded ground wires.
- Wires routed too close to hot components.

To inspect components under the hood, start by verifying the integrity of ground connections. Refer to "GROUND INSPECTION", GI-29. First check that the system is properly grounded. Then check for loose connection by **gently** shaking the wiring or components as previously explained. Using the wiring diagrams inspect the wiring for continuity.

Behind The Instrument Panel
An improperly routed or improperly clamped harness can become pinched during accessory installation. Vehicle vibration can aggravate a harness which is routed along a bracket or near a screw.

Under Seating Areas
An unclamped or loose harness can cause wiring to be pinched by seat components (such as slide guides) during vehicle vibration. If the wiring runs under seating areas, inspect wire routing for possible damage or pinching.

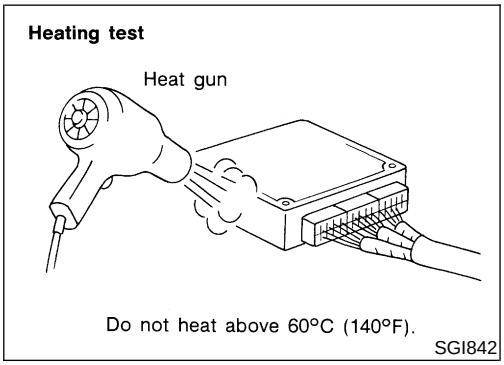

HEAT SENSITIVE

NEGI0004S0203

The owner's problem may occur during hot weather or after car has sat for a short time. In such cases you will want to check for a heat sensitive condition.
To determine if an electrical component is heat sensitive, heat the component with a heat gun or equivalent.
Do not heat components above 60°C (140°F). If incident occurs while heating the unit, either replace or properly insulate the component.

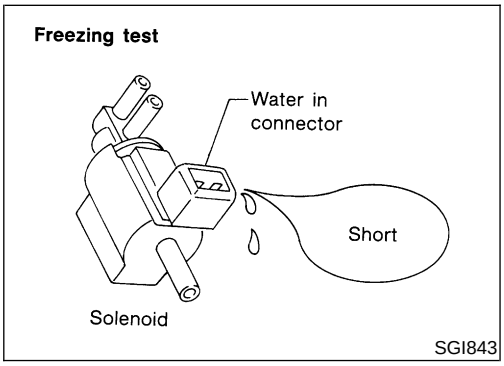

FREEZING

NEGI0004S0204

The customer may indicate the incident goes away after the car warms up (wintertime). The cause could be related to water freezing somewhere in the wiring/electrical system.
There are two methods to check for this. The first is to arrange for the owner to leave the car overnight. Make sure it will get cold enough to demonstrate the complaint. Leave the car parked outside overnight. In the morning, do a quick and thorough diagnosis of those electrical components which could be affected.

The second method is to put the suspect component into a freezer long enough for any water to freeze. Reinstall the part into the car and check for the reoccurrence of the incident. If it occurs, repair or replace the component.

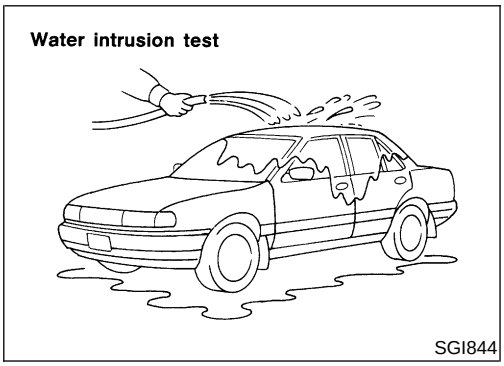

WATER INTRUSION

NEGI0004S0205

The incident may occur only during high humidity or in rainy/snowy weather. In such cases the incident could be caused by water intrusion on an electrical part. This can be simulated by soaking the car or running it through a car wash.
Do not spray water directly on any electrical components.

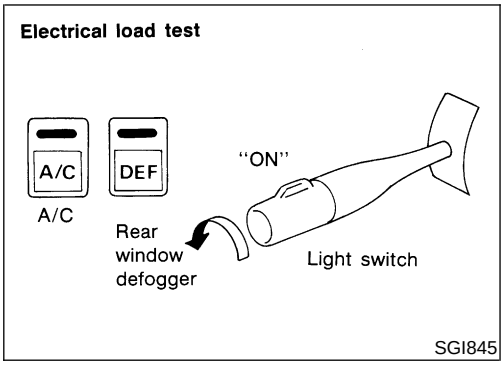

ELECTRICAL LOAD

NEGI0004S0206

The incident may be electrical load sensitive. Perform diagnosis with all accessories (including A/C, rear window defogger, radio, fog lamps) turned on.

COLD OR HOT START UP

NEGI0004S0207

On some occasions an electrical incident may occur only when the car is started cold. Or it may occur when the car is restarted hot shortly after being turned off. In these cases you may have to keep the car overnight to make a proper diagnosis.

Circuit Inspection

NEGI0004S03

INTRODUCTION

NEGI0004S0302

In general, testing electrical circuits is an easy task if it is approached in a logical and organized method. Before beginning it is important to have all available information on the system to be tested. Also, get a thorough understanding of system operation. Then you will be able to use the appropriate equipment and follow the correct test procedure.
You may have to simulate vehicle vibrations while testing electrical components. **Gently** shake the wiring harness or electrical component to do this.

OPEN	A circuit is open when there is no continuity through a section of the circuit.	
SHORT	There are two types of shorts.	
	• SHORT CIRCUIT	When a circuit contacts another circuit and causes the normal resistance to change.
	• SHORT TO GROUND	When a circuit contacts a ground source and grounds the circuit.

NOTE:
Refer to "HOW TO CHECK TERMINAL", GI-20 to probe or check terminal.

TESTING FOR "OPENS" IN THE CIRCUIT

NEGI0004S0303

Before you begin to diagnose and test the system, you should rough sketch a schematic of the system. This will help you to logically walk through the diagnosis process. Drawing the sketch will also reinforce your working knowledge of the system.

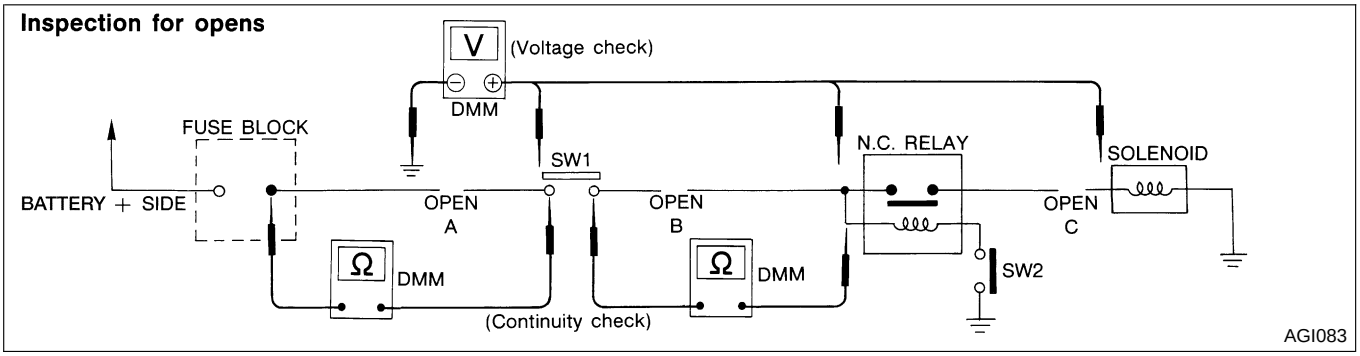

Continuity Check Method

The continuity check is used to find an open in the circuit. The Digital Multimeter (DMM) set on the resistance function will indicate an open circuit as over limit (no beep tone or no ohms symbol). Make sure to always start with the DMM at the highest resistance level.

To help in understanding the diagnosis of open circuits please refer to the schematic above.

1) Disconnect the battery negative cable.
2) Start at one end of the circuit and work your way to the other end. (At the fuse block in this example)
3) Connect one probe of the DMM to the fuse block terminal on the load side.
4) Connect the other probe to the fuse block (power) side of SW1. Little or no resistance will indicate that portion of the circuit has good continuity. If there were an open in the circuit, the DMM would indicate an over limit or infinite resistance condition. (point A)
5) Connect the probes between SW1 and the relay. Little or no resistance will indicate that portion of the circuit has good continuity. If there were an open in the circuit, the DMM would indicate an over limit or infinite resistance condition. (point B)
6) Connect the probes between the relay and the solenoid. Little or no resistance will indicate that portion of the circuit has good continuity. If there were an open in the circuit, the DMM would indicate an over limit or infinite resistance condition. (point C)

Any circuit can be diagnosed using the approach in the above example.

Voltage Check Method

To help in understanding the diagnosis of open circuits please refer to the previous schematic.

In any powered circuit, an open can be found by methodically checking the system for the presence of voltage. This is done by switching the DMM to the voltage function.

1) Connect one probe of the DMM to a known good ground.
2) Begin probing at one end of the circuit and work your way to the other end.
3) With SW1 open, probe at SW1 to check for voltage.

- Voltage: open is further down the circuit than SW1.
- No voltage: open is between fuse block and SW1 (point A).

4) Close SW1 and probe at relay.

- Voltage: open is further down the circuit than the relay.
- No voltage: open is between SW1 and relay (point B).

5) Close the relay and probe at the solenoid.

- Voltage: open is further down the circuit than the solenoid.
- No voltage: open is between relay and solenoid (point C).

Any powered circuit can be diagnosed using the approach in the above example.

TESTING FOR "SHORTS" IN THE CIRCUIT

NEGI0004S0304

To simplify the discussion of shorts in the system please refer to the schematic below.

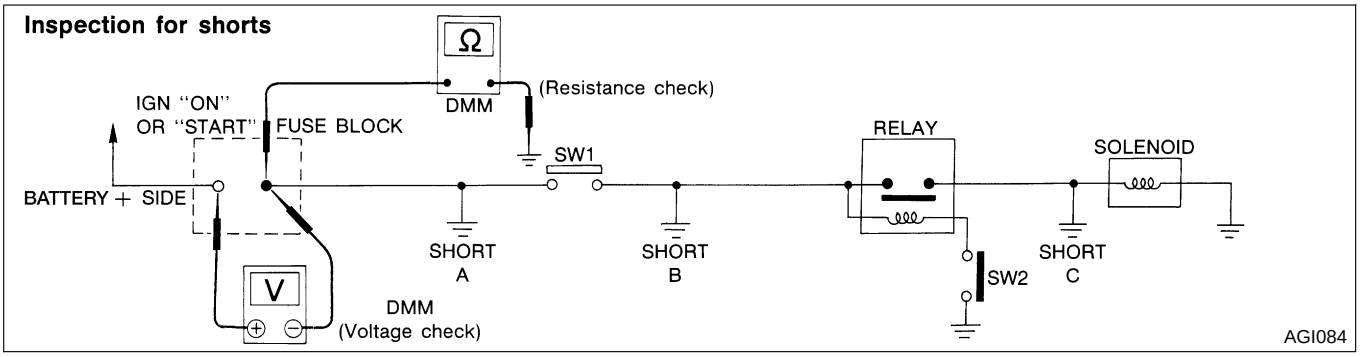

Resistance Check Method

1) Disconnect the battery negative cable and remove the blown fuse.
2) Disconnect all loads (SW1 open, relay disconnected and solenoid disconnected) powered through the fuse.
3) Connect one probe of the ohmmeter to the load side of the fuse terminal. Connect the other probe to a known good ground.
4) With SW1 open, check for continuity.

- Continuity: short is between fuse terminal and SW1 (point A).
- No continuity: short is further down the circuit than SW1.

5) Close SW1 and disconnect the relay. Put probes at the load side of fuse terminal and a known good ground. Then, check for continuity.

- Continuity: short is between SW1 and the relay (point B).
- No continuity: short is further down the circuit than the relay.

6) Close SW1 and jump the relay contacts with jumper wire. Put probes at the load side of fuse terminal and a known good ground. Then, check for continuity.

- Continuity: short is between relay and solenoid (point C).
- No continuity: check solenoid, retrace steps.

Voltage Check Method

1) Remove the blown fuse and disconnect all loads (i.e. SW1 open, relay disconnected and solenoid disconnected) powered through the fuse.
2) Turn the ignition key to the ON or START position. Verify battery voltage at the battery + side of the fuse terminal (one lead on the battery + terminal side of the fuse block and one lead on a known good ground).
3) With SW1 open and the DMM leads across both fuse terminals, check for voltage.

- Voltage: short is between fuse block and SW1 (point A).
- No voltage: short is further down the circuit than SW1.

4) With SW1 closed, relay and solenoid disconnected and the

DMM leads across both fuse terminals, check for voltage.

- Voltage: short is between SW1 and the relay (point B).
- No voltage: short is further down the circuit than the relay.

5) With SW1 closed, relay contacts jumped with fused jumper wire check for voltage.

- Voltage: short is down the circuit of the relay or between the relay and the disconnected solenoid (point C).
- No voltage: retrace steps and check power to fuse block.

GROUND INSPECTION

NEGI0004S0305

Ground connections are very important to the proper operation of electrical and electronic circuits. Ground connections are often exposed to moisture, dirt and other corrosive elements. The corrosion (rust) can become an unwanted resistance. This unwanted resistance can change the way a circuit works.

Electronically controlled circuits are very sensitive to proper grounding. A loose or corroded ground can drastically affect an electronically controlled circuit. A poor or corroded ground can easily affect the circuit. Even when the ground connection looks clean, there can be a thin film of rust on the surface.

When inspecting a ground connection follow these rules:

1) Remove the ground bolt or screw.
2) Inspect all mating surfaces for tarnish, dirt, rust, etc.
3) Clean as required to assure good contact.
4) Reinstall bolt or screw securely.
5) Inspect for "add-on" accessories which may be interfering with the ground circuit.
6) If several wires are crimped into one ground eyelet terminal, check for proper crimps. Make sure all of the wires are clean, securely fastened and providing a good ground path. If multiple wires are cased in one eyelet make sure no ground wires have excess wire insulation.
   For detailed ground distribution information, refer to ***EL-17***, "GROUND DISTRIBUTION".

Ground Inspection

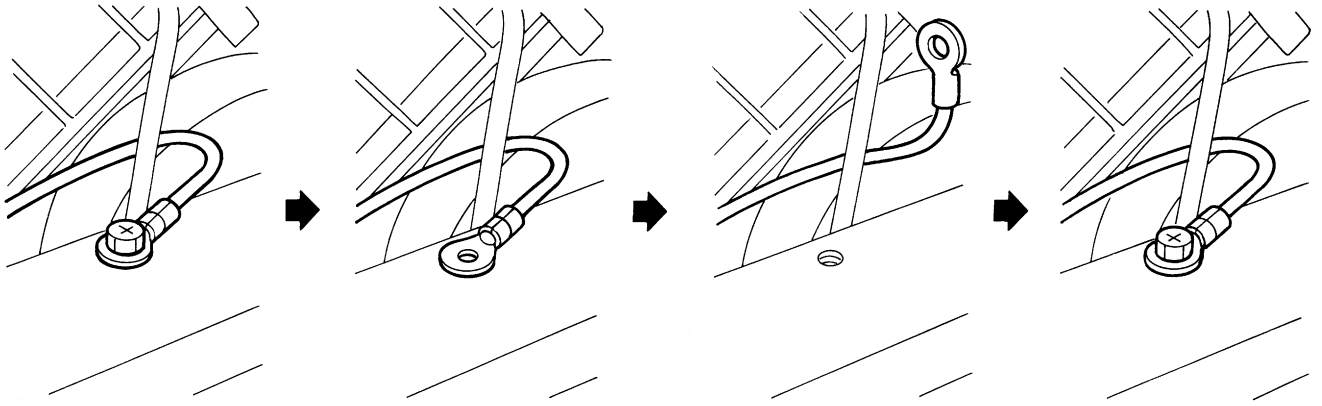

SGI853

VOLTAGE DROP TESTS

NEGI0004S0306

Voltage drop tests are often used to find components or circuits which have excessive resistance. A voltage drop in a circuit is caused by a resistance **when the circuit is in operation**.

Check the wire in the illustration. When measuring resistance with ohmmeter, contact by a single strand of wire will give reading of 0 ohms. This would indicate a good circuit. When the circuit operates, this single strand of wire is not able to carry the current. The single strand will have a high resistance to the current. This will be picked up as a slight voltage drop.

Unwanted resistance can be caused by many situations as follows:

- Undersized wiring (single strand example)
- Corrosion on switch contacts
- Loose wire connections or splices.

If repairs are needed always use wire that is of the same or larger gauge.

Measuring Voltage Drop — Accumulated Method

1) Connect the voltmeter across the connector or part of the circuit you want to check. The positive lead of the voltmeter should be closer to power and the negative lead closer to ground.
2) Operate the circuit.
3) The voltmeter will indicate how many volts are being used to "push" current through that part of the circuit.

Note in the illustration that there is an excessive 4.1 volt drop between the battery and the bulb.

Symptom: Dim bulb or no operation

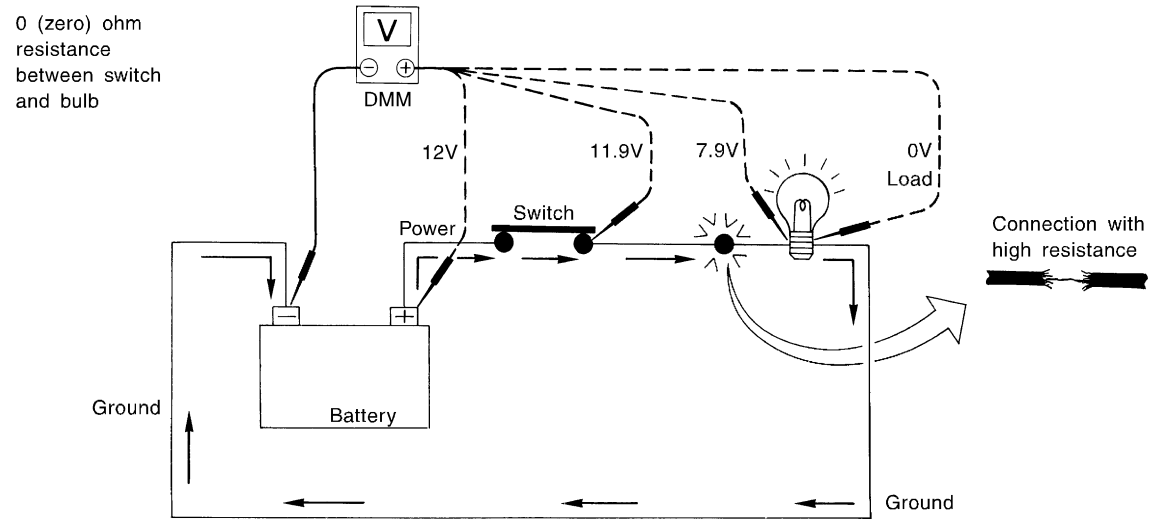

SGI974

Measuring Voltage Drop — Step by Step

The step by step method is most useful for isolating excessive drops in low voltage systems (such as those in "Computer Controlled Systems").

Circuits in the "Computer Controlled System" operate on very low amperage.

The (Computer Controlled) system operations can be adversely

affected by any variation in resistance in the system. Such resistance variation may be caused by poor connection, improper installation, improper wire gauge or corrosion.
The step by step voltage drop test can identify a component or wire with too much resistance.

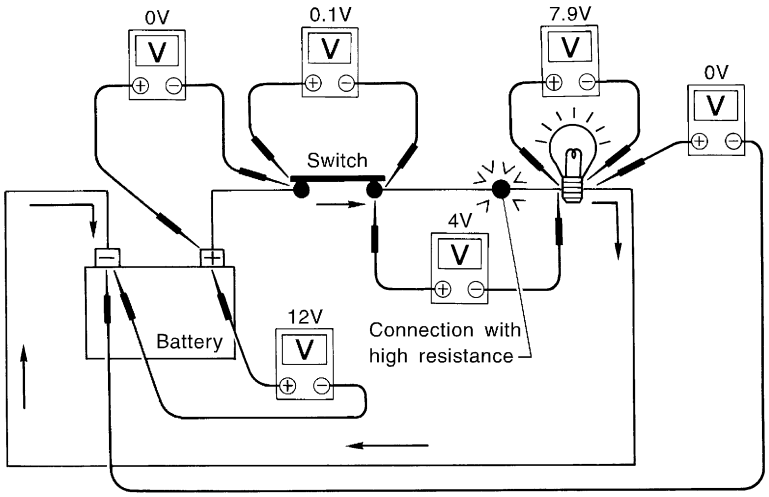

1. Connect the voltmeter as shown, starting at the battery and working your way around the circuit.
2. An unusually large voltage drop will indicate a component or wire that needs to be repaired. As you can see the illustration above, the poor connection causes a 4 volt drop.

The chart that follows illustrates some maximum allowable voltage drops. These values are given as a guideline, the exact value for each component may vary.

COMPONENT	VOLTAGE DROP
Wire	negligible < .001 volts
Ground Connections	Approx. 0.1 volts
Switch Contacts	Approx. 0.3 volts

SGI854

CONTROL UNIT CIRCUIT TEST

NEGI0004S0307

System Description: When the switch is ON, the control unit lights up the lamp.

Case 1

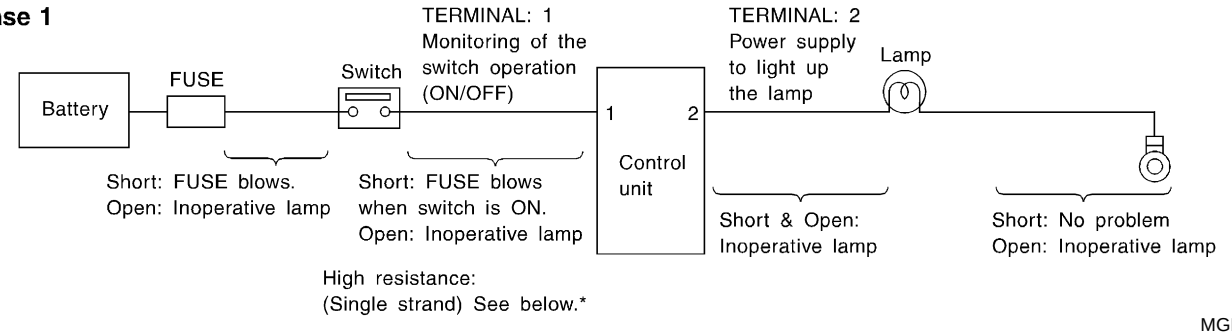

MGI034A

Input-output voltage chart

Pin No.	Item	Condition	Voltage value [V]	In case of high resistance such as single strand [V] *
1	Switch	Switch ON	Battery voltage	Lower than battery voltage Approx. 8 (Example)
		Switch OFF	Approx. 0	Approx. 0
2	Lamp	Switch ON	Battery voltage	Approx. 0 (Inoperative lamp)
		Switch OFF	Approx. 0	Approx. 0

The voltage value is based on the body ground.

* : If high resistance exists in the switch side circuit (caused by a single strand), terminal 1 does not detect battery voltage. Control unit does not detect the switch is ON even if the switch does not turn ON. Therefore, the control unit does not supply power to light up the lamp.

Case 2

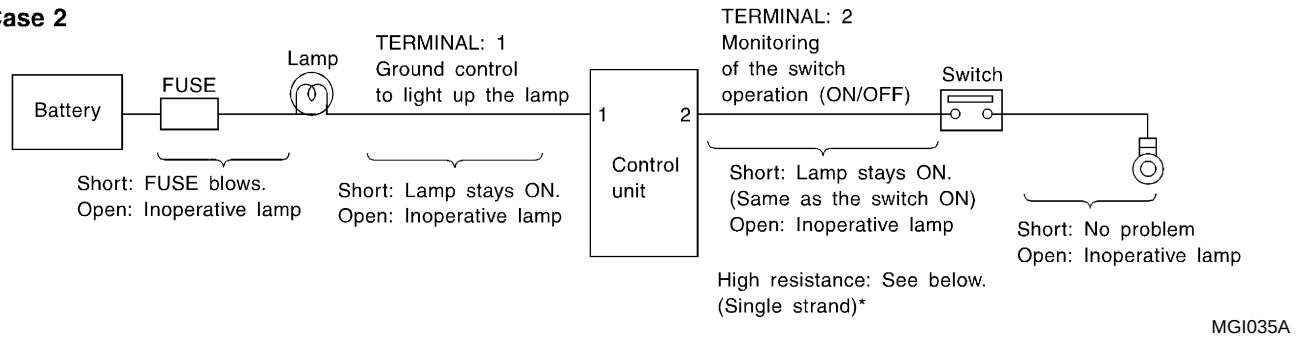

MGI035A

Input-output voltage chart

Pin No.	Item	Condition	Voltage value [V]	In case of high resistance such as single strand [V] *
1	Lamp	Switch ON	Approx. 0	Battery voltage (Inoperative lamp)
		Switch OFF	Battery voltage	Battery voltage
2	Switch	Switch ON	Approx. 0	Higher than 0 Approx. 4 (Example)
		Switch OFF	Approx. 5	Approx. 5

The voltage value is based on the body ground.

* : If high resistance exists in the switch side circuit (caused by a single strand), terminal 2 does not detect approx. 0V. Control unit does not detect the switch is ON even if the switch does not turn ON. Therefore, the control unit does not control ground to light up the lamp.

NOTICE:
Trouble diagnoses indicates work procedures required to diagnose problems effectively. Observe the following instructions before diagnosing.

1) **Before performing trouble diagnoses, read the "Preliminary Check", the "Symptom Chart" or the "Work Flow".**
2) **After repairs, re-check that the problem has been completely eliminated.**
3) **Refer to Component Parts and Harness Connector Location for the Systems described in each section for identification/location of components and harness connectors.**
4) **Refer to the Circuit Diagram for quick pinpoint check.**
   If you need to check circuit continuity between harness connectors in more detail, such as when a sub-harness is used, refer to Wiring Diagram in each individual section and Harness Layout in EL section for identification of harness connectors.
5) **When checking circuit continuity, ignition switch should be OFF.**
6) **Before checking voltage at connectors, check battery voltage.**
7) **After accomplishing the Diagnostic Procedures and Electrical Components Inspection, make sure that all harness connectors are reconnected as they were.**

How to Follow Test Groups in Trouble Diagnoses

NEGI0005S01

Example

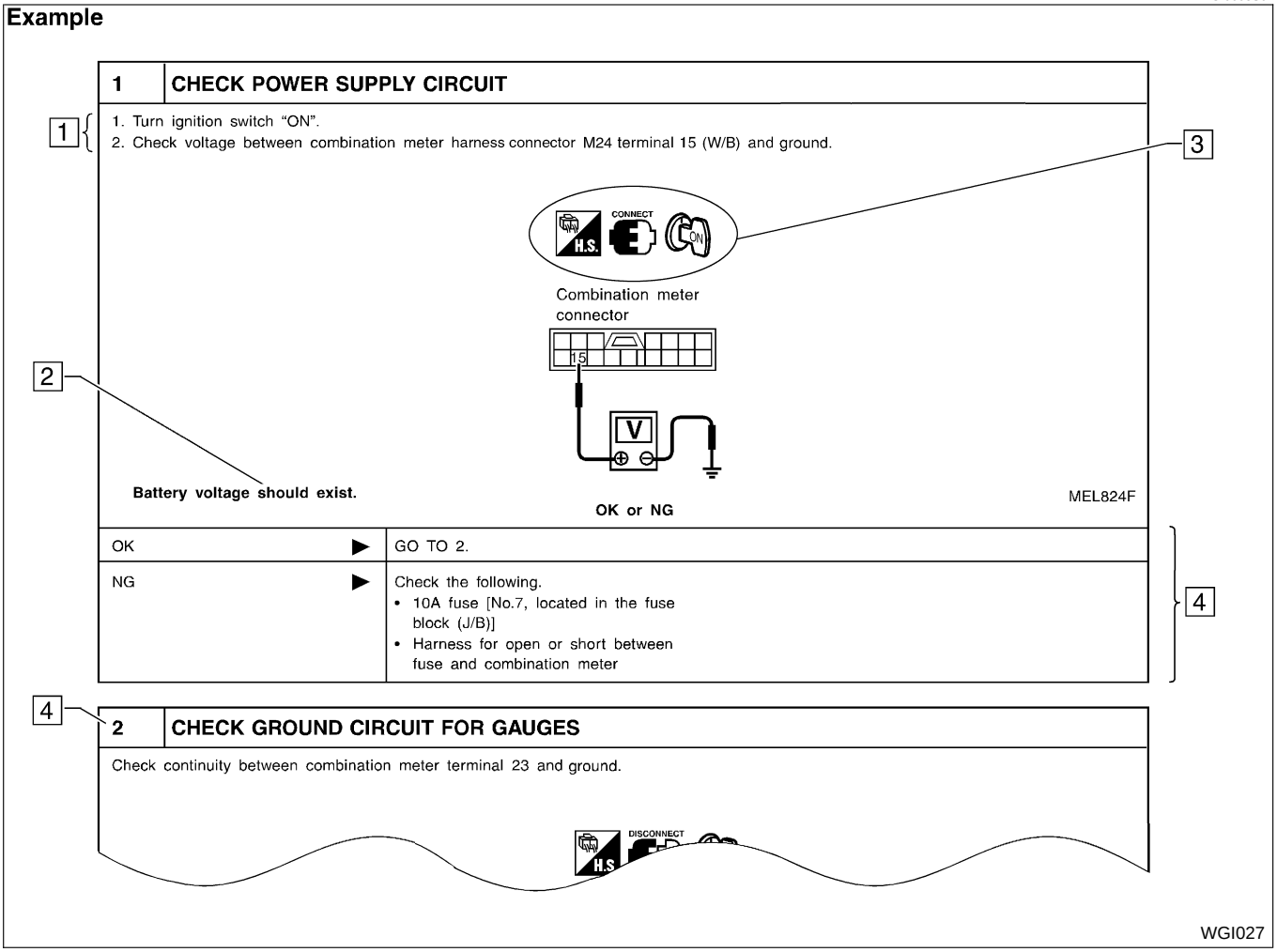

1) **Work and diagnostic procedure**
Start to diagnose a problem using procedures indicated in enclosed test groups.

2) **Questions and required results.**
Questions and required results are indicated in bold type in test group.
The meaning of are as follows:

a. Battery voltage → 11 - 14V or approximately 12V

b. Voltage: Approximately 0V → Less than 1V

c. Resistance: Continuity should exist → Approximately 0Ω

3) **Symbol used in illustration**
Symbols included in illustrations refer to measurements or procedures. Before diagnosing a problem, familiarize yourself with each symbol. Refer to "CONNECTOR SYMBOLS", GI-15 and "Key to Symbols Signifying Measurements or Procedures", GI-36.

4) **Action items**
Next action for each test group is indicated based on result of each question. Test group number is shown in the left upper portion of each test group.

Harness Wire Color and Connector Number Indication

NEGI0005S03

There are two types of harness wire color and connector number indication.

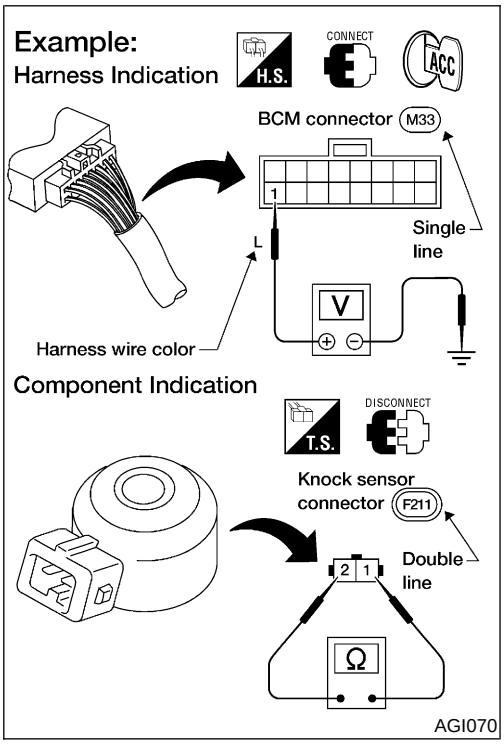

TYPE 1: HARNESS WIRE COLOR AND CONNECTOR NUMBER ARE SHOWN IN ILLUSTRATION

NEGI0005S0301

- Letter designations next to test meter probe indicate harness wire color.
- Connector numbers in a single circle (e.g. M33) indicate harness connectors.
- Connector numbers in a double circle indicate component connectors.

TYPE 2: HARNESS WIRE COLOR AND CONNECTOR NUMBER ARE SHOWN IN TEXT

=NEGI0005S0302

Example 1:

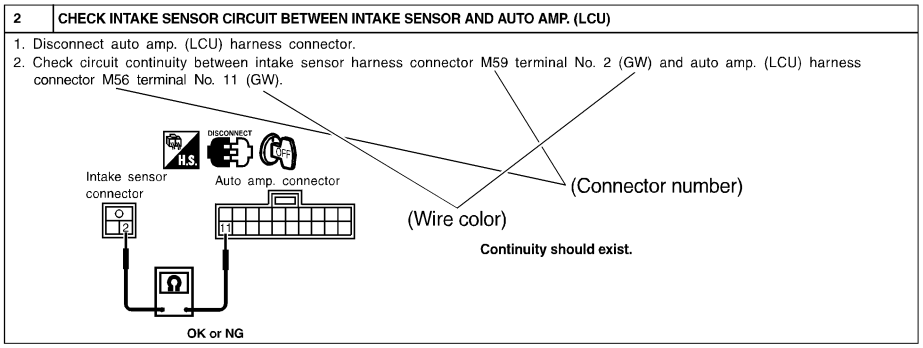

Example 2:

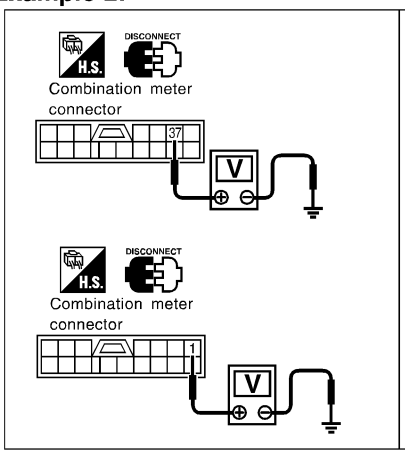

POWER SUPPLY AND GROUND CIRCUIT CHECK

Power Supply Circuit Check

=NCEL00-16S07
NCEL00-16S0701

Terminals			Ignition switch position		
(+)		(–)	OFF	ACC	ON
Connector	Terminal (Wire color)				
M40	37 (Y)	Ground	Battery voltage	Battery voltage	Battery voltage
M41	1 (Y)	Ground	0V	0V	Battery voltage

If NG, check the follwing.
- 7.5A fuse [No. 5, located in fuse block (J/B)]
- 10A fuse [No. 11, located in fuse block (J/B)]
- Harness for open or short between fuse and combination meter

Connector number Wire color

SGI144A

Key to Symbols Signifying Measurements or Procedures

NEGI0005S02

Symbol	Symbol explanation	Symbol	Symbol explanation
DISCONNECT	Check after disconnecting the connector to be measured.	GST	Procedure with Generic Scan Tool (GST, OBD-II scan tool)
CONNECT	Check after connecting the connector to be measured.	NO TOOLS	Procedure without CONSULT-II or GST
	Insert key into ignition switch.	A/C	A/C switch is OFF.
	Remove key from ignition switch.	A/C	A/C switch is ON.
OFF	Turn ignition switch to OFF position.		REC switch is ON.
ON	Turn ignition switch to ON position.		REC switch is OFF.

Symbol	Symbol explanation	Symbol	Symbol explanation
	Turn ignition switch to "START" position.		DEF switch is ON.
	Turn ignition switch from OFF to ACC position.		VENT switch is ON.
	Turn ignition switch from ACC to OFF position.		Fan switch is ON. (At any position except for OFF position)
	Turn ignition switch from OFF to ON position.		Fan switch is OFF.
	Turn ignition switch from ON to OFF position.	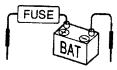	Apply positive voltage from battery with fuse directly to components.
	Do not start engine, or check with engine stopped.		Drive vehicle.
	Start engine, or check with engine running.		Disconnect battery negative cable.
	Apply parking brake.		Depress brake pedal.
	Release parking brake.		Release brake pedal.
	Check after engine is warmed up sufficiently.		Depress accelerator pedal.
	Voltage should be measured with a voltmeter.		Release accelerator pedal.
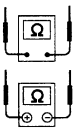	Circuit resistance should be measured with an ohmmeter.	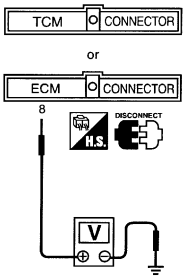	Pin terminal check for SMJ type ECM and TCM connectors. **For details regarding the terminal arrangement, refer to the foldout page.** 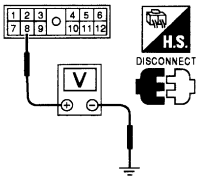
	Current should be measured with an ammeter.		
	Procedure with CONSULT-II		
	Procedure without CONSULT-II		

Function and System Application

NEGI0006S01

Diagnostic test mode	Function	Engine	A/T	Air bag	ABS
Work support	This mode enables a technician to adjust some devices faster and more accurately by following the indications on CONSULT-II.	x	—	—	—
DTC work support	Select the operating condition to confirm Diagnosis Trouble Codes.	—	x	—	—
Self-diagnostic results	Self-diagnostic results can be read and erased quickly.	x	x	x	x
Trouble diagnostic record	Current self-diagnostic results and all trouble diagnostic records previously stored can be read.	—	—	x	—
ECU discriminated No.	Classification number of a replacement ECU can be read to prevent an incorrect ECU from being installed.	—	—	x	—
Data monitor	Input/Output data in the ECU (ECM) can be read.	x	x	—	x
Data monitor (Spec.)	The specified values will be displayed when an OK/NG judgment is difficult for the DATA MONITOR items by Bar Chart and Line Graph.	x	—	—	—
Active test	Diagnostic Test Mode in which CONSULT-II drives some actuators apart from the ECUs and also shifts some parameters in a specified range.	x	—	—	x
SRT & DTC confirmation	The results of SRT (System Readiness Test) and the self-diagnosis status/result can be confirmed.	x	x*	—	—
ECU (ECM) part number	ECU (ECM) part number can be read.	x	x	—	x

x: Applicable

*: For VG33E engine

Nickel Metal Hydride Battery Replacement

NEGI0006S02

CONSULT-II contains a Nickel Metal Hydride battery. When replacing the battery obey the following:

WARNING:

Replace the Nickel Metal Hydride battery with genuine CONSULT-II battery only. Use of another battery may present a risk of fire or explosion. The battery may present a fire or chemical burn hazard if mistreated. Do not recharge, disassemble, or dispose of in fire.

Keep the battery out of reach of children and discard used battery conforming to the local regulations.

Checking Equipment

=NEGI0006S03

When ordering the below equipment, contact your NISSAN distributor.

Tool name	Description
NISSAN CONSULT-II ① CONSULT-II unit (Tester internal soft: Resident Version 3.2.0) and accessories ② Program card AED00A-1 (Version 4.11) For details, refer to Consult-II Operation Manual.	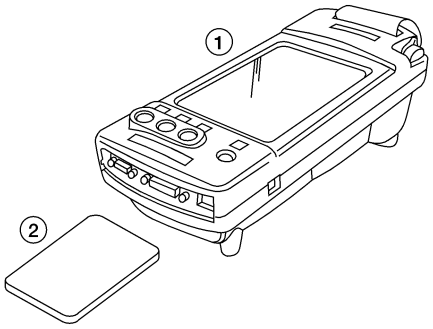 AGI123

Loading Procedure

NEGI0006S04

NOTE:

- **The CONSULT-II must be used in conjunction with a program card. CONSULT-II does not require loading (Initialization) procedure.**
- **Be sure the CONSULT-II is turned off before installing or removing a program card.**

CONSULT-II Data Link Connector (DLC) Circuit

NEGI0006S05

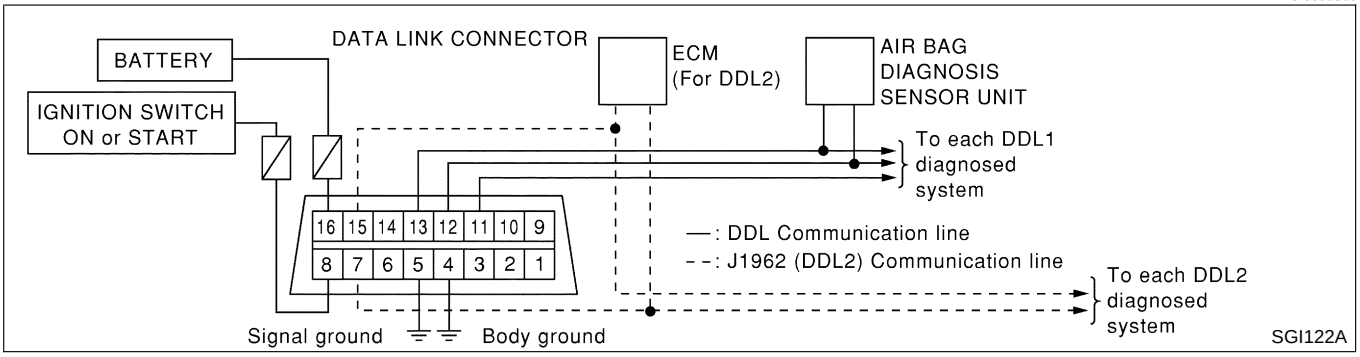

INSPECTION PROCEDURE

NEGI0006S0501

If the CONSULT-II cannot diagnose the system properly, check the following items.

Symptom	Check item
CONSULT-II cannot access any system.	• CONSULT-II DLC power supply circuit (Terminal 8) and ground circuit (Terminal 4) (For detailed circuit, refer to ***EC-615*** (KA24DE), ***EC-1216*** (VG33E) or ***EC-1819*** (VG33ER), “MIL & Link Connectors Wiring Diagram”. • CONSULT-II DDL cable
CONSULT-II cannot access individual system. (Other systems can be accessed.) Refer to “Function and System Application”, GI-38 for the systems supported by CONSULT-II.	• CONSULT-II program card (Check the appropriate CONSULT-II program card for the system. Refer to “Checking Equipment”, GI-39. • Power supply and ground circuit for the control unit of the system (For detailed circuit, refer to wiring diagram for each system.) • Open or short circuit between the system and CONSULT-II DLC (For detailed circuit, refer to wiring diagram for each system.)

NOTE:

The DDL1 and DDL2 circuits from DLC pins 12, 13, 14 and 15 may be connected to more than one system. A short in a DDL circuit connected to a control unit in one system may affect CONSULT-II access to other systems.

Model Variation

NEGI0007S01

Drive Type	Body	Engine	Transmission	Grade	Model	
					U.S.A.	Canada
4x2	Regular Cab	KA24DE	Manual	XE	ABGALEFD22EUN	N/A
			Auto	XE	ABGALEBD22EUN	N/A
	King Cab		Manual	XE	BBGGLEFD22EUN	BBGGLEFD22ENN
			Auto	XE	BBGGLEBD22EUN	BBGGLEBD22ENN
		VG33E	Manual	XE	BLPGLEFD22EUN	BLPGLEFD22ENN
				SE	BLPGLFFD22EUN	N/A
			Auto	XE	BLPGLEAD22EUN	BLPGLEAD22ENN
				SE	BLPGLFAD22EUN	N/A
	Crew Cab		Manual	XE	CLPGLEFD22EUN	CLPGLEFD22ENN
				SE	CLPGLFFD22EUN	CLPGLFFD22ENN
			Auto	XE	CLPGLEAD22EUN	CLPGLEAD22ENN
				SE	CLPGLFAD22EUN	CLPGLFAD22ENN
	King Cab	VG33ER	Manual	SC	BLPGLMFD22RUN	N/A
			Auto	SC	BLPGLMAD22RUN	N/A
	Crew Cab		Manual	SC	CLPGLMFD22RUN	CLPGLMFD22RNN
			Auto	SC	CLPGLMAD22RUN	CLPGLMAD22RNN
4X4	King Cab	VG33E	Manual	XE	BLPULEFD22EUN	BLPULEFD22ENN
				SE	BLPULFFD22EUN	N/A
			Auto	XE	BLPULEAD22EUN	BLPULEAD22ENN
				SE	BLPULFAD22EUN	N/A
	Crew Cab		Manual	XE	CLPULEFD22EUN	CLPULEFD22ENN
				SE	CLPULFFD22EUN	CLPULFFD22ENN
			Auto	XE	CLPULEAD22EUN	CLPULEAD22ENN
				SE	CLPULFAD22EUN	CLPULFAD22ENN
	King Cab	VG33ER	Manual	SC	BLPULMFD22RUN	N/A
			Auto	SC	BLPULMAD22RUN	N/A
	Crew Cab		Manual	SC	CLPULMFD22RUN	CLPULMFD22RNN
			Auto	SC	CLPULMAD22RUN	CLPULMAD22RNN

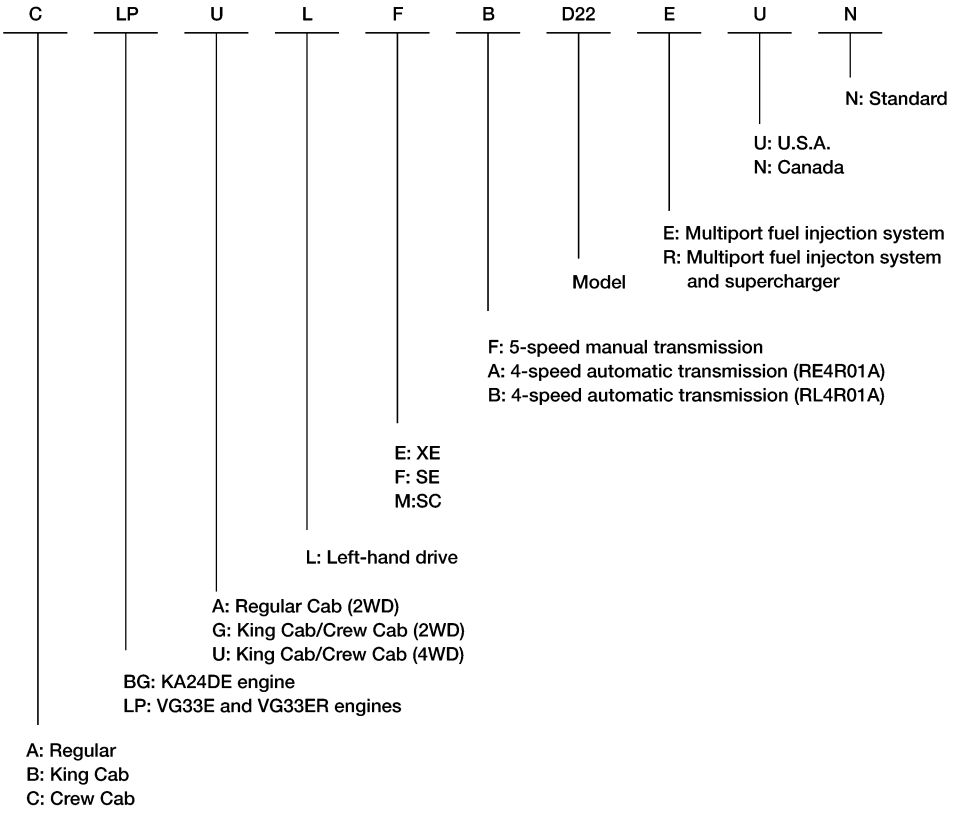
C
LP
U
L
F
B
D22
E
U
N
N: Standard
U: U.S.A.
N: Canada
E: Multiport fuel injection system
R: Multiport fuel injecton system and supercharger
Model
F: 5-speed manual transmission
A: 4-speed automatic transmission (RE4R01A)
B: 4-speed automatic transmission (RL4R01A)
E: XE
F: SE
M:SC
L: Left-hand drive
A: Regular Cab (2WD)
G: King Cab/Crew Cab (2WD)
U: King Cab/Crew Cab (4WD)
BG: KA24DE engine
LP: VG33E and VG33ER engines
A: Regular
B: King Cab
C: Crew Cab

WGI030

Identification Number

=NEGI0007S02

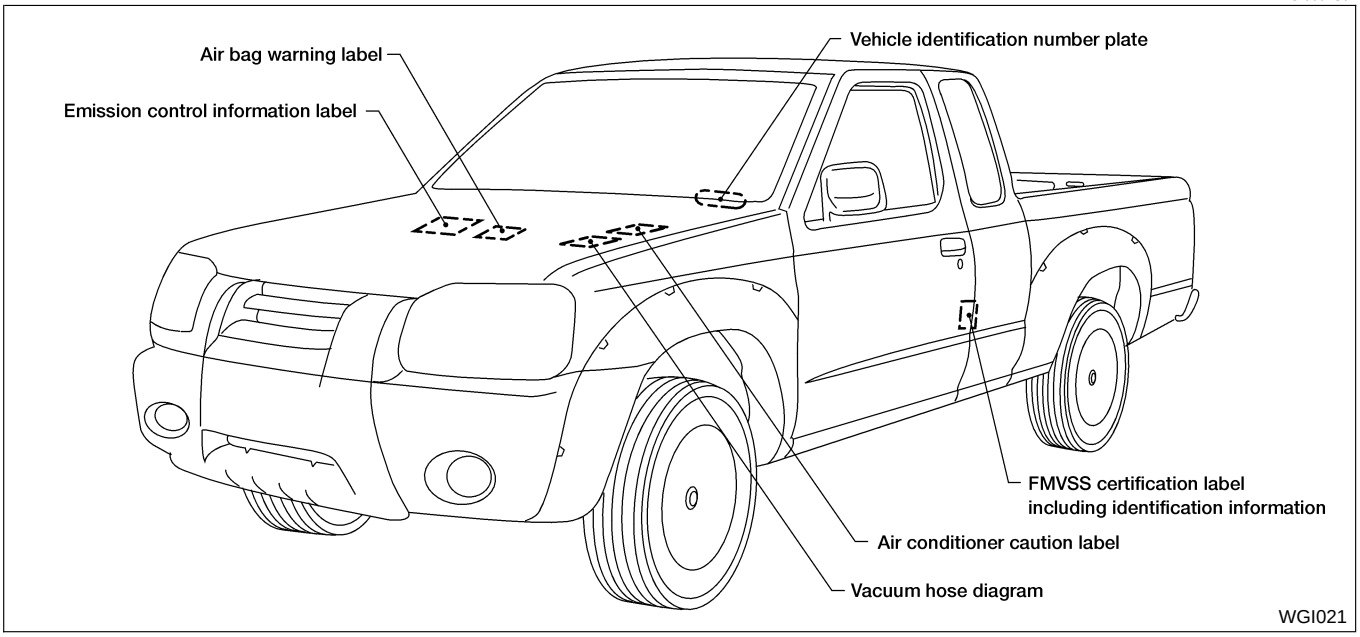

WGI021

VEHICLE IDENTIFICATION NUMBER ARRANGEMENT

NEGI0007S0201

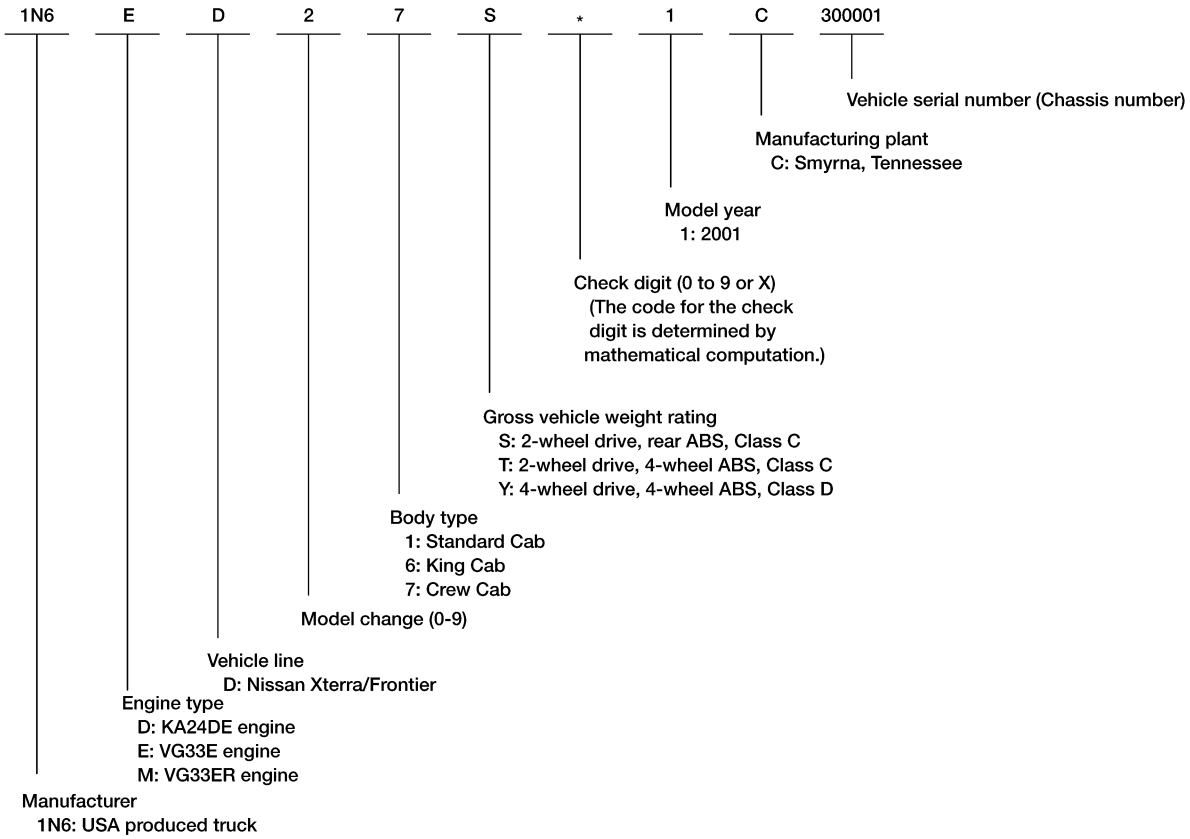

WGI041

KA24DE Engine serial number

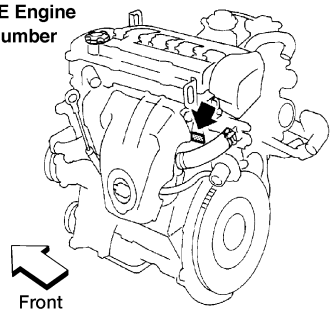

AGI106

ENGINE SERIAL NUMBER

NEGI0007S0203

VG33E and VG33ER Engine serial numbers

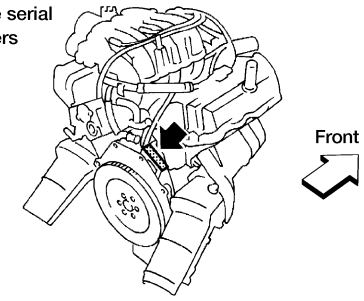

WGI029

Transfer serial number

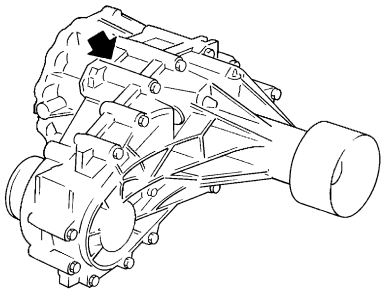

AGI108

TRANSFER SERIAL NUMBER

NEGI0007S0207

Manual transmission number

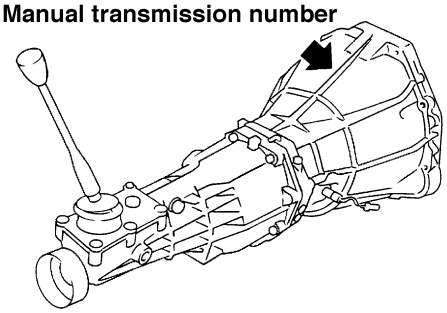

AGI109

MANUAL TRANSMISSION NUMBER

NEGI0007S0210

Identification Number (Cont'd)

RL4R01A
Automatic transmission number

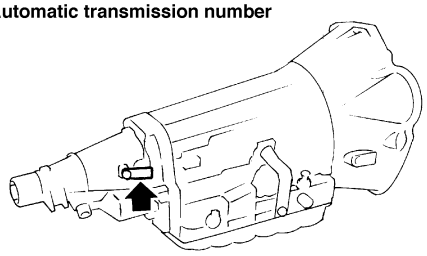

AGI110

RE4R01A
Automatic transmission number

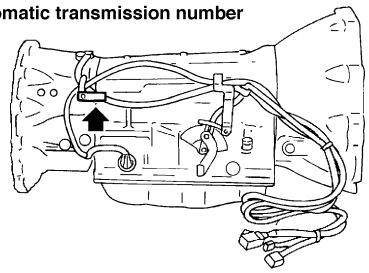

AGI111

AUTOMATIC TRANSMISSION NUMBER

NEGI0007S0205

Dimensions

NEGI0007S03

Unit: mm (in)

Drive Type	2WD			4WD	
Body	Regular Cab	King Cab	Crew Cab	King Cab	Crew Cab
Wheelbase	Short	Long	Long	Long	Long
Overall Length*1	4699 (185)	4999 (196.8)	4906 (193.1)	4999 (196.8)	4906 (193.1)
Overall Width	1720 (67.7)	1664 (65.5)*5 1808 (71.2)*4	1664 (65.5)*5 1808 (71.2)*4	1664 (65.5)*5 1808 (71.2)*4	1664 (65.5)*5 1808 (71.2)*4
Overall Height	1613 (63.5)	1605 (63.2)*2 1694 (66.7)*3 1687 (66.4)*6	1687 (66.4)	1694 (66.7)*3 1687 (66.4)*6	1687 (66.4)
Front Tread	1395 (54.9)	1395 (54.9)*2 1525 (60)*3, *6	1525 (60)	1525 (60)	1525 (60)
Rear Tread	1390 (54.7)	1390 (54.7)*2 1507 (59.3)*3, *6	1507 (59.3)	1507 (59.3)	1507 (59.3)
Wheelbase	2648 (104.3)	2950 (116.1)	2950 (116.1)	2950 (116.1)	2950 (116.1)
Minimum Running Ground Clearance (at Front Suspension)	N/A	N/A*2 N/A*6 229 (9.0)*7 246 (9.7)*8	209 (8.2)*7 226 (8.9)*6, *8	201 (7.9)*6 229 (9.0)*7 244 (9.6)*8	209 (8.2)*7 226 (8.9)*6, *8

*1: The step bumper adds 175 mm (6.9 in) to the overall length.
*2: XE with KA24DE engine.
*3: XE with VG33E engine and SE models.
*4: With over-fender.
*5: Without over-fender.
*6: SC with VG33ER engine.
*7: XE with VG33E engine.
*8: SE models.

Wheels & Tires

NEGI0007S04

Drive Type	Grade	Road wheel	Tire	Spare tire size
4x2	XE	15x6JJ Steel, 15x7JJ Alloy	P225/70R15	T135/90D16
		15x7JJ Steel, 15x7JJ Alloy	P265/70R15*	P265/70R15*
	SE	16x7JJ Alloy	P255/65R16	P255/65R16
	SC	17x8JJ Alloy	P265/55R17	P265/55R17
4x4	XE	15x7JJ Steel, 15x7JJ Alloy	P265/70R15	P265/70R15
	SE	16x7JJ Alloy	P265/70R16	P265/70R16
	SC	17x8JJ Alloy	P265/55R17	P265/55R17

*: Not available with KA24DE engine.

LIFTING POINTS AND TOW TRUCK TOWING

WARNING:

- **Never get under the vehicle while it is supported only by the jack. Always use safety stands to support the frame when you have to get under the vehicle.**
- **Place wheel chocks at both front and back of the wheels on the ground.**

Pantograph Jack

NEGI0008S01

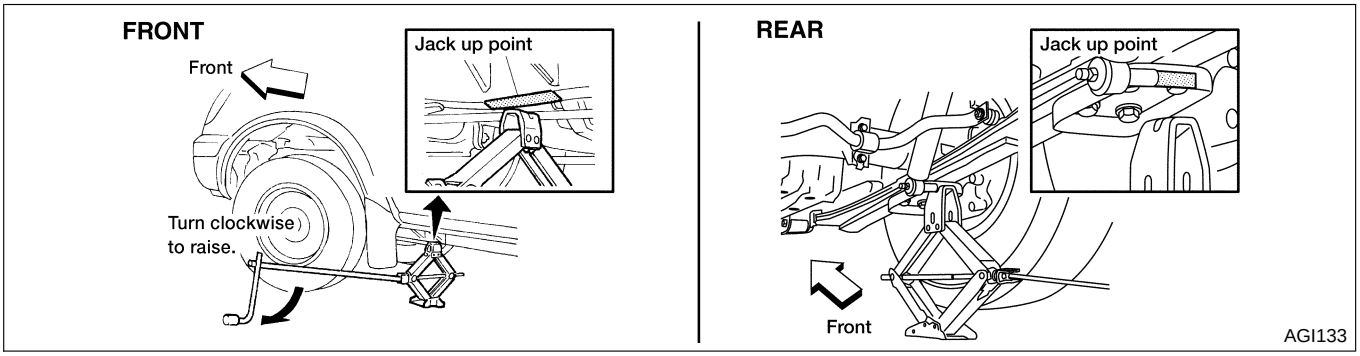

Garage Jack and Safety Stand

NEGI0008S02

CAUTION:

Place a wooden or rubber block between safety stand and vehicle body when the supporting body is flat.

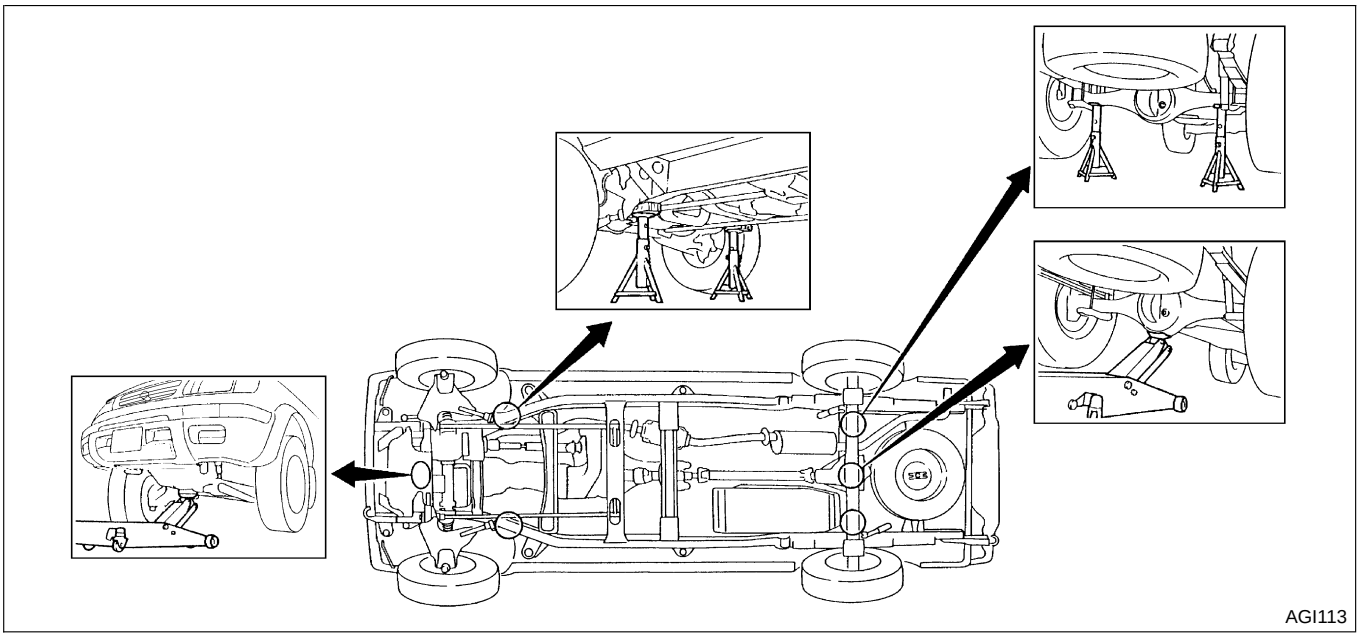

2-pole Lift

=NEGI0008S03

WARNING:

When lifting the vehicle, open the lift arms as wide as possible and ensure that the front and rear of the vehicle are well balanced.

When setting the lift arm, do not allow the arm to contact the brake tubes, brake cable, or fuel lines.

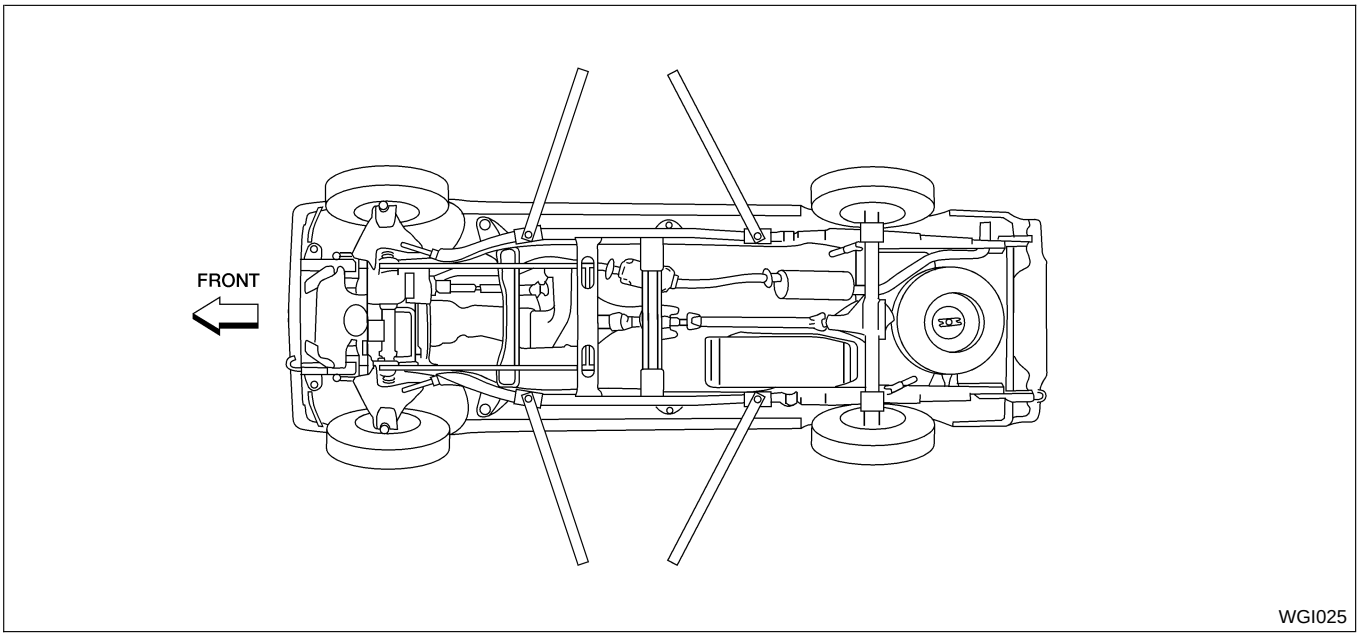

WGI025

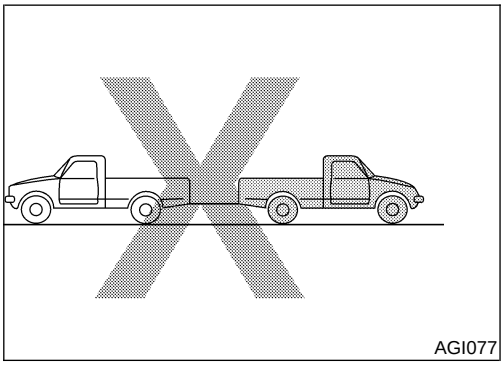

AGI077

Tow Truck Towing

NEGI0008S04

CAUTION:

- **All applicable State or Provincial (in Canada) laws and local laws regarding the towing operation must be obeyed.**
- **It is necessary to use proper towing equipment to avoid possible damage during towing operation. Towing is in accordance with Towing Procedure Manual at dealer.**
- **Always attach safety chains before towing.**
- **When towing, make sure that the transmission, steering system and power train are in good order. If any unit is damaged, dollies must be used.**
- **Never tow an automatic transmission model from the rear (i.e., backward) with four wheels on the ground as this may cause serious and expensive damage to the transmission.**

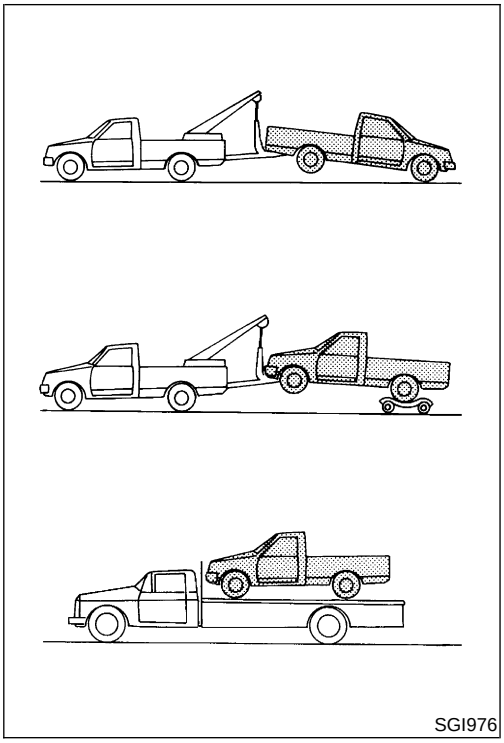
SGI976

2-WHEEL DRIVE MODELS

NEGI0008S0406

NISSAN recommends that vehicle be towed with the driving (rear) wheels off the ground as illustrated.

CAUTION:

- **When towing with the front wheels on the ground: Turn the ignition key to the OFF position and move the transmission shift lever to the neutral position. On automatic transmission models, to move the selector lever to N (neutral) position, turn the ignition key to OFF position and secure the steering wheel in a straight ahead position with a rope or similar device. Never place the ignition key in the LOCK position. This will result in damage to the steering lock mechanism.**
- **When towing manual transmission models with the rear wheels on the ground (if you do not use a towing dollies): Always release the parking brake and move the transmission shift lever to the neutral position.**

Observe the following restricted towing speeds and distances.

Speed: Below 95 km/h (60 MPH)

Distance: Less than 800 km (500 miles)

If the speed or distance must necessarily be greater, remove the propeller shaft before hand to prevent damage to the transmission. NISSAN recommends that the vehicle be towed with the driving (front) wheels off the ground as illustrated.

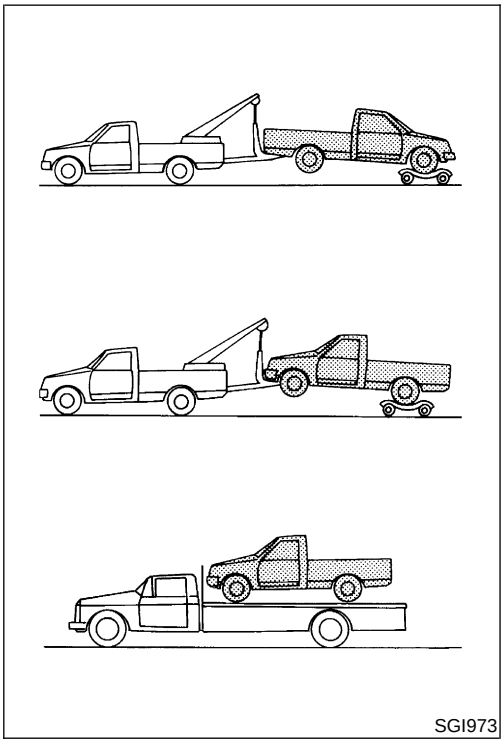
SGI973

4-WHEEL DRIVE MODELS

NEGI0008S0407

NISSAN recommends that a dolly be used as illustrated when towing 4–wheel drive models.

CAUTION:

- **When towing with the front wheels on the ground or rear wheels on the ground (If you do not use towing dollies): Set the free-running hubs to the free position and move the transfer case shift lever into the "2H" position.**
- **When towing with the front on the ground: Turn the ignition key to the OFF position and secure the steering wheel in a straight ahead position with a rope or similar device. Never place the ignition key in the LOCK position. This will result in damage to the steering lock mechanism.**
- **When towing manual transmission models with the rear wheels on the ground:**
  Always release the parking brake and move the transmission shift lever to the neutral position.

Observe the following restricted towing speeds and distances.

Speed: Below 95 km/h (60 MPH)

Distance: Less than 800 km (500 miles)

If the speed or distance must necessarily be greater, remove the propeller shaft before hand to prevent damage to the transmission.

TOWING POINT

NEGI0008S0409

Never tow the vehicle using only the towing points. To avoid damaging the vehicle body, use proper towing equipment when towing.

Front

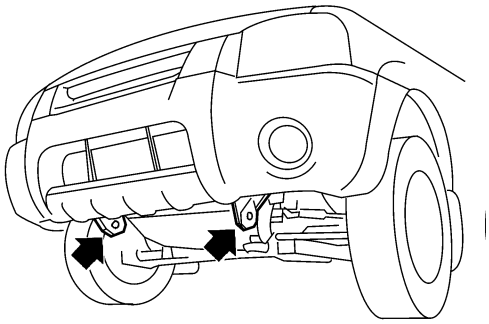

Rear

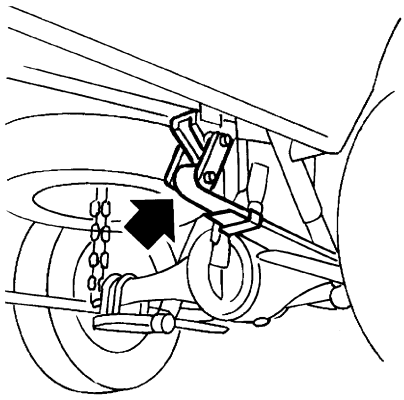

WGI022

VEHICLE RECOVERY (FREEING A STUCK VEHICLE)

NEGI0008S0403

- **Tow chains or cables must be attached only to the main structural members of the vehicle.**
- **Pulling devices should be routed so they do not touch any part of the suspension, steering, brake or cooling systems**
- **Always pull the cable straight out from the front or rear of the vehicle. Never pull the vehicle at a sideways angle.**
- **Pulling devices such as ropes or canvas straps are not recommended for use for vehicle towing or recovery.**

TIGHTENING TORQUE OF STANDARD BOLTS

Grade	Bolt size	Bolt diameter * mm	Pitch mm	Tightening torque (Without lubricant)							
				Hexagon head bolt				Hexagon flange bolt			
				N·m	kg-m	ft-lb	in-lb	N·m	kg-m	ft-lb	in-lb
4T	M6	6.0	1.0	5.1	0.52	3.8	45.1	6.1	0.62	4.5	53.8
	M8	8.0	1.25	13	1.3	9	—	15	1.5	11	—
			1.0	13	1.3	9	—	16	1.6	12	—
	M10	10.0	1.5	25	2.5	18	—	29	3.0	22	—
			1.25	25	2.6	19	—	30	3.1	22	—
	M12	12.0	1.75	42	4.3	31	—	51	5.2	38	—
			1.25	46	4.7	34	—	56	5.7	41	—
	M14	14.0	1.5	74	7.5	54	—	88	9.0	65	—
7T	M6	6.0	1.0	8.4	0.86	6.2	74.6	10	1.0	7	87
	M8	8.0	1.25	21	2.1	15	—	25	2.5	18	—
			1.0	22	2.2	16	—	26	2.7	20	—
	M10	10.0	1.5	41	4.2	30	—	48	4.9	35	—
			1.25	43	4.4	32	—	51	5.2	38	—
	M12	12.0	1.75	71	7.2	52	—	84	8.6	62	—
			1.25	77	7.9	57	—	92	9.4	68	—
	M14	14.0	1.5	127	13.0	94	—	147	15.0	108	—
9T	M6	6.0	1.0	12	1.2	9	—	15	1.5	11	—
	M8	8.0	1.25	29	3.0	22	—	35	3.6	26	—
			1.0	31	3.2	23	—	37	3.8	27	—
	M10	10.0	1.5	59	6.0	43	—	70	7.1	51	—
			1.25	62	6.3	46	—	74	7.5	54	—
	M12	12.0	1.75	98	10.0	72	—	118	12.0	87	—
			1.25	108	11.0	80	—	137	14.0	101	—
	M14	14.0	1.5	177	18.0	130	—	206	21.0	152	—

*: Nominal diameter

1) **Special parts are excluded.**

2) **This standard is applicable to bolts having the following marks embossed on the bolt head.**

Grade	Mark
4T	4
7T	7
9T	9

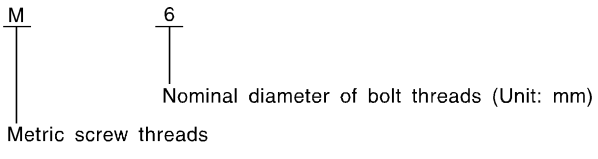

MGI044A

SAE J1930 Terminology List

NEGI0010S01

All emission related terms used in this publication in accordance with SAE J1930 are listed. Accordingly, new terms, new acronyms/abbreviations and old terms are listed in the following chart.

NEW TERM	NEW ACRONYM / ABBREVIATION	OLD TERM
Air cleaner	ACL	Air cleaner
Barometric pressure	BARO	***
Barometric pressure sensor-BCDD	BAROS-BCDD	BCDD
Camshaft position	CMP	***
Camshaft position sensor	CMPS	Crank angle sensor
Canister	***	Canister
Carburetor	CARB	Carburetor
Charge air cooler	CAC	Intercooler
Closed loop	CL	Closed loop
Closed throttle position switch	CTP switch	Idle switch
Clutch pedal position switch	CPP switch	Clutch switch
Continuous fuel injection system	CFI system	***
Continuous trap oxidizer system	CTOX system	***
Crankshaft position	CKP	***
Crankshaft position sensor	CKPS	***
Data link connector	DLC	***
Diagnostic test mode	DTM	Diagnostic mode
Diagnostic test mode selector	DTM selector	Diagnostic mode selector
Diagnostic test mode I	DTM I	Mode I
Diagnostic test mode II	DTM II	Mode II
Diagnostic trouble code	DTC	Malfunction code
Direct fuel injection system	DFI system	***
Distributor ignition system	DI system	Ignition timing control
Early fuel evaporation-mixture heater	EFE-mixture heater	Mixture heater
Early fuel evaporation system	EFE system	Mixture heater control
Electrically erasable programmable read only memory	EEPROM	***
Electronic ignition system	EI system	Ignition timing control
Engine control	EC	***
Engine control module	ECM	ECCS control unit
Engine coolant temperature	ECT	Engine temperature
Engine coolant temperature sensor	ECTS	Engine temperature sensor
Engine modification	EM	***
Engine speed	RPM	Engine speed
Erasable programmable read only memory	EPROM	***

SAE J1930 Terminology List (Cont'd)

NEW TERM	NEW ACRONYM / ABBREVIATION	OLD TERM
Evaporative emission canister	EVAP canister	Canister
Evaporative emission system	EVAP system	Canister control solenoid valve
Exhaust gas recirculation valve	EGR valve	EGR valve
Exhaust gas recirculation control-BPT valve	EGRC-BPT valve	BPT valve
Exhaust gas recirculation control-solenoid valve	EGRC-solenoid valve	EGR control solenoid valve
Exhaust gas recirculation temperature sensor	EGRT sensor	Exhaust gas temperature sensor
EGR temperature sensor		
Flash electrically erasable programmable read only memory	FEEPROM	***
Flash erasable programmable read only memory	FEPROM	***
Flexible fuel sensor	FFS	***
Flexible fuel system	FF system	***
Fuel pressure regulator	***	Pressure regulator
Fuel pressure regulator control solenoid valve	***	PRVR control solenoid valve
Fuel trim	FT	***
Heated Oxygen sensor	HO2S	Exhaust gas sensor
Idle air control system	IAC system	Idle speed control
Idle air control valve-air regulator	IACV-air regulator	Air regulator
Idle air control valve-auxiliary air control valve	IACV-AAC valve	Auxiliary air control (AAC) valve
Idle air control valve-FICD solenoid valve	IACV-FICD solenoid valve	FICD solenoid valve
Idle air control valve-idle up control solenoid valve	IACV-idle up control solenoid valve	Idle up control solenoid valve
Idle speed control-FI pot	ISC-FI pot	FI pot
Idle speed control system	ISC system	***
Ignition control	IC	***
Ignition control module	ICM	***
Indirect fuel injection system	IFI system	***
Intake air	IA	Air
Intake air temperature sensor	IAT sensor	Air temperature sensor
Knock	***	Detonation
Knock sensor	KS	Detonation sensor
Malfunction indicator lamp	MIL	Check engine light
Manifold absolute pressure	MAP	***
Manifold absolute pressure sensor	MAPS	***
Manifold differential pressure	MDP	***

NEW TERM	NEW ACRONYM / ABBREVIATION	OLD TERM
Manifold differential pressure sensor	MDPS	***
Manifold surface temperature	MST	***
Manifold surface temperature sensor	MSTS	***
Manifold vacuum zone	MVZ	***
Manifold vacuum zone sensor	MVZS	***
Mass air flow sensor	MAFS	Air flow meter
Mixture control solenoid valve	MC solenoid valve	Air-fuel ratio control solenoid valve
Multiport fuel injection system	MFI system	Fuel injection control
Nonvolatile random access memory	NVRAM	***
On board diagnostic system	OBD system	Self-diagnosis
Open loop	OL	Open loop
Oxidation catalyst	OC	Catalyst
Oxidation catalytic converter system	OC system	***
Oxygen sensor	O2S	Exhaust gas sensor
Park position switch	***	Park switch
Park/neutral position switch	PNP switch	Park/neutral switch Inhibitor switch Neutral position switch
Periodic trap oxidizer system	PTOX system	***
Positive crankcase ventilation	PCV	Positive crankcase ventilation
Positive crankcase ventilation valve	PCV valve	PCV valve
Powertrain control module	PCM	***
Programmable read only memory	PROM	***
Pulsed secondary air injection control solenoid valve	PAIRC solenoid valve	AIV control solenoid valve
Pulsed secondary air injection system	PAIR system	Air induction valve (AIV) control
Pulsed secondary air injection valve	PAIR valve	Air induction valve
Random access memory	RAM	***
Read only memory	ROM	***
Scan tool	ST	***
Secondary air injection pump	AIR pump	***
Secondary air injection system	AIR system	***
Sequential multiport fuel injection system	SFI system	Sequential fuel injection
Service reminder indicator	SRI	***
Simultaneous multiport fuel injection system	***	Simultaneous fuel injection
Smoke puff limiter system	SPL system	***
Supercharger	SC	***
Supercharger bypass	SCB	***

SAE J1930 Terminology List (Cont'd)

NEW TERM	NEW ACRONYM / ABBREVIATION	OLD TERM
System readiness test	SRT	***
Thermal vacuum valve	TVV	Thermal vacuum valve
Three way catalyst	TWC	Catalyst
Three way catalytic converter system	TWC system	***
Three way + oxidation catalyst	TWC + OC	Catalyst
Three way + oxidation catalytic converter system	TWC + OC system	***
Throttle body	TB	Throttle chamber SPI body
Throttle body fuel injection system	TBI system	Fuel injection control
Throttle position	TP	Throttle position
Throttle position sensor	TPS	Throttle sensor
Throttle position switch	TP switch	Throttle switch
Torque converter clutch solenoid valve	TCC solenoid valve	Lock-up cancel solenoid Lock-up solenoid
Transmission control module	TCM	A/T control unit
Turbocharger	TC	Turbocharger
Vehicle speed sensor	VSS	Vehicle speed sensor
Volume air flow sensor	VAFS	Air flow meter
Warm up oxidation catalyst	WU-OC	Catalyst
Warm up oxidation catalytic converter system	WU-OC system	***
Warm up three way catalyst	WU-TWC	Catalyst
Warm up three way catalytic converter system	WU-TWC system	***
Wide open throttle position switch	WOTP switch	Full switch

MAINTENANCE

SECTION MA

CONTENTS

PRECAUTIONS 3
Supplemental Restraint System (SRS) ″AIR BAG″ and ″SEAT BELT PRE-TENSIONER″ 3
PREPARATION 4
Special Service Tools 4
Commercial Service Tool 4
GENERAL MAINTENANCE 5
PERIODIC MAINTENANCE 7
Schedule 1 8
EMISSION CONTROL SYSTEM MAINTENANCE 8
CHASSIS AND BODY MAINTENANCE 9
Schedule 2 11
EMISSION CONTROL SYSTEM MAINTENANCE 11
CHASSIS AND BODY MAINTENANCE 12
RECOMMENDED FLUIDS AND LUBRICANTS 13
Fluids and Lubricants 13
SAE Viscosity Number 14
GASOLINE ENGINE OIL 14
GEAR OIL 15
Anti-freeze Coolant Mixture Ratio 15

KA24DE

ENGINE MAINTENANCE 16
Checking Drive Belts 16
DRIVE BELT DEFLECTION AND TENSION 17
Changing Engine Coolant 17
-DRAINING ENGINE COOLANT- 17
-REFILLING ENGINE COOLANT- 17
-FLUSHING COOLING SYSTEM- 18
Checking Fuel Lines 19
Changing Fuel Filter 19
WITH CONSULT - II 19
WITHOUT CONSULT - II 20
Changing Air Cleaner Filter 20
Changing Engine Oil 20
Changing Oil Filter 21
Changing Spark Plugs 22
Checking EVAP Vapor Lines 23
Changing Positive Crankcase Ventilation (PCV) Filter 23
SERVICE DATA AND SPECIFICATIONS (SDS) 24
Engine Maintenance 24
KA24DE 24

VG33E AND VG33ER

ENGINE MAINTENANCE 25
Checking Drive Belts 25
DRIVE BELT DEFLECTION AND TENSION 27
Changing Engine Coolant 27
-DRAINING ENGINE COOLANT- 27
-REFILLING ENGINE COOLANT- 28
-FLUSHING COOLING SYSTEM- 29
Checking Fuel Lines 29
Changing Fuel Filter 29
WITH CONSULT - II 29
WITHOUT CONSULT - II 30
Changing Air Cleaner Filter 30
VISCOUS PAPER TYPE 30
Changing Engine Oil 30
Changing Oil Filter 31
Changing Spark Plugs 32
Checking EVAP Vapor Lines 35
SERVICE DATA AND SPECIFICATIONS (SDS) 36
Engine Maintenance 36
VG33E AND VG33ER 36

CHASSIS AND BODY MAINTENANCE 37
Checking Exhaust System 37
Checking Clutch Fluid Level and Leaks 37
Checking M/T Oil 37
Changing M/T Oil 37
Checking A/T Fluid 38
Changing A/T Fluid 38
Checking Transfer Fluid 39
Changing Transfer Fluid 39
Checking Propeller Shaft 39
Greasing Propeller Shaft 40

CONTENTS (Cont'd)

Checking Differential Gear Oil 40
Changing Differential Gear Oil 40
LIMITED-SLIP DIFFERENTIAL GEAR 41
Balancing Wheels 41
Tire Rotation 41
Checking Brake Fluid Level and Leaks 41
Checking Brake Lines and Cables 41
Checking Disc Brake 42
ROTOR 42
CALIPER 42
PAD 42
Checking Drum Brake 42
WHEEL CYLINDER 42
LINING 42
Checking Steering Gear and Linkage 43
STEERING GEAR 43
STEERING LINKAGE 43
Checking Power Steering Fluid and Lines 43
CHECKING FLUID LEVEL 43
CHECKING LINES 43
Lubricating Locks, Hinges and Hood Latches 44
Checking Seat Belts, Buckles, Retractors, Anchors and Adjusters 45
SERVICE DATA AND SPECIFICATIONS (SDS) 46
Chassis and Body Maintenance 46
WHEEL BALANCE 46

Supplemental Restraint System (SRS) “AIR BAG” and “SEAT BELT PRE-TENSIONER”

NEMA0001

The Supplemental Restraint System such as “AIR BAG” and “SEAT BELT PRE-TENSIONER”, used along with a seat belt, helps to reduce the risk or severity of injury to the driver and front passenger in a frontal collision. The Supplemental Restraint System consists of driver air bag module (located in the center of the steering wheel), front passenger air bag module (located on the instrument panel on passenger side), seat belt pre-tensioners, a diagnosis sensor unit, warning lamp, wiring harness, and spiral cable.

The vehicle (except Crew Cab model) is equipped with a passenger air bag deactivation switch. Because no rear seat exists where a rear-facing child restraint can be placed, the switch is designed to turn off the passenger air bag so that a rear-facing child restraint can be used in the front passenger seat. The switch is located in the center of the instrument panel, near the ashtray. When the switch is turned to the ON position, the passenger air bag is enabled and could inflate in a frontal collision. When the switch is turned to the OFF position, the passenger air bag is disabled and will not inflate in a frontal collision. A passenger air bag OFF indicator on the instrument panel lights up when the passenger air bag is switched OFF. The driver air bag always remains enabled and is not affected by the passenger air bag deactivation switch.

Information necessary to service the system safely is included in the **RS section** of this Service Manual.

WARNING:

- **To avoid rendering the SRS inoperative, which could increase the risk of personal injury or death in the event of a collision which would result in air bag inflation, all maintenance should be performed by an authorized NISSAN dealer.**
- **Improper maintenance, including incorrect removal and installation of the SRS, can lead to personal injury caused by unintentional activation of the system. For removal of Spiral Cable and Air Bag Module, see the RS section.**
- **Do not use electrical test equipment on any circuit related to the SRS unless instructed to in this Service Manual. Spiral cable and wiring harnesses (except “SEAT BELT PRE-TENSIONER”) are covered with yellow insulation either just before the harness connectors or for the complete harness are related to the SRS.**
- **The vehicle (except Crew Cab model) is equipped with a passenger air bag deactivation switch which can be operated by the customer. When the passenger air bag is switched OFF, the passenger air bag is disabled and will not inflate in a frontal collision. When the passenger air bag is switched ON, the passenger air bag is enabled and could inflate in a frontal collision. After SRS maintenance or repair, make sure the passenger air bag deactivation switch is in the same position (ON or OFF) as when the vehicle arrived for service.**

Special Service Tools

NEMA0002

The actual shapes of Kent-Moore tools may differ from those of special service tools illustrated here.

Tool number (Kent-Moore No.) Tool name	Description
KV10115801 (J38956) Oil filter cap wrench	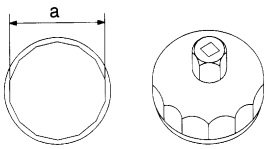 NT375 Removing oil filter **a: 64.3 mm (2.531 in)**

Commercial Service Tool

NEMA0052

Tool name (Kent-Moore No.)	Description
Belt tension gauge (BT3373-F)	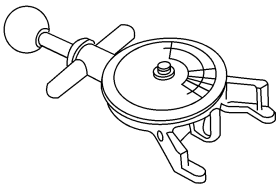 AMA126 Checking drive belt tension

GENERAL MAINTENANCE

General maintenance includes those items which should be checked during the normal day-to-day operation of the vehicle. They are essential if the vehicle is to continue operating properly. The owners can perform checks and inspections themselves or have their NISSAN dealers do them.

OUTSIDE THE VEHICLE

The maintenance items listed here should be performed from time to time, unless otherwise specified.

Item		Reference page
Tires	Check the pressure with a gauge periodically when at a service station, including the spare, and adjust to the specified pressure if necessary. Check carefully for damage, cuts or excessive wear.	"Tire Rotation", MA-41
Wheel nuts	When checking the tires, make sure no nuts are missing, and check for any loose nuts. Tighten if necessary.	"Tire Rotation", MA-41
Tire rotation	Tires should be rotated every 12,000 km (7,500 miles).	"Tire Rotation", MA-41
Wheel alignment and balance	If the vehicle pulls to either side while driving on a straight and level road, or if you detect uneven or abnormal tire wear, there may be a need for wheel alignment. If the steering wheel or seat vibrates at normal highway speeds, wheel balancing may be needed.	"Balancing Wheels", MA-41, ***SU-7***, "Front Wheel Alignment"
Windshield wiper blades	Check for cracks or wear if they do not wipe properly.	—
Doors and engine hood	Check that all doors and the engine hood operate smoothly as well as the trunk lid and back hatch. Also make sure that all latches lock securely. Lubricate if necessary. Make sure that the secondary latch keeps the hood from opening when the primary latch is released. When driving in areas using road salt or other corrosive materials, check lubrication frequently.	"Lubricating Locks, Hinges and Hood Latches", MA-44
Lamps	Make sure that the headlamps, stop lamps, tail lamps, turn signal lamps, and other lamps are all operating properly and installed securely. Also check headlamp aim.	***EL-37***, "Aiming Adjustment"

INSIDE THE VEHICLE

The maintenance items listed here should be checked on a regular basis, such as when performing periodic maintenance, cleaning the vehicle, etc.

Item		Reference page
Warning lamps and buzzers/chimes	Make sure that all warning lamps and buzzers/chimes are operating properly.	—
Windshield wiper and washer	Check that the wipers and washer operate properly and that the wipers do not streak.	—
Windshield defroster	Check that the air comes out of the defroster outlets properly and in sufficient quantity when operating the heater or air conditioner.	—
Steering wheel	Check that it has the specified play. Be sure to check for changes in the steering condition, such as excessive play, hard steering or strange noises.	***ST-6***, "Checking Steering Wheel Play"
Seats	Check seat position controls such as seat adjusters, seatback recliner, etc. to make sure they operate smoothly and that all latches lock securely in every position. Check that the head restraints move up and down smoothly and that the locks (if equipped) hold securely in all latched positions. Check that the latches lock securely for folding-down rear seatbacks.	—
Seat belts	Check that all parts of the seat belt system (e.g. buckles, anchors, adjusters and retractors) operate properly and smoothly and are installed securely. Check the belt webbing for cuts, fraying, wear or damage.	"Checking Seat Belts, Buckles, Retractors, Anchors and Adjusters", MA-45, ***RS-9***, "Seat Belt Inspection"
Accelerator pedal	Check that pedal for smooth operation and make sure the pedal does not catch or require uneven effort. Keep the floor mats away from the pedal.	***FE-3***, "Adjusting Accelerator Wire"

Item		Reference page
Clutch pedal	Make sure the pedal operates smoothly and check that it has the proper free play.	***CL-6***, “Adjusting Clutch Pedal”
Brakes	Check that the brake does not pull the vehicle to one side when applied.	—
Brake pedal and booster	Check the pedal for smooth operation and make sure it has the proper distance under it when depressed fully. Check the brake booster function. Be sure to keep floor mats away from the pedal.	***BR-17***, “Brake Pedal and Bracket” and ***BR-22***, “Brake Booster”
Parking brake	Check that the lever has the proper travel and make sure that the vehicle is held securely on a fairly steep hill when only the parking brake is applied.	***BR-36***, “Parking Brake Control”
Automatic transmission “Park” mechanism	Check that the lock release button on the selector lever operates properly and smoothly. On a fairly steep hill check that the vehicle is held securely with the selector lever in the P position without applying any brakes.	—

UNDER THE HOOD AND VEHICLE

The maintenance items listed here should be checked periodically (e.g. each time you check the engine oil or refuel).

Item		Reference page	
		KA24DE	VG33E
Windshield washer fluid	Check that there is adequate fluid in the tank.	—	
Engine coolant level	Check the coolant level when the engine is cold.	MA-17	MA-28
Radiator and hoses	Check the front of the radiator and clean off any dirt, insects, leaves, etc., that may have accumulated. Make sure the hoses have no cracks, deformation, deterioration or loose connections.	—	
Brake and clutch fluid levels	Make sure that the brake and clutch fluid levels are between the “MAX” and “MIN” lines on the reservoirs	MA-37, 41	
Battery	Check the fluid level in each cell. It should be between the “MAX” and “MIN” lines.	—	
Engine drive belts	Make sure that no belt is frayed, worn, cracked or oily.	MA-16	MA-25
Engine oil level	Check the level on the dipstick after parking the vehicle on a level spot and turning off the engine.	MA-20	MA-30
Power steering fluid level and lines	Check the level on the reservoir with the engine off. Check the lines for improper attachment, leaks, cracks, etc.	MA-43	
Automatic transmission fluid level	Check the level on the dipstick after putting the selector lever in “P” with the engine idling.	MA-38	
Exhaust system	Make sure there are no loose supports, cracks or holes. If the sound of the exhaust seems unusual or there is a smell of exhaust fumes, immediately locate the trouble and correct it.	MA-37	
Underbody	The underbody is frequently exposed to corrosive substances such as those used on icy roads or to control dust. It is very important to remove these substances, otherwise rust will form on the floor pan, frame, fuel lines and around the exhaust system. At the end of winter, the underbody should be thoroughly flushed with plain water, being careful to clean those areas where mud and dirt can easily accumulate.	—	
Fluid leaks	Check under the vehicle for fuel, oil, water or other fluid leaks after the vehicle has been parked for a while. Water dripping from the air conditioner after use is normal. If you should notice any leaks or gasoline fumes are evident, check for the cause and correct it immediately.	—	

PERIODIC MAINTENANCE

Two different maintenance schedules are provided, and should be used, depending upon the conditions in which the vehicle is mainly operated. **After 60,000 miles (96,000 km) or 48 months, continue the periodic maintenance at the same mileage/time intervals.**

Schedule 1	Follow Periodic Maintenance Schedule 1 if your driving habits frequently includes one or more of the following driving conditions: ● Repeated short trips of less than 5 miles (8 km). ● Repeated short trips of less than 10 miles (16 km) with outside temperatures remaining below freezing. ● Operating in hot weather in stop-and-go “rush hour” traffic. ● Extensive idling and/or low speed driving for long distances, such as police, taxi or door-to-door delivery use. ● Driving in dusty conditions. ● Driving on rough, muddy, or salt spread roads. ● Towing a trailer, using a camper or a car-top carrier.	Emission Control System Maintenance	MA-8
		Chassis and Body Maintenance	MA-9
Schedule 2	Follow Periodic Maintenance Schedule 2 if none of the driving conditions shown in Schedule 1 apply to the driving habits.	Emission Control System Maintenance	MA-11
		Chassis and Body Maintenance	MA-12

Maintenance for off-road driving (4x4 only)

Whenever you drive off-road through sand, mud or water, more frequent maintenance may be required of the following items:

▲ Brake pads and rotors
▲ Brake lining and drums
▲ Brake lines and hoses
▲ Wheel bearing grease and free-running hub grease
▲ Differential, transmission and transfer oil
▲ Steering linkage
▲ Propeller shaft and drive shafts
▲ Air cleaner filter

Abbreviations: R = Replace. I = Inspect. Correct or replace if necessary. [ ]: At the mileage intervals only

MAINTENANCE OPERATION		MAINTENANCE INTERVAL																Reference Section - Page or - Content Title	
Perform at number of miles, kilometers or months, whichever comes first.	Miles x 1,000 (km x 1,000) Months	3.75 (6) 3	7.5 (12) 6	11.25 (18) 9	15 (24) 12	18.75 (30) 15	22.5 (36) 18	26.25 (42) 21	30 (48) 24	33.75 (54) 27	37.5 (60) 30	41.25 (66) 33	45 (72) 36	48.75 (78) 39	52.5 (84) 42	56.25 (90) 45	60 (96) 48	KA24DE	VG33E and VG33ER
Drive belts									I*								I*	MA-16	MA-25
Air cleaner filter	NOTE (1)								[R]								[R]	MA-20	MA-30
Positive crankcase ventilation (PCV) filter	NOTE (2)								[R]								[R]	MA-23	—
EVAP vapor lines									I*								I*	MA-23	MA-35
Fuel lines									I*								I*	MA-19	MA-29
Fuel filter*	NOTE (2)																	MA-19	MA-29
Engine coolant	NOTE (3)																R*	MA-17	MA-27
Engine oil		R	R	R	R	R	R	R	R	R	R	R	R	R	R	R	R	MA-20	MA-30
Engine oil filter (Use part No. 15208 31U00, 15208 9E000, 15208 7B000 or equivalent for VG engine.)		R	R	R	R	R	R	R	R	R	R	R	R	R	R	R	R	MA-21	MA-31
Spark plugs (Double PLATINUM–TIPPED type)		Replace every 105,000 miles (169,000 km)																MA-22	MA-32
Timing belt		Replace every 105,000 miles (169,000 km)																—	***EM-85***, "Timing Belt"
Intake and Exhaust valve clearance ★	NOTE (4)																	***EM-38***, "Valve Clearance"	—

NOTE:

(1) If operating mainly in dusty conditions, more frequent maintenance may be required.

(2) When the filter becomes clogged, the vehicle speed cannot be increased as the driver wishes. In such an event, replace the filter.

(3) After 60,000 miles (96,000 km) or 48 months, replace every 30,000 miles (48,000 km) or 24 months.

(4) If valve noises increases, inspect valve clearance.

★ Maintenance items and intervals with "*" are recommended by NISSAN for reliable vehicle operation. The owner need not perform such maintenance in order to maintain the emission warranty or manufacturer recall liability. Other maintenance items and intervals are required.

NEMA0004S01

NEMA0004S0101

Abbreviations: R = Replace. I = Inspect. Correct or replace if necessary. L = Lubricate. [ ]: At the mileage intervals only.

MAINTENANCE OPERATION			MAINTENANCE INTERVAL																Reference Section - Page or - Content Title
Perform at number of miles, kilometers or months, whichever comes first.		Miles x 1,000 (km x 1,000) Months	3.75 (6) 3	7.5 (12) 6	11.25 (18) 9	15 (24) 12	18.75 (30) 15	22.5 (36) 18	26.25 (42) 21	30 (48) 24	33.75 (54) 27	37.5 (60) 30	41.25 (66) 33	45 (72) 36	48.75 (78) 39	52.5 (84) 42	56.25 (90) 45	60 (96) 48	
Brake lines & cables						I				I				I				I	MA-41
Brake pads, rotors, drums & linings				I		I		I		I		I		I		I		I	MA-42, 42
Automatic transmission fluid		NOTE (1)				I				I				I				I	MA-38
Transfer fluid & differential gear oil (exc. LSD)		NOTE (1)				I				I				I				I	MA-39, 40
LSD gear oil		NOTE (2)				I				R				I				R	MA-40
Manual transmission gear oil		NOTE (1)				I				I				I				[R]	MA-37
Steering gear, linkage, axle & suspension parts				I		I		I		I		I		I		I		I	MA-43 NOTE (7)
Tire Rotation		NOTE (3)																	MA-5
Drive shaft boots (4x4)				I		I		I		I		I		I		I		I	***AX-7***, "Drive Shaft"
Propeller shaft (4x4)		NOTE (4)		L		L		L		L		L		L		L		L	MA-39
Front wheel bearing grease	4x2									I								I	***AX-5***, "Front Wheel Bearing"
Front wheel bearing grease and free-running hub grease	4x4	NOTE (5)				I				R				I				R	***AX-5***, "Front Wheel Bearing"
Exhaust system				I		I		I		I		I		I		I		I	MA-37
Supplemental air bag system		NOTE (6)																	***RS-18***, "Maintenance Items"

NOTE:

(1) If towing a trailer, using a camper or a car-top carrier, or driving on rough or muddy roads, change (not just inspect) oil (exc. LSD) at every 30,000 miles (48,000 km) or 24 months.

(2) If towing a trailer, using a camper or a car-top carrier, or driving on rough or muddy roads, change (not just inspect) oil (exc. LSD) at every 30,000 miles (48,000 km) or 24 months, and change LSD gear oil every 15,000 miles (24,000 km) or 12 months.

(3) Refer to "Tire rotation" under the "General maintenance" heading earlier in this section.

(4) The propeller shaft should be re-greased after being immersed in water.

NEMA0004S0102

(5) If operating frequently in water, replace grease every 3,750 miles (6,000 km) or 3 months.
(6) Inspect the air bag system 10 years after the date of manufacture noted on the FMVSS certification label.
(7) Refer to "Front Suspension Parts", ***SU-7***, "Rear Suspension Parts", ***SU-27***, "Front Axle Parts", ***AX-4***, "Rear Axle Parts", ***AX-27***.

Abbreviations: R = Replace. I = Inspect. Correct or replace if necessary. [ ]: At the mileage intervals only

MAINTENANCE OPERATION		MAINTENANCE INTERVAL								Reference Section - Page or - Content Title	
Perform at number of miles, kilometers or months, whichever comes first.	Miles x 1,000 (km x 1,000) Months	7.5 (12) 6	15 (24) 12	22.5 (36) 18	30 (48) 24	37.5 (60) 30	45 (72) 36	52.5 (84) 42	60 (96) 48	KA24DE	VG33E and VG33ER
Drive belts					I*				I*	MA-16	MA-25
Air cleaner filter					[R]				[R]	MA-20	MA-30
Positive crankcase ventilation (PCV) filter	NOTE (1)				[R]				[R]	MA-23	—
EVAP vapor lines					I*				I*	MA-23	MA-35
Fuel lines					I*				I*	MA-19	MA-29
Fuel filter*	NOTE (1)									MA-19	MA-29
Engine coolant	NOTE (2)								R*	MA-17	MA-27
Engine oil		R	R	R	R	R	R	R	R	MA-20	MA-30
Engine oil filter (Use part No. 15208 31U00, 15208 9E000, 15208 7B000,or equivalent for VG engine.)		R	R	R	R	R	R	R	R	MA-21	MA-31
Spark plugs (Double PLATINUM–TIPPED type)		Replace every 105,000 miles (169,000 km)								MA-22	MA-32
Timing belt		Replace every 105,000 miles (169,000 km)								—	***EM-85***, "Timing Belt"
Intake and Exhaust valve clearance ★	NOTE (3)									***EM-38***, "Valve Clearance"	—

NOTE:

(1) When the filter becomes clogged, the vehicle speed cannot be increased as the driver wishes. In such an event, replace the filter.

(2) After 60,000 miles (96,000 km) or 48 months, replace every 30,000 miles (48,000 km) or 24 months.

(3) If valve noises increase, inspect valve clearance.

★ Maintenance items and intervals with "*" are recommended by NISSAN for reliable vehicle operation. The owner need not perform such maintenance in order to maintain the emission warranty or manufacturer recall liability. Other maintenance items and intervals are required.

NEMA0004S02
NEMA0004S0201

Abbreviations: R = Replace. I = Inspect. Correct or replace if necessary. L = Lubricate. [ ]: At the mileage interval only.

MAINTENANCE OPERATION		MAINTENANCE INTERVAL								Reference Section - Page or - Content Title
Perform at number of miles, kilometers or months, whichever comes first.	Miles x 1,000 (km x 1,000) Months	7.5 (12) 6	15 (24) 12	22.5 (36) 18	30 (48) 24	37.5 (60) 30	45 (72) 36	52.5 (84) 42	60 (96) 48	
Brake lines & cables			I		I		I		I	MA-41
Brake pads, rotors, drums & linings			I		I		I		I	MA-42, 42
Automatic transmission fluid			I		I		I		I	MA-38
Transfer fluid & differential gear oil (exc. LSD)			I		I		I		I	MA-39, 40
LSD gear oil			I		R		I		R	MA-40
Manual transmission gear oil			I		I		I		[R]	MA-37
Steering gear, linkage, axle & suspension parts.					I				I	MA-43 NOTE (4)
Tire rotation	NOTE (1)									MA-5
Drive shaft boots (4x4)			I		I		I		I	***AX-7***, "Drive Shaft"
Propeller shaft (4x4)	NOTE (2)		L		L		L		L	MA-39
Front wheel bearing grease (4x2)					I				I	***AX-5***, "Front Axle Wheel Bearing"
Front wheel bearing grease and free-running hub grease(4x4)			I		R		I		R	***AX-5***, "Front Axle Wheel Bearing"
Exhaust system					I				I	MA-37
Supplemental air bag system	NOTE (3)									***RS-18***, "Maintenance Items"

NOTE:

(1) Refer to "Tire rotation" under the "General maintenance" heading earlier in this section.

(2) The propeller shaft should be re-greased after being immersed in water.

(3) Inspect the air bag system 10 years after the date of manufacture noted on the FMVSS certification label.

(4) Refer to "Front Suspension Parts", ***SU-7***, "Rear Suspension Parts", ***SU-27***, "Front Axle Parts", ***AX-4***, "Rear Axle Parts", ***AX-27***.

NEMA0004S0202

Fluids and Lubricants

NEMA0005S01

KA24DE

			Capacity (Approximate)			Recommended Fluids/Lubricants
			US measure	Imp measure	Liter	
Engine oil	Drain and Refill	With oil filter	3-3/4 qt	3-1/8 qt	3.5	• API Certification Mark*1 • API grade SG/SH, Energy Conserving I & II or API grade SJ, Energy Conserving*1 • ILSAC grade GF-I & GF-II*1
		Without oil filter	3-1/2 qt	2-7/8 qt	3.3	
	Dry engine (Engine overhaul)		4-1/2 qt	3-3/4 qt	4.1	
Cooling system (With reservoir)		MT	7-3/4 qt	6-3/8 qt	7.3	Genuine NISSAN anti-freeze coolant or equivalent
		AT	7-1/2 qt	6-1/4 qt	7.1	
Manual transmission gear oil (FS5W71C)			4-1/4 pt	3-1/2 pt	2.0	API GL-4, Viscosity SAE 75W-90 only
Differential carrier gear oil		C200	2-3/8 pt	2-1/4 pt	1.3	Standard differential gear: API GL-5*1 Limited-slip differential (LSD) gear: Use only LSD gear oil API GL-5 and SAE 80W-90*3 approved for NISSAN LSD*4.
Automatic transmission fluid			8-3/8 qt	7 qt	7.9	NISSAN Matic “D” (Continental U.S. and Alaska) or Canada NISSAN Automatic Transmission Fluid *5
Power steering fluid			30.4-33.8 fl oz	31.7-35.2 fl oz	0.9-1.0	Genuine NISSAN PSF II or equivalent*6
Brake and clutch fluid			—	—	—	Genuine NISSAN Brake Fluid*2 or equivalent DOT 3 (US FMVSS No. 116)
Multi-purpose grease			—	—	—	NLGI No. 2 (Lithium soap base)

*1: For further details, see “SAE Viscosity Number”.

*2: Available in mainland U.S.A. through your NISSAN dealer.

*3: SAE 90 is acceptable in ambient temperatures above −18°C (0°F).

*4: Contact a NISSAN dealer for a list of approved oils.

*5: DEXRON™III, MERCON™ or equivalent may also be used. Outside the Continental United States and Alaska contact a NISSAN dealership for more information regarding suitable fluids, including recommended brand(s) of DEXRON™III, MERCON™ Automatic Transmission Fluid.

*6: Genuine NISSAN PSF, Canada NISSAN Automatic Transmission Fluid, DEXRON™III, MERCON™, or equivalent ATF may also be used.

VG33E and VG33ER

			Capacity (Approximate)			Recommended Fluids/Lubricants
			US measure	Imp measure	Liter	
Engine oil	Drain and refill	With oil filter	3-1/2 qt	2-7/8 qt	3.3	• API Certification Mark*1 • API grade SG/SH, Energy Conserving I & II or API grade SJ, Energy Conserving*1 • ILSAC grade GF-I & GF-II*1
		Without oil filter	3-1/8 qt	2-5/8 qt	3.0	
	Dry engine (Engine overhaul)		4 qt	3-3/8 qt	3.8	
Cooling system (With reservoir)			11-5/8 qt	9-5/8 qt	10.95	Genuine NISSAN anti-freeze coolant or equivalent
Manual transmission gear oil (FS5R30A)		2WD	5-7/8 pt	4-7/8 pt	2.8	API GL-4, Viscosity SAE 75W-90 only
		4WD	10-3/4 pt	9 pt	5.1	

			Capacity (Approximate)			Recommended Fluids/Lubricants
			US measure	Imp measure	Liter	
Transfer fluid (TX10A)			2-3/8 qt	2 qt	2.2	NISSAN Matic "D" (Continental U.S. and Alaska) or Canada NISSAN Automatic Transmission Fluid*2 or API GL-4*1
Differential carrier gear oil	Front (4WD) R200A		3-1/8 pt	2-5/8 pt	1.5	Standard differential gear: API GL-5*1 Limited-slip differential (LSD) gear: Use only LSD gear oil API GL-5 and SAE 80W-90*4 approved for NISSAN LSD*5.
	Rear H233B		5-7/8 pt	4-7/8 pt	2.8	
Automatic transmission fluid		2WD	8-3/4 qt	7-1/4 qt	8.3	NISSAN Matic "D" (Continental U.S. and Alaska) or Canada NISSAN Automatic Transmission Fluid *2
		4WD	9 qt	7-1/2 qt	8.5	
Power steering fluid			33.8-37.2 fl oz	35.2-38.7 fl oz	1.0-1.1	Genuine NISSAN PSF II or equivalent*6
Brake and clutch fluid			—	—	—	Genuine NISSAN Brake Fluid*3 or equivalent DOT 3 (US FMVSS No. 116)
Propeller shaft grease			—	—	—	NLGI No. 2 (Molybdenum disulphide lithium soap base)
Multi-purpose grease			—	—	—	NLGI No. 2 (Lithium soap base)
Free-running hub grease (Auto-lock)			—	—	—	Genuine NISSAN grease or equivalent

*1: For further details, see "SAE Viscosity Number".

*2: DEXRON™III, MERCON™ or equivalent may also be used. Outside the continental United States and Alaska contact a NISSAN dealership for more information regarding suitable fluids, including recommended brand(s) of DEXRON™III, MERCON™ Automatic Transmission Fluid.

*3: Available in mainland U.S.A. through your NISSAN dealer.

*4: SAE 90 is acceptable in ambient temperatures above −18°C (0°F).

*5: Contact a NISSAN dealer for a list of approved oils.

*6: Genuine NISSAN PSF, Canada NISSAN Automatic Transmission Fluid, DEXRON™III, MERCON™, or equivalent ATF may also be used.

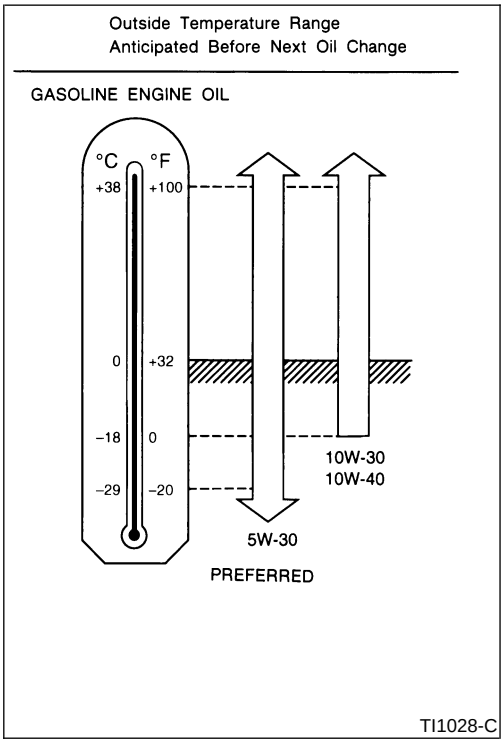

SAE Viscosity Number

NEMA0005S02

GASOLINE ENGINE OIL

NEMA0005S0201

SAE 5W-30 viscosity oil is preferred for all ambient temperatures. SAE 10W-30 and 10W-40 viscosity oil may be used if the ambient temperature is above −18°C (0°F).

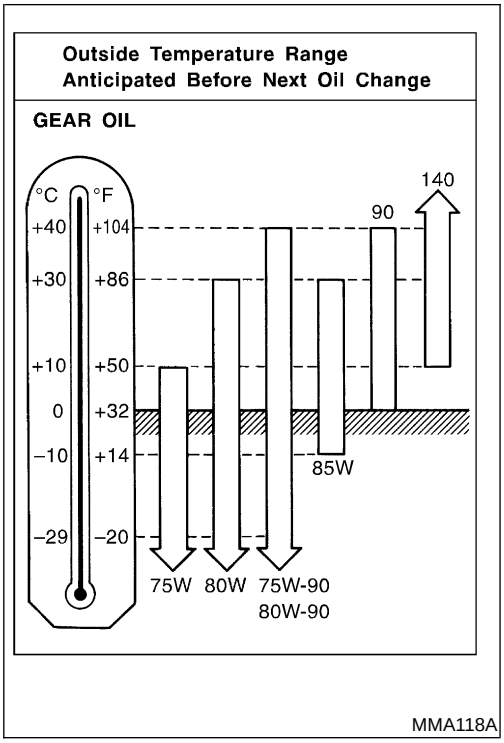

GEAR OIL

NEMA0005S0202

SAE rated 75W-90 for transfer fluid, and 80W-90 for differential gear oil are preferable.

Anti-freeze Coolant Mixture Ratio

NEMA0005S03

The engine cooling system is filled at the factory with a high-quality, year-round, anti-freeze coolant solution. The anti-freeze solution contains rust and corrosion inhibitors. Therefore, additional cooling system additives are not necessary.

CAUTION:

When adding or replacing coolant, be sure to use only a Genuine NISSAN anti-freeze coolant or equivalent with the proper mixture.

Outside temperature down to		Genuine NISSAN Anti-freeze Coolant or equivalent	Demineralized water or distilled water
°C	°F		
-35	-30	50%	50%

Other types of coolant solutions may damage the engine cooling system.

Checking Drive Belts

NEMA0055

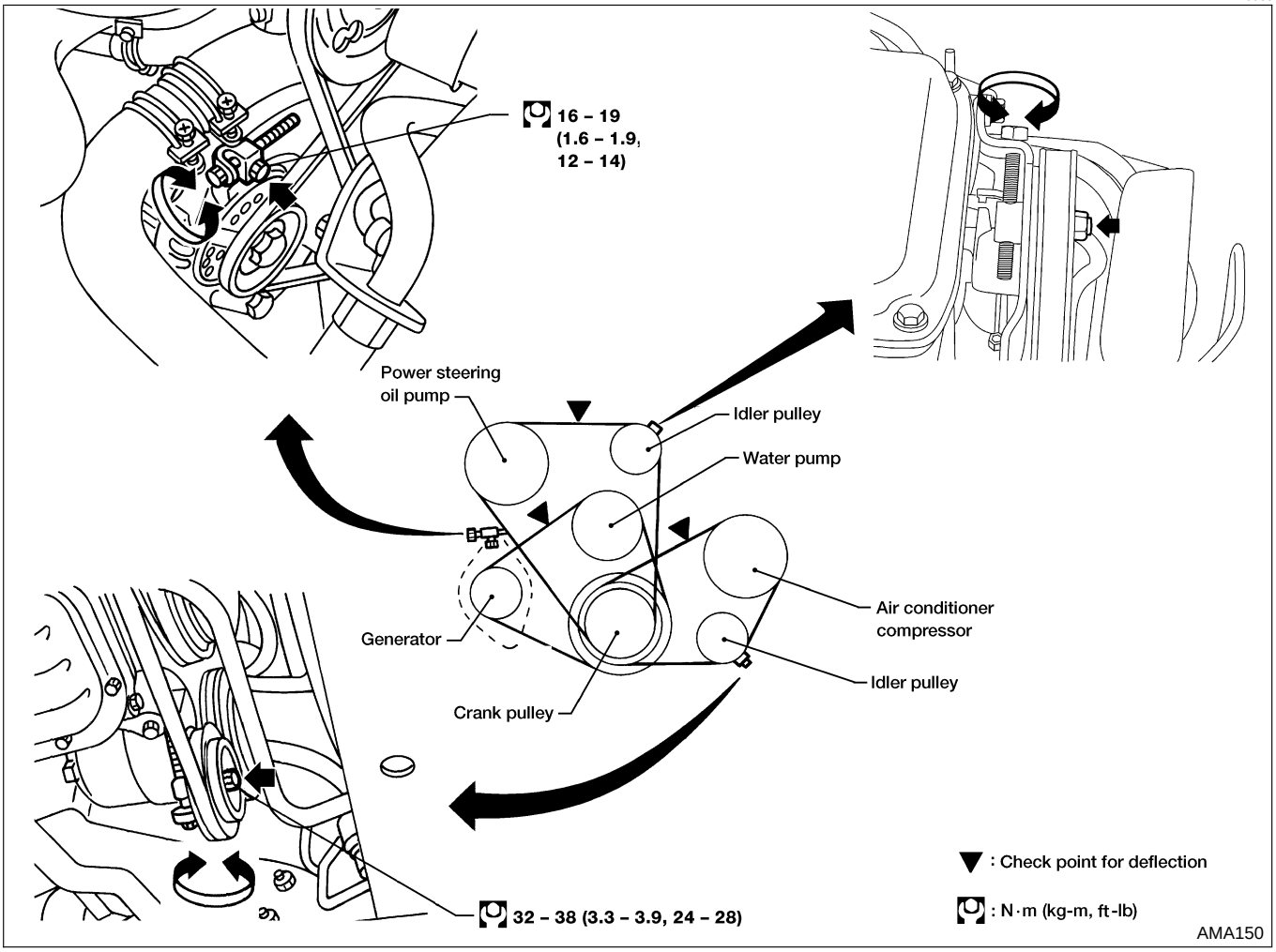

1. Inspect belt for cracks, fraying, wear and oil. If necessary, replace.
2. Inspect drive belt deflection or tension at a point on the belt midway between pulleys.

Check belt tension using belt tension gauge (BT3373-F or equivalent).

Inspect drive belt deflection or tension when engine is cold.

- **Adjust if belt deflections exceed the limit or if belt tension is not within specifications.**
- **Drive belt tension can be checked at other points on the belt.**

DRIVE BELT DEFLECTION AND TENSION

NEMA0055S01

	Deflection adjustment Unit: mm (in)			Tension adjustment *1 Unit: N (kg, lb)		
	Used belt		New belt	Used belt		New belt
	Limit	After adjustment		Limit	After adjustment	
Generator	17 (0.67)	10 - 12 (0.39 - 0.47)	8 - 10 (0.31 - 0.39)	222.4 (22.7, 50)	355.8 - 444.8 (36.3 - 45.4, 80 - 100)	489.3 - 578.2 (49.9 - 59.0, 110 - 130)
Air conditioner compressor	16 (0.63)	10 - 12 (0.39 - 0.47)	8 - 10 (0.31 - 0.39)	200.2 (20.4, 45)	355.8 - 444.8 (36.3 - 45.4, 80 - 100)	489.3 - 578.2 (49.9 - 59.0, 110 - 130)
Power steering oil pump	17 (0.67)	10 - 13 (0.39 - 0.51)	8 - 10 (0.31 - 0.39)	222.4 (22.7, 50)	355.8 - 444.8 (36.3 - 45.4, 80 - 100)	489.3 - 578.2 (49.9 - 59.0, 110 - 130)
Applied pushing force	98 N (10 kg, 22 lb)			—		

*1: If belt tension gauge cannot be installed at check point shown, check belt tension at a different location on the belt.

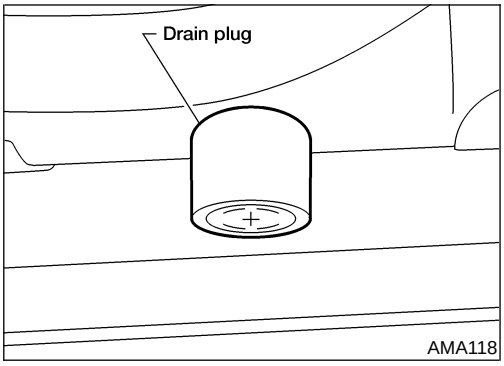

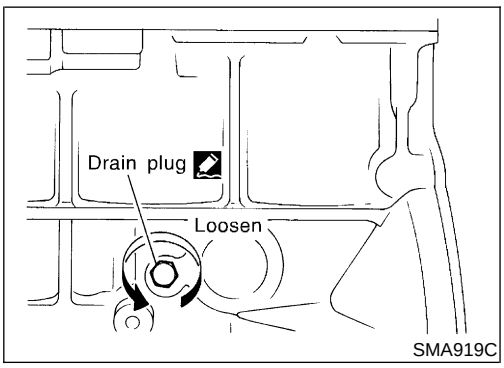

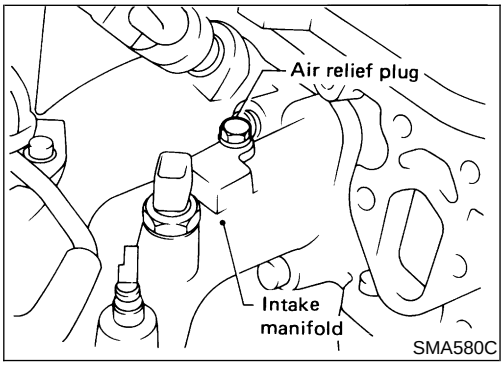

Changing Engine Coolant

NEMA0056

WARNING:

To avoid being scalded, never change the coolant when the engine is hot.

—DRAINING ENGINE COOLANT—

NEMA0056S01

1. Set air conditioner system as follows to prevent coolant from remaining in the system.
   a. Turn ignition switch ON and set temperature control lever all the way to "HOT" position or the highest temperature position.
   b. Wait 10 seconds before turning ignition switch OFF.
2. Open drain plug at the bottom of radiator, and remove radiator cap.
3. Remove reservoir tank, drain coolant, then clean reservoir tank.
   Install it temporarily.

Be careful not to allow coolant to contact drive belts.

4. Remove cylinder block drain plug.
5. Open air relief plug.
6. Check drained coolant for contaminants such as rust, corrosion or discoloration. If contaminated flush engine cooling system, "Refer to FLUSHING COOLING SYSTEM", MA-18.

—REFILLING ENGINE COOLANT—

NEMA0056S02

1. Install reservoir tank, radiator drain plug and cylinder block drain plug.

- **Apply sealant to the thread of drain plug.**

  : 34 - 44 N·m (3.5 - 4.5 kg-m, 25 - 33 ft-lb)

2. Fill radiator until coolant spills from the air relief hole, then install air relief plug.

Air relief plug:

: 7 - 8 N·m (0.7 - 0.8 kg-m, 61 - 69 in-lb)

- Use 50% Genuine NISSAN anti-freeze coolant or equivalent mixed with 50% demineralized water or distilled water.

Unit: ℓ (US qt, Imp qt)

Description		Coolant capacity
Without reservoir tank	MT	6.5 (6-7/8, 5-5/8)
	AT	6.3 (6-5/8, 5-1/2)
Reservoir tank		0.8 (7/8, 3/4)

- **Pour coolant through coolant filler neck slowly to allow air in system to escape.**

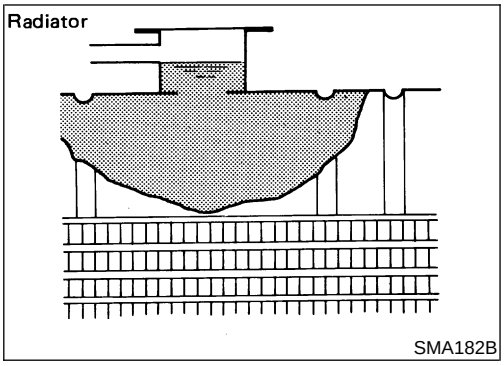

SMA182B

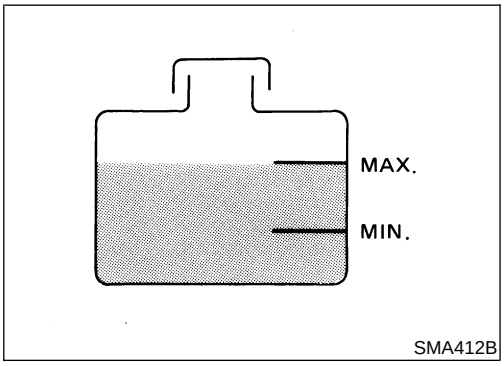

SMA412B

3. Fill radiator and reservoir tank to specified level.
4. Warm up engine to normal operating temperature without radiator cap installed.

- **If coolant overflows radiator filler hole, install filler cap.**

5. Install radiator cap and run engine at 2,500 rpm for 10 seconds and return to idle speed.

- Repeat two or three times.

CAUTION:

Watch coolant temperature gauge so as not to overheat the engine.

6. Stop engine and cool it down.

- Cool down using a fan to reduce the time.
- If necessary, refill radiator up to filler neck.

7. Refill reservoir tank to MAX level line.
8. Repeat steps 5 through 7 two or more times with radiator cap installed until coolant no longer drops.
9. Check cooling system for leaks with engine running.
10. Warm up engine, and check for sound of coolant flow while running engine from idle up to 3,000 rpm with heater temperature control lever set at several positions between COOL and WARM.

- Sound may be noticeable at heater water cock.

11. If sound is heard, bleed air from cooling system by repeating steps 5 through 7 until coolant level no longer drops.

- **Clean excess coolant from engine.**

—FLUSHING COOLING SYSTEM—

NEMA0056S03

1. Open air relief plug.
2. Fill radiator with water until water spills from the air relief hole, then close air relief plug. Fill radiator and reservoir tank with water and reinstall radiator cap.
3. Run engine and warm it up to normal operating temperature.
4. Rev engine two or three times under no-load.

5. Stop engine and wait until it cools down.
6. Drain water.
7. Repeat steps 1 through 6 until clear water begins to drain from radiator.

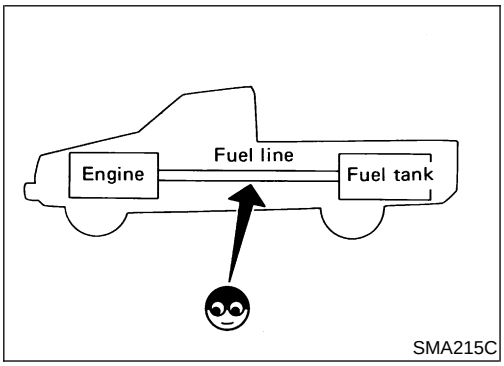

SMA215C

Checking Fuel Lines

NEMA0057

Inspect fuel lines and tank for improper attachment, leaks, cracks, damage, chafing and deterioration. If necessary, repair or replace.

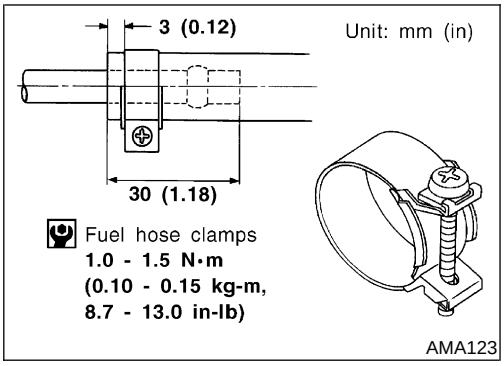

AMA123

Changing Fuel Filter

NEMA0058

CAUTION:

Tighten high-pressure rubber hose clamp so that clamp end is 3 mm (0.12 in) from hose end.
Tightening torque specifications are the same for all rubber hose clamps.
Ensure that the screw does not contact adjacent parts.

WARNING:

Before removing fuel filter, release fuel pressure from fuel line.

WITH CONSULT - II

NEMA0058S01

1. Start engine.
2. Perform "FUEL PRES RELEASE" in "WORK SUPPORT" mode to release fuel pressure to zero.
3. After engine stalls, crank engine two or three times to make sure that fuel pressure is released.
4. Turn ignition switch "OFF".

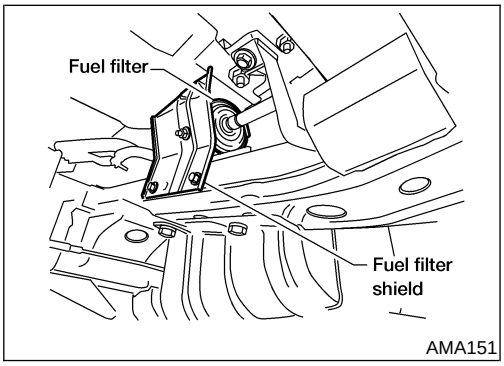

AMA151

5. Remove the fuel filter shield.
6. Loosen fuel hose clamps.
7. Replace fuel filter.

- **Be careful not to spill fuel over engine compartment. Place a shop towel to absorb fuel.**
- **Use a high-pressure type fuel filter. Do not use a synthetic resinous fuel filter.**
- **Tighten fuel hose clamps. Refer to "Checking Fuel Lines", MA-19.**

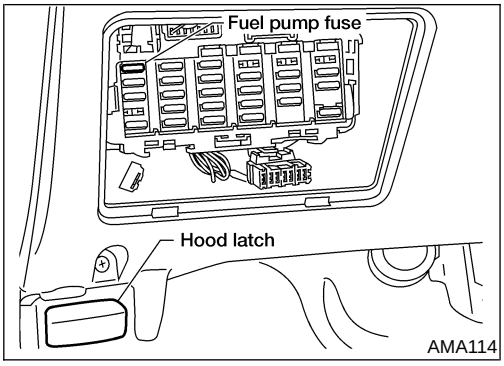

WITHOUT CONSULT - II

NEMA0058S02

1. Remove fuel pump fuse.
   For correct fuse location, refer to label on fuse block cover.
2. Start engine.
3. After engine stalls, crank engine two or three times to make sure that fuel pressure is released.
4. Turn ignition switch "OFF" and install fuel pump fuse.

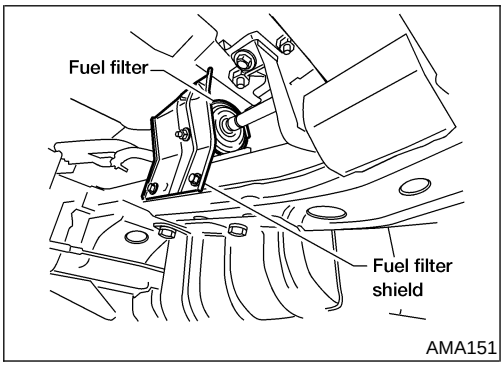

5. Remove the fuel filter shield.
6. Loosen fuel hose clamps.
7. Replace fuel filter.

- **Be careful not to spill fuel over engine compartment. Place a shop towel to absorb fuel.**
- **Use a high-pressure type fuel filter. Do not use a synthetic resinous fuel filter.**
- **Tighten fuel hose clamps. Refer to "Checking Fuel Lines", MA-19.**

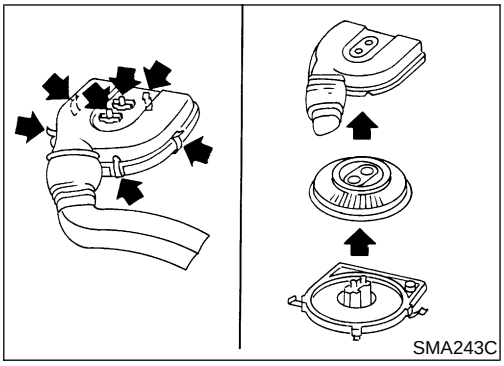

Changing Air Cleaner Filter

NEMA0059

The viscous paper type filter does not need cleaning between renewals.

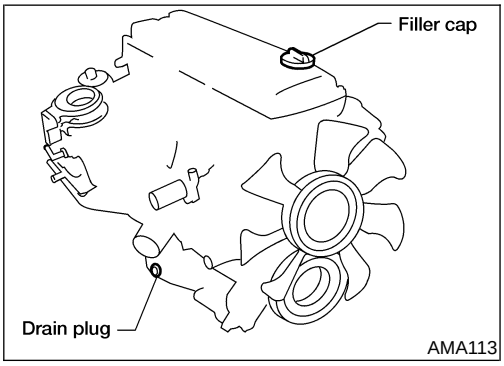

Changing Engine Oil

NEMA0060

WARNING:

- **Be careful not to burn yourself, as the engine oil is hot.**
- **Prolonged and repeated contact with used engine oil may cause skin cancer; try to avoid direct skin contact with used oil. If skin contact is made, wash thoroughly with soap or hand cleaner as soon as possible.**

1. Warm up engine, and check for oil leakage from engine components.
2. Remove drain plug and oil filler cap.
3. Drain oil and refill with new engine oil.

Oil specification and viscosity:

- **API Certification Mark**
- **API grade SG/SH, Energy Conserving I & II or API grade SJ, Energy Conserving.**
- **ILSAC grade GF-I & GF-II**
- **Refer to "RECOMMENDED FLUIDS AND LUBRICANTS", MA-13.**

Oil capacity (Approximately):

Unit: ℓ (US qt, Imp qt)

Drain and refill	With oil filter change	3.5 (3-3/4, 3-1/8)
	Without oil filter change	3.3 (3-1/2, 2-7/8)
Dry engine (engine overhaul)		4.1 (4-1/2, 3-3/4)

CAUTION:

- **Be sure to clean drain plug and install with new washer.**
  Drain plug:
  : 29 - 39 N·m (3.0 - 4.0 kg-m, 22 - 29 ft-lb)
- **The refill capacity depends on the oil temperature and drain time. Use these specifications for reference only. Always use the dipstick to determine when the proper amount of oil is in the engine.**

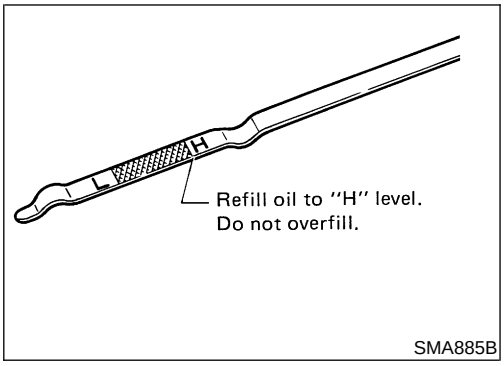

SMA885B

4. Check oil level.
5. Start engine and check area around drain plug and oil filter for oil leakage.
6. Run engine for a few minutes, then turn it off. After several minutes, check oil level.

Changing Oil Filter

NEMA0061

1. Remove oil filter with Tool.
- a: 64.3 mm (2.531 in)

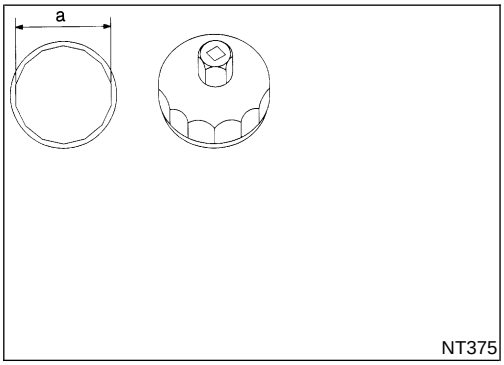

NT375

WARNING:
Be careful not to burn yourself. Engine and engine oil are hot.

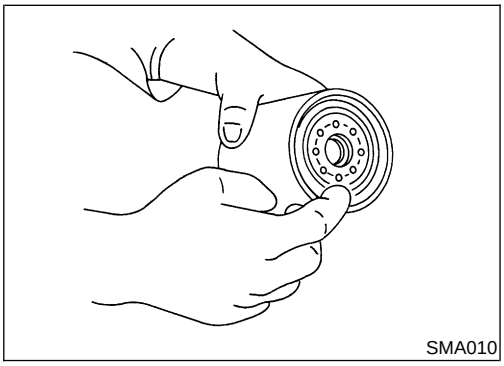
SMA010

2. Clean oil filter mounting surface on cylinder block. Coat rubber seal of new oil filter with engine oil.

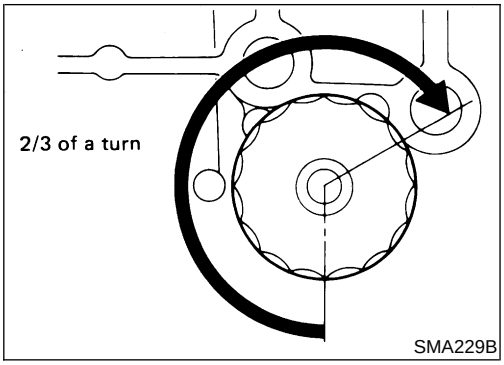

3. Screw in the oil filter until a slight resistance is felt, then tighten additionally more than 2/3 of a turn.
4. Add engine oil.

Refer to "Changing Engine Oil", MA-20.

- **Clean excess oil from engine.**

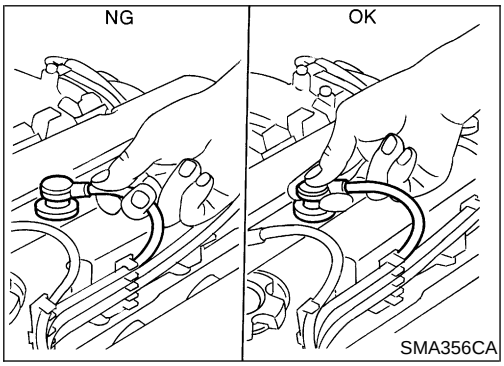

Changing Spark Plugs

NEMA0062

1. Disconnect ignition wires from spark plugs at boot. Do not pull on the wire.

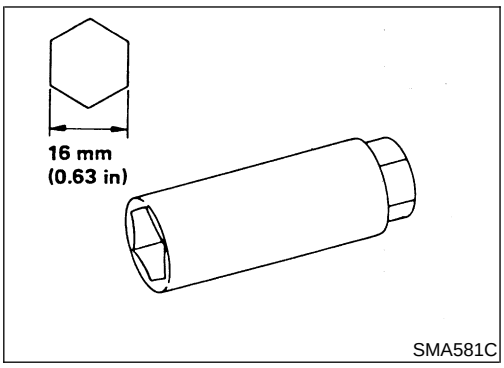

2. Remove spark plugs with spark plug wrench.

Spark plug:

Make	NGK (Double Platimnum Tipped)
Standard type	PFR5G-11
Cold type	PFR6G-11

Use standard type spark plug under normal conditions.
The cold type spark plug is suitable when spark knock occurs with the standard type spark plug under conditions such as:

- extended highway driving
- frequent high engine revolution
- **Do not use a wire brush for cleaning.**
- **If plug tip is covered with carbon, spark plug cleaner may be used.**

  Cleaner air pressure:
  Less than 588 kPa (6 kg/cm^2, 85 psi)
  Cleaning time:
  Less than 20 seconds

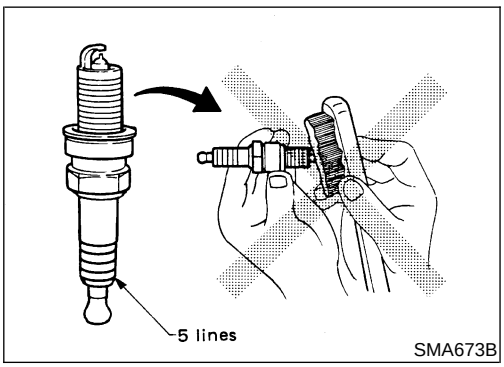

- **Checking and adjusting plug gap is not required between change intervals.**

  Spark plug (Double platinum-tipped type)
  Gap (Nominal):1.1 mm (0.043 in)

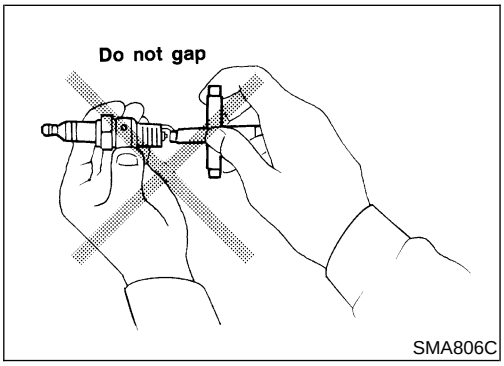

3. Install spark plugs. Reconnect ignition wires according to numbers indicated on them.

   Spark plug:
   : 20 - 29 N·m (2.0 - 3.0 kg-m, 14 - 22 ft-lb)

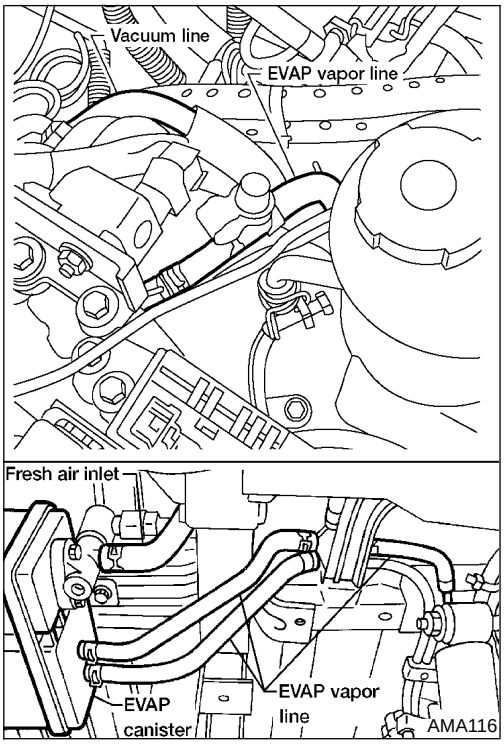

Checking EVAP Vapor Lines

NEMA0063

1. Visually inspect EVAP vapor lines for improper attachment and for cracks, damage, loose connections, chafing and deterioration.
2. Inspect fuel tank filler cap vacuum relief valve for clogging, sticking, etc.
   Refer to *EC-40*, "EVAPORATIVE EMISSION SYSTEM".

Changing Positive Crankcase Ventilation (PCV) Filter

NEMA0064

Remove air cleaner cover and take out PCV filter located inside air cleaner cover. Then install new PCV filter.

Engine Maintenance

KA24DE

NEMA0065

Drive Belt Deflection and Tension

NEMA0065S01

	Deflection adjustment Unit: mm (in)			Tension adjustment *1 Unit: N (kg, lb)		
	Used belt		New belt	Used belt		New belt
	Limit	After adjustment		Limit	After adjustment	
Generator	17 (0.67)	10 - 12 (0.39 - 0.47)	8 - 10 (0.31 - 0.39)	222.4 (22.7, 50)	355.8-444.8 (36.3-45.4, 80-100)	489.3-578.2 (49.9-59.0, 110-130)
Air conditioner compressor	16 (0.63)	10 - 12 (0.39 - 0.47)	8 - 10 (0.31 - 0.39)	200.2 (20.4, 45)	355.8-444.8 (36.3-45.4, 80-100)	489.3-578.2 (49.9-59.0, 110-130)
Power steering oil pump	17 (0.67)	10 - 13 (0.39 - 0.51)	8 - 10 (0.31 - 0.39)	222.4 (22.7, 50)	355.8-444.8 (36.3-45.4, 80-100)	489.3-578.2 (49.9-59.0, 110-130)
Applied pushing force	98 N (10 kg, 22 lb)			—		

*1: If belt tension gauge cannot be installed at check point shown, check belt tension at a different location on the belt.

Spark Plug

NEMA0065S02

Make	NGK (Double Platimnum Tipped)
Hot type	—
Standard type	PFR5G-11
Cold type	PFR6G-11
Gap (nominal)	1.1 mm (0.043 in)

Checking Drive Belts

NEMA0016

VG33E

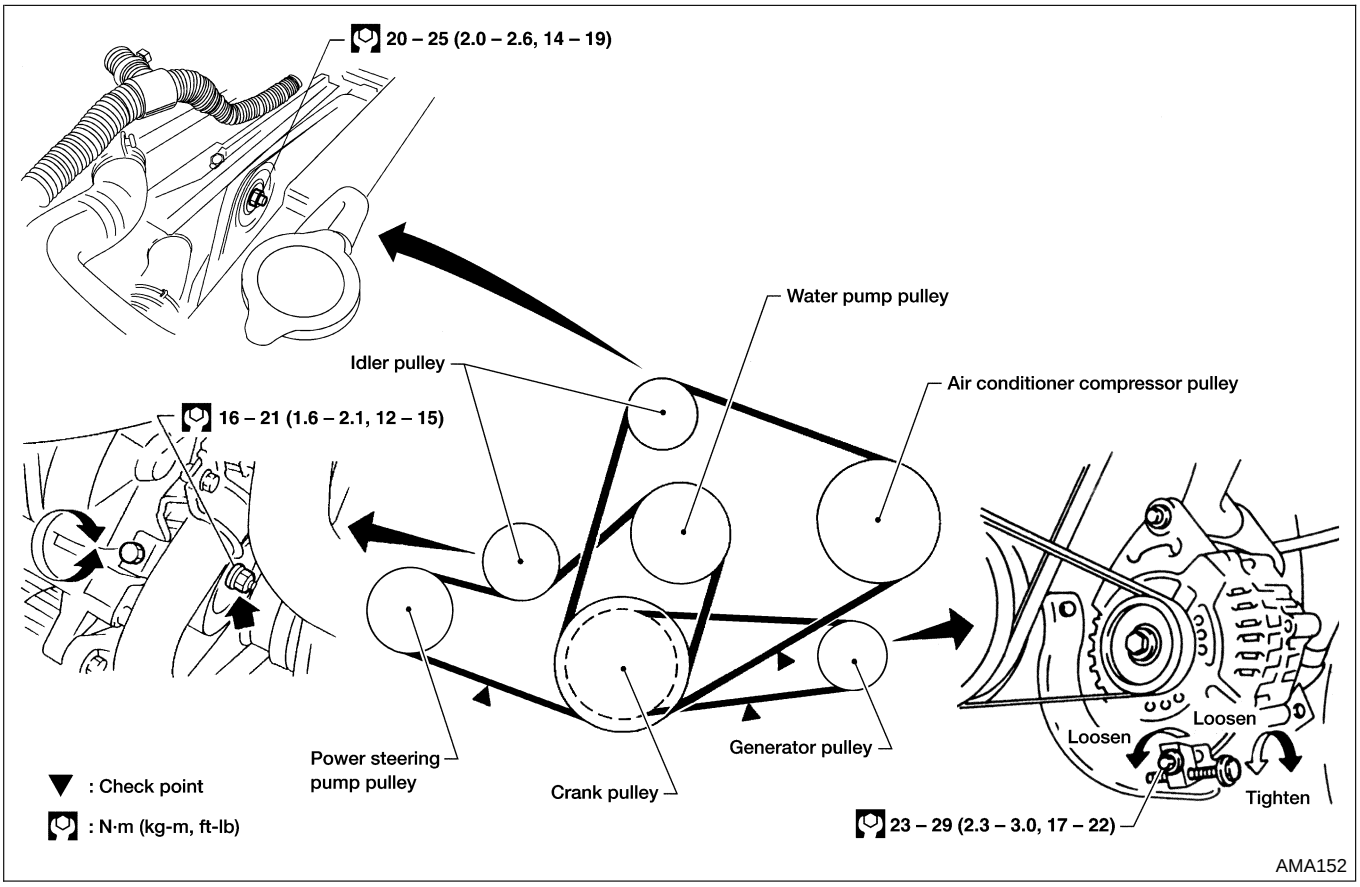

Checking Drive Belts (Cont'd)

VG33ER

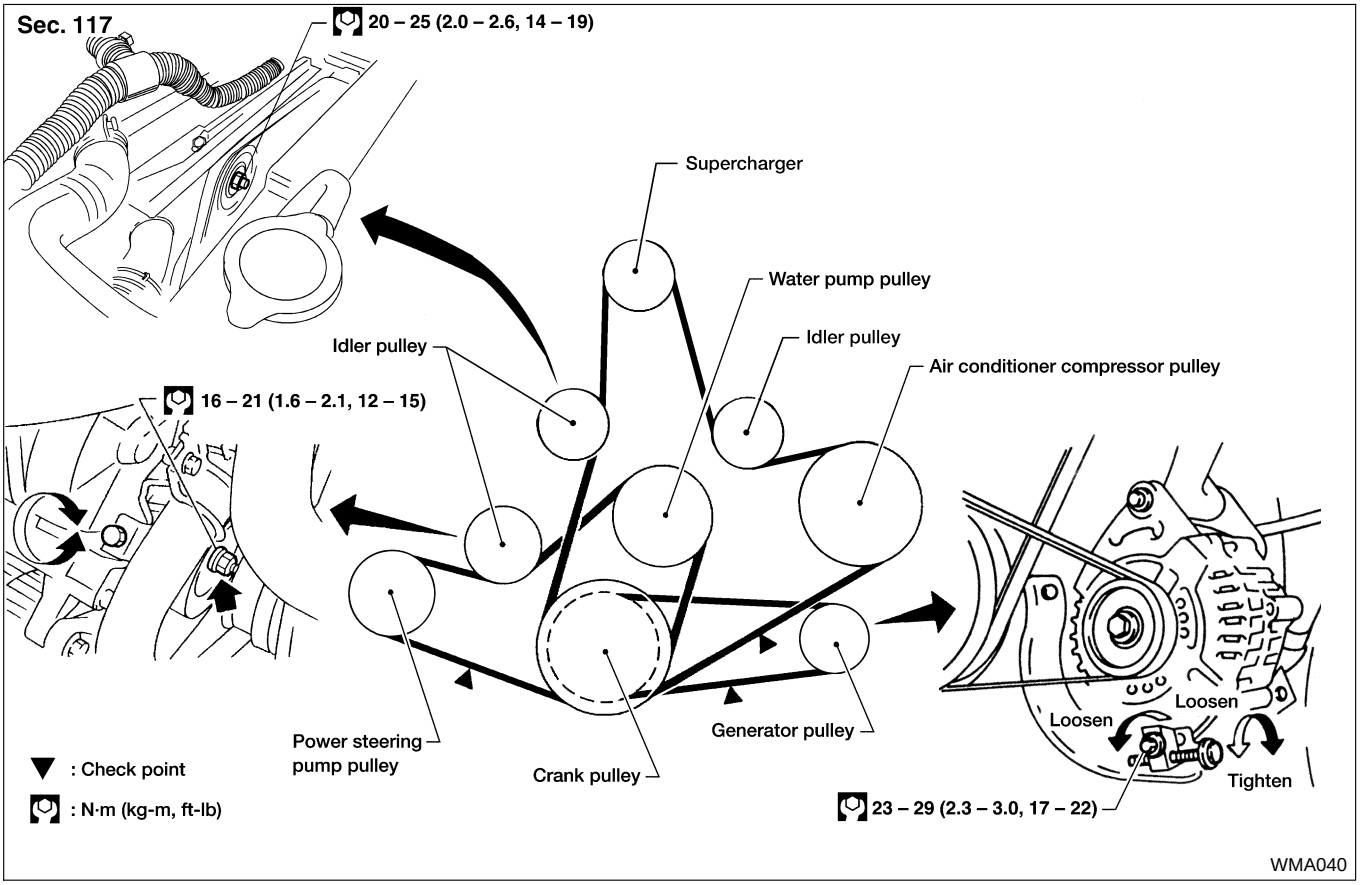

1. Inspect belt for cracks, fraying, wear and oil. If necessary, replace.
2. Inspect drive belt deflection or tension at a point on the belt midway between pulleys.

Check belt tension using belt tension gauge (BT3373-F or equivalent).

Inspect drive belt deflection or tension when engine is cold.

- **Adjust if belt deflections exceed the limit or if belt tension is not within specifications**
- **Drive belt tension can be checked at other points on the belt.**

DRIVE BELT DEFLECTION AND TENSION

NEMA0016S01

	Deflection adjustment Unit: mm (in)			Tension adjustment *1 Unit: N (kg, lb)		
	Used belt		New belt	Used belt		New belt
	Limit	After adjustment		Limit	After adjustment	
Generator	11 (0.43)	7 - 8 (0.24 - 0.31)	6 - 7 (0.24 - 0.28)	226 (23, 51)	554.1 - 642.4 (56.5 - 65.5, 124.6 - 144.4)	671.8 - 760.0 (68.5 - 77.5, 151.0 - 170.9)
Air conditioner compressor - VG33E	18 (0.71)	12 - 13 (0.47 - 0.51)	10.5 - 11.5 (0.413 - 0.453)	196 (20, 44)	495.3 - 583.5 (50.5 - 59.5, 111.4 - 131.2)	603.1 - 691.4 (61.5 -70.5, 135.6 - 155.5)
Air conditioner compressor and supercharger - VG33ER	16.5 (0.65)	9.5 - 10.5 (0.37 - 0.41)	8.5-9.5 (0.33 - 0.37)	294 (30 , 66)	730 - 818 (75.5 - 83.5, 166.5 - 184.1)	838 - 926 (85.5 - 94.5, 188.5 - 208.4)
Power steering oil pump	15 (0.59)	9.5 - 10.5 (0.374 - 0.413)	8 - 9 (0.31 - 0.35)	275 (28, 62)	554.1 - 642.4 (56.5 - 65.5, 124.6 - 144.4)	671.8 - 760.0 (68.5 - 77.5, 151.0 - 170.9)
Applied pushing force	98 N (10 kg, 22 lb)			—		

*1: If belt tension gauge cannot be installed at check point shown, check belt tension at a different location on the belt.

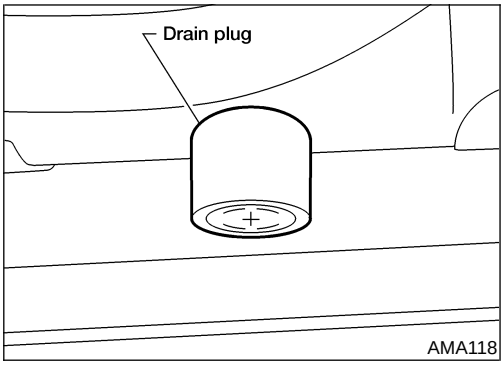

Changing Engine Coolant

NEMA0017

WARNING:

To avoid the danger of being scalded, never change the coolant when the engine is hot.

—DRAINING ENGINE COOLANT—

NEMA0017S01

1. Set air conditioning system as follows to prevent coolant from remaining in the system.
   a. Turn ignition switch "ON" and set temperature controller to maximum hot position.
   b. Wait 10 seconds before turning ignition switch "OFF".
2. Open radiator drain plug at the bottom of radiator and remove radiator filler cap.

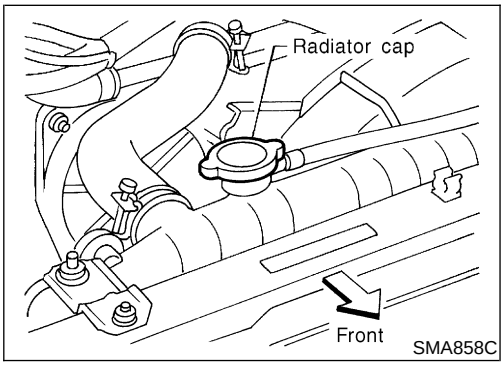

3. Remove reservoir tank, drain coolant, then clean reservoir tank.
   Install it temporarily.

- **Be careful not to allow coolant to contact drive belts.**

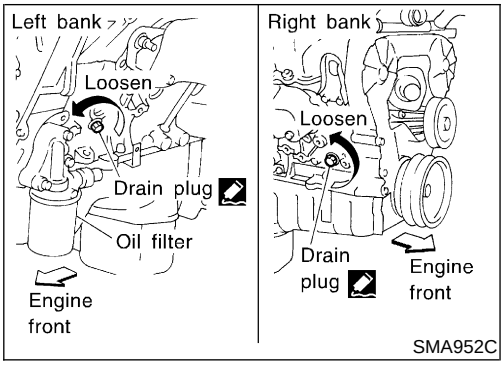

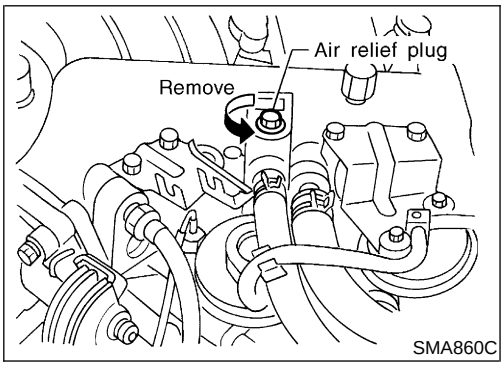

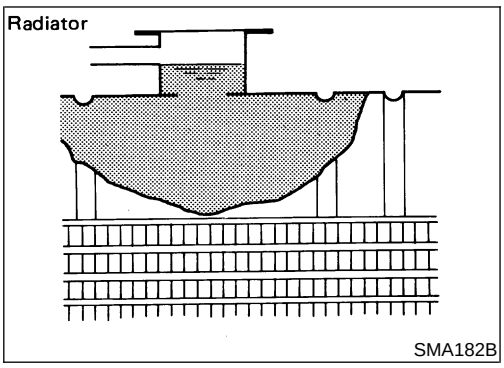

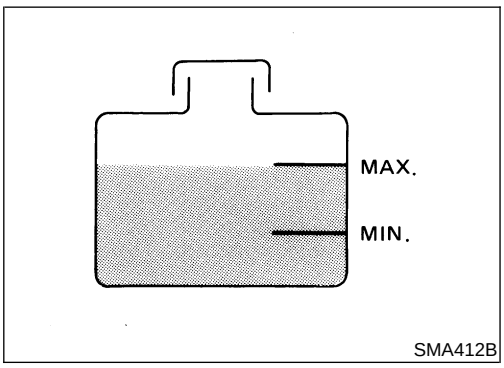

4. Remove cylinder block drain plugs and air relief plug.
5. Check drained coolant for contaminants such as rust, corrosion or discoloration. If contaminated flush engine cooling system. Refer to "FLUSHING COOLING SYSTEM", MA-29.

—REFILLING ENGINE COOLANT—

NEMA0017S02

1. Install reservoir tank, radiator drain plug, and cylinder block drain plugs.

- **Apply sealant to the thread of cylinder block drain plug.**
  : 34.3 - 44.1 N·m (3.5 - 4.5 kg-m, 25 - 33 ft-lb)

2. Fill radiator slowly until coolant spills from the air relief plug, then install air relief plug.
   Air relief plug:
   : 7 - 8 N·m (0.7 - 0.8 kg-m, 61 - 69 in-lb)
3. Fill radiator and reservoir tank to specified level.

- Pour coolant through coolant filler neck slowly to allow air in system to escape.
- Use 50% genuine NISSAN anti-freeze coolant or equivalent mixed with 50% demineralized water or distilled water.
  Coolant capacity (Without reservoir tank):
  10.15 ℓ (10–3/4 US qt, 8–7/8 Imp qt)
  Reservoir tank capacity (for MAX level):
  0.8 ℓ (7/8 US qt, 3/4 Imp qt)

4. Warm up engine to normal operating temperature without radiator cap installed.
   If coolant overflows radiator filler hole, install filler cap.
5. Run engine at 3,000 rpm for 10 seconds and return to idle speed with radiator cap installed.

- Repeat two or three times.

Watch coolant temperature gauge so as not to overheat the engine.

6. Stop engine and cool it down.

- Cool down using a fan to reduce the time.
- If necessary, refill radiator up to filler neck with coolant.

7. Refill reservoir tank to Max line with coolant.
8. Repeat step 5 through step 7 two or more times with radiator cap installed until coolant level no longer drops.

9. Check cooling system for leaks with engine running.
10. Warm up engine, and check for sound of coolant flow while running engine from idle up to 3,000 rpm with heater temperature control set at several positions between COOL and HOT.
- Sound may be noticeable at heater water cock.

11. If sound is heard, bleed air from cooling system by repeating steps 5 through 7 until coolant level no longer drops.
- **Clean excess coolant from engine.**

—FLUSHING COOLING SYSTEM—

NEMA0017S04

1. Open air relief plug.
2. Fill radiator with water until water spills from the air relief hole, then close air relief plug. Fill radiator and reservoir tank with water and reinstall radiator cap.
3. Run engine and warm it up to normal operating temperature.
4. Rev engine two or three times under no-load.
5. Stop engine and wait until it cools down.
6. Drain water.
7. Repeat steps 1 through 6 until clear water begins to drain from radiator.

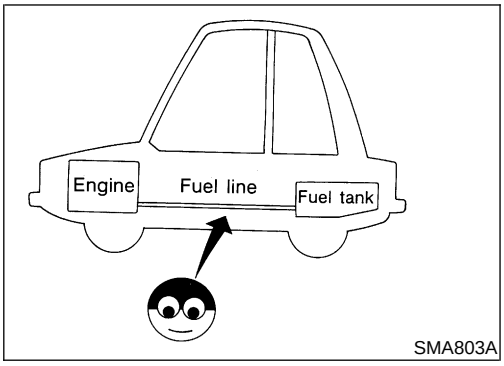

SMA803A

Checking Fuel Lines

NEMA0018

Inspect fuel lines and tank for improper attachment, leaks, cracks, damage, loose connections, chafing or deterioration.
If necessary, repair or replace faulty parts.

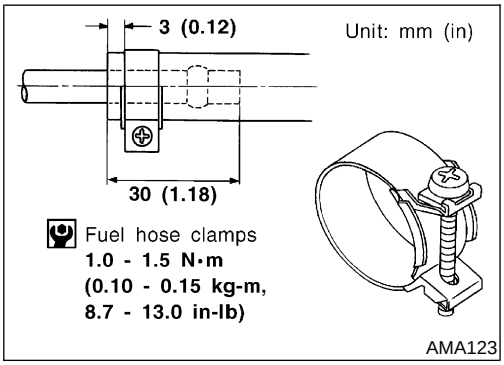

AMA123

Changing Fuel Filter

NEMA0019

CAUTION:
Tighten high-pressure rubber hose clamp so that clamp end is 3 mm (0.12 in) from hose end.
Tightening torque specifications are the same for all rubber hose clamps.
Ensure that screw does not contact adjacent parts.

WARNING:
Before removing fuel filter, release fuel pressure from fuel line.

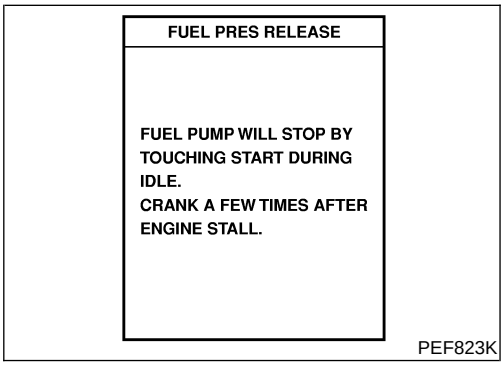

PEF823K

WITH CONSULT - II

NEMA0019S01

1. Start engine.
2. Perform "FUEL PRESSURE RELEASE" in "WORK SUPPORT" mode to release fuel pressure to zero.
3. After engine stalls, crank engine two or three times to make sure that fuel pressure is released.
4. Turn ignition switch "OFF".

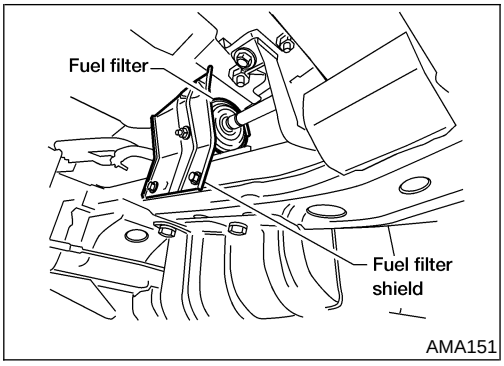

5. Remove the fuel filter shield.
6. Loosen fuel hose clamps.
7. Replace fuel filter.

- **Be careful not to spill fuel over engine compartment. Place a shop towel to absorb fuel.**
- **Use a high-pressure type fuel filter. Do not use a synthetic resinous fuel filter.**
- **Tighten fuel hose clamps. Refer to "Checking Fuel Lines", MA-29.**

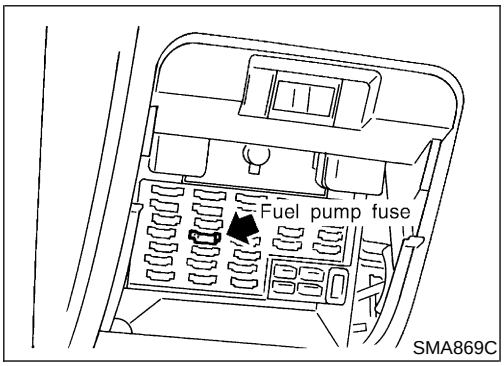

⊗ WITHOUT CONSULT - II

NEMA0019S02

1. Remove fuel pump fuse.
   For correct fuse location, refer to label on fuse block cover.
2. Start engine.
3. After engine stalls, crank engine two or three times to make sure that fuel pressure is released.
4. Turn ignition switch "OFF" and install fuel pump fuse.

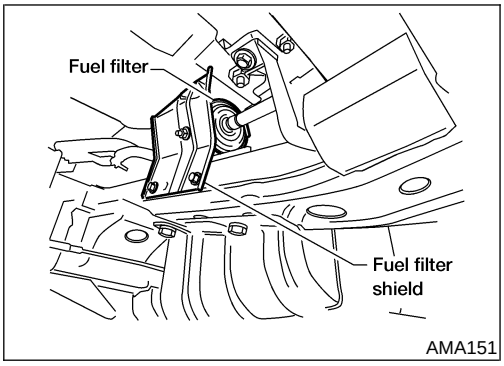

5. Remove the fuel filter shield.
6. Loosen fuel hose clamps.
7. Replace fuel filter.

- **Be careful not to spill fuel over engine compartment. Place a shop towel to absorb fuel.**
- **Use a high-pressure type fuel filter. Do not use a synthetic resinous fuel filter.**
- **Tighten fuel hose clamps. Refer to "Checking Fuel Lines", MA-29.**

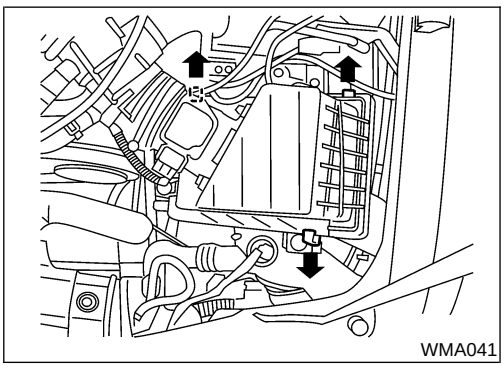

Changing Air Cleaner Filter

NEMA0020

VISCOUS PAPER TYPE

NEMA0020S01

The viscous paper type filter does not need cleaning between replacement intervals.

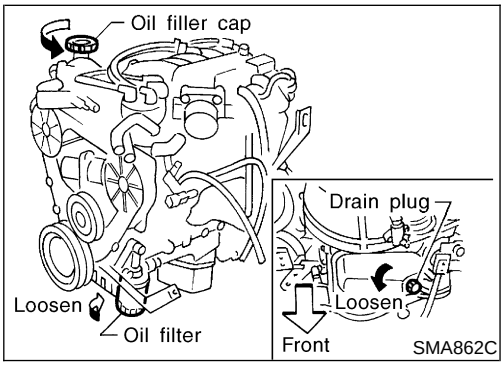

Changing Engine Oil

NEMA0021

WARNING:

- **Be careful not to burn yourself, as the engine oil is hot.**
- **Prolonged and repeated contact with used engine oil may cause skin cancer; try to avoid direct skin contact with used oil. If skin contact is made, wash thoroughly with soap or hand cleaner as soon as possible.**

1. Warm up engine, and check for oil leakage from engine components.
2. Stop engine and wait for more than 10 minutes.
3. Remove drain plug and oil filler cap.

4. Drain oil and refill with new engine oil.

Oil specification and viscosity

- API SG or SH and Energy Conserving I & II or API grade SJ, Energy Conserving
- API Certification Mark
- ILSAC grade GF-I and GF-II
- See "RECOMMENDED FLUIDS AND LUBRICANTS", MA-13.

Refill oil capacity (Approximately) :

Unit: ℓ (US qt, Imp qt)

Drain and refill		
	with oil filter change	3.3 (3-1/2, 2-7/8)
	without oil filter change	3.0 (3-1/8, 2-5/8)
Dry engine (engine overhaul)		3.8 (4, 3-3/8)

CAUTION:

- **Be sure to clean drain plug and install with new washer.**
  Oil pan drain plug:
  : 29 - 39 N·m (3.0 - 4.0 kg-m, 22 - 29 ft-lb)
- **The refill capacity depends on the oil temperature and drain time; use the "Refill oil capacity" values as a reference and be certain to check with the dipstick when changing the oil.**

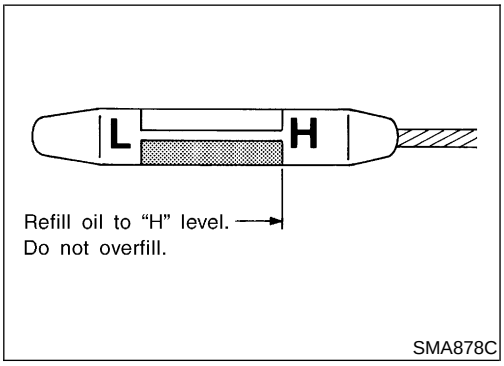

5. Warm up engine and check area around drain plug and oil filter for oil leakage.
6. Stop engine and wait for more than 10 minutes.
7. Check oil level.

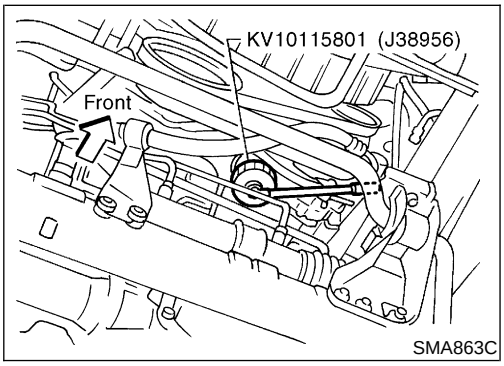

Changing Oil Filter

NEMA0022

1. Remove oil filter with Tool.

WARNING:

Be careful not to burn yourself, as the engine and engine oil are hot.

The filter is a full-flow cartridge type and is provided with a relief valve.

Refer to *LC-23*, "Oil Filter".

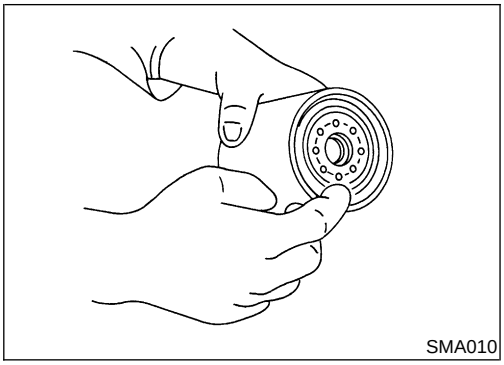
SMA010

2. Clean oil filter mounting surface on cylinder block. Coat rubber seal of new oil filter with engine oil.

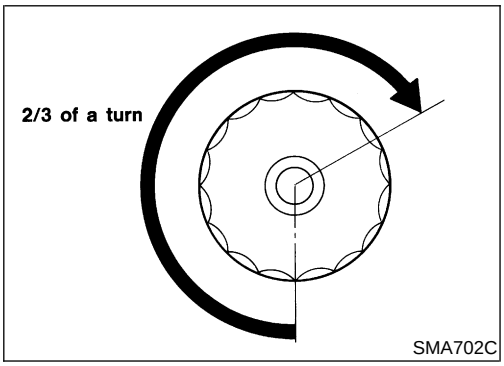

SMA702C

3. Screw in the oil filter until a slight resistance is felt, then tighten an additional 2/3 turn.
4. Add engine oil.

Refer to "Changing Engine Oil", MA-30.

- **Clean excess oil from engine.**

Changing Spark Plugs

NEMA0023

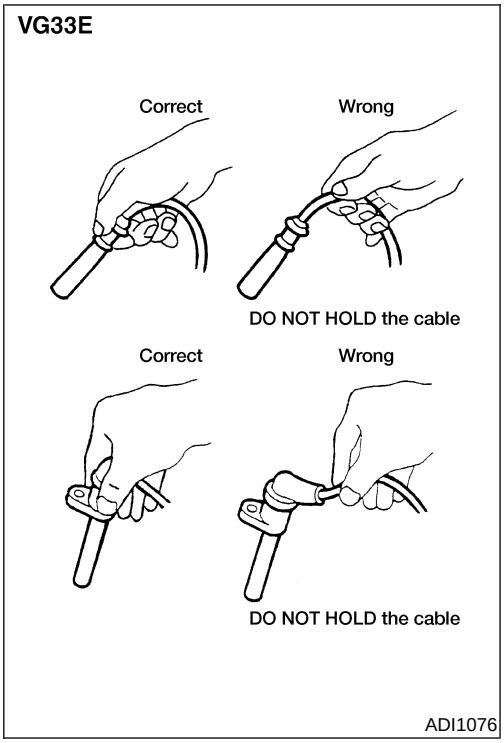

ADI1076

1. Disconnect ignition wires from spark plugs at boot. Do not pull on the wire.
2. Remove spark plugs with 16 mm (0.63 in) spark plug wrench.

- For VG33ER engine only; to remove the No. 2, and 4 spark plugs, the following components must be removed:

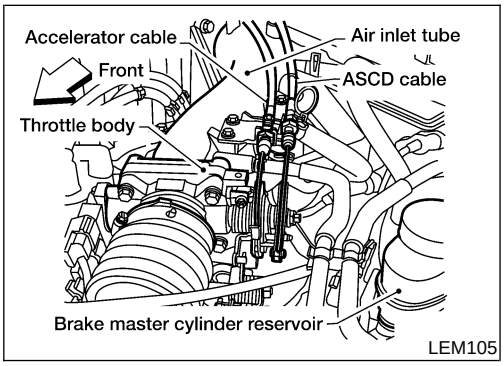

LEM105

a) Disconnect the accelerator cable from the throttle body and the air inlet tube bracket.
b) Disconnect the ASCD cable from the throttle body and the air inlet tube bracket, if equipped.

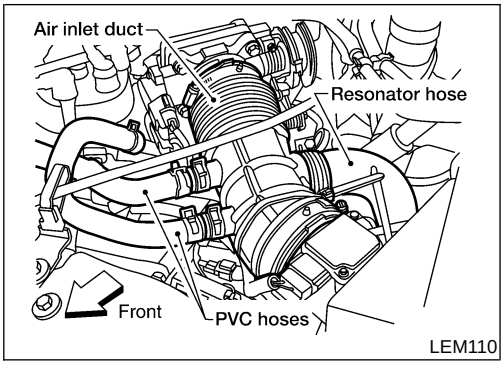

c) Remove the air inlet duct.
- Disconnect the PCV hoses.
- Disconnect the resonator hose.

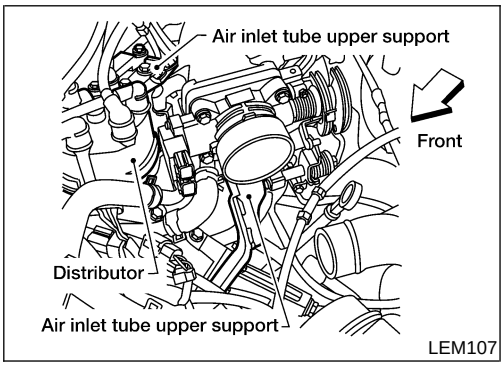

d) Remove the air inlet tube upper and lower supports.

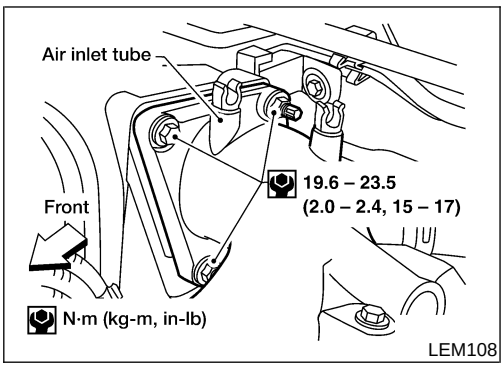

e) Remove the air inlet tube bolts, nuts, and studs. Position the air inlet tube aside.
- Disconnect the evaporative emission vacuum hose.
- Disconnect the brake booster vacuum hose.
- Disconnect the TPS sensor electrical connector.
- Disconnect the TPS switch electrical connector.

3. Check type and gap of new spark plug.

Spark plug (VG33E):

Description	NGK (Double Platinum Tipped)
Hot type	PFR4G-11
Standard type	PFR5G-11
Cold type	PFR6G-11
Spark Plug Gap (nominal)	1.1 mm (0.043 in)

Spark plug (VG33ER):

Description	NGK (Double Platinum Tipped)
Hot type	PFR5G-11
Standard type	PFR6G-11
Cold type	PFR7G-11
Spark Plug Gap (nominal)	1.1 mm (0.043 in)

Use standard type spark plug under normal conditions.
The hot type spark plug is suitable when fouling occurs with the standard type spark plug under conditions such as:
- frequent engine starts
- low ambient temperatures

The cold type spark plug is suitable when spark knock occurs with the standard type spark plug under conditions such as:

- extended highway driving
- frequent high engine revolution

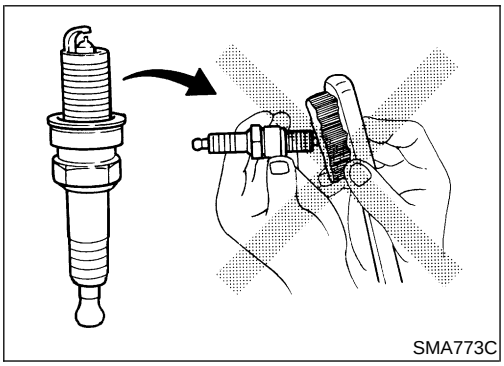
SMA773C

- **Do not use a wire brush for cleaning.**
- **If plug tip is covered with carbon, spark plug cleaner may be used.**

  Cleaner air pressure:

  Less than 588 kPa (6 kg/cm^2, 85 psi)

  Cleaning time:

  Less than 20 seconds

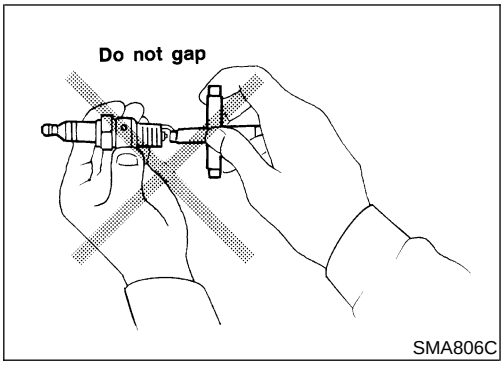

SMA806C

- **Checking and adjusting plug gap is not required between spark plug change intervals.**

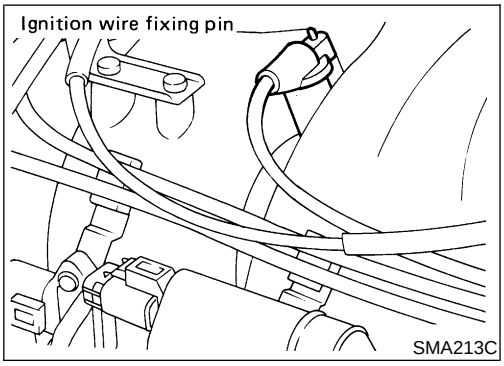

SMA213C

When installing ignition wires to No. 2 and 4 cylinders, securely fit each ignition wire mounting hole onto the ignition wire fixing pin (VG33E only).

Spark plug:

: 20 - 29 N·m (2.0 - 3.0 kg-m, 14 - 22 ft-lb)

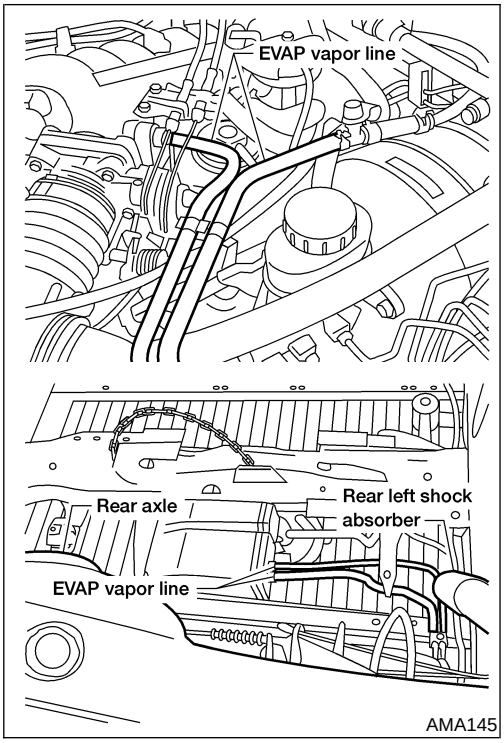

Checking EVAP Vapor Lines

NEMA0024

1. Visually inspect EVAP vapor lines for improper attachment, cracks, damage, loose connections, chafing or deterioration.
2. Inspect vacuum relief valve of fuel tank filler cap for clogging, sticking, etc.

Refer to *EC-640*, "EVAPORATIVE EMISSION SYSTEM".

Engine Maintenance

VG33E AND VG33ER

Drive Belt Deflection and Tension

NEMA0054

NEMA0054S01

	Deflection adjustment Unit: mm (in)			Tension adjustment *1 Unit: N (kg, lb)		
	Used belt		New belt	Used belt		New belt
	Limit	After adjustment		Limit	After adjustment	
Generator	11 (0.43)	7 - 8 (0.24 - 0.31)	6 - 7 (0.24 - 0.28)	226 (23, 51)	554.1 - 642.4 (56.5 - 65.5, 124.6 - 144.4)	671.8 - 760.0 (68.5 - 77.5, 151.0 - 170.9)
Air conditioner compressor (VG33E)	18 (0.71)	12 - 13 (0.47 - 0.51)	10.5 - 11.5 (0.413 - 0.435)	196 (20, 44)	495.3 - 583.5 (50.5 - 59.5, 111.4 - 131.2)	603.1 - 691.4 (61.5 - 70.5, 135.6 - 155.5)
Air conditioner compressor and supercharger (VG33ER)	16.5 (0.65)	9.5 - 10.5 (0.37 - 0.41)	8.5 - 9.5 (0.33 - 0.39)	294 (30, 66)	730 - 818 (75.5 - 83.5, 166.5 - 184.1)	838 - 926 (85.5 - 94.5, 188.5 - 208.4)
Power steering oil pump	15 (0.59)	9.5 - 10.5 (0.374 - 0.413)	8 - 9 (0.31 - 0.35)	275 (28, 62)	554.1 - 642.4 (56.5 - 65.5, (124.6 - 144.4)	671.8 - 760.0 (68.5 - 77.5, 151.0 - 170.9)
Applied pushing force	98 N (10 kg, 22 lb)			—		

*1: If belt tension gauge cannot be installed at check point shown, check belt tension at a different location on the belt.

Spark Plug

NEMA0054S02

NGK (Double Platimnum Tipped)	VG33E	VG33ER
Hot type	PFR4G-11	PFR5G-11
Standard type	PFR5G-11	PFR6G-11
Cold type	PFR6G-11	PFR7G-11
Gap (nominal)	1.1 mm (0.043 in)	1.1 mm (0.043 in)

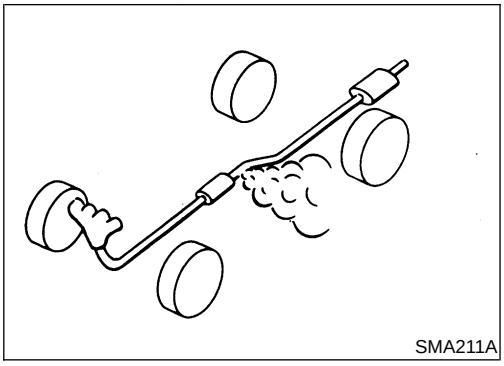
SMA211A

Checking Exhaust System

NEMA0025

Check exhaust pipes, muffler and mounting for improper attachment, leaks, cracks, damage, loose connections, chafing or deterioration.

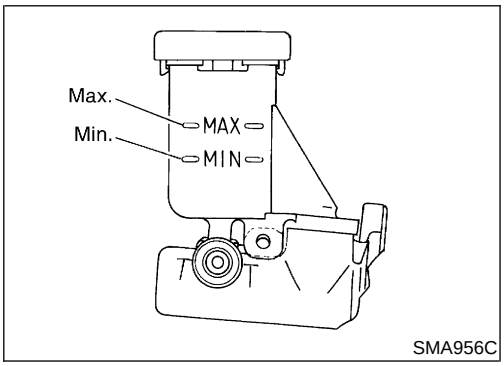

SMA956C

Checking Clutch Fluid Level and Leaks

NEMA0026

If fluid level is extremely low, check clutch system for leaks.

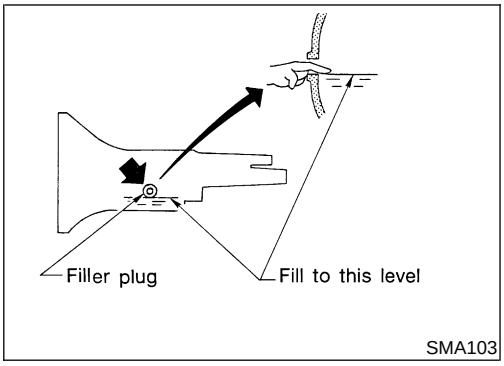

SMA103

Checking M/T Oil

NEMA0027

Check for oil leakage and oil level.

Never start engine while checking oil level.

Filler plug:

: 25 - 34 N·m (2.5 - 3.5 kg-m, 18 - 25 ft-lb)

Changing M/T Oil

NEMA0028

1. Drain oil from drain plug and refill with new gear oil.
2. Check oil level.

Oil grade and viscosity:

API GL-4. Refer to "RECOMMENDED FLUIDS AND LUBRICANTS", MA-13.

Oil capacity:

FS5W71C

2WD 2.0 ℓ (4-1/4 US pt, 3-1/2 Imp pt)

FS5R30A

2WD 2.8 ℓ (5-7/8 US pt, 4-7/8 Imp pt)

4WD 5.1 ℓ (10-3/4 US pt, 9 Imp pt)

Drain plug:

: 25 - 34 N·m (2.5 - 3.5 kg-m, 18 - 25 ft-lb)

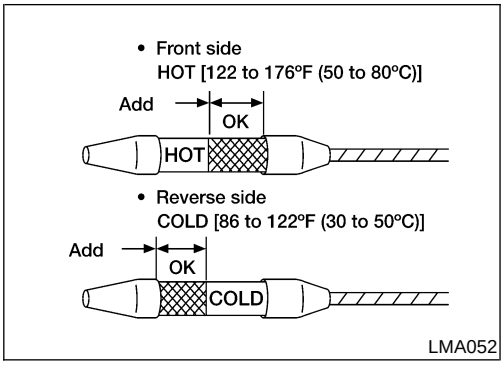

Checking A/T Fluid

NEMA0030

1. Warm up engine.
2. Check for fluid leakage.
3. Before driving, fluid level can be checked at fluid temperatures of 30 to 50°C (86 to 122°F) using “COLD” range on dipstick.

a. Park vehicle on level surface and set parking brake.
b. Start engine and move selector lever through each gear position. Leave selector lever in “P” position.
c. Check fluid level with engine idling.
d. Remove dipstick and note reading. If level is at low side of either range, and fluid to the charging pipe.
e. Re-insert dipstick into charging pipe as far as it will go.
f. Remove dipstick and note reading. If reading is at low side of range, add fluid to the charging pipe.

Do not overfill.

4. Drive vehicle for approximately 5 minutes in urban areas.
5. Re-check fluid level at fluid temperatures of 50° to 80°C (122° to 176°F) using “HOT” range on dipstick.

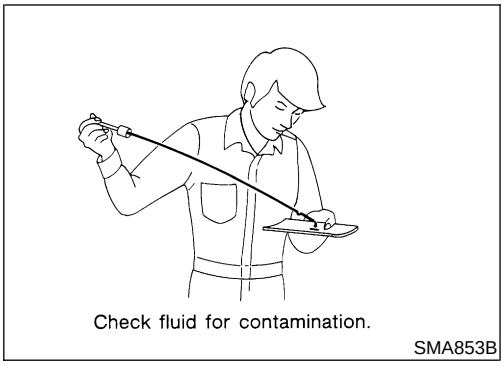

6. Check fluid condition.

- If fluid is very dark or smells burned, refer to AT section for checking operation of A/T. Flush cooling system after repair of A/T.
- If A/T fluid contains frictional material (clutches, bands, etc.), replace radiator and flush cooler line using cleaning solvent and compressed air after repair of A/T. Refer to ***LC-14*** (KA24DE), ***LC-32*** (VG33E and VG33ER), “Radiator”.

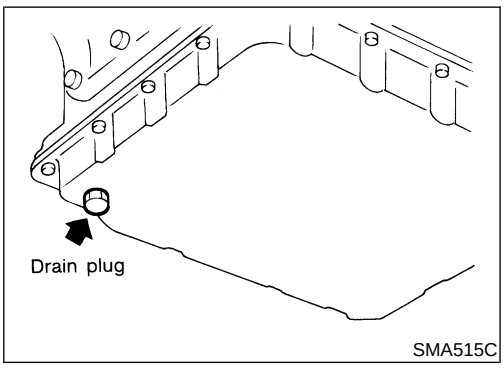

Changing A/T Fluid

NEMA0031

1. Warm up A/T fluid.
2. Stop engine.
3. Drain A/T fluid from drain plug and refill with new A/T fluid. Always refill same volume with drained fluid.

Fluid grade:

Nissan Matic “D” (Continental U.S. and Alaska) or Canada Nissan Automatic Transmission Fluid. Refer to “RECOMMENDED FLUIDS AND LUBRICANTS”, MA-13.

Fluid capacity (With torque converter):

KA24DE

2WD 7.9 ℓ (8-3/8 US qt, 7 Imp qt)

VG33E and VG33ER

2WD 8.3 ℓ (8-3/4 US qt, 7-1/4 Imp qt)

4WD 8.5 ℓ (9 US qt, 7-1/2 Imp qt)

Drain plug:

: 29 - 39 N·m (3.0 - 4.0 kg-m, 22 - 29 ft-lb)

4. Run engine at idle speed for five minutes.
5. Check fluid level and condition. Refer to “Checking A/T Fluid”, MA-38. If fluid is still dirty, repeat steps 2 through 5.

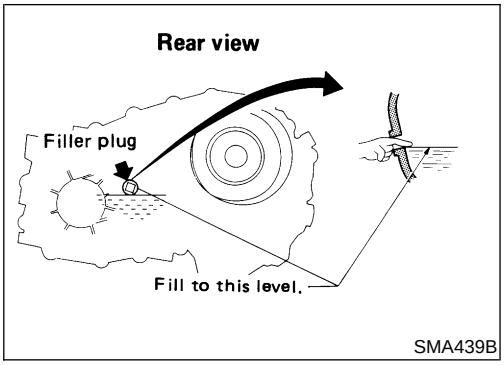

Checking Transfer Fluid

NEMA0032

Check for fluid leakage and fluid level.

A/T fluid is used for the transfer in the factory.

Never start engine while checking fluid level.

Filler plug:

: 25 - 34 N·m (2.5 - 3.5 kg-m, 18 - 25 ft-lb)

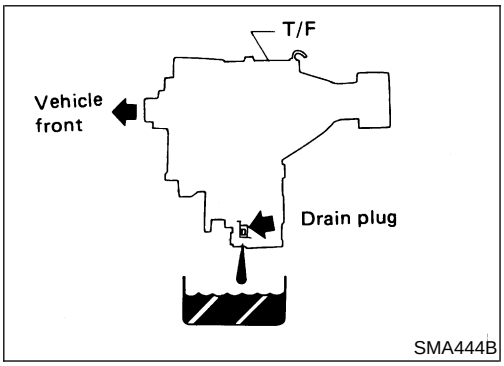

Changing Transfer Fluid

NEMA0033

When changing transfer fluid completely, A/T fluid may be used.

Fluid grade:

Nissan Matic "D" (Continental U.S. and Alaska) or Canada NISSAN Automatic Transmission Fluid or API GL-4

Refer to "RECOMMENDED FLUIDS AND LUBRICANTS", MA-13.

Fluid capacity:

2.2 ℓ (2-3/8 US qt, 2 Imp qt)

Drain plug:

: 25 - 34 N·m (2.5 - 3.5 kg-m, 18 - 25 ft-lb)

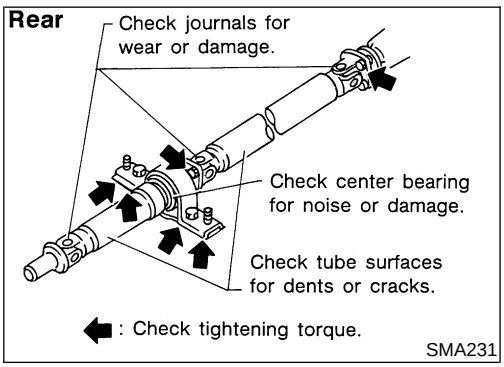

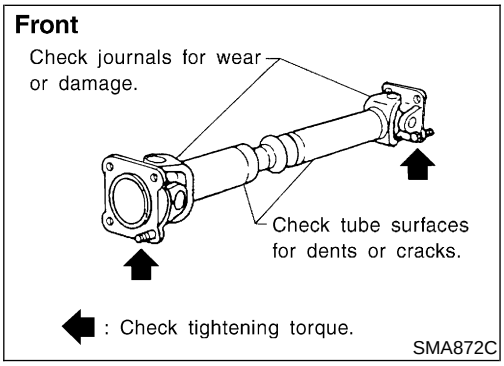

Checking Propeller Shaft

NEMA0034

Check propeller shaft for damage, looseness or grease leakage.

Tightening torque: Refer to *PD-5*, "Components".

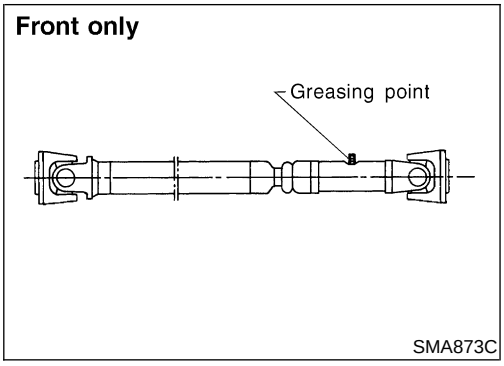

Greasing Propeller Shaft

NEMA0035

Apply specified grease to nipples provided on propeller shaft.

Grease grade:

Refer to “RECOMMENDED FLUIDS AND LUBRICANTS”, MA-13.

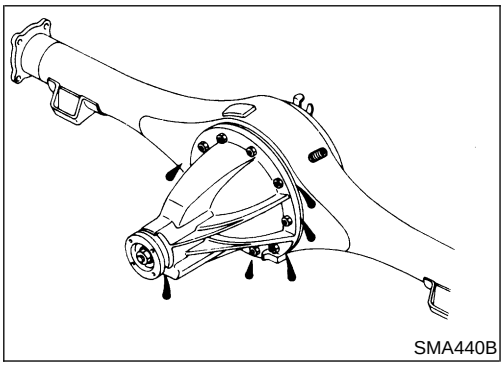

Checking Differential Gear Oil

NEMA0036

Check for oil leakage and oil level.

Filler plug:

Front — R200A

: 59 - 98 N·m (6 - 10 kg-m, 43 - 72 ft-lb)

Rear — H233B

: 59 - 98 N·m (6 - 10 kg-m, 43 - 72 ft-lb)

Rear — C200

: 39 - 59 N·m (4 - 6 kg-m, 29 - 43 ft-lb)

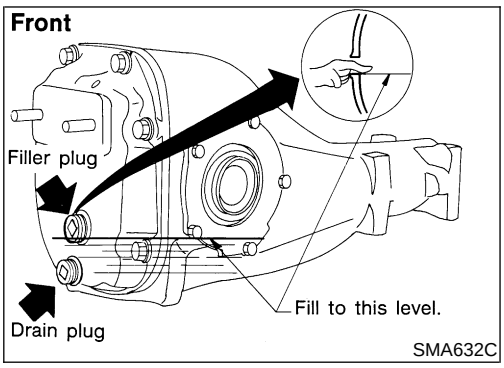

Changing Differential Gear Oil

NEMA0037

1. Drain oil from drain plug and refill with new gear oil.
2. Check oil level.

Oil grade and viscosity:

See “RECOMMENDED FLUIDS AND LUBRICANTS”, MA-13, 14.

Oil capacity:

Front — R200A

1.5ℓ (3-1/8 US pt, 2-5/8 Imp pt)

Rear — H233B

2.8ℓ (5-7/8 US pt, 4-7/8 Imp pt)

Rear — C200

1.3ℓ (2-3/4 US pt, 2-1/4 Imp pt)

Filler plug:

Front — R200A

: 59 - 98 N·m (6 - 10 kg-m, 43 - 72 ft-lb)

Rear — H233B

: 59 - 98 N·m (6 - 10 kg-m, 43 - 72 ft-lb)

Rear — C200

: 39 - 59 N·m (4 - 6 kg-m, 29 - 43 ft-lb)

Drain plug:

Front — R200A

: 59 - 98 N·m (6 - 10 kg-m, 43 - 72 ft-lb)

Rear — H233B

: 59 - 98 N·m (6 - 10 kg-m, 43 - 72 ft-lb)

Rear — C200

: 59 - 98 N·m (6 - 10 kg-m, 43 - 72 ft-lb)

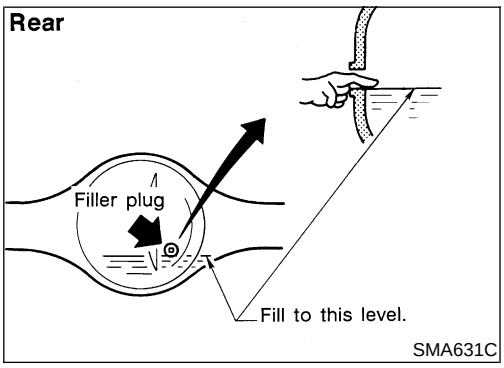

LIMITED-SLIP DIFFERENTIAL GEAR

NEMA0037S01

- Use only approved limited-slip differential gear oil.
- Limited-slip differential identification.

1. Lift both rear wheels off the ground.
2. Turn one rear wheel by hand.
3. If both rear wheels turn in the same direction simultaneously, vehicle is equipped with limited-slip differential.

Balancing Wheels

NEMA0038

Adjust wheel balance using the road wheel center.

Wheel balance (Maximum allowable unbalance):
Refer to "WHEEL BALANCE", MA-46.

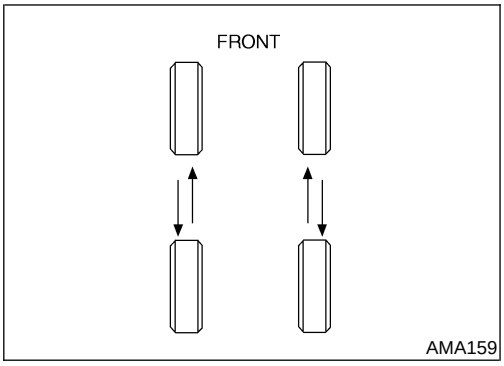

Tire Rotation

NEMA0039

- **After rotating the tires, adjust the tire pressure.**
- **Retighten the wheel nuts when the vehicle has been driven for 1,000 km (600 miles) (also in cases of a flat tire, etc.).**

Wheel nuts:
: 118 - 147 N·m (12 - 15 kg-m, 87 - 108 ft-lb)

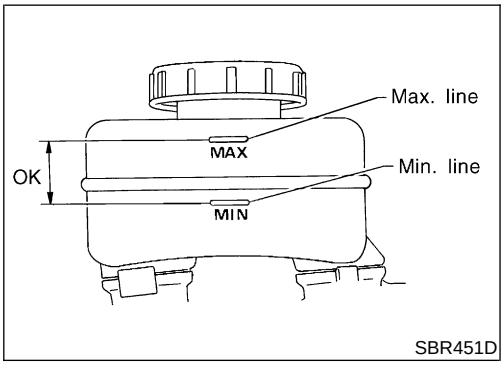

Checking Brake Fluid Level and Leaks

NEMA0040

If fluid level is extremely low, check brake system for leaks.

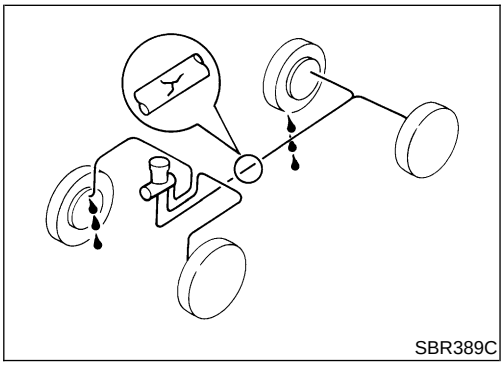

Checking Brake Lines and Cables

NEMA0041

Check brake fluid lines and parking brake cables for improper attachment, leaks, chafing, abrasions and deterioration.

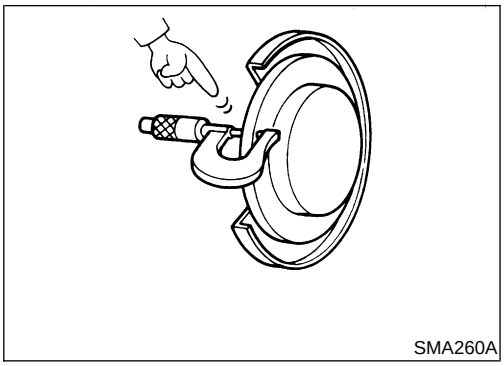
SMA260A

Checking Disc Brake

NEMA0042

ROTOR

NEMA0042S01

Check condition and thickness.

Standard thickness:
26 mm (1.02 in)
Minimum thickness:
24 mm (0.94 in)

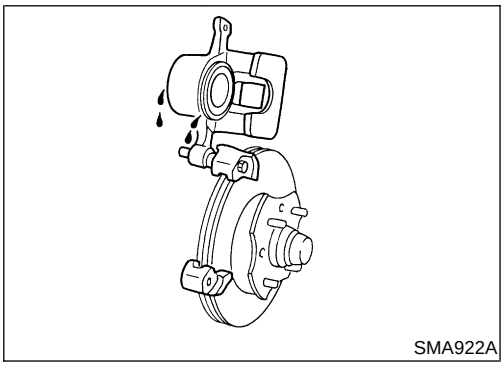
SMA922A

CALIPER

NEMA0042S02

Check for leakage.

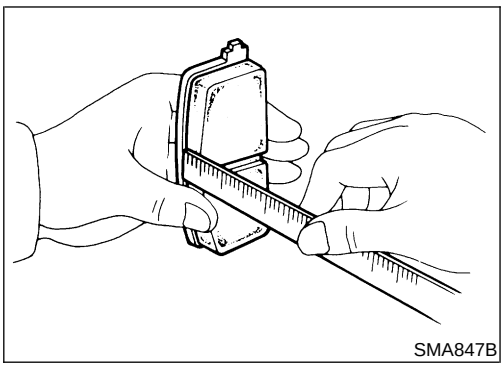
SMA847B

PAD

NEMA0042S03

Check wear or damage.

Standard thickness:
10 mm (0.39 in)
Minimum thickness: 2 mm (0.08 in)

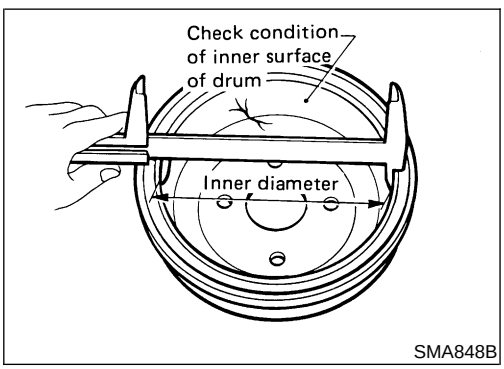

SMA848B

Checking Drum Brake

NEMA0043

WHEEL CYLINDER

NEMA0043S01

Check for leakage.

DRUM

NEMA0043S02

Check condition and inner surface.

Standard inner diameter:
295 mm (11.61 in)
Drum repair limit (Inner diameter):
296.5 mm (11.67 in)

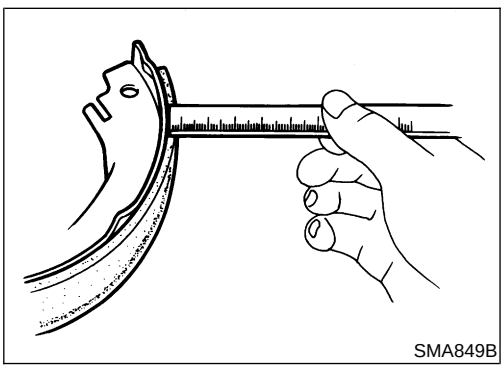
SMA849B

LINING

NEMA0043S03

Check wear or damage.

Standard thickness:
5.8 mm (0.23 in)
Lining wear limit (Minimum thickness):
1.5 mm (0.059 in)

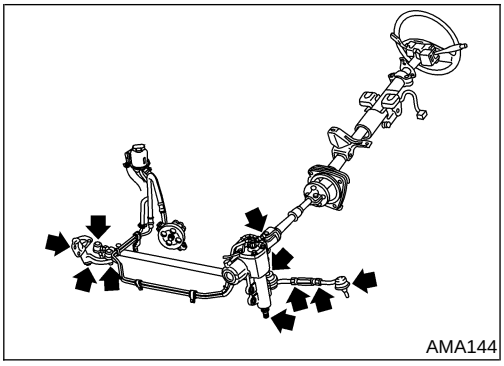
AMA144

Checking Steering Gear and Linkage

NEMA0044

STEERING GEAR

NEMA0044S01

- Check steering gear housing for looseness, damage and oil leakage.
- Check connection with steering column for looseness.

STEERING LINKAGE

NEMA0044S02

- Check ball joint, dust cover and other component parts for looseness, wear, damage and grease leakage.

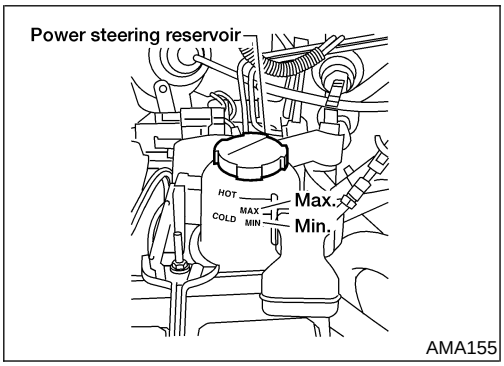

AMA155

Checking Power Steering Fluid and Lines

NEMA0045

CHECKING FLUID LEVEL

NEMA0045S01

- Check fluid level with engine off.
- Check fluid level on reservoir. Use “HOT” range at fluid temperatures of 50 to 80°C (122 to 176°F). Use “COLD” range at fluid temperatures of 0 to 30°C (32 to 86°F).

CAUTION:

- **Do not overfill.**
- **Recommended fluid is Genuine NISSAN PSF II or equivalent.**
  Refer to “RECOMMENDED FLUIDS AND LUBRICANTS”, MA-13.

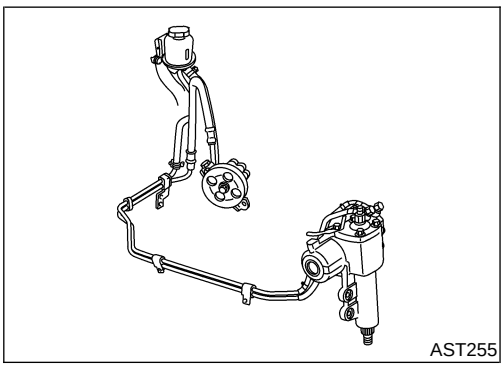
AST255

CHECKING LINES

NEMA0045S02

- Check lines for improper attachment, leaks, cracks, damage, loose connections, chafing and deterioration.

Lubricating Locks, Hinges and Hood Latches

NEMA0046

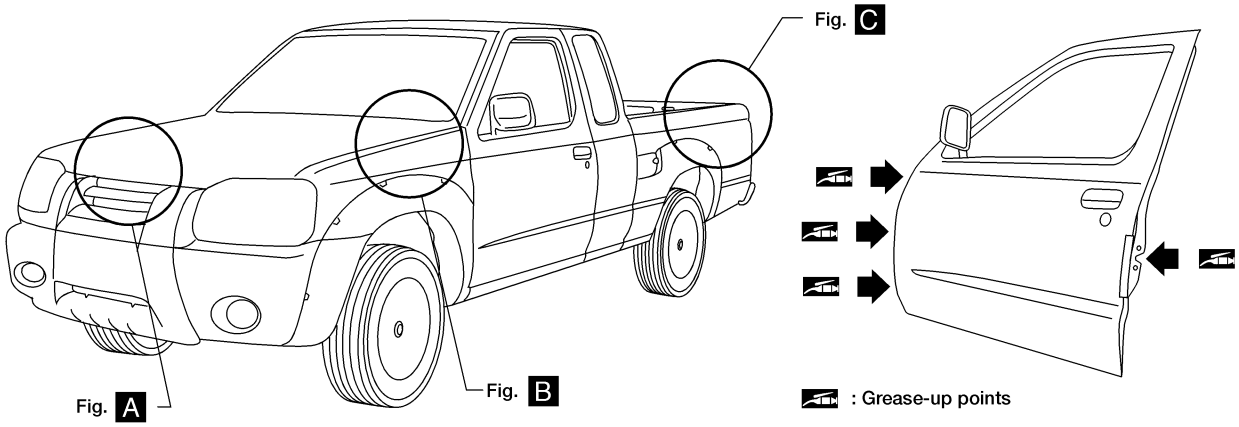

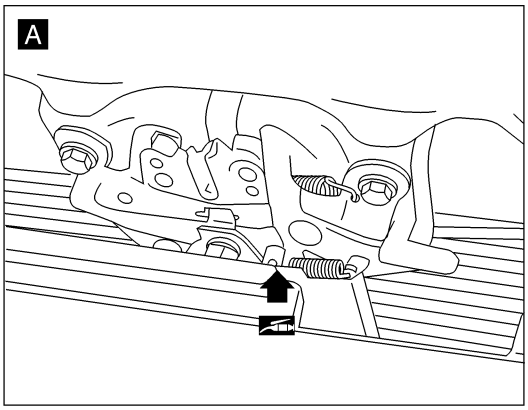

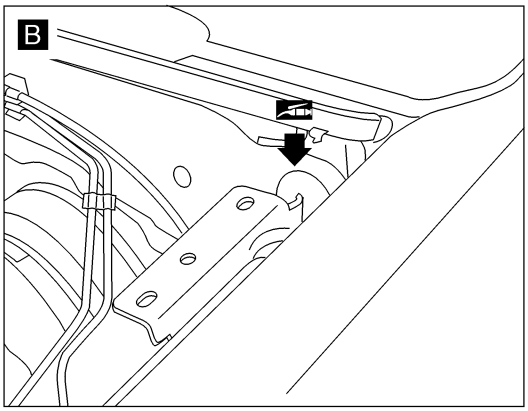

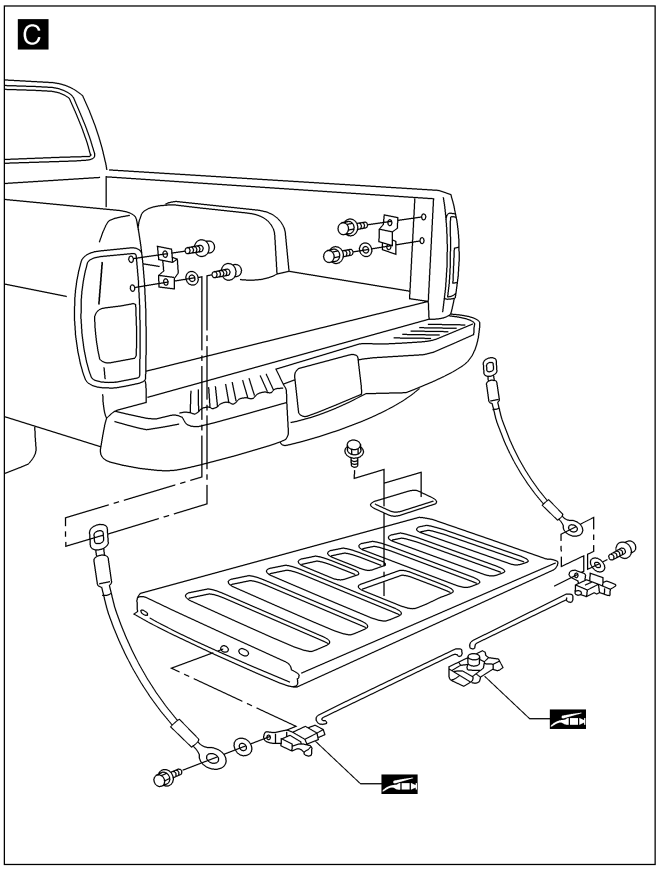

WMA032

Checking Seat Belts, Buckles, Retractors, Anchors and Adjusters

NEMA0047

With ELR type

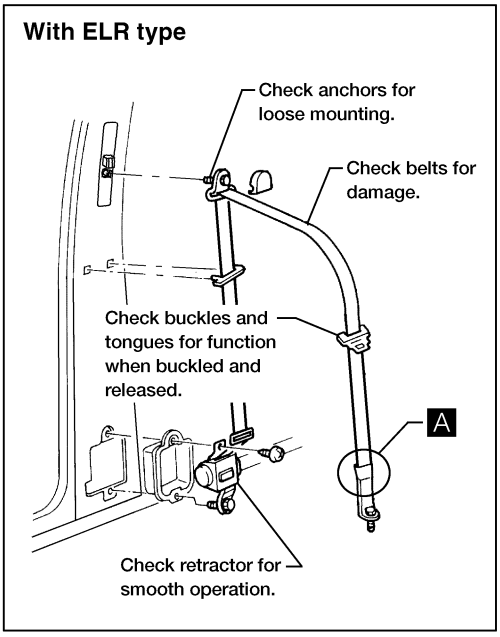

Front separate seat

Jump seat (King cab)

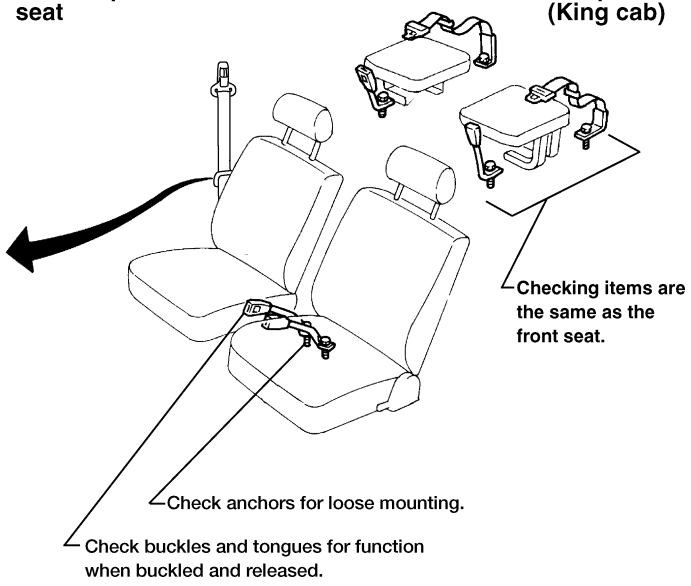

Front bench seat (Including split seat)

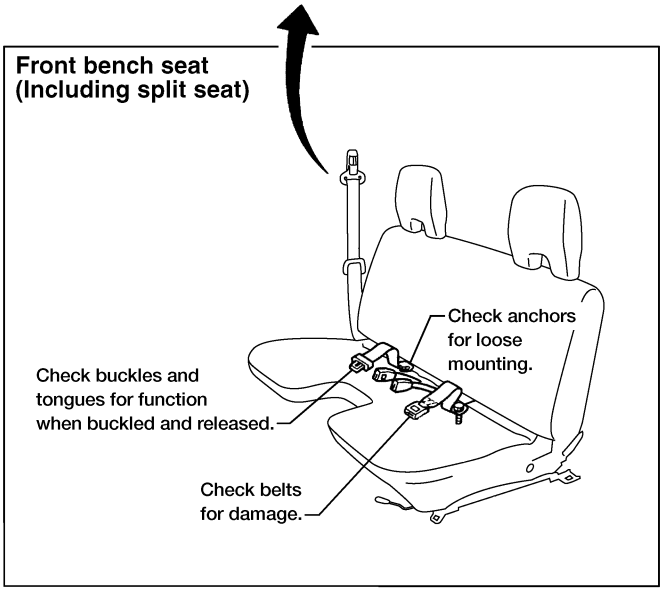

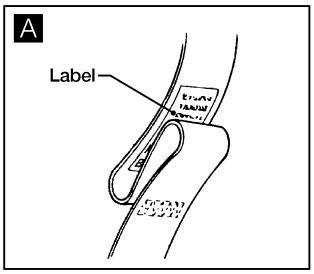

For front seat belt, shock absorber type belt has been used.
Replace the belt when loop has been pulled out and "REPLACE BELT" is visible because this seat belt has a loop of webbing under the sleeve.

CAUTION:

1. **If the vehicle has collided or overturned, replace the entire belt assembly, regardless of nature of accident.**
2. **If the condition of any component of a seat belt is questionable, do not repair seat belt, but replace it as a belt assembly.**
3. **If webbing is cut, frayed, or damaged, replace belt assembly.**
4. **Do not spill drinks, oil, etc. on inner lap belt buckle. Never oil tongue and buckle.**
5. **Use a NISSAN genuine seat belt assembly.**

Anchor bolt:

: 43 - 55 N•m (4.4 - 5.6 kg-m, 32 - 41 ft-lb)

For details, refer to "Seat Belt Inspection", "SEAT BELTS" in RS section.

WMA037

Chassis and Body Maintenance

WHEEL BALANCE

NEMA0050

Maximum allowable unbalance	Dynamic (At rim flange)	10g (0.35oz) (one side)
	Static	20g (0.71oz)

ENGINE MECHANICAL

SECTION EM

CONTENTS

KA24DE

PRECAUTIONS 4
Supplemental Restraint System (SRS) ″AIR BAG″ and ″SEAT BELT PRE-TENSIONER″ 4
Parts Requiring Angular Tightening 5
Liquid Gasket Application Procedure 5
PREPARATION 6
Special Service Tools 6
Commercial Service Tools 8
NOISE, VIBRATION AND HARSHNESS (NVH) TROUBLESHOOTING 10
NVH Troubleshooting Chart - Engine Noise 11
OUTER COMPONENT PARTS 12
Removal and Installation 12
MEASUREMENT OF COMPRESSION PRESSURE 15
OIL PAN 16
Components 16
Removal 16
Installation 17
TIMING CHAIN 18
Components 18
LIQUID GASKET APPLICATION PLACES 19
Removal 20
UPPER TIMING CHAIN 20
IDLER SPROCKET 21
LOWER TIMING CHAIN 21
Inspection 22
Installation 23
LOWER TIMING CHAIN 23
IDLER SPROCKET 24
UPPER TIMING CHAIN 24
OIL SEAL 26
Replacement 26
VALVE OIL SEAL 26
OIL SEAL INSTALLING DIRECTION 26
FRONT OIL SEAL 26
REAR OIL SEAL 27
CYLINDER HEAD 29
Components 29
Removal 30
Installation 31
Disassembly 31
Inspection 31
CYLINDER HEAD DISTORTION 31
CAMSHAFT VISUAL CHECK 32
CAMSHAFT RUNOUT 32
CAMSHAFT CAM HEIGHT 32
CAMSHAFT JOURNAL CLEARANCE 32
CAMSHAFT END PLAY 33
CAMSHAFT SPROCKET RUNOUT 33
VALVE GUIDE CLEARANCE 33
VALVE GUIDE REPLACEMENT 34
VALVE SEATS 35
REPLACING VALVE SEAT FOR SERVICE PARTS 35
VALVE DIMENSIONS 36
VALVE SPRING 37
VALVE LIFTER AND VALVE SHIM 37
Assembly 38
Valve Clearance 38
CHECKING 38
ADJUSTING 39
ENGINE ASSEMBLY 41
Removal and Installation 41
REMOVAL 42
INSTALLATION 43
CYLINDER BLOCK 44
Components 44
Removal and Installation 45
Disassembly 45
PISTON AND CRANKSHAFT 45
Inspection 45
PISTON AND PISTON PIN CLEARANCE 45
PISTON RING SIDE CLEARANCE 46
PISTON RING END GAP 46
CONNECTING ROD BEND AND TORSION 46
CYLINDER BLOCK DISTORTION AND WEAR 47
PISTON-TO-BORE CLEARANCE 47
CRANKSHAFT 48
BEARING CLEARANCE 49

CONTENTS (Cont'd)

CONNECTING ROD BUSHING CLEARANCE (SMALL END) 51
REPLACEMENT OF CONNECTING ROD BUSHING (SMALL END) 51
FLYWHEEL RUNOUT 52
Assembly 52
PISTON 52
CRANKSHAFT 53
REPLACING PILOT BUSHING 54
SERVICE DATA AND SPECIFICATIONS (SDS) 55
General Specifications 55
COMPRESSION PRESSURE 55
Cylinder Head 55
Valve 56
VALVE 56
VALVE SPRING 56
VALVE GUIDE 57
VALVE LIFTER 57
VALVE CLEARANCE ADJUSTMENT 57
AVAILABLE SHIMS 58
VALVE SEAT 59
Cylinder Block 60
Camshaft and Camshaft Bearing 61
Piston, Piston Ring and Piston pin 62
PISTON 62
PISTON PIN 62
PISTON RING 62
Connecting Rod 63
Crankshaft 63
Bearing Clearance 64
Available Main Bearing 64
STANDARD 64
UNDERSIZE (SERVICE) 64
Available Connecting Rod Bearing 64
STANDARD 64
UNDERSIZE (SERVICE) 64
Miscellaneous Components 65

VG33E AND VG33ER

PRECAUTIONS 66
Supplemental Restraint System (SRS) "AIR BAG" and "SEAT BELT PRE-TENSIONER" 66
Parts Requiring Angular Tightening 67
Liquid Gasket Application Procedure 67
PREPARATION 68
Special Service Tools 68
Commercial Service Tools 70
NOISE, VIBRATION AND HARSHNESS (NVH) TROUBLESHOOTING 72
NVH Troubleshooting Chart - Engine Noise 73
OUTER COMPONENT PARTS 75
Removal and Installation 75
MEASUREMENT OF COMPRESSION PRESSURE 78
OIL PAN 80
Removal 80
Installation 81
TIMING BELT 83
Components 83
Removal 84
Inspection 85
BELT TENSIONER AND TENSIONER SPRING 86
Installation 86
Tension Adjustment 87
AFTER BELT REPLACEMENT 87
AFTER ENGINE OVERHAUL OR ENGINE REASSEMBLY (WITH ROCKER COVERS REMOVED) 88
OIL SEAL 90
Replacement 90
VALVE OIL SEAL 90
OIL SEAL INSTALLING DIRECTION 90
CAMSHAFT OIL SEAL 91
FRONT OIL SEAL 91
REAR OIL SEAL 91
CYLINDER HEAD 92
Components 92
Removal 93
Disassembly 95
Inspection 96
CYLINDER HEAD DISTORTION 96
CAMSHAFT VISUAL CHECK 96
CAMSHAFT RUNOUT 96
CAMSHAFT CAM HEIGHT 96
CAMSHAFT JOURNAL CLEARANCE 96
CAMSHAFT END PLAY 97
CAMSHAFT SPROCKET RUNOUT 97
VALVE GUIDE CLEARANCE 98
VALVE GUIDE REPLACEMENT 98
VALVE SEATS 99
REPLACING VALVE SEAT FOR SERVICE PARTS 100
VALVE DIMENSIONS 100
VALVE SPRING 101
ROCKER SHAFT AND ROCKER ARM 101
HYDRAULIC VALVE LIFTER 102
Assembly 102
Installation 103
SUPERCHARGER 107
Components 107
Removal 108
Inspection 109
SUPERCHARGER FLANGE 109
ROTOR SYSTEM 109
SUPERCHARGER BYPASS VALVE ACTUATOR 110
Installation 110
ENGINE ASSEMBLY 111
Removal and Installation 111
REMOVAL 112
CYLINDER BLOCK 114

CONTENTS (Cont'd)

Components....114
Removal and Installation....115
Disassembly....115
PISTON AND CRANKSHAFT....115
Inspection....116
PISTON AND PISTON PIN CLEARANCE....116
PISTON RING SIDE CLEARANCE....116
PISTON RING END GAP....117
CONNECTING ROD BEND AND TORSION....117
CYLINDER BLOCK DISTORTION AND WEAR....117
PISTON-TO-BORE CLEARANCE....118
CRANKSHAFT....119
BEARING CLEARANCE....120
CONNECTING ROD BUSHING CLEARANCE (SMALL END)....122
REPLACEMENT OF CONNECTING ROD BUSHING (SMALL END)....123
FLYWHEEL/DRIVE PLATE RUNOUT....123
Assembly....123
PISTON....123
CRANKSHAFT....124
REPLACING PILOT BUSHING (M/T) OR PILOT CONVERTER (A/T)....125
SERVICE DATA AND SPECIFICATIONS (SDS)....126
General Specifications....126
Cylinder Head....127
Valve....127
VALVE....127
VALVE SPRING....128
HYDRAULIC VALVE LIFTER....128
VALVE GUIDE....128
ROCKER SHAFT AND ROCKER ARM....128
Valve Seat....129
INTAKE VALVE SEAT....129
EXHAUST VALVE SEAT....130
Camshaft and Camshaft Bearing....131
Cylinder Block....132
Piston, Piston Ring and Piston Pin....133
AVAILABLE PISTON....133
PISTON RING....133
PISTON PIN....134
Connecting Rod....134
Crankshaft....134
Available Main Bearing....135
NO. 1 MAIN BEARING....135
NO. 2 AND 3 MAIN BEARING....135
NO. 4 MAIN BEARING....135
UNDER SIZE....135
Available Connecting Rod Bearing....136
CONNECTING ROD BEARING UNDERSIZE....136
Miscellaneous Components....136
BEARING CLEARANCE....136

Supplemental Restraint System (SRS) “AIR BAG” and “SEAT BELT PRE-TENSIONER”

NEEM0125

The Supplemental Restraint System such as “AIR BAG” and “SEAT BELT PRE-TENSIONER” used along with a seat belt, helps to reduce the risk or severity of injury to the driver and front passenger in a frontal collision. The Supplemental Restraint System consists of a driver air bag module (located in the center of the steering wheel), a front passenger air bag module (located on the instrument panel on the passenger side), seat belt pre-tensioners, a diagnosis sensor unit, warning lamp, wiring harness, and spiral cable.

The vehicle (except Crew Cab model) is equipped with a passenger air bag deactivation switch. Because no rear seat exists where a rear-facing child restraint can be placed, the switch is designed to turn off the passenger air bag so that a rear-facing child restraint can be used in the front passenger seat. The switch is located in the center of the instrument panel, near the ashtray. When the switch is turned to the ON position, the passenger air bag is enabled and could inflate in a frontal collision. When the switch is turned to the OFF position, the passenger air bag is disabled and will not inflate in a frontal collision. A passenger air bag OFF indicator on the instrument panel lights up when the passenger air bag is switched OFF. The driver air bag always remains enabled and is not affected by the passenger air bag deactivation switch.

Information necessary to service the system safely is included in the **RS section** of this Service Manual.

WARNING:

- **To avoid rendering the SRS inoperative, which could increase the risk of personal injury or death in the event of a collision which would result in air bag inflation, all maintenance should be performed by an authorized NISSAN dealer.**
- **Improper maintenance, including incorrect removal and installation of the SRS, can lead to personal injury caused by unintentional activation of the system. For removal of Spiral Cable and Air Bag Module, see the RS section.**
- **Do not use electrical test equipment on any circuit related to the SRS unless instructed to in this Service Manual. Spiral cable and wiring harnesses (except “SEAT BELT PRE-TENSIONER”) covered with yellow insulation either just before the harness connectors or for the complete harness are related to the SRS.**
- **The vehicle (except Crew Cab model) is equipped with a passenger air bag deactivation switch which can be operated by the customer. When the passenger air bag is switched OFF, the passenger air bag is disabled and will not inflate in a frontal collision. When the passenger air bag is switched ON, the passenger air bag is enabled and could inflate in a frontal collision. After SRS maintenance or repair, make sure the passenger air bag deactivation switch is in the same position (ON or OFF) as when the vehicle arrived for service.**

Parts Requiring Angular Tightening

NEEM0126

- Use an angle wrench for the final tightening of the following engine parts:

a) Cylinder head bolts
b) Connecting rod cap nuts

- Do not use a torque value for final tightening.
- The torque value for these parts are for a preliminary step.
- Ensure thread and seat surfaces are clean and coated with engine oil.

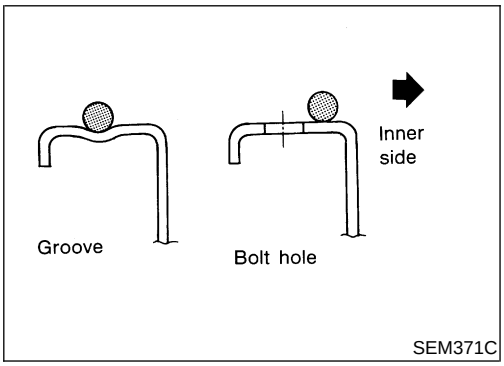

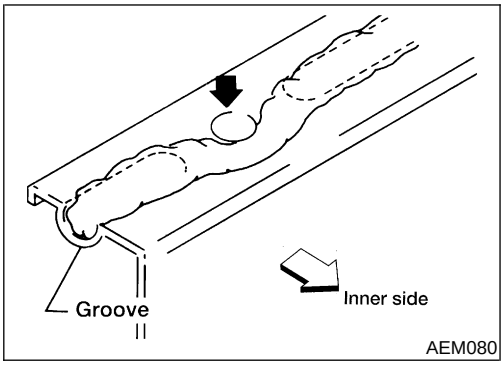

Liquid Gasket Application Procedure

NEEM0127

1) Use a scraper to remove all traces of old liquid gasket from mating surfaces and grooves. Also completely clean any oil stains from these portions.
2) Apply a continuous bead of liquid gasket to mating surfaces. (Use Genuine RTV Silicone Sealant Part No. 999MP-A7007 or equivalent.)
   - Be sure liquid gasket is 3.5 to 4.5 mm (0.138 to 0.177 in) dia. (for oil pan).
   - Be sure liquid gasket is 2.0 to 3.0 mm (0.079 to 0.118 in) dia. (in areas except oil pan).
3) Apply liquid gasket to inner surface around hole perimeter area (unless otherwise specified).
4) Assembly should be done within 5 minutes after coating.
5) Wait at least 30 minutes before refilling engine oil and engine coolant.

Special Service Tools

NEEM0128

The actual shapes of Kent-Moore tools may differ from those of special service tools illustrated here.

Tool number (Kent-Moore No.) Tool name	Description	
ST0501S000 (—) Engine stand assembly **1** ST05011000 (—) Engine stand **2** ST05012000 (—) Base	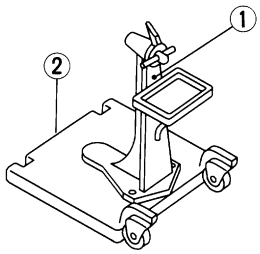 NT042	Disassembling and assembling
KV10105001 (—) Engine attachment	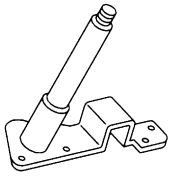 NT031	
KV101092S0 (J26336-B) Valve spring compressor **1** KV10109210 (—) Compressor **2** KV100109220 (—) Adapter	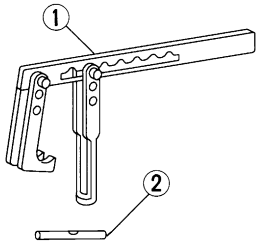 NT021	Disassembling and assembling valve components
KV10112100 (BT8653-A) Angle wrench	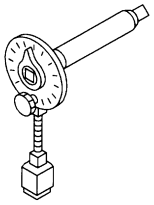 NT014	Tightening bearing cap, cylinder head bolts, etc.
KV10116300 (J-38955) Valve oil seal drift	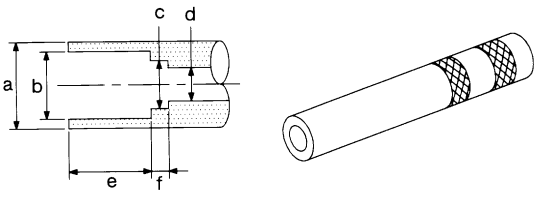 NT602	Installing valve oil seal **a: 25 (0.98) dia.** **b: 14.4 (0.567) dia.** **c: 11.8 (0.465) dia.** **d: 10 (0.39) dia.** **e: 11 (0.43)** **f: 9 (0.35)**

Tool number (Kent-Moore No.) Tool name	Description	
KV10110300 (—) Piston pin press stand assembly **1** KV10110310 (—) Cap **2** KV10110330 (—) Spacer **3** ST13030020 (—) Press stand **4** ST13030030 (—) Spring **5** KV10110340 (—) Drift **6** KV10110320 (—) Center shaft	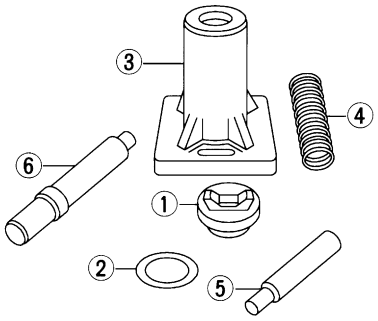 NT036	Disassembling and assembling piston with connecting rod
EM03470000 (J8037) Piston ring compressor	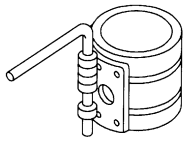 NT044	Installing piston assembly into cylinder bore
(J36467) Valve oil seal remover	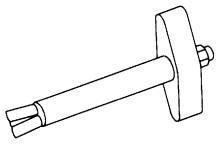 NT034	Removing valve oil seal
ST16610001 (J23907) Pilot bushing puller	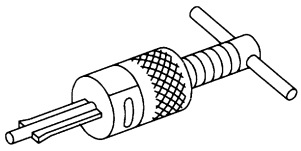 NT045	Removing crankshaft pilot bushing
KV10111100 (J37228) Seal cutter	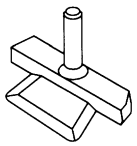 NT046	Removing oil pan
WS39930000 (—) Tube presser	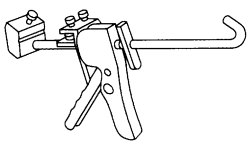 NT052	Pressing the tube of liquid gasket

Special Service Tools (Cont'd)

Tool number (Kent-Moore No.) Tool name	Description	
KV101151S0 (J38972) Lifter stopper set **1** KV10115110 (J38972-1) Camshaft pliers **2** KV10115120 (J38972-2) Lifter stopper	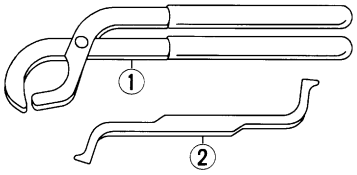 NT041	Changing valve lifter shims
KV10117100 (J36471-A) Front heated oxygen sensor wrench	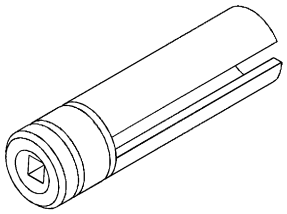 NT379	Loosening or tightening heated oxygen sensor **For 22 mm (0.87 in) hexagon nut**

Commercial Service Tools

NEEM0129

Tool name (Kent Moore No.)	Description	
Spark plug wrench	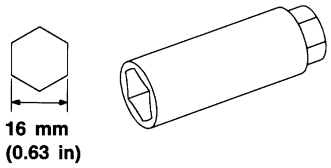 NT047	Removing and installing spark plug
Pulley holder	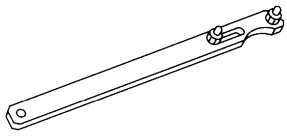 NT035	Holding camshaft pulley while tightening or loosening camshaft bolt
Valve seat cutter set	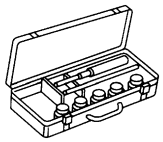 NT048	Finishing valve seat dimensions
Piston ring expander	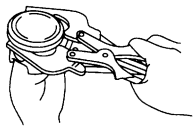 NT030	Removing and installing piston ring
Valve guide drift	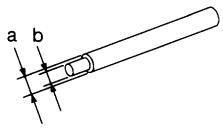 NT015	Removing and installing valve guide **Intake & Exhaust:** **a = 10.5 mm (0.413 in) dia.** **b = 6.6 mm (0.260 in) dia.**

Tool name (Kent Moore No.)	Description	
Valve guide reamer	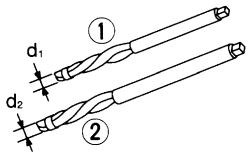 NT016	Reaming valve guide 1 or hole for oversize valve guide 2 **Intake:** **d_1 = 7.0 mm (0.276 in) dia.** **d_2 = 11.2 mm (0.441 in) dia.** **Exhaust:** **d_1 = 8.0 mm (0.315 in) dia.** **d_2 = 12.2 mm (0.480 in) dia.**
Front oil seal drift	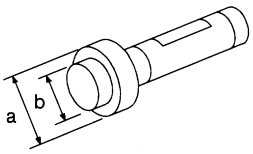 NT049	Installing front oil seal **a: 52 mm (2.05 in) dia.** **b: 44 mm (1.73 in) dia.**
Rear oil seal drift	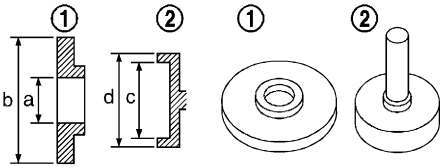 NT719	Installing rear oil seal **a: 46 mm (1.81 in)** **b: 110 mm (4.33 in)** **c: 84 mm (3.31 in)** **d: 96 mm (3.78 in)**
a: (J-43897-18) b: (J-43897-12) Thread repair tool for oxygen sensor	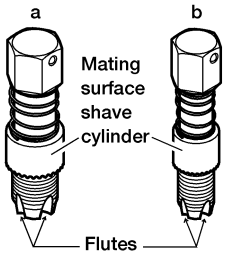 AEM488	**a: 18 mm (0.71 in)** **b: 12 mm (0.47 in)**
Anti-seize thread compound	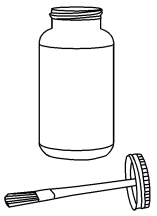 AEM489	For preventing corrosion, seizing, and galling on high temperature applications.

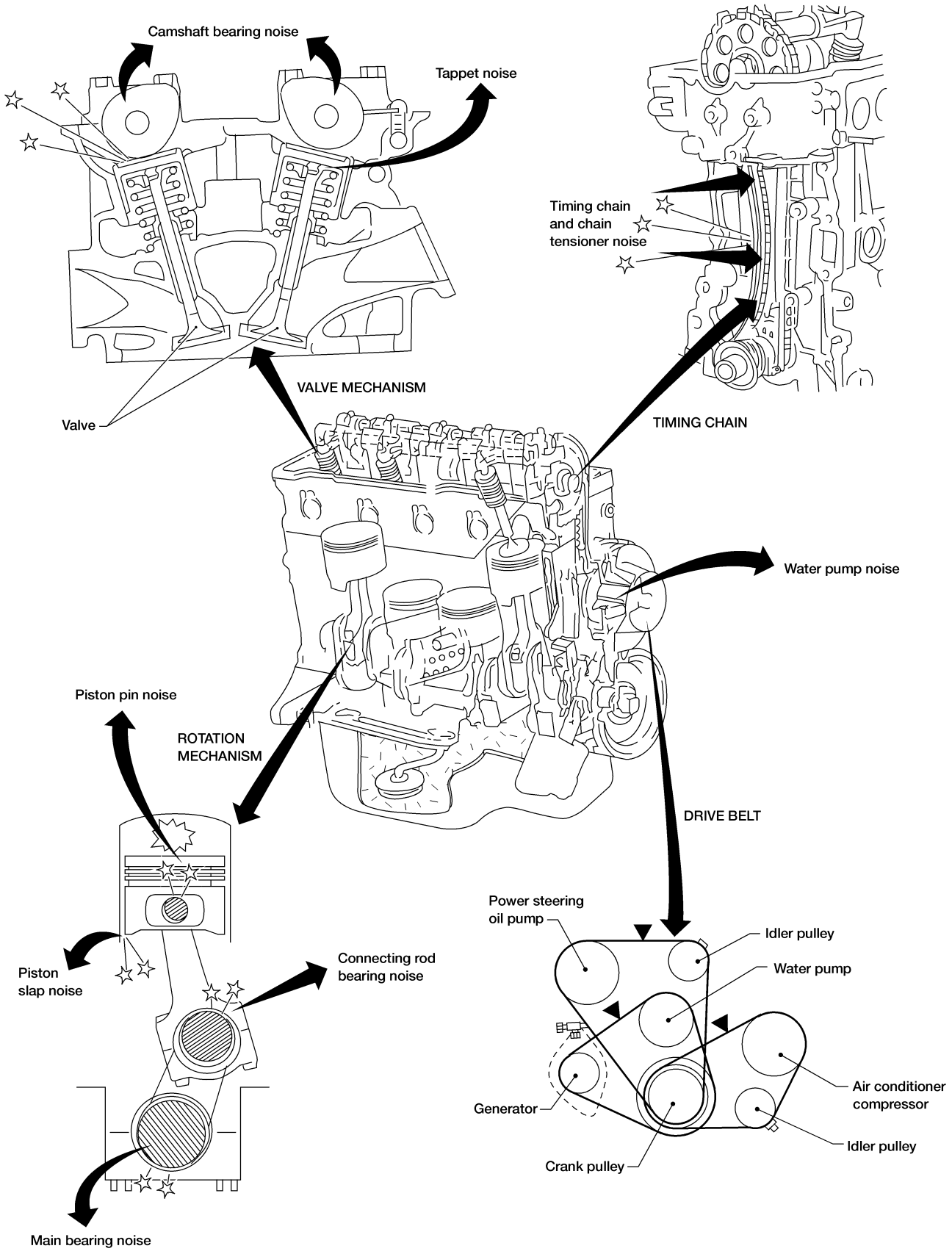
Camshaft bearing noise
Tappet noise
Timing chain
and chain
tensioner noise
VALVE MECHANISM
Valve
TIMING CHAIN
Water pump noise
Piston pin noise
ROTATION
MECHANISM
DRIVE BELT
Power steering
oil pump
Idler pulley
Water pump
Piston
slap noise
Connecting rod
bearing noise
Air conditioner
compressor
Generator
Idler pulley
Crank pulley
Main bearing noise

AEM466

NVH Troubleshooting Chart — Engine Noise

NEEM0085S01

Use the chart below to help you find the cause of the symptom.

1. Locate the area where noise occurs.
2. Confirm the type of noise.
3. Specify the operating condition of the engine.
4. Check the specified noise source.

If necessary, repair or replace these parts.

Location of noise	Type of noise	Operating condition of engine						Source of noise	Check item	Reference page
		Before warm-up	After warm-up	When start-ing	When idling	When rev-ving	While driving			
Top of engine Rocker cover Cylinder head	Ticking or clicking	C	A	—	A	B	—	Tappet noise	Valve clearance	EM-38
	Rattle	C	A	—	A	B	C	Camshaft bearing noise	Camshaft journal clear-ance Camshaft runout	EM-32
Crankshaft pulley Cylinder block (upper side of engine) Oil pan	Slap or knock	—	A	—	B	B	—	Piston pin noise	Piston and piston pin clearance Connecting rod bushing clearance	EM-45, 51
	Slap or rap	A	—	—	B	B	A	Piston slap noise	Piston ring side clearance Piston ring end gap Connecting rod bend and torsion Piston-to-bore clearance	EM-47, 46
	Knock	A	B	C	B	B	B	Connecting rod-bearing noise	Connecting rod bearing clearance (Big end) Connecting rod bushing clearance (Small end)	EM-50, 51
	Knock	A	B	—	A	B	C	Main bear-ing noise	Crankshaft runout Main bearing oil clear-ance	EM-48
Front of engine Timing chain cover	Tapping or ticking	A	A	—	B	B	B	Timing chain and chain ten-sioner noise	Timing chain cracks and wear	EM-22
Front of engine	Squeak-ing or fizzing	A	B	—	B	—	C	Other drive belts (Stick-ing or slip-ping)	Drive belt deflection	***MA-16***, “Checking Drive Belts”
	Creaking	A	B	A	B	A	B	Other drive belts (Slip-ping)	Idler pulley bearing operation	
	Squall creak	A	B	—	B	A	B	Water pump noise	Water pump operation	***LC-12***, “Water Pump Inspection”

A: Closely related B: Related C: Sometimes related —: Not related:

Removal and Installation

NEEM0086

SEC. 120 • 140 • 147 • 150 • 163 • 164 • 210 • 220 • 221 • 230 • 231

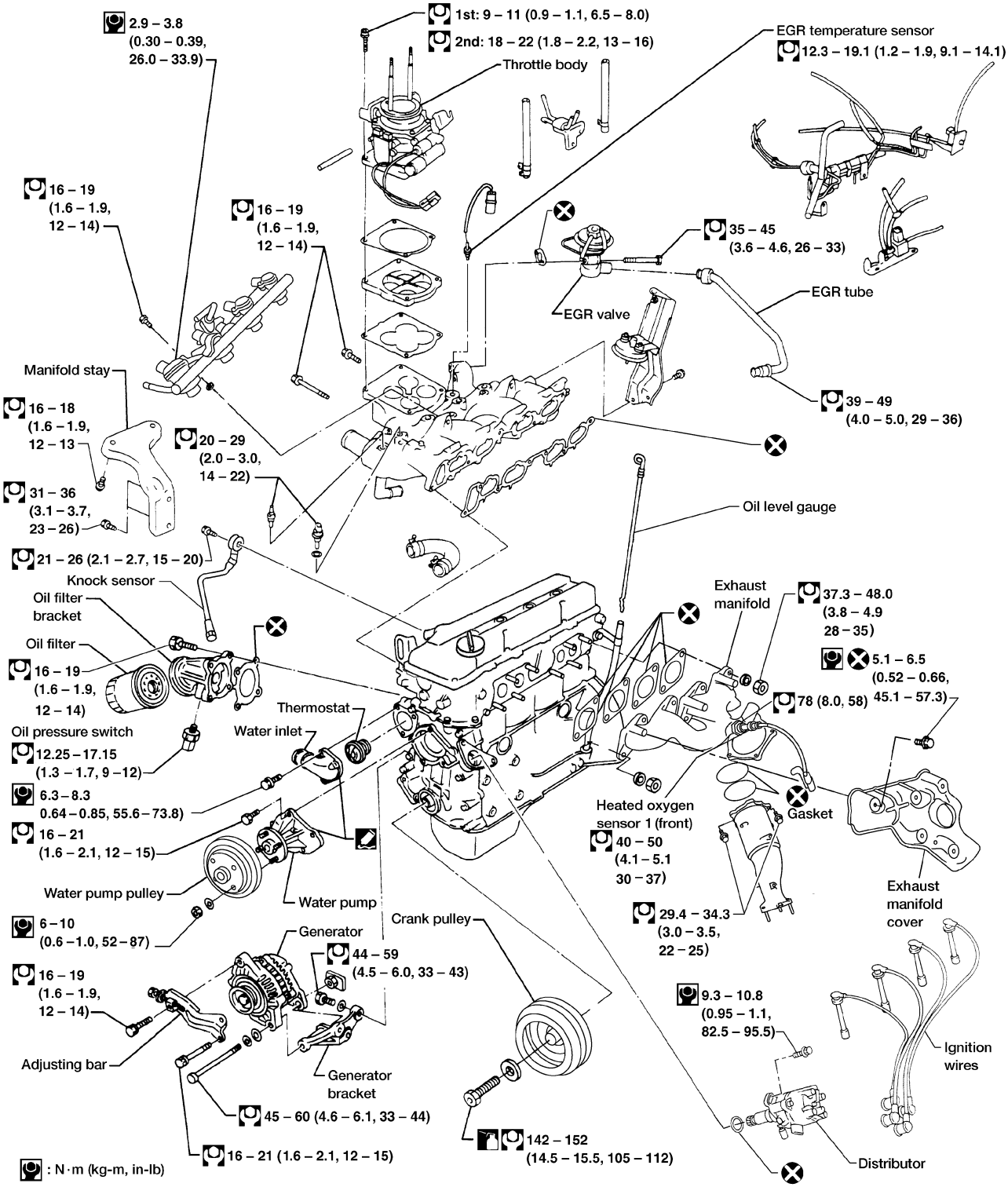

WEM146

SEC. 140 • 147 • 220 • 221 • 226

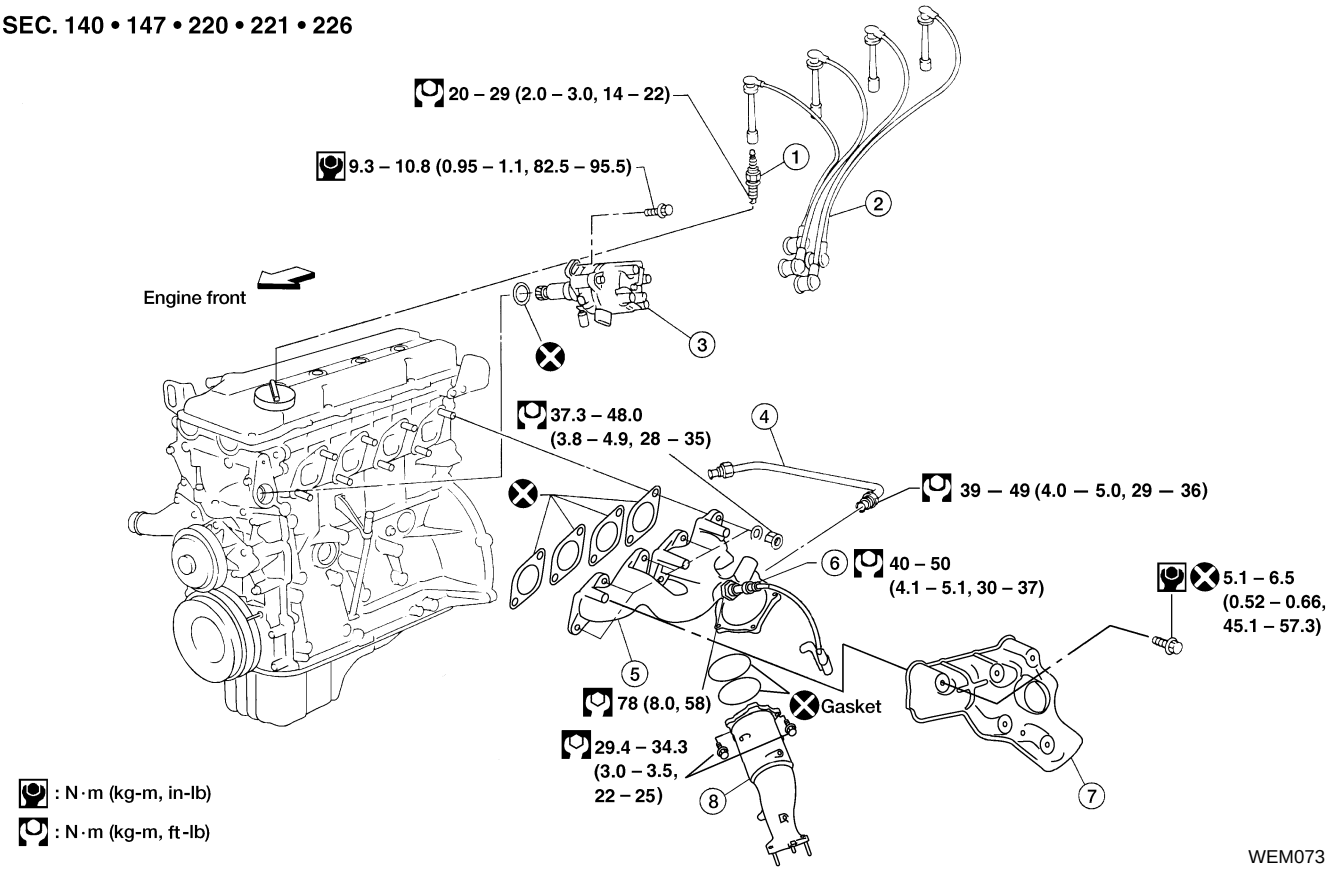

1. Spark plug
2. Ignition wires
3. Camshaft position sensor built into distributor
4. EGR tube
5. Exhaust manifold
6. Heated oxygen sensor 1 (front)
7. Exhaust manifold cover
8. TWC (manifold)

Intake manifold

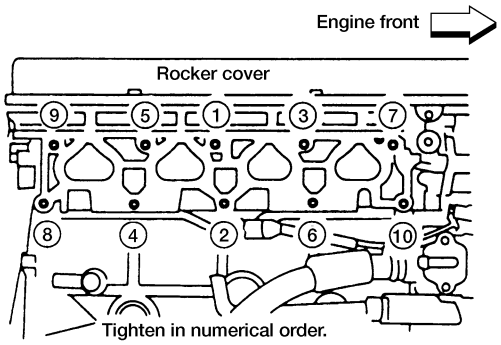

Tighten in numerical order.
Loosen in reverse order.
15.7 – 18.6 (1.6 – 1.9, 11.6 – 13.7)

Exhaust manifold

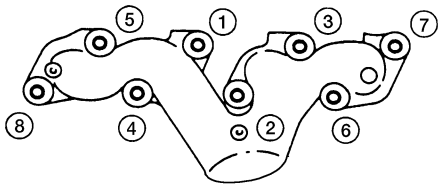

Tighten in numerical order.
Loosen in reverse order.
37.3 – 48.0 (3.8 – 4.9, 27.5 – 35.4)

: N·m (kg-m, ft-lb)

Throttle body

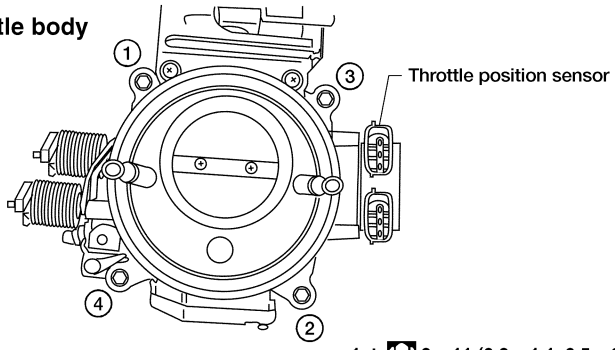

Tighten in numerical order.
Loosen in reverse order.

1st: 9 – 11 (0.9 – 1.1, 6.5 – 8.0)
2nd: 18 – 22 (1.8 – 2.2, 13 – 16)

AEM467

MEASUREMENT OF COMPRESSION PRESSURE

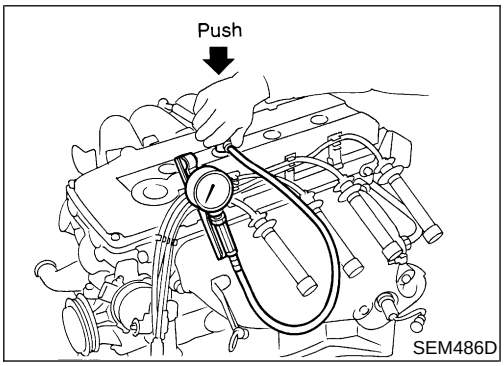

1. Warm up engine.
2. Turn ignition switch OFF.
3. Release fuel pressure.
   Refer to ***EC-57***, “Fuel Pressure Release”.
4. Remove all spark plugs.

- **Clean area around plug with compressed air before removing the spark plug.**

5. Disconnect camshaft position sensor harness connector at the distributor.
6. Remove fuel injector fuse **3** on FUSE BLOCK (J/B) behind the instrument lower panel driver’s side.
7. Attach a compression tester to No. 1 cylinder.
8. Depress accelerator pedal fully to keep throttle valve wide open.
9. Crank engine and record highest gauge indication.
10. Repeat the measurement on each cylinder as shown above.

- **Always use a fully-charged battery to obtain specified engine speed.**

Compression pressure: kPa (kg/cm^2, psi)/300 rpm

Standard

1,226 (12.5, 178)

Minimum

1,030 (10.5, 149)

Difference limit between cylinders

98 (1.0, 14)

11. If compression in one or more cylinders is low:

a. Pour a small amount of engine oil into cylinders through spark plug holes.

b. Retest compression.

- **If adding oil improves cylinder compression, piston rings may be worn or damaged. If so, replace piston rings after checking piston.**
- **If pressure stays low, a valve may be sticking or seating improperly. Inspect and repair valve and valve seat. Refer to “VALVE”, EM-56 and “VALVE SEAT”, EM-59. If valve or valve seat is damaged excessively, replace it.**
- **If compression in any two cylinders adjacent cylinders is low, and if adding oil does not improve compression, there is leakage past the gasket surface. If so, replace cylinder head gasket.**

12. Reinstall spark plugs, fuel injector fuse, fuel pump fuse, and reconnect camshaft position sensor harness connector at the distributor.
13. Erase the DTC stored in the ECM.

CAUTION:

Always erase the DTC after checking compression.
Refer to *EC-85*, “HOW TO ERASE EMISSION-RELATED DIAGNOSTIC INFORMATION”.

Components

NEEM0088

SEC. 110

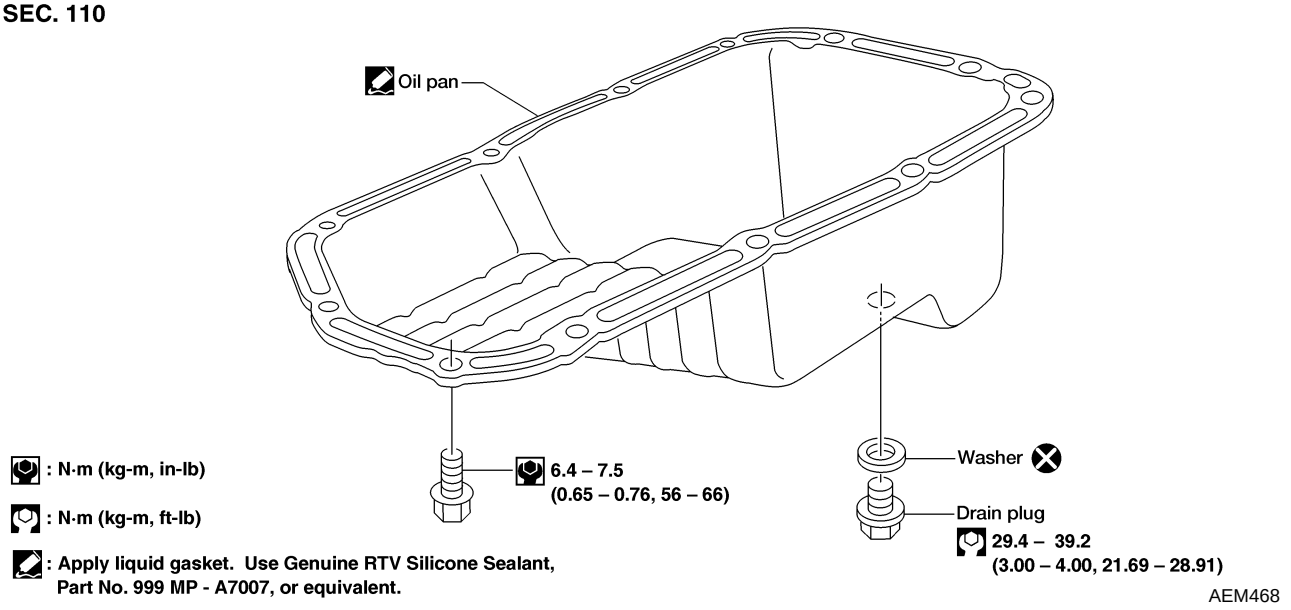

AEM468

Removal

NEEM0089

1. Raise vehicle and support it with safety stands.
2. Remove engine under cover.
3. Drain engine oil.
4. Remove front suspension member.

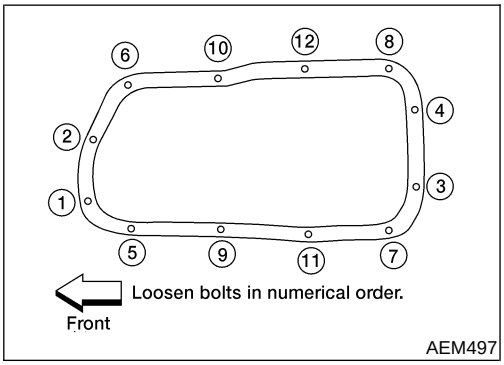

AEM497

5. Remove oil pan bolts.

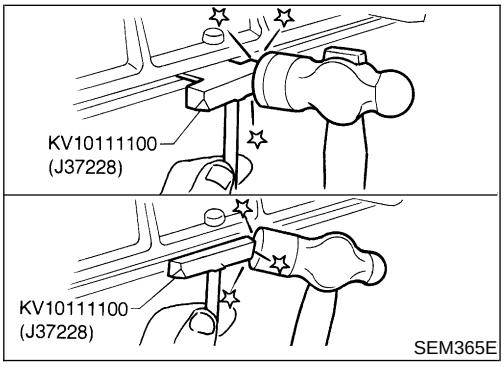

SEM365E

6. Remove oil pan.
a. Insert Tool between cylinder block and oil pan.
- **Be careful not to damage aluminum mating surface.**
- **Do not insert screwdriver, or oil pan flange will be damaged.**

b. Slide Tool by tapping on the side of the Tool with a hammer.
7. Pull out oil pan from front side.

Installation

NEEM0090

1. Use a scraper to remove old liquid gasket from mating surface of oil pan.

- **Also remove traces of liquid gasket from mating surface of cylinder block.**

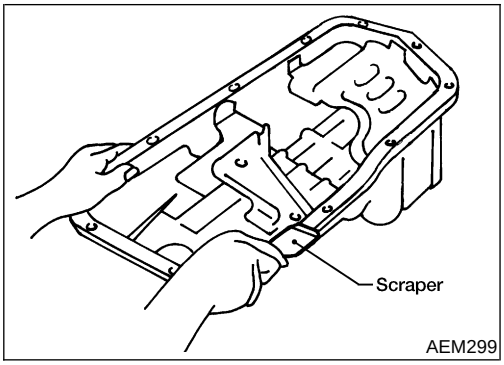

AEM299

2. Apply a continuous bead of liquid gasket to mating surface of oil pan.

- **Use Genuine RTV Silicone Sealant, Part No. 999 MP-A7007 or equivalent.**
- **Apply to groove on mating surface.**
- **Allow 7 mm (0.28 in) clearance around bolt hole.**

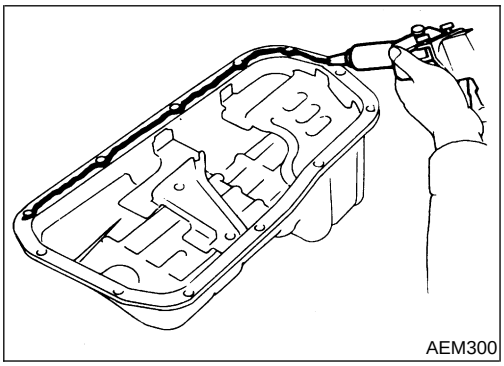
AEM300

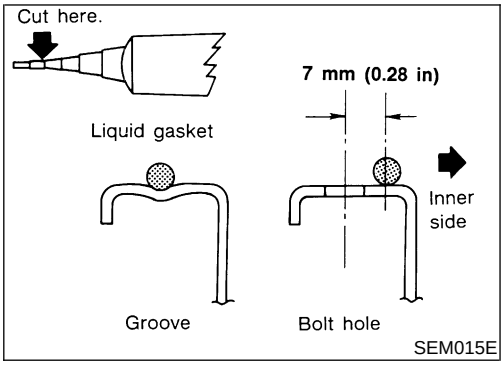

SEM015E

- **Be sure liquid gasket diameter is 3.5 to 4.5 mm (0.138 to 0.177 in).**
- **Attaching should be done within 5 minutes after coating.**

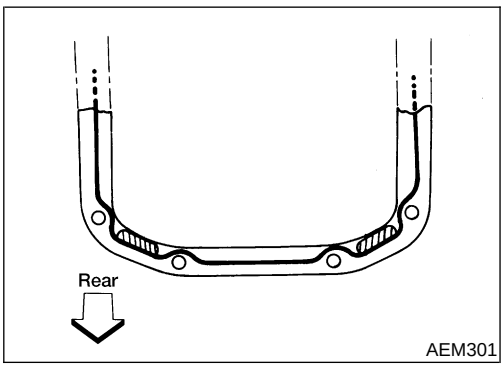

AEM301

3. Install oil pan.

- **Tighten oil pan bolts in numerical order.**
  : 6.4 - 7.5 N·m (0.65 - 0.76 kg-m, 56 - 66 in-lb)
- **Wait at least 30 minutes before refilling engine oil.**

4. Install parts in reverse order of removal.

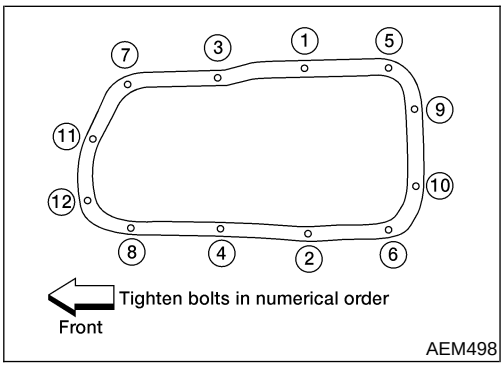

AEM498

Components

NEEM0091

SEC. 120 • 130 • 135 • 210

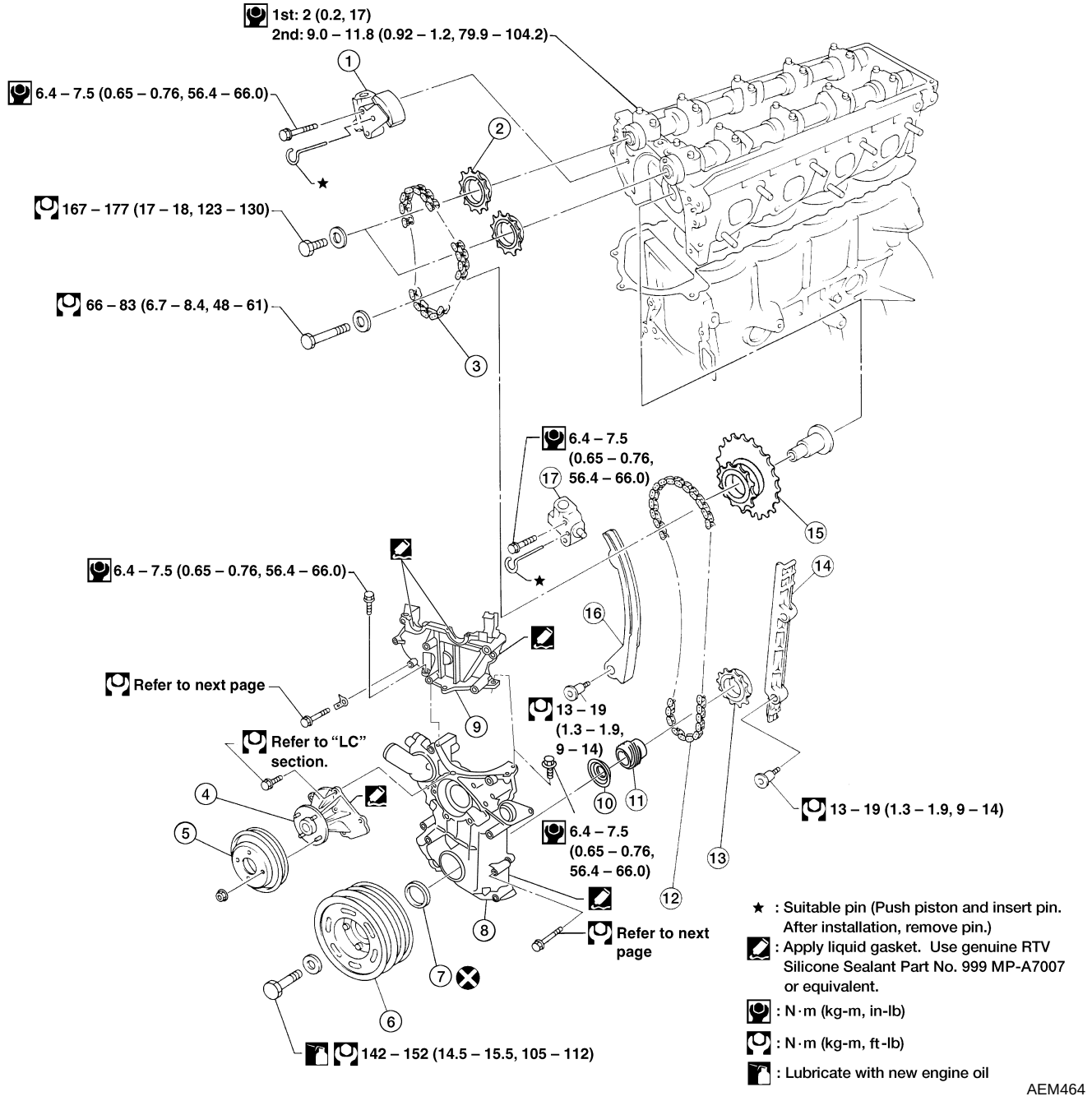

1. Upper timing chain tensioner
2. Cam sprocket
3. Upper timing chain
4. Water pump
5. Water pump pulley
6. Crankshaft pulley
7. Front oil seal
8. Front cover
9. Camshaft sprocket cover
10. Oil slinger
11. Oil pump drive gear
12. Lower timing chain
13. Crankshaft sprocket
14. Chain guide
15. Idler sprocket
16. Chain tension arm
17. Lower timing chain tensioner

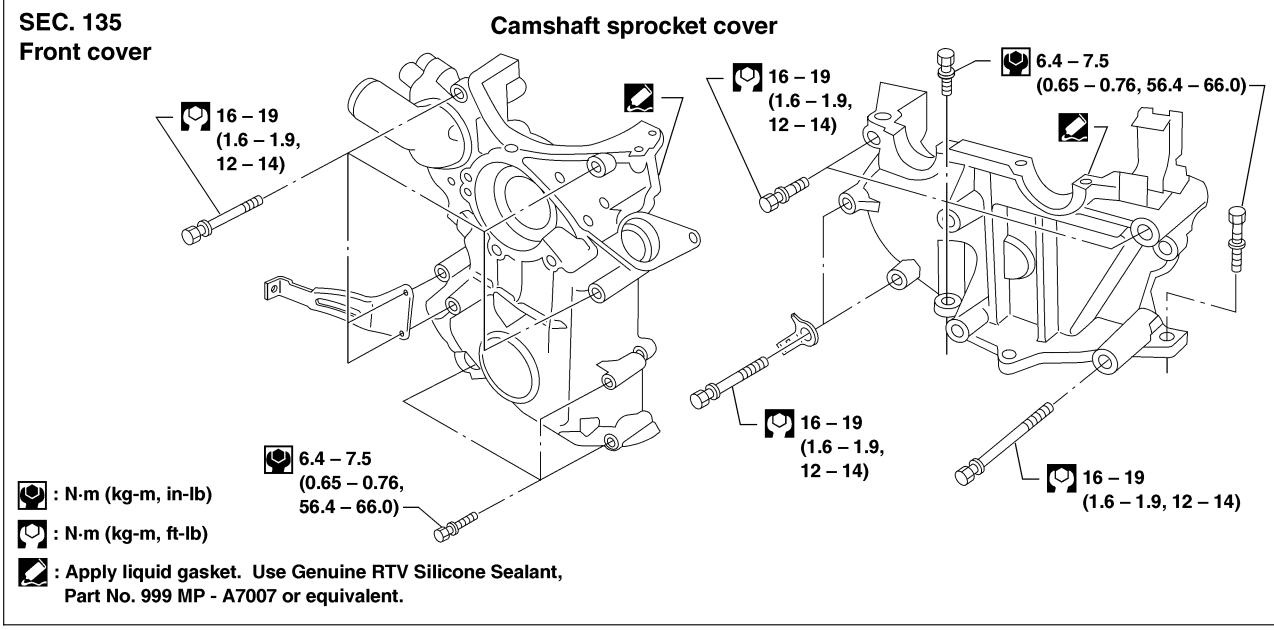

LIQUID GASKET APPLICATION PLACES

NEEM0091S01

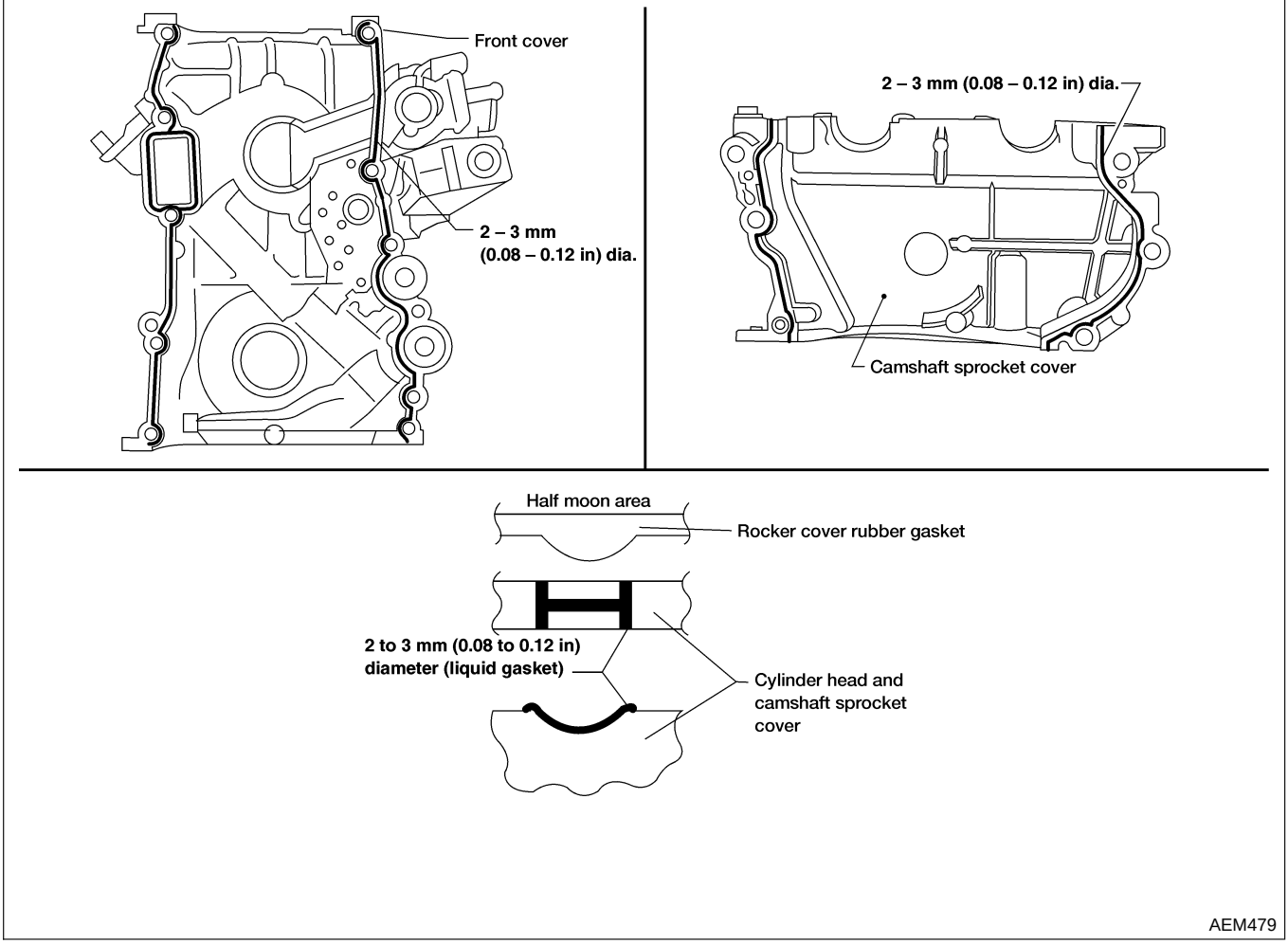

Removal

NEEM0092

CAUTION:

- **After removing timing chain, do not turn crankshaft and camshaft separately, or valves will strike piston heads.**
- **When installing chain tensioners or other sliding parts, lubricate contacting surfaces with new engine oil.**
- **Apply new engine oil to bolt threads and seat surfaces when installing camshaft sprockets and crankshaft pulley.**
- **Do not spill engine coolant on drive belts.**

UPPER TIMING CHAIN

NEEM0092S01

1. Remove the air cleaner assembly.
2. Remove the spark plug wires.

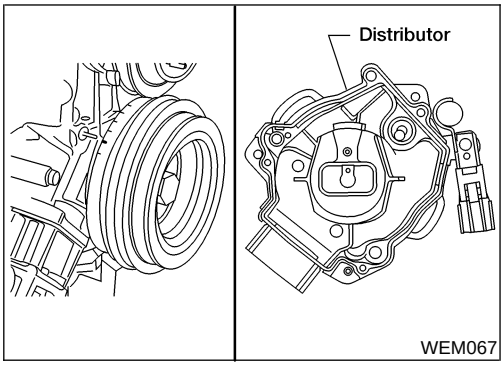

3. Set No.1 piston at TDC on its compression stroke.
4. Remove vacuum hoses, electrical harness connectors, and harness clamps.
5. Remove the power steering belt.
6. Remove the power steering pump and position it to one side. Remove the idler pulley and bracket as well.

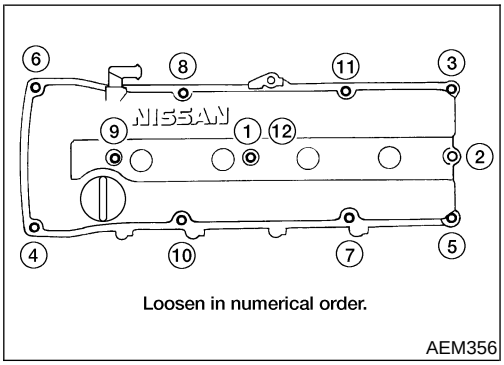

7. Remove the rocker cover.

- **Loosen the bolts and remove in numerical order as shown.**

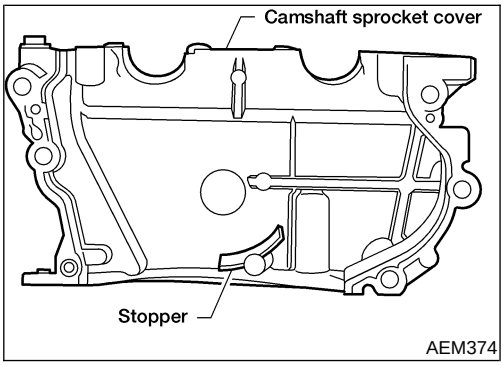

8. Remove the camshaft sprocket cover.

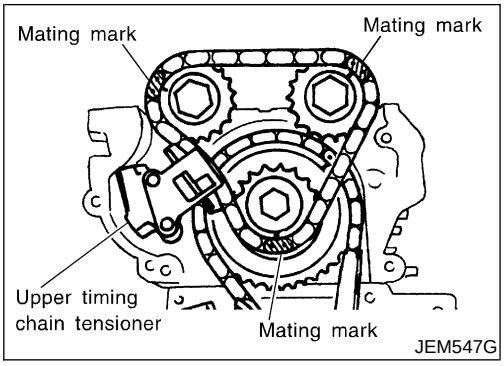

9. Wipe off the links of the timing chain next to the timing marks on the sprockets. Put paint marks on the timing chain, matching them with the timing marks on the cam sprockets and idler sprocket.
10. Remove cam sprocket bolts, cam sprockets and upper timing chain.

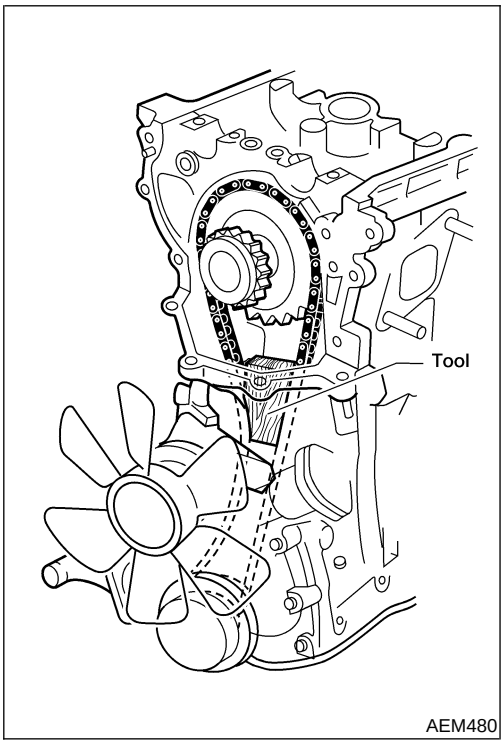

IDLER SPROCKET

NEEM0092S02

1. Remove upper timing chain.
   Refer to "UPPER TIMING CHAIN", EM-20.
2. Support lower timing chain by using a suitable tool to prevent chain tensioner spring from coming out.

NOTE:
This step is only to be applied when the lower cover is not being removed.

3. Remove the idler sprocket.

LOWER TIMING CHAIN

NEEM0092S03

1. Drain coolant by removing the cylinder block drain plug and opening the radiator drain cock. Refer to ***MA-17***, "Changing Engine Coolant".
2. Drain engine oil from drain plug of oil pan.
3. Remove the following parts.

- Alternator drive belt.
- A/C compressor drive belt.
- Cooling fan with coupling.
- Radiator shroud.

4. Remove A/C compressor and position it to the side. Remove the idler pulley and bracket as well.

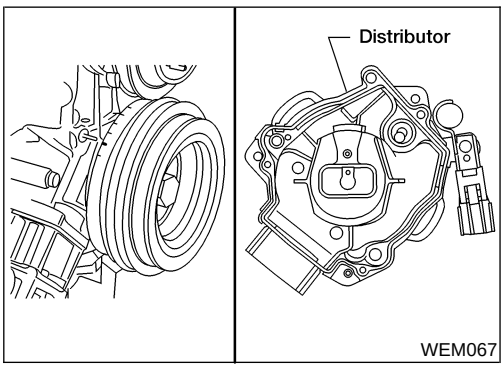

5. Set No. 1 piston to TDC on its compression stroke.
6. Remove the distributor.

Removal (Cont'd)

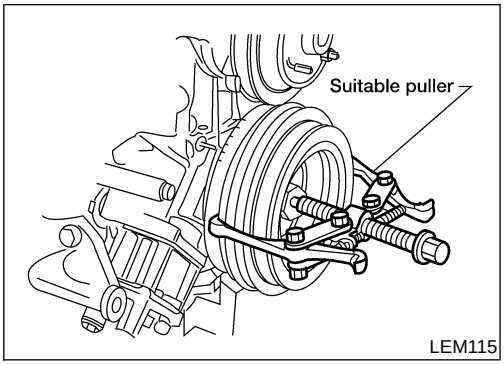

7. Remove the crankshaft pulley with suitable puller.
8. Remove oil pan.
   Refer to "Removal", EM-16.
9. Remove the oil pump and distributor drive shaft, then the oil pickup strainer.
10. Remove the front cover.

CAUTION:
Be careful not to tear or damage the cylinder head gasket.

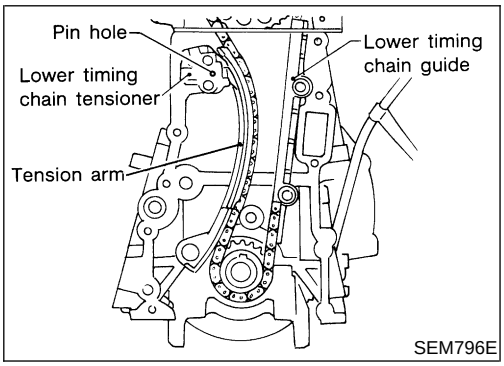

11. Remove the following parts.
- Release the timing chain tensioner. Push piston in and insert a suitable pin into the pin hole.
- Chain tension arm
- Lower timing chain guide

12. Remove the upper timing chain and idler sprocket. **Refer to "UPPER TIMING CHAIN", EM-20 and "IDLER SPROCKET", EM-21.**

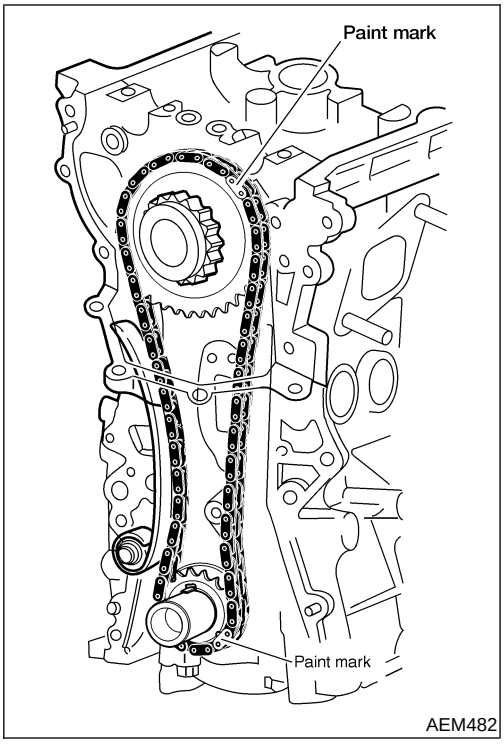

13. Wipe off the links of the timing chain next to the timing marks on the sprockets. Put paint marks on the timing chain, matching them with the timing marks on the crankshaft sprocket and idler sprocket.
14. Remove the lower timing chain and sprocket.

Inspection

NEEM0093

Check for cracks and excessive wear at roller links. Replace chain if necessary.

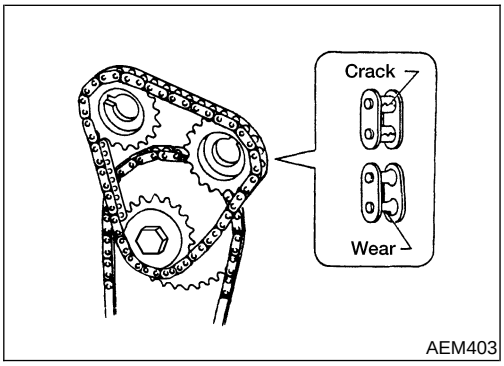

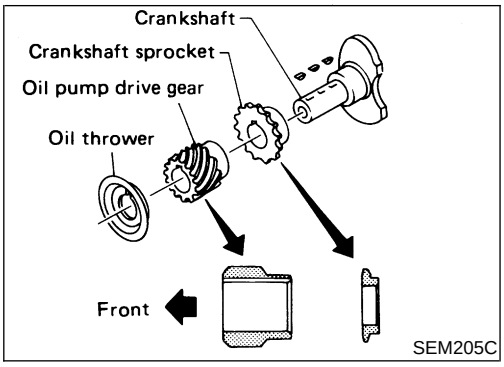

SEM205C

Installation

NEEM0094

LOWER TIMING CHAIN

NEEM0094S01

1. Install crankshaft sprocket.
- **Make sure that mating marks of crankshaft sprocket face front of engine.**
2. Install the idler sprocket and lower timing chain using the mating marks and the paint marks made during the removal process.

CAUTION:
Be careful not to tear or damage the cylinder head gasket.

3. Install chain guide and chain tension arm.
4. Install lower chain tensioner and remove the pin securing the piston into the tensioner body.

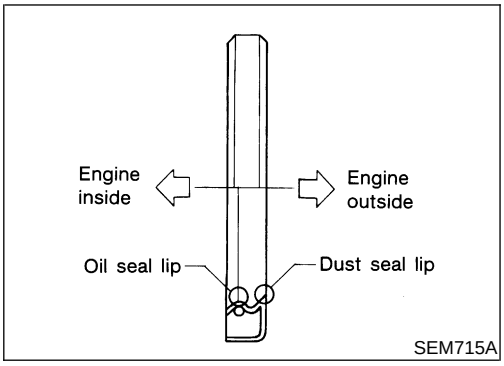

SEM715A

5. Front cover installation:
- Using a scraper or other suitable tool remove all traces of liquid gasket from the cylinder block and front cover mating surfaces.
- Install new crankshaft seal in front cover.
- **Apply a continuous bead of liquid gasket to front cover. Refer to “LIQUID GASKET APPLICATION PLACES”, EM-19.**

NOTE:
Use Genuine Nissan RTV Silicone Sealant P/N 999MP-A7007 or equivalent.

- **Be sure to install new front oil seal. Refer to “FRONT OIL SEAL”, EM-26.**
- Also place RTV sealant on the head gasket surface.
- Install the front cover to the engine.
6. Install oil strainer and oil pan. Refer to “Installation”, EM-17.

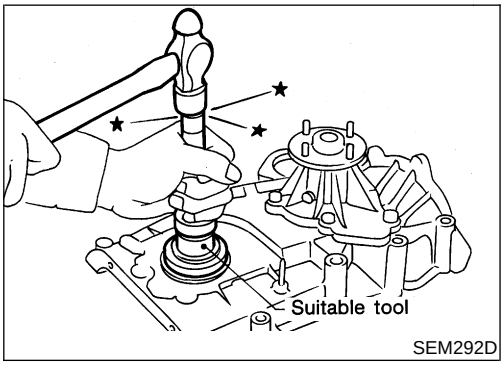

SEM292D

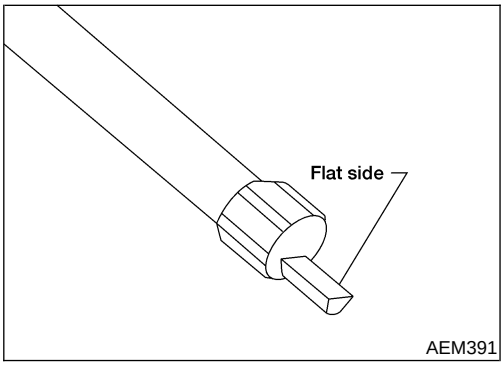

AEM391

7. Install the oil pump and distributor drive shaft.

NOTE:
Make sure the flat side of the distributor drive shaft is facing the engine. Failure to do so will result in the distributor being out of time.

8. Install the following parts:
- Crankshaft pulley.
- A/C compressor and idler pulley bracket.
- Radiator shroud and cooling fan with coupling.
- A/C compressor, alternator and power steering pump drive belts.

- Air duct.

IDLER SPROCKET

NEEM0094S02

1. Install lower timing chain. Refer to "LOWER TIMING CHAIN", EM-23.
2. Install idler sprocket and bolt.

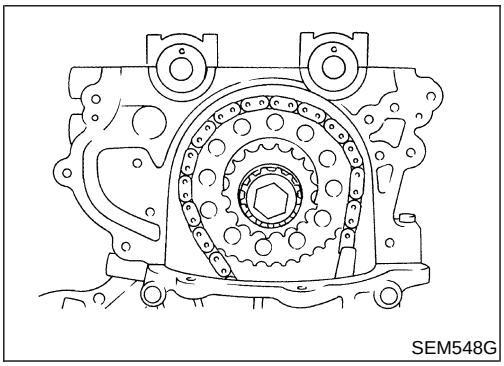
SEM548G

UPPER TIMING CHAIN

NEEM0094S03

1. Install lower timing chain and idler sprocket.
   Refer to "LOWER TIMING CHAIN", EM-23 and "IDLER SPROCKET", EM-24.

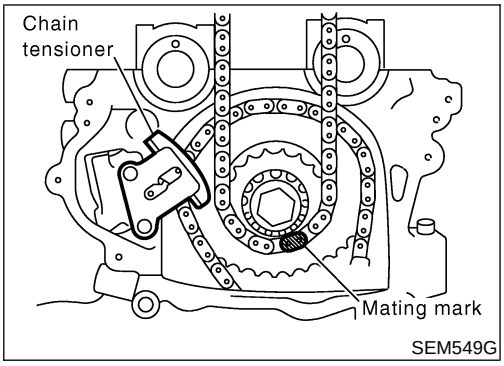

SEM549G

2. Install upper timing chain and sprockets, referring to the painted marks made during removal.
3. Install chain tensioner. Remove the pin holding the tensioner piston in the bore of the tensioner.
4. Install camshaft sprocket cover:

- Use a scraper to remove all traces of liquid gasket from mating surfaces of the engine block and camshaft sprocket cover.
- Apply a continuous bead of RTV sealant to the cover. Refer to "LIQUID GASKET APPLICATION PLACES", EM-19.
- Also place RTV sealant on the head gasket surface.

NOTE:
Use Nissan Genuine RTV Silicone Sealant, Part No. 999MP-A7007 or equivalent.

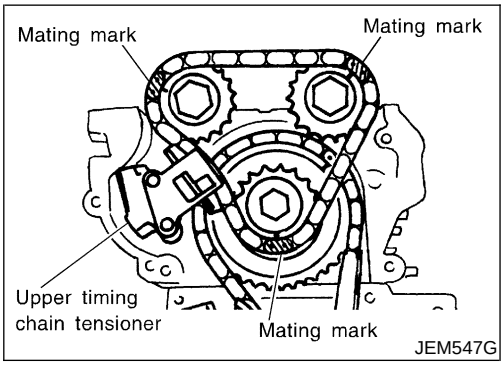

JEM547G

CAUTION:

- **Be careful not to tear or damage the cylinder head gasket.**
- **Be careful upper timing chain does not slip or jump when installing camshaft sprocket cover.**

5. Install the rocker cover gasket on the rocker cover.

- Apply a continuous bead of RTV sealant to the cover. Refer to "LIQUID GASKET APPLICATION PLACES", EM-19.

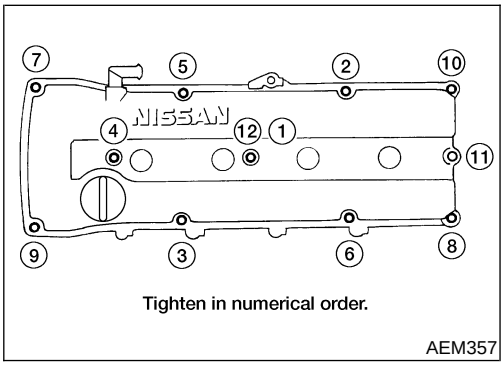

Tighten in numerical order.
AEM357

6. Install rocker cover. Tighten bolts in numerical order.
   : 8 - 11 N·m (0.8 - 1.1 kg-m, 69 - 95 in-lb).

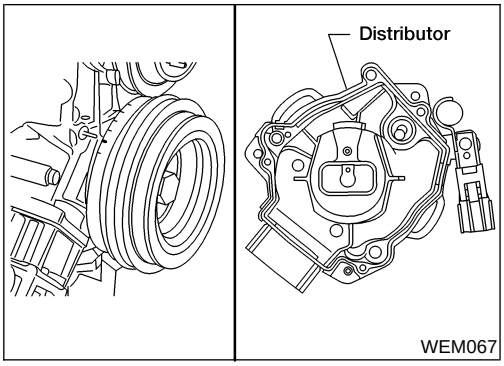

7. Install distributor, aligning as shown.
8. Install vacuum hoses, electrical harnesses, connectors, and harness clamps.

Replacement

NEEM0095

VALVE OIL SEAL

NEEM0095S01

1. Remove rocker cover.
2. Remove camshaft. Refer to “TIMING CHAIN”, EM-18.
3. Remove valve spring and valve oil seal with Tool or a suitable tool.

Piston concerned should be set at TDC to prevent valve from falling.

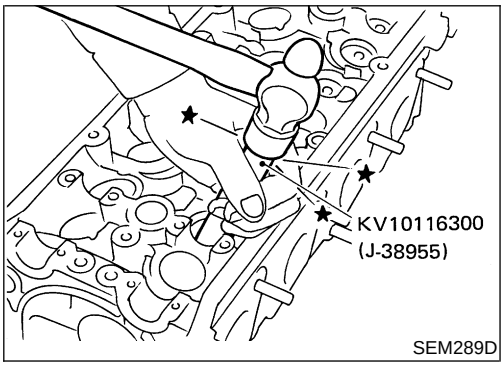

4. Apply engine oil to new valve oil seal and install it with Tool.

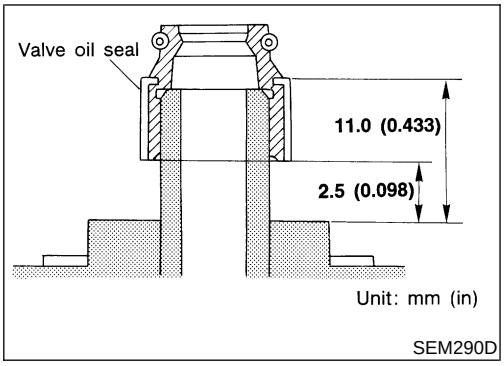

OIL SEAL INSTALLING DIRECTION

NEEM0095S02

- Install new oil seal in the direction shown.

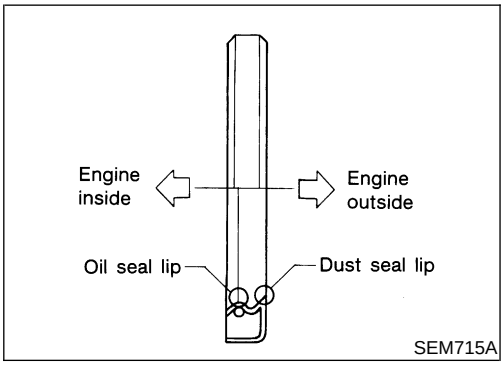

FRONT OIL SEAL

NEEM0095S03

1. Remove radiator shroud and crankshaft pulley.
2. Remove front oil seal

- **Be careful not to scratch front cover.**

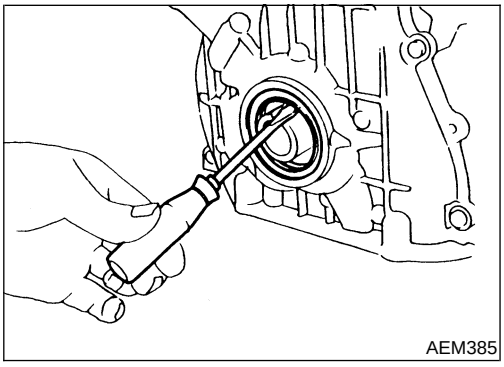

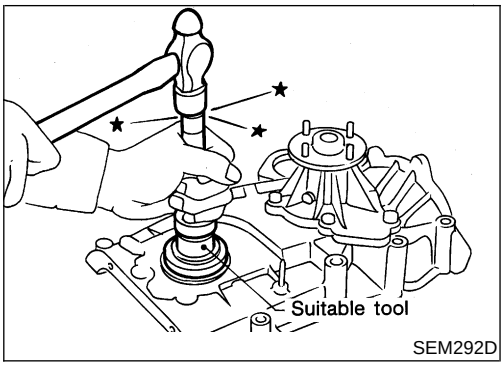

3. Apply engine oil to new oil seal and install it using a suitable tool.

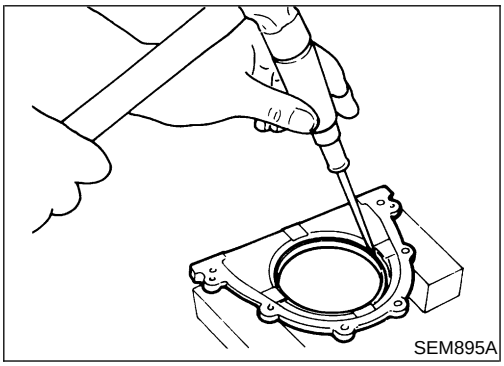

REAR OIL SEAL

NEEM0095S04

1. Remove flywheel or drive plate.
2. Remove rear oil seal retainer.
3. Remove rear oil seal from retainer.

- **Be careful not to scratch rear oil seal retainer.**

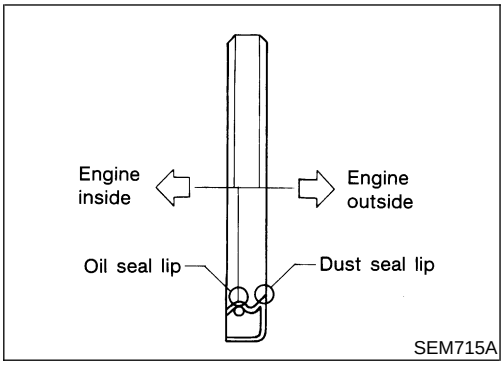

4. Apply engine oil to new oil seal and install it using suitable tool.

- **Install new oil seal in the direction shown.**

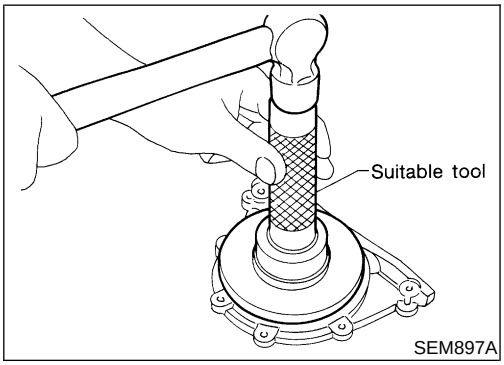

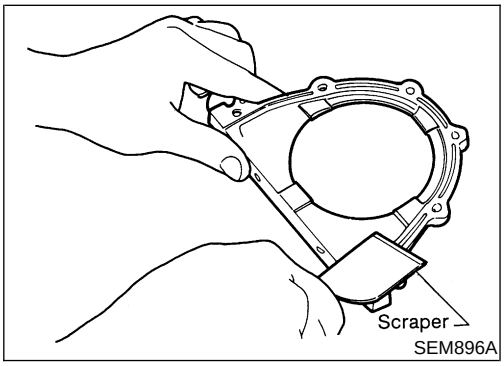

5. Install rear oil seal retainer.

a. Before installing rear oil seal retainer, remove all traces of liquid gasket from mating surface using a scraper.

- **Also remove traces of liquid gasket from mating surface of cylinder block.**

Replacement (Cont'd)

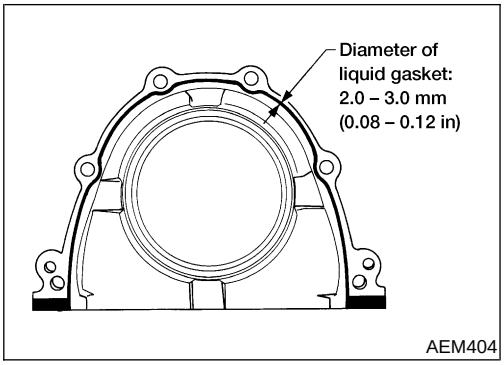

b. Apply a continuous bead of liquid gasket to mating surface of rear oil seal retainer.

- **Use Genuine RTV Silicone Sealant, Part No. 999MP-A7007 or equivalent.**
- **Apply around inner side of bolt holes.**

Components

NEEM0096

SEC. 111 • 130

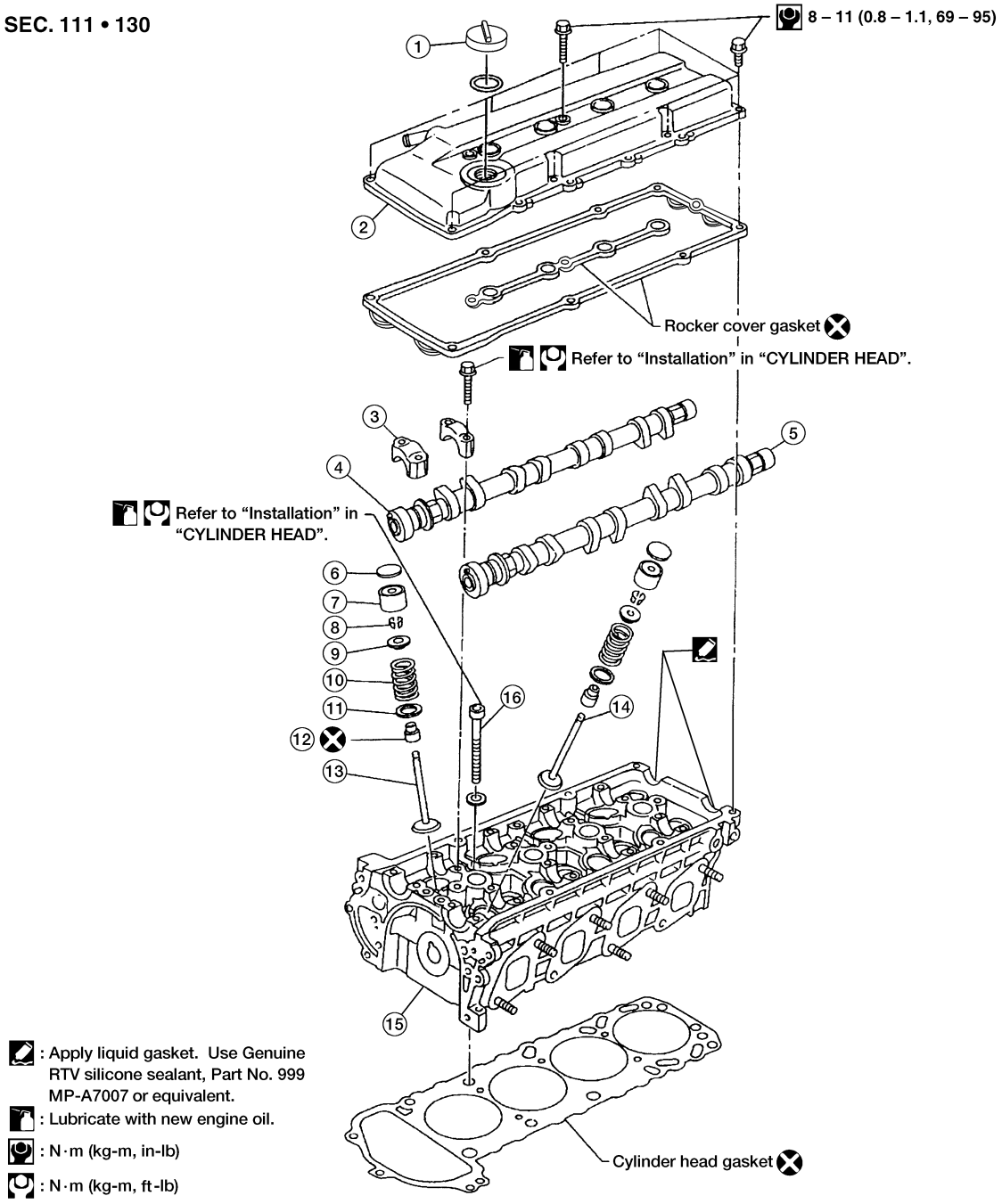

AEM485

1. Oil filler cap
2. Rocker cover
3. Camshaft bracket
4. Intake camshaft
5. Exhaust camshaft
6. Shim
7. Valve lifter
8. Valve cotter
9. Spring retainer
10. Valve spring
11. Spring seat
12. Valve oil seal
13. Intake valve
14. Exhaust valve
15. Cylinder head
16. Cylinder head bolt

Removal

NEEM0097

CAUTION:

- **When installing camshafts, chain tensioners, oil seals, or other sliding parts, lubricate contacting surfaces with new engine oil.**
- **Apply new engine oil to threads and seat surfaces when installing cylinder head, camshaft sprocket, crankshaft pulley, and camshaft bracket.**
- **Attach tags to valve lifters so as not to mix them up.**

- **Before removing camshaft and idler sprockets, apply paint marks to them for retiming.**

1) Remove upper timing chain and idler sprocket.

- **Refer to "UPPER TIMING CHAIN", EM-20 and "IDLER SPROCKET", EM-21.**
- **For retiming during cylinder head removal/installation, apply paint marks to camshaft sprockets, upper timing chain, lower timing chain, and idler sprocket.**

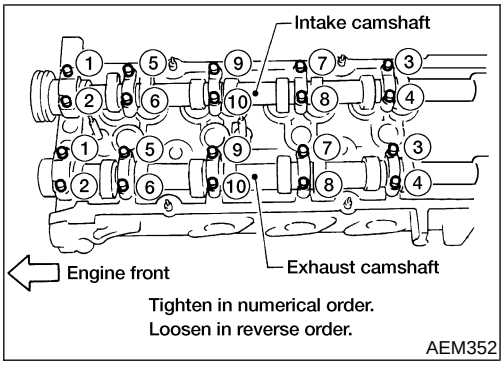

2) Remove camshaft brackets and camshafts.

- **Mark these parts' original positions for reassembly.**

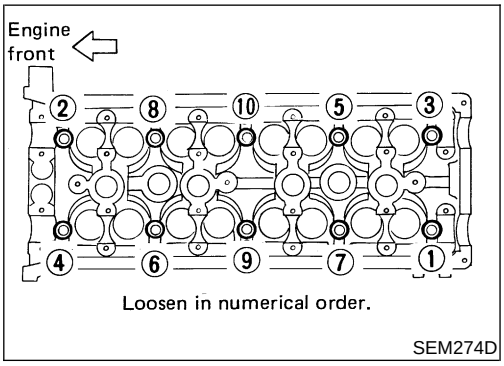

3) Remove cylinder head bolts in numerical order.

- **Removing bolts in incorrect order could result in a warped or cracked cylinder head.**
- **Loosen cylinder head bolts in two or three steps.**

4) Remove cylinder head and cylinder head gasket.

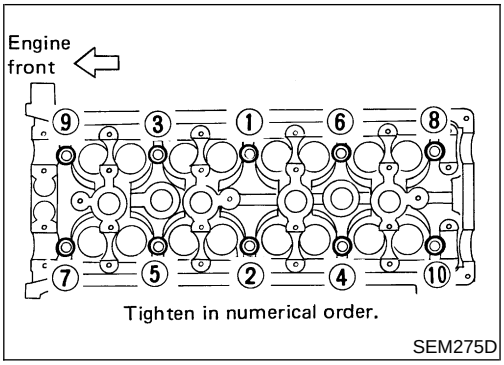

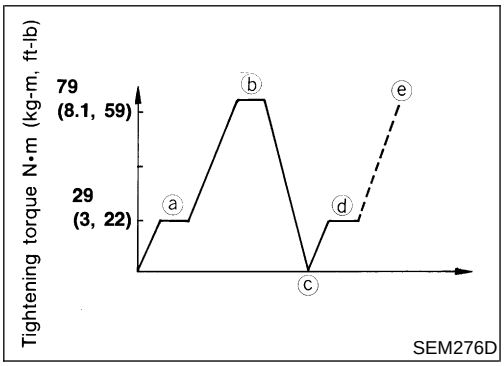

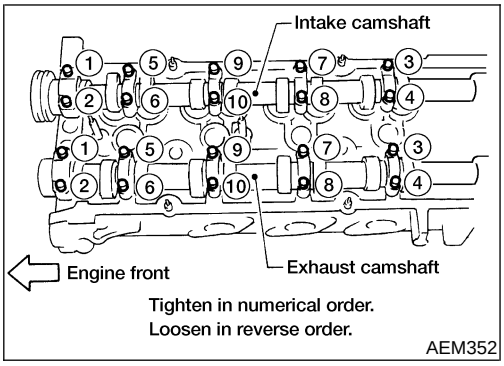

Installation

NEEM0098

1) Tighten cylinder head bolts in numerical order using the following procedure:

a) Tighten all bolts to 29 N·m (3.0 kg-m, 22 ft-lb).

b) Tighten all bolts to 79 N·m (8.1 kg-m, 59 ft-lb).

c) Loosen all bolts completely.

d) Tighten all bolts to 25 to 34 N·m (2.5 to 3.5 kg-m, 18 to 25 ft-lb).

e) Turn all bolts 86 to 91 degrees clockwise. If angle wrench is not available, mark all cylinder head bolts on the side facing engine front. Then turn each cylinder head bolts 86 to 91 degrees clockwise.

2) Install camshafts and camshaft brackets in the order shown using the following procedure:

a) Set camshafts and camshaft brackets.

- Dowel pins of both intake and exhaust camshafts should be at 12 o'clock positions when installing the camshafts.

b) Tighten all bolts to 2 N·m (0.2 kg-m, 17 in-lb).

c) Tighten all bolts to 9.0 to 11.8 N·m (0.92 to 1.2 kg-m, 79.9 to 104.2 in-lb).

- Apply new engine oil to bolt threads and seat surfaces.

3) Install upper timing chain and idler sprocket.

- **Refer to "UPPER TIMING CHAIN", EM-24 and "IDLER SPROCKET", EM-24.**

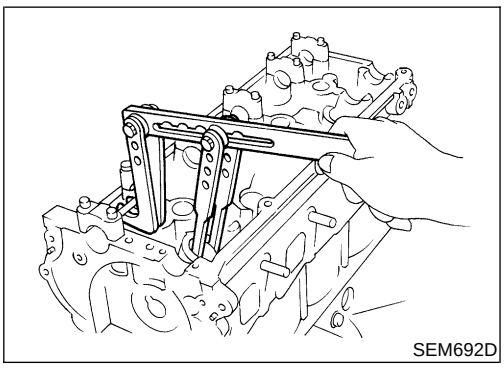

Disassembly

NEEM0099

1. Remove intake manifold and exhaust manifold. Refer to "OUTER COMPONENT PARTS", EM-12.
2. Remove valve components.
3. Remove valve oil seal with a suitable tool.

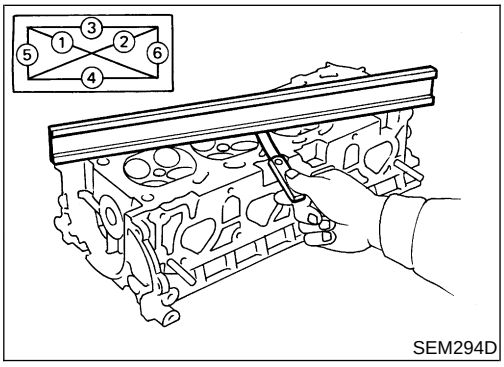

Inspection

NEEM0100

CYLINDER HEAD DISTORTION

NEEM0100S01

Clean surface of cylinder head.
Use a reliable straightedge and feeler gauge to check the flatness of cylinder head surface.
Check along six positions shown in the figure.

Head surface flatness:

Standard Less than 0.03 mm (0.0012 in)

Limit 0.1 mm (0.004 in)

If beyond the specified limit, replace it or resurface it.

Resurfacing limit:

The limit of cylinder head resurfacing is determined by the cylinder block resurfacing.

Amount of cylinder head resurfacing is "A".

Amount of cylinder block resurfacing is "B".

The maximum limit:

A + B = 0.2 mm (0.008 in)

After resurfacing cylinder head, check that camshaft rotates freely by hand. If resistance is felt, cylinder head must be replaced.

Nominal cylinder head height:

126.3 - 126.5 mm (4.972 - 4.980 in)

CAMSHAFT VISUAL CHECK

NEEM0100S02

Check camshaft for scratches, seizure and wear.

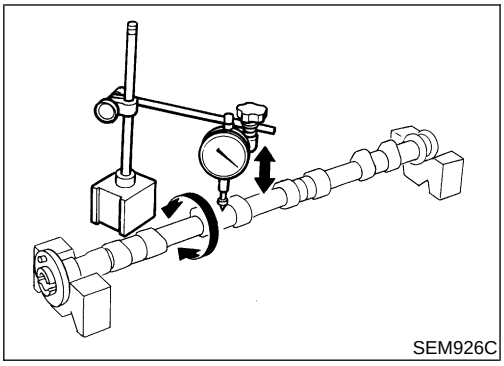
SEM926C

CAMSHAFT RUNOUT

NEEM0100S03

1. Measure camshaft runout at the center journal.

Runout (Total indicator reading):

Standard:

Less than 0.02 mm (0.0008 in)

Limit:

0.04 mm (0.0016 in)

2. If it exceeds the limit, replace camshaft.

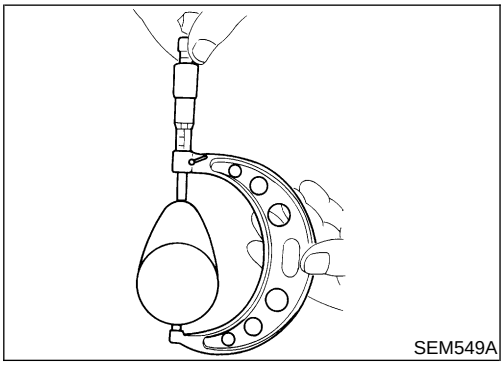
SEM549A

CAMSHAFT CAM HEIGHT

NEEM0100S04

1. Measure camshaft cam height.

Standard cam height:

Intake 41.755 - 41.945 mm (1.644 - 1.651 in)

Exhaust 41.815 - 42.005 mm (1.646 - 1.654 in)

Cam height wear limit:

Intake & Exhaust

0.2 mm (0.008 in)

2. If wear is beyond the limit, replace camshaft.

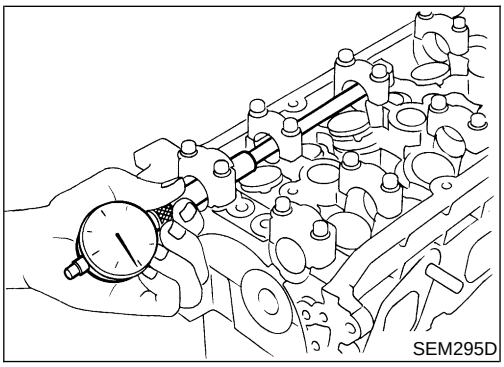
SEM295D

CAMSHAFT JOURNAL CLEARANCE

NEEM0100S05

1. Install camshaft bracket and tighten bolts to the specified torque.
2. Measure inner diameter of camshaft bearing.

Standard inner diameter:

#1 to #5 journals

28.000 - 28.025 mm (1.1024 - 1.1033 in)

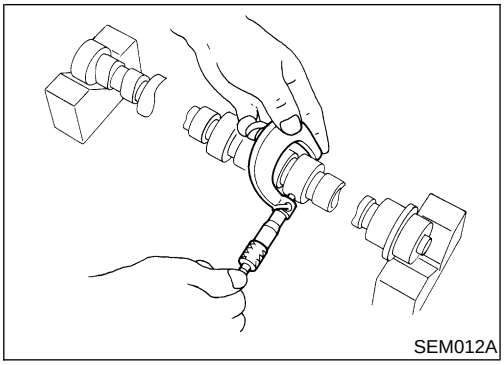
SEM012A

3. Measure outer diameter of camshaft journal.
   Standard outer diameter:
   #1 to #5 journals
   27.935 - 27.955 mm (1.0998 - 1.1006 in)
4. If clearance exceeds the limit, replace camshaft and/or cylinder head.
   Camshaft journal clearance:
   Standard 0.045 - 0.090 mm (0.0018 - 0.0035 in)
   Limit 0.12 mm (0.0047 in)

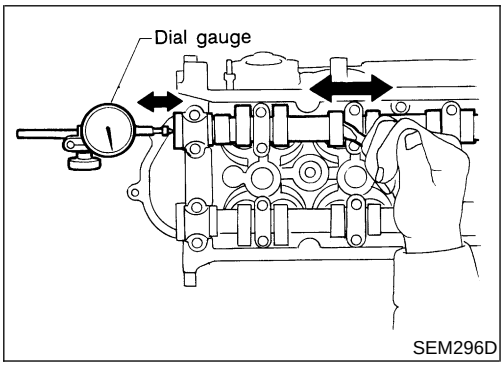

SEM296D

CAMSHAFT END PLAY

NEEM0100S06

1. Install camshaft in cylinder head.
2. Measure camshaft end play.
   Camshaft end play:
   Standard
   0.070 - 0.148 mm (0.0028 - 0.0058 in)
   Limit
   0.2 mm (0.008 in)
3. If end play exceeds the limit, replace camshaft and remeasure camshaft end play.
4. If end play still exceeds the limit after replacing camshaft, replace cylinder head.

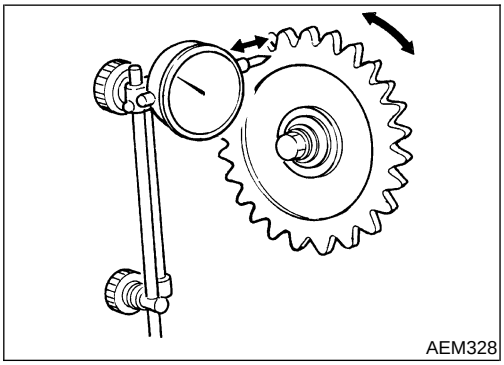
AEM328

CAMSHAFT SPROCKET RUNOUT

NEEM0100S07

1. Install sprocket on camshaft.
2. Measure camshaft sprocket runout.
   Runout (Total indicator reading):
   Limit 0.15 mm (0.0059 in)
3. If it exceeds the limit, replace camshaft sprocket.

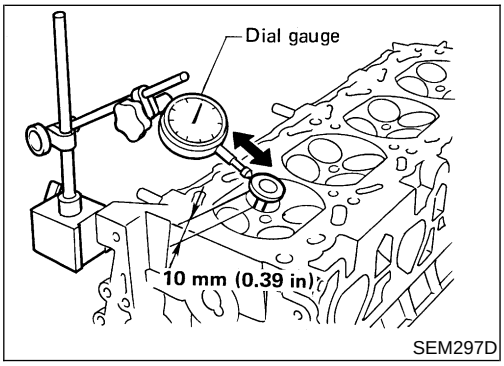

SEM297D

VALVE GUIDE CLEARANCE

NEEM0100S08

1. Measure valve deflection as shown in figure. (Valve and valve guide mostly wear in this direction.)
   Valve deflection limit (Dial gauge reading):
   Intake & Exhaust
   0.2 mm (0.008 in)

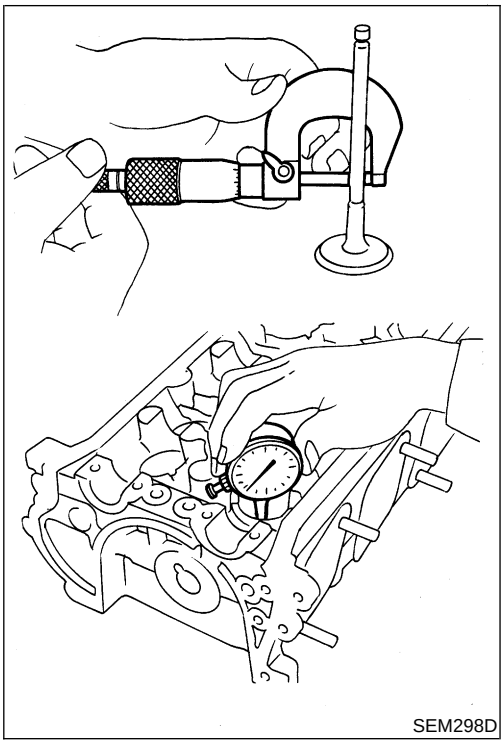
SEM298D

2. If it exceeds the limit, check valve to valve guide clearance.
a. Measure valve stem diameter and valve guide inner diameter.
b. Check that clearance is within specification.
Valve to valve guide clearance = Valve guide inner diameter - Valve stem diameter:

Unit: mm (in)

	Standard	Limit
Intake	0.020 - 0.053 (0.0008 - 0.0021)	0.08 (0.0031)
Exhaust	0.040 - 0.073 (0.0016 - 0.0029)	0.1 (0.004)

c. If it exceeds the limit, replace valve and remeasure clearance.
- If clearance still exceeds the limit after replacing valve, replace the valve guide.

VALVE GUIDE REPLACEMENT

NEEM0100S09

1. To remove valve guide, heat cylinder head to 120 to 140°C (248 to 284°F) by soaking in heated oil.

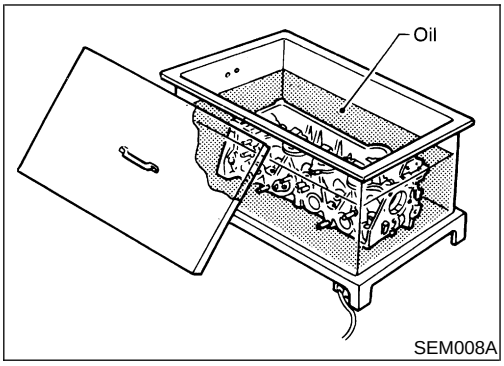

SEM008A

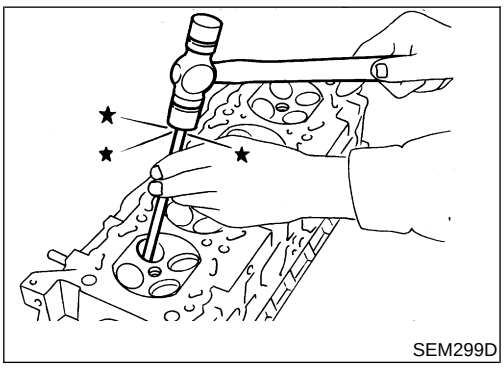
SEM299D

2. Drive out valve guide with a press [under a 20 kN (2 ton, 2.2 US ton, 2.0 Imp ton) pressure] or hammer and suitable tool.

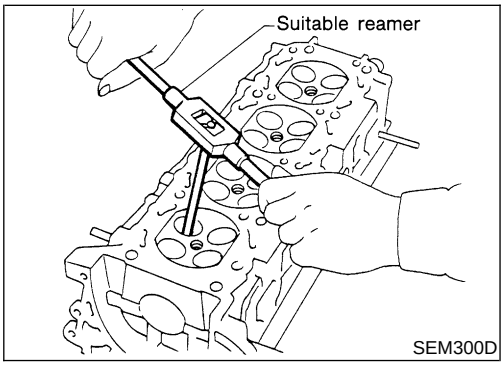

SEM300D

3. Ream cylinder head valve guide hole.
Valve guide hole diameter
(for service parts):
Intake & Exhaust
11.175 - 11.196 mm (0.4400 - 0.4408 in)

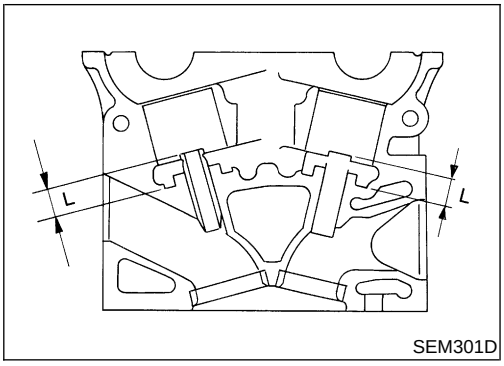

SEM301D

4. Heat cylinder head to 120 to 140°C (248 to 284°F) and press service valve guide onto cylinder head.
   Projection "L":
   13.3 - 13.9 mm (0.524 - 0.547 in)

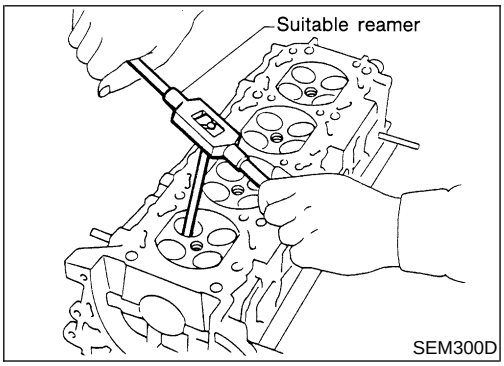

SEM300D

5. Ream valve guide.
   Finished size:
   Intake & Exhaust
   7.000 - 7.018 mm (0.2756 - 0.2763 in)

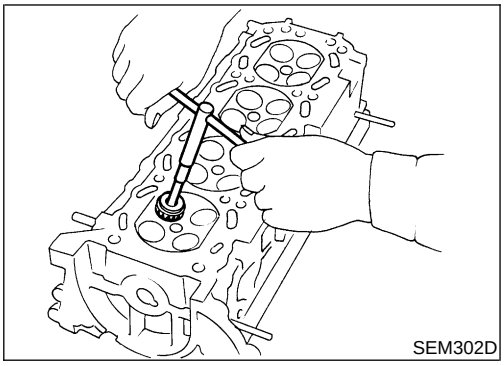
SEM302D

VALVE SEATS

NEEM0100S10

Check valve seats for pitting at contact surface. Resurface or replace if excessively worn.

- **Before repairing valve seats, check valve and valve guide for wear. If they have worn, replace them. Then correct valve seat.**
- **Use both hands to cut uniformly.**

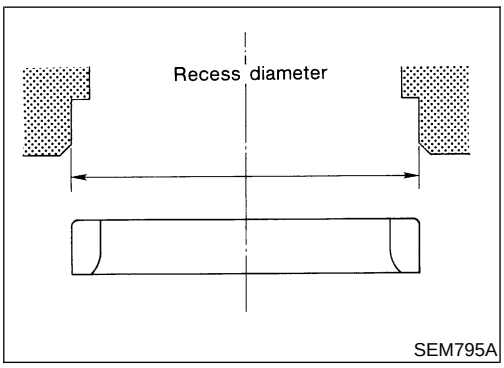

SEM795A

REPLACING VALVE SEAT FOR SERVICE PARTS

NEEM0100S11

1. Bore out old seat until it collapses. Boring should not continue beyond the bottom face of the seat recess in cylinder head. Set the machine depth stop to ensure this.
2. Ream cylinder head recess.
   Reaming bore for service valve seat
   Oversize [0.5 mm (0.020 in)]:
   Intake 38.000 - 38.016 mm (1.4961 - 1.4967 in)
   Exhaust 32.700 - 32.716 mm (1.2874 - 1.2880 in)

Use the valve guide center for reaming to ensure valve seat will have the correct fit.

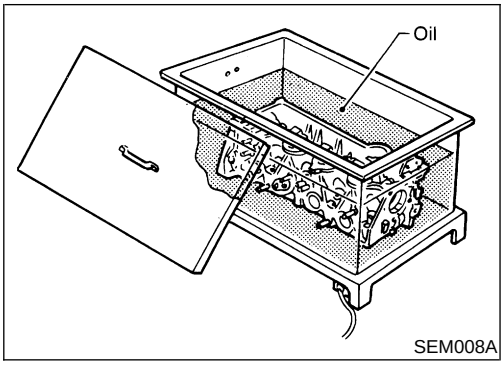

SEM008A

3. Heat cylinder head to 120 to 140°C (248 to 284°F).
4. Press fit valve seat until it seats on the bottom.

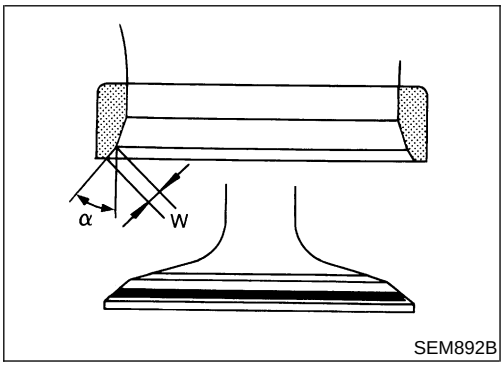

SEM892B

5. Cut or grind valve seat using suitable tool to the specified dimensions. Refer to "VALVE SEAT", EM-59.
6. After cutting, lap valve seat with abrasive compound.
7. Check valve seating condition.

Seat face angle "α":
45°15′ - 45°45′ deg.
Contacting width "W":
Intake
1.48 - 1.63 mm (0.0583 - 0.0642 in)
Exhaust
1.8 - 2.0 mm (0.071 - 0.079 in)

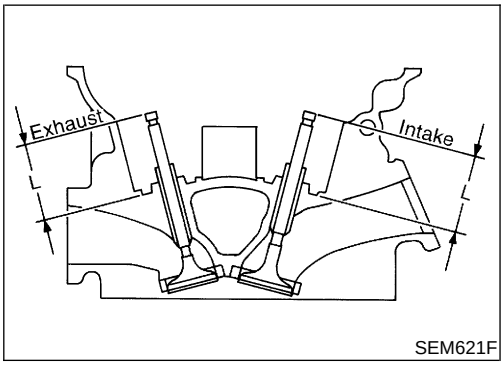

SEM621F

8. Use a depth gauge to measure the distance between the mounting surface of the cylinder head spring seat and the valve stem end. If the distance is shorter than specified, repeat step 5 above to adjust it. If it is longer, replace the valve seat with a new one.

Valve seat resurface limit "L":
Intake 42.02 - 42.52 mm (1.6543 - 1.6740 in)
Exhaust 42.03 - 42.53 mm (1.6547 - 1.6744 in)

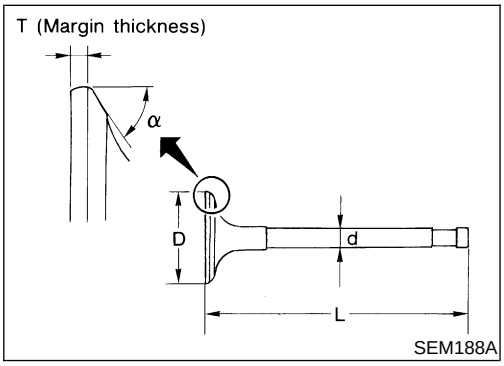

SEM188A

VALVE DIMENSIONS

NEEM0100S12

Check dimensions of each valve. Refer to "Valve", EM-56. When valve head has been worn down to 0.5 mm (0.020 in) in margin thickness, replace valve.
Grinding allowance for valve stem tip is 0.2 mm (0.008 in) or less.

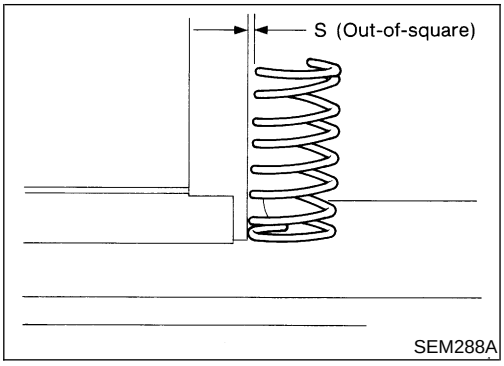

SEM288A

VALVE SPRING

NEEM0100S13

Squareness

NEEM0100S1301

1. Measure dimension "S".
   Out-of-square "S":
   Less than 2.2 mm (0.087 in)
2. If it exceeds the limit, replace spring.

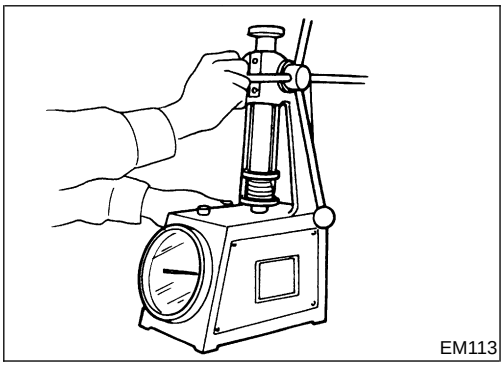
EM113

Pressure

NEEM0100S1302

Check valve spring pressure at specified spring height.

Pressure: N (kg, lb) at height mm (in)
Standard
418.0 (42.6, 93.9) at 29.17 (1.1484)
Limit
393.0 (40.1, 88.4) at 29.17 (1.1484)

If not within specification, replace spring.

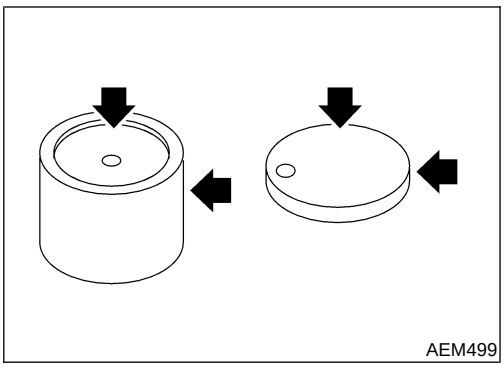
AEM499

VALVE LIFTER AND VALVE SHIM

NEEM0100S14

1. Visually check contact and sliding surfaces for wear and scratches.

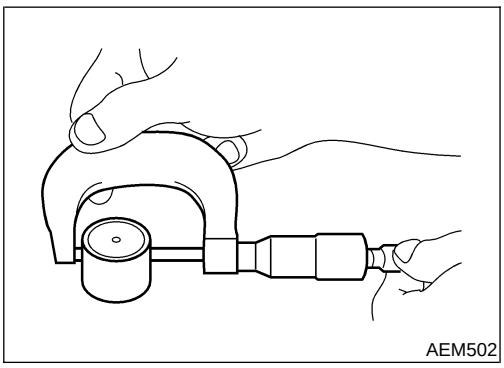
AEM502

2. Check diameter of valve lifter and valve lifter guide bore.
   Valve lifter outer diameter:
   33.960 - 33.975 mm (1.3370 - 1.3376 in)

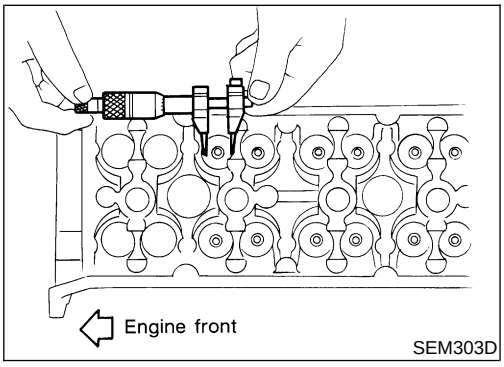

SEM303D

Lifter guide bore diameter:
34.000 - 34.021 mm (1.3386 - 1.3394 in)
Valve lifter to valve lifter guide clearance:
0.025 - 0.061 mm (0.0010 - 0.0024 in)

If it exceeds the standard diameter or clearance, replace valve lifter or cylinder head.

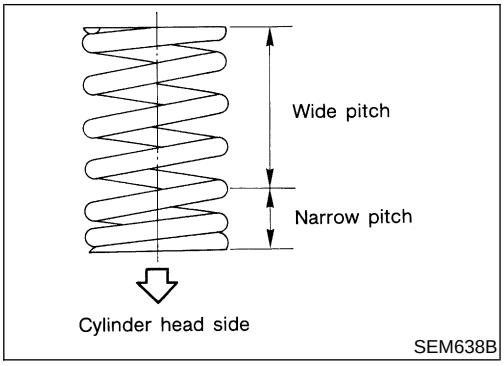

Assembly

NEEM0101

1. Install valve component parts.

- **Always use new valve oil seal. Refer to “Replacement”, EM-26.**
- **Before installing valve oil seal, install valve spring seat.**
- **Install outer valve spring (uneven pitch type) with its narrow pitch side toward cylinder head side.**
- **After installing valve component parts, tap valve stem tip with plastic hammer to assure a proper fit.**

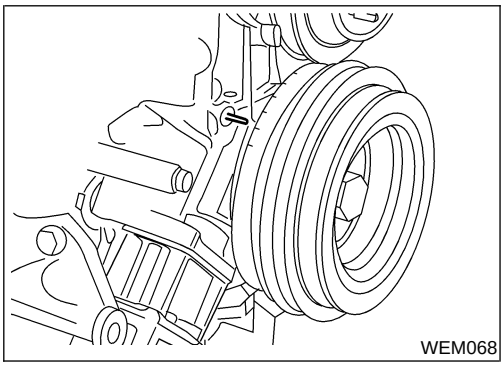

Valve Clearance

NEEM0102

CHECKING

NEEM0102S01

Check valve clearance while engine is warm but not running.

1. Remove rocker cover and all spark plugs.
2. Set No. 1 cylinder at TDC on its compression stroke.

- Align pointer with TDC mark on crankshaft pulley.
- Check that valve lifters on No. 1 cylinder are loose and valve lifters on No. 4 are tight.
  If not, turn crankshaft one revolution (360°) and align as above.

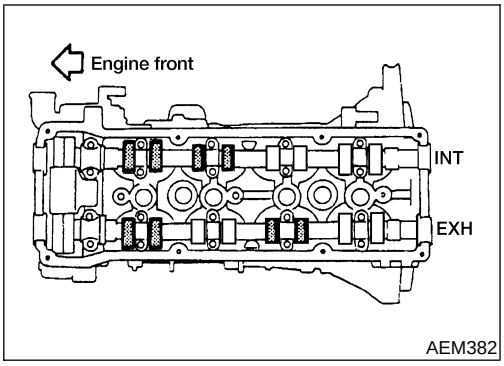

3. Check only those valves shown in the figure.

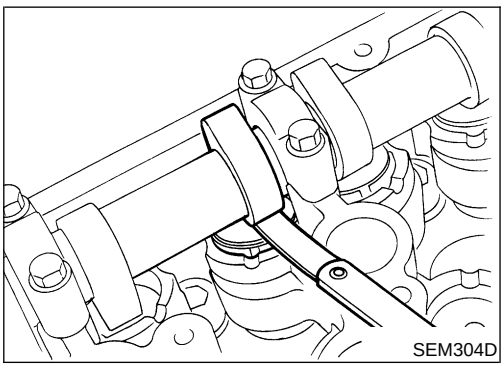

4. Using a feeler gauge, measure clearance between valve lifter and camshaft.

- Record any valve clearance measurements which are out of specification. They will be used later to determine the required replacement adjusting shim.

Valve clearance (Hot):

Intake

0.31 - 0.39 mm (0.012 - 0.015 in)

Exhaust

0.39 - 0.47 mm (0.015 - 0.019 in)

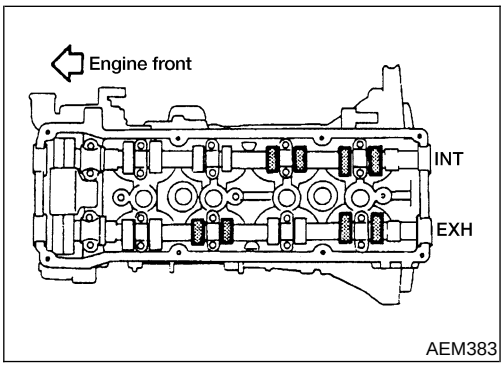

5. Turn crankshaft one revolution (360°) and align mark on crankshaft pulley with pointer.
6. Check those valves shown in the figure.

- Use the same procedure as mentioned in step 4.

7. If all valve clearances are within specification, install the following parts.

- Rocker cover
- All spark plugs

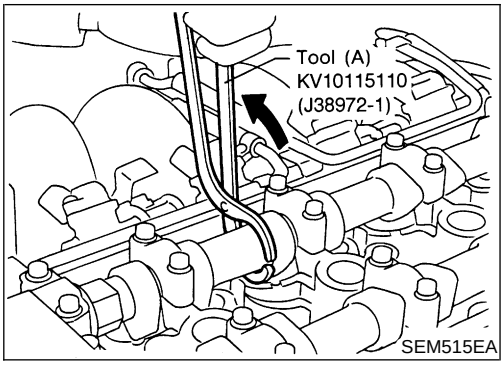

ADJUSTING

NEEM0102S02

Adjust valve clearance while engine is cold.

1. Turn crankshaft to position cam lobe on camshaft of valve that must be adjusted upward.
2. Place Tool (A) around camshaft as shown in figure.
3. Rotate Tool (A) so that lifter is pushed down.

Before placing Tool (A), rotate notch toward center of cylinder head (See figure.), to simplify shim removal later.

CAUTION:

Be careful not to damage cam surface with Tool (A).

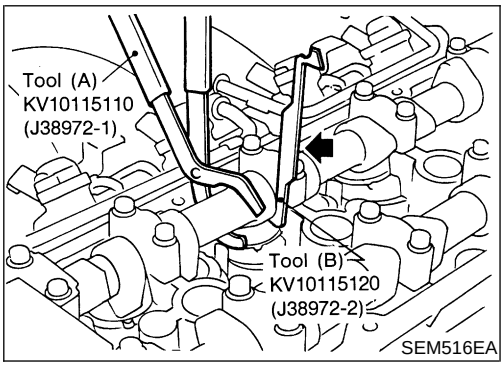

4. Place Tool (B) between camshaft and the edge of the valve lifter to retain valve lifter.

CAUTION:

- **Tool (B) must be placed as close to camshaft bracket as possible.**
- **Be careful not to damage cam surface with Tool (B).**

5. Remove Tool (A).

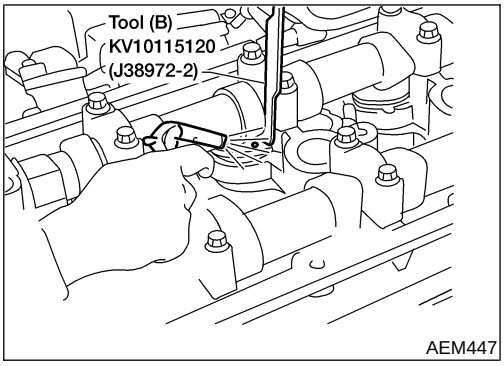

6. Rotate adjusting shim until hole is visible. Blow air into the hole to separate adjusting shim from valve lifter.

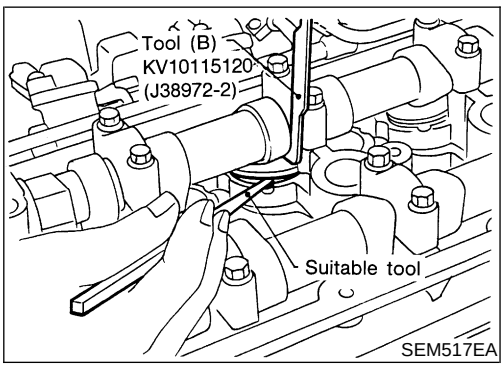

7. Remove adjusting shim using a small screwdriver and a magnetic finger.

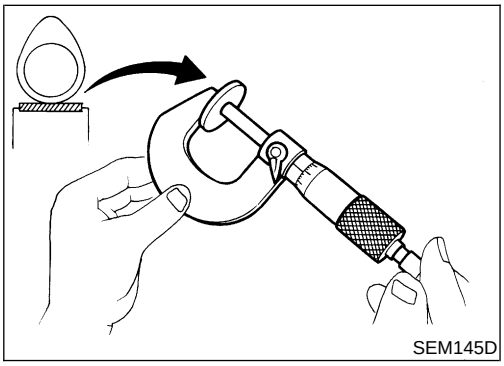

8. Determine replacement adjusting shim size as follows.

a. Using a micrometer determine thickness of removed shim.

b. Calculate thickness of new adjusting shim so valve clearance comes within specified values.

R = Thickness of removed shim
N = Thickness of new shim
M = Measured valve clearance

Intake & Exhaust:

N = R + [M − 0.37 mm (0.0146 in)]

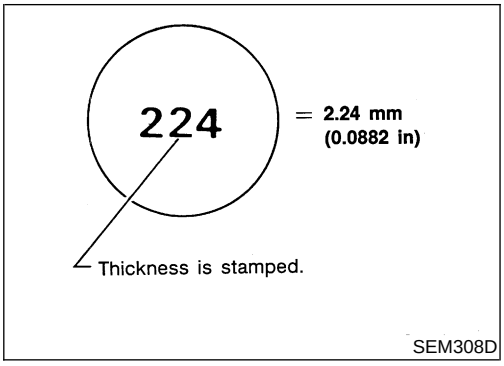

Shims are available in thicknesses from 1.96 mm (0.0772 in) to 2.68 mm (0.1055 in), in steps of 0.02 mm (0.0008 in).

c. Select new shim with thickness as close as possible to calculated value.
Refer to "AVAILABLE SHIMS", EM-58.

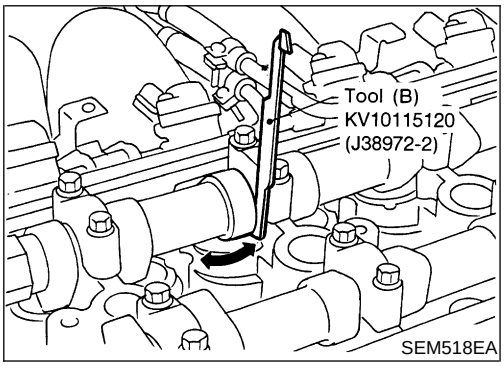

9. Install new shim using a suitable tool.
- **Install with the surface on which the thickness is stamped facing down.**

10. Place Tool (A) as mentioned in steps 2 and 3.
11. Remove Tool (B).
12. Remove Tool (A).
13. Recheck valve clearance.
Refer to "CHECKING", EM-38.

Removal and Installation

NEEM0103

SEC. 112

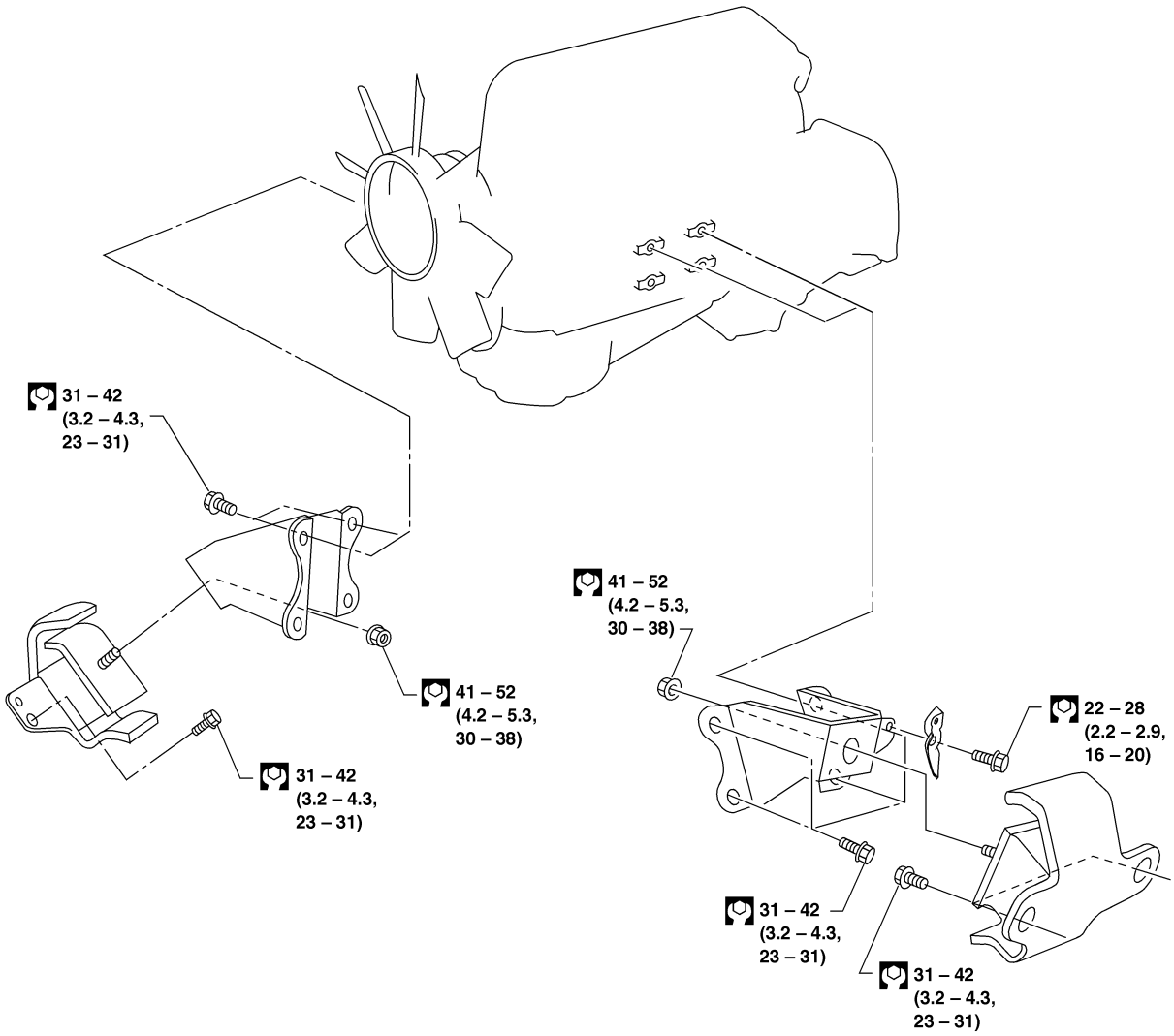

: N·m (kg-m, ft-lb)

WEM055

WARNING:

- **Position vehicle on a flat and solid surface.**
- **Place chocks at front and back of rear wheels.**
- **Do not remove engine until exhaust system has completely cooled off. Otherwise, you may burn yourself and/or fire may break out in fuel line.**
- **Before disconnecting fuel hose, release fuel pressure. Refer to *EC-57*, "Fuel Pressure Release".**
- **Be sure to hoist engine and transmission in a safe manner.**
- **For engines not equipped with engine slingers, attach proper slingers and bolts described in PARTS CATALOG.**

CAUTION:

- **When lifting engine, be sure to clear surrounding parts. Take special care near accelerator wire casing, brake lines and brake master cylinder.**
- **In hoisting the engine, always use engine slingers in a safe manner.**
- **Before separating engine and transmission, remove the crankshaft position sensor (OBD) from the assembly.**
- **Always take extra care not to damage edge of crankshaft position sensor (OBD) or ring gear teeth.**

REMOVAL

NEEM0103S01

1. Drain coolant from engine block and radiator. Refer to ***MA-17***, "Changing Engine Coolant".
2. Release fuel pressure. Refer to ***EC-57***, "Fuel Pressure Release". Disconnect the fuel hose.
3. Remove negative battery cable.
4. Remove hood. Refer to ***BT-12***, "Removal and Installation".
5. Remove air cleaner.
6. Remove power steering drive belt, generator drive belt and A/C compressor drive belt.
7. Remove radiator. Refer to ***LC-14***, "Radiator".
8. Remove exhaust manifold heat shield.
9. Disconnect exhaust system at rear of TWC (manifold).
10. Remove A/C compressor from bracket. Refer to ***HA-72***, "Compressor Mounting".
11. Disconnect accelerator wire, ASCD wire (if equipped), vacuum hoses, electrical connectors, heater hoses and vacuum booster hose.
12. Remove four power steering pump bolts.
13. Remove transmission Refer to ***MT-9*** (manual), "Removal and Installation", or ***AT-67*** (automatic), "Removal".

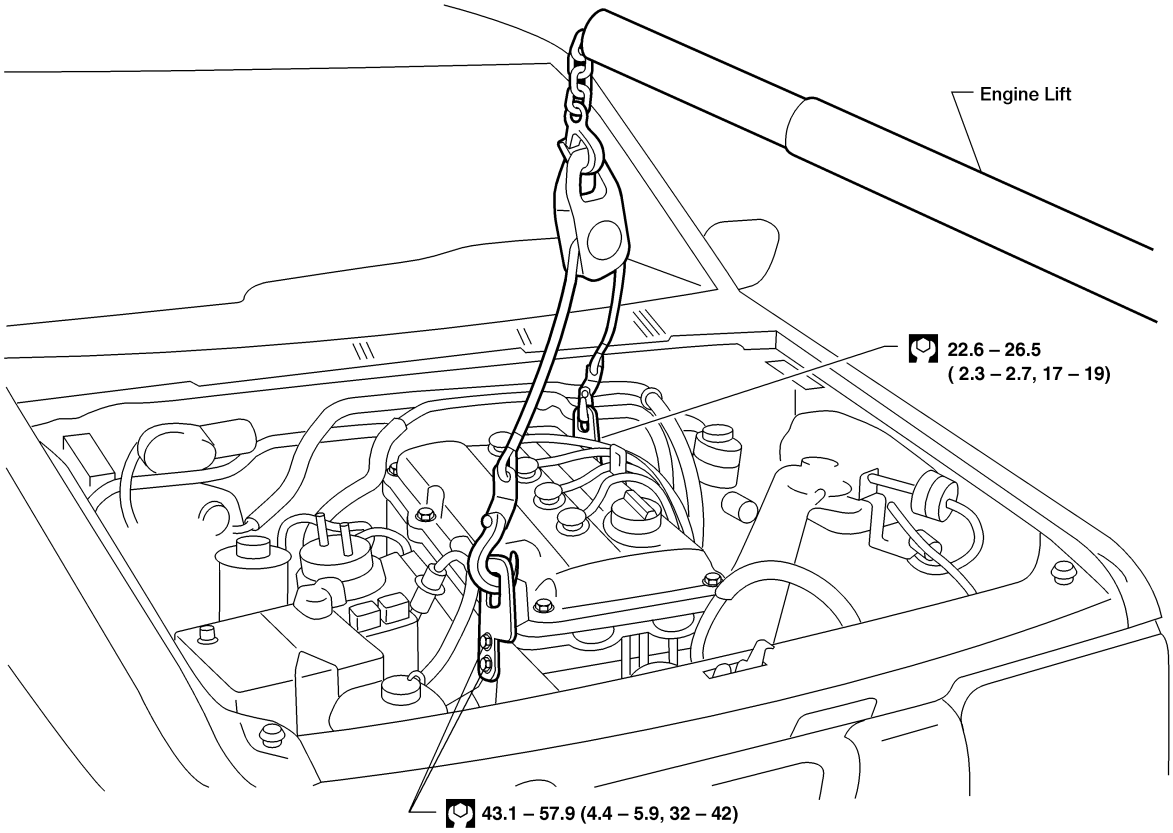

WEM063

14. Install engine slingers and attach engine lift hooks.
15. Remove LH and RH engine mounts.
16. Lift and remove engine.

INSTALLATION

NEEM0103S02

- Install in reverse order of removal.

Components

NEEM0104

SEC. 110 • 120 • 135 • 150 • 210

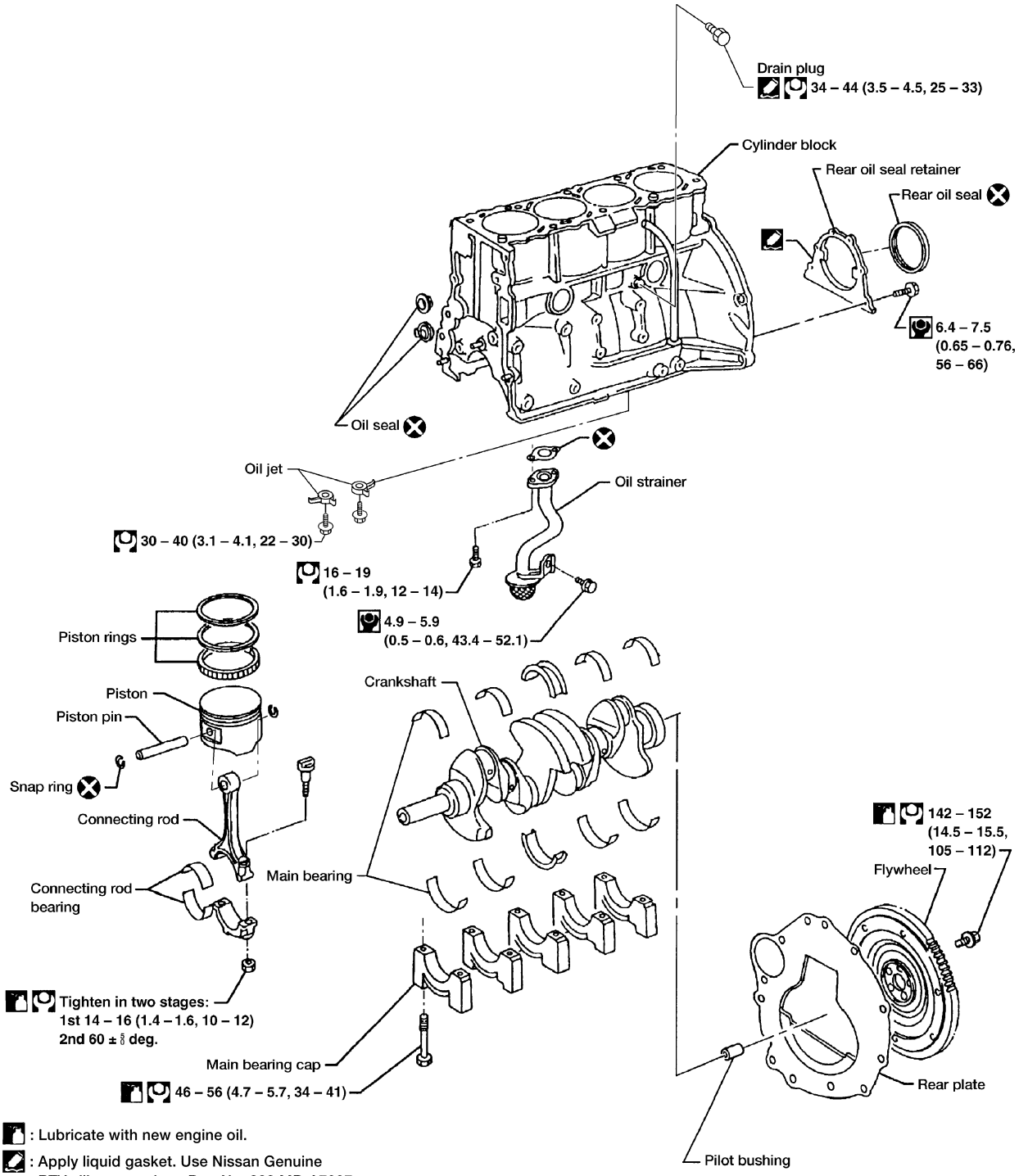

: Lubricate with new engine oil.

: Apply liquid gasket. Use Nissan Genuine RTV silicone sealant, Part No. 999 MP-A7007 or equivalent.

: N·m (kg-m, in-lb)

: N·m (kg-m, ft-lb)

WEM056

Removal and Installation

NEEM0105

CAUTION:

- **When installing sliding parts (bearings, pistons, etc.), lubricate contacting surfaces with new engine oil.**
- **Place removed parts such as bearings and bearing caps in their proper order and direction.**
- **When installing connecting rod nuts and main bearing cap bolts, apply new engine oil to threads and seating surfaces.**
- **Do not allow any magnetic materials to contact the ring gear teeth of flywheel or drive plate.**

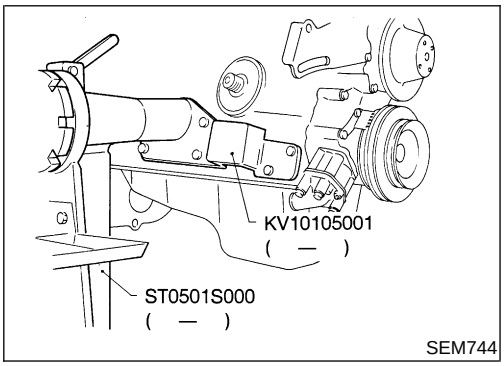

SEM744

Disassembly

NEEM0106

PISTON AND CRANKSHAFT

NEEM0106S01

1. Place engine on a work stand.
2. Drain coolant and oil.
3. Remove oil pan.
4. Remove timing chain. Refer to “Removal”, EM-20.
5. Remove water pump.
6. Remove cylinder head.
7. Remove pistons with connecting rods.

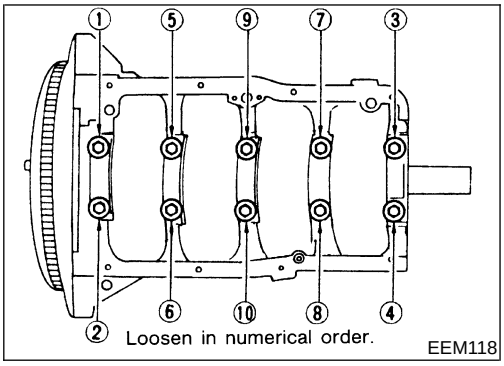

EEM118

8. Remove bearing caps and crankshaft.

- **Before removing bearing caps, measure crankshaft end play. Refer to “CRANKSHAFT”, EM-53.**
- **Bolts should be loosened in two or three steps.**

Inspection

NEEM0107

PISTON AND PISTON PIN CLEARANCE

NEEM0107S01

1. Measure inner diameter of piston pin hole “dp”.

Standard diameter “dp”:
20.993 - 21.005 mm (0.8265 - 0.8270 in)

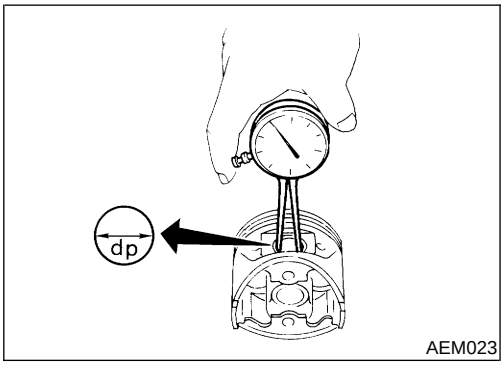

AEM023

2. Measure outer diameter of piston pin “Dp”.

Standard diameter “Dp”:
20.989 - 21.001 mm (0.8263 - 0.8268 in)

3. Calculate piston pin clearance.

dp − Dp = −0.002 - 0.01 mm (−0.0001 - 0.0004 in)

If it exceeds the above value, replace piston assembly with pin.

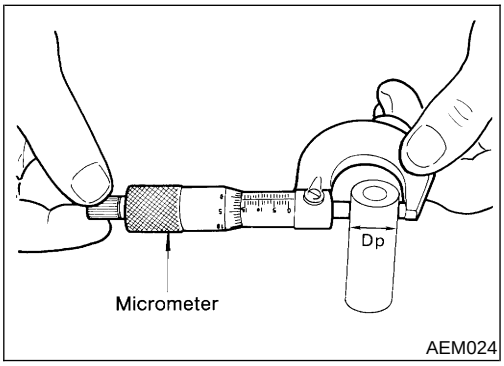

AEM024

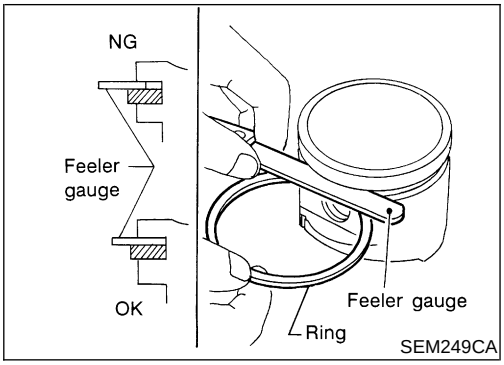

PISTON RING SIDE CLEARANCE

NEEM0107S02

Side clearance:

Top ring 0.04 - 0.08 mm (0.0016 - 0.0031 in)

2nd ring 0.03 - 0.07 mm (0.0012 - 0.0028 in)

Max. limit of side clearance:

0.1 mm (0.004 in)

If out of specification, replace piston ring.
If clearance exceeds maximum limit with new ring, replace piston.

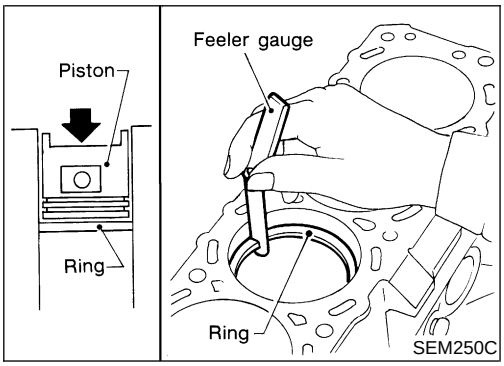

PISTON RING END GAP

NEEM0107S03

End gap:

Top ring

0.28 - 0.52 mm (0.0110 - 0.0205 in)

2nd ring

0.45 - 0.69 mm (0.0177 - 0.0272 in)

Oil ring

0.20 - 0.69 mm (0.0079 - 0.0272 in)

Max. limit of ring gap:

Refer to "PISTON RING", EM-62.

If out of specification, replace piston ring. If gap exceeds maximum limit with a new ring, rebore cylinder and use oversized piston and piston rings. Refer to "PISTON RING", EM-62.

- When replacing the piston, check cylinder block surface for scratches or seizure. If scratches or seizure are found, hone or replace the cylinder block.

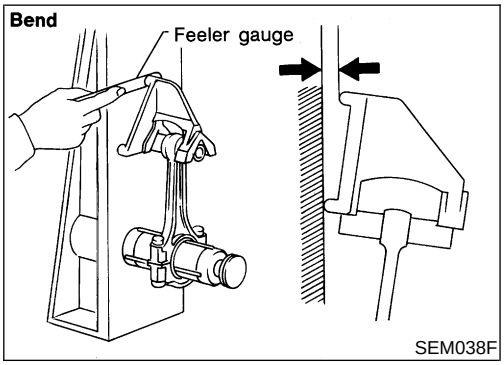

CONNECTING ROD BEND AND TORSION

NEEM0107S04

Bend:

Limit 0.15 mm (0.0059 in)

per 100 mm (3.94 in) length

Torsion:

Limit 0.30 mm (0.0118 in)

per 100 mm (3.94 in) length

If it exceeds the limit, replace connecting rod assembly.

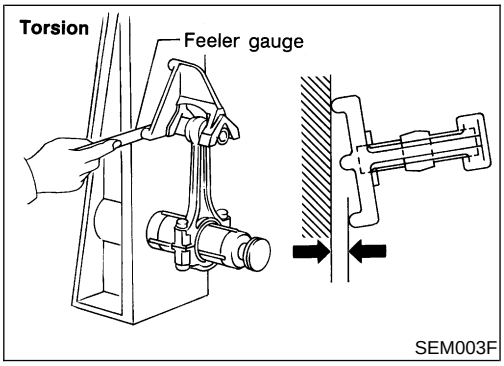

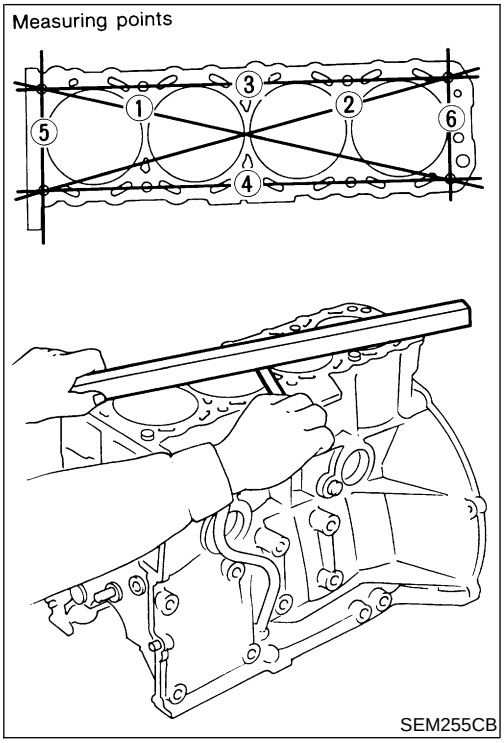

CYLINDER BLOCK DISTORTION AND WEAR

NEEM0107S05

1. Clean upper face of cylinder block.
   Use a reliable straightedge and feeler gauge to check the flatness of cylinder block surface. Check along six positions shown in figure.
   Limit:
   0.1 mm (0.004 in)
2. If out of specification, resurface it.
   The limit for cylinder block resurfacing is determined by cylinder head resurfacing.

Amount of cylinder head resurfacing is "A"
Amount of cylinder block resurfacing is "B"
The maximum limit is as follows:
A + B = 0.2 mm (0.008 in)
Nominal cylinder block height from crankshaft center:
246.95 - 247.05 mm (9.7224 - 9.7264 in)

3. If necessary, replace cylinder block.

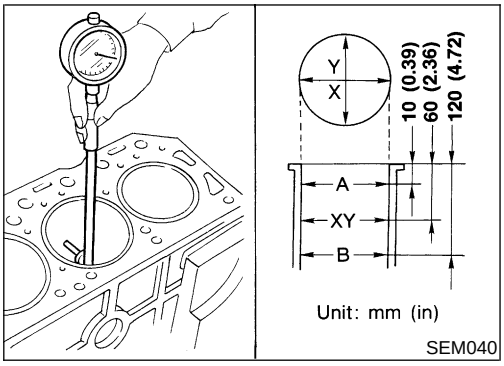

PISTON-TO-BORE CLEARANCE

NEEM0107S06

1. Using a bore gauge, measure cylinder bore for wear, out-of-round and taper.
   Standard inner diameter:
   Refer to "Cylinder Block", EM-60.
   Wear limit: 0.2 mm (0.008 in)
   Out-of-round (X − Y) standard: 0.015 mm (0.0006 in)
   Taper (A − B) standard: 0.010 mm (0.0004 in)
   If it exceeds the limit, rebore all cylinders. Replace cylinder block if necessary.
2. Check for scratches and seizure. If seizure is found, hone it.

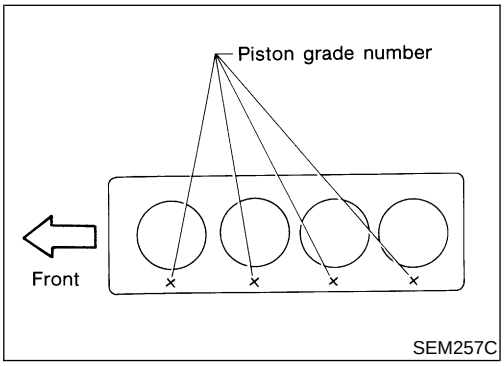

- **If cylinder block and piston are replaced, match piston grade with grade number on cylinder block upper surface.**

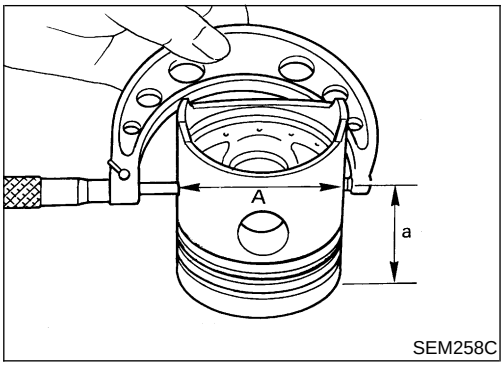

3. Measure piston skirt diameter.
   Piston diameter "A":
   Refer to "PISTON", EM-62.
   Measuring point "a" (Distance from the top):
   Approximately 48 mm (1.89 in)
4. Check that piston-to-bore clearance is within specification.
   Piston-to-bore clearance "B":
   0.020 - 0.040 mm (0.0008 - 0.0016 in)
5. Determine piston oversize according to amount of cylinder wear.

Oversize pistons are available for service. Refer to "PISTON", EM-62.

6. Cylinder bore size is determined by adding piston-to-bore clearance to piston diameter "A".
   Rebored size calculation:
   A + B − C = D
   where,
   D: Bored diameter
   A: Piston diameter as measured
   B: Piston-to-bore clearance
   C: Honing allowance 0.02 mm (0.0008 in)
7. Install main bearing caps and tighten bolts to the specified torque. This will prevent distortion of cylinder bores.
8. Cut cylinder bores.

- **When any cylinder needs boring, all other cylinders must also be bored.**
- **Do not cut too much out of cylinder bore at a time. Cut only 0.05 mm (0.0020 in) or so at a time.**

9. Hone cylinders to obtain specified piston-to-bore clearance.
10. Measure finished cylinder bore for out-of-round and taper.

- **Measurement should be done after cylinder bore cools down.**

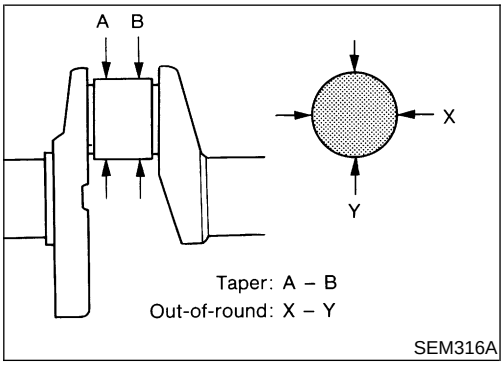

CRANKSHAFT

NEEM0107S07

1. Check crankshaft main and pin journals for score, wear or cracks.
2. With a micrometer, measure journals for taper and out-of-round.
   Out-of-round (X − Y):
   Main journal Less than 0.01 mm (0.0004 in)
   Crank pin Less than 0.005 mm (0.0002 in)
   Taper (A − B):
   Main journal Less than 0.01 mm (0.0004 in)
   Crank pin Less than 0.005 mm (0.0002 in)

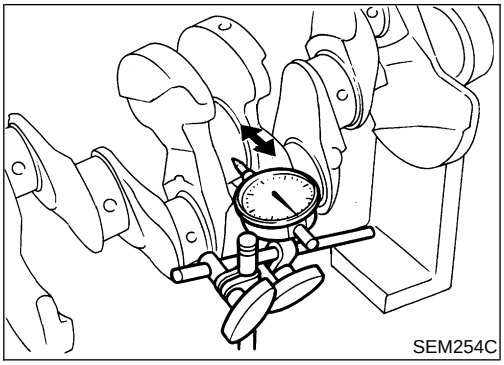
SEM254C

3. Measure crankshaft runout.

Runout (Total indicator reading):
Less than 0.10 mm (0.0039 in)

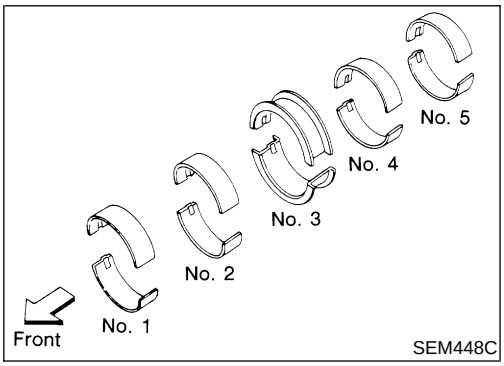

SEM448C

BEARING CLEARANCE

NEEM0107S08

- Use Method A or Method B. Method A is preferred because it is more accurate.

Method A (Using bore gauge and micrometer)

Main bearing

NEEM0107S0801

1. Set main bearings in their proper positions on cylinder block and main bearing cap.

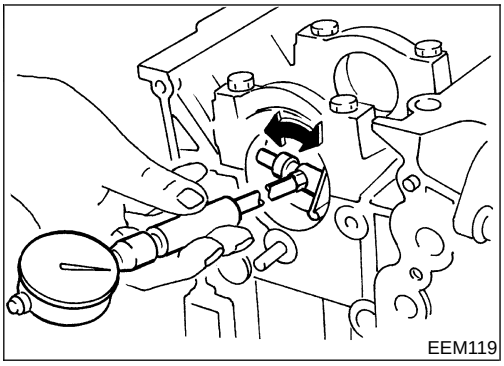
EEM119

2. Install main bearing cap to cylinder block.
- **Tighten all bolts in correct order in two or three stages. Refer to "Components", EM-44 and "CRANKSHAFT", EM-53.**
3. Measure inner diameter "A" of each main bearing.

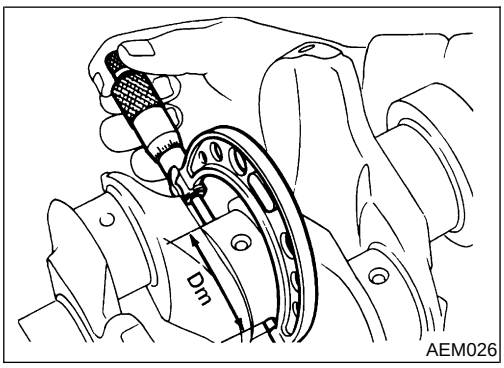

AEM026

4. Measure outer diameter "Dm" of each crankshaft main journal.
5. Calculate main bearing clearance.
Main bearing clearance = A − Dm

Standard:
0.020 - 0.047 mm (0.0008 - 0.0019 in)
Limit:
0.1 mm (0.004 in)

6. If it exceeds the limit, replace bearing.
7. If clearance cannot be adjusted within the standard of any bearing, grind crankshaft journal and use undersized bearing.

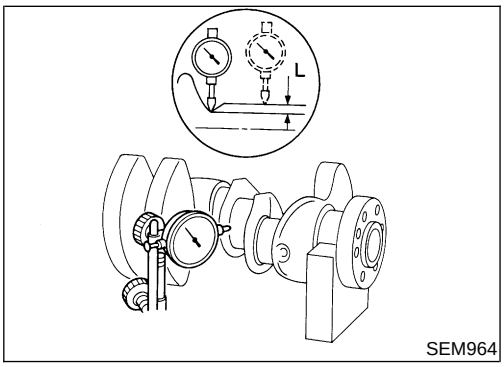

SEM964

a. **When grinding crankshaft journal, confirm that "L" dimension in fillet roll is more than the specified limit.**
"L": 0.1 mm (0.004 in)
b. **Grind crankshaft to use with available service parts. Refer to "Crankshaft", EM-63, and "Available Main Bearing", EM-64.**

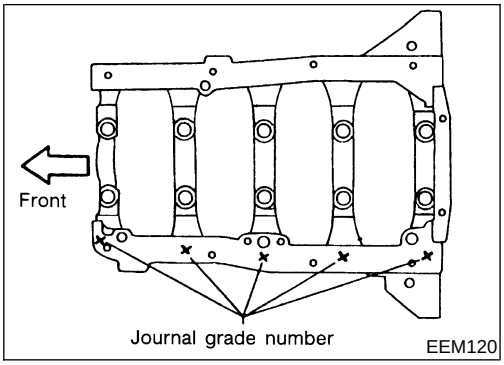

8. If crankshaft is reused, measure main bearing clearance and select thickness of main bearing.
   If crankshaft or cylinder block is replaced, select thickness of main bearings as follows:

a. Grade number of each cylinder block main journal is punched on the respective cylinder block. These numbers are punched in either Arabic or Roman numerals.

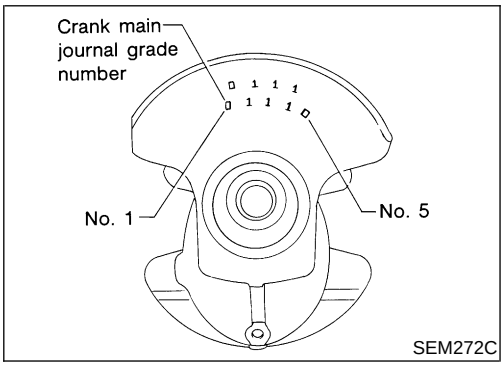

b. Grade number of each crankshaft main journal is punched on crankshaft. These numbers are punched in either Arabic or Roman numerals.

c. Select main bearing with suitable thickness according to the following example or table.
   For example:
   Main journal grade number: 1
   Crankshaft journal grade number: 2
   Main bearing grade number = 1 + 2 = 3 (Yellow)
   Main bearing grade number and identification color:

		Main journal grade number		
		0	1	2
Crankshaft journal grade number	0	0 (Black)	1 (Brown)	2 (Green)
	1 or I	1 (Brown)	2 (Green)	3 (Yellow)
	2 or II	2 (Green)	3 (Yellow)	4 (Blue)

Connecting Rod Bearing (Big End)

NEEM0107S0802

1. Install connecting rod bearing to connecting rod and cap.
2. Install connecting rod cap to connecting rod.
- **Tighten bolts to the specified torque.**
3. Measure inner diameter "C" of each bearing.

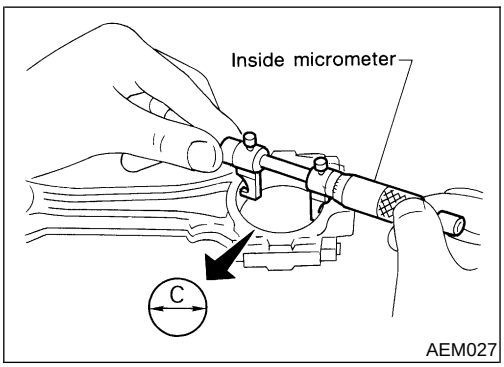

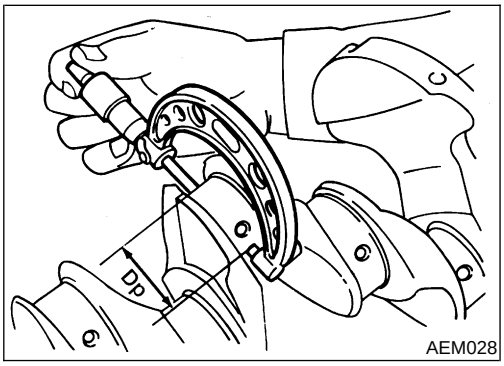

4. Measure outer diameter "Dp" of each crankshaft pin journal.
5. Calculate connecting rod bearing clearance.
   Connecting rod bearing clearance = C − Dp:
   Standard
   0.010 - 0.035 mm (0.0004 - 0.0014 in)
   Limit
   0.09 mm (0.0035 in)
6. If it exceeds the limit, replace bearing.
7. If clearance cannot be adjusted within the standard of any bearing, grind crankshaft journal and use undersized bearing.

Refer to step 5 of "BEARING CLEARANCE", EM-49.

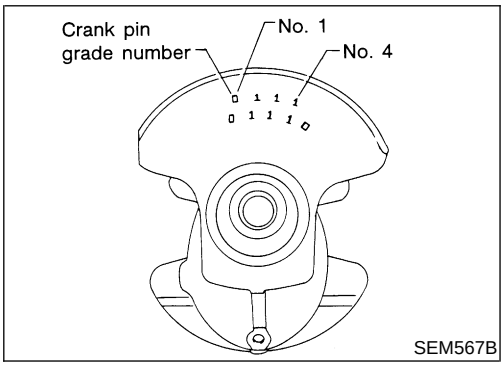

8. If crankshaft is replaced, select connecting rod bearing according to the following table.

Connecting rod bearing grade number:
These numbers are punched in either Arabic or Roman numerals.

Crank pin grade number	Connecting rod bearing grade number
0	0
1 or I	1
2 or II	2

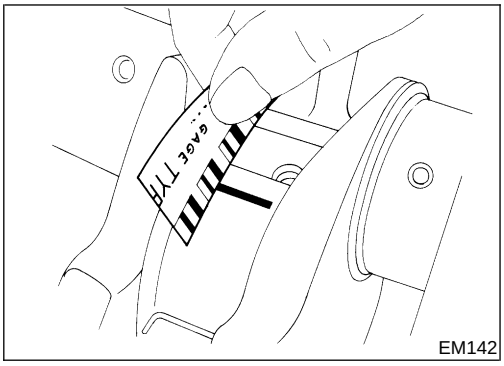

Method B (Using plastigage)

CAUTION:

- **Do not turn crankshaft or connecting rod while plastigage is being inserted.**
- **When bearing clearance exceeds the specified limit, ensure that the proper bearing has been installed. Then if excessive bearing clearance exists, use a thicker main bearing or undersized bearing so that the specified bearing clearance is obtained.**

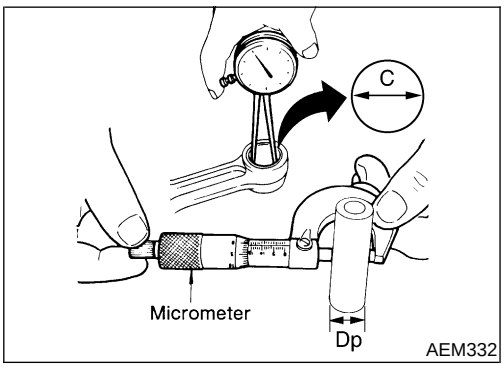

CONNECTING ROD BUSHING CLEARANCE (SMALL END)

NEEM0107S09

1. Measure inner diameter "C" of bushing.
2. Measure outer diameter "Dp" of piston pin.
3. Calculate connecting rod bushing clearance.

C − Dp =
0.005 - 0.017 mm (0.0002 - 0.0007 in) (Standard)
0.023 mm (0.0009 in) (Limit)

If out of specification, replace connecting rod assembly and/or piston set with pin.

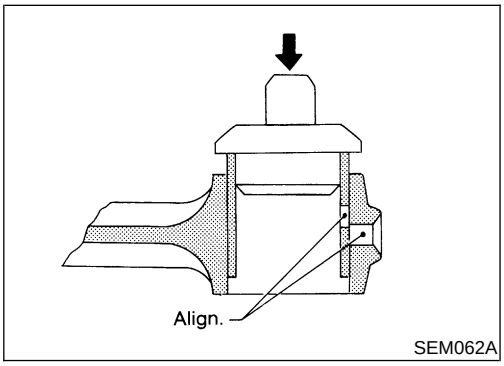

REPLACEMENT OF CONNECTING ROD BUSHING (SMALL END)

NEEM0107S10

1. Drive in small end bushing until it is flush with end surface of rod.

Be sure to align the oil holes.

2. Ream the bushing until clearance with piston pin is within specification.

Clearance between connecting rod bushing and piston pin:
0.005 - 0.017 mm (0.0002 - 0.0007 in)

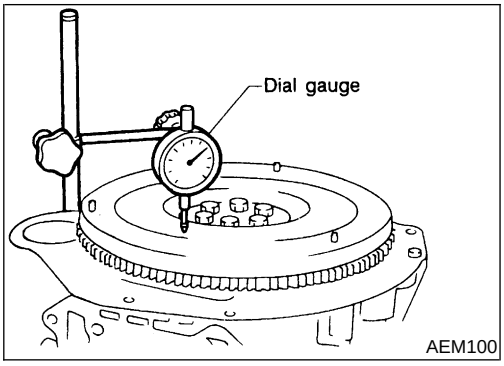

FLYWHEEL RUNOUT

NEEM0107S11

Runout (Total indicator reading):
Flywheel
Less than 0.15 mm (0.006 in)

CAUTION:

- **Be careful not to damage the ring gear teeth.**
- **Do not allow any magnetic materials to contact the ring gear teeth.**
- **Do not resurface the flywheel. Replace as necessary.**

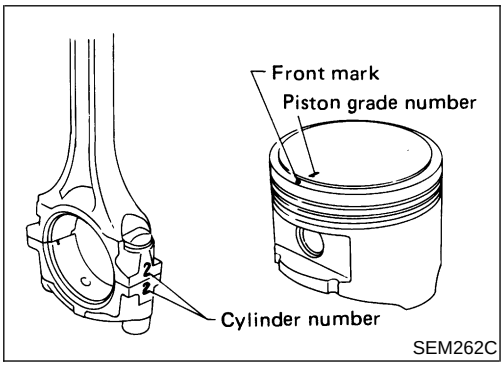

Assembly

NEEM0108

PISTON

NEEM0108S01

1. Heat piston to 60 to 70°C (140 to 158°F) and assemble piston, piston pin and connecting rod.

- **Align the direction of piston and connecting rod.**
- **Numbers stamped on connecting rod and cap correspond to each cylinder.**
- **After assembly, make sure connecting rod swings smoothly.**

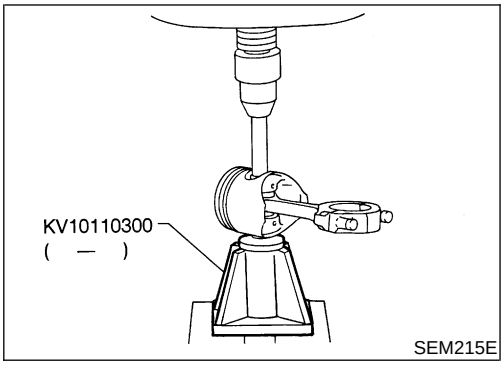

2. Set piston rings as shown.

CAUTION:

- **When piston rings are not replaced, make sure that piston rings are mounted in their original positions.**
- **When piston rings are being replaced and no punchmark is present, piston rings can be mounted with either side up.**

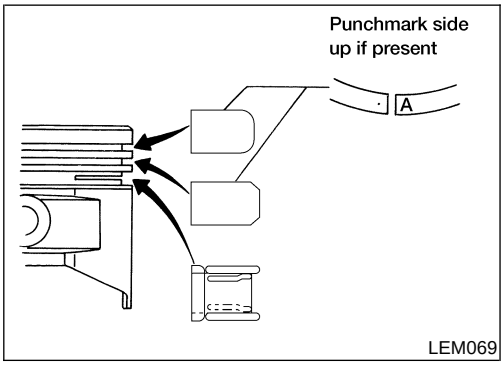

3. Align piston rings so that end gaps are positioned as shown.

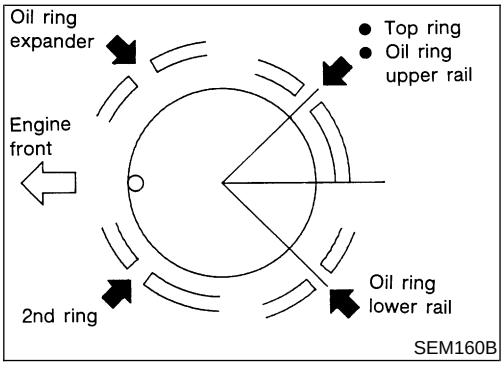

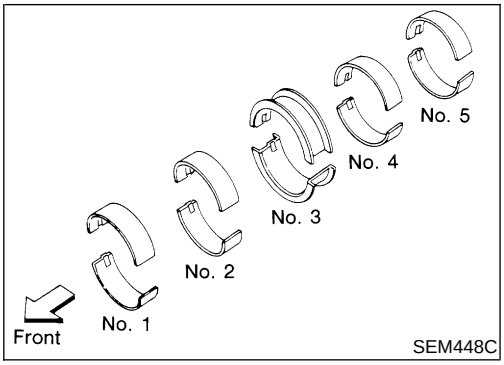

CRANKSHAFT

NEEM0108S02

1. Set main bearings in their proper positions on cylinder block and main bearing caps.

- **Confirm that correct main bearings are used. Refer to "BEARING CLEARANCE", EM-49.**
- **Apply new engine oil to bearing surfaces.**

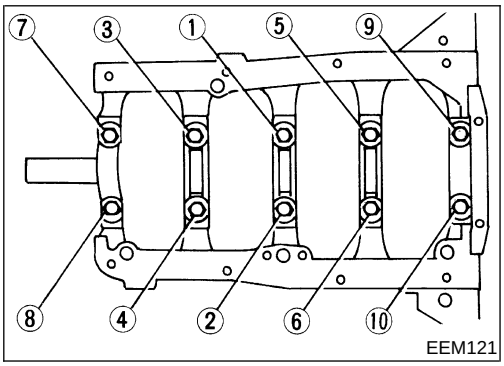

2. Install crankshaft and main bearing caps and tighten bolts to the specified torque. Refer to "Components", EM-44.

- **Apply new engine oil to the bolt threads and seat surface.**
- **Prior to tightening bearing cap bolts, place bearing cap in its proper position by shifting crankshaft in the axial direction.**
- **Tighten bearing cap bolts gradually in two or three stages. Start with center bearing and move outward as shown in figure.**
- **After securing bearing cap bolts, make sure crankshaft turns smoothly by hand.**

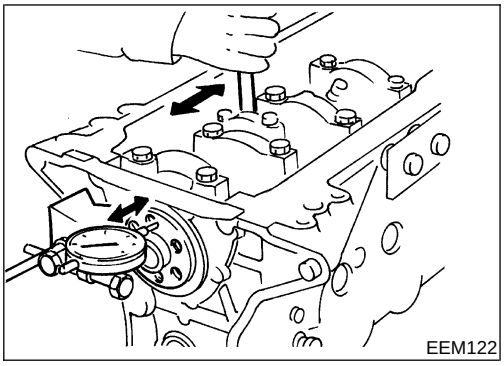

3. Measure crankshaft end play.

Crankshaft end play:
Standard
0.05 - 0.18 mm (0.0020 - 0.0071 in)
Limit
0.3 mm (0.012 in)

If beyond the limit, replace No. 3 bearing with a new one.

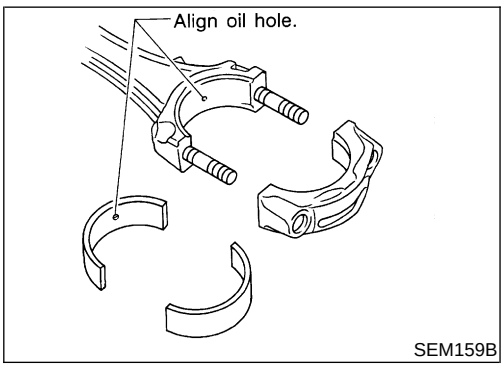

4. Install connecting rod bearings in connecting rods and connecting rod caps.

- **Confirm that correct bearings are used.**
  Refer to "Connecting Rod Bearing (Big End)", EM-50.
- **Install bearings so that oil hole in connecting rod aligns with oil hole of bearing.**
- **Apply new engine oil to bearing surfaces, bolt threads and seating surfaces.**

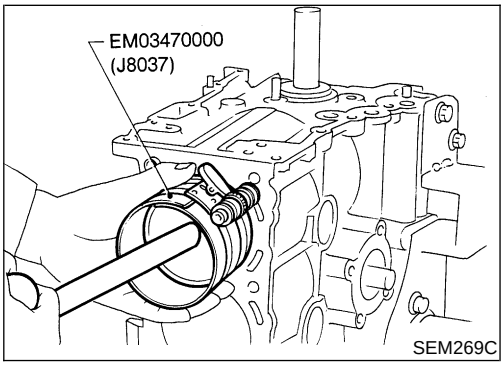

5. Install pistons with connecting rods.

a. Install them into corresponding cylinders with Tool.

- **Arrange so that front mark on piston head faces toward front of engine.**
- **Make sure connecting rod does not scratch cylinder wall.**
- **Make sure connecting rod bolts do not scratch crankshaft journals.**
- **Apply new engine oil to piston rings and sliding surface of piston.**

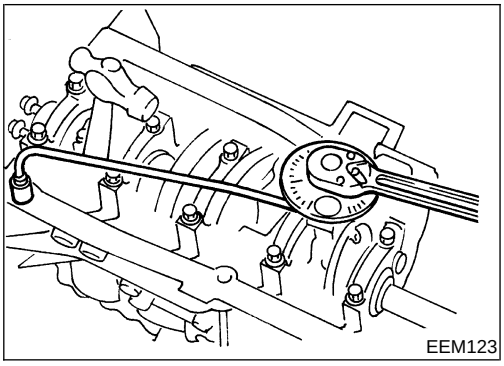
EEM123

b. Install connecting rod bearing caps.
Tighten connecting rod bearing cap nuts using the following procedure.

Connecting rod bearing nut:

(1) Tighten to 14 - 16 N·m

(1.4 - 1.6 kg-m, 10 - 12 ft-lb).

(2) Tighten bolts $60^{+5}/_{-0}$ degrees clockwise with an angle wrench.

If an angle wrench is not available, tighten them to 38 - 44 N·m (3.9 - 4.5 kg-m, 28 - 33 ft-lb).

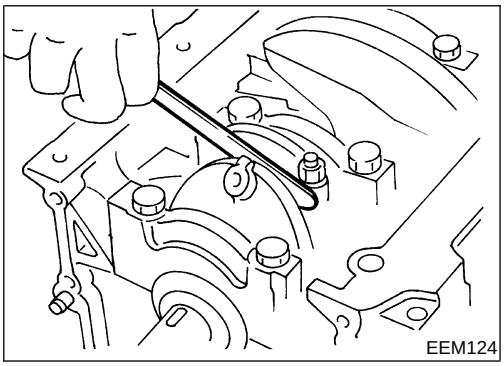
EEM124

6. Measure connecting rod side clearance.

Connecting rod side clearance:

Standard

0.2 - 0.4 mm (0.008 - 0.016 in)

Limit

0.6 mm (0.024 in)

If beyond the limit, replace connecting rod and/or crankshaft.

REPLACING PILOT BUSHING

NEEM0108S03

1. Remove pilot bushing.

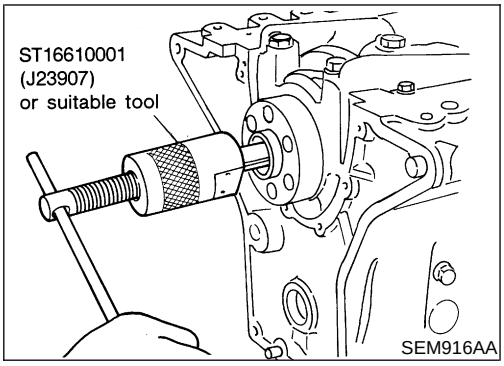

SEM916AA

2. Install pilot bushing.

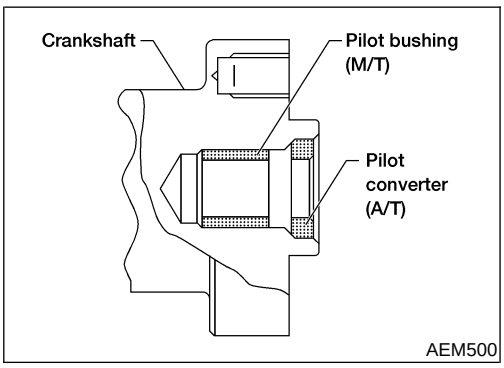

AEM500

General Specifications

NEEM0109

Cylinder arrangement		In-line 4
Displacement		2,389 cm^3 (145.78 cu in)
Bore and stroke		89 x 96 mm (3.50 x 3.78 in)
Valve arrangement		DOHC
Firing order		1-3-4-2
Number of piston rings	Compression	2
	Oil	1
Number of main bearings		5
Compression ratio		9.2

COMPRESSION PRESSURE

NEEM0109S01

Unit: kPa (kg/cm^2, psi)/300 rpm

Standard	1,226 (12.5, 178)
Minimum	1,030 (10.5, 149)
Differential limit between cylinders	98 (1.0, 14)

Cylinder Head

NEEM0110

Unit: mm (in)

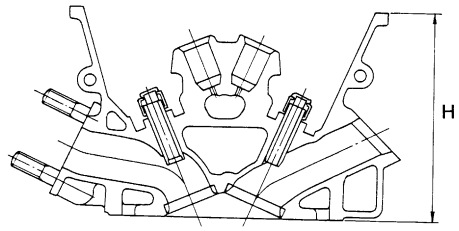

Nominal cylinder head height:
H = 126.3 - 126.5 (4.972 - 4.980)

SEM519E

	Standard	Limit
Head surface distortion	Less than 0.03 (0.0012)	0.1 (0.004)

Valve

VALVE

NEEM0111

NEEM0111S01

Unit: mm (in)

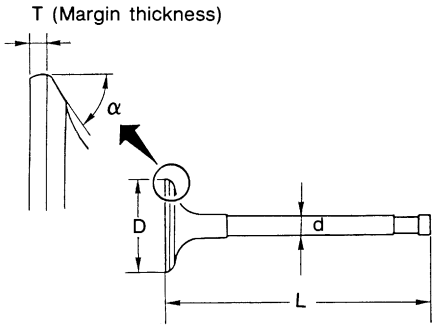

SEM188

Valve head diameter “D”	Intake	36.5 - 36.7 (1.437 - 1.445)
	Exhaust	31.2 - 31.4 (1.228 - 1.236)
Valve length “L”	Intake	101.17 - 101.47 (3.9831 - 3.9949)
	Exhaust	98.67 - 98.97 (3.8846 - 3.8964)
Valve stem diameter “d”	Intake	6.965 - 6.980 (0.2742 - 0.2748)
	Exhaust	6.945 - 6.960 (0.2734 - 0.2740)
Valve seat angle “α”	Intake & Exhaust	45°15′ - 45°45′
Valve margin “T”	Intake	0.95 - 1.25 (0.0374 - 0.0492)
	Exhaust	1.15 - 1.45 (0.0453 - 0.0571)
Valve margin “T” limit		More than 0.5 (0.020)
Valve stem end surface grinding limit		Less than 0.2 (0.008)

VALVE SPRING

NEEM0111S02

Free height mm (in)		50.3 (1.9831)
Pressure N (kg, lb) at height mm (in)	Standard	418.0 (42.6, 93.9) at 29.17 (1.1484)
	Limit	393.0 (40.1, 88.4) at 29.17 (1.1484)
Out-of-square mm (in)		Less than 2.2 (0.087)

VALVE GUIDE

NEEM0111S03

Unit: mm (in)

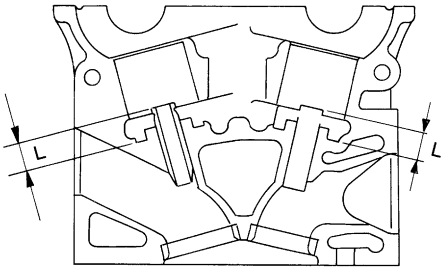

SEM301D

		Standard	Service
Valve guide Outer diameter	Intake	11.023 - 11.034 (0.4340 - 0.4344)	11.223 - 11.234 (0.4418 - 0.4423)
	Exhaust	11.023 - 11.034 (0.4340 - 0.4344)	11.223 - 11.234 (0.4418 - 0.4423)
Valve guide Inner diameter (Finished size)	Intake	7.000 - 7.018 (0.2756 - 0.2763)	
	Exhaust	7.000 - 7.018 (0.2756 - 0.2763)	
Cylinder head valve guide hole diameter	Intake	10.975 - 10.996 (0.4321 - 0.4329)	11.175 - 11.196 (0.4400 - 0.4408)
	Exhaust	10.975 - 10.996 (0.4321 - 0.4329)	11.175 - 11.196 (0.4400 - 0.4408)
Interference fit of valve guide		0.027 - 0.059 (0.0011 - 0.0023)	
		Standard	Limit
Stem to guide clearance	Intake	0.020 - 0.053 (0.0008 - 0.0021)	0.08 (0.0031)
	Exhaust	0.040 - 0.073 (0.0016 - 0.0029)	0.1 (0.004)
Valve deflection limit		0.2 (0.008)	
Projection length "L"		13.3 - 13.9 (0.524 - 0.547)	

VALVE LIFTER

NEEM0111S04

Unit: mm (in)

Valve lifter outer diameter	33.960 - 33.975 (1.3370 - 1.3376)
Lifter guide inner diameter	34.000 - 34.021 (1.3386 - 1.3394)
Clearance between lifter and filter guide	0.025 - 0.061 (0.0010 - 0.0024)

VALVE CLEARANCE ADJUSTMENT

NEEM0111S05

Unit: mm (in)

Valve clearance (Hot)	Intake	0.31 - 0.39 (0.012 - 0.015)
	Exhaust	0.39 - 0.47 (0.015 - 0.019)

Valve (Cont'd)

AVAILABLE SHIMS

NEEM0111S06

Thickness mm (in)	Identification mark	Thickness mm (in)	Identification mark
—	—	1.90 (0.0748)	190
1.92 (0.0756)	192	1.94 (0.0764)	194
1.96 (0.0772)	196	1.98 (0.0780)	198
2.00 (0.0787)	200	2.02 (0.0795)	202
2.04 (0.0803)	204	2.06 (0.0811)	206
2.08 (0.819)	208	2.10 (0.0827)	210
2.12 (0.0835)	212	2.14 (0.0843)	214
2.16 (0.0850)	216	2.18 (0.0858)	218
2.20 (0.0866)	220	2.22 (0.0874)	222
2.24 (0.0882)	224	2.26 (0.0890)	226
2.28 (0.0898)	228	2.30 (0.0906)	230
2.32 (0.0913)	232	2.34 (0.0921)	234
2.36 (0.0929)	236	2.38 (0.0937)	238
2.40 (0.0945)	240	2.42 (0.0953)	242
2.44 (0.0961)	244	2.46 (0.0969)	246
2.48 (0.0976)	248	2.50 (0.0984)	250
2.52 (0.0992)	252	2.54 (0.1000)	254
2.56 (0.1008)	256	2.58 (0.1016)	258
2.60 (0.1024)	260	2.62 (0.1031)	262
2.64 (0.1039)	264	2.66 (0.1047)	266
2.68 (0.1055	268	—	—

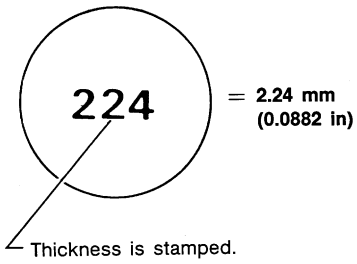

SEM308D

VALVE SEAT

NEEM0111S07

Unit: mm (in)

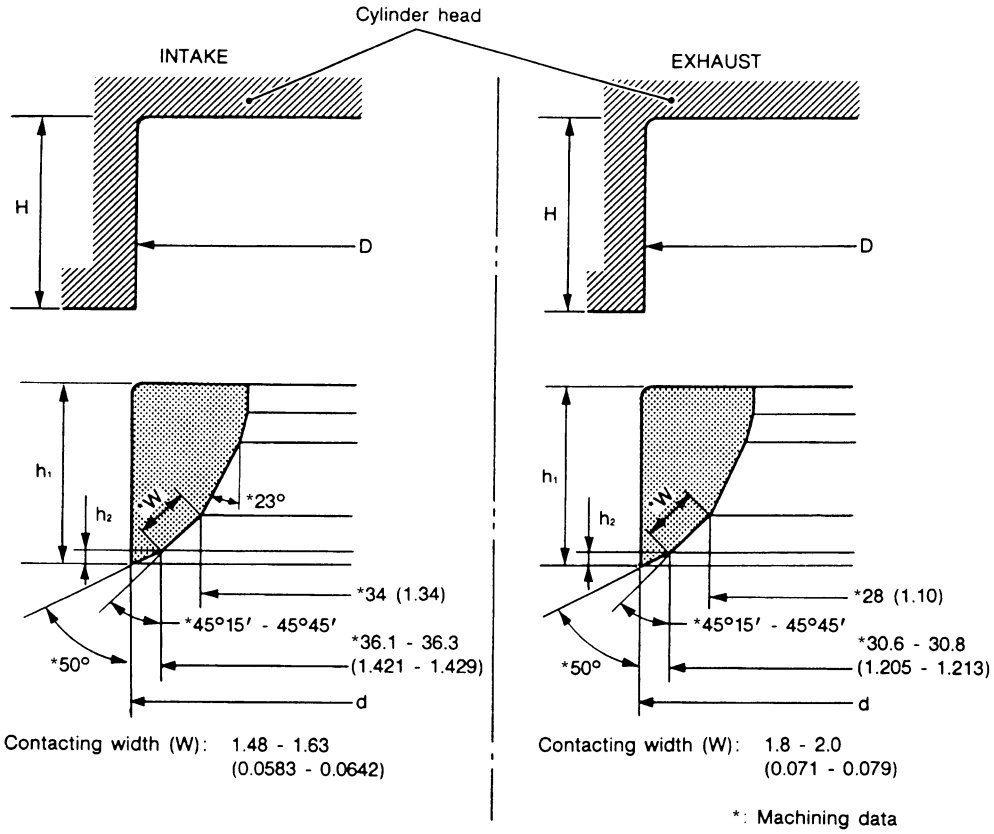

AEM456

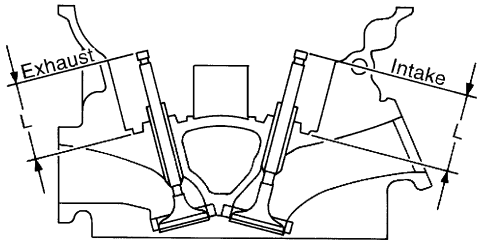

SEM621F

		Standard	Service
Cylinder head seat recess diameter (D)	Intake	37.500 - 37.516 (1.4764 - 1.4770)	38.000 - 38.016 (1.4961 - 1.4967)
	Exhaust	32.200 - 32.216 (1.2677 - 1.2683)	32.700 - 32.716 (1.2874 - 1.2880)
Valve seat interference fit	Intake	0.064 - 0.096 (0.0025 - 0.0038)	
	Exhaust	0.064 - 0.096 (0.0025 - 0.0038)	
Valve seat outer diameter (d)	Intake	37.580 - 37.596 (1.4795 - 1.4802)	38.080 - 38.096 (1.4992 - 1.4998)
	Exhaust	32.280 - 32.296 (1.2709 - 1.2715)	32.780 - 32.796 (1.2905 - 1.2912)
Depth (H)	Intake	6.1 - 6.3 (0.240 - 0.248)	
	Exhaust	6.1 - 6.3 (0.240 - 0.248)	
Height (h_1)	Intake	5.8 - 6.0 (0.228 - 0.236) 5.9 - 6.0 (0.232 - 0.236)	5.3 - 5.5 (0.209 - 0.217)
	Exhaust	5.9 - 6.0 (0.232 - 0.236)	5.32 - 5.42 (0.209 - 0.213)

Valve (Cont'd)

Height (h_2)	Intake	0.24 - 0.64 (0.0094 - 0.0252) 0.34 - 0.64 (0.0134 - 0.0252)
	Exhaust	0.43 - 0.73 (0.0169 - 0.0287)
Depth (L)	Intake	42.02 - 42.52
	Exhaust	42.03 - 42.53

Cylinder Block

NEEM0112

Unit: mm (in)

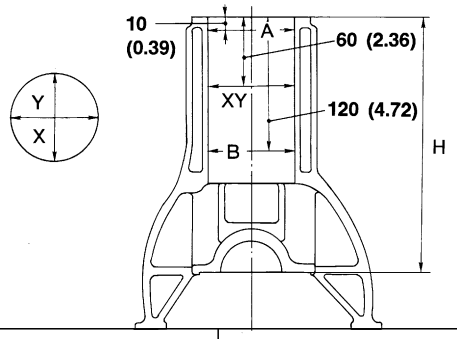

SEM400E

			Standard	Limit
Distortion			—	0.1 (0.004)
Cylinder bore	Inner diameter	Grade 1	89.000 - 89.010 (3.5039 - 3.5043)	0.2 (0.008)*
		Grade 2	89.010 - 89.020 (3.5043 - 3.5047)	
		Grade 3	89.020 - 89.030 (3.5047 - 3.5051)	
	Out-of-round (X − Y)		Less than 0.015 (0.0006)	—
	Taper (A − B)		Less than 0.010 (0.0004)	—
Difference in inner diameter between cylinders			Less than 0.03 (0.0012)	0.2 (0.008)
Piston-to-cylinder clearance			0.020 - 0.040 (0.0008 - 0.0016)	—
Cylinder block height (From crankshaft center)			246.95 - 247.05 (9.7224 - 9.7264)	0.2 (0.008)**

* Wear limit

** Total amount of cylinder head resurfacing and cylinder block resurfacing

Camshaft and Camshaft Bearing

NEEM0113
Unit: mm (in)

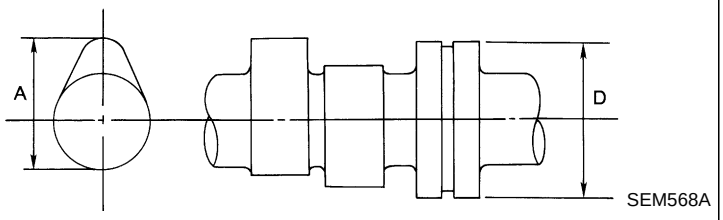

SEM568A

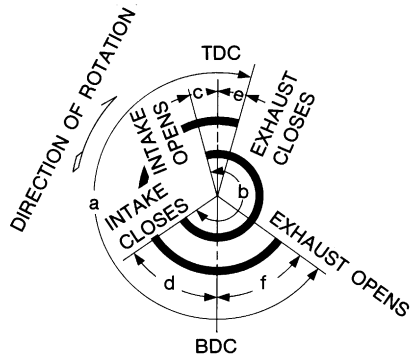

EM120

		Standard	Limit
Cam height (A)	Intake	41.755 - 41.945 (1.644 - 1.651)	—
	Exhaust	41.815 - 42.005 (1.646 - 1.654)	—
Wear limit of cam height		—	0.2 (0.008)
Camshaft journal to bearing clearance		0.045 - 0.090 (0.0018 - 0.0035)	0.12 (0.0047)
Inner diameter of camshaft bearing	#1 to #5 journals	28.000 - 28.025 (1.1024 - 1.1033)	—
Outer diameter of camshaft journal (D)	#1 to #5 journals	27.935 - 27.955 (1.0998 - 1.1006)	—
Camshaft runout*		Less than 0.02 (0.0008)	0.04 (0.0016)
Camshaft end play		0.070 - 0.148 (0.0028 - 0.0058)	0.2 (0.008)
Valve timing (Degree on crankshaft)	a	224	—
	b	224	—
	c	−1	—
	d	45	—
	e	7	—
	f	37	—

* Total indicator reading

Piston, Piston Ring and Piston pin

NEEM0114

PISTON

NEEM0114S01
Unit: mm (in)

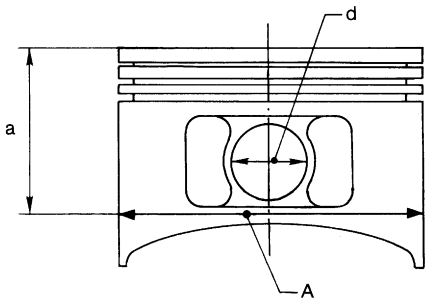

SEM804E

Piston skirt diameter (A)	Standard	Grade No. 1	88.970 - 88.980 (3.5027 - 3.5031)
		Grade No. 2	88.980 - 88.990 (3.5031 - 3.5035)
		Grade No. 3	88.990 - 89.000 (3.5035 - 3.5039)
	Service (Oversize)	0.5 (0.020)	89.470 - 89.500 (3.5224 - 3.5236)
		1.0 (0.039)	89.970 - 90.000 (3.5421 - 3.5433)
Dimension (a)		Approximately 48 (1.89)	
Piston pin hole diameter (d)		20.993 - 21.005 (0.8265 - 0.8270)	
Piston-to-cylinder bore clearance		0.020 - 0.040 (0.0008 - 0.0016)	

PISTON PIN

NEEM0114S02
Unit: mm (in)

	Standard	Limit
Piston pin outer diameter	20.989 - 21.001 (0.8263 - 0.8268)	—
Interference fit of piston pin to piston pin hole	−0.002 to 0.01 (−0.0001 to 0.0004)	—
Piston pin to connecting rod bearing clearance	0.005 - 0.017 (0.0002 - 0.0007)	0.023 (0.0009)

PISTON RING

NEEM0114S03
Unit: mm (in)

		Standard	Limit
Side clearance	Top	0.040 - 0.080 (0.0016 - 0.0031)	0.1 (0.004)
	2nd	0.030 - 0.070 (0.0012 - 0.0028)	0.1 (0.004)
	Oil	0.065 - 0.135 (0.0026 - 0.0053)	—
Ring gap	Top	0.28 - 0.52 (0.0110 - 0.0205)	1.0 (0.039)
	2nd	0.45 - 0.69 (0.0177 - 0.0272)	1.0 (0.039)
	Oil (rail ring)	0.20 - 0.69 (0.0079 - 0.0272)	1.0 (0.039)

Connecting Rod

NEEM0115

Unit: mm (in)

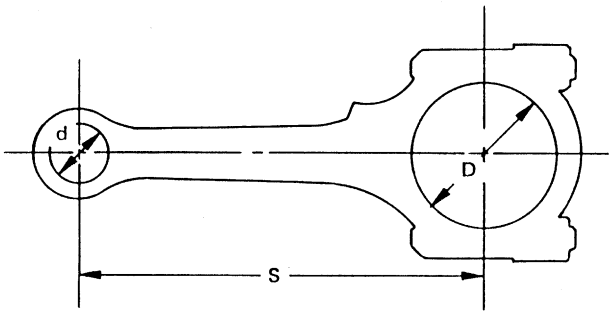

SEM570A

	Standard	Limit
Center distance (S)	164.95 - 165.05 (6.4941 - 6.4980)	—
Bend [per 100 mm (3.94 in)]	—	0.15 (0.0059)
Torsion [per 100 mm (3.94 in)]	—	0.30 (0.0118)
Connecting rod small end inner diameter (d)*	23.970 - 24.000 (0.9437 - 0.9449)	—
Piston pin bushing inner diameter	21.000 - 21.012 (0.8268 - 0.8272)	—
Connecting rod big end inner diameter (D)*	53.000 - 53.013 (2.0866 - 2.0871)	—
Side clearance	0.2 - 0.4 (0.008 - 0.016)	0.6 (0.024)

* Without bearing

Crankshaft

NEEM0116

Unit: mm (in)

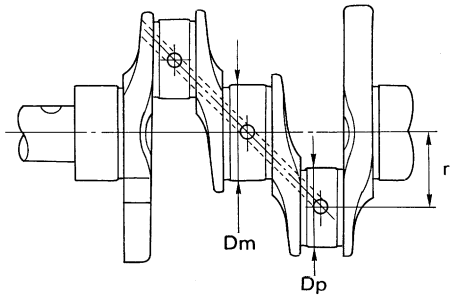

SEM394

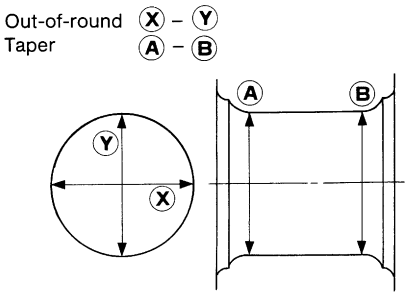

EM715

Main journal diameter (Dm)	Grade No. 0	59.967 - 59.975 (2.3609 - 2.3612)	
	Grade No. 1	59.959 - 59.967 (2.3606 - 2.3609)	
	Grade No. 2	59.951 - 59.959 (2.3603 - 2.3606)	
Pin journal diameter (Dp)	Grade No. 0	49.968 - 49.974 (1.9672 - 1.9675)	
	Grade No. 1	49.962 - 49.968 (1.9670 - 1.9672)	
	Grade No. 2	49.956 - 49.962 (1.9668 - 1.9670)	
Center distance (r)		47.95 - 48.05 (1.8878 - 1.8917)	
		Standard	Limit
Taper of journal and pin [A - B]	Journal	—	0.01 (0.0004)
	Pin	—	0.005 (0.0002)

Crankshaft (Cont'd)

Out-of-round of journal and pin [X - Y]	Journal	—	0.01 (0.0004)
	Pin	—	0.005 (0.0002)
Runout [TIR]*		—	0.10 (0.0039)
Free end play		0.05 - 0.18 (0.0020 - 0.0071)	0.3 (0.012)
Fillet roil		More than 0.1 (0.004)	

* Total indicator reading

Bearing Clearance

NEEM0117

Unit: mm (in)

	Standard	Limit
Main bearing clearance	0.020 - 0.047 (0.0008 - 0.0019)	0.1 (0.004)
Connecting rod bearing clearance	0.010 - 0.035 (0.0004 - 0.0014)	0.09 (0.0035)

Available Main Bearing

NEEM0118

STANDARD

NEEM0118S01

Unit: mm (in)

Grade number	Thickness	Identification color
0	1.821 - 1.825 (0.0717 - 0.0719)	Black
1	1.825 - 1.829 (0.0719 - 0.0720)	Brown
2	1.829 - 1.833 (0.0720 - 0.0722)	Green
3	1.833 - 1.837 (0.0722 - 0.0723)	Yellow
4	1.837 - 1.841 (0.0723 - 0.0725)	Blue

UNDERSIZE (SERVICE)

NEEM0118S02

Unit: mm (in)

	Thickness	Main journal diameter "Dm"
0.25 (0.0098)	1.952 - 1.960 (0.0769 - 0.0772)	Grind so that bearing clearance is the specified value.

Available Connecting Rod Bearing

NEEM0119

STANDARD

NEEM0119S01

Unit: mm (in)

Grade number	Thickness	Identification color
0	1.505 - 1.508 (0.0593 - 0.0594)	—
1	1.508 - 1.511 (0.0594 - 0.0595)	Brown
2	1.511 - 1.514 (0.0595 - 0.0596)	Green

UNDERSIZE (SERVICE)

NEEM0119S02

Unit: mm (in)

	Thickness	Crank pin journal diameter "Dp"
0.08 (0.0031)	1.540 - 1.548 (0.0606 - 0.0609)	Grind so that bearing clearance is the specified value.
0.12 (0.0047)	1.560 - 1.568 (0.0614 - 0.0617)	
0.25 (0.0098)	1.625 - 1.633 (0.0640 - 0.0643)	

Miscellaneous Components

NEEM0120

Unit: mm (in)

Camshaft sprocket runout [TIR]*	Less than 0.15 (0.0059)
Flywheel runout [TIR]*	Less than 0.15 (0.006)
Drive plate runout [TIR]*	Less than 0.15 (0.006)

* Total indicator reading

Supplemental Restraint System (SRS) “AIR BAG” and “SEAT BELT PRE-TENSIONER”

NEEM0130

The Supplemental Restraint System such as “AIR BAG” and “SEAT BELT PRE-TENSIONER” used along with a seat belt, helps to reduce the risk or severity of injury to the driver and front passenger in a frontal collision. The Supplemental Restraint System consists of a driver air bag module (located in the center of the steering wheel), a front passenger air bag module (located on the instrument panel on the passenger side), seat belt pre-tensioners, a diagnosis sensor unit, warning lamp, wiring harness, and spiral cable.

The vehicle (except Crew Cab model) is equipped with a passenger air bag deactivation switch. Because no rear seat exists where a rear-facing child restraint can be placed, the switch is designed to turn off the passenger air bag so that a rear-facing child restraint can be used in the front passenger seat. The switch is located in the center of the instrument panel, near the ashtray. When the switch is turned to the ON position, the passenger air bag is enabled and could inflate in a frontal collision. When the switch is turned to the OFF position, the passenger air bag is disabled and will not inflate in a frontal collision. A passenger air bag OFF indicator on the instrument panel lights up when the passenger air bag is switched OFF. The driver air bag always remains enabled and is not affected by the passenger air bag deactivation switch.

Information necessary to service the system safely is included in the **RS section** of this Service Manual.

WARNING:

- **To avoid rendering the SRS inoperative, which could increase the risk of personal injury or death in the event of a collision which would result in air bag inflation, all maintenance should be performed by an authorized NISSAN dealer.**
- **Improper maintenance, including incorrect removal and installation of the SRS, can lead to personal injury caused by unintentional activation of the system. For removal of Spiral Cable and Air Bag Module, see the RS section.**
- **Do not use electrical test equipment on any circuit related to the SRS unless instructed to in this Service Manual. Spiral cable and wiring harnesses (except “SEAT BELT PRE-TENSIONER”) covered with yellow insulation either just before the harness connectors or for the complete harness are related to the SRS.**
- **The vehicle (except Crew Cab model) is equipped with a passenger air bag deactivation switch which can be operated by the customer. When the passenger air bag is switched OFF, the passenger air bag is disabled and will not inflate in a frontal collision. When the passenger air bag is switched ON, the passenger air bag is enabled and could inflate in a frontal collision. After SRS maintenance or repair, make sure the passenger air bag deactivation switch is in the same position (ON or OFF) as when the vehicle arrived for service.**

Parts Requiring Angular Tightening

NEEM0131

- Use an angle wrench for the final tightening of the following engine parts:

a) Cylinder head bolts
b) Connecting rod cap nuts

- Do not use a torque value for final tightening.
- The torque value for these parts are for a preliminary step.
- Ensure thread and seat surfaces are clean and coated with engine oil.

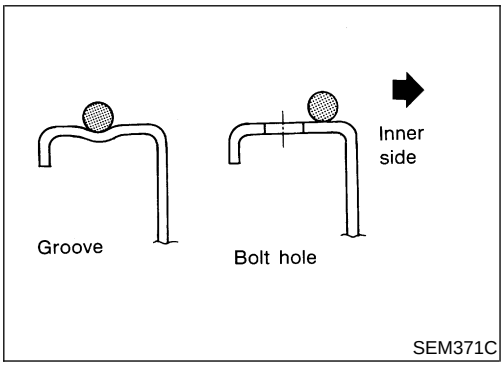

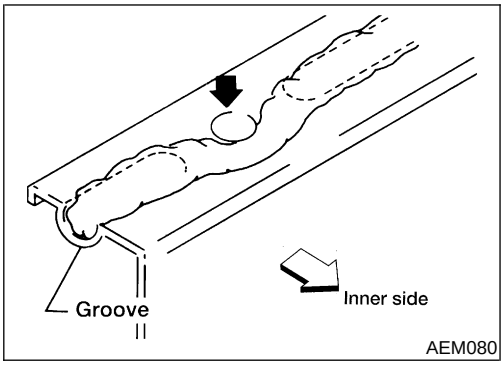

Liquid Gasket Application Procedure

NEEM0132

1) Use a scraper to remove all traces of old liquid gasket from mating surfaces and grooves. Also completely clean any oil stains from these portions.
2) Apply a continuous bead of liquid gasket to mating surfaces. (Use Genuine RTV Silicone Sealant Part No. 999MP-A7007 or equivalent.)
   - Be sure liquid gasket is 3.5 to 4.5 mm (0.138 to 0.177 in) dia. (for oil pan).
   - Be sure liquid gasket is 2.0 to 3.0 mm (0.079 to 0.118 in) dia. (in areas except oil pan).
3) Apply liquid gasket to inner surface around hole perimeter area (unless otherwise specified).
4) Assembly should be done within 5 minutes after coating.
5) Wait at least 30 minutes before refilling engine oil and engine coolant.

Special Service Tools

NEEM0133

The actual shapes of Kent-Moore tools may differ from those of special service tools illustrated here.

Tool number (Kent-Moore No.) Tool name	Description	
ST0501S000 (—) Engine stand assembly **1** ST05011000 (—) Engine stand **2** ST05012000 (—) Base	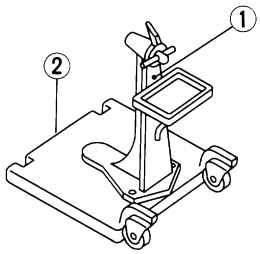 NT042	Disassembling and assembling
KV10106500 (—) Engine stand shaft	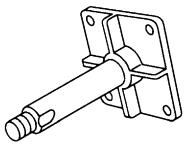 NT028	
KV10110001 (—) Engine sub-attachment	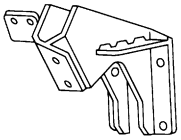 NT032	
ST10120000 (J24239-01) Cylinder head bolt wrench	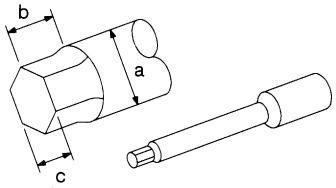 NT583	Loosening and tightening cylinder head bolt **a: 13 mm (0.51 in) dia.** **b: 12 mm (0.47 in)** **c: 10 mm (0.39 in)**
KV10112100 (BT8653-A) Angle wrench	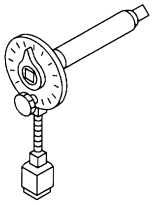 NT014	Tightening bearing cap, cylinder head bolts, etc.
KV10110600 (J33986) Valve spring compressor	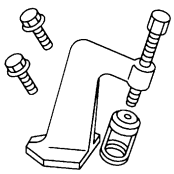 NT033	Disassembling and assembling valve components
KV10107501 (—) Valve oil seal drift	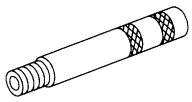 NT025	Installing valve oil seal

Tool number (Kent-Moore No.) Tool name	Description	
KV10110300 (—) Piston pin press stand assembly **1** KV10110310 (—) Cap **2** KV10110330 (—) Spacer **3** ST13030020 (—) Press stand **4** ST13030030 (—) Spring **5** KV10110340 (—) Drift **6** KV10110320 (—) Center shaft	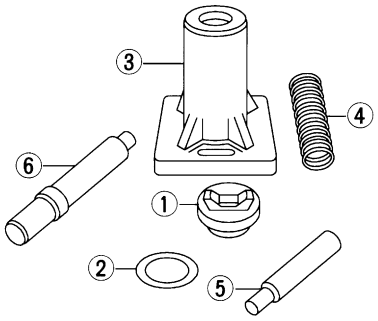 NT036	Disassembling and assembling piston with connecting rod
EM03470000 (J8037) Piston ring compressor	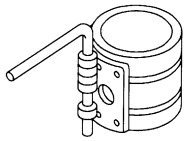 NT044	Installing piston assembly into cylinder bore
ST16610001 (J23907) Pilot bushing puller	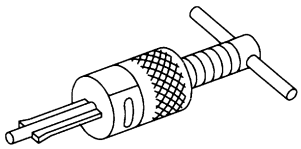 NT045	Removing crankshaft pilot bushing
KV10111100 (J37228) Seal cutter	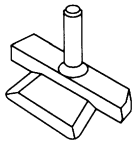 NT046	Removing oil pan
WS39930000 (—) Tube presser	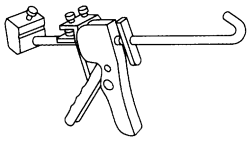 NT052	Pressing the tube of liquid gasket
KV10117100 (J36471-A) Front heated oxygen sensor wrench	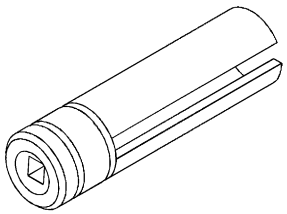 NT379	Loosening or tightening heated oxygen sensor **For 22 mm (0.87 in) hexagon nut**

Special Service Tools (Cont'd)

Tool number (Kent-Moore No.) Tool name	Description	
KV10114400 (J38365) Heated oxygen sensor wrench	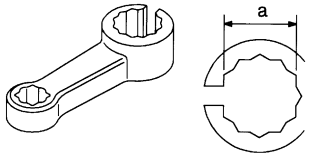 NT636	Loosening or tightening rear heated oxygen sensor (For right bank) **a: 22 mm (0.87 in)**

Commercial Service Tools

NEEM0134

Tool name (Kent Moore No.)	Description	
Spark plug wrench	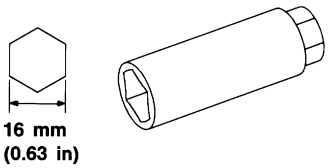 NT047	Removing and installing spark plug
Pulley holder	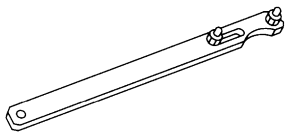 NT035	Holding camshaft pulley while tightening or loosening camshaft bolt
Valve seat cutter set	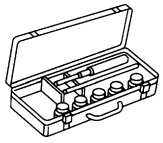 NT048	Finishing valve seat dimensions
Piston ring expander	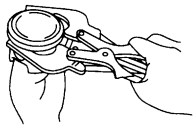 NT030	Removing and installing piston ring
Valve guide drift	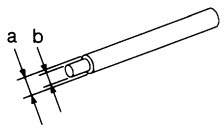 NT015	Removing and installing valve guide **Intake & Exhaust:** **a = 10.5 mm (0.413 in) dia.** **b = 6.6 mm (0.260 in) dia.**
Valve guide reamer	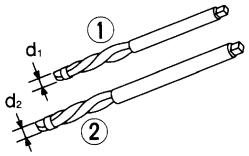 NT016	Reaming valve guide 1 or hole for oversize valve guide 2 **Intake:** **d_1 = 7.0 mm (0.276 in) dia.** **d_2 = 11.2 mm (0.441 in) dia.** **Exhaust:** **d_1 = 8.0 mm (0.315 in) dia.** **d_2 = 12.2 mm (0.480 in) dia.**

Tool name (Kent Moore No.)	Description	
Camshaft oil seal drift	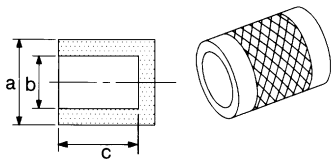 NT613	Installing camshaft oil seal **a: 60 mm (2.36 in) dia.** **b: 44.5 mm (1.752 in) dia.** **c: 75 mm (2.95 in)**
Front oil seal drift	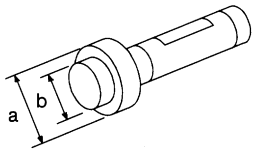 NT049	Installing front oil seal **a: 52 mm (2.05 in) dia.** **b: 44 mm (1.73 in) dia.**
Rear oil seal drift	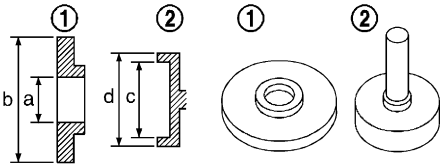 NT719	Installing rear oil seal **a: 46 mm (1.81 in)** **b: 110 mm (4.33 in)** **c: 84 mm (3.31 in)** **d: 96 mm (3.78 in)**
a: (J-43897-18) b: (J-43897-12) Thread repair tool for oxygen sensor	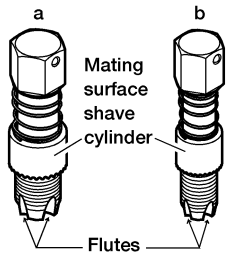 AEM488	**a: 18 mm (0.71 in)** **b: 12 mm (0.47 in)**
Anti-seize thread compound	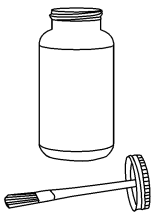 AEM489	For preventing corrosion, seizing, and galling on high temperature applications.

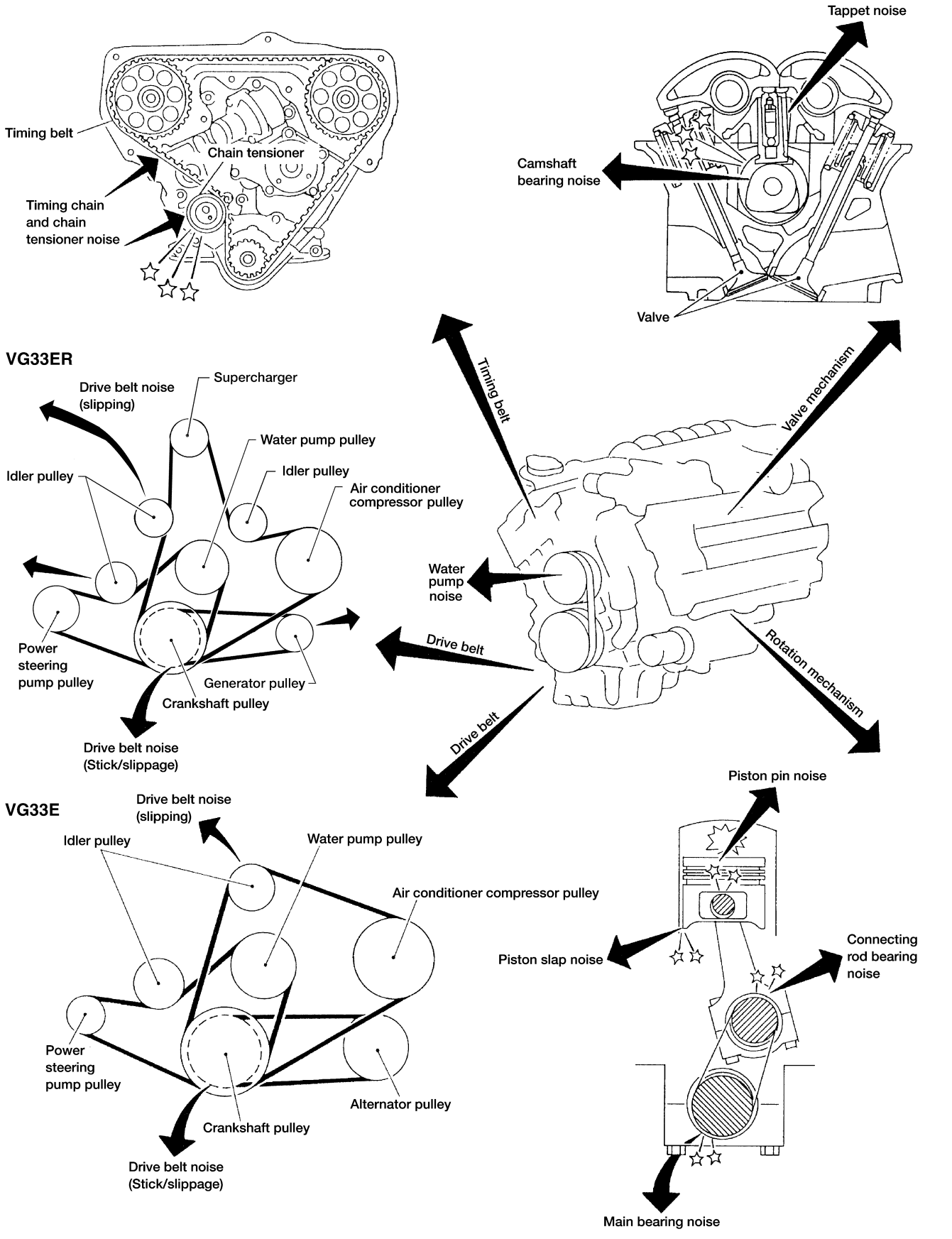
Timing belt
Chain tensioner
Timing chain and chain tensioner noise
Tappet noise
Camshaft bearing noise
Valve
VG33ER
Drive belt noise (slipping)
Supercharger
Water pump pulley
Idler pulley
Idler pulley
Air conditioner compressor pulley
Power steering pump pulley
Generator pulley
Crankshaft pulley
Drive belt noise (Stick/slippage)
Timing belt
Valve mechanism
Water pump noise
Drive belt
Drive belt
Rotation mechanism
VG33E
Drive belt noise (slipping)
Idler pulley
Water pump pulley
Air conditioner compressor pulley
Power steering pump pulley
Alternator pulley
Crankshaft pulley
Drive belt noise (Stick/slippage)
Piston pin noise
Piston slap noise
Connecting rod bearing noise
Main bearing noise

WEM111

NVH Troubleshooting Chart — Engine Noise

NEEM0039S01

Use the chart below to help you find the cause of the symptom.

1. Locate the area where noise occurs.
2. Confirm the type of noise.
3. Specify the operating condition of engine.
4. Check specified noise source. If necessary, repair or replace these parts.

Location of noise	Type of noise	Operating condition of engine						Source of noise	Check item	Reference page
		Before warm-up	After warm-up	When starting	When idling	When racing	While driving			
Top of engine Rocker cover Cylinder head	Ticking or clicking	C	A	—	A	B	—	Tappet noise	Hydraulic valve lifter	Refer to step 19 in “Installation”, EM-103.
	Rattle	C	A	—	A	B	C	Camshaft bearing noise	Camshaft journal clearance Camshaft runout	EM-96, EM-96
Crankshaft pulley Cylinder block (Side of engine) Oil pan	Slap or knock	—	A	—	B	B	—	Piston pin noise	Piston and piston pin clearance Connecting rod bushing clearance	EM-116, EM-122
	Slap or rap	A	—	—	B	B	A	Piston slap noise	Piston-to-bore clearance Piston ring side clearance Piston ring end gap Connecting rod bend and torsion	EM-118, EM-116, EM-117, EM-117
	Knock	A	B	C	B	B	B	Connecting rod bearing noise	Connecting rod bushing clearance (Small end) Connecting rod bearing clearance (Big end)	EM-122, EM-122
	Knock	A	B	—	A	B	C	Main bearing noise	Main bearing oil clearance Crankshaft runout	EM-120, EM-119
Timing belt cover	Whine or hissing	C	A	—	A	A	—	Timing belt noise (too tight)	Loose timing belt Belt contacting case	EM-83
	Clatter	A	B	—	C	A	—	Timing belt noise (too loose)		
Front of engine	Squeaking or fizzing	A	B	—	B	—	C	Other drive belts (Sticking or slipping)	Drive belts deflection	***MA-25***, “Checking Drive Belts”.
	Creaking	A	B	A	B	A	B	Other drive belts (Slipping)	Idler pulley bearing operation	
	Squall Creak	A	B	—	B	A	B	Water pump noise	Water pump operation	***LC-30***, “Water Pump Inspection”.

NVH Troubleshooting Chart — Engine Noise (Cont'd)

A: Closely related B: Related C: Sometimes related —: Not related

Removal and Installation

NEEM0005

VG33E, VG33ER

SEC. 140•147•148•163•164•173•210•221

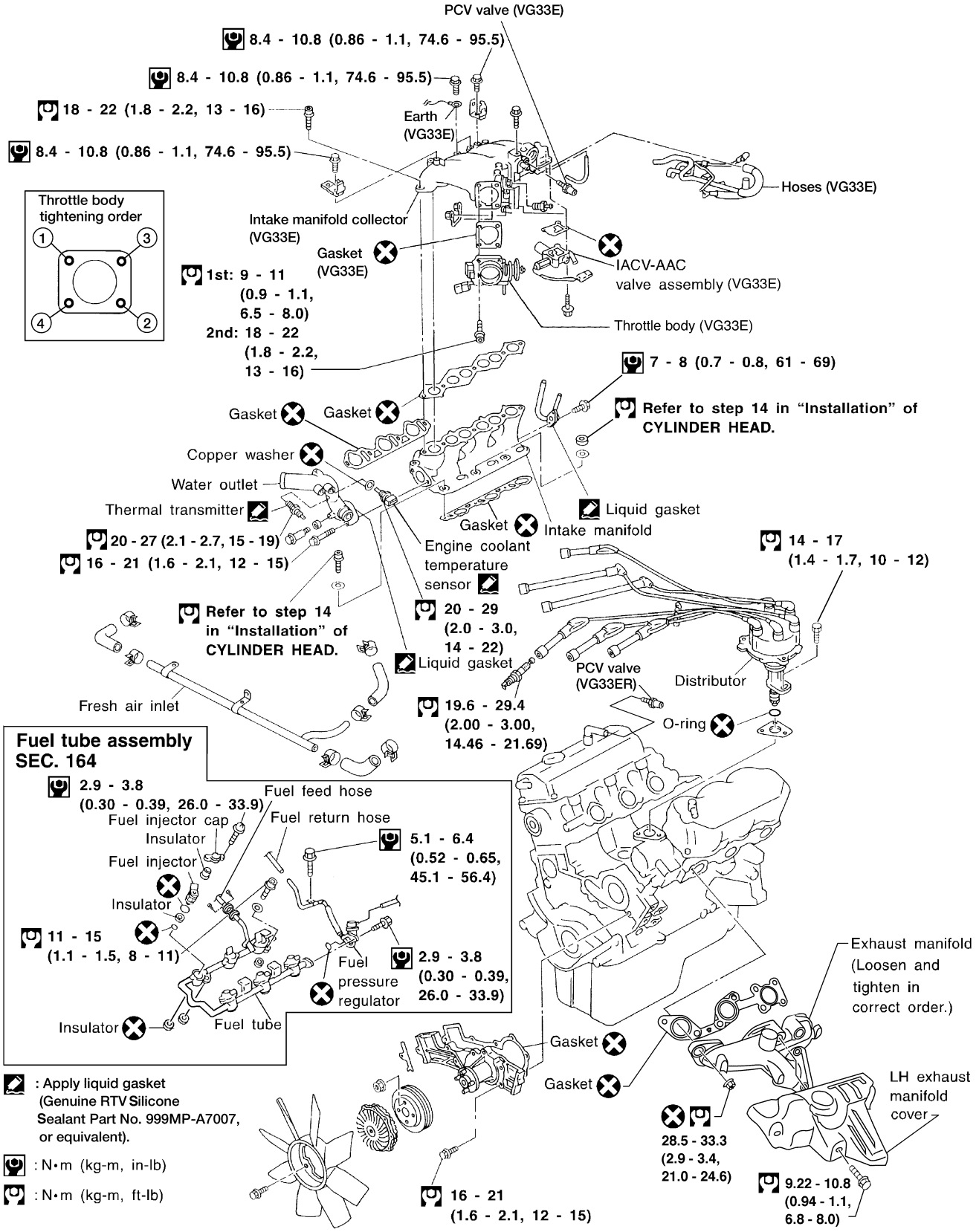

WEM099

Removal and Installation (Cont'd)

VG33ER

SEC. 140 • 147 • 148 • 163 • 164 • 173 • 210 • 221

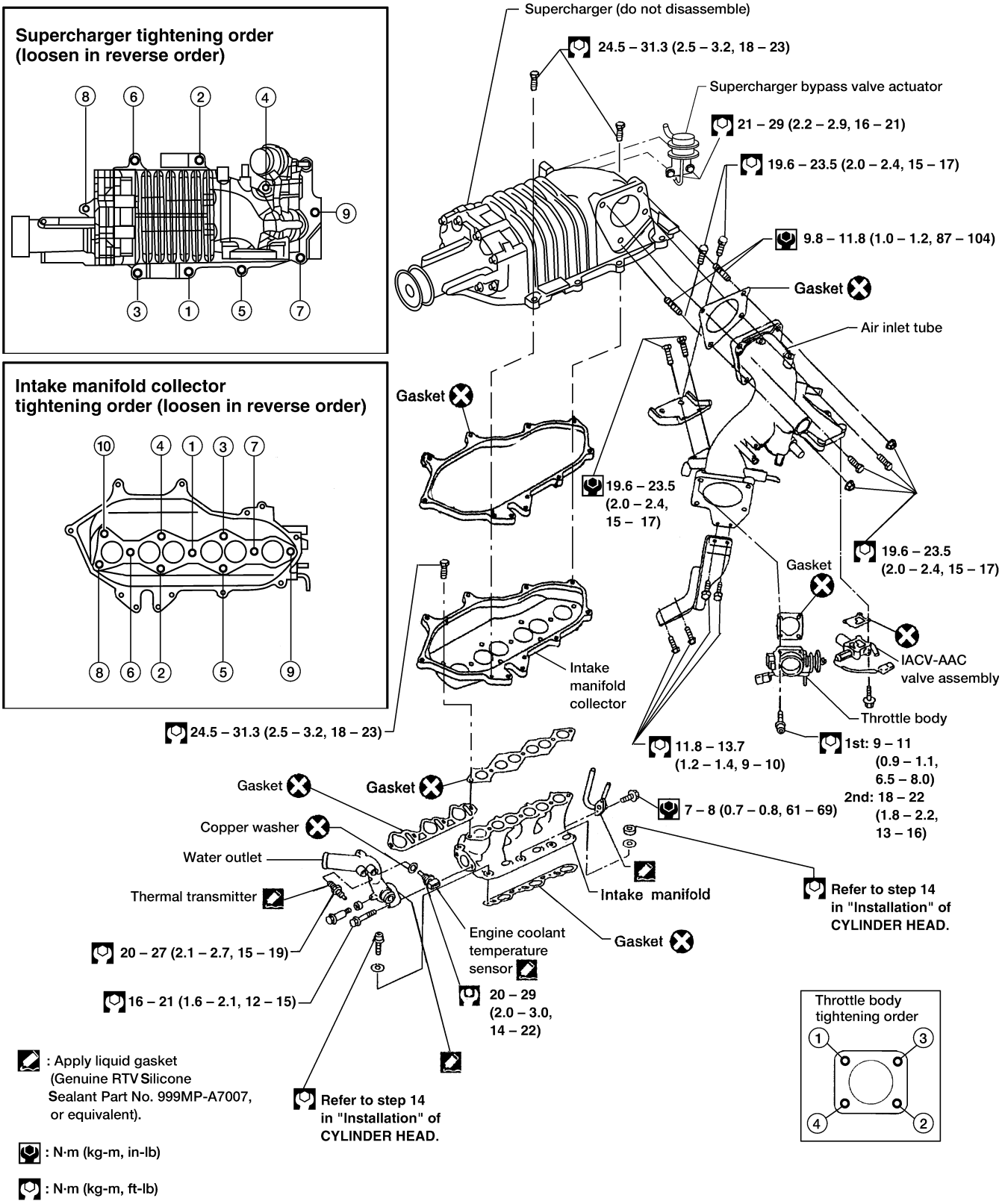

LEM104

VG33E, VG33ER

SEC. 140 • 208

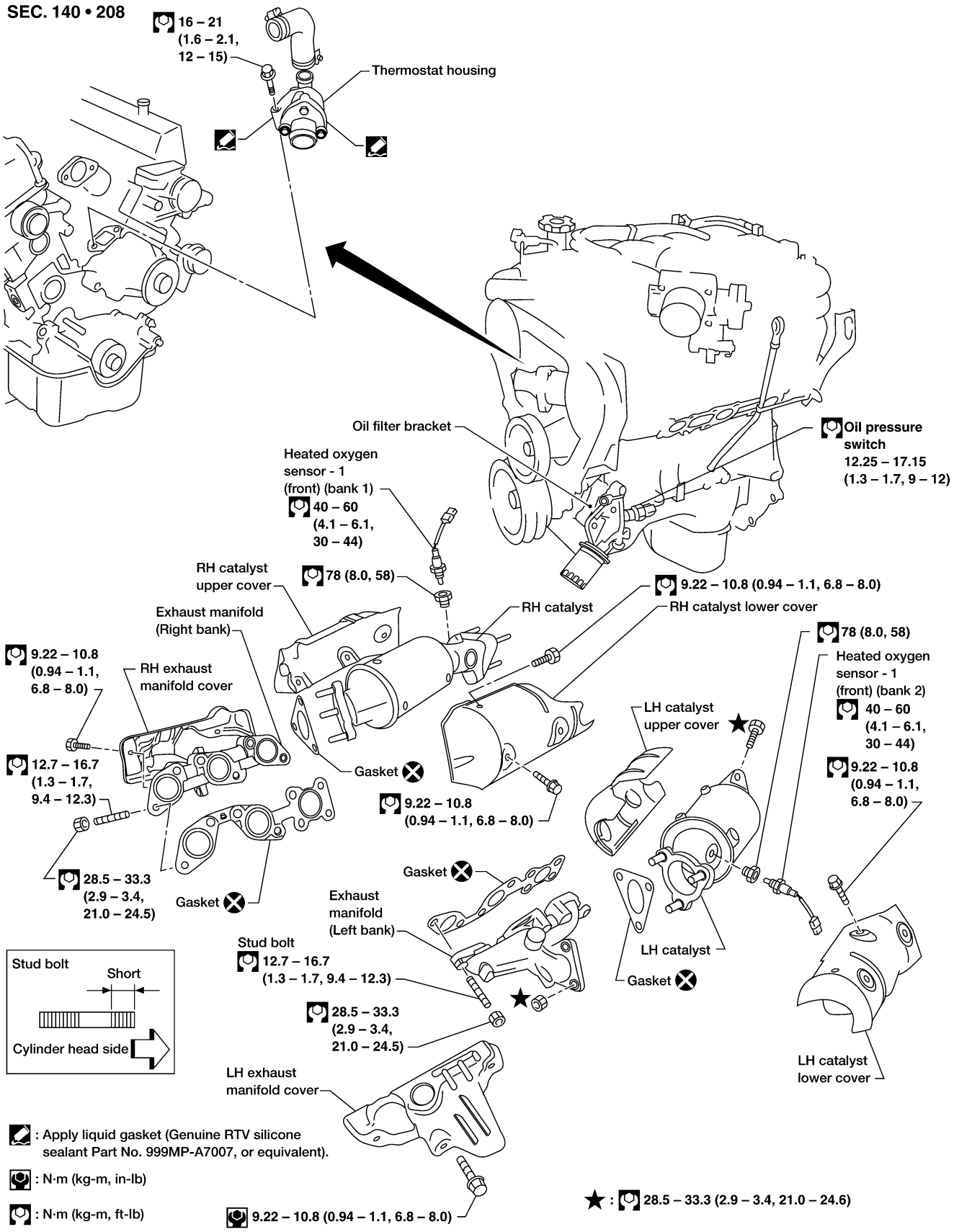

WEM100

1. Warm up engine.
2. Turn ignition switch OFF.
3. Release fuel pressure.
   Refer to ***EC-658***, “Fuel Pressure Release”.
4. Remove all spark plugs.

- **Clean area around plug with compressed air before removing the spark plugs.**

5. Disconnect camshaft position sensor harness connector at the distributor.
6. Remove fuel injector fuse **3** on FUSE BLOCK (J/B) behind the instrument lower panel.
   Refer to “FUSE BLOCK-Junction Box (J/B)”.

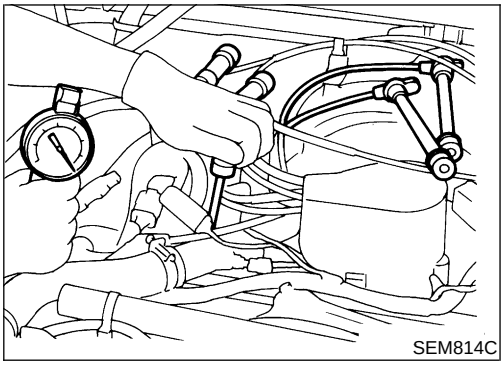

SEM814C



20 mm (0.79 in) dia.

Use compressor tester whose end (rubber portion) is less than 20 mm (0.79 in) dia. Otherwise, it may be caught by cylinder head during removal.

SEM387C

7. Attach a compression tester to No. 1 cylinder.
8. Depress accelerator pedal fully to keep throttle valve wide open.
9. Crank engine and record highest gauge indication.
10. Repeat the measurement on each cylinder as shown above.

- **Always use a fully-charged battery to obtain specified engine speed.**

Compression pressure: kPa (kg/cm^2, psi)/300 rpm

Standard

1,196 (12.2, 173)

Minimum

883 (9.0, 128)

Difference limit between cylinders

98 (1.0, 14)

11. If cylinder compression in one or more cylinders is low, pour a small amount of engine oil into cylinders through spark plug holes and retest compression.

- **If adding oil improves cylinder compression, piston rings may be worn or damaged. If so, replace piston rings after checking piston.**
- **If pressure stays low, a valve may be sticking or seating improperly. Inspect and repair valve and valve seat. Refer to “Valve Seat”, EM-129. If valve or valve seat is damaged excessively, replace them.**
- **If compression in any two adjacent cylinders is low and if adding oil does not improve compression, there is leakage past the gasket surface. If so, replace cylinder head gasket.**

12. Reinstall spark plugs, fuel injector fuse, fuel pump fuse, and reconnect camshaft position sensor harness connector at the distributor.
13. Erase the DTC stored in the ECM.

CAUTION:
Always erase the DTC after checking compression.
Refer to *EC-687*, "HOW TO ERASE EMISSION-RELATED DIAGNOSTIC INFORMATION".

Removal

NEEM0007

WARNING:

- **Place vehicle on a flat and solid surface.**
- **Place chocks at front and rear of rear wheels.**
- **You should not remove oil pan until exhaust system and cooling system have completely cooled off.**
  Otherwise, you may burn yourself and/or fire may break out in the fuel line.
- **When removing front and/or rear engine mounting bolts or nuts, lift engine slightly to ensure safety.**

CAUTION:

- **In lifting engine, be careful not to hit against adjacent parts, especially against accelerator wire casing end, brake tube and brake master cylinder.**
- **For tightening torque, refer to *AT-420*, "REMOVAL"; *MT-41*, "REMOVAL AND INSTALLATION"; *PD-19*, "Removal and Installation"; *PD-69*, "Removal and Installation".**

1. Remove undercover.
2. Drain engine oil.
3. Remove stabilizer bracket bolts (RH & LH).
4. Remove front propeller shaft from front differential carrier.
5. Remove front drive shaft fixing bolts (RH & LH).
6. Remove front differential carrier bleeder hose.
7. Remove front suspension crossmember.
8. Remove differential front mounting bolts (RH & LH) and rear mounting bolts.
9. Remove front differential carrier.
10. Remove front differential carrier mounting bracket.
11. Remove starter motor.
12. Remove transmission to rear engine mounting bracket nuts (RH & LH).
13. Remove engine mounting bolts or nuts (RH & LH).
14. Remove power steering mounting brackets (RH & LH).
15. Lift up engine. If necessary, disconnect exhaust tube.
16. Remove relay rod. It is not necessary to disconnect pitman arm.

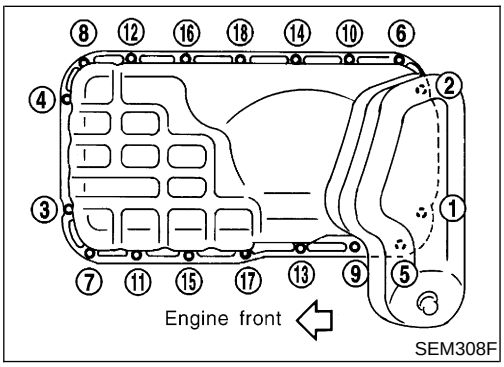

17. Remove oil pan bolts in numerical order.

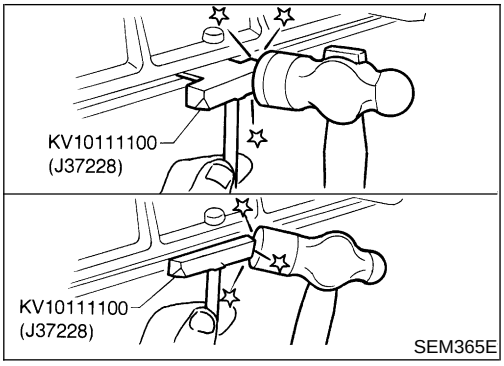

18. Remove oil pan.
a. Insert Tool between cylinder block and oil pan.
- **Do not drive seal cutter into oil pump or rear oil seal retainer portion, or aluminum mating face will be damaged.**
- **Do not insert screwdriver, or oil pan flange will be deformed.**

b. Slide Tool by tapping its side with a hammer, and remove oil pan.

Installation

NEEM0008

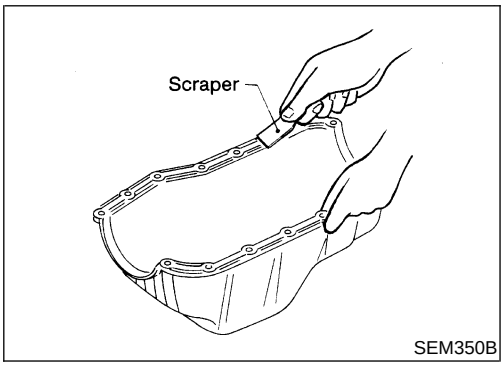

1. Before installing oil pan, remove all traces of liquid gasket from mating surface using a scraper.
- Also remove traces of liquid gasket from mating surface of cylinder block.

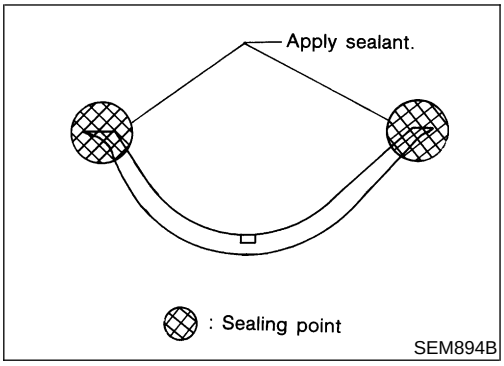

2. Apply sealant to oil pump gasket and rear oil seal retainer gasket.

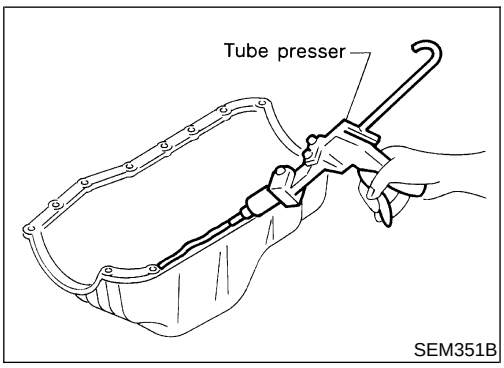

3. Apply a continuous bead of liquid gasket to mating surface of oil pan.
- **Use Genuine RTV Silicone Sealant Part No. 999MP-A7007 or equivalent.**

Installation (Cont'd)

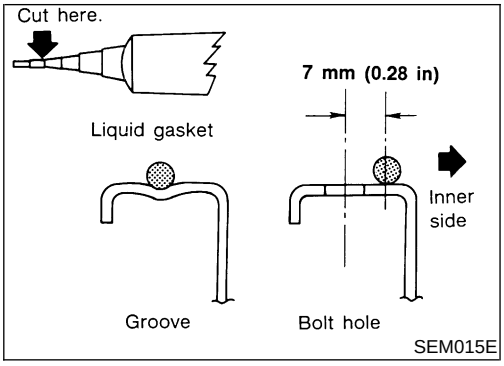

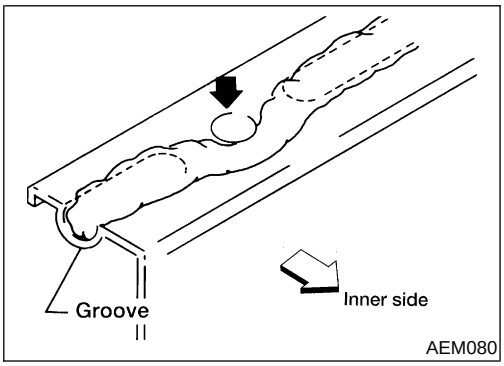

- **Be sure liquid gasket is 3.5 to 4.5 mm (0.138 to 0.177 in) wide.**

4. Apply liquid gasket to inner sealing surface as shown in figure.

- **Attaching should be done within 5 minutes after coating.**

5. Install oil pan.

- **Install bolts/nuts in the reverse order of removal.**
- **Wait at least 30 minutes before refilling engine oil.**

Components

NEEM0009

CAUTION:

- **Do not bend or twist timing belt.**
- **After removing timing belt, do not turn crankshaft and camshaft separately because valves will strike piston heads.**
- **Make sure that timing belt, camshaft sprocket, crankshaft sprocket and belt tensioner are clean and free from oil and water.**
- **Installation should be carried out when engine is cold.**

SEC. 120•130•135

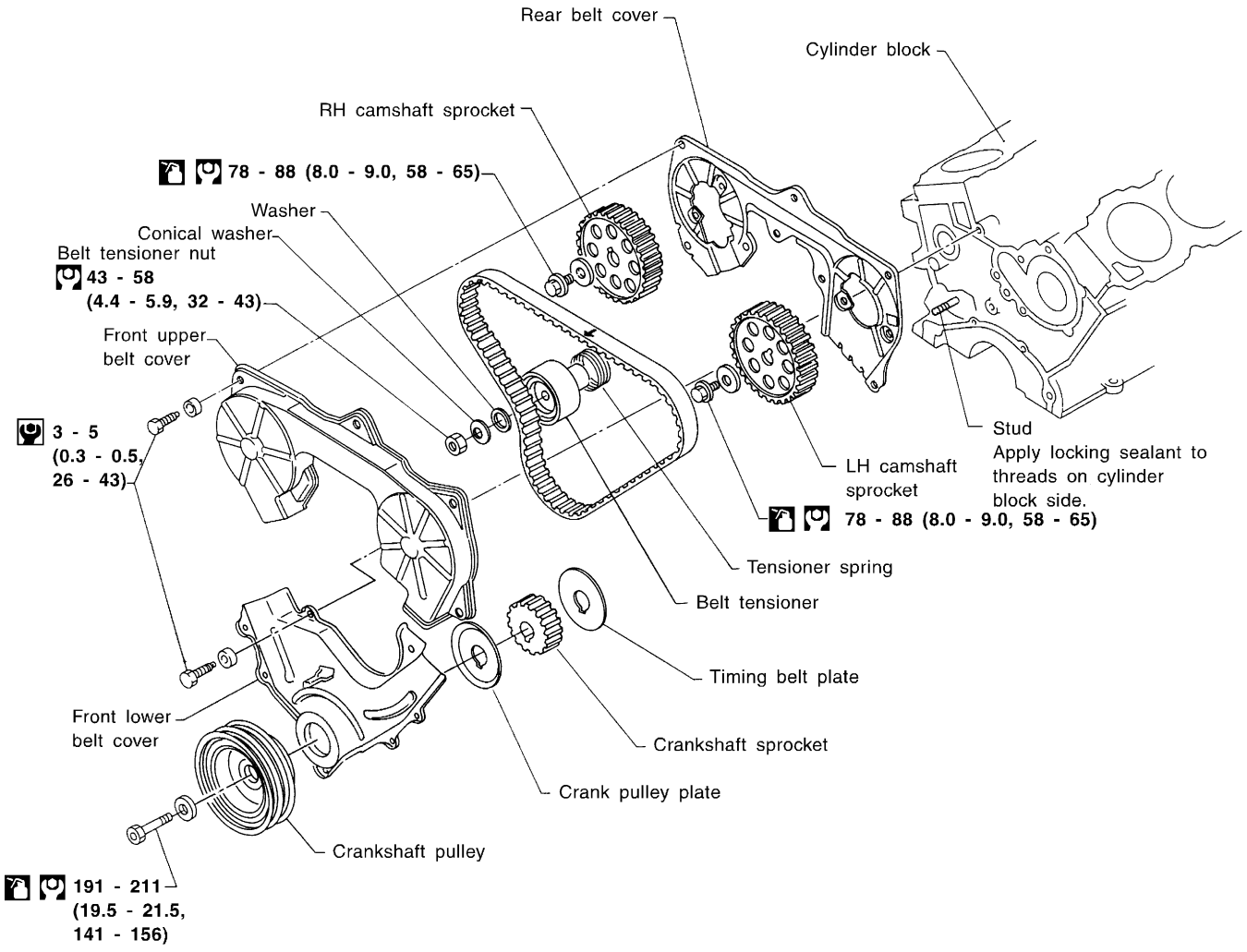

: N•m (kg-m, in-lb)
: N•m (kg-m, ft-lb)
: Lubricate with new engine oil

SEM311FA

Removal

NEEM0010

1. Remove engine under cover.
2. Drain engine coolant from radiator. Refer to ***MA-27***, “Draining Engine Coolant”.
   Be careful not to spill coolant on drive belts.
3. Remove radiator. Refer to ***LC-32***, “Radiator”.
4. Remove engine cooling fan and water pump pulley.
5. Remove the following belts:
- Power steering pump drive belt
- Compressor drive belt
- Alternator drive belt
- Supercharger (if equipped). Refer to “Removal”, EM-108.
6. Remove all spark plugs.
7. Remove distributor protector.

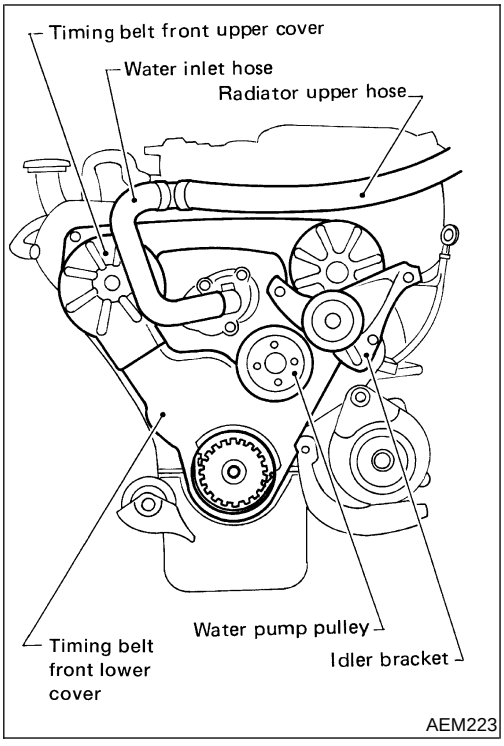

8. Remove compressor drive belt idler bracket.
9. Remove fresh-air intake tube for rocker cover.
10. Remove water hose for thermostat housing.

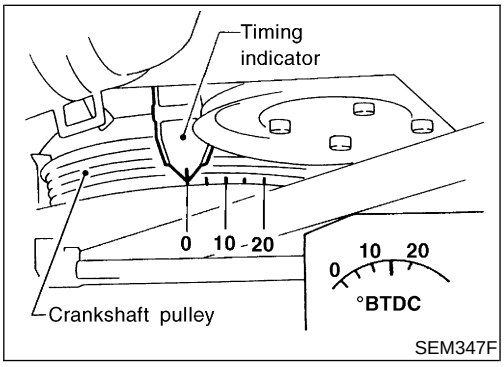

11. Set No. 1 piston at TDC on its compression stroke by rotating crankshaft.
12. Remove crankshaft pulley bolt.
13. Remove crankshaft pulley using a suitable puller.
14. Remove front upper and lower belt covers.

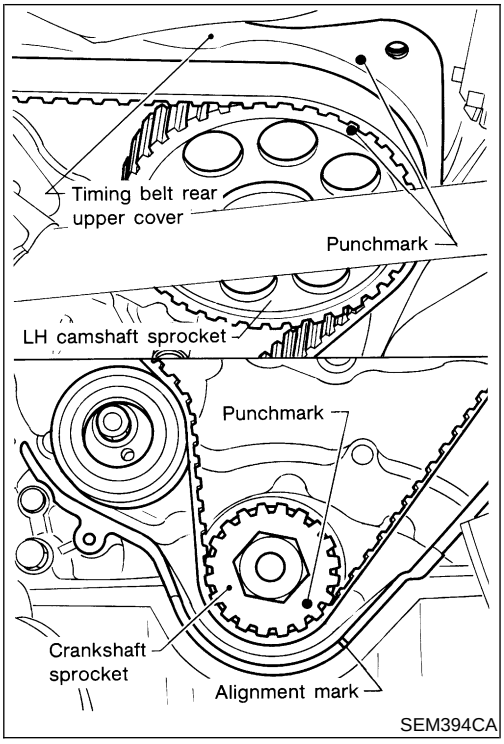

- **Align punchmark on LH camshaft sprocket with punchmark on timing belt rear cover.**
- **Align punchmark on crankshaft sprocket with alignment mark on oil pump housing.**
- **Temporarily install crankshaft pulley bolt on crankshaft so the crankshaft can be rotated.**

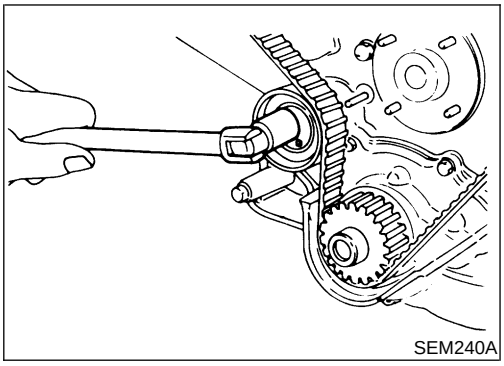

15. Loosen timing belt tensioner nut, rotate tensioner, then remove timing belt.

Inspection

NEEM0011

Visually check the condition of timing belt.
Replace if any abnormality is found.

Item to check	Problem	Cause
Tooth is broken/tooth root is cracked.	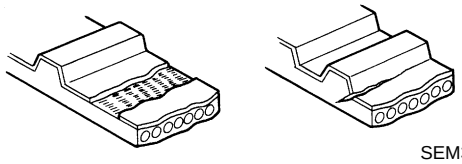 SEM394A	• Camshaft jamming • Distributor jamming • Damaged camshaft/crankshaft oil seal
Back surface is cracked/worn.	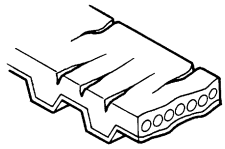 SEM395A	• Tensioner jamming • Overheated engine • Interference with belt cover

Inspection (Cont'd)

Item to check	Problem	Cause
Side surface is worn.	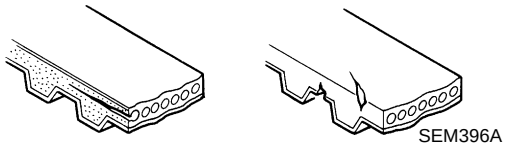 SEM396A • Belt corners are worn and round. • Wicks are frayed and coming out.	• Improper installation of belt • Malfunctioning crankshaft pulley plate/timing belt plate
Teeth are worn.	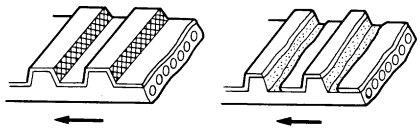 Rotating direction SEM397A • Canvas on tooth face is worn down. • Canvas on tooth is fluffy, rubber layer is worn down and faded white, or weft is worn down and invisible.	• Poor belt cover sealing • Coolant leakage at water pump • Camshaft not functioning properly • Distributor not functioning properly • Excessive belt tension
Oil/Coolant or water is stuck to belt.	—	• Poor oil sealing of each oil seal • Coolant leakage at water pump • Poor belt cover sealing

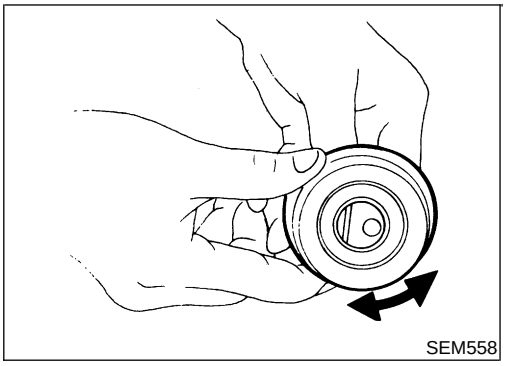
SEM558

BELT TENSIONER AND TENSIONER SPRING

NEEM0011S01

1. Check belt tensioner for smooth turning.
2. Check condition of tensioner spring.

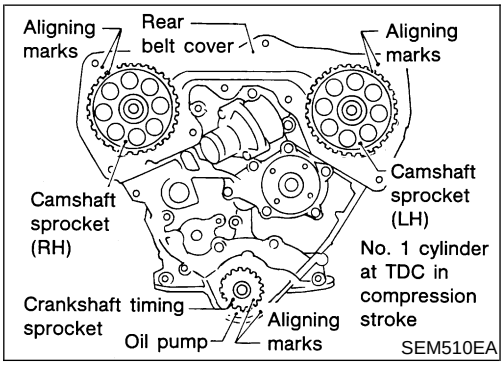

SEM510EA

Installation

NEEM0012

1. Confirm that No. 1 piston is set at TDC on its compression stroke.

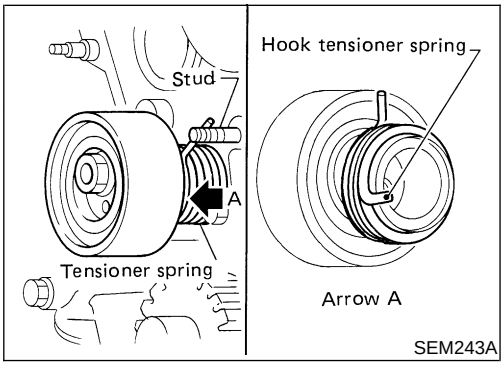

SEM243A

2. Install tensioner and tensioner spring.

Once stud is removed, apply locking sealant to threads of stud on cylinder block side before installing.

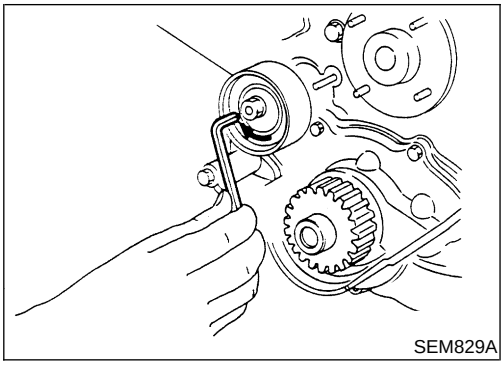
SEM829A

3. Turn tensioner fully outward with hexagon wrench, and temporarily tighten lock nut.

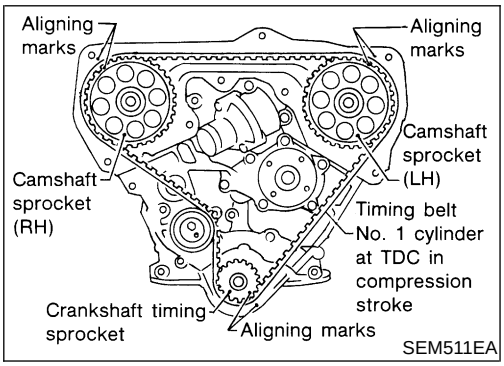

SEM511EA

4. Set timing belt when engine is cold.
1) Align white lines on timing belt with punchmarks on camshaft sprockets and crankshaft sprocket.
2) Point arrow on timing belt toward front belt cover.

Number of teeth (reference):

Number of timing belt teeth		133
Number of teeth between timing marks	Between LH and RH camshaft sprockets	40
	Between LH camshaft sprocket and crankshaft timing sprocket	43

5. Install the remaining parts in the reverse order of removal.

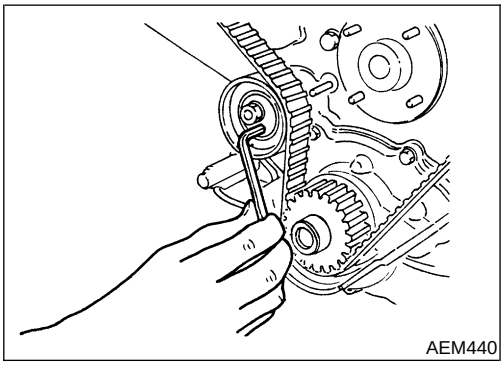
AEM440

Tension Adjustment

NEEM0040

AFTER BELT REPLACEMENT

NEEM0040S01

If the timing belt was replaced (or to adjust tension on a used belt), follow the steps below.

1. Loosen tensioner lock nut, then turn tensioner clockwise and counterclockwise with hexagon wrench at least 2 times.

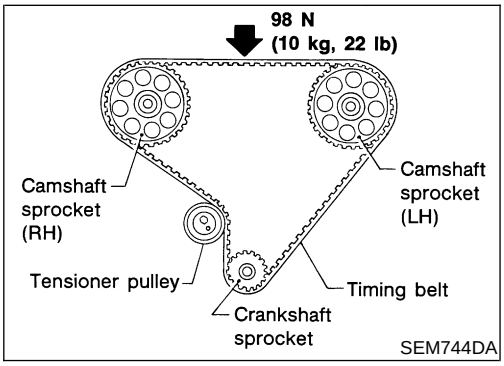

SEM744DA

2. Tighten tensioner lock nut.
3. Turn crankshaft clockwise at least 2 times, then slowly set No. 1 piston at TDC on its compression stroke.
4. Measure deflection of timing belt midway between camshaft pulleys while pushing with 98 N (10 kg, 22 lb) force.

Belt deflection when engine is cold (Reference value):
13 - 15 mm (0.51 - 0.59 in)/98 N (10 kg, 22 lb)

5. If belt deflection is not within specification, return to step 1 and repeat procedure.

AFTER ENGINE OVERHAUL OR ENGINE REASSEMBLY (WITH ROCKER COVERS REMOVED)

NEEM0040S02

If the engine was overhauled or previously disassembled (i.e. intake manifold and/or cylinder head were removed), follow the steps below.

1. Loosen rocker shaft bolts to relieve belt tension caused by the camshafts.

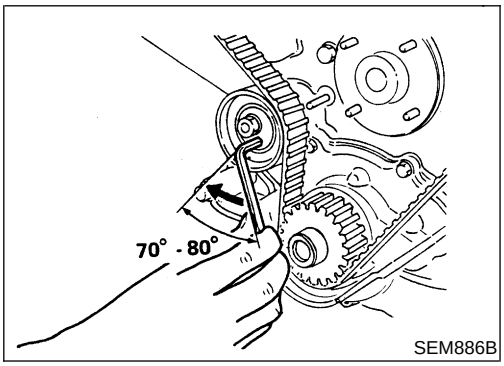

SEM886B

2. Loosen tensioner lock nut, keeping tensioner steady with hexagon wrench.
3. Turn tensioner 70 to 80 degrees clockwise with hexagon wrench to release belt tension, and temporarily tighten lock nut.
4. Turn crankshaft clockwise at least two times, then slowly set No. 1 piston at TDC on its compression stroke.

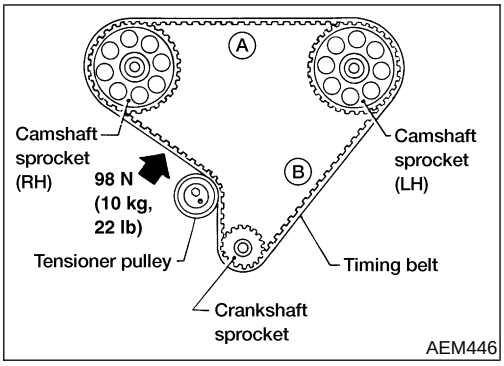

AEM446

5. Push middle of timing belt between RH camshaft sprocket and tensioner pulley with force of 98 N (10 kg, 22 lb) to apply tensions on part A and part B.
6. Loosen tensioner lock nut, keeping tensioner steady with hexagon wrench.

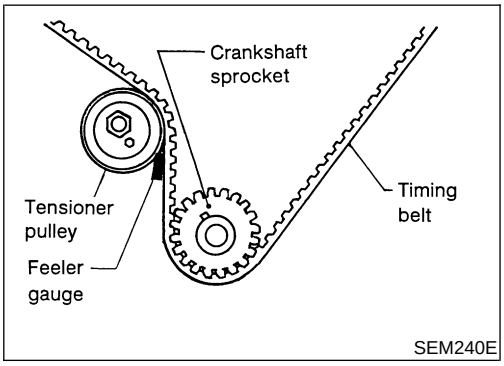

SEM240E

7. Set feeler gauge as shown in figure which is 0.5 mm (0.0206 in) thick and 12.7 mm (0.500 in) wide.

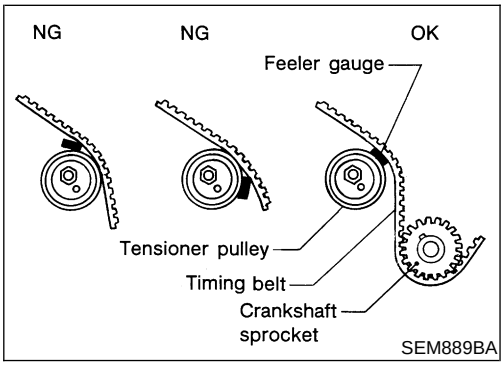

SEM889BA

8. Turn crankshaft clockwise until feeler gauge is positioned as shown in figure.
- Timing belt will move about 2.5 teeth.

9. Tighten tensioner lock nut, keeping tensioner steady with hexagon wrench.
10. Turn crankshaft clockwise or counterclockwise, and remove feeler gauge.
11. Turn crankshaft clockwise at least two times, then slowly set No. 1 piston at TDC on its compression stroke.

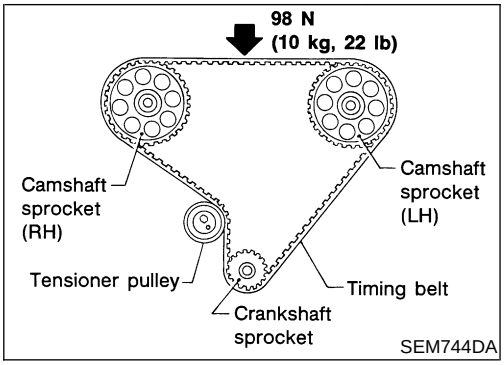

12. Measure deflection of timing belt midway between camshaft pulleys while pushing with 98 N (10 kg, 22 lb) force.

Belt deflection when engine is cold (Reference value):
13 - 15 mm (0.51 - 0.59 in)/98 N (10 kg, 22 lb)

13. If belt deflection is not within specification, return to step 1 and repeat procedure.
14. Install lower and upper belt covers.
15. Install the remaining components in the reverse order of removal.

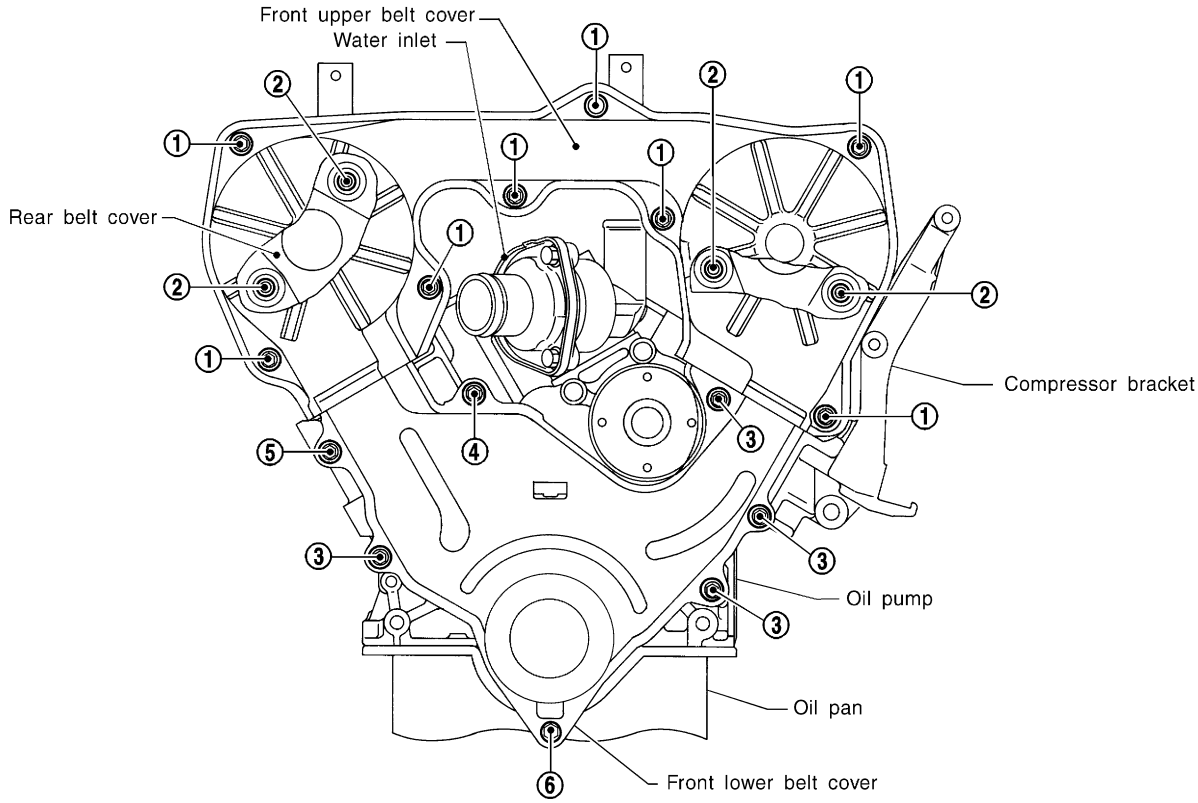

No.	Tightened parts		No.	Tightened parts	
①	Bolt, Rubber washer, Front upper belt cover, Welded nut	8 pcs.	④	Bolt, Rubber washer, Front lower belt cover	1 pc.
②	Hexagon bolt with washer, Rear belt cover	4 pcs.	⑤	Bolt, Rubber washer, Front lower belt cover	1 pc.
③	Bolt, Rubber washer, Front lower belt cover	4 pcs.	⑥	Bolt, Front lower belt cover, Lock spring washer	1 pc.

SEM313F

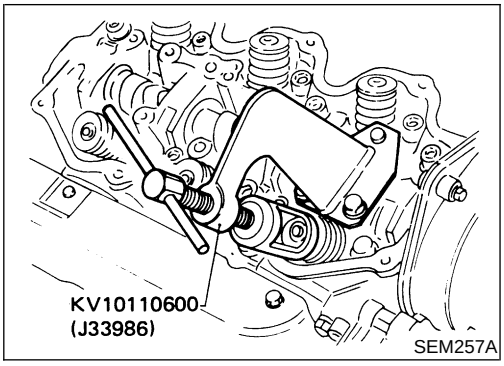

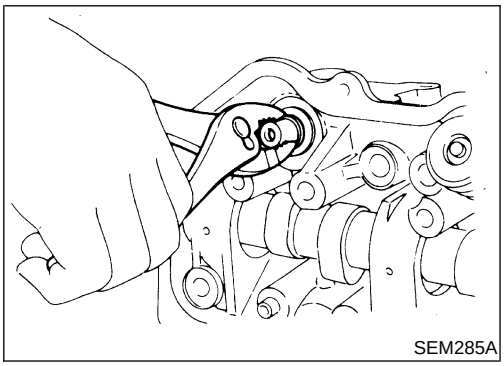

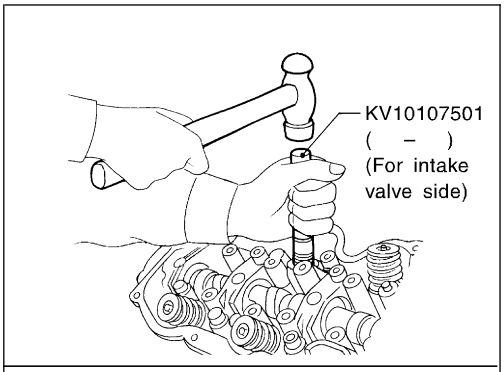

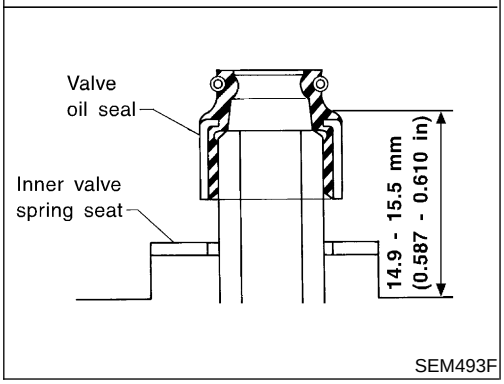

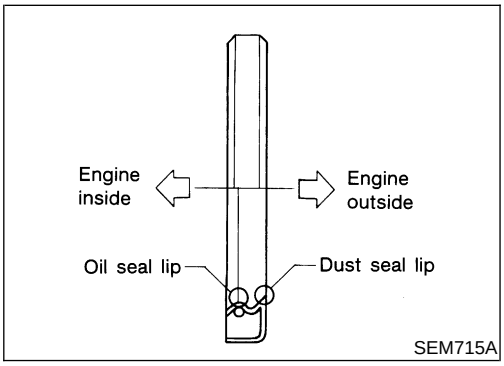

Replacement

NEEM0013

VALVE OIL SEAL

NEEM0013S01

1. Remove rocker cover.
2. Remove rocker shaft assembly and valve lifters with valve lifter guide.
3. Remove valve springs and valve oil seal.

- Piston concerned should be set at TDC to prevent valve from falling.
- When removing intake side valve oil seal, use Tool or suitable tool.
- When removing exhaust side valve oil seal, pull it out with suitable tool.

4. Apply engine oil to new valve oil seal and install it.

- Before installing valve oil seal, install inner valve spring seat.
- When installing intake side valve oil seal, use Tool.
- When installing exhaust side valve oil seal, set it by hand.

OIL SEAL INSTALLING DIRECTION

NEEM0013S02

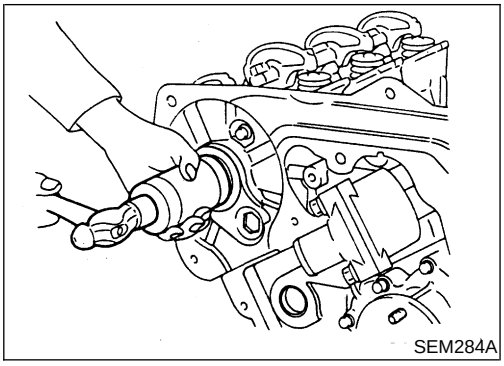
SEM284A

CAMSHAFT OIL SEAL

NEEM0013S03

1. Remove timing belt.
2. Remove camshaft sprocket.
3. Remove camshaft.
4. Remove camshaft oil seal.

Be careful not to scratch camshaft.

5. Apply engine oil to new camshaft oil seal.

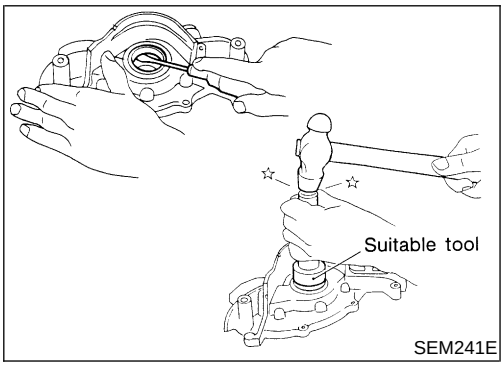

SEM241E

FRONT OIL SEAL

NEEM0013S04

1. Remove timing belt and crankshaft sprocket.
2. Remove oil pump assembly.
3. Remove front oil seal from oil pump body.
4. Apply engine oil to new oil seal and install it using suitable tool.

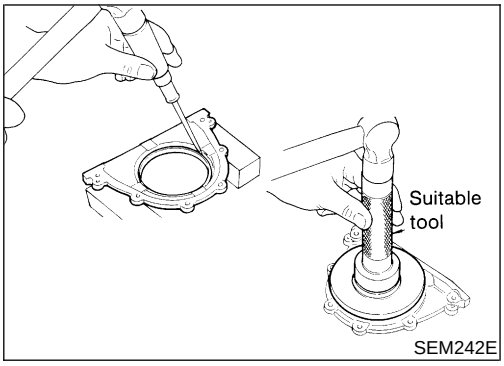

SEM242E

REAR OIL SEAL

NEEM0013S05

1. Remove drive plate.
2. Remove rear oil seal retainer.
3. Remove rear oil seal from retainer.

- Be careful not to scratch rear oil seal retainer.

4. Apply engine oil to new oil seal and install it using suitable tool.
5. Install rear oil seal retainer with a new gasket to cylinder block.

- Always use a new oil seal retainer to cylinder block gasket.

Components

NEEM0014

SEC. 102•111•130

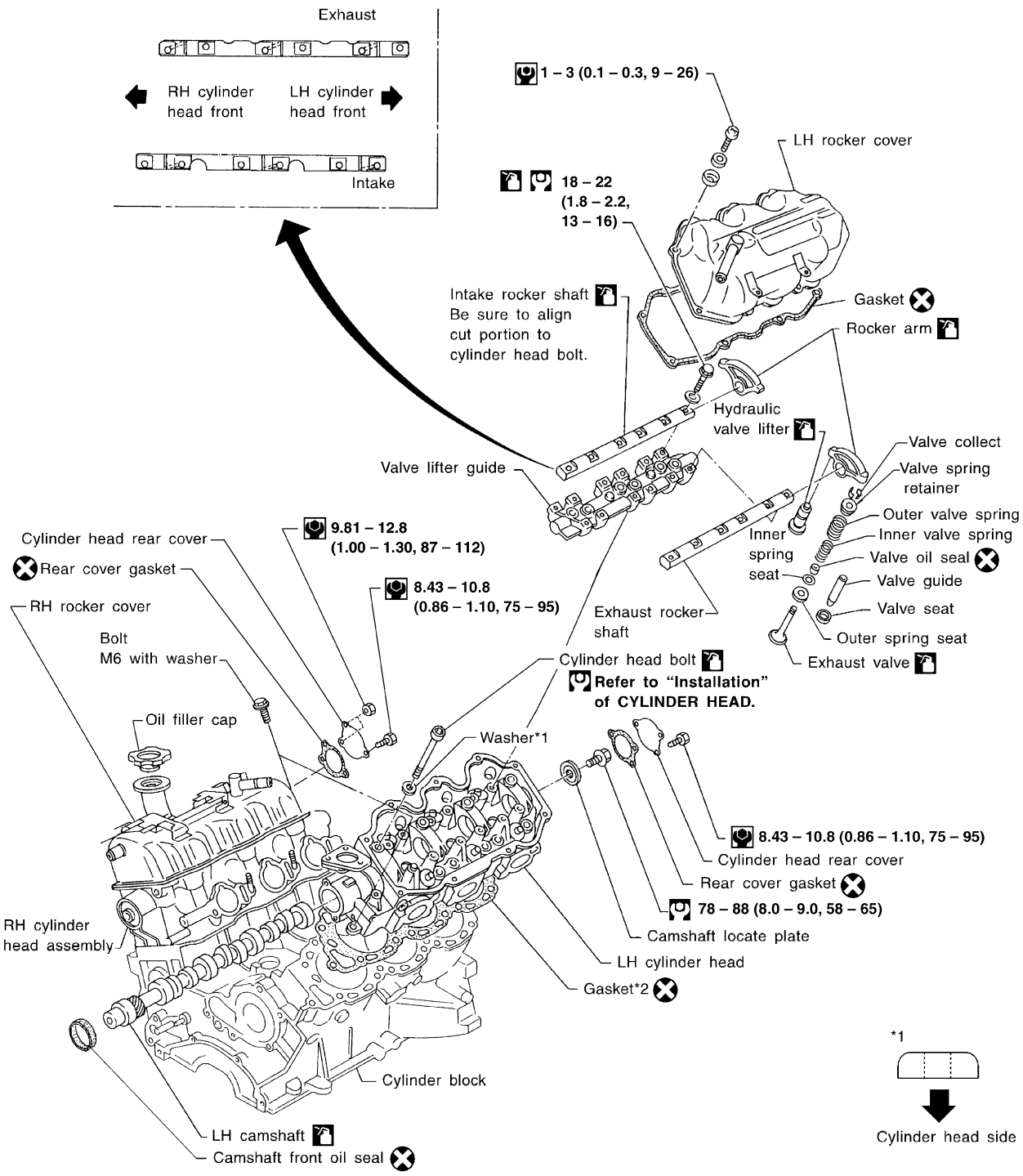

WEM077

Removal

NEEM0015

1. Release fuel pressure. Refer to ***EC-658***, “Fuel Pressure Release”.
2. Remove timing belt. Refer to “Components”, EM-83.

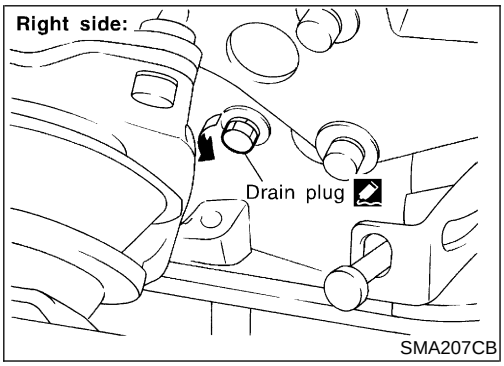

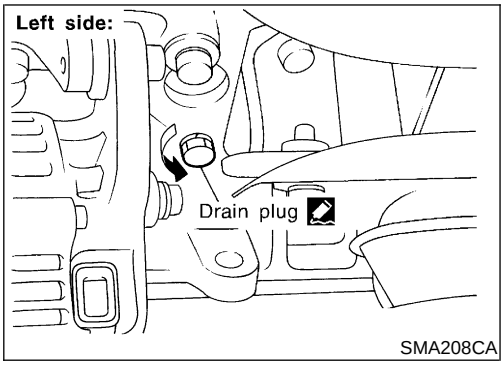

3. Drain coolant by removing drain plugs from both sides of cylinder block.
4. Separate ASCD and accelerator control wire from intake manifold collector (VG33E only).
5. Remove intake manifold collector from engine (VG33E only).
6. The following must be disconnected.

a. Harness connectors for:
- IACV-AAC valve
- Throttle position sensor
- Throttle position switch
- Distributor (ignition coil)
- Distributor

b. Water hoses from collector
c. Heater hoses
d. PCV hose from RH/LH rocker cover
e. Vacuum hoses for:
- Brake master cylinder
- Pressure regulator

f. Purge hose from purge control valve
g. Spark plug wires
h. Distributor assembly
i. 3 left/right bank injector connectors
j. Ground harness

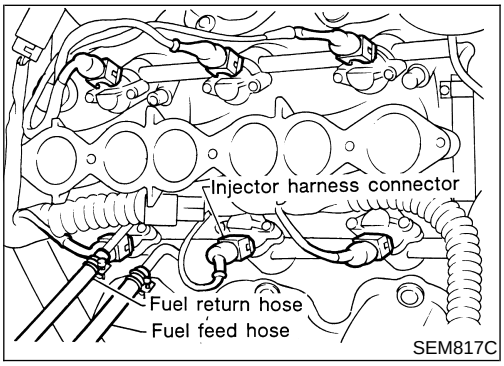

7. Remove fuel feed and fuel return hoses from injector fuel tube assembly.
8. Disconnect the right injector harness connectors.
9. Remove injector fuel tube assembly.

Removal (Cont'd)

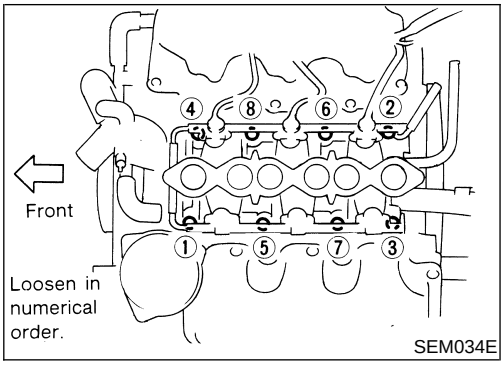

10. Remove intake manifold from engine. The following parts should be disconnected to remove intake manifold.
a. Engine coolant temperature switch harness connector
b. Thermal transmitter harness connector
c. Water hose from thermostat housing

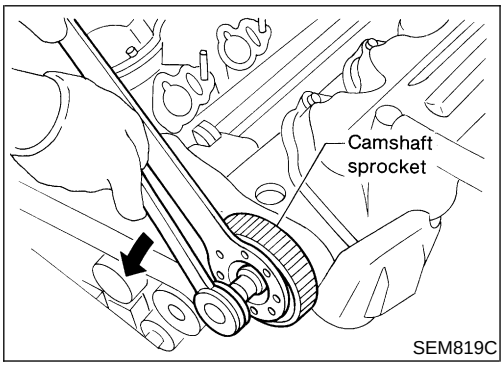

11. Remove both camshaft sprockets.
12. Remove rear timing belt cover.
13. Remove distributor and ignition wires.

After pulling out distributor from cylinder head, do not rotate distributor rotor.

14. Remove harness clamp from RH rocker cover.
15. Remove exhaust tube from exhaust manifold.

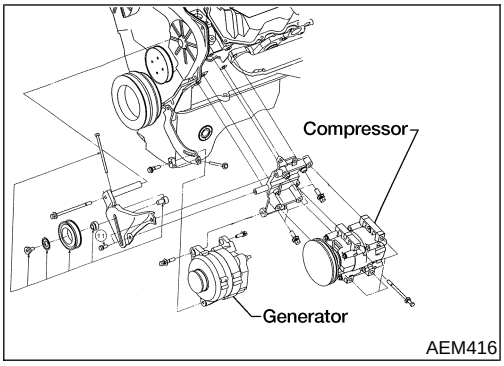

16. Remove compressor and generator.
17. Remove power steering pump.
18. Remove the compressor, generator and power steering pump brackets.

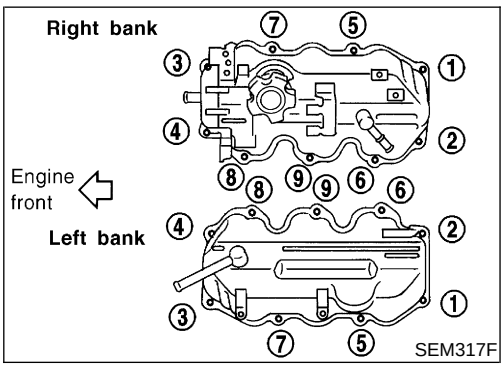

19. Loosen and remove the bolts from both rocker covers in the order shown. Remove both rocker covers.

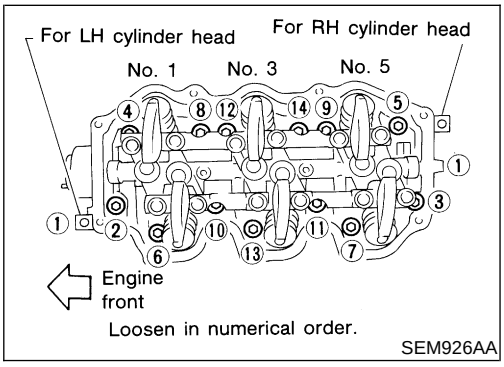

20. Remove cylinder head with exhaust manifold.

- **A warped or cracked cylinder head could result from removing in incorrect order.**
- **Cylinder head bolts should be loosened in two or three steps.**

Disassembly

NEEM0016

CAUTION:

- **When installing sliding parts such as rocker arms, camshaft and oil seal, be sure to apply new engine oil on their sliding surfaces.**
- **When tightening cylinder head bolts and rocker shaft bolts, apply new engine oil to thread portions and seat surfaces of bolts.**

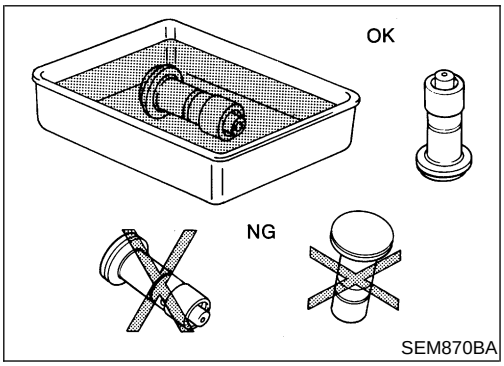

- **If hydraulic valve lifter is kept on its side, there is a risk of air entering it. After removal, always set hydraulic valve lifter straight up, or when laying it on its side, have it soak in new engine oil.**
- **Do not disassemble hydraulic valve lifter.**
- **Attach tags to valve lifters so as not to mix them up.**

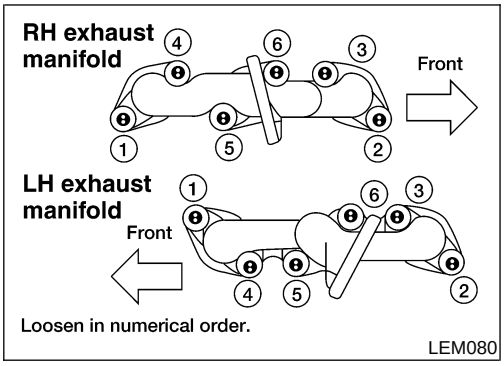

1. Remove exhaust manifolds from cylinder head.

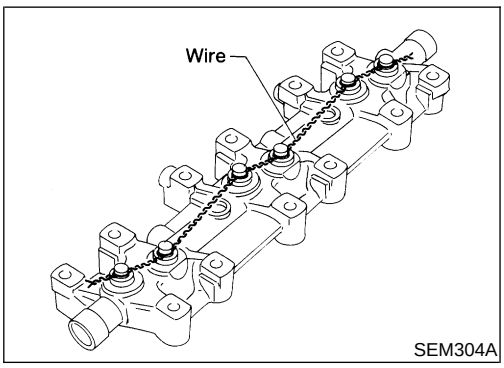

2. Remove rocker shafts with rocker arms.

Bolts should be loosened in two or three steps.

3. Remove hydraulic valve lifters and lifter guide.

- **Hold hydraulic valve lifters with wire so that they will not drop from lifter guide.**

4. Remove oil seal and camshaft.

- **Before removing camshaft, measure camshaft end play.**

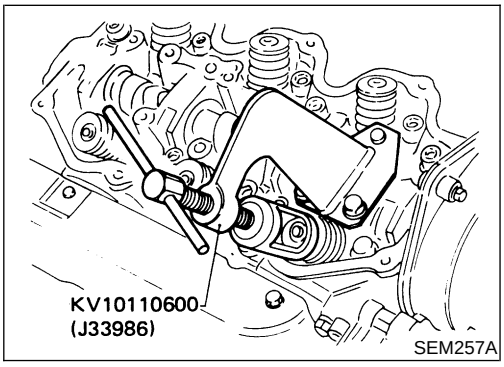

5. Remove valve components with Tool.
6. Remove valve oil seals with Tool or suitable tool.

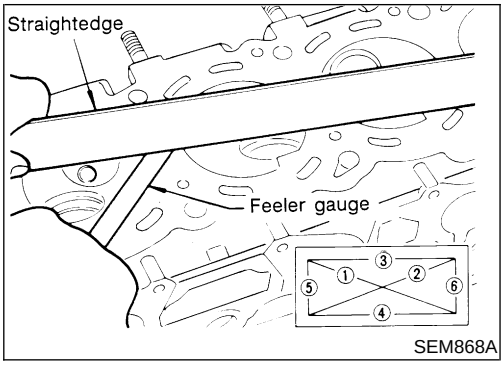

Inspection

NEEM0017

CYLINDER HEAD DISTORTION

NEEM0017S01

Head surface flatness:

Less than 0.1 mm (0.004 in)

If beyond the specified limit, resurface it or replace it.

Resurfacing limit:

The resurfacing limit of cylinder head is determined by the cylinder block resurfacing in an engine.

Amount of cylinder head resurfacing is “A”.

Amount of cylinder block resurfacing is “B”.

The maximum limit is as follows:

A + B = 0.2 mm (0.008 in)

After resurfacing cylinder head, check that camshaft rotates freely by hand. If resistance is felt, cylinder head must be replaced.

Nominal cylinder head height:

106.8 - 107.2 mm (4.205 - 4.220 in)

CAMSHAFT VISUAL CHECK

NEEM0017S02

Check camshaft for scratches, seizure and wear.

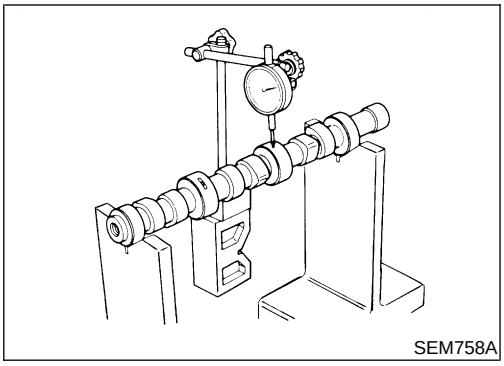

CAMSHAFT RUNOUT

NEEM0017S03

1. Measure camshaft runout at the center journal.

Runout (Total indicator reading):

Limit 0.1 mm (0.004 in)

2. If it exceeds the limit, replace camshaft.

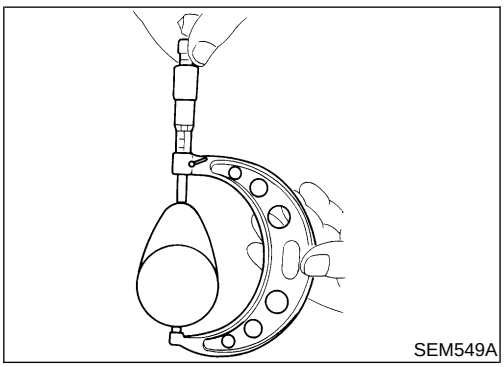

CAMSHAFT CAM HEIGHT

NEEM0017S04

1. Measure camshaft cam height.

Standard cam height:

Intake and exhaust:

38.943 - 39.133 mm (1.5332 - 1.5407 in)

Cam wear limit:

0.15 mm (0.0059 in)

2. If wear is beyond the limit, replace camshaft.

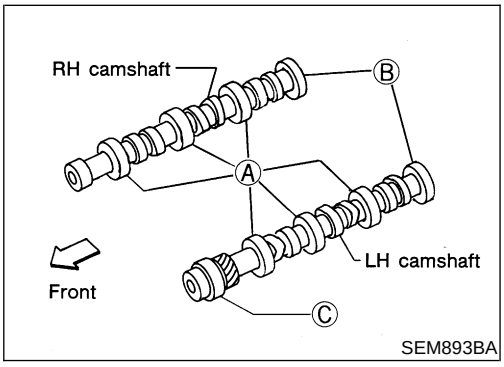

CAMSHAFT JOURNAL CLEARANCE

NEEM0017S05

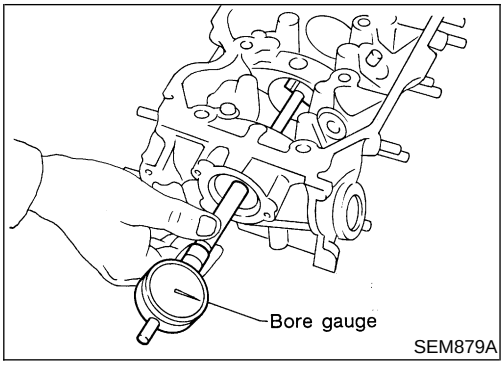

1. Measure inner diameter of camshaft bearing.
   Standard inner diameter:
   A 47.000 - 47.025 mm (1.8504 - 1.8514 in)
   B 42.500 - 42.525 mm (1.6732 - 1.6742 in)
   C 48.000 - 48.025 mm (1.8898 - 1.8907 in)

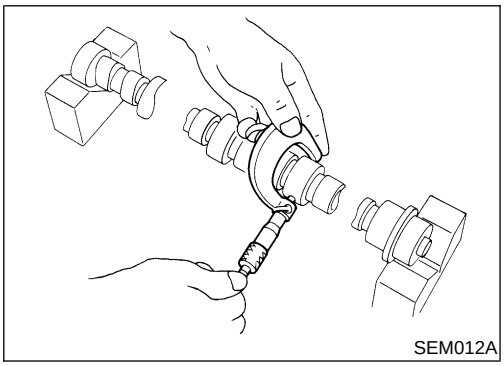

2. Measure outer diameter of camshaft journal.
   Standard outer diameter:
   A 46.920 - 46.940 mm (1.8472 - 1.8480 in)
   B 42.420 - 42.440 mm (1.6701 - 1.6709 in)
   C 47.920 - 47.940 mm (1.8866 - 1.8874 in)
3. If clearance exceeds the limit, replace camshaft and/or cylinder head.
   Camshaft journal clearance limit:
   0.15 mm (0.0059 in)

CAMSHAFT END PLAY

NEEM0017S06

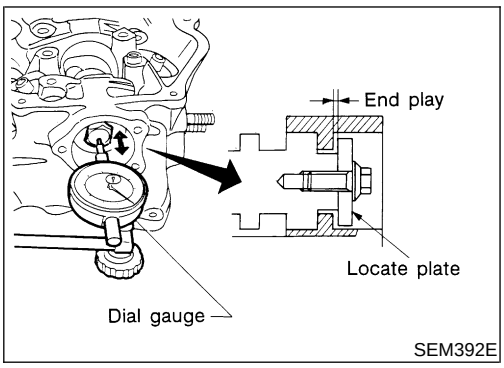

1. Install camshaft and locate plate in cylinder head.
2. Measure camshaft end play.
   Camshaft end play:
   Standard:
   0.03 - 0.06 mm (0.0012 - 0.0024 in)

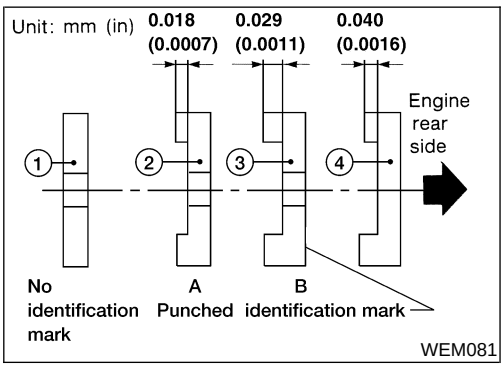

3. If it is out of the specified range, select thickness of camshaft locate plate to obtain standard specified end play.
   Example:
   When camshaft end play is 0.08 mm (0.0031 in) with camshaft locate plate 1 replace camshaft locate plate 1 with camshaft locate plate 4 to set the end play at 0.04 mm (0.0016 in).

CAMSHAFT SPROCKET RUNOUT

NEEM0017S07

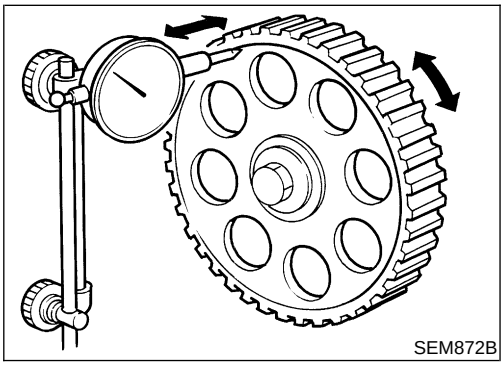

1. Install sprocket on camshaft.
2. Measure camshaft sprocket runout.
   Runout (Total indicator reading):
   Limit:
   0.1 mm (0.004 in)
3. If it exceeds the limit, replace camshaft sprocket.

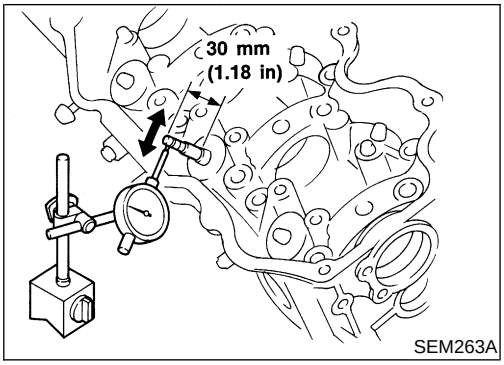

SEM263A

VALVE GUIDE CLEARANCE

NEEM0017S08

1. Measure valve deflection in a right-angled direction with camshaft. (Valve and valve guide mostly wear in this direction.)

Valve deflection limit (Dial gauge reading):
0.20 mm (0.0079 in)

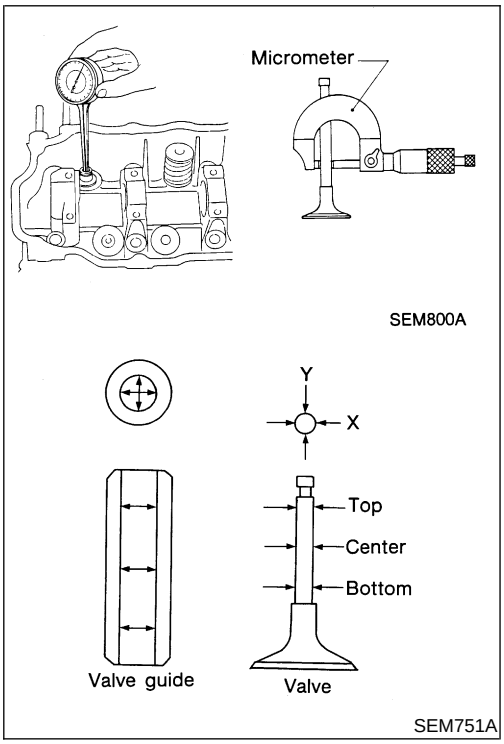

SEM751A

2. If it exceeds the limit, check valve to valve guide clearance.

a. Measure valve stem diameter and valve guide inner diameter.

b. Check that clearance is within specification.

Valve to valve guide clearance:
Intake:
0.020 - 0.053 mm (0.0008 - 0.0021 in)
Exhaust:
0.030 - 0.049 mm (0.0012 - 0.0019 in)
Limit:
0.10 mm (0.0039 in)

c. If it exceeds the limit, replace valve or valve guide.

VALVE GUIDE REPLACEMENT

NEEM0017S09

1. To remove valve guide, heat cylinder head to 150 to 160°C (302 to 320°F) by soaking in heated oil.

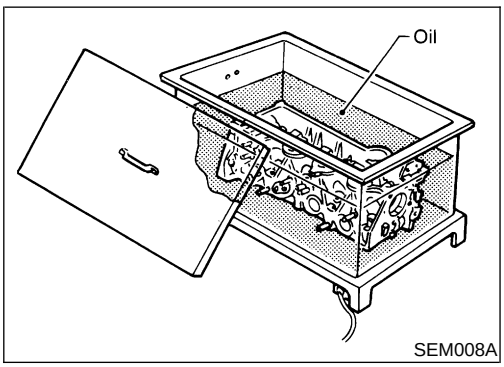

SEM008A

2. Drive out valve guide with a press [under a 20 kN (2 ton, 2.2 US ton, 2.0 Imp ton) pressure] or hammer and suitable tool.

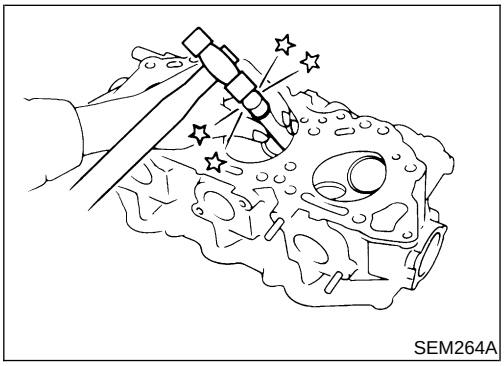
SEM264A

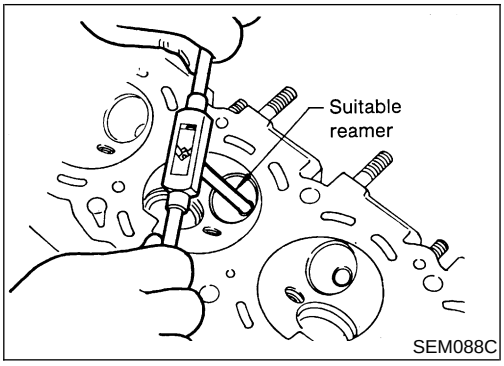

3. Ream cylinder head valve guide hole.
   Valve guide hole diameter (for service parts):
   Intake:
   11.175 - 11.196 mm (0.4400 - 0.4408 in)
   Exhaust:
   12.175 - 12.196 mm (0.4793 - 0.4802 in)

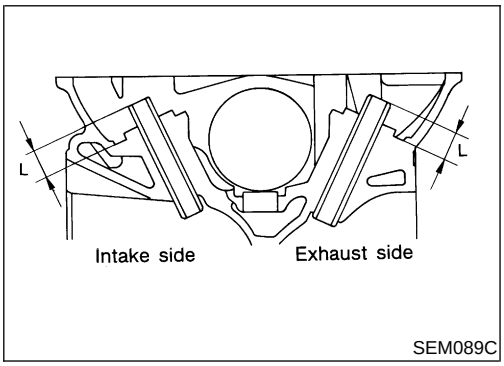

4. Heat cylinder head to 150 to 160°C (302 to 320°F) and press service valve guide onto cylinder head.
   Projection "L":
   13.2 - 13.4 mm (0.520 - 0.528 in)
5. Ream valve guide.
   Finished size:
   Intake:
   7.000 - 7.018 mm (0.2756 - 0.2763 in)
   Exhaust:
   8.000 - 8.011 mm (0.3150 - 0.3154 in)

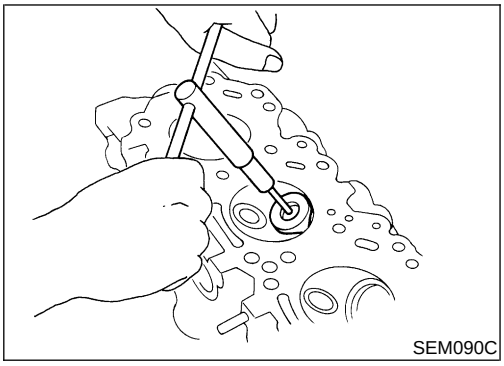

VALVE SEATS

NEEM0017S10

Check valve seats for any evidence of pitting at valve contact surface, and reseat or replace if it has worn out excessively.

- **Before repairing valve seats, check valve and valve guide for wear. If they have worn, replace them. Then correct valve seat.**
- **Use both hands to cut uniformly.**

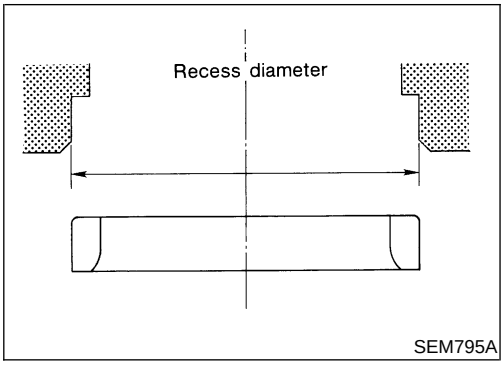

REPLACING VALVE SEAT FOR SERVICE PARTS

=NEEM0017S11

1. Bore out old seat until it collapses. The machine depth stop should be set so that boring cannot continue beyond the bottom face of the seat recess in cylinder head.
2. Ream cylinder head recess.

Reaming bore for service valve seat:
Oversize [0.5 mm (0.020 in)]:
Intake:
44.500 - 44.516 mm (1.7520 - 1.7526 in)
Exhaust:
37.500 - 37.516 mm (1.4764 - 1.4770 in)

Reaming should be done in circles concentric to the valve guide center so that valve seat will have the correct fit.

3. Heat cylinder head to 150 to 160°C (302 to 320°F) by soaking in heated oil.
4. Press fit valve seat until it seats on the bottom.

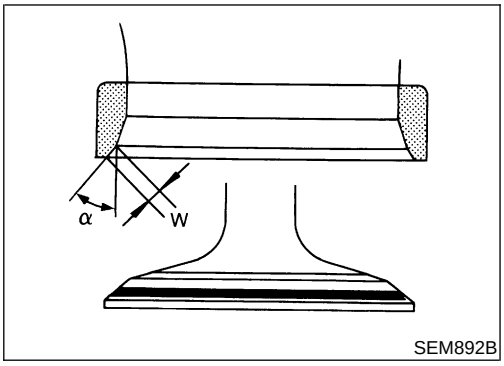

5. Cut or grind valve seat using suitable tool at the specified dimensions to specification. Refer to "Valve", EM-127.
6. After cutting, lap valve seat with abrasive compound.
7. Check valve seating condition.

	Intake	Exhaust
Seat face angle "α" degree	45	45
Contacting width "W" mm (in)	1.75 (0.0689)	1.7 (0.067)

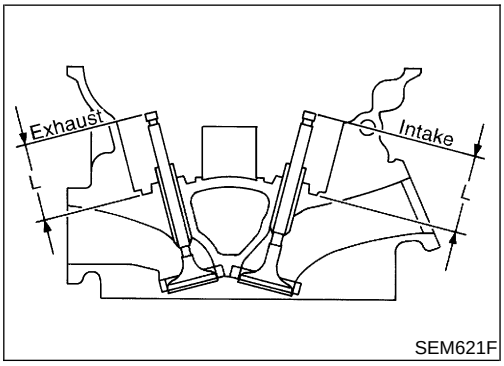

8. Use a depth gauge to measure the distance between the mounting surface of the cylinder head spring seat and the valve stem end. If the distance is shorter than specified, repeat step 5 above to adjust it. If it is longer, replace the valve seat with a new one.

Intake:
44.7 - 44.9 mm (1.760 - 1.768 in)
Exhaust:
45.4 - 45.6 mm (1.787 - 1.795 in)

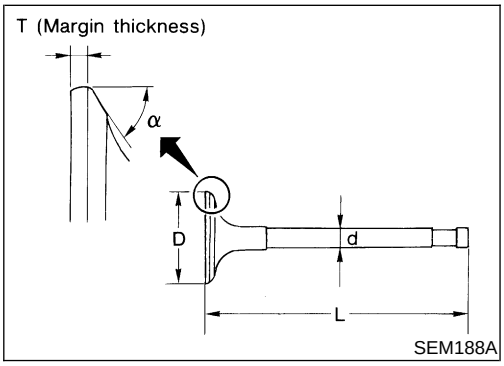

VALVE DIMENSIONS

NEEM0017S12

Check dimensions in each valve. Refer to "Valve", EM-127.
When valve head has been worn down to 0.5 mm (0.020 in) in margin thickness, replace valve.
Grinding allowance for valve stem tip is 0.2 mm (0.008 in) or less.

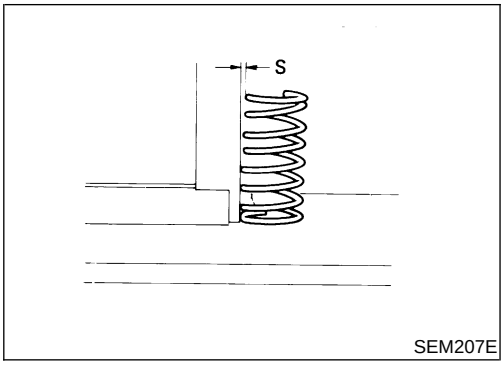

SEM207E

VALVE SPRING

NEEM0017S13

Squareness

NEEM0017S1301

1. Measure "S" dimension.
   Out-of-square:
   Outer:
   Less than 2.2 mm (0.087 in)
   Inner:
   Less than 1.9 mm (0.075 in)
2. If it exceeds the limit, replace spring.

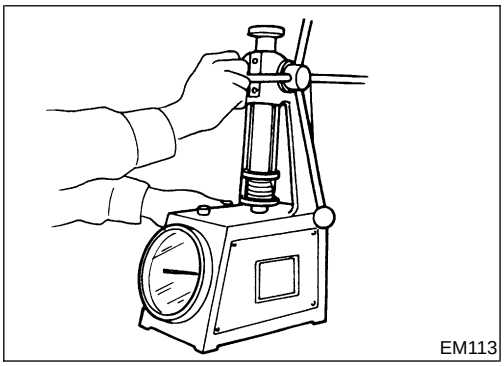
EM113

Pressure

NEEM0017S1302

Check valve spring pressure.

Standard pressure: N (kg, lb) at height mm (in)
Outer:
523.7 (53.4, 117.7) at 30.0 (1.181)
Inner:
255.0 (26.0, 57.3) at 25.0 (0.984)
Limit pressure: N (kg, lb) at height mm (in)
Outer:
More than 228.5 (23.3, 51.4) at 25.0 (0.984)
Inner:
More than 225.6 (23.0, 50.7) at 25.0 (0.984)

If not within specification, replace spring.

ROCKER SHAFT AND ROCKER ARM

NEEM0017S14

1. Check rocker shafts for scratches, seizure and wear.
2. Check outer diameter of rocker shaft.
   Diameter:
   17.979 - 18.000 mm (0.7078 - 0.7087 in)

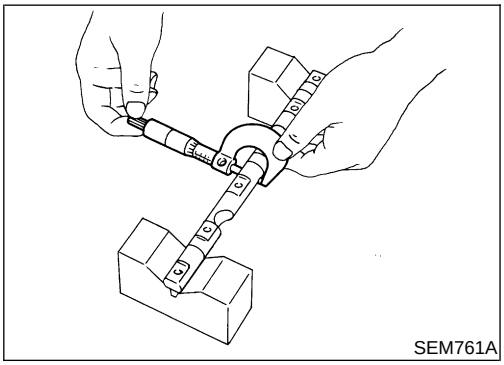
SEM761A

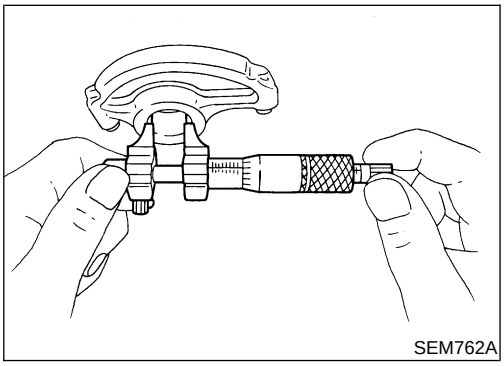
SEM762A

3. Check inner diameter of rocker arm.
   Diameter:
   18.007 - 18.028 mm (0.7089 - 0.7098 in)
   Rocker arm to shaft clearance:
   0.007 - 0.049 mm (0.0003 - 0.0019 in)

- **Keep rocker arm with hydraulic valve lifter standing to prevent air from entering hydraulic valve lifter when checking.**

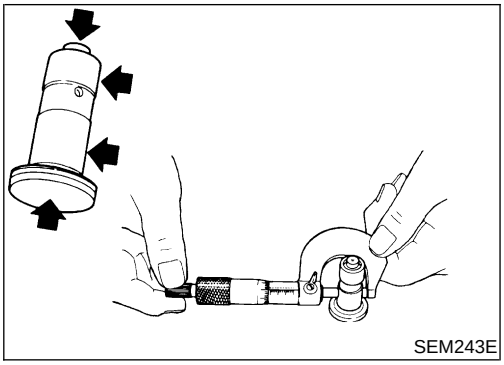
SEM243E

HYDRAULIC VALVE LIFTER

NEEM0017S15

1. Check contact and sliding surfaces for wear or scratches.
2. Check diameter of valve lifter.

Outer diameter:
15.947 - 15.957 mm (0.6278 - 0.6282 in)

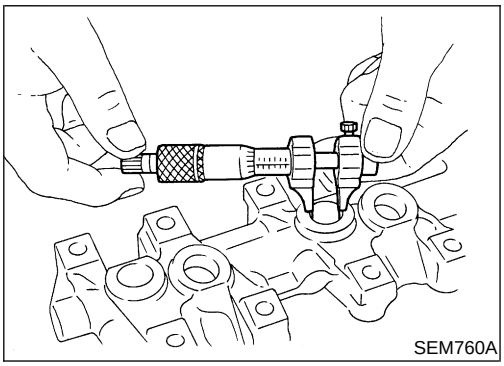
SEM760A

3. Check valve lifter guide inner diameter.

Inner diameter:
16.000 - 16.013 mm (0.6299 - 0.6304 in)
Standard clearance between valve lifter and lifter guide:
0.043 - 0.066 mm (0.0017 - 0.0026 in)

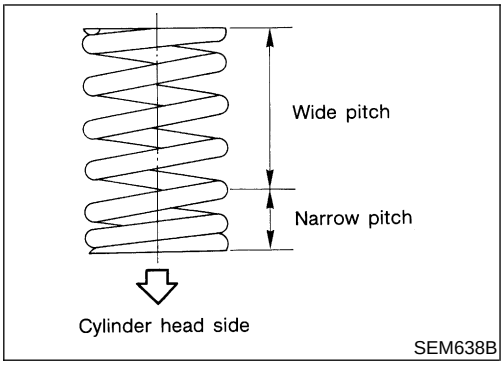

SEM638B

Assembly

NEEM0018

1. Install valve component parts.

- **Always use new valve oil seal. Refer to "Replacement", EM-90.**
- **Before installing valve oil seal, install inner valve spring seat.**
- **Install outer valve spring (uneven pitch type) with its narrow pitch side toward cylinder head side.**
- **After installing valve component parts, use plastic hammer to lightly tap valve stem tip to assure a proper fit.**

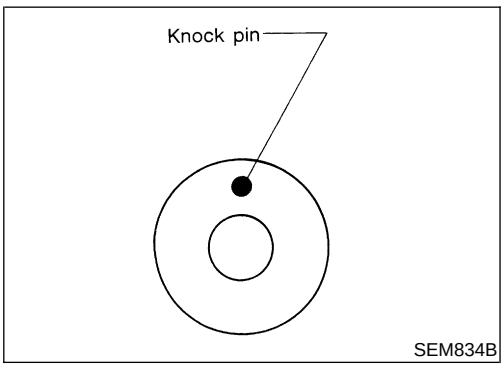

SEM834B

2. Install camshafts, locate plates and cylinder head rear covers.

- **Set knock pin of camshaft at the top.**

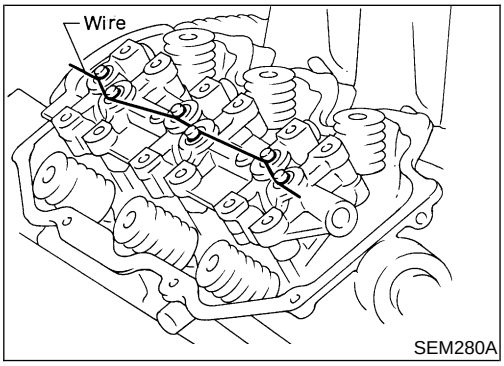

SEM280A

3. Install valve lifters into valve lifter guide.

- **Assemble valve lifters to their original position and hold all valve lifters with wire to prevent lifters from falling off.**
- **After installing, remove the wire.**

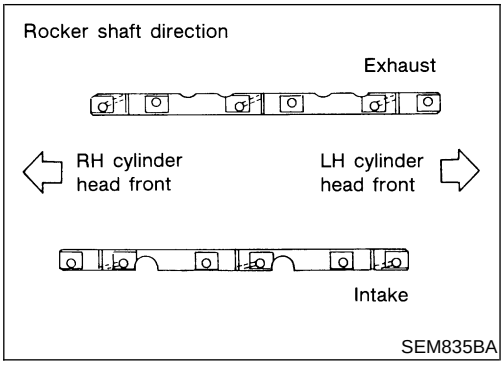

4. Install rocker shafts with rocker arms.
- **Tighten bolts gradually in two or three stages.**
- **Before tightening, be sure to set camshaft the lobe at the position where lobe is not lifted.**

a. Set No. 1 piston at TDC on its compression stroke and tighten rocker shaft bolts for No. 2, No. 4 and No. 6 cylinders.
b. Set No. 4 piston at TDC on its compression stroke and tighten rocker shaft bolts for No. 1, No. 3 and No. 5 cylinders.

5. Install exhaust manifold to cylinder head in reverse order of removal.

Installation

NEEM0019

1. Set No. 1 piston at TDC on its compression stroke as follows:

a. Align crankshaft sprocket aligning mark with mark on oil pump body.
b. Confirm that knock pin on camshaft is set at the top.

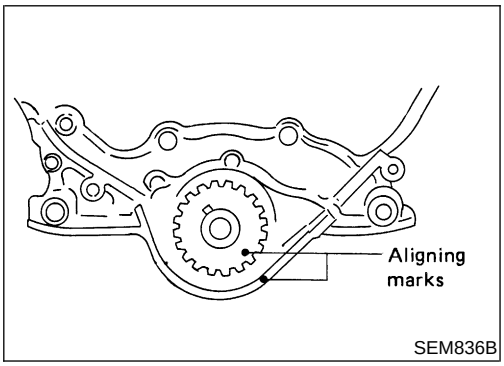

2. Install both drain plugs.
- Use Genuine RTV Silicone Sealant Part No. 999MP-A7007 or equivalent.

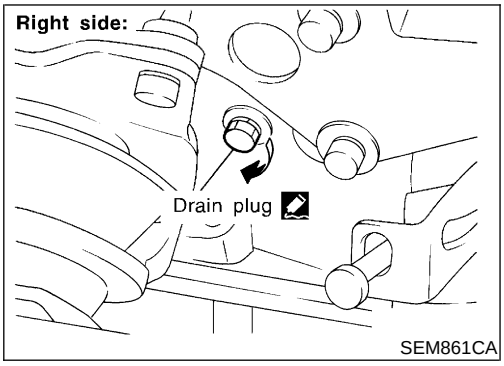

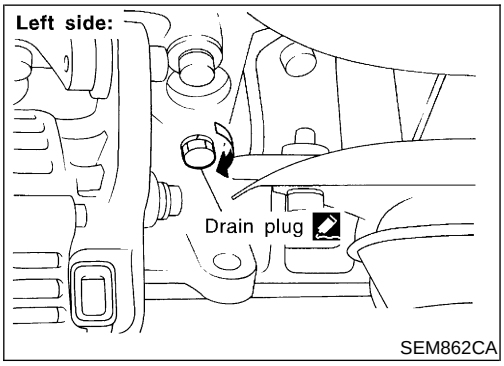

3. Install exhaust manifolds to cylinder head.

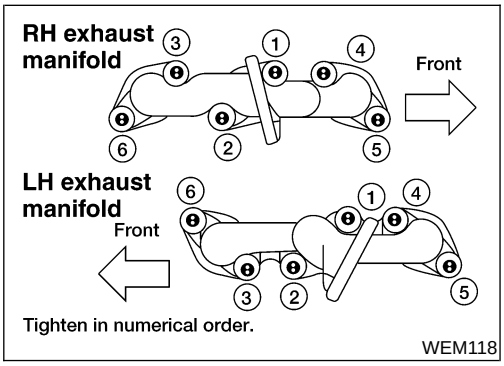

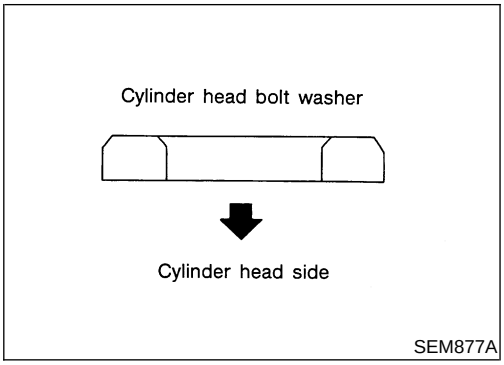

4. Install cylinder head with new gasket.

- **Be sure to install washers between bolts and cylinder head.**
- **Do not rotate crankshaft and camshaft separately, or valves will hit piston heads.**

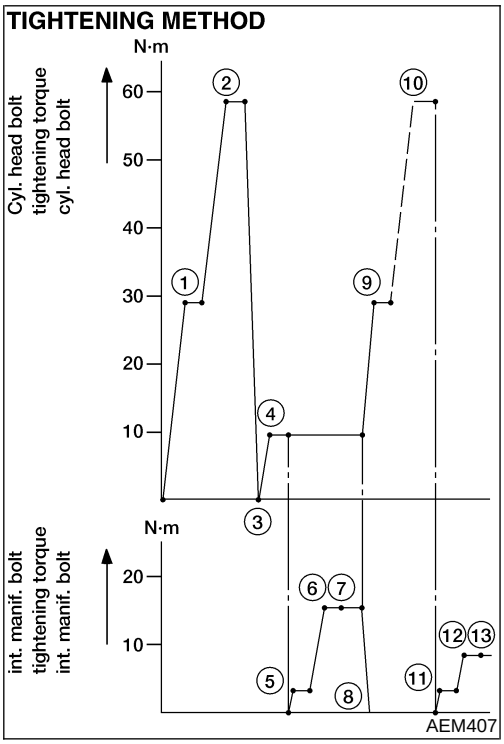

5. Tighten cylinder head bolts in numerical order using angle wrench [ST10120000 (J24239-01)].

Apply engine oil to threads and seating surfaces of cylinder head bolts before installing them.

- **Cylinder head bolts for 4, 7, 9 and 12 are longer than the others.**
  L_1: 127 mm (5.00 in) for 4, 7, 9 and 12
  L_2: 106 mm (4.17 in) for others
- **Install intake manifold and cylinder head at the same time using the following procedure:**

1) Tighten cylinder head bolts to 29 N·m (3.0 kg-m, 22 ft-lb).
2) Tighten cylinder head bolts to 59 N·m (6.0 kg-m, 43 ft-lb).
3) Loosen cylinder head bolts completely.
4) Tighten cylinder head bolts to 10 N·m (1.0 kg-m, 7 ft-lb).
5) Tighten intake manifold bolts and nuts to 4 N·m (0.4 kg-m, 2.9 ft-lb).
6) Tighten intake manifold bolts and nuts to 18 N·m (1.8 kg-m, 13 ft-lb).
7) Tighten intake manifold bolts and nuts to 16 to 20 N·m (1.6 to 2.0 kg-m, 12 to 14 ft-lb).
8) Loosen intake manifold bolts and nuts completely.
9) Tighten cylinder head bolts to 29 N·m (3.0 kg-m, 2.2 ft-lb).
10) Turn cylinder head bolts to 60 to 65 degrees clockwise. If an angle wrench is not available, tighten cylinder head bolts to 54 to 64 N·m (5.5 to 6.5 kg-m, 40 to 47 ft-lb).
11) Tighten cylinder head sub-bolts to 9.0 to 11.8 N·m (0.92 to 1.20 kg-m, 6.7 to 8.7 ft-lb).
12) Tighten intake manifold bolts and nuts to 4 N·m (0.4 kg-m, 2.9 ft-lb).
13) Tighten intake manifold bolts and nuts to 9 N·m (0.9 kg-m, 6.5 ft-lb).
14) Tighten intake manifold bolts and nuts to 8 to 10 N·m (0.8 to 1.0 kg-m, 5.8 to 7 ft-lb).

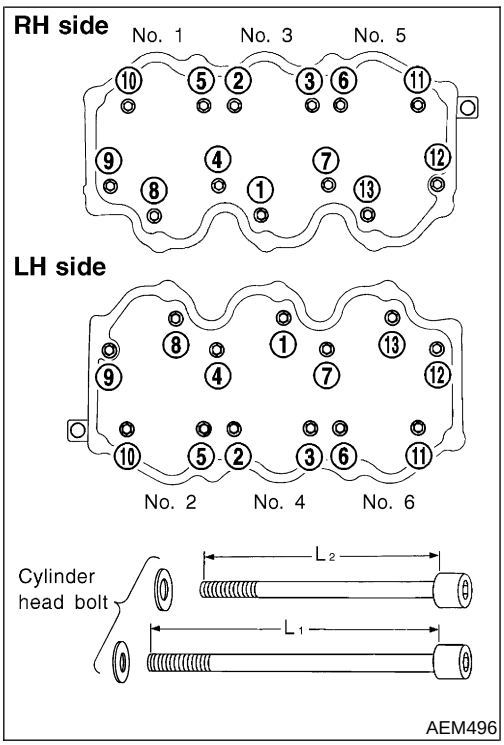

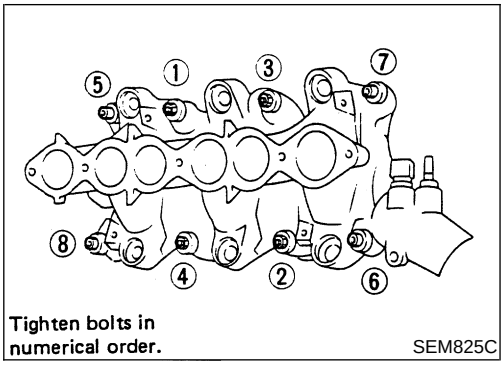

Tighten bolts in numerical order.
SEM825C

- **If only intake manifold is removed and to be used again, install it using the following procedure:**

1) Tighten all bolts and nuts to 4 N·m (0.4 kg-m, 2.9 ft-lb).
2) Tighten all bolts and nuts to 9 N·m (0.9 kg-m, 6.5 ft-lb).
3) Tighten all bolts and nuts to 8 to 10 N·m (0.8 to 1.0 kg-m, 5.8 to 7 ft-lb).

CAUTION:
If replacing intake manifold with a new one, cylinder head gasket must also be replaced with a new one. Refer to step 4.

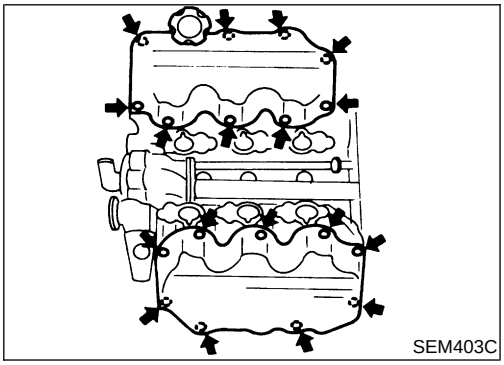
SEM403C

6. Install both rocker covers.

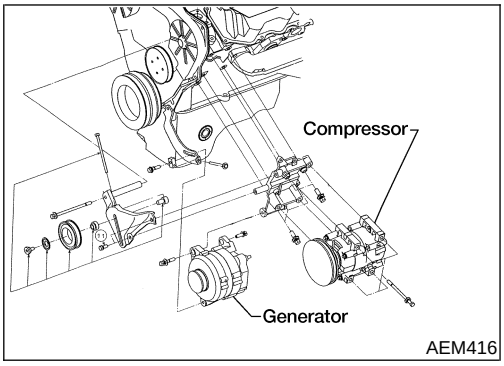

AEM416

7. Install compressor, generator and power steering pump brackets.
8. Install power steering pump.
9. Install compressor and generator.
10. Install exhaust front tube to exhaust manifold.

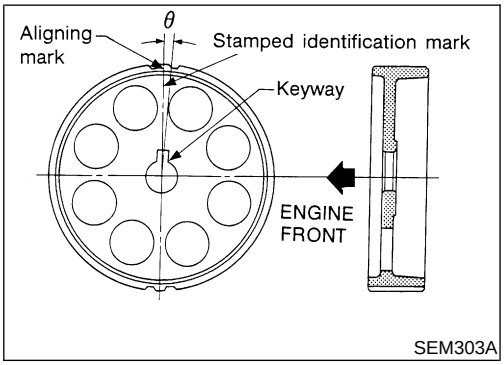

SEM303A

11. Install rear belt cover and camshaft sprocket.

- **RH camshaft sprocket and LH camshaft sprocket are different parts. Be sure to install them in the correct location.**

Description	Identification mark	θ
RH camshaft sprocket	R3	0°53′
LH camshaft sprocket	L3	−3°27′

12. Install timing belt and adjust belt tension. Refer to "AFTER ENGINE OVERHAUL OR ENGINE REASSEMBLY (WITH ROCKER COVERS REMOVED)", EM-88.

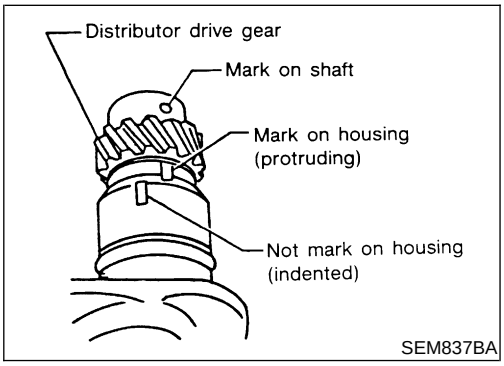

SEM837BA

13. Install distributor.
1) Align mark on shaft with protruding mark on housing.

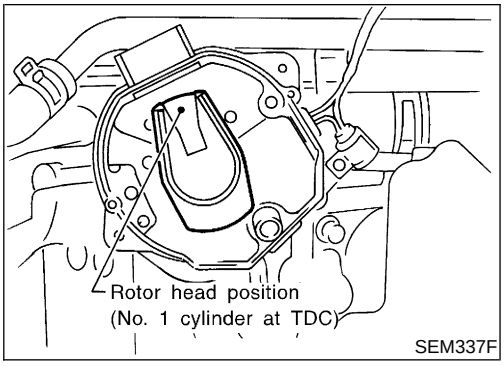

2) After installing, confirm that distributor rotor head is set as shown in figure.

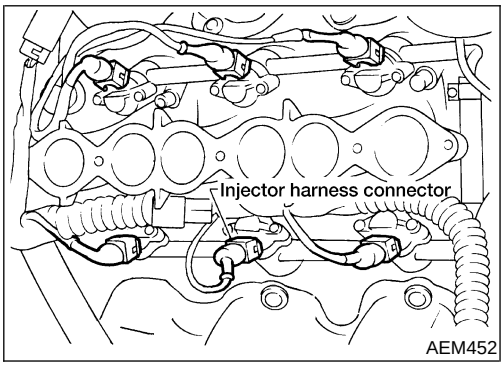

14. Install injector fuel tube assembly.
15. Connect all injector harness connectors.
16. Install fuel feed and fuel return hoses to injector fuel tube assembly.
17. Install intake manifold collector. Install all parts which were removed in step 6 under "Removal", EM-93.
18. Install ASCD and accelerator control wire.

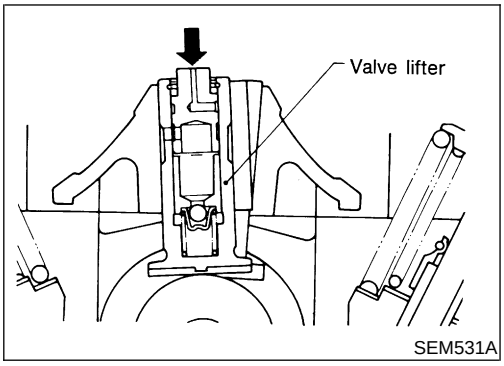

19. Check hydraulic valve lifter.

a. Push plunger forcefully with your finger.

- **Be sure to check it with rocker arm in its free position (not on the lobe).**

b. If valve lifter moves more than 1 mm (0.04 in), air may be inside it.

c. Bleed air out by running the engine at 1,000 rpm under no load for about 10 minutes.

d. If hydraulic valve lifters are still noisy, replace them and bleed air out again by running the engine at 1,000 rpm under no load for about 10 minutes.

20. Install the remaining components in the reverse order of removal.

Components

NEEM0122

SEC. 140 • 147 • 148 • 163 • 164 • 173 • 210 • 221

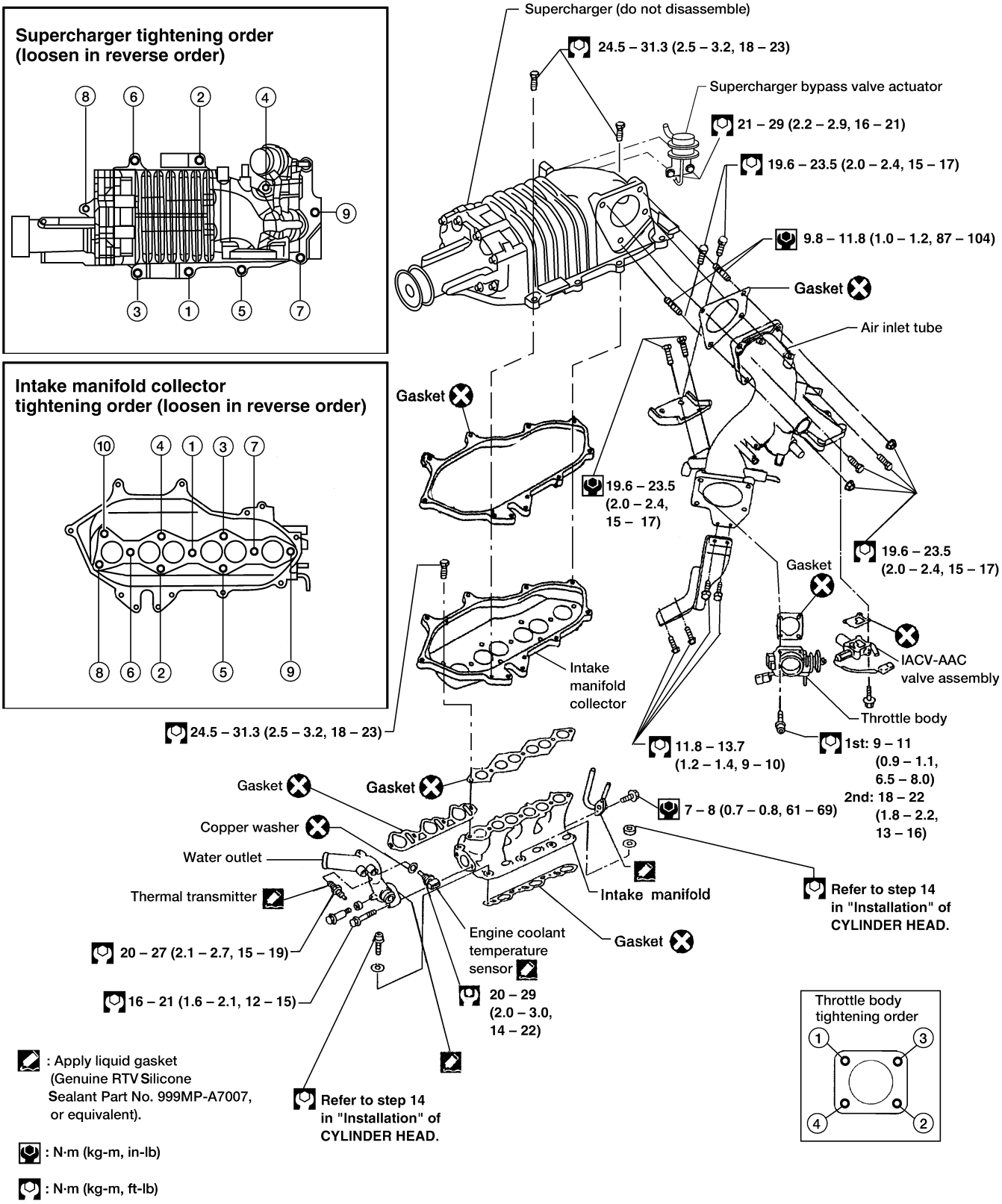

LEM104

Removal

NEEM0123

CAUTION:

Do not disassemble or adjust the supercharger.

1. Disconnect the negative battery cable.

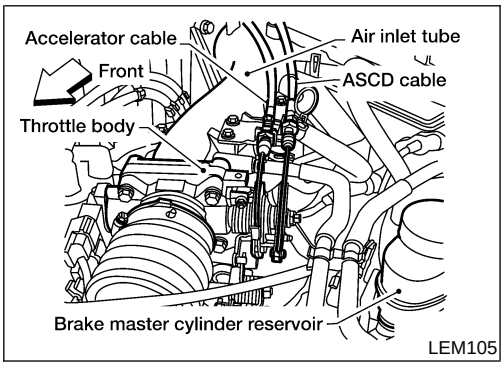

2. Disconnect the accelerator cable from the throttle body and the air inlet tube bracket.
3. Disconnect the ASCD cable from the throttle body and the air inlet tube bracket, if equipped.

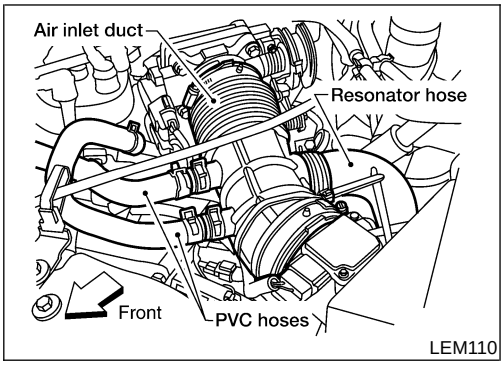

4. Remove the air inlet duct
- Disconnect the PCV hoses.
- Disconnect the resonator hose.

5. Partially drain the cooling system. Refer to ***MA-27***, “Changing Engine Coolant”.

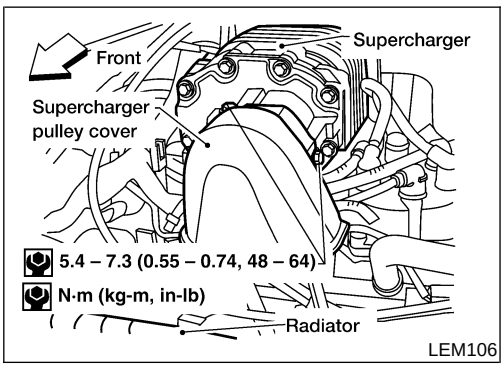

6. Remove the supercharger pulley cover and the supercharger/ air conditioning drive belt. Refer to ***MA-25***, “Checking Drive Belts”.

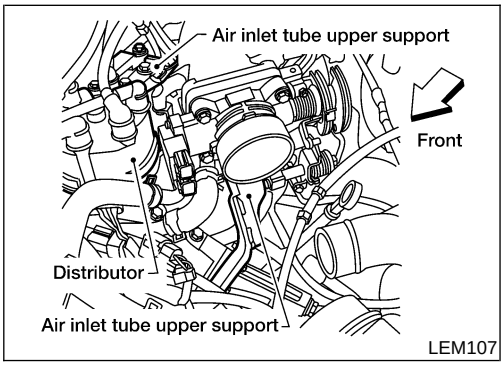

7. Remove the air inlet tube upper and lower supports.

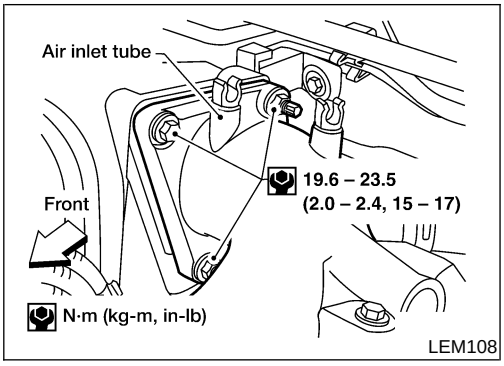

8. Remove the air inlet tube bolts, nuts, and studs. Position the air inlet tube aside.
- Disconnect the evaporative emission vacuum hose.
- Disconnect the brake booster vacuum hose.
- Disconnect the TPS sensor electrical connector.
- Disconnect the TPS switch electrical connector.

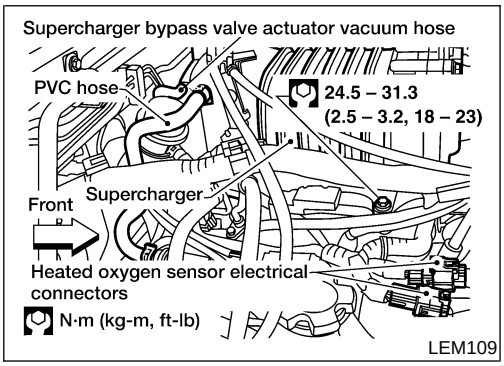

9. Remove the supercharger bolts and the supercharger assembly.
- Disconnect the boost control valve vacuum hose.
- Disconnect the PCV hose.

10. Remove the intake manifold collector.
- Disconnect the collector to vacuum gallery hose.
- Disconnect the fuel pressure regulator vacuum hose.
- Disconnect the heated oxygen sensor electrical connectors.

11. Remove the air inlet tube.
- Disconnect the two coolant hoses.
- Disconnect the IACV-AAC valve electrical connector.
- Disconnect the IACV-FICD solenoid valve electrical connector.

Inspection

NEEM0135

SUPERCHARGER FLANGE

NEEM0135S01

1. Clean the mating surface of the supercharger flange.

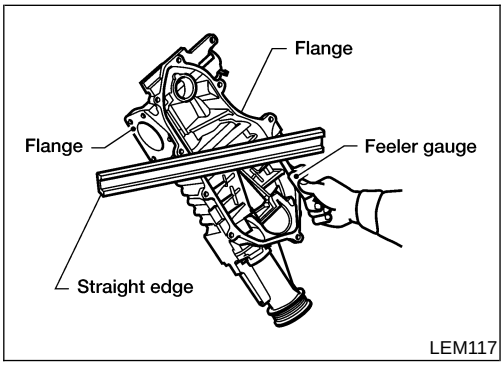

2. Check the flange surface for any deformation and flatness. Use a reliable straightedge and feeler gauge, or attach the supercharger flange to the intake collector mating flange, and check that the flatness is within specification.

Flange flatness limit: 0.12 mm (0.005 in)

ROTOR SYSTEM

NEEM0135S02

1. Check that the supercharger pulley rotates smoothly when turning it by hand in a clockwise direction. Rotating torque must not exceed specification.

Rotating torque: 0.5 N.m (0.05 kg-m, 4 in-lb)

2. Check that both the left and right rotors are free from any cracks or contamination.

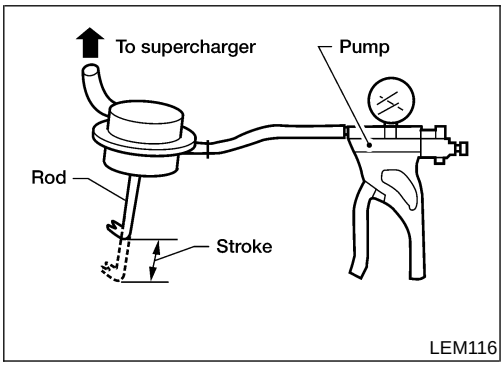

SUPERCHARGER BYPASS VALVE ACTUATOR

NEEM0135S03

1. Apply air pressure of less than 12 kPa (90 mmHg, 3.54 inHg) to the supercharger bypass valve actuator's lower side hose port and check for any leakage.
2. Check the supercharger bypass valve actuator rod for smooth movement while maintaining the pressure at the specified levels below:

   Rod starts to extend at approximately: 12 Kpa (90 mmHg, 3.54 inHg)

   Rod is fully extended at approximately: 33.3 kPa (250 mmHg, 9.84 inHg)

   Rod full extended length: 20.83 — 22.71 mm (0.82 — 0.89 in)

Installation

NEEM0124

To install the supercharger, follow the removal steps in reverse order.

- Replace all gaskets; make sure that all gasket surfaces are clean and undamaged.
- Follow all torque sequences for tightening.
- Refill the cooling system. Refer to ***MA-27***, "Changing Engine Coolant".

Removal and Installation

NEEM0020

WARNING:

- Situate vehicle on a flat and solid surface.
- Place chocks at front and back of rear wheels.
- Do not remove engine until exhaust system has completely cooled off. Otherwise, you may burn yourself and/or fire may break out in fuel line.
- For safety during subsequent steps, the tension of wires should be slackened against the engine.
- Before disconnecting fuel hose, release fuel pressure from fuel line. Refer to *EC-658* (VG33E), *EC-1259* (VG33ER), "Fuel Pressure Release".
- Before removing front axle from transmission, place safety stands under designated front supporting points. Refer to *GI-46*, "Lifting Points and Tow Truck Towing".
- Be sure to hoist engine and transmission in a safe manner.
- For engines not equipped with engine slingers, attach proper slingers and bolts described in the PARTS CATALOG.

CAUTION:

- When lifting engine, be careful not to strike adjacent parts, especially accelerator wire casing, brake lines, and brake master cylinder.
- In hoisting the engine, always use engine slingers in a safe manner.
- Before separating engine and transmission, remove crankshaft position sensor (OBD) from the assembly.
- Always take extra care not to damage edge of crankshaft position sensor (OBD), or ring gear teeth.

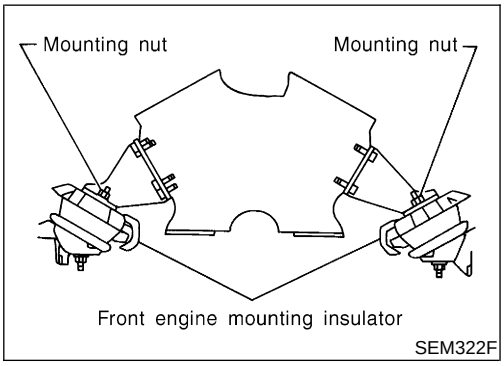

- Do not loosen front engine mounting insulator cover securing bolts.
- When cover is removed, damper oil flows out and mounting insulator will not function.
- Tighten all bolts and nuts to specification. Refer to *AT-420*, "Removal" (automatic); *MT-41*, "Removal and Installation" (manual); and *PD-69*, "Removal and Installation" (driveshaft).
- Sealant should be applied between engine and transmission. Refer to *MT-43*, "Installation".

REMOVAL
Engine Mounting

NEEM0020S01

NEEM0020S0101

SEC. 112

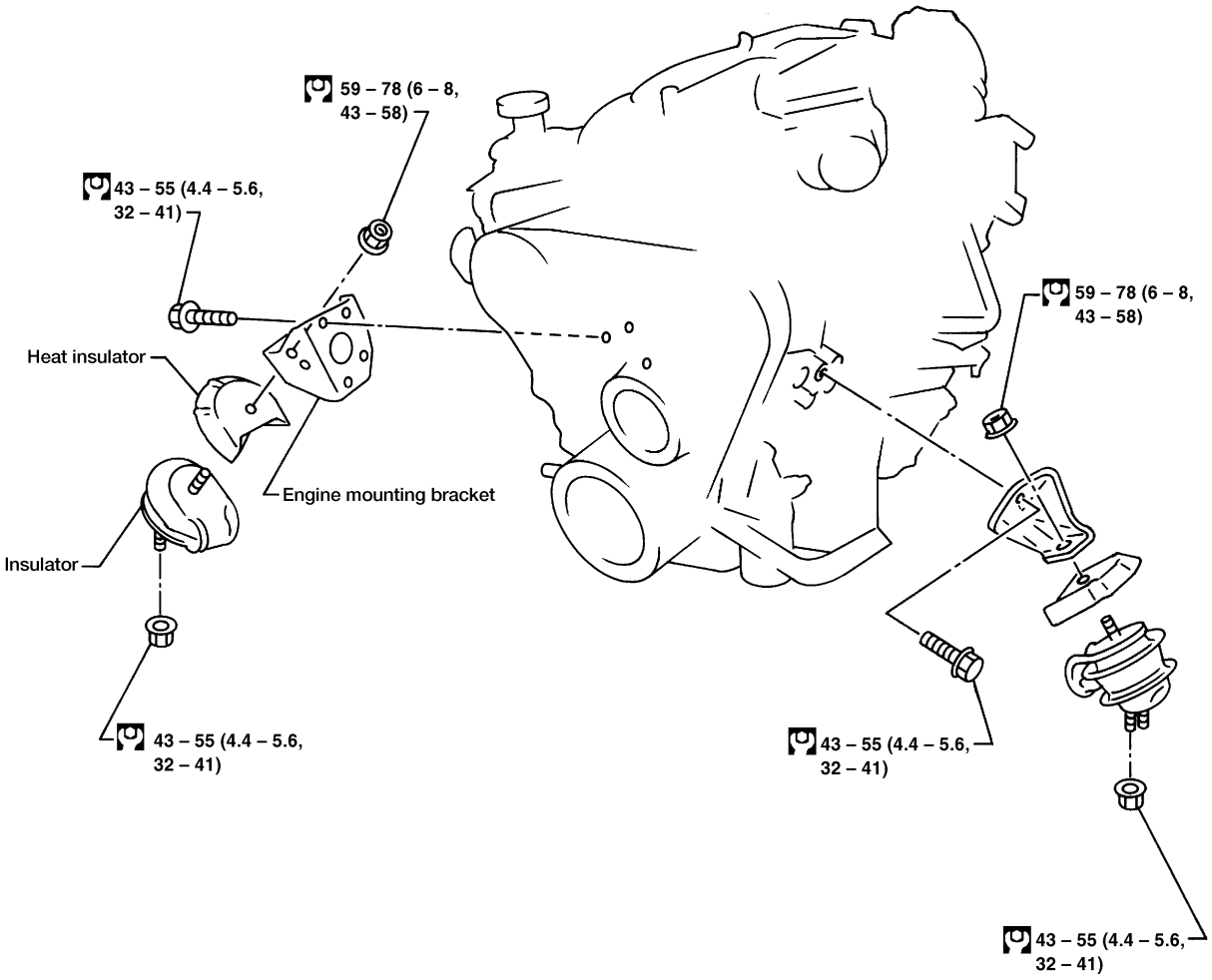

: N•m (kg-m, ft-lb)

AEM471

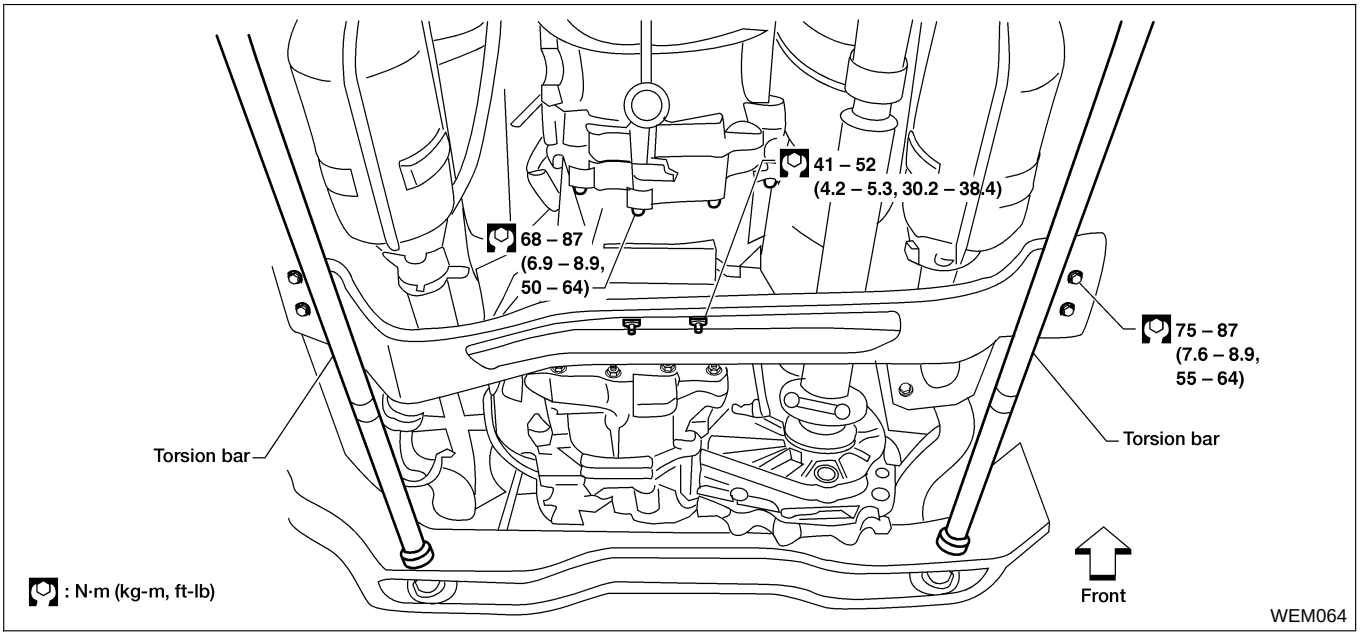

1. Remove engine undercover and hood.
2. Drain coolant from cylinder block and radiator. Refer to ***MA-27***, "Draining Engine Coolant".
3. Remove vacuum hoses, fuel tubes, wires, harnesses and connectors.
4. Before disconnecting fuel hose, release fuel pressure from fuel line. Refer to ***EC-658*** (VG33E), ***EC-1259*** (VG33ER), "Fuel Pressure Release".
5. Remove radiator with shroud and cooling fan.
6. Remove drive belts.
7. Discharge refrigerant. Refer to ***HA-66***, "Discharging Refrigerant".
8. Remove A/C compressor manifold.
9. Remove power steering oil pump from engine.
10. Remove front exhaust tubes.
11. Remove transmission from vehicle.

Refer to *AT-420*, "Removal" (automatic); or *MT-41*, "Removal and Installation" (manual).

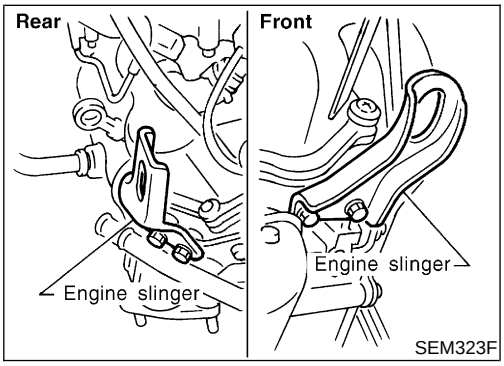

12. Install the engine slingers.

Slinger bolts:

: 20 − 26 N·m (2.1 − 2.7 kg−m, 15 − 20 ft−lb)

13. Hoist engine with engine slingers and remove engine mounting nuts from both sides.
14. Lift and remove engine from vehicle.

Components

NEEM0021

SEC. 110•120•150•313

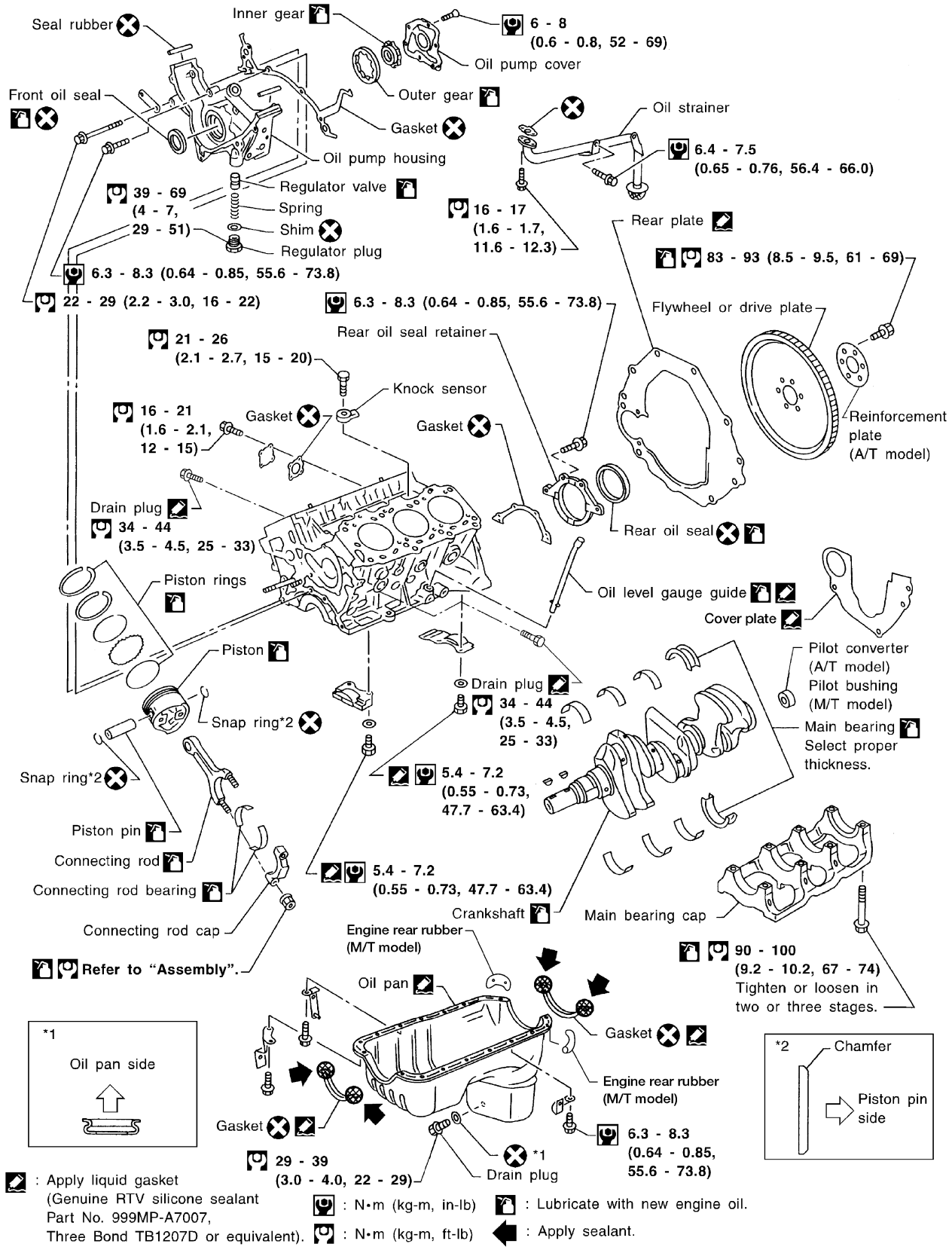

: Apply liquid gasket (Genuine RTV silicone sealant Part No. 999MP-A7007, Three Bond TB1207D or equivalent).

: N•m (kg-m, in-lb)

: N•m (kg-m, ft-lb)

: Lubricate with new engine oil.

: Apply sealant.

WEM147

Canada Models — Block Heater

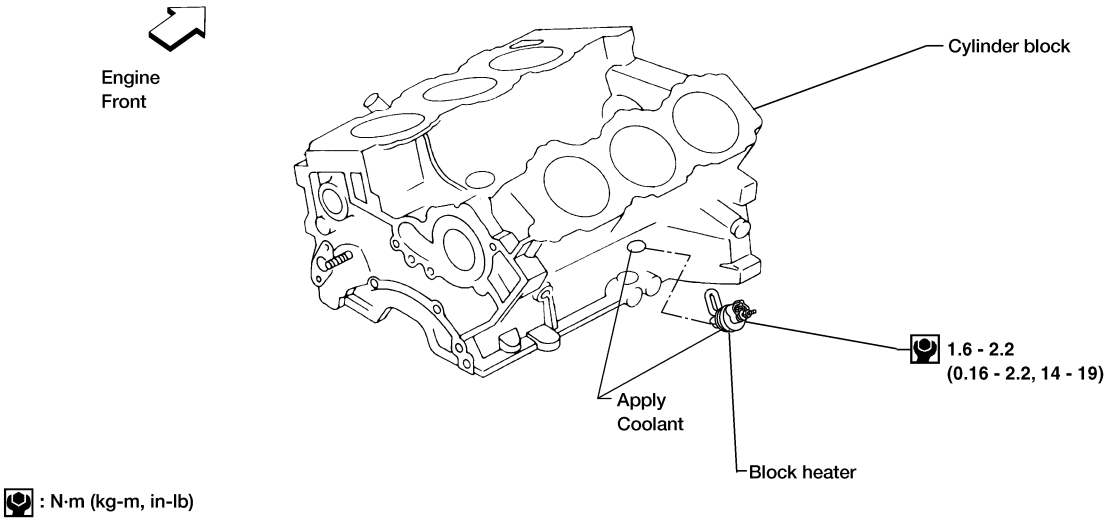

: N·m (kg-m, in-lb)

LEM112

Removal and Installation

NEEM0022

CAUTION:

- **When installing sliding parts such as bearings and pistons, be sure to apply engine oil on the sliding surfaces.**
- **Place removed parts such as bearings and bearing caps in their proper order and direction.**
- **When installing connecting rod bolts and main bearing cap bolts, apply new engine oil to threads and seating surfaces.**
- **Do not allow any magnetic materials to contact the ring gear teeth on drive plate and rear plate.**

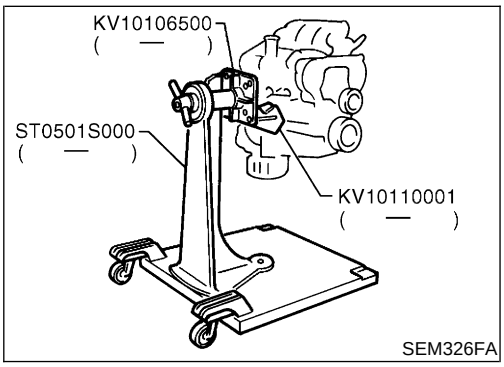

SEM326FA

Disassembly

NEEM0023

PISTON AND CRANKSHAFT

NEEM0023S01

1. Place engine on a work stand.
2. Drain coolant and oil.
3. Remove timing belt.
4. Remove oil pan and oil pump.
5. Remove water pump.
6. Remove cylinder head.

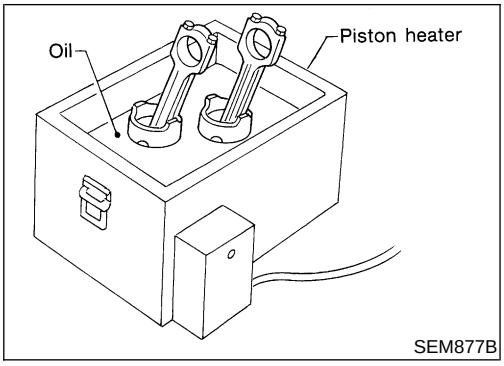

7. Remove pistons with connecting rods.
- When disassembling piston and connecting rod, remove snap ring first, then heat piston to 60 to 70°C (140 to 158°F) or use piston pin press stand at room temperature.

CAUTION:
- **When piston rings are not replaced, make sure that piston rings are mounted in their original positions.**
- **When replacing piston rings, if there is no punchmark, install with either side up.**

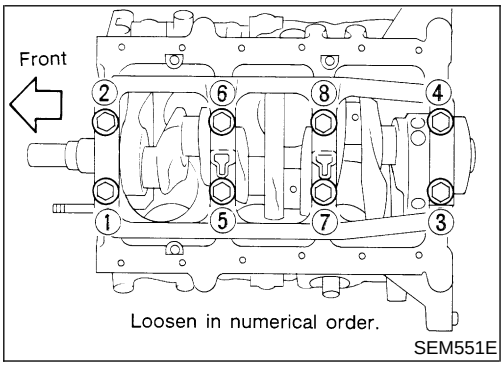

8. Remove bearing cap and crankshaft.
- **Before removing bearing cap, measure crankshaft end play.**
- **Bolts should be loosened in two or three steps.**

Inspection

NEEM0024

PISTON AND PISTON PIN CLEARANCE

NEEM0024S01

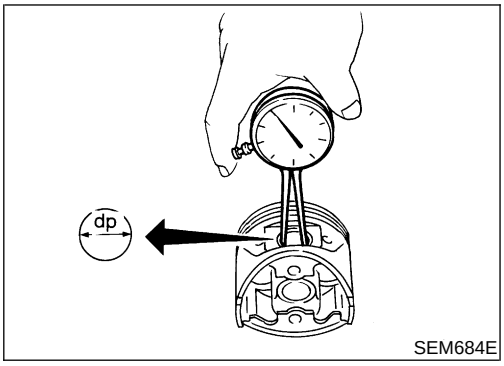

1. Measure inner diameter of piston pin hole "dp".
   Standard diameter "dp":
   20.969 - 20.981 mm (0.8255 - 0.8260 in)

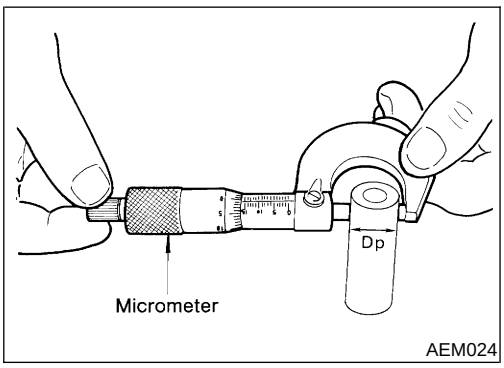

2. Measure outer diameter of piston pin "Dp".
   Standard diameter "Dp":
   20.971 - 20.983 mm (0.8256 - 0.8261 in)
3. Calculate piston pin clearance.
   dp − Dp = 0 to (- 0.004) mm [0 to (- 0.0002) in]

If it exceeds the above value, replace piston assembly with pin.

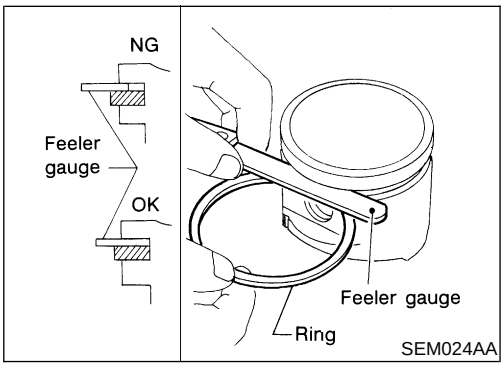

PISTON RING SIDE CLEARANCE

NEEM0024S02

Side clearance:
Top ring: 0.040 - 0.080 mm (0.0016 - 0.0031 in)
2nd ring: 0.030 - 0.070 mm (0.0012 - 0.0028 in)
Oil ring: 0.015 - 0.185 mm (0.0006 - 0.0073 in)
Max. limit of side clearance:
Top ring: 0.11 mm (0.0043 in)
2nd ring: 0.1 mm (0.004 in)
Oil ring: –

If out of specification, replace piston and/or piston ring assembly.

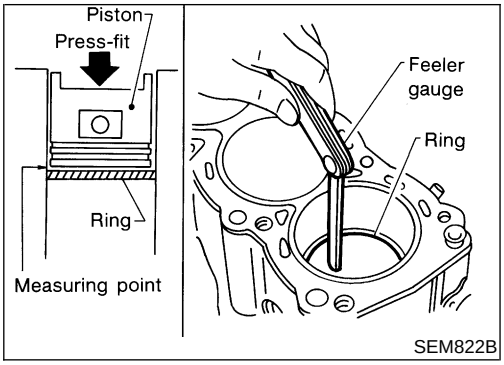

PISTON RING END GAP

NEEM0024S03

End gap:
Top ring: 0.21 - 0.31 mm (0.0083 - 0.0122 in)
2nd ring: 0.50 - 0.60 mm (0.0197 - 0.0236 in)
Oil ring: 0.20 - 0.60 mm (0.0079 - 0.0236 in)
Max. limit of ring gap:
Top ring: 0.43 mm (0.0169 in)
2nd ring: 0.69 mm (0.0272 in)
Oil ring: 0.84 mm (0.0331 in)

If out of specification, replace piston ring. If gap still exceeds the limit even with a new ring, rebore cylinder and use oversized piston and piston rings. **Refer to "Piston, Piston Ring and Piston Pin", EM-133.**

- When replacing the piston, check the cylinder block surface for scratches or seizure. If scratches or seizure are found, hone or replace the cylinder block.

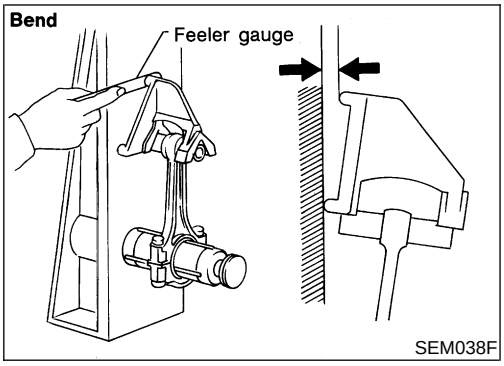

CONNECTING ROD BEND AND TORSION

NEEM0024S04

Bend:
Limit 0.15 mm (0.0059 in)
per 100 mm (3.94 in) length
Torsion:
Limit 0.30 mm (0.0118 in)
per 100 mm (3.94 in) length

If it exceeds the limit, replace connecting rod assembly.

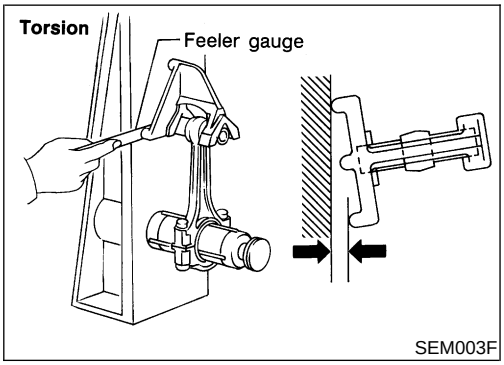

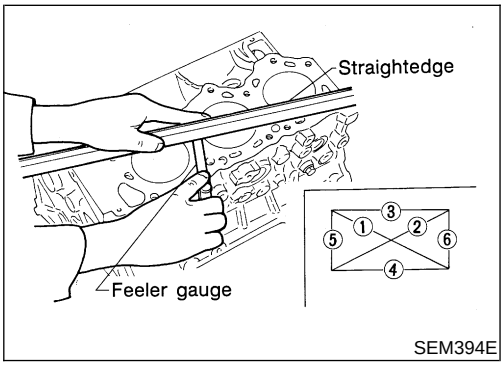

CYLINDER BLOCK DISTORTION AND WEAR

NEEM0024S05

1. Clean upper face of cylinder block and measure the distortion.

Limit:
0.10 mm (0.0039 in)

2. If out of specification, resurface it.
The resurfacing limit is determined by cylinder head resurfacing in engine.

Amount of cylinder head resurfacing is "A".
Amount of cylinder block resurfacing is "B".

The maximum limit is as follows:
A + B = 0.2 mm (0.008 in)
Nominal cylinder block height from crankshaft center:
227.60 - 227.70 mm (8.9606 - 8.9645 in)

3. If necessary, replace cylinder block.

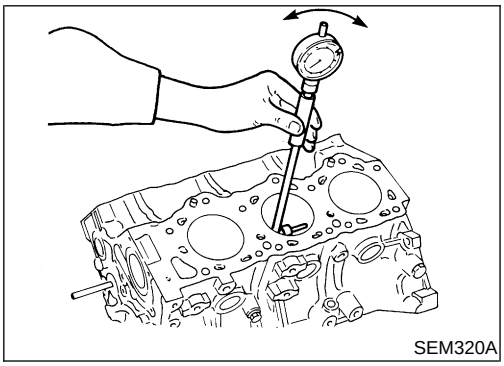
SEM320A

PISTON-TO-BORE CLEARANCE

NEEM0024S06

1. Using a bore gauge, measure cylinder bore for wear, out-of-round and taper.

Standard inner diameter:
91.500 - 91.530 mm (3.6024 - 3.6035 in)
Refer to "CYLINDER BLOCK", EM-132.
Wear limit:
0.20 mm (0.0079 in)

If it exceeds the limit, rebore all cylinders. Replace cylinder block if necessary.

Out-of-round (X − Y) standard:
0.015 mm (0.0006 in)
Taper (A − B or A − C) standard:
0.015 mm (0.0006 in)

2. Check for scratches and seizure. If seizure is found, hone it.

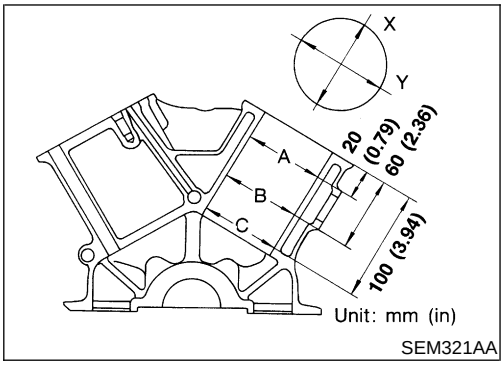

SEM321AA

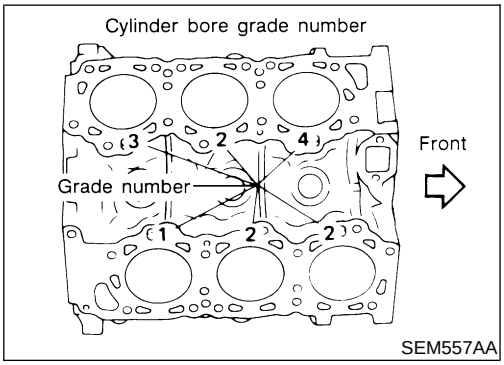

SEM557AA

- **If both cylinder block and piston are replaced with new ones, select piston of the same grade number according to the following table. These numbers are punched on cylinder block and piston in either Arabic or Roman numerals.**

Combination of grade number for cylinder bore and piston

	For No. 3, 4 and 5 cylinders						Except for No. 1, 2 and 6 cylinders		
Cylinder bore grade No.	1	2	3	4	5	6	1	2	3
Piston grade No.	2-1	3-2	3-3	4-4	4-5	5-6	1	2	3

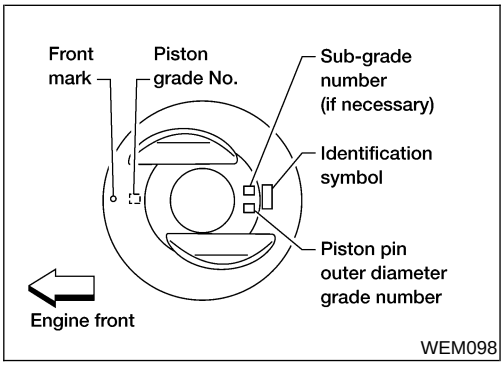

WEM098

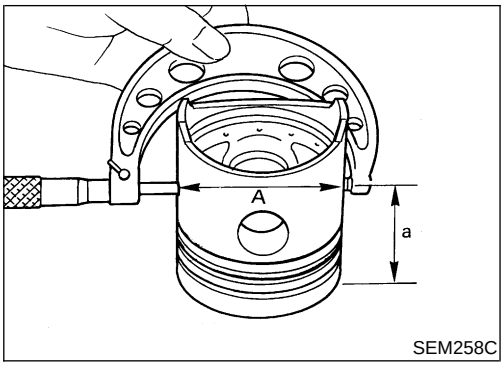

3. Measure piston skirt diameter.
   Piston diameter "A":
   Refer to "AVAILABLE PISTON", EM-133.
   Measuring point "a" (Distance from the top):
   49.0 mm (1.929 in)
4. Check that piston-to-bore clearance is within specification.
   Piston-to-bore clearance "B":
   0.025 - 0.045 mm (0.0010 - 0.0018 in) for No. 1, 2 and 6 cylinders (and No. 5 cylinder for VG33ER only)
   0.015 - 0.025 mm (0.0006 - 0.0010 in) for No. 3 and 4 cylinders
   0.030 - 0.040 mm (0.0012 - 0.0016 in) for No. 5 cylinder (VG33E only)
5. Determine piston oversize according to amount of cylinder wear.

Oversize pistons are available for service. Refer to "AVAILABLE PISTON", EM-133.

6. Cylinder bore size is determined by adding piston-to-bore clearance to piston diameter "A".
   Rebored size calculation:
   D = A + B − C
   where,
   D: Bored diameter
   A: Piston diameter as measured
   B: Piston-to-bore clearance
   C: Honing allowance 0.02 mm (0.0008 in)
7. Install main bearing caps, and tighten to the specified torque to prevent distortion of cylinder bores in final assembly.
8. Cut cylinder bores.

- **When any cylinder needs boring, all other cylinders must also be bored.**
- **Do not cut too much out of cylinder bore at a time. Cut only 0.05 mm (0.0020 in) or so in diameter at a time.**

9. Hone cylinders to obtain specified piston-to-bore clearance.
10. Measure finished cylinder bore for out-of-round and taper.

- **Measurement should be done after cylinder bore cools down.**

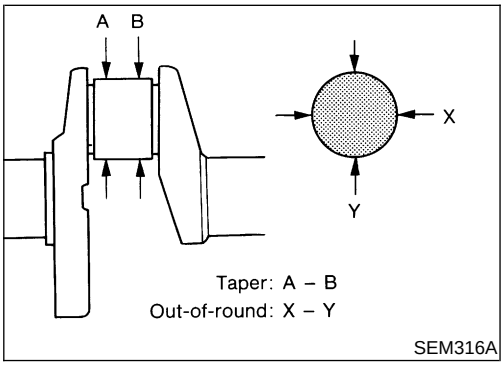

CRANKSHAFT

NEEM0024S07

1. Check crankshaft main and pin journals for score, wear or cracks.
2. With a micrometer, measure journals for taper and out-of-round.
   Out-of-round (X − Y):
   Less than 0.005 mm (0.0002 in)
   Taper (A − B):
   Less than 0.005 mm (0.0002 in)

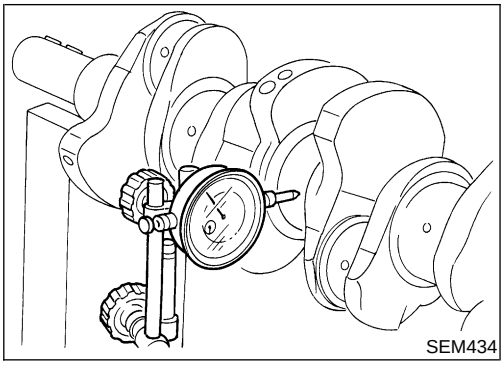
SEM434

3. Measure crankshaft runout.

Runout (Total indicator reading):
Less than 0.10 mm (0.0039 in)

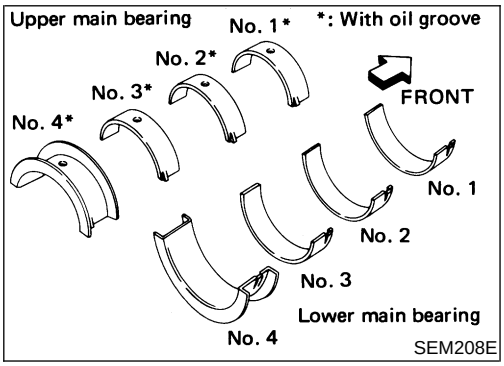

SEM208E

BEARING CLEARANCE

NEEM0024S08

- Either of the following two methods may be used, however, method A gives more reliable results and is preferable.

Method A (Using bore gauge & micrometer)

Main Bearing

NEEM0024S0801

1. Set main bearings in their proper positions on cylinder block and main bearing cap.

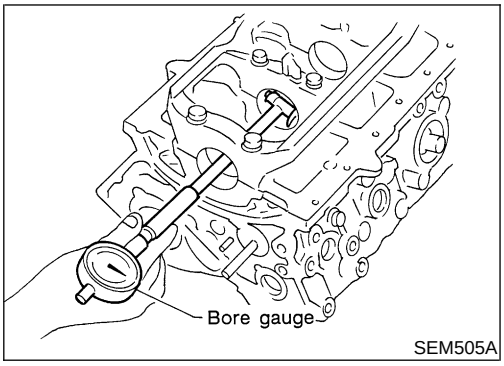

SEM505A

2. Install main bearing cap to cylinder block.

Tighten all bolts in correct order in two or three stages.

3. Measure inner diameter "A" of each main bearing.

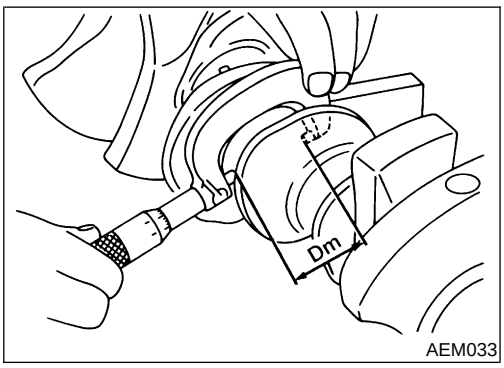

AEM033

4. Measure outer diameter "Dm" of each crankshaft main journal.
5. Calculate main bearing clearance.

No.1 main bearing clearance (A – Dm):
Standard
0.030 - 0.048 mm (0.0012 - 0.0019in)
Limit
0.060 mm (0.0024 in)
No. 2, 3 and No. 4 main bearing clearance (A − Dm):
Standard
0.038 - 0.065 mm (0.0015 - 0.0026 in)
Limit
0.080 mm (0.0031 in)

6. If it exceeds the limit, replace bearing.
7. If clearance cannot be adjusted within the standard of any bearing, grind crankshaft journal and use undersized bearing.

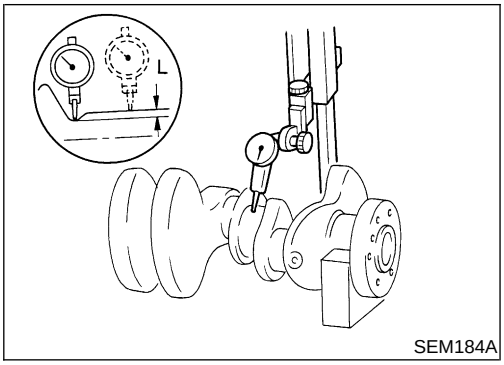

a. When grinding crankshaft journal, confirm that "L" dimension in fillet roll is more than the specified limit.
"L": 0.1 mm (0.004 in)
b. For grinding crankshaft to specifications, and available service parts. Refer to "Crankshaft", EM-134.

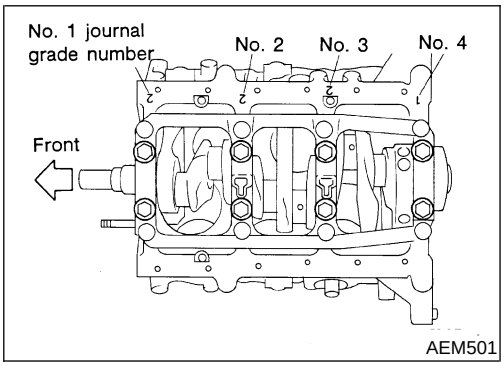

8. If crankshaft is reused, measure main bearing clearances and select thickness of main bearings.
If crankshaft is replaced with a new one, it is necessary to select thickness of main bearings as follows:
a. Grade number of each cylinder block main journal is punched on the respective cylinder block. These numbers are punched in either Arabic or Roman numerals.

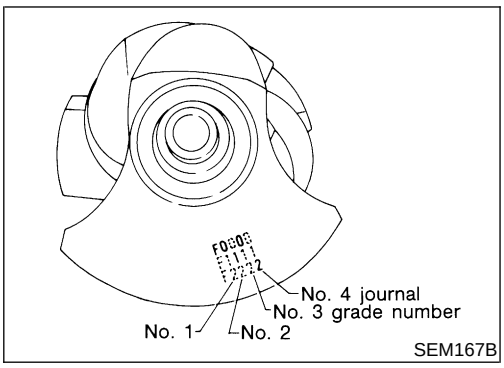

b. Grade number of each crankshaft main journal is punched on the respective crankshaft. These numbers are punched in either Arabic or Roman numerals.
c. Select main bearing with suitable thickness according to the following table.

No. 1 main bearing grade number (Identification color):

Crankshaft journal grade number	Main journal grade number			
	3	4	5	6
3	0 (Black)	1 (Brown)	2 (Green)	3 (Yellow)
4	1 (Brown)	2 (Green)	3 (Yellow)	4 (Blue)
5	2 (Green)	3 (Yellow)	4 (Blue)	5 (Pink)
6	3 (Yellow)	4 (Blue)	5 (Pink)	6 (Purple)

Except No. 1 main bearing grade number (Identification color):

Crankshaft journal grade number	Main journal grade number		
	0	1	2
0	0 (Black)	1 (Brown)	2 (Green)
1	1 (Brown)	2 (Green)	3 (Yellow)
2	2 (Green)	3 (Yellow)	4 (Blue)

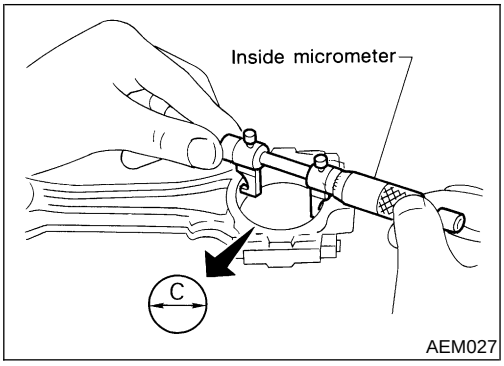

AEM027

Connecting Rod Bearing (Big End)

NEEM0024S0802

1. Install connecting rod bearing to connecting rod and cap.
2. Install connecting rod cap to connecting rod.

Tighten bolts to the specified torque.

3. Measure inner diameter "C" of each bearing.

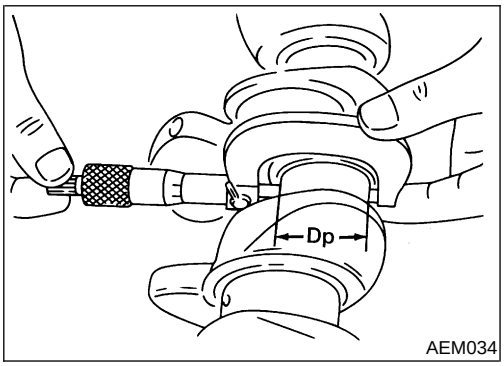

AEM034

4. Measure outer diameter "Dp" of each crankshaft pin journal.
5. Calculate connecting rod bearing clearance.

Connecting rod bearing clearance (C − Dp):
Standard
0.024 - 0.064 mm (0.0009 - 0.0025 in)
Limit
0.090 mm (0.0035 in)

6. If it exceeds the limit, replace bearing.
7. If clearance cannot be adjusted within the standard of any bearing, grind crankshaft journal and use undersized bearing. Refer to step 7 of "Available Main Bearing", EM-135.

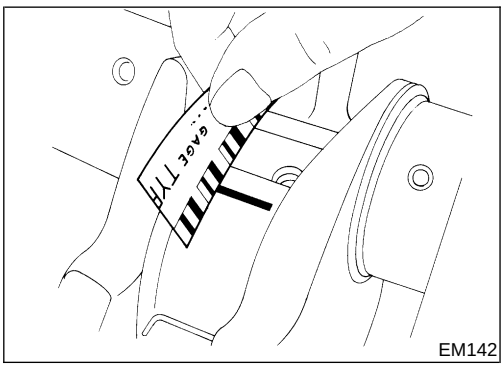
EM142

Method B (Using plastigage)

CAUTION:

- **Do not turn crankshaft or connecting rod while plastigage is being inserted.**
- **When bearing clearance exceeds the specified limit, ensure that the proper bearing has been installed. Then if excessive bearing clearance exists, use a thicker main bearing or undersized bearing so that the specified bearing clearance is obtained.**

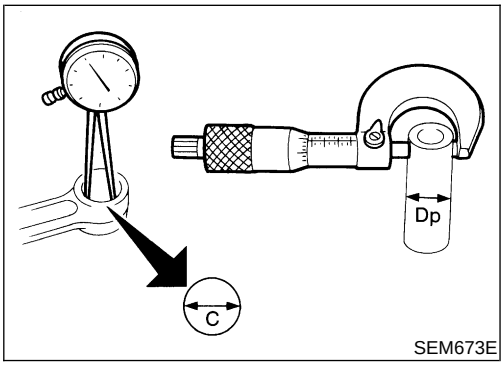

SEM673E

CONNECTING ROD BUSHING CLEARANCE (SMALL END)

NEEM0024S09

1. Measure inner diameter "C" of bushing.
2. Measure outer diameter "Dp" of piston pin.
3. Calculate connecting rod bushing clearance.

Connecting rod bushing clearance = C − Dp
Standard: 0.005 - 0.017 mm (0.0002 - 0.0007 in)
Limit: 0.023 mm (0.0009 in)

If it exceeds the limit, replace connecting rod assembly or connecting rod bushing and/or piston set with pin.

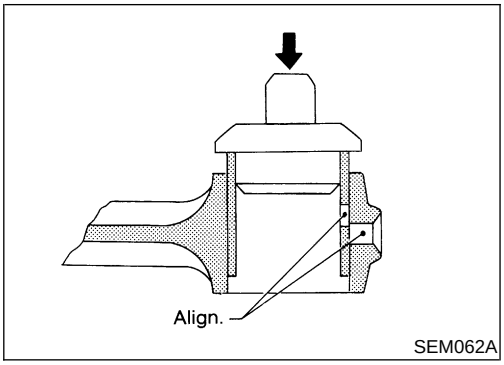

REPLACEMENT OF CONNECTING ROD BUSHING (SMALL END)

NEEM0024S10

1. Drive in small end bushing until it is flush with end surface of rod.

Be sure to align the oil holes.

2. After driving in small end bushing, ream the bushing so that clearance between connecting rod bushing and piston pin is the specified value.

Clearance between connecting rod bushing and piston pin:

0.005 - 0.017 mm (0.0002 - 0.0007 in)

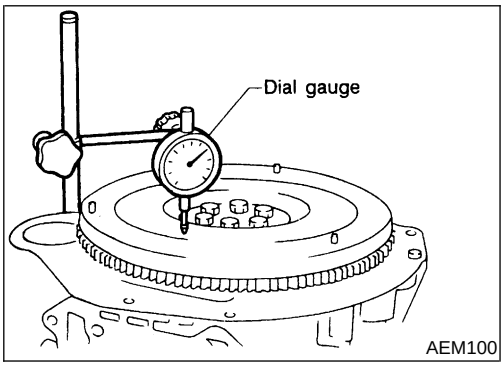

FLYWHEEL/DRIVE PLATE RUNOUT

NEEM0024S11

Runout (Total indicator reading):

Flywheel (M/T model)

Less than 0.15 mm (0.0059 in)

Drive plate (A/T model)

Less than 0.15 mm (0.0059 in)

CAUTION:

- **Be careful not to damage the ring gear teeth.**
- **Check the drive plate for deformation or cracks.**
- **Do not allow any magnetic materials to contact the ring gear teeth.**
- **Do not surface flywheel or drive plate. Replace as necessary.**

Assembly

NEEM0025

PISTON

NEEM0025S01

1. Install new snap ring on one side of piston pin hole.
2. Heat piston to 60 to 70°C (140 to 158°F) and assemble piston, piston pin, connecting rod and new snap ring.

- **Align the direction of piston and connecting rod.**
- **Numbers stamped on connecting rod and cap correspond to each cylinder.**
- **After assembly, make sure connecting rod swings smoothly.**

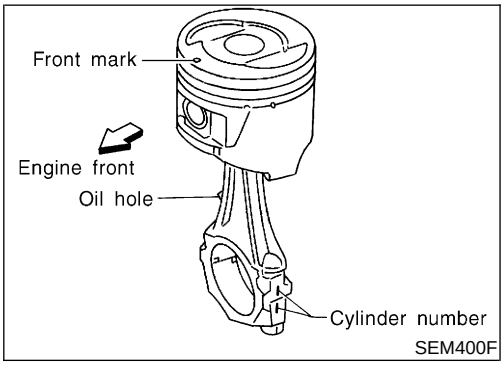

3. Set piston rings as shown.

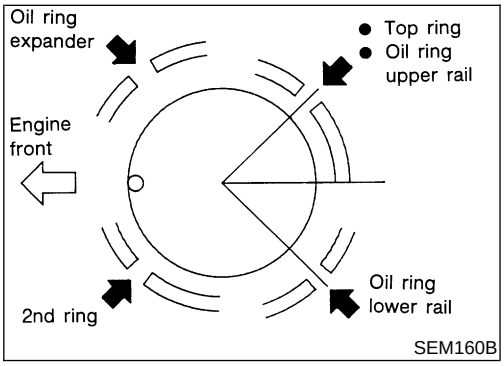

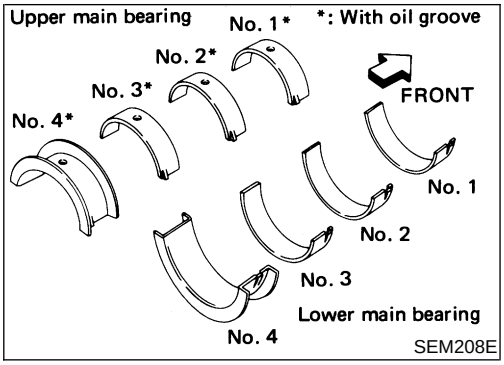

CRANKSHAFT

NEEM0025S02

1. Set main bearings in their proper positions on cylinder block and main bearing cap.

- **Confirm that correct main bearings are used.**
- **Apply new engine oil to bearing surfaces.**

Refer to "BEARING CLEARANCE", EM-120.

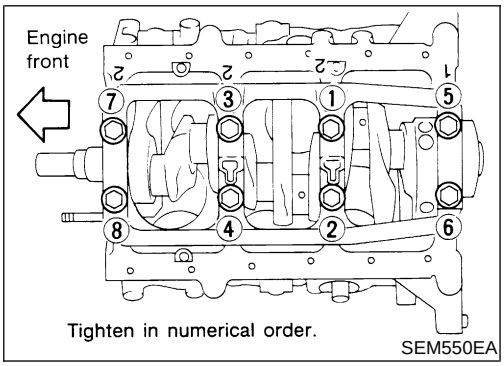

2. Install crankshaft and main bearing caps and tighten bolts to the specified torque.

- **Prior to tightening bearing cap bolts, place bearing cap in its proper position by shifting crankshaft in the axial direction.**
- **Tighten bearing cap bolts gradually in two or three stages. Start with center bearing and move outward sequentially.**
- **After securing bearing cap bolts, make sure crankshaft turns smoothly by hand.**
- **Lubricate threads and seat surfaces of the bolts with new engine oil.**

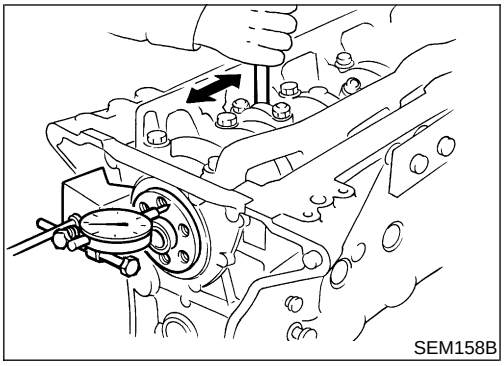

3. Measure crankshaft end play.

Crankshaft end play:
Standard
0.050 - 0.170 mm (0.0020 - 0.0067 in)
Limit
0.30 mm (0.0118 in)

If beyond the limit, replace bearing with a new one.

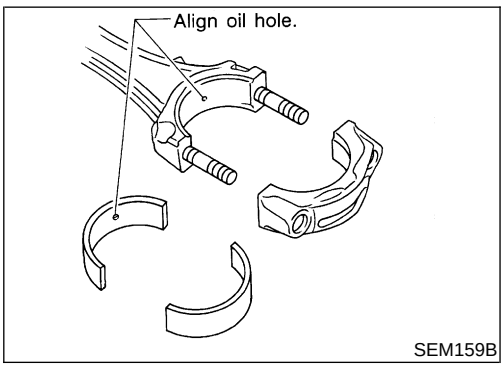

4. Install connecting rod bearings in connecting rods and connecting rod caps.

- **Confirm that correct bearings are used.**

Refer to "Inspection".

- Install bearings so that oil hole in connecting rod aligns with oil hole of bearing.

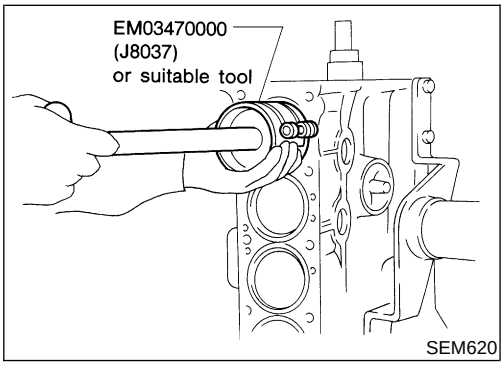

5. Install pistons with connecting rods.

a. Install them into corresponding cylinders with Tool.

- **Be careful not to scratch cylinder wall by connecting rod.**
- **Arrange so that front mark on piston head faces toward front of engine.**

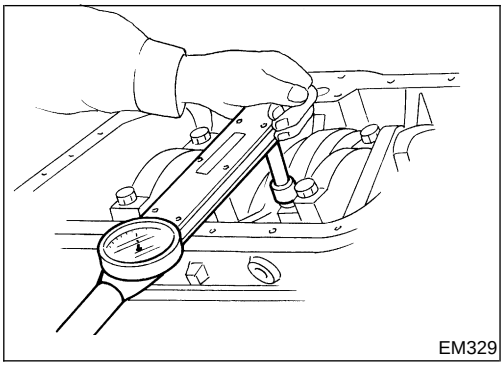
EM329

b. Install connecting rod bearing caps.

- **Lubricate threads and seat surfaces with new engine oil.** Tighten connecting rod bearing cap nuts to the specified torque.

: Connecting rod bearing nut

(1) Tighten to 14 to 16 N·m (1.4 to 1.6 kg-m, 10 to 12 ft-lb).

(2) Turn nuts 60 to 65 degrees clockwise. If an angle wrench is not available, tighten nuts to 38 to 44 N·m (3.9 to 4.5 kg-m, 28 to 33 ft-lb).

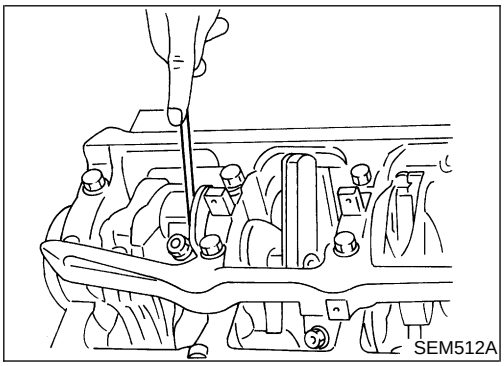
SEM512A

6. Measure connecting rod side clearance.

Connecting rod side clearance:

Standard

0.20 - 0.35 mm (0.0079 - 0.0138 in)

Limit

0.40 mm (0.0157 in)

If beyond the limit, replace connecting rod and/or crankshaft.

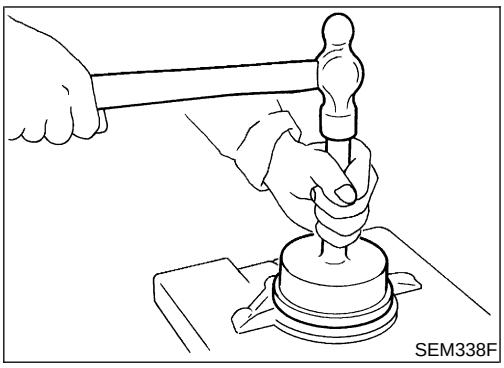
SEM338F

7. Install rear oil seal retainer.

REPLACING PILOT BUSHING (M/T) OR PILOT CONVERTER (A/T)

NEEM0025S03

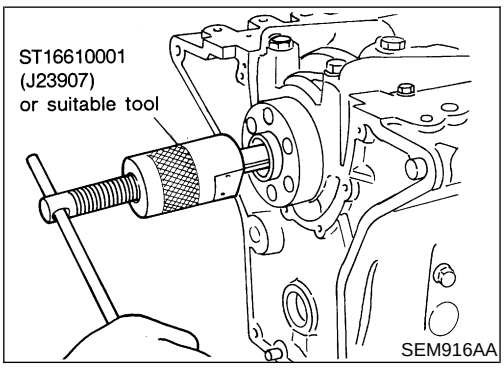

SEM916AA

1. Remove pilot bushing (M/T) or pilot converter (A/T).

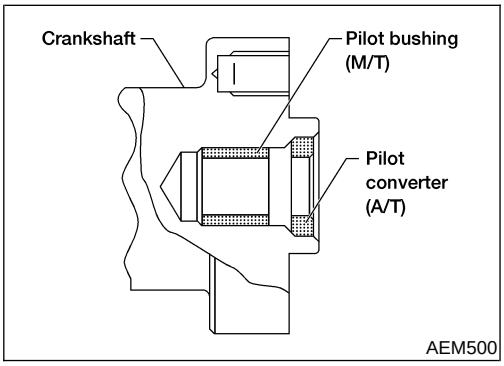

AEM500

2. Install pilot bushing (M/T) or pilot converter (A/T).

General Specifications

=NEEM0026

Cylinder arrangement		V-6
Displacement		3,275 cm^3 (199.84 cu in)
Bore and stroke		91.5 x 83 mm (3.602 x 3.27 in)
Valve arrangement		OHC
Firing order		1-2-3-4-5-6
Number of piston rings	Compression	2
	Oil	1
Number of main bearings		4
Compression ratio	VG33E	8.9:1
	VG33ER	8.3:1

Cylinder number

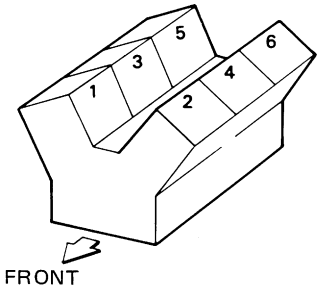

SEM713A

Unit: kPa (kg/cm^2, psi)/300 rpm

Compression pressure	Standard	1,196 (12.2, 173)
	Minimum	883 (9.0, 128)
	Differential limit between cylinders	98 (1.0, 14)

Unit: degree

Valve timing

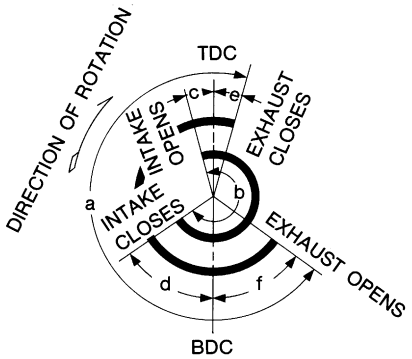

EM120

a	b	c	d	e	f
240	244	4	60	9	51

Cylinder Head

NEEM0027

Unit: mm (in)

	Standard	Limit
Head surface distortion	Less than 0.03 (0.0012)	0.1 (0.004)

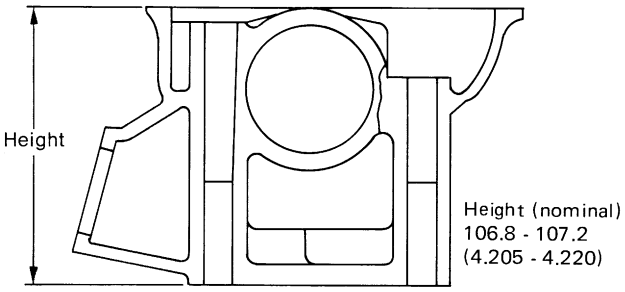

SEM082B

Valve

VALVE

NEEM0028

NEEM0028S01

Unit: mm (in)

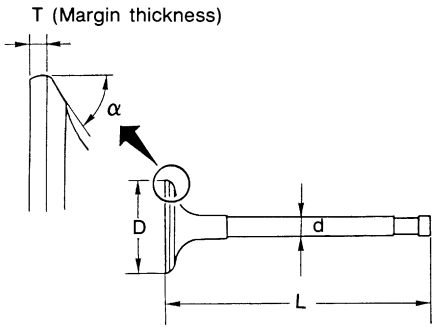

SEM188

Valve head diameter “D”	Intake	42.0 - 42.2 (1.654 - 1.661)
	Exhaust	34.95 - 35.25 (1.376 - 1.388)
Valve length “L”	Intake	125.3 - 125.9 (4.933 - 4.957)
	Exhaust	124.2 - 124.8 (4.890 - 4.913)
Valve stem diameter “d”	Intake	6.965 - 6.980 (0.2742 - 0.2748)
	Exhaust	7.962 - 7.970 (0.3135 - 0.3138)
Valve seat angle “α”	Intake	45°15′ - 45°45′
	Exhaust	
Valve margin “T”	Intake	1.15 - 1.45 (0.0453 - 0.0571)
	Exhaust	1.35 - 1.65 (0.0531 - 0.0650)
Valve margin “T” limit		More than 0.5 (0.020)
Valve stem end surface grinding limit		Less than 0.2 (0.008)
Valve clearance	Intake	0 (0)
	Exhaust	0 (0)

VALVE SPRING

NEEM0028S02

Free height	Outer	51.2 mm (2.016 in)
	Inner	44.1 mm (1.736 in)
Pressure	Outer	523.7 N (53.4 kg, 117.7 lb) at 30.0 mm (1.181 in)
	Inner	255.0 N (26.0 kg, 57.3 lb) at 25.0 mm (0.984 in)
Out-of-square	Outer	2.2 mm (0.087 in)
	Inner	1.9 mm (0.075 in)

HYDRAULIC VALVE LIFTER

NEEM0028S03

Unit: mm (in)

Lifter outside diameter	15.947 - 15.957 (0.6278 - 0.6282)
Lifter guide inside diameter	16.000 - 16.013 (0.6299 - 0.6304)
Clearance between lifter and lifter guide	0.043 - 0.066 (0.0017 - 0.0026)

VALVE GUIDE

NEEM0028S04

Unit: mm (in)

			Standard	Service
Valve guide	Outer diameter	Intake	11.023 - 11.034 (0.4340 - 0.4344)	11.223 - 11.234 (0.4418 - 0.4423)
		Exhaust	12.023 - 12.034 (0.4733 - 0.4738)	12.223 - 12.234 (0.4812 - 0.4817)
	Inner diameter (Finished size)	Intake	7.000 - 7.018 (0.2756 - 0.2763)	
		Exhaust	8.000 - 8.011 (0.3150 - 0.3154)	
Cylinder head valve guide hole diameter		Intake	10.975 - 10.996 (0.4321 - 0.4329)	11.175 - 11.196 (0.4400 - 0.4408)
		Exhaust	11.975 - 11.996 (0.4715 - 0.4723)	12.175 - 12.196 (0.4793 - 0.4802)
Interference fit of valve guide		Intake	0.027 - 0.059 (0.0011 - 0.0023)	
		Exhaust		
			Standard	Max. tolerance
Stem to guide clearance		Intake	0.020 - 0.053 (0.0008 - 0.0021)	0.10 (0.0039)
		Exhaust	0.030 - 0.049 (0.0012 - 0.0019)	
Valve deflection limit			—	0.20 (0.0079)

ROCKER SHAFT AND ROCKER ARM

NEEM0028S05

Unit: mm (in)

Rocker shaft	Outer diameter	17.979 - 18.000 (0.7078 - 0.7087)
Rocker arm	Inner diameter	18.007 - 18.028 (0.7089 - 0.7098)
Clearance between rocker arm and rocker shaft		0.007 - 0.049 (0.0003 - 0.0019)

Valve Seat

NEEM0029

INTAKE VALVE SEAT

NEEM0029S01

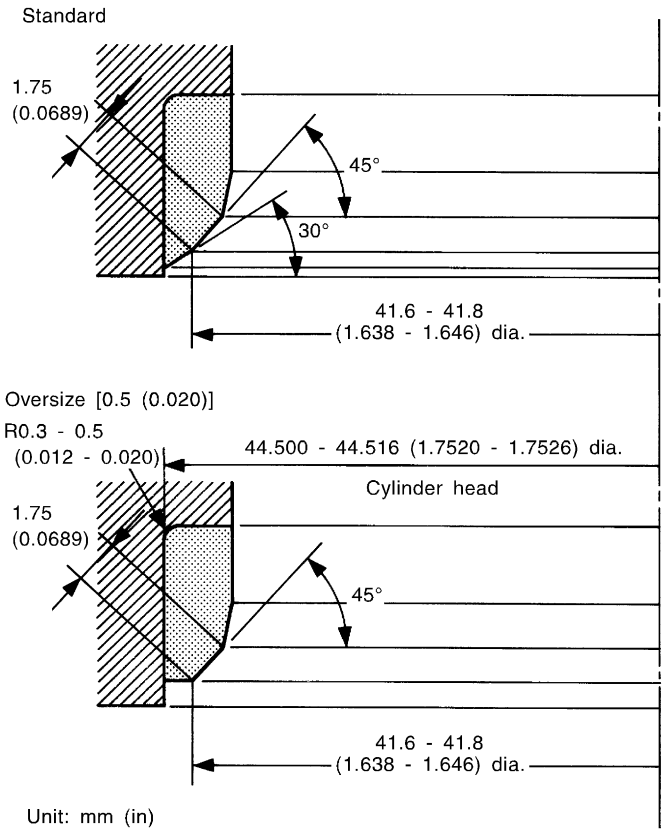

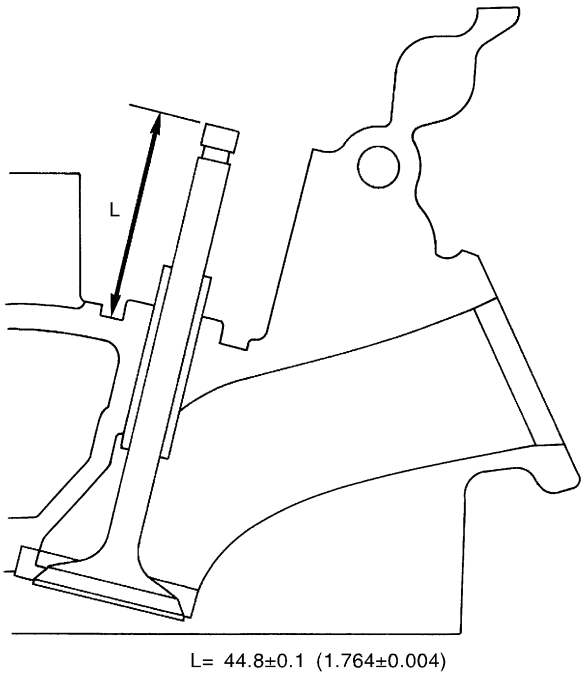

SEM639F

EXHAUST VALVE SEAT

NEEM0029S02

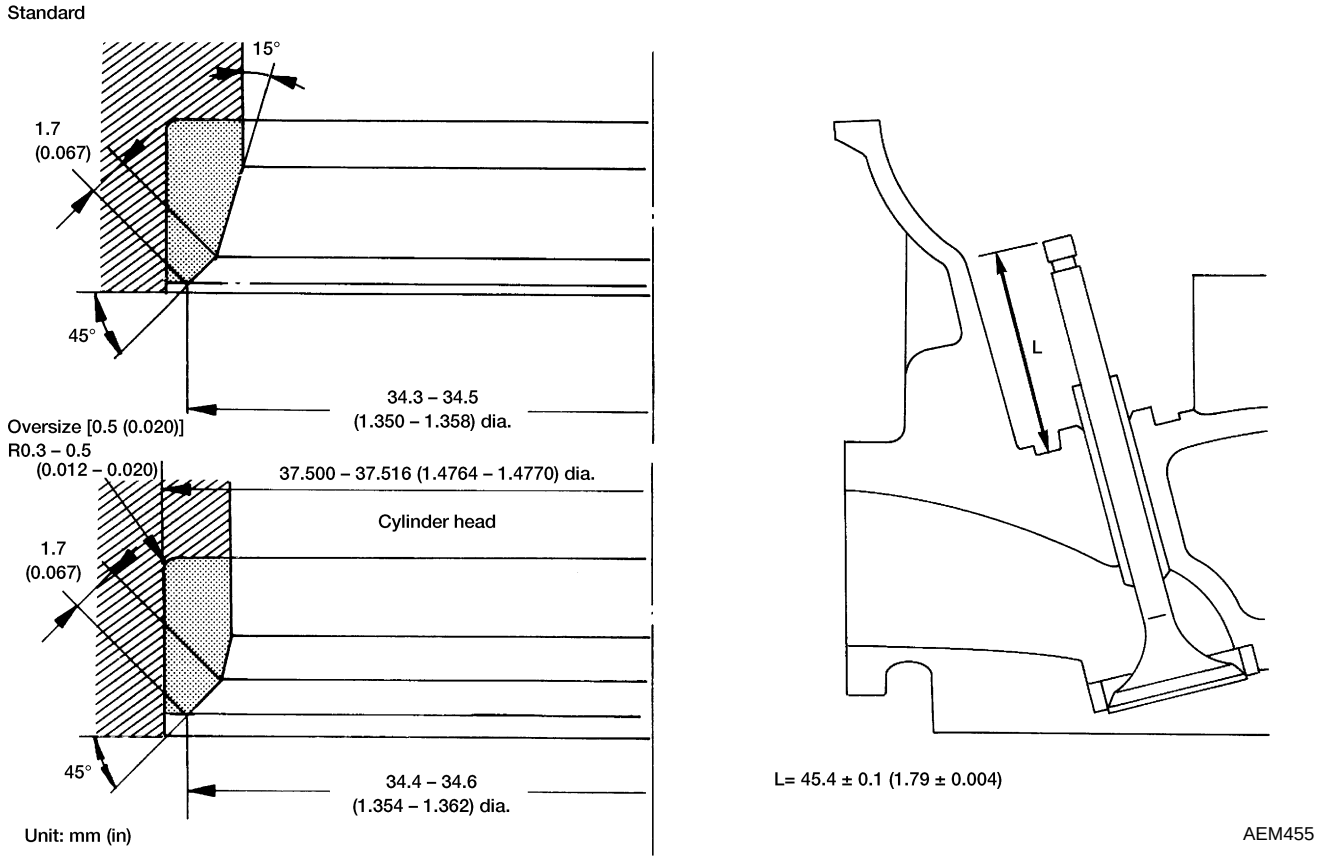

Camshaft and Camshaft Bearing

NEEM0030

Unit: mm (in)

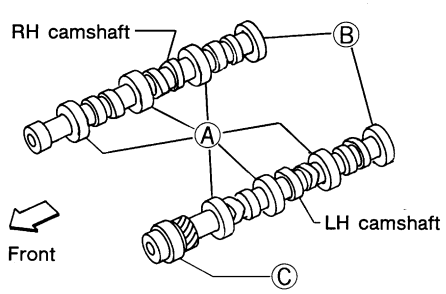

SEM893BA

	Standard	Max. tolerance
Camshaft journal to bearing clearance	0.060 - 0.105 (0.0024 - 0.0041)	0.15 (0.0059)
Inner diameter of camshaft bearing	A: 47.000 - 47.025 (1.8504 - 1.8514)	—
	B: 42.500 - 42.525 (1.6732 - 1.6742)	—
	C: 48.000 - 48.025 (1.8898 - 1.8907)	—
Outer diameter of camshaft journal	A: 46.920 - 46.940 (1.8472 - 1.8480)	—
	B: 42.420 - 42.440 (1.6701 - 1.6709)	—
	C: 47.920 - 47.940 (1.8866 - 1.8874)	—
Camshaft runout [TIR*]	Less than 0.04 (0.0016)	0.1 (0.004)
Camshaft end play	0.03 - 0.06 (0.0012 - 0.0024)	—

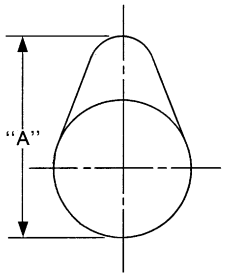

EM671

Cam height "A"	Intake	38.943 - 39.133 (1.5332 - 1.5407)
	Exhaust	38.943 - 39.133 (1.5332 - 1.5407)
Wear limit of cam height		0.15 (0.0059)

*Total indicator reading

Cylinder Block

NEEM0031
Unit: mm (in)

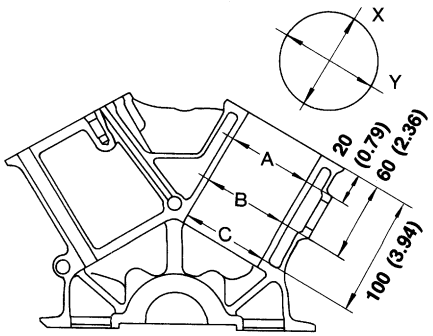

SEM321A

Surface flatness		Standard		Less than 0.03 (0.0012)
		Limit		0.10 (0.0039)
Cylinder bore	Inner diameter	Standard (for No. 3 and 4 cylinders)	Grade No. 1	91.500 - 91.505 (3.6024 - 3.6026)
			Grade No. 2	91.505 - 91.510 (3.6026 - 3.6027)
			Grade No. 3	91.510 - 91.515 (3.6027 - 3.6029)
			Grade No. 4	91.515 - 91.520 (3.6029 - 3.6031)
			Grade No. 5	91.520 - 91.525 (3.6031 - 3.6033)
			Grade No. 6	91.525 - 91.530 (3.6033 - 3.6035)
		Standard (for No. 1, 2 and 6 cylinders)	Grade No. 1	91.500 - 91.510 (3.6024 - 3.6027)
			Grade No. 2	91.510 - 91.520 (3.6027 - 3.6031)
			Grade No. 3	91.520 - 91.530 (3.6031 - 3.6035)
		Standard (for No. 5 cylinder)	Grade No. 1	91.515 - 91.520 (3.6029 - 3.6031)
			Grade No. 2	91.520 - 91.525 (3.6031 - 3.6033)
			Grade No. 3	91.525 - 91.530 (3.6033 - 3.6035)
			Grade No. 4	91.530 - 91.535 (3.6035 - 3.6037)
			Grade No. 5	91.535 - 91.540 (3.6037 - 3.6039)
			Grade No. 6	91.540 - 91.545 (3.6039 - 3.6041)
		Wear limit		0.20 (0.0079)
Out-of-round (X − Y)				Less than 0.015 (0.0006)
Taper (A − B or A − C)				Less than 0.015 (0.0006)
Main journal inner diameter		No. 1 main journal	Grade No. 3	66.645 - 66.651 (2.6238 - 2.6240)
			Grade No. 4	66.651 - 66.657 (2.6240 - 2.6243)
			Grade No. 5	66.657 - 62.663 (2.6243 - 2.6245)
			Grade No. 6	66.663 - 66.669 (2.6245 - 2.6248)
		Except No. 1 main journal	Grade No. 0	66.645 - 66.654 (2.6238 - 2.6242)
			Grade No. 1	66.654 - 66.663 (2.6242 - 2.6245)
			Grade No. 2	66.663 - 66.672 (2.6245 - 2.6249)
Difference in inner diameter between cylinders		Standard		Less than 0.05 (0.0020)

Piston, Piston Ring and Piston Pin

NEEM0032

AVAILABLE PISTON

NEEM0032S01
Unit: mm (in)

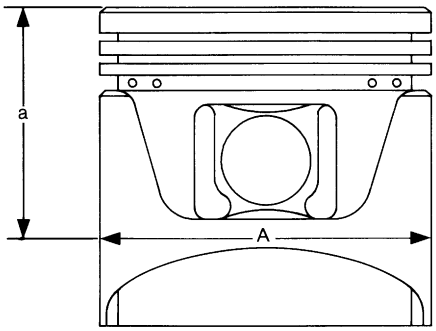

SEM882E

Piston skirt diameter "A"	Standard (for No. 3, 4 and 5 cylinders)	Grade No. 2-1	91.480 - 91.485 (3.6016 - 3.6018)
		Grade No. 3-2	91.485 - 91.490 (3.6018 - 3.6020)
		Grade No. 3-3	91.490 - 91.495 (3.6020 - 3.6022)
		Grade No. 4-4	91.495 - 91.500 (3.6022 - 3.6024)
		Grade No. 4-5	91.500 - 91.505 (3.6024 - 3.6026)
		Grade No. 5-6	91.505 - 91.510 (3.6026 - 3.6027)
	Standard (for No. 1, 2 and 6 cylinders)	Grade No. 1	91.465 - 91.475 (3.6010 - 3.6014)
		Grade No. 2	91.475 - 91.485 (3.6014 - 3.6018)
		Grade No. 3	91.485 - 91.495 (3.6018 - 3.6022)
	0.25 (0.0098) oversize (Service)		91.715 - 91.745 (3.6108 - 3.6120)
	0.50 (0.0197) oversize (Service)		91.965 - 91.995 (3.6207 - 3.6218)
"a" dimension			49.0 (1.929)
Piston pin hole diameter		Grade No. 0	20.969 - 20.975 (0.8255 - 0.8258)
		Grade No. 1	20.975 - 20.981 (0.8258 - 0.8260)
Piston clearance to cylinder block	Standard	For No. 3 and 4 cylinders	0.015 - 0.025 (0.0006 - 0.0010)
		For No. 1, 2 and 6 cylinders (No. 5 cylinder - VG33ER only)	0.025 - 0.045 (0.0010 - 0.0018)
		For No. 5 cylinder (VG33E only)	0.030 - 0.040 (0.0012 - 0.0016)

PISTON RING

NEEM0032S02
Unit: mm (in)

		Standard	Limit
Side clearance	Top	0.040 - 0.080 (0.0016 - 0.0031)	0.11 (0.0043)
	2nd	0.030 - 0.070 (0.0012 - 0.0028)	0.10 (0.004)
	Oil	0.015 - 0.185 (0.0006 - 0.0073)	—
Ring gap	Top	0.21 - 0.31 (0.0083 - 0.0122)	0.43 (0.0169)
	2nd	0.50 - 0.60 (0.0197 - 0.0236)	0.69 (0.0272)
	Oil (rail ring)	0.20 - 0.60 (0.0079 - 0.0236)	0.84 (0.0331)

PISTON PIN

NEEM0032S03
Unit: mm (in)/[in]

Piston pin outer diameter	20.971 - 20.983 (0.8256 - 0.8261)
Interference fit of piston pin to piston	0 to (- 0.004) [0 to (- 0.0002)]
Piston pin to connecting rod bushing clearance	0.005 - 0.017 (0.0002 - 0.0007)

Values measured at ambient temperature of 20°C (68°F)

Connecting Rod

NEEM0033
Unit: mm (in)

Center distance		154.1 - 154.2 (6.067 - 6.071)
Bend, torsion [per 100 (3.94)]	Limit	Bend: 0.15 (0.0059) Torsion: 0.30 (0.0118)
Piston pin bushing inner diameter*		20.982 - 20.994 (0.8261 - 0.8265)
Connecting rod big end inner diameter		53.000 - 53.013 (2.0866 - 2.0871)
Side clearance	Standard	0.20 - 0.35 (0.0079 - 0.0138)
	Limit	0.40 (0.0157)

*After installing in connecting rod

Crankshaft

NEEM0034
Unit: mm (in)

Main journal dia. "Dm"	No. 1 main journal	Grade No. 3	62.696 - 62.975 (2.4683 - 2.4793
		Grade No. 4	62.963 - 62.969 (2.4789 - 2.4791)
		Grade No. 5	62.957 - 62.963 (2.4786 - 2.4789)
		Grade No. 6	62.951 - 62.957 (2.4784 - 2.4786)
	Except No. 1 main journal	Grade No. 0	62.967 - 62.975 (2.4790 - 2.4793)
		Grade No. 1	62.959 - 62.967 (2.4787 - 2.4790)
		Grade No. 2	62.951 - 62.959 (2.4784 - 2.4787)
Pin journal dia. "Dp"			49.955 - 49.974 (1.9667 - 1.9675)
Center distance "r"			41.5 (1.634)
Out-of-round (X − Y)		Standard	Less than 0.005 (0.0002)
Taper (A − B)		Standard	Less than 0.005 (0.0002)
Runout [TIR]		Standard	Less than 0.025 (0.0010)
		Limit	Less than 0.10 (0.0039)
Free end play		Standard	0.050 - 0.170 (0.0020 - 0.0067)
		Limit	0.30 (0.0118)

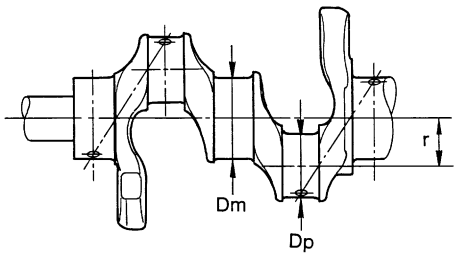

SEM645

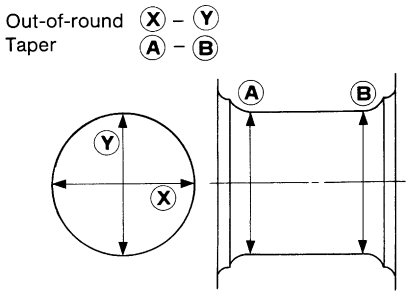

EM715

Available Main Bearing

NEEM0035

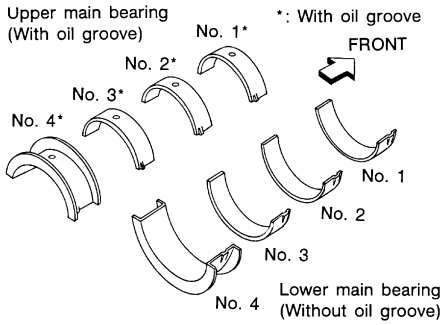

SEM327A

NO. 1 MAIN BEARING

NEEM0035S01

Grade number	Thickness “T” mm (in)	Width “W” mm (in)	Identification color(mark)
0	1.822 - 1.825 (0.0717 - 0.0719)	22.4 - 22.6 (0.882 - 0.890)	Black (A)
1	1.825 - 1.828 (0.0719 - 0.0720)		Brown (B)
2	1.828 - 1.831 (0.0720 - 0.0721)		Green (C)
3	1.831 - 1.834 (0.0721 - 0.0722)		Yellow (D)
4	1.834 - 1.837 (0.0722 - 0.0723)		Blue (E)
5	1.837 - 1.840 (0.0723 - 0.0724)		Pink (F)
6	1.840 - 1.843 (0.0724 - 0.0726)		Purple (G)

NO. 2 AND 3 MAIN BEARING

NEEM0035S02

Grade number	Thickness “T” mm (in)	Width “W” mm (in)	Identification color
0	1.817 - 1.821 (0.0715 - 0.0717)	18.9 - 19.1 (0.744 - 0.752)	Black
1	1.821 - 1.825 (0.0717 - 0.0719)		Brown
2	1.825 - 1.829 (0.0719 - 0.0720)		Green
3	1.829 - 1.833 (0.0720 - 0.0722)		Yellow
4	1.833 - 1.837 (0.0722 - 0.0723)		Blue

NO. 4 MAIN BEARING

NEEM0035S03

Grade number	Thickness “T” mm (in)	Identification color
0	1.817 - 1.821 (0.0715 - 0.0717)	Black
1	1.821 - 1.825 (0.0717 - 0.0719)	Brown
2	1.825 - 1.829 (0.0719 - 0.0720)	Green
3	1.829 - 1.833 (0.0720 - 0.0722)	Yellow
4	1.833 - 1.837 (0.0722 - 0.0723)	Blue

UNDER SIZE

NEEM0035S04

Unit: mm (in)

		Thickness “T” mm (in)	Main journal diameter “Dm”
0.25 (0.0098)	No.1 main bearing	1.956 - 1.962 (0.0770 - 0.0772)	Grind so that bearing clearance is the specified value.
	No.2,3 and No.4 main bearing	1.948 - 1956 (0.0767 - 0.0770)	

Available Connecting Rod Bearing

NEEM0036

CONNECTING ROD BEARING UNDERSIZE

NEEM0036S01

Unit: mm (in)

		Thickness	Crank pin journal diameter “Dp”
Standard		1.502 - 1.506 (0.0591 - 0.0593)	49.955 - 49.974 (1.9667 - 1.9675)
Undersize	0.08 (0.0031)	1.542 - 1.546 (0.0607 - 0.0609)	Grind so that bearing clearance is the specified value.
	0.12 (0.0047)	1.562 - 1.566 (0.0615 - 0.0617)	
	0.25 (0.0098)	1.627 - 1.631 (0.0641 - 0.0642)	

Miscellaneous Components

NEEM0037

Unit: mm (in)

Drive plate runout [TIR]	Less than 0.15 (0.0059)

BEARING CLEARANCE

NEEM0037S01

Unit: mm (in)

Main bearing clearance	No.1 main bearing	Standard	0.030 - 0.048 (0.0012 - 0.0019)
		Limit	0.060 (0.0024)
	No.2, 3 and No.4 main bearing	Standard	0.038 - 0.065 (0.0015 - 0.0026)
		Limit	0.080 (0.0031)
Connecting rod bearing clearance	Standard	0.024 - 0.064 (0.0009 - 0.0025	
	Limit	0.090 (0.0035)	

ENGINE LUBRICATION & COOLING SYSTEMS

SECTION LC

CONTENTS

KA24DE

ENGINE LUBRICATION SYSTEM 3
- Precautions 3
  - SUPPLEMENTAL RESTRAINT SYSTEM (SRS) "AIR BAG" AND "SEAT BELT PRE-TENSIONER" 3
  - LIQUID GASKET APPLICATION PROCEDURE 3
- Preparation 4
  - SPECIAL SERVICE TOOLS 4
- Lubrication Circuit 5
- Oil Pressure Check 6
- Oil Pump 6
  - REMOVAL AND INSTALLATION 6
  - REGULATOR VALVE INSPECTION 7
  - OIL FILTER 7
  - OIL PUMP INSPECTION 7
- Service Data and Specifications (SDS) 8
  - OIL PRESSURE CHECK 8
  - REGULATOR VALVE 8
  - OIL PUMP 8

ENGINE COOLING SYSTEM 9
- Precautions 9
  - SUPPLEMENTAL RESTRAINT SYSTEM (SRS) "AIR BAG" AND "SEAT BELT PRE-TENSIONER" 9
  - LIQUID GASKET APPLICATION PROCEDURE 9
- Preparation 10
  - SPECIAL SERVICE TOOLS 10
- Cooling Circuit 10
- System Check 11
  - CHECKING COOLING SYSTEM HOSES 11
  - CHECKING RADIATOR 11
  - CHECKING COOLING SYSTEM FOR LEAKS 11
  - CHECKING RADIATOR CAP 12
- Water Pump 12
  - REMOVAL 12
  - INSPECTION 12
  - INSTALLATION 13
- Thermostat 13
  - REMOVAL 13
  - INSPECTION 13
  - INSTALLATION 13
- Radiator 14
  - REMOVAL AND INSTALLATION 14
  - COMPONENTS 15
  - INSPECTION 15
- Cooling Fan (Crankshaft driven) 16
  - REMOVAL AND INSTALLATION 16
  - INSPECTION 16
- Refilling Engine Coolant 16
- Overheating Cause Analysis 17
- Service Data and Specifications (SDS) 18
  - THERMOSTAT 18
  - RADIATOR 18

VG33E AND VG33ER

ENGINE LUBRICATION SYSTEM 19
- Precautions 19
  - SUPPLEMENTAL RESTRAINT SYSTEM (SRS) "AIR BAG" AND "SEAT BELT PRE-TENSIONER" 19
  - LIQUID GASKET APPLICATION PROCEDURE 19
- Preparation 20
  - SPECIAL SERVICE TOOLS 20
- Lubrication Circuit 20
- Oil Pressure Check 21
- Oil Pump 21
  - REMOVAL AND INSTALLATION 21
  - DISASSEMBLY AND ASSEMBLY 22
  - INSPECTION 23
  - REGULATOR VALVE INSPECTION 23
  - OIL FILTER 23
  - OIL FILTER BRACKET 24
- Service Data and Specifications (SDS) 25
  - OIL PRESSURE CHECK 25
  - REGULATOR VALVE 25
  - OIL PUMP 25

ENGINE COOLING SYSTEM 26
- Precautions 26
  - SUPPLEMENTAL RESTRAINT SYSTEM (SRS) "AIR BAG" AND "SEAT BELT PRE-TENSIONER" 26
  - LIQUID GASKET APPLICATION PROCEDURE 26
- Preparation 27

CONTENTS (Cont'd)

SPECIAL SERVICE TOOLS 27
Cooling Circuit 27
System Check 27
CHECKING COOLING SYSTEM HOSES 27
CHECKING RADIATOR CAP 28
CHECKING RADIATOR 28
CHECKING COOLING SYSTEM FOR LEAKS 28
Water Pump 29
REMOVAL 29
INSPECTION 30
INSTALLATION 30
Thermostat 30
REMOVAL 30
INSPECTION 31
INSTALLATION 31
Radiator 32
REMOVAL AND INSTALLATION 32
COMPONENTS 32
INSPECTION 33
Cooling Fan (Crankshaft driven) 33
REMOVAL AND INSTALLATION 33
INSPECTION 33
Refilling Engine Coolant 35
Overheating Cause Analysis 35
Service Data and Specifications (SDS) 36
THERMOSTAT 36
RADIATOR 36

Precautions

SUPPLEMENTAL RESTRAINT SYSTEM (SRS) “AIR BAG” AND “SEAT BELT PRE-TENSIONER”

NELC0140

The Supplemental Restraint System such as “AIR BAG” and “SEAT BELT PRE-TENSIONER” used along with a seat belt, helps to reduce the risk or severity of injury to the driver and front passenger in a frontal collision. The Supplemental Restraint System consists of air bag modules (located in the center of the steering wheel and in the instrument panel on the passenger side), seat belt pre-tensioners, a diagnosis sensor unit, warning lamp, wiring harness, and spiral cable.

The vehicle (except Crew Cab model) is equipped with a passenger air bag deactivation switch. Because no rear seat exists where a rear-facing child restraint can be placed, the switch is designed to turn off the passenger air bag so that a rear-facing child restraint can be used in the front passenger seat. The switch is located in the center of the instrument panel, near the ashtray. When the switch is turned to the ON position, the passenger air bag is enabled and could inflate in a frontal collision. When the switch is turned to the OFF position, the passenger air bag is disabled and will not inflate in a frontal collision. A passenger air bag OFF indicator on the instrument panel lights up when the passenger air bag is switched OFF. The driver air bag always remains enabled and is not affected by the passenger air bag deactivation switch.

Information necessary to service the system safely is included in the **RS section** of this Service Manual.

WARNING:

- **To avoid rendering the SRS inoperative, which could increase the risk of personal injury or death in the event of a collision which would result in air bag inflation, all maintenance should be performed by an authorized NISSAN dealer.**
- **Improper maintenance, including incorrect removal and installation of the SRS, can lead to personal injury caused by unintentional activation of the system. For removal of Spiral Cable and Air Bag Module, see the RS section.**
- **Do not use electrical test equipment on any circuit related to the SRS unless instructed to in this Service Manual. Spiral cable and wiring harnesses (except “SEAT BELT PRE-TENSIONER”) covered with yellow insulation either just before the harness connectors or for the complete harness are related to the SRS.**
- **The vehicle (except Crew Cab model) is equipped with a passenger air bag deactivation switch which can be operated by the customer. When the passenger air bag is switched OFF, the passenger air bag is disabled and will not inflate in a frontal collision. When the passenger air bag is switched ON, the passenger air bag is enabled and could inflate in a frontal collision. After SRS maintenance or repair, make sure the passenger air bag deactivation switch is in the same position (ON or OFF) as when the vehicle arrived for service.**

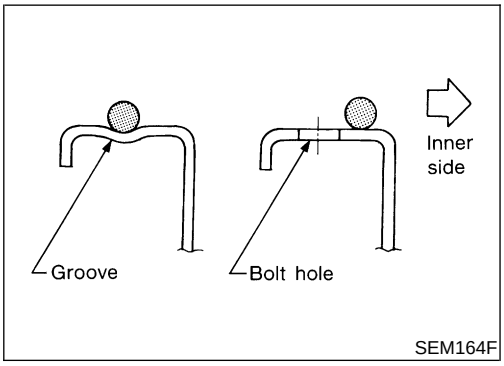

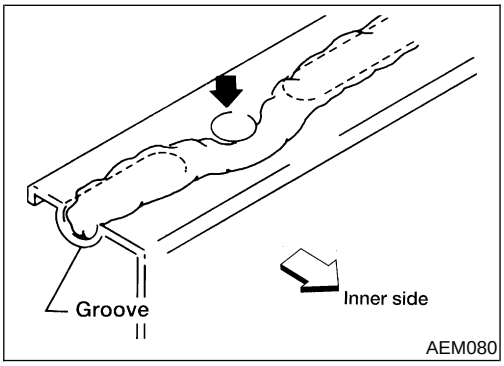

LIQUID GASKET APPLICATION PROCEDURE

NELC0141

1. Use a scraper to remove all traces of old liquid gasket from mating surfaces and grooves. Also, completely clean any oil from these areas.
2. Apply a continuous bead of liquid gasket to mating surfaces. Use Genuine RTV Silicone Sealant Part No. 999MP-A7007 or equivalent.
   - For oil pan, be sure liquid gasket diameter is 3.5 to 4.5 mm (0.138 to 0.177 in).
   - For areas except oil pan, be sure liquid gasket diameter is 2.0 to 3.0 mm (0.079 to 0.118 in).
3. Apply liquid gasket around the inner side of bolt holes (unless otherwise specified).
4. Assembly should be done within 5 minutes after coating.
5. Wait at least 30 minutes before refilling engine oil and engine coolant.

Preparation

SPECIAL SERVICE TOOLS

=NELC0142

The actual shapes of Kent-Moore tools may differ from those of special service tools illustrated here.

Tool number (Kent-Moore No.) Tool name	Description	
(J34301-C) Oil pressure gauge set 1: (J34301-1) Oil pressure gauge 2: (J34301-2) Hoses 3: (J34298) Adapter 4: (J34282-1) Adapter 5: (790-301-1230-A) 60° adapter 6: (J34301-15) Square socket	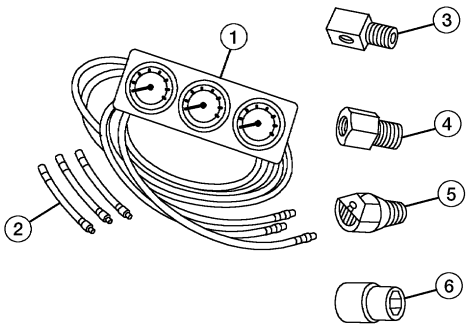 AAT896	Measuring oil pressure **Maximum measuring range:** **1,379 kPa (14 kg/cm^2, 200 psi)**
WS39930000 (—) Tube presser	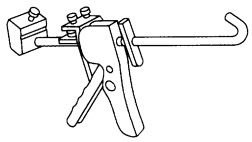 NT052	Pressing the tube of liquid gasket
KV10115801 (J38956) Oil filter wrench	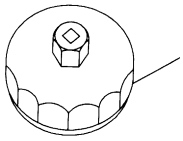 NT362	Removing oil filter

Lubrication Circuit

NELC0143

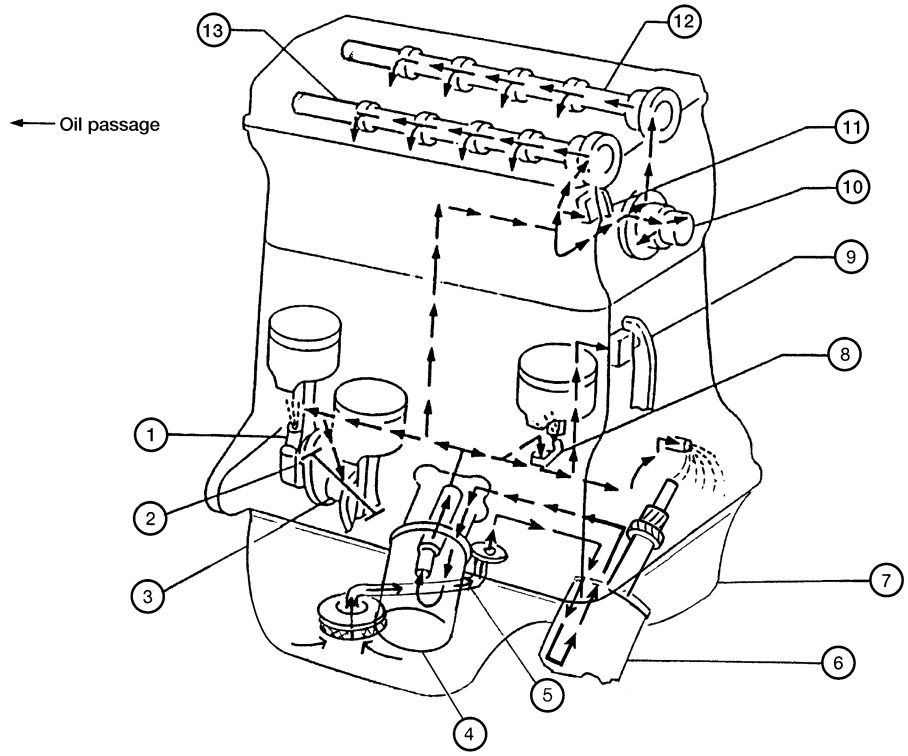

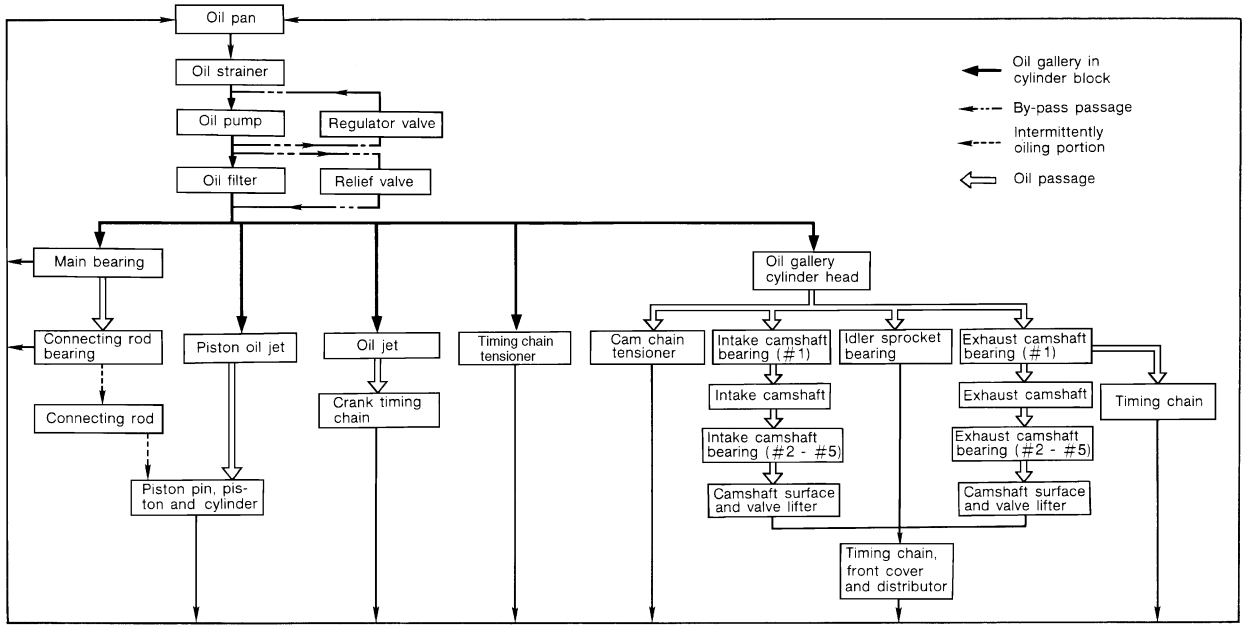

ALC116

1. Connecting rod
2. Connecting rod bearing
3. Main bearing
4. Oil filter
5. Oil strainer
6. Oil pump
7. Oil pan
8. Piston oil jet
9. Timing chain tensioner
10. Idler sprocket
11. Upper timing chain tensioner
12. Exhaust camshaft
13. Intake camshaft

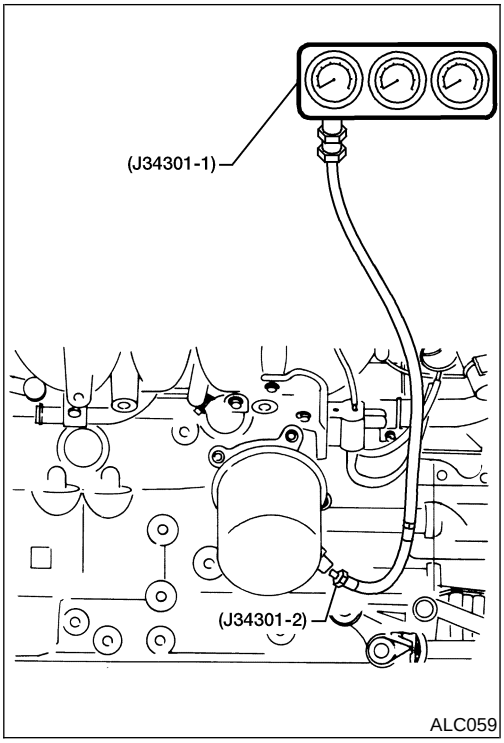

Oil Pressure Check

NELC0144

WARNING:

- **Be careful not to burn yourself, as the engine and oil may be hot.**
- **For M/T models, put gearshift lever in Neutral "N" position. For A/T models, put selector lever in Park "P" position.**

1. Check oil level.
2. Remove oil pressure switch.
3. Install pressure gauge.
4. Start engine and warm it up to normal operating temperature.
5. Check oil pressure with engine running under no-load.

Engine speed	Approximate discharge pressure
Idle speed	More than 78 kPa (0.8 kg/cm^2, 11 psi)
3,000 rpm	412 - 481 kPa (4.2 - 4.9 kg/cm^2, 60 - 70 psi)

- **If difference is extreme, check oil passage and oil pump for oil leaks.**

6. Install oil pressure switch with sealant.

: 12.25 – 17.25 N·m (1.3 – 1.7 kg-m, 9 – 12 ft-lb)

Oil Pump

REMOVAL AND INSTALLATION

NELC0145

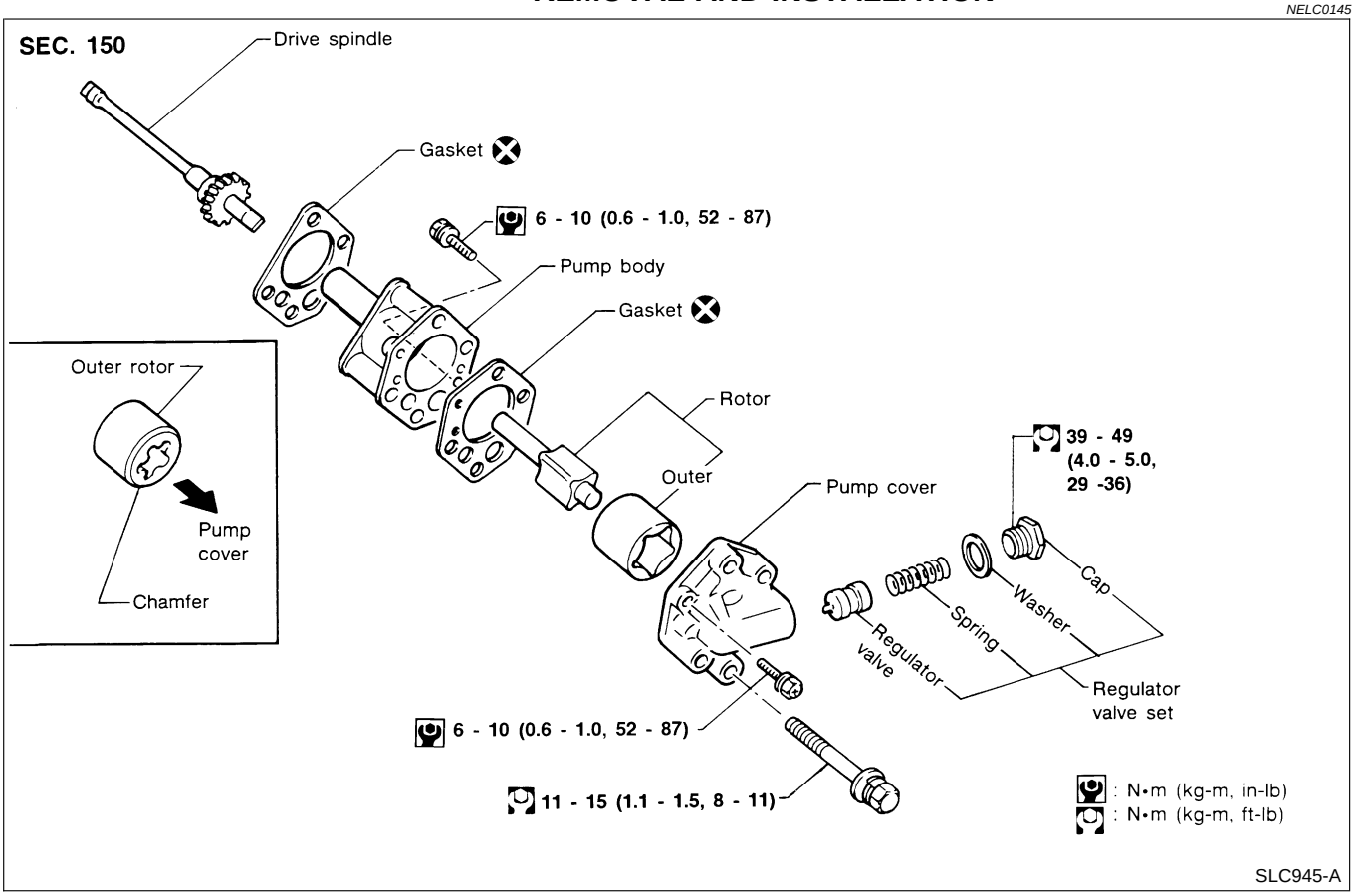

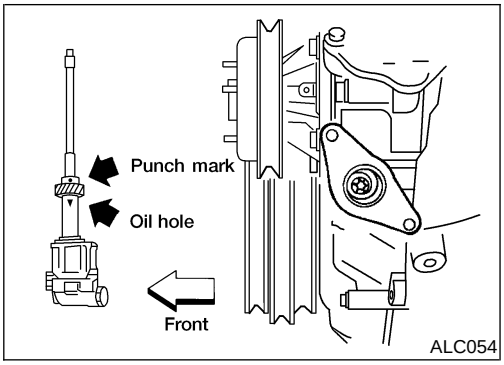

ALC054

- **Always replace with new oil seal and gasket.**
- **When removing oil pump, turn crankshaft so that No. 1 piston is at TDC on its compression stroke.**
- **When installing oil pump, apply engine oil to gears, then align punch mark on drive spindle and oil hole on oil pump.**

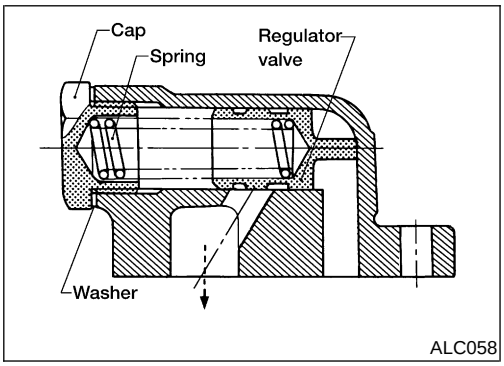

ALC058

REGULATOR VALVE INSPECTION

NELC0146

1. Visually inspect components for wear and damage.
2. Check oil pressure regulator valve sliding surface and valve spring.
3. Coat regulator valve with engine oil. Check that it falls smoothly into the valve hole by its own weight.

- **Replace regulator valve set or oil pump assembly, if damaged.**

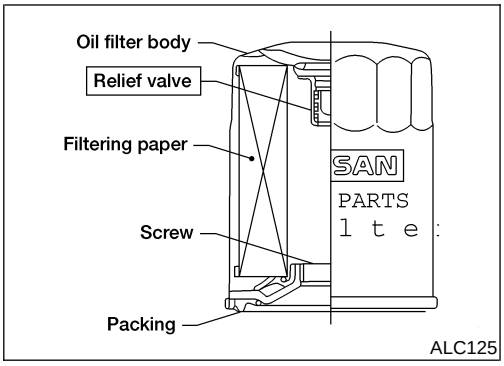

ALC125

OIL FILTER

NELC0147

The oil filter is a small, full-flow cartridge type and is provided with a relief valve.

- **Use Tool KV10115801 (J38956) for removing oil filter.**

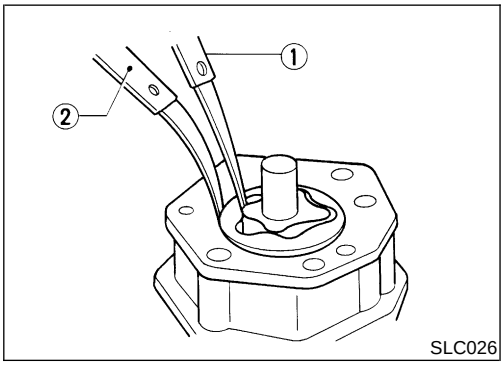

SLC026

OIL PUMP INSPECTION

NELC0148

Using a feeler gauge, check the following clearances.

Standard clearance:

Unit: mm (in)

Rotor tip clearance **1**	Less than 0.12 (0.0047)
Outer rotor to body clearance **2**	0.15 - 0.21 (0.0059 - 0.0083)
Side clearance (with gasket) **3**	0.04 - 0.100 (0.0016 - 0.0039)

- **If the tip clearance (1) exceeds the limit, replace rotor set.**
- **If body to rotor clearances (2, 3) exceed the limit, replace oil pump assembly.**

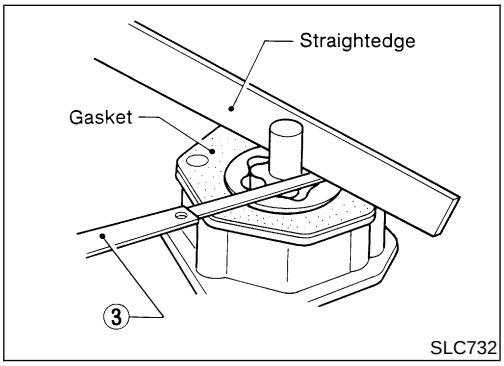

SLC732

Service Data and Specifications (SDS)

OIL PRESSURE CHECK

NELC0149

Engine speed	Approximate discharge pressure
Idle speed	More than 78 kPa (0.8 kg/cm^2, 11 psi)
3,000 rpm	412 - 481 kPa (4.2 - 4.9 kg/cm^2, 60 - 70 psi)

REGULATOR VALVE

NELC0150
Unit: mm (in)

Regulator valve to oil pump cover clearance	0.040 - 0.097 (0.0016 - 0.0038)

OIL PUMP

NELC0151
Unit: mm (in)

Rotor tip clearance	Less than 0.12 (0.0047)
Outer rotor to body clearance	0.15 - 0.21 (0.0059 - 0.0083)
Side clearance (with gasket)	0.04 - 0.100 (0.0016 - 0.0039)

Precautions

SUPPLEMENTAL RESTRAINT SYSTEM (SRS) “AIR BAG” AND “SEAT BELT PRE-TENSIONER”

NELC0152

The Supplemental Restraint System such as “AIR BAG” and “SEAT BELT PRE-TENSIONER” used along with a seat belt, helps to reduce the risk or severity of injury to the driver and front passenger in a frontal collision. The Supplemental Restraint System consists of air bag modules (located in the center of the steering wheel and in the instrument panel on the passenger side), seat belt pre-tensioners, a diagnosis sensor unit, warning lamp, wiring harness, and spiral cable.

The vehicle (except Crew Cab model) is equipped with a passenger air bag deactivation switch. Because no rear seat exists where a rear-facing child restraint can be placed, the switch is designed to turn off the passenger air bag so that a rear-facing child restraint can be used in the front passenger seat. The switch is located in the center of the instrument panel, near the ashtray. When the switch is turned to the ON position, the passenger air bag is enabled and could inflate in a frontal collision. When the switch is turned to the OFF position, the passenger air bag is disabled and will not inflate in a frontal collision. A passenger air bag OFF indicator on the instrument panel lights up when the passenger air bag is switched OFF. The driver air bag always remains enabled and is not affected by the passenger air bag deactivation switch.

Information necessary to service the system safely is included in the **RS section** of this Service Manual.

WARNING:

- **To avoid rendering the SRS inoperative, which could increase the risk of personal injury or death in the event of a collision which would result in air bag inflation, all maintenance should be performed by an authorized NISSAN dealer.**
- **Improper maintenance, including incorrect removal and installation of the SRS, can lead to personal injury caused by unintentional activation of the system. For removal of Spiral Cable and Air Bag Module, see the RS section.**
- **Do not use electrical test equipment on any circuit related to the SRS unless instructed to in this Service Manual. Spiral cable and wiring harnesses (except “SEAT BELT PRE-TENSIONER”) covered with yellow insulation either just before the harness connectors or for the complete harness are related to the SRS.**
- **The vehicle (except Crew Cab model) is equipped with a passenger air bag deactivation switch which can be operated by the customer. When the passenger air bag is switched OFF, the passenger air bag is disabled and will not inflate in a frontal collision. When the passenger air bag is switched ON, the passenger air bag is enabled and could inflate in a frontal collision. After SRS maintenance or repair, make sure the passenger air bag deactivation switch is in the same position (ON or OFF) as when the vehicle arrived for service.**

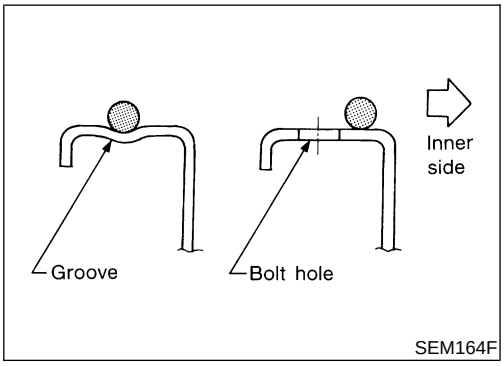

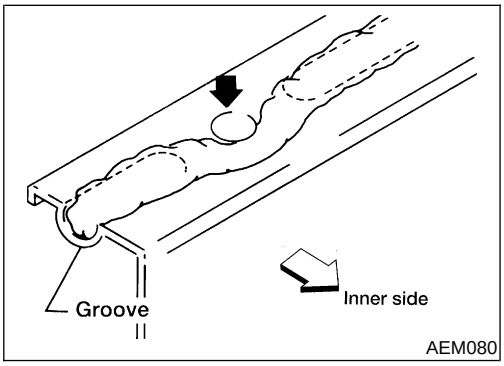

LIQUID GASKET APPLICATION PROCEDURE

NELC0153

1. Use a scraper to remove all traces of old liquid gasket from mating surfaces and grooves. Also, completely clean any oil from these areas.
2. Apply a continuous bead of liquid gasket to mating surfaces. Use Genuine RTV Silicone Sealant Part No. 999MP-A7007 or equivalent.
   - For oil pan, be sure liquid gasket diameter is 3.5 to 4.5 mm (0.138 to 0.177 in).
   - For areas except oil pan, be sure liquid gasket diameter is 2.0 to 3.0 mm (0.079 to 0.118 in).
3. Apply liquid gasket around the inner side of bolt holes (unless otherwise specified).
4. Assembly should be done within 5 minutes after coating.
5. Wait at least 30 minutes before refilling engine oil and engine coolant.

Preparation

SPECIAL SERVICE TOOLS

=NELC0154

The actual shapes of Kent-Moore tools may differ from those of special service tools illustrated here.

Tool number (Kent-Moore No.) Tool name	Description	
EG17650301 (J33984-A) Radiator cap tester adapter	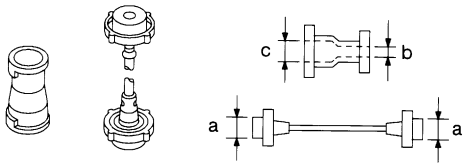 NT564	Adapting radiator cap tester to radiator filler neck **a: 28 (1.10) dia.** **b: 31.4 (1.236) dia.** **c: 41.3 (1.626) dia.** Unit: mm (in)
WS39930000 (—) Tube presser	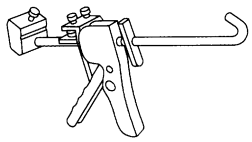 NT052	Pressing the tube of liquid gasket

Cooling Circuit

NELC0155

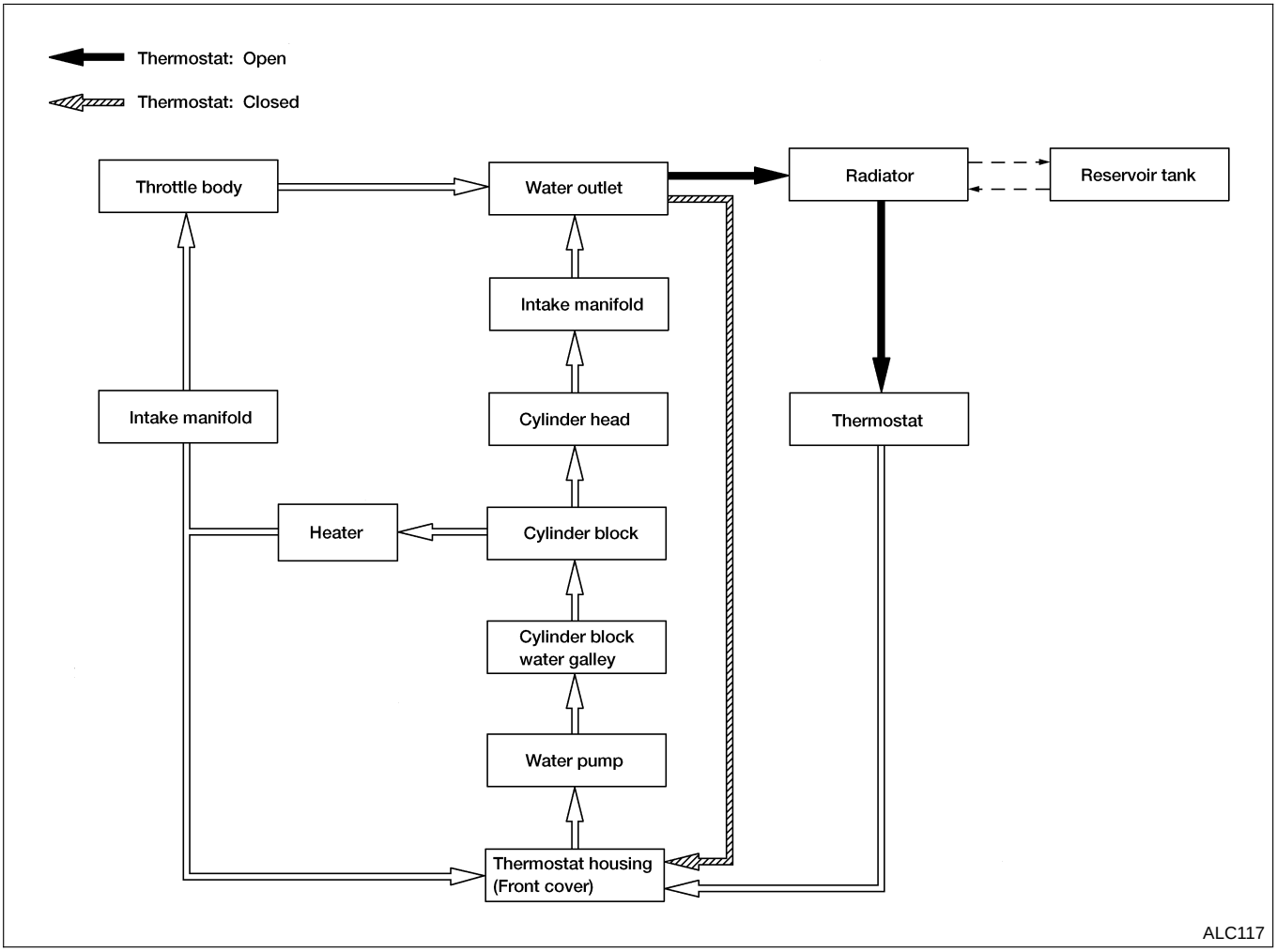

System Check

NELC0156

WARNING:

Never remove the radiator cap when the engine is hot. Serious burns could occur from high pressure coolant escaping from the radiator.

Wrap a thick cloth around the radiator cap. Slowly turn it a quarter turn to allow built-up pressure to escape. Carefully remove the radiator cap by turning it all the way.

CHECKING COOLING SYSTEM HOSES

NELC0156S01

Check hoses for the following:

- Improper attachment
- Leaks
- Cracks
- Damage
- Chafing
- Deterioration

CHECKING RADIATOR

NELC0156S02

Check radiator for mud or clogging. If necessary, clean radiator as follows.

- Be careful not to bend or damage the radiator fins.
- When radiator is cleaned without removal, remove all surrounding parts such as cooling fan, radiator shroud and horns.
- Tape the harness connectors to prevent water from entering.

1. Apply water by hose to the back side of the radiator core vertically downward.
2. Apply water again to all radiator core surfaces once per minute.
3. Stop washing when water flows clear coming out of the radiator.
4. Blow air into the back side of radiator core vertically downward.
   - Use compressed air lower than 490 kPa (5 kg/cm^2, 71 psi) and keep the air hose end more than 30 cm (11.8 in) away from the core.
5. Blow air again into all the radiator core surfaces once per minute until no water sprays out and the core is dry.

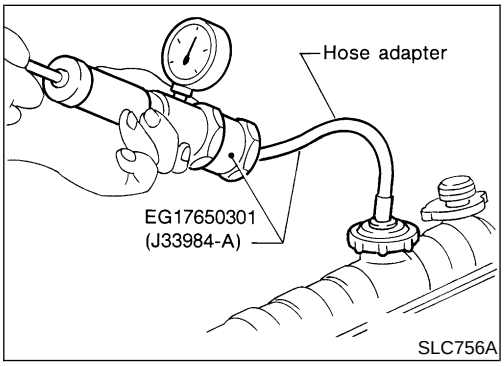

CHECKING COOLING SYSTEM FOR LEAKS

NELC0156S03

To check for leakage, apply pressure to the cooling system with a radiator cap tester.

Testing pressure:

157 kPa (1.6 kg/cm^2, 23 psi)

CAUTION:

Higher pressure than specified may cause radiator damage.

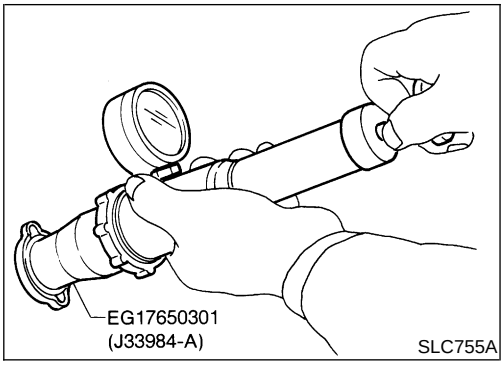

CHECKING RADIATOR CAP

NELC0156S04

To check radiator cap, apply pressure to radiator cap with a radiator cap tester.

Radiator cap relief pressure:

Standard

78 - 98 kPa (0.8 - 1.0 kg/cm^2, 11 - 14 psi)

Limit

59 - 98 kPa (0.6 - 1.0 kg/cm^2, 9 - 14 psi)

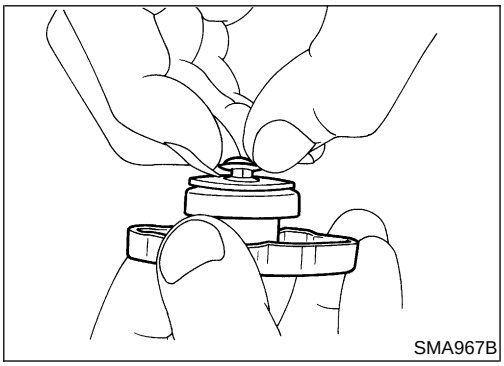

Pull the negative pressure valve to open it.
Check that it closes completely when released.

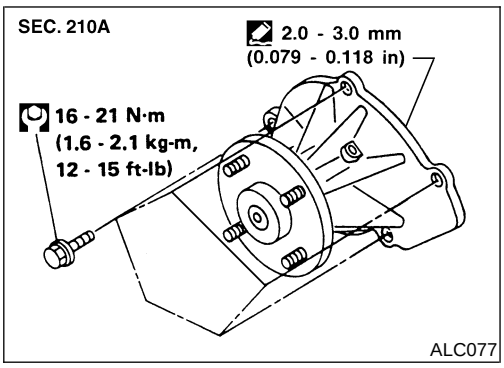

Water Pump

REMOVAL

NELC0157

CAUTION:

- **When removing water pump assembly, be careful not to get coolant on drive belts.**
- **Water pump cannot be disassembled and should be replaced as a unit.**
- **After installing water pump, connect hose and clamp securely. Check for leaks using radiator cap tester.**

1. Drain coolant from engine.
   Refer to ***MA-17***, "Changing Engine Coolant".
2. Remove fan coupling with fan.
3. Remove power steering pump drive belt, generator drive belt and A/C compressor drive belt.
4. Remove water pump.

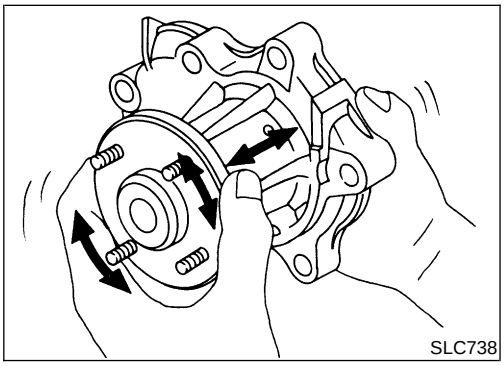

INSPECTION

NELC0158

- Check body assembly for rust or corrosion.
- Check for rough operation due to excessive end play.

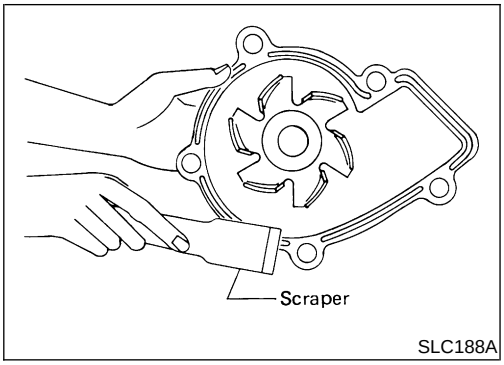

SLC188A

INSTALLATION

NELC0159

1. Use a scraper to remove liquid gasket from water pump.
- **Also remove traces of liquid gasket from mating surface of cylinder block.**

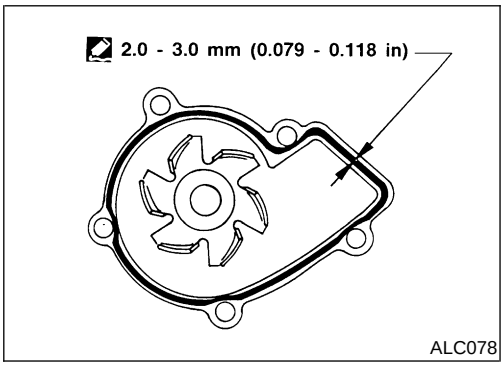

ALC078

2. Apply a continuous bead of liquid gasket to mating surface of water pump.
- **Use Genuine RTV Silicone Sealant Part No. 999MP-A7007 or equivalent.**

Fill the radiator with coolant. Refer to *MA-17*, "Changing Engine Coolant".
Install drive belts. Refer to *MA-16*, "Checking Drive Belts".

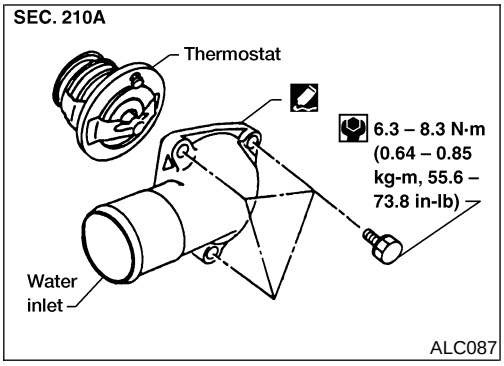

ALC087

Thermostat

REMOVAL

NELC0160

- **Be careful not to spill coolant over engine compartment. Use a rag to absorb coolant.**

1. Drain coolant from engine. Refer to ***MA-17***, "Changing Engine Coolant".
2. Remove air cleaner and air duct assembly.
3. Remove water hose from water inlet housing.
4. Remove water inlet housing, then take out thermostat.

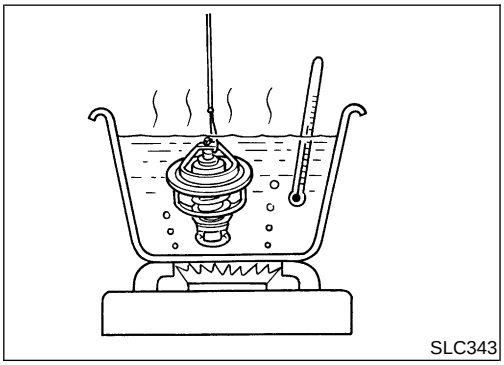
SLC343

INSPECTION

NELC0161

1. Check valve seating condition at normal room temperature. It should seat tightly.
2. Check valve opening temperature and valve lift.

Valve opening temperature	76.5°C (170°F)
Valve lift	More than 8 mm/90°C (0.31 in/194°F)

3. Check if valve closes at 5°C (9°F) below valve opening temperature.

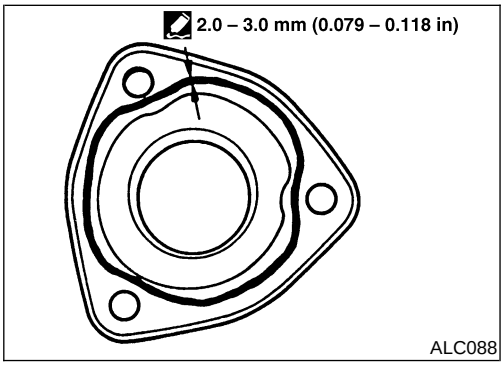

ALC088

INSTALLATION

NELC0162

1. Use a scraper to remove old liquid gasket from water inlet.
- **Also remove traces of liquid gasket from mating surface of front cover.**

2. Apply a continuous bead of liquid gasket to mating surface of water inlet.
- **Use Genuine RTV Silicone Sealant Part No. 999MP-A7007 or equivalent.**

Thermostat (Cont'd)

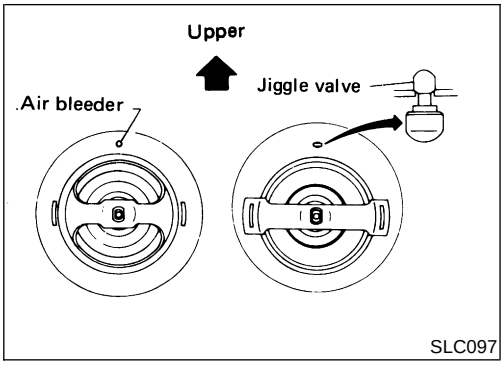

3. Install thermostat with jiggle valve or air bleeder at upper side.
4. Install water inlet housing.
5. Install water hose to water inlet housing.
6. Install air cleaner and air duct assembly.
7. Refill engine coolant. Refer to ***MA-17***, " Changing Engine Coolant".

- **After installation, run engine for a few minutes and check for leaks.**

Radiator

REMOVAL AND INSTALLATION

NELC0163

1. Remove under cover.
2. Drain coolant from radiator. Refer to ***MA-17***, "Changing Engine Coolant".
3. Disconnect upper and lower radiator hoses.
4. Remove air cleaner and air duct assembly.
5. Remove lower radiator shroud.
6. Remove radiator shroud.
7. Remove A/T oil cooler hoses (A/T models only).
8. Disconnect coolant reservoir hose.
9. Remove radiator.
10. After replacing radiator, install all parts in reverse order of removal.
11. Refill engine coolant. Refer to ***MA-17***, "Changing Engine Coolant".

- **After installation, run engine for a few minutes, and check for leaks.**

COMPONENTS

NELC0164

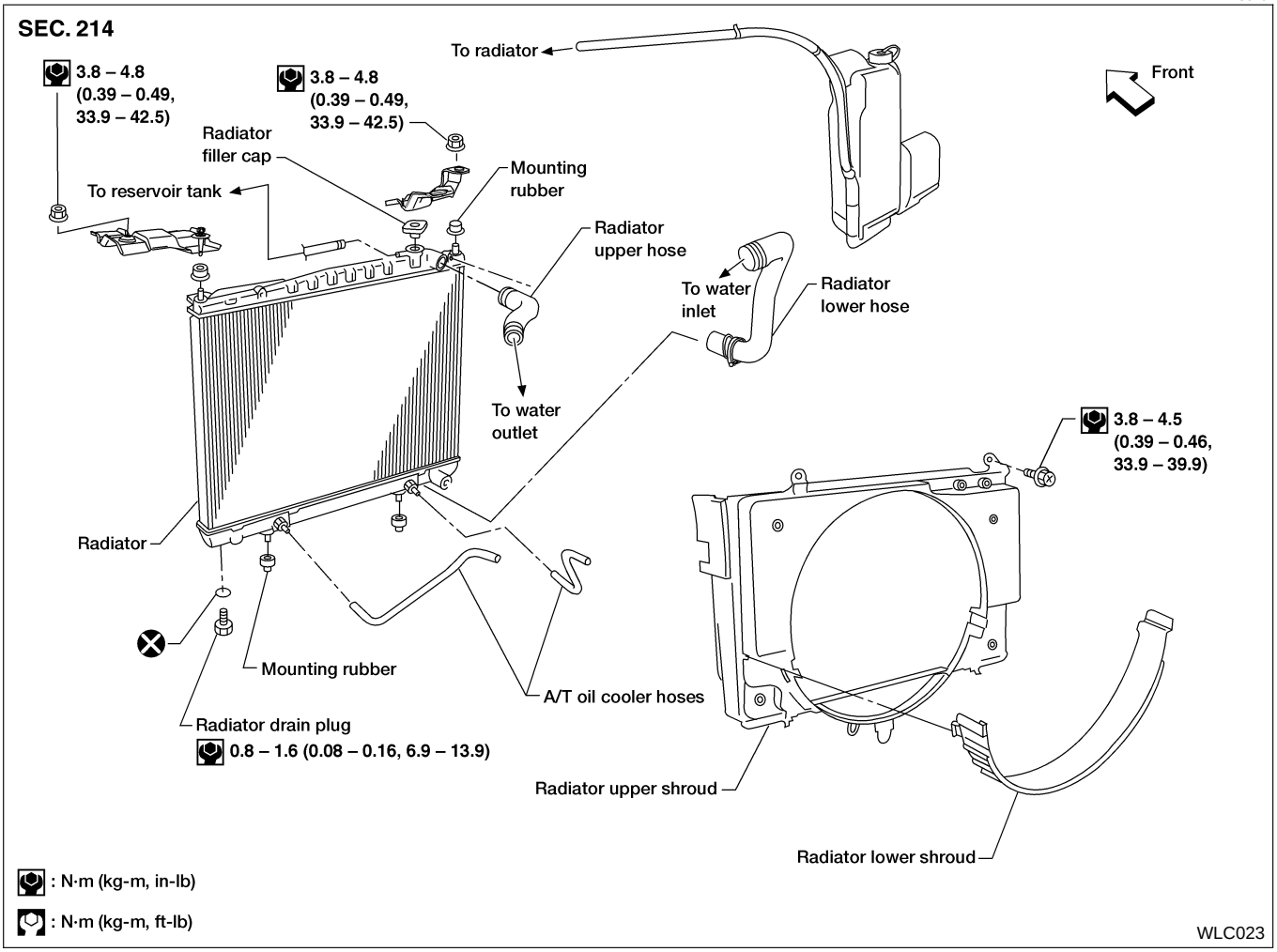

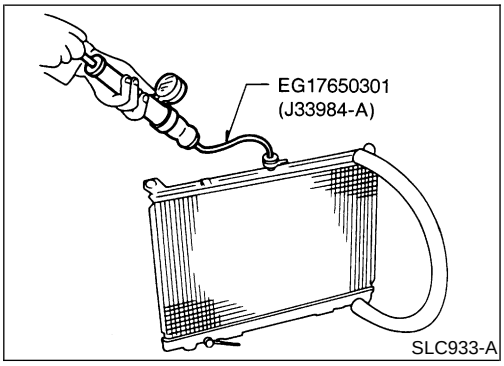

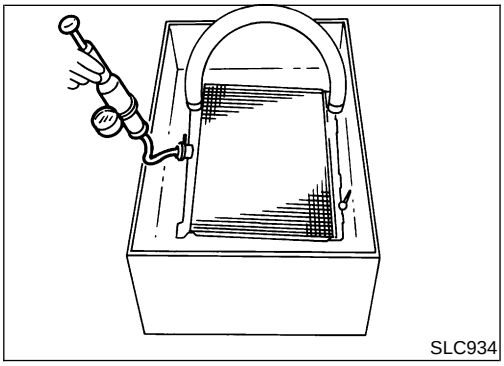

INSPECTION

NELC0165

1. Apply pressure with Tool.

   Specified pressure value:
   157 kPa (1.6 kg/cm^2, 23 psi)

2. Check for leakage.

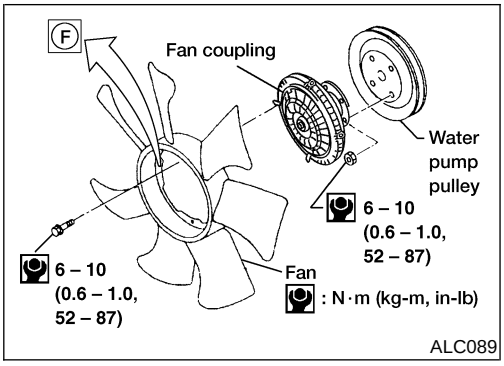

Cooling Fan (Crankshaft driven)

REMOVAL AND INSTALLATION

NELC0166

- Do not release the drive belt tension by removing the fan/water pump pulley.
- Fan coupling cannot be disassembled and should be replaced as a unit. If front mark **F** is present, install fan so that side marked **F** faces the front.
- Install the drive belt only after the fan and fan coupling to water pump flange bolts/nuts have been properly torqued.
- Proper alignment of these components is essential. Improper alignment will cause them to wobble and may eventually cause the fan to separate from the water pump, causing extensive damage.

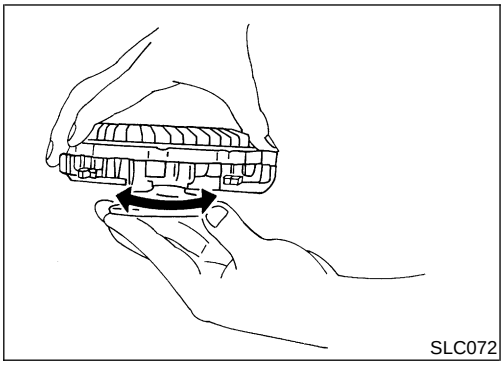

INSPECTION

NELC0167

Check fan coupling for rough operation, oil leakage and bent bimetal.

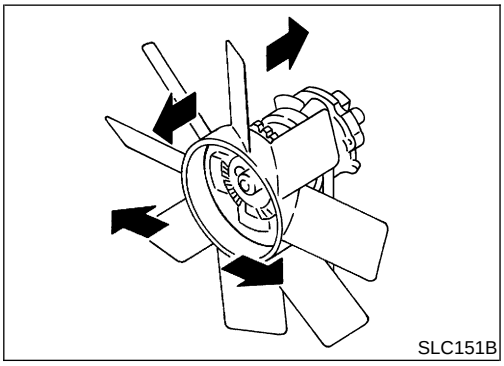

After assembly, verify the fan does not wobble or flap while the engine is running.

WARNING:

- **When the engine is running, keep hands and clothing away from moving parts such as drive belts and fan.**

Refilling Engine Coolant

NELC0168

For details on refilling engine coolant, refer to ***MA-17***, “Changing Engine Coolant”.

Overheating Cause Analysis

=NELC0169

	Symptom		Check items	
Cooling system parts malfunction	Poor heat transfer	Water pump malfunction	Worn or loose drive belt	—
		Thermostat stuck closed	—	
		Damaged fins	Dust contamination or paper clogging	
			Mechanical damage	
		Clogged radiator cooling tube	Excess foreign material (rust, dirt, sand, etc.)	
	Reduced air flow	Fan coupling does not operate	—	—
		High resistance to fan rotation		
		Damaged fan blades		
	Damaged radiator shroud	—	—	—
	Improper coolant mixture ratio	—	—	—
	Poor coolant quality	—	—	—
	Insufficient coolant	Coolant leaks	Cooling hose	Loose clamp
				Cracked hose
			Water pump	Poor sealing
			Radiator cap	Loose
				Poor sealing
			Radiator	O-ring for damage, deterioration or improper fitting
				Cracked radiator tank
				Cracked radiator core
			Reservoir tank	Cracked reservoir tank
		Overflowing reservoir tank	Exhaust gas leaks into cooling system	Cylinder head deterioration
				Cylinder head gasket deterioration

Overheating Cause Analysis (Cont'd)

	Symptom		Check items	
Except cooling system parts malfunction	—	Overload on engine	Abusive driving	High engine rpm under no-load
				Driving in low gear for extended time
				Driving at extremely high speed
			Powertrain system malfunction	—
			Installed improper size wheels and tires	
			Dragging brakes	
			Improper ignition timing	
	Blocked or restricted air flow	Blocked bumper	—	—
		Blocked radiator grille	Installed car brassiere	
			Mud contamination or paper clogging	
		Blocked radiator	—	
		Blocked condenser	—	
		Installed large fog lamp		

Service Data and Specifications (SDS)

THERMOSTAT

NELC0170

Valve opening temperature	76.5°C (170°F)
Valve lift	More than 8 mm/90°C (0.31 in/194°F)

RADIATOR

NELC0171

Unit: kPa (kg/cm^2, psi)

Cap relief pressure	Standard	78 - 98 (0.8 - 1.0, 11 - 14)
	Limit	59 - 98 (0.6 - 1.0, 9 - 14)
Leakage test pressure		157 (1.6, 23)

Precautions

SUPPLEMENTAL RESTRAINT SYSTEM (SRS) “AIR BAG” AND “SEAT BELT PRE-TENSIONER”

NELC0138

The Supplemental Restraint System such as “AIR BAG” and “SEAT BELT PRE-TENSIONER” used along with a seat belt, helps to reduce the risk or severity of injury to the driver and front passenger in a frontal collision. The Supplemental Restraint System consists of air bag modules (located in the center of the steering wheel and in the instrument panel on the passenger side), seat belt pre-tensioners, a diagnosis sensor unit, warning lamp, wiring harness, and spiral cable.

The vehicle (except Crew Cab model) is equipped with a passenger air bag deactivation switch. Because no rear seat exists where a rear-facing child restraint can be placed, the switch is designed to turn off the passenger air bag so that a rear-facing child restraint can be used in the front passenger seat. The switch is located in the center of the instrument panel, near the ashtray. When the switch is turned to the ON position, the passenger air bag is enabled and could inflate in a frontal collision. When the switch is turned to the OFF position, the passenger air bag is disabled and will not inflate in a frontal collision. A passenger air bag OFF indicator on the instrument panel lights up when the passenger air bag is switched OFF. The driver air bag always remains enabled and is not affected by the passenger air bag deactivation switch.

Information necessary to service the system safely is included in the **RS section** of this Service Manual.

WARNING:

- **To avoid rendering the SRS inoperative, which could increase the risk of personal injury or death in the event of a collision which would result in air bag inflation, all maintenance should be performed by an authorized NISSAN dealer.**
- **Improper maintenance, including incorrect removal and installation of the SRS, can lead to personal injury caused by unintentional activation of the system. For removal of Spiral Cable and Air Bag Module, see the RS section.**
- **Do not use electrical test equipment on any circuit related to the SRS unless instructed to in this Service Manual. Spiral cable and wiring harnesses (except “SEAT BELT PRE-TENSIONER”) covered with yellow insulation either just before the harness connectors or for the complete harness are related to SRS.**
- **The vehicle (except Crew Cab model) is equipped with a passenger air bag deactivation switch which can be operated by the customer. When the passenger air bag is switched OFF, the passenger air bag is disabled and will not inflate in a frontal collision. When the passenger air bag is switched ON, the passenger air bag is enabled and could inflate in a frontal collision. After SRS maintenance or repair, make sure the passenger air bag deactivation switch is in the same position (ON or OFF) as when the vehicle arrived for service.**

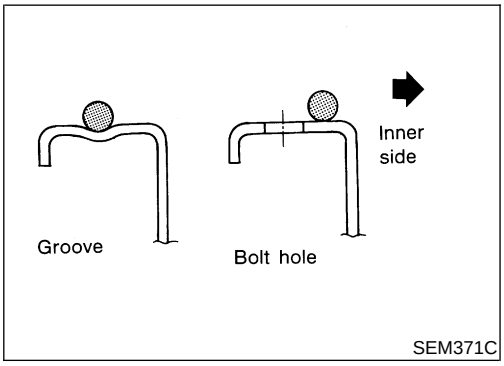

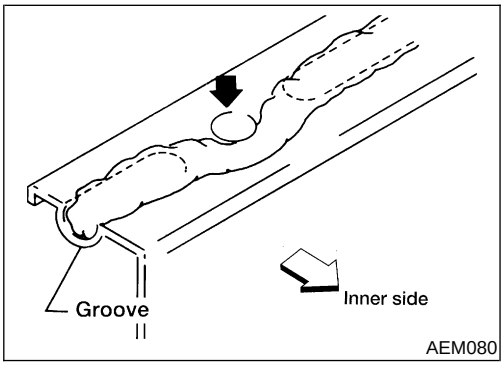

LIQUID GASKET APPLICATION PROCEDURE

NELC0001

1. Use a scraper to remove all traces of old liquid gasket from mating surface and grooves. Also, completely clean any oil from these areas.
2. Apply a continuous bead of liquid gasket to mating surfaces. (Use Genuine RTV Silicone Sealant Part No. 999MP-A7007 or equivalent.)
   - **Be sure liquid gasket is 3.5 to 4.5 mm (0.138 to 0.177 in) diameter (for oil pan).**
   - **Be sure liquid gasket is 2.0 to 3.0 mm (0.079 to 0.118 in) diameter (in areas except oil pan).**
3. Apply liquid gasket around the inner side of bolt holes (unless otherwise specified).
4. Assembly should be done within 5 minutes after coating.
5. Wait at least 30 minutes before refilling engine oil and engine coolant.

Preparation

SPECIAL SERVICE TOOLS

=NELC0002

The actual shapes of Kent-Moore tools may differ from those of special service tools illustrated here.

Tool number (Kent-Moore No.) Tool name	Description	
ST25051001 (J25695-1) Oil pressure gauge	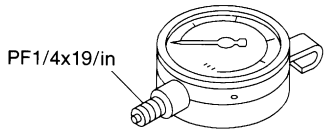 NT558	Measuring oil pressure **Maximum measuring range: 2,452 kPa (25 kg/cm^2, 356 psi)**
ST25052000 (J25695-2) Hose	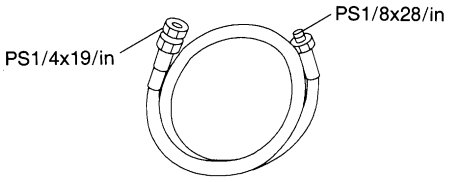 NT559	Adapting oil pressure gauge to cylinder block
KV10115801 (J38956) Oil filter wrench	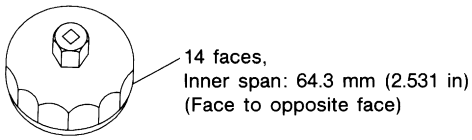 NT362	Removing oil filter
WS39930000 (—) Tube presser	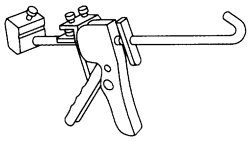 NT052	Pressing the tube of liquid gasket

Lubrication Circuit

NELC0003

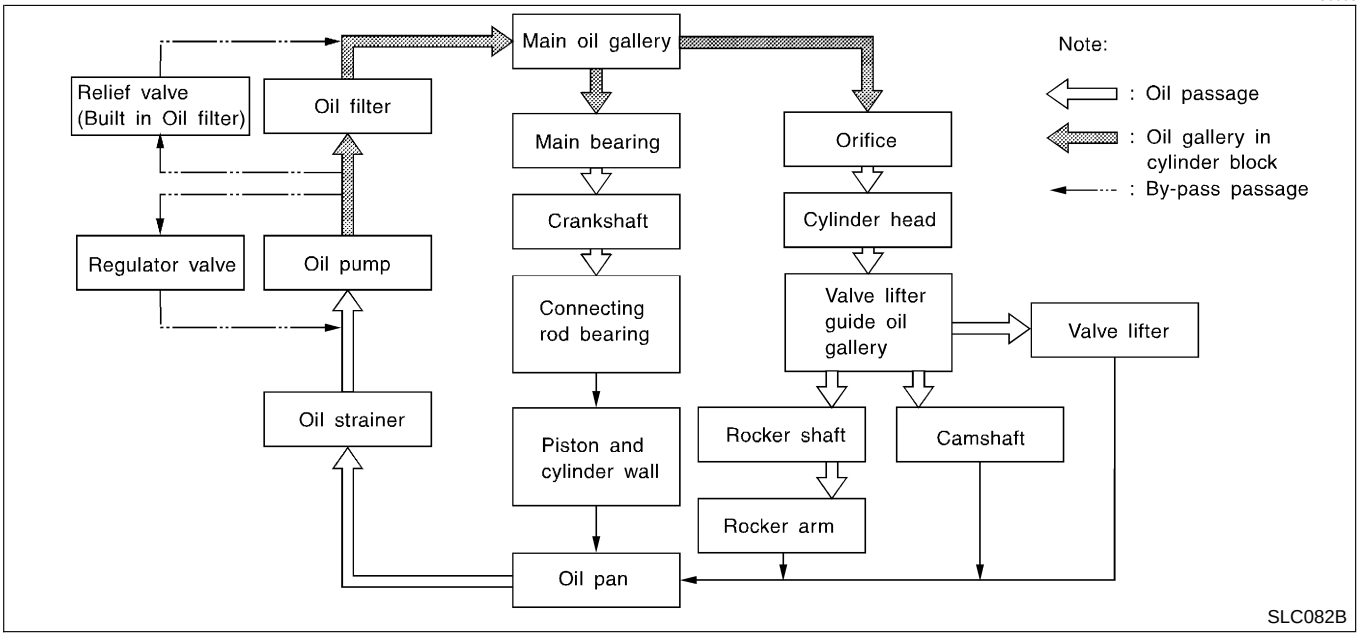

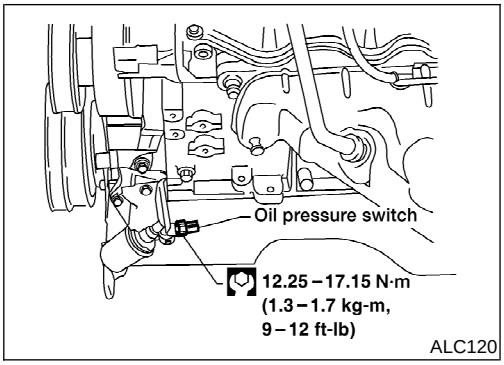

ALC120

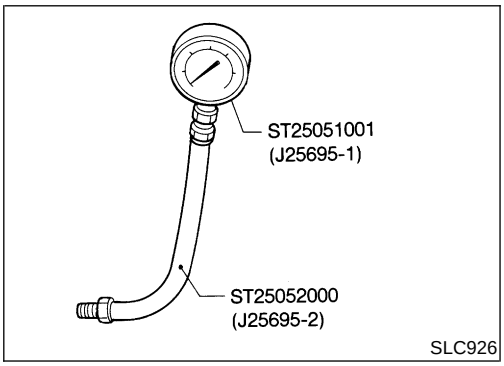

SLC926

Oil Pressure Check

NELC0004

WARNING:

- **Be careful not to burn yourself, as the engine and oil may be hot.**
- **Oil pressure check should be done in "Neutral position" (M/T) or "Parking position" (A/T).**

1. Check oil level.
2. Remove oil pressure switch.
3. Install pressure gauge.
4. Start engine and warm it up to normal operating temperature.
5. Check oil pressure with engine running under no-load.

Engine speed rpm	Approximate discharge pressure kPa (kg/cm^2, psi)
Idle speed	More than 59 (0.6, 9)
2,000	412 - 451 (4.2 - 4.6, 60 - 65)

If difference is extreme, check oil passage and oil pump for oil leaks.

6. Install oil pressure switch with sealant.
   : 12.25 – 17.15 N·m (1.3 – 1.7 kg-m, 9 – 12 ft-lb)

Oil Pump

REMOVAL AND INSTALLATION

NELC0005

1. Drain engine oil.
2. Drain engine coolant from drain plug on radiator.
3. Remove air duct (from mass air flow sensor to throttle body).
4. Remove cooling fan.
5. Remove radiator hoses (upper and lower) and fan shroud. Refer to "Radiator", LC-32.
6. Remove drive belts. Refer to ***MA-25***, "Checking Drive Belts".
7. Remove crankshaft pulley and front upper and lower belt covers. Refer to ***EM-83***, "TIMING BELT".
8. Remove oil pan. Refer to ***EM-80***, "OIL PAN".
9. Remove oil strainer.
10. Remove oil pump assembly.

DISASSEMBLY AND ASSEMBLY

NELC0006

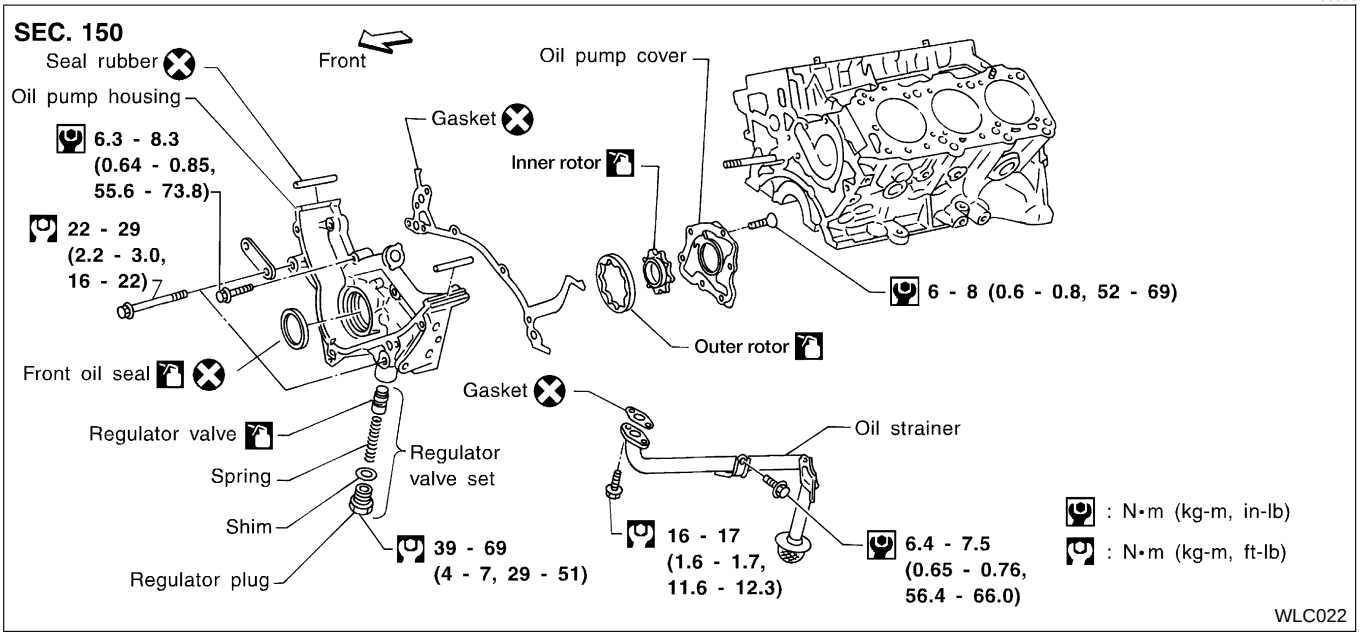

- **Always replace with new oil seal and gasket.**
- **When installing oil pump, apply engine oil to inner and outer rotors.**
- **Be sure that O-ring is properly installed.**

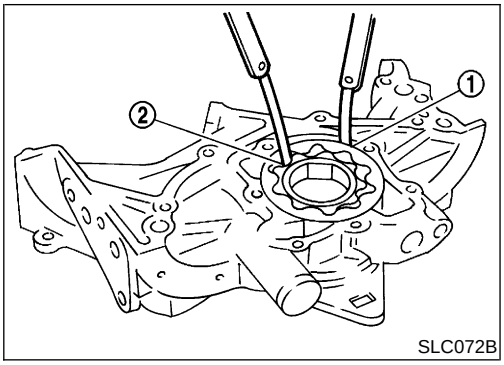

SLC072B

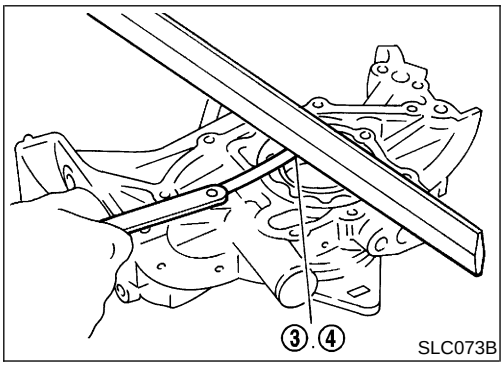

SLC073B

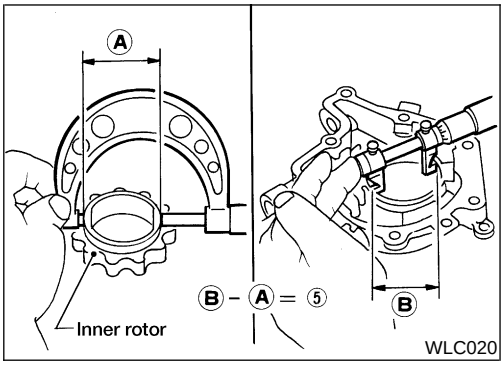

WLC020

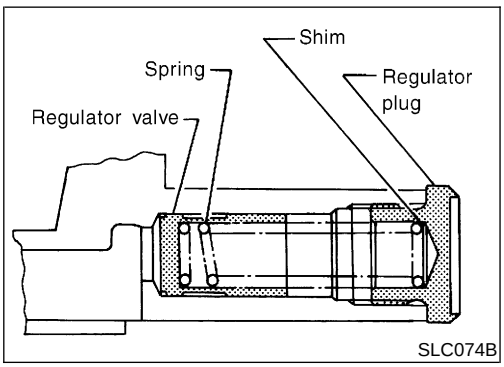

SLC074B

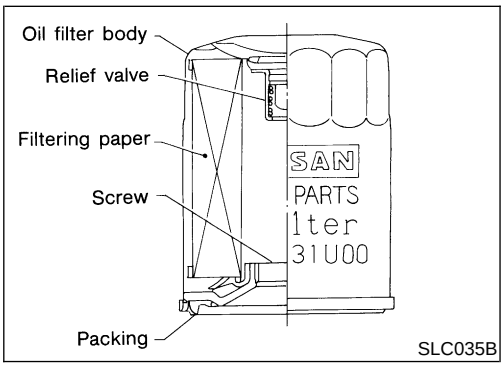

SLC035B

INSPECTION

NELC0007

Using a feeler gauge, straightedge and micrometers, check the following clearances:

Unit: mm (in)

Body to outer rotor radial clearance **1**	0.114 - 0.200 (0.0045 - 0.0079)
Inner rotor to outer rotor tip clearance **2**	Below 0.18 (0.0071)
Body to inner rotor axial clearance **3**	0.05 - 0.09 (0.0020 - 0.0035)
Body to outer rotor axial clearance **4**	0.050 - 0.110 (0.0020 - 0.0043)
Inner rotor to brazed portion of housing clearance **5**	0.045 - 0.091 (0.0018 - 0.0036)

- **If the tip clearance (2) exceeds the limit, replace rotor set.**
- **If body to rotor clearances (1, 3, 4, 5) exceed the limit, replace oil pump body assembly.**

REGULATOR VALVE INSPECTION

NELC0008

1. Visually inspect components for wear and damage.
2. Check oil pressure regulator valve sliding surface and valve spring.
3. Coat regulator valve with engine oil. Check that it falls smoothly into the valve hole by its own weight.

If damaged, replace regulator valve set or oil pump assembly.

OIL FILTER

NELC0009

The oil filter is a small, full-flow cartridge type and is provided with a relief valve.

- **Use Tool KV10115801 (J38956) for removing oil filter.**

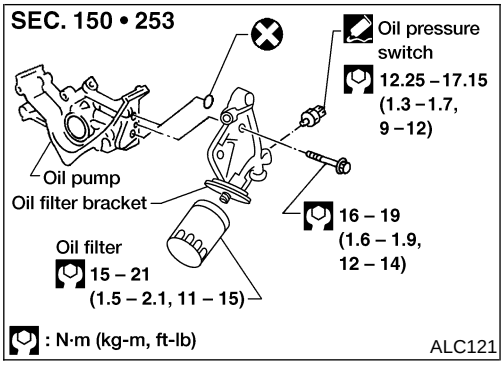

OIL FILTER BRACKET

NELC0010

1. Remove oil filter.
2. Disconnect oil pressure switch and connector.
3. Remove oil filter bracket.

Service Data and Specifications (SDS)

OIL PRESSURE CHECK

=NELC0011

Engine speed rpm	Approximate discharge pressure kPa (kg/cm^2, psi)
Idle speed	More than 59 (0.6, 9)
2,000	412 - 451 (4.2 - 4.6, 60 - 65)

REGULATOR VALVE

NELC0012
Unit: mm (in)

Regulator valve to oil pump cover clearance	0.040 - 0.097 (0.0016 - 0.0038)

OIL PUMP

NELC0013
Unit: mm (in)

Body to outer rotor radial clearance	0.114 - 0.200 (0.0045 - 0.0079)
Inner rotor to outer rotor tip clearance	Below 0.18 (0.0071)
Body to inner rotor axial clearance	0.05 - 0.09 (0.0020 - 0.0035)
Body to outer rotor axial clearance	0.050 - 0.110 (0.0020 - 0.0043)
Inner rotor to brazed portion of housing clearance	0.045 - 0.091 (0.0018 - 0.0036)

Precautions

SUPPLEMENTAL RESTRAINT SYSTEM (SRS) “AIR BAG” AND “SEAT BELT PRE-TENSIONER”

NELC0139

The Supplemental Restraint System such as “AIR BAG” and “SEAT BELT PRE-TENSIONER” used along with a seat belt, helps to reduce the risk or severity of injury to the driver and front passenger in a frontal collision. The Supplemental Restraint System consists of driver air bag module (located in the center of the steering wheel), front passenger air bag module (located on the instrument panel on passenger side), seat belt pre-tensioners, a diagnosis sensor unit, warning lamp, wiring harness and spiral cable.
The vehicle (except Crew Cab model) is equipped with a passenger air bag deactivation switch. Because no rear seat exists where a rear-facing child restraint can be placed, the switch is designed to turn off the passenger air bag so that a rear-facing child restraint can be used in the front passenger seat. The switch is located in the center of the instrument panel, near the ashtray. When the switch is turned to the ON position, the passenger air bag is enabled and could inflate in a frontal collision. When the switch is turned to the OFF position, the passenger air bag is disabled and will not inflate in a frontal collision. A passenger air bag OFF indicator on the instrument panel lights up when the passenger air bag is switched OFF. The driver air bag always remains enabled and is not affected by the passenger air bag deactivation switch.
Information necessary to service the system safely is included in the **RS section** of this Service Manual.

WARNING:

- **To avoid rendering the SRS inoperative, which could increase the risk of personal injury or death in the event of a collision which would result in air bag inflation, all maintenance should be performed by an authorized NISSAN dealer.**
- **Improper maintenance, including incorrect removal and installation of the SRS, can lead to personal injury caused by unintentional activation of the system. For removal of Spiral Cable and Air Bag Module, see the RS section.**
- **Do not use electrical test equipment on any circuit related to the SRS unless instructed to in this Service Manual. Spiral cable and wiring harnesses (except “SEAT BELT PRE-TENSIONER”) covered with yellow insulation either just before the harness connectors or for the complete harness are related to the SRS.**
- **The vehicle (except Crew Cab model) is equipped with a passenger air bag deactivation switch which can be operated by the customer. When the passenger air bag is switched OFF, the passenger air bag is disabled and will not inflate in a frontal collision. When the passenger air bag is switched ON, the passenger air bag is enabled and could inflate in a frontal collision. After SRS maintenance or repair, make sure the passenger air bag deactivation switch is in the same position (ON or OFF) as when the vehicle arrived for service.**

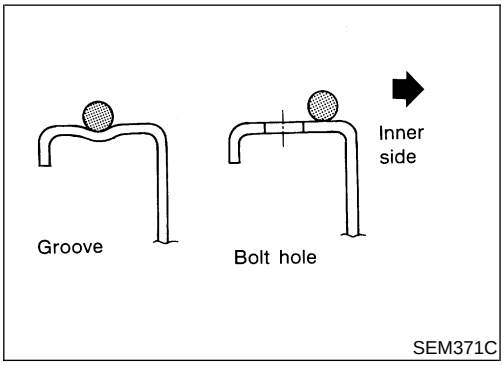

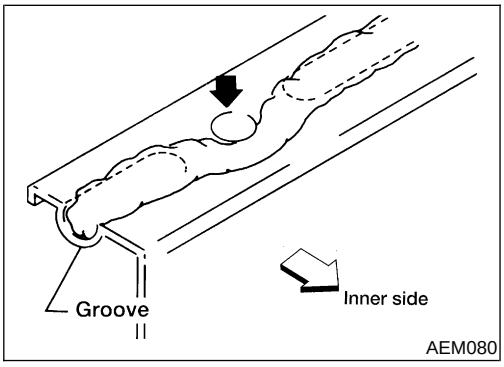

LIQUID GASKET APPLICATION PROCEDURE

NELC0014

1. Use a scraper to remove all traces of old liquid gasket from mating surface and grooves. Also, completely clean any oil from these areas.
2. Apply a continuous bead of liquid gasket to mating surfaces. Use Genuine RTV Silicone Sealant Part No. 999MP-A7007 or equivalent.
   - **Be sure liquid gasket is 3.5 to 4.5 mm (0.138 to 0.177 in) diameter (for oil pan).**
   - **Be sure liquid gasket is 2.0 to 3.0 mm (0.079 to 0.118 in) diameter (in areas except oil pan).**
3. Apply liquid gasket around the inner side of bolt holes (unless otherwise specified).
4. Assembly should be done within 5 minutes after coating.
5. Wait at least 30 minutes before refilling engine oil and engine coolant.

Preparation

SPECIAL SERVICE TOOLS

=NELC0015

The actual shapes of Kent-Moore tools may differ from those of special service tools illustrated here.

Tool number (Kent-Moore No.) Tool name	Description	
EG17650301 (J33984-A) Radiator cap tester adapter	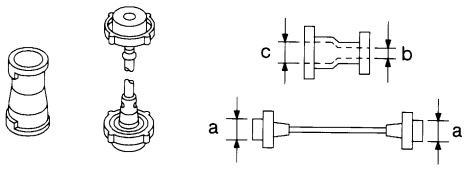 NT564	Adapting radiator cap tester to radiator filler neck **a: 28 (1.10) dia.** **b: 31.4 (1.236) dia.** **c: 41.3 (1.626) dia.** Unit: mm (in)
WS39930000 (—) Tube presser	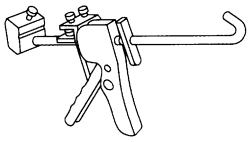 NT052	Pressing the tube of liquid gasket

Cooling Circuit

NELC0016

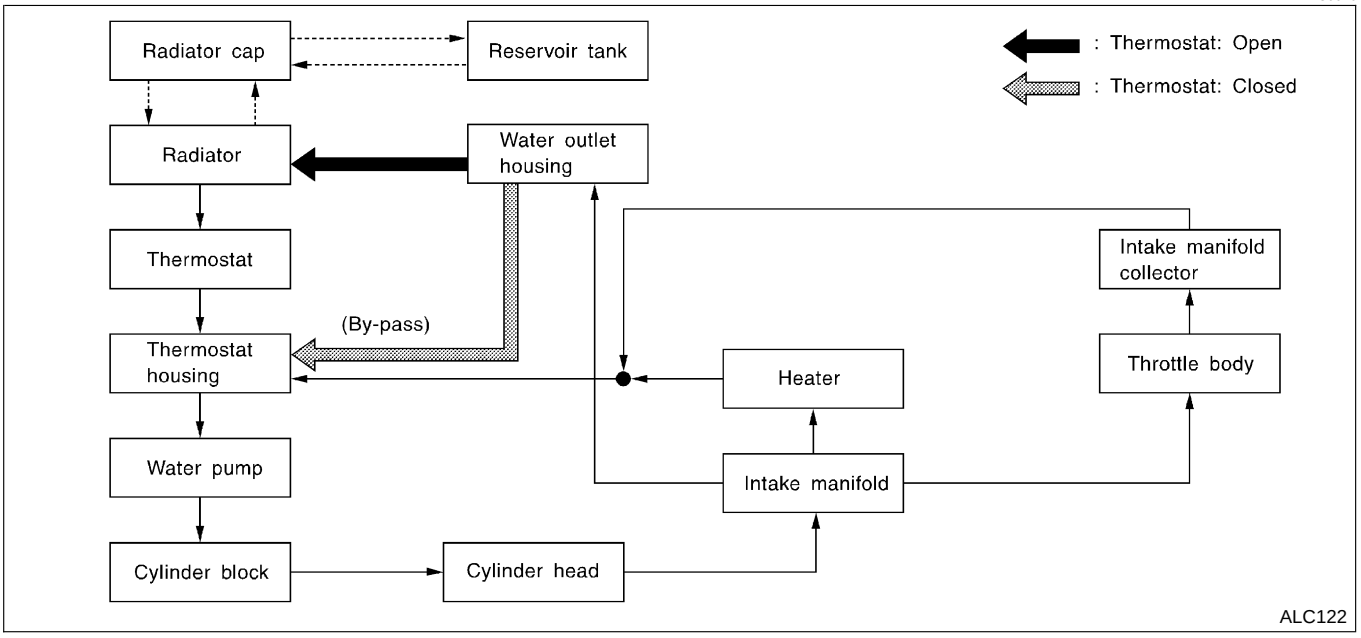

System Check

NELC0017

WARNING:

Never remove the radiator cap when the engine is hot. Serious burns could occur from high pressure coolant escaping from the radiator.

Wrap a thick cloth around the cap. Slowly turn it a quarter turn to allow built-up pressure to escape. Carefully remove the cap by turning it all the way.

CHECKING COOLING SYSTEM HOSES

NELC0017S01

Check hoses for improper attachment, leaks, cracks, damage, loose connections, chafing and deterioration.

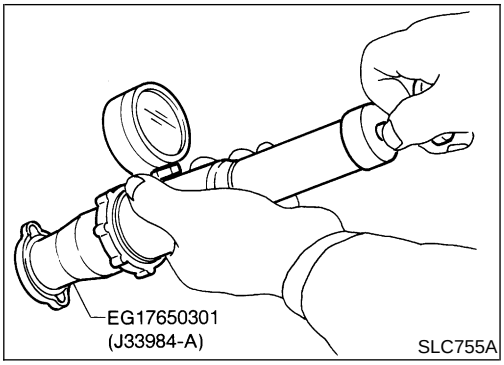

CHECKING RADIATOR CAP

NELC0017S02

To check radiator cap, apply pressure to cap with a tester.

Radiator cap relief pressure:

Standard

78 - 98 kPa (0.8 - 1.0 kg/cm^2, 11 - 14 psi)

Limit

59 - 98 kPa (0.6 - 1.0 kg/cm^2, 9 - 14 psi)

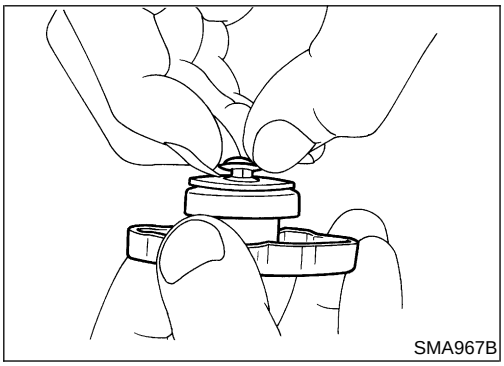

Pull the negative pressure valve to open it.
Check that it closes completely when released.

CHECKING RADIATOR

NELC0017S04

Check radiator for mud or clogging. If necessary, clean radiator as follows.

- Be careful not to bend or damage the radiator fins.
- When radiator is cleaned without removal, remove all surrounding parts such as cooling fan, radiator shroud and horns.
- Tape the harness connectors to prevent water from entering.

1. Apply water by hose to the back side of the radiator core vertically downward.
2. Apply water again to all radiator core surfaces once per minute.
3. Stop washing when water flows clear coming out from the radiator.
4. Blow air into the back side of radiator core vertically downward.

- Use compressed air lower than 490 kPa (5 kg/cm^2, 71 psi) and keep the air hose end more than 30 cm (11.8 in) away from the core.

5. Blow air again into all the radiator core surfaces once per minute until no water blows out and the core is dry.

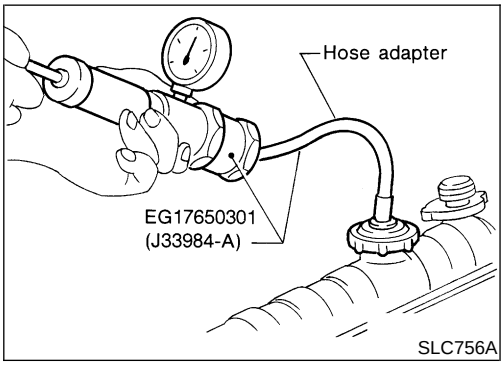

CHECKING COOLING SYSTEM FOR LEAKS

NELC0017S03

To check for leakage, apply pressure to the cooling system with a tester.

Testing pressure: 157 kPa (1.6 kg/cm^2, 23 psi)

CAUTION:

Higher pressure than specified may cause radiator damage.

Water Pump

REMOVAL

NELC0018

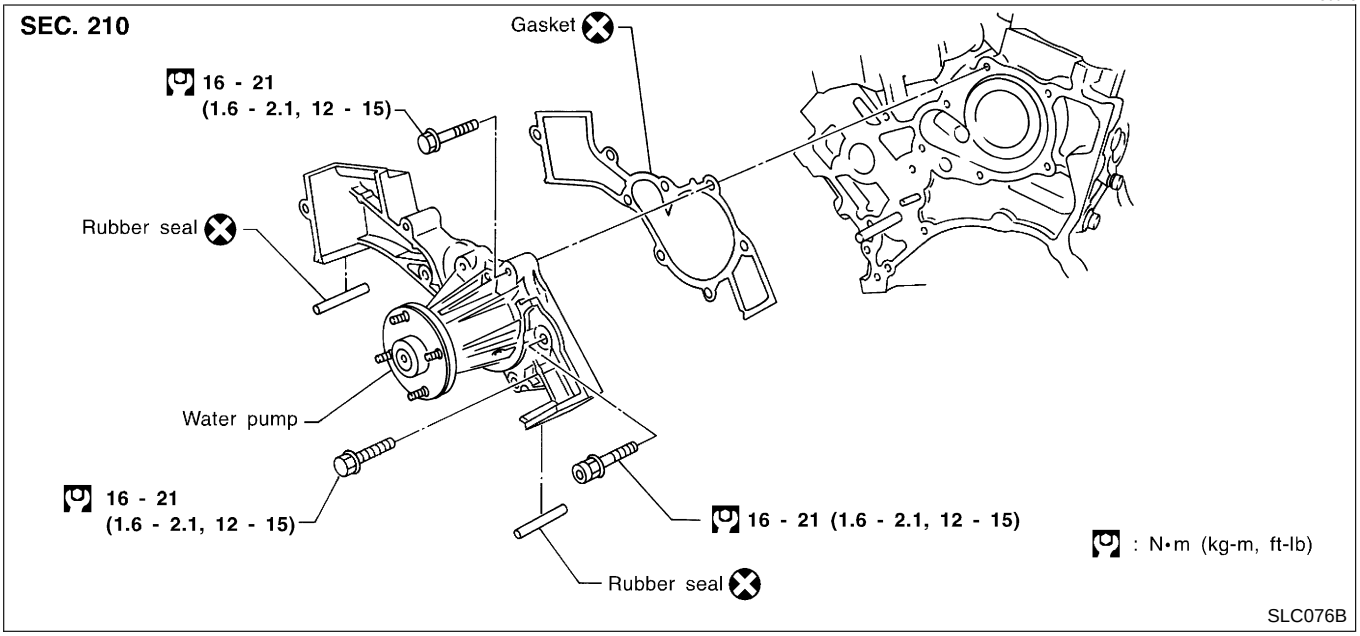

CAUTION:

- **When removing water pump assembly, be careful not to get coolant on timing belt.**
- **Water pump cannot be disassembled and should be replaced as a unit.**
- **After installing water pump, connect hose and clamp securely, then check for leaks using radiator cap tester.**
- **To avoid deforming timing cover, make sure there is adequate clearance between it and the hose clamp.**

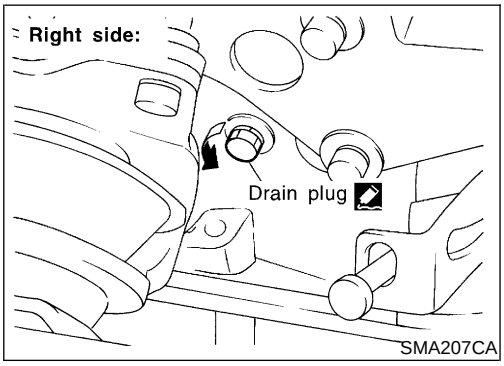

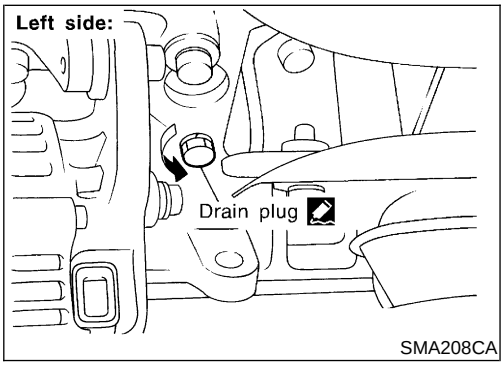

1. Drain coolant from drain plugs on both sides of cylinder block and radiator. Refer to ***MA-27***, “Changing Engine Coolant”.

2. Remove radiator hoses (upper and lower) and fan shroud. Refer to "Radiator", LC-32.
3. Remove drive belts. Refer to ***MA-25***, "Checking Drive Belts".
4. Remove water pump pulley.
5. Remove crankshaft pulley and front (upper and lower) belt cover. Refer to ***EM-83***, "TIMING BELT".
6. Remove water pump.

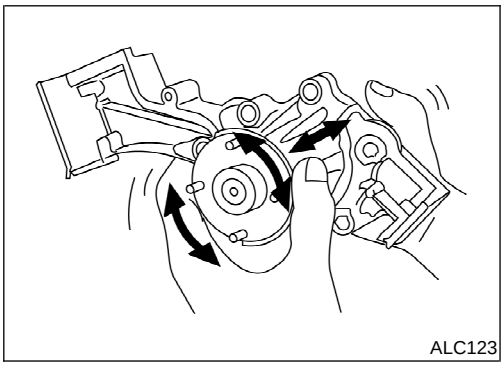
ALC123

INSPECTION
NELC0019

1. Check for badly rusted or corroded body assembly and vanes.
2. Check for rough operation due to excessive end play.

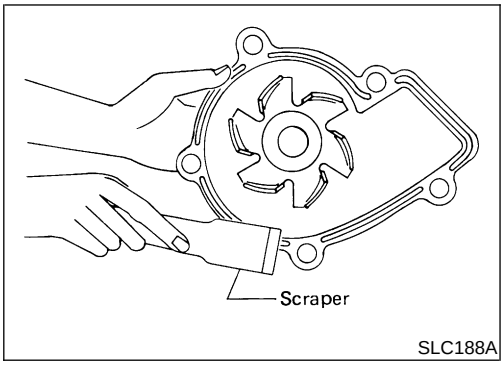

SLC188A

INSTALLATION
NELC0132

1. Use a scraper to remove liquid gasket from water pump.

- **Also remove traces of liquid gasket from mating surface of cylinder block.**

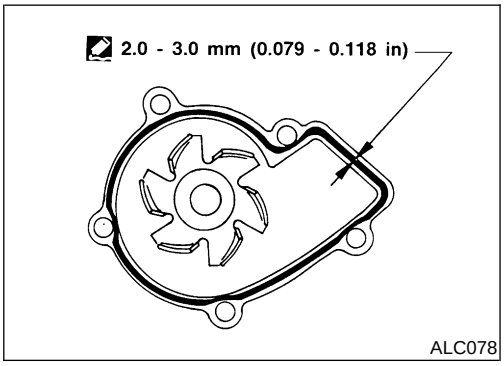

ALC078

2. Apply a continuous bead of liquid gasket to mating surface of water pump.

- **Use Genuine RTV Silicone Sealant Part No. 999MP-A7007 or equivalent.**

When filling radiator with coolant, refer to *MA-27*, "Changing Engine Coolant".
When installing drive belts, refer to *MA-25*, "Checking Drive Belts".

Thermostat

REMOVAL
NELC0020

1. Drain engine coolant from drain plugs on radiator.
2. Remove radiator hoses (upper and lower) and fan shroud.
3. Remove drive belts.
4. Remove pulley bracket.
5. Remove water inlet and thermostat assembly.

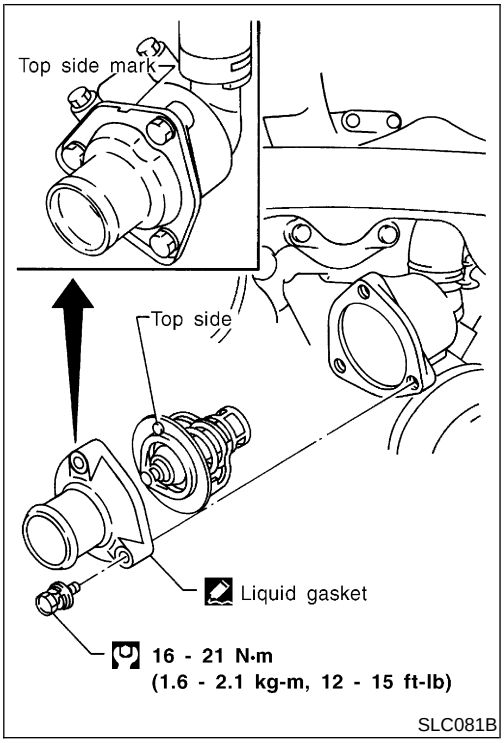

INSPECTION

NELC0021

1. Check valve seating condition at ordinary temperatures. It should seat tightly.

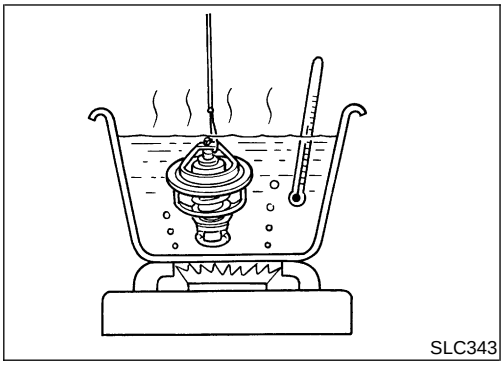

2. Check valve opening temperature and valve lift.

Description	VG33E	VG33ER
Valve opening temperature °C (°F)	82 (180)	76.5 (170)
Valve lift mm/°C (in/°F)	More than 10/95 (0.39/203)	

3. Then check if valve is closed at 5°C (9°F) below valve opening temperature.

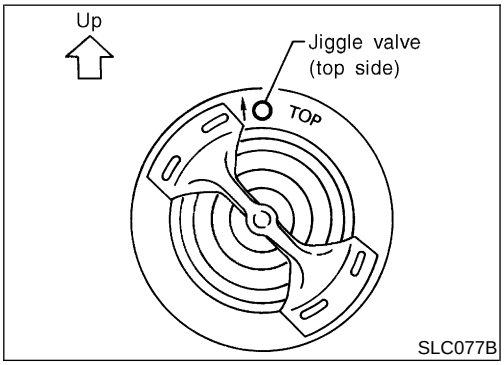

INSTALLATION

NELC0022

1. Install thermostat with jiggle valve or air bleeder at upper side.

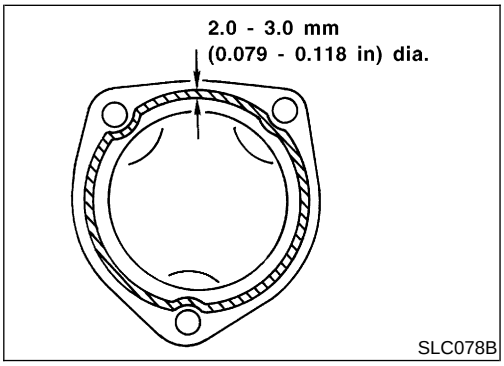

2. When installing water inlet apply liquid gasket as shown.

- **After installation, run engine for a few minutes, and check for leaks.**
- **Be careful not to spill coolant over engine compartment. Use a rag to absorb coolant.**

Radiator

REMOVAL AND INSTALLATION

NELC0023

1. Remove under cover.
2. Drain coolant from radiator drain plug.
3. Remove air duct. (From mass air flow sensor to throttle body)
4. Disconnect radiator upper and lower hoses.
5. Remove A/T oil cooler hoses. (A/T model only)
6. Remove radiator lower shroud.
7. Disconnect reservoir tank hose.
8. Remove radiator.
9. After repairing or replacing radiator, install any part removed in reverse order of removal.
10. Refill the engine coolant. Refer to ***MA-27***, “Changing Engine Coolant”.

- After installation, run the engine until it reaches operating temperature and check the system for leaks.

COMPONENTS

NELC0024

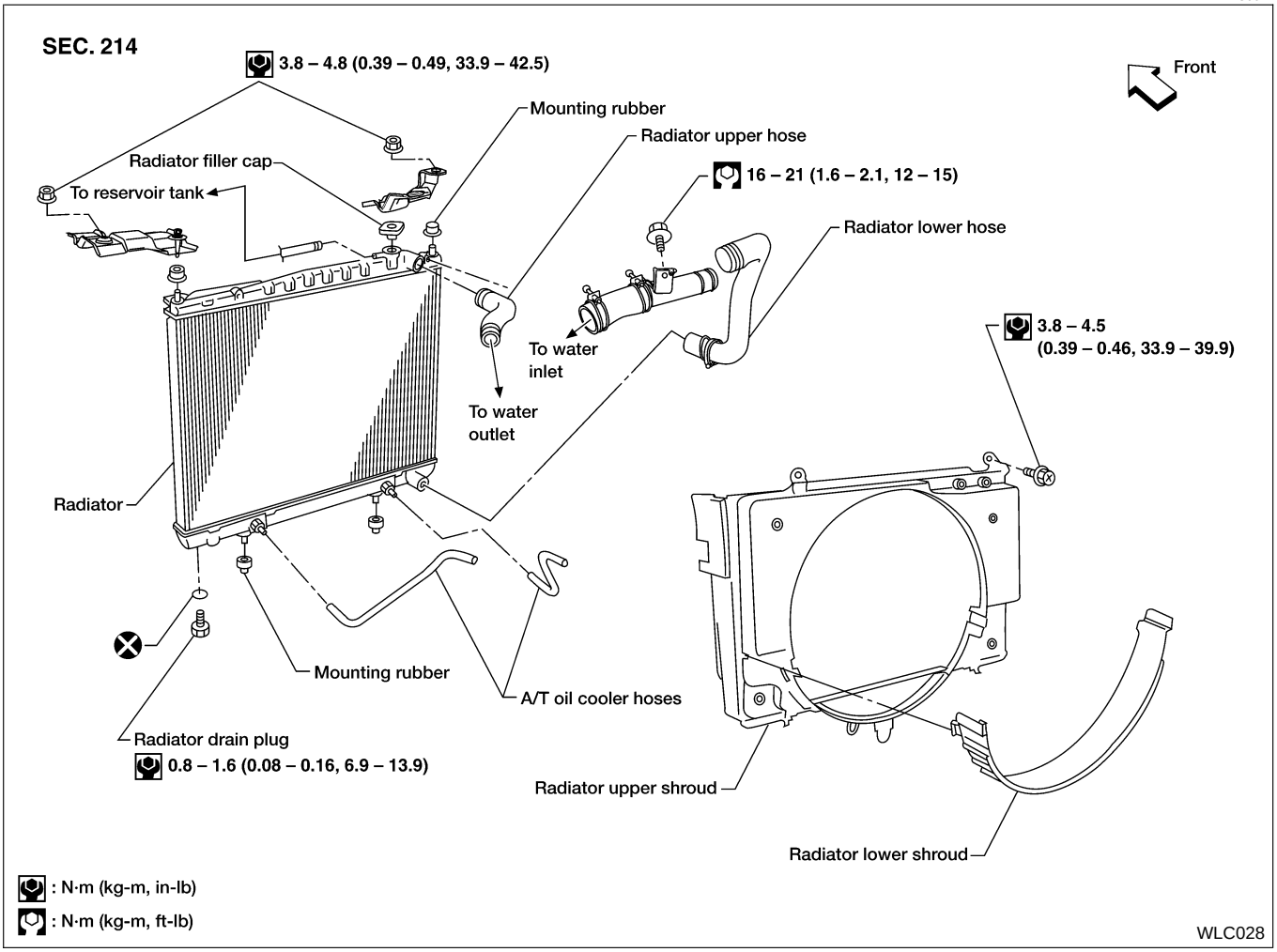

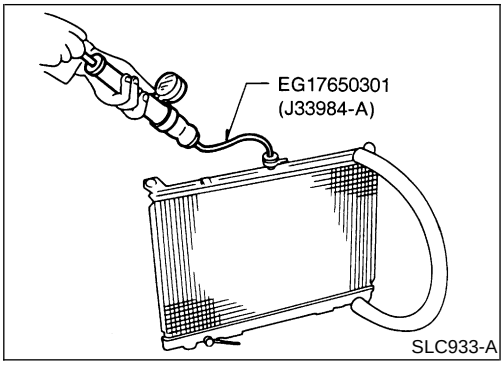

INSPECTION

NELC0028

1. Apply pressure with Tool.
   Specified pressure value:
   157 kPa (1.6 kg/cm^2, 23 psi)

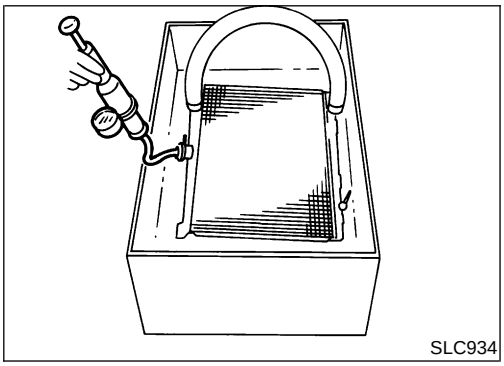

2. Check for leakage.

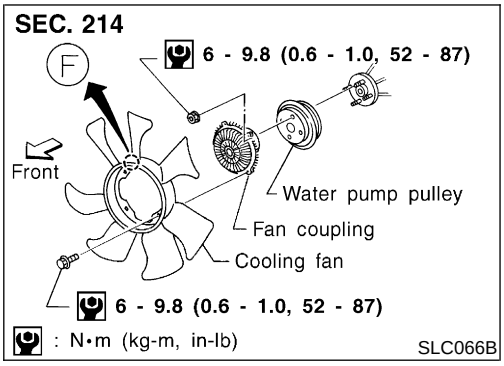

Cooling Fan (Crankshaft driven)

REMOVAL AND INSTALLATION

NELC0029

- Do not release the drive belt tension by removing the fan/water pump pulley.
- Fan coupling cannot be disassembled and should be replaced as a unit. If front mark **F** is present, install fan so that side marked **F** faces the front.
- Install the drive belt only after the fan and fan coupling to water pump flange bolts/nuts have been properly torqued.
- Proper alignment of these components is essential. Improper alignment will cause them to wobble and may eventually cause the fan to separate from the water pump causing extensive damage.

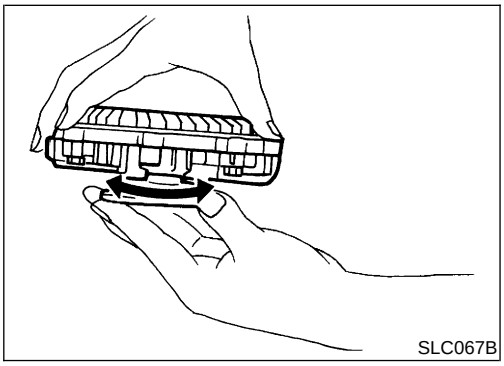

INSPECTION

NELC0030

Check fan coupling for rough operation, wobbling, oil leakage or bent bimetal.

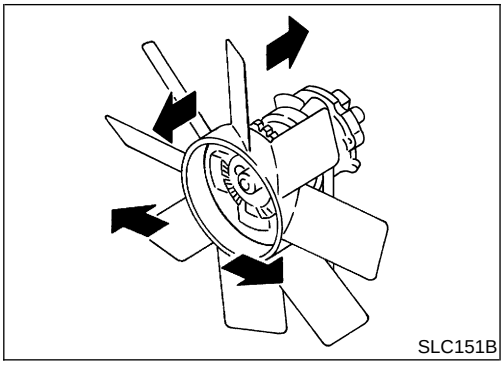
SLC151B

After assembly, verify the fan does not wobble or flap while the engine is running.

WARNING:

- **When the engine is running, keep hands and clothing away from moving parts such as drive belts and fan.**

Refilling Engine Coolant

=NELC0031

For details on refilling engine coolant, refer to “REFILLING ENGINE COOLANT”, ***MA-27***.

Overheating Cause Analysis

NELC0032

	Symptom		Check items	
Cooling system parts malfunction	Poor heat transfer	Water pump malfunction	—	—
		Thermostat stuck closed	—	
		Damaged fins	Dust contamination or paper clogging	
			Mechanical damage	
		Clogged radiator cooling tube	Excess foreign material (rust, dirt, sand, etc.)	
	Reduced air flow	Cooling fan does not operate	—	—
		High resistance to fan rotation		
		Damaged fan blades		
	Damaged radiator shroud	—	—	
	Improper coolant mixture ratio	—	—	—
	Poor coolant quality	—	—	—
	Insufficient coolant	Coolant leaks	Cooling hose	Loose clamp
				Cracked hose
			Water pump	Poor sealing
			Radiator cap	Loose
				Poor sealing
			Radiator	O-ring for damage, deterioration or improper fitting
				Cracked radiator tank
				Cracked radiator core
			Reservoir tank	Cracked reservoir tank
		Overflowing reservoir tank	Exhaust gas leaks into cooling system	Cylinder head deterioration
				Cylinder head gasket deterioration

Overheating Cause Analysis (Cont'd)

	Symptom		Check items	
Except cooling system parts malfunction	—	Overload on engine	Abusive driving	High engine rpm under no-load
				Driving in low gear for extended time
				Driving at extremely high speed
			Powertrain system malfunction	—
			Installed improper size wheels and tires	
			Dragging brakes	
			Improper ignition timing.	
	Blocked or restricted air flow	Blocked bumper	—	—
		Blocked radiator grille	Installed car brassiere	
			Mud contamination or paper clogging	
		Blocked radiator	—	
		Blocked condenser	—	
		Installed large fog lamp		

Service Data and Specifications (SDS)

THERMOSTAT

NELC0033

Description	VG33E	VG33ER
Valve opening temperature °C (°F)	82 (180)	76.5 (170)
Valve lift mm/°C (in/°F)	More than 10/95 (0.39/203)	

RADIATOR

NELC0034

Unit: kPa (kg/cm^2, psi)

Cap relief pressure	Standard	78 - 98 (0.8 - 1.0, 11 - 14)
	Limit	59 - 98 (0.6 - 1.0, 9 - 14)
Leakage test pressure		157 (1.6, 23)

ENGINE CONTROL SYSTEM

SECTION EC

CONTENTS

KA24DE

TROUBLE DIAGNOSIS - INDEX 19
Alphabetical & P No. Index for DTC 19
PRECAUTIONS 23
Supplemental Restraint System (SRS) ″AIR BAG″ and ″SEAT BELT PRE-TENSIONER″....23
Precautions for On Board Diagnostic (OBD) System of Engine and A/T....23
Engine Fuel & Emission Control System 24
Precautions....25
Wiring Diagrams and Trouble Diagnosis....26
PREPARATION 27
Special Service Tools 27
Commercial Service Tools....27
ENGINE AND EMISSION CONTROL OVERALL SYSTEM....29
Engine Control Component Parts Location....29
Circuit Diagram....31
System Diagram 32
Vacuum Hose Drawing 33
System Chart....34
ENGINE AND EMISSION BASIC CONTROL SYSTEM DESCRIPTION....35
Multiport Fuel Injection (MFI) System 35
Distributor Ignition (DI) System 37
Air Conditioning Cut Control....39
Fuel Cut Control (at no load & high engine speed)....39
Evaporative Emission System....40
On Board Refueling Vapor Recovery (ORVR)....45
Positive Crankcase Ventilation 55
BASIC SERVICE PROCEDURE 57
Fuel Pressure Release....57
Fuel Pressure Check....57
Fuel Pressure Regulator Check 58
Injector 58
Fast Idle Cam (FIC)....58
Idle Speed/Ignition Timing/Idle Mixture Ratio Adjustment....59
ON BOARD DIAGNOSTIC SYSTEM DESCRIPTION....73
Introduction 73
Two Trip Detection Logic....73
Emission-related Diagnostic Information....74
Malfunction Indicator Lamp (MIL)....87
OBD System Operation Chart....87
CONSULT-II 93
Generic Scan Tool (GST) 104
TROUBLE DIAGNOSIS - INTRODUCTION....106
Introduction 106
Work Flow....108
TROUBLE DIAGNOSIS - BASIC INSPECTION....110
Basic Inspection....110
TROUBLE DIAGNOSIS - GENERAL DESCRIPTION....124
DTC Inspection Priority Chart....124
Fail-safe Chart 125
Symptom Matrix Chart....126
CONSULT-II Reference Value in Data Monitor Mode....130
Major Sensor Reference Graph in Data Monitor Mode....132
ECM Terminals and Reference Value 135
TROUBLE DIAGNOSIS - SPECIFICATION VALUE....144
Description....144
Testing Condition 144
Inspection Procedure....144
Diagnostic Procedure 145
TROUBLE DIAGNOSIS FOR INTERMITTENT INCIDENT....148
Description....148
Diagnostic Procedure 148
TROUBLE DIAGNOSIS FOR POWER SUPPLY....149
Main Power Supply and Ground Circuit....149
DTC P0100 MASS AIR FLOW SENSOR (MAFS)....156

CONTENTS (Cont'd)

Component Description 156
CONSULT-II Reference Value in Data Monitor Mode 156
ECM Terminals and Reference Value 156
On Board Diagnosis Logic.....157
DTC Confirmation Procedure 157
Overall Function Check 159
Wiring Diagram 160
Diagnostic Procedure 161
DTC P0105 ABSOLUTE PRESSURE SENSOR 166
Component Description 166
On Board Diagnosis Logic.....166
DTC Confirmation Procedure 166
Diagnostic Procedure 167
DTC P0110 INTAKE AIR TEMPERATURE SENSOR 168
Component Description 168
On Board Diagnosis Logic.....168
DTC Confirmation Procedure 169
Wiring Diagram 170
Diagnostic Procedure 171
DTC P0115 ENGINE COOLANT TEMPERATURE SENSOR (ECTS) (CIRCUIT) 174
Component Description 174
CONSULT-II Reference Value in Data Monitor Mode 174
On Board Diagnosis Logic.....174
DTC Confirmation Procedure 175
Wiring Diagram 176
Diagnostic Procedure 177
DTC P0120 THROTTLE POSITION SENSOR 179
Component Description 179
CONSULT-II Reference Value in Data Monitor Mode 179
ECM Terminals and Reference Value 180
On Board Diagnosis Logic.....180
DTC Confirmation Procedure 181
Wiring Diagram 184
Diagnostic Procedure 185
DTC P0125 ENGINE COOLANT TEMPERATURE (ECT) SENSOR.....193
Component Description 193
On Board Diagnosis Logic.....193
DTC Confirmation Procedure 193
Wiring Diagram 195
Diagnostic Procedure 196
DTC P0130 HEATED OXYGEN SENSOR 1 (FRONT) (CIRCUIT).....198
Component Description 198
CONSULT-II Reference Value in Data Monitor Mode 198
ECM Terminals and Reference Value 198
On Board Diagnosis Logic.....199
DTC Confirmation Procedure 200
Overall Function Check 201
Wiring Diagram 202
Diagnostic Procedure 203
DTC P0131 HEATED OXYGEN SENSOR 1 (FRONT) (LEAN SHIFT MONITORING) 206
Component Description 206
CONSULT-II Reference Value in Data Monitor Mode 206
ECM Terminals and Reference Value 206
On Board Diagnosis Logic.....207
DTC Confirmation Procedure 207
Overall Function Check 208
Diagnostic Procedure 208
DTC P0132 HEATED OXYGEN SENSOR 1 (FRONT) (RICH SHIFT MONITORING) 213
Component Description 213
CONSULT-II Reference Value in Data Monitor Mode 213
ECM Terminals and Reference Value 213
On Board Diagnosis Logic.....214
DTC Confirmation Procedure 214
Overall Function Check 215
Diagnostic Procedure 215
DTC P0133 HEATED OXYGEN SENSOR 1 (FRONT) (RESPONSE MONITORING).....220
Component Description 220
CONSULT-II Reference Value in Data Monitor Mode 220
ECM Terminals and Reference Value 220
On Board Diagnosis Logic.....221
DTC Confirmation Procedure 221
Overall Function Check 222
Wiring Diagram 223
Diagnostic Procedure 224
DTC P0134 HEATED OXYGEN SENSOR 1 (FRONT) (HIGH VOLTAGE).....231
Component Description 231
CONSULT-II Reference Value in Data Monitor Mode 231
ECM Terminals and Reference Value 231
On Board Diagnosis Logic.....232
DTC Confirmation Procedure 232
Wiring Diagram 233
Diagnostic Procedure 234
DTC P0135 HEATED OXYGEN SENSOR 1 HEATER (FRONT).....238
Description 238
CONSULT-II Reference Value in Data Monitor Mode 238
ECM Terminals and Reference Value 238

CONTENTS (Cont'd)

On Board Diagnosis Logic....238
DTC Confirmation Procedure....239
Wiring Diagram....240
Diagnostic Procedure....241
DTC P0137 HEATED OXYGEN SENSOR 2 (REAR) (MIN. VOLTAGE MONITORING)....243
Component Description....243
CONSULT-II Reference Value in Data Monitor Mode....243
ECM Terminals and Reference Value....243
On Board Diagnosis Logic....243
DTC Confirmation Procedure....244
Overall Function Check....245
Wiring Diagram....246
Diagnostic Procedure....247
DTC P0138 HEATED OXYGEN SENSOR 2 (REAR) (MAX. VOLTAGE MONITORING)....253
Component Description....253
CONSULT-II Reference Value in Data Monitor Mode....253
ECM Terminals and Reference Value....253
On Board Diagnosis Logic....253
DTC Confirmation Procedure....254
Overall Function Check....255
Wiring Diagram....256
Diagnostic Procedure....257
DTC P0139 HEATED OXYGEN SENSOR 2 (REAR) (RESPONSE MONITORING)....263
Component Description....263
CONSULT-II Reference Value in Data Monitor Mode....263
ECM Terminals and Reference Value....263
On Board Diagnosis Logic....263
DTC Confirmation Procedure....264
Overall Function Check....265
Wiring Diagram....266
Diagnostic Procedure....267
DTC P0140 HEATED OXYGEN SENSOR 2 (REAR) (HIGH VOLTAGE)....273
Component Description....273
CONSULT-II Reference Value in Data Monitor Mode....273
ECM Terminals and Reference Value....273
On Board Diagnosis Logic....273
DTC Confirmation Procedure....274
Overall Function Check....274
Wiring Diagram....275
Diagnostic Procedure....276
DTC P0141 HEATED OXYGEN SENSOR 2 HEATER (REAR)....281
Description....281
CONSULT-II Reference Value in Data Monitor Mode....281
ECM Terminals and Reference Value....281
On Board Diagnosis Logic....281
DTC Confirmation Procedure....282
Wiring Diagram....283
Diagnostic Procedure....284
DTC P0171 FUEL INJECTION SYSTEM FUNCTION (LEAN SIDE)....286
On Board Diagnosis Logic....286
DTC Confirmation Procedure....286
Wiring Diagram....288
Diagnostic Procedure....289
DTC P0172 FUEL INJECTION SYSTEM FUNCTION (RICH SIDE)....293
On Board Diagnosis Logic....293
DTC Confirmation Procedure....293
Wiring Diagram....295
Diagnostic Procedure....296
DTC P0180 FUEL TANK TEMPERATURE SENSOR....300
Component Description....300
On Board Diagnosis Logic....300
DTC Confirmation Procedure....301
Wiring Diagram....302
Diagnostic Procedure....303
DTC P0300 - P0304 NO. 4 - 1 CYLINDER MISFIRE, MULTIPLE CYLINDER....306
On Board Diagnosis Logic....306
DTC Confirmation Procedure....306
Diagnostic Procedure....307
DTC P0325 KNOCK SENSOR (KS)....315
Component Description....315
ECM Terminals and Reference Value....315
On Board Diagnosis Logic....315
DTC Confirmation Procedure....315
Wiring Diagram....316
Diagnostic Procedure....317
DTC P0335 CRANKSHAFT POSITION SENSOR (CKPS) (OBD)....319
Component Description....319
ECM Terminals and Reference Value....319
On Board Diagnosis Logic....319
DTC Confirmation Procedure....320
Wiring Diagram....321
Diagnostic Procedure....322
DTC P0340 CAMSHAFT POSITION SENSOR (CMPS)....325
Component Description....325
ECM Terminals and Reference Value....325
On Board Diagnosis Logic....326
DTC Confirmation Procedure....327

CONTENTS (Cont'd)

Wiring Diagram 328
Diagnostic Procedure 329
DTC P0400 EGR FUNCTION (CLOSE) 333
Description 333
On Board Diagnosis Logic 334
DTC Confirmation Procedure 335
Overall Function Check 336
Wiring Diagram 337
Diagnostic Procedure 338
DTC P0402 EGRC-BPT VALVE FUNCTION 345
Description 345
On Board Diagnosis Logic 345
DTC Confirmation Procedure 346
Overall Function Check 347
Diagnostic Procedure 348
DTC P0420 THREE WAY CATALYST FUNCTION 353
On Board Diagnosis Logic 353
DTC Confirmation Procedure 353
Overall Function Check 354
Diagnostic Procedure 355
DTC P0440 EVAP CONTROL SYSTEM (SMALL LEAK) (NEGATIVE PRESSURE) 358
On Board Diagnosis Logic 358
DTC Confirmation Procedure 360
Diagnostic Procedure 362
DTC P0443 EVAP CANISTER PURGE VOLUME CONTROL SOLENOID VALVE (CIRCUIT) 375
Description 375
CONSULT-II Reference Value in Data Monitor Mode 375
ECM Terminals and Reference Value 376
On Board Diagnosis Logic 376
DTC Confirmation Procedure 377
Wiring Diagram 378
Diagnostic Procedure 379
DTC P0446 EVAPORATIVE EMISSION (EVAP) CANISTER VENT CONTROL VALVE (CIRCUIT) 383
Component Description 383
CONSULT-II Reference Value in Data Monitor Mode 383
ECM Terminals and Reference Value 383
On Board Diagnosis Logic 383
DTC Confirmation Procedure 384
Wiring Diagram 385
Diagnostic Procedure 386
DTC P0450 EVAPORATIVE EMISSION (EVAP) CONTROL SYSTEM PRESSURE SENSOR 391
Component Description 391
CONSULT-II Reference Value in Data Monitor Mode 391
ECM Terminals and Reference Value 391
On Board Diagnosis Logic 392
DTC Confirmation Procedure 393
Wiring Diagram 394
Diagnostic Procedure 395
DTC P0455 EVAP CONTROL SYSTEM (GROSS LEAK) 406
On Board Diagnosis Logic 406
DTC Confirmation Procedure 407
Diagnostic Procedure 408
DTC P0460 FUEL LEVEL SENSOR FUNCTION (SLOSH) 419
Component Description 419
On Board Diagnostic Logic 419
Possible Cause 419
DTC Confirmation Procedure 419
Wiring Diagram 420
Diagnostic Procedure 421
DTC P0461 FUEL LEVEL SENSOR FUNCTION 423
Component Description 423
On Board Diagnostic Logic 423
Possible Cause 423
Overall Function Check 423
DTC P0464 FUEL LEVEL SENSOR CIRCUIT 425
Component Description 425
On Board Diagnostic Logic 425
Possible Cause 425
DTC Confirmation Procedure 425
Wiring Diagram 426
Diagnostic Procedure 427
DTC P0500 VEHICLE SPEED SENSOR (VSS) 429
Component Description 429
ECM Terminals and Reference Value 429
On Board Diagnosis Logic 429
DTC Confirmation Procedure 429
Overall Function Check 430
Wiring Diagram 432
Diagnostic Procedure 433
DTC P0505 IDLE AIR CONTROL VALVE (IACV) - AUXILIARY AIR CONTROL (AAC) VALVE 434
Description 434
CONSULT-II Reference Value in Data Monitor Mode 435
ECM Terminals and Reference Value 435
On Board Diagnosis Logic 435
DTC Confirmation Procedure 436
Wiring Diagram 437
Diagnostic Procedure 438
DTC P0510 CLOSED THROTTLE POSITION SWITCH 440
Component Description 440
ECM Terminals and Reference Value 440
On Board Diagnosis Logic 440
DTC Confirmation Procedure 441

CONTENTS (Cont'd)

Overall Function Check 441
Wiring Diagram 442
Diagnostic Procedure 443
DTC P0605 ECM 447
Component Description 447
On Board Diagnosis Logic....447
DTC Confirmation Procedure 447
Diagnostic Procedure 448
DTC P1126 THERMOSTAT FUNCTION....449
On Board Diagnosis Logic....449
Possible Cause....449
DTC Confirmation Procedure 449
Diagnostic Procedure 450
DTC P1148 CLOSED LOOP CONTROL 451
On Board Diagnosis Logic....451
DTC Confirmation Procedure 451
Overall Function Check 452
Diagnostic Procedure 452
DTC P1336 CRANKSHAFT POSITION SENSOR (CKPS) (OBD) (COG)....453
Component Description 453
ECM Terminals and Reference Value 453
On Board Diagnosis Logic....454
DTC Confirmation Procedure 454
Wiring Diagram 455
Diagnostic Procedure 456
DTC P1400 EGRC-SOLENOID VALVE....459
Component Description 459
CONSULT-II Reference Value in Data Monitor Mode 459
ECM Terminals and Reference Value 459
On Board Diagnosis Logic....459
DTC Confirmation Procedure 460
Overall Function Check 460
Wiring Diagram 461
Diagnostic Procedure 462
DTC P1401 EGR TEMPERATURE SENSOR....466
Component Description 466
On Board Diagnosis Logic....466
DTC Confirmation Procedure 467
Overall Function Check 468
Wiring Diagram 469
Diagnostic Procedure 470
DTC P1402 EGR FUNCTION (OPEN)....472
Description 472
On Board Diagnosis Logic....473
DTC Confirmation Procedure 473
Wiring Diagram 475
Diagnostic Procedure 476
DTC P1440 EVAP CONTROL SYSTEM (SMALL LEAK) (POSITIVE PRESSURE) 481
On Board Diagnosis Logic....481
Possible Cause....481
DTC Confirmation Procedure 482
Diagnostic Procedure 482
DTC P1441 EVAP CONTROL SYSTEM (VERY SMALL LEAK)....483
On Board Diagnosis Logic....483
Possible Cause....483
DTC Confirmation Procedure 484
Diagnostic Procedure 486
DTC P1444 EVAP CANISTER PURGE VOLUME CONTROL SOLENOID VALVE....498
Description 498
CONSULT-II Reference Value in Data Monitor Mode 498
ECM Terminals and Reference Value 499
On Board Diagnosis Logic....499
DTC Confirmation Procedure 500
Wiring Diagram 501
Diagnostic Procedure 502
DTC P1446 EVAPORATIVE EMISSION (EVAP) CANISTER VENT CONTROL VALVE (CLOSE)....510
Component Description 510
CONSULT-II Reference Value in Data Monitor Mode 510
ECM Terminals and Reference Value 510
On Board Diagnosis Logic....510
DTC Confirmation Procedure 511
Diagnostic Procedure 512
DTC P1447 EVAPORATIVE EMISSION (EVAP) CONTROL SYSTEM PURGE FLOW MONITORING 516
System Description....516
On Board Diagnosis Logic....516
DTC Confirmation Procedure 517
Overall Function Check 517
Diagnostic Procedure 518
DTC P1448 EVAPORATIVE EMISSION (EVAP) CANISTER VENT CONTROL VALVE (OPEN)....526
Component Description 526
CONSULT-II Reference Value in Data Monitor Mode 526
ECM Terminals and Reference Value 526
On Board Diagnosis Logic....526
DTC Confirmation Procedure 527
Overall Function Check 528
Diagnostic Procedure 528
DTC P1464 FUEL LEVEL SENSOR CIRCUIT (GROUND SIGNAL) 534
Component Description 534
On Board Diagnostic Logic....534
Possible Cause....534
DTC Confirmation Procedure 534

CONTENTS (Cont'd)

Wiring Diagram 535
Diagnostic Procedure 536
DTC P1490 VACUUM CUT VALVE BYPASS VALVE (CIRCUIT) 537
Description 537
CONSULT-II Reference Value in Data Monitor Mode 537
ECM Terminals and Reference Value 537
On Board Diagnosis Logic 538
DTC Confirmation Procedure 538
Wiring Diagram 539
Diagnostic Procedure 540
DTC P1491 VACUUM CUT VALVE BYPASS VALVE 544
Description 544
CONSULT-II Reference Value in Data Monitor Mode 544
ECM Terminals and Reference Value 544
On Board Diagnosis Logic 545
DTC Confirmation Procedure 545
Overall Function Check 546
Wiring Diagram 547
Diagnostic Procedure 548
DTC P1706 PARK/NEUTRAL POSITION (PNP) SWITCH 555
Component Description 555
CONSULT-II Reference Value in Data Monitor Mode 555
ECM Terminals and Reference Value 555
On Board Diagnosis Logic 555
DTC Confirmation Procedure 556
Overall Function Check 557
Wiring Diagram 558
Diagnostic Procedure For M/T Models 559
Diagnostic Procedure For A/T Models 561
DTC P1775 TORQUE CONVERTER CLUTCH SOLENOID VALVE (CIRCUIT) 564
System Description 564
CONSULT-II Reference Value in Data Monitor Mode 564
ECM Terminals and Reference Value 564
On Board Diagnosis Logic 565
DTC Confirmation Procedure 565
Wiring Diagram 566
Diagnostic Procedure 567
DTC P1776 TORQUE CONVERTER CLUTCH SOLENOID VALVE 570
System Description 570
CONSULT-II Reference Value in Data Monitor Mode 570
ECM Terminals and Reference Value 571
On Board Diagnosis Logic 571
DTC Confirmation Procedure 571
Diagnostic Procedure 572
TROUBLE DIAGNOSIS FOR OVERHEAT 574
On Board Diagnosis Logic 574
Overall Function Check 574
Diagnostic Procedure 575
Main 11 Causes of Overheating 578
IGNITION SIGNAL 579
Component Description 579
CONSULT-II Reference Value in Data Monitor Mode 579
ECM Terminals and Reference Value 580
Wiring Diagram 581
Diagnostic Procedure 582
INJECTOR 588
Component Description 588
ECM Terminals and Reference Value 588
Wiring Diagram 589
Diagnostic Procedure 590
START SIGNAL 593
CONSULT-II Reference Value in Data Monitor Mode 593
ECM Terminals and Reference Value 593
Wiring Diagram 594
Diagnostic Procedure 595
FUEL PUMP 597
System Description 597
Component Description 597
CONSULT-II Reference Value in Data Monitor Mode 597
ECM Terminals and Reference Value 598
Wiring Diagram 599
Diagnostic Procedure 600
POWER STEERING OIL PRESSURE SWITCH 605
Component Description 605
CONSULT-II Reference Value in Data Monitor Mode 605
ECM Terminals and Reference Value 605
Wiring Diagram 606
Diagnostic Procedure 607
IACV-FICD SOLENOID VALVE 609
Component Description 609
ECM Terminals and Reference Value 609
Wiring Diagram 610
Diagnostic Procedure 611
MIL & DATA LINK CONNECTORS 615
Wiring Diagram 615
SERVICE DATA AND SPECIFICATIONS (SDS) 616
Fuel Pressure Regulator 616
Idle Speed and Ignition Timing 616
Ignition Coil 616
Mass Air Flow Sensor 616

CONTENTS (Cont'd)

Engine Coolant Temperature Sensor 616
EGR Temperature Sensor 616
Fuel Pump 616
IACV-AAC Valve 617
Injector 617
Resistor 617
Throttle Position Sensor 617
Heated Oxygen Sensor 1 Heater (Front) 617
Calculated Load Value 617
Intake Air Temperature Sensor 617
Heated Oxygen Sensor 2 Heater (Rear) 617
Crankshaft Position Sensor (OBD) 617
Fuel Tank Temperature Sensor 617

VG33E

TROUBLE DIAGNOSIS - INDEX 618
Alphabetical & P No. Index for DTC 618
PRECAUTIONS 624
Supplemental Restraint System (SRS) "AIR BAG" and "SEAT BELT PRE-TENSIONER" 624
Precautions for On Board Diagnostic (OBD) System of Engine and A/T 624
Engine Fuel & Emission Control System 625
Precautions 626
Wiring Diagrams and Trouble Diagnosis 627
PREPARATION 628
Special Service Tools 628
Commercial Service Tools 628
ENGINE AND EMISSION CONTROL OVERALL SYSTEM 630
Engine Control Component Parts Location 630
Circuit Diagram 632
System Diagram 633
Vacuum Hose Drawing 634
System Chart 635
ENGINE AND EMISSION BASIC CONTROL SYSTEM DESCRIPTION 636
Multiport Fuel Injection (MFI) System 636
Distributor Ignition (DI) System 638
Air Conditioning Cut Control 639
DTC P0217 Coolant Overtemperature Enrichment Protection (Without Electric Cooling Fan) 640
Evaporative Emission System 640
On Board Refueling Vapor Recovery (ORVR) 646
Positive Crankcase Ventilation 656
BASIC SERVICE PROCEDURE 658
Fuel Pressure Release 658
Fuel Pressure Check 658
Fuel Pressure Regulator Check 659
Injector 659
Fast Idle Cam (FIC) 660
Idle Speed/Ignition Timing/Idle Mixture Ratio Adjustment 662
ON BOARD DIAGNOSTIC SYSTEM DESCRIPTION 674
Introduction 674
Two Trip Detection Logic 674
Emission-related Diagnostic Information 675
Malfunction Indicator Lamp (MIL) 689
OBD System Operation Chart 690
CONSULT-II 696
Generic Scan Tool (GST) 709
TROUBLE DIAGNOSIS - INTRODUCTION 711
Introduction 711
Work Flow 713
TROUBLE DIAGNOSIS - BASIC INSPECTION 715
Basic Inspection 715
TROUBLE DIAGNOSIS - GENERAL DESCRIPTION 729
DTC Inspection Priority Chart 729
Fail-safe Chart 730
Symptom Matrix Chart 731
CONSULT-II Reference Value in Data Monitor Mode 735
Major Sensor Reference Graph in Data Monitor Mode 737
ECM Terminals and Reference Value 740
TROUBLE DIAGNOSIS - SPECIFICATION VALUE 749
Description 749
Testing Condition 749
Inspection Procedure 749
Diagnostic Procedure 750
TROUBLE DIAGNOSIS FOR INTERMITTENT INCIDENT 753
Description 753
Diagnostic Procedure 753
TROUBLE DIAGNOSIS FOR POWER SUPPLY 754
Main Power Supply and Ground Circuit 754
DTC P0100 MASS AIR FLOW SENSOR (MAFS) 760
Component Description 760
CONSULT-II Reference Value in Data Monitor Mode 760
ECM Terminals and Reference Value 760
On Board Diagnosis Logic 760
DTC Confirmation Procedure 761
Overall Function Check 763
Wiring Diagram 764
Diagnostic Procedure 765
DTC P0105 ABSOLUTE PRESSURE SENSOR 769
Component Description 769
On Board Diagnosis Logic 769
DTC Confirmation Procedure 769

CONTENTS (Cont'd)

Diagnostic Procedure 770
DTC P0110 INTAKE AIR TEMPERATURE SENSOR 771
Component Description 771
On Board Diagnosis Logic.....771
DTC Confirmation Procedure 771
Wiring Diagram 773
Diagnostic Procedure 774
DTC P0115 ENGINE COOLANT TEMPERATURE SENSOR (ECTS) (CIRCUIT) 776
Component Description 776
On Board Diagnosis Logic.....776
DTC Confirmation Procedure 777
Wiring Diagram 778
Diagnostic Procedure 779
DTC P0120 THROTTLE POSITION SENSOR 781
Description 781
CONSULT-II Reference Value in Data Monitor Mode 781
ECM Terminals and Reference Value 782
On Board Diagnosis Logic.....782
DTC Confirmation Procedure 783
Wiring Diagram 786
Diagnostic Procedure 787
DTC P0125 ENGINE COOLANT TEMPERATURE SENSOR (ECTS) 794
Description 794
On Board Diagnosis Logic.....794
DTC Confirmation Procedure 795
Wiring Diagram 796
Diagnostic Procedure 797
DTC P0130, P0150 HEATED OXYGEN SENSOR 1 (FRONT) (BANK 1)/(BANK 2) (CIRCUIT) 799
Component Description 799
CONSULT-II Reference Value in Data Monitor Mode 799
ECM Terminals and Reference Value 799
On Board Diagnosis Logic.....800
DTC Confirmation Procedure 801
Overall Function Check 802
Wiring Diagram 803
Diagnostic Procedure 805
DTC P0131, P0151 HEATED OXYGEN SENSOR 1 (FRONT) (BANK 1)/(BANK 2) (LEAN SHIFT MONITORING) 810
Component Description 810
CONSULT-II Reference Value in Data Monitor Mode 810
ECM Terminals and Reference Value 810
On Board Diagnosis Logic.....811
DTC Confirmation Procedure 812
Overall Function Check 813
Diagnostic Procedure 813
DTC P0132, P0152 HEATED OXYGEN SENSOR 1 (FRONT) (BANK 1)/(BANK 2) (RICH SHIFT MONITORING) 819
Component Description 819
CONSULT-II Reference Value in Data Monitor Mode 819
ECM Terminals and Reference Value 819
On Board Diagnosis Logic.....820
DTC Confirmation Procedure 821
Overall Function Check 822
Diagnostic Procedure 822
DTC P0133, P0153 HEATED OXYGEN SENSOR 1 (FRONT) (BANK 1)/(BANK 2) (RESPONSE MONITORING) 828
Component Description 828
CONSULT-II Reference Value in Data Monitor Mode 828
ECM Terminals and Reference Value 828
On Board Diagnosis Logic.....829
DTC Confirmation Procedure 829
Overall Function Check 830
Wiring Diagram 831
Diagnostic Procedure 833
DTC P0134, P0154 HEATED OXYGEN SENSOR 1 (FRONT) (BANK 1)/(BANK 2) (HIGH VOLTAGE) 842
Component Description 842
CONSULT-II Reference Value in Data Monitor Mode 842
ECM Terminals and Reference Value 842
On Board Diagnosis Logic.....843
DTC Confirmation Procedure 843
Wiring Diagram 844
Diagnostic Procedure 846
DTC P0135, P0155 HEATED OXYGEN SENSOR 1 HEATER (FRONT) (BANK 1)/(BANK 2) 850
Description 850
CONSULT-II Reference Value in Data Monitor Mode 850
ECM Terminals and Reference Value 850
On Board Diagnosis Logic.....850
DTC Confirmation Procedure 851
Wiring Diagram 852
Diagnostic Procedure 854
DTC P0137, P0157 HEATED OXYGEN SENSOR 2 (REAR) (BANK 1)/(BANK 2) (MIN. VOLTAGE MONITORING) 857
Component Description 857
CONSULT-II Reference Value in Data Monitor Mode 857
ECM Terminals and Reference Value 857
On Board Diagnosis Logic.....857

CONTENTS (Cont'd)

DTC Confirmation Procedure 858
Overall Function Check 859
Wiring Diagram 860
Diagnostic Procedure 862
DTC P0138, P0158 HEATED OXYGEN SENSOR 2 (REAR) (BANK 1)/(BANK 2) (MAX. VOLTAGE MONITORING) 867
Component Description 867
CONSULT-II Reference Value in Data Monitor Mode 867
ECM Terminals and Reference Value 867
On Board Diagnosis Logic 867
DTC Confirmation Procedure 868
Overall Function Check 869
Wiring Diagram 870
Diagnostic Procedure 872
DTC P0139, P0159 HEATED OXYGEN SENSOR 2 (REAR) (BANK 1)/(BANK 2) (RESPONSE MONITORING) 877
Component Description 877
CONSULT-II Reference Value in Data Monitor Mode 877
ECM Terminals and Reference Value 877
On Board Diagnosis Logic 877
DTC Confirmation Procedure 878
Overall Function Check 879
Wiring Diagram 880
Diagnostic Procedure 882
DTC P0140, P0160 HEATED OXYGEN SENSOR 2 (REAR) (BANK 1)/(BANK 2) (HIGH VOLTAGE) 887
Component Description 887
CONSULT-II Reference Value in Data Monitor Mode 887
ECM Terminals and Reference Value 887
On Board Diagnosis Logic 887
DTC Confirmation Procedure 888
Overall Function Check 888
Wiring Diagram 890
Diagnostic Procedure 892
DTC P0141, P0161 HEATED OXYGEN SENSOR 2 HEATER (REAR) (BANK 1)/(BANK 2) 897
Description 897
CONSULT-II Reference Value in Data Monitor Mode 897
ECM Terminals and Reference Value 897
On Board Diagnosis Logic 898
DTC Confirmation Procedure 898
Wiring Diagram 899
Diagnostic Procedure 901
DTC P0171 (RIGHT, -B1), P0174 (LEFT, -B2) FUEL INJECTION SYSTEM FUNCTION (LEAN) 905
On Board Diagnosis Logic 905
DTC Confirmation Procedure 906
Wiring Diagram 907
Diagnostic Procedure 909
DTC P0172 (RIGHT, -B1), P0175 (LEFT, -B2) FUEL INJECTION SYSTEM FUNCTION (RICH) 914
On Board Diagnosis Logic 914
DTC Confirmation Procedure 915
Wiring Diagram 916
Diagnostic Procedure 918
DTC P0180 FUEL TANK TEMPERATURE SENSOR 922
Component Description 922
On Board Diagnosis Logic 922
DTC Confirmation Procedure 923
Wiring Diagram 924
Diagnostic Procedure 925
DTC P0217 COOLANT OVERTEMPERATURE ENRICHMENT PROTECTION (WITH ELECTRIC COOLING FAN) 927
System Description 927
CONSULT-II Reference Value in Data Monitor Mode 927
On Board Diagnosis Logic 927
Possible Cause 928
Overall Function Check 929
Wiring Diagram 932
Diagnostic Procedure 933
Main 12 Causes of Overheating 940
DTC P0217 COOLANT OVERTEMPERATURE ENRICHMENT PROTECTION (WITHOUT ELECTRIC COOLING FAN) 941
On Board Diagnosis Logic 941
Possible Cause 941
Overall Function Check 942
Diagnostic Procedure 944
Main 12 Causes of Overheating 947
DTC P0300 - P0306 NO. 6 - 1 CYLINDER MISFIRE, MULTIPLE CYLINDER MISFIRE 948
On Board Diagnosis Logic 948
DTC Confirmation Procedure 949
Diagnostic Procedure 949
DTC P0325 KNOCK SENSOR (KS) 957
Component Description 957
ECM Terminals and Reference Value 957
On Board Diagnosis Logic 957
DTC Confirmation Procedure 957
Wiring Diagram 958
Diagnostic Procedure 959
DTC P0335 CRANKSHAFT POSITION SENSOR (CKPS) (OBD) 961
Component Description 961
ECM Terminals and Reference Value 961

CONTENTS (Cont'd)

On Board Diagnosis Logic....962
DTC Confirmation Procedure....962
Wiring Diagram....963
Diagnostic Procedure....964
DTC P0340 CAMSHAFT POSITION SENSOR (CMPS)....967
Component Description....967
ECM Terminals and Reference Value....967
On Board Diagnosis Logic....968
DTC Confirmation Procedure....969
Wiring Diagram....970
Diagnostic Procedure....971
DTC P0420 (RIGHT BANK, -B1), P0430 (LEFT BANK, -B2) THREE WAY CATALYST FUNCTION....974
On Board Diagnosis Logic....974
DTC Confirmation Procedure....974
Overall Function Check....975
Diagnostic Procedure....976
DTC P0440 EVAP CONTROL SYSTEM (SMALL LEAK) (NEGATIVE PRESSURE)....979
On Board Diagnosis Logic....979
DTC Confirmation Procedure....981
Diagnostic Procedure....982
DTC P0443 EVAP CANISTER PURGE VOLUME CONTROL SOLENOID VALVE (CIRCUIT)....994
Description....994
CONSULT-II Reference Value in Data Monitor Mode....994
ECM Terminals and Reference Value....995
On Board Diagnosis Logic....996
DTC Confirmation Procedure....996
Wiring Diagram....997
Diagnostic Procedure....998
DTC P0446 EVAPORATIVE EMISSION (EVAP) CANISTER VENT CONTROL VALVE (CIRCUIT)....1001
Component Description....1001
CONSULT-II Reference Value in Data Monitor Mode....1001
ECM Terminals and Reference Value....1001
On Board Diagnosis Logic....1002
DTC Confirmation Procedure....1002
Wiring Diagram....1003
Diagnostic Procedure....1004
DTC P0450 EVAPORATIVE EMISSION (EVAP) CONTROL SYSTEM PRESSURE SENSOR....1007
Component Description....1007
CONSULT-II Reference Value in Data Monitor Mode....1007
ECM Terminals and Reference Value....1007
On Board Diagnosis Logic....1008
DTC Confirmation Procedure....1008
Wiring Diagram....1009
Diagnostic Procedure....1010
DTC P0455 EVAP CONTROL SYSTEM (GROSS LEAK)....1018
On Board Diagnosis Logic....1018
DTC Confirmation Procedure....1019
Diagnostic Procedure....1021
DTC P0460 FUEL LEVEL SENSOR FUNCTION (SLOSH)....1032
Component Description....1032
ECM Terminals and Reference Value....1032
On Board Diagnosis Logic....1032
DTC Confirmation Procedure....1033
Wiring Diagram....1034
Diagnostic Procedure....1035
DTC P0461 FUEL LEVEL SENSOR FUNCTION....1037
Component Description....1037
On Board Diagnosis Logic....1037
Overall Function Check....1037
DTC P0464 FUEL LEVEL SENSOR CIRCUIT....1039
Component Description....1039
ECM Terminals and Reference Value....1039
On Board Diagnosis Logic....1039
DTC Confirmation Procedure....1040
Wiring Diagram....1041
Diagnostic Procedure....1042
DTC P0500 VEHICLE SPEED SENSOR (VSS)....1044
Component Description....1044
ECM Terminals and Reference Value....1044
On Board Diagnosis Logic....1044
DTC Confirmation Procedure....1044
Overall Function Check....1045
Wiring Diagram....1046
Diagnostic Procedure....1047
DTC P0505 IDLE AIR CONTROL VALVE (IACV) - AUXILIARY AIR CONTROL (AAC) VALVE....1048
Description....1048
CONSULT-II Reference Value in Data Monitor Mode....1049
ECM Terminals and Reference Value....1049
On Board Diagnosis Logic....1049
DTC Confirmation Procedure....1050
Wiring Diagram....1051
Diagnostic Procedure....1052
DTC P0510 CLOSED THROTTLE POSITION SWITCH....1054
Component Description....1054
CONSULT-II Reference Value in Data Monitor Mode....1054
ECM Terminals and Reference Value....1054
On Board Diagnosis Logic....1054
DTC Confirmation Procedure....1055
Overall Function Check....1055

CONTENTS (Cont'd)

Wiring Diagram 1056
Diagnostic Procedure 1057
DTC P0600 A/T CONTROL 1061
System Description 1061
ECM Terminals and Reference Value 1061
On Board Diagnosis Logic 1061
DTC Confirmation Procedure 1062
Overall Function Check 1062
Wiring Diagram 1063
Diagnostic Procedure 1064
DTC P0605 ECM 1066
Component Description 1066
On Board Diagnosis Logic 1066
DTC Confirmation Procedure 1066
Diagnostic Procedure 1067
DTC P1126 THERMOSTAT FUNCTION 1068
On Board Diagnosis Logic 1068
DTC Confirmation Procedure 1068
Diagnostic Procedure 1069
DTC P1148 (RIGHT BANK, -B1), P1168 (LEFT BANK, -B2) CLOSED LOOP CONTROL 1070
On Board Diagnosis Logic 1070
DTC Confirmation Procedure 1070
Overall Function Check 1071
Diagnostic Procedure 1071
DTC P1217 ENGINE OVERTEMPERATURE (OVERHEAT) (WITH ELECTRIC COOLING FAN) 1072
System Description 1072
CONSULT-II Reference Value in Data Monitor Mode 1072
ECM Terminals and Reference Value 1072
On Board Diagnosis Logic 1073
Overall Function Check 1074
Wiring Diagram 1075
Diagnostic Procedure 1076
Main 12 Causes of Overheating 1083
DTC P1217 ENGINE OVERTEMPERATURE (OVERHEAT) (WITHOUT ELECTRIC COOLING FAN) 1084
On Board Diagnosis Logic 1084
Overall Function Check 1084
Diagnostic Procedure 1085
Main 12 Causes of Overheating 1088
DTC P1336 CRANKSHAFT POSITION SENSOR (CKPS) (OBD) (COG) 1089
Component Description 1089
ECM Terminals and Reference Value 1089
On Board Diagnosis Logic 1090
DTC Confirmation Procedure 1090
Wiring Diagram 1091
Diagnostic Procedure 1092
DTC P1440 EVAP CONTROL SYSTEM (SMALL LEAK) (POSITIVE PRESSURE) 1096
On Board Diagnosis Logic 1096
DTC Confirmation Procedure 1097
Diagnostic Procedure 1097
DTC P1441 EVAP CONTROL SYSTEM (VERY SMALL LEAK) 1098
On Board Diagnosis Logic 1098
DTC Confirmation Procedure 1099
Overall Function Check 1100
Diagnostic Procedure 1101
DTC P1444 EVAP CANISTER PURGE VOLUME CONTROL SOLENOID VALVE 1113
Description 1113
CONSULT-II Reference Value in Data Monitor Mode 1113
ECM Terminals and Reference Value 1114
On Board Diagnosis Logic 1114
DTC Confirmation Procedure 1115
Wiring Diagram 1116
Diagnostic Procedure 1117
DTC P1446 EVAPORATIVE EMISSION (EVAP) CANISTER VENT CONTROL VALVE (CLOSE) 1125
Component Description 1125
CONSULT-II Reference Value in Data Monitor Mode 1125
ECM Terminals and Reference Value 1125
On Board Diagnosis Logic 1126
DTC Confirmation Procedure 1126
Wiring Diagram 1127
Diagnostic Procedure 1128
DTC P1447 EVAPORATIVE EMISSION (EVAP) CONTROL SYSTEM PURGE FLOW MONITORING 1132
System Description 1132
On Board Diagnosis Logic 1132
DTC Confirmation Procedure 1133
Overall Function Check 1134
Diagnostic Procedure 1135
DTC P1448 EVAPORATIVE EMISSION (EVAP) CANISTER VENT CONTROL VALVE (OPEN) 1144
Component Description 1144
CONSULT-II Reference Value in Data Monitor Mode 1144
ECM Terminals and Reference Value 1144
On Board Diagnosis Logic 1144
DTC Confirmation Procedure 1145
Overall Function Check 1146
Wiring Diagram 1147
Diagnostic Procedure 1148
DTC P1464 FUEL LEVEL SENSOR CIRCUIT (GROUND SIGNAL) 1152

CONTENTS (Cont'd)

Component Description 1152
ECM Terminals and Reference Value 1152
On Board Diagnosis Logic 1152
DTC Confirmation Procedure 1152
Wiring Diagram 1154
Diagnostic Procedure 1155
DTC P1490 VACUUM CUT VALVE BYPASS VALVE (CIRCUIT) 1156
Description 1156
CONSULT-II Reference Value in Data Monitor Mode 1156
ECM Terminals and Reference Value 1156
On Board Diagnosis Logic 1157
DTC Confirmation Procedure 1157
Wiring Diagram 1158
Diagnostic Procedure 1159
DTC P1491 VACUUM CUT VALVE BYPASS VALVE 1162
Description 1162
CONSULT-II Reference Value in Data Monitor Mode 1162
ECM Terminals and Reference Value 1162
On Board Diagnosis Logic 1163
DTC Confirmation Procedure 1163
Overall Function Check 1164
Wiring Diagram 1165
Diagnostic Procedure 1166
DTC P1605 A/T DIAGNOSIS COMMUNICATION LINE 1171
Component Description 1171
ECM Terminals and Reference Value 1171
On Board Diagnosis Logic 1171
DTC Confirmation Procedure 1171
Wiring Diagram 1172
Diagnostic Procedure 1173
DTC P1706 PARK/NEUTRAL POSITION (PNP) SWITCH 1174
Component Description 1174
CONSULT-II Reference Value in Data Monitor Mode 1174
ECM Terminals and Reference Value 1174
On Board Diagnosis Logic 1174
DTC Confirmation Procedure 1175
Overall Function Check 1176
Wiring Diagram 1177
Diagnostic Procedure 1178
IGNITION SIGNAL 1183
Component Description 1183
ECM Terminals and Reference Value 1183
Wiring Diagram 1184
Diagnostic Procedure 1185
INJECTOR 1189
Component Description 1189
CONSULT-II Reference Value in Data Monitor Mode 1189
ECM Terminals and Reference Value 1189
Wiring Diagram 1190
Diagnostic Procedure 1191
START SIGNAL 1194
CONSULT-II Reference Value in Data Monitor Mode 1194
ECM Terminals and Reference Value 1194
Wiring Diagram 1195
Diagnostic Procedure 1196
FUEL PUMP 1198
System Description 1198
Component Description 1198
CONSULT-II Reference Value in Data Monitor Mode 1198
ECM Terminals and Reference Value 1199
Wiring Diagram 1200
Diagnostic Procedure 1201
POWER STEERING OIL PRESSURE SWITCH 1205
Component Description 1205
CONSULT-II Reference Value in Data Monitor Mode 1205
ECM Terminals and Reference Value 1205
Wiring Diagram 1206
Diagnostic Procedure 1207
IACV-FICD SOLENOID VALVE 1210
Component Description 1210
ECM Terminals and Reference Value 1210
Wiring Diagram 1211
Diagnostic Procedure 1212
MIL & DATA LINK CONNECTORS 1216
Wiring Diagram 1216
SERVICE DATA AND SPECIFICATIONS (SDS) 1217
Fuel Pressure Regulator 1217
Idle Speed and Ignition Timing 1217
Ignition Coil 1217
Mass Air Flow Sensor 1217
Engine Coolant Temperature Sensor 1217
Heated Oxygen Sensor 1 Heater (Front) 1217
Fuel Pump 1217
IACV-AAC Valve 1217
Injector 1218
Throttle Position Sensor 1218
Calculated Load Value 1218
Intake Air Temperature Sensor 1218
Heated Oxygen Sensor 2 Heater (Rear) 1218
Crankshaft Position Sensor (OBD) 1218
Fuel Tank Temperature Sensor 1218

CONTENTS (Cont'd)

VG33ER

TROUBLE DIAGNOSIS - INDEX 1219
Alphabetical & P No. Index for DTC 1219
PRECAUTIONS 1225
Supplemental Restraint System (SRS) "AIR BAG" and "SEAT BELT PRE-TENSIONER" 1225
Precautions for On Board Diagnostic (OBD) System of Engine and A/T 1225
Engine Fuel & Emission Control System 1226
Precautions 1227
Wiring Diagrams and Trouble Diagnosis 1228
PREPARATION 1229
Special Service Tools 1229
Commercial Service Tools 1229
ENGINE AND EMISSION CONTROL OVERALL SYSTEM 1231
Engine Control Component Parts Location 1231
Circuit Diagram 1233
System Diagram 1234
Vacuum Hose Drawing 1235
System Chart 1236
ENGINE AND EMISSION BASIC CONTROL SYSTEM DESCRIPTION 1237
Multiport Fuel Injection (MFI) System 1237
Distributor Ignition (DI) System 1239
Air Conditioning Cut Control 1240
Fuel Cut Control (at no load & high engine speed) 1241
Evaporative Emission System 1241
On Board Refueling Vapor Recovery (ORVR) 1247
Positive Crankcase Ventilation 1257
BASIC SERVICE PROCEDURE 1259
Fuel Pressure Release 1259
Fuel Pressure Check 1259
Fuel Pressure Regulator Check 1260
Injector 1260
Fast Idle Cam (FIC) 1261
Idle Speed/Ignition Timing/Idle Mixture Ratio Adjustment 1262
ON BOARD DIAGNOSTIC SYSTEM DESCRIPTION 1274
Introduction 1274
Two Trip Detection Logic 1274
Emission-related Diagnostic Information 1275
Malfunction Indicator Lamp (MIL) 1289
OBD System Operation Chart 1290
CONSULT-II 1295
Generic Scan Tool (GST) 1308
TROUBLE DIAGNOSIS - INTRODUCTION 1310
Introduction 1310
Work Flow 1312
TROUBLE DIAGNOSIS - BASIC INSPECTION 1314
Basic Inspection 1314
TROUBLE DIAGNOSIS - GENERAL DESCRIPTION 1329
DTC Inspection Priority Chart 1329
Fail-safe Chart 1330
Symptom Matrix Chart 1331
CONSULT-II Reference Value in Data Monitor Mode 1335
Major Sensor Reference Graph in Data Monitor Mode 1337
ECM Terminals and Reference Value 1340
TROUBLE DIAGNOSIS - SPECIFICATION VALUE 1349
Description 1349
Testing Condition 1349
Inspection Procedure 1349
Diagnostic Procedure 1350
TROUBLE DIAGNOSIS FOR INTERMITTENT INCIDENT 1353
Description 1353
Diagnostic Procedure 1353
TROUBLE DIAGNOSIS FOR POWER SUPPLY 1354
Main Power Supply and Ground Circuit 1354
DTC P0100 MASS AIR FLOW SENSOR (MAFS) 1360
Component Description 1360
CONSULT-II Reference Value in Data Monitor Mode 1360
ECM Terminals and Reference Value 1360
On Board Diagnosis Logic 1360
DTC Confirmation Procedure 1361
Overall Function Check 1363
Wiring Diagram 1364
Diagnostic Procedure 1365
DTC P0105 ABSOLUTE PRESSURE SENSOR 1369
Component Description 1369
On Board Diagnosis Logic 1369
DTC Confirmation Procedure 1369
Diagnostic Procedure 1370
DTC P0110 INTAKE AIR TEMPERATURE SENSOR 1371
Component Description 1371
On Board Diagnosis Logic 1371
DTC Confirmation Procedure 1371
Wiring Diagram 1373
Diagnostic Procedure 1374
DTC P0115 ENGINE COOLANT TEMPERATURE SENSOR (ECTS) (CIRCUIT) 1376
Component Description 1376
On Board Diagnosis Logic 1376
DTC Confirmation Procedure 1377
Wiring Diagram 1378
Diagnostic Procedure 1379

CONTENTS (Cont'd)

DTC P0120 THROTTLE POSITION SENSOR 1381
Description 1381
CONSULT-II Reference Value in Data Monitor Mode 1381
ECM Terminals and Reference Value 1382
On Board Diagnosis Logic.....1382
DTC Confirmation Procedure 1383
Wiring Diagram 1386
Diagnostic Procedure 1387
DTC P0125 ENGINE COOLANT TEMPERATURE SENSOR (ECTS) 1394
Description 1394
On Board Diagnosis Logic.....1394
DTC Confirmation Procedure 1395
Wiring Diagram 1396
Diagnostic Procedure 1397
DTC P0130, P0150 HEATED OXYGEN SENSOR 1 (FRONT) (BANK 1)/(BANK 2) (CIRCUIT) 1400
Component Description 1400
CONSULT-II Reference Value in Data Monitor Mode 1400
ECM Terminals and Reference Value 1400
On Board Diagnosis Logic.....1401
DTC Confirmation Procedure 1402
Overall Function Check 1403
Wiring Diagram 1404
Diagnostic Procedure 1406
DTC P0131, P0151 HEATED OXYGEN SENSOR 1 (FRONT) (BANK 1)/(BANK 2) (LEAN SHIFT MONITORING) 1411
Component Description 1411
CONSULT-II Reference Value in Data Monitor Mode 1411
ECM Terminals and Reference Value 1411
On Board Diagnosis Logic.....1412
DTC Confirmation Procedure 1413
Overall Function Check 1414
Diagnostic Procedure 1414
DTC P0132, P0152 HEATED OXYGEN SENSOR 1 (FRONT) (BANK 1)/(BANK 2) (RICH SHIFT MONITORING) 1420
Component Description 1420
CONSULT-II Reference Value in Data Monitor Mode 1420
ECM Terminals and Reference Value 1420
On Board Diagnosis Logic.....1421
DTC Confirmation Procedure 1422
Overall Function Check 1423
Diagnostic Procedure 1423
DTC P0133, P0153 HEATED OXYGEN SENSOR 1 (FRONT) (BANK 1)/(BANK 2) (RESPONSE MONITORING) 1429
Component Description 1429
CONSULT-II Reference Value in Data Monitor Mode 1429
ECM Terminals and Reference Value 1429
On Board Diagnosis Logic.....1430
DTC Confirmation Procedure 1430
Overall Function Check 1431
Wiring Diagram 1432
Diagnostic Procedure 1434
DTC P0134, P0154 HEATED OXYGEN SENSOR 1 (FRONT) (BANK 1)/(BANK 2) (HIGH VOLTAGE) 1443
Component Description 1443
CONSULT-II Reference Value in Data Monitor Mode 1443
ECM Terminals and Reference Value 1443
On Board Diagnosis Logic.....1444
DTC Confirmation Procedure 1444
Wiring Diagram 1445
Diagnostic Procedure 1447
DTC P0135, P0155 HEATED OXYGEN SENSOR 1 HEATER (FRONT) (BANK 1)/(BANK 2) 1451
Description 1451
CONSULT-II Reference Value in Data Monitor Mode 1451
ECM Terminals and Reference Value 1451
On Board Diagnosis Logic.....1451
DTC Confirmation Procedure 1452
Wiring Diagram 1453
Diagnostic Procedure 1455
DTC P0137, P0157 HEATED OXYGEN SENSOR 2 (REAR) (BANK 1)/(BANK 2) (MIN. VOLTAGE MONITORING) 1458
Component Description 1458
CONSULT-II Reference Value in Data Monitor Mode 1458
ECM Terminals and Reference Value 1458
On Board Diagnosis Logic.....1458
DTC Confirmation Procedure 1459
Overall Function Check 1460
Wiring Diagram 1461
Diagnostic Procedure 1463
DTC P0138, P0158 HEATED OXYGEN SENSOR 2 (REAR) (BANK 1)/(BANK 2) (MAX. VOLTAGE MONITORING) 1468
Component Description 1468
CONSULT-II Reference Value in Data Monitor Mode 1468
ECM Terminals and Reference Value 1468
On Board Diagnosis Logic.....1468
DTC Confirmation Procedure 1469
Overall Function Check 1470
Wiring Diagram 1471

CONTENTS (Cont'd)

Diagnostic Procedure 1473
DTC P0139, P0159 HEATED OXYGEN SENSOR 2 (REAR) (BANK 1)/(BANK 2) (RESPONSE MONITORING) 1478
Component Description 1478
CONSULT-II Reference Value in Data Monitor Mode 1478
ECM Terminals and Reference Value 1478
On Board Diagnosis Logic 1478
DTC Confirmation Procedure 1479
Overall Function Check 1480
Wiring Diagram 1481
Diagnostic Procedure 1483
DTC P0140, P0160 HEATED OXYGEN SENSOR 2 (REAR) (BANK 1)/(BANK 2) (HIGH VOLTAGE) 1488
Component Description 1488
CONSULT-II Reference Value in Data Monitor Mode 1488
ECM Terminals and Reference Value 1488
On Board Diagnosis Logic 1488
DTC Confirmation Procedure 1489
Overall Function Check 1489
Wiring Diagram 1491
Diagnostic Procedure 1493
DTC P0141, P0161 HEATED OXYGEN SENSOR 2 HEATER (REAR) (BANK 1)/(BANK 2) 1498
Description 1498
CONSULT-II Reference Value in Data Monitor Mode 1498
ECM Terminals and Reference Value 1498
On Board Diagnosis Logic 1499
DTC Confirmation Procedure 1499
Wiring Diagram 1500
Diagnostic Procedure 1502
DTC P0171 (RIGHT, -B1), P0174 (LEFT, -B2) FUEL INJECTION SYSTEM FUNCTION (LEAN) 1506
On Board Diagnosis Logic 1506
DTC Confirmation Procedure 1507
Wiring Diagram 1508
Diagnostic Procedure 1510
DTC P0172 (RIGHT, -B1), P0175 (LEFT, -B2) FUEL INJECTION SYSTEM FUNCTION (RICH) 1515
On Board Diagnosis Logic 1515
DTC Confirmation Procedure 1516
Wiring Diagram 1517
Diagnostic Procedure 1519
DTC P0180 FUEL TANK TEMPERATURE SENSOR 1523
Component Description 1523
On Board Diagnosis Logic 1523
DTC Confirmation Procedure 1524
Wiring Diagram 1525
Diagnostic Procedure 1526
DTC P0217 COOLANT OVERTEMPERATURE ENRICHMENT PROTECTION 1528
System Description 1528
CONSULT-II Reference Value in Data Monitor Mode 1528
ECM Terminals and Reference Value 1528
On Board Diagnosis Logic 1529
Possible Cause 1529
Overall Function Check 1530
Wiring Diagram 1533
Diagnostic Procedure 1534
Main 12 Causes of Overheating 1545
DTC P0300 - P0306 NO. 6 - 1 CYLINDER MISFIRE, MULTIPLE CYLINDER MISFIRE 1546
On Board Diagnosis Logic 1546
DTC Confirmation Procedure 1547
Diagnostic Procedure 1547
DTC P0325 KNOCK SENSOR (KS) 1555
Component Description 1555
ECM Terminals and Reference Value 1555
On Board Diagnosis Logic 1555
DTC Confirmation Procedure 1555
Wiring Diagram 1556
Diagnostic Procedure 1557
DTC P0335 CRANKSHAFT POSITION SENSOR (CKPS) (OBD) 1559
Component Description 1559
ECM Terminals and Reference Value 1559
On Board Diagnosis Logic 1560
DTC Confirmation Procedure 1560
Wiring Diagram 1561
Diagnostic Procedure 1562
DTC P0340 CAMSHAFT POSITION SENSOR (CMPS) 1565
Component Description 1565
ECM Terminals and Reference Value 1565
On Board Diagnosis Logic 1566
DTC Confirmation Procedure 1567
Wiring Diagram 1568
Diagnostic Procedure 1569
DTC P0420 (RIGHT BANK, -B1), P0430 (LEFT BANK, -B2) THREE WAY CATALYST FUNCTION 1572
On Board Diagnosis Logic 1572
DTC Confirmation Procedure 1572
Overall Function Check 1573
Diagnostic Procedure 1574
DTC P0440 EVAP CONTROL SYSTEM (SMALL LEAK) (NEGATIVE PRESSURE) 1577
On Board Diagnosis Logic 1577
DTC Confirmation Procedure 1579
Diagnostic Procedure 1580

CONTENTS (Cont'd)

DTC P0443 EVAP CANISTER PURGE VOLUME CONTROL SOLENOID VALVE (CIRCUIT).....1592
Description.....1592
CONSULT-II Reference Value in Data Monitor Mode.....1592
ECM Terminals and Reference Value.....1593
On Board Diagnosis Logic.....1594
DTC Confirmation Procedure.....1594
Wiring Diagram.....1595
Diagnostic Procedure.....1596
DTC P0446 EVAPORATIVE EMISSION (EVAP) CANISTER VENT CONTROL VALVE (CIRCUIT).....1599
Component Description.....1599
CONSULT-II Reference Value in Data Monitor Mode.....1599
ECM Terminals and Reference Value.....1599
On Board Diagnosis Logic.....1600
DTC Confirmation Procedure.....1600
Wiring Diagram.....1601
Diagnostic Procedure.....1602
DTC P0450 EVAPORATIVE EMISSION (EVAP) CONTROL SYSTEM PRESSURE SENSOR.....1605
Component Description.....1605
CONSULT-II Reference Value in Data Monitor Mode.....1605
ECM Terminals and Reference Value.....1605
On Board Diagnosis Logic.....1606
DTC Confirmation Procedure.....1606
Wiring Diagram.....1607
Diagnostic Procedure.....1608
DTC P0455 EVAP CONTROL SYSTEM (GROSS LEAK).....1616
On Board Diagnosis Logic.....1616
DTC Confirmation Procedure.....1617
Diagnostic Procedure.....1619
DTC P0460 FUEL LEVEL SENSOR FUNCTION (SLOSH).....1630
Component Description.....1630
ECM Terminals and Reference Value.....1630
On Board Diagnosis Logic.....1630
DTC Confirmation Procedure.....1631
Wiring Diagram.....1632
Diagnostic Procedure.....1633
DTC P0461 FUEL LEVEL SENSOR FUNCTION.....1635
Component Description.....1635
On Board Diagnosis Logic.....1635
Overall Function Check.....1635
DTC P0464 FUEL LEVEL SENSOR CIRCUIT.....1637
Component Description.....1637
ECM Terminals and Reference Value.....1637
On Board Diagnosis Logic.....1637
DTC Confirmation Procedure.....1638
Wiring Diagram.....1639
Diagnostic Procedure.....1640
DTC P0500 VEHICLE SPEED SENSOR (VSS).....1642
Component Description.....1642
ECM Terminals and Reference Value.....1642
On Board Diagnosis Logic.....1642
DTC Confirmation Procedure.....1642
Overall Function Check.....1643
Wiring Diagram.....1644
Diagnostic Procedure.....1645
DTC P0505 IDLE AIR CONTROL VALVE (IACV) - AUXILIARY AIR CONTROL (AAC) VALVE.....1646
Description.....1646
CONSULT-II Reference Value in Data Monitor Mode.....1647
ECM Terminals and Reference Value.....1647
On Board Diagnosis Logic.....1647
DTC Confirmation Procedure.....1648
Wiring Diagram.....1649
Diagnostic Procedure.....1650
DTC P0510 CLOSED THROTTLE POSITION SWITCH.....1652
Component Description.....1652
CONSULT-II Reference Value in Data Monitor Mode.....1652
ECM Terminals and Reference Value.....1652
On Board Diagnosis Logic.....1652
DTC Confirmation Procedure.....1653
Overall Function Check.....1653
Wiring Diagram.....1654
Diagnostic Procedure.....1655
DTC P0600 A/T CONTROL.....1659
System Description.....1659
ECM Terminals and Reference Value.....1659
On Board Diagnosis Logic.....1659
DTC Confirmation Procedure.....1660
Wiring Diagram.....1661
Diagnostic Procedure.....1662
DTC P0605 ECM.....1664
Component Description.....1664
On Board Diagnosis Logic.....1664
DTC Confirmation Procedure.....1664
Diagnostic Procedure.....1665
DTC P1126 THERMOSTAT FUNCTION.....1666
On Board Diagnosis Logic.....1666
DTC Confirmation Procedure.....1666
Diagnostic Procedure.....1667
DTC P1148 (RIGHT BANK, -B1), P1168 (LEFT BANK, -B2) CLOSED LOOP CONTROL.....1668
On Board Diagnosis Logic.....1668
DTC Confirmation Procedure.....1668
Overall Function Check.....1669

CONTENTS (Cont'd)

Diagnostic Procedure 1669
DTC P1217 ENGINE OVER TEMPERATURE (OVERHEAT) 1670
System Description 1670
CONSULT-II Reference Value in Data Monitor Mode 1670
ECM Terminals and Reference Value 1670
On Board Diagnosis Logic 1671
Overall Function Check 1672
Wiring Diagram 1673
Diagnostic Procedure 1674
Main 12 Causes of Overheating 1685
DTC P1243 SUPERCHARGER BYPASS (SCB) VALVE CONTROL SOLENOID VALVE 1686
Description 1686
CONSULT-II Reference Value in Data Monitor Mode 1687
ECM Terminals and Reference Value 1687
On Board Diagnosis Logic 1687
DTC Confirmation Procedure 1688
Wiring Diagram 1689
Diagnostic Procedure 1690
DTC P1336 CRANKSHAFT POSITION SENSOR (CKPS) (OBD) (COG) 1692
Component Description 1692
ECM Terminals and Reference Value 1692
On Board Diagnosis Logic 1693
DTC Confirmation Procedure 1693
Wiring Diagram 1694
Diagnostic Procedure 1695
DTC P1440 EVAP CONTROL SYSTEM (SMALL LEAK) (POSITIVE PRESSURE) 1699
On Board Diagnosis Logic 1699
DTC Confirmation Procedure 1700
Diagnostic Procedure 1700
DTC P1441 EVAP CONTROL SYSTEM (VERY SMALL LEAK) 1701
On Board Diagnosis Logic 1701
DTC Confirmation Procedure 1702
Overall Function Check 1703
Diagnostic Procedure 1704
DTC P1444 EVAP CANISTER PURGE VOLUME CONTROL SOLENOID VALVE 1716
Description 1716
CONSULT-II Reference Value in Data Monitor Mode 1716
ECM Terminals and Reference Value 1717
On Board Diagnosis Logic 1717
DTC Confirmation Procedure 1718
Wiring Diagram 1719
Diagnostic Procedure 1720
DTC P1446 EVAPORATIVE EMISSION (EVAP) CANISTER VENT CONTROL VALVE (CLOSE) 1728
Component Description 1728
CONSULT-II Reference Value in Data Monitor Mode 1728
ECM Terminals and Reference Value 1728
On Board Diagnosis Logic 1729
DTC Confirmation Procedure 1729
Wiring Diagram 1730
Diagnostic Procedure 1731
DTC P1447 EVAPORATIVE EMISSION (EVAP) CONTROL SYSTEM PURGE FLOW MONITORING 1735
System Description 1735
On Board Diagnosis Logic 1735
DTC Confirmation Procedure 1736
Overall Function Check 1737
Diagnostic Procedure 1738
DTC P1448 EVAPORATIVE EMISSION (EVAP) CANISTER VENT CONTROL VALVE (OPEN) 1747
Component Description 1747
CONSULT-II Reference Value in Data Monitor Mode 1747
ECM Terminals and Reference Value 1747
On Board Diagnosis Logic 1747
DTC Confirmation Procedure 1748
Overall Function Check 1749
Wiring Diagram 1750
Diagnostic Procedure 1751
DTC P1464 FUEL LEVEL SENSOR CIRCUIT (GROUND SIGNAL) 1755
Component Description 1755
ECM Terminals and Reference Value 1755
On Board Diagnosis Logic 1755
DTC Confirmation Procedure 1755
Wiring Diagram 1757
Diagnostic Procedure 1758
DTC P1490 VACUUM CUT VALVE BYPASS VALVE (CIRCUIT) 1759
Description 1759
CONSULT-II Reference Value in Data Monitor Mode 1759
ECM Terminals and Reference Value 1759
On Board Diagnosis Logic 1760
DTC Confirmation Procedure 1760
Wiring Diagram 1761
Diagnostic Procedure 1762
DTC P1491 VACUUM CUT VALVE BYPASS VALVE 1765
Description 1765
CONSULT-II Reference Value in Data Monitor Mode 1765

CONTENTS (Cont'd)

ECM Terminals and Reference Value 1765
On Board Diagnosis Logic.....1766
DTC Confirmation Procedure 1766
Overall Function Check 1767
Wiring Diagram 1768
Diagnostic Procedure 1769
DTC P1605 A/T DIAGNOSIS COMMUNICATION LINE 1774
Component Description 1774
ECM Terminals and Reference Value 1774
On Board Diagnosis Logic.....1774
DTC Confirmation Procedure 1774
Wiring Diagram 1775
Diagnostic Procedure 1776
DTC P1706 PARK/NEUTRAL POSITION (PNP) SWITCH 1777
Component Description 1777
CONSULT-II Reference Value in Data Monitor Mode 1777
ECM Terminals and Reference Value 1777
On Board Diagnosis Logic.....1777
DTC Confirmation Procedure 1778
Overall Function Check 1779
Wiring Diagram 1780
Diagnostic Procedure 1781
IGNITION SIGNAL.....1786
Component Description 1786
ECM Terminals and Reference Value 1786
Wiring Diagram 1787
Diagnostic Procedure 1788
INJECTOR 1792
Component Description 1792
CONSULT-II Reference Value in Data Monitor Mode 1792
ECM Terminals and Reference Value 1792
Wiring Diagram 1793
Diagnostic Procedure 1794
START SIGNAL.....1797
CONSULT-II Reference Value in Data Monitor Mode 1797
ECM Terminals and Reference Value 1797
Wiring Diagram 1798
Diagnostic Procedure 1799
FUEL PUMP.....1801
System Description.....1801
Component Description 1801
CONSULT-II Reference Value in Data Monitor Mode 1801
ECM Terminals and Reference Value 1802
Wiring Diagram 1803
Diagnostic Procedure 1804
POWER STEERING OIL PRESSURE SWITCH.....1808
Component Description 1808
CONSULT-II Reference Value in Data Monitor Mode 1808
ECM Terminals and Reference Value 1808
Wiring Diagram 1809
Diagnostic Procedure 1810
IACV-FICD SOLENOID VALVE.....1813
Component Description 1813
ECM Terminals and Reference Value 1813
Wiring Diagram 1814
Diagnostic Procedure 1815
MIL & DATA LINK CONNECTORS 1819
Wiring Diagram 1819
SERVICE DATA AND SPECIFICATIONS (SDS) 1820
Fuel Pressure Regulator.....1820
Idle Speed and Ignition Timing.....1820
Ignition Coil 1820
Mass Air Flow Sensor.....1820
Engine Coolant Temperature Sensor 1820
Heated Oxygen Sensor 1 Heater (Front) 1820
Fuel Pump 1820
IACV-AAC Valve 1820
Injector 1821
Throttle Position Sensor 1821
Calculated Load Value.....1821
Intake Air Temperature Sensor.....1821
Heated Oxygen Sensor 2 Heater (Rear).....1821
Crankshaft Position Sensor (OBD).....1821
Fuel Tank Temperature Sensor 1821

Alphabetical & P No. Index for DTC

NEEC0001

ALPHABETICAL INDEX FOR DTC

NEEC0001S01

Items (CONSULT-II screen terms)	DTC*4 CONSULT-II GST*2	Reference page
Unable to access ECM	—	EC-125
*COOLAN T SEN/CIRC	P0125	EC-193
ABSL PRES SEN/CIRC	P0105	EC-166
AIR TEMP SEN/CIRC	P0110	EC-168
CKP SENSOR (COG)	P1336	EC-453
CKP SEN/CIRCUIT	P0335	EC-319
CLOSED LOOP-B1	P1148	EC-451
CLOSED TP SW/CIRC	P0510	EC-440
CMP SEN/CIRCUIT	P0340	EC-325
COOLANT T SEN/CIRC	P0115	EC-174
CYL 1 MISFIRE	P0301	EC-306
CYL 2 MISFIRE	P0302	EC-306
CYL 3 MISFIRE	P0303	EC-306
CYL 4 MISFIRE	P0304	EC-306
ECM	P0605	EC-447
EGR SYSTEM	P0400	EC-333
EGR SYSTEM	P1402	EC-472
EGR TEMP SEN/CIRC	P1401	EC-466
EGRC SOLENOID/V	P1400	EC-459
EGRC-BPT VALVE	P0402	EC-345
EVAP GROSS LEAK	P0455	EC-406
EVAP PURG FLOW/MON	P1447	EC-516
EVAP SMALL LEAK	P0440	EC-358
EVAP SMALL LEAK	P1440	EC-481
EVAP SYS PRES SEN	P0450	EC-391
EVAP VERY SML LEAK	P1441	EC-483
FUEL LEVEL SENSOR	P0461	EC-423
FUEL LEVL SEN/CIRC	P0464	EC-425
FUEL LEV SEN SLOSH	P0460	EC-419
FUEL LEVL SEN/CIRC	P1464	EC-534
FUEL SYS LEAN/BK1	P0171	EC-286
FUEL SYS RICH/BK1	P0172	EC-293
FUEL TEMP SEN/CIRC	P0180	EC-300
HO2S1 (B1)	P0130	EC-198

Items (CONSULT-II screen terms)	DTC*4 CONSULT-II GST*2	Reference page
HO2S1 (B1)	P0131	EC-206
HO2S1 (B1)	P0132	EC-213
HO2S1 (B1)	P0133	EC-220
HO2S1 (B1)	P0134	EC-231
HO2S1 HTR (B1)	P0135	EC-238
HO2S2 (B1)	P0137	EC-243
HO2S2 (B1)	P0138	EC-253
HO2S2 (B1)	P0139	EC-263
HO2S2 (B1)	P0140	EC-273
HO2S2 HTR (B1)	P0141	EC-281
IACV/AAC VLV/CIRC	P0505	EC-434
KNOCK SEN/CIRC-B1	P0325	EC-315
MAF SEN/CIRCUIT*2	P0100	EC-156
MULTI CYL MISFIRE	P0300	EC-306
NO DTC IS DETECTED. FURTHER TESTING MAY BE REQUIRED.	**P0000**	**—**
OVERHEAT	—	EC-574
P-N POS SW/CIRCUIT	P1706	EC-555
PURG VOLUME CONT/V	P0443	EC-375
PURG VOLUME CONT/V	P1444	EC-498
TCC SOL/V	P1775	EC-564, ***AT-43***
TCC SOL/V	P1776	EC-570
THERMSTAT FUNCTN	P1126	EC-449
THRTL POS SEN/CIRC*2	P0120	EC-179
TW CATALYST SYS-B1	P0420	EC-353
VC CUT/V BYPASS/V	P1491	EC-544
VC/V BYPASS/V	P1490	EC-537
VEH SPEED SEN/CIRC*3	P0500	EC-429
VENT CONTROL VALVE	P0446	EC-383
VENT CONTROL VALVE	P1446	EC-510
VENT CONTROL VALVE	P1448	EC-526

*1: These numbers are prescribed by SAE J2012.

*2: When the fail-safe operation occurs, the MIL illuminates.

*3: The MIL illuminates when the "Revolution sensor signal" and the "Vehicle speed sensor signal" meet the fail-safe condition at the same time.

*4: 1st trip DTC No. is the same as DTC No.

P NO. INDEX FOR DTC

NEEC0001S02

DTC*4 CONSULT-II GST*1	Items (CONSULT-II screen terms)	Reference page
—	Unable to access ECM	EC-125
P0000	**NO DTC IS DETECTED. FURTHER TESTING MAY BE REQUIRED.**	**—**
P0100	MAF SEN/CIRCUIT*2	EC-156
P0105	ABSL PRES SEN/CIRC	EC-166
P0110	AIR TEMP SEN/CIRC	EC-168
P0115	COOLANT T SEN/CIRC	EC-174
P0120	THRTL POS SEN/CIRC*2	EC-179
P0125	*COOLAN T SEN/CIRC	EC-193
P0130	HO2S1 (B1)	EC-198
P0131	HO2S1 (B1)	EC-206
P0132	HO2S1 (B1)	EC-213
P0133	HO2S1 (B1)	EC-220
P0134	HO2S1 (B1)	EC-231
P0135	HO2S1 HTR (B1)	EC-238
P0137	HO2S2 (B1)	EC-243
P0138	HO2S2 (B1)	EC-253
P0139	HO2S2 (B1)	EC-263
P0140	HO2S2 (B1)	EC-273
P0141	HO2S2 HTR (B1)	EC-281
P0171	FUEL SYS LEAN/BK1	EC-286
P0172	FUEL SYS RICH/BK1	EC-293
P0180	FUEL TEMP SEN/CIRC	EC-300
P0300	MULTI CYL MISFIRE	EC-306
P0301	CYL 1 MISFIRE	EC-306
P0302	CYL 2 MISFIRE	EC-306
P0303	CYL 3 MISFIRE	EC-306
P0304	CYL 4 MISFIRE	EC-306
P0325	KNOCK SEN/CIRC-B1	EC-315
P0335	CKP SEN/CIRCUIT	EC-319
P0340	CMP SEN/CIRCUIT	EC-325
P0400	EGR SYSTEM	EC-333
P0402	EGRC-BPT VALVE	EC-345
P0420	TW CATALYST SYS-B1	EC-353
P0440	EVAP SMALL LEAK	EC-358
P0443	PURG VOLUME CONT/V	EC-375

DTC*4 CONSULT-II GST*1	Items (CONSULT-II screen terms)	Reference page
P0446	VENT CONTROL VALVE	EC-383
P0450	EVAP SYS PRES SEN	EC-391
P0455	EVAP GROSS LEAK	EC-406
P0460	FUEL LEV SEN SLOSH	EC-419
P0461	FUEL LEVEL SENSOR	EC-423
P0464	FUEL LEVL SEN/CIRC	EC-425
P0500	VEH SPEED SEN/CIRC*3	EC-429
P0505	IACV/AAC VLV/CIRC	EC-434
P0510	CLOSED TP SW/CIRC	EC-440
P0605	ECM	EC-447
P1126	THERMSTAT FNCTN	EC-449
P1148	CLOSED LOOP-B1	EC-451
P1336	CKP SENSOR (COG)	EC-453
P1400	EGRC SOLENOID/V	EC-459
P1401	EGR TEMP SEN/CIRC	EC-466
P1402	EGR SYSTEM	EC-472
P1440	EVAP SMALL LEAK	EC-481
P1441	EVAP VERY SML LEAK	EC-483
P1444	PURG VOLUME CONT/V	EC-498
P1446	VENT CONTROL VALVE	EC-510
P1447	EVAP PURG FLOW/MON	EC-516
P1448	VENT CONTROL VALVE	EC-526
P1464	FUEL LEVL SEN/CIRC	EC-534
P1490	VC/V BYPASS/V	EC-537
P1491	VC CUT/V BYPASS/V	EC-544
P1706	P-N POS SW/CIRCUIT	EC-555
P1775	TCC SOL/V	EC-564, ***AT-43***
P1776	TCC SOL/V	EC-570
—	OVERHEAT	EC-574

*1: These numbers are prescribed by SAE J2012.

*2: When the fail-safe operation occurs, the MIL illuminates.

*3: The MIL illuminates when the "Revolution sensor signal" and the "Vehicle speed sensor signal" meet the fail-safe condition at the same time.

*4: 1st trip DTC No. is the same as DTC No.

Supplemental Restraint System (SRS) "AIR BAG" and "SEAT BELT PRE-TENSIONER"

NEEC0002

The Supplemental Restraint System such as "AIR BAG" and "SEAT BELT PRE-TENSIONER" used along with a seat belt, help to reduce the risk or severity of injury to the driver and front passenger in a frontal collision. The Supplemental Restraint System consists of air bag modules (located in the center of the steering wheel and in the instrument panel on the passenger side), seat belt pre-tensioners, a diagnosis sensor unit, warning lamp, wiring harness, and spiral cable.

The vehicle (except Crew Cab model) is equipped with a passenger air bag deactivation switch. Because no rear seat exists where a rear-facing child restraint can be placed, the switch is designed to turn off the passenger air bag so that a rear-facing child restraint can be used in the front passenger seat. The switch is located in the center of the instrument panel, near the ashtray. When the switch is turned to the ON position, the passenger air bag is enabled and could inflate in a frontal collision. When the switch is turned to the OFF position, the passenger air bag is disabled and will not inflate in a frontal collision. A passenger air bag OFF indicator on the instrument panel lights up when the passenger air bag is switched OFF. The driver air bag always remains enabled and is not affected by the passenger air bag deactivation switch.

Information necessary to service the system safely is included in the **RS section** of this Service Manual.

WARNING:

- **To avoid rendering the SRS inoperative, which could increase the risk of personal injury or death in the event of a collision which would result in air bag inflation, all maintenance should be performed by an authorized NISSAN dealer.**
- **Improper maintenance, including incorrect removal and installation of the SRS, can lead to personal injury caused by unintentional activation of the system. For removal of Spiral Cable and Air Bag Module, see the RS section.**
- **Do not use electrical test equipment on any circuit related to the SRS unless instructed to in this Service Manual. Spiral cable and wiring harnesses (except "SEAT BELT PRE-TENSIONER") covered with yellow insulation either just before the harness connectors or for the complete harness are related to the SRS.**
- **The vehicle (except Crew Cab model) is equipped with a passenger air bag deactivation switch which can be operated by the customer. When the passenger air bag is switched OFF, the passenger air bag is disabled and will not inflate in a frontal collision. When the passenger air bag is switched ON, the passenger air bag is enabled and could inflate in a frontal collision. After SRS maintenance or repair, make sure the passenger air bag deactivation switch is in the same position (ON or OFF) as when the vehicle arrived for service.**

Precautions for On Board Diagnostic (OBD) System of Engine and A/T

NEEC0003

The ECM has an on board diagnostic system. It will light up the malfunction indicator lamp (MIL) to warn the driver of a malfunction causing emission deterioration.

CAUTION:

- **Be sure to turn the ignition switch OFF and disconnect the negative battery terminal before any repair or inspection work. The open/short circuit of related switches, sensors, solenoid valves, etc. will cause the MIL to light up.**
- **Be sure to connect and lock the connectors securely after work. A loose (unlocked) connector will cause the MIL to light up due to the open circuit. (Be sure the connector is free from water, grease, dirt, bent terminals, etc.)**
- **Certain systems and components, especially those related to OBD, may use a new style slide-locking type harness connector.**
  For description and how to disconnect, refer to *EL-5*, "HARNESS CONNECTOR".
- **Be sure to route and secure the harnesses properly after work. The interference of the harness with a bracket, etc. may cause the MIL to light up due to the short circuit.**
- **Be sure to connect rubber tubes properly after work. A misconnected or disconnected rubber tube may cause the MIL to light up due to the malfunction of the EGR system or fuel injection system, etc.**
- **Be sure to erase the unnecessary malfunction information (repairs completed) from the ECM and TCM (Transmission Control Module) before returning the vehicle to the customer.**

Engine Fuel & Emission Control System

NEEC0004

ECM

- Do not disassemble ECM.
- Do not turn on board diagnostic test mode selector forcibly.
- If a battery terminal is disconnected, the memory will return to the ECM value.
  The ECM will now start to self-control at its initial value. Engine operation can vary slightly when the terminal is disconnected. However, this is not an indication of a problem. Do not replace parts because of a slight variation.

WIRELESS EQUIPMENT

- When installing CB ham radio or a mobile phone, be sure to observe the following as it may adversely affect electronic control systems depending on its installation location.

1) Keep the antenna as far away as possible from the electronic control units.
2) Keep the antenna feeder line more than 20 cm (7.9 in) away from the harness of electronic controls.
   Do not let them run parallel for a long distance.
3) Adjust the antenna and feeder line so that the standing-wave ratio can be kept smaller.
4) Be sure to ground the radio to vehicle body.

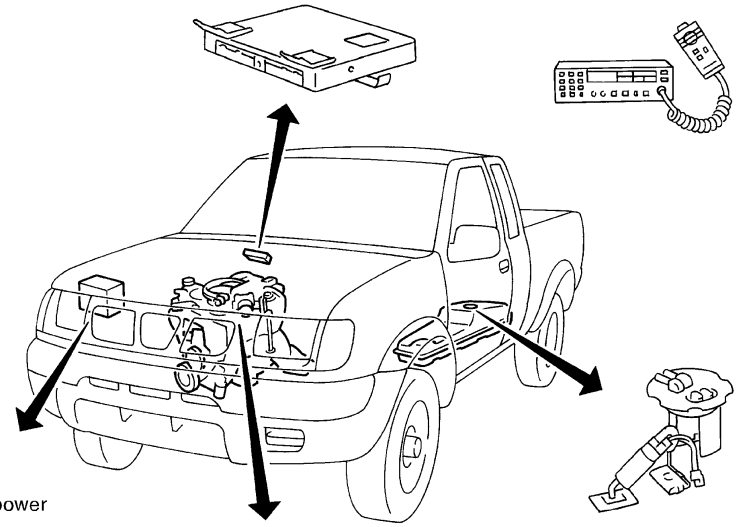

BATTERY

- Always use a 12 volt battery as power source.
- Do not attempt to disconnect battery cables while engine is running.

WHEN STARTING

- Do not depress accelerator pedal when starting.
- Immediately after starting, do not rev up engine unnecessarily.
- Do not rev up engine just prior to shutdown.

ECM PARTS HANDLING

- Handle mass air flow sensor carefully to avoid damage.
- Do not disassemble mass air flow sensor.
- Do not clean mass air flow sensor with any type of detergent.
- Do not disassemble IACV-AAC valve.
- Even a slight leak in the air intake system can cause serious problems.
- Do not shock or jar the camshaft position sensor or crankshaft position sensor (OBD).

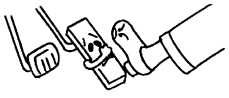

FUEL PUMP

- Do not operate fuel pump when there is no fuel in lines.
- Tighten fuel hose clamps to the specified torque. (Refer to MA section.)

ECM HARNESS HANDLING

- Securely connect ECM harness connectors.
  A poor connection can cause an extremely high (surge) voltage to develop in coil and condenser, thus resulting in damage to ICs.
- Keep ECM harness at least 10 cm (3.9 in.) away from adjacent harnesses to prevent an ECM system malfunction due to receiving external noise, degraded operation of ICs, etc.
- Keep ECM parts and harnesses dry.
- Before removing parts, turn off ignition switch and then disconnect battery ground cable.

SEF236V

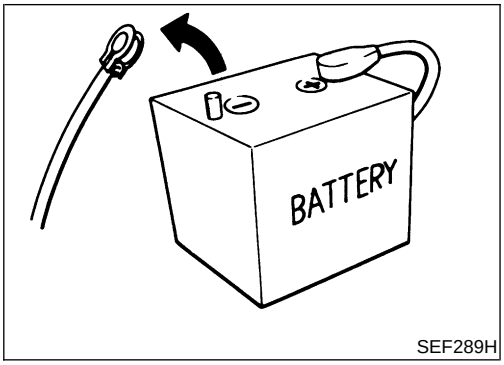

SEF289H

Precautions

NEEC0005

- **Before connecting or disconnecting the ECM harness connector, turn ignition switch OFF and disconnect negative battery terminal. Failure to do so may damage the ECM because battery voltage is applied to ECM even if ignition switch is turned off.**

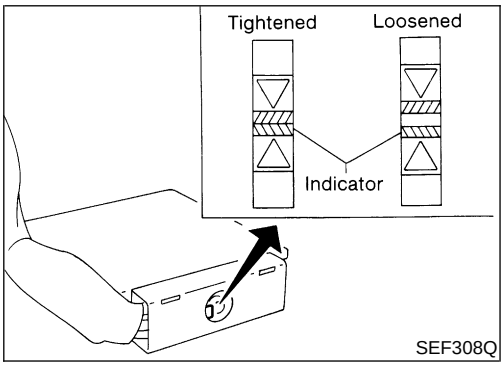

SEF308Q

- **When connecting ECM harness connector, tighten securing bolt until the gap between orange indicators disappears.**
  : 3 - 5 N·m (0.3 - 0.5 kg-m, 26 - 43 in-lb)

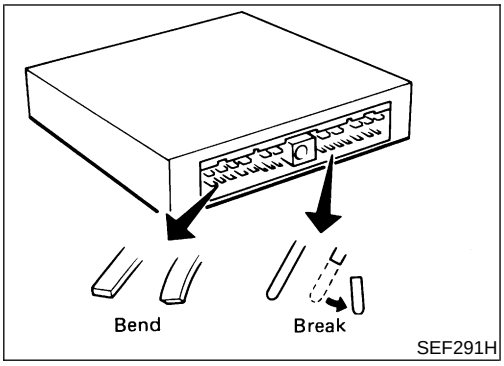

SEF291H

- **When connecting or disconnecting pin connectors into or from ECM, take care not to damage pin terminals (bend or break).**
  Make sure that there are not any bends or breaks on ECM pin terminals when connecting pin connectors.

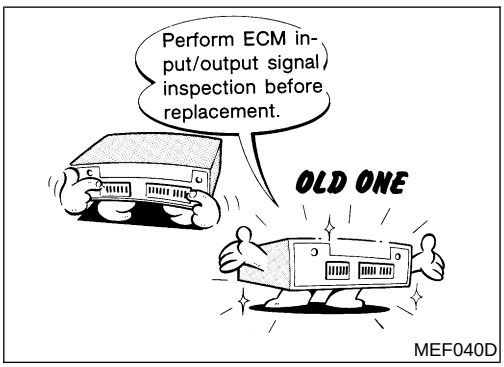

MEF040D

- **Before replacing ECM, perform Terminals and Reference Value inspection and make sure ECM functions properly. Refer to EC-135.**

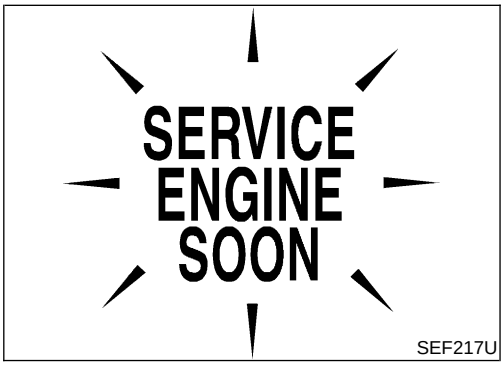

SEF217U

- **After performing each TROUBLE DIAGNOSIS, perform "Overall Function Check" or "DTC Confirmation Procedure".**
  The DTC should not be displayed in the "DTC Confirmation Procedure" if the repair is completed. The "Overall Function Check" should be a good result if the repair is completed.

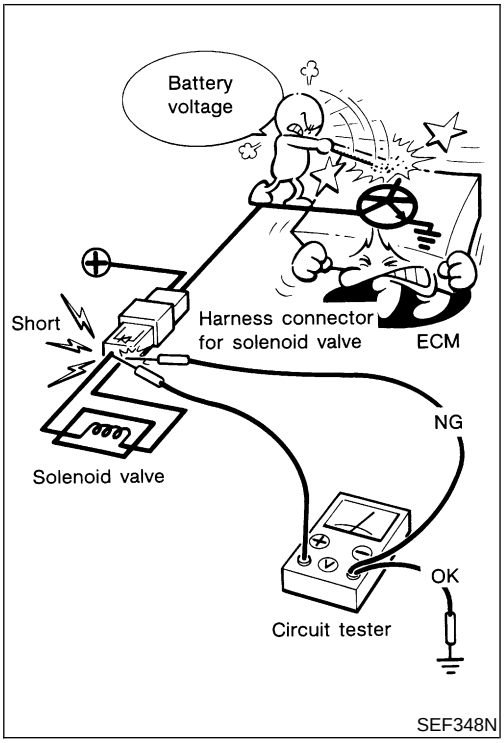

- **When measuring ECM signals with a circuit tester, never allow the two tester probes to contact.**
  Accidental contact of probes will cause a short circuit and damage the ECM power transistor.
- **Do not use ECM ground terminals when measuring input/ output voltage. Doing so may result in damage to the ECM's transistor. Use a ground other than the ECM terminals, such as the ground.**

Wiring Diagrams and Trouble Diagnosis

NEEC0006

When you read Wiring diagrams, refer to the following:

- ***GI-11***, "HOW TO READ WIRING DIAGRAMS".
- ***EL-9***, "POWER SUPPLY ROUTING".

When you perform trouble diagnosis, refer to the following:

- ***GI-34***, "How to Follow Test Groups in Trouble Diagnoses".
- ***GI-23***, "HOW TO PERFORM EFFICIENT DIAGNOSIS FOR AN ELECTRICAL INCIDENT"

Special Service Tools

NEEC0007

The actual shapes of Kent-Moore tools may differ from those of special service tools illustrated here.

Tool number (Kent-Moore No.) Tool name	Description	
KV10117100 (J36471-A) Heated oxygen sensor wrench	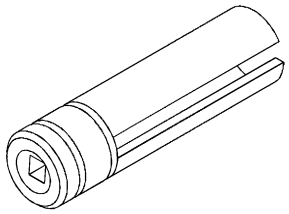 NT379	Loosening or tightening front heated oxygen sensor with 22 mm (0.87 in) hexagon nut
KV10114400 (J-38365) Heated oxygen sensor wrench	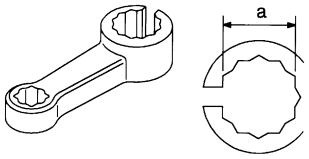 NT636	Loosening or tightening rear heated oxygen sensor **a: 22 mm (0.87 in)**
(J-44321) Fuel pressure gauge kit	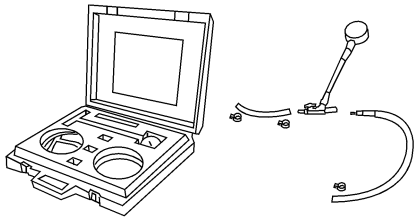 LEC642	Checking fuel pressure

Commercial Service Tools

NEEC0008

Tool name	Description	
Fuel filler cap adapter	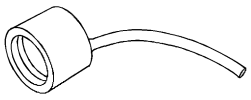 NT653	Checking fuel tank vacuum relief valve opening pressure
Leak detector (J41416)	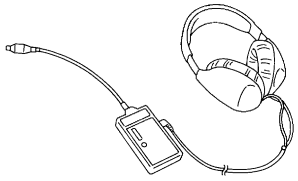 NT703	Locating the EVAP leak

Commercial Service Tools (Cont'd)

Tool name	Description	
EVAP service port adapter (J41413-OBD)	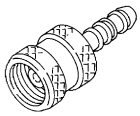 NT704	Applying positive pressure through EVAP service port
Hose clipper (—)	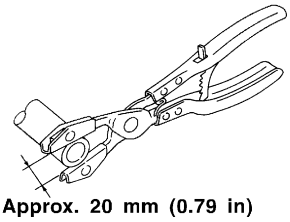 NT720	Clamping the EVAP purge hose between the fuel tank and EVAP canister applied to DTC P1440 [EVAP control system (Small leak — Positive pressure)]
Socket wrench	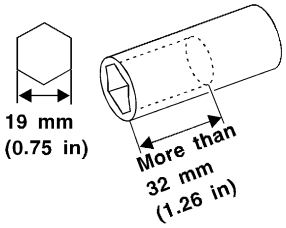 NT705	Removing and installing engine coolant temperature sensor
Oxygen sensor thread cleaner (J-43897-18) (J-43897-12)	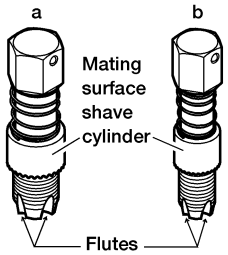 AEM488	Reconditioning the exhaust system threads before installing a new oxygen sensor. Use with anti-seize lubricant shown in "Commercial Service tools". a: J-43897-18 18 mm diameter, for Zirconia Oxygen Sensor b: J-43897-12 12 mm diameter, for Titania Oxygen Sensor
Anti-seize lubricant (Permatex™ 133AR or equivalent meeting MIL specification MIL-A-907)	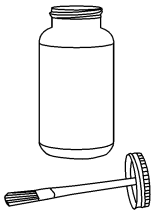 AEM489	Lubricating oxygen sensor thread cleaning tool when reconditioning exhaust system threads.

Engine Control Component Parts Location

NEEC0009

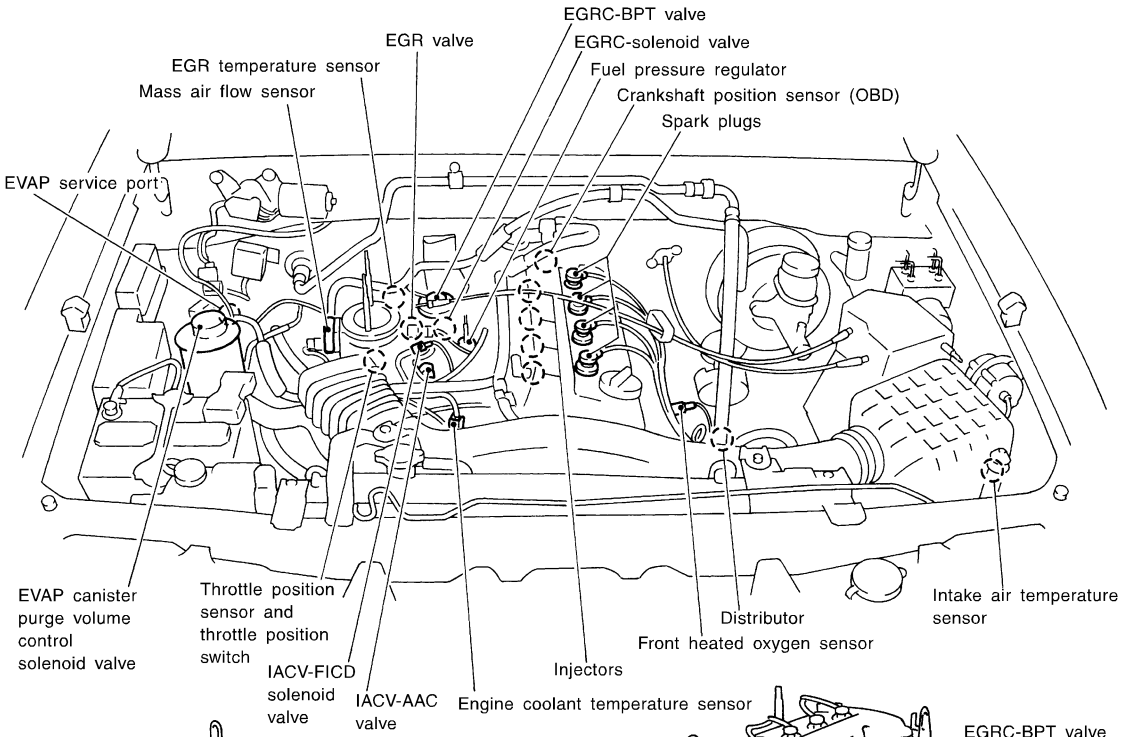

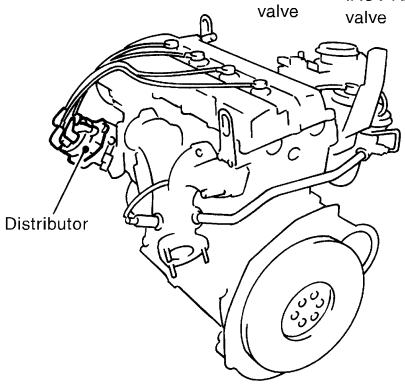

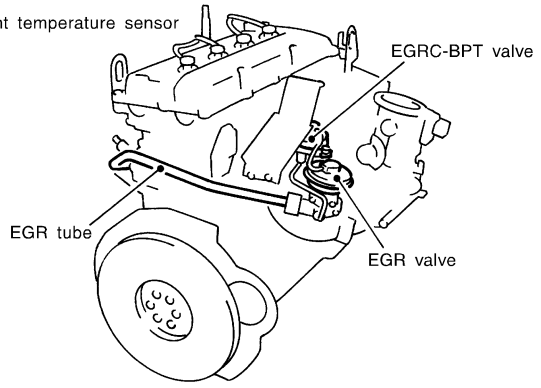

Driver side

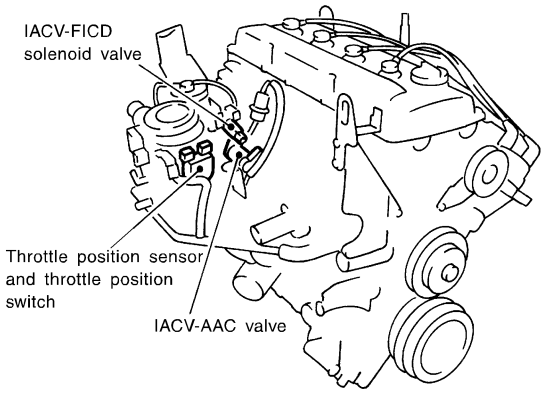

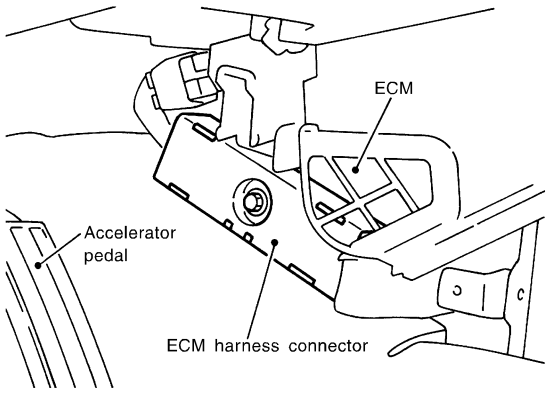

SEF711Z

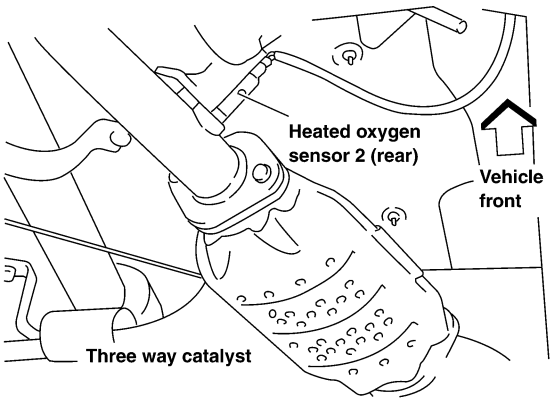
Heated oxygen sensor 2 (rear)
Vehicle front
Three way catalyst

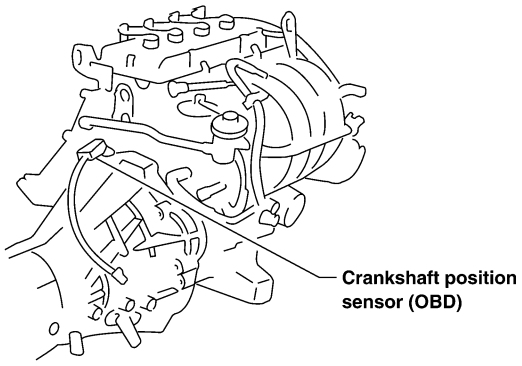
Crankshaft position sensor (OBD)

WEC550

Circuit Diagram

NEEC0010

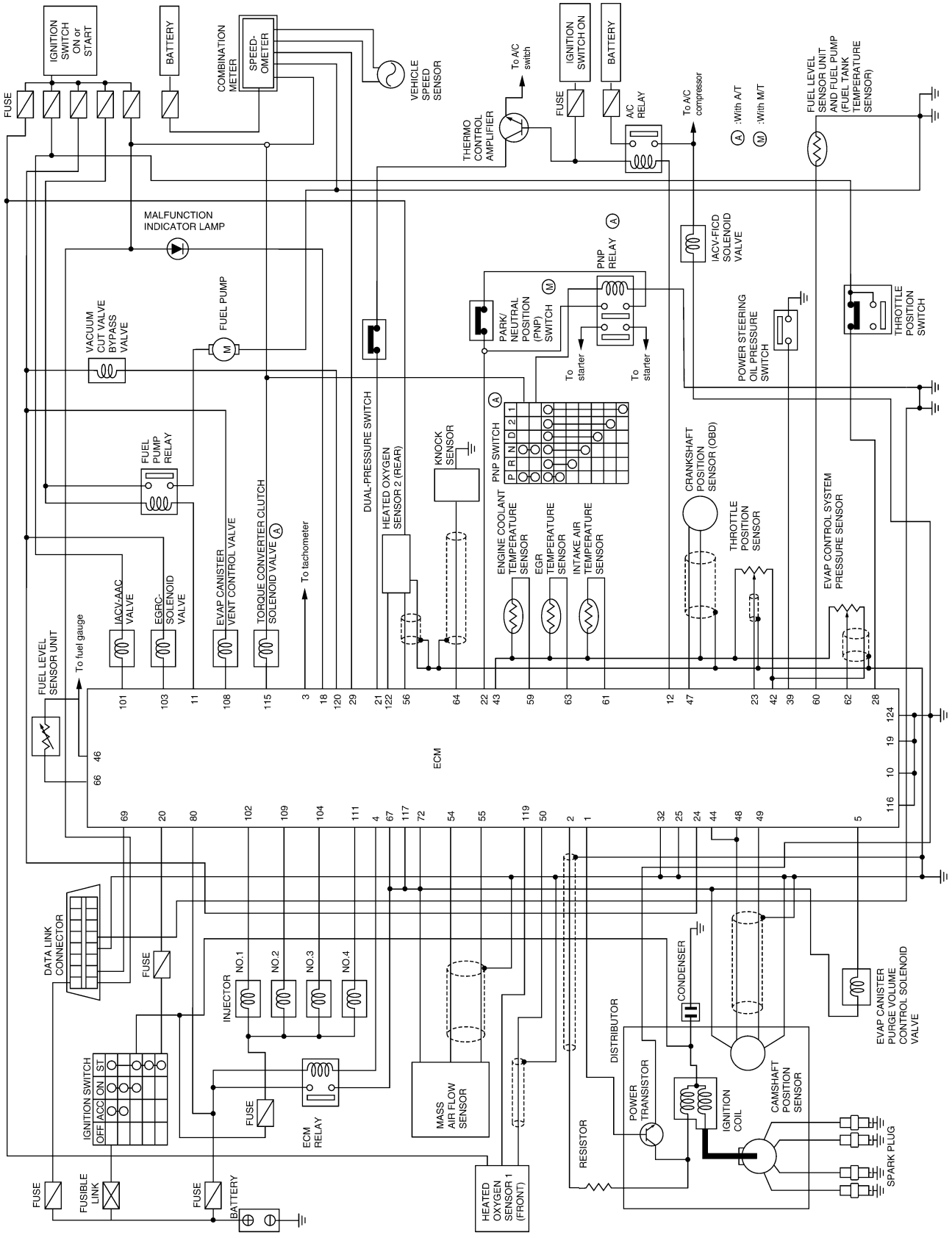

WEC149A

System Diagram

NEEC0011

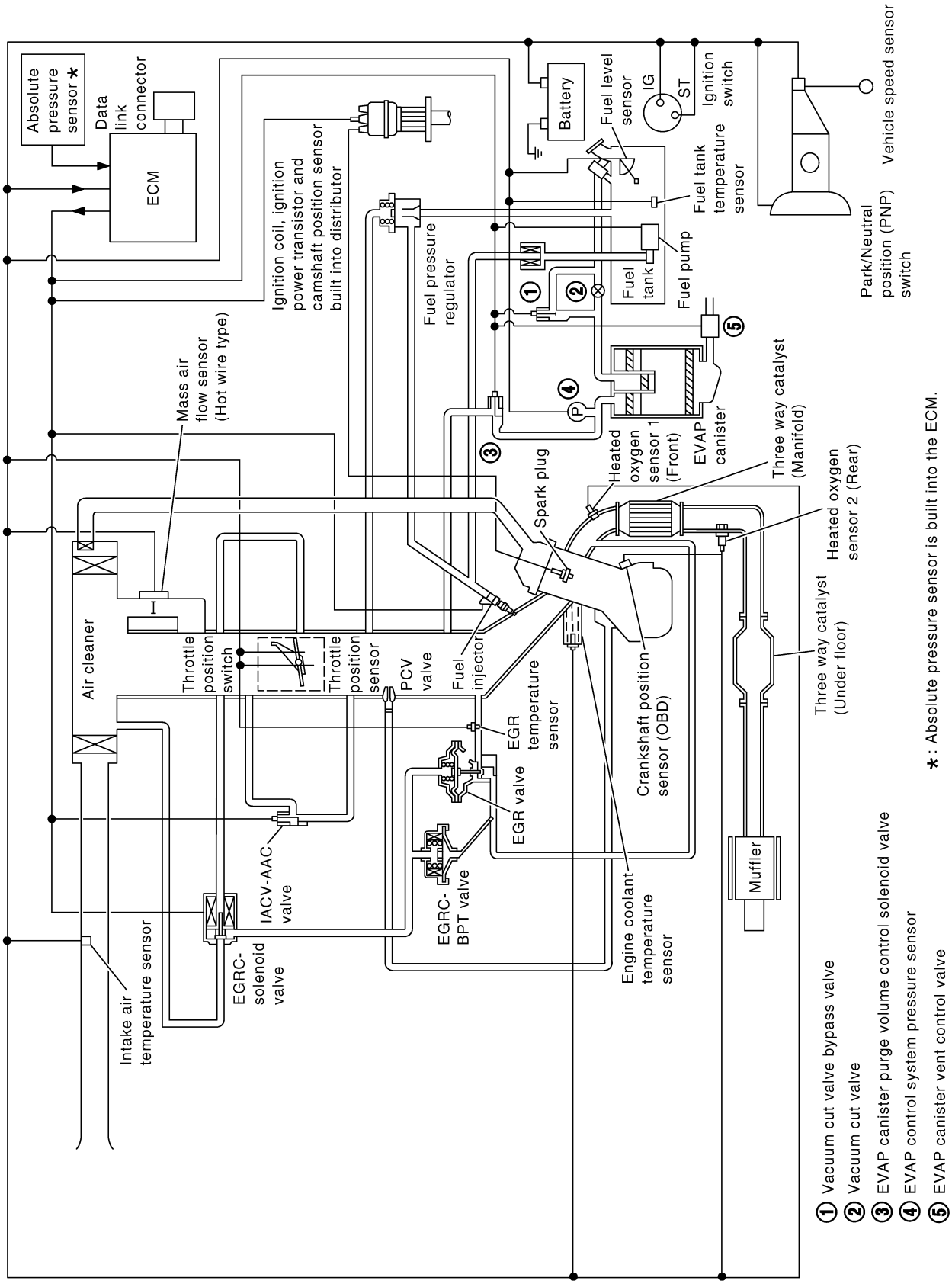

SEF697Z

Vacuum Hose Drawing

NEEC0012

Refer to “System Diagram” on EC-32 for vacuum control system.

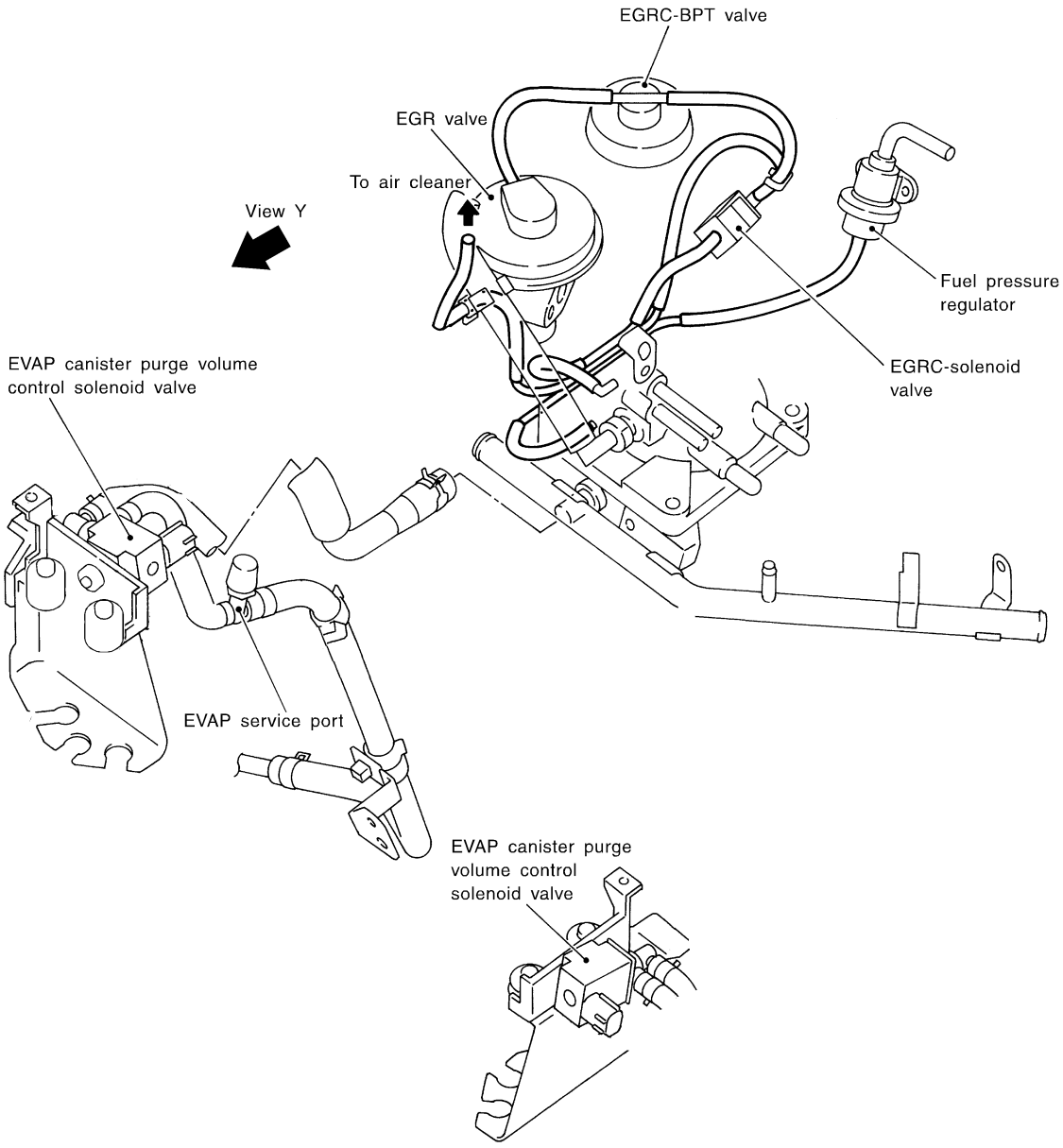

NOTE: Do not use soapy water or any type of solvent while installing vacuum hoses or purge hoses.

View Y

WEC551

System Chart

NEEC0013

Input (Sensor)	ECM Function	Output (Actuator)
• Camshaft position sensor • Mass air flow sensor • Engine coolant temperature sensor • Heated oxygen sensor 1 (front) • Ignition switch • Throttle position sensor • PNP switch • Air conditioner switch • Knock sensor • EGR temperature sensor*1 • Crankshaft position sensor (OBD) • EVAP control system pressure sensor*1 • Fuel tank temperature sensor • Battery voltage • Power steering oil pressure switch • Vehicle speed sensor • Intake air temperature sensor • Heated oxygen sensor 2 (rear)*2 • Closed throttle position switch*3	Fuel injection & mixture ratio control	Injectors
	Distributor ignition system	Power transistor
	Idle air control system	IACV-AAC valve and IACV-FICD solenoid valve
	Fuel pump control	Fuel pump relay
	Heated oxygen sensor 1 (front) monitor & on board diagnostic system	Malfunction indicator lamp (On the instrument panel)
	EGR control	EGRC-solenoid valve
	Heated oxygen sensors 1, 2 (front and rear) heater control	Heated oxygen sensor heater
	EVAP canister purge flow control	• EVAP canister purge volume control valve • EVAP canister purge control solenoid valve
	Air conditioning cut control	Air conditioner relay
	ON BOARD DIAGNOSIS for EVAP system	• EVAP canister vent control valve • Vacuum cut valve bypass valve

*1: These sensors are not used to control the engine system. They are used only for the on board diagnosis.
*2: Under normal conditions, this sensor is not for engine control operation.
*3: This switch will operate in place of the throttle position sensor to control EVAP parts if the sensor malfunctions.

Multiport Fuel Injection (MFI) System

DESCRIPTION

Input/Output Signal Chart

NEEC0014

NEEC0014S01

Sensor	Input Signal to ECM	ECM function	Actuator
Camshaft position sensor	Engine speed and piston position	Fuel injection & mixture ratio control	Injector
Mass air flow sensor	Amount of intake air		
Engine coolant temperature sensor	Engine coolant temperature		
Heated oxygen sensor 1 (front)	Density of oxygen in exhaust gas		
Throttle position sensor	Throttle position Throttle valve idle position		
PNP switch	Gear position		
Vehicle speed sensor	Vehicle speed		
Ignition switch	Start signal		
Air conditioner switch	Air conditioner operation		
Knock sensor	Engine knocking condition		
Battery	Battery voltage		
Power steering oil pressure switch	Power steering operation		
Heated oxygen sensor 2 (rear)*	Density of oxygen in exhaust gas		

* Under normal conditions, this sensor is not for engine control operation.

Basic Multiport Fuel Injection System

NEEC0014S02

The amount of fuel injected from the fuel injector is determined by the ECM. The ECM controls the length of time the valve remains open (injection pulse duration). The amount of fuel injected is a program value in the ECM memory. The program value is preset by engine operating conditions. These conditions are determined by input signals (for engine speed and intake air) from both the camshaft position sensor and the mass air flow sensor.

Various Fuel Injection Increase/Decrease Compensation

NEEC0014S03

In addition, the amount of fuel injected is compensated to improve engine performance under various operating conditions as listed below.

<Fuel increase>

- During warm-up
- When starting the engine
- During acceleration
- Hot-engine operation
- High-load, high-speed operation

<Fuel decrease>

- During deceleration
- During high engine speed operation

Mixture Ratio Feedback Control (Closed loop control)

NEEC0014S04

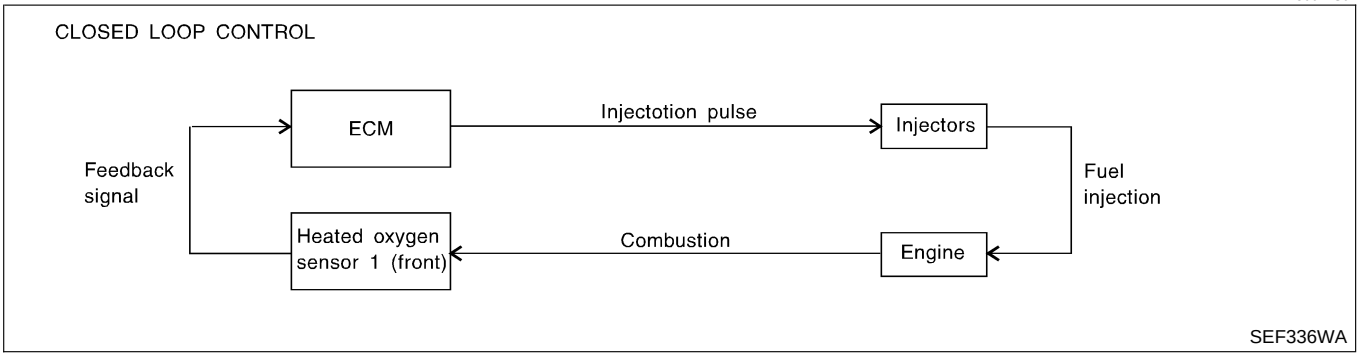

The mixture ratio feedback system provides the best air-fuel mixture ratio for driveability and emission control. The three way catalyst can then better reduce CO, HC and NOx emissions. This system uses a front heated oxygen sensor in the exhaust manifold to monitor if the engine operation is rich or lean. The ECM adjusts the injection pulse width according to the sensor voltage signal. For more information about the heated oxygen sensor 1 (front), refer to EC-198. This maintains the mixture ratio within the range of stoichiometric (ideal air-fuel mixture).
This stage is referred to as the closed loop control condition.
Heated oxygen sensor 2 (rear) is located downstream of the three way catalyst. Even if the switching characteristics of the heated oxygen sensor 1 (front) shift, the air-fuel ratio is controlled to stoichiometric by the signal from the heated oxygen sensor 2 (rear).

Open Loop Control

NEEC0014S05

The open loop system condition refers to when the ECM detects any of the following conditions. Feedback control stops in order to maintain stabilized fuel combustion.

- Deceleration and acceleration
- High-load, high-speed operation
- Malfunction of heated oxygen sensor 1 (front) or its circuit
- Insufficient activation of heated oxygen sensor 1 (front) at low engine coolant temperature
- High engine coolant temperature
- During warm-up
- When starting the engine

Mixture Ratio Self-learning Control

NEEC0014S06

The mixture ratio feedback control system monitors the mixture ratio signal transmitted from the heated oxygen sensor 1 (front). This feedback signal is then sent to the ECM. The ECM controls the basic mixture ratio as close to the theoretical mixture ratio as possible. However, the basic mixture ratio is not necessarily controlled as originally designed. Both manufacturing differences (i.e., mass air flow sensor hot film) and characteristic changes during operation (i.e., injector clogging) directly affect mixture ratio.
Accordingly, the difference between the basic and theoretical mixture ratios is monitored in this system. This is then computed in terms of "injection pulse duration" to automatically compensate for the difference between the two ratios.
"Fuel trim" refers to the feedback compensation value compared against the basic injection duration. Fuel trim includes short term fuel trim and long term fuel trim.
"Short term fuel trim" is the short-term fuel compensation used to maintain the mixture ratio at its theoretical value. The signal from the front heated oxygen sensor indicates whether the mixture ratio is RICH or LEAN compared to the theoretical value. The signal then triggers a reduction in fuel volume if the mixture ratio is rich, and an increase in fuel volume if it is lean.
"Long term fuel trim" is overall fuel compensation carried out long-term to compensate for continual deviation of the short term fuel trim from the central value. Such deviation will occur due to individual engine differences, wear over time and changes in the usage environment.

Fuel Injection Timing

NEEC0014S07

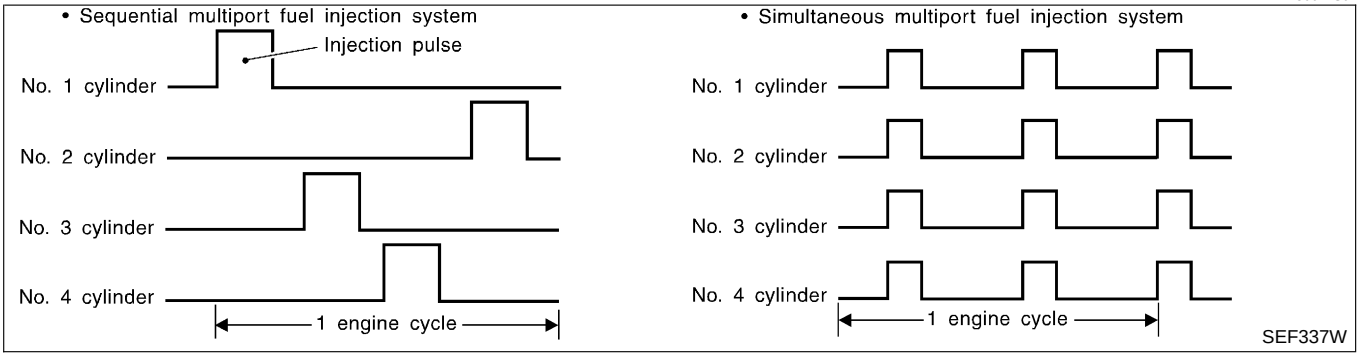

Two types of systems are used.

Sequential Multiport Fuel Injection System

NEEC0014S0701

Fuel is injected into each cylinder during each engine cycle according to the firing order. This system is used when the engine is running.

Simultaneous Multiport Fuel Injection System

NEEC0014S0702

Fuel is injected simultaneously into all four cylinders twice each engine cycle. In other words, pulse signals of the same width are simultaneously transmitted from the ECM.
The four injectors will then receive the signals two times for each engine cycle.
This system is used when the engine is being started and/or if the fail-safe system (CPU) is operating.

Fuel Shut-off

NEEC0014S08

Fuel to each cylinder is cut off during deceleration or operation of the engine at excessively high speeds.

Distributor Ignition (DI) System

DESCRIPTION

NEEC0015

Input/Output Signal Chart

NEEC0015S01

Sensor	Input Signal to ECM	ECM function	Actuator
Camshaft position sensor	Engine speed and piston position	Ignition timing control	Power transistor
Mass air flow sensor	Amount of intake air		
Engine coolant temperature sensor	Engine coolant temperature		
Throttle position sensor	Throttle position Throttle valve idle position		
Vehicle speed sensor	Vehicle speed		
Ignition switch	Start signal		
Knock sensor	Engine knocking		
PNP switch	Gear position		
Battery	Battery voltage		

Distributor Ignition (DI) System (Cont'd)

System Description

NEEC0015S02

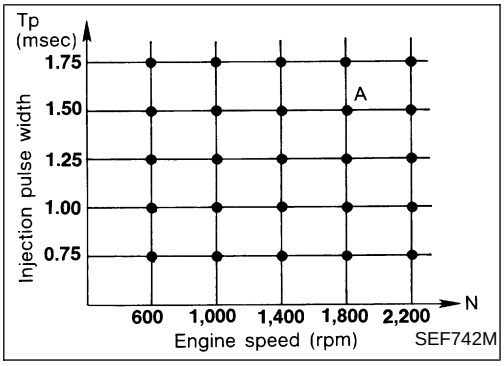

The ignition timing is controlled by the ECM to maintain the best air-fuel ratio for every running condition of the engine. The ignition timing data is stored in the ECM. This data forms the map shown above.
The ECM receives information such as the injection pulse width and camshaft position sensor signal. Computing this information, ignition signals are transmitted to the power transistor.
e.g., N: 1,800 rpm, Tp: 1.50 msec
A°BTDC
During the following conditions, the ignition timing is revised by the ECM according to the other data stored in the ECM.

- At starting
- During warm-up
- At idle
- At low battery voltage
- During acceleration

The knock sensor retard system is designed only for emergencies. The basic ignition timing is programmed within the anti-knocking zone, if recommended fuel is used under dry conditions. The retard system does not operate under normal driving conditions.
If engine knocking occurs, the knock sensor monitors the condition. The signal is transmitted to the ECM. The ECM retards the ignition timing to eliminate the knocking condition.

Air Conditioning Cut Control

DESCRIPTION

Input/Output Signal Chart

=NEEC0016

NEEC0016S01

Sensor	Input Signal to ECM	ECM function	Actuator
Air conditioner switch	Air conditioner “ON” signal	Air conditioner cut control	Air conditioner relay
Throttle position sensor	Throttle valve opening angle		
Camshaft position sensor	Engine speed		
Engine coolant temperature sensor	Engine coolant temperature		
Ignition switch	Start signal		
Vehicle speed sensor	Vehicle speed		
Power steering oil pressure switch	Power steering operation		

System Description

NEEC0016S02

This system improves engine operation when the air conditioner is used.
Under the following conditions, the air conditioner is turned off.

- When the accelerator pedal is fully depressed.
- When cranking the engine.
- When the engine coolant temperature becomes excessively high.
- When operating power steering and air conditioner during low engine speed or when fully releasing accelerator pedal.
- When engine speed is excessively low.

Fuel Cut Control (at no load & high engine speed)

DESCRIPTION

Input/Output Signal Chart

NEEC0017

NEEC0017S01

Sensor	Input Signal to ECM	ECM function	Actuator
Vehicle speed sensor	Vehicle speed	Fuel cut control	Injectors
PNP switch	Neutral position		
Throttle position sensor	Throttle position		
Camshaft position sensor	Engine speed		

If the engine speed is above 3,000 rpm with no load, (for example, in Neutral and engine speed over 3,000 rpm) fuel will be cut off after some time. The exact time when the fuel is cut off varies based on engine speed. Fuel cut will operate until the engine speed reaches 1,500 rpm, then fuel cut is cancelled.

NOTE:
This function is different from deceleration control listed under “Multiport Fuel Injection (MFI) System”, EC-35.

Evaporative Emission System

DESCRIPTION

=NEEC0018

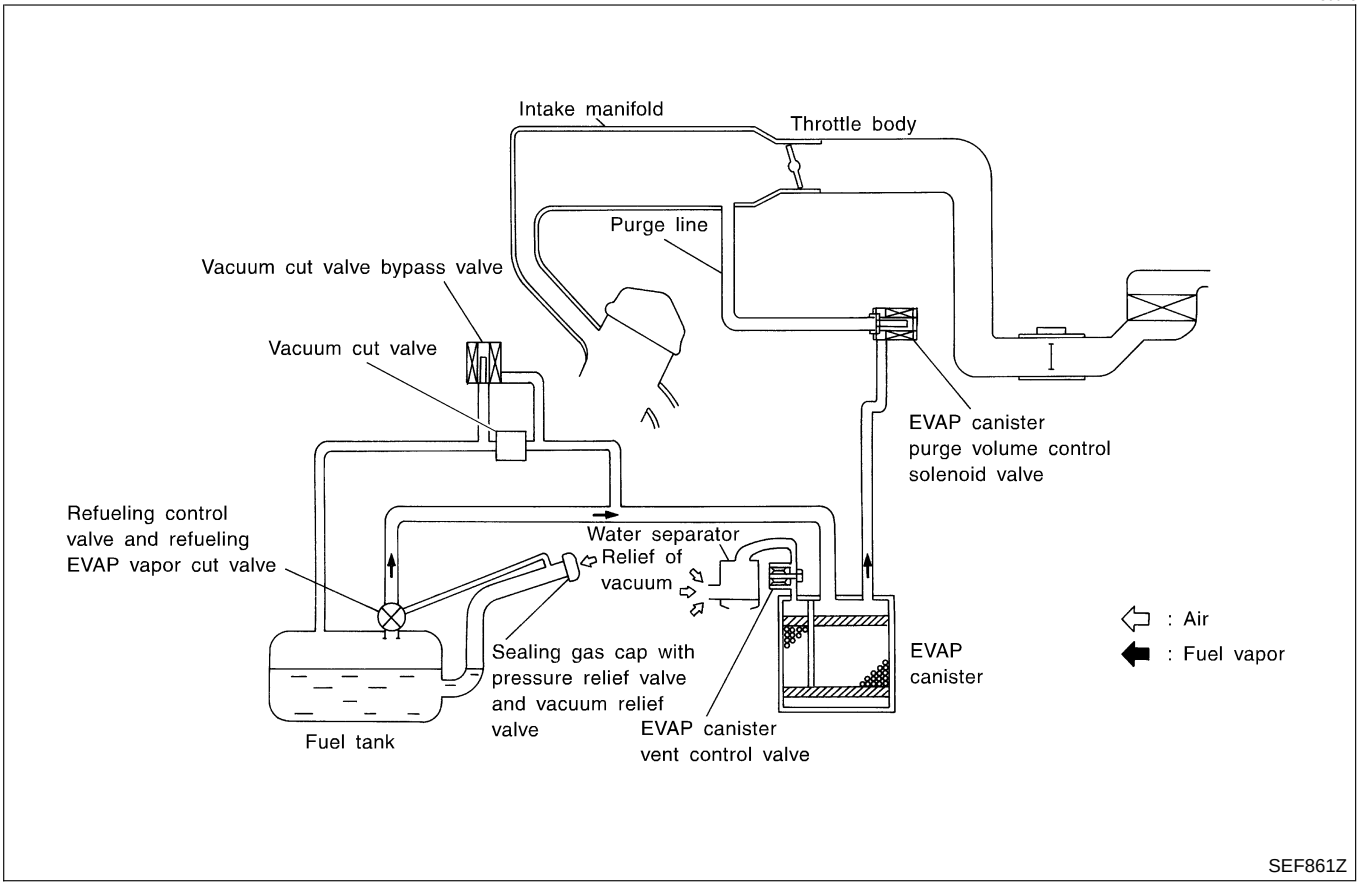

The evaporative emission system is used to reduce hydrocarbons emitted into the atmosphere from the fuel system. This reduction of hydrocarbons is accomplished by activated charcoals in the EVAP canister.
The fuel vapor in the sealed fuel tank is led into the EVAP canister which contains activated carbon and the vapor is stored there when the engine is not operating or when refueling to the fuel tank.
The vapor in the EVAP canister is purged by the air through the purge line to the intake manifold when the engine is operating.
EVAP canister purge volume control solenoid valve is controlled by ECM. When the engine operates, the flow rate of vapor controlled by EVAP canister purge volume control solenoid valve is proportionally regulated as the air flow increases.
EVAP canister purge volume control solenoid valve also shuts off the vapor purge line during decelerating and idling.

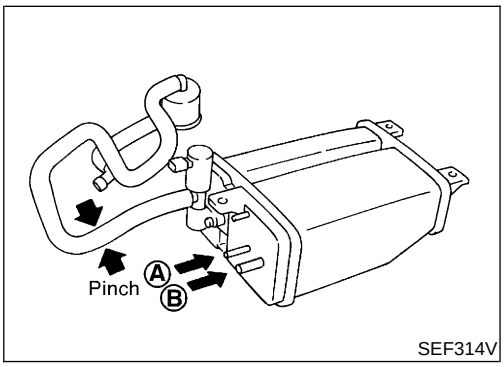

INSPECTION

NEEC0019

EVAP Canister

NEEC0019S01

Check EVAP canister as follows:

1. Pinch the fresh air hose.
2. Blow air into port **A** and check that air flows freely through port **B**.

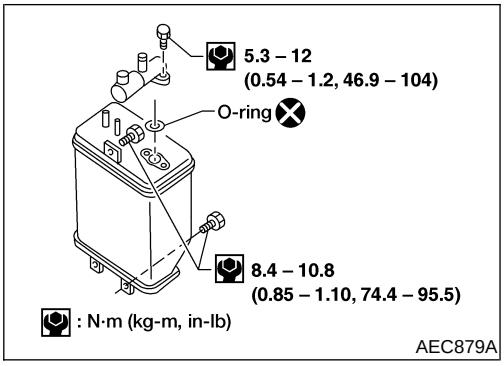

Tightening Torque

NEEC0019S02

Tighten EVAP canister as shown in the figure.

Make sure new O-ring is installed properly between EVAP canister and EVAP canister vent control valve.

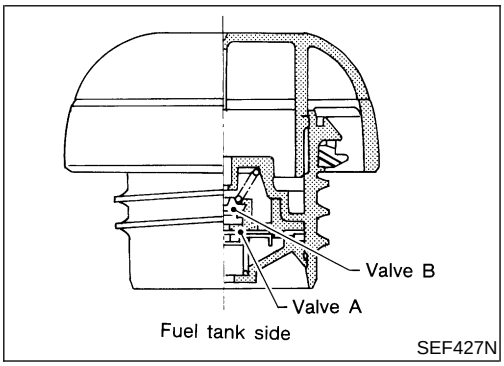

Fuel Tank Vacuum Relief Valve (Built into fuel filler cap)

NEEC0019S03

1. Wipe clean valve housing.
2. Check valve opening pressure and vacuum.

Pressure:

16.0 - 20.0 kPa (0.163 - 0.204 kg/cm^2, 2.32 - 2.90 psi)

Vacuum:

−6.0 to −3.5 kPa (−0.061 to −0.036 kg/cm^2, −0.87 to −0.51 psi)

3. If out of specification, replace fuel filler cap as an assembly.

CAUTION:

Use only a genuine NISSAN fuel filler cap as a replacement. If an incorrect fuel filler cap is used, the MIL may come on.

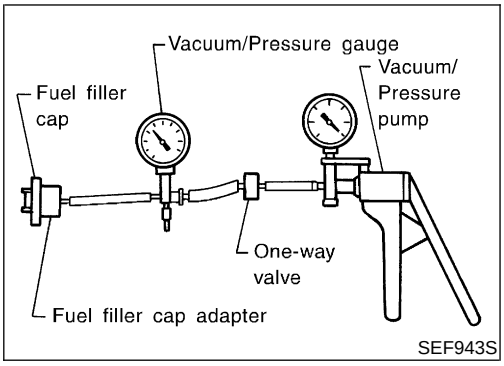

Vacuum Cut Valve and Vacuum Cut Valve Bypass Valve

NEEC0019S05

Refer to EC-544.

Evaporative Emission (EVAP) Canister Purge Volume Control Solenoid Valve

NEEC0019S06

Refer to EC-498.

Fuel Tank Temperature Sensor

NEEC0019S08

Refer to EC-300.

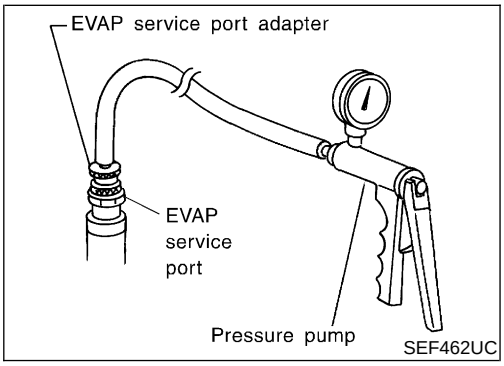

EVAP Service Port

NEEC0019S09

Positive pressure is delivered to the EVAP system through the EVAP service port. If fuel vapor leakage in the EVAP system occurs, use a leak detector to locate the leak.

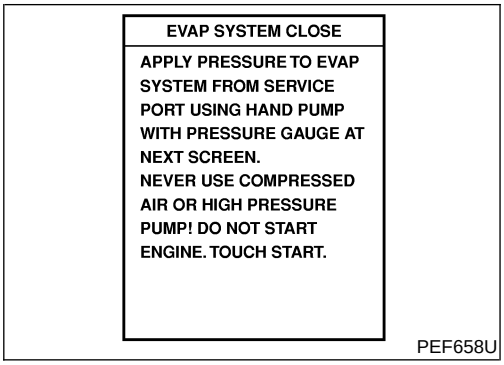

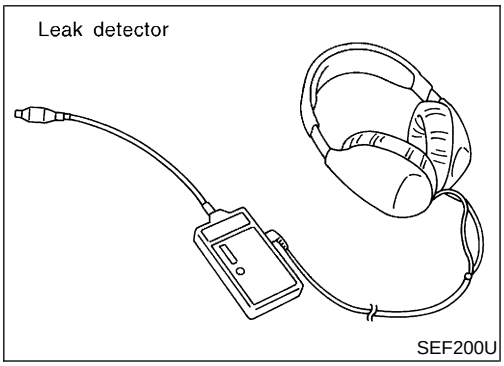

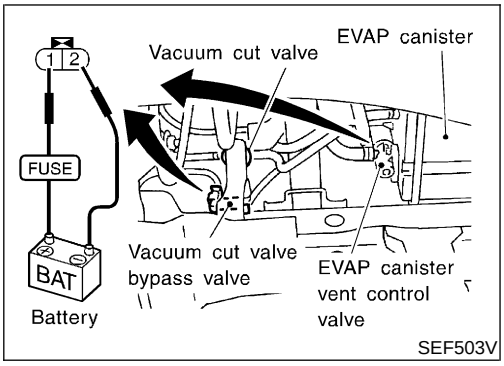

How to Detect Fuel Vapor Leakage

NEEC0019S10

CAUTION:

- **Never use compressed air or a high pressure pump.**
- **Do not start engine.**
- **Do not exceed 4.12 kPa (0.042 kg/cm^2, 0.6 psi) of pressure in EVAP system.**

NOTE:
Improper installation of adapter to the service port may cause a leak.

With CONSULT-II

1) Attach the EVAP service port adapter securely to the EVAP service port.
2) Also attach the pressure pump and hose.
3) Turn ignition switch "ON".
4) Select the "EVAP SYSTEM CLOSE" of "WORK SUPPORT MODE" with CONSULT-II.
5) Touch "START". A bar graph (Pressure indicating display) will appear on the screen.
6) Apply positive pressure to the EVAP system until the pressure indicator reaches the middle of the bar graph.
7) Remove the EVAP service port adapter and hose with pressure pump.
8) Locate the leak using a leak detector. Refer to "Evaporative Emission Line Drawing", EC-43.

Without CONSULT-II

1) Attach the EVAP service port adapter securely to the EVAP service port and pressure pump with pressure gauge to the EVAP service port.
2) Apply battery voltage to between the terminals of both EVAP canister vent control valve and vacuum cut valve bypass valve to make a closed EVAP system.
3) To locate the leak, deliver positive pressure to the EVAP system until pressure gauge points reach 1.38 to 2.76 kPa (0.014 to 0.028 kg/cm^2, 0.2 to 0.4 psi).
4) Remove the EVAP service port adapter and hose with pressure pump.
5) Locate the leak using a leak detector. Refer to "EVAPORATIVE EMISSION LINE DRAWING", EC-43.

EVAPORATIVE EMISSION LINE DRAWING

=NEEC0020

NOTE:

Do not use soapy water or any type of solvent while installing vacuum hoses or purge hoses.

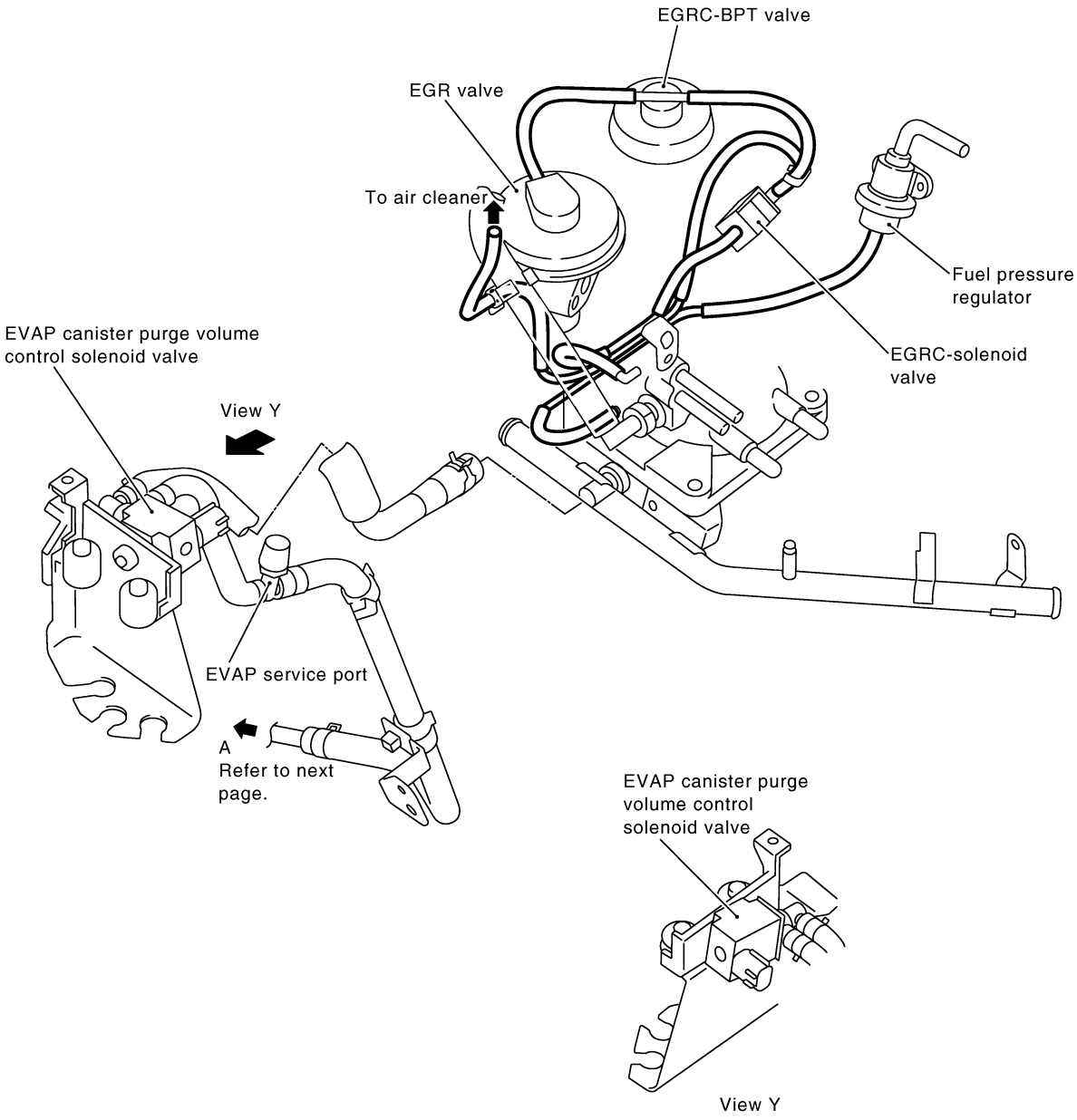

SEF712Z

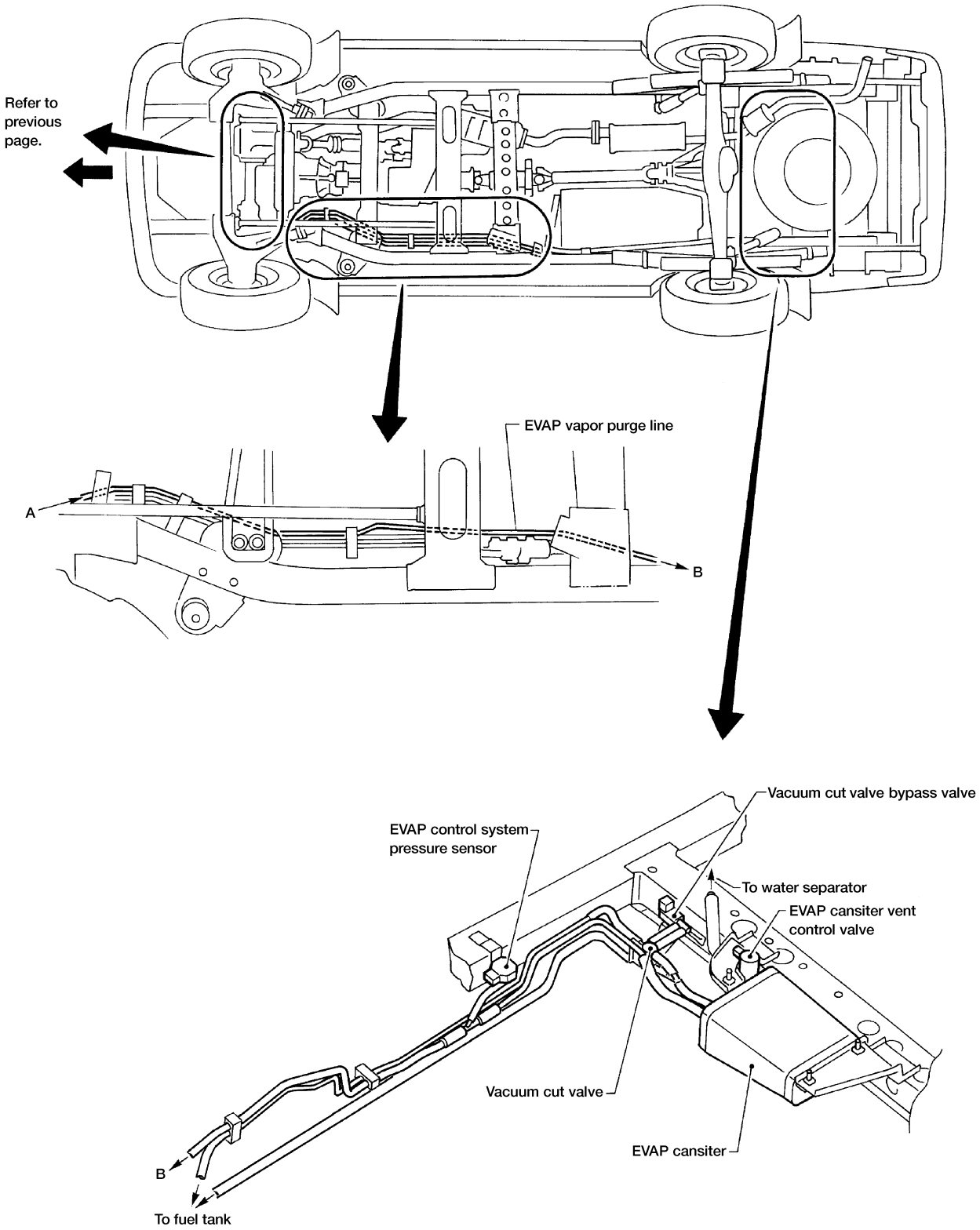
Refer to previous page.
EVAP vapor purge line
A
B
Vacuum cut valve bypass valve
EVAP control system pressure sensor
To water separator
EVAP cansiter vent control valve
Vacuum cut valve
EVAP cansiter
B
To fuel tank

WEC555

On Board Refueling Vapor Recovery (ORVR)

NEEC1002

SYSTEM DESCRIPTION

NEEC1002S01

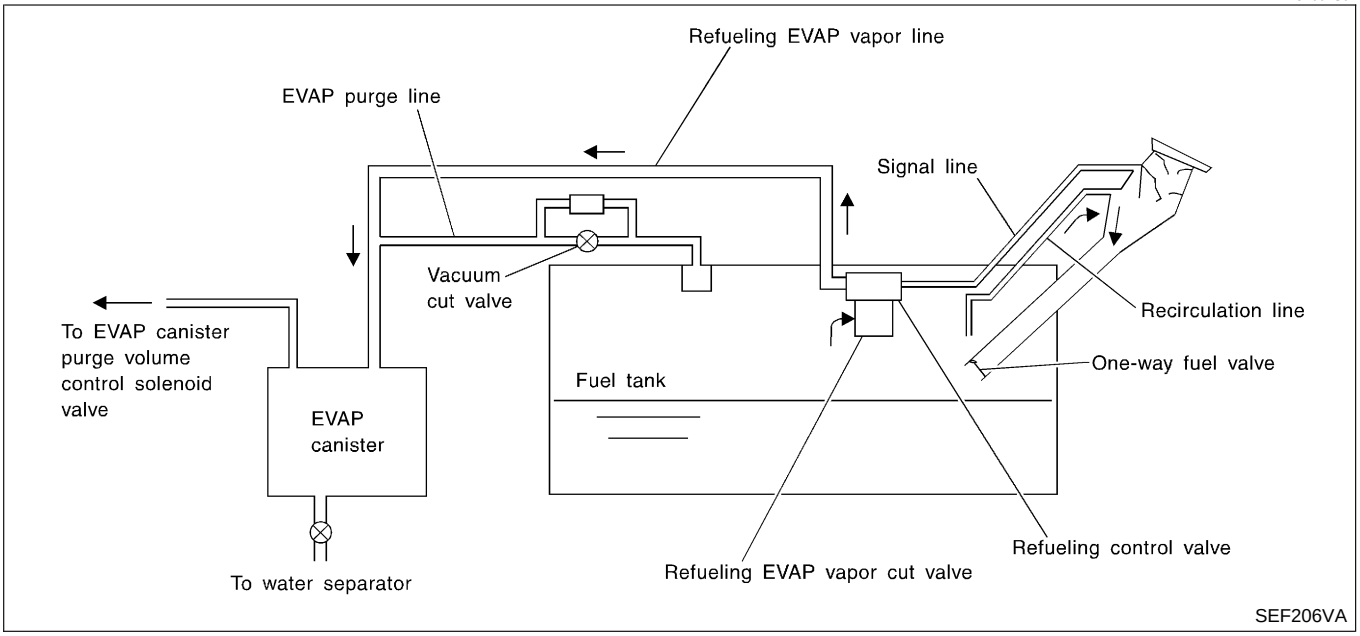

From the beginning of refueling, the fuel tank pressure goes up. When the pressure reaches the setting value of the refueling control valve (RCV) opening pressure, the RCV is opened. After RCV opens, the air and vapor inside the fuel tank go through refueling EVAP vapor cut valve, RCV and refueling vapor line to the EVAP canister. The vapor is absorbed by the EVAP canister and the air is released to the atmosphere.
When the refueling has reached the full level of the fuel tank, the refueling EVAP vapor cut valve is closed and refueling is stopped because of auto shut-off. The vapor which was absorbed by the EVAP canister is purged during driving.
The RCV is always closed during driving and the evaporative emission control system is operated the same as conventional system.

WARNING:

When conducting inspections below, be sure to observe the following:

- **Put a "CAUTION: INFLAMMABLE" sign in workshop.**
- **Do not smoke while servicing fuel system. Keep open flames and sparks away from work area.**
- **Be sure to furnish the workshop with a CO_2 fire extinguisher.**

CAUTION:

- **Before removing fuel line parts, carry out the following procedures:**

a) Put drained fuel in an explosion-proof container and put lid on securely.
b) Release fuel pressure from fuel line. Refer to "Fuel Pressure Release", EC-57.
c) Disconnect battery ground cable.

- **Always replace O-ring when the fuel gauge retainer is removed.**
- **Do not kink or twist hose and tube when they are installed.**
- **Do not tighten hose and clamps excessively to avoid damaging hoses.**
- **After installation, run engine and check for fuel leaks at connection.**
- **Do not attempt to top off the fuel tank after the fuel pump nozzle shuts off automatically. Continued refueling may cause fuel overflow, resulting in fuel spray and possibly a fire.**

DIAGNOSTIC PROCEDURE

NEEC1002S02

Symptom: Fuel Odor from EVAP Canister Is Strong.

NEEC1002S0201

1	CHECK EVAP CANISTER	
1. Remove EVAP canister with EVAP canister vent control valve attached. 2. Weigh the EVAP canister with EVAP canister vent control valve attached. The weight should be less than 1.8 kg (4.0 lb). **OK or NG**		
OK	▶	GO TO 2.
NG	▶	GO TO 3.

2	CHECK IF EVAP CANISTER SATURATED WITH WATER	
Does water drain from the EVAP canister? 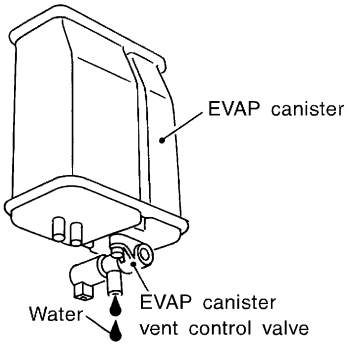 SEF596U **Yes or No**		
Yes	▶	GO TO 3.
No (With CONSULT-II)	▶	GO TO 6.
No (Without CONSULT-II)	▶	GO TO 7.

3	REPLACE EVAP CANISTER	
Replace EVAP canister with a new one.		
	▶	GO TO 4.

4	CHECK WATER SEPARATOR

1. Check visually for insect nests in the water separator air inlet.
2. Check visually for cracks or flaws in the appearance.
3. Check visually for cracks or flaws in the hose.
4. Check that **A** and **C** are not clogged by blowing air into **B** with **A**, and then **C** plugged.

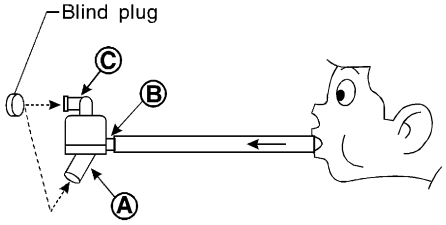

* Ⓐ: Bottom hole (To atmosphere)
Ⓑ: Emergency tube (From EVAP canister)
Ⓒ: Inlet port (To member)

SEF829T

5. In case of NG in items 2 - 4, replace the parts.

NOTE:
- Do not disassemble water separator.

OK or NG

OK	▶	GO TO 5.
NG	▶	Replace water separator.

5	DETECT MALFUNCTIONING PART

Check the EVAP hose between EVAP canister and water separator for clogging or poor connection.

	▶	Repair or replace EVAP hose.

6	CHECK REFUELING EVAP VAPOR CUT VALVE

With CONSULT-II

1. Remove fuel tank. Refer to ***FE-4***, "FUEL SYSTEM.
2. Drain fuel from the tank as follows:

a. Remove fuel feed hose located on the fuel gauge retainer.
b. Connect a spare fuel hose, one side to fuel gauge retainer where the hose was removed and the other side to a fuel container.
c. Drain fuel using "FUEL PUMP RELAY" in "ACTIVE TEST" mode with CONSULT-II.

3. Check refueling EVAP vapor cut valve for being stuck to close as follows.
   Blow air into the refueling EVAP vapor cut valve (from hose end B), and check that the air flows freely into the tank.
4. Check EVAP vapor cut valve for being stuck to open as follows.

a. Connect vacuum pump to hose ends A and B using a suitable 3-way connector.
b. Remove fuel gauge retainer with fuel gauge unit.
   Always replace O-ring with new one.
c. Put fuel tank upside down.
d. Apply vacuum pressure to both hose ends A and B [−13.3 kPa (−100 mmHg, −3.94 inHg)] with fuel gauge retainer remaining open and check that the pressure is applicable.

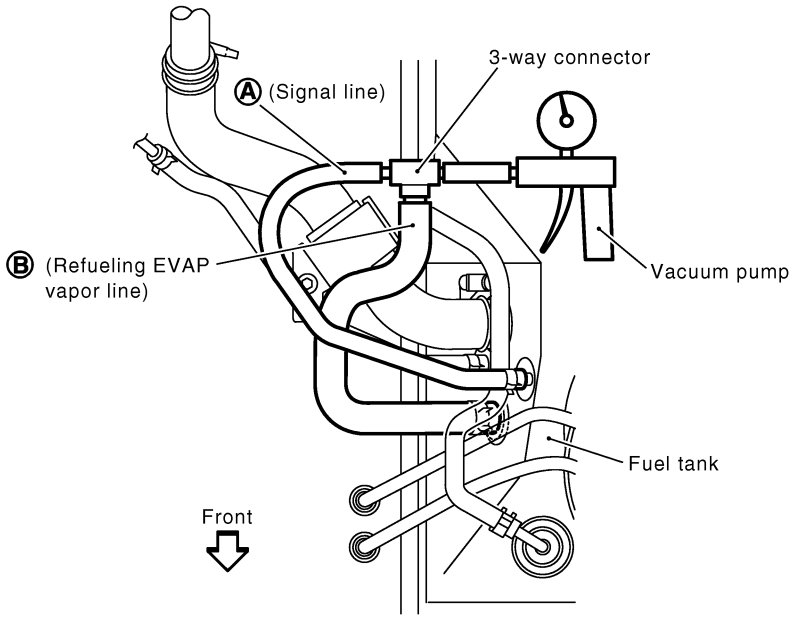

SEF707Z

OK or NG

OK	▶	GO TO 8.
NG	▶	Replace refueling EVAP vapor cut valve with fuel tank.

7	CHECK REFUELING EVAP VAPOR CUT VALVE

Without CONSULT-II

1. Remove fuel tank. Refer to ***FE-4***, "FUEL SYSTEM".
2. Drain fuel from the tank as follows:
a. Remove fuel gauge retainer.
b. Drain fuel from the tank using a hand pump into a fuel container.
3. Check refueling EVAP vapor cut valve for being stuck to close as follows.
   Blow air into the refueling EVAP vapor cut valve (from hose end B), and check that the air flows freely into the tank.
4. Check EVAP vapor cut valve for being stuck to open as follows.
a. Connect vacuum pump to hose ends A and B using a suitable 3-way connector.
b. Remove fuel gauge retainer with fuel gauge unit.
   Always replace O-ring with new one.
c. Put fuel tank upside down.
d. Apply vacuum pressure to both hose ends A and B [−13.3 kPa (−100 mmHg, −3.94 inHg)] with fuel gauge retainer remaining open and check that the pressure is applicable.

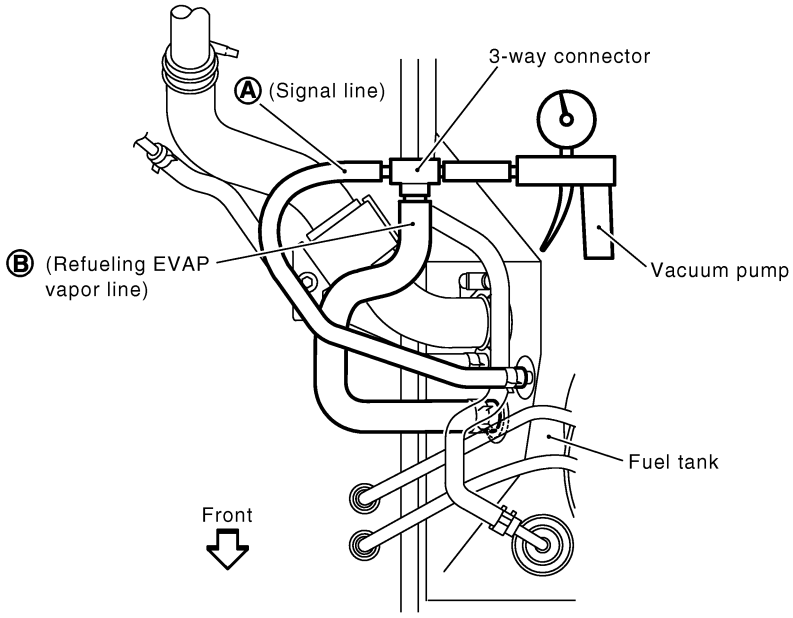

SEF707Z

OK or NG

OK	▶	GO TO 8.
NG	▶	Replace refueling EVAP vapor cut valve with fuel tank.

8	CHECK REFUELING CONTROL VALVE

1. Remove fuel filler cap.
2. Check air continuity between hose ends A and B.
   Blow air into the hose end B. Air should flow freely into the fuel tank.
3. Blow air into hose end A and check there is no leakage.
4. Apply pressure to both hose ends A and B [20 kPa (150 mmHg, 5.91 inHg)] using a pressure pump and a suitable 3-way connector. Check that there is no leakage.

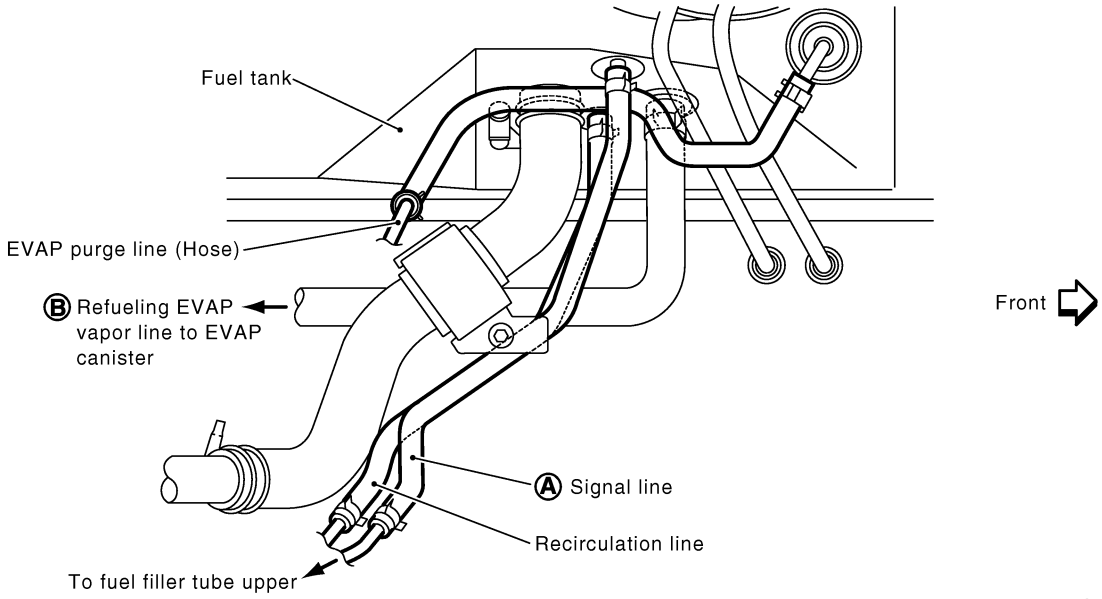

SEF706Z

OK or NG

OK	▶	**INSPECTION END**
NG	▶	Replace refueling control valve with fuel tank.

Symptom: Cannot Refuel/Fuel Odor From The Fuel Filler Opening Is Strong While Refueling.

NEEC1002S0202

1	CHECK EVAP CANISTER

1. Remove EVAP canister with EVAP canister vent control valve attached.
2. Weigh the EVAP canister with EVAP canister vent control valve attached.
   The weight should be less than 1.8 kg (4.0 lb).

OK or NG

OK	▶	GO TO 2.
NG	▶	GO TO 3.

2	CHECK IF EVAP CANISTER SATURATED WITH WATER

Does water drain from the EVAP canister?

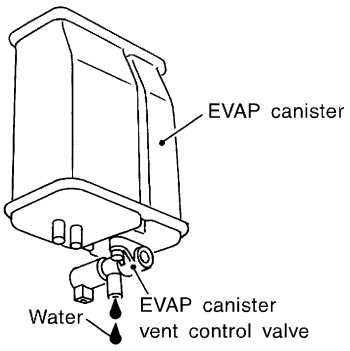

SEF596U

Yes or No

Yes	▶	GO TO 3.
No	▶	GO TO 6.

3	REPLACE EVAP CANISTER

Replace EVAP canister with a new one.

	▶	GO TO 4.

4	CHECK WATER SEPARATOR

1. Check visually for insect nests in the water separator air inlet.
2. Check visually for cracks or flaws in the appearance.
3. Check visually for cracks or flaws in the hose.
4. Check that **A** and **C** are not clogged by blowing air into **B** with **A**, and then **C** plugged.

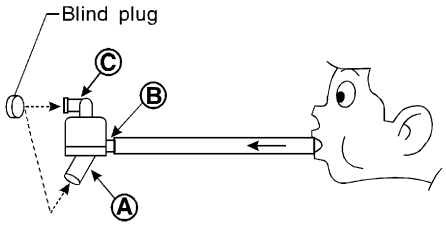

* Ⓐ: Bottom hole (To atmosphere)
Ⓑ: Emergency tube (From EVAP canister)
Ⓒ: Inlet port (To member)

SEF829T

5. In case of NG in items 2 - 4, replace the parts.

NOTE:

- Do not disassemble water separator.

OK or NG

OK	▶	GO TO 5.
NG	▶	Replace water separator.

5	DETECT MALFUNCTIONING PART

Check the EVAP hose between EVAP canister and water separator for clogging or poor connection.

	▶	Repair or replace EVAP hose.

6	CHECK VENT HOSES AND VENT TUBES	
Check hoses and tubes between EVAP canister and refueling control valve for clogging, kink, looseness and improper connection.		
OK or NG		
OK	▶	GO TO 7.
NG	▶	Repair or replace hoses and tubes.

7	CHECK FILLER NECK TUBE	
Check signal line and recirculation line for clogging, dents and cracks.		
OK or NG		
OK	▶	GO TO 8.
NG	▶	Replace filler neck tube.

8 CHECK REFUELING CONTROL VALVE

1. Remove fuel filler cap.
2. Check air continuity between hose ends A and B.
   Blow air into the hose end B. Air should flow freely into the fuel tank.
3. Blow air into hose end A and check there is no leakage.
4. Apply pressure to both hose ends A and B [20 kPa (150 mmHg, 5.91 inHg)] using a pressure pump and a suitable 3-way connector. Check that there is no leakage.

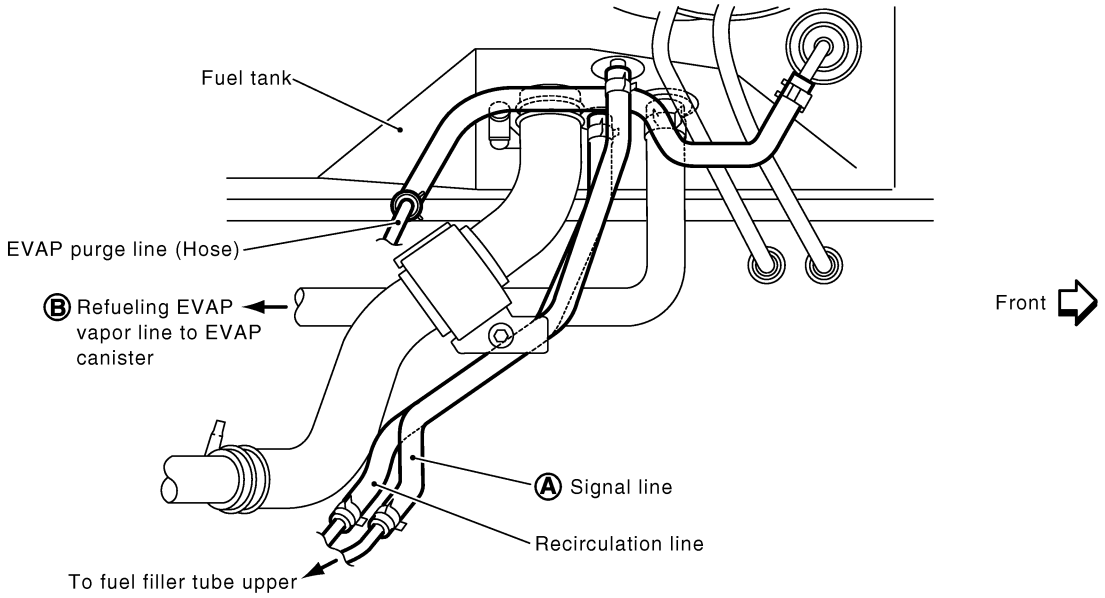

SEF706Z

OK or NG

OK (With CONSULT-II)	▶	GO TO 9.
OK (Without CONSULT-II)	▶	GO TO 10.
NG	▶	Replace refueling control valve with fuel tank.

9	CHECK REFUELING EVAP VAPOR CUT VALVE

With CONSULT-II

1. Remove fuel tank. Refer to ***FE-4***, "FUEL SYSTEM".
2. Drain fuel from the tank as follows:

a. Remove fuel feed hose located on the fuel gauge retainer.
b. Connect a spare fuel hose, one side to fuel gauge retainer where the hose was removed and the other side to a fuel container.
c. Drain fuel using "FUEL PUMP RELAY" in "ACTIVE TEST" mode with CONSULT-II.

3. Check refueling EVAP vapor cut valve for being stuck to close as follows.
   Blow air into the refueling EVAP vapor cut valve (from hose end B), and check that the air flows freely into the tank.
4. Check EVAP vapor cut valve for being stuck to open as follows.

a. Connect vacuum pump to hose ends A and B using a suitable 3-way connector.
b. Remove fuel gauge retainer with fuel gauge unit.
   Always replace O-ring with new one.
c. Put fuel tank upside down.
d. Apply vacuum pressure to both hose ends A and B [−13.3 kPa (−100 mmHg, −3.94 inHg)] with fuel gauge retainer remaining open and check that the pressure is applicable.

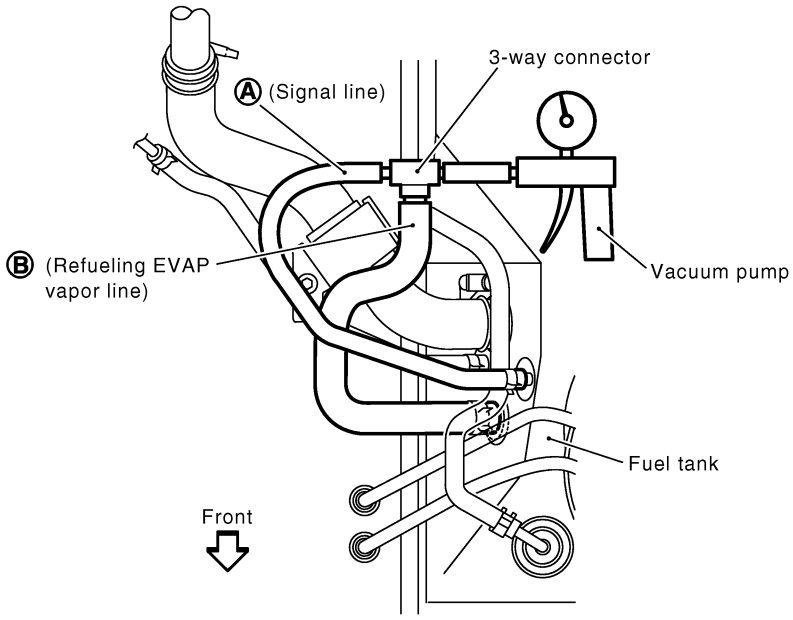

SEF707Z

OK or NG

OK	▶	GO TO 11.
NG	▶	Replace refueling EVAP vapor cut valve with fuel tank.

10	CHECK REFUELING EVAP VAPOR CUT VALVE

Without CONSULT-II

1. Remove fuel tank. Refer to ***FE-4***, "FUEL SYSTEM".
2. Drain fuel from the tank as follows:

a. Remove fuel gauge retainer.
b. Drain fuel from the tank using a hand pump into a fuel container.

3. Check refueling EVAP vapor cut valve for being stuck to close as follows.
   Blow air into the refueling EVAP vapor cut valve (from hose end B), and check that the air flows freely into the tank.
4. Check EVAP vapor cut valve for being stuck to open as follows.

a. Connect vacuum pump to hose ends A and B using a suitable 3-way connector.
b. Remove fuel gauge retainer with fuel gauge unit.
   Always replace O-ring with new one.
c. Put fuel tank upside down.
d. Apply vacuum pressure to both hose ends A and B [−13.3 kPa (−100 mmHg, −3.94 inHg)] with fuel gauge retainer remaining open and check that the pressure is applicable.

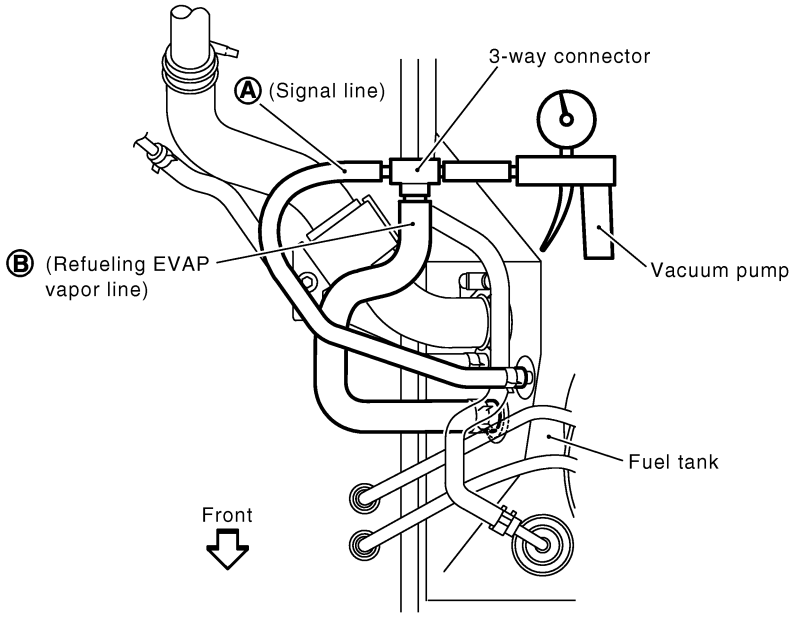

SEF707Z

OK or NG

OK	▶	GO TO 11.
NG	▶	Replace refueling EVAP vapor cut valve with fuel tank.

11	CHECK FUEL FILLER TUBE

Check filler neck tube and hose connected to the fuel tank for clogging, dents and cracks.

OK or NG

OK	▶	GO TO 12.
NG	▶	Replace fuel filler tube.

12	CHECK ONE-WAY FUEL VALVE-I

Check one-way valve for clogging.

OK or NG

OK	▶	GO TO 13.
NG	▶	Repair or replace one-way fuel valve with fuel tank.

13	CHECK ONE-WAY FUEL VALVE-II

1. Make sure that fuel is drained from the tank.
2. Remove fuel filler tube and hose.
3. Check one-way fuel valve for operation as follows.
   When a stick is inserted, the valve should open, when removing stick it should close.

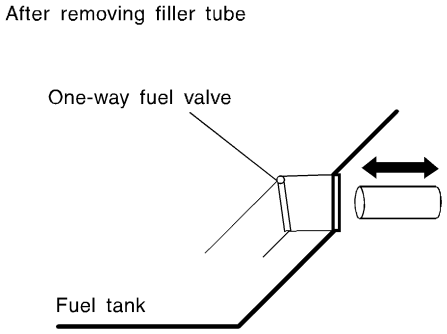

SEF665U

Do not drop any material into the tank.

OK or NG

OK	▶	**INSPECTION END**
NG	▶	Replace fuel filler tube or replace one-way fuel valve with fuel tank.

Positive Crankcase Ventilation

DESCRIPTION

NEEC0022

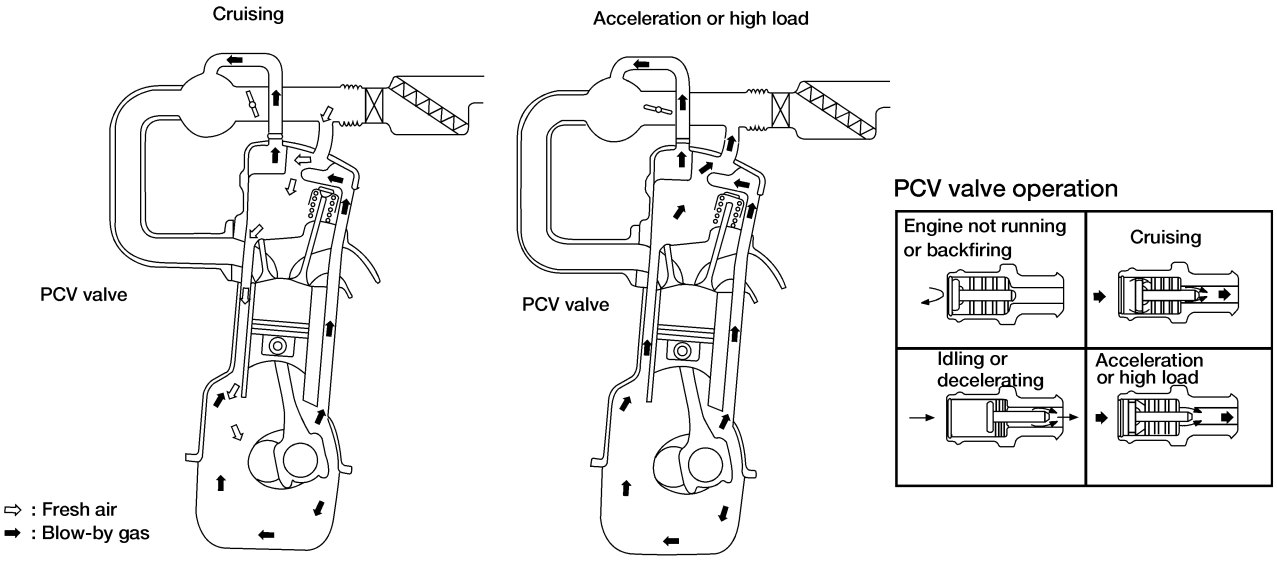

AEC042B

This system returns blow-by gas to the intake collector.
The positive crankcase ventilation (PCV) valve is provided to conduct crankcase blow-by gas to the intake manifold.
During partial throttle operation of the engine, the intake manifold sucks the blow-by gas through the PCV valve.
Normally, the capacity of the valve is sufficient to handle any blow-by and a small amount of ventilating air.
The ventilating air is then drawn from the air duct into the crankcase. In this process the air passes through the hose connecting air inlet tubes to rocker cover.
Under full-throttle condition, the manifold vacuum is insufficient to draw the blow-by flow through the valve. The flow goes through the hose connection in the reverse direction.
On vehicles with an excessively high blow-by, the valve does not meet the requirement. This is because some of the flow will go through the hose connection to the intake collector under all conditions.

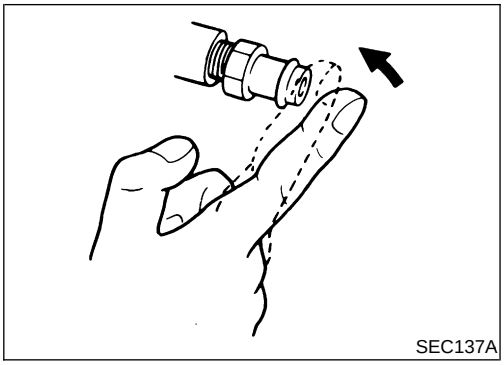
SEC137A

INSPECTION

NEEC0023

PCV (Positive Crankcase Ventilation) Valve

NEEC0023S01

With engine running at idle, remove PCV valve from breather separator. A properly working valve makes a hissing noise as air passes through it. A strong vacuum should be felt immediately when a finger is placed over the valve inlet.

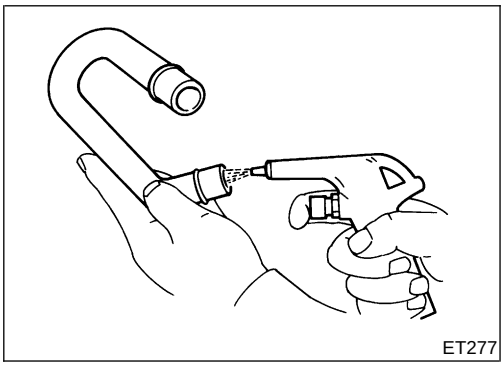
ET277

Ventilation Hose

NEEC0023S02

1. Check hoses and hose connections for leaks.
2. Disconnect all hoses and clean with compressed air. If any hose cannot be freed of obstructions, replace.

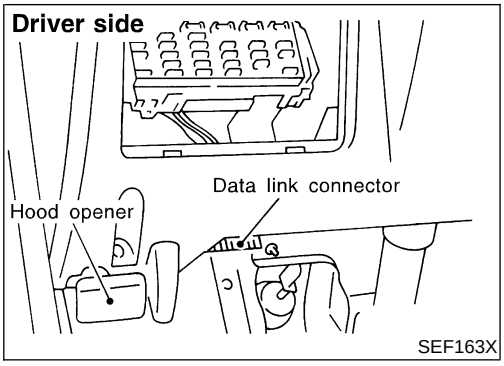

Fuel Pressure Release

NEEC0024

Before disconnecting fuel line, release fuel pressure from fuel line to eliminate danger.

WITH CONSULT-II

NEEC0024S01

1. Start engine.
2. Perform “FUEL PRESSURE RELEASE” in “WORK SUPPORT” mode with CONSULT-II.
3. After engine stalls, crank it two or three times to release all fuel pressure.
4. Turn ignition switch OFF.

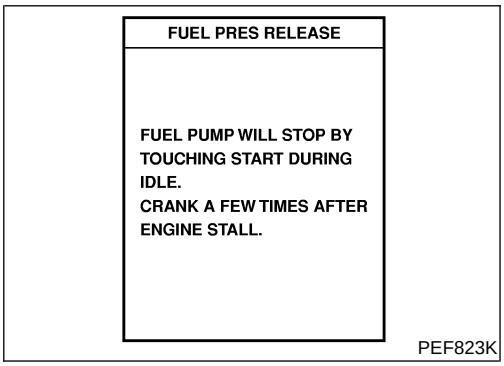

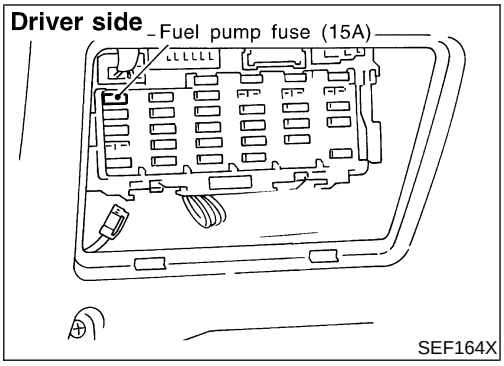

WITHOUT CONSULT-II

NEEC0024S02

1. Remove fuse for fuel pump.
2. Start engine.
3. After engine stalls, crank it two or three times to release all fuel pressure.
4. Turn ignition switch OFF and reconnect fuel pump fuse.

Fuel Pressure Check

NEEC0025

- **When reconnecting fuel line, always use new clamps.**
- **Make sure that clamp screw does not contact adjacent parts.**
- **Use a torque driver to tighten clamps.**
- **Use Pressure Gauge to check fuel pressure.**
- **Do not perform fuel pressure check with system operating. Fuel pressure gauge may indicate false readings.**

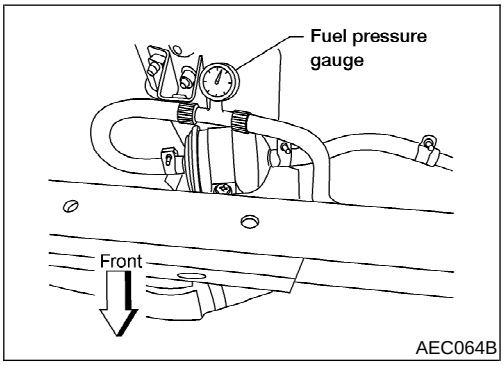

1. Release fuel pressure to zero.
2. Disconnect fuel hose between fuel filter and fuel tube (engine side).
3. Install pressure gauge between fuel filter and fuel tube.
4. Start engine and check for fuel leakage.
5. Read the indication of fuel pressure gauge.

At idle speed:

With vacuum hose connected

Approximately 235 kPa (2.4 kg/cm^2, 34 psi)

With vacuum hose disconnected

Approximately 294 kPa (3.0 kg/cm^2, 43 psi)

If results are unsatisfactory, perform Fuel Pressure Regulator Check, EC-58.

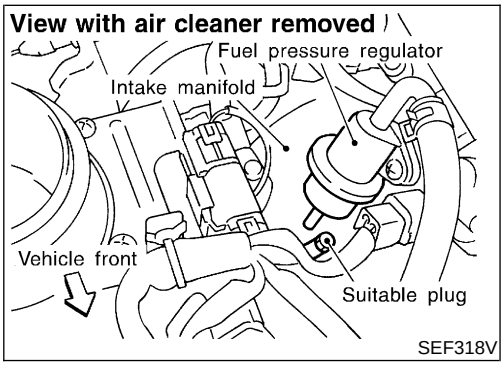

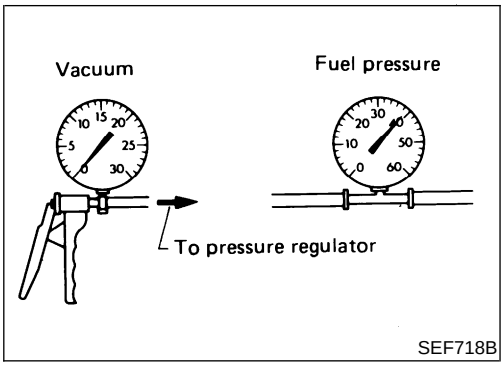

Fuel Pressure Regulator Check

NEEC0026

1. Stop engine and disconnect fuel pressure regulator vacuum hose from intake manifold.
2. Plug intake manifold with a rubber cap.
3. Connect variable vacuum source to fuel pressure regulator.
4. Start engine and read indication of fuel pressure gauge as vacuum is changed.

Fuel pressure should decrease as vacuum increases. If results are unsatisfactory, replace fuel pressure regulator.

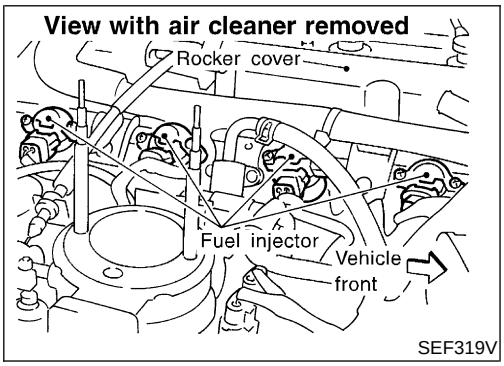

Injector

REMOVAL AND INSTALLATION

NEEC0027

1. Release fuel pressure to zero.
2. Remove injector tube assembly with injectors from intake manifold.
3. Remove injectors from injector tube assembly.

- Push injector tail piece.
- Do not pull on the connector.

4. Install injector to fuel tube assembly.

a. Clean exterior of injector tail piece.
b. Use new O-rings.

Always replace O-rings with new ones.
Lubricate O-rings with a smear of engine oil.

5. Install injectors with fuel tube assembly to intake manifold.
   Tighten in numerical order shown in the figure.

a. First, tighten all bolts to 9.3 to 10.8 N·m (0.95 to 1.1 kg-m, 6.9 to 8.0 ft-lb).
b. Then, tighten all bolts to 21 to 26 N·m (2.1 to 2.7 kg-m, 15 to 20 ft-lb).

6. Install fuel hoses to fuel tube assembly.
7. Reinstall any parts removed in reverse order of removal.

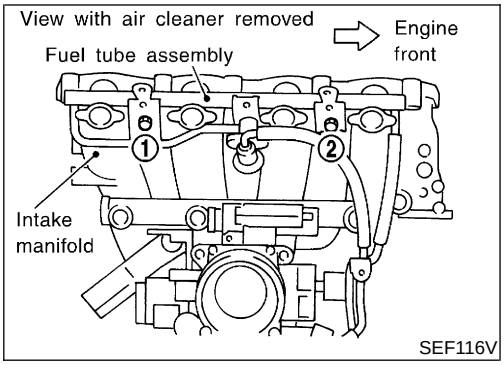

CAUTION:
After properly connecting injectors to fuel tube assembly, check connections for fuel leakage.

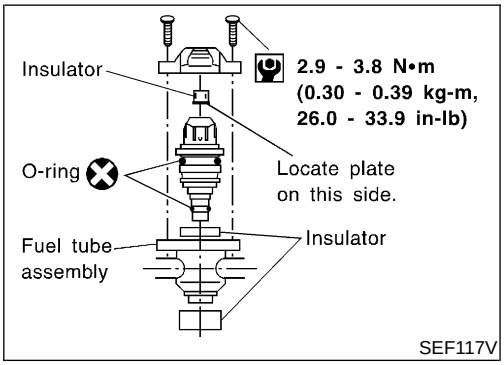

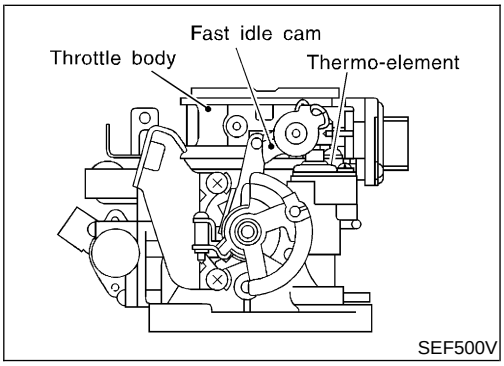

Fast Idle Cam (FIC)

COMPONENT DESCRIPTION

NEEC0502

The FIC is installed on the throttle body to maintain adequate engine speed while the engine is cold. It is operated by a volumetric change in wax located inside the thermo-element. The thermo-element is operated by engine coolant temperature.
For inspection refer to “TROUBLE DIAGNOSIS-BASIC INSPECTION”, “Basic Inspection”, EC-110.

Idle Speed/Ignition Timing/Idle Mixture Ratio Adjustment

NEEC0028

PREPARATION

NEEC0028S01

- **Make sure that the following parts are in good order.**

a) **Battery**
b) **Ignition system**
c) **Engine oil and coolant levels**
d) **Fuses**
e) **ECM harness connector**
f) **Vacuum hoses**
g) **Air intake system**
(Oil filler cap, oil level gauge, etc.)
h) **Fuel pressure**
i) **Engine compression**
j) **EGR valve operation**
k) **Throttle valve**
l) **EVAP system**

- **On models equipped with air conditioner, checks should be carried out while the air conditioner is “OFF”.**
- **On models equipped with automatic transmission, when checking idle speed, ignition timing and mixture ratio, checks should be carried out while shift lever is in “P” or “N” position.**
- **When measuring “CO” percentage, insert probe more than 40 cm (15.7 in) into tail pipe.**
- **Turn off headlamps, heater blower.**
- **Keep front wheels pointed straight ahead.**

Overall Inspection Sequence

NEEC0028S0101

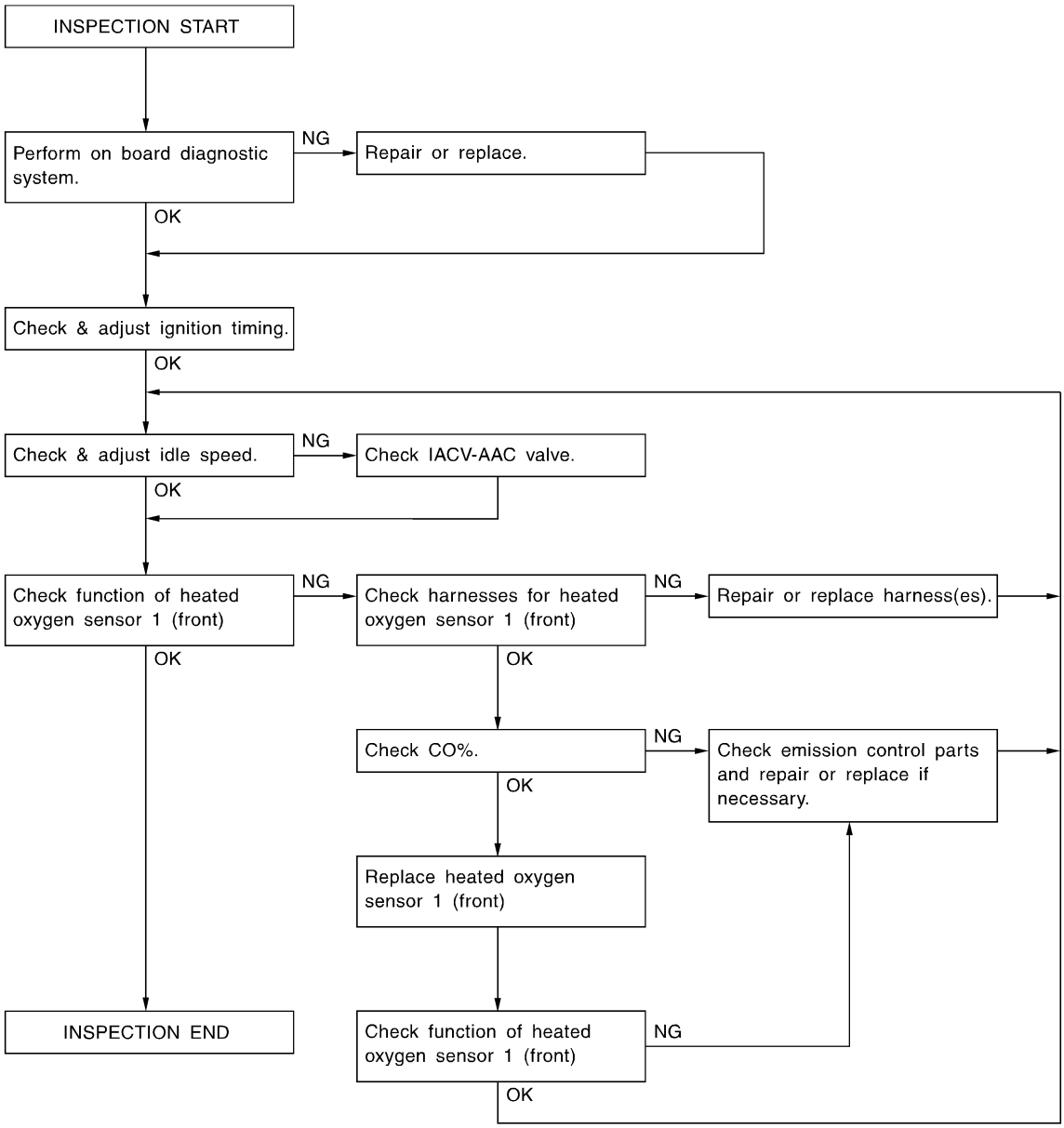

SEF554Y

NOTE:
If a vehicle contains a part which is operating outside of design specifications with no MIL illumination, the part shall not be replaced prior to emission testing unless it is determined that the part has been tampered with or abused in such a way that the diagnostic system cannot reasonably be expected to detect the resulting malfunction.

INSPECTION PROCEDURE

=NEEC0028S02

1	INSPECTION START

1. Visually check the following:
- Air cleaner clogging
- Hoses and duct for leaks
- EGR valve operation
- Electrical connectors
- Gasket (intake manifold, cylinder head, exhaust system)
- Throttle valve and throttle position sensor operation

2. Start engine and warm it up until engine coolant temperature indicator points to the middle of gauge. Ensure engine speed stays below 1,000 rpm.

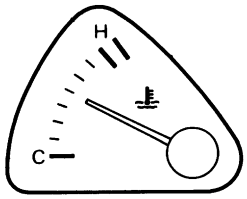

SEF810K

3. Open engine hood and run engine at about 2,000 rpm for about 2 minutes under no-load.
4. Make sure that no DTC is displayed with CONSULT-II or GST.

OK or NG

OK	▶	• GO TO 2. (With CONSULT-II) • GO TO 3. (Without CONSULT-II)
NG	▶	1. Repair or replace components as necessary. 2. GO TO 2. (With CONSULT-II) 3. GO TO 3. (Without CONSULT-II)

2	CHECK IGNITION TIMING

With CONSULT-II

1. Run engine at about 2,000 rpm for about 2 minutes under no-load.
2. Rev engine two or three times under no-load, then run engine at idle speed for about 1 minute.

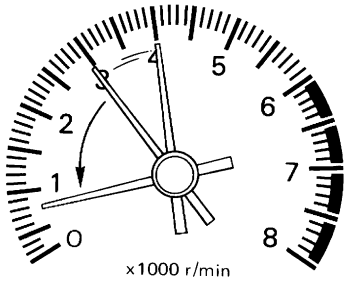

SEF978U

3. Select "IGNITION TIMING ADJ" in WORK SUPPORT mode.
4. Touch "START".

IGNITION TIMING ADJ
IGNITION TIMING FEEDBACK CONTROL WILL BE HELD BY TOUCHING START. AFTER DOING SO, ADJUST IGNITION TIMING WITH A TIMING LIGHT BY TURNING THE CAMSHAFT POSITION SENSOR.

PEF546N

5. Rev engine (2,000 to 3,000 rpm) two or three times under no-load, then run engine at idle speed.
6. Check ignition timing with a timing light.

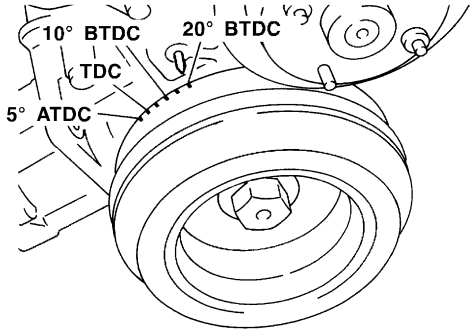

SEF320V

M/T: 20°±2° BTDC
A/T: 20°±2° BTDC (in "P" or "N" position)

OK or NG

OK	▶	GO TO 5.
NG	▶	GO TO 4.

3	CHECK IGNITION TIMING

Without CONSULT-II

1. Run engine at about 2,000 rpm for about 2 minutes under no-load.
2. Rev engine two or three times under no-load, then run engine at idle speed for about 1 minute.

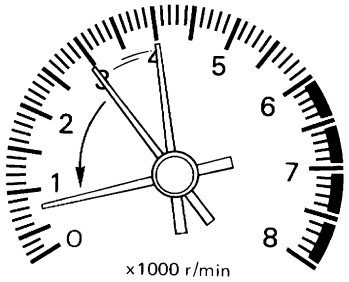

SEF978U

3. Turn off engine and disconnect throttle position sensor harness connector.

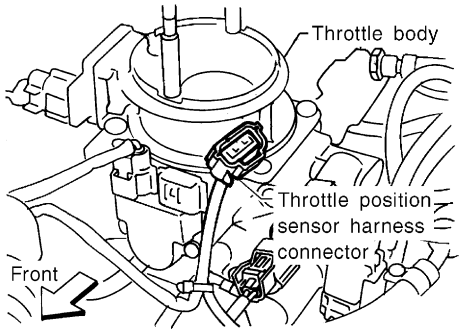

SEF265S

4. Start engine and rev it (2,000 to 3,000 rpm) two or three times under no-load, then run engine at idle speed.
5. Check ignition timing with a timing light.

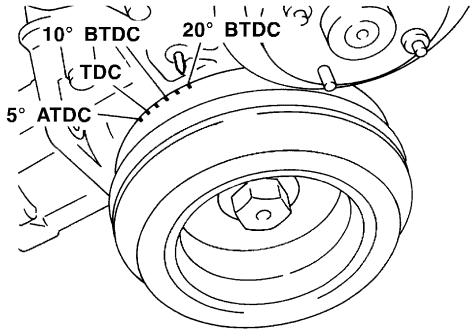

SEF320V

M/T: 20°±2° BTDC
A/T: 20°±2° BTDC (in "P" or "N" position)

OK or NG

OK	▶	GO TO 5.
NG	▶	GO TO 4.

4	ADJUST IGNITION TIMING

With CONSULT-II

1. Adjust ignition timing to the specified value by turning distributor after loosening bolts which secure distributor.

Without CONSULT-II

1. Adjust ignition timing to the specified value by turning distributor after loosening bolts which secure distributor.
2. Turn off engine and connect throttle position sensor harness connector to throttle position sensor.

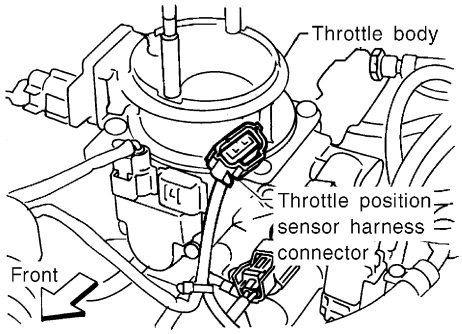

SEF265S

Models with CONSULT-II	▶	GO TO 2.
Models without CONSULT-II	▶	GO TO 3.

5	CHECK BASE IDLE SPEED

With CONSULT-II

1. Read idle speed in "IGNITION TIMING ADJ" in "WORK SUPPORT" mode.

IGNITION TIMING ADJ	
CONDITION SETTING	
IGN/T FEEDBACK	HOLD
MONITOR	
ENG SPEED	XXX rpm
IGN TIMING	XXX BTDC
CLSD THL POS	ON

SEF713Z

M/T: 750±50 rpm
A/T: 750±50 rpm (in "P" or "N" position)

Without CONSULT-II

1. Check idle speed.

M/T: 750±50 rpm
A/T: 750±50 rpm (in "P" or "N" position)

OK or NG

OK (With CONSULT-II)	▶	GO TO 7.
OK (Without CONSULT-II)	▶	GO TO 8.
NG	▶	GO TO 6.

6	ADJUST BASE IDLE SPEED

1. Rev engine (2,000 to 3,000 rpm) two or three times under no-load, then run engine at idle speed.
2. Adjust idle speed by turning idle speed adjusting screw.

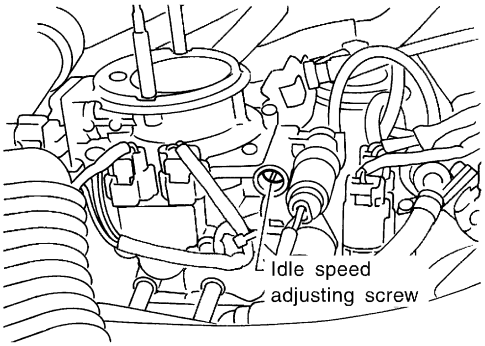

SEF240SA

M/T: 750±50 rpm
A/T: 750±50 rpm (in "P" or "N" position)

Models with CONSULT-II	▶	GO TO 7.
Models without CONSULT-II	▶	GO TO 8.

7	CHECK TARGET IDLE SPEED

With CONSULT-II
1. Touch "BACK" on CONSULT-II.
2. Rev engine (2,000 to 3,000 rpm) two or three times under no-load, then run engine at idle speed.

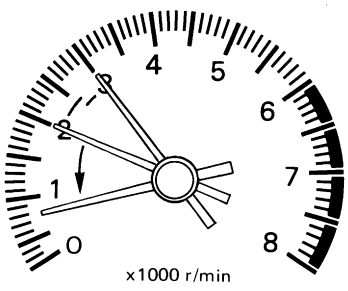

SEF602K

3. Read idle speed in "DATA MONITOR" mode with CONSULT-II.

DATA MONITOR	
MONITOR	NO DTC
ENG SPEED	XXX rpm

SEF058Y

M/T: 800±50 rpm
A/T: 800±50 rpm (in "P" or "N" position)

OK or NG

OK	▶	GO TO 10.
NG	▶	GO TO 9.

8	CHECK TARGET IDLE SPEED

Without CONSULT-II

1. Turn off engine and connect throttle position sensor harness connector.

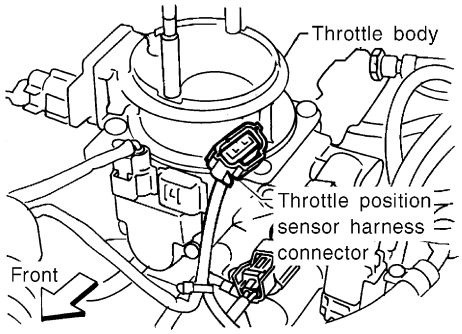

SEF265S

2. Start engine.
3. Rev engine (2,000 to 3,000 rpm) two or three times under no-load, then run engine at idle speed.
4. Check target idle speed.

M/T: 800±50 rpm
A/T: 800±50 rpm (in "P" or "N" position)

OK or NG

OK	▶	GO TO 10.
NG	▶	GO TO 9.

9	DETECT MALFUNCTIONING PART

Check the following.

1. Check IACV-AAC valve and replace if necessary. Refer to EC-434.
2. Check IACV-AAC valve harness and repair if necessary. Refer to EC-434.
3. Check ECM function by substituting another known good ECM.
   (ECM may be the cause of a problem, but this is rarely the case.)

	▶	GO TO 10.

10	CHECK HEATED OXYGEN SENSOR 1 (FRONT) SIGNAL

With CONSULT-II

1. See "HO2S1 MNTR (B1)" in "DATA MONITOR" mode.
2. Run engine at about 2,000 rpm for about 2 minutes under no-load.
3. Maintain engine at 2,000 rpm under no-load (engine is warmed up to normal operating temperature) and check that the monitor fluctuates between "LEAN" and "RICH" more than five times during 10 seconds.

DATA MONITOR	
MONITOR	NO DTC
ENG SPEED	XXX rpm
HO2S1 MNTR (B1)	RICH

SEF820Y

1 cycle: RICH → LEAN → RICH
2 cycles: RICH → LEAN → RICH → LEAN → RICH

Without CONSULT-II

1. Run engine at about 2,000 rpm for about 2 minutes under no-load.
2. Set voltmeter probe between ECM terminal 50 and ground.
3. Make sure that the voltage fluctuates between 0 - 0.3V and 0.6 - 1.0V more than 5 times during 10 seconds at 2,000 rpm.
   1 time: 0 - 0.3V → 0.6 - 1.0V → 0 - 0.3V
   2 times: 0 - 0.3V → 0.6 - 1.0V → 0 - 0.3V → 0.6 - 1.0V → 0 - 0.3V

OK or NG

OK	▶	**INSPECTION END**
NG	▶	GO TO 11.

11 CHECK HEATED OXYGEN SENSOR 1 (FRONT) HARNESS

1. Turn off engine and disconnect battery ground cable.
2. Disconnect ECM harness connector.
3. Disconnect heated oxygen sensor 1 (front) harness connector.
4. Then connect harness connector terminal for heated oxygen sensor 1 (front) to ground with a jumper wire.

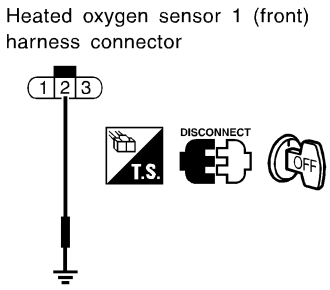

SEF508VA

5. Check for continuity between terminal 50 of ECM harness connector and body ground.

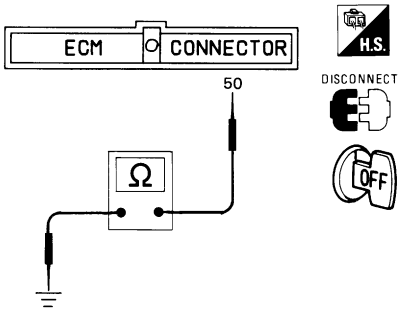

SEF250P

Continuity exists...OK
Continuity does not exist...NG

OK or NG

OK	▶	1. Connect ECM harness connector to ECM. 2. Connect battery ground cable. 3. GO TO 13.
NG	▶	1. Repair or replace harness. 2. GO TO 12.

12	PREPARATION FOR IDLE SPEED ADJUSTING

With CONSULT-II

1. Select "IGNITION TIMING ADJ" in "WORK SUPPORT" mode.
2. Touch "START".

IGNITION TIMING ADJ
IGNITION TIMING FEEDBACK CONTROL WILL BE HELD BY TOUCHING START. AFTER DOING SO, ADJUST IGNITION TIMING WITH A TIMING LIGHT BY TURNING THE CAMSHAFT POSITION SENSOR.

PEF546N

Without CONSULT-II

1. Stop engine and disconnect throttle position sensor harness connector.

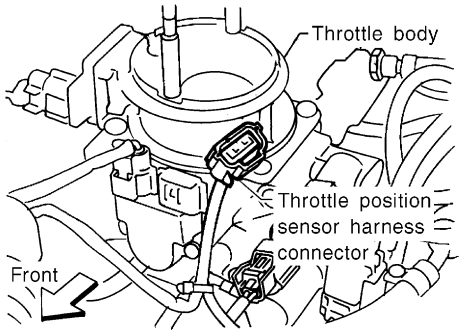

SEF265S

2. Start engine.

▶	GO TO 6.

13 **PREPARATION FOR "CO" % CHECK**

With CONSULT-II

1. Select "ENGINE COOLANT TEMP" in "ACTIVE TEST" mode.
2. Set "COOLANT TEMP" to 5°C (41°F) by touching "Qu" and "Qd" and "UP", "DOWN".

ACTIVE TEST	
ENG COOLANT TEMP	XXX °C
MONITOR	
ENG SPEED	XXX rpm
INJ PULSE-B1	XXX msec
IGN TIMING	XXX BTDC

SEF172Y

1. Connect ECM harness connector to ECM.
2. Disconnect engine coolant temperature sensor harness connector.
3. Connect a resistor (4.4 kΩ) between terminals of engine coolant temperature sensor harness connector.

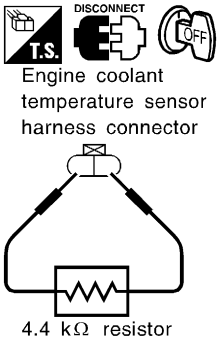

SEF053RA

4. Connect battery ground cable.

▶ GO TO 14.

14	CHECK "CO" %

Without CONSULT-II

1. Start engine and warm it up until engine coolant temperature indicator points to middle of gauge.
   (Be sure to start engine after setting "COOLANT TEMP" or installing a 4.4 kΩ resistor.)

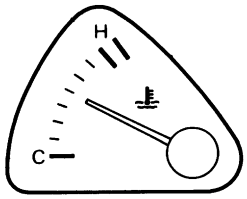

SEF810K

2. Rev engine two or three times under no-load, then run engine at idle speed.

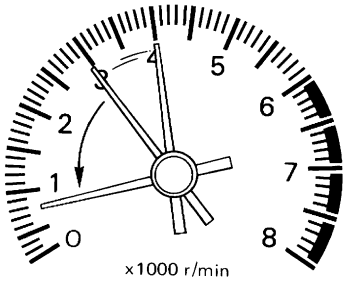

SEF978U

3. Check "CO"%.
   Idle CO: 2.9 - 10.8% and engine runs smoothly.
4. **With CONSULT-II**
   After checking CO%, touch "BACK".
5. **Without CONSULT-II**
   After checking CO%,

a. Disconnect the resistor from terminals of engine coolant temperature sensor harness connector.
b. Connect engine coolant temperature sensor harness connector to engine coolant temperature sensor.

OK or NG

OK	▶	GO TO 15.
NG	▶	GO TO 16.

15	CHECK HEATED OXYGEN SENSOR 1 (FRONT) SIGNAL

With CONSULT-II

1. Replace heated oxygen sensor 1 (front).
2. See "HO2S1 MNTR (B1)" in "DATA MONITOR" mode.
3. Maintain engine at 2,000 rpm under no-load (engine is warmed up to normal operating temperature.). Check that the monitor fluctuates between "LEAN" and "RICH" more than five times during 10 seconds.
   1 cycle: RICH → LEAN → RICH
   2 cycles: RICH → LEAN → RICH → LEAN → RICH

Without CONSULT-II

1. Stop engine.
2. Replace heated oxygen sensor 1 (front).
3. Start engine and warm it up to normal operating temperature.
4. Run engine at approx. 2,000 rpm for approx. 2 minutes under no-load.
5. Set voltmeter probe between ECM terminal 50 and ground.
6. Make sure that voltage fluctuates between 0 - 0.3V and 0.6 - 1.0V more than 5 times during 10 seconds at 2,000 rpm.
   1 time: 0 - 0.3V → 0.6 - 1.0V → 0 - 0.3V
   2 times: 0 - 0.3V → 0.6 - 1.0V → 0 - 0.3V → 0.6 - 1.0V → 0 - 0.3V

OK or NG

OK	▶	GO TO 12.
NG	▶	GO TO 16.

16	DETECT MALFUNCTIONING PART

1. Connect heated oxygen sensor 1 (front) harness connector to heated oxygen sensor 1 (front).
2. Check fuel pressure regulator. Refer to EC-58.
3. Check mass air flow sensor and its circuit.
   Refer to EC-156.
4. Check injector and its circuit.
   Refer to EC-588.
   Clean or replace if necessary.
5. Check engine coolant temperature sensor and its circuit. Refer to EC-174, 193.
6. Check ECM function by substituting another known-good ECM.
   (ECM may be the cause of a problem, but this is rarely the case.)

	▶	GO TO 12.

- **If a vehicle contains a part which is operating outside of design specifications with no MIL illumination, the part shall not be replaced prior to emission testing unless it is determined that the part has been tampered with or abused in such a way that the diagnostic system cannot reasonably be expected to detect the resulting malfunction.**

Introduction

NEEC0029

The ECM has an on board diagnostic system which detects malfunctions related to engine sensors or actuators. The ECM also records various emission-related diagnostic information including:

Diagnostic Trouble Code (DTC)	Mode 3 of SAE J1979
Freeze Frame data	Mode 2 of SAE J1979
System Readiness Test (SRT) code	Mode 1 of SAE J1979
1st Trip Diagnostic Trouble Code (1st Trip DTC)	Mode 7 of SAE J1979
1st Trip Freeze Frame data	
Test values and Test limits	Mode 6 of SAE J1979

The above information can be checked using procedures listed in the table below.

X: Applicable —: Not applicable

	DTC	1st trip DTC	Freeze Frame data	1st trip Freeze Frame data	SRT code	Test value
ECM*3	X	X*1	—	—	—	—
CONSULT-II	X	X	X	X	X	—
GST	X	X*2	X	—	X	X

*1: When DTC and 1st trip DTC simultaneously appear on the display, they cannot be clearly distinguished from each other.
*2: 1st trip DTCs for self-diagnoses concerning SRT items cannot be shown on the GST display.
*3: In diagnostic test mode II (Self-diagnostic results)

The malfunction indicator lamp (MIL) on the instrument panel lights up when the same malfunction is detected in two consecutive trips (Two trip detection logic), or when the ECM enters fail-safe mode. (Refer to EC-125.)

Two Trip Detection Logic

NEEC0030

When a malfunction is detected for the first time, 1st trip DTC and 1st trip Freeze Frame data are stored in the ECM memory. The MIL will not light up at this stage. <1st trip>
If the same malfunction is detected again during the next drive, the DTC and Freeze Frame data are stored in the ECM memory, and the MIL lights up. The MIL lights up at the same time when the DTC is stored. <2nd trip> The “trip” in the “Two Trip Detection Logic” means a driving mode in which self-diagnosis is performed during vehicle operation. Specific on board diagnostic items will cause the ECM to light up or blink the MIL, and store DTC and Freeze Frame data, even in the 1st trip, as shown below.

X: Applicable —: Not applicable

Items	MIL				DTC		1st trip DTC	
	1st trip		2nd trip		1st trip displaying	2nd trip displaying	1st trip displaying	2nd trip displaying
	Blinking	Lighting up	Blinking	Lighting up				
Misfire (Possible three way catalyst damage) — DTC: P0300 - P0304 is being detected	X	—	—	—	—	—	X	—
Misfire (Possible three way catalyst damage) — DTC: P0300 - P0304 is being detected	—	—	X	—	—	X	—	—
Closed loop control — DTC: P1148	—	X	—	—	X	—	X	—
Fail-safe items (Refer to EC-125.)	—	X	—	—	X*1	—	X*1	—
Except above	—	—	—	X	—	X	X	—

*1: Except “ECM”

Emission-related Diagnostic Information

NEEC0031

DTC AND 1ST TRIP DTC

NEEC0031S01

The 1st trip DTC (whose number is the same as the DTC number) is displayed for the latest self-diagnostic result obtained. If the ECM memory was cleared previously, and the 1st trip DTC did not reoccur, the 1st trip DTC will not be displayed. If a malfunction is detected during the 1st trip, the 1st trip DTC is stored in the ECM memory. The MIL will not light up (two trip detection logic). If the same malfunction is not detected in the 2nd trip (meeting the required driving pattern), the 1st trip DTC is cleared from the ECM memory. If the same malfunction is detected in the 2nd trip, both the 1st trip DTC and DTC are stored in the ECM memory and the MIL lights up. In other words, the DTC is stored in the ECM memory and the MIL lights up when the same malfunction occurs in two consecutive trips. If a 1st trip DTC is stored and a non-diagnostic operation is performed between the 1st and 2nd trips, only the 1st trip DTC will continue to be stored. For malfunctions that blink or light up the MIL during the 1st trip, the DTC and 1st trip DTC are stored in the ECM memory.
Procedures for clearing the DTC and the 1st trip DTC from the ECM memory are described in “HOW TO ERASE EMISSION-RELATED DIAGNOSTIC INFORMATION”. Refer to EC-85.
For malfunctions in which 1st trip DTCs are displayed, refer to EC-83. These items are required by legal regulations to continuously monitor the system/component. In addition, the items monitored non-continuously are also displayed on CONSULT-II.
1st trip DTC is specified in Mode 7 of SAE J1979. 1st trip DTC detection occurs without lighting up the MIL and therefore does not warn the driver of a problem. However, 1st trip DTC detection will not prevent the vehicle from being tested, for example during Inspection/Maintenance (I/M) tests.
When a 1st trip DTC is detected, check, print out or write down and erase (1st trip) DTC and Freeze Frame data as specified in “Work Flow” procedure Step II, refer to page EC-108. Then perform “DTC Confirmation Procedure” or “Overall Function Check” to try to duplicate the problem. If the malfunction is duplicated, the item requires repair.

How to read DTC and 1st Trip DTC

NEEC0031S0101

DTC and 1st trip DTC can be read by the following methods.
With CONSULT-II
With GST
CONSULT-II or GST (Generic Scan Tool) Examples: P0340, P1320, P0705, P0750, etc.
These DTCs are prescribed by SAE J2012.
(CONSULT-II also displays the malfunctioning component or system.)

- **1st trip DTC No. is the same as DTC No.**
- **Output of a DTC indicates a malfunction. However, GST does not indicate whether the malfunction is still occurring or has occurred in the past and has returned to normal.**
  CONSULT-II can identify malfunction status as shown below. Therefore, using CONSULT-II (if available) is recommended.

A sample of CONSULT-II display for DTC is shown below. DTC or 1st trip DTC of a malfunction is displayed in SELF-DIAGNOSTIC RESULTS mode of CONSULT-II. Time data indicates how many times the vehicle was driven after the last detection of a DTC.
If the DTC is being detected currently, the time data will be “0”.
If a 1st trip DTC is stored in the ECM, the time data will be “[1t]”.

DTC display

SELF DIAG RESULTS	
DTC RESULTS	TIME
MAF SEN/CIRCUIT [P0100]	0

1st trip DTC display

SELF DIAG RESULTS	
DTC RESULTS	TIME
MAF SEN/CIRCUIT [P0100]	1t

SEF992X

FREEZE FRAME DATA AND 1ST TRIP FREEZE FRAME DATA

NEEC0031S02

The ECM records the driving conditions such as fuel system status, calculated load value, engine coolant temperature, short term fuel trim, long term fuel trim, engine speed, vehicle speed and absolute pressure sensor at the moment a malfunction is detected.
Data which are stored in the ECM memory, along with the 1st trip DTC, are called 1st trip freeze frame data.

The data, stored together with the DTC data, are called freeze frame data and displayed on CONSULT-II or GST. The 1st trip freeze frame data can only be displayed on the CONSULT-II screen, not on the GST. For details, see EC-96.
Only one set of freeze frame data (either 1st trip freeze frame data or freeze frame data) can be stored in the ECM. 1st trip freeze frame data is stored in the ECM memory along with the 1st trip DTC. There is no priority for 1st trip freeze frame data and it is updated each time a different 1st trip DTC is detected. However, once freeze frame data (2nd trip detection/MIL on) is stored in the ECM memory, 1st trip freeze frame data is no longer stored. Remember, only one set of freeze frame data can be stored in the ECM. The ECM has the following priorities to update the data.

Priority	Items	
1	Freeze frame data	Misfire — DTC: P0300 - P0304 Fuel Injection System Function — DTC: P0171, P0172
2		Except the above items (Includes A/T related items)
3	1st trip freeze frame data	

For example, the EGR malfunction (Priority: 2) was detected and the freeze frame data was stored in the 2nd trip. After that when the misfire (Priority: 1) is detected in another trip, the freeze frame data will be updated from the EGR malfunction to the misfire. The 1st trip freeze frame data is updated each time a different malfunction is detected. There is no priority for 1st trip freeze frame data. However, once freeze frame data is stored in the ECM memory, 1st trip freeze data is no longer stored (because only one freeze frame data or 1st trip freeze frame data can be stored in the ECM). If freeze frame data is stored in the ECM memory and freeze frame data with the same priority occurs later, the first (original) freeze frame data remains unchanged in the ECM memory.
Both 1st trip freeze frame data and freeze frame data (along with the DTCs) are cleared when the ECM memory is erased. Procedures for clearing the ECM memory are described in "HOW TO ERASE EMISSION-RELATED DIAGNOSTIC INFORMATION". Refer to EC-85.

SYSTEM READINESS TEST (SRT) CODE

NEEC0031S03

System Readiness Test (SRT) code is specified in Mode 1 of SAE J1979.
As part of enhanced emissions test for Inspection and Maintenance (I/M), certain states require that the status of srt be used to indicate whether the ECM has completed self-diagnosis of major emission systems and components. Completion must be verified in order for the emissions inspection to proceed.
If a vehicle is rejected for a State emissions inspection due to one or more SRT items indicating "incomplete", use the information in this service manual to set the SRT to "complete".
In most cases, the ECM will automatically complete its self-diagnosis cycle during normal usage and the SRT status will indicate "complete" for each application system. Once set as "complete", the SRT status remains "complete" until the self-diagnosis memory is erased.
Occasionally, certain portions of the self-diagnostic test may not be completed as a result of the customer's normal driving pattern and the SRT will indicate "incomplete" for these items.

NOTE:
The SRT will also indicate "incomplete" if the self-diagnosis memory is erased for any reason or if the ECM memory power supply is interrupted for several hours.

If, during the state emissions inspection, the SRT indicates "complete" for all test items, the inspector will continue with the emissions test. However, if the SRT indicates "incomplete" for one or more of the SRT items, the vehicle is returned to the customer untested.

NOTE:
If MIL is "ON" during the state emissions inspection, the vehicle is also returned to the customer untested even though the SRT indicates "complete" for all test items. Therefore, it is important to check SRT ("complete") and DTC (No DTCs) before the inspection.

This service manual contains the service procedure and support information to perform a comprehensive road test that enables the ECM to complete the SRT.

SRT Item

NEEC0031S0308

Self-diagnosis result		Example				
		Diagnosis	Ignition OFF – ON – OFF	Ignition OFF – ON – OFF	Ignition OFF – ON – OFF	Ignition OFF – ON – OFF
All OK	Case 1	P0400	OK (1)	– (1)	OK (2)	– (2)
		P0402	OK (1)	– (1)	– (1)	OK (2)
		P1402	OK (1)	OK (2)	– (2)	– (2)
		SRT of EGR	"complete"	"complete"	"complete"	"complete"
	Case 2	P0400	OK (1)	– (1)	– (1)	– (1)
		P0402	– (0)	– (0)	OK (1)	– (1)
		P1402	OK (1)	OK (2)	– (2)	– (2)
		SRT of EGR	"incomplete"	"incomplete"	"complete"	"complete"
NG exists	Case 3	P0400	OK	OK	–	–
		P0402	–	–	–	–
		P1402	NG	–	NG	NG (Consecutive NG)
		(1st trip) DTC	1st trip DTC	–	1st trip DTC	DTC (=MIL "ON")
		SRT of EGR	"incomplete"	"incomplete"	"incomplete"	"complete"

OK: Self-diagnosis is carried out and the result is OK.
NG: Self-diagnosis is carried out and the result is OK.
– : Self-diagnosis is not carried out.

SRT Set Timing

NEEC0031S0310

SRT is set as "complete" after self-diagnosis has been performed one or more times. Completion of SRT will occur if the result is OK or NG. The set timing is different between them and is shown in the following table. When all SRT related self-diagnoses showed OK results in a same cycle (Ignition OFF – ON – OFF), the SRT will indicate "complete".

→ Case 1 above

When all SRT related self-diagnoses show OK results through several different cycles, the SRT will indicate "complete" at the time the respective self-diagnoses have at least one OK result.

→ Case 2 above

If one or more SRT related self-diagnoses showed NG results in 2 consecutive cycles, the SRT will also indicate "complete".

→ Case 3 above

The previous table shows that the minimum number of cycles for setting SRT as "incomplete" is one (1) for each self-diagnosis (Case 1 and 2) or two (2) for one self-diagnosis (Case 3). However, in preparation for the State emissions inspection, it is unnecessary of each self-diagnosis to be executed twice (Case 3) because of the following reasons;

- The SRT will indicate "complete" at the time the respective self-diagnoses have one (1) OK result.
- The emissions inspection requires "complete" of the SRT only with OK self-diagnosis result.
- When, during SRT driving pattern, 1st trip DTC (NG) is detected prior to "complete" of SRT, the self-diagnosis memory must be erased from ECM after repair.
- If the 1st trip DTC is erased, all the SRT will indicate "incomplete".

NOTE:
SRT can be set as "complete" together with the DTC(s). Therefore, DTC check must always be carried out prior to the State emission inspection even though the SRT indicates "complete".

How to Display SRT Code

NEEC0031S0301

1. **With CONSULT-II**
   Selecting "SRT STATUS" in "DTC CONFIRMATION" mode with CONSULT-II.

For items whose SRT codes are set, a "CMPLT" is displayed on the CONSULT-II screen; for items whose SRT codes are not set, "INCMP" is displayed.

2. **With GST**
   Selecting Mode 1 with GST (Generic Scan Tool)

A sample of CONSULT-II display for SRT code is shown below.
"INCMP" means the self-diagnosis is incomplete and SRT is not set. "CMPLT" means the self-diagnosis is complete and SRT is set.

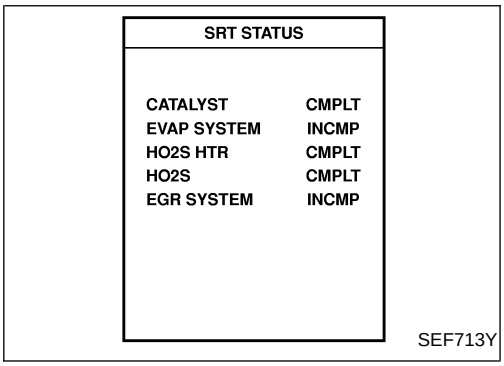

SRT Service Procedure

=NEEC0031S0311

If a vehicle has been rejected for the State emissions inspection due to one or more SRT items indicating "incomplete", review the following flowchart diagnostic sequence.

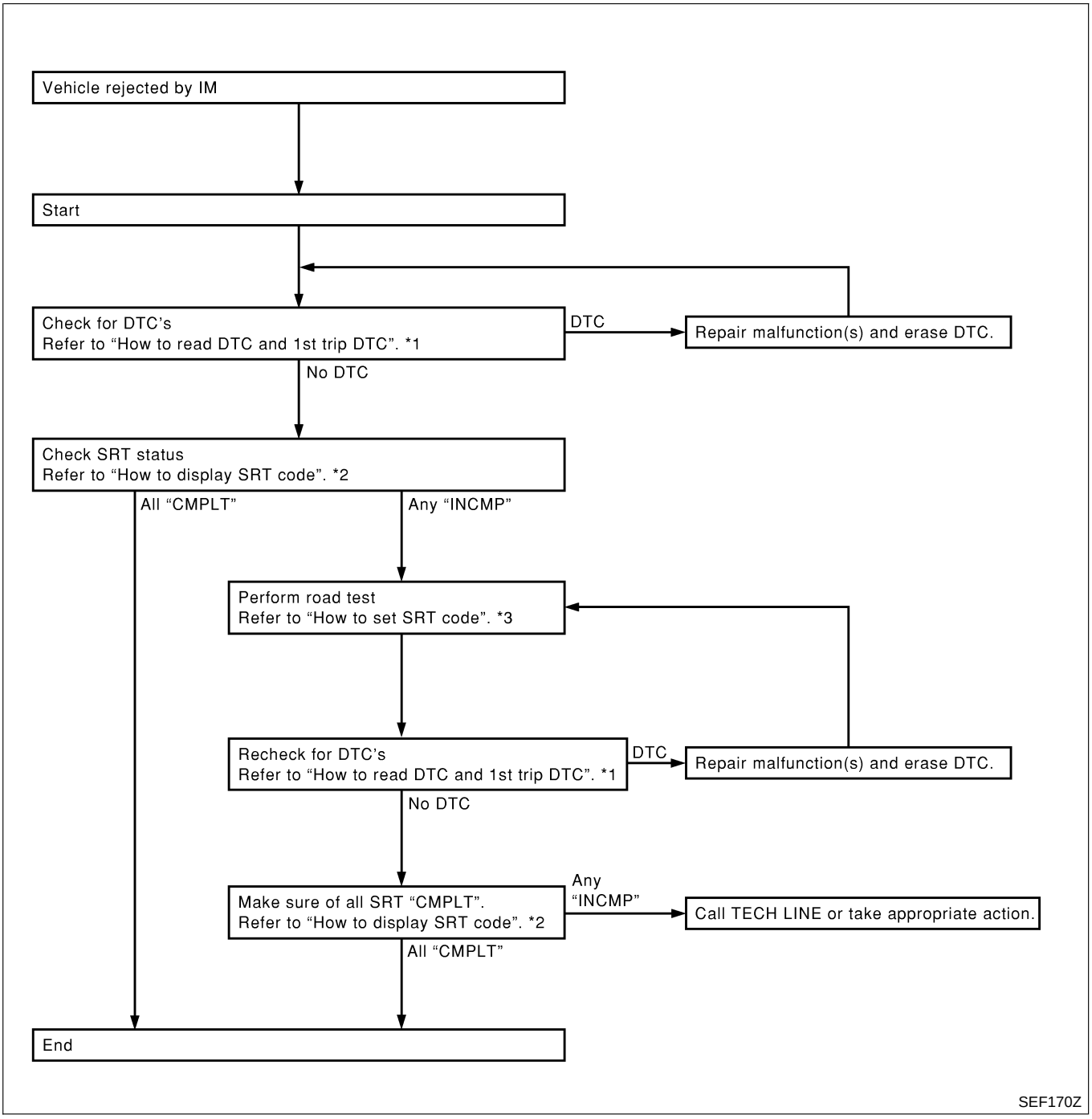

*1 EC-74 *2 EC-76 *3 EC-79

How to Set SRT Code

=NEEC0031S0302

To set all SRT codes, self-diagnosis for the items indicated above must be performed one or more times. Each diagnosis may require a long period of actual driving under various conditions.

With CONSULT-II

Perform corresponding DTC confirmation procedure one by one based on "Performance Priority" in the table on EC-76.

Without CONSULT-II

The most efficient driving pattern in which SRT codes can be properly set is explained on EC-80. The driving pattern should be performed one or more times to set all SRT codes.

Driving Pattern

NEEC0031S0303

Note: Always drive vehicle in safe manner according to traffic conditions and obey all traffic laws.
Refer to next page for more information and explanation of chart.

Driving pattern

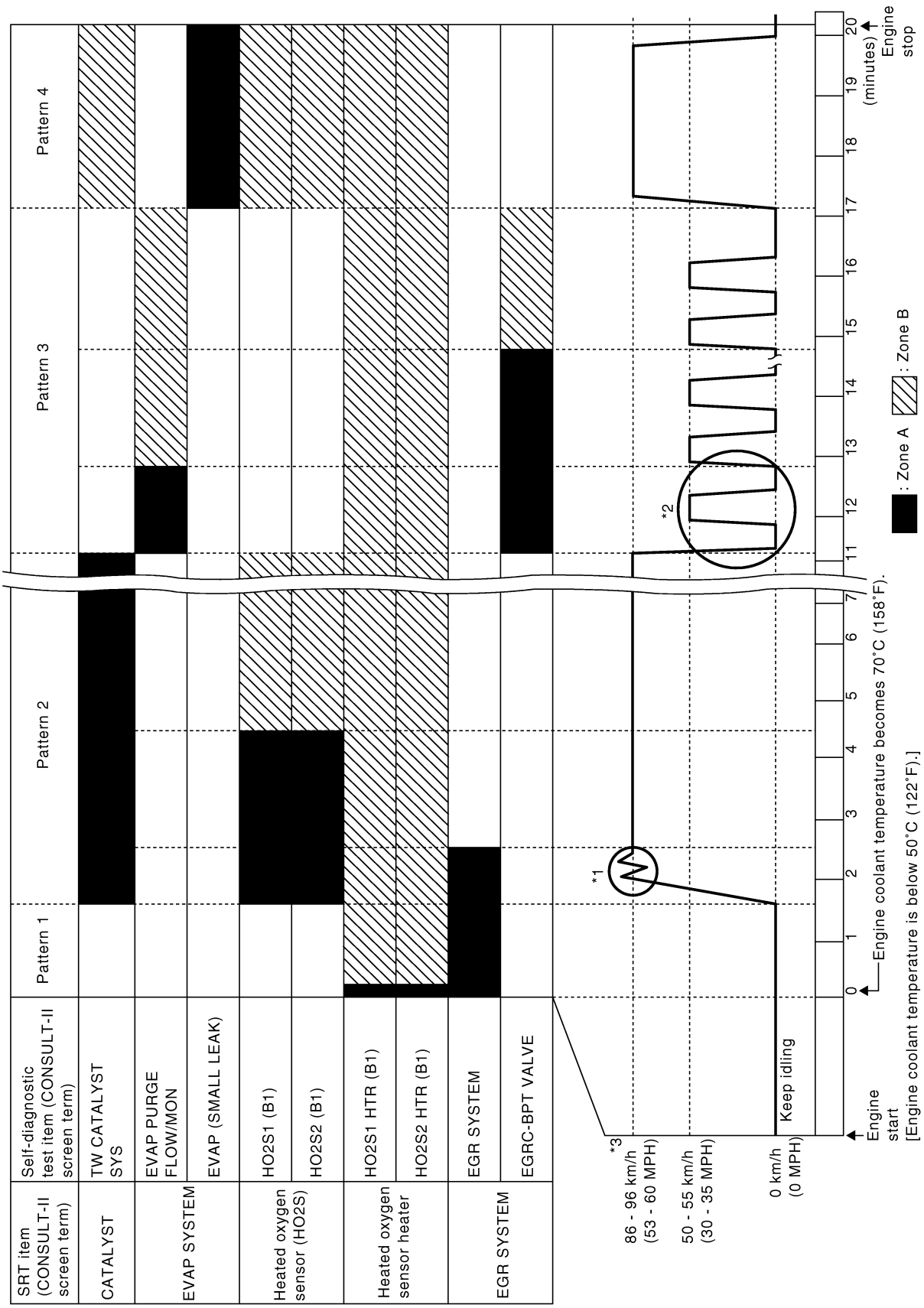

SEF906Z

- The time required for each diagnosis varies with road surface conditions, weather, altitude, individual driving habits, etc.
  Zone A refers to the range where the time required, for the diagnosis under normal conditions*, is the shortest.
  Zone B refers to the range where the diagnosis can still be performed if the diagnosis is not completed within zone A.

*: Normal conditions refer to the following:

− Sea level
− Flat road
− Ambient air temperature: 20 - 30°C (68 - 86°F)
− Diagnosis is performed as quickly as possible under normal conditions.
  Under different conditions [For example: ambient air temperature other than 20 - 30°C (68 - 86°F)], diagnosis may also be performed.

Pattern 1:

- **The engine is started at the engine coolant temperature of −10 to 35°C (14 to 95°F) (where the voltage between the ECM terminal 59 and ground is 3.0 - 4.3V).**
- **The engine must be operated at idle speed until the engine coolant temperature is greater than 70°C (158°F) (where the voltage between the ECM terminal 59 and ground is lower than 1.4V).**
- **The engine is started at the tank fuel temperature of warmer than 0°C (32°F) (where the voltage between the ECM terminal 60 and ground is less than 4.1V).**

Pattern 2:

- When steady-state driving is performed again even after it is interrupted, each diagnosis can be conducted. In this case, the time required for diagnosis may be extended.

Pattern 3:

- The driving pattern outlined in *2 must be repeated at least 3 times.

Pattern 4:

- Tests are performed after the engine has been operated for at least 17 minutes.
- The accelerator pedal must be held very steady during steady-state driving.
- If the accelerator pedal is moved, the test must be conducted all over again.

*1: Depress the accelerator pedal until vehicle speed is 90 km/h (56 MPH), then release the accelerator pedal and keep it released for more than 10 seconds. Depress the accelerator pedal until vehicle speed is 90 km/h (56 MPH) again.
*2: Operate the vehicle in the following driving pattern.
1) Decelerate vehicle to 0 km/h (0 MPH) and let engine idle.
2) Repeat driving pattern shown below at least 10 times.

- **During acceleration, hold the accelerator pedal as steady as possible.**

3) Repeat steps 1 and 2 until the EGR system SRT is set.

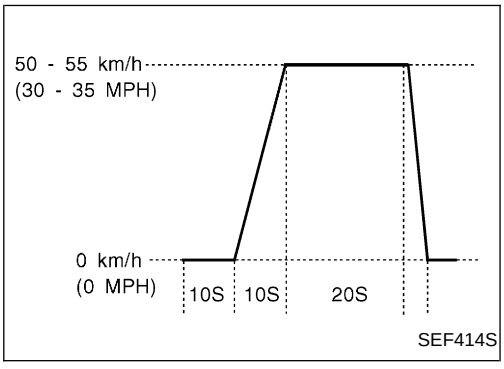

*3: Checking the vehicle speed with GST is advised.
Suggested Transmission Gear Position for A/T Models
Set the selector lever in the "D" position with the overdrive switch turned ON.

Suggested upshift speeds for M/T models

Shown below are suggested vehicle speeds for shifting into a higher gear. These suggestions relate to fuel economy and vehicle performance. Actual upshift speeds will vary according to road conditions, the weather and individual driving habits.

	For normal acceleration in low altitude areas [less than 1,219 m (4,000 ft)]:		For quick acceleration in low altitude areas and high altitude areas [over 1,219 m (4,000 ft)]:
Gear change	ACCEL shift point km/h (MPH)	CRUISE shift point km/h (MPH)	km/h (MPH)
1st to 2nd	24 (15)	24 (15)	24 (15)
2nd to 3rd	40 (25)	29 (18)	40 (25)
3rd to 4th	58 (36)	48 (30)	64 (40)
4th to 5th	64 (40)	63 (39)	72 (45)

Suggested Maximum Speed in Each Gear

Downshift to a lower gear if the engine is not running smoothly, or if you need to accelerate.

Do not exceed the maximum suggested speed (shown below) in any gear. For level road driving, use the highest gear suggested for that speed. Always observe posted speed limits and drive according to the road conditions to ensure safe operation. Do not over-rev the engine when shifting to a lower gear as it may cause engine damage or loss of vehicle control.

Gear	km/h (MPH) 2WD (AUTO mode)
1st	50 (30)
2nd	95 (60)

TEST VALUE AND TEST LIMIT (GST ONLY — NOT APPLICABLE TO CONSULT-II)

NEEC0031S04

The following is the information specified in Mode 6 of SAE J1979.

The test value is a parameter used to determine whether a system/circuit diagnostic test is "OK" or "NG" while being monitored by the ECM during self-diagnosis. The test limit is a reference value which is specified as the maximum or minimum value and is compared with the test value being monitored.

Items for which these data (test value and test limit) are displayed are the same as SRT code items (9 test items).

These data (test value and test limit) are specified by Test ID (TID) and Component ID (CID) and can be displayed on the GST screen.

X: Applicable —: Not applicable

SRT item	Self-diagnostic test item	Test value (GST display)		Test limit	Application
		TID	CID		
CATALYST	Three way catalyst function	01H	01H	Max.	X
		02H	81H	Min.	X
EVAP SYSTEM	EVAP control system (Small leak)	05H	03H	Max.	X
	EVAP control system purge flow monitoring	06H	83H	Min.	X

SRT item	Self-diagnostic test item	Test value (GST display)		Test limit	Application
		TID	CID		
O2 SENSOR	Heated oxygen sensor 1 heater (front)	09H	04H	Max.	X
		0AH	84H	Min.	X
		0BH	04H	Max.	X
		0CH	04H	Max.	X
		0DH	04H	Max.	X
	Heated oxygen sensor 2 heater (rear)	19H	86H	Min.	X
		1AH	86H	Min.	X
		1BH	06H	Max.	X
		1CH	06H	Max.	X
O2 SENSOR HEATER	Heated oxygen sensor 1 heater (front)	29H	08H	Max.	X
		2AH	88H	Min.	X
	Heated oxygen sensor 2 heater (rear)	2DH	0AH	Max.	X
		2EH	8AH	Min.	X
EGR SYSTEM	EGR function	31H	8CH	Min.	X
		32H	8CH	Min.	X
		33H	8CH	Min.	X
		34H	8CH	Min.	X
		35H	0CH	Max.	X
	EGRC-BPT valve function	36H	0CH	Max.	X
		37H	8CH	Min.	X

EMISSION-RELATED DIAGNOSTIC INFORMATION ITEMS

NEEC0031S05

X: Applicable —: Not applicable

Items (CONSULT-II screen terms)	DTC*3 CONSULT-II GST*1	SRT code	Test value/Test limit (GST only)	1st trip DTC*3	Reference page
NO SELF DIAGNOSTIC FAILURE INDICATED	**P0000**	—	—	—	—
MAF SEN/CIRCUIT	P0100	—	—	X	EC-156
ABSL PRES SEN/CIRC	P0105	—	—	X	EC-166
AIR TEMP SEN/CIRC	P0110	—	—	X	EC-168
COOLANT T SEN/CIRC	P0115	—	—	X	EC-174
THRTL POS SEN/CIRC	P0120	—	—	X	EC-179
*COOLAN T SEN/CIRC	P0125	—	—	X	EC-193
HO2S1 (B1)	P0130	X	X	X*2	EC-198
HO2S1 (B1)	P0131	X	X	X*2	EC-206
HO2S1 (B1)	P0132	X	X	X*2	EC-213
HO2S1 (B1)	P0133	X	X	X*2	EC-220
HO2S1 (B1)	P0134	X	X	X*2	EC-231

Items (CONSULT-II screen terms)	DTC*3 CONSULT-II GST*1	SRT code	Test value/Test limit (GST only)	1st trip DTC*3	Reference page
HO2S1 HTR (B1)	P0135	X	X	X*2	EC-238
HO2S2 (B1)	P0137	X	X	X*2	EC-243
HO2S2 (B1)	P0138	X	X	X*2	EC-253
HO2S2 (B1)	P0139	X	X	X*2	EC-263
HO2S2 (B1)	P0140	X	X	X*2	EC-273
HO2S2 HTR (B1)	P0141	X	X	X*2	EC-281
FUEL SYS LEAN/BK1	P0171	—	—	X	EC-286
FUEL SYS RICH/BK1	P0172	—	—	X	EC-293
FUEL TEMP SEN/CIRC	P0180	—	—	X	EC-300
MULTI CYL MISFIRE	P0300	—	—	X	EC-306
CYL 1 MISFIRE	P0301	—	—	X	EC-306
CYL 2 MISFIRE	P0302	—	—	X	EC-306
CYL 3 MISFIRE	P0303	—	—	X	EC-306
CYL 4 MISFIRE	P0304	—	—	X	EC-306
KNOCK SEN/CIRC-B1	P0325	—	—	—	EC-315
CKP SEN/CIRCUIT	P0335	—	—	X	EC-319
CMP SEN/CIRCUIT	P0340	—	—	X	EC-325
EGR SYSTEM	P0400	X	X	X*2	EC-333
EGRC-BPT VALVE	P0402	X	X	X*2	EC-345
TW CATALYST SYS-B1	P0420	X	X	X*2	EC-353
EVAP SMALL LEAK	P0440	X	X	X*2	EC-358
PURG VOLUME CONT/V	P0443	—	—	X	EC-375
VENT CONTROL VALVE	P0446	—	—	X	EC-383
EVAP SYS PRES SEN	P0450	—	—	X	EC-391
EVAP GROSS LEAK	P0455	X	X	X*3	EC-406
FUEL LEV SEN SLOSH	P0460	—	—	X	EC-419
FUEL LEVEL SENSOR	P0461	—	—	X	EC-423
FUEL LEVL SEN/CIRC	P0464	—	—	X	EC-425
VEH SPEED SEN/CIRC	P0500	—	—	X	EC-429
IACV/AAC VLV/CIRC	P0505	—	—	X	EC-434
CLOSED TP SW/CIRC	P0510	—	—	X	EC-440
ECM	P0605	—	—	X	EC-447
THERMSTAT FNCTN	P1126	—	—	X	EC-449
CLOSED LOOP-B1	P1148	—	—	—	EC-451
CKP SENSOR (COG)	P1336	—	—	X	EC-453
EGRC SOLENOID/V	P1400	—	—	X	EC-459

Items (CONSULT-II screen terms)	DTC*3 CONSULT-II GST*1	SRT code	Test value/Test limit (GST only)	1st trip DTC*3	Reference page
EGR TEMP SEN/CIRC	P1401	—	—	X	EC-466
EGR SYSTEM	P1402	X	X	X*2	EC-472
EVAP SMALL LEAK	P1440	X	X	X*2	EC-481
EVAP VERY SML LEAK	P1441	X*4	X	X*2	EC-483
PURG VOLUME CONT/V	P1444	—	—	X	EC-498
VENT CONTROL VALVE	P1446	—	—	X	EC-510
EVAP PURG FLOW/MON	P1447	X	X	X*2	EC-516
VENT CONTROL VALVE	P1448	—	—	X	EC-526
FUEL LEVEL SEN/CIRC	P1464	—	—	X	EC-534
VC/V BYPASS/V	P1490	—	—	X	EC-537
VC CUT/V BYPASS/V	P1491	—	—	X	EC-544
P-N POS SW/CIRCUIT	P1706	—	—	X	EC-555
TCC SOL/V	P1775	—	—	X	EC-564
TCC SOL/V	P1776	—	—	X	EC-570

*1: These numbers are prescribed by SAE J2012.
*2: These are not displayed with GST.
*3: 1st trip DTC No. is the same as DTC No.
*4: SRT code will not be set if the self-diag result is NG.

HOW TO ERASE EMISSION-RELATED DIAGNOSTIC INFORMATION

NEEC0031S06

How to Erase DTC (With CONSULT-II)

NEEC0031S0601

1. If the ignition switch stays ON after repair work, be sure to turn ignition switch OFF once. Wait at least 5 seconds and then turn it ON (engine stopped) again.
2. Turn CONSULT-II "ON" and touch "ENGINE".
3. Touch "SELF-DIAG RESULTS".
4. Touch "ERASE". (The DTC in the ECM will be erased.)

How to erase DTC (With CONSULT-II)

1. If the ignition switch stays "ON" after repair work, be sure to turn ignition switch "OFF" once. Wait at least 5 seconds and then turn it "ON" (engine stopped) again.

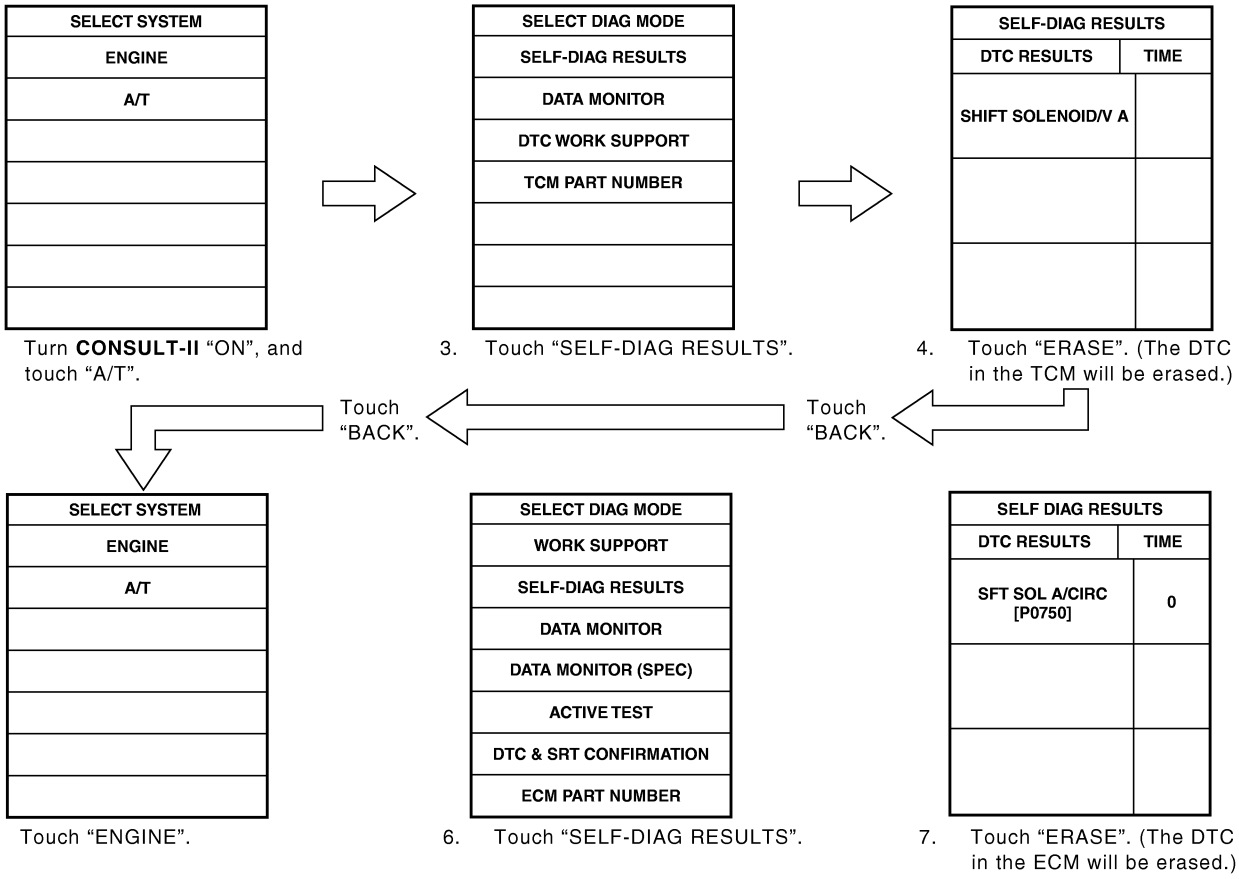

SEF823YD

The emission-related diagnostic information can be erased by selecting "ERASE" in the "SELF-DIAG RESULTS" mode with CONSULT-II.

How to Erase DTC (With GST)

NEEC0031S0602

1. If the ignition switch stays ON after repair work, be sure to turn ignition switch OFF once. Wait at least 5 seconds and then turn it ON (engine stopped) again.
2. Select Mode 4 with GST (Generic Scan Tool).

The emission-related diagnostic information in the ECM can be erased by selecting Mode 4 with GST (Generic Scan Tool).

NOTE:

- **If the battery is disconnected, the emission-related diagnostic information will be lost after approx. 24 hours.**
- **The following data are cleared when the ECM memory is erased.**

1) Diagnostic trouble codes
2) 1st trip diagnostic trouble codes
3) Freeze frame data
4) 1st trip freeze frame data
5) System readiness test (SRT) codes
6) Test values
7) Others

Actual work procedures are explained using a DTC as an example. Be careful so that not only the DTC, but all of the data listed above, are cleared from the ECM memory during work procedures.

Malfunction Indicator Lamp (MIL)

DESCRIPTION

NEEC0032

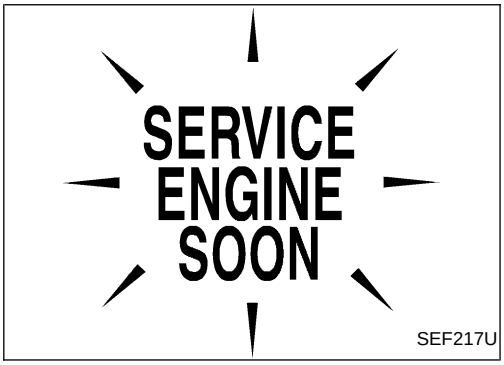

The MIL is located on the instrument panel.

1. The MIL will light up when the ignition switch is turned ON without the engine running. This is a bulb check.
- If the MIL does not light up, refer to ***EL-84***, "WARNING LAMPS" or see EC-615.
2. When the engine is started, the MIL should go off.
   If the MIL remains on, the on board diagnostic system has detected an engine system malfunction.

On Board Diagnostic System Function

NEEC0032S01

The on board diagnostic system has the following two functions.

Diagnostic Test Mode	KEY and ENG. Status	Function	Explanation of Function
Mode I	Ignition switch in "ON" position  Engine stopped 	BULB CHECK	This function checks the MIL bulb for damage (blown, open circuit, etc.). If the MIL does not come on, check MIL circuit.
	Engine running 	MALFUNCTION WARNING	This is a usual driving condition. When a malfunction is detected twice in two consecutive driving cycles (two trip detection logic), the MIL will light up to inform the driver that a malfunction has been detected. The following malfunctions will light up or blink the MIL in the 1st trip. ● Coolant overtemperature enrichment protection ● "Misfire (Possible three way catalyst damage)" ● "Closed loop control" ● Fail-safe mode

Diagnostic Test Mode I — Bulb Check

NEEC0032S03

In this mode, the MIL on the instrument panel should stay ON. If it remains OFF, check the bulb. Refer to ***EL-84***, "WARNING LAMPS" or see EC-615.

Diagnostic Test Mode I — Malfunction Warning

NEEC0032S04

MIL	Condition
ON	When the malfunction is detected or the ECM's CPU is malfunctioning.
OFF	No malfunction.

OBD System Operation Chart

NEEC0033

RELATIONSHIP BETWEEN MIL, DTC, 1ST TRIP DTC AND DETECTABLE ITEMS

NEEC0033S01

- When a malfunction is detected for the first time, the 1st trip DTC and the 1st trip freeze frame data are stored in the ECM memory.

OBD System Operation Chart (Cont'd)

- When the same malfunction is detected in two consecutive trips, the DTC and the freeze frame data are stored in the ECM memory, and the MIL will come on. For details, refer to "Two Trip Detection Logic" on EC-73.
- The MIL will go off after the vehicle is driven 3 times with no malfunction. The drive is counted only when the recorded driving pattern is met (as stored in the ECM). If another malfunction occurs while counting, the counter will reset.
- The DTC and the freeze frame data will be stored until the vehicle is driven 40 times (driving pattern A) without the same malfunction recurring (except for Misfire and Fuel Injection System). For Misfire and Fuel Injection System, the DTC and freeze frame data will be stored until the vehicle is driven 80 times (driving pattern C) without the same malfunction recurring. The "TIME" in "SELF-DIAGNOSTIC RESULTS" mode of CONSULT-II will count the number of times the vehicle is driven.
- The 1st trip DTC is not displayed when the self-diagnosis results in "OK" for the 2nd trip.

SUMMARY CHART

NEEC0033S02

Items	Fuel Injection System	Misfire	Other
MIL (goes off)	3 (pattern B)	3 (pattern B)	3 (pattern B)
DTC, Freeze Frame Data (no display)	80 (pattern C)	80 (pattern C)	40 (pattern A)
1st Trip DTC (clear)	1 (pattern C), *1	1 (pattern C), *1	1 (pattern B)
1st Trip Freeze Frame Data (clear)	*1, *2	*1, *2	1 (pattern B)

For details about patterns "B" and "C" under "Fuel Injection System" and "Misfire", see EC-90.

For details about patterns "A" and "B" under "Other", see EC-92.

*1: Clear timing is at the moment OK is detected.

*2: Clear timing is when the same malfunction is detected in the 2nd trip.

RELATIONSHIP BETWEEN MIL, DTC, 1ST TRIP DTC AND DRIVING PATTERNS FOR "MISFIRE" <EXHAUST QUALITY DETERIORATION>, "FUEL INJECTION SYSTEM"

NEEC0033S03

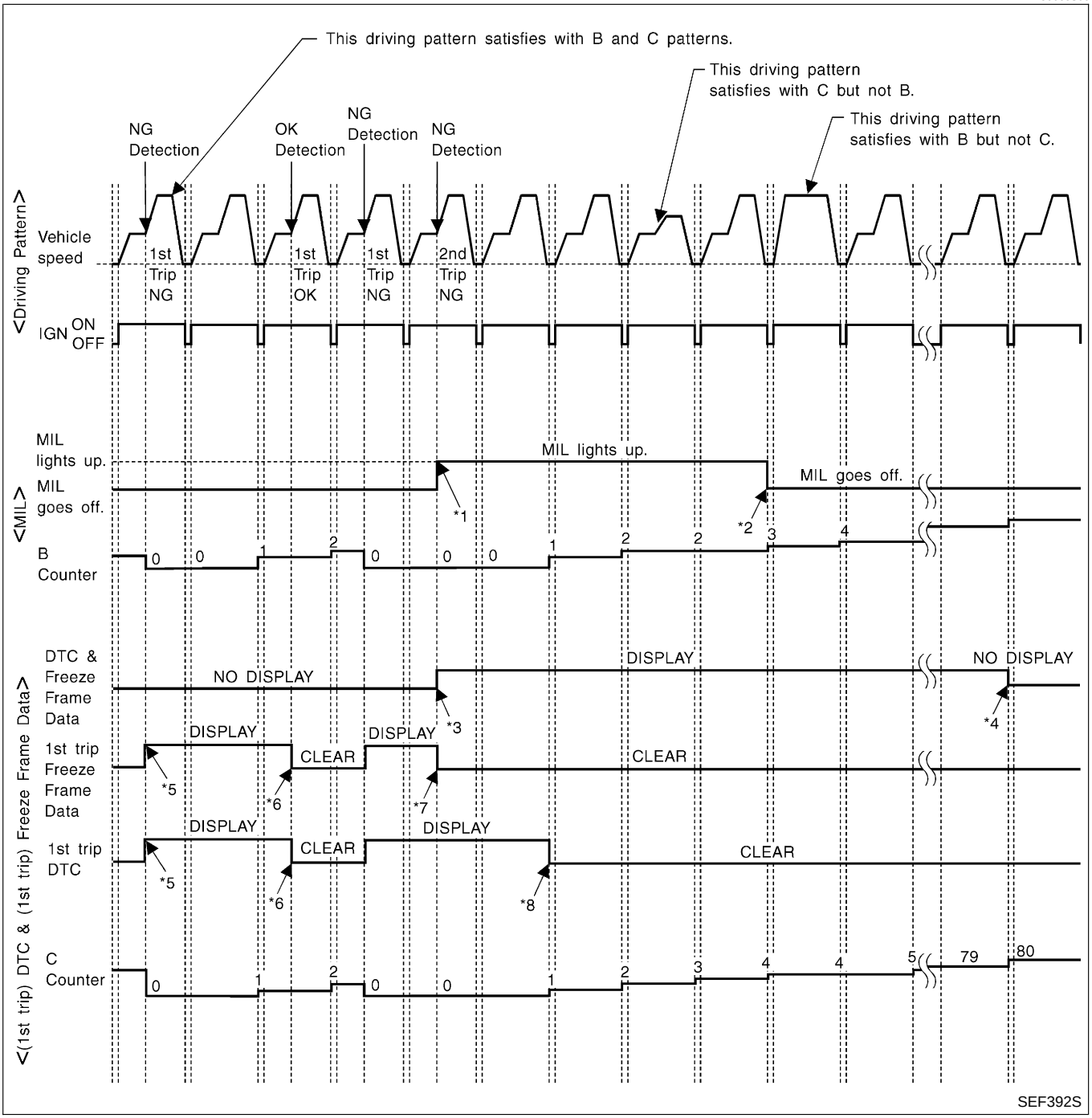

*1: When the same malfunction is detected in two consecutive trips, MIL will light up.

*2: MIL will go off after vehicle is driven 3 times (pattern B) without any malfunctions.

*3: When the same malfunction is detected in two consecutive trips, the DTC and the freeze frame data will be stored in ECM.

*4: The DTC and the freeze frame data will not be displayed any longer after vehicle is driven 80 times (pattern C) without the same malfunction.
(The DTC and the freeze frame data still remain in ECM.)

*5: When a malfunction is detected for the first time, the 1st trip DTC and the 1st trip freeze frame data will be stored in ECM.

*6: The 1st trip DTC and the 1st trip freeze frame data will be cleared at the moment OK is detected.

*7: When the same malfunction is detected in the 2nd trip, the 1st trip freeze frame data will be cleared.

*8: 1st trip DTC will be cleared when vehicle is driven once (pattern C) without the same malfunction after DTC is stored in ECM.

EXPLANATION FOR DRIVING PATTERNS FOR "MISFIRE <EXHAUST QUALITY DETERIORATION>", "FUEL INJECTION SYSTEM"

NEEC0033S04

Driving Pattern B

NEEC0033S0401

Driving pattern B means the vehicle operation as follows:
All components and systems should be monitored at least once by the OBD system.

- The B counter will be cleared when the malfunction is detected once regardless of the driving pattern.
- The B counter will be counted up when driving pattern B is satisfied without any malfunction.
- The MIL will go off when the B counter reaches 3. (*2 in "OBD SYSTEM OPERATION CHART")

Driving Pattern C

NEEC0033S0402

Driving pattern C means the vehicle operation as follows:

1) The following conditions should be satisfied at the same time:
   Engine speed: (Engine speed in the freeze frame data) ±375 rpm
   Calculated load value: (Calculated load value in the freeze frame data) × (1±0.1) [%]
   Engine coolant temperature (T) condition:

- When the freeze frame data shows lower than 70°C (158°F), "T" should be lower than 70°C (158°F).
- When the freeze frame data shows higher than or equal to 70°C (158°F), "T" should be higher than or equal to 70°C (158°F).

Example:
If the stored freeze frame data is as follows:
Engine speed: 850 rpm, Calculated load value: 30%, Engine coolant temperature: 80°C (176°F)
To be satisfied with driving pattern C, the vehicle should run under the following conditions:
Engine speed: 475 - 1,225 rpm, Calculated load value: 27 - 33%, Engine coolant temperature: more than 70°C (158°F)

- The C counter will be cleared when the malfunction is detected regardless of (1).
- The C counter will be counted up when (1) is satisfied without the same malfunction.
- The DTC will not be displayed after C counter reaches 80.
- The 1st trip DTC will be cleared when C counter is counted once without the same malfunction after DTC is stored in ECM.

RELATIONSHIP BETWEEN MIL, DTC, 1ST TRIP DTC AND DRIVING PATTERNS EXCEPT FOR "MISFIRE <EXHAUST QUALITY DETERIORATION>", "FUEL INJECTION SYSTEM"

NEEC0033S05

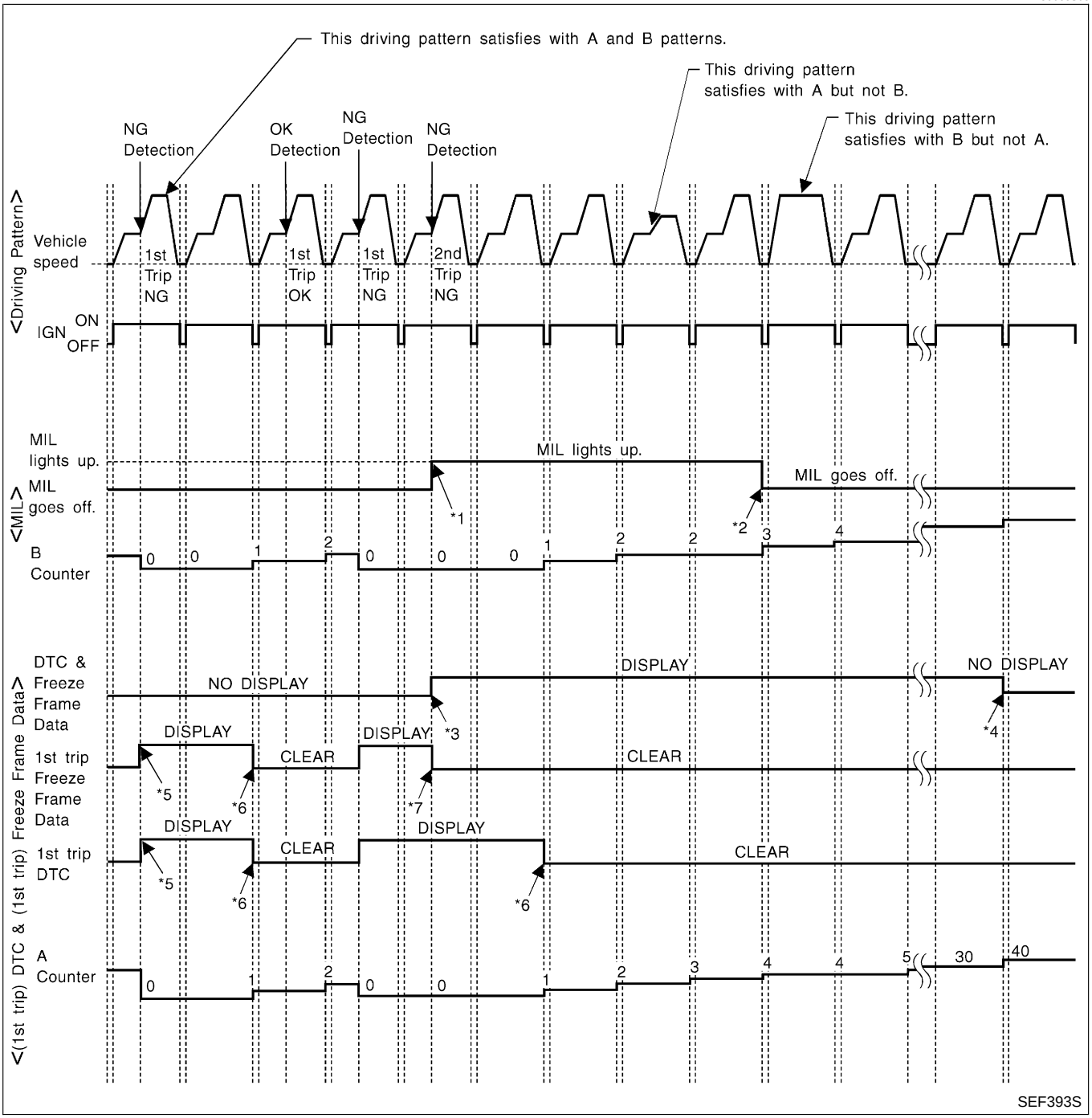

*1: When the same malfunction is detected in two consecutive trips, MIL will light up.

*2: MIL will go off after vehicle is driven 3 times (pattern B) without any malfunctions.

*3: When the same malfunction is detected in two consecutive trips, the DTC and the freeze frame data will be stored in ECM.

*4: The DTC and the freeze frame data will not be displayed any longer after vehicle is driven 40 times (pattern A) without the same malfunction.
(The DTC and the freeze frame data still remain in ECM.)

*5: When a malfunction is detected for the first time, the 1st trip DTC and the 1st trip freeze frame data will be stored in ECM.

*6: 1st trip DTC will be cleared after vehicle is driven once (pattern B) without the same malfunction.

*7: When the same malfunction is detected in the 2nd trip, the 1st trip freeze frame data will be cleared.

EXPLANATION FOR DRIVING PATTERNS EXCEPT FOR "MISFIRE <EXHAUST QUALITY DETERIORATION>", "FUEL INJECTION SYSTEM"

NEEC0033S06

Driving Pattern A

NEEC0033S0601

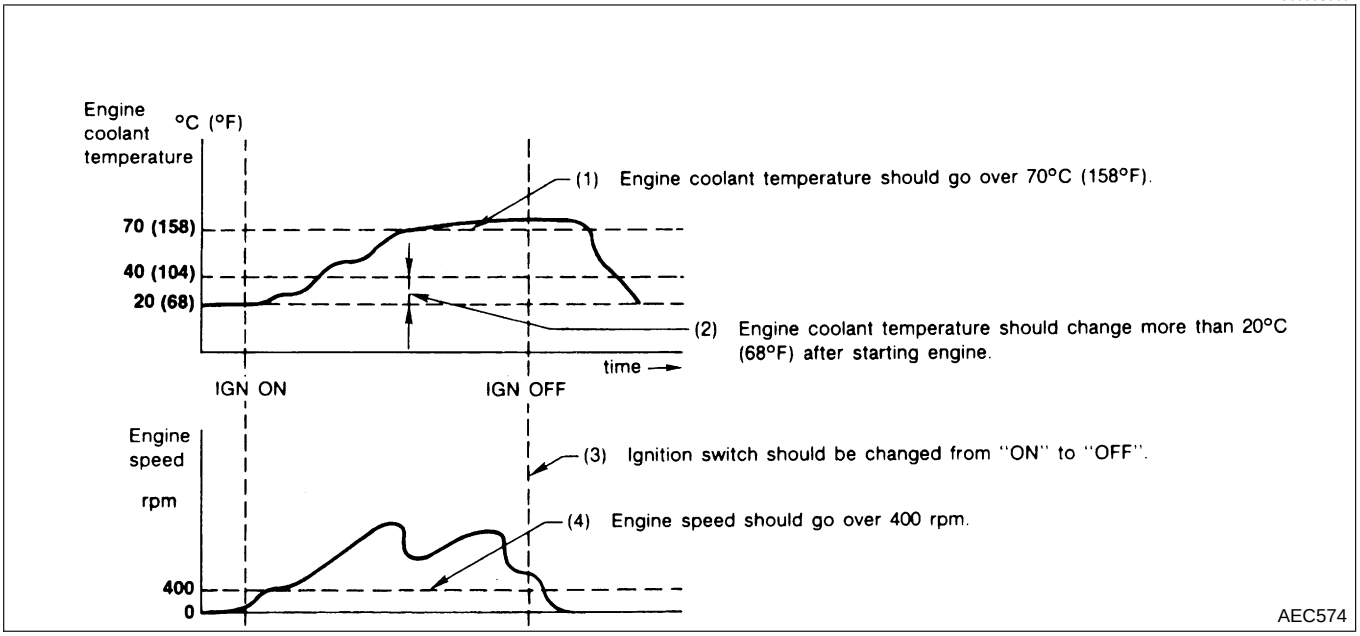

- The A counter will be cleared when the malfunction is detected regardless of (1) - (4).
- The A counter will be counted up when (1) - (4) are satisfied without the same malfunction.
- The DTC will not be displayed after the A counter reaches 40.

Driving Pattern B

NEEC0033S0602

Driving pattern B means the vehicle operation as follows:
All components and systems should be monitored at least once by the OBD system.

- The B counter will be cleared when the malfunction is detected once regardless of the driving pattern.
- The B counter will be counted up when driving pattern B is satisfied without any malfunctions.
- The MIL will go off when the B counter reaches 3 (*2 in "OBD SYSTEM OPERATION CHART").

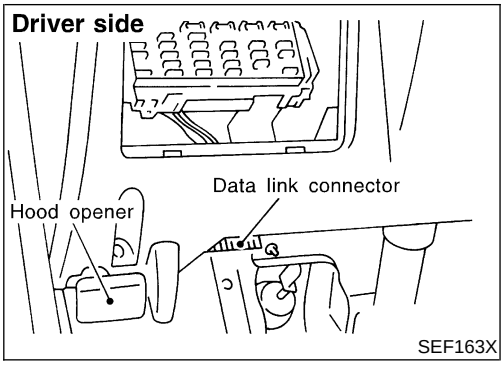

SEF163X

CONSULT-II

=NEEC0034

CONSULT-II INSPECTION PROCEDURE

NEEC0034S01

1. Turn ignition switch OFF.
2. Connect “CONSULT-II” to data link connector which is located behind the fuse box cover.

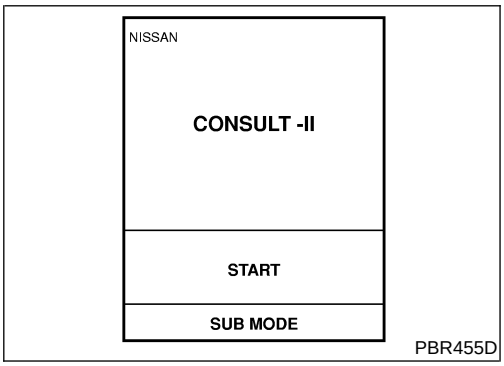

PBR455D

3. Turn ignition switch ON.
4. Touch “START”.

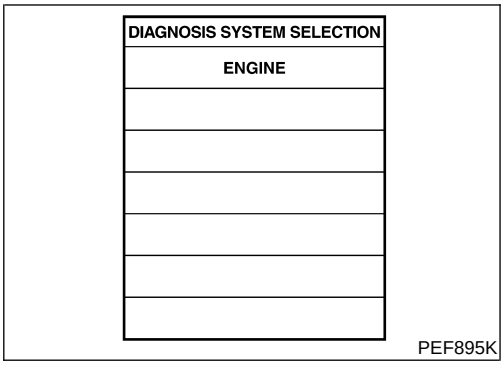

PEF895K

5. Touch “ENGINE”.

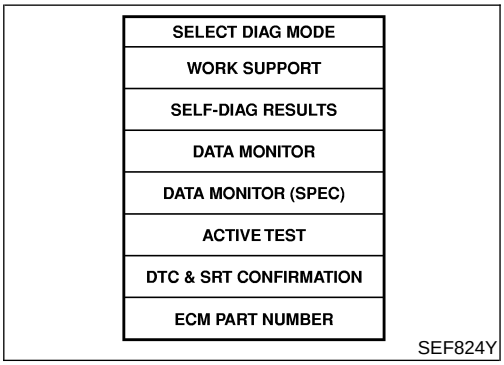

SEF824Y

6. Perform each diagnostic test mode according to each service procedure.

For further information, see the CONSULT-II Operation Manual.

ENGINE CONTROL COMPONENT PARTS/CONTROL SYSTEMS APPLICATION

NEEC0034S02

Item			DIAGNOSTIC TEST MODE							
			WORK SUPPORT	SELF-DIAGNOSTIC RESULTS		DATA MONITOR	DATA MONITOR (SPEC)	ACTIVE TEST	DTC & SRT CONFIRMATION	
				DTC*1	FREEZE FRAME DATA*2				SRT STATUS	DTC WORK SUPPORT
ENGINE CONTROL COMPONENT PARTS	INPUT	Camshaft position sensor		X	X	X	X			
		Mass air flow sensor		X		X	X			
		Engine coolant temperature sensor		X	X	X	X	X		
		Heated oxygen sensor 1 (front)		X		X	X		X	X
		Heated oxygen sensor 2 (rear)		X		X	X		X	X
		Vehicle speed sensor		X	X	X	X			
		Throttle position sensor	X	X		X	X			
		Fuel tank temperature sensor		X		X	X	X		
		EVAP control system pressure sensor		X		X	X			
		Absolute pressure sensor		X	X	X	X			
		EGR temperature sensor		X		X	X			
		Intake air temperature sensor		X		X	X			
		Crankshaft position sensor (OBD)		X						
		Knock sensor		X						
		Fuel level sensor		X		X	X			
		Ignition switch (start signal)				X				
		Closed throttle position switch		X		X				
		Closed throttle position switch (throttle position sensor signal)				X				
		Air conditioner switch				X				
		Park/Neutral position (PNP) switch		X		X				
		Power steering oil pressure switch				X				
		Air conditioner pressure switch				X				
		Battery voltage				X				
		Ambient air temperature switch				X	X			

Item			DIAGNOSTIC TEST MODE							
			WORK SUPPORT	SELF-DIAGNOSTIC RESULTS		DATA MONITOR	DATA MONITOR (SPEC)	ACTIVE TEST	DTC & SRT CONFIRMATION	
				DTC*1	FREEZE FRAME DATA*2				SRT STATUS	DTC WORK SUPPORT
ENGINE CONTROL COMPONENT PARTS	OUTPUT	Injectors				X	X	X		
		Power transistor (Ignition timing)	X	X (Ignition signal)		X	X	X		
		IACV-AAC valve	X	X		X	X	X		
		EVAP canister purge volume control solenoid valve		X		X	X	X		X
		Air conditioner relay				X	X			
		Fuel pump relay	X			X	X	X		
		EGRC-solenoid valve		X		X	X	X		
		Heated oxygen sensor 1 heater (front)		X		X	X		X	
		Heated oxygen sensor 2 heater (rear)		X		X	X		X	
		Torque converter clutch solenoid valve		X		X	X			X
		EVAP canister vent control valve		X		X	X	X		
		Vacuum cut valve bypass valve		X		X	X	X		X
		Calculated load value			X	X	X			

X: Applicable

*1: This item includes 1st trip DTCs.

*2: This mode includes 1st trip freeze frame data or freeze frame data. The items appear on CONSULT-II screen in freeze frame data mode only if a 1st trip DTC or DTC is detected. For details, refer to EC-74.

FUNCTION

NEEC0034S03

Diagnostic test mode	Function
Work support	This mode enables a technician to adjust some devices faster and more accurately by following the indications on the CONSULT-II unit.
Self-diagnostic results	Self-diagnostic results such as 1st trip DTC, DTCs and 1st trip freeze frame data or freeze frame data can be read and erased quickly. *1
Data monitor	Input/Output data in the ECM can be read.
Data monitor (SPEC)	Input/Output of the specification for the basic fuel schedule, AFM, A/F, feedback control valve and the other data monitor items can be read.
Active test	Diagnostic Test Mode in which CONSULT-II drives some actuators apart from the ECMs and also shifts some parameters in a specified range.
DTC confirmation	The status of system monitoring tests and the self-diagnosis status/result can be confirmed.
ECM part number	ECM part numbers can be read.

*1 The following emission-related diagnostic information is cleared when the ECM memory is erased.

1) Diagnostic trouble codes

CONSULT-II (Cont'd)

2) 1st trip diagnostic trouble codes
3) Freeze frame data
4) 1st trip freeze frame data
5) System readiness test (SRT) codes
6) Test values
7) Others

WORK SUPPORT MODE

NEEC0034S04

WORK ITEM	CONDITION	USAGE
TP SW/TP SEN IDLE POSI ADJ	● FOLLOW THE BASIC INSPECTION IN THE SERVICE MANUAL	When adjusting the idle throttle position
IGNITION TIMING ADJ	● IGNITION TIMING FEEDBACK CONTROL WILL BE HELD BY TOUCHING "START". AFTER DOING SO, ADJUST IGNITION TIMING WITH A TIMING LIGHT BY TURNING THE CRANKSHAFT POSITION SENSOR.	When adjusting initial ignition timing
FUEL PRESSURE RELEASE	● FUEL PUMP WILL STOP BY TOUCHING "START" DURING IDLING. CRANK A FEW TIMES AFTER ENGINE STALLS.	When releasing fuel pressure from fuel line
SELF-LEARNING CONT	● THE COEFFICIENT OF SELF-LEARNING CONTROL MIXTURE RATIO RETURNS TO THE ORIGINAL COEFFICIENT.	When releasing fuel pressure from fuel line
EVAP SYSTEM CLOSE	OPEN THE VACUUM CUT VALVE BYPASS VALVE AND CLOSE THE EVAP CANISTER VENT CONTROL VALVE IN ORDER TO MAKE EVAP SYSTEM CLOSE UNDER THE FOLLOWING CONDITIONS. ● BATTERY VOLTAGE IS SUFFICIENT. ● IGN SW "ON" ● ENGINE NOT RUNNING ● AMBIENT TEMPERATURE IS ABOVE 0°C (32°F). ● NO VACUUM AND NO HIGH PRESSURE IN EVAP SYSTEM ● TANK FUEL TEMP. IS MORE THAN 0°C (32°F). ● WITHIN 10 MINUTES AFTER STARTING "EVAP SYSTEM CLOSE" WHEN TRYING TO EXECUTE "EVAP SYSTEM CLOSE" UNDER THE CONDITIONS ABOVE, CONSULT-II WILL DISCONTINUE AND DISPLAY INSTRUCTIONS. **NOTE:** **WHEN STARTING ENGINE, CONSULT-II MAY DISPLAY "BATTERY VOLTAGE IS LOW. CHARGE BATTERY", EVEN WHEN USING A CHARGED BATTERY.**	When detecting EVAP vapor leak point of EVAP system
TARGET IDLE RPM ADJ*	● IDLE CONDITION	When setting target idle speed

*: This function is not necessary in the usual service procedure.

SELF DIAGNOSTIC MODE

NEEC0034S05

DTC and 1st Trip DTC

NEEC0034S0501

Regarding items of "DTC and 1st trip DTC", refer to "TROUBLE DIAGNOSIS — INDEX", EC-19.

Freeze Frame Data and 1st Trip Freeze Frame Data

NEEC0034S0502

Freeze frame data item*	Description
DIAG TROUBLE CODE [PXXXX]	● Engine Control component part/control system has a trouble code, it is displayed as "PXXXX". [Refer to "Alphabetical & P No. Index for DTC" (EC-19).]

Freeze frame data item*	Description
FUEL SYS-B1	● "Fuel injection system status" at the moment a malfunction is detected is displayed. ● One mode in the following is displayed. "MODE 2": Open loop due to detected system malfunction "MODE 3": Open loop due to driving conditions (power enrichment, deceleration enrichment) "MODE 4": Closed loop - using oxygen sensor(s) as feedback for fuel control "MODE 5": Open loop - has not yet satisfied condition to go to closed loop
CAL/LD VALUE [%]	● The calculated load value at the moment a malfunction is detected is displayed.
COOLANT TEMP [°C] or [°F]	● The engine coolant temperature at the moment a malfunction is detected is displayed.
S-FUEL TRIM-B1 [%]	● "Short-term fuel trim" at the moment a malfunction is detected is displayed. ● The short-term fuel trim indicates dynamic or instantaneous feedback compensation to the base fuel schedule.
L-FUEL TRIM-B1 [%]	● "Long-term fuel trim" at the moment a malfunction is detected is displayed. ● The long-term fuel trim indicates much more gradual feedback compensation to the base fuel schedule than short-term fuel trim.
ENGINE SPEED [rpm]	● The engine speed at the moment a malfunction is detected is displayed.
VEHICLE SPEED [km/h] or [mph]	● The vehicle speed at the moment a malfunction is detected is displayed.
ABSOL TH-P/S [%]	● The throttle valve opening angle at the moment a malfunction is detected is displayed.
B/FUEL SCHDL [msec]	● The base fuel schedule at the moment a malfunction is detected is displayed.
INT/A TEMP SE [°C] or [°F]	● The intake air temperature at the moment a malfunction is detected is displayed.

*: The items are the same as those of 1st trip freeze frame data.

DATA MONITOR MODE

NEEC0034S06

Monitored item [Unit]	ECM input signals	Main signals	Description	Remarks
ENG SPEED [rpm]	○	○	● Indicates the engine speed computed from the REF signal (180° signal) of the camshaft position sensor.	● Accuracy becomes poor if engine speed drops below the idle rpm. ● If the signal is interrupted while the engine is running, an abnormal value may be indicated.
MAS A/F SE-B1 [V]	○	○	● The signal voltage of the mass air flow sensor is displayed.	● When the engine is stopped, a certain value is indicated.
B/FUEL SCHDL [msec]		○	● "Base fuel schedule" indicates the fuel injection pulse width programmed into ECM, prior to any learned on board correction.	
A/F ALPHA-B1 [%]		○	● Indicates the mean value of the air-fuel ratio feedback correction factor per cycle.	● When the engine is stopped, a certain value is indicated. ● This data also includes the data for the air-fuel ratio learning control.
COOLAN TEMP/S [°C] or [°F]	○	○	● The engine coolant temperature (determined by the signal voltage of the engine coolant temperature sensor) is displayed.	● When the engine coolant temperature sensor is open or short-circuited, ECM enters fail-safe mode. The engine coolant temperature determined by the ECM is displayed.

CONSULT-II (Cont'd)

Monitored item [Unit]	ECM input signals	Main signals	Description	Remarks
HO2S1 (B1) [V]	○	○	• The signal voltage of the heated oxygen sensor 1 (front) is displayed.	
HO2S2 (B1) [V]	○	○	• The signal voltage of the heated oxygen sensor 2 (rear) is displayed.	
HO2S1 MNTR (B1) [RICH/LEAN]	○		• Display of heated oxygen sensor 1 (front) signal during air-fuel ratio feedback control: RICH ... means the mixture became "rich", and control is being affected toward a leaner mixture. LEAN ... means the mixture became "lean", and control is being affected toward a rich mixture.	• After turning ON the ignition switch, "RICH" is displayed until air-fuel mixture ratio feedback control begins. • When the air-fuel ratio feedback is clamped, the value just before the clamping is displayed continuously.
HO2S2 MNTR (B1) [RICH/LEAN]	○		• Display of heated oxygen sensor 2 (rear) signal: RICH ... means the amount of oxygen after three way catalyst is relatively small. LEAN ... means the amount of oxygen after three way catalyst is relatively large.	• When the engine is stopped, a certain value is indicated.
VHCL SPEED SE [km/h] or [mph]	○	○	• The vehicle speed computed from the vehicle speed sensor signal is displayed.	
BATTERY VOLT [V]	○	○	• The power supply voltage of ECM is displayed.	
THRTL POS SEN [V]	○	○	• The throttle position sensor signal voltage is displayed.	
FUEL T/TMP SE [°C] or [°F]	○		• The fuel temperature judged from the fuel tank temperature sensor signal voltage is displayed.	
INT/A TEMP SE [°C] or [°F]	○	○	• The intake air temperature determined by the signal voltage of the intake air temperature sensor is indicated.	
EGR TEMP SEN [V]	○	○	• The signal voltage of the EGR temperature sensor is displayed.	
EVAP SYS PRES [V]	○		• The signal voltage of EVAP control system pressure sensor is displayed.	
ABSOL PRES/SE [V]	○		• The signal voltage of the absolute pressure sensor is displayed.	
FUEL LEVEL SE [V]	○		• The signal voltage of the fuel level sensor is displayed.	
START SIGNAL [ON/OFF]	○	○	• Indicates [ON/OFF] condition from the starter signal.	• After starting the engine, [OFF] is displayed regardless of the starter signal.
CLSD THL POS [ON/OFF]	○	○	• Indicates idle position [ON/OFF] computed by ECM according to the throttle position sensor signal.	
CLSD THL/P SW [ON/OFF]	○		• Indicates mechanical contact [ON/OFF] condition of the closed throttle position switch.	

Monitored item [Unit]	ECM input signals	Main signals	Description	Remarks
AIR COND SIG [ON/OFF]	○	○	• Indicates [ON/OFF] condition of the air conditioner switch as determined by the air conditioning signal.	
P/N POSI SW [ON/OFF]	○	○	• Indicates [ON/OFF] condition from the PNP switch signal.	
PW/ST SIGNAL [ON/OFF]	○	○	• Indicates [ON/OFF] condition of the power steering oil pressure switch determined by the power steering oil pressure switch signal.	
IGNITION SW [ON/OFF]	○		• Indicates [ON/OFF] condition from ignition switch.	
INJ PULSE-B1 [msec]		○	• Indicates the actual fuel injection pulse width compensated by ECM according to the input signals.	• When the engine is stopped, a certain computed value is indicated.
IGN TIMING [BTDC]		○	• Indicates the ignition timing computed by ECM according to the input signals.	
CAL/LD VALUE [%]			• "Calculated load value" indicates the value of the current airflow divided by peak airflow.	
ABSOL TH·P/S [%]			• "Absolute throttle position sensor" indicates the throttle opening computed by ECM according to the signal voltage of the throttle position sensor.	
MASS AIRFLOW [g·m/s]			• Indicates the mass airflow computed by ECM according to the signal voltage of the mass air flow sensor.	
IACV-AAC/V [%]		○	• Indicates the IACV-AAC valve control value computed by ECM according to the input signals.	
PURG VOL C/V [%]			• Indicates the EVAP canister purge volume control value computed by the ECM according to the input signals. • The opening becomes larger as the value increases.	
AIR COND RLY [ON/OFF]		○	• Indicates the air conditioner relay control condition determined by ECM according to the input signals.	
EGRC SOL/V [ON/OFF] (FLOW/CUT)		○	• Indicates the control condition of the EGRC-solenoid valve determined by ECM according to the input signals. • ON ... EGR valve is operational OFF ... EGR valve operation is cut-off	
TCC SOL/V			• Indicates [ON/OFF] condition of torque converter clutch solenoid valve determined by ECM according to the input signals.	
FUEL PUMP RLY [ON/OFF]		○	• Indicates the fuel pump relay control condition determined by ECM according to the input signals.	

CONSULT-II (Cont'd)

Monitored item [Unit]	ECM input signals	Main signals	Description	Remarks
VC/V BYPASS/V [ON/OFF]			• The control condition of the vacuum cut valve bypass valve (determined by ECM according to the input signal) is indicated. • ON ... Open OFF ... Closed	
VENT CONT/V [ON/OFF]			• The control condition of the EVAP canister vent control valve (determined by ECM according to the input signal) is indicated. • ON ... Closed OFF ... Open	
HO2S1 HTR (B1) [ON/OFF]			• Indicates [ON/OFF] condition of front heated oxygen sensor heater determined by ECM according to the input signals.	
HO2S2 HTR (B1) [ON/OFF]			• Indicates [ON/OFF] condition of rear heated oxygen sensor heater determined by ECM according to the input signals.	
VOLTAGE [V]			• Voltage measured by the voltage probe.	
Frequency [msec] or [Hz] or [%]			• Pulse width, frequency or duty cycle measured by the pulse probe.	• Only "#" is displayed if item is unable to be measured. • Figures with "#"s are temporary ones. They are the same figures as an actual piece of data which was just previously measured.

NOTE:
Any monitored item that does not match the vehicle being diagnosed is deleted from the display automatically.

DATA MONITOR (SPEC) MODE

NEEC0034S12

Monitored item [Unit]	ECM input signals	Main signals	Description	Remarks
ENG SPEED [rpm]	○	○	• Indicates the engine speed computed from the REF signal (180° signal) of the camshaft position sensor (PHASE).	
MAS A/F SE-B1 [V]	○	○	• The signal voltage of the mass air flow sensor specification is displayed.	• When engine is running specification range is indicated.
B/FUEL SCHDL [msec]			• "Base fuel schedule" indicates the fuel injection pulse width programmed into ECM, prior to any learned on board correction.	• When engine is running specification range is indicated.
A/F ALPHA-B1 [%]		○	• The mean value of the air-fuel ratio feedback correction factor per cycle is indicated.	• When engine is running specification range is indicated. • This data also includes the data for the air-fuel ratio learning control.

NOTE:
Any monitored item that does not match the vehicle being diagnosed is deleted from the display automatically.

ACTIVE TEST MODE

NEEC0034S07

TEST ITEM	CONDITION	JUDGEMENT	CHECK ITEM (REMEDY)
FUEL INJECTION	• Engine: Return to the original trouble condition • Change the amount of fuel injection using CONSULT-II.	If trouble symptom disappears, see CHECK ITEM.	• Harness and connector • Fuel injectors • Front heated oxygen sensor
IGNITION TIMING	• Engine: Return to the original trouble condition • Timing light: Set • Retard the ignition timing using CONSULT-II.	If trouble symptom disappears, see CHECK ITEM.	• Adjust initial ignition timing
IACV-AAC/V OPENING	• Engine: After warming up, idle the engine. • Change the IACV-AAC valve opening percent using CONSULT-II.	Engine speed changes according to the opening percent.	• Harness and connector • IACV-AAC valve
POWER BALANCE	• Engine: After warming up, idle the engine. • Air conditioner switch "OFF" • Shift lever "N" • Cut off each injector signal one at a time using CONSULT-II.	Engine runs rough or dies.	• Harness and connector • Compression • Injectors • Power transistor • Spark plugs • Ignition coils
ENG COOLANT TEMP	• Engine: Return to the original trouble condition • Change the engine coolant temperature indication using CONSULT-II.	If trouble symptom disappears, see CHECK ITEM.	• Harness and connector • Engine coolant temperature sensor • Fuel injectors
FUEL PUMP RELAY	• Ignition switch: ON (Engine stopped) • Turn the fuel pump relay "ON" and "OFF" using CONSULT-II and listen to operating sound.	Fuel pump relay makes the operating sound.	• Harness and connector • Fuel pump relay
EGRC SOLENOID VALVE	• Ignition switch: ON • Turn EGRC-solenoid valve "ON" and "OFF" using CONSULT-II and listen to operating sound.	EGRC-solenoid valve makes an operating sound.	• Harness and connector • EGRC-solenoid valve
PURG VOL CONT/V	• Engine: After warming up, run engine at 1,500 rpm. • Change the EVAP canister purge volume control valve opening step using CONSULT-II.	Engine speed changes according to the opening step.	• Harness and connector • EVAP canister purge volume control valve
FUEL T/TEMP SEN	• Change the fuel tank temperature using CONSULT-II.		
VENT CONTROL/V	• Ignition switch: ON (Engine stopped) • Turn solenoid valve "ON" and "OFF" using CONSULT-II and listen to operating sound.	Solenoid valve makes an operating sound.	• Harness and connector • Solenoid valve
VC/V BYPASS/V	• Ignition switch: ON (Engine stopped) • Turn solenoid valve "ON" and "OFF" using CONSULT-II and listen to operating sound.	Solenoid valve makes an operating sound.	• Harness and connector • Solenoid valve

DTC & SRT CONFIRMATION MODE

=NEEC0034S08

SRT STATUS Mode

NEEC0034S0801

For details, refer to "SYSTEM READINESS TEST (SRT) CODE", EC-75.

SRT Work Support Mode

NEEC0034S0803

This mode enables a technician to drive a vehicle to set the SRT while monitoring the SRT status.

DTC Work Support Mode

NEEC0034S0802

TEST MODE	TEST ITEM	CONDITION	REFERENCE PAGE
EVAPORATIVE SYSTEM	EVAP SML LEAK P0440	Refer to corresponding trouble diagnosis for DTC.	EC-358
	EVAP SML LEAK P1440		EC-481
	EVAP V/S LEAK P1441		EC-483
	PURG VOL CN/V P1444		EC-498
	PURGE FLOW P1447		EC-516
	VC CUT/V BP/V P1491		EC-544
	PURG CN/V & S/V P1493		EC-375
HEATED OXYGEN SENSOR 1 (FRONT)	HO2S1 (B1) P0130		EC-198
	HO2S1 (B1) P0131		EC-206
	HO2S1 (B1) P0132		EC-213
	HO2S1 (B1) P0133		EC-220
HEATED OXYGEN SENSOR 2 (REAR)	HO2S2 (B1) P0137		EC-243
	HO2S2 (B1) P0138		EC-253
	HO2S2 (B1) P0139		EC-263
EGR SYSTEM	EGR SYSTEM P0400		EC-333
	EGRC-BPT/VLV P0402		EC-345
	EGR SYSTEM P1402		EC-472

REAL TIME DIAGNOSIS IN DATA MONITOR MODE (RECORDING VEHICLE DATA)

NEEC0034S10

CONSULT-II has two kinds of triggers and they can be selected by touching "SETTING" in "DATA MONITOR" mode.

1) "AUTO TRIG" (Automatic trigger):

- The malfunction will be identified on the CONSULT-II screen in real time.
  In other words, DTC/1st trip DTC and malfunction item will be displayed if the malfunction is detected by ECM.
  At the moment a malfunction is detected by ECM, "MONITOR" in "DATA MONITOR" screen is changed to "Recording Data ... xx%" as shown at left, and the data after the malfunction detection is recorded. Then the percentage reached 100%, "REAL-TIME DIAG" screen is displayed. If "STOP" is touched on the screen during "Recording Data ... xx%", "REAL-TIME DIAG" screen is also displayed.
  The recording time after the malfunction detection and the recording speed can be changed by "TRIGGER POINT" and "RECORDING Speed". Refer to CONSULT-II OPERATION MANUAL.

2) "MANU TRIG" (Manual trigger):

- DTC/1st trip DTC and malfunction item will not be displayed automatically on CONSULT-II screen even though a malfunction is detected by ECM.
  DATA MONITOR can be performed continuously even though a malfunction is detected.

Use these triggers as follows:

1) "AUTO TRIG"

- While trying to detect the DTC/1st trip DTC by performing the "DIAGNOSTIC TROUBLE CODE CONFIRMATION PROCEDURE", be sure to select to "DATA MONITOR (AUTO TRIG)" mode. You can confirm the malfunction at the moment it is detected.
- While narrowing down the possible causes, CONSULT-II should be set in "DATA MONITOR (AUTO TRIG)" mode, especially in case the incident is intermittent.
  When you are inspecting the circuit by gently shaking (or twisting) the suspicious connectors, components and harness in the "DIAGNOSTIC TROUBLE CODE CONFIRMATION PROCEDURE", the moment a malfunction is found the DTC/1st trip DTC will be displayed. (Refer to "Incident Simulation Tests" in "HOW TO PERFORM EFFICIENT DIAGNOSIS FOR AN ELECTRICAL INCIDENT", ***GI-24***.

2) "MANU TRIG"

- If the malfunction is displayed as soon as "DATA MONITOR" is selected, reset CONSULT-II to "MANU TRIG". By selecting "MANU TRIG" you can monitor and store the data. The data can be utilized for further diagnosis, such as a comparison with the value for the normal operating condition.

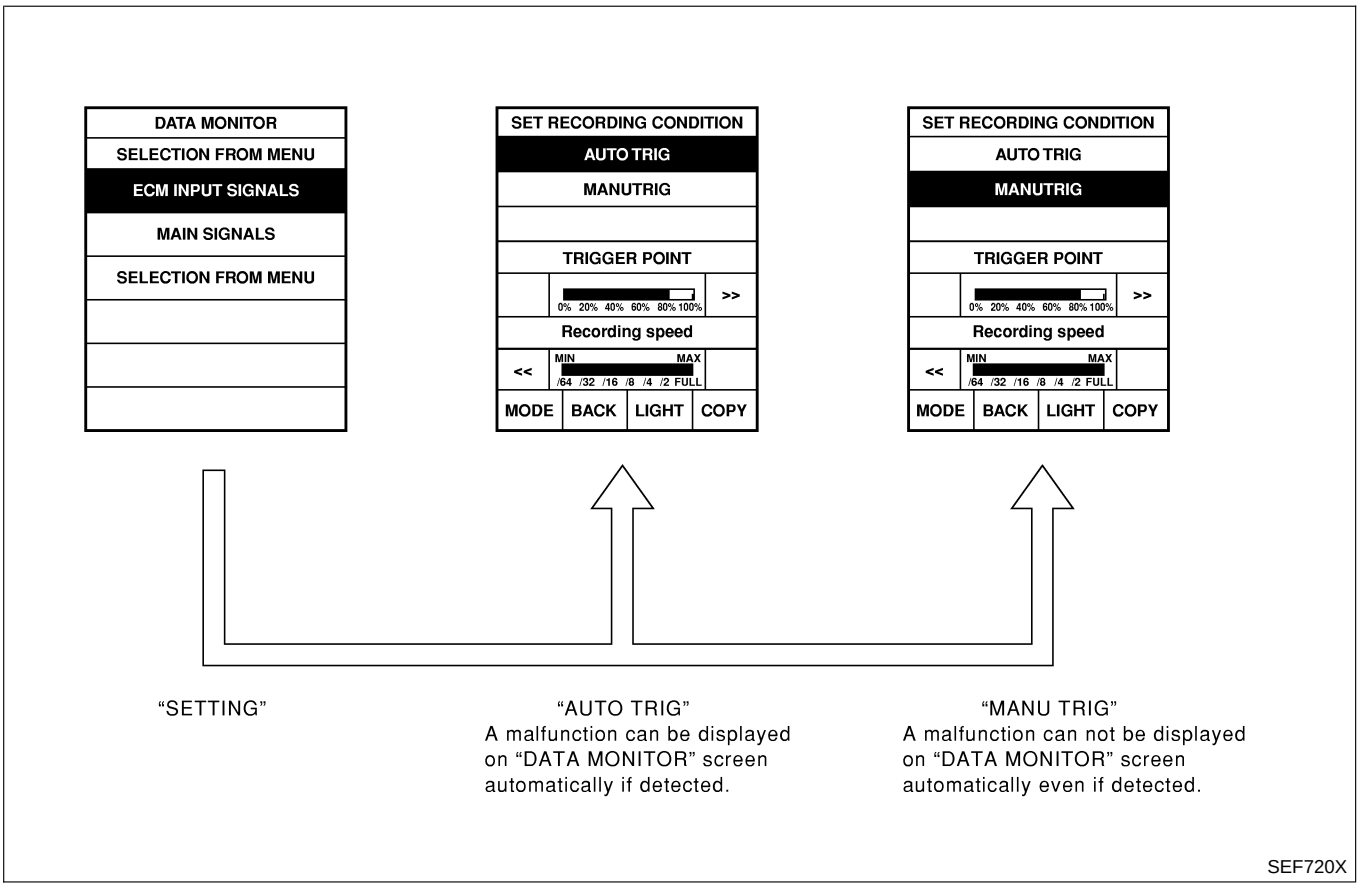

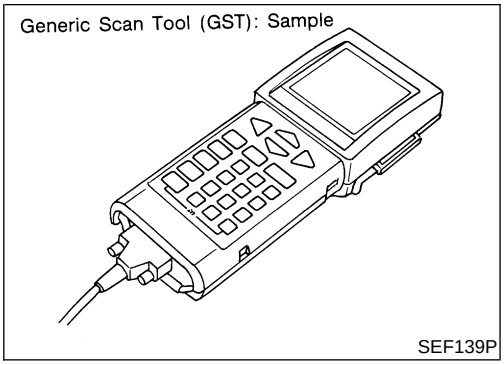

Generic Scan Tool (GST)

NEEC0035

DESCRIPTION

NEEC0035S01

Generic Scan Tool (OBDII scan tool) complying with SAE J1978 has 8 different functions explained on the next page.
ISO9141 is used as the protocol.
The name “GST” or “Generic Scan Tool” is used in this service manual.

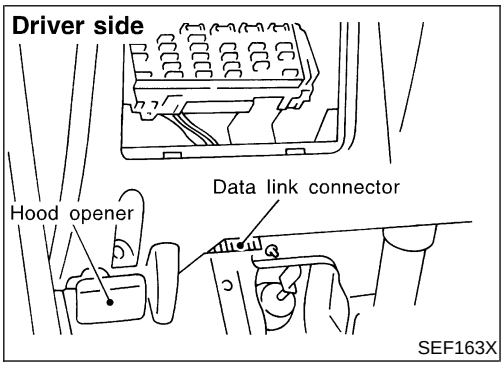

GST INSPECTION PROCEDURE

NEEC0035S02

1. Turn ignition switch OFF.
2. Connect “GST” to data link connector for GST which is located under LH dash panel near the fuse box cover.

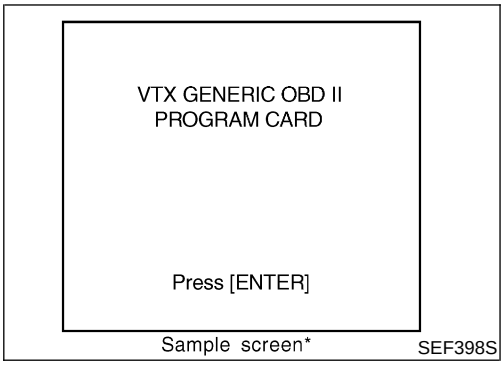

3. Turn ignition switch ON.
4. Enter the program according to instruction on the screen or in the operation manual.

(*: Regarding GST screens in this section, sample screens are shown.)

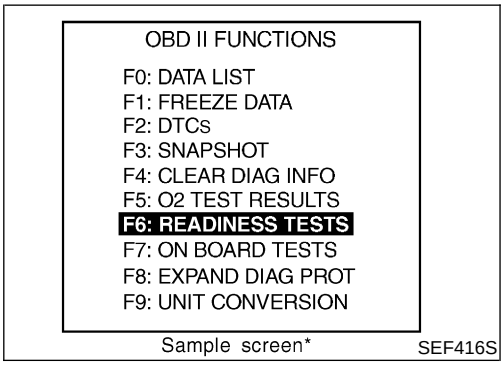

5. Perform each diagnostic mode according to each service procedure.

For further information, see the GST Operation Manual of the tool maker.

FUNCTION

NEEC0035S03

Diagnostic test mode		Function
MODE 1	READINESS TESTS	This mode gains access to current emission-related data values, including analog inputs and outputs, digital inputs and outputs, and system status information.
MODE 2	(FREEZE DATA)	This mode gains access to emission-related data value which were stored by ECM during the freeze frame. [For details, refer to "Freeze Frame Data" (EC-96).]
MODE 3	DTCs	This mode gains access to emission-related power train trouble codes which were stored by ECM.
MODE 4	CLEAR DIAG INFO	This mode can clear all emission-related diagnostic information. This includes: ● Clear number of diagnostic trouble codes (MODE 1) ● Clear diagnostic trouble codes (MODE 3) ● Clear trouble code for freeze frame data (MODE 1) ● Clear freeze frame data (MODE 2) ● Reset status of system monitoring test (MODE 1) ● Clear on board monitoring test results (MODE 6 and 7)
MODE 6	(ON BOARD TESTS)	This mode accesses the results of on board diagnostic monitoring tests of specific components/systems that are not continuously monitored.
MODE 7	(ON BOARD TESTS)	This mode enables the off board test drive to obtain test results for emission-related powertrain components/systems that are continuously monitored during normal driving conditions.
MODE 8	—	—
MODE 9	(CALIBRATION ID)	This mode is to enable the off-board to request vehicle specific information such as Vehicle Identification Number (VIN) and Calibration ID.

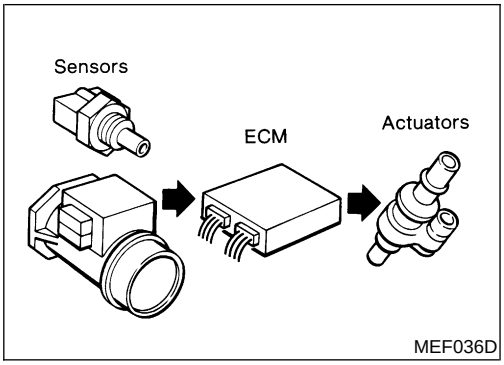

MEF036D

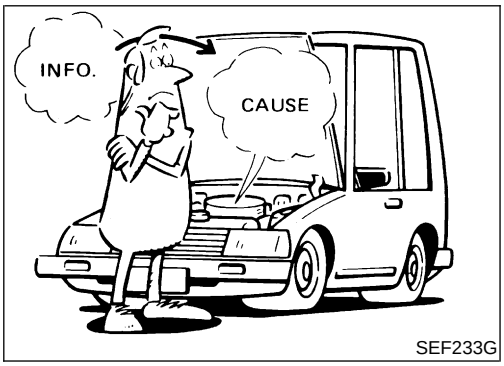

SEF233G

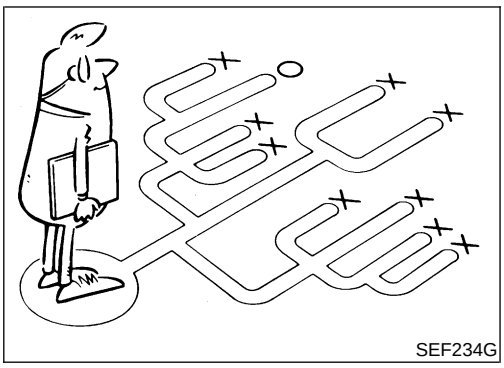
SEF234G

KEY POINTS

WHAT ..... Vehicle & engine model
WHEN ..... Date, Frequencies
WHERE..... Road conditions
HOW ..... Operating conditions, Weather conditions, Symptoms

SEF907L

Introduction

NEEC0036

The engine has an ECM to control major systems such as fuel control, ignition control, idle air control system, etc. The ECM accepts input signals from sensors and instantly drives actuators. It is essential that both input and output signals are proper and stable. At the same time, it is important that there are no problems such as vacuum leaks, fouled spark plugs, or other problems with the engine.

It is much more difficult to diagnose a problem that occurs intermittently rather than continuously. Most intermittent problems are caused by poor electric connections or improper wiring. In this case, careful checking of suspected circuits may help prevent the replacement of good parts.

A visual check only may not find the cause of the problems. A road test with CONSULT-II (or GST) or a circuit tester connected should be performed. Follow the “Work Flow” on EC-108.

Before undertaking actual checks, take a few minutes to talk with a customer who approaches with a driveability complaint. The customer can supply good information about such problems, especially intermittent ones. Find out what symptoms are present and under what conditions they occur. A “Diagnostic Worksheet” like the example on next page should be used.

Start your diagnosis by looking for “conventional” problems first. This will help troubleshoot driveability problems on an electronically controlled engine vehicle.

DIAGNOSTIC WORKSHEET

NEEC0036S01

There are many operating conditions that lead to the malfunction of engine components. A good grasp of such conditions can make trouble-shooting faster and more accurate.

In general, each customer feels differently about a problem. It is important to fully understand the symptoms or conditions for a customer complaint.

Utilize a diagnostic worksheet like the one on the next page in order to organize all the information for troubleshooting.

Some conditions may cause the malfunction indicator lamp to come on steady or blink and DTC to be detected. Examples:

- Vehicle ran out of fuel, which caused the engine to misfire.
- Fuel filler cap was left off or incorrectly screwed on, allowing fuel to evaporate into the atmosphere [for the models with EVAP (SMALL LEAK) diagnosis].

Worksheet Sample

NEEC0036S0101

Customer name MR/MS		Model & Year	VIN
Engine #		Trans.	Mileage
Incident Date		Manuf. Date	In Service Date
Fuel and fuel filler cap		☐ Vehicle ran out of fuel causing misfire ☐ Fuel filler cap was left off or incorrectly screwed on.	
Symptoms	☐ Startability	☐ Inpossible to start ☐ No combustion ☐ Partial combustion ☐ Partial combustion affected by throttle position ☐ Partial combustion NOT affected by throttle position ☐ Possible but hard to start ☐ Others [ ]	
	☐ Idling	☐ No fast idle ☐ Unstable ☐ High idle ☐ Low idle ☐ Others [ ]	
	☐ Driveability	☐ Stumble ☐ Surge ☐ Knock ☐ Lack of power ☐ Intake backfire ☐ Exhaust backfire ☐ Others [ ]	
	☐ Engine stall	☐ At the time of start ☐ While idling ☐ While accelerating ☐ While decelerating ☐ Just after stopping ☐ While loading	
Incident occurrence		☐ Just after delivery ☐ Recently ☐ In the morning ☐ At night ☐ In the daytime	
Frequency		☐ All the time ☐ Under certain conditions ☐ Sometimes	
Weather conditions		☐ Not affected	
	Weather	☐ Fine ☐ Raining ☐ Snowing ☐ Others [ ]	
	Temperature	☐ Hot ☐ Warm ☐ Cool ☐ Cold ☐ Humid ˚F	
Engine conditions		☐ Cold ☐ During warm-up ☐ After warm-up Engine speed 0 2,000 4,000 6,000 8,000 rpm	
Road conditions		☐ In town ☐ In suburbs ☐ Highway ☐ Off road (up/down)	
Driving conditions		☐ Not affected ☐ At starting ☐ While idling ☐ At racing ☐ While accelerating ☐ While cruising ☐ While decelerating ☐ While turning (RH/LH) Vehicle speed 0 10 20 30 40 50 60 MPH	
Malfunction indicator lamp		☐ Turned on ☐ Not turned on	

MTBL0017

Work Flow

NEEC0037

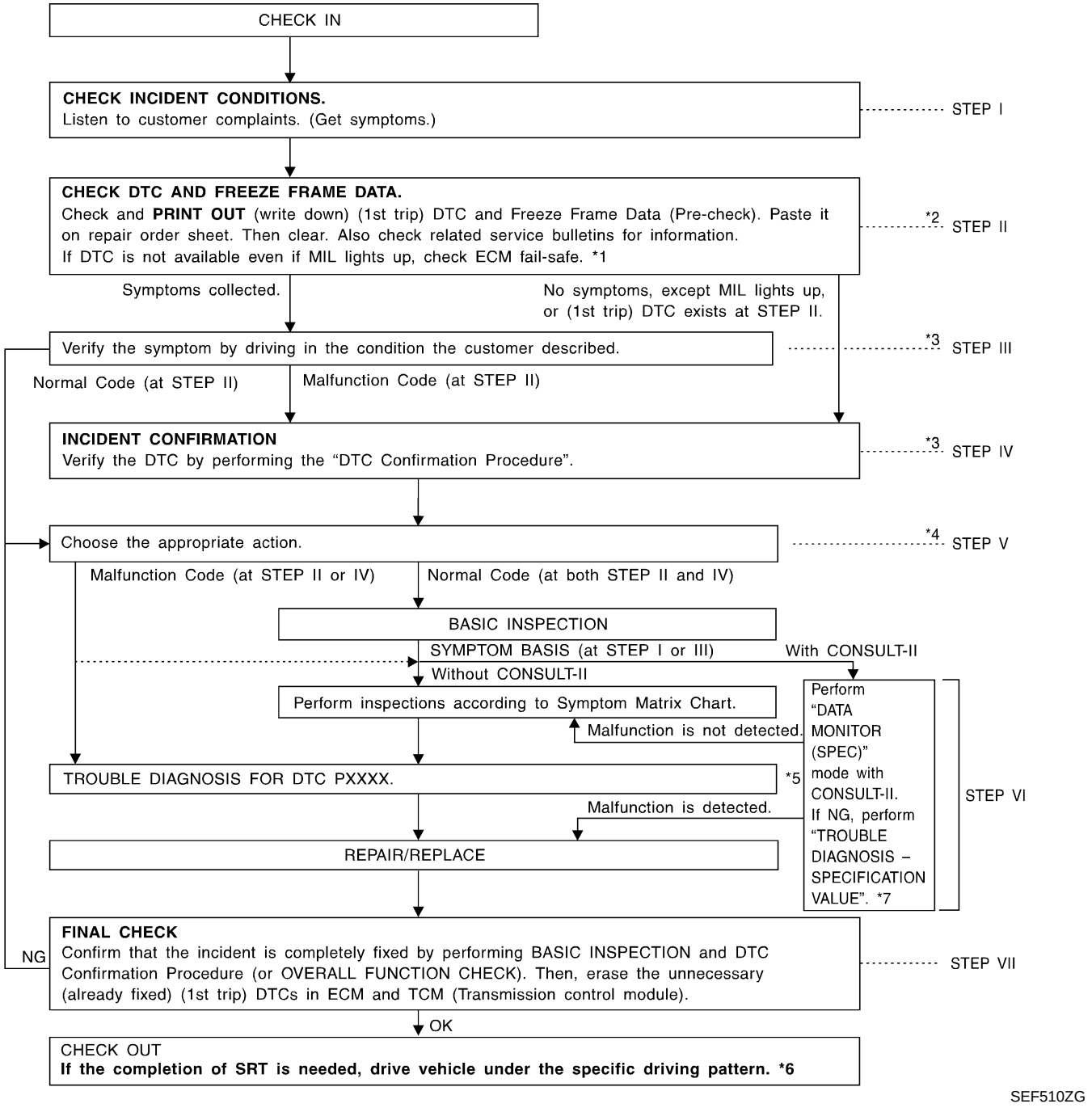

SEF510ZG

*1: If the incident cannot be duplicated, refer to “TROUBLE DIAGNOSIS FOR INTERMITTENT INCIDENT”, EC-148.

*2: If the on board diagnostic system cannot be performed, check main power supply and ground circuit. Refer to “TROUBLE DIAGNOSIS FOR POWER SUPPLY”, EC-149.

*3: If time data of “SELF-DIAG RESULTS” is other than “0” or “1t” refer to “TROUBLE DIAGNOSIS FOR INTERMITTENT”, EC-148.

*4: If the malfunctioning part cannot be found, refer to “TROUBLE DIAGNOSIS FOR INTERMITTENT INCIDENT”, EC-148.

*5: EC-125

*6: EC-80

*7: EC-144

DESCRIPTION FOR WORK FLOW

NEEC0037S01

STEP	DESCRIPTION
STEP I	Get detailed information about the conditions and the environment when the incident/symptom occurred using the "DIAGNOSTIC WORK SHEET", EC-107.
STEP II	Before confirming the concern, check and write down (print out using CONSULT-II or Generic Scan Tool) the (1st trip) Diagnostic Trouble Code (DTC) and the (1st trip) freeze frame data, then erase the code and the data. (Refer to EC-85.) The (1st trip) DTC and the (1st trip) freeze frame data can be used when duplicating the incident at STEP III & IV. Study the relationship between the cause, specified by (1st trip) DTC, and the symptom described by the customer. (The "Symptom Matrix Chart" will be useful. See EC-126.) Also check related service bulletins for information.
STEP III	Try to confirm the symptom and under what conditions the incident occurs. The "DIAGNOSTIC WORK SHEET" and the freeze frame data are useful to verify the incident. Connect CONSULT-II to the vehicle in DATA MONITOR (AUTO TRIG) mode and check real time diagnosis results. If the incident cannot be verified, perform INCIDENT SIMULATION TESTS. (Refer to GI section.) If the malfunction code is detected, skip STEP IV and perform STEP V.
STEP IV	Try to detect the (1st trip) Diagnostic Trouble Code by driving in (or performing) the "DIAGNOSTIC TROUBLE CODE CONFIRMATION PROCEDURE". Check and read the (1st trip) DTC and (1st trip) freeze frame data by using CONSULT-II or Generic Scan Tool. During the (1st trip) DTC verification, be sure to connect CONSULT-II to the vehicle in DATA MONITOR (AUTO TRIG) mode and check real time diagnosis results. If the incident cannot be verified, perform INCIDENT SIMULATION TESTS. (Refer to GI section.) In case the "DIAGNOSTIC TROUBLE CODE CONFIRMATION PROCEDURE" is not available, perform the "OVERALL FUNCTION CHECK" instead. The (1st trip) DTC cannot be displayed by this check, however, this simplified "check" is an effective alternative. The "NG" result of the "OVERALL FUNCTION CHECK" is the same as the (1st trip) DTC detection.
STEP V	Take the appropriate action based on the results of STEP I through IV. If the malfunction code is indicated, proceed to TROUBLE DIAGNOSIS FOR DTC PXXXX. If the normal code is indicated, proceed to the BASIC INSPECTION. (Refer to EC-110.) If CONSULT-II is available, perform "DATA MONITOR (SPEC)" mode with CONSULT-II and proceed to the "TROUBLE DIAGNOSIS — SPECIFICATION VALUE", EC-144. (If malfunction is detected, proceed to "REPAIR/REPLACE".) Then perform inspections according to the Symptom Matrix Chart. (Refer to EC-126.)
STEP VI	Identify where to begin diagnosis based on the relationship study between symptom and possible causes. Inspect the system for mechanical binding, loose connectors or wiring damage using (tracing) "Harness Layouts". Gently shake the related connectors, components or wiring harness with CONSULT-II set in "DATA MONITOR (AUTO TRIG)" mode. Check the voltage of the related ECM terminals or monitor the output data from the related sensors with CONSULT-II. Refer to EC-135. The "DIAGNOSTIC PROCEDURE" in EC section contains a description based on open circuit inspection. A short circuit inspection is also required for the circuit check in the DIAGNOSTIC PROCEDURE. For details, refer to "HOW TO PERFORM EFFICIENT DIAGNOSIS FOR AN ELECTRICAL INCIDENT", "Circuit Inspection", ***GI-26***. Repair or replace the malfunction parts.
STEP VII	Once you have repaired the circuit or replaced a component, you need to run the engine in the same conditions and circumstances which resulted in the customer's initial complaint. Perform the "DIAGNOSTIC TROUBLE CODE CONFIRMATION PROCEDURE" and confirm the normal code [Diagnostic trouble code No. P0000 or 0505] is detected. If the incident is still detected in the final check, perform STEP VI by using a different method from the previous one. Before returning the vehicle to the customer, be sure to erase the unnecessary (already fixed) (1st trip) DTC in ECM. (Refer to EC-85.)

Basic Inspection

NEEC0038

Precaution:
Perform Basic Inspection without electrical or mechanical loads applied;

- **Headlamp switch is OFF,**
- **Air conditioner switch is OFF,**
- **Rear window defogger switch is OFF,**
- **Steering wheel is in the straight-ahead position, etc.**

1	INSPECTION START

1. Check service records for any recent repairs that may indicate a related problem, or the current need for scheduled maintenance.
2. Open engine hood and check the following:

- Harness connectors for improper connections
- Vacuum hoses for splits, kinks, or improper connections
- Wiring for improper connections, pinches, or cuts

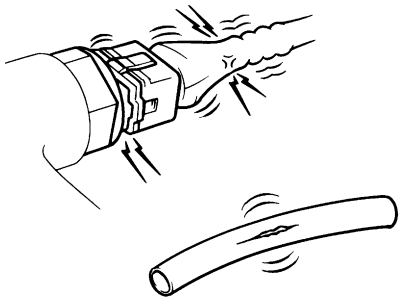

SEF142I

With CONSULT-II	▶	GO TO 2.
With GST	▶	GO TO 4.
No tools	▶	GO TO 5.

2	CONNECT CONSULT-II TO THE VEHICLE

Connect “CONSULT-II” to the data link connector and select “ENGINE” from the menu. Refer to EC-93.

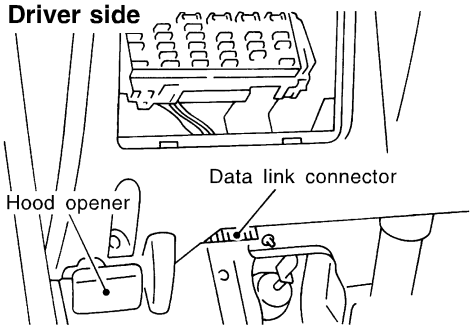

SEF163X

	▶	GO TO 3.

3	CHECK FI CAM FUNCTION

With CONSULT-II

1. Adjust accelerator wire. Refer to "Adjust Accelerator Wire", ***FE-3***.
2. Warm up engine to 75°C (167°F).
3. Stop engine and wait at least 5 seconds, then turn ignition switch ON.
4. Select "COOLAN TEMP/S" in "DATA MONITOR" mode with CONSULT-II.
5. When the engine coolant temp is 75 to 85°C (167 to 185°F), confirm the clearance is less than 0.05 mm (0.0020 in), between stopper and throttle drum as shown in the figure.

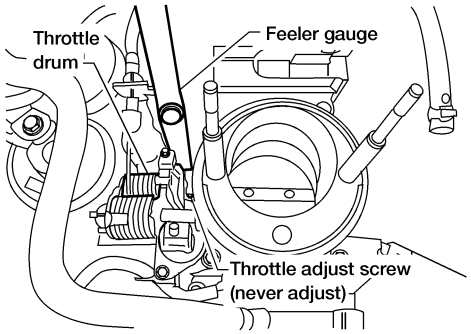

AEC871A

OK or NG

OK	▶	GO TO 6.
NG	▶	1. Replace throttle body assembly. Refer to "OUTER COMPONENT PARTS", ***EM-12***. 2. GO TO 6.

4	CHECK FI CAM FUNCTION

With GST

1. Adjust accelerator wire. Refer to "Adjust Accelerator Wire", ***FE-3***.
2. Warm up engine to 75°C (167°F).
3. Stop engine and wait at least 10 seconds, then turn ignition switch ON.
4. Select "MODE 1" with GST.
5. When the engine coolant temp is 75 to 85°C (167 to 185°F), confirm the clearance is less than 0.05 mm (0.0020 in), between stopper and throttle drum as shown in the figure.

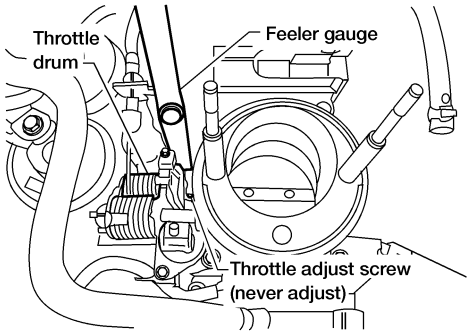

AEC871A

OK or NG

OK (With CONSULT-II)	▶	GO TO 6.
OK (Without CONSULT-II)	▶	GO TO 14.
NG	▶	1. Replace throttle body assembly. Refer to "OUTER COMPONENT PARTS", ***EM-12***. 2. With CONSULT-II: GO TO 6. Without CONSULT-II: GO TO 14.

5	CHECK FI CAM FUNCTION

No Tools

1. Adjust accelerator wire. Refer to "Adjust Accelerator Wire", ***FE-3***.
2. Disconnect engine coolant temperature sensor harness connector and check resistance as shown in the figure.

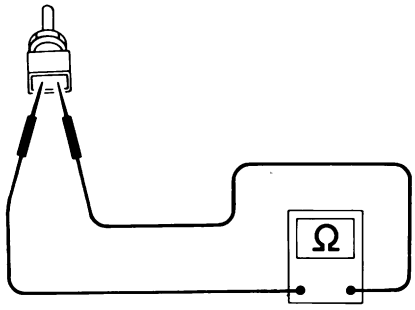

SEF536H

3. Warm up engine until the resistance of coolant temperature sensor is 0.26 to 0.39 kΩ.
4. Turn ignition switch OFF.
5. When engine coolant temperature is 75 to 85°C (167 to 185°F), with the voltage between 1.10 to 1.36V, make sure that the clearance is less than 0.05 mm (0.0020 in), between stopper and throttle adjusting screw as shown in figure.

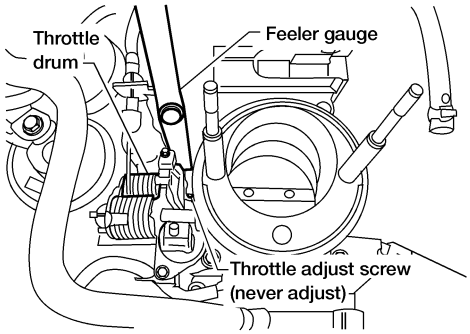

AEC871A

OK or NG

OK	▶	GO TO 14.
NG	▶	1. Replace throttle body assembly. Refer to "OUTER COMPONENT PARTS", ***EM-12***. 2. GO TO 14.

6	CHECK IGNITION TIMING

With CONSULT-II

1. Warm up engine to normal operating temperature.
2. Select "IGNITION TIMING ADJ" in "WORK SUPPORT" mode.
3. Touch "START".

IGNITION TIMING ADJ
IGNITION TIMING FEEDBACK CONTROL WILL BE HELD BY TOUCHING START. AFTER DOING SO, ADJUST IGNITION TIMING WITH A TIMING LIGHT BY TURNING THE CAMSHAFT POSITION SENSOR.

PEF546N

4. Check ignition timing at idle using timing light.

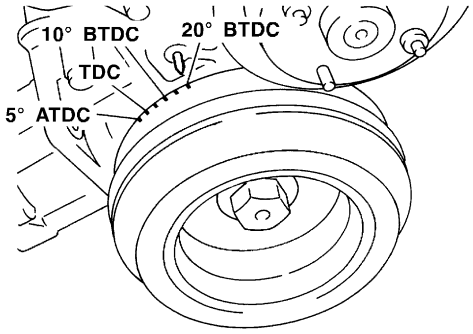

SEF320V

Ignition timing:
20°±2° BTDC (in "P" or "N" position)

OK or NG

OK	▶	GO TO 7.
NG	▶	1. Adjust ignition timing by turning distributor. Refer to "Idle Speed/Ignition Timing/Idle Mixture Ratio Adjustment", EC-59. 2. GO TO 7.

7	CHECK BASE IDLE SPEED

With CONSULT-II

1. Select "IGNITION TIMING ADJ" in "WORK SUPPORT" mode and touch "START".

IACV-AAC/V ADJ	
ADJ MONITOR	
ENG SPEED	700 rpm
CONDITION SETTING	
IACV-ACC/V	FIXED
MONITOR	
COOLAN TEMP/S	XXX°C
CLSD THL POS	XXX N

SEF714Z

2. Check idle speed.

750±50 rpm (in "P" or "N" position)

OK or NG

OK	▶	GO TO 8.
NG	▶	1. Adjust base idle speed by turning idle speed adjusting screw. Refer to "Idle Speed/ Ignition Timing/Idle Mixture Ratio Adjustment", EC-59. 2. GO TO 8.

8	CHECK CLOSED THROTTLE POSITION SWITCH IDLE POSITION (CHECK THROTTLE POSITION SENSOR IDLE POSITION)

With CONSULT-II

NOTE:

Always check ignition timing and base idle speed before performing the following.

1. Warm up engine to normal operating temperature.
2. Check FI cam. Refer to procedure 3.
3. Stop engine.
4. Turn ignition switch ON.
5. Select "DATA MONITOR" mode with CONSULT-II.
6. Select "CLSD THL/P SW" from the menu.
7. Read "CLSD THL/P SW" signal under the following conditions.

- Insert a 0.1 mm (0.004 in) and 0.3 mm (0.012 in) feeler gauge alternately between the throttle adjust screw (TAS) and throttle drum as shown in the figure and check the signal.

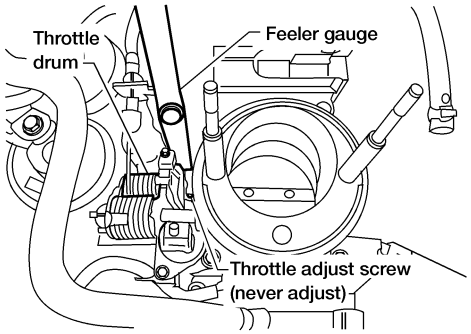

AEC871A

DATA MONITOR	
MONITOR	NO DTC
ENG SPEED	XXX rpm
COOLAN TEMP/S	XXX °C
CLSD THL/P SW	ON

SEF197Y

"CLSD THL/P SW" signal should remain "ON" while inserting 0.1 mm (0.004 in) feeler gauge.
"CLSD THL/P SW" signal should remain "OFF" while inserting 0.3 mm (0.012 in) feeler gauge.

OK or NG

OK	▶	GO TO 12.
NG	▶	GO TO 9.

9	ADJUSTMENT THROTTLE POSITION SENSOR IDLE POSITION-1

With CONSULT-II

NOTE:

- **Never adjust throttle adjust screw (TAS).**
- **Do not touch throttle drum when checking "CLSD THL/P SW" signal. Doing so may cause an incorrect adjustment.**

1. Warm engine up to normal operating temperature.
2. Check FI cam. Refer to procedure 3.
3. Stop engine.
4. Loosen throttle position sensor fixing bolts.
5. Turn ignition switch ON.
6. Select "CLSD THL/P SW" in "DATA MONITOR" mode.
7. Insert a 0.1 mm (0.004 in) feeler gauge between throttle adjust screw and throttle drum as shown in the figure.

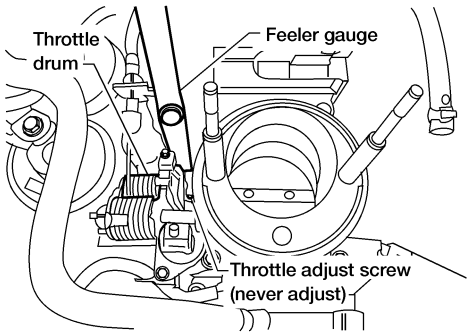

AEC871A

8. Open throttle valve and then close.
9. Check "CLSD THL/P SW" signal.

DATA MONITOR	
MONITOR	NO DTC
ENG SPEED	XXX rpm
COOLAN TEMP/S	XXX °C
CLSD THL/P SW	ON

SEF197Y

"CLSD THL/P SW" signal should remain "OFF" when the throttle valve is closed.
If it is impossible to adjust closed throttle position switch, replace throttle position sensor.

OK or NG

OK	▶	GO TO 11.
NG	▶	GO TO 10.

10	ADJUSTMENT THROTTLE POSITION SENSOR IDLE POSITION-2

With CONSULT-II

Turn throttle position sensor body counterclockwise until "CLSD THL/P SW" signal switches to "OFF".

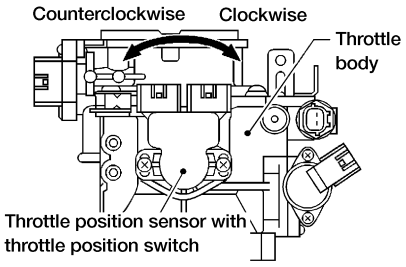

AEC872A

▶	GO TO 11.

11	ADJUSTMENT THROTTLE POSITION SENSOR IDLE POSITION-3

With CONSULT-II

1. Temporarily tighten sensor body fixing bolts as follows.
- **Gradually move the sensor body clockwise and stop it when "CLSD THL/P SW" signal switches from "OFF" to "ON" when tightening sensor body fixing bolts.**

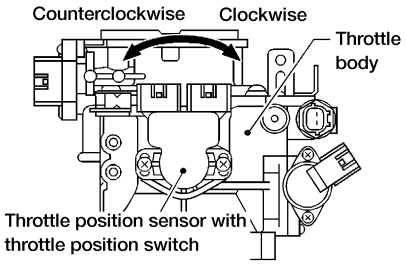

AEC872A

2. Make sure two or three times that the signal is "ON" when the throttle valve is closed and "OFF" when it is opened.
3. Remove 0.1 mm (0.004 in) feeler gauge then insert 0.3 mm (0.012 in) feeler gauge.
4. Make sure two or three times that the signal remains "OFF" when the throttle valve is closed.
5. Tighten throttle position sensor.
6. Check "CLSD THL/P SW" signal again.
   The signal remains "OFF" while closing throttle valve.

OK or NG

OK	▶	1. Remove 0.3 mm (0.012 in) feeler gauge. 2. GO TO 12.
NG	▶	GO TO 9.

12	RESET THROTTLE POSITION SENSOR IDLE POSITION MEMORY

With CONSULT-II

NOTE:

Always warm up engine to normal operating temperature. If engine is cool, the throttle position sensor idle position memory will not be reset correctly.

1. Start engine.
2. Warm up engine to normal operating temperature.
3. Select "CLSD THL POS" in "DATA MONITOR" mode manual trigger.
4. Stop engine. (Turn ignition switch OFF.)
5. Turn ignition switch ON and wait at least 5 seconds.

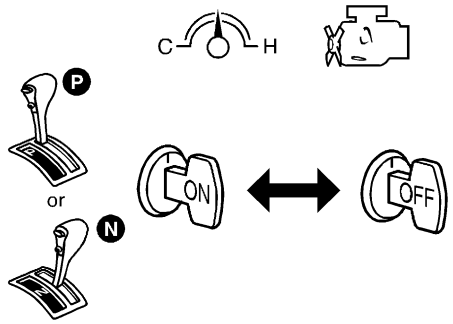

SEF864V

6. Turn ignition switch OFF and wait at least 5 seconds.
7. Repeat steps 5 and 6 until "CLSD THL POS" in "DATA MONITOR" mode with CONSULT-II changes to "ON".

DATA MONITOR	
MONITORING	NO DTC
CLSD THL/P SW	ON

SEF715Z

	▶	GO TO 13.

13	CHECK TARGET IDLE SPEED

With CONSULT-II

1. Start engine and warm it up to normal operating temperature.
2. Select "ENG SPEED" in "DATA MONITOR" mode.
3. Check idle speed.

800±50 rpm (in "P" or "N" position)

OK or NG

OK	▶	**INSPECTION END**
NG	▶	Adjust idle speed. Refer to "Idle Speed/Ignition Timing/Idle Mixture Ratio Adjustment", EC-59. Inspection end after adjust idle speed.

14	CHECK IGNITION TIMING

Without CONSULT-II

1. Warm up engine to normal operating temperature.
2. Stop engine and disconnect throttle position sensor harness connector.

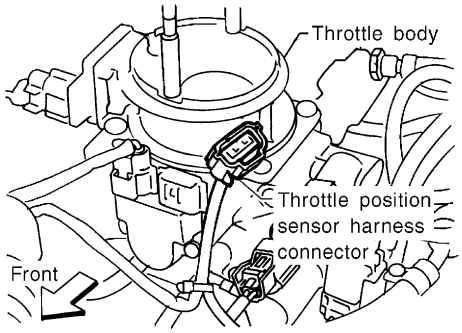

SEF265S

3. Start engine.
4. Rev engine (2,000 to 3,000 rpm) two or three times under no-load and then run engine at idle speed.
5. Check ignition timing at idle using timing light.

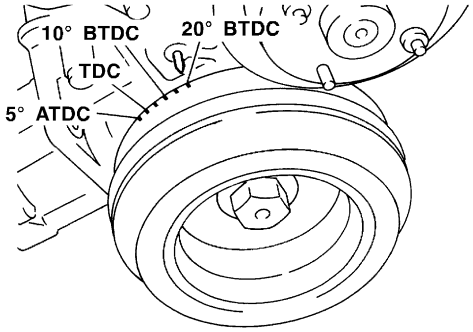

SEF320V

Ignition timing:
20°±2° BTDC (in "P" or "N" position)

OK or NG

OK	▶	GO TO 15.
NG	▶	1. Adjust ignition timing by turning distributor. Refer to "Idle Speed/Ignition Timing/Idle Mixture Ratio Adjustment", EC-59. 2. GO TO 15.

15	CHECK BASE IDLE SPEED

Without CONSULT-II

Make sure that engine speed falls to the following speed.

750±50 rpm (in "P" or "N" position)

OK or NG

OK	▶	GO TO 16.
NG	▶	1. Adjust base idle speed by turning idle speed adjusting screw. Refer to "Idle Speed/Ignition Timing/Idle Mixture Ratio Adjustment", EC-59. 2. GO TO 16.

16	CHECK CLOSED THROTTLE POSITION SWITCH IDLE POSITION (CHECK THROTTLE POSITION SENSOR IDLE POSITION)

Without CONSULT-II

NOTE:

Always check ignition timing and base idle speed before performing the following.

1. Warm up engine to normal operating temperature.
2. Check FI cam. Refer to procedure 5.
3. Stop engine.
4. Disconnect closed throttle position switch harness connector .
5. Connect the tester probe to closed throttle position switch terminals 5 and 6.
6. Check harness continuity under the following conditions.

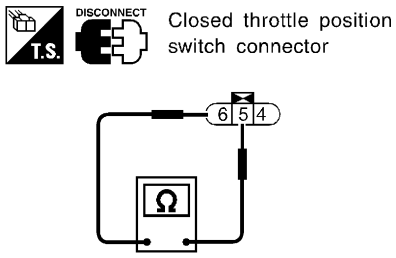

SEF862V

- Insert the 0.1 mm (0.004 in) and 0.3 mm (0.012 in) feeler gauge alternately between the throttle adjust screw (TAS) and throttle drum as shown in the figure.

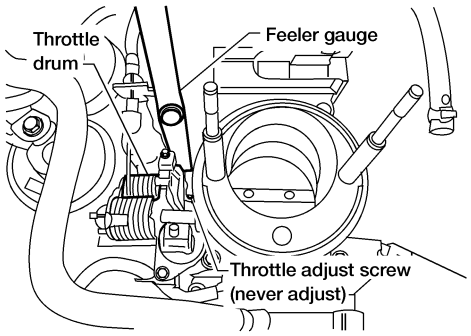

AEC871A

"Continuity should exist" while inserting 0.1 mm (0.004 in) feeler gauge.
"Continuity should not exist" while inserting 0.3 mm (0.012 in) feeler gauge.

OK or NG

OK	▶	GO TO 20.
NG	▶	GO TO 17.

17	ADJUSTMENT THROTTLE POSITION SENSOR IDLE POSITION-1

Without CONSULT-II

NOTE:

- **Never adjust throttle adjust screw (TAS).**
- **Do not touch throttle drum when checking "continuity".**
  Doing so may cause an incorrect adjustment.

1. Warm engine up to normal operating temperature.
2. Check FI cam. Refer to procedure 5.
3. Stop engine.
4. Loosen throttle position sensor fixing bolts.
5. Disconnect closed throttle position sensor harness connector.
6. Insert 0.1 mm (0.004 in) feeler gauge between the throttle adjust screw and throttle drum as shown in the figure.

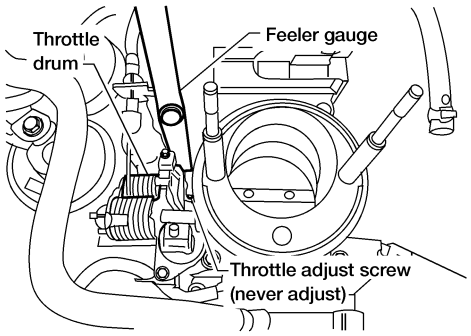

AEC871A

7. Open throttle valve then close.
8. Check continuity between closed throttle position switch terminal 5 and 6.

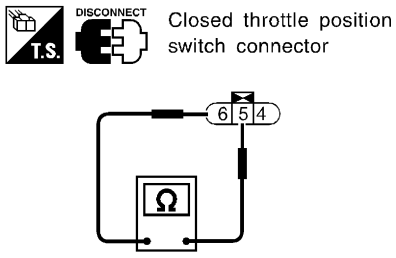

SEF862V

The continuity should not exist while closing the throttle position sensor body.
If it is impossible to adjust closed throttle position switch, replace throttle position sensor.

OK or NG

OK	▶	GO TO 19.
NG	▶	GO TO 18.

18	ADJUSTMENT THROTTLE POSITION SENSOR IDLE POSITION-2

Without CONSULT-II

Turn throttle position sensor body counterclockwise until continuity does not exist.

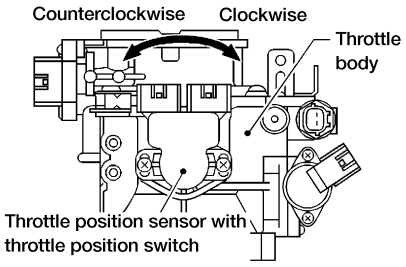

AEC872A

▶	GO TO 19.

19	ADJUSTMENT THROTTLE POSITION SENSOR IDLE POSITION-3

Without CONSULT-II

1. Temporarily tighten sensor body fixing bolts as follows.
- **Gradually move the sensor body clockwise and stop it when the continuity comes to exist, then tighten sensor body fixing bolts.**

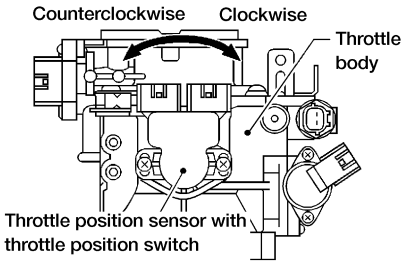

AEC872A

2. Make sure two or three times that the continuity exists when the throttle valve is closed and continuity does not exist when it is opened.
3. Remove 0.1 mm (0.004 in) feeler gauge then insert 0.3 mm (0.012 in) feeler gauge.
4. Make sure two or three times that continuity does not exist when the throttle valve is closed.
5. Tighten throttle position sensor.
6. Check the continuity again.
   Continuity does not exist while closing the throttle valve.

OK or NG

OK	▶	GO TO 20.
NG	▶	GO TO 17.

20	REINSTALLATION

Without CONSULT-II

1. Remove 0.3 mm (0.012 in) feeler gauge.
2. Reconnect throttle position sensor harness connector and closed throttle position switch harness connector.
3. Rev engine (2,000 to 3,000 rpm) two or three times under no-load and then run engine at idle speed.

▶	GO TO 21.

21	RESET THROTTLE POSITION SENSOR IDLE POSITION MEMORY

Without CONSULT-II

NOTE:

Always warm up engine to normal operating temperature. If engine is cool, the throttle position sensor idle position memory will not be reset correctly.

1. Start engine.
2. Warm up engine to normal operating temperature.
3. Stop engine. (Turn ignition switch "OFF".)
4. Turn ignition switch "ON" and wait at least 5 seconds.

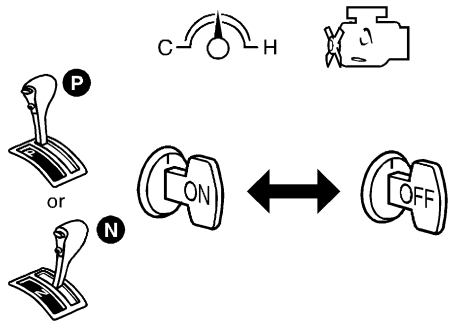

SEF864V

5. Turn ignition switch "OFF" and wait at least 5 seconds.
6. Repeat steps 4 and 5, 20 times.

▶	GO TO 22.

22	CHECK TARGET IDLE SPEED

Without CONSULT-II

1. Start engine and warm it up to normal operating temperature.
2. Check idle speed.

800±50 rpm (in "P" or "N" position)

OK or NG

OK	▶	GO TO 23.
NG	▶	1. Adjust target idle speed. Refer to "Idle Speed/Ignition Timing/Idle Mixture Ratio Adjustment", EC-59. 2. GO TO 23.

23	ERASE UNNECESSARY DTC

After this inspection, unnecessary DTC No. might be displayed.
Erase the stored memory in ECM and TCM.
Refer to "HOW TO ERASE EMISSION-RELATED DIAGNOSTIC INFORMATION", (EC-85) .

▶	**INSPECTION END**

DTC Inspection Priority Chart

NEEC0039

If some DTCs are displayed at the same time, perform inspections one by one based on the following priority chart.

Priority	Detected items (DTC)
1	• P0100 Mass air flow sensor • P0110 Intake air temperature sensor • P0115, P0125 Engine coolant temperature sensor • P0120 Throttle position sensor • P0180 Fuel tank temperature sensor • P0325 Knock sensor • P0340 Camshaft position sensor • P0460, P0461, P0464, P1464 Fuel level sensor • P0500 Vehicle speed sensor • P0605 ECM • P1126 Thermostat function • P1400 EGRC-solenoid valve • P1706 Park/neutral position switch
2	• P0105 Absolute pressure sensor • P0130 - P0134 Heated oxygen sensor 1 (front) • P0135 Heated oxygen sensor 1 heater (front) • P0137 - P0140 Heated oxygen sensor 2 (rear) • P0141 Heated oxygen sensor 2 heater (rear) • P0335, P1336 Crankshaft position sensor (OBD) • P0443, P1444 EVAP canister purge volume control solenoid valve • P0446, P1446, P1448 EVAP canister vent control valve • P0450 EVAP control system pressure sensor • P0510 Closed throttle position switch • P1401 EGR temperature sensor • P1447 EVAP control system purge flow monitoring • P1490, P1491 Vacuum cut valve bypass valve • P1775 Torque converter clutch solenoid valve (CIRCUIT) • P1776 Torque converter clutch solenoid valve
3	• P0172, P0171 Fuel injection system function • P0300 - P0304 Misfire • P0400, P1402 EGR function • P0402 EGRC-BPT valve function • P0420 Three way catalyst function • P0440, P1440 EVAP control system (SMALL LEAK) • P0455 EVAP control system (GROSS LEAK) • P0505 IACV-AAC valve • P1148 Closed loop control • P1441 EVAP control system (VERY SMALL LEAK)

Fail-safe Chart

=NEEC0040

The ECM enters fail-safe mode if any of the following malfunctions is detected due to the open or short circuit. When the ECM enters the fail-safe mode, the MIL illuminates.

DTC No. / CONSULT-II GST	Detected items	Engine operating condition in fail-safe mode	
P0100	Mass air flow sensor circuit	Engine speed will not rise more than 2,400 rpm due to the fuel cut.	
P0110	Intake air temperature sensor	The ECM functions on the assumption that the intake air temperature is 25°C (77°F).	
P0115	Engine coolant temperature sensor circuit	Engine coolant temperature will be determined by ECM based on the time after turning ignition switch to ON or START. CONSULT-II displays the engine coolant temperature decided by ECM.	
		Condition	Engine coolant temperature decided (CONSULT-II display)
		Just as ignition switch is turned to ON or Start	40°C (104°F)
		More than approx. 4 minutes after ignition ON or Start	80°C (176°F)
		Except as shown above	40 - 80°C (104 - 176°F) (Depends on the time)
P0120	Throttle position sensor circuit	Throttle position will be determined based on the injected fuel amount and the engine speed. Therefore, acceleration will be poor.	
		Condition	Driving condition
		When engine is idling	Normal
		When accelerating	Poor acceleration
Unable to access ECM	ECM	**ECM fail-safe activating condition** The computing function of the ECM was judged to be malfunctioning. When the fail-safe system activates (i.e., if the ECM detects a malfunction condition in the CPU of ECM), the MIL on the instrument panel lights to warn the driver. However it is not possible to access ECM and DTC cannot be confirmed. **Engine control with fail-safe** When ECM fail-safe is operating, fuel injection, ignition timing, fuel pump operation and IACV-AAC valve operation are controlled under certain limitations.	
			ECM fail-safe operation
		Engine speed	**Engine speed will not rise more than 3,000 rpm**
		Fuel injection	Simultaneous multiport fuel injection system
		Ignition timing	Ignition timing is fixed at the preset valve
		Fuel pump	Fuel pump relay is “ON” when engine is running and “OFF” when engine stalls
		IACV-AAC valve	Full open
		Replace ECM, if ECM fail-safe condition is confirmed.	

Symptom Matrix Chart

NEEC0041

SYSTEM — ENGINE CONTROL SYSTEM

NEEC0041S01

		SYMPTOM													Reference page
		HARD/NO START/RESTART (EXCP. HA)	ENGINE STALL	HESITATION/SURGING/FLAT SPOT	SPARK KNOCK/DETONATION	LACK OF POWER/POOR ACCELERATION	HIGH IDLE/LOW IDLE	ROUGH IDLE/HUNTING	IDLING VIBRATION	SLOW/NO RETURN TO IDLE	OVERHEATS/WATER TEMPERATURE HIGH	EXCESSIVE FUEL CONSUMPTION	EXCESSIVE OIL CONSUMPTION	BATTERY DEAD (UNDER CHARGE)	
Warranty symptom code		AA	AB	AC	AD	AE	AF	AG	AH	AJ	AK	AL	AM	HA	
Fuel	Fuel pump circuit	1	1	2	3	2		2	2			3		2	EC-597
	Fuel pressure regulator system	3	3	4	4	4	4	4	4	4		4			EC-58
	Injector circuit	1	1	2	3	2		2	2			2			EC-589
	Evaporative emission system	3	3	4	4	4	4	4	4	4		4			EC-40
Air	Positive crankcase ventilation system	3	3	4	4	4	4	4	4	4		4	1		EC-55
	Incorrect idle speed adjustment	3	3				1	1	1	1		1			EC-59
	IACV-AAC valve circuit	1	1	2	3	3	2	2	2	2		2		2	EC-434
	IACV-FICD solenoid valve circuit	2	2	3	3	3	3	3	3	3		3			EC-610
Ignition	Incorrect ignition timing adjustment	3	3	1	1	1		1	1			1			EC-59
	Ignition circuit	1	1	2	2	2		2	2			2			EC-579
EGR	EGRC-solenoid valve circuit		2	2	3	3						3			EC-459
	EGR system	2	1	2	3	3	3	2	2	3		3			EC-333, 345, 472
Main power supply and ground circuit		2	2	3	3	3		3	3		2	3		2	EC-149
Air conditioner circuit		2	2	3	3	3	3	3	3	3		3		2	***HA-26***

1 - 6: The numbers refer to the order of inspection.

(continued on next page)

	SYMPTOM													Reference page
	HARD/NO START/RESTART (EXCP. HA)	ENGINE STALL	HESITATION/SURGING/FLAT SPOT	SPARK KNOCK/DETONATION	LACK OF POWER/POOR ACCELERATION	HIGH IDLE/LOW IDLE	ROUGH IDLE/HUNTING	IDLING VIBRATION	SLOW/NO RETURN TO IDLE	OVERHEATS/WATER TEMPERATURE HIGH	EXCESSIVE FUEL CONSUMPTION	EXCESSIVE OIL CONSUMPTION	BATTERY DEAD (UNDER CHARGE)	
Warranty symptom code	AA	AB	AC	AD	AE	AF	AG	AH	AJ	AK	AL	AM	HA	
Camshaft position sensor circuit	2	2	3	3	3		3	3			3			EC-325
Mass air flow sensor circuit	1	1	2	2	2		2	2			2			EC-156
Heated oxygen sensor 1 (front) circuit		1	2	3	2		2	2			2			EC-198, 206
Engine coolant temperature sensor circuit	1	1	2	3	2	3	2	2	3		2			EC-174, 193
Throttle position sensor circuit		1	2		2	2	2	2	2		2			EC-179
Incorrect throttle position sensor adjustment		3	1		1	1	1	1	1		1			EC-110
Vehicle speed sensor circuit		2	3		3						3			EC-429
Knock sensor circuit			2								3			EC-315
ECM	2	2	3	3	3	3	3	3	3	3	3			EC-447, 125
Start signal circuit	2													EC-594
PNP switch circuit			3		3		3	3			3			EC-555
Power steering oil pressure switch circuit		2					3	3						EC-606

1 - 6: The numbers refer to the order of inspection.
(continued on next page)

Symptom Matrix Chart (Cont'd)

SYSTEM — ENGINE MECHANICAL & OTHER

NEEC0041S03

		SYMPTOM													Reference page
		HARD/NO START/RESTART (EXCP. HA)	ENGINE STALL	HESITATION/SURGING/FLAT SPOT	SPARK KNOCK/DETONATION	LACK OF POWER/POOR ACCELERATION	HIGH IDLE/LOW IDLE	ROUGH IDLE/HUNTING	IDLING VIBRATION	SLOW/NO RETURN TO IDLE	OVERHEATS/WATER TEMPERATURE HIGH	EXCESSIVE FUEL CONSUMPTION	EXCESSIVE OIL CONSUMPTION	BATTERY DEAD (UNDER CHARGE)	
Warranty symptom code		AA	AB	AC	AD	AE	AF	AG	AH	AJ	AK	AL	AM	HA	
Fuel	Fuel tank	5													***FE-4***
	Fuel piping			5	5	5		5	5			5			
	Vapor lock		5												
	Valve deposit	5		5	5	5		5	5			5			—
	Poor fuel (Heavy weight gasoline, Low octane)														
Air	Air duct	5	5	5	5	5	5	5	5	5		5			
	Air cleaner														
	Air leakage from air duct (Mass air flow sensor — throttle body)														
	Throttle body, Throttle wire														***FE-3***
	Air leakage from intake manifold/Collector/Gasket														—
Crank-ing	Battery	1	1	1		1		1	1					1	***SC-2***
	Alternator circuit														
	Starter circuit	3										1			
	Flywheel/Drive plate	6													***EM-52***
	PNP switch	4													—

1 - 6: The numbers refer to the order of inspection.

(continued on next page)

		SYMPTOM													Reference page
		HARD/NO START/RESTART (EXCP. HA)	ENGINE STALL	HESITATION/SURGING/FLAT SPOT	SPARK KNOCK/DETONATION	LACK OF POWER/POOR ACCELERATION	HIGH IDLE/LOW IDLE	ROUGH IDLE/HUNTING	IDLING VIBRATION	SLOW/NO RETURN TO IDLE	OVERHEATS/WATER TEMPERATURE HIGH	EXCESSIVE FUEL CONSUMPTION	EXCESSIVE OIL CONSUMPTION	BATTERY DEAD (UNDER CHARGE)	
Warranty symptom code		AA	AB	AC	AD	AE	AF	AG	AH	AJ	AK	AL	AM	HA	
Engine	Cylinder head	5	5	5	5	5		5	5			5			***EM-29***, ***EM-44***
	Cylinder head gasket										4		3		
	Cylinder block	6	6	6	6	6		6	6			6	4		
	Piston														
	Piston ring														
	Connecting rod														
	Bearing														
	Crankshaft														
Valve mechanism	Timing chain	5	5	5	5	5		5	5			5			***EM-18***, ***EM-29***
	Camshaft														
	Intake valve												3		
	Exhaust valve														
Exhaust	Exhaust manifold/Tube/ Muffler/Gasket	5	5	5	5	5		5	5			5			***FE-8***
	Three way catalyst														
Lubrication	Oil pan/Oil strainer/Oil pump/ Oil filter/Oil gallery	5	5	5	5	5		5	5			5			***MA-21***, ***LC-6***
	Oil level (Low)/Filthy oil														
Cooling	Radiator/Hose/Radiator filler cap	5	5	5	5	5		5	5		4	5			***LC-10***
	Thermostat									5					
	Water pump														
	Water gallery														
	Coolant level (low)/ Contaminated coolant														***MA-19***

1 - 6: The numbers refer to the order of inspection.

CONSULT-II Reference Value in Data Monitor Mode

NEEC0042

Remarks:

- Specification data are reference values.
- Specification data are output/input values which are detected or supplied by the ECM at the connector.

  * Specification data may not be directly related to their components signals/values/operations.

  (i.e., Adjust ignition timing with a timing light before monitoring IGN TIMING. Specification data might be displayed even when ignition timing is not adjusted to specification. This IGN TIMING monitors the data calculated by the ECM according to the input signals from the camshaft position sensor and other ignition timing related sensors.)
- If the real-time diagnosis results are NG, and the on board diagnostic system results are OK, when diagnosing the mass air flow sensor, first check to see if the fuel pump control circuit is normal.

MONITOR ITEM	CONDITION		SPECIFICATION
ENG SPEED	• Tachometer: Connect • Run engine and compare tachometer indication with the CONSULT-II value.		Almost the same speed as the CONSULT-II value.
MAS A/F SE-B1	• Engine: After warming up • Air conditioner switch: “OFF” • Shift lever: “N” • No-load	Idle	0.9 - 1.8V
		2,500 rpm	1.9 - 2.3V
COOLAN TEMP/S	• Engine: After warming up		More than 70°C (158°F)
HO2S1 (B1)	• Engine: After warming up	Maintaining engine speed at 2,000 rpm	0 - 0.3V ⟷ Approx. 0.6 - 1.0V
HO2S1 MNTR (B1)			LEAN ⟷ RICH Changes more than 5 times during 10 seconds.
HO2S2 (B1)	• Engine: After warming up	Revving engine from idle to 3,000 rpm quickly	0 - 0.3V ⟷ Approx. 0.6 - 1.0V
HO2S2 MNTR (B1)			LEAN ⟷ RICH
VHCL SPEED SE	• Turn drive wheels and compare speedometer indication with the CONSULT-II value		Almost the same speed as the CONSULT-II value
BATTERY VOLT	• Ignition switch: ON (Engine stopped)		11 - 14V
THRTL POS SEN	• Engine: After warming up • Ignition switch: ON (Engine stopped)	Throttle valve fully closed	0.2 - 0.8V
		Throttle valve fully opened	3.5 - 4.5V
EGR TEMP SEN	• Engine: After warming up		Less than 4.5V
START SIGNAL	• Ignition switch: ON → START → ON		OFF → ON → OFF
CLSD THL/P SW	• Engine: After warming up • Ignition switch: ON (Engine stopped)	Throttle valve: Idle position	ON
		Throttle valve: Slightly open	OFF
CLSD THL POS	• Engine: After warming up • Ignition switch: ON (Engine stopped)	Throttle valve: Idle position	ON
		Throttle valve: Slightly open	OFF
AIR COND SIG	• Engine: After warming up, idle the engine	A/C switch: OFF	OFF
		A/C switch: ON (Compressor operates.)	ON
P/N POSI SW	• Ignition switch: ON	Shift lever: “P” or “N”	ON
		Except above	OFF
PW/ST SIGNAL	• Engine: After warming up, idle the engine	Steering wheel in neutral position (forward direction)	OFF
		The steering wheel is turned	ON
IGNITION SW	• Ignition switch: ON → OFF → ON		ON → OFF → ON

MONITOR ITEM	CONDITION		SPECIFICATION
INJ PULSE-B1	• Engine: After warming up • Air conditioner switch: OFF • Shift lever: "N" • No-load	Idle	2.5 - 3.3 msec
		2,000 rpm	2.4 - 3.2 msec
B/FUEL SCHDL	• Engine: After warming up • Air conditioner switch: OFF • Shift lever: "N" • No-load	Idle	0.8 - 1.2 msec
		2,000 rpm	0.8 - 1.2 msec
IGN TIMING	• Engine: After warming up • Air conditioner switch: OFF • Shift lever: "N" • No-load	Idle	Approx. 20° BTDC
		2,000 rpm	More than 25° BTDC
IACV-AAC/V	• Engine: After warming up • Air conditioner switch: OFF • Shift lever: "N" • No-load	Idle	Approx. 30%
		2,000 rpm	—
PURG VOL C/V	• Engine: After warming up • Air conditioner switch: OFF • No-load	Idle	0%
		2,000 rpm (More than 200 seconds after starting engine)	—
A/F ALPHA-B1	• Engine: After warming up	Maintaining engine speed at 2,000 rpm	50 - 159%
EVAP SYS PRES	• Ignition switch: ON		Approx. 3.4V
AIR COND RLY	• Air conditioner switch: OFF → ON		OFF → ON
FUEL PUMP RLY	• Ignition switch is turned to ON (Operates for 5 seconds) • Engine running and cranking		ON
	• Except as shown above		OFF
EGRC SOL/V	• Engine: After warming up • Air conditioner switch: OFF • Shift lever: "N" • No-load	Idle	ON (Cut)
		Engine speed: Revving engine from idle to 3,000 rpm quickly.	OFF (Flow)
VENT CONT/V	• Ignition switch: ON		OFF
HO2S1 HTR (B1)	• Engine speed: Below 3,000 rpm (All models) For 6 seconds after engine speed exceeds 3,000 rpm (4WD models only)		ON
	• Engine speed: Above 3,000 rpm (2WD models) More than 6 seconds after engine speed exceeds 3,000 rpm (4WD models)		OFF
HO2S2 HTR (B1)	• Engine speed: Idle after driving 2 minutes at 70 km/h (43 MPH) or more		ON
	• Ignition switch: ON (Engine stopped)		OFF
VC/V BYPASS/V	• Ignition switch: ON		OFF
CAL/LD VALUE	• Engine: After warming up • Air conditioner switch: OFF • Shift lever: "N" • No-load	Idle	9.5 - 34.0%
		2,500 rpm	13.9 - 24.9%
ABSOL TH·P/S	• Engine: After warming up, engine stopped • Ignition switch: ON	Throttle valve: fully closed	0.0%
		Throttle valve: fully opened	Approx. 80%

CONSULT-II Reference Value in Data Monitor Mode (Cont'd)

MONITOR ITEM	CONDITION		SPECIFICATION
MASS AIRFLOW	• Engine: After warming up • Air conditioner switch: OFF • Shift lever: "N" • No-load	Idle	0.9 - 5.8 g·m/s
		2,500 rpm	7.5 - 13.2 g·m/s
ABSOL PRES/SE	• Ignition switch: ON • Engine: For 5 seconds after stating engine		Approx. 4.4V
	• Engine: More than 5 seconds after starting engine (After warming up)		Approx. 1.2V

Major Sensor Reference Graph in Data Monitor Mode

NEEC0043

The following are the major sensor reference graphs in "DATA MONITOR" mode.
(Select "MANU TRIG" in "DATA MONITOR" with CONSULT-II. "Trigger Point" is set to 100%, "Recording Speed" is set to MAX..)

THRTL POS SEN, ABSOL TH·P/S, CLSD THL POS

NEEC0043S01

Below is the data for "THRTL POS SEN", "ABSOL TH·P/S" and "CLSD THL POS" when depressing the accelerator pedal with the ignition switch ON.
The signal of "THRTL POS SEN" and "ABSOL TH·P/S" should rise gradually without any intermittent drop or rise after "CLSD THL POS" is changed from "ON" to "OFF".

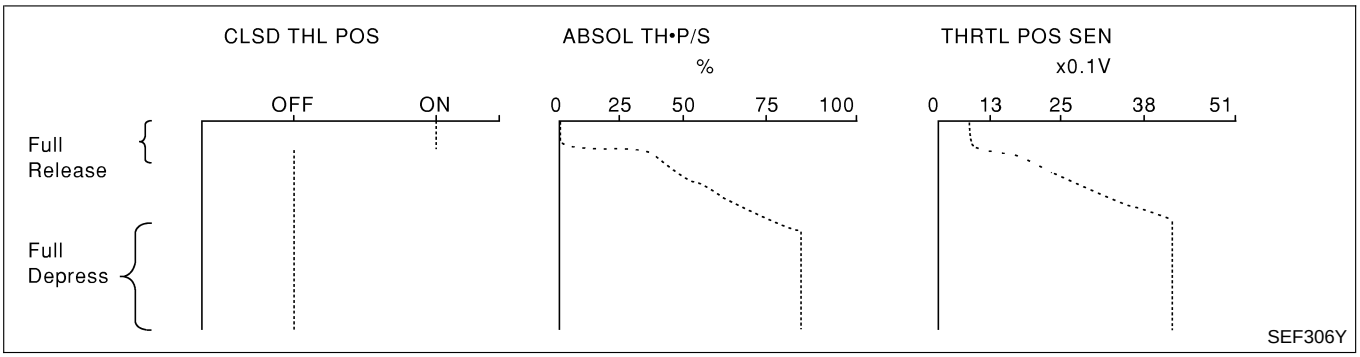

ENG SPEED, MAS A/F SE-B1, THRTL POS SEN, HO2S2 (B1), HO2S1 (B1), INJ PULSE-B1

NEEC0043S02

Below is the data for "ENG SPEED", "MAS A/F SE-B1", "THRTL POS SEN", "HO2S2 (B1)", "HO2S1 (B1)" and "INJ PULSE-B1" when revving engine quickly up to 4,800 rpm under no load after warming up engine to normal operating temperature.
Each value is for reference, the exact value may vary.

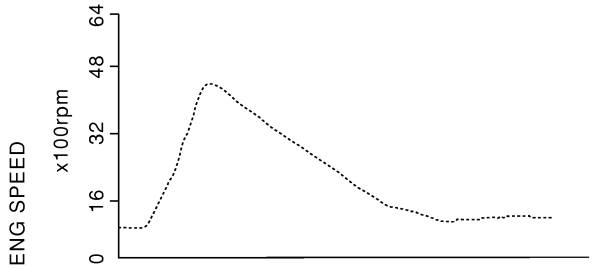

• "ENG SPEED" should increase gradually while depressing the accelerator pedal and should decrease gradually after releasing the pedal without any intemittent drop or rise.

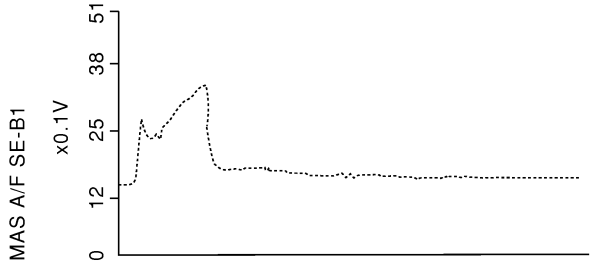

• "MAS A/F SE-B1" should increase when depressing the accelerator pedal and should decrease at the moment "THRTL POS SEN" is closed (accelerator pedal is released).

SEF241Y

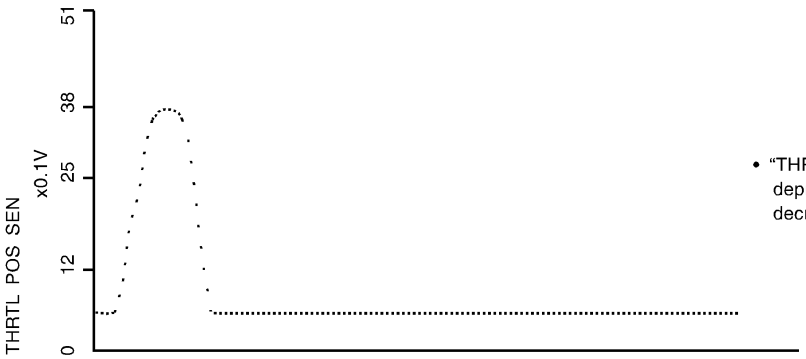

- "THRTL POS SEN" should increase while depressing the accelerator pedal and should decrease while releasing it.

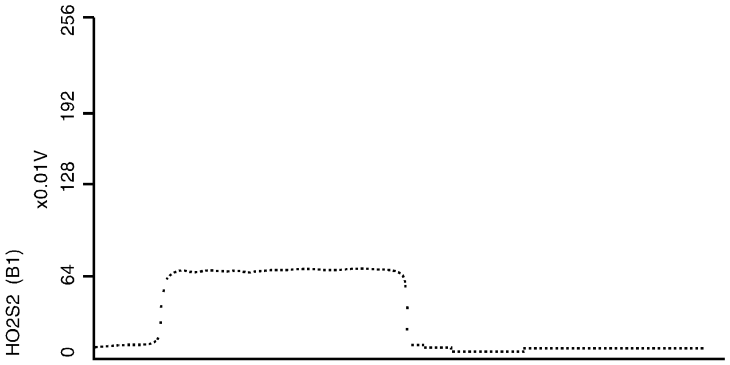

- "HO2S2 (B1)" may increase immediately after depressing the accelerator pedal and may decrease after releasing the pedal.

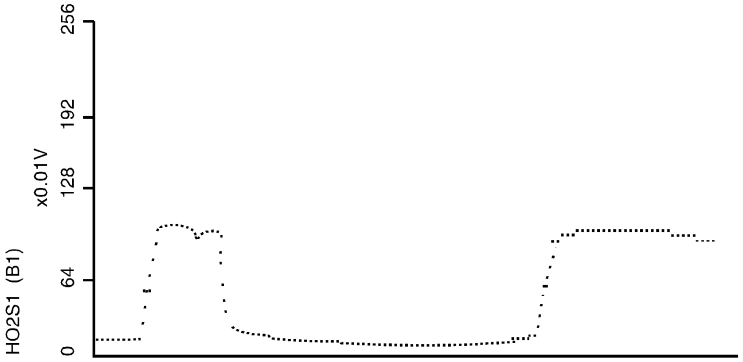

- "HO2S1 (B1)" may increase immediately after depressing the accelerator pedal and may decrease after releasing the pedal.

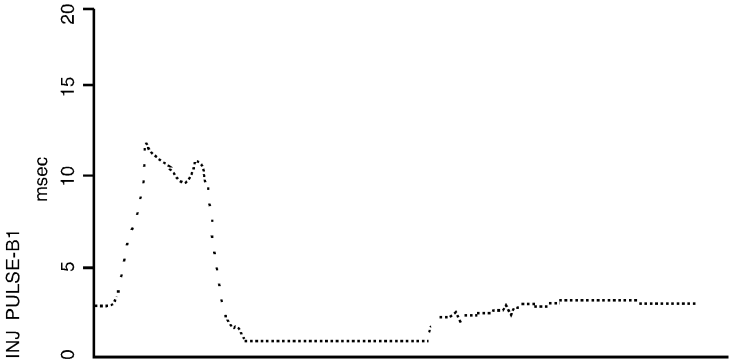

- "INJ PULSE-B1" should increase when depressing the accelerator pedal and should decrease when the pedal is released.

SEF242YA

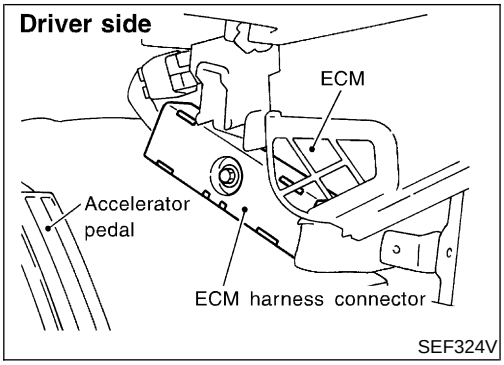

SEF324V

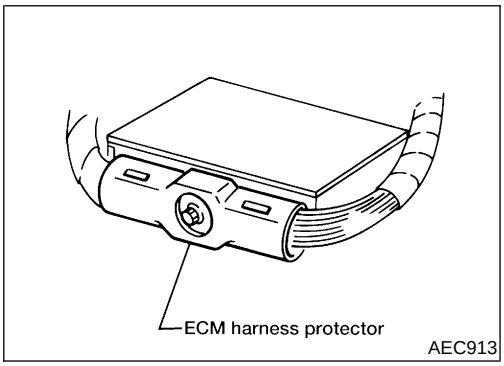

AEC913

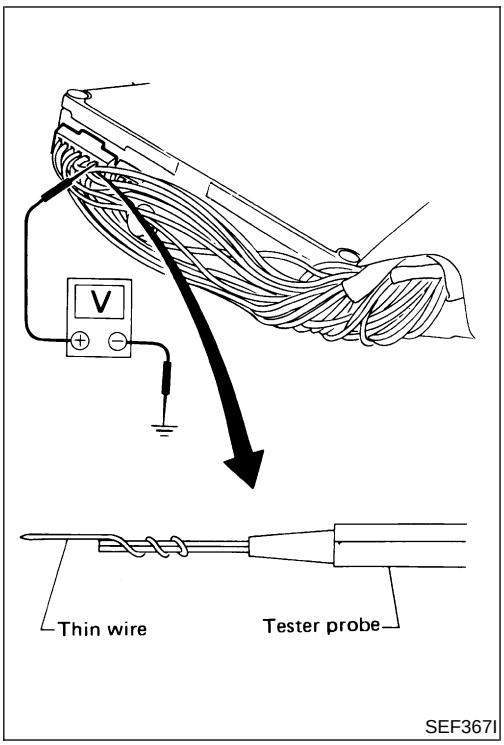

SEF367I

ECM Terminals and Reference Value

NEEC0044

PREPARATION

NEEC0044S01

1. ECM is located behind the instrument lower cover. For this inspection:

- Remove instrument lower cover.

2. Remove ECM harness protector.

3. Perform all voltage measurements with the connector connected. Extend tester probe as shown to perform tests easily.

- Open harness securing clip to make testing easier.
- Use extreme care not to touch 2 pins at one time.
- Data is for comparison and may not be exact.

ECM HARNESS CONNECTOR TERMINAL LAYOUT

NEEC0044S02

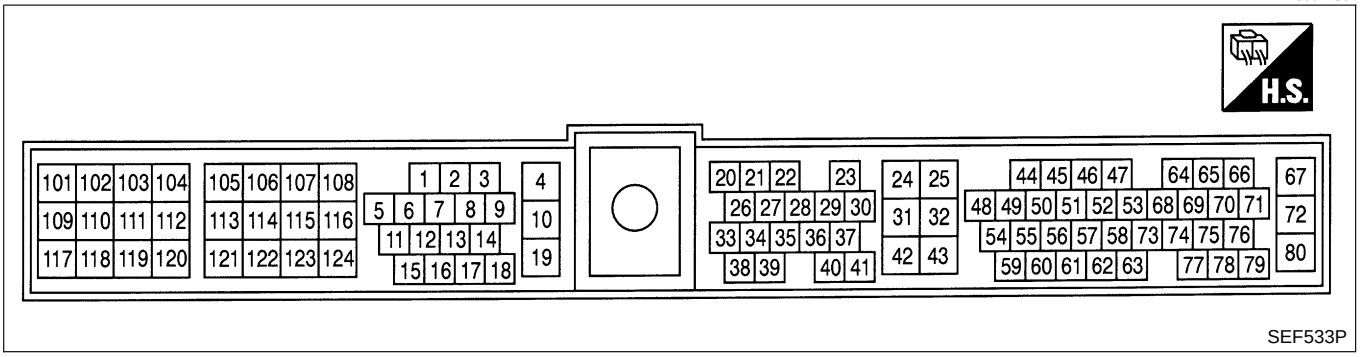

ECM INSPECTION TABLE

NEEC0044S03

Specification data are reference values and are measured between each terminal and ground.

CAUTION:

Do not use ECM ground terminals when measuring input/ output voltage. Doing so may result in damage to the ECM's transistor. Use a ground other than ECM terminals, such as the ground.

TERMINAL NO.	WIRE COLOR	ITEM	CONDITION	DATA (DC Voltage)
1	PU/W	Ignition signal	**[Engine is running]** ● **Warm-up condition** ● Idle speed	0 - 0.5V 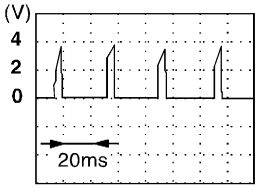
			[Engine is running] ● Engine speed is 2,000 rpm	0.2 - 1.0V 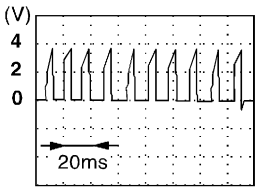

TERMINAL NO.	WIRE COLOR	ITEM	CONDITION	DATA (DC Voltage)
2	B	Ignition check	**[Engine is running]** ● **Warm-up condition** ● Idle speed	12 - 14V 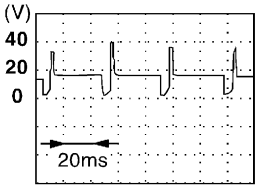
			[Engine is running] ● Engine speed is 2,000 rpm	12 - 13V 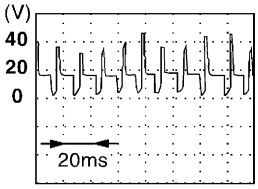
3	P/L	Tachometer	**[Engine is running]** ● **Warm-up condition** ● Idle speed	0 - 1V 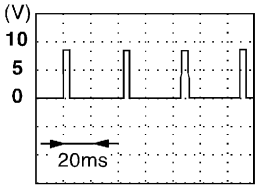
			[Engine is running] ● Engine speed is 2,000 rpm	0.5 - 2V 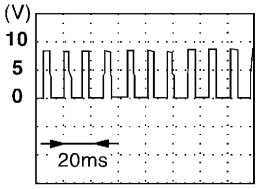
4	LG/R	ECM relay (Self shut-off)	**[Engine is running]** **[Ignition switch OFF]** ● For a few seconds after turning ignition switch OFF	0 - 1V
			[Ignition switch OFF] ● More than a few seconds after turning ignition switch OFF	BATTERY VOLTAGE (11 - 14V)

ECM Terminals and Reference Value (Cont'd)

TERMINAL NO.	WIRE COLOR	ITEM	CONDITION	DATA (DC Voltage)
5	R/Y	EVAP canister purge volume control solenoid valve	**[Engine is running]** ● Idle speed	BATTERY VOLTAGE (11 - 14V) 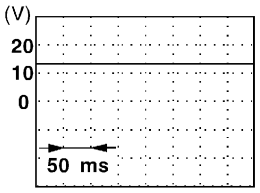
			[Engine is running] ● Engine speed is 2,000 rpm (More than 200 seconds after starting engine)	12 - 13V 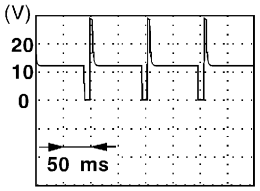
10	B/R	ECM ground	**[Engine is running]** ● Idle speed	Engine ground
11	W/R	Fuel pump relay	**[Ignition switch ON]** ● For 5 seconds after turning ignition switch ON. **[Engine is running]**	0 - 1V
			[Ignition switch ON] ● More than 5 seconds after turning ignition switch ON	BATTERY VOLTAGE (11 - 14V)
12	P	Air conditioner relay	**[Engine is running]** ● Both A/C switch and blower switch are ON* *: Any mode except "OFF", ambient air temperature above 10°C (50°F).	Approximately 0V
			[Engine is running] ● A/C switch is OFF	BATTERY VOLTAGE (11 - 14V)
18	R/W	Malfunction indicator lamp	**[Ignition switch ON]**	0 - 1V
			[Engine is running] ● Idle speed	BATTERY VOLTAGE (11 - 14V)
19	B/R	ECM ground	**[Engine is running]** ● Idle speed	Engine ground
20	L/OR	Start signal	**[Ignition switch ON]**	Approximately 0V
			[Ignition switch START]	BATTERY VOLTAGE (11 - 14V)
21	G/R	Air conditioner dual-pressure switch	**[Engine is running]** ● Both air conditioner switch and blower switch are ON (Compressor operates)	Approximately 0V
			[Engine is running] ● Air conditioner switch is OFF	BATTERY VOLTAGE (11 - 14V)
22	L/B	Park/neutral position (PNP) switch	**[Ignition switch ON]** ● Gear position is "N" or "P"	Approximately 0V
			[Ignition switch ON] ● Except the above gear position	Approximately 5V

TERMINAL NO.	WIRE COLOR	ITEM	CONDITION	DATA (DC Voltage)
23	L	Throttle position sensor	**[Ignition switch ON]** ● **Warm-up condition** ● Accelerator pedal fully released	0.2 - 0.8V
			[Ignition switch ON] ● Accelerator pedal fully depressed	3.5 - 4.5V
24	W/G	Ignition switch	**[Ignition switch OFF]**	0V
			[Ignition switch ON]	BATTERY VOLTAGE (11 - 14V)
25	B/Y	ECM ground	**[Engine is running]** ● Idle speed	Engine ground
28	BR/W	Throttle position switch (Closed position)	**[Ignition switch ON]** ● **Warm-up condition** ● Accelerator pedal released	BATTERY VOLTAGE (11 - 14V)
			[Ignition switch ON] ● Accelerator pedal depressed	Approximately 0V
29	G/B	Vehicle speed sensor	**[Engine is running]** ● Lift up the vehicle ● In 2nd gear position ● 40 km/h (25 MPH)	1 - 4V 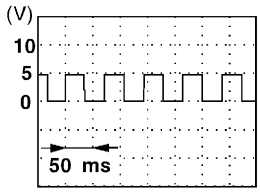
32	B/Y	ECM ground	**[Engine is running]** ● Idle speed	Engine ground
39	GY/R	Power steering oil pressure switch	**[Engine is running]** ● Steering wheel is fully turned	Approximately 0V
			[Engine is running] ● Steering wheel is not turned	Approximately 5V
42	BR	Sensors' power supply	**[Ignition switch ON]**	Approximately 5V
43	B/W	Sensors' ground	**[Engine is running]** ● Idle speed	Approximately 0V
44	PU	Camshaft position sensor (Reference signal)	**[Engine is running]** ● **Warm-up condition** ● Idle speed	0.2 - 0.5V 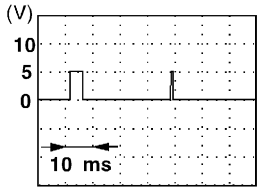
			[Engine is running] ● Engine speed is 2,000 rpm	0 - 0.5V 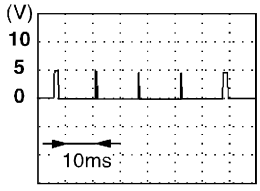

ECM Terminals and Reference Value (Cont'd)

TERMINAL NO.	WIRE COLOR	ITEM	CONDITION	DATA (DC Voltage)
46	OR/B	Fuel level sensor	**[Ignition switch ON]**	Approximately 0 - 4.8V Output voltage varies with fuel level.
47	L	Crankshaft position sensor (OBD)	**[Engine is running]** ● **Warm-up condition** ● Idle speed	Approximately 0V 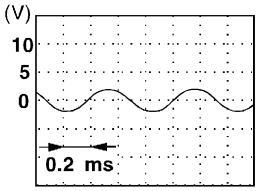
			[Engine is running] ● Engine speed is 2,000 rpm	Approximately 0V 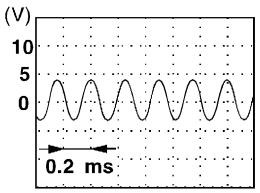
49	LG	Camshaft position sensor (Position signal)	**[Engine is running]** ● **Warm-up condition** ● Idle speed	Approximately 2.6V 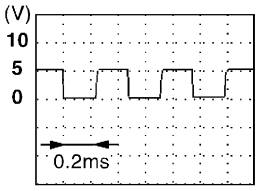
			[Engine is running] ● Engine speed is 2,000 rpm	Approximately 2.5 - 2.6V 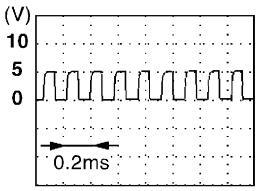
50	B	Heated oxygen sensor 1 (front)	**[Engine is running]** ● After warning up to normal operating temperature and engine speed is 2,000 rpm.	0 - Approximately 1.0V 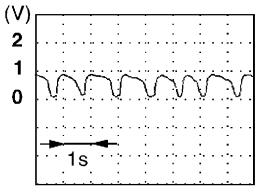
54	R	Mass air flow sensor	**[Engine is running]** ● **Warm-up condition** ● Idle speed	0.9 - 1.8V
			[Engine is running] ● **Warm-up condition** ● Engine speed is 2,500 rpm	1.8 - 2.3V

TERMINAL NO.	WIRE COLOR	ITEM	CONDITION	DATA (DC Voltage)
55	G	Mass air flow sensor ground	**[Engine is running]** ● **Warm-up condition** ● Idle speed	Approximately 0V
56	OR	Heated oxygen sensor 2 (rear)	**[Engine is running]** ● After warming up to normal operating temperature and revving engine from idle to 3,000 rpm quickly	0 - Approximately 1.0V
59	LG/R	Engine coolant temperature sensor	**[Engine is running]**	Approximately 0 - 4.8V Output voltage varies with engine coolant temperature
60	Y/B	Fuel tank temperature sensor	**[Engine is running]**	Approximately 0 - 4.8V Output voltage varies with fuel temperature
61	PU/R	Intake air temperature sensor	**[Engine is running]**	Approximately 0 - 4.8V Output voltage varies with intake air temperature
62	Y	EVAP control system pressure sensor	**[Ignition switch ON]**	Approximately 3.4V
63	G/OR	EGR temperature sensor	**[Engine is running]** ● **Warm-up condition** ● Idle speed	Less than 4.5V
			[Engine is running] ● **Warm-up condition** ● EGR system is operating	0 - 1.5V
64	W	Knock sensor	**[Engine is running]** ● Idle speed	Approximately 2.4V
66	B	Fuel level sensor ground	**[Engine is running]** ● Idle speed	Approximately 0V
67	B/P	Power supply for ECM	**[Ignition switch ON]**	BATTERY VOLTAGE (11 - 14V)
72	B/P			
69	LG/R	Data link connector	**[Ignition switch ON]** ● CONSULT-II or GST is disconnected.	Approximately 2V
80	SB	Power supply (Back-up)	**[Ignition switch OFF]**	BATTERY VOLTAGE (11 - 14V)

ECM Terminals and Reference Value (Cont'd)

TERMINAL NO.	WIRE COLOR	ITEM	CONDITION	DATA (DC Voltage)
101	OR/L	IACV-AAC valve	**[Engine is running]** ● **Warm-up condition** ● Idle speed	10.5 - 11.5V 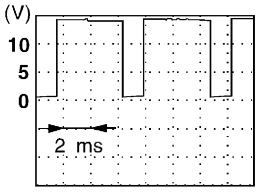
			[Engine is running] ● **Warm-up condition** ● Engine speed is 2,000 rpm	1 - 13V 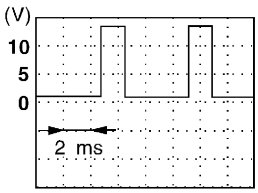
102	W/B	Injector No. 1	**[Engine is running]** ● **Warm-up condition** ● Idle speed	BATTERY VOLTAGE (11 - 14V) 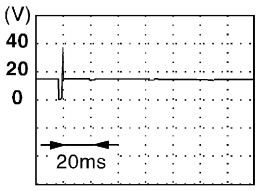
104	W/R	Injector No. 3		
109	W/L	Injector No. 2	**[Engine is running]** ● **Warm-up condition** ● Engine speed is 2,000 rpm	BATTERY VOLTAGE (11 - 14V) 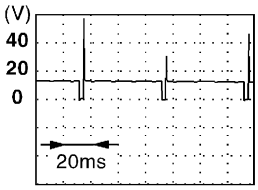
111	W/PU	Injector No. 4		
103	G/W	EGRC-solenoid valve	**[Engine is running]** ● **Warm-up condition** ● Idle speed	0 - 1V
			[Engine is running] ● **Warm-up condition** ● Revving engine from idle to 3,000 rpm quickly	BATTERY VOLTAGE (11 - 14V)
108	R/G	EVAP canister vent control valve	**[Ignition switch ON]**	BATTERY VOLTAGE (11 - 14V)
115	L/Y	Torque converter clutch solenoid valve (A/T models only)	**[Engine is running]** ● Idle speed	Approximately 1V
			[Engine is running] ● **Warm-up condition** ● Engine speed is 2,000 rpm	BATTERY VOLTAGE (11 - 14V)
116	B/R	ECM ground	**[Engine is running]** ● Idle speed	Engine ground
117	B/P	Current return	**[Engine is running]** ● Idle speed	BATTERY VOLTAGE (11 - 14V)

TERMINAL NO.	WIRE COLOR	ITEM	CONDITION	DATA (DC Voltage)
119	BR/Y	Heated oxygen sensor heater 1 (front)	**[Engine is running]** ● Engine speed is below 3,000 rpm. (All models)	Approximately 0.4V
			[Engine is running] ● Engine speed is above 3,000 rpm. (2WD models) ● More than 6 seconds after engine speed exceeds 3,000 rpm (4WD models)	BATTERY VOLTAGE (11 - 14V)
120	P/B	Vacuum cut valve bypass valve	**[Ignition switch ON]**	BATTERY VOLTAGE (11 - 14V)
122	R/B	Heated oxygen sensor heater 2 (rear)	**[Engine is running]** ● Idle speed after driving 2 minutes at 70 km/h (43 MPH) or more	Approximately 0.4V
			[Ignition switch ON] ● Engine is not running	BATTERY VOLTAGE (11 - 14V)
124	B/R	ECM ground	**[Engine is running]** ● Idle speed	Engine ground

Description

NEEC1003

The specification (SP) value indicates the tolerance of the value that is displayed in “DATA MONITOR (SPEC)” mode of CONSULT-II during normal operation of the Engine Control System. When the value in “DATA MONITOR (SPEC)” mode is within the SP value, the Engine Control System is confirmed OK. When the value in “DATA MONITOR (SPEC)” mode is NOT within the SP value, the Engine Control System may have one or more malfunctions.

The SP value is used to detect malfunctions that may affect the Engine Control System, but will not light the MIL.

The SP value will be displayed for the following three items:

- B/FUEL SCHDL (The fuel injection pulse width programmed into ECM prior to any learned on board correction)
- A/F ALPHA-B1/B2 (The mean value of air-fuel ratio feedback correction factor per cycle)
- MAS A/F SE-B1 (The signal voltage of the mass air flow sensor)

Testing Condition

NEEC1004

- Vehicle driven distance: More than 5,000 km (3,107 miles)
- Barometric pressure: 101.3 kPa (760.0 mmHg, 29.92 inHg)±3 kPa (22.5 mmHg, 0.89 inHg)
- Atmospheric temperature: 20 - 30°C (68 - 86°F)
- Engine coolant temperature: 75 - 95°C (167 - 203°F)
- Transmission: Warmed-up*1
- Electrical load: Not applied*2
- Engine speed: Idle

*1: For A/T or CVT models, after the engine is warmed up to normal operating temperature, drive vehicle until “FLUID TEMP SE” (A/T or CVT fluid temperature sensor signal) indicates less than 0.9V. For M/T models, drive vehicle for 5 minutes after the engine is warmed up to normal operating temperature.

*2: Rear window defogger switch, air conditioner switch, lighting switch are “OFF”. Cooling fans are not operating. Steering wheel is straight ahead.

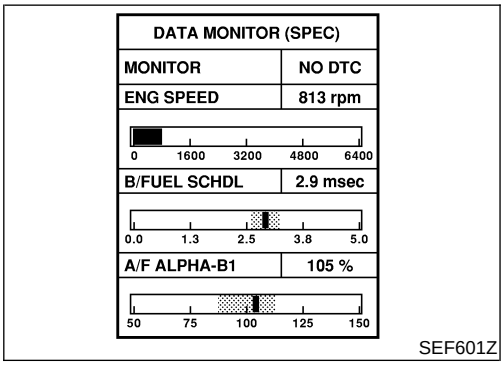

Inspection Procedure

NEEC1005

NOTE:

Perform “DATA MONITOR (SPEC)” mode in maximum scale display.

1. Perform “Basic Inspection”, EC-110.
2. Confirm that the testing conditions indicated above are met.
3. Select “B/FUEL SCHDL”, “A/F ALPHA-B1”, “A/F ALPHA-B2” and “MAS A/F SE-B1” in “DATA MONITOR (SPEC)” mode with CONSULT-II.
4. Make sure that monitor items are within the SP value.
5. If NG, go to “Diagnostic Procedure”, EC-145.

Diagnostic Procedure

NEEC1006

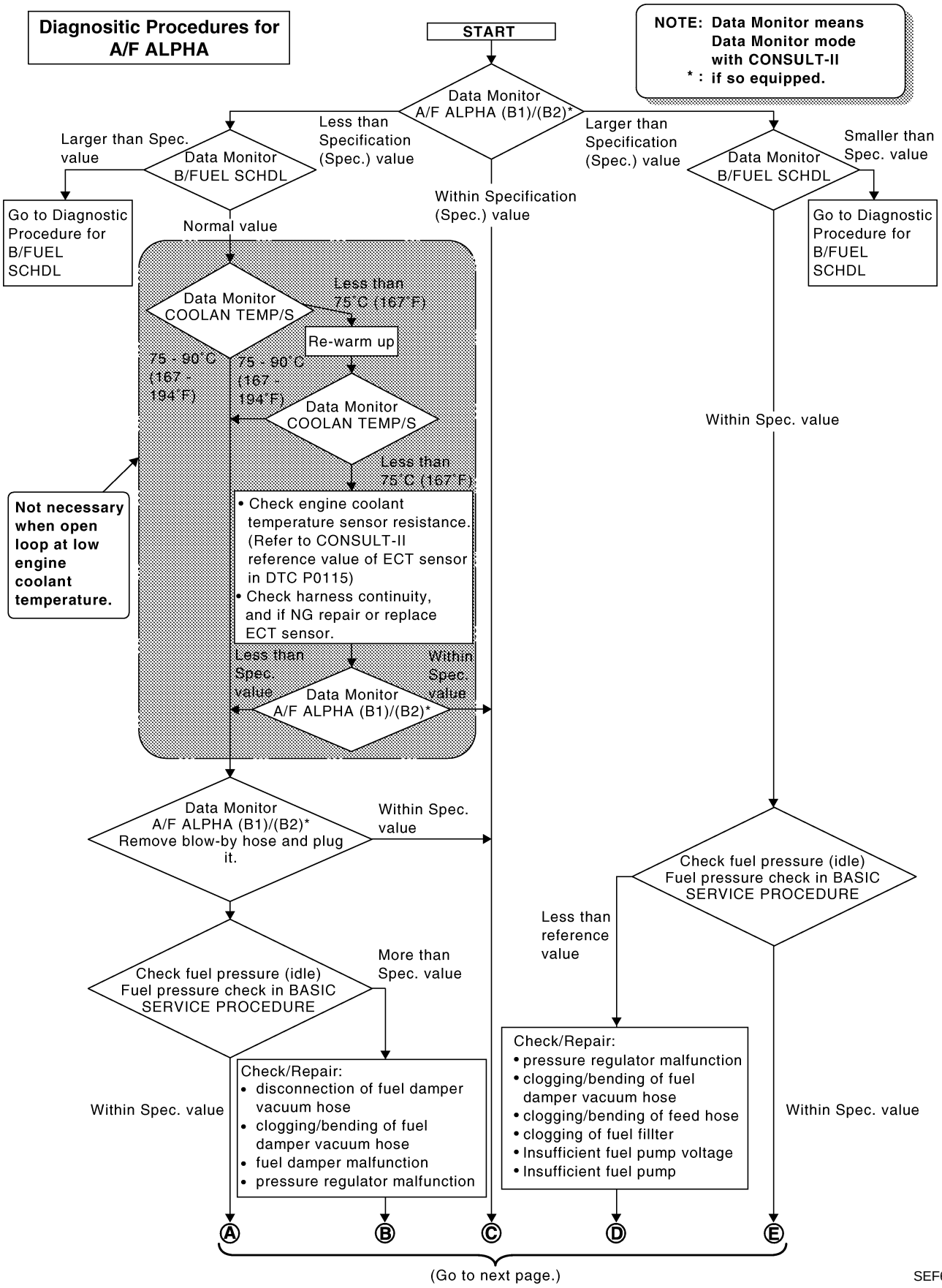

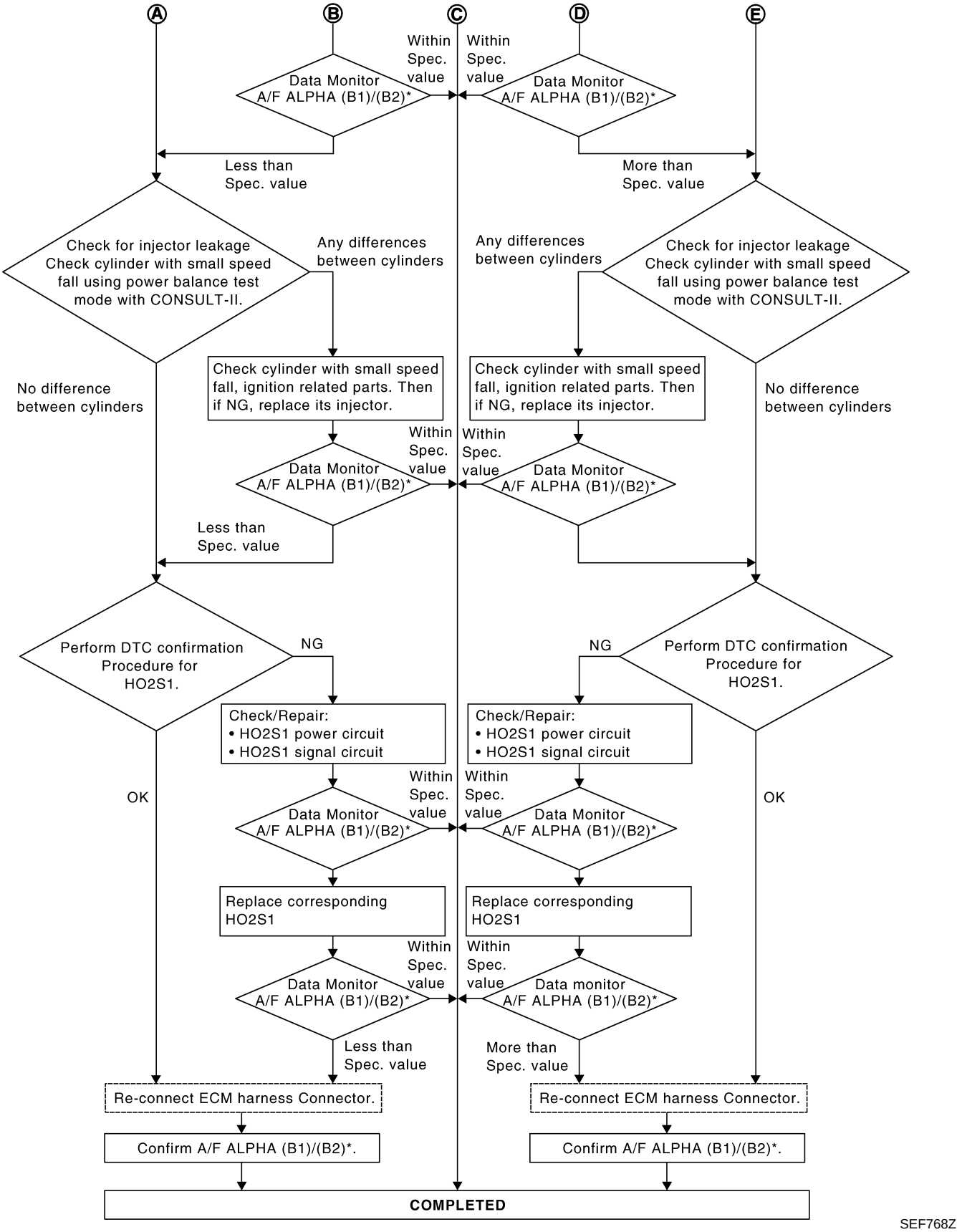
Ⓐ
Ⓑ
Ⓒ
Ⓓ
Ⓔ
Within Spec. value
Within Spec. value
Data Monitor A/F ALPHA (B1)/(B2)*
Data Monitor A/F ALPHA (B1)/(B2)*
Less than Spec. value
More than Spec. value
Check for injector leakage Check cylinder with small speed fall using power balance test mode with CONSULT-II.
Any differences between cylinders
Any differences between cylinders
Check for injector leakage Check cylinder with small speed fall using power balance test mode with CONSULT-II.
No difference between cylinders
Check cylinder with small speed fall, ignition related parts. Then if NG, replace its injector.
Check cylinder with small speed fall, ignition related parts. Then if NG, replace its injector.
No difference between cylinders
Within Spec. value
Within Spec. value
Data Monitor A/F ALPHA (B1)/(B2)*
Data Monitor A/F ALPHA (B1)/(B2)*
Less than Spec. value
Perform DTC confirmation Procedure for HO2S1.
NG
NG
Perform DTC confirmation Procedure for HO2S1.
Check/Repair:
• HO2S1 power circuit
• HO2S1 signal circuit
Check/Repair:
• HO2S1 power circuit
• HO2S1 signal circuit
OK
Within Spec. value
Within Spec. value
OK
Data Monitor A/F ALPHA (B1)/(B2)*
Data Monitor A/F ALPHA (B1)/(B2)*
Replace corresponding HO2S1
Replace corresponding HO2S1
Within Spec. value
Within Spec. value
Data Monitor A/F ALPHA (B1)/(B2)*
Data monitor A/F ALPHA (B1)/(B2)*
Less than Spec. value
More than Spec. value
Re-connect ECM harness Connector.
Re-connect ECM harness Connector.
Confirm A/F ALPHA (B1)/(B2)*.
Confirm A/F ALPHA (B1)/(B2)*.
COMPLETED

SEF768Z

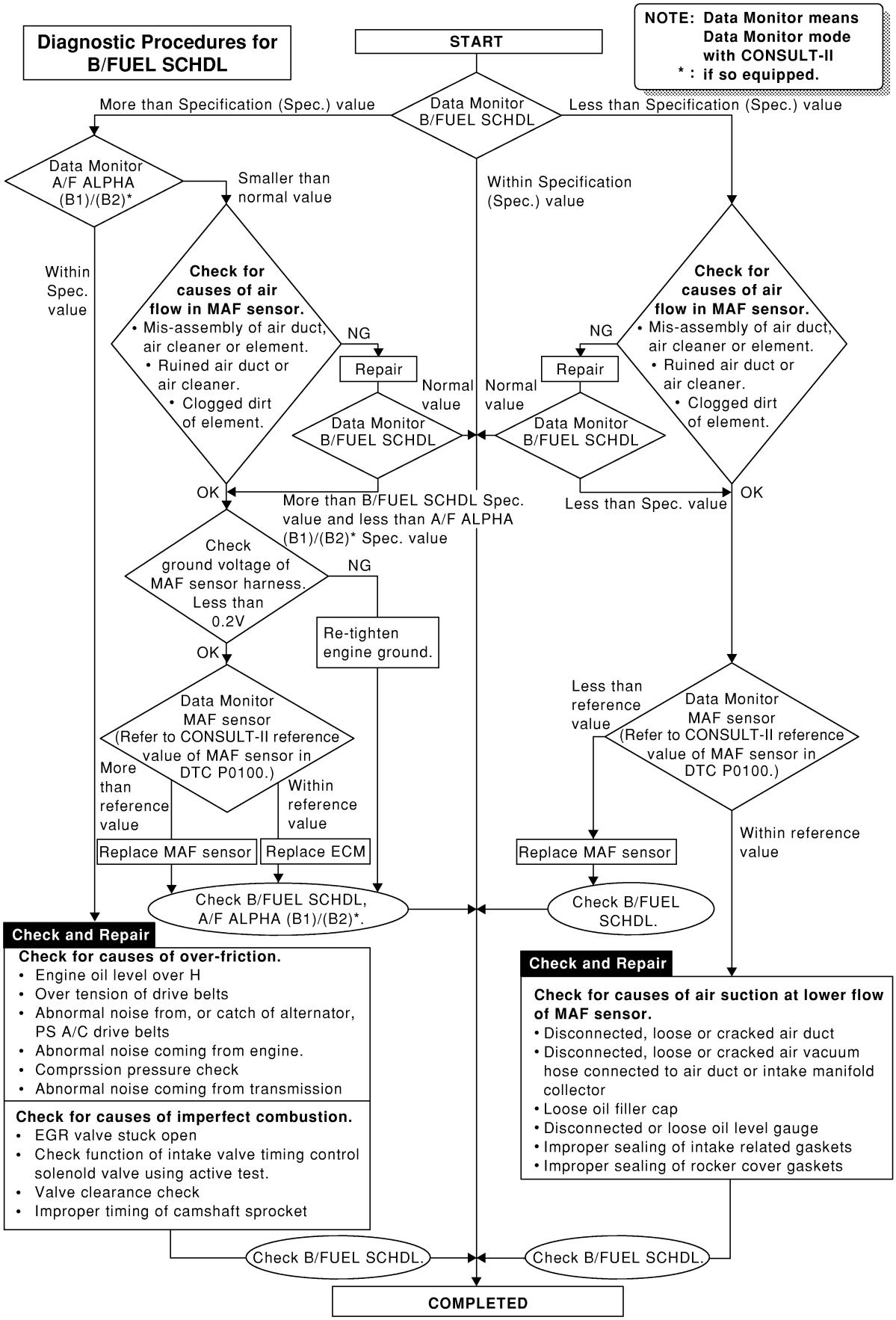
Diagnostic Procedures for B/FUEL SCHDL
START
NOTE: Data Monitor means Data Monitor mode with CONSULT-II
* : if so equipped.
Data Monitor B/FUEL SCHDL
More than Specification (Spec.) value
Less than Specification (Spec.) value
Within Specification (Spec.) value
Data Monitor A/F ALPHA (B1)/(B2)*
Smaller than normal value
Within Spec. value
Check for causes of air flow in MAF sensor.
• Mis-assembly of air duct, air cleaner or element.
• Ruined air duct or air cleaner.
• Clogged dirt of element.
NG
Repair
Normal value
Data Monitor B/FUEL SCHDL
OK
More than B/FUEL SCHDL Spec. value and less than A/F ALPHA (B1)/(B2)* Spec. value
Check ground voltage of MAF sensor harness. Less than 0.2V
NG
Re-tighten engine ground.
OK
Data Monitor MAF sensor (Refer to CONSULT-II reference value of MAF sensor in DTC P0100.)
More than reference value
Within reference value
Replace MAF sensor
Replace ECM
Check B/FUEL SCHDL, A/F ALPHA (B1)/(B2)*.
Check and Repair
Check for causes of over-friction.
• Engine oil level over H
• Over tension of drive belts
• Abnormal noise from, or catch of alternator, PS A/C drive belts
• Abnormal noise coming from engine.
• Comprssion pressure check
• Abnormal noise coming from transmission
Check for causes of imperfect combustion.
• EGR valve stuck open
• Check function of intake valve timing control solenold valve using active test.
• Valve clearance check
• Improper timing of camshaft sprocket
Check B/FUEL SCHDL.
Less than Spec. value
OK
Check for causes of air flow in MAF sensor.
• Mis-assembly of air duct, air cleaner or element.
• Ruined air duct or air cleaner.
• Clogged dirt of element.
NG
Repair
Normal value
Data Monitor B/FUEL SCHDL
Less than reference value
Data Monitor MAF sensor (Refer to CONSULT-II reference value of MAF sensor in DTC P0100.)
Within reference value
Replace MAF sensor
Check B/FUEL SCHDL.
Check and Repair
Check for causes of air suction at lower flow of MAF sensor.
• Disconnected, loose or cracked air duct
• Disconnected, loose or cracked air vacuum hose connected to air duct or intake manifold collector
• Loose oil filler cap
• Disconnected or loose oil level gauge
• Improper sealing of intake related gaskets
• Improper sealing of rocker cover gaskets
Check B/FUEL SCHDL.
COMPLETED
SEF615Z

Description

NEEC0045

Intermittent incidents (I/I) may occur. In many cases, the problem resolves itself (the part or circuit function returns to normal without intervention). It is important to realize that the symptoms described in the customer's complaint often do not recur on DTC (1st trip) visits. Realize also that the most frequent cause of I/I occurrences is poor electrical connections. Because of this, the conditions under which the incident occurred may not be clear. Therefore, circuit checks made as part of the standard diagnostic procedure may not indicate the specific problem area.

COMMON I/I REPORT SITUATIONS

NEEC0045S01

STEP in Work Flow	Situation
II	The CONSULT-II is used. The SELF-DIAG RESULTS screen shows time data other than "0" or "1t".
III	The symptom described by the customer does not recur.
IV	(1st trip) DTC data does not appear during the DTC CONFIRMATION PROCEDURE.
VI	The TROUBLE DIAGNOSIS for PXXXX does not indicate the problem area.

Diagnostic Procedure

NEEC0046

1	**INSPECTION START**
Erase (1st trip) DTCs. Refer to "HOW TO ERASE EMISSION-RELATED INFORMATION", EC-85.	
▶	GO TO 2.

2	**CHECK GROUND TERMINALS**
Check ground terminals for corroding or loose connection. Refer to "Circuit Inspection", "GROUND INSPECTION", ***GI-29***.	
OK or NG	
OK ▶	GO TO 3.
NG ▶	Repair or replace.

3	**SEARCH FOR ELECTRICAL INCIDENT**
Perform "Incident Simulation Tests", ***GI-24***.	
OK or NG	
OK ▶	GO TO 4.
NG ▶	Repair or replace.

4	**CHECK CONNECTOR TERMINALS**
Refer to "How to Check Enlarged Contact Spring of Terminal", ***GI-21***.	
OK or NG	
OK ▶	**INSPECTION END**
NG ▶	Repair or replace connector.

Main Power Supply and Ground Circuit

WIRING DIAGRAM

NEEC0047

EC-MAIN-01

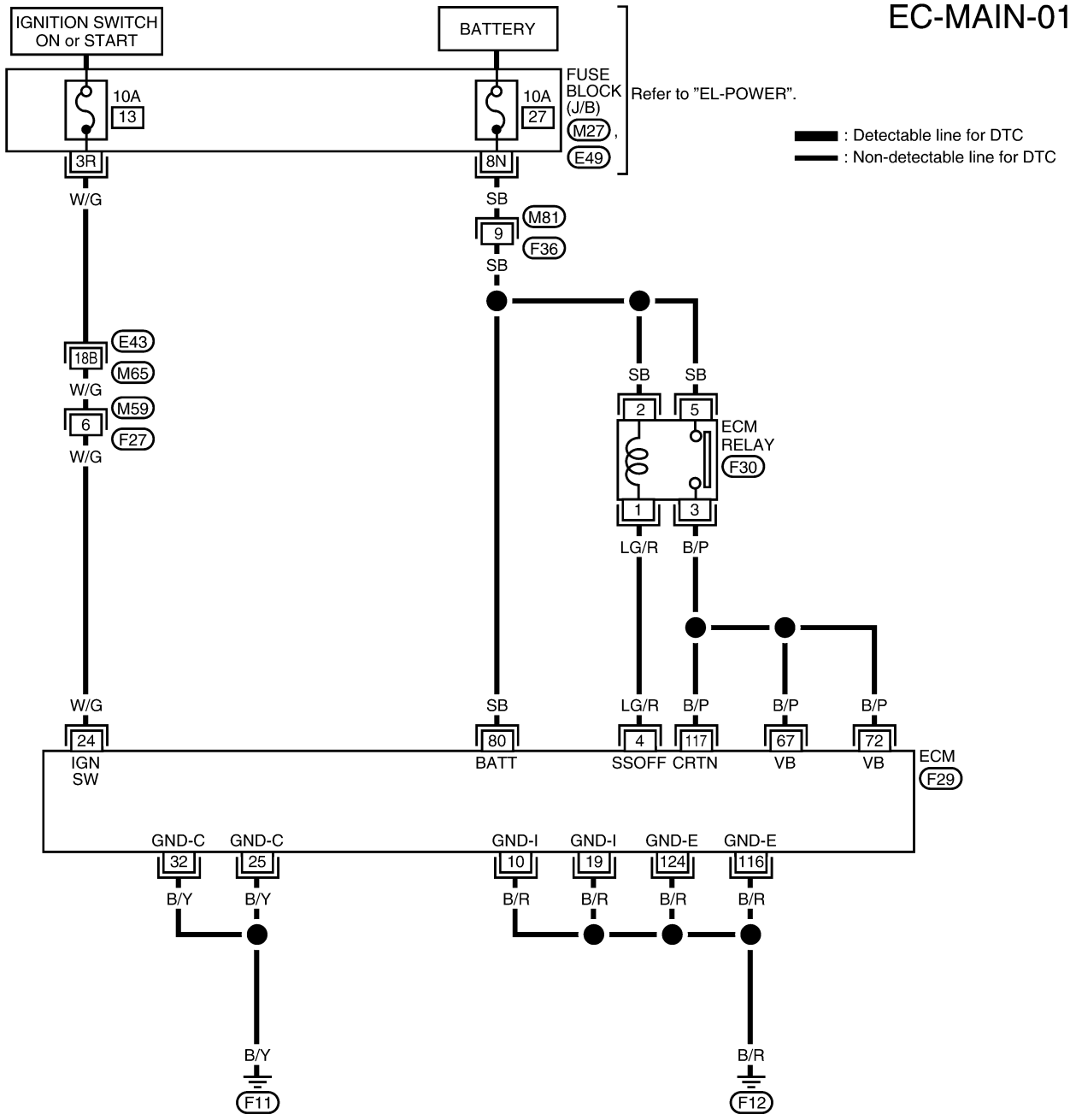

Refer to the following.
M65, E43 - SUPER MULTIPLE JUNCTION (SMJ)

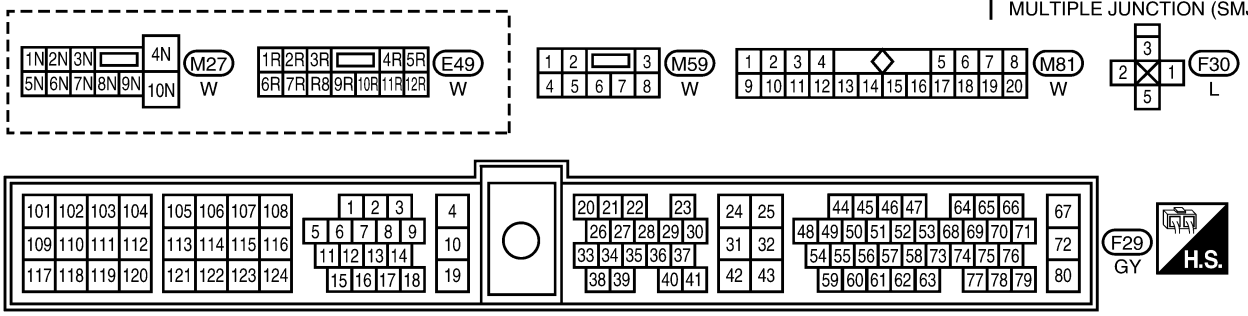

WEC769

ECM TERMINALS AND REFERENCE VALUE

NEEC0048

Specification data are reference values and are measured between each terminal and ground.

CAUTION:

Do not use ECM ground terminals when measuring input/output voltage. Doing so may result in damage to the ECM's transistor. Use a ground other than ECM terminals, such as the ground.

TERMINAL NO.	WIRE COLOR	ITEM	CONDITION	DATA (DC Voltage)
4	LG/R	ECM relay (Self shut-off)	**[Engine is running]** **[Ignition switch OFF]** ● For a few seconds after turning ignition switch OFF	0 - 1V
			[Ignition switch OFF] ● A few seconds passed after turning ignition switch OFF	BATTERY VOLTAGE (11 - 14V)
10	B/R	ECM ground	**[Engine is running]** ● Idle speed	Engine ground
19	B/R	ECM ground	**[Engine is running]** ● Idle speed	Engine ground
24	W/G	Ignition switch	**[Ignition switch OFF]**	0V
			[Ignition switch ON]	BATTERY VOLTAGE (11 - 14V)
25	B/Y	ECM ground	**[Engine is running]** ● Idle speed	Engine ground
32	B/Y	ECM ground	**[Engine is running]** ● Idle speed	Engine ground (Probe this terminal with (−) tester probe when measuring)
67	B/P	Power supply for ECM	**[Ignition switch ON]**	BATTERY VOLTAGE (11 - 14V)
72	B/P			
80	SB	Power supply (Back-up)	**[Ignition switch OFF]**	BATTERY VOLTAGE (11 - 14V)
116	B/R	ECM ground	**[Engine is running]** ● Idle speed	Engine ground
117	B/P	Current return	**[Engine is running]** ● Idle speed	BATTERY VOLTAGE (11 - 14V)
124	B/R	ECM ground	**[Engine is running]** ● Idle speed	Engine ground

DIAGNOSTIC PROCEDURE

=NEEC0049

1	INSPECTION START

Start engine.
Is engine running?

Yes or No

Yes	▶	GO TO 4.
No	▶	GO TO 2.

2	CHECK POWER SUPPLY-I

1. Turn ignition switch OFF and then ON.
2. Check voltage between ECM terminal 24 and ground with CONSULT-II or tester.

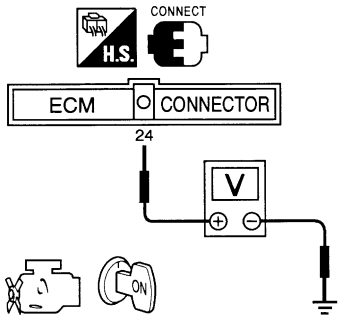

SEF600P

Voltage: Battery voltage

OK or NG

OK	▶	GO TO 14.
NG	▶	GO TO 3.

3	DETECT MALFUNCTIONING PART

Check the following.
- Harness connectors M65, E43
- Harness connectors M59, F27
- 10A fuse
- Harness for open or short between ECM and ignition switch

	▶	Repair harness or connectors.

4	CHECK POWER SUPPLY-II

1. Stop engine.
2. Check voltage between ECM harness connector F29 terminal 80 and ground with CONSULT-II or tester.

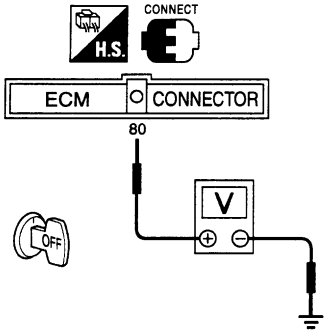

MEC698B

Voltage: Battery voltage

OK or NG

OK	▶	GO TO 6.
NG	▶	GO TO 5.

5	DETECT MALFUNCTIONING PART

Check the following.
- Harness connectors F27, M59
- 10A fuse
- Harness for open or short between ECM and fuse

	▶	Repair harness or connectors.

6	CHECK POWER SUPPLY-III

1. Turn ignition switch ON and then OFF.
2. Check voltage between ECM harness connector F29 terminals 67, 72, 117 and ground with CONSULT-II or tester.

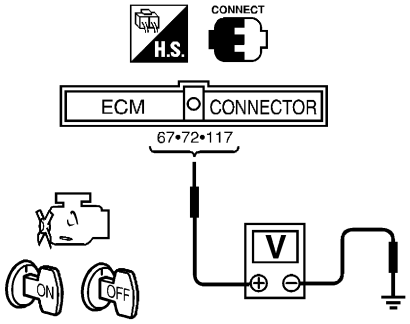

SEF121V

Voltage:
After turning ignition switch OFF, battery voltage will exist for a few seconds, then drop to approximately 0V.

OK or NG

OK	▶	GO TO 14.
NG (Battery voltage does not exist.)	▶	GO TO 7.
NG (Battery voltage exists for more than a few seconds.)	▶	GO TO 13.

7	CHECK HARNESS CONTINUITY BETWEEN ECM RELAY AND ECM

1. Disconnect ECM harness connector.
2. Disconnect ECM relay.

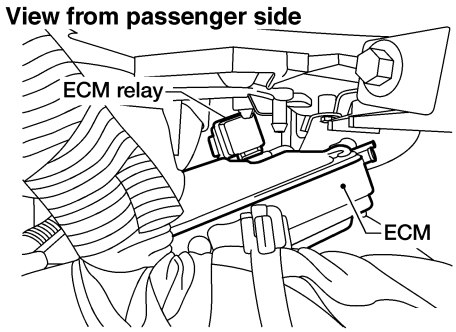

AEC927A

3. Check harness continuity between ECM harness connector F29 terminals 67, 72, 117 and relay harness connector F30 terminal 3.

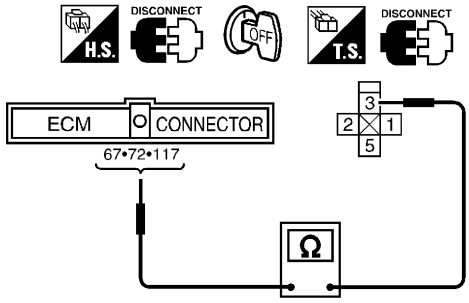

SEF122V

Continuity should exist.

4. Also check harness for short to ground and short to power.

OK or NG

OK	▶	GO TO 9.
NG	▶	GO TO 8.

8	DETECT MALFUNCTIONING PART
Check harness for open or short between ECM relay and ECM.	
▶	Repair open circuit or short to ground or short to power in harness or connectors.

9	CHECK VOLTAGE BETWEEN ECM RELAY AND GROUND

Check voltage between ECM relay terminals 2, 5 and ground with CONSULT-II or tester.

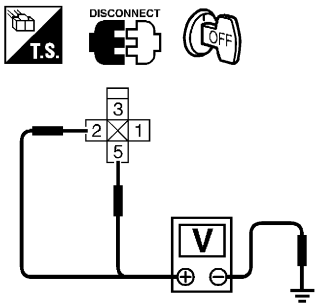

SEF120V

Voltage: Battery voltage

OK or NG

OK	▶	GO TO 11.
NG	▶	GO TO 10.

10	DETECT MALFUNCTIONING PART

Check the following.
- Harness connectors F27, M59
- 10A fuse
- Harness for open or short between ECM relay and fuse

	▶	Repair harness or connectors.

11	CHECK OUTPUT SIGNAL CIRCUIT

1. Check harness continuity between ECM harness connector F29 terminal 4 and relay harness connector F30 terminal 1.

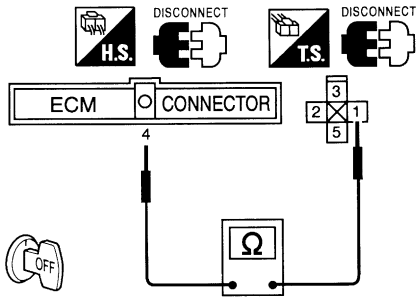

SEF605P

Continuity should exist.

2. Also check harness for short to ground and short to power.

OK or NG

OK	▶	GO TO 12.
NG	▶	Repair open circuit or short to ground or short to power in harness or connectors.

12	CHECK ECM RELAY

1. Apply 12V direct current between ECM relay terminals 1 and 2.
2. Check continuity between ECM relay terminals 3 and 5.

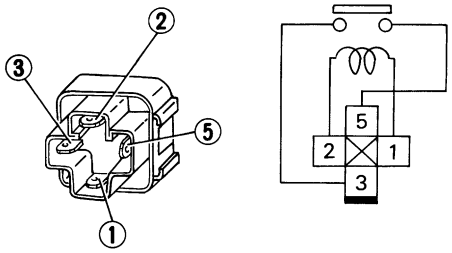

SEF511P

12V (1 - 2) applied: Continuity exists.
No voltage applied: No continuity

OK or NG

OK	▶	GO TO 13.
NG	▶	Replace ECM relay.

13	CHECK GROUND CIRCUIT

1. Turn ignition switch "OFF".
2. Disconnect ECM harness connector.
3. Check harness continuity between ECM harness connector F29 terminals 10, 19, 25, 32, 116, 124 and engine ground.

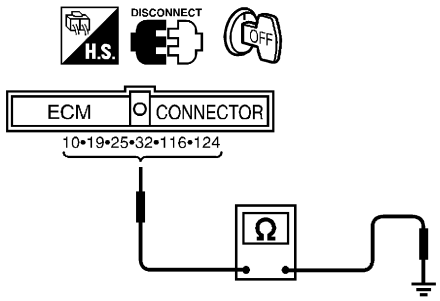

SEF119V

Continuity should exist.

4. Also check harness for short to power.

OK or NG

OK	▶	GO TO 14.
NG	▶	Repair open circuit or short to power in harness or connectors.

14	CHECK INTERMITTENT INCIDENT

Perform "TROUBLE DIAGNOSIS FOR INTERMITTENT INCIDENT", EC-148.

▶ **INSPECTION END**

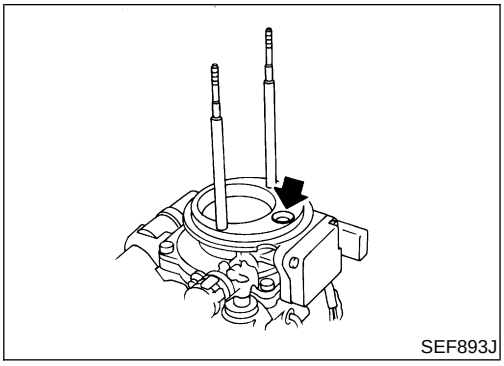
SEF893J

Component Description

NEEC0050

The mass air flow sensor is placed in the stream of intake air. It measures the intake flow rate by measuring a part of the entire intake flow. It consists of a hot wire that is supplied with electric current from the ECM. The temperature of the hot wire is controlled by the ECM a certain amount. The heat generated by the hot wire is reduced as the intake air flows around it. The more air, the greater the heat loss.
Therefore, the ECM must supply more electric current to maintain the temperature of the hot wire as air flow increases. The ECM detects the air flow by means of this current change.

CONSULT-II Reference Value in Data Monitor Mode

NEEC0051

Specification data are reference values.

MONITOR ITEM	CONDITION		SPECIFICATION
MAS A/F SE-B1	• Engine: After warming up • Air conditioner switch: OFF • Shift lever: “N” • No-load	Idle	0.9 - 1.8V
		2,500 rpm	1.9 - 2.3V
CAL/LD VALUE	• Engine: After warming up • Air conditioner switch: OFF • Shift lever: “N” • No-load	Idle	9.5 - 34.0%
		2,500 rpm	13.9 - 24.9%
MASS AIRFLOW	• Engine: After warming up • Air conditioner switch: OFF • Shift lever: “N” • No-load	Idle	0.9 - 5.8 g·m/s
		2,500 rpm	7.5 - 13.2 g·m/s

ECM Terminals and Reference Value

NEEC0052

Specification data are reference values and are measured between each terminal and ground.

CAUTION:
Do not use ECM ground terminals when measuring input/output voltage. Doing so may result in damage to the ECM’s transistor. Use a ground other than ECM terminals, such as the ground.

TERMINAL NO.	WIRE COLOR	ITEM	CONDITION	DATA (DC Voltage)
54	R	Mass air flow sensor	**[Engine is running]** • **Warm-up condition** • Idle speed	0.9 - 1.8V
			[Engine is running] • **Warm-up condition** • Engine speed is 2,500 rpm	1.9 - 2.3V
55	G	Mass air flow sensor ground	**[Engine is running]** • **Warm-up condition** • Idle speed	Approximately 0V

On Board Diagnosis Logic

NEEC0053

DTC No.	Malfunction is detected when ...		Check Items (Possible Cause)
P0100	A)	An excessively high voltage from the sensor is sent to ECM when engine is not running.	• Harness or connectors (The sensor circuit is open or shorted.) • Mass air flow sensor
	C)	A high voltage from the sensor is sent to ECM under light load driving condition.	
	B)	An excessively low voltage from the sensor is sent to ECM* when engine is running.	• Harness or connectors (The sensor circuit is open or shorted.) • Intake air leaks • Mass air flow sensor
	D)	A low voltage from the sensor is sent to ECM under heavy load driving condition.	

*: When this malfunction is detected, the ECM enters fail-safe mode and the MIL lights up.

Detected items	Engine operating condition in fail-safe mode
Mass air flow sensor circuit	Engine speed will not rise more than 2,400 rpm due to the fuel cut.

DTC Confirmation Procedure

NEEC0054

Perform “PROCEDURE FOR MALFUNCTION A” first. If the 1st trip DTC cannot be confirmed, perform “PROCEDURE FOR MALFUNCTION B”. If there is no problem on “PROCEDURE FOR MALFUNCTION B”, perform “PROCEDURE FOR MALFUNCTION C”. If there is no problem on “PROCEDURE FOR MALFUNCTION C”, perform “PROCEDURE FOR MALFUNCTION D”.

CAUTION:

Always drive vehicle at a safe speed.

NOTE:

If “DTC Confirmation Procedure” has been previously conducted, always turn ignition switch OFF and wait at least 5 seconds before conducting the next test.

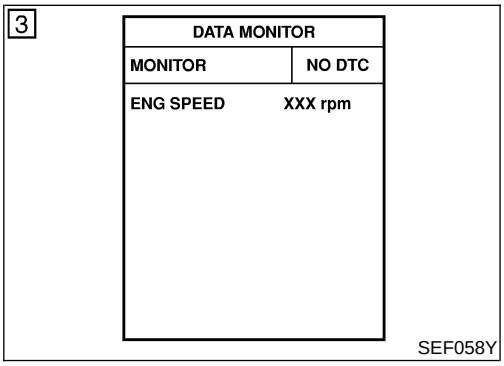

PROCEDURE FOR MALFUNCTION A

NEEC0054S01

With CONSULT-II

1) Turn ignition switch ON.
2) Select “DATA MONITOR” mode with CONSULT-II.
3) Wait at least 6 seconds.
4) If 1st trip DTC is detected, go to “Diagnostic Procedure”, EC-161.

With GST

Follow the procedure “With CONSULT-II”.

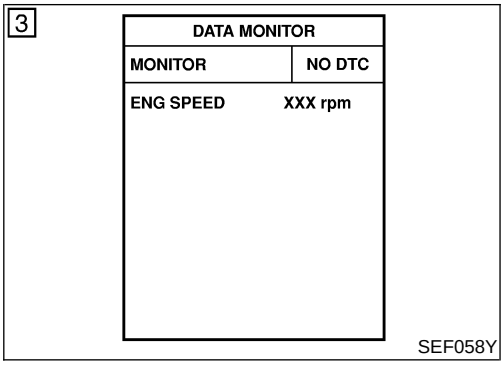

PROCEDURE FOR MALFUNCTION B

NEEC0054S02

With CONSULT-II

1) Turn ignition switch ON.
2) Select "DATA MONITOR" mode with CONSULT-II.
3) Start engine and wait 5 seconds at most.
4) If 1st trip DTC is detected, go to "Diagnostic Procedure", EC-161.

With GST

Follow the procedure "With CONSULT-II".

NOTE:

If 1st trip DTC is confirmed after more than 5 seconds, there may be malfunction C.

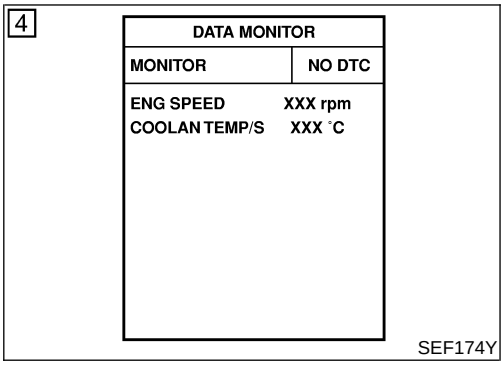

PROCEDURE FOR MALFUNCTION C

NEEC0054S03

NOTE:

If engine will not start or stops soon wait at least 10 seconds with engine stopped (Ignition switch "ON") instead of running engine at idle speed.

With CONSULT-II

1) Turn ignition switch ON.
2) Select "DATA MONITOR" mode with CONSULT-II.
3) Start engine and warm it up to normal operating temperature.
4) Run engine for at least 10 seconds at idle speed.
5) If 1st trip DTC is detected, go to "Diagnostic Procedure", EC-161.

With GST

Follow the procedure "With CONSULT-II".

6

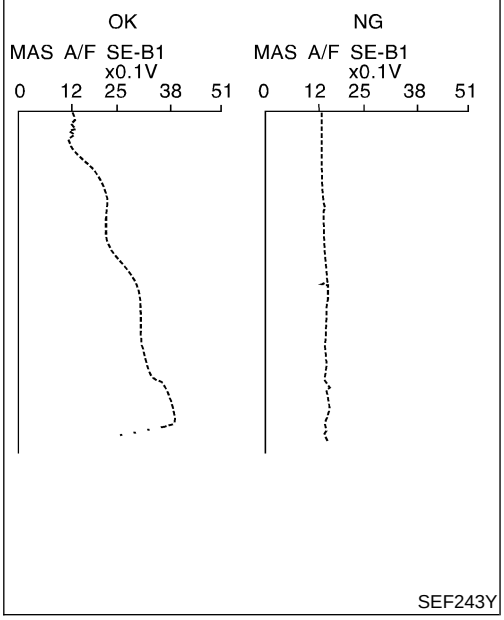

SEF243Y

7

DATA MONITOR	
MONITOR	NO DTC
ENG SPEED	XXX rpm
VHCL SPEED SE	XXX km/h
THRTL POS SEN	XXX V

SEF175Y

CALC LOAD	20%
COOLANT TEMP	95°C
SHORT FT #1	2%
LONG FT #1	0%
SHORT FT #2	4%
LONG FT #2	0%
ENGINE SPD	2637RPM
VEHICLE SPD	0MPH
IGN ADVANCE	41.0°
INTAKE AIR	41°C
MAF	14.1gm/sec
THROTTLE POS	3%

SEF534P

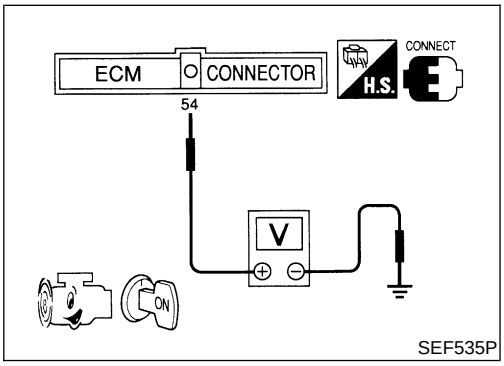

SEF535P

PROCEDURE FOR MALFUNCTION D

NEEC0054S04

With CONSULT-II

1) Turn ignition switch ON.
2) Start engine and warm it up to normal operating temperature. If engine cannot be started, go to "Diagnostic Procedure", EC-161.
3) Select "DATA MONITOR" mode with CONSULT-II.
4) Check the voltage of "MAS A/F SE-B1" with "DATA MONITOR".
5) Increases engine speed to about 4,000 rpm.
6) Monitor the linear voltage rise in response to engine speed increases.
   If NG, go to "Diagnostic Procedure", EC-161.
   If OK, go to following step.
7) Maintain the following conditions for at least 10 consecutive seconds.

ENG SPEED	More than 2,000 rpm
THRTL POS SEN	More than 3V
Selector lever	Suitable position
Driving location	Driving vehicle uphill (Increased engine load) will help maintain the driving conditions required for this test.

8) If 1st trip DTC is detected, go to "Diagnostic Procedure", EC-161.

Overall Function Check

NEEC0055

Use this procedure to check the overall function of the mass air flow sensor circuit. During this check, a 1st trip DTC might not be confirmed.

PROCEDURE FOR MALFUNCTION D

NEEC0055S01

With GST

1) Turn ignition switch ON.
2) Start engine and warm it up to normal operating temperature.
3) Select "MODE 1" with GST.
4) Check the mass air flow sensor signal with "MODE 1".
5) Check for linear mass air flow rise in response to increases to about 4,000 rpm in engine speed.
6) If NG, go to "Diagnostic Procedure", EC-161.

No Tools

1) Turn ignition switch ON.
2) Start engine and warm it up to normal operating temperature.
3) Check the voltage between ECM terminal 54 (Mass air flow sensor signal) and ground.
4) Check for linear voltage rise in response to increases to about 4,000 rpm in engine speed.
5) If NG, go to "Diagnostic Procedure", EC-161.

Wiring Diagram

NEEC0056

EC-MAFS-01

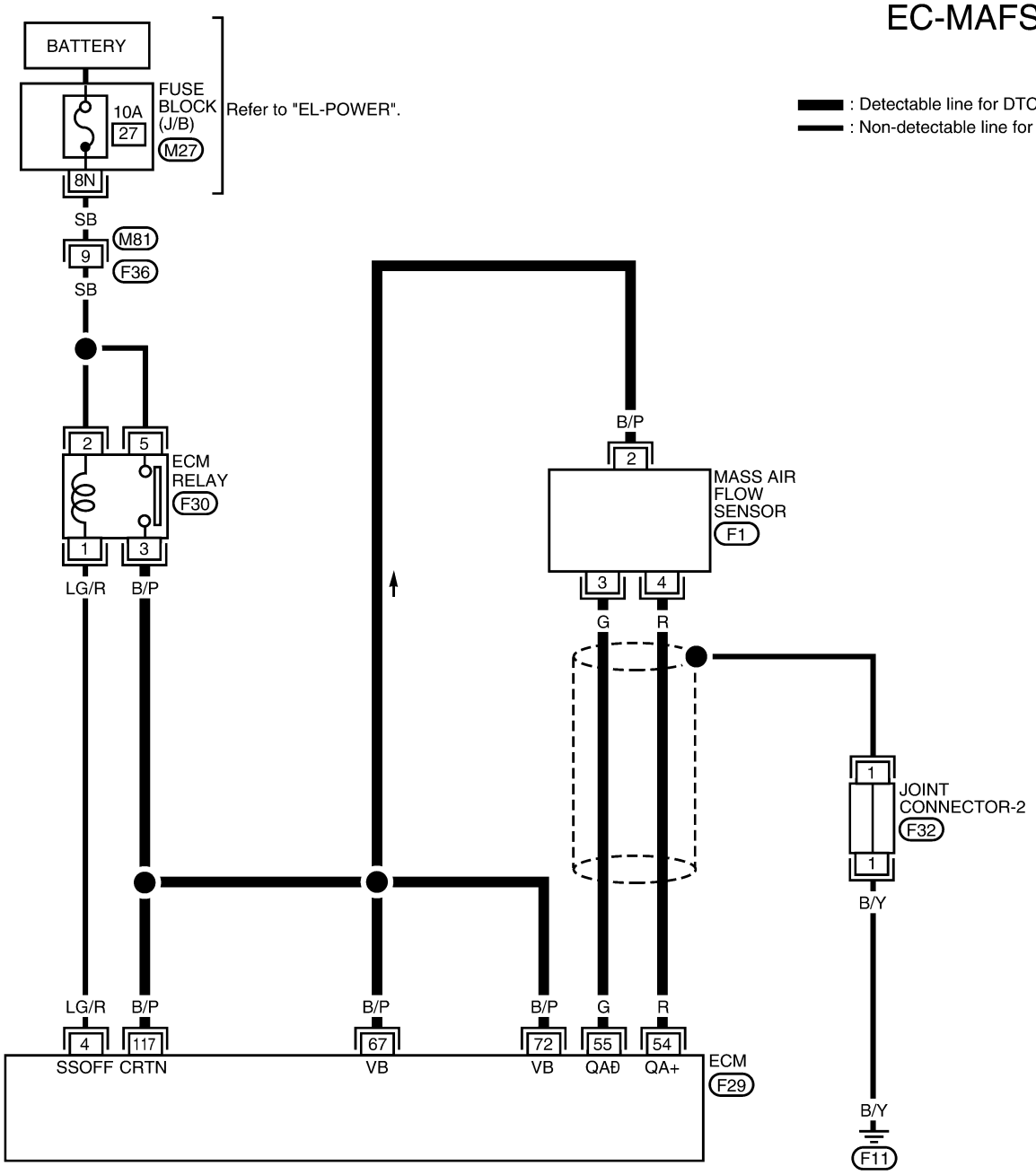

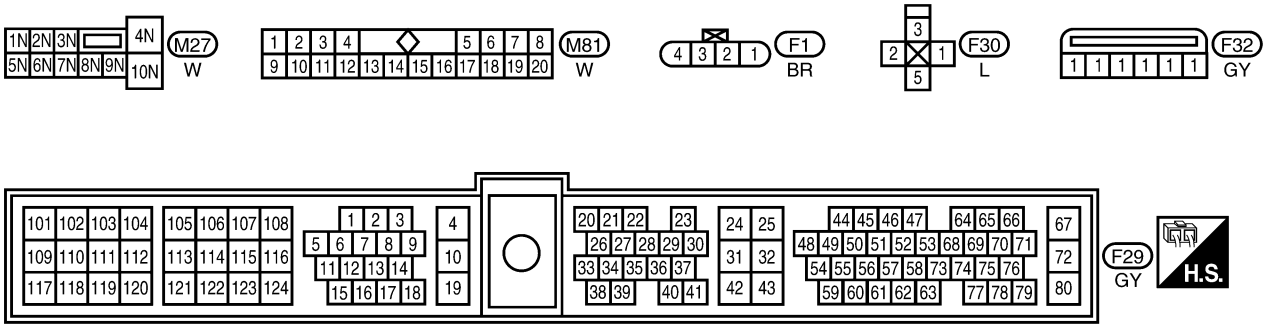

WEC770

Diagnostic Procedure

NEEC0057

1	INSPECTION START

Which malfunction (A, B, C or D) is duplicated?

MALFUNCTION	Type
A and/or C	I
B and/or D	II

MTBL0063

Type I or Type II

Type I	▶	GO TO 3.
Type II	▶	GO TO 2.

2	CHECK INTAKE SYSTEM

Check the followings for connection.
- Air duct
- Air cleaner
- Vacuum hoses
- Intake air passage between air duct to collector

OK or NG

OK	▶	GO TO 3.
NG	▶	Reconnect the parts.

3	RETIGHTEN GROUND SCREWS

1. Turn ignition switch OFF.
2. Loosen and retighten engine ground screws.

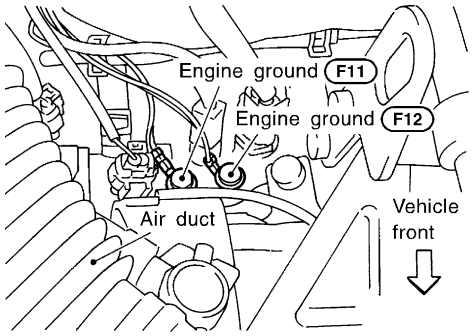

SEF325V

	▶	GO TO 4.

4	CHECK POWER SUPPLY

1. Disconnect Mass air flow sensor harness connector.

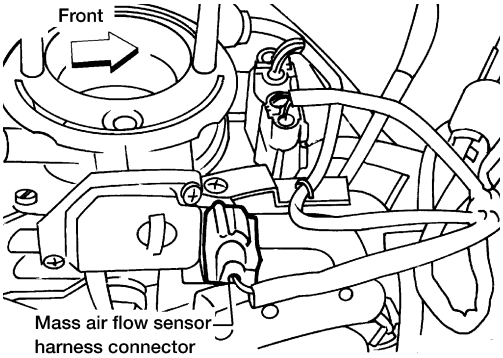

AEC131A

2. Turn ignition switch ON.
3. Check voltage between terminal 2 and ground with CONSULT-II or tester.

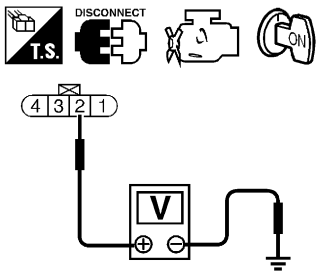

SEF126V

Voltage: Battery voltage

OK or NG

OK	▶	GO TO 6.
NG	▶	GO TO 5.

5	DETECT MALFUNCTIONING PART

Check the following.
- Harness for open or short between ECM relay and mass air flow sensor
- Harness for open or short between Mass air flow sensor and ECM

	▶	Repair harness or connectors.

6	CHECK GROUND CIRCUIT

1. Turn ignition switch OFF.
2. Disconnect ECM harness connector.
3. Check harness continuity between Mass air flow sensor terminal 3 and ECM terminal 55. Refer to EC-160.

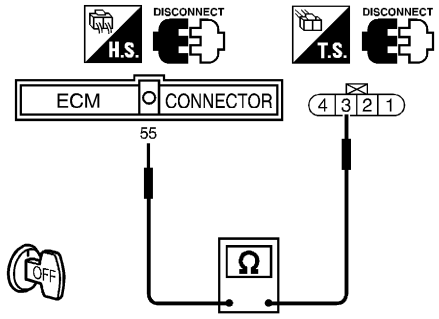

SEF124V

Continuity should exist.

4. Also check harness for short to power.

OK or NG

OK	▶	GO TO 7.
NG	▶	Repair open circuit or short to power in harness or connectors.

7	CHECK INPUT SIGNAL CIRCUIT

1. Check harness continuity between terminal 4 and ECM terminal 54.

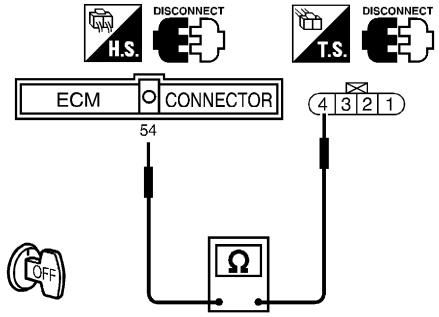

SEF125V

Continuity should exist.

2. Also check harness for short to ground and short to power.

OK or NG

OK	▶	GO TO 8.
NG	▶	Repair open circuit or short to ground or short to power in harness or connectors.

8	CHECK MASS AIR FLOW SENSOR

1. Turn ignition switch ON.
2. Start engine and warm it up to normal operating temperature.
3. Check voltage between ECM terminal 54 (Mass air flow sensor signal) and ground.

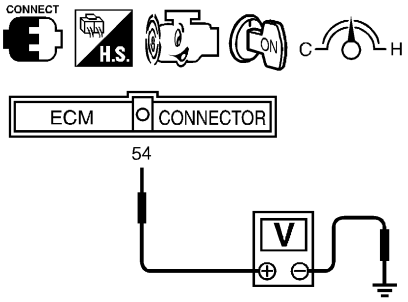

SEF326V

Conditions	Voltage V
Ignition switch "ON" (Engine stopped.)	Less than 1.0
Idle (Engine is warmed-up to normal operating temperature.)	0.9 - 1.8
2,500 rpm (Engine is warmed-up to normal operating temperature.)	1.9 - 2.3
Idle to about 4,000 rpm*	1.3 - 1.7 to Approx. 3.0

*: Check for linear voltage rise in response to increases to about 4,000 rpm in engine speed.

MTBL0326

4. If the voltage is out of specification, disconnect Mass air flow sensor harness connector and connect it again. Repeat above check.
5. If NG, remove Mass air flow sensor from air duct. Check hot wire for damage or dust.

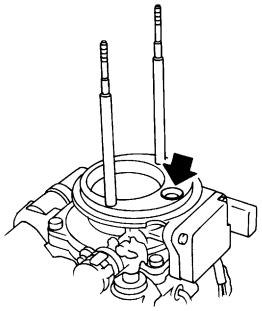

SEF893J

OK or NG

OK	▶	GO TO 9.
NG	▶	Replace mass air flow sensor.

9	CHECK SHIELD CIRCUIT

1. Turn ignition switch OFF.
2. Disconnect joint connector-2.
3. Check the following.
- Continuity between joint connector-1 terminal 1 and ground
- Joint connector-2
  (Refer to "HARNESS LAYOUT", ***EL-239***.)
  Continuity should exist.
4. Also check harness for short to power.

OK or NG

OK	▶	GO TO 10.
NG	▶	Repair open circuit or short to power in harness or connectors.

10	CHECK INTERMITTENT INCIDENT
Perform "TROUBLE DIAGNOSIS FOR INTERMITTENT INCIDENT", EC-148.	
▶	INSPECTION END

Component Description

NEEC1007

The absolute pressure sensor detects ambient barometric pressure. The absolute pressure sensor is built into ECM.

On Board Diagnosis Logic

NEEC1008

DTC No.	Malfunction is detected when ...	Check Items (Possible Cause)
P0105	An excessively low or high voltage from the sensor is sent to the micro computer.	• ECM

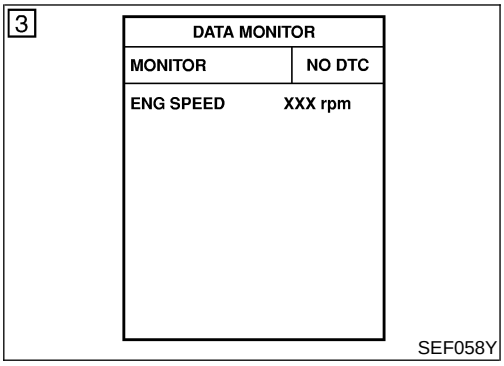

DTC Confirmation Procedure

NEEC1009

NOTE:
If "DTC Confirmation Procedure" has been previously conducted, always turn ignition switch "OFF" and wait at least 5 seconds before conducting the next test.

With CONSULT-II

1) Turn ignition switch "ON".
2) Select "DATA MONITOR" mode with CONSULT-II.
3) Wait at least 6 seconds.
4) If 1st trip DTC is detected, go to "Diagnostic Procedure", EC-167.

With GST

Follow the procedure "With CONSULT-II" above.

Diagnostic Procedure

NEEC1011

1	INSPECTION START	
With CONSULT-II 1. Turn ignition switch ON. 2. Select “SELF DIAG RESULTS” mode with CONSULT-II. 3. Touch “ERASE”. 4. Perform “DTC Confirmation Procedure”. See previous page. 5. Is the 1st trip DTC P0105 displayed again?		
With GST 1. Turn ignition switch ON. 2. Select MODE 4 with GST. 3. Touch “ERASE”. 4. Perform “DTC Confirmation Procedure”. See previous page. 5. Is the 1st trip DTC P0105 displayed again?		
Yes or No		
Yes	▶	Replace ECM.
No	▶	**INSPECTION END**

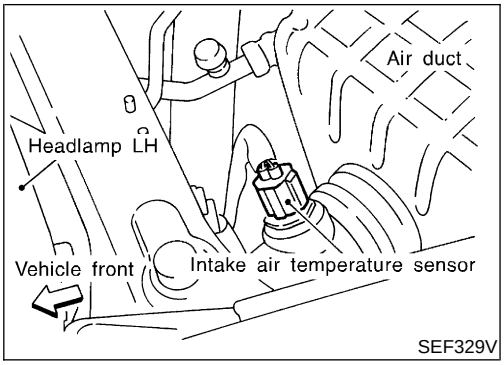

Component Description

NEEC0066

The intake air temperature sensor is mounted to the air duct housing. The sensor detects intake air temperature and transmits a signal to the ECM.

The temperature sensing unit uses a thermistor which is sensitive to the change in temperature. Electrical resistance of the thermistor decreases in response to the temperature rise.

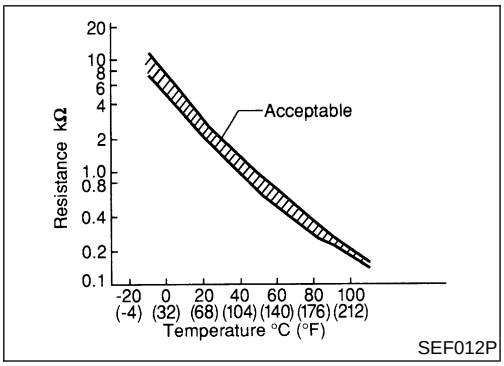

<Reference data>

Intake air temperature °C (°F)	Voltage* V	Resistance kΩ
20 (68)	3.5	2.1 - 2.9
80 (176)	1.23	0.27 - 0.38

*: These data are reference values and are measured between ECM terminal 61 (Intake air temperature sensor) and ground.

CAUTION:

Do not use ECM ground terminals when measuring input/ output voltage. Doing so may result in damage to the ECM's transistor. Use a ground other than ECM terminals, such as the ground.

On Board Diagnosis Logic

NEEC0067

DTC No.	Malfunction is detected when ...		Check Items (Possible Cause)
P0110	A)	An excessively low or high voltage from the sensor is sent to ECM.	• Harness or connectors (The sensor circuit is open or shorted.) • Intake air temperature sensor
	B)	Rationally incorrect voltage from the sensor is sent to ECM, compared with the voltage signal from engine coolant temperature sensor.	

Engine operating condition in fail-safe mode
The ECM functions on the assumption that the intake air temperature is 25°C (77°F).

DTC Confirmation Procedure

=NEEC0068

Perform "PROCEDURE FOR MALFUNCTION A" first. If the 1st trip DTC cannot be confirmed, perform "PROCEDURE FOR MALFUNCTION B".

NOTE:
If "DTC Confirmation Procedure" has been previously conducted, always turn ignition switch OFF and wait at least 5 seconds before conducting the next test.

3

DATA MONITOR	
MONITOR	NO DTC
ENG SPEED	XXX rpm

SEF058Y

PROCEDURE FOR MALFUNCTION A

NEEC0068S01

With CONSULT-II

1) Turn ignition switch ON.
2) Select "DATA MONITOR" mode with CONSULT-II.
3) Wait at least 5 seconds.
4) If 1st trip DTC is detected, go to "Diagnostic Procedure", EC-171.

With GST

Follow the procedure "With CONSULT-II".

5

DATA MONITOR	
MONITOR	NO DTC
COOLAN TEMP/S	XXX °C
VHCL SPEED SE	XXX km/h

SEF176Y

PROCEDURE FOR MALFUNCTION B

NEEC0068S02

CAUTION:
Always drive vehicle at a safe speed.

TESTING CONDITION:
This test may be conducted with the drive wheels lifted in the shop or by driving the vehicle. If a road test is expected to be easier, it is unnecessary to lift the vehicle.

With CONSULT-II

1) Wait until engine coolant temperature is less than 90°C (194°F).

a) Turn ignition switch ON.
b) Select "DATA MONITOR" mode with CONSULT-II.
c) Check the engine coolant temperature.
d) If the engine coolant temperature is not less than 90°C (194°F), turn ignition switch "OFF" and cool down engine.

- Perform the following steps before engine coolant temperature is above 90°C (194°F).

2) Turn ignition switch ON.
3) Select "DATA MONITOR" mode with CONSULT-II.
4) Start engine.
5) Hold vehicle speed more than 70 km/h (43 MPH) for 100 consecutive seconds.
6) If 1st trip DTC is detected, go to "Diagnostic Procedure", EC-171.

With GST

Follow the procedure "With CONSULT-II".

Wiring Diagram

NEEC0069

EC-IATS-01

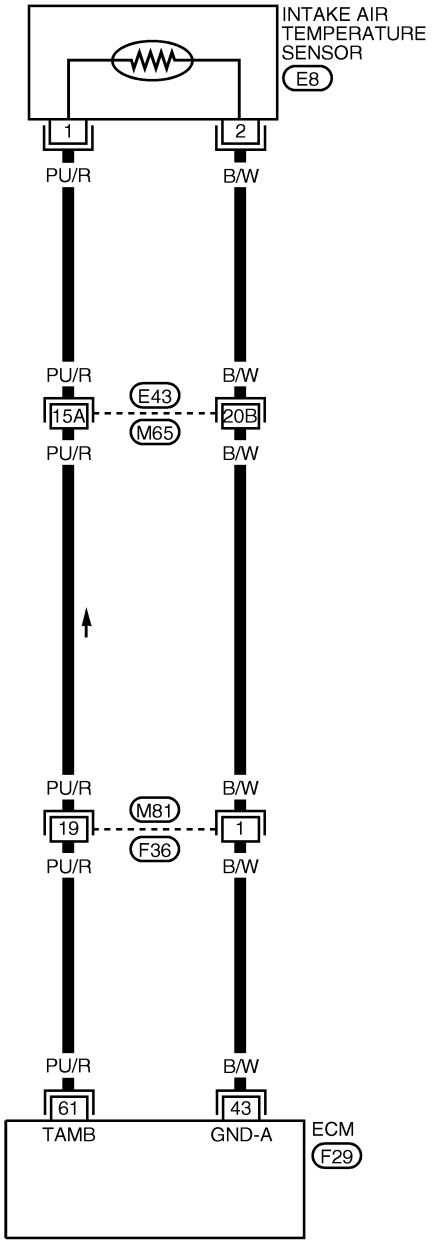

Refer to the following.
M65 , E43 - SUPER MULTIPLE JUNCTION (SMJ)

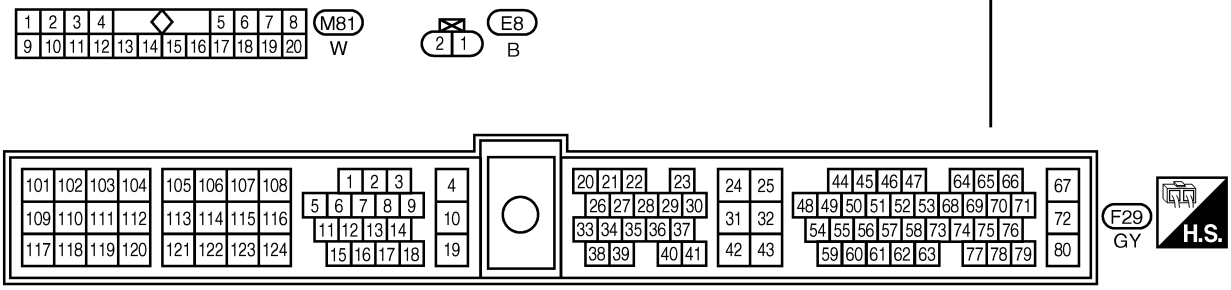

AEC983A

Diagnostic Procedure

NEEC0070

1	CHECK POWER SUPPLY

1. Turn ignition switch OFF.
2. Disconnect intake air temperature sensor harness connector.

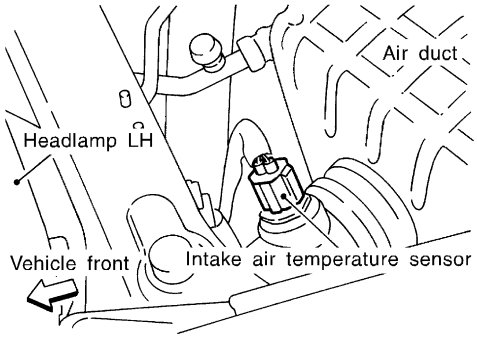

SEF329V

3. Turn ignition switch ON.
4. Check voltage between terminal 1 and ground with CONSULT-II or tester.

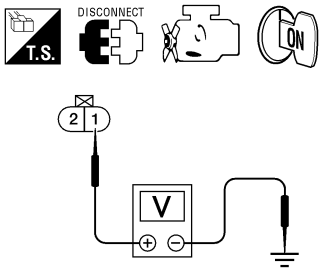

AEC570A

Voltage: Approximately 5V

OK or NG

OK	▶	GO TO 3.
NG	▶	GO TO 2.

2	DETECT MALFUNCTIONING PART

Check the following.
- Harness connectors E43, M65
- Harness connectors M58, F28
- Harness connectors M59, F27
- Harness for open or short between ECM and intake air temperature sensor

	▶	Repair harness or connectors.

Diagnostic Procedure (Cont'd)

3	CHECK GROUND CIRCUIT

1. Turn ignition switch OFF.
2. Check harness continuity between intake air temperature sensor terminal 2 and engine ground. Refer to the wiring diagram.

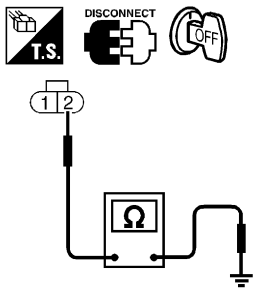

SEF102S

Continuity should exist.

3. Also check harness for short to power.

OK or NG

OK	▶	GO TO 5.
NG	▶	GO TO 4.

4	DETECT MALFUNCTIONING PART

Check the following.
- Harness connectors E43, M65
- Harness connectors M58, F28
- Harness connectors M59, F27
- Harness for open or short between ECM and intake air temperature sensor

	▶	Repair open circuit or short to power in harness or connectors.

5	CHECK INTAKE AIR TEMPERATURE SENSOR

Check resistance as shown in the figure.

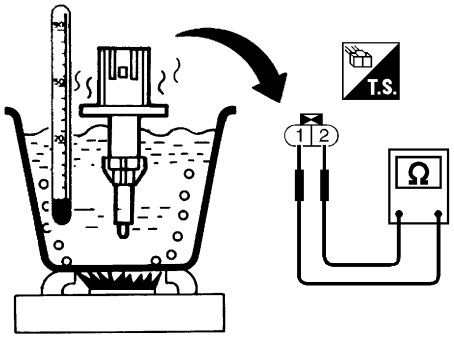

SEF205W

<Reference data>

EGR coolant temperature °C (°F)	Voltage* V	Resistance k Ω
–10 (14)	4.4	7.0 - 11.4
20 (68)	3.5	2.1 - 2.9
50 (122)	2.2	0.68 - 1.00
90 (194)	0.9	0.236 - 0.260

*: These data are reference values and are measured between ECM terminal ⑲ (Engine coolant temperature sensor) and ECM terminal ㉜ (ECM ground).

MTBL0327

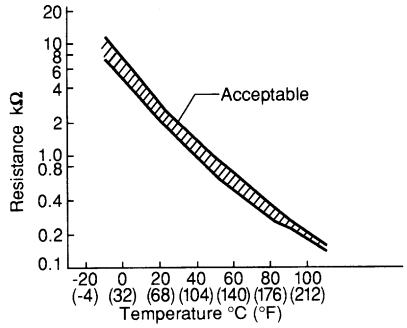

SEF012P

OK or NG

OK	▶	GO TO 6.
NG	▶	Replace intake air temperature sensor.

6	CHECK INTERMITTENT INCIDENT
Perform "TROUBLE DIAGNOSIS FOR INTERMITTENT INCIDENT", EC-148.	
▶	**INSPECTION END**

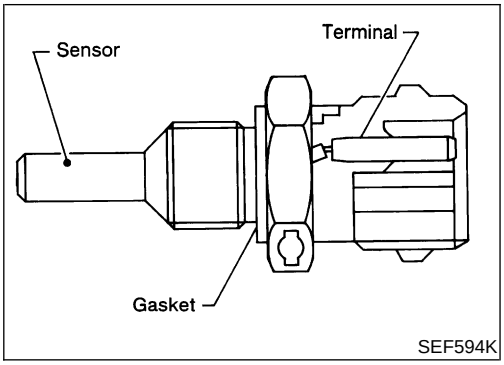

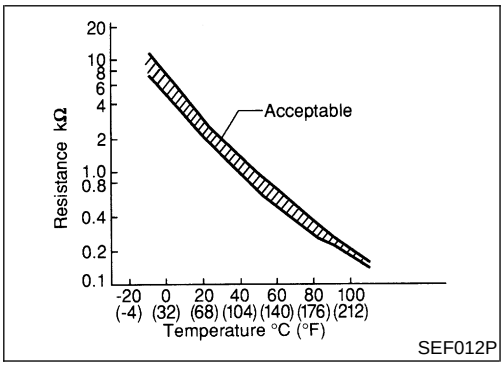

Component Description

NEEC0072

The engine coolant temperature sensor is used to detect the engine coolant temperature. The sensor modifies a voltage signal from the ECM. The modified signal returns to the ECM as the engine coolant temperature input. The sensor uses a thermistor which is sensitive to the change in temperature. The electrical resistance of the thermistor decreases as temperature increases.

<Reference data>

Engine coolant temperature °C (°F)	Voltage* V	Resistance kΩ
−10 (14)	4.4	7.0 - 11.4
20 (68)	3.5	2.1 - 2.9
50 (122)	2.2	0.68 - 1.00
90 (194)	0.9	0.236 - 0.260

*: These data are reference values and are measured between ECM terminal 59 (Engine coolant temperature sensor) and ground.

CAUTION:

Do not use ECM ground terminals when measuring input/ output voltage. Doing so may result in damage to the ECM's transistor. Use a ground other than ECM terminals, such as the ground.

CONSULT-II Reference Value in Data Monitor Mode

NEEC0073

MONITOR ITEM	CONDITION	SPECIFICATION
COOLAN TEMP/S	• Engine: After warming up	More than 70°C (158°F)

On Board Diagnosis Logic

NEEC0074

DTC No.	Malfunction is detected when ...	Check Items (Possible Cause)
P0115	• An excessively high or low voltage from the sensor is sent to ECM.*	• Harness or connectors (The sensor circuit is open or shorted.) • Engine coolant temperature sensor

*: When this malfunction is detected, the ECM enters fail-safe mode and the MIL lights up.

Detected items	Engine operating condition in fail-safe mode	
Engine coolant temperature sensor circuit	Engine coolant temperature will be determined by ECM based on the time after turning ignition switch to ON or START. CONSULT-II displays the engine coolant temperature decided by ECM.	
	Condition	Engine coolant temperature decided (CONSULT-II display)
	Just as ignition switch is turned to ON or Start	40°C (104°F)
	More than approx. 4 minutes after ignition ON or Start	80°C (176°F)
	Except as shown above	40 - 80°C (104 - 176°F) (Depends on the time)

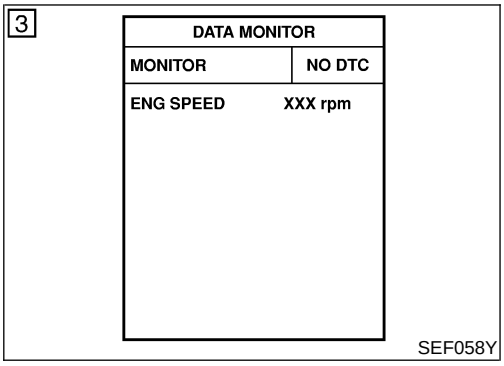

DTC Confirmation Procedure

NEEC0075

NOTE:

If "DTC Confirmation Procedure" has been previously conducted, always turn ignition switch OFF and wait at least 5 seconds before conducting the next test.

With CONSULT-II

1) Turn ignition switch ON.
2) Select "DATA MONITOR" mode with CONSULT-II.
3) Wait at least 5 seconds.
4) If 1st trip DTC is detected, go to "Diagnostic Procedure", EC-177.

With GST

Follow the procedure "With CONSULT-II".

Wiring Diagram

NEEC0076

EC-ECTS-01

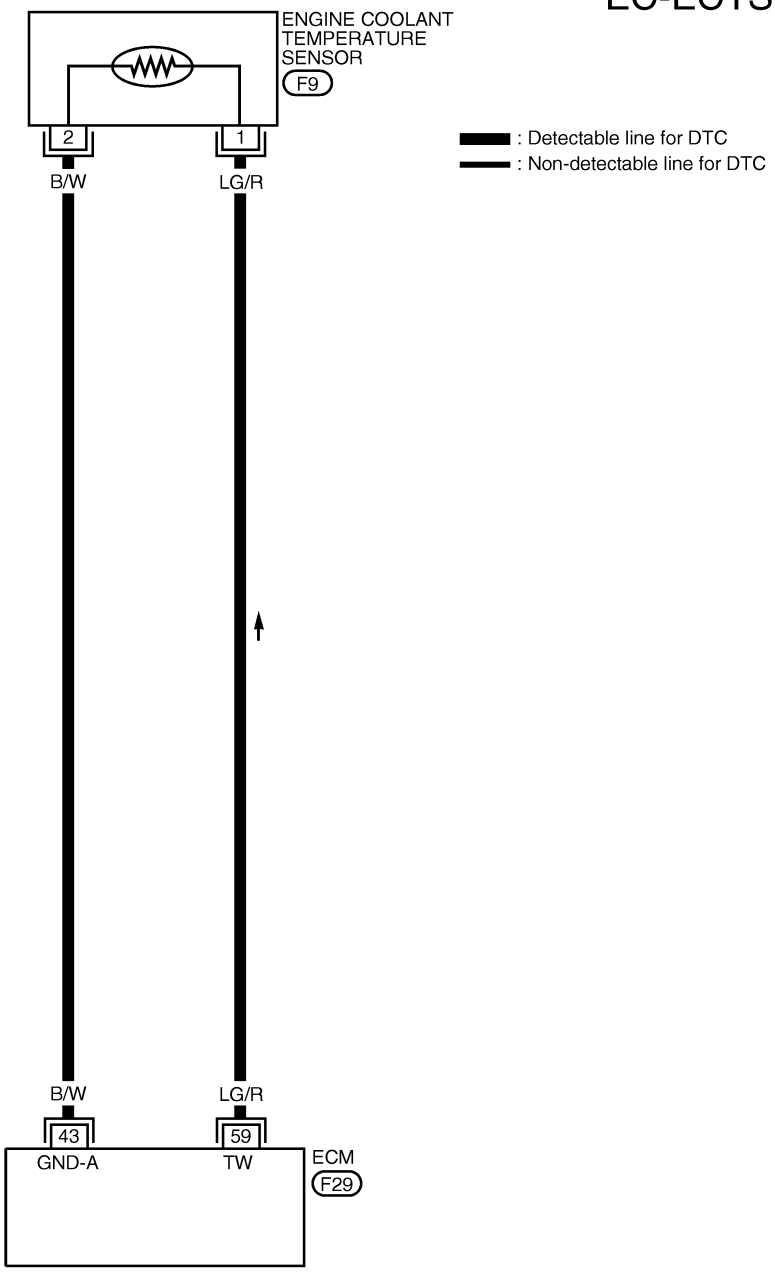

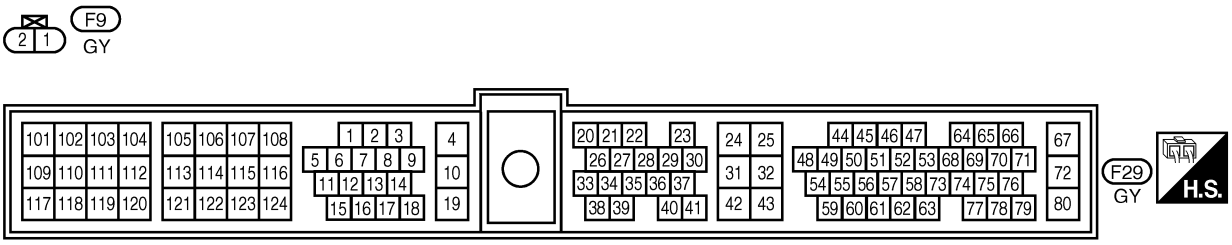

AEC984A

Diagnostic Procedure

NEEC0077

1	CHECK POWER SUPPLY

1. Turn ignition switch OFF.
2. Disconnect engine coolant temperature sensor harness connector.

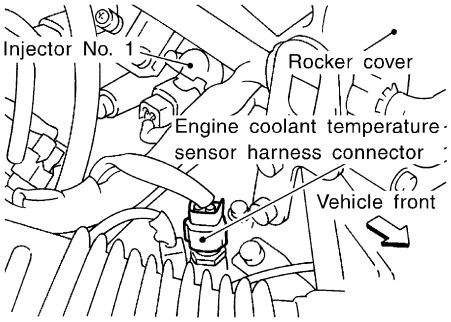

SEF330V

3. Turn ignition switch ON.
4. Check voltage between engine coolant temperature sensor terminal 1 and ground with CONSULT-II or tester.

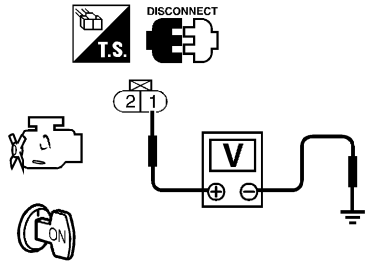

SEF206W

Voltage: Approximately 5V

OK or NG

OK	▶	GO TO 3.
NG	▶	GO TO 2.

2	DETECT MALFUNCTIONING PART

Check the harness for open or short between ECM and engine coolant temperature sensor.

	▶	Repair harness or connectors.

3	CHECK GROUND CIRCUIT

1. Turn ignition switch OFF.
2. Check harness continuity between engine coolant temperature sensor terminal 2 and engine ground. Refer to EC-176.
   Continuity should exist.
3. Also check harness for short to power.

OK or NG

OK	▶	GO TO 5.
NG	▶	GO TO 4.

4	DETECT MALFUNCTIONING PART

Check the harness for open or short between ECM and engine coolant temperature sensor.

	▶	Repair open circuit or short to power in harness or connectors.

Diagnostic Procedure (Cont'd)

5	CHECK ENGINE COOLANT TEMPERATURE SENSOR

Check resistance as shown in the figure.

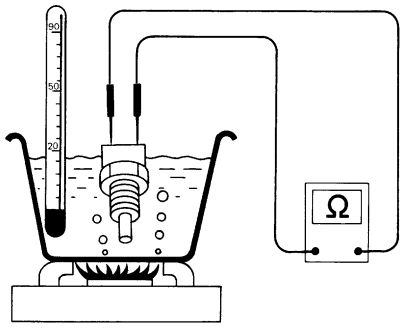

SEF152P

<Reference data>

Temperature °C (°F)	Resistance kΩ
20 (68)	2.1 - 2.9
50 (122)	0.68 - 1.00
90 (194)	0.236 - 0.260

MTBL0285

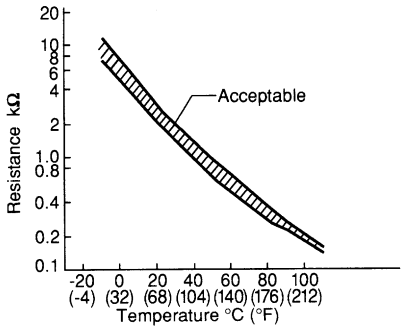

SEF012P

OK or NG

OK	▶	GO TO 6.
NG	▶	Replace engine coolant temperature sensor.

6	CHECK INTERMITTENT INCIDENT
Perform "TROUBLE DIAGNOSIS FOR INTERMITTENT INCIDENT", EC-148.	
▶	**INSPECTION END**

Component Description

NEEC0079

NOTE:
If DTC P0120 (0403) is displayed with DTC P0510 (0203), first perform trouble diagnosis for DTC P0510, EC-440.

The throttle position sensor responds to the accelerator pedal movement. This sensor is a type of potentiometer which transforms the throttle position into output voltage, and emits the voltage signal to the ECM. In addition, the sensor detects the opening and closing speed of the throttle valve and feeds the voltage signal to the ECM.

Idle position of the throttle valve is determined by the ECM receiving the signal from the throttle position sensor. This sensor controls engine operation such as fuel cut. On the other hand, the “Wide open and closed throttle position switch”, which is built into the throttle position sensor unit, is not used for engine control.

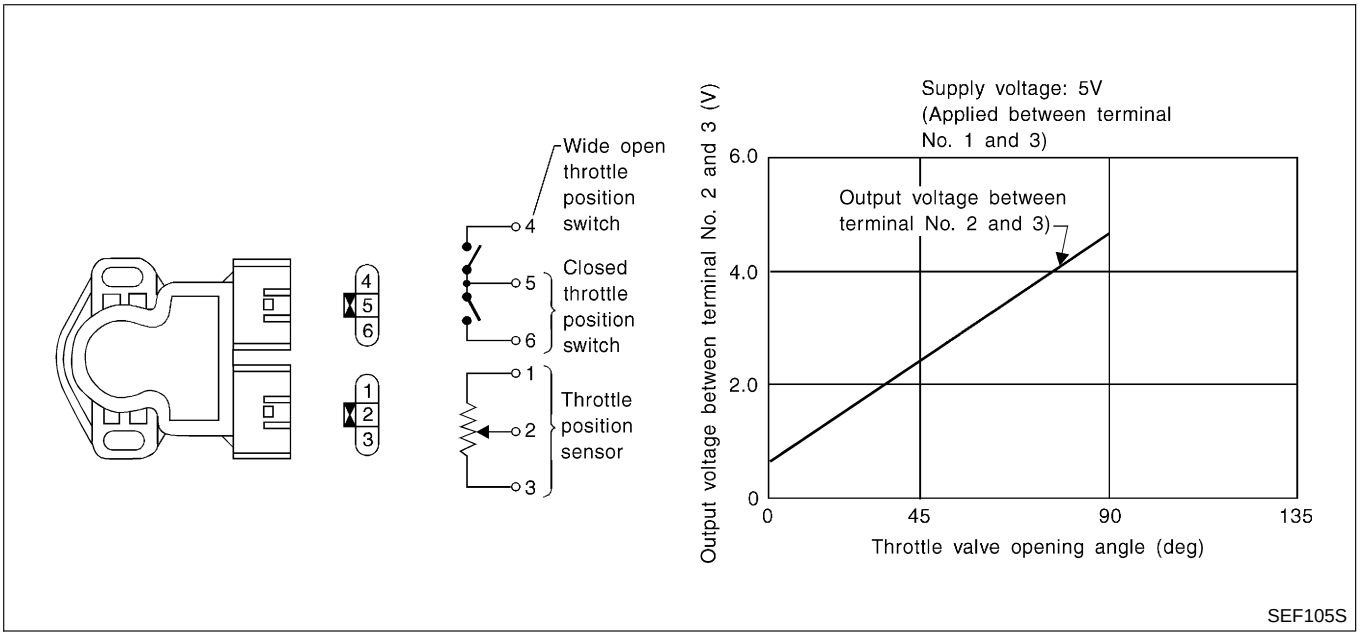

CONSULT-II Reference Value in Data Monitor Mode

NEEC0080

Specification data are reference values.

MONITOR ITEM	CONDITION		SPECIFICATION
THRTL POS SEN	• Ignition switch: ON (Engine stopped) • Engine: After warming up	Throttle valve: fully closed	0.2 - 0.8V
		Throttle valve: fully opened	3.5 - 4.5V
ABSOL TH·P/S	• Ignition switch: ON (Engine stopped) • Engine: After warming up	Throttle valve: fully closed	0.0%
		Throttle valve: fully opened	Approx. 80%

ECM Terminals and Reference Value

=NEEC0081

Specification data are reference values and are measured between each terminal and ground.

CAUTION:

Do not use ECM ground terminals when measuring input/output voltage. Doing so may result in damage to the ECM's transistor. Use a ground other than ECM terminals, such as the ground.

TERMINAL NO.	WIRE COLOR	ITEM	CONDITION	DATA (DC Voltage)
23	L	Throttle position sensor	**[Ignition switch ON]** ● **Warm-up condition** ● Accelerator pedal fully released	0.2 - 0.8V
			[Ignition switch ON] ● Accelerator pedal fully depressed	3.5 - 4.5V
42	BR	Sensors' power supply	**[Ignition switch ON]**	Approximately 5V
43	B/W	Sensors' ground	**[Engine is running]** ● Idle speed	Approximately 0V

On Board Diagnosis Logic

NEEC0082

DTC No.		Malfunction is detected when ...	Check Items (Possible Cause)
P0120	A)	An excessively low or high voltage from the sensor is sent to ECM.*	● Harness or connectors (The throttle position sensor circuit is open or shorted.) ● Throttle position sensor
	B)	A high voltage from the sensor is sent to ECM under light load driving condition.	● Harness or connectors (The throttle position sensor circuit is open or shorted.) ● Throttle position sensor ● Fuel injector ● Camshaft position sensor ● Mass air flow sensor
	C)	A low voltage from the sensor is sent to ECM under heavy load driving condition.	● Harness or connectors (The throttle position sensor circuit is open or shorted.) ● Intake air leaks ● Throttle position sensor

*: When this malfunction is detected, the ECM enters fail-safe mode and the MIL lights up.

Detected items	Engine operating condition in fail-safe mode	
Throttle position sensor circuit	Throttle position will be determined based on the injected fuel amount and the engine speed. Therefore, acceleration will be poor.	
	Condition	Driving condition
	When engine is idling	Normal
	When accelerating	Poor acceleration

DTC Confirmation Procedure

=NEEC0083

Perform "PROCEDURE FOR MALFUNCTION A" first. If the 1st trip DTC cannot be confirmed, perform "PROCEDURE FOR MALFUNCTION B". If there is no problem on "PROCEDURE FOR MALFUNCTION B", perform "PROCEDURE FOR MALFUNCTION C".

NOTE:

If "DTC Confirmation Procedure" has been previously conducted, always turn ignition switch OFF and wait at least 5 seconds before conducting the next test.

PROCEDURE FOR MALFUNCTION A

NEEC0083S01

CAUTION:

Always drive vehicle at a safe speed.

TESTING CONDITION:

- **Before performing the following procedure, confirm that battery voltage is more than 10V at idle.**
- **This test may be conducted with the drive wheels lifted in the shop or by driving the vehicle. If a road test is expected to be easier, it is unnecessary to lift the vehicle.**

2

DATA MONITOR	
MONITOR	NO DTC
ENG SPEED	XXX rpm
VHCL SPEED SE	XXX km/h
P/N POSI SW	OFF

SEF065Y

With CONSULT-II

1) Turn ignition switch ON and select "DATA MONITOR" mode with CONSULT-II.
2) Start engine and maintain the following conditions for at least 5 consecutive seconds.

VHCL SPEED SE	More than 4 km/h (2 MPH)
Selector lever	Suitable position except "P" or "N" position

3) If 1st trip DTC is detected, go to "Diagnostic Procedure", EC-185.

With GST

Follow the procedure "With CONSULT-II".

No Tools

1) Start engine and maintain the following conditions for at least 5 consecutive seconds.

Vehicle speed	More than 4 km/h (2 MPH)
Selector lever	Suitable position except "P" or "N" position

2) Turn ignition switch OFF and wait at least 5 seconds.
3) Turn ignition switch ON and perform "Diagnostic Test Mode II (Self-diagnostic results)" with ECM.
4) If 1st trip DTC is detected, go to "Diagnostic Procedure", EC-185.

DTC Confirmation Procedure (Cont'd)

3

DATA MONITOR	
MONITOR	NO DTC
ENG SPEED	XXX rpm

SEF058Y

PROCEDURE FOR MALFUNCTION B

NEEC0083S02

With CONSULT-II

1) Turn ignition switch ON.
2) Select "DATA MONITOR" mode with CONSULT-II.
3) Start engine and let it idle for at least 10 seconds.
   If idle speed is over 1,100 rpm, maintain the following conditions for at least 10 seconds to keep engine speed below 1,100 rpm.

Selector lever	Suitable position except "N" (Higher gear position such as 3rd or 4th is better to keep low engine rpm.)
Accelerator pedal	Released
Vehicle speed	As slow as possible

4) If 1st trip DTC is detected, go to "Diagnostic Procedure", EC-185.

With GST

Follow the procedure "With CONSULT-II".

6

DATA MONITOR	
MONITOR	NO DTC
THRTL POS SEN	XXX V
ABSOL TH-P/S	XXX %

SEF177Y

PROCEDURE FOR MALFUNCTION C

NEEC0083S03

CAUTION:

Always drive vehicle at a safe speed.

With CONSULT-II

1) Start engine and warm it up to normal operating temperature.
2) Turn ignition switch OFF and wait at least 5 seconds.
3) Turn ignition switch ON.
4) Select "MANU TRIG" in "DATA MONITOR" mode with CONSULT-II.
5) Select "THRTL POS SEN" and "ABSOL TH·P/S" in "DATA MONITOR" mode with CONSULT-II.
6) Press RECORD on CONSULT-II SCREEN at the same time accelerator pedal is depressed.
7) Print out the recorded graph and check the following:

- The voltage rise is linear in response to accelerator pedal depression.
- The voltage when accelerator pedal is fully depressed is approximately 4V.
  If NG, go to "Diagnostic Procedure", EC-185.
  If OK, go to following step.

7

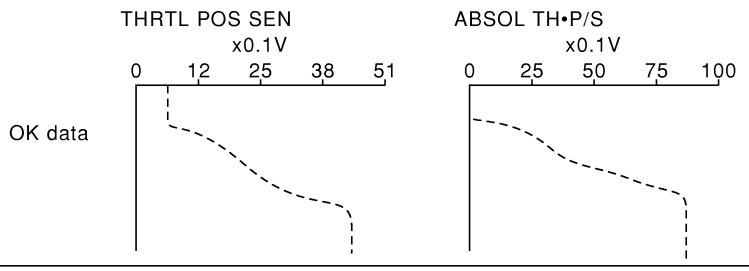

Trigger	THRTL POS SEN	ABSOL TH/PO SEN
	V	%
00"43	2.52	48.8
00"44	2.64	52.0
00"45	2.76	54.9
00"46	2.88	57.4
00"47	3.00	60.5
00"48	3.12	63.3
00"49	3.24	66.1
00"50	3.34	68.9
00"51	3.46	71.4
00"52	3.56	74.2
00"53	3.68	77.0
00"54	3.80	79.8

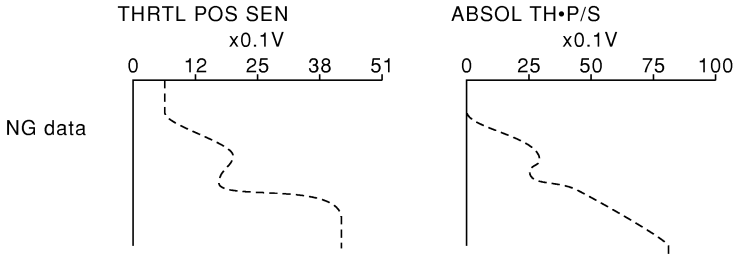

Trigger	THRTL POS SEN	ABSOL TH/PO SEN
	V	%
00"33	1.96	38.7
00"34	2.02	39.1
00"35	2.08	39.5
00"36	2.14	39.9
00"37	2.20	41.3
00"38	2.26	42.7
00"39	2.32	44.4
00"41	2.26	42.7
00"42	2.20	41.3
00"43	2.58	50.4
00"44	2.66	52.5
00"45	2.76	54.9

SEF245Y

9

DATA MONITOR	
MONITOR	NO DTC
ENG SPEED	XXX rpm
MAS A/F SE-B1	XXX V
COOLAN TEMP/S	XXX °C

SEF178Y

8) Select "AUTO TRIG" in "DATA MONITOR" mode with CONSULT-II.
9) Maintain the following conditions for at least 10 consecutive seconds.

ENG SPEED	More than 2,000 rpm
MAS A/F SE-B1	More than 3V
COOLAN TEMP/S	More than 70°C (158°F)
Selector lever	Suitable position
Driving location	Driving vehicle uphill (Increased engine load) will help maintain the driving conditions required for this test.

10) If 1st trip DTC is detected, go to "Diagnostic Procedure", EC-185.

With GST
Follow the procedure "With CONSULT-II".

Wiring Diagram

NEEC0084

EC-TPS-01

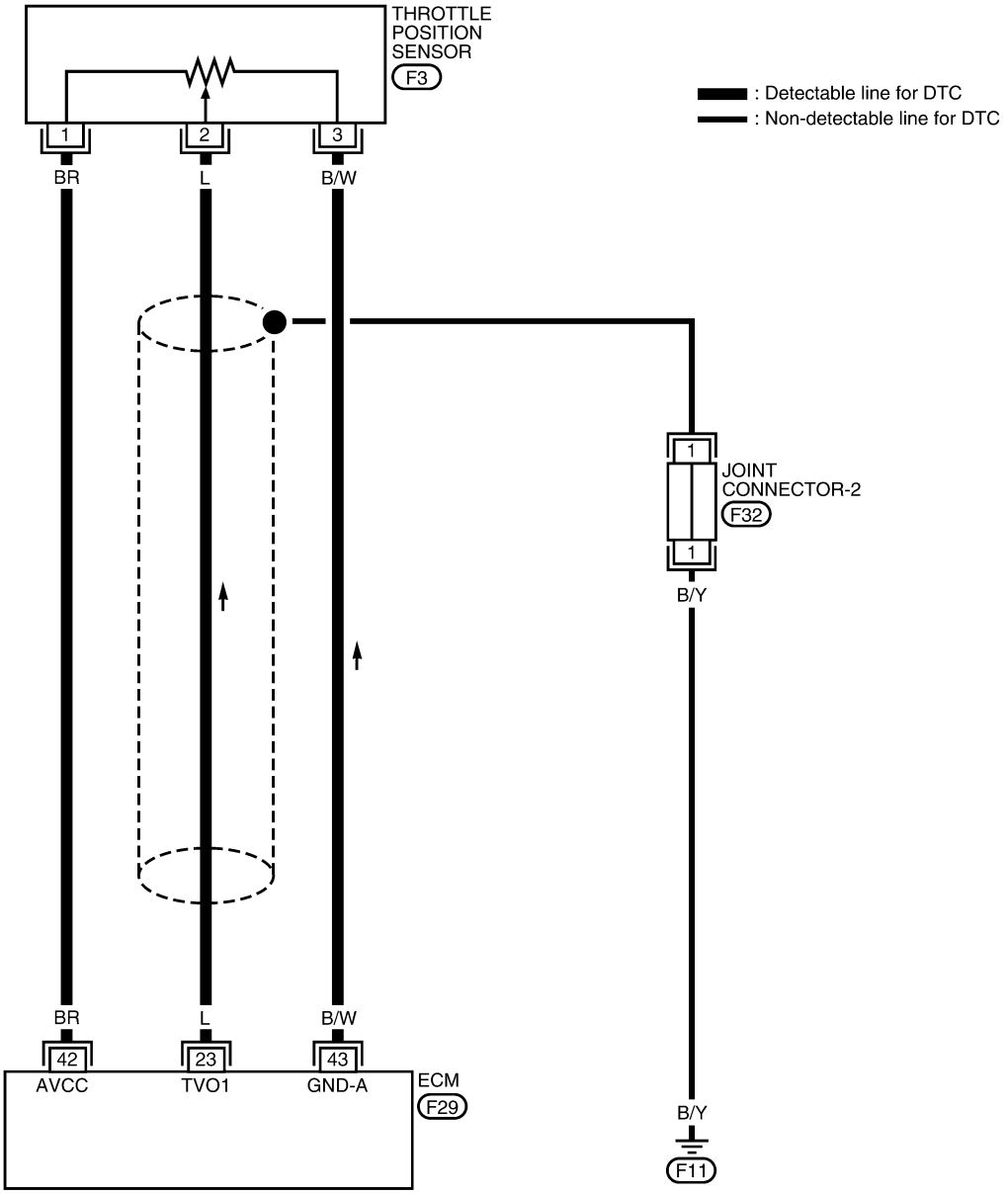

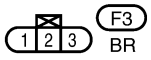

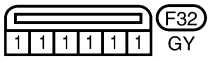

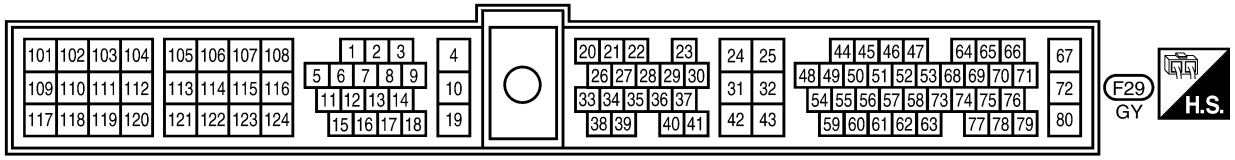

WEC771

Diagnostic Procedure

NEEC0085

1	INSPECTION START

Which malfunction A, B or C is duplicated?

MALFUNCTION	Type
A	A
B	B
C	C

MTBL0066

Type A, B or C

Type A or B	▶	GO TO 4.
Type C	▶	GO TO 2.

2	ADJUST THROTTLE POSITION SENSOR

1. Check the following items. Refer to “Basic Inspection”, EC-110.

Items	Specifications
Ignition timing	20° ± 2° BTDC
Base idle speed	750 ± 50 rpm (in “P” or “N” position)
Closed throttle position switch idle position adjustment	Feeler gauge thickness and switch condition 0.1 mm (0.004 in): ON 0.3 mm (0.012 in): OFF
Target idle speed	800 ± 50 rpm (in “P” or “N” position)

MTBL0328

OK or NG

OK	▶	GO TO 3.

3	CHECK INTAKE SYSTEM

Check the following for connection.
- Air duct
- Air cleaner
- Vacuum hoses
- Intake air passage between air duct to intake manifold collector

OK or NG

OK	▶	GO TO 4.
NG	▶	Reconnect the parts.

4	RETIGHTEN GROUND SCREWS

1. Turn ignition switch OFF.
2. Loosen and retighten engine ground screws.

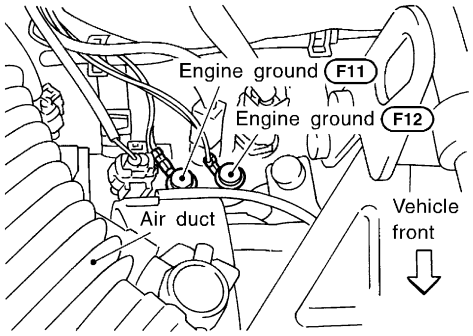

SEF325V

	▶	GO TO 5.

5	CHECK POWER SUPPLY

1. Disconnect throttle position sensor harness connector.

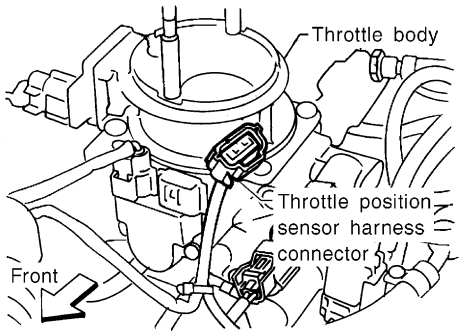

SEF265S

2. Turn ignition switch ON.
3. Check voltage between terminal 1 and ground with CONSULT-II or tester.

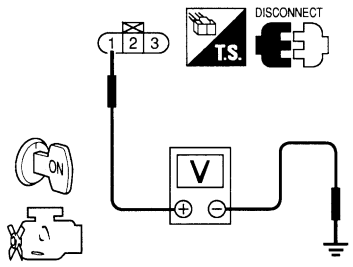

SEF564P

Voltage: Approximately 5V

OK or NG

OK	▶	GO TO 6.
NG	▶	Repair harness or connectors.

6	CHECK GROUND CIRCUIT

1. Turn ignition switch OFF.
2. Check harness continuity between throttle position sensor terminal 3 and engine ground. Refer to the wiring diagram.

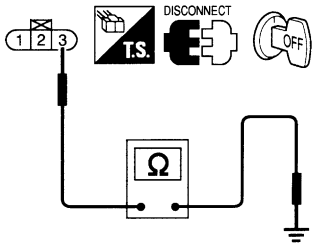

SEF565P

Continuity should exist.

3. Also check harness for short to power.

OK or NG

OK	▶	GO TO 8.
NG	▶	GO TO 7.

7	DETECT MALFUNCTIONING PART

Check harness for open or short between ECM and throttle position sensor.

	▶	Repair open circuit or short to power in harness or connectors.

8	CHECK INPUT SIGNAL CIRCUIT

1. Disconnect ECM harness connector.
2. Check harness continuity between ECM terminal 23 and terminal 2.
   Refer to "Wiring Diagram", EC-184
   Continuity should exist.
3. Also check harness for short to ground and short to power.

OK or NG

OK (With CONSULT-II)	▶	GO TO 9.
OK (Without CONSULT-II)	▶	GO TO 10.
NG	▶	Repair open circuit or short to ground or short to power in harness or connectors.

9	CHECK THROTTLE POSITION SENSOR

With CONSULT-II

1. Start engine and warm it up to normal operating temperature.
2. Stop engine and turn ignition switch ON.
3. Select "DATA MONITOR" mode with CONSULT-II.
4. Check voltage of "THRTL POS SEN" under the following conditions.

DATA MONITOR	
MONITOR	NO DTC
ENG SPEED	XXX rpm
COOLAN TEMP/S	XXX °C
THRTL POS SEN	XXX V

SEF179Y

NOTE:
Voltage measurement must be made with throttle position sensor installed in vehicle.

Throttle valve conditions	Voltage V
Completely closed	0.2 - 0.8 (a)
Partially open	Between (a) and (b)
Completely open	3.5 - 4.5 (b)

MTBL0579

If NG, adjust closed throttle position switch. Refer to "Basic Inspection", EC-110.

OK or NG

OK (Type B in step 1)	▶	GO TO 11.
OK (Type A or C in step 1)	▶	GO TO 14.
NG	▶	Replace throttle position sensor. To adjust it, perform "Basic Inspection", EC-110.

10	CHECK THROTTLE POSITION SENSOR

Without CONSULT-II

1. Start engine and warm it up to normal operating temperature.
2. Stop engine and turn ignition switch ON.
3. Check voltage between ECM terminal 23 (Throttle position sensor signal) and ground under the following conditions.

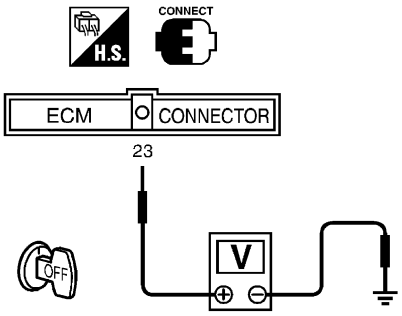

SEF767W

NOTE:
Voltage measurement must be made with throttle position sensor installed in vehicle.

Throttle valve conditions	Voltage V
Completely closed	0.2 - 0.8 (a)
Partially open	Between (a) and (b)
Completely open	3.5 - 4.5 (b)

MTBL0579

If NG, adjust closed throttle position switch. Refer to "Basic Inspection", EC-110.

OK or NG

OK (Type B in step 1)	▶	GO TO 11.
OK (Type A or C in step 1)	▶	GO TO 14.
NG	▶	Replace throttle position sensor. To adjust it, perform "Basic Inspection", EC-110.

11 CHECK MASS AIR FLOW SENSOR

1. Turn ignition switch ON.
2. Start engine and warm it up to normal operating temperature.
3. Check voltage between ECM terminal 54 (Mass air flow sensor signal) and ground.

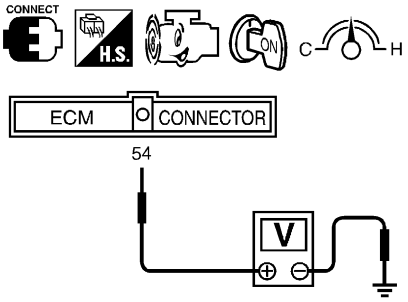

SEF326V

Conditions	Voltage V
Ignition switch "ON" (Engine stopped.)	Less than 1.0
Idle (Engine is warmed-up to normal operating temperature.)	0.9 - 1.8
2,500 rpm (Engine is warmed-up to normal operating temperature.)	1.9 - 2.3
Idle to about 4,000 rpm*	1.3 - 1.7 to Approx. 3.0

*: Check for linear voltage rise in response to increases to about 4,000 rpm in engine speed.

MTBL0326

4. If the voltage is out of specification, disconnect mass air flow sensor harness connector and connect it again. Repeat above check.
5. If NG, remove mass air flow sensor from air duct. Check hot wire for damage or dust.

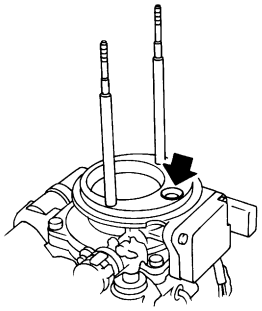

SEF893J

OK or NG

OK	▶	GO TO 12.
NG	▶	Replace mass air flow sensor.

12	CHECK CAMSHAFT POSITION SENSOR

1. Start engine and warm it up to normal operating temperature.
2. Check voltage between ECM terminals 49 and engine ground, ECM terminal 44 and engine ground.

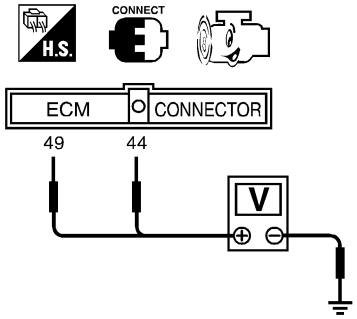

Terminal 44 and engine ground

Condition	Idle	2,000 rpm
Voltage	0.2 - 0.5V	0 - 0.5V
Pulse signal	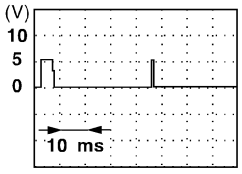	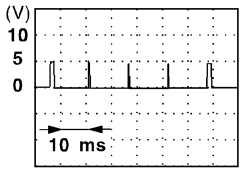

Terminal 49 and engine ground

Condition	Idle	2,000 rpm
Voltage	Approximately 2.6V	Approximately 2.5 - 2.6V
Pulse signal	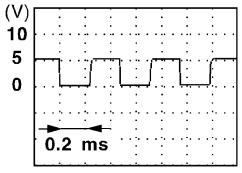	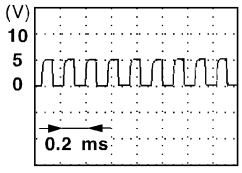

SEF868Z

OK or NG

OK	▶	GO TO 13.
NG	▶	Replace distributor assembly with camshaft position sensor.

13	CHECK FUEL INJECTOR

1. Disconnect injector harness connector.
2. Check resistance between terminals as shown in the figure.

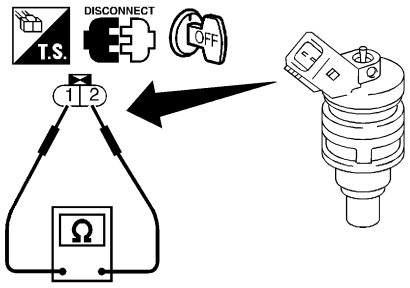

SEF273W

Resistance: 10 - 14Ω [at 25°C (77°F)]

OK or NG

OK	▶	GO TO 14.
NG	▶	Replace fuel injector.

Diagnostic Procedure (Cont'd)

14	CHECK SHIELD CIRCUIT	
1. Turn ignition switch OFF. 2. Remove joint connector-1. 3. Check the following. ● Continuity between joint connector-1 terminal 1 and ground ● Joint connector-1 (Refer to "HARNESS LAYOUT", ***EL-239***.) **Continuity should exist.** 4. Also check harness for short to power. 5. Then reconnect joint connector.		
OK or NG		
OK	▶	GO TO 15.
NG	▶	Repair open circuit or short to power in harness or connectors.

15	CHECK INTERMITTENT INCIDENT
Perform "TROUBLE DIAGNOSIS FOR INTERMITTENT INCIDENT", EC-148.	
▶	**INSPECTION END**

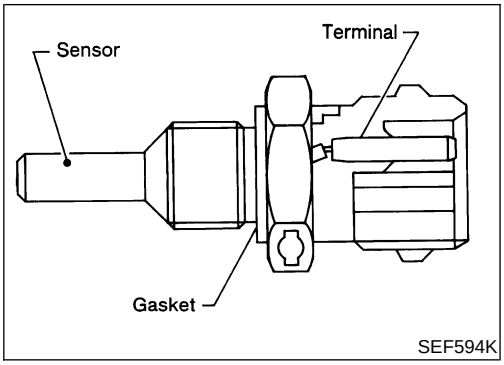

SEF594K

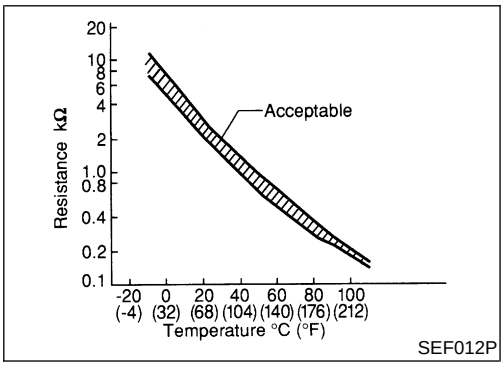

SEF012P

Component Description

NEEC0087

NOTE:

If DTC P0125 (0908) is displayed with P0115 (0103), first perform trouble diagnosis for DTC P0115, EC-174.

The engine coolant temperature sensor is used to detect the engine coolant temperature. The sensor modifies a voltage signal from the ECM. The modified signal returns to the ECM as the engine coolant temperature input. The sensor uses a thermistor which is sensitive to the change in temperature. The electrical resistance of the thermistor decreases as temperature increases.

<Reference data>

Engine coolant temperature °C (°F)	Voltage* V	Resistance kΩ
−10 (14)	4.4	7.0 - 11.4
20 (68)	3.5	2.1 - 2.9
50 (122)	2.2	0.68 - 1.00
90 (194)	0.9	0.236 - 0.260

*: These data are reference values and are measured between ECM terminal 59 (Engine coolant temperature sensor) and ground.

CAUTION:

Do not use ECM ground terminals when measuring input/ output voltage. Doing so may result in damage to the ECM's transistor. Use a ground other than ECM terminals, such as the ground.

On Board Diagnosis Logic

NEEC0089

DTC No.	Malfunction is detected when ...	Check Items (Possible Cause)
P0125	• Voltage sent to ECM from the sensor is not practical, even when some time has passed after starting the engine. • Engine coolant temperature is insufficient for closed loop fuel control.	• Harness or connectors (High resistance in the circuit) • Engine coolant temperature sensor • Thermostat

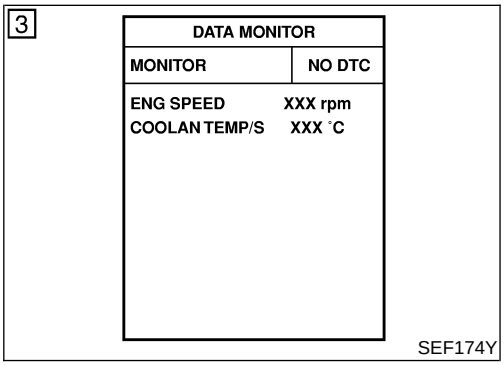

SEF174Y

DTC Confirmation Procedure

NEEC0090

CAUTION:

Be careful not to overheat engine.

NOTE:

If "DTC Confirmation Procedure" has been previously conducted, always turn ignition switch OFF and wait at least 5 seconds before conducting the next test.

With CONSULT-II

1) Turn ignition switch ON.
2) Select "DATA MONITOR" mode with CONSULT-II.

DTC Confirmation Procedure (Cont'd)

3) Start engine and run it for 65 minutes at idle speed.
If "COOLAN TEMP/S" increases to more than 10°C (50°F) within 65 minutes, stop engine because the test result will be OK.
4) If 1st trip DTC is detected, go to "Diagnostic Procedure", EC-196.

With GST

Follow the procedure "With CONSULT-II".

Wiring Diagram

NEEC0091

EC-ECTS-01

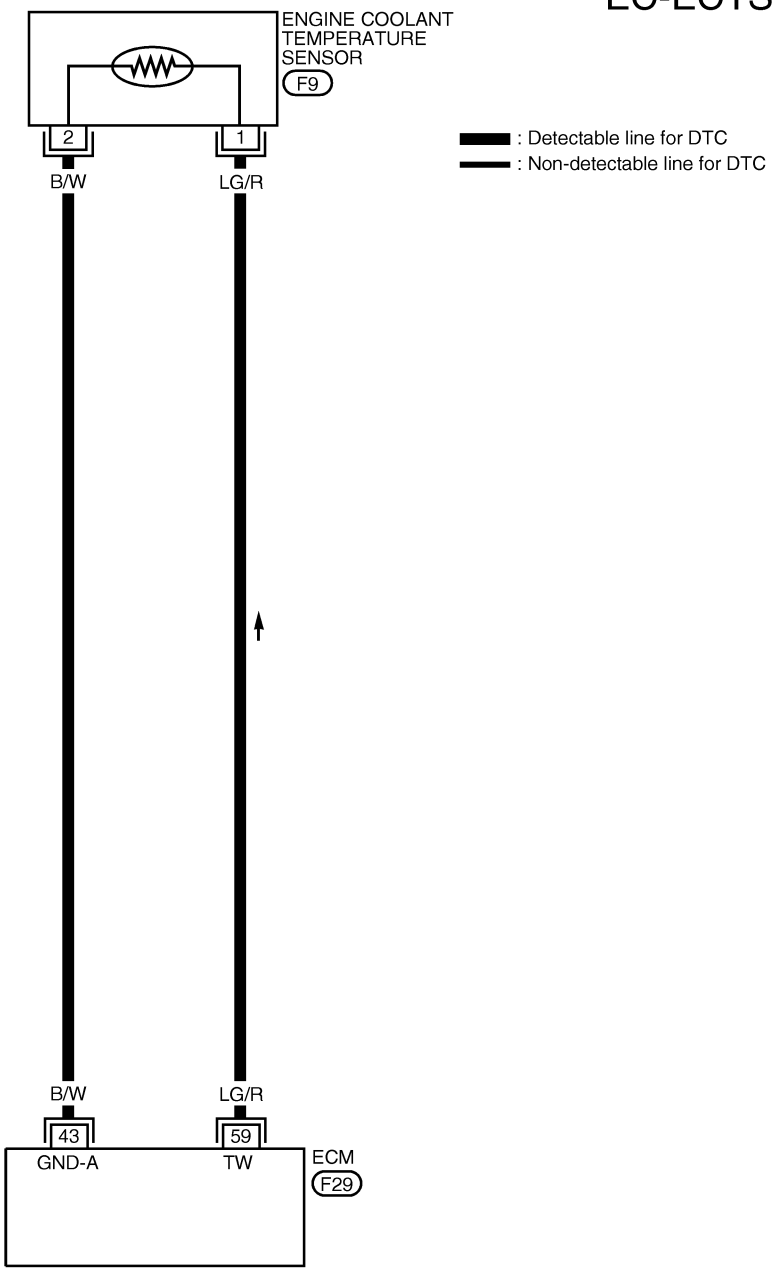

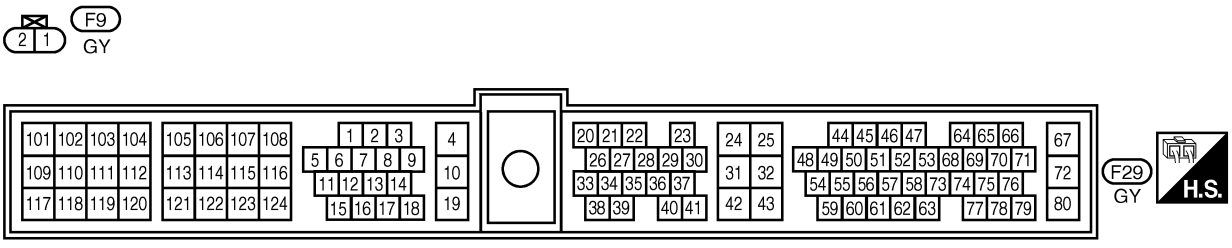

AEC984A

Diagnostic Procedure

NEEC0092

1	CHECK POWER SUPPLY

1. Turn ignition switch OFF.
2. Disconnect engine coolant temperature sensor harness connector.

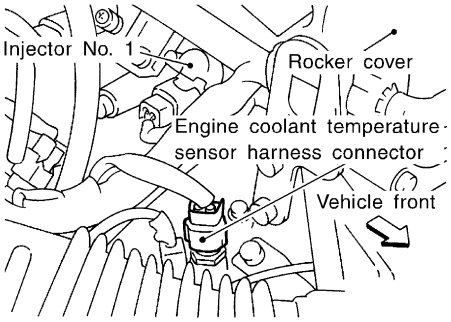

SEF330V

3. Turn ignition switch ON.
4. Check voltage between coolant temperature sensor connector F9 terminal 1 and ground with CONSULT-II or tester.

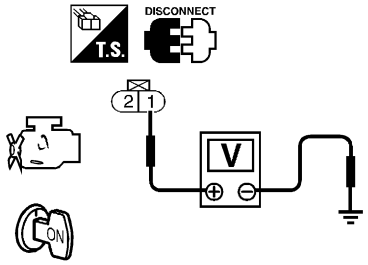

SEF206W

Voltage: Approximately 5V

OK or NG

OK	▶	GO TO 3.
NG	▶	GO TO 2.

2	DETECT MALFUNCTIONING PART

Check the harness for open or short between ECM and engine coolant temperature sensor.

	▶	Repair harness or connectors.

3	CHECK GROUND CIRCUIT

1. Turn ignition switch OFF.
2. Check harness continuity between engine coolant temperature sensor connector F9 terminal 2 and engine ground. Refer to the wiring diagram.
   Continuity should exist.
3. Also check harness for short to power.

OK or NG

OK	▶	GO TO 5.
NG	▶	GO TO 4.

4	DETECT MALFUNCTIONING PART

Check the harness for open or short between ECM and engine coolant temperature sensor.

	▶	Repair open circuit or short to power in harness or connectors.

5	CHECK ENGINE COOLANT TEMPERATURE SENSOR

Check resistance as shown in the figure.

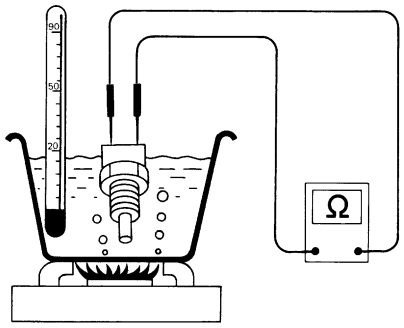

SEF152P

<Reference data>

Temperature °C (°F)	Resistance kΩ
20 (68)	2.1 - 2.9
50 (122)	0.68 - 1.00
90 (194)	0.236 - 0.260

MTBL0285

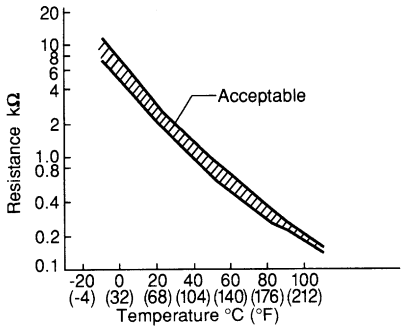

SEF012P

OK or NG

OK	▶	GO TO 6.
NG	▶	Replace engine coolant temperature sensor.

6	CHECK THERMOSTAT OPERATION

When the engine is cooled [lower than 76.5°C (170°F)], condition grasp lower radiator hose and confirm the engine coolant does not flow.

OK or NG

OK	▶	GO TO 7.
NG	▶	Repair or replace thermostat. Refer to "Thermostat", "ENGINE COOLING SYSTEM", ***LC-13***.

7	CHECK INTERMITTENT INCIDENT

Perform "TROUBLE DIAGNOSIS FOR INTERMITTENT INCIDENT", EC-148.

▶ **INSPECTION END**

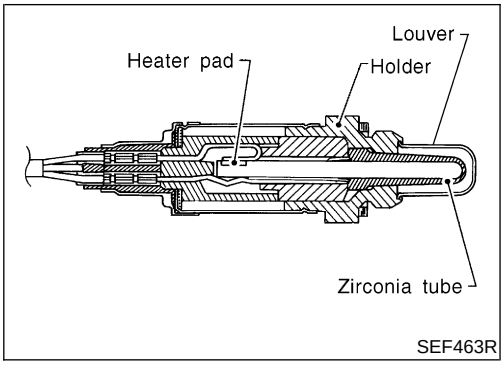

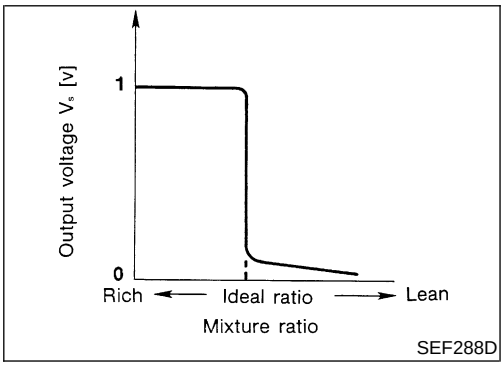

Component Description

NEEC0094

The heated oxygen sensor 1 (front) is placed into the exhaust manifold. It detects the amount of oxygen in the exhaust gas compared to the outside air. The heated oxygen sensor 1 (front) has a closed-end tube made of ceramic zirconia. The zirconia generates voltage from approximately 1V in richer conditions to 0V in leaner conditions. The heated oxygen sensor 1 (front) signal is sent to the ECM. The ECM adjusts the injection pulse duration to achieve the ideal air-fuel ratio. The ideal air-fuel ratio occurs near the radical change from 1V to 0V.

CONSULT-II Reference Value in Data Monitor Mode

NEEC0095

Specification data are reference values.

MONITOR ITEM	CONDITION		SPECIFICATION
HO2S1 (B1)	● Engine: After warming up	Maintaining engine speed at 2,000 rpm	0 - 0.3V ⟷ Approx. 0.6 - 1.0V
HO2S1 MNTR (B1)			LEAN ⟷ RICH Changes more than 5 times during 10 seconds.

ECM Terminals and Reference Value

NEEC0096

Specification data are reference values and are measured between each terminal and ground.

CAUTION:

Do not use ECM ground terminals when measuring input/output voltage. Doing so may result in damage to the ECM's transistor. Use a ground other than ECM terminals, such as the ground.

TERMINAL NO.	WIRE COLOR	ITEM	CONDITION	DATA (DC Voltage)
50	B	Heated oxygen sensor 1 (front)	**[Engine is running]** ● After warming up to normal operating temperature and engine speed is 2,000 rpm	0 - Approximately 1.0V 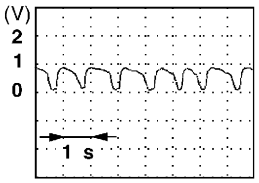 SEF008W

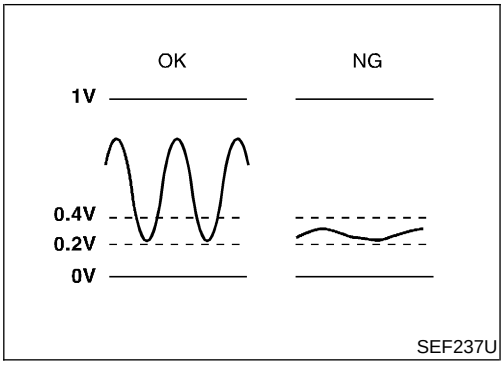

On Board Diagnosis Logic

NEEC0097

Under the condition in which the heated oxygen sensor 1 (front) signal is not input, the ECM circuits will read a continuous approximately 0.3V. Therefore, for this diagnosis, the time that output voltage is within 200 to 400 mV range is monitored, and the diagnosis checks that this time is not inordinately long.

DTC No.	Malfunction is detected when ...	Check Items (Possible Cause)
P0130	• The voltage from the sensor is constantly approx. 0.3V.	• Harness or connectors (The sensor circuit is open or shorted.) • Heated oxygen sensor 1 (front)

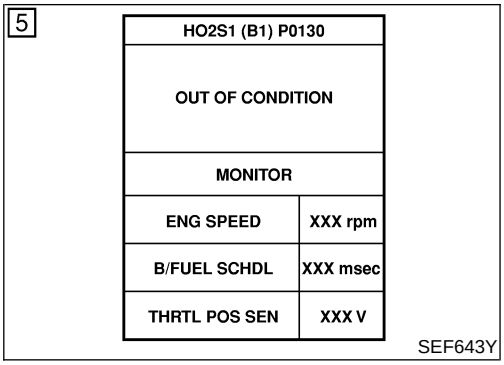

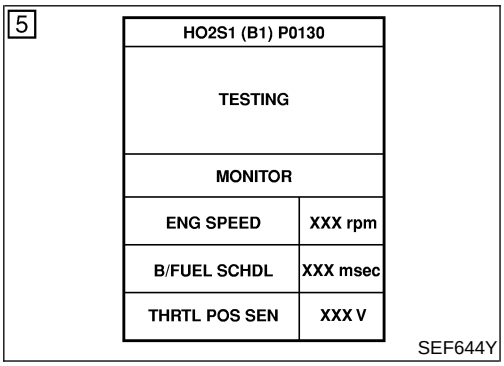

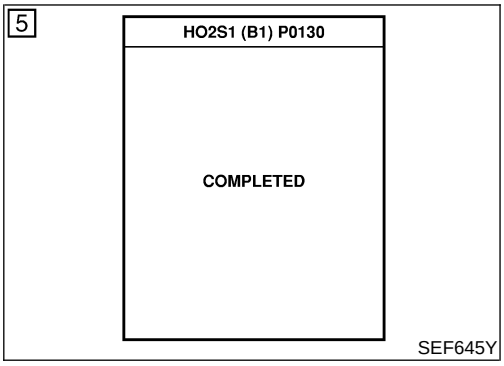

DTC Confirmation Procedure

=NEEC0098

CAUTION:

Always drive vehicle at a safe speed.

NOTE:

If "DTC Confirmation Procedure" has been previously conducted, always turn ignition switch OFF and wait at least 5 seconds before conducting the next test.

TESTING CONDITION:

Before performing the following procedure, confirm that battery voltage is more than 11V at idle.

With CONSULT-II

1) Start engine and warm it up to normal operating temperature.
2) Select "HO2S1 (B1) P0130" of "HO2S1 (front)" in "DTC WORK SUPPORT" mode with CONSULT-II.
3) Touch "START".
4) Let it idle for at least 3 minutes.

NOTE:

Never raise engine speed above 3,000 rpm after this step. If the engine speed limit is exceeded, return to step 4.

5) When the following conditions are met, "TESTING" will be displayed on the CONSULT-II screen. Maintain the conditions continuously until "TESTING" changes to "COMPLETED". (It will take approximately 10 to 60 seconds.)

ENG SPEED	1,400 - 4,000 rpm
Vehicle speed	64 - 130 km/h (40 - 81 MPH)
B/FUEL SCHDL	3.5 - 17 msec
Selector lever	Suitable position

If "TESTING" is not displayed after 5 minutes, retry from step 2.

6) Make sure that "OK" is displayed after touching "SELF-DIAG RESULTS". If "NG" is displayed, refer to "Diagnostic Procedure", EC-203.

During this test, P1148 may be displayed on CONSULT-II screen.

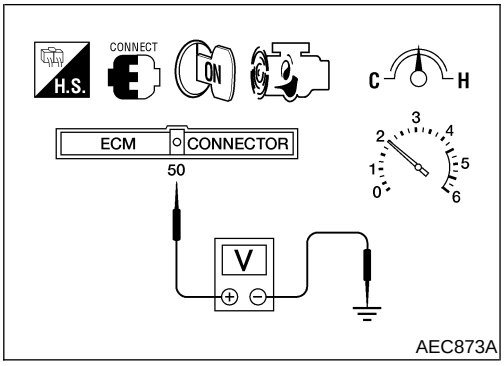

Overall Function Check

=NEEC0099

Use this procedure to check the overall function of the heated oxygen sensor 1 (front) circuit. During this check, a 1st trip DTC might not be confirmed.

Without CONSULT-II

1) Start engine and warm it up to normal operating temperature.
2) Set voltmeter probes between ECM terminal 50 [Heated oxygen sensor 1 (front) signal] and engine ground.
3) Check the following with engine speed held at 2,000 rpm constant under no load.

- The voltage does not remain in the range of 0.2 - 0.4V.

4) If NG, go to “Diagnostic Procedure”, EC-203.

Wiring Diagram

NEEC0100

EC-HO2S1-01

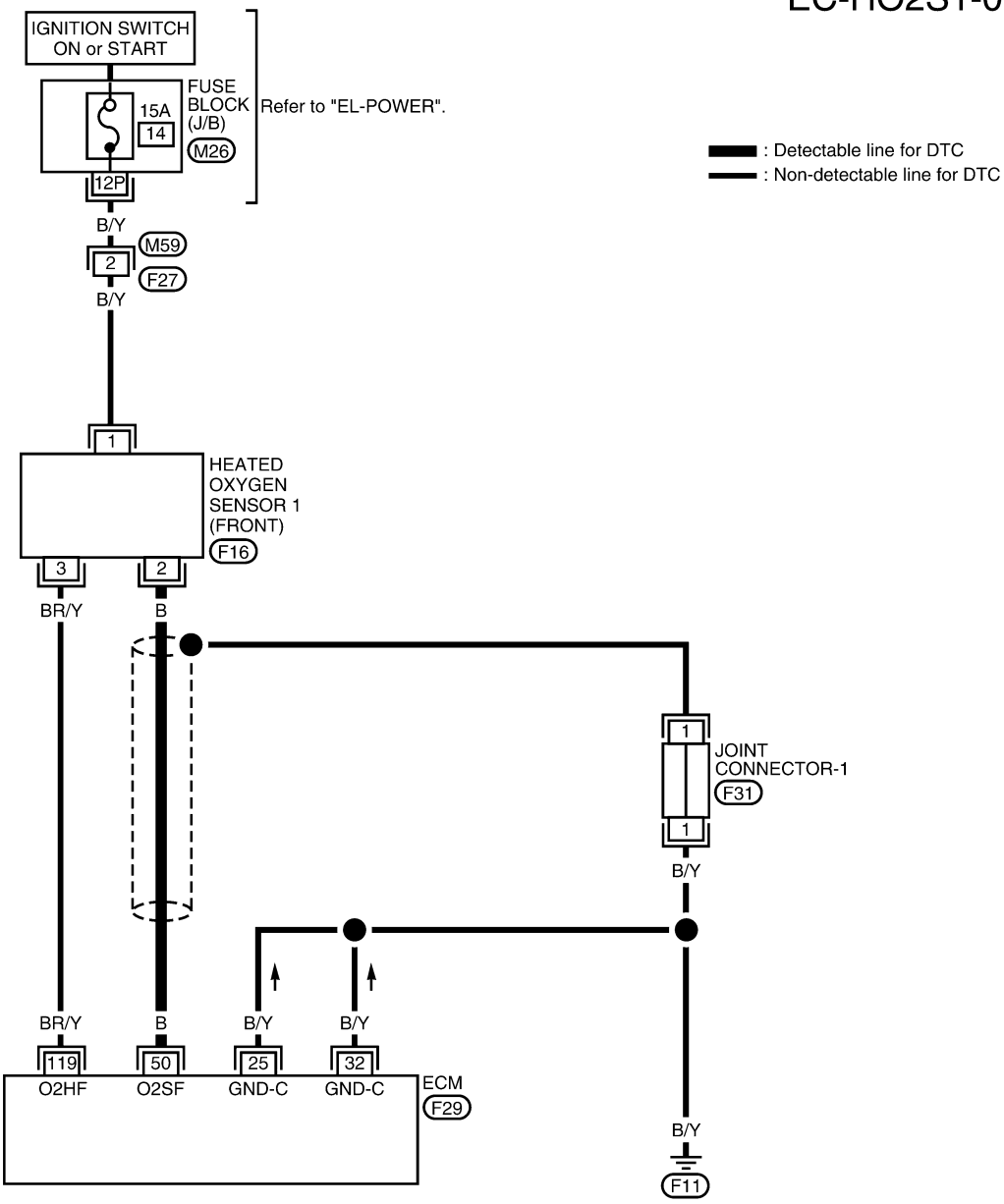

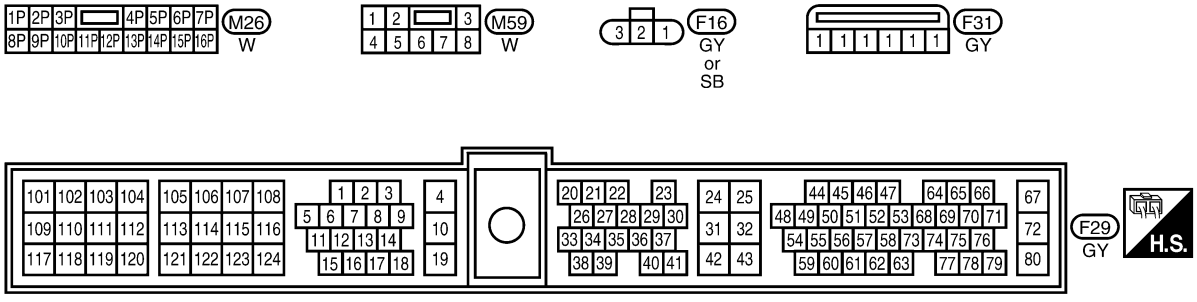

WEC150A

Diagnostic Procedure

NEEC0101

1	INSPECTION START

1. Turn ignition switch OFF.
2. Loosen and retighten engine ground screws.

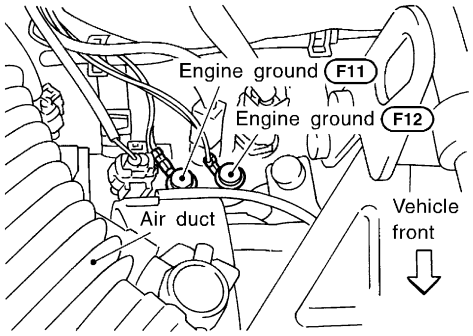

SEF325V

3. Disconnect heated oxygen sensor 1 (front) harness connector.

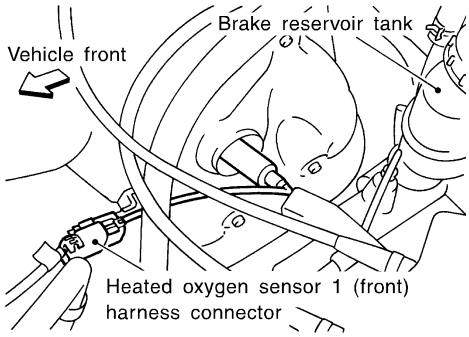

SEF331VA

▶	GO TO 2.

2	CHECK INPUT SIGNAL CIRCUIT

1. Disconnect ECM harness connector.
2. Check harness continuity between ECM harness connector F29 terminal 50 and terminal 2.

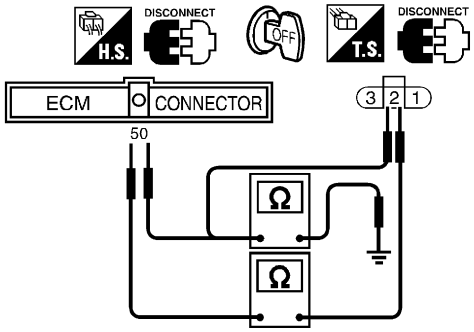

SEF141V

Continuity should exist.

3. Check harness continuity between ECM harness connector F29 terminal 50 (or terminal 2) and ground.

Continuity should not exist.

4. Also check harness for short to power.

OK or NG

OK (With CONSULT-II)	▶	GO TO 3.
OK (Without CONSULT-II)	▶	GO TO 4.
NG	▶	Repair open circuit or short to ground or short to power in harness or connectors.

3	CHECK HEATED OXYGEN SENSOR 1 (FRONT)

With CONSULT-II

1. Start engine and warm it up to normal operating temperature.
2. Select "MANU TRIG" in "DATA MONITOR" mode, and the trigger point is adjusted to 100%.
3. Select "HO2S1 (B1)" AND "HO2S1 MNTR (B1)" in Item Selection.
4. Hold engine speed at 2,000 rpm under no load during the following steps.
5. Touch "START" on CONSULT-II screen.

DATA MONITOR	
MONITOR	NO DTC
ENG SPEED	XXX rpm
MAS A/F SE-B1	XXX V
COOLAN TEMP/S	XXX °C
HO2S1 (B1)	XXX V
HO2S1 MNTR (B1)	LEAN

SEF646Y

6. Check the following.

- "HO2S1 MNTR (B1)" in "DATA MONITOR" mode changes from "RICH" to "LEAN" to "RICH" 5 times in 10 seconds.
  5 times (cycles) are counted as shown below:

cycle	1	2	3	4	5
HO2S1 MNTR (B1)	R-L-R-L-R	L-R-L-R-L	R-L-R-L-R	L-R-L-R-L	R-L-R-L-R

R means HO2S1 MNTR (B1) indicates RICH
L means HO2S1 MNTR (B1) indicates LEAN

SEF217YA

R = "HO2S1 MNTR (B1)", "RICH"
L = "HO2S1 MNTR (B1)", "LEAN"

- "HO2S1 (B1)" voltage goes above 0.6V at least once.
- "HO2S1 (B1)" voltage goes below 0.3V at least once.
- "HO2S1 (B1)" voltage never exceeds 1.0V.

Trigger	ENG SPEED	HO2S1 (B1)
	rpm	V
XXX	XXX	XXX
XXX	XXX	XXX
XXX	XXX	XXX
XXX	XXX	XXX
XXX	XXX	XXX
XXX	XXX	XXX
XXX	XXX	XXX
XXX	XXX	XXX
XXX	XXX	XXX
XXX	XXX	XXX
XXX	XXX	XXX
XXX	XXX	XXX
XXX	XXX	XXX

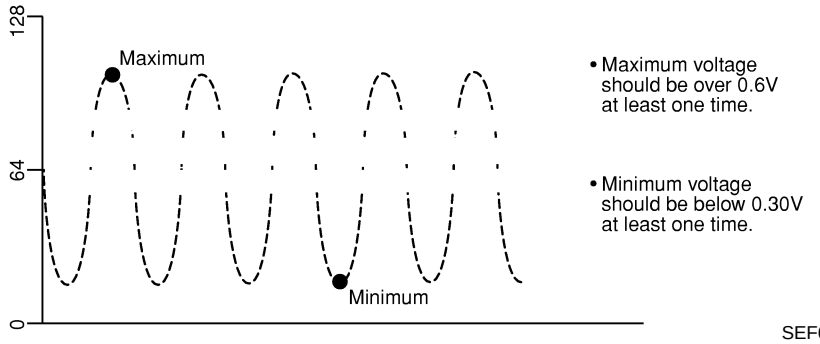

SEF648Y

CAUTION:

- **Discard any heated oxygen sensor which has been dropped from a height of more than 0.5 m (19.7 in) onto a hard surface such as a concrete floor; use a new one.**
- **Before installing new oxygen sensor, clean exhaust system threads using Oxygen Sensor Thread Cleaner tool J-43897-18 or J-43897-12 and approved anti-seize lubricant.**

OK or NG

OK	▶	GO TO 5.
NG	▶	Replace heated oxygen sensor 1 (front).

4	CHECK HEATED OXYGEN SENSOR 1 (FRONT)

Without CONSULT-II

1. Start engine and warm it up to normal operating temperature.
2. Set voltmeter probes between ECM terminal 50 [Heated oxygen sensor 1 (front) signal] and engine ground.

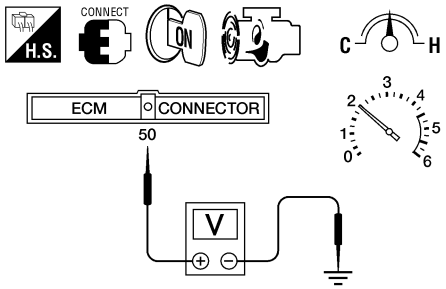

AEC873A

3. Check the following with engine speed held at 2,000 rpm constant under no load.

- The voltage fluctuates between 0 to 0.3V and 0.6 to 1.0V more than five times within 10 seconds.
  1 time: 0 - 0.3V → 0.6 - 1.0V → 0 - 0.3V
  2 times: 0 - 0.3V → 0.6 - 1.0V → 0 - 0.3V → 0.6 - 1.0V → 0 - 0.3V
- The maximum voltage is over 0.6V at least one time.
- The minimum voltage is below 0.3V at least one time.
- The voltage never exceeds 1.0V.

CAUTION:

- **Discard any heated oxygen sensor which has been dropped from a height of more than 0.5 m (19.7 in) onto a hard surface such as a concrete floor; use a new one.**
- **Before installing new oxygen sensor, clean exhaust system threads using Oxygen Sensor Thread Cleaner tool J-43897-18 or J-43897-12 and approved anti-seize lubricant.**

OK or NG

OK	▶	GO TO 5.
NG	▶	Replace heated oxygen sensor 1 (front).

5	CHECK SHIELD CIRCUIT

1. Turn ignition switch OFF.
2. Remove joint connector-1.
3. Check the following.

- Continuity between joint connector-1 terminal 1 and ground
- Joint connector-1
  (Refer to "HARNESS LAYOUT", ***EL-239***.)
  Continuity should exist.

4. Also check harness for short to power.
5. Then reconnect joint connector.

OK or NG

OK	▶	GO TO 6.
NG	▶	Repair open circuit, short to power in harness or connectors.

6	CHECK INTERMITTENT INCIDENT
Perform "TROUBLE DIAGNOSIS FOR INTERMITTENT INCIDENT", EC-148.	
▶	**INSPECTION END**

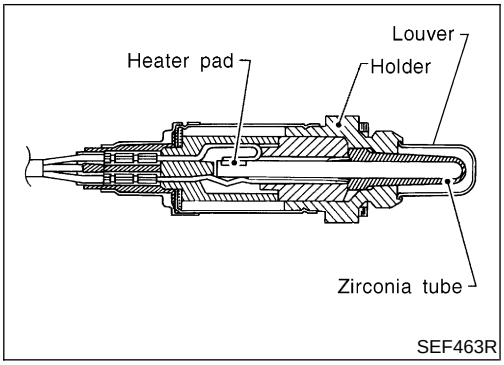

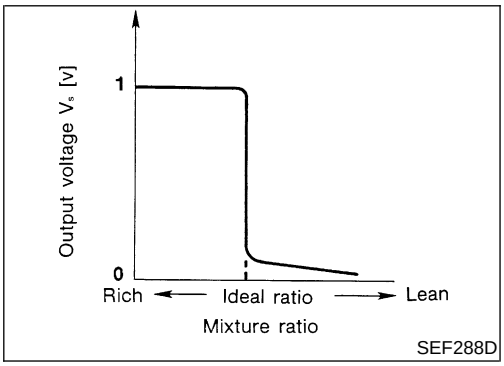

Component Description

NEEC0103

The heated oxygen sensor 1 (front) is placed into the exhaust manifold. It detects the amount of oxygen in the exhaust gas compared to the outside air. The heated oxygen sensor 1 (front) has a closed-end tube made of ceramic zirconia. The zirconia generates voltage from approximately 1V in richer conditions to 0V in leaner conditions. The heated oxygen sensor 1 (front) signal is sent to the ECM. The ECM adjusts the injection pulse duration to achieve the ideal air-fuel ratio. The ideal air-fuel ratio occurs near the radical change from 1V to 0V.

CONSULT-II Reference Value in Data Monitor Mode

NEEC0104

Specification data are reference values.

MONITOR ITEM	CONDITION		SPECIFICATION
HO2S1 (B1)	● Engine: After warming up	Maintaining engine speed at 2,000 rpm	0 - 0.3V ⟷ Approx. 0.6 - 1.0V
HO2S1 MNTR (B1)			LEAN ⟷ RICH Changes more than 5 times during 10 seconds.

ECM Terminals and Reference Value

NEEC0105

Specification data are reference values and are measured between each terminal and ground.

CAUTION:

Do not use ECM ground terminals when measuring input/output voltage. Doing so may result in damage to the ECM's transistor. Use a ground other than ECM terminals, such as the ground.

TERMINAL NO.	WIRE COLOR	ITEM	CONDITION	DATA (DC Voltage)
50	B	Heated oxygen sensor 1 (front)	**[Engine is running]** ● After warming up to normal operating temperature and engine speed is 2,000 rpm	0 - Approximately 1.0V 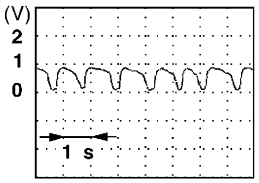 SEF008W

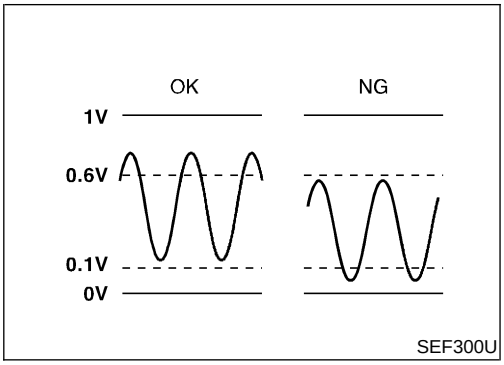

SEF300U

On Board Diagnosis Logic

NEEC0106

To judge the malfunction, the output from the heated oxygen sensor 1 (front) is monitored to determine whether the “rich” output is sufficiently high and whether the “lean” output is sufficiently low. When both the outputs are shifting to the lean side, the malfunction will be detected.

DTC No.	Malfunction is detected when ...	Check Items (Possible Cause)
P0131	• The maximum and minimum voltages from the sensor are not reached to the specified voltages.	• Heated oxygen sensor 1 (front) • Heated oxygen sensor 1 heater (front) • Fuel pressure • Injectors • Intake air leaks

6

HO2S1 (B1) P0131	
OUT OF CONDITION	
MONITOR	
ENG SPEED	XXX rpm
B/FUEL SCHDL	XXX msec
THRTL POS SEN	XXX V

SEF649Y

6

HO2S1 (B1) P0131	
TESTING	
MONITOR	
ENG SPEED	XXX rpm
B/FUEL SCHDL	XXX msec
THRTL POS SEN	XXX V

SEF650Y

6

HO2S1 (B1) P0131
COMPLETED

SEF651Y

DTC Confirmation Procedure

NEEC0107

CAUTION:

Always drive vehicle at a safe speed.

NOTE:

If “DTC Confirmation Procedure” has been previously conducted, always turn ignition switch OFF and wait at least 5 seconds before conducting the next test.

TESTING CONDITION:

- **Always perform at a temperature above −10°C (14°F).**
- **Before performing the following procedure, confirm that battery voltage is more than 11V at idle.**

With CONSULT-II

1) Start engine and warm it up to normal operating temperature.
2) Stop engine and wait at least 5 seconds.
3) Turn ignition switch ON and select “HO2S1 (B1) P0131” of “HO2S1 (front)” in “DTC WORK SUPPORT” mode with CONSULT-II.
4) Touch “START”.
5) Start engine and let it idle for at least 3.0 minutes.

NOTE:

Never raise engine speed above 3,000 rpm after this step. If the engine speed limit is exceeded, return to step 5.

6) When the following conditions are met, “TESTING” will be displayed on the CONSULT-II screen. Maintain the conditions continuously until “TESTING” changes to “COMPLETED”. (It will take approximately 50 seconds or more.)

ENG SPEED	1,200 - 3,150 rpm
Vehicle speed	Less than 100 km/h (Less than 62 MPH)
B/FUEL SCHDL	3.5 - 15 msec
Selector lever	Suitable position

If "TESTING" is not displayed after 5 minutes, retry from step 2.

7) Make sure that "OK" is displayed after touching "SELF-DIAG RESULTS". If "NG" is displayed, refer to "Diagnostic Procedure", EC-208.

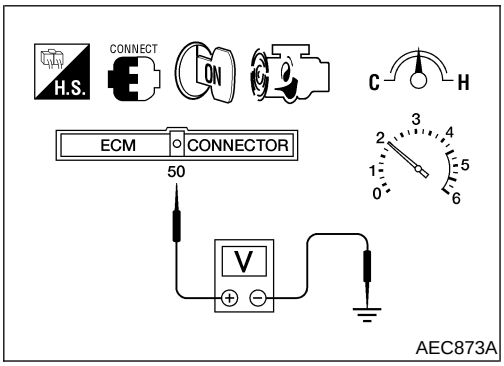

Overall Function Check

NEEC0108

Use this procedure to check the overall function of the heated oxygen sensor 1 (front) circuit. During this check, a 1st trip DTC might not be confirmed.

Without CONSULT-II

1) Start engine and warm it up to normal operating temperature.
2) Set voltmeter probes between ECM terminal 50 [Heated oxygen sensor 1 (front) signal] and engine ground.
3) Check the following with engine speed held at 2,000 rpm constant under no load.
- The maximum voltage is over 0.6V at least one time.
- The minimum voltage is over 0.1V at least one time.
4) If NG, go to "Diagnostic Procedure", EC-208.

Diagnostic Procedure

NEEC0109

1	RETIGHTEN HEATED OXYGEN SENSOR 1 (FRONT)

1. Turn ignition switch OFF.
2. Loosen and retighten heated oxygen sensor 1 (front).

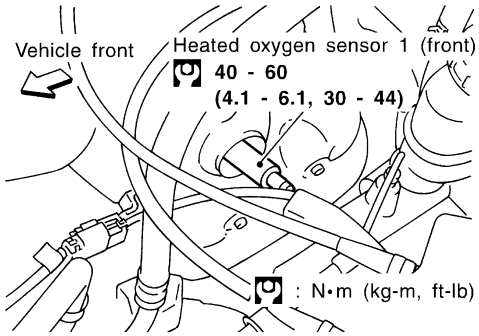

SEF332VA

Tightening torque:
40 - 60 N·m (4.1 - 6.1 kg-m, 30 - 44 ft-lb)

▶	GO TO 2.

2	CLEAR THE SELF-LEARNING DATA.

With CONSULT-II

1. Start engine and warm it up to normal operating temperature.
2. Select "SELF-LEARNING CONT" in "WORK SUPPORT" mode with CONSULT-II.
3. Clear the self-learning control coefficient by touching "CLEAR".

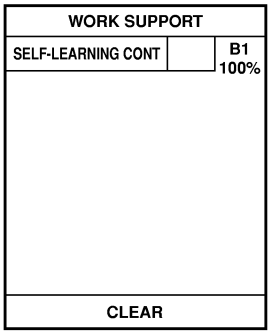

SEF215Z

4. Run engine for at least 10 minutes at idle speed.
   Is the 1st trip DTC P0171 detected? Is it difficult to start engine?

Without CONSULT-II

1. Start engine and warm it up to normal operating temperature.
2. Turn ignition switch OFF.
3. Disconnect mass air flow sensor harness connector, and restart and run engine for at least 3 seconds at idle speed.

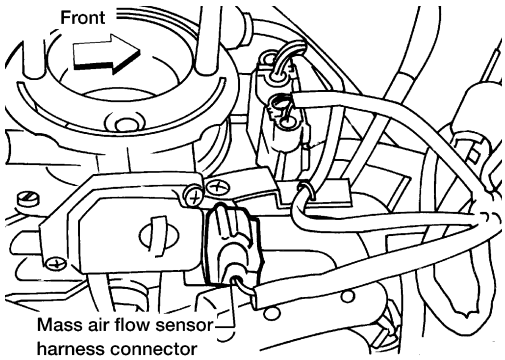

AEC131A

4. Stop engine and reconnect mass air flow sensor harness connector.
5. Make sure 1st trip DTC P0100 is displayed.
6. Erase the 1st trip DTC memory. Refer to "HOW TO ERASE EMISSION-RELATED DIAGNOSTIC INFORMATION", EC-85.
7. Make sure DTC P0000 is displayed.
8. Run engine for at least 10 minutes at idle speed.
   Is the 1st trip DTC P0171 detected? Is it difficult to start engine?

Yes or No

Yes	▶	Perform trouble diagnosis for DTC P0171. Refer to EC-286.
No	▶	GO TO 3.

Diagnostic Procedure (Cont'd)

3	CHECK HEATED OXYGEN SENSOR 1 HEATER (FRONT)

Check resistance between terminals 3 and 1.

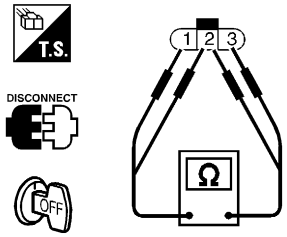

SEF220W

Resistance: 2.3 - 4.3 Ω at 25°C (77°F)

Check continuity between terminals 2 and 1, 3 and 2.

Continuity should not exist.

CAUTION:

Discard any heated oxygen sensor which has been dropped from a height of more than 0.5 m (19.7 in) onto a hard surface such as a concrete floor; use a new one.

OK or NG

OK (With CONSULT-II)	▶	GO TO 4.
OK (Without CONSULT-II)	▶	GO TO 5.
NG	▶	Replace heated oxygen sensor 1 (front).

4	CHECK HEATED OXYGEN SENSOR 1 (FRONT)

With CONSULT-II

1. Start engine and warm it up to normal operating temperature.
2. Select "MANU TRIG" in "DATA MONITOR" mode, and the trigger point is adjusted to 100%.
3. Select "HO2S1 (B1)" AND "HO2S1 MNTR (B1)" in Item Selection.
4. Hold engine speed at 2,000 rpm under no load during the following steps.
5. Touch "START" on CONSULT-II screen.

DATA MONITOR	
MONITOR	NO DTC
ENG SPEED	XXX rpm
MAS A/F SE-B1	XXX V
COOLAN TEMP/S	XXX °C
HO2S1 (B1)	XXX V
HO2S1 MNTR (B1)	LEAN

SEF646Y

6. Check the following.

- "HO2S1 MNTR (B1)" in "DATA MONITOR" mode changes from "RICH" to "LEAN" to "RICH" 5 times in 10 seconds.
  5 times (cycles) are counted as shown below:

cycle	1	2	3	4	5
HO2S1 MNTR (B1)	R-L-R-L-R	L-R-L-R-L	R-L-R-L-R	L-R-L-R-L	R-L-R

R means HO2S1 MNTR (B1) indicates RICH
L means HO2S1 MNTR (B1) indicates LEAN

SEF217YA

R = "HO2S1 MNTR (B1)", "RICH"
L = "HO2S1 MNTR (B1)", "LEAN"

- "HO2S1 (B1)" voltage goes above 0.6V at least once.
- "HO2S1 (B1)" voltage goes below 0.3V at least once.
- "HO2S1 (B1)" voltage never exceeds 1.0V.

Trigger	ENG SPEED	HO2S1 (B1)
	rpm	V
XXX	XXX	XXX
XXX	XXX	XXX
XXX	XXX	XXX
XXX	XXX	XXX
XXX	XXX	XXX
XXX	XXX	XXX
XXX	XXX	XXX
XXX	XXX	XXX
XXX	XXX	XXX
XXX	XXX	XXX
XXX	XXX	XXX
XXX	XXX	XXX
XXX	XXX	XXX

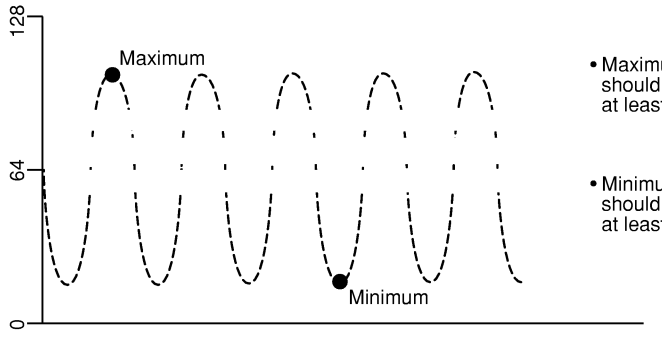

SEF648Y

CAUTION:

- **Discard any heated oxygen sensor which has been dropped from a height of more than 0.5 m (19.7 in) onto a hard surface such as a concrete floor; use a new one.**
- **Before installing new oxygen sensor, clean exhaust system threads using Oxygen Sensor Thread Cleaner tool J-43897-18 or J-43897-12 and approved anti-seize lubricant.**

OK or NG

OK	▶	GO TO 6.
NG	▶	Replace heated oxygen sensor 1 (front).

Diagnostic Procedure (Cont'd)

5	CHECK HEATED OXYGEN SENSOR 1 (FRONT)

Without CONSULT-II

1. Start engine and warm it up to normal operating temperature.
2. Set voltmeter probes between ECM terminal 50 [Heated oxygen sensor 1 (front) signal] and engine ground.

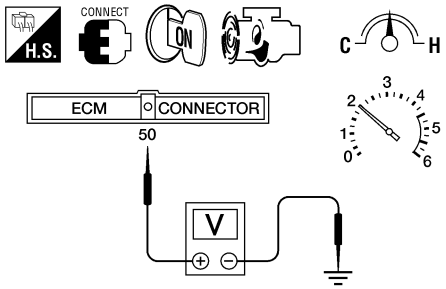

AEC873A

3. Check the following with engine speed held at 2,000 rpm constant under no load.

- The voltage fluctuates between 0 to 0.3V and 0.6 to 1.0V more than five times within 10 seconds.
  1 time: 0 - 0.3V → 0.6 - 1.0V → 0 - 0.3V
  2 times: 0 - 0.3V → 0.6 - 1.0V → 0 - 0.3V → 0.6 - 1.0V → 0 - 0.3V
- The maximum voltage is over 0.6V at least one time.
- The minimum voltage is below 0.3V at least one time.
- The voltage never exceeds 1.0V.

CAUTION:

- **Discard any heated oxygen sensor which has been dropped from a height of more than 0.5 m (19.7 in) onto a hard surface such as a concrete floor; use a new one.**
- **Before installing new oxygen sensor, clean exhaust system threads using Oxygen Sensor Thread Cleaner tool J-43897-18 or J-43897-12 and approved anti-seize lubricant.**

OK or NG

OK	▶	GO TO 6.
NG	▶	Replace heated oxygen sensor 1 (front).

6	CHECK INTERMITTENT INCIDENT

Perform "TROUBLE DIAGNOSIS FOR INTERMITTENT INCIDENT", EC-148.
Refer to "Wiring Diagram", EC-202, for circuit.

	▶	**INSPECTION END**

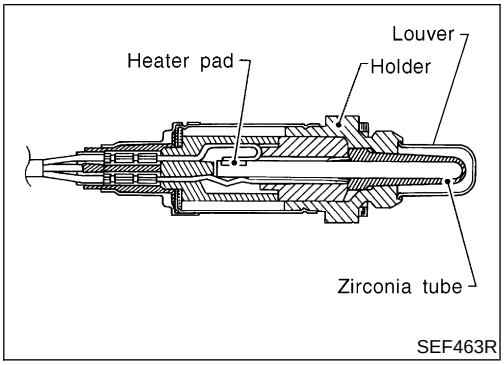

SEF463R

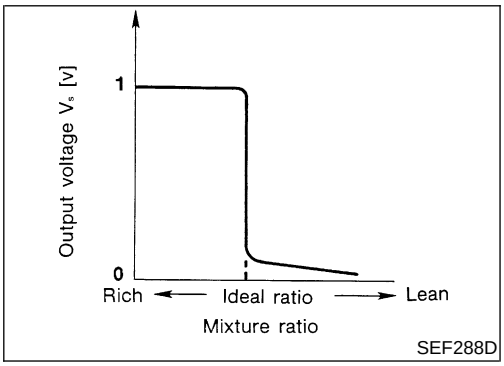

SEF288D

Component Description

NEEC0111

The heated oxygen sensor 1 (front) is placed into the exhaust manifold. It detects the amount of oxygen in the exhaust gas compared to the outside air. The heated oxygen sensor 1 (front) has a closed-end tube made of ceramic zirconia. The zirconia generates voltage from approximately 1V in richer conditions to 0V in leaner conditions. The heated oxygen sensor 1 (front) signal is sent to the ECM. The ECM adjusts the injection pulse duration to achieve the ideal air-fuel ratio. The ideal air-fuel ratio occurs near the radical change from 1V to 0V.

CONSULT-II Reference Value in Data Monitor Mode

NEEC0112

Specification data are reference values.

MONITOR ITEM	CONDITION		SPECIFICATION
HO2S1 (B1)	● Engine: After warming up	Maintaining engine speed at 2,000 rpm	0 - 0.3V ⟷ Approx. 0.6 - 1.0V
HO2S1 MNTR (B1)			LEAN ⟷ RICH Changes more than 5 times during 10 seconds.

ECM Terminals and Reference Value

NEEC0113

Specification data are reference values and are measured between each terminal and ground.

CAUTION:

Do not use ECM ground terminals when measuring input/output voltage. Doing so may result in damage to the ECM's transistor. Use a ground other than ECM terminals, such as the ground.

TERMINAL NO.	WIRE COLOR	ITEM	CONDITION	DATA (DC Voltage)
50	B	Heated oxygen sensor 1 (front)	**[Engine is running]** ● After warming up to normal operating temperature and engine speed is 2,000 rpm	0 - Approximately 1.0V 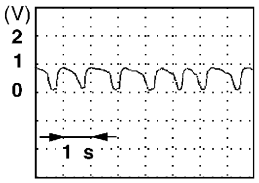 SEF008W

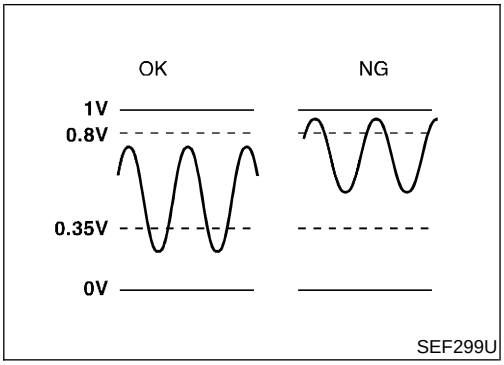

SEF299U

On Board Diagnosis Logic

NEEC0114

To judge the malfunction, the output from the heated oxygen sensor 1 (front) is monitored to determine whether the “rich” output is sufficiently high. The “lean” output is sufficiently low. When both the outputs are shifting to the rich side, the malfunction will be detected.

DTC No.	Malfunction is detected when ...	Check Items (Possible Cause)
P0132	• The maximum and minimum voltages from the sensor are beyond the specified voltages.	• Heated oxygen sensor 1 (front) • Heated oxygen sensor 1 heater (front) • Fuel pressure • Injectors

6

HO2S1 (B1) P0132	
OUT OF CONDITION	
MONITOR	
ENG SPEED	XXX rpm
B/FUEL SCHDL	XXX msec
THRTL POS SEN	XXX V

SEF653Y

6

HO2S1 (B1) P0132	
TESTING	
MONITOR	
ENG SPEED	XXX rpm
B/FUEL SCHDL	XXX msec
THRTL POS SEN	XXX V

SEF654Y

6

HO2S1 (B1) P0132
COMPLETED

SEF655Y

DTC Confirmation Procedure

NEEC0115

CAUTION:

Always drive vehicle at a safe speed.

NOTE:

If “DTC Confirmation Procedure” has been previously conducted, always turn ignition switch OFF and wait at least 5 seconds before conducting the next test.

TESTING CONDITION:

- **Always perform at a temperature above −10°C (14°F).**
- **Before performing the following procedure, confirm that battery voltage is more than 11V at idle.**

With CONSULT-II

1) Start engine and warm it up to normal operating temperature.
2) Stop engine and wait at least 5 seconds.
3) Turn ignition switch ON and select “HO2S1 (front) P0132” of “HO2S1 (front)” in “DTC WORK SUPPORT” mode with CONSULT-II.
4) Touch “START”.
5) Start engine and let it idle for at least 3.0 minutes.

NOTE:

Never raise engine speed above 3,000 rpm after this step. If the engine speed limit is exceeded, return to step 5.

6) When the following conditions are met, “TESTING” will be displayed on the CONSULT-II screen. Maintain the conditions continuously until “TESTING” changes to “COMPLETED”. (It will take approximately 50 seconds or more.)

ENG SPEED	1,200 - 3,150 rpm
Vehicle speed	Less than 100 km/h (Less than 62 MPH)
B/FUEL SCHDL	3.5 - 15 msec
Selector lever	Suitable position

If "TESTING" is not displayed after 5 minutes, retry from step 2.

7) Make sure that "OK" is displayed after touching "SELF-DIAG RESULTS". If "NG" is displayed, refer to "Diagnostic Procedure", EC-215.

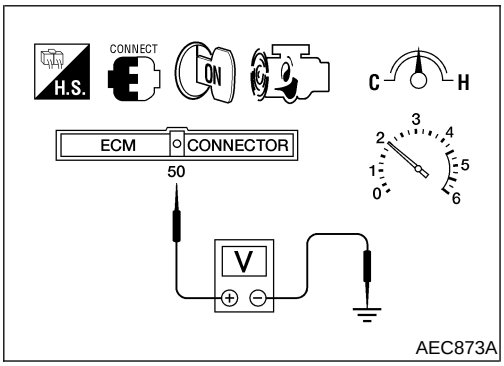

Overall Function Check

NEEC0116

Use this procedure to check the overall function of the front heated oxygen sensor circuit. During this check, a 1st trip DTC might not be confirmed.

Without CONSULT-II

1) Start engine and warm it up to normal operating temperature.
2) Set voltmeter probes between ECM terminal 50 [Heated oxygen sensor 1 (front) signal] and ECM ground.
3) Check the following with engine speed held at 2,000 rpm constant under no load.

- The maximum voltage is below 0.8V at least one time.
- The minimum voltage is below 0.35V at least one time.

4) If NG, go to "Diagnostic Procedure", EC-215.

Diagnostic Procedure

NEEC0117

1	RETIGHTEN HEATED OXYGEN SENSOR 1 (FRONT)

1. Turn ignition switch OFF.
2. Loosen and retighten heated oxygen sensor 1 (front).

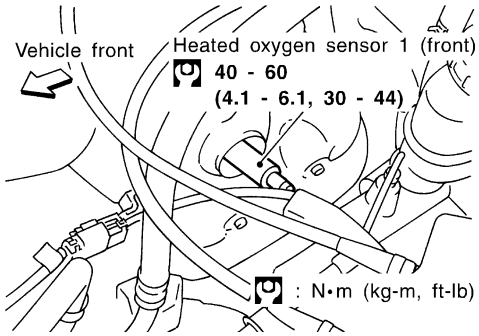

SEF332VA

Tightening torque:
40 - 60 N·m (4.1 - 6.1 kg-m, 30 - 44 ft-lb)

▶	GO TO 2.

Diagnostic Procedure (Cont'd)

2	CLEAR THE SELF-LEARNING DATA

With CONSULT-II

1. Start engine and warm it up to normal operating temperature.
2. Select "SELF-LEARNING CONT" in "ACTIVE TEST" mode with CONSULT-II.
3. Clear the self-learning control coefficient by touching "CLEAR".

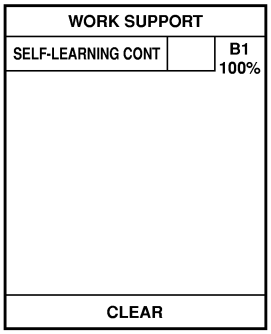

SEF215Z

4. Run engine for at least 10 minutes at idle speed.
   Is the 1st trip DTC P0172 detected? Is it difficult to start engine?

Without CONSULT-II

1. Start engine and warm it up to normal operating temperature.
2. Turn ignition switch OFF.
3. Disconnect mass air flow sensor harness connector, and restart and run engine for at least 3 seconds at idle speed.

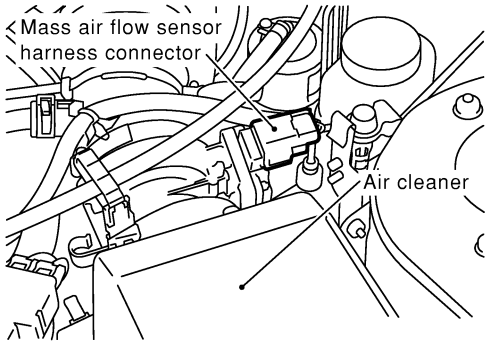

SEF293W

4. Stop engine and reconnect mass air flow sensor harness connector.
5. Make sure 1st trip DTC P0100 is displayed.
6. Erase the 1st trip DTC memory. Refer to "HOW TO ERASE EMISSION-RELATED DIAGNOSTIC INFORMATION", EC-85.
7. Make sure DTC P0000 is displayed.
8. Run engine for at least 10 minutes at idle speed.
   Is the 1st trip DTC P0171 detected? Is it difficult to start engine?

Yes or No

Yes	▶	Perform trouble diagnosis for DTC P0172. Refer to EC-293.
No	▶	GO TO 3.

3	CHECK HARNESS CONNECTOR

1. Turn ignition switch OFF.
2. Disconnect heated oxygen sensor 1 (front) harness connector.
3. Check harness connector for water.
   Water should not exit.

OK or NG

OK	▶	GO TO 4.
NG	▶	Repair or replace harness connector.

4	CHECK HEATED OXYGEN SENSOR 1 HEATER (FRONT)

Check resistance between terminals 3 and 1.

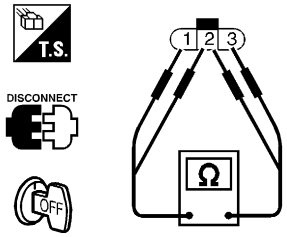

SEF220W

Resistance: 2.3 - 4.3 Ω at 25°C (77°F)

Check continuity between terminals 2 and 1, 3 and 2.

Continuity should not exist.

CAUTION:

- **Discard any heated oxygen sensor which has been dropped from a height of more than 0.5 m (19.7 in) onto a hard surface such as a concrete floor; use a new one.**
- **Before installing new oxygen sensor, clean exhaust system threads using Oxygen Sensor Thread Cleaner tool J-43897-18 or J-43897-12 and approved anti-seize lubricant.**

OK or NG

OK (With CONSULT-II) ▶	GO TO 5.
OK (Without CONSULT-II) ▶	GO TO 6.
NG ▶	Replace heated oxygen sensor 1 (front).

Diagnostic Procedure (Cont'd)

5	CHECK HEATED OXYGEN SENSOR 1 (FRONT)

With CONSULT-II

1. Start engine and warm it up to normal operating temperature.
2. Select "MANU TRIG" in "DATA MONITOR" mode, and the trigger point is adjusted to 100%.
3. Select "HO2S1 (B1)" and "HO2S1 MNTR (B1)" in item selection.
4. Hold engine speed at 2,000 rpm under no load during the following steps.
5. Touch "RECORD" on CONSULT-II screen.

DATA MONITOR	
MONITOR	NO DTC
ENG SPEED	XXX rpm
MAS A/F SE-B1	XXX V
COOLAN TEMP/S	XXX °C
HO2S1 (B1)	XXX V
HO2S1 MNTR (B1)	LEAN

SEF646Y

6. Check the following.

- "HO2S1 MNTR (B1)" in "DATA MONITOR" mode changes from "RICH" to "LEAN" to "RICH" 5 times in 10 seconds.
  5 times (cycles) are counted as shown below:

cycle	1	2	3	4	5
HO2S1 MNTR (B1)	R-L-R-L-R	L-R-L-R-L	R-L-R-L-R	L-R-L-R-L	R-L-R-L-R

R means HO2S1 MNTR (B1) indicates RICH
L means HO2S1 MNTR (B1) indicates LEAN

SEF217YA

R = "HO2S1 MNTR (B1)", "RICH"
L = "HO2S1 MNTR (B1)", "LEAN"

- "HO2S1 (B1)" voltage goes above 0.6V at least once.
- "HO2S1 (B1)" voltage goes below 0.3V at least once.
- "HO2S1 (B1)" voltage never exceeds 1.0V.

Trigger	ENG SPEED	HO2S1 (B1)
	rpm	V
XXX	XXX	XXX
XXX	XXX	XXX
XXX	XXX	XXX
XXX	XXX	XXX
XXX	XXX	XXX
XXX	XXX	XXX
XXX	XXX	XXX
XXX	XXX	XXX
XXX	XXX	XXX
XXX	XXX	XXX
XXX	XXX	XXX
XXX	XXX	XXX
XXX	XXX	XXX

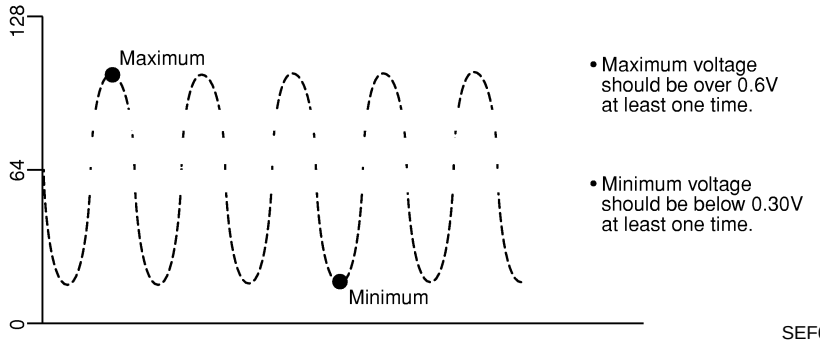

SEF648Y

CAUTION:

- **Discard any heated oxygen sensor which has been dropped from a height of more than 0.5 m (19.7 in) onto a hard surface such as a concrete floor; use a new one.**
- **Before installing new oxygen sensor, clean exhaust system threads using Oxygen Sensor Thread Cleaner tool J-43897-18 or J-43897-12 and approved anti-seize lubricant.**

OK or NG

OK	▶	GO TO 7.
NG	▶	Replace heated oxygen sensor 1 (front).

6	CHECK HEATED OXYGEN SENSOR 1 (FRONT)

Without CONSULT-II

1. Start engine and warm it up to normal operating temperature.
2. Set voltmeter probes between ECM terminal 50 [Heated oxygen sensor 1 (front) signal] and engine ground.

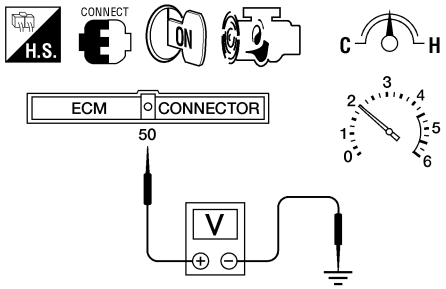

AEC873A

3. Check the following with engine speed held at 2,000 rpm constant under no load.

- The voltage fluctuates between 0 to 0.3V and 0.6 to 1.0V more than five times within 10 seconds.
  1 time: 0 - 0.3V → 0.6 - 1.0V → 0 - 0.3V
  2 times: 0 - 0.3V → 0.6 - 1.0V → 0 - 0.3V → 0.6 - 1.0V → 0 - 0.3V
- The maximum voltage is over 0.6V at least one time.
- The minimum voltage is below 0.3V at least one time.
- The voltage never exceeds 1.0V.

CAUTION:

- **Discard any heated oxygen sensor which has been dropped from a height of more than 0.5 m (19.7 in) onto a hard surface such as a concrete floor; use a new one.**
- **Before installing new oxygen sensor, clean exhaust system threads using Oxygen Sensor Thread Cleaner tool J-43897-18 or J-43897-12 and approved anti-seize lubricant.**

OK or NG

OK	▶	GO TO 7.
NG	▶	Replace heated oxygen sensor 1 (front).

7	CHECK INTERMITTENT INCIDENT
Perform "TROUBLE DIAGNOSIS FOR INTERMITTENT INCIDENT", EC-148. Refer to "Wiring Diagram", EC-202, for circuit.	
▶	**INSPECTION END**

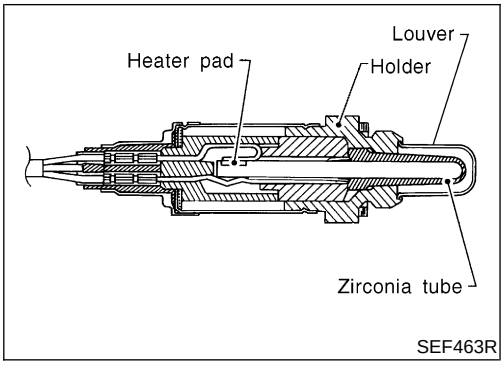

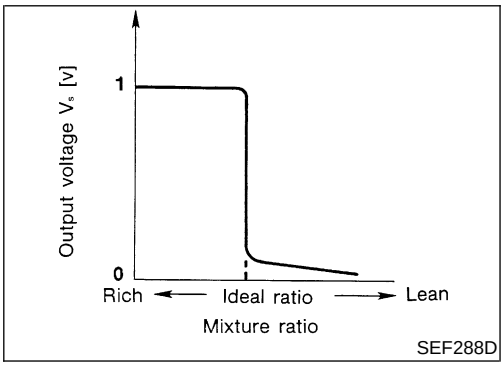

Component Description

NEEC0119

The heated oxygen sensor 1 (front) is placed into the exhaust manifold. It detects the amount of oxygen in the exhaust gas compared to the outside air. The heated oxygen sensor 1 (front) has a closed-end tube made of ceramic zirconia. The zirconia generates voltage from approximately 1V in richer conditions to 0V in leaner conditions. The heated oxygen sensor 1 (front) signal is sent to the ECM. The ECM adjusts the injection pulse duration to achieve the ideal air-fuel ratio. The ideal air-fuel ratio occurs near the radical change from 1V to 0V.

CONSULT-II Reference Value in Data Monitor Mode

NEEC0120

Specification data are reference values.

MONITOR ITEM	CONDITION		SPECIFICATION
HO2S1 (B1)	● Engine: After warming up	Maintaining engine speed at 2,000 rpm	0 - 0.3V ⟷ Approx. 0.6 - 1.0V
HO2S1 MNTR (B1)			LEAN ⟷ RICH Changes more than 5 times during 10 seconds.

ECM Terminals and Reference Value

NEEC0121

Specification data are reference values and are measured between each terminal and ground.

CAUTION:

Do not use ECM ground terminals when measuring input/output voltage. Doing so may result in damage to the ECM's transistor. Use a ground other than ECM terminals, such as the ground.

TERMINAL NO.	WIRE COLOR	ITEM	CONDITION	DATA (DC Voltage)
50	B	Heated oxygen sensor 1 (front)	**[Engine is running]** ● After warming up to normal operating temperature and engine speed is 2,000 rpm	0 - Approximately 1.0V 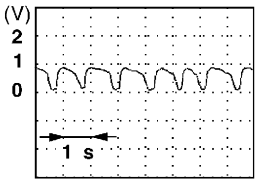 SEF008W

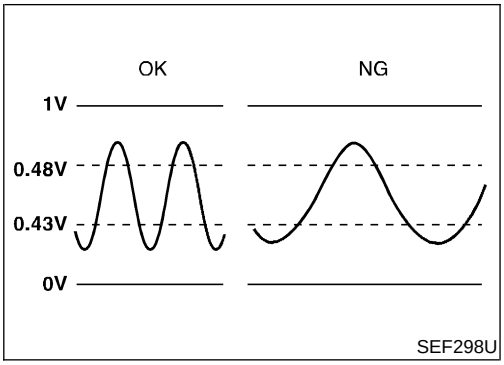

On Board Diagnosis Logic

NEEC0122

To judge the malfunction of heated oxygen sensor 1 (front), this diagnosis measures response time of heated oxygen sensor 1 (front) signal. The time is compensated by engine operating (speed and load), fuel feedback control constant, and heated oxygen sensor 1 (front) temperature index. Judgment is based on whether the compensated time [heated oxygen sensor 1 (front) cycling time index] is inordinately long or not.

DTC No.	Malfunction is detected when ...	Check Items (Possible Cause)
P0133	• The response of the voltage signal from the sensor takes more than the specified time.	• Harness or connectors (The sensor circuit is open or shorted.) • Heated oxygen sensor 1 (front) • Heated oxygen sensor 1 heater (front) • Fuel pressure • Injectors • Intake air leaks • Exhaust gas leaks • PCV • Mass air flow sensor

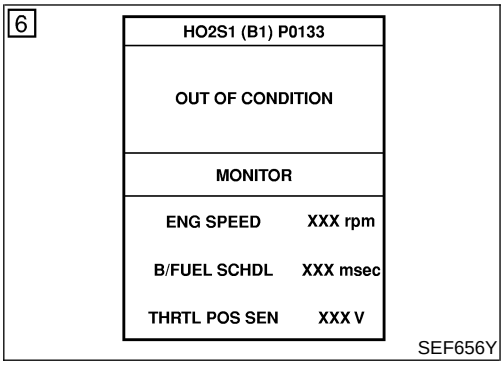

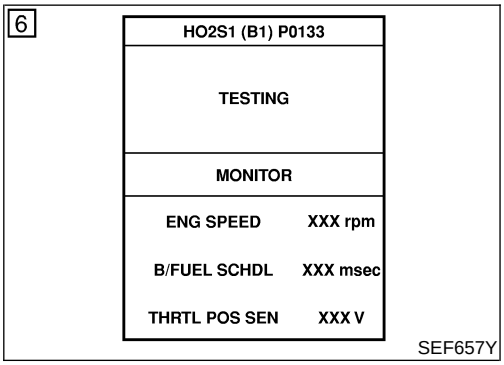

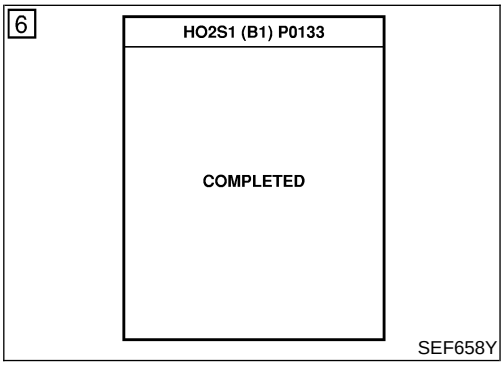

DTC Confirmation Procedure

NEEC0123

CAUTION:

Always drive vehicle at a safe speed.

NOTE:

If "DTC Confirmation Procedure" has been previously conducted, always turn ignition switch OFF and wait at least 5 seconds before conducting the next test.

TESTING CONDITION:

- **Always perform at a temperature above −10°C (14°F).**
- **Before performing the following procedure, confirm that battery voltage is more than 11V at idle.**

With CONSULT-II

1) Start engine and warm it up to normal operating temperature.
2) Stop engine and wait at least 5 seconds.
3) Turn ignition switch ON and select "HO2S1 (B1) P0133" of "HO2S1 (front)" in "DTC WORK SUPPORT" mode with CONSULT-II.
4) Touch "START".
5) Start engine and let it idle for at least 3.0 minutes.

NOTE:

Never raise engine speed above 3,000 rpm after this step. If the engine speed limit is exceeded, return to step 5.

6) When the following conditions are met, "TESTING" will be displayed on the CONSULT-II screen. Maintain the conditions continuously until "TESTING" changes to "COMPLETED". (It will take approximately 20 seconds.)

ENG SPEED	1,750 - 3,750 rpm
Vehicle speed	More than 80 km/h (More than 50 MPH)
B/FUEL SCHDL	3.5 - 15.5 msec
Selector lever	Suitable position

If "TESTING" is not displayed after 5 minutes, retry from step 2.

7) Make sure that "OK" is displayed after touching "SELF-DIAG RESULTS". If "NG" is displayed, refer to "Diagnostic Procedure", EC-224.

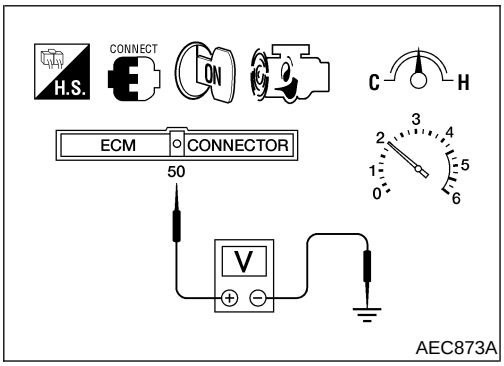

Overall Function Check

NEEC0124

Use this procedure to check the overall function of the heated oxygen sensor 1 (front) circuit. During this check, a 1st trip DTC might not be confirmed.

With GST

1) Start engine and warm it up to normal operating temperature.
2) Set voltmeter probes between ECM terminal 50 [Heated oxygen sensor 1 (front) signal] and engine ground.
3) Check the following with engine speed held at 2,000 rpm constant under no load.

- The voltage fluctuates between 0 to 0.3V and 0.6 to 1.0V more than five times within 10 seconds.
  1 time: 0 - 0.3V → 0.6 - 1.0V → 0 - 0.3V
  2 times: 0 - 0.3V → 0.6 - 1.0V → 0 - 0.3V → 0.6 - 1.0V → 0 - 0.3V

4) If NG, go to "Diagnostic Procedure", EC-224.

Wiring Diagram

NEEC0125

EC-HO2S1-01

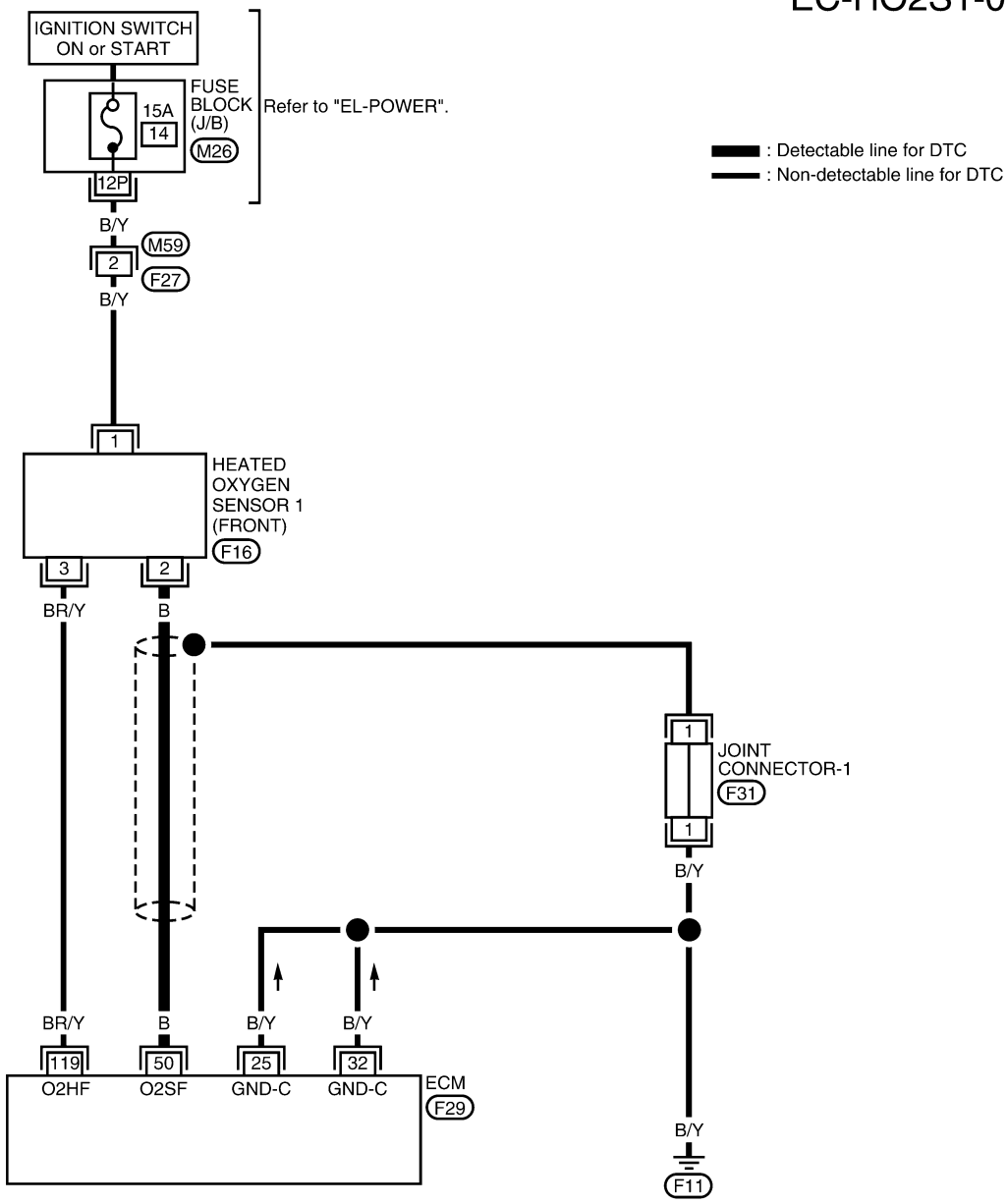

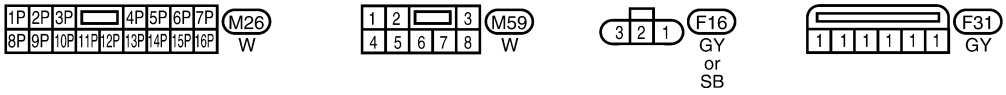

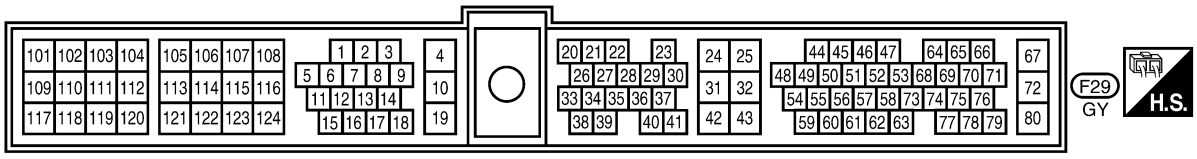

WEC150A

Diagnostic Procedure

NEEC0126

1	RETIGHTEN GROUND SCREWS

1. Turn ignition switch OFF.
2. Loosen and retighten engine ground screws.

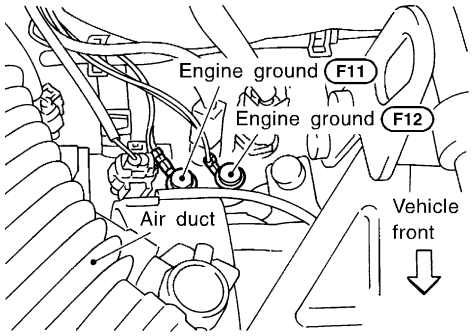

SEF325V

▶ GO TO 2.

2	RETIGHTEN HEATED OXYGEN SENSOR 1 (FRONT)

Loosen and retighten heated oxygen sensor 1 (front).

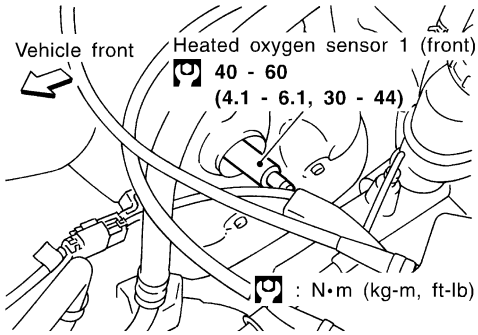

SEF332VA

Tightening torque:
40 - 60 N·m (4.1 - 6.1 kg-m, 30 - 44 ft-lb)

▶ GO TO 3.

3	CHECK EXHAUST AIR LEAK

1. Start engine and run it at idle.
2. Listen for an exhaust air leak before three way catalyst.

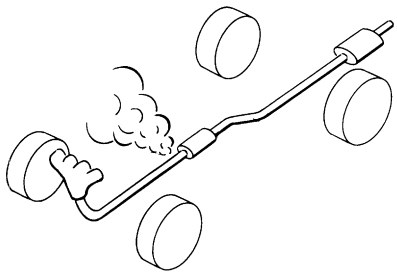

SEF099P

OK or NG

OK	▶	GO TO 4.
NG	▶	Repair or replace.

4	CHECK FOR INTAKE AIR LEAK	
Listen for an intake air leak between the mass air flow sensor and the intake manifold.		
OK or NG		
OK	▶	GO TO 5.
NG	▶	Repair or replace.

5	CLEAR THE SELF-LEARNING DATA	

With CONSULT-II

1. Start engine and warm it up to normal operating temperature.
2. Select "SELF-LEARNING CONT" in "WORK SUPPORT" mode with CONSULT-II.
3. Clear the self-learning control coefficient by touching "CLEAR".

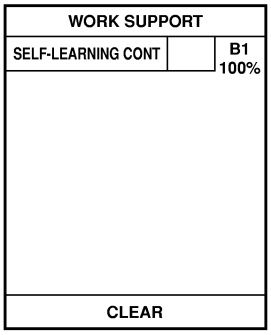

SEF215Z

4. Run engine for at least 10 minutes at idle speed.
   Is the 1st trip DTC P0171 or P0172 detected? Is it difficult to start engine?

Without CONSULT-II

1. Start engine and warm it up to normal operating temperature.
2. Turn ignition switch "OFF".
3. Disconnect mass air flow sensor harness connector, and restart and run engine for at least 3 seconds at idle speed.

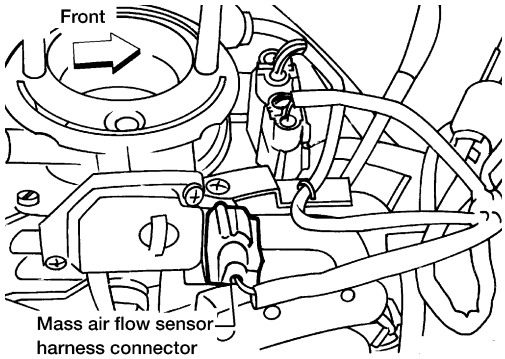

AEC131A

4. Stop engine and reconnect mass air flow sensor harness connector.
5. Make sure 1st trip DTC P0100 is displayed.
6. Erase the 1st trip DTC memory. Refer to "HOW TO ERASE EMISSION-RELATED DIAGNOSTIC INFORMATION", EC-85.
7. Make sure DTC P0000 is displayed.
8. Run engine for at least 10 minutes at idle speed.
   Is the 1st trip DTC P0171 or P0172 detected? Is it difficult to start engine?

Yes or No		
Yes	▶	Perform trouble diagnosis for DTC P0171, P0172. Refer to EC-286, 293.
No	▶	GO TO 6.

Diagnostic Procedure (Cont'd)

6	CHECK INPUT SIGNAL CIRCUIT

1. Disconnect heated oxygen sensor 1 (front) harness connector and ECM harness connector.
2. Check harness continuity between ECM terminal 50 and terminal 2.

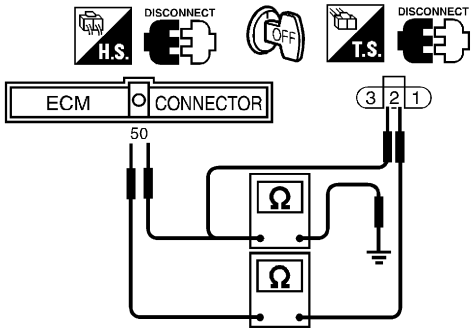

SEF141V

Continuity should exist.

3. Check harness continuity between ECM terminal 50 (or terminal 2) and ground.
Continuity should not exist.
4. Also check harness for short to power.

OK or NG

OK	▶	GO TO 7.
NG	▶	Repair open circuit or short to ground or short to power in harness or connectors.

7	CHECK HEATED OXYGEN SENSOR 1 HEATER (FRONT)

Check resistance between terminals 3 and 1.

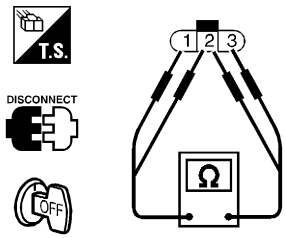

SEF220W

Resistance: 2.3 - 4.3 Ω at 25°C (77°F)

Check continuity between terminals 2 and 1, 3 and 2.

Continuity should not exist.

CAUTION:

- **Discard any heated oxygen sensor which has been dropped from a height of more than 0.5 m (19.7 in) onto a hard surface such as a concrete floor; use a new one.**
- **Before installing new oxygen sensor, clean exhaust system threads using Oxygen Sensor Thread Cleaner tool J-43897-18 or J-43897-12 and approved anti-seize lubricant.**

OK or NG

OK (With CONSULT-II)	▶	GO TO 8.
OK (Without CONSULT-II)	▶	GO TO 9.
NG	▶	Replace heated oxygen sensor 1 (front).

8	CHECK HEATED OXYGEN SENSOR 1 (FRONT)

With CONSULT-II

1. Start engine and warm it up to normal operating temperature.
2. Select "MANU TRIG" in "DATA MONITOR" mode, and the trigger point is adjusted to 100%.
3. Select "HO2S1 (B1)" and "HO2S1 MNTR (B1)" in item selection.
4. Hold engine speed at 2,000 rpm under no load during the following steps.
5. Touch "START" on CONSULT-II screen.

DATA MONITOR	
MONITOR	NO DTC
ENG SPEED	XXX rpm
MAS A/F SE-B1	XXX V
COOLAN TEMP/S	XXX °C
HO2S1 (B1)	XXX V
HO2S1 MNTR (B1)	LEAN

SEF646Y

6. Check the following.

- "HO2S1 MNTR (B1)" in "DATA MONITOR" mode changes from "RICH" to "LEAN" to "RICH" 5 times in 10 seconds.
  5 times (cycles) are counted as shown below:

cycle	1	2	3	4	5
HO2S1 MNTR (B1)	R-L-R-L-R-L-R-L-R-L				

R means HO2S1 MNTR (B1) indicates RICH
L means HO2S1 MNTR (B1) indicates LEAN

SEF217YA

R = "HO2S1 MNTR (B1)", "RICH"
L = "HO2S1 MNTR (B1)", "LEAN"

- "HO2S1 (B1)" voltage goes above 0.6V at least once.
- "HO2S1 (B1)" voltage goes below 0.3V at least once.
- "HO2S1 (B1)" voltage never exceeds 1.0V.

Trigger	ENG SPEED	HO2S1 (B1)
	rpm	V
XXX	XXX	XXX
XXX	XXX	XXX
XXX	XXX	XXX
XXX	XXX	XXX
XXX	XXX	XXX
XXX	XXX	XXX
XXX	XXX	XXX
XXX	XXX	XXX
XXX	XXX	XXX
XXX	XXX	XXX
XXX	XXX	XXX
XXX	XXX	XXX
XXX	XXX	XXX

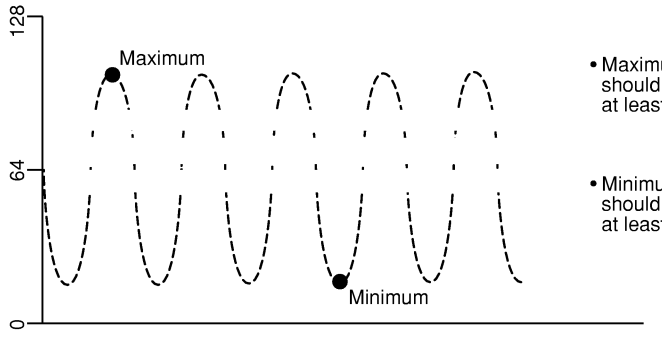

SEF648Y

CAUTION:

- **Discard any heated oxygen sensor which has been dropped from a height of more than 0.5 m (19.7 in) onto a hard surface such as a concrete floor; use a new one.**
- **Before installing new oxygen sensor, clean exhaust system threads using Oxygen Sensor Thread Cleaner tool J-43897-18 or J-43897-12 and approved anti-seize lubricant.**

OK or NG

OK	▶	GO TO 10.
NG	▶	Replace heated oxygen sensor 1 (front).

9	CHECK HEATED OXYGEN SENSOR 1 (FRONT)

Without CONSULT-II

1. Start engine and warm it up to normal operating temperature.
2. Set voltmeter probes between ECM terminal 50 [Heated oxygen sensor 1 (front) signal] and engine ground.

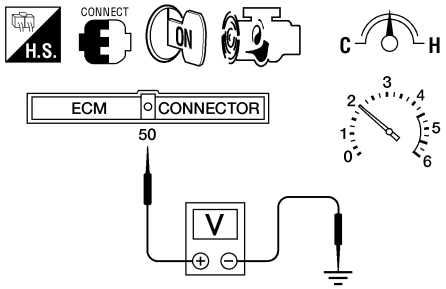

AEC873A

3. Check the following with engine speed held at 2,000 rpm constant under no load.

- The voltage fluctuates between 0 to 0.3V and 0.6 to 1.0V more than five times within 10 seconds.
  1 time: 0 - 0.3V → 0.6 - 1.0V → 0 - 0.3V
  2 times: 0 - 0.3V → 0.6 - 1.0V → 0 - 0.3V → 0.6 - 1.0V → 0 - 0.3V
- The maximum voltage is over 0.6V at least one time.
- The minimum voltage is below 0.3V at least one time.
- The voltage never exceeds 1.0V.

CAUTION:

- **Discard any heated oxygen sensor which has been dropped from a height of more than 0.5 m (19.7 in) onto a hard surface such as a concrete floor; use a new one.**
- **Before installing new oxygen sensor, clean exhaust system threads using Oxygen Sensor Thread Cleaner tool J-43897-18 or J-43897-12 and approved anti-seize lubricant.**

OK or NG

OK	▶	GO TO 10.
NG	▶	Replace heated oxygen sensor 1 (front).

10 **CHECK MASS AIR FLOW SENSOR**

1. Turn ignition switch ON.
2. Start engine and warm it up to normal operating temperature.
3. Check voltage between ECM terminal 54 (Mass air flow sensor signal) and ground.

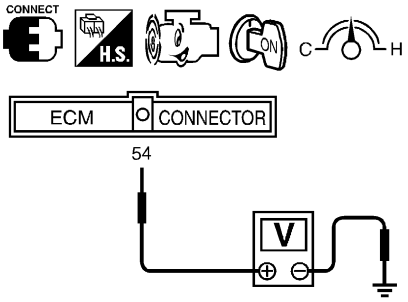

SEF326V

Conditions	Voltage V
Ignition switch "ON" (Engine stopped.)	Less than 1.0
Idle (Engine is warmed-up to normal operating temperature.)	0.9 - 1.8
2,500 rpm (Engine is warmed-up to normal operating temperature.)	1.9 - 2.3
Idle to about 4,000 rpm*	1.3 - 1.7 to Approx. 3.0

*: Check for linear voltage rise in response to increases to about 4,000 rpm in engine speed.

MTBL0326

4. If the voltage is out of specification, disconnect mass air flow sensor harness connector and connect it again. Repeat above check.
5. If NG, remove mass air flow sensor from air duct. Check hot wire for damage or dust.

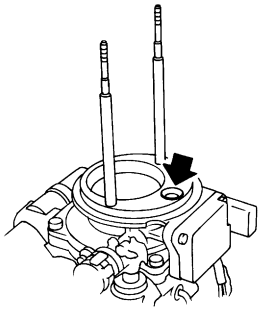

SEF893J

OK or NG

OK	▶	GO TO 11.
NG	▶	Replace mass air flow sensor.

Diagnostic Procedure (Cont'd)

11	CHECK PCV VALVE

1. With engine running at idle, remove PCV valve from breather separator.
2. A properly working valve makes a hissing noise as air passes through it. A strong vacuum should be felt immediately when a finger is placed over the valve inlet.

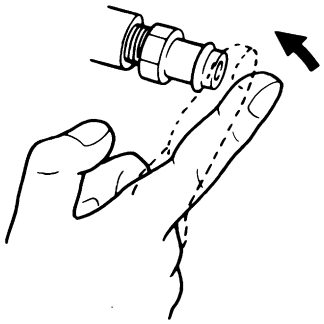

SEC137A

OK or NG

OK	▶	GO TO 12.
NG	▶	Repair or replace PCV valve.

12	CHECK SHIELD CIRCUIT

1. Turn ignition switch OFF.
2. Remove joint connector-1.
3. Check the following.

- Continuity between joint connector-1 terminal 1 and ground
- Joint connector-1

(Refer to "HARNESS LAYOUT", ***EL-239***.)

Continuity should exist.

4. Also check harness for short to power.
5. Then reconnect joint connector.

OK or NG

OK	▶	GO TO 13.
NG	▶	Repair open circuit, short to power in harness or connectors.

13	CHECK INTERMITTENT INCIDENT

Perform "TROUBLE DIAGNOSIS FOR INTERMITTENT INCIDENT", EC-148.

▶ **INSPECTION END**

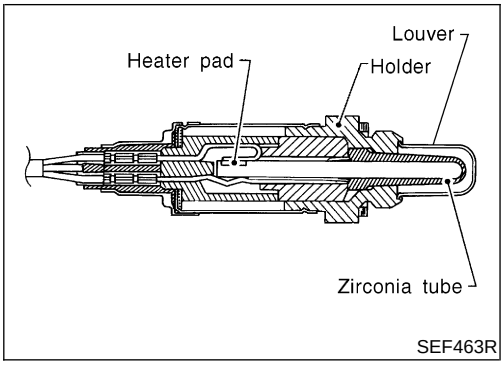

SEF463R

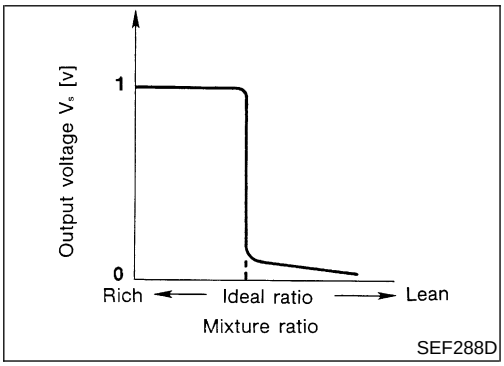

SEF288D

Component Description

NEEC0128

The heated oxygen sensor 1 (front) is placed into the exhaust manifold. It detects the amount of oxygen in the exhaust gas compared to the outside air. The heated oxygen sensor 1 (front) has a closed-end tube made of ceramic zirconia. The zirconia generates voltage from approximately 1V in richer conditions to 0V in leaner conditions. The heated oxygen sensor 1 (front) signal is sent to the ECM. The ECM adjusts the injection pulse duration to achieve the ideal air-fuel ratio. The ideal air-fuel ratio occurs near the radical change from 1V to 0V.

CONSULT-II Reference Value in Data Monitor Mode

NEEC0129

Specification data are reference values.

MONITOR ITEM	CONDITION		SPECIFICATION
HO2S1 (B1)	● Engine: After warming up	Maintaining engine speed at 2,000 rpm	0 - 0.3V ⟷ Approx. 0.6 - 1.0V
HO2S1 MNTR (B1)			LEAN ⟷ RICH Changes more than 5 times during 10 seconds.

ECM Terminals and Reference Value

NEEC0130

Specification data are reference values and are measured between each terminal and ground.

CAUTION:

Do not use ECM ground terminals when measuring input/output voltage. Doing so may result in damage to the ECM's transistor. Use a ground other than ECM terminals, such as the ground.

TERMINAL NO.	WIRE COLOR	ITEM	CONDITION	DATA (DC Voltage)
50	B	Heated oxygen sensor 1 (front)	**[Engine is running]** ● After warming up to normal operating temperature and engine speed is 2,000 rpm	0 - Approximately 1.0V 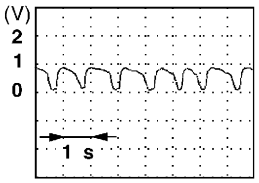 SEF008W

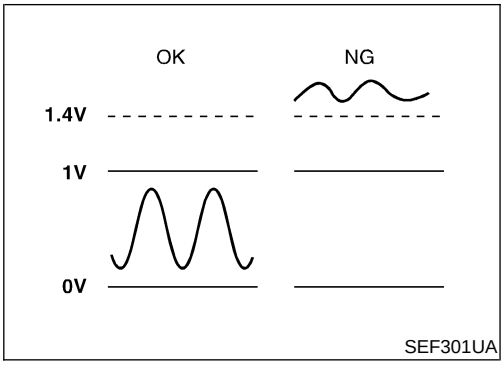

On Board Diagnosis Logic

NEEC0131

To judge the malfunction, the diagnosis checks that the heated oxygen sensor 1 (front) output is not inordinately high.

DTC No.	Malfunction is detected when ...	Check Items (Possible Cause)
P0134	• An excessively high voltage from the sensor is sent to ECM.	• Harness or connectors (The sensor circuit is open or shorted.) • Heated oxygen sensor 1 (front)

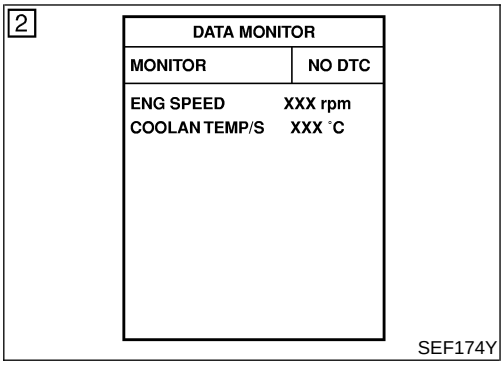

DTC Confirmation Procedure

NEEC0132

NOTE:

If “DTC Confirmation Procedure” has been previously conducted, always turn ignition switch OFF and wait at least 5 seconds before conducting the next test.

With CONSULT-II

1) Start engine and warm it up to normal operating temperature.
2) Turn ignition switch OFF and wait at least 5 seconds.
3) Turn ignition switch ON.
4) Select “DATA MONITOR” mode with CONSULT-II.
5) Restart engine and let it idle for 35 seconds.
6) If 1st trip DTC is detected, go to “Diagnostic Procedure”, EC-234.

With GST

1) Start engine and warm it up to normal operating temperature.
2) Turn ignition switch OFF and wait at least 5 seconds.
3) Restart engine and let it idle for 35 seconds.
4) Turn ignition switch OFF and wait at least 5 seconds.
5) Restart engine and let it idle for 35 seconds.
6) Select “MODE 3” with GST.
7) If DTC is detected, go to “Diagnostic Procedure”, EC-234.

- **When using GST, “DTC Confirmation Procedure” should be performed twice as much as when using CONSULT-II or ECM (Diagnostic Test Mode II) because GST cannot display MODE 7 (1st trip DTC) concerning this diagnosis. Therefore, using CONSULT-II or ECM (Diagnostic Test Mode II) is recommended.**

Wiring Diagram

NEEC0133

EC-HO2S1-01

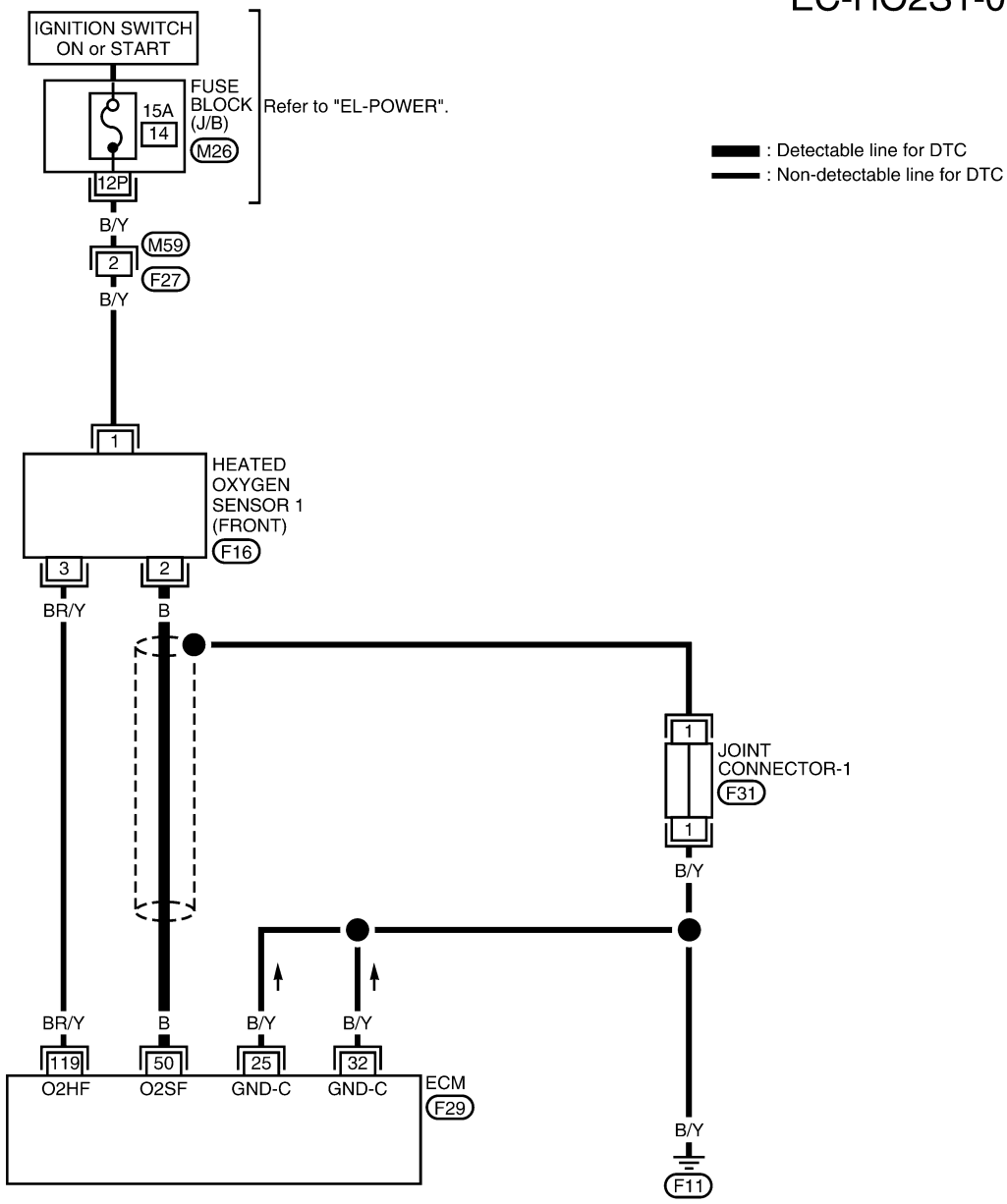

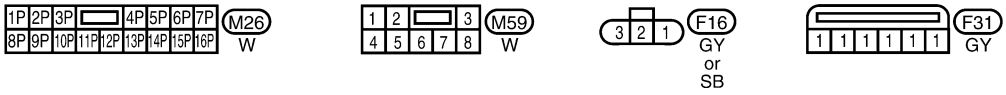

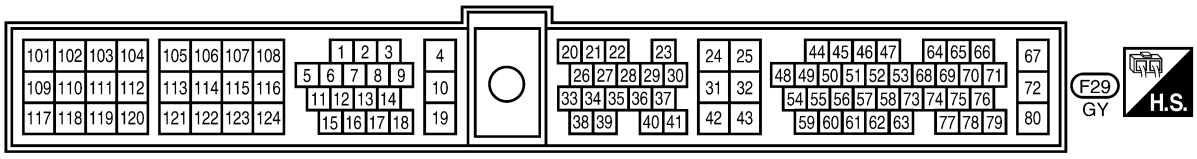

WEC150A

Diagnostic Procedure

NEEC0134

1	RETIGHTEN HEATED OXYGEN SENSOR 1 (FRONT)

1. Turn ignition switch OFF.
2. Loosen and retighten heated oxygen sensor 1 (front).

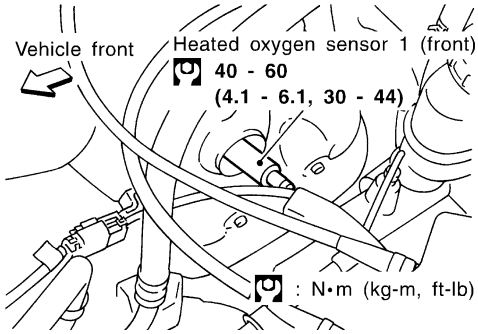

SEF332VA

Tightening torque:
40 - 60 N·m (4.1 - 6.1 kg-m, 30 - 44 ft-lb)

	▶	GO TO 2.

2	CHECK INPUT SIGNAL CIRCUIT

1. Disconnect heated oxygen sensor 1 (front) harness connector and ECM harness connector.

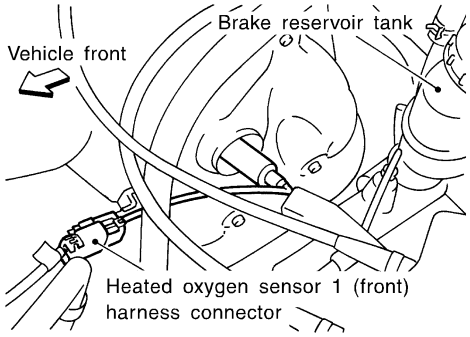

SEF331VA

2. Check harness continuity between ECM terminal 50 and terminal 2.

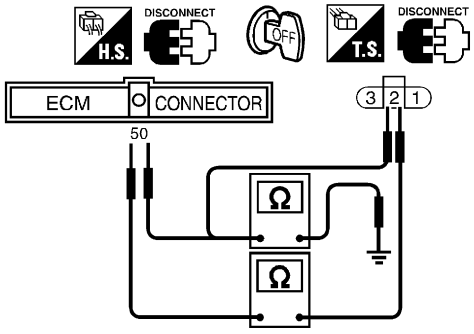

SEF141V

Continuity should exist.

3. Check harness continuity between ECM terminal 50 (or terminal 2) and ground.
Continuity should not exist.
4. Also check harness for short to power.

OK or NG

OK	▶	GO TO 3.
NG	▶	Repair open circuit or short to ground or short to power in harness or connectors.

3	CHECK HARNESS CONNECTOR	
Check heated oxygen sensor 1 (front) harness connector for water. **Water should not exist.**		
OK or NG		
OK (With CONSULT-II)	▶	GO TO 4.
OK (Without CONSULT-II)	▶	GO TO 5.
NG	▶	Repair or replace harness connector.

Diagnostic Procedure (Cont'd)

4	CHECK HEATED OXYGEN SENSOR 1 (FRONT)

With CONSULT-II

1. Start engine and warm it up to normal operating temperature.
2. Select "MANU TRIG" in "DATA MONITOR" mode, and the trigger point is adjusted to 100%.
3. Select "HO2S1 (B1)" and "HO2S1 MNTR (B1)" in item selection.
4. Hold engine speed at 2,000 rpm under no load during the following steps.
5. Touch "START" on CONSULT-II screen.

DATA MONITOR	
MONITOR	NO DTC
ENG SPEED	XXX rpm
MAS A/F SE-B1	XXX V
COOLAN TEMP/S	XXX °C
HO2S1 (B1)	XXX V
HO2S1 MNTR (B1)	LEAN

SEF646Y

6. Check the following.

- "HO2S1 MNTR (B1)" in "DATA MONITOR" mode changes from "RICH" to "LEAN" to "RICH" 5 times in 10 seconds.
  5 times (cycles) are counted as shown below:

cycle	1	2	3	4	5
HO2S1 MNTR (B1)	R-L-R-L-R	L-R-L-R-L	R-L-R-L-R	L-R-L-R-L	R-L-R-L-R

R means HO2S1 MNTR (B1) indicates RICH
L means HO2S1 MNTR (B1) indicates LEAN

SEF217YA

R = "HO2S1 MNTR (B1)", "RICH"
L = "HO2S1 MNTR (B1)", "LEAN"

- "HO2S1 (B1)" voltage goes above 0.6V at least once.
- "HO2S1 (B1)" voltage goes below 0.3V at least once.
- "HO2S1 (B1)" voltage never exceeds 1.0V.

Trigger	ENG SPEED	HO2S1 (B1)
	rpm	V
XXX	XXX	XXX
XXX	XXX	XXX
XXX	XXX	XXX
XXX	XXX	XXX
XXX	XXX	XXX
XXX	XXX	XXX
XXX	XXX	XXX
XXX	XXX	XXX
XXX	XXX	XXX
XXX	XXX	XXX
XXX	XXX	XXX
XXX	XXX	XXX
XXX	XXX	XXX

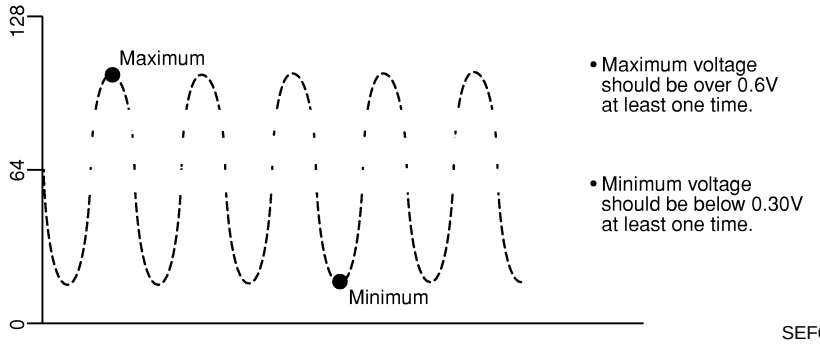

SEF648Y

CAUTION:

- **Discard any heated oxygen sensor which has been dropped from a height of more than 0.5 m (19.7 in) onto a hard surface such as a concrete floor; use a new one.**
- **Before installing new oxygen sensor, clean exhaust system threads using Oxygen Sensor Thread Cleaner tool J-43897-18 or J-43897-12 and approved anti-seize lubricant.**

OK or NG

OK	▶	GO TO 6.
NG	▶	Replace heated oxygen sensor 1 (front).

5	CHECK HEATED OXYGEN SENSOR 1 (FRONT)

Without CONSULT-II

1. Start engine and warm it up to normal operating temperature.
2. Set voltmeter probes between ECM terminal 50 [Heated oxygen sensor 1 (front) signal] and engine ground.

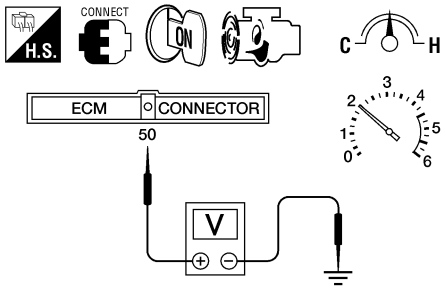

AEC873A

3. Check the following with engine speed held at 2,000 rpm constant under no load.

- The voltage fluctuates between 0 to 0.3V and 0.6 to 1.0V more than five times within 10 seconds.
  1 time: 0 - 0.3V → 0.6 - 1.0V → 0 - 0.3V
  2 times: 0 - 0.3V → 0.6 - 1.0V → 0 - 0.3V → 0.6 - 1.0V → 0 - 0.3V
- The maximum voltage is over 0.6V at least one time.
- The minimum voltage is below 0.3V at least one time.
- The voltage never exceeds 1.0V.

CAUTION:

- **Discard any heated oxygen sensor which has been dropped from a height of more than 0.5 m (19.7 in) onto a hard surface such as a concrete floor; use a new one.**
- **Before installing new oxygen sensor, clean exhaust system threads using Oxygen Sensor Thread Cleaner tool J-43897-18 or J-43897-12 and approved anti-seize lubricant.**

OK or NG

OK	▶	GO TO 6.
NG	▶	Replace heated oxygen sensor 1 (front).

6	CHECK SHIELD CIRCUIT

1. Turn ignition switch OFF.
2. Remove joint connector-1.
3. Check the following.

- Continuity between joint connector-1 terminal 1 and ground
- Joint connector-1
  (Refer to "HARNESS LAYOUT", ***EL-239***.)
  Continuity should exist.

4. Also check harness for short to ground and short to power. Then reconnect joint connector.

OK or NG

OK	▶	GO TO 7.
NG	▶	Repair open circuit, short to power in harness or connectors.

7	CHECK INTERMITTENT INCIDENT
Perform "TROUBLE DIAGNOSIS FOR INTERMITTENT INCIDENT", EC-148.	
▶	**INSPECTION END**

Description

NEEC0136

SYSTEM DESCRIPTION

NEEC0136S01

Sensor	Input Signal to ECM	ECM function	Actuator
Camshaft position sensor	Engine speed	Heated oxygen sensor 1 heater (front) control	Heated oxygen sensor 1 heater (front)

The ECM performs ON/OFF control of the heated oxygen sensor 1 heater (front) corresponding to the engine operating condition.

OPERATION

NEEC0136S02

Engine speed	Heated oxygen sensor 1 heater (front)
Above 3,000 rpm	OFF
Below 3,000 rpm	ON

CONSULT-II Reference Value in Data Monitor Mode

NEEC0137

Specification data are reference values.

MONITOR ITEM	CONDITION	SPECIFICATION
HO2S1 HTR (B1)	• Engine speed: Below 3,000 rpm	ON
	• Engine speed: Above 3,000 rpm	OFF

ECM Terminals and Reference Value

NEEC0138

Specification data are reference values and are measured between each terminal and ground.

CAUTION:

Do not use ECM ground terminals when measuring input/output voltage. Doing so may result in damage to the ECM's transistor. Use a ground other than ECM terminals, such as the ground.

TERMINAL NO.	WIRE COLOR	ITEM	CONDITION	DATA (DC Voltage)
119	BR/Y	Heated oxygen sensor 1 heater (front)	**[Engine is running]** • Engine speed is below 3,000 rpm.	Approximately 0.4V
			[Engine is running] • Engine speed is above 3,000 rpm.	BATTERY VOLTAGE (11 - 14V)

On Board Diagnosis Logic

NEEC0139

DTC No.	Malfunction is detected when ...	Check Items (Possible Cause)
P0135	• The current amperage in the heated oxygen sensor 1 heater (front) circuit is out of the normal range. [An improper voltage drop signal is sent to ECM through the heated oxygen sensor 1 heater (front).]	• Harness or connectors [The heated oxygen sensor 1 heater (front) circuit is open or shorted.] • Heated oxygen sensor 1 heater (front)

DTC Confirmation Procedure

NEEC0140

NOTE:
If “DTC Confirmation Procedure” has been previously conducted, always turn ignition switch OFF and wait at least 5 seconds before conducting the next test.

TESTING CONDITION:
Before performing the following procedure, confirm battery voltage is more than 11V at idle.

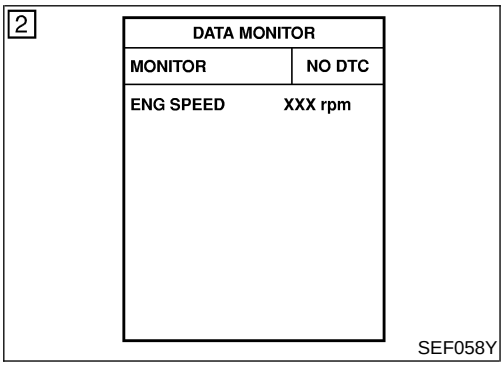

With CONSULT-II

1) Turn ignition switch ON and select “DATA MONITOR” mode with CONSULT-II.
2) Start engine and run it for at least 6 seconds at idle speed.
3) If 1st trip DTC is detected, go to “Diagnostic Procedure”, EC-241.

With GST

1) Start engine and run it for at least 6 seconds at idle speed.
2) Turn ignition switch OFF and wait least 6 seconds at idle speed.
3) Select “MODE 3” with GST.
4) If DTC is detected, go to “Diagnostic Procedure”, EC-241.

- **When using GST, “DTC Confirmation Procedure” should be performed twice as much as when using CONSULT-II or ECM (Diagnostic Test Mode II) because GST cannot display MODE 7 (1st trip DTC) concerning this diagnosis. Therefore, using CONSULT-II or ECM (Diagnostic Test Mode II) is recommended.**

Wiring Diagram

NEEC0141

EC-HO2S1H-01

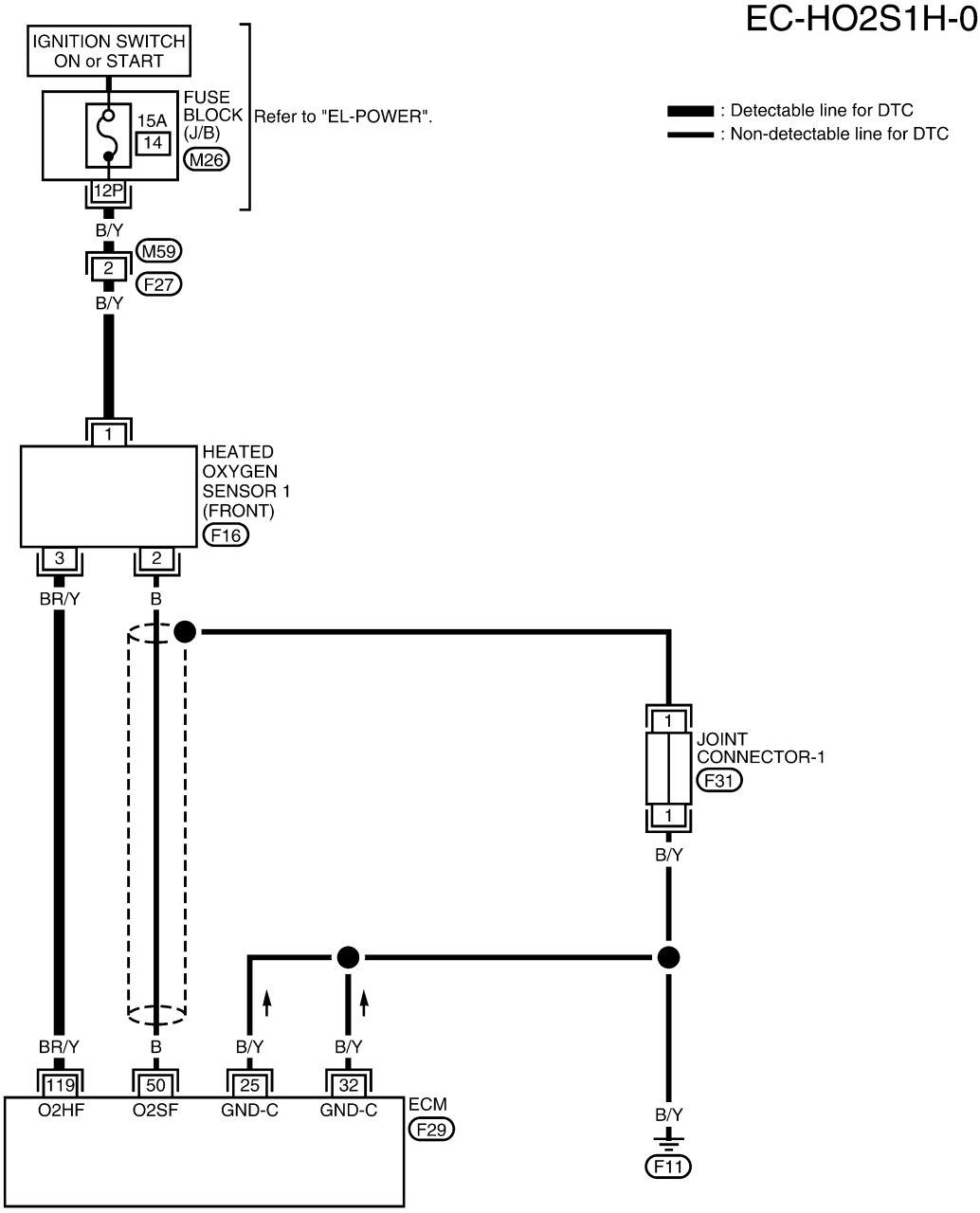

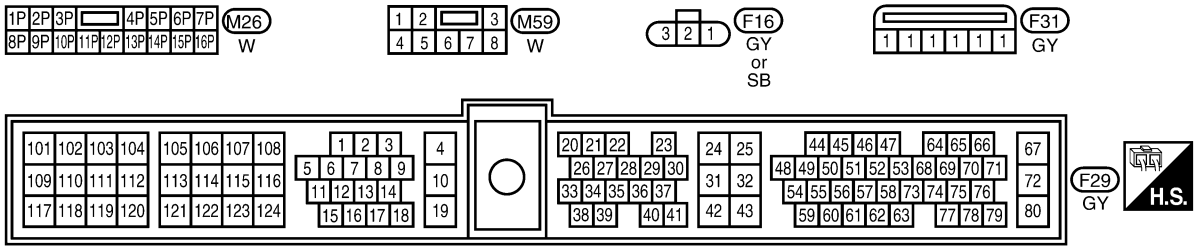

WEC151A

Diagnostic Procedure

NEEC0142

1	CHECK POWER SUPPLY

1. Turn ignition switch OFF.
2. Disconnect heated oxygen sensor 1 (front) harness connector.

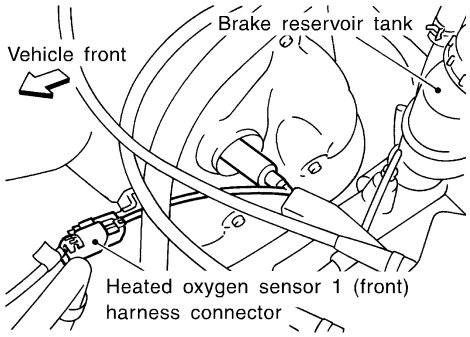

SEF331VA

3. Turn ignition switch ON.
4. Check voltage between terminal 1 and ground with CONSULT-II or tester.

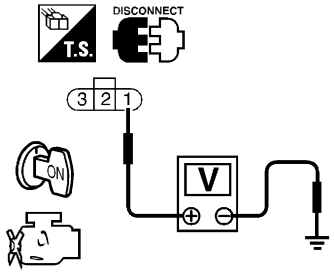

SEF213W

Voltage: Battery voltage

OK or NG

OK	▶	GO TO 3.
NG	▶	GO TO 2.

2	DETECT MALFUNCTIONING PART

Check the following.
- Harness connectors M59, F27
- 15A fuse
- Harness for open or short between heated oxygen sensor 1 (front) and 15A fuse

	▶	Repair harness or connectors.

3	CHECK GROUND CIRCUIT

1. Turn ignition switch OFF.
2. Disconnect ECM harness connector.
3. Check harness continuity between heated oxygen sensor 1 (front) terminal 3 and ECM terminal 119. Refer to the wiring diagram.
   Continuity should exist.
4. Also check harness for short to ground or short to power.

OK or NG

OK	▶	GO TO 4.
NG	▶	Repair open circuit or short to ground or short to power in harness or connectors.

Diagnostic Procedure (Cont'd)

4	CHECK HEATED OXYGEN SENSOR 1 HEATER (FRONT)

Check resistance between terminals 3 and 1.

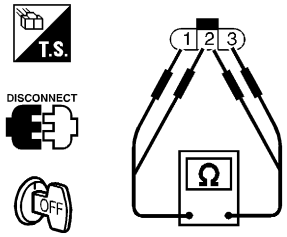

SEF220W

Resistance: 2.3 - 4.3 Ω at 25°C (77°F)

Check continuity between terminals 2 and 1, 3 and 2.

Continuity should not exist.

CAUTION:

- **Discard any heated oxygen sensor which has been dropped from a height of more than 0.5 m (19.7 in) onto a hard surface such as a concrete floor; use a new one.**
- **Before installing new oxygen sensor, clean exhaust system threads using Oxygen Sensor Thread Cleaner tool J-43897-18 or J-43897-12 and approved anti-seize lubricant.**

OK or NG

OK	▶	GO TO 5.
NG	▶	Replace heated oxygen sensor 1 (front).

5	CHECK INTERMITTENT INCIDENT

Perform "TROUBLE DIAGNOSIS FOR INTERMITTENT INCIDENT", EC-148.

▶ **INSPECTION END**

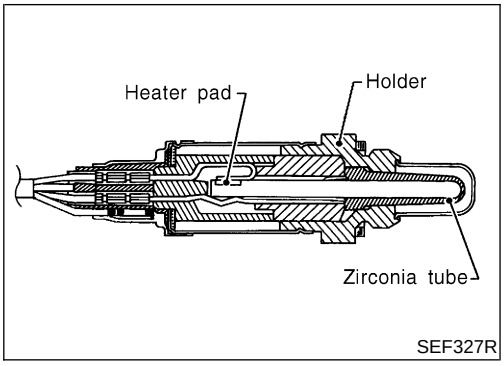

Component Description

NEEC0144

The heated oxygen sensor 2 (rear), after three way catalyst, monitors the oxygen level in the exhaust gas.
Even if switching characteristics of the heated oxygen sensor 1 (front) are shifted, the air fuel ratio is controlled to stoichiometric, by the signal from the heated oxygen sensor 2 (rear).
This sensor is made of ceramic zirconia. The zirconia generates voltage from approximately 1V in richer conditions to 0V in leaner conditions.
Under normal conditions the heated oxygen sensor 2 (rear) is not used for engine control operation.

CONSULT-II Reference Value in Data Monitor Mode

NEEC0145

Specification data are reference values.

MONITOR ITEM	CONDITION		SPECIFICATION
HO2S2 (B1)	● Engine: After warming up	Revving engine from idle to 3,000 rpm	0 - 0.3V ⟷ Approx. 0.6 - 1.0V
HO2S2 MNTR (B1)			LEAN ⟷ RICH

ECM Terminals and Reference Value

NEEC0146

Specification data are reference values and are measured between each terminal and ground.

CAUTION:

Do not use ECM ground terminals when measuring input/output voltage. Doing so may result in damage to the ECM's transistor. Use a ground other than ECM terminals, such as the ground.

TERMINAL NO.	WIRE COLOR	ITEM	CONDITION	DATA (DC Voltage)
56	OR	Heated oxygen sensor 2 (rear)	**[Engine is running]** ● After warming up to normal operating temperature and revving engine from idle to 3,000 rpm quickly	0 - Approximately 1.0V

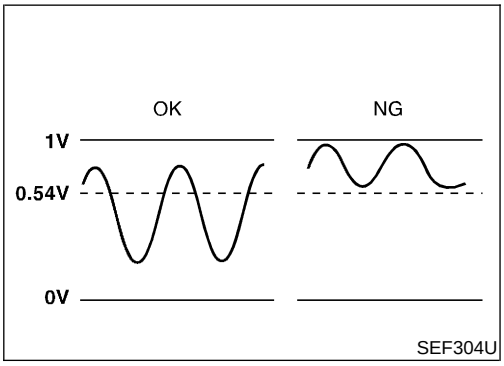

On Board Diagnosis Logic

NEEC0147

The heated oxygen sensor 2 (rear) has a much longer switching time between rich and lean than the heated oxygen sensor 1 (front). The oxygen storage capacity before the three way catalyst causes the longer switching time. To judge the malfunctions of rear heated oxygen sensor, ECM monitors whether the minimum voltage of the sensor is sufficiently low during various driving conditions such as fuel-cut.

DTC No.	Malfunction is detected when ...	Check Items (Possible Cause)
P0137	● The minimum voltage from the sensor does not reach the specified voltage.	● Harness or connectors (The sensor circuit is open or shorted.) ● Heated oxygen sensor 2 (rear) ● Fuel pressure ● Injectors

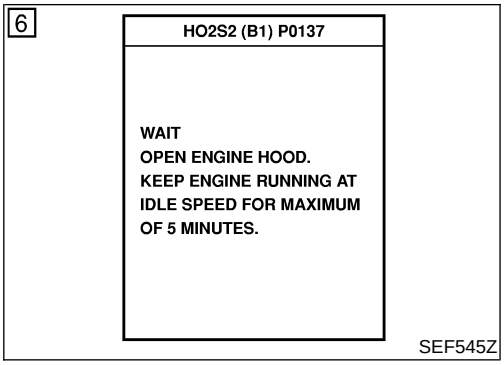

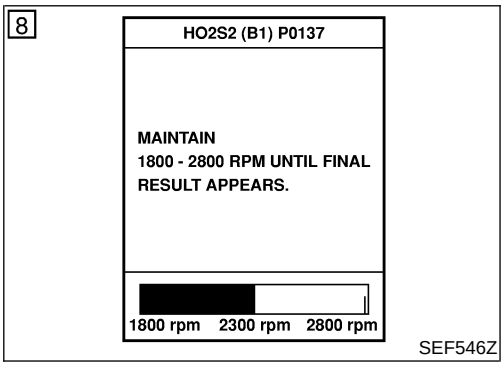

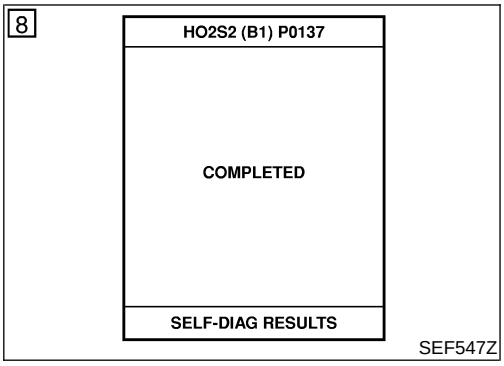

DTC Confirmation Procedure

NEEC0148

NOTE:

If "DIAGNOSTIC TROUBLE CODE CONFIRMATION PROCEDURE" has been previously conducted, always turn ignition switch OFF and wait at least 5 seconds before conducting the next test.

TESTING CONDITION:

Open engine hood before conducting following procedure
With CONSULT-II

1) Start engine and warm it up to normal operating temperature.
2) Turn ignition switch OFF and wait at least 5 seconds.
3) Turn ignition switch ON.
4) Select "DATA MONITOR" mode with CONSULT-II.
5) Make sure the "COOLANT TEMP/S" is more then 70°C (158°F).
6) Select "HO2S2 (B1) P0137", of "HO2S2" in "DTC WORK SUPPORT" mode with CONSULT-II.
7) Start engine and follow the instructions of CONSULT-II.
8) Make sure the "OK" is displayed after touching "SELF-DIAG RESULTS".
   If NG is displayed, refer to "DIAGNOSTIC PROCEDURE", EC-247.
   If "CAN NOT BE DIAGNOSED" is displayed, perform the following.

a) Stop engine and cool down "COOLANT TEMP/SE" to less then 70°C (158°F).
b) Turn ignition switch ON
c) Select "DATA MONITOR" mode with CONSULT-II.
d) Start engine.
e) Perform from step 6) again when the "COOLANT TEMP/S" reach to 70°C (158°F).

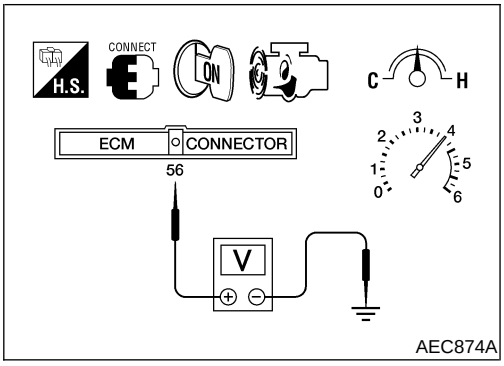

Overall Function Check

=NEEC0149

Use this procedure to check the overall function of the heated oxygen sensor 2 (rear) circuit. During this check, a 1st trip DTC might not be confirmed.

CAUTION:

Always drive vehicle at a safe speed.

Without CONSULT-II

1) Start engine and drive vehicle at a speed of more than 70 km/h (43 MPH) for 2 consecutive minutes.
2) Stop vehicle with engine running.
3) Set voltmeter probes between ECM terminals 56 [Heated oxygen sensor 2 (rear) signal] and ECM ground.
4) Check the voltage when revving engine up to 4,000 rpm under no load at least 10 times.
   (Depress and release accelerator pedal as soon as possible.)
   The voltage should be below 0.54V at least once during this procedure.
   If the voltage can be confirmed in step 4, step 5 is not necessary.
5) Keep vehicle at idling for 10 minutes, then check the voltage. Or check the voltage when coasting from 80 km/h (50 MPH) in 3rd gear position.
   The voltage should be below 0.54V at least once during this procedure.
6) If NG, go to “Diagnostic Procedure”, EC-247.

Wiring Diagram

NEEC0150

EC-HO2S2-01

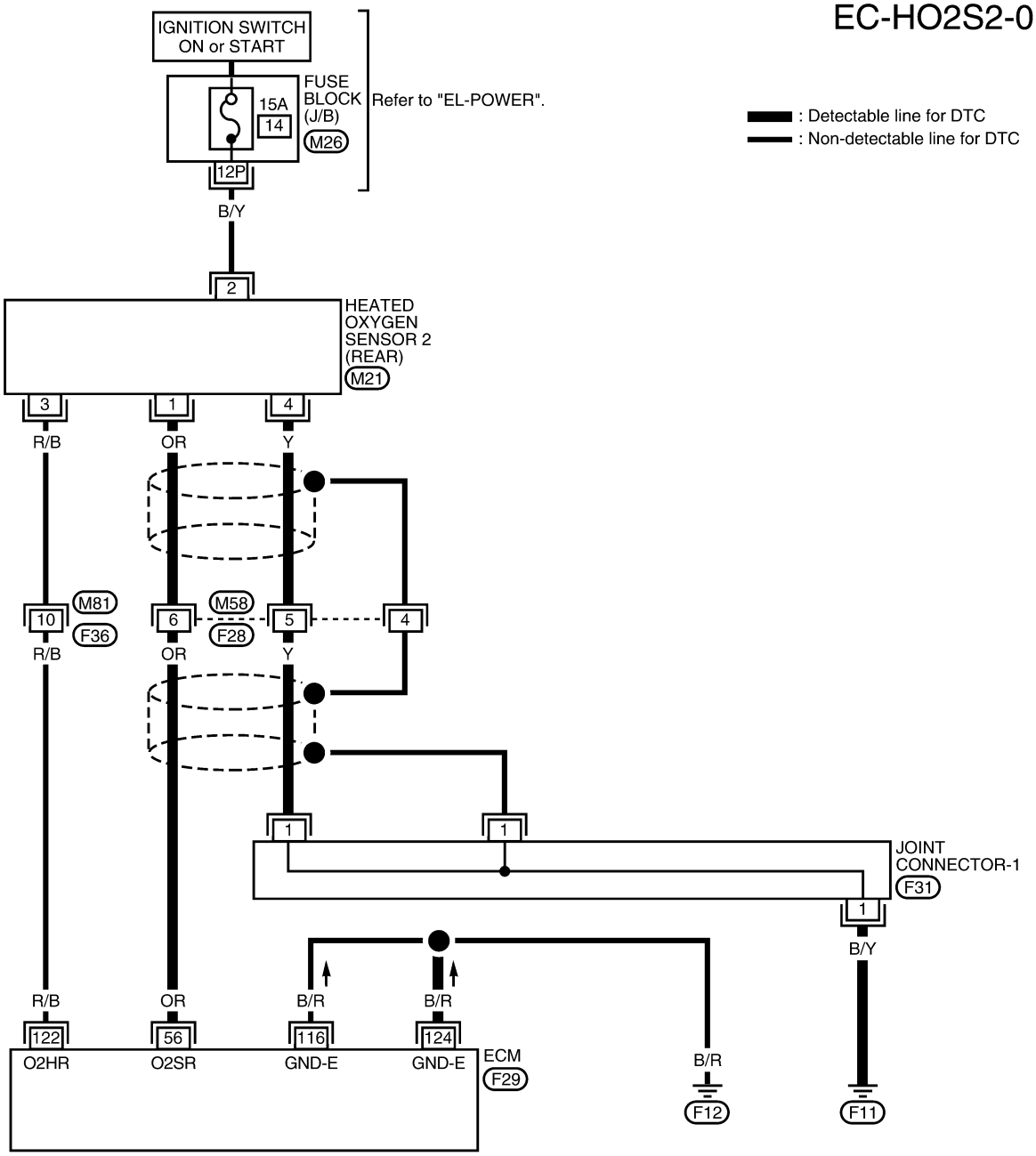

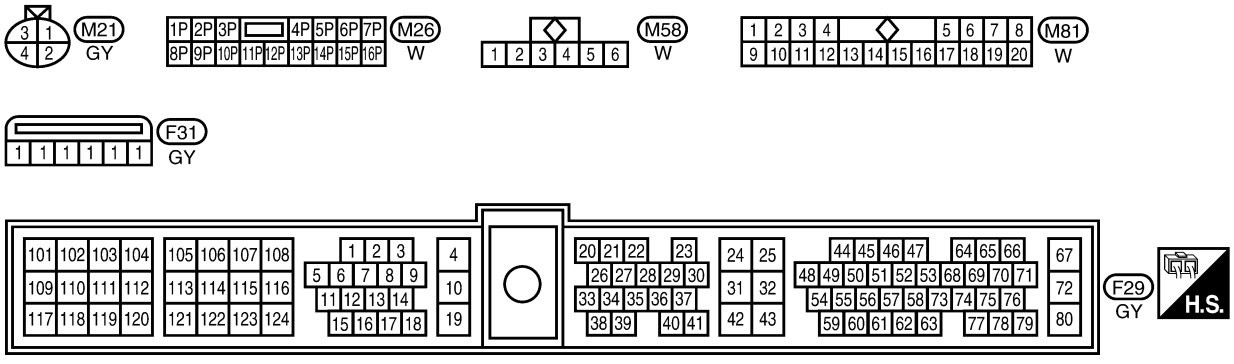

WEC774

Diagnostic Procedure

NEEC0151

1	RETIGHTEN GROUND SCREWS

1. Turn ignition switch OFF.
2. Loosen and retighten engine ground screws.

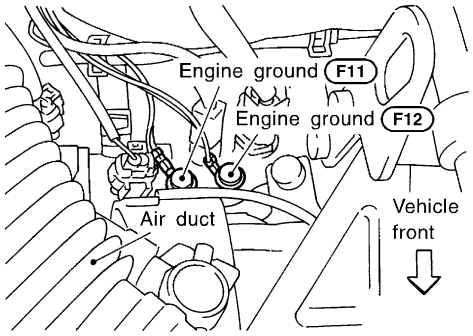

SEF325V

▶	GO TO 2.

Diagnostic Procedure (Cont'd)

2	CLEAR THE SELF-LEARNING DATA

With CONSULT-II

1. Start engine and warm it up to normal operating temperature.
2. Select "SELF-LEARNING CONT" in "WORK SUPPORT" mode with CONSULT-II.
3. Clear the self-learning control coefficient by touching "CLEAR".

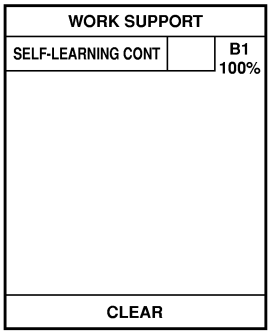

SEF215Z

4. Run engine for at least 10 minutes at idle speed.
   Is the 1st trip DTC P0172 detected? Is it difficult to start engine?

Without CONSULT-II

1. Start engine and warm it up to normal operating temperature.
2. Turn ignition switch "OFF".
3. Disconnect mass air flow sensor harness connector, and restart and run engine for at least 3 seconds at idle speed.

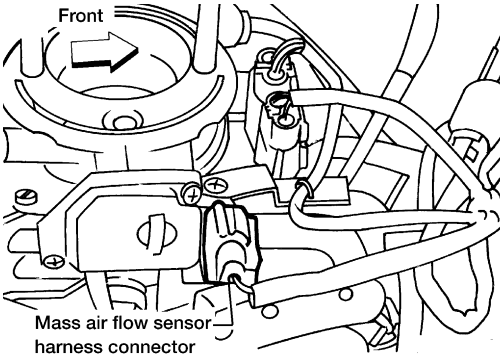

AEC131A

4. Stop engine and reconnect mass air flow sensor harness connector.
5. Make sure 1st trip DTC P0100 is displayed.
6. Erase the 1st trip DTC memory. Refer to "HOW TO ERASE EMISSION-RELATED DIAGNOSTIC INFORMATION", EC-85.
7. Make sure DTC P0000 is displayed.
8. Run engine for at least 10 minutes at idle speed.
   Is the 1st trip DTC P0171 or P0172 detected? Is it difficult to start engine?

Yes or No

Yes	▶	Perform trouble diagnosis for DTC P0172. Refer to EC-293.
No	▶	GO TO 3.

3	CHECK INPUT SIGNAL CIRCUIT

1. Turn ignition switch OFF.
2. Disconnect heated oxygen sensor 2 (rear) harness connector and ECM harness connector.
3. Check harness continuity between ECM terminal 56 and terminal 1.

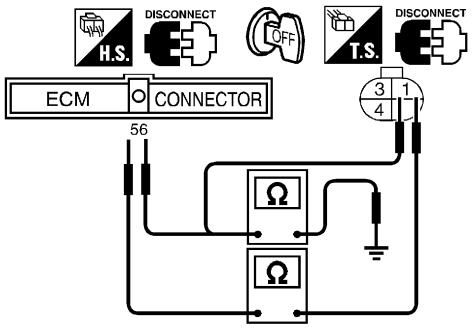

SEF157V

Continuity should exist.

4. Check harness continuity between ECM terminal 56 (or terminal 1) and ground.
   Continuity should not exist.
5. Also check harness for short to ground and short to power.

OK or NG

OK	▶	GO TO 5.
NG	▶	GO TO 4.

4	DETECT MALFUNCTIONING PART

Check the following.
- Harness connectors M59, F27
- Harness for open or short between heated oxygen sensor 2 (rear) and ECM

	▶	Repair open circuit or short to ground or short to power in harness or connectors.

5	CHECK GROUND CIRCUIT

1. Check harness continuity between heated oxygen sensor 2 (rear) terminal 4 and engine ground. Refer to "Wiring Diagram", EC-246.
   Continuity should exist.
2. Also check harness for short to power.

OK or NG

OK (With CONSULT-II)	▶	GO TO 6.
OK (Without CONSULT-II)	▶	GO TO 7.
NG	▶	GO TO 4.

Diagnostic Procedure (Cont'd)

6	CHECK HEATED OXYGEN SENSOR 2 (REAR)

With CONSULT-II

1. Start engine and drive vehicle at a speed of more than 70 km/h (43 MPH) for 2 consecutive minutes.
2. Stop vehicle with engine running.
3. Select "FUEL INJECTION" in "ACTIVE TEST" mode, and select "HO2S2 (B1)" as the monitor item with CONSULT-II.
4. Check "HO2S2 (B1)" at idle speed when adjusting "FUEL INJECTION" to ±25%.

ACTIVE TEST	
FUEL INJECTION	25 %
MONITOR	
ENG SPEED	XXX rpm
HO2S1 (B1)	XXX V
HO2S2 (B1)	XXX V
HO2S1 MNTR (B1)	RICH
HO2S2 MNTR (B1)	RICH

SEF662Y

"HO2S2 (B1)" should be above 0.56V at least once when the "FUEL INJECTION" is +25%. "HO2S2 (B1)" should be below 0.54V at least once when the "FUEL INJECTION" is −25%.

CAUTION:

- **Discard any heated oxygen sensor which has been dropped from a height of more than 0.5 m (19.7 in) onto a hard surface such as a concrete floor; use a new one.**
- **Before installing new oxygen sensor, clean exhaust system threads using Oxygen Sensor Thread Cleaner tool J-43897-18 or J-43897-12 and approved anti-seize lubricant.**

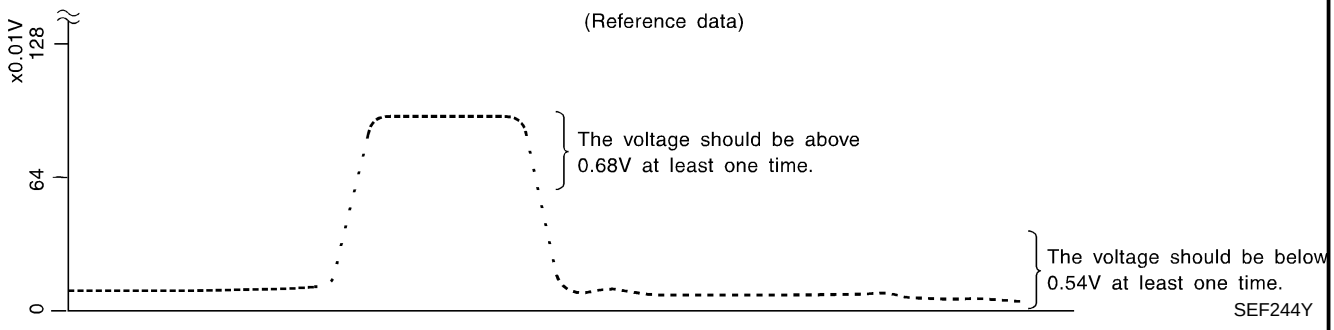

OK or NG

OK	▶	GO TO 8.
NG	▶	Replace heated oxygen sensor 2 (rear).

7	CHECK HEATED OXYGEN SENSOR 2 (REAR)

Without CONSULT-II

1. Start engine and drive vehicle at a speed of more than 70 km/h (43 MPH) for 2 consecutive minutes.
2. Stop vehicle with engine running.
3. Set voltmeter probes between ECM terminals 56 [Heated oxygen sensor 2 (rear) signal] and ECM ground.

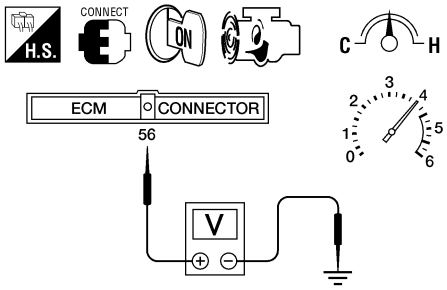

AEC874A

4. Check the voltage when revving up to 4,000 rpm under no load at least 10 times.
   (Depress and release accelerator pedal as soon as possible.)
   The voltage should be above 0.56V at least once.
   If the voltage is above 0.56V at step 4, step 5 is not necessary.
5. Check the voltage when revving up to 5,000 rpm under no load. Or keep vehicle at idling for 10 minutes, then check the voltage. Or check the voltage when coasting from 80 km/h (50 MPH) in 3rd gear position.
   The voltage should be below 0.54V at least once.
   CAUTION:
   - **Discard any heated oxygen sensor which has been dropped from a height of more than 0.5 m (19.7 in) onto a hard surface such as a concrete floor; use a new one.**
   - **Before installing new oxygen sensor, clean exhaust system threads using Oxygen Sensor Thread Cleaner tool J-43897-18 or J-43897-12 and approved anti-seize lubricant.**

OK or NG

OK	▶	GO TO 8.
NG	▶	Replace heated oxygen sensor 2 (rear).

8	CHECK SHIELD CIRCUIT

1. Turn ignition switch OFF.
2. Disconnect harness connectors F28.
3. Check harness continuity between harness connector F28 terminal 4 and ground.

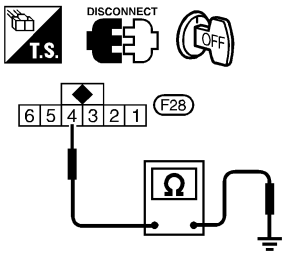

SEF698Z

Continuity should exist.

4. Also check harness for short to power.
5. Then reconnect harness connectors.

OK or NG

OK	▶	GO TO 10.
NG	▶	GO TO 9.

Diagnostic Procedure (Cont'd)

9	DETECT MALFUNCTIONING PART
Check the following. ● Joint connector-1 (Refer to "HARNESS LAYOUT", ***EL-239***.) ● Harness for open or short between harness connector F28 and engine ground	
▶	Repair open circuit, short to ground or short to power in harness or connectors.

10	CHECK INTERMITTENT INCIDENT
Perform "TROUBLE DIAGNOSIS FOR INTERMITTENT INCIDENT", EC-148.	
▶	**INSPECTION END**

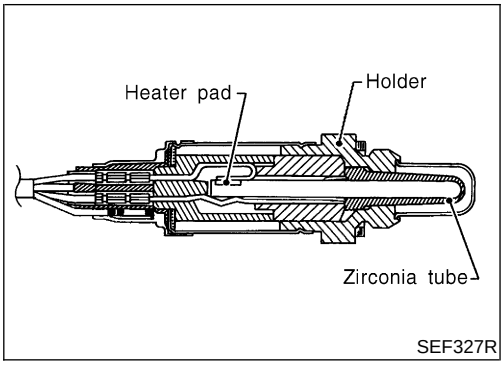

Component Description

NEEC0153

The heated oxygen sensor 2 (rear), after three way catalyst, monitors the oxygen level in the exhaust gas.
Even if switching characteristics of the heated oxygen sensor 1 (front) are shifted, the air fuel ratio is controlled to stoichiometric, by the signal from the heated oxygen sensor 2 (rear).
This sensor is made of ceramic zirconia. The zirconia generates voltage from approximately 1V in richer conditions to 0V in leaner conditions.
Under normal conditions the heated oxygen sensor 2 (rear) is not used for engine control operation.

CONSULT-II Reference Value in Data Monitor Mode

NEEC0154

Specification data are reference values.

MONITOR ITEM	CONDITION		SPECIFICATION
HO2S2 (B1)	● Engine: After warming up	Revving engine from idle to 3,000 rpm	0 - 0.3V ⟷ Approx. 0.6 - 1.0V
HO2S2 MNTR (B1)			LEAN ⟷ RICH

ECM Terminals and Reference Value

NEEC0155

Specification data are reference values and are measured between each terminal and ground.

CAUTION:

Do not use ECM ground terminals when measuring input/output voltage. Doing so may result in damage to the ECM's transistor. Use a ground other than ECM terminals, such as the ground.

TERMINAL NO.	WIRE COLOR	ITEM	CONDITION	DATA (DC Voltage)
56	OR	Heated oxygen sensor 2 (rear)	**[Engine is running]** ● After warming up to normal operating temperature and revving engine from idle to 3,000 rpm quickly	0 - Approximately 1.0V

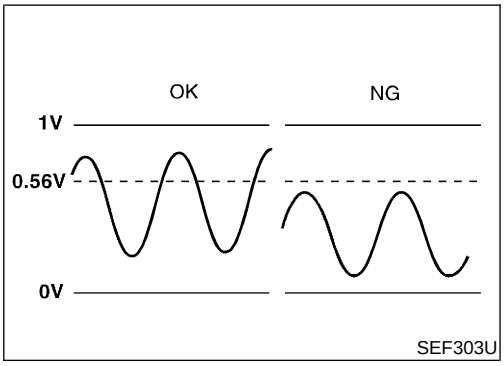

On Board Diagnosis Logic

NEEC0156

The heated oxygen sensor 2 (rear) has a much longer switching time between rich and lean than the heated oxygen sensor 1 (front). The oxygen storage capacity before the three way catalyst causes the longer switching time. To judge the malfunctions of heated oxygen sensor 2 (rear), ECM monitors whether the maximum voltage of the sensor is sufficiently high during various driving conditions such as fuel-cut.

DTC No.	Malfunction is detected when ...	Check Items (Possible Cause)
P0138	● The maximum voltage from the sensor does not reach the specified voltage.	● Harness or connectors (The sensor circuit is open or shorted.) ● Heated oxygen sensor 2 (rear) ● Fuel pressure ● Injectors ● Intake air leaks

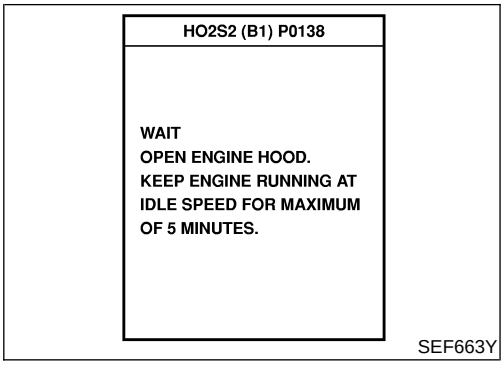

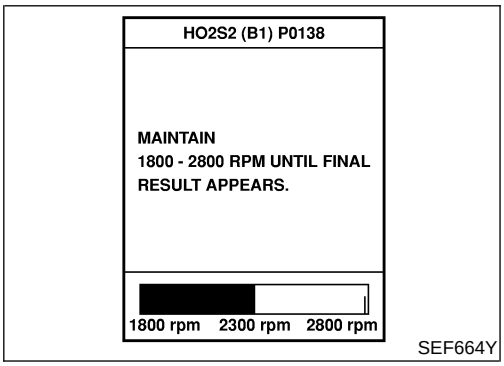

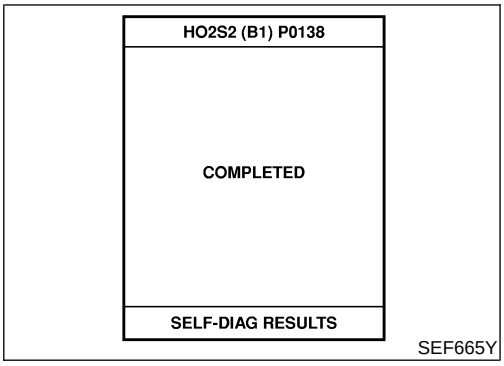

DTC Confirmation Procedure

NEEC0157

NOTE:

If "DIAGNOSTIC TROUBLE CODE CONFIRMATION PROCEDURE" has been previously conducted, always turn ignition switch OFF and wait at least 5 seconds before conducting the next test.

TESTING CONDITION:

Open engine hood before conducting following procedure

With CONSULT-II

1) Start engine and warm it up to normal operating temperature.
2) Turn ignition switch OFF and wait at least 5 seconds.
3) Turn ignition switch ON.
4) Select "DATA MONITOR" mode with CONSULT-II.
5) Make sure the "COOLANT TEMP/S" is more then 70°C (158°F).
6) Select "HO2S1 (B1) P0138", of "HO2S2" in "DTC WORK SUPPORT" mode with CONSULT-II.
7) Start engine and follow the instructions of CONSULT-II.
8) Make sure the "OK" is displayed after touching "SELF-DIAG RESULTS".
   If NG is displayed, refer to "DIAGNOSTIC PROCEDURE", EC-257.
   If "CAN NOT BE DIAGNOSED" is displayed, perform the following.

a) Stop engine and cool down "COOLANT TEMP/SE" to less then 70°C (158°F).
b) Turn ignition switch ON.
c) Select "DATA MONITOR" mode with CONSULT-II.
d) Start engine.
e) Perform from step 6) again when the "COOLANT TEMP/S" reach to 70°C (158°F).

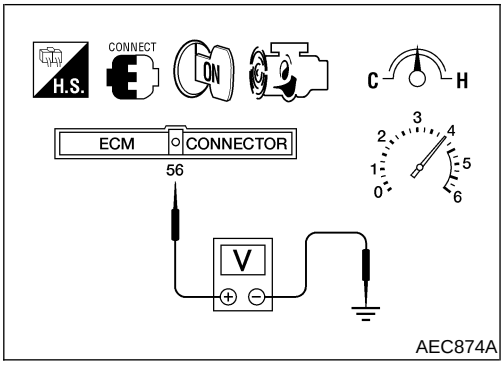

Overall Function Check

=NEEC0158

Use this procedure to check the overall function of the rear heated oxygen sensor circuit. During this check, a 1st trip DTC might not be confirmed.

CAUTION:

Always drive vehicle at a safe speed.

Without CONSULT-II

1) Start engine and drive vehicle at a speed of 70 km/h (43 MPH) for 2 consecutive minutes.
2) Stop vehicle with engine running.
3) Set voltmeter probes between ECM terminals 56 [Heated oxygen sensor 2 (rear) signal] and ECM ground.
4) Check the voltage when revving engine up to 4,000 rpm under no load at least 10 times.
   (Depress and release accelerator pedal as soon as possible.)
   The voltage should be above 0.56V at least once during this procedure.
   If the voltage can be confirmed in step 4, step 5 is not necessary.
5) Keep vehicle at idling for 10 minutes, then check the voltage. Or check the voltage when coasting from 80 km/h (50 MPH) in 3rd gear position .
   The voltage should be above 0.56V at least once during this procedure.
6) If NG, go to “Diagnostic Procedure”, EC-257.

Wiring Diagram

NEEC0159

EC-HO2S2-01

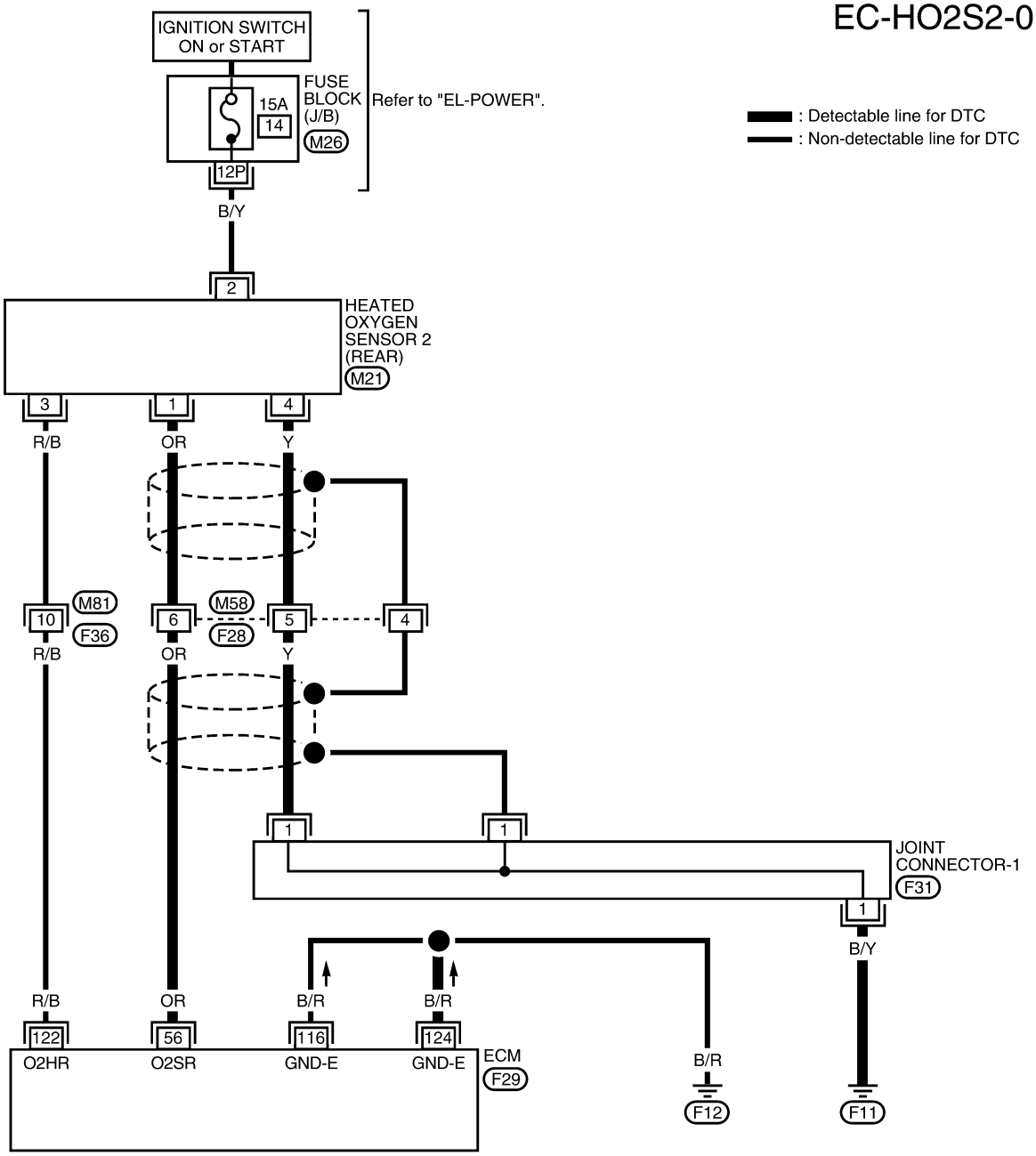

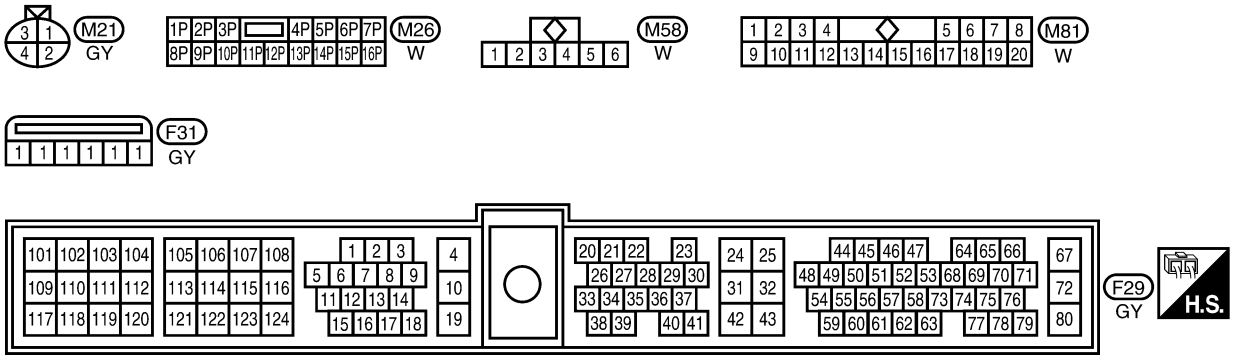

WEC774

Diagnostic Procedure

NEEC0160

1	RETIGHTEN GROUND SCREWS

1. Turn ignition switch OFF.
2. Loosen and retighten engine ground screws.

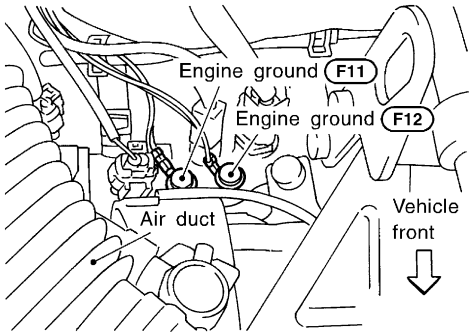

SEF325V

▶	GO TO 2.

Diagnostic Procedure (Cont'd)

2	CLEAR THE SELF-LEARNING DATA

With CONSULT-II

1. Start engine and warm it up to normal operating temperature.
2. Select "SELF-LEARNING CONT" in "WORK SUPPORT" mode with CONSULT-II.
3. Clear the self-learning control coefficient by touching "CLEAR".

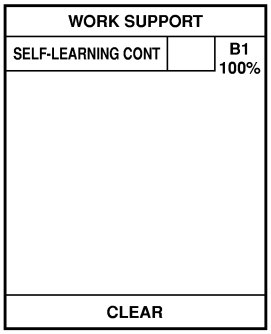

SEF215Z

4. Run engine for at least 10 minutes at idle speed.
   Is the 1st trip DTC P0171 detected? Is it difficult to start engine?

Without CONSULT-II

1. Start engine and warm it up to normal operating temperature.
2. Turn ignition switch "OFF".
3. Disconnect mass air flow sensor harness connector, and restart and run engine for at least 3 seconds at idle speed.

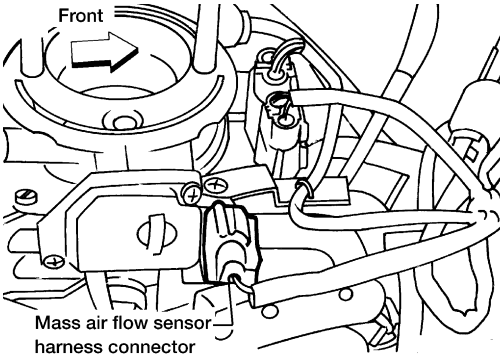

AEC131A

4. Stop engine and reconnect mass air flow sensor harness connector.
5. Make sure 1st trip DTC P0100 is displayed.
6. Erase the 1st trip DTC memory. Refer to "HOW TO ERASE EMISSION-RELATED DIAGNOSTIC INFORMATION", EC-85.
7. Make sure DTC P0000 is displayed.
8. Run engine for at least 10 minutes at idle speed.
   Is the 1st trip DTC P0171 or P0172 detected? Is it difficult to start engine?

Yes or No

Yes	▶	Perform trouble diagnosis for DTC P0171. Refer to EC-286.
No	▶	GO TO 3.

3	CHECK INPUT SIGNAL CIRCUIT

1. Disconnect heated oxygen sensor 2 (rear) harness connector and ECM harness connector.
2. Check harness continuity between ECM harness connector F29 terminal 56 and terminal 1.

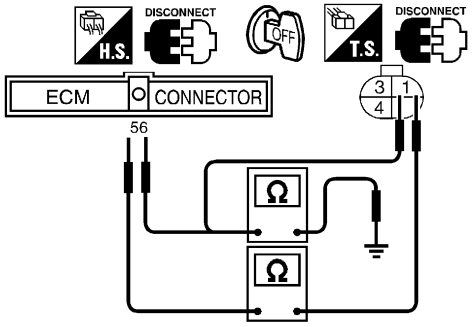

SEF157V

Continuity should exist.

3. Check harness continuity between ECM terminal 56 (or terminal 1) and ground.
Continuity should not exist.
4. Also check harness for short to ground and short to power.

OK or NG

OK	▶	GO TO 5.
NG	▶	GO TO 4.

4	DETECT MALFUNCTIONING PART

Check the following.
- Harness connectors M59, F27
- Harness for open or short between ECM and heated oxygen sensor 2 (rear)

	▶	Repair open circuit or short to ground or short to power in harness or connectors.

5	CHECK GROUND CIRCUIT

1. Check harness continuity between heated oxygen sensor 2 (rear) connector M21 terminal 4 and engine ground. Refer to "Wiring Diagram", EC-256.
Continuity should exist.
2. Also check harness for short to power.

OK or NG

OK (With CONSULT-II)	▶	GO TO 6.
OK (Without CONSULT-II)	▶	GO TO 7.
NG	▶	Repair open circuit or short to power in harness or connectors.

6	CHECK HEATED OXYGEN SENSOR 2 (REAR)

With CONSULT-II

1. Start engine and drive vehicle at a speed of more than 70 km/h (43 MPH) for 2 consecutive minutes.
2. Stop vehicle with engine running.
3. Select "FUEL INJECTION" in "ACTIVE TEST" mode, and select "HO2S2 (B1)" as the monitor item with CONSULT-II.
4. Check "HO2S2 (B1)" at idle speed when adjusting "FUEL INJECTION" to ±25%.

ACTIVE TEST	
FUEL INJECTION	25 %
MONITOR	
ENG SPEED	XXX rpm
HO2S1 (B1)	XXX V
HO2S2 (B1)	XXX V
HO2S1 MNTR (B1)	RICH
HO2S2 MNTR (B1)	RICH

SEF662Y

"HO2S2 (B1)" should be above 0.56V at least once when the "FUEL INJECTION" is +25%. "HO2S2 (B1)" should be below 0.54V at least once when the "FUEL INJECTION" is −25%.

CAUTION:

- **Discard any heated oxygen sensor which has been dropped from a height of more than 0.5 m (19.7 in) onto a hard surface such as a concrete floor; use a new one.**
- **Before installing new oxygen sensor, clean exhaust system threads using Oxygen Sensor Thread Cleaner tool J-43897-18 or J-43897-12 and approved anti-seize lubricant.**

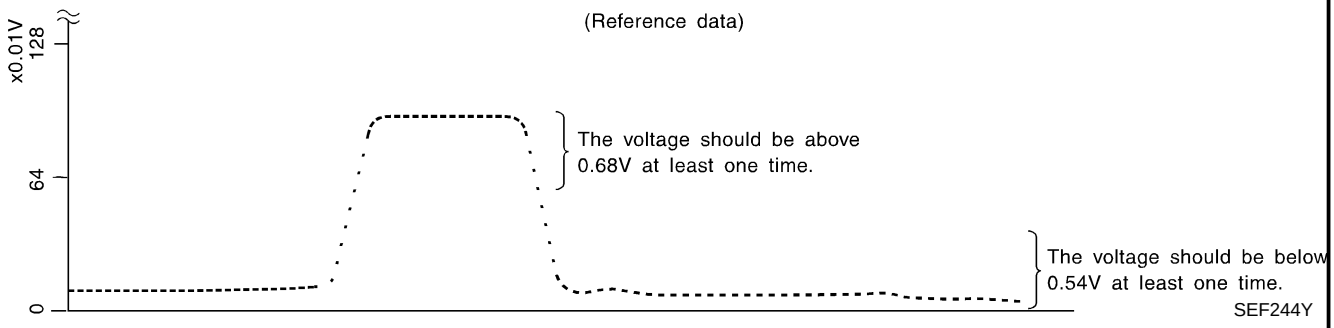

OK or NG

OK	▶	GO TO 8.
NG	▶	Replace heated oxygen sensor 2 (rear).

7	CHECK HEATED OXYGEN SENSOR 2 (REAR)

Without CONSULT-II

1. Start engine and drive vehicle at a speed of more than 70 km/h (43 MPH) for 2 consecutive minutes.
2. Stop vehicle with engine running.
3. Set voltmeter probes between ECM terminals 56 [Heated oxygen sensor 2 (rear) signal] and ECM ground.

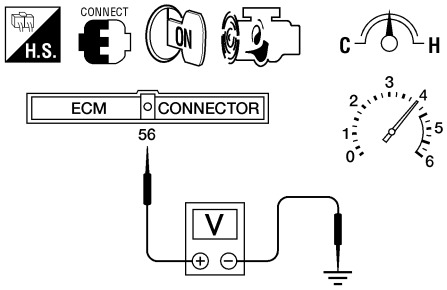

AEC874A

4. Check the voltage when revving up to 4,000 rpm under no load at least 10 times.
   (Depress and release accelerator pedal as soon as possible.)
   The voltage should be above 0.56V at least once.
   If the voltage is above 0.56V at step 4, step 5 is not necessary.
5. Check the voltage when revving up to 5,000 rpm under no load. Or keep vehicle at idling for 10 minutes, then check the voltage. Or check the voltage when coasting from 80 km/h (50 MPH) in 3rd gear position (M/T), D position with "O/D" OFF (A/T).
   The voltage should be below 0.54V at least once.
   CAUTION:
   - **Discard any heated oxygen sensor which has been dropped from a height of more than 0.5 m (19.7 in) onto a hard surface such as a concrete floor; use a new one.**
   - **Before installing new oxygen sensor, clean exhaust system threads using Oxygen Sensor Thread Cleaner tool J-43897-18 or J-43897-12 and approved anti-seize lubricant.**

OK or NG

OK	▶	GO TO 8.
NG	▶	Replace heated oxygen sensor 2 (rear).

8	CHECK SHIELD CIRCUIT

1. Turn ignition switch OFF.
2. Disconnect harness connectors F28.
3. Check harness continuity between harness connector F28 terminal 4 and ground.

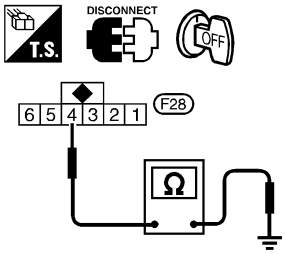

SEF698Z

Continuity should exist.

4. Also check harness for short to power.
5. Then reconnect harness connectors.

OK or NG

OK	▶	GO TO 10.
NG	▶	GO TO 9.

Diagnostic Procedure (Cont'd)

9	DETECT MALFUNCTIONING PART
Check the following. ● Joint connector-1 (Refer to "HARNESS LAYOUT", ***EL-239***.) ● Harness for open or short between harness connector F28 and engine ground	
▶	Repair open circuit, short to ground or short to power in harness or connectors.

10	CHECK INTERMITTENT INCIDENT
Perform "TROUBLE DIAGNOSIS FOR INTERMITTENT INCIDENT", EC-148.	
▶	**INSPECTION END**

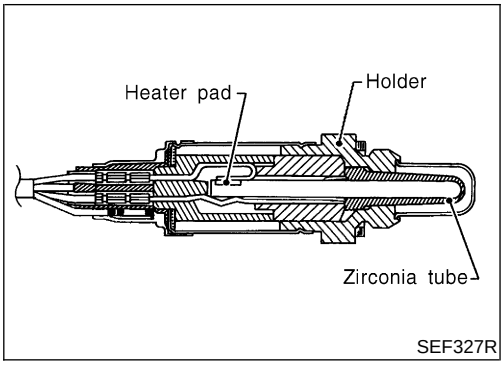

Component Description

NEEC0162

The heated oxygen sensor 2 (rear), after three way catalyst, monitors the oxygen level in the exhaust gas.
Even if switching characteristics of the heated oxygen sensor 1 (front) are shifted, the air fuel ratio is controlled to stoichiometric, by the signal from the heated oxygen sensor 2 (rear).
This sensor is made of ceramic zirconia. The zirconia generates voltage from approximately 1V in richer conditions to 0V in leaner conditions.
Under normal conditions the heated oxygen sensor 2 (rear) is not used for engine control operation.

CONSULT-II Reference Value in Data Monitor Mode

NEEC0163

Specification data are reference values.

MONITOR ITEM	CONDITION		SPECIFICATION
HO2S2 (B1)	● Engine: After warming up	Revving engine from idle to 3,000 rpm	0 - 0.3V ⟷ Approx. 0.6 - 1.0V
HO2S2 MNTR (B1)			LEAN ⟷ RICH

ECM Terminals and Reference Value

NEEC0164

Specification data are reference values and are measured between each terminal and ground.

CAUTION:

Do not use ECM ground terminals when measuring input/output voltage. Doing so may result in damage to the ECM's transistor. Use a ground other than ECM terminals, such as the ground.

TERMINAL NO.	WIRE COLOR	ITEM	CONDITION	DATA (DC Voltage)
56	OR	Heated oxygen sensor 2 (rear)	**[Engine is running]** ● After warming up to normal operating temperature and revving engine from idle to 3,000 rpm	0 - Approximately 1.0V

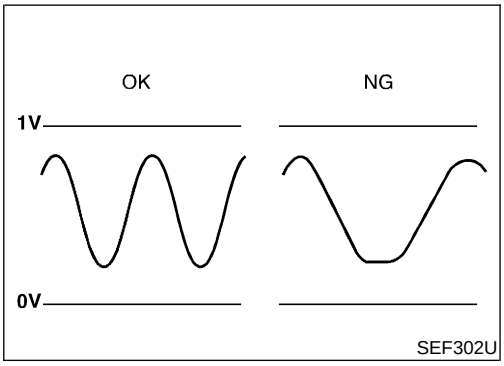

On Board Diagnosis Logic

NEEC0165

The heated oxygen sensor 2 (rear) has a much longer switching time between rich and lean than the heated oxygen sensor 1 (front). The oxygen storage capacity before the three way catalyst causes the longer switching time. To judge the malfunctions of heated oxygen sensor 2 (rear), ECM monitors whether the switching response of the sensor's voltage is faster than specified during various driving conditions such as fuel-cut.

DTC No.	Malfunction is detected when ...	Check Items (Possible Cause)
P0139	● It takes more than the specified time for the sensor to respond between rich and lean.	● Harness or connectors (The sensor circuit is open or shorted.) ● Heated oxygen sensor 2 (rear) ● Fuel pressure ● Injectors ● Intake air leaks

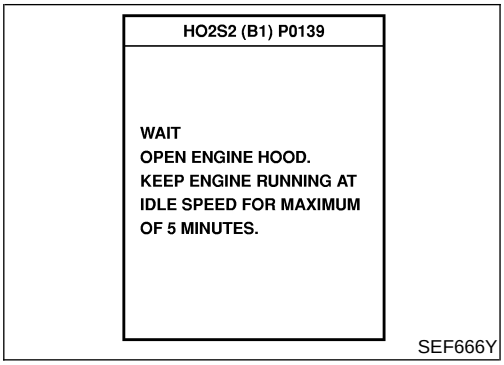

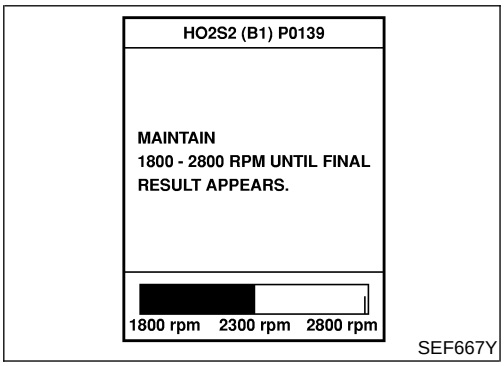

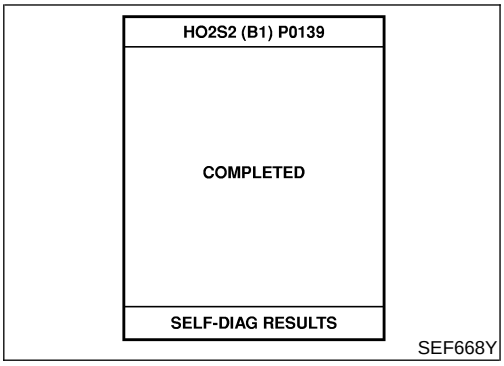

DTC Confirmation Procedure

NEEC0166

NOTE:

If "DIAGNOSTIC TROUBLE CODE CONFIRMATION PROCEDURE" has been previously conducted, always turn ignition switch OFF and wait at least 5 seconds before conducting the next test.

TESTING CONDITION:

Open engine hood before conducting following procedure

With CONSULT-II

1) Start engine and warm it up to normal operating temperature.
2) Turn ignition switch OFF and wait at least 5 seconds.
3) Turn ignition switch ON.
4) Select "DATA MONITOR" mode with CONSULT-II.
5) Make sure the "COOLANT TEMP/S" is more then 70°C (158°F).
6) Select "HO2S2 (B1) P0139", of "HO2S2" in "DTC WORK SUPPORT" mode with CONSULT-II.
7) Start engine and follow the instructions of CONSULT-II.
8) Make sure the "OK" is displayed after touching "SELF-DIAG RESULTS".
   If NG is displayed, refer to "DIAGNOSTIC PROCEDURE", EC-267.
   If "CAN NOT BE DIAGNOSED" is displayed, perform the following.

a) Stop engine and cool down "COOLANT TEMP/SE" to less then 70°C (158°F).
b) Turn ignition switch ON
c) Select "DATA MONITOR" mode with CONSULT-II.
d) Start engine.
e) Perform from step 6) again when the "COOLANT TEMP/S" reach to 70°C (158°F).

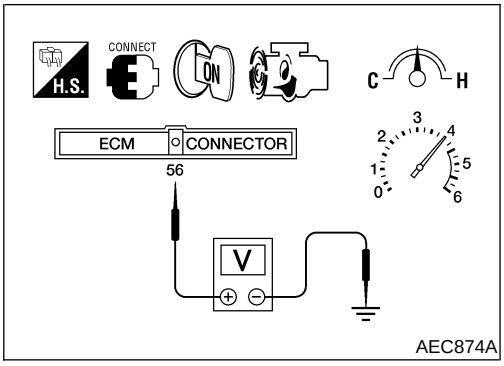

Overall Function Check

=NEEC0167

Use this procedure to check the overall function of the heated oxygen sensor 2 (rear) circuit. During this check, a 1st trip DTC might not be confirmed.

CAUTION:

Always drive vehicle at a safe speed.

Without CONSULT-II

1) Start engine and drive vehicle at a speed of more than 70 km/h (43 MPH) for 2 consecutive minutes.
2) Stop vehicle with engine running.
3) Set voltmeter probes between ECM terminals 56 [Heated oxygen sensor 2 (rear) signal] and engine ground.
4) Check the voltage when revving up to 4,000 rpm under no load at least 10 times.
   (Depress and release accelerator pedal as soon as possible.)
   The voltage should change at more than 0.06V for 1 second during this procedure.
   If the voltage can be confirmed in step 4, step 5 is not necessary.
5) Keep vehicle at idling for 10 minutes, then check the voltage. Or check the voltage when coasting from 80 km/h (50 MPH) in 3rd gear position.
   The voltage should change at more than 0.06V for 1 second during this procedure.
6) If NG, go to “Diagnostic Procedure”, EC-267.

Wiring Diagram

NEEC0168

EC-HO2S2-01

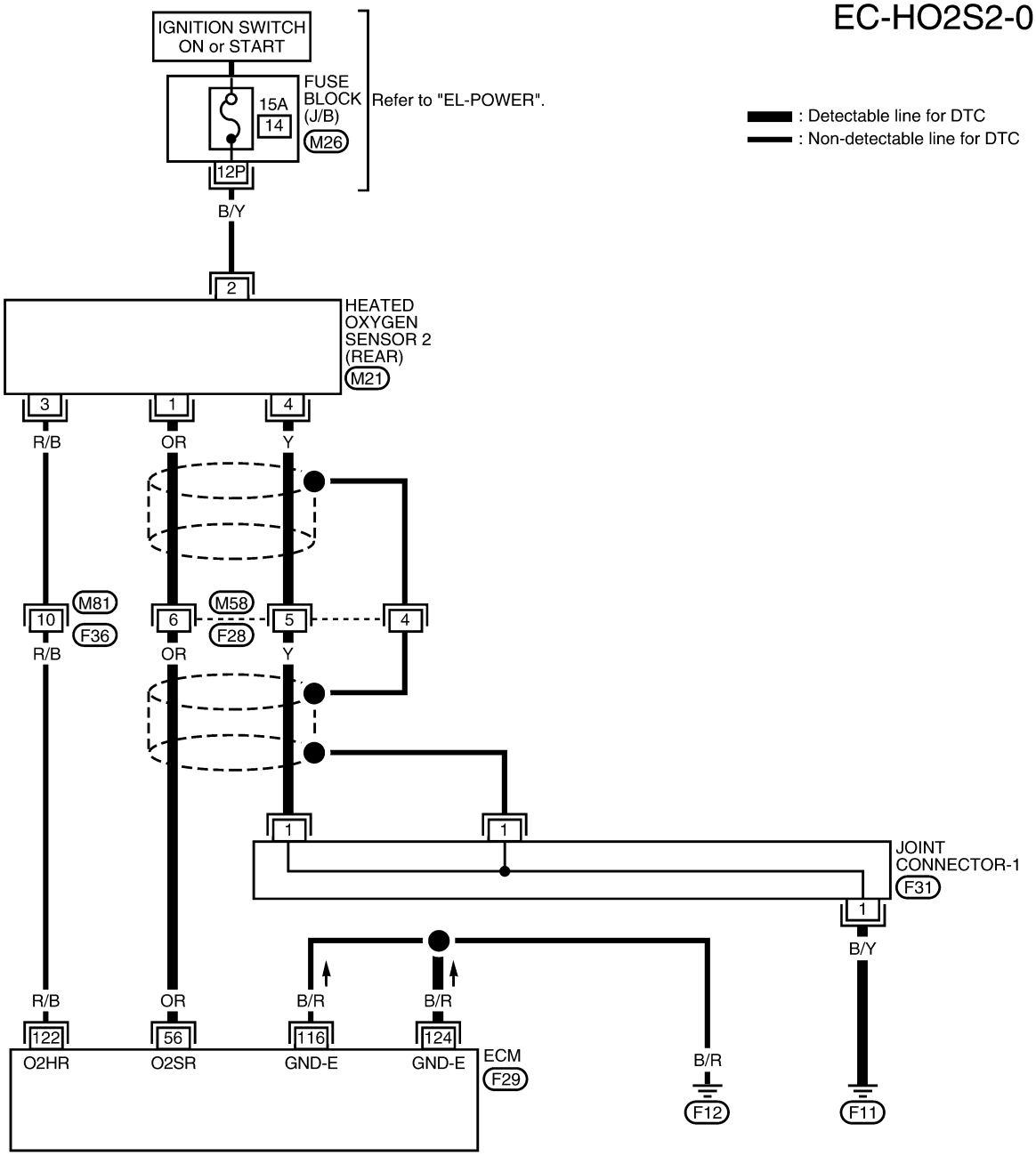

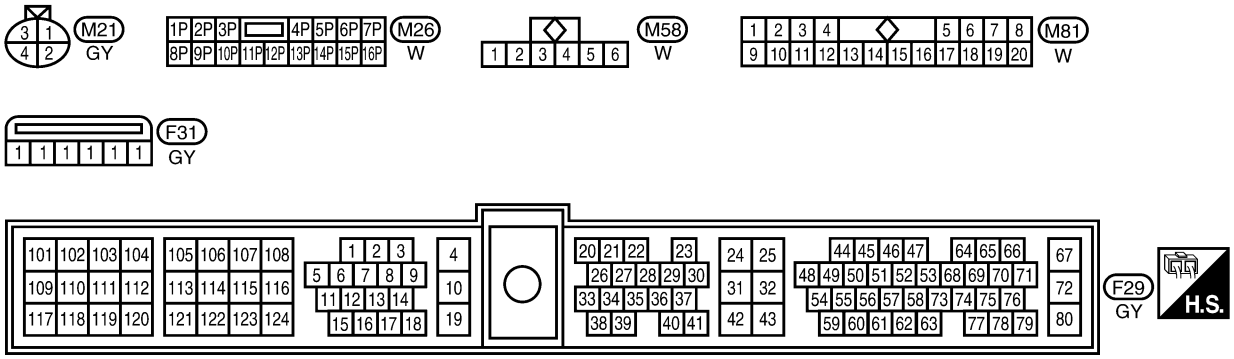

WEC774

Diagnostic Procedure

NEEC0169

1	RETIGHTEN GROUND SCREWS

1. Turn ignition switch OFF.
2. Loosen and retighten engine ground screws.

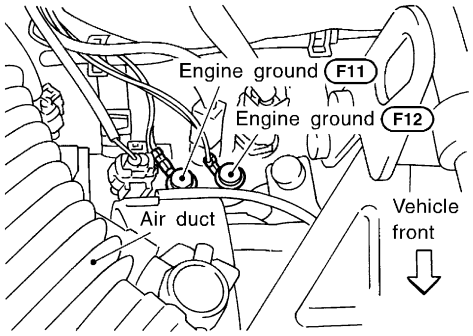

SEF325V

▶	GO TO 2.

Diagnostic Procedure (Cont'd)

2	CLEAR THE SELF-LEARNING DATA

With CONSULT-II

1. Start engine and warm it up to normal operating temperature.
2. Select "SELF-LEARNING CONT" in "WORK SUPPORT" mode with CONSULT-II.
3. Clear the self-learning control coefficient by touching "CLEAR".

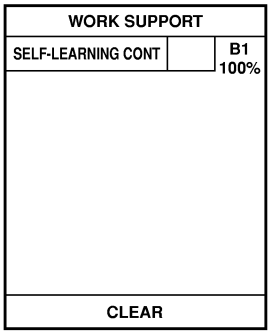

SEF215Z

4. Run engine for at least 10 minutes at idle speed.
   Is the 1st trip DTC P0172 detected? Is it difficult to start engine?

Without CONSULT-II

1. Start engine and warm it up to normal operating temperature.
2. Turn ignition switch "OFF".
3. Disconnect mass air flow sensor harness connector, and restart and run engine for at least 3 seconds at idle speed.

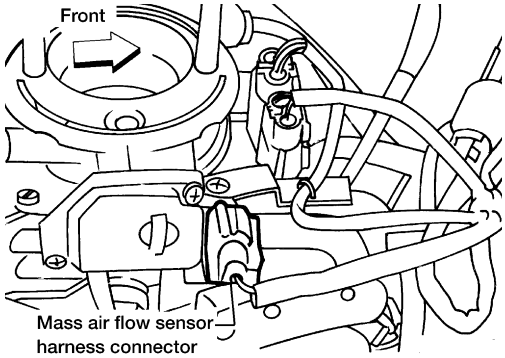

AEC131A

4. Stop engine and reconnect mass air flow sensor harness connector.
5. Make sure 1st trip DTC P0100 is displayed.
6. Erase the 1st trip DTC memory. Refer to "HOW TO ERASE EMISSION-RELATED DIAGNOSTIC INFORMATION", EC-85.
7. Make sure DTC P0000 is displayed.
8. Run engine for at least 10 minutes at idle speed.
   Is the 1st trip DTC P0171 or P0172 detected? Is it difficult to start engine?

Yes or No

Yes	▶	Perform trouble diagnosis for DTC P0171 or P0172. Refer to EC-286 or EC-293.
No	▶	GO TO 3.

3	CHECK INPUT SIGNAL CIRCUIT

1. Disconnect heated oxygen sensor 2 (rear) harness connector and ECM harness connector.
2. Check harness continuity between ECM terminal 56 and terminal 1.

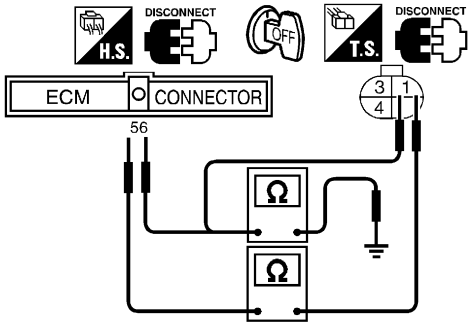

SEF157V

Continuity should exist.

3. Check harness continuity between ECM terminal 56 (or terminal 1) and ground.
Continuity should not exist.
4. Also check harness for short to ground and short to power.

OK or NG

OK	▶	GO TO 5.
NG	▶	GO TO 4.

4	DETECT MALFUNCTIONING PART

Check the following.
- Harness connectors M59, F27
- Harness for open or short between heated oxygen sensor 2 (rear) and ECM

	▶	Repair open circuit or short to ground or short to power in harness or connectors.

5	CHECK GROUND CIRCUIT

1. Check harness continuity between heated oxygen sensor 2 (rear) terminal 4 and engine ground. Refer to the wiring diagram.
Continuity should exist.
2. Also check harness for short to power.

OK or NG

OK (With CONSULT-II)	▶	GO TO 6.
OK (Without CONSULT-II)	▶	GO TO 7.
NG	▶	GO TO 4.

6	CHECK HEATED OXYGEN SENSOR 2 (REAR)

With CONSULT-II

1. Start engine and drive vehicle at a speed of more than 70 km/h (43 MPH) for 2 consecutive minutes.
2. Stop vehicle with engine running.
3. Select "FUEL INJECTION" in "ACTIVE TEST" mode, and select "HO2S2 (B1)" as the monitor item with CONSULT-II.
4. Check "HO2S2 (B1)" at idle speed when adjusting "FUEL INJECTION" to ±25%.

ACTIVE TEST	
FUEL INJECTION	25 %
MONITOR	
ENG SPEED	XXX rpm
HO2S1 (B1)	XXX V
HO2S2 (B1)	XXX V
HO2S1 MNTR (B1)	RICH
HO2S2 MNTR (B1)	RICH

SEF662Y

"HO2S2 (B1)" should be above 0.56V at least once when the "FUEL INJECTION" is +25%. "HO2S2 (B1)" should be below 0.54V at least once when the "FUEL INJECTION" is −25%.

CAUTION:

- **Discard any heated oxygen sensor which has been dropped from a height of more than 0.5 m (19.7 in) onto a hard surface such as a concrete floor; use a new one.**
- **Before installing new oxygen sensor, clean exhaust system threads using Oxygen Sensor Thread Cleaner tool J-43897-18 or J-43897-12 and approved anti-seize lubricant.**

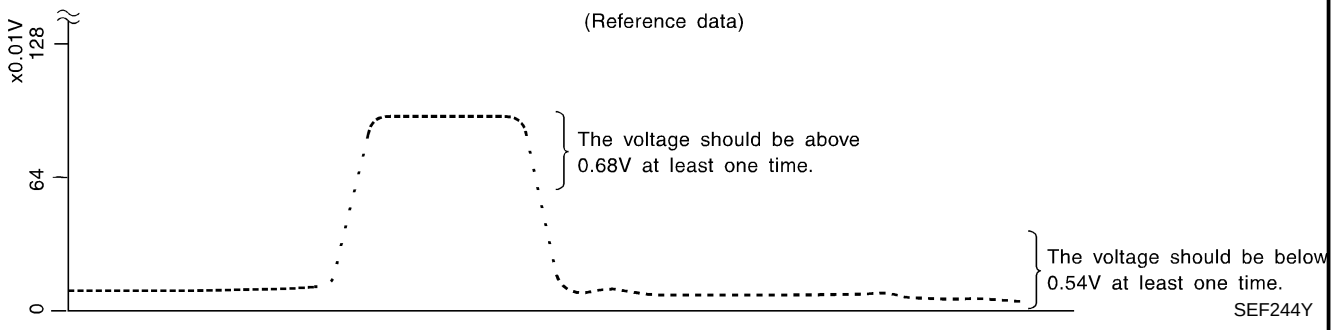

SEF244Y

OK or NG

OK	▶	GO TO 8.
NG	▶	Replace heated oxygen sensor 2 (rear).

7	CHECK HEATED OXYGEN SENSOR 2 (REAR)

Without CONSULT-II

1. Start engine and drive vehicle at a speed of more than 70 km/h (43 MPH) for 2 consecutive minutes.
2. Stop vehicle with engine running.
3. Set voltmeter probes between ECM terminals 56 [Heated oxygen sensor 2 (rear) signal] and engine ground.

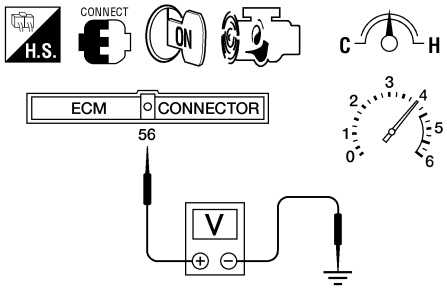

AEC874A

4. Check the voltage when revving up to 4,000 rpm under no load at least 10 times.
   (Depress and release accelerator pedal as soon as possible.)
   The voltage should be above 0.56V at least once.
   If the voltage is above 0.56V at step 4, step 5 is not necessary.
5. Check the voltage when revving up to 5,000 rpm under no load. Or keep vehicle at idling for 10 minutes, then check the voltage. Or check the voltage when coasting from 80 km/h (50 MPH) in 3rd gear position.
   The voltage should be below 0.54V at least once.
   CAUTION:
   - **Discard any heated oxygen sensor which has been dropped from a height of more than 0.5 m (19.7 in) onto a hard surface such as a concrete floor; use a new one.**
   - **Before installing new oxygen sensor, clean exhaust system threads using Oxygen Sensor Thread Cleaner tool J-43897-18 or J-43897-12 and approved anti-seize lubricant.**

OK or NG

OK	▶	GO TO 8.
NG	▶	Replace heated oxygen sensor 2 (rear).

8	CHECK SHIELD CIRCUIT

1. Turn ignition switch OFF.
2. Disconnect harness connectors F28.
3. Check harness continuity between harness connector F28 terminal 4 and ground.

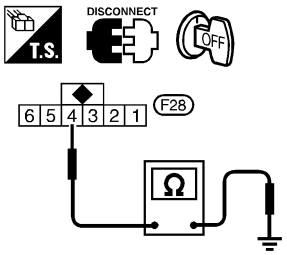

SEF698Z

Continuity should exist.

4. Also check harness for short to power.
5. Then reconnect harness connectors.

OK or NG

OK	▶	GO TO 10.
NG	▶	GO TO 9.

Diagnostic Procedure (Cont'd)

9	DETECT MALFUNCTIONING PART
Check the following. ● Joint connector-1 (Refer to "HARNESS LAYOUT", ***EL-239***.) ● Harness for open or short between harness connector F28 and engine ground	
▶	Repair open circuit, short to ground or short to power in harness or connectors.

10	CHECK INTERMITTENT INCIDENT
Perform "TROUBLE DIAGNOSIS FOR INTERMITTENT INCIDENT", EC-148.	
▶	**INSPECTION END**

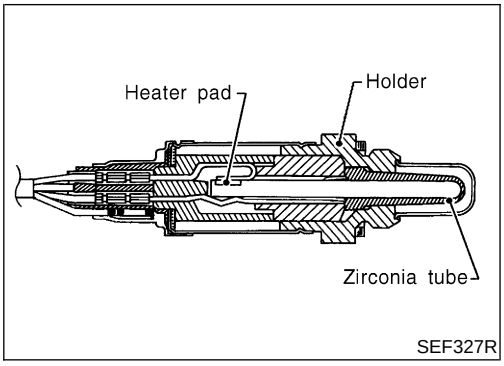

Component Description

NEEC0171

The heated oxygen sensor 2 (rear), after three way catalyst, monitors the oxygen level in the exhaust gas.
Even if switching characteristics of the heated oxygen sensor 1 (front) are shifted, the air fuel ratio is controlled to stoichiometric, by the signal from the heated oxygen sensor 2 (rear).
This sensor is made of ceramic zirconia. The zirconia generates voltage from approximately 1V in richer conditions to 0V in leaner conditions.
Under normal conditions the heated oxygen sensor 2 (rear) is not used for engine control operation.

CONSULT-II Reference Value in Data Monitor Mode

NEEC0172

Specification data are reference values.

MONITOR ITEM	CONDITION		SPECIFICATION
HO2S2 (B1)	● Engine: After warming up	Revving engine from idle to 3,000 rpm	0 - 0.3V ⟷ Approx. 0.6 - 1.0V
HO2S2 MNTR (B1)			LEAN ⟷ RICH

ECM Terminals and Reference Value

NEEC0173

Specification data are reference values and are measured between each terminal and ground.

CAUTION:

Do not use ECM ground terminals when measuring input/output voltage. Doing so may result in damage to the ECM's transistor. Use a ground other than ECM terminals, such as the ground.

TERMINAL NO.	WIRE COLOR	ITEM	CONDITION	DATA (DC Voltage)
56	OR	Heated oxygen sensor 2 (rear)	**[Engine is running]** ● After warming up to normal operating temperature and revving engine from idle to 3,000 rpm	0 - Approximately 1.0V

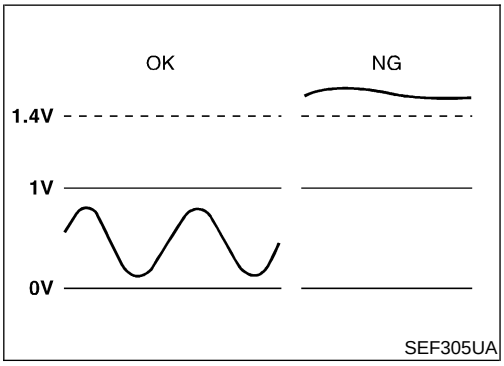

On Board Diagnosis Logic

NEEC0174

The heated oxygen sensor 2 (rear) has a much longer switching time between rich and lean than the heated oxygen sensor 1 (front). The oxygen storage capacity before the three way catalyst causes the longer switching time. To judge the malfunctions of heated oxygen sensor 2 (rear), ECM monitors whether or not the voltage is too high during various driving conditions such as fuel-cut.

DTC No.	Malfunction is detected when ...	Check Items (Possible Cause)
P0140	● An excessively high voltage from the sensor is sent to ECM.	● Harness or connectors (The sensor circuit is open or shorted.) ● Heated oxygen sensor 2 (rear)

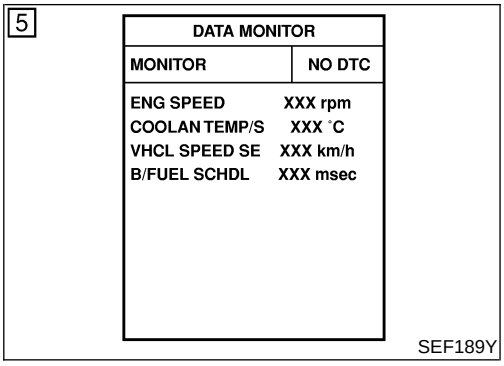

DTC Confirmation Procedure

NEEC0175

NOTE:

If "DTC Confirmation Procedure " has been previously conducted, always turn ignition switch OFF and wait at least 5 seconds before conducting the next test.

With CONSULT-II

1) Turn ignition switch ON and select "DATA MONITOR" mode with CONSULT-II.
2) Start engine and drive vehicle at a speed of more than 70 km/h (43 MPH) for 2 consecutive minutes.
3) Maintain the following conditions for at least 5 consecutive seconds.

ENG SPEED	1,100 - 3,600 rpm
VHCL SPEED SE	32 - 120 km/h (20 - 75 MPH)
B/FUEL SCHDL	3.5 - 15.5 msec
COOLAN TEMP/S	More than 70°C (158°F)
Selector lever	Suitable position

4) If 1st trip DTC is detected, go to "Diagnostic Procedure", EC-276.

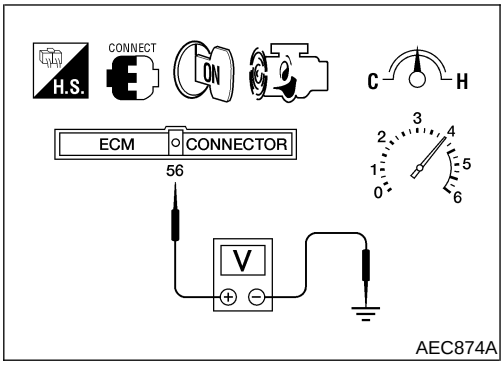

Overall Function Check

NEEC0176

Use this procedure to check the overall function of the rear heated oxygen sensor circuit. During this check, a 1st trip DTC might not be confirmed.

Without CONSULT-II

1) Start engine and drive vehicle at a speed of more than 70 km/h (43 MPH) for 2 consecutive minutes.
2) Stop vehicle with engine running.
3) Set voltmeter probes between ECM terminals 56 [Heated oxygen sensor 2 (rear) signal] and ECM ground.
4) Check the voltage after revving up to 4,000 rpm under no load at least 10 times.
   (Depress and release accelerator pedal as soon as possible.)
   The voltage should be below 1.4V during this procedure.
5) If NG, go to "Diagnostic Procedure", EC-276.

Wiring Diagram

NEEC0177

EC-HO2S2-01

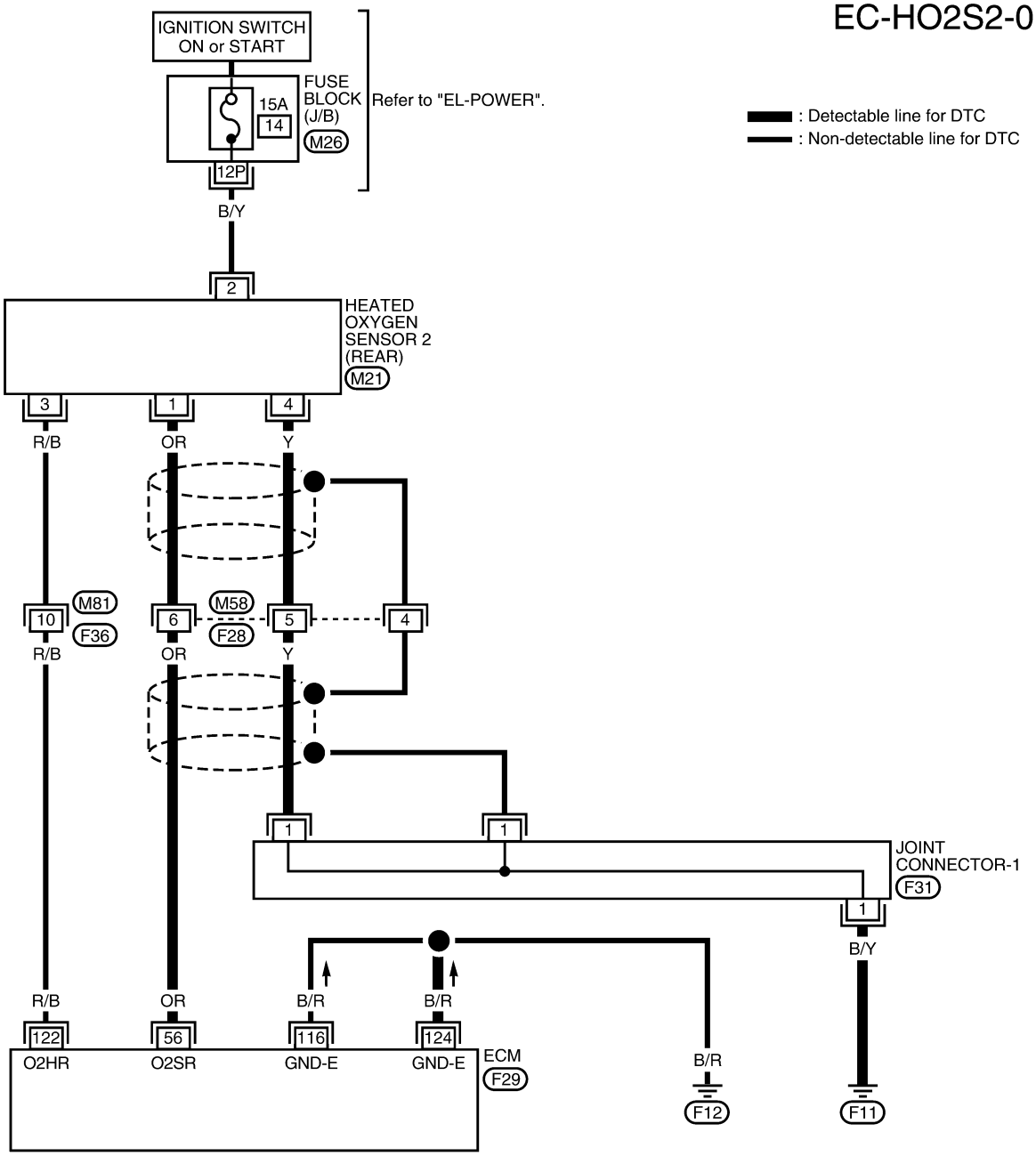

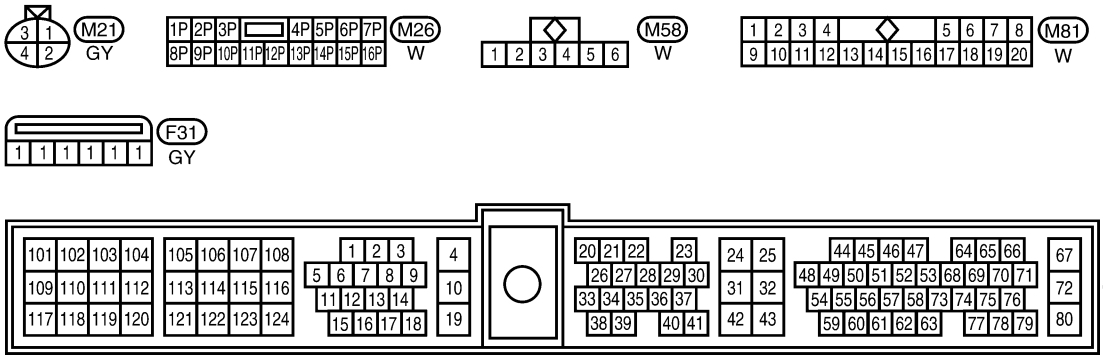

WEC774

Diagnostic Procedure

NEEC0178

1	RETIGHTEN GROUND SCREWS

1. Turn ignition switch OFF.
2. Loosen and retighten engine ground screws.

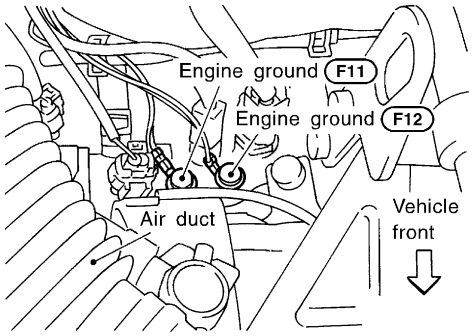

SEF325V

▶ GO TO 2.

2	CHECK INPUT SIGNAL CIRCUIT

1. Disconnect heated oxygen sensor 2 (rear) harness connector and ECM harness connector.
2. Check harness continuity between ECM terminal 56 and terminal 1.

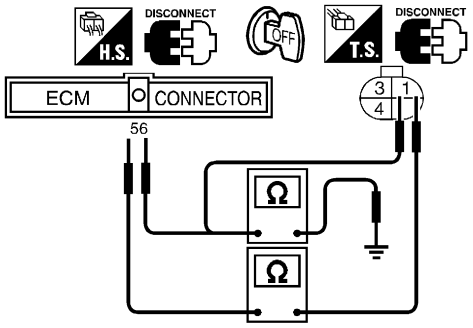

SEF157V

Continuity should exist.

3. Check harness continuity between ECM terminal 56 (or terminal 1) and ground.

Continuity should not exist.

4. Also check harness for short to ground and short to power.

OK or NG

OK	▶	GO TO 4.
NG	▶	GO TO 3.

3	DETECT MALFUNCTIONING PART

Check the following.

- Harness connectors M59, F27
- Harness for open or short between heated oxygen sensor 2 (rear) and ECM

▶ Repair open circuit or short to ground or short to power in harness or connectors.

4	CHECK GROUND CIRCUIT	
1. Check harness continuity between heated oxygen sensor 2 (rear) terminal 4 and engine ground. Refer to "Wiring Diagram", EC-275. **Continuity should exist.** 2. Also check harness for short to power. **OK or NG**		
OK	▶	GO TO 5.
NG	▶	Repair open circuit or short to power in harness or connectors.

5	CHECK HARNESS CONNECTOR	
Check heated oxygen sensor 2 (rear) harness connector for water. **Water should not exist.** **OK or NG**		
OK (With CONSULT-II)	▶	GO TO 6.
OK (Without CONSULT-II)	▶	GO TO 7.
NG	▶	Repair or replace harness connector.

6	CHECK HEATED OXYGEN SENSOR 2 (REAR)

With CONSULT-II

1. Start engine and drive vehicle at a speed of more than 70 km/h (43 MPH) for 2 consecutive minutes.
2. Stop vehicle with engine running.
3. Select "FUEL INJECTION" in "ACTIVE TEST" mode, and select "HO2S2 (B1)" as the monitor item with CONSULT-II.
4. Check "HO2S2 (B1)" at idle speed when adjusting "FUEL INJECTION" to ±25%.

ACTIVE TEST	
FUEL INJECTION	25 %
MONITOR	
ENG SPEED	XXX rpm
HO2S1 (B1)	XXX V
HO2S2 (B1)	XXX V
HO2S1 MNTR (B1)	RICH
HO2S2 MNTR (B1)	RICH

SEF662Y

"HO2S2 (B1)" should be above 0.56V at least once when the "FUEL INJECTION" is +25%. "HO2S2 (B1)" should be below 0.54V at least once when the "FUEL INJECTION" is −25%.

CAUTION:

- **Discard any heated oxygen sensor which has been dropped from a height of more than 0.5 m (19.7 in) onto a hard surface such as a concrete floor; use a new one.**
- **Before installing new oxygen sensor, clean exhaust system threads using Oxygen Sensor Thread Cleaner tool J-43897-18 or J-43897-12 and approved anti-seize lubricant.**

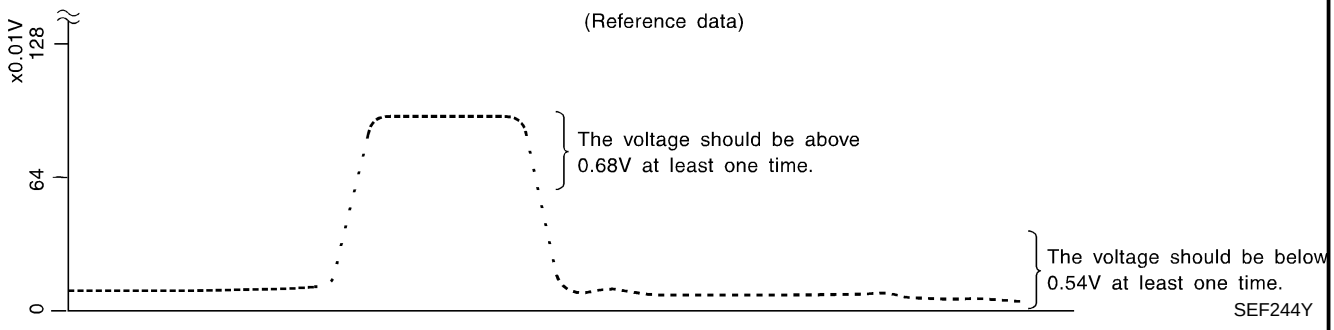

OK or NG

OK	▶	GO TO 8.
NG	▶	Replace heated oxygen sensor 2 (rear).

7	CHECK HEATED OXYGEN SENSOR 2 (REAR)

Without CONSULT-II

1. Start engine and drive vehicle at a speed of more than 70 km/h (43 MPH) for 2 consecutive minutes.
2. Stop vehicle with engine running.
3. Set voltmeter probes between ECM terminals 56 [Heated oxygen sensor 2 (rear) signal] and ECM ground.

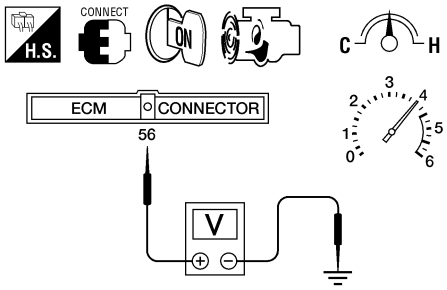

AEC874A

4. Check the voltage when revving up to 4,000 rpm under no load at least 10 times.
   (Depress and release accelerator pedal as soon as possible.)
   The voltage should be above 0.56V at least once.
   If the voltage is above 0.56V at step 4, step 5 is not necessary.
5. Check the voltage when revving up to 5,000 rpm under no load. Or keep vehicle at idling for 10 minutes, then check the voltage. Or check the voltage when coasting from 80 km/h (50 MPH) in 3rd gear position.
   The voltage should be below 0.54V at least once.
   CAUTION:
   - **Discard any heated oxygen sensor which has been dropped from a height of more than 0.5 m (19.7 in) onto a hard surface such as a concrete floor; use a new one.**
   - **Before installing new oxygen sensor, clean exhaust system threads using Oxygen Sensor Thread Cleaner tool J-43897-18 or J-43897-12 and approved anti-seize lubricant.**

OK or NG

OK	▶	GO TO 8.
NG	▶	Replace heated oxygen sensor 2 (rear).

8	CHECK SHIELD CIRCUIT

1. Turn ignition switch OFF.
2. Disconnect harness connectors F28.
3. Check harness continuity between harness connector F28 terminal 4 and ground.

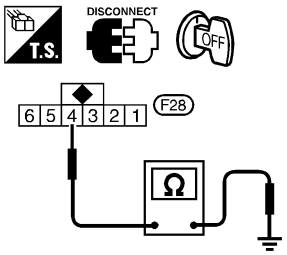

SEF698Z

Continuity should exist.

4. Also check harness for short to power.
5. Then reconnect harness connectors.

OK or NG

OK	▶	GO TO 10.
NG	▶	GO TO 9.

Diagnostic Procedure (Cont'd)

9	DETECT MALFUNCTIONING PART
Check the following. ● Joint connector-1 (Refer to "HARNESS LAYOUT", ***EL-239***.) ● Harness for open or short between harness connector F28 and engine ground	
▶	Repair open circuit, short to ground or short to power in harness or connectors.

10	CHECK INTERMITTENT INCIDENT
Perform "TROUBLE DIAGNOSIS FOR INTERMITTENT INCIDENT", EC-148.	
▶	**INSPECTION END**

Description

NEEC0180

SYSTEM DESCRIPTION

NEEC0180S01

Sensor	Input Signal to ECM	ECM function	Actuator
Camshaft position sensor	Engine speed	Heated oxygen sensor 2 heater (rear) control	Heated oxygen sensor 2 heater (rear)

The ECM performs ON/OFF control of the heated oxygen sensor 2 (rear) heater corresponding to the engine speed.

OPERATION

NEEC0180S02

Engine condition	Heated oxygen sensor 2 heater (rear)
Ignition switch ON Engine stopped	OFF
Engine is running.	ON

CONSULT-II Reference Value in Data Monitor Mode

NEEC0181

Specification data are reference values.

MONITOR ITEM	CONDITION	SPECIFICATION
HO2S2 HTR (B1)	• Engine speed: Idle [After driving for 2 minutes at a speed of 70 km/h (43 MPH) or more]	ON
	• Ignition switch ON (Engine stopped)	OFF

ECM Terminals and Reference Value

NEEC0182

Specification data are reference values and are measured between each terminal and ground.

CAUTION:

Do not use ECM ground terminals when measuring input/output voltage. Doing so may result in damage to the ECM's transistor. Use a ground other than ECM terminals, such as the ground.

TERMINAL NO.	WIRE COLOR	ITEM	CONDITION	DATA (DC Voltage)
122	R/B	Heated oxygen sensor 2 heater (rear)	**[Engine is running]** • After driving for 2 minutes at a speed of 70 km/h (43 MPH) or more	Approximately 0.4V
			[Ignition switch "ON"] • Engine stopped	BATTERY VOLTAGE (11 - 14V)

On Board Diagnosis Logic

NEEC0183

DTC No.	Malfunction is detected when ...	Check Items (Possible Cause)
P0141	• The current amperage in the heated oxygen sensor 2 heater (rear) circuit is out of the normal range. [An improper voltage drop signal is sent to ECM through the heated oxygen sensor 2 heater (rear).]	• Harness or connectors [The heated oxygen sensor 2 heater (rear) circuit is open or shorted.] • Heated oxygen sensor 2 heater (rear)

DTC Confirmation Procedure

NEEC0184

NOTE:
If “DTC Confirmation Procedure” has been previously conducted, always turn ignition switch OFF and wait at least 5 seconds before conducting the next test.

TESTING CONDITION:
Before performing the following procedure, confirm that battery voltage is in between 10.5V at idle.

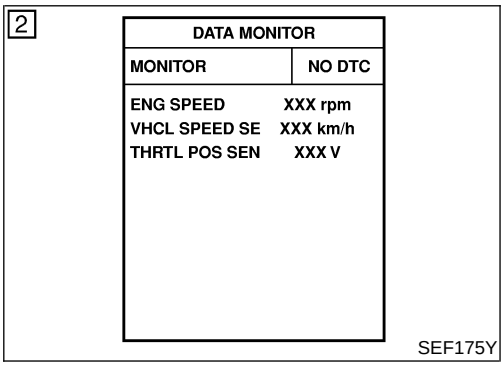

With CONSULT-II

1) Turn ignition switch ON and select “DATA MONITOR” mode with CONSULT-II.
2) Start engine and drive vehicle at a speed of more than 70 km/h (43 MPH) for 2 consecutive minutes.
3) If 1st trip DTC is detected, go to “Diagnostic Procedure”, EC-284.

With GST

1) Start engine.
2) Drive vehicle at a speed of more than 70 km/h (43 MPH) for 2 consecutive minutes.
3) Stop vehicle and let engine idle for at least 6 seconds.
4) Turn ignition switch OFF and wait at least 10 seconds.
5) Start engine.
6) Drive vehicle at a speed of more than 70 km/h (43 MPH) for 2 consecutive minutes
7) Stop vehicle and let engine idle for at least 6 seconds.
8) Select “MODE 3” with GST.
9) If DTC is detected, go to “Diagnostic Procedure”, EC-284.

When using GST, “DTC Confirmation Procedure” should be performed twice as much as when using CONSULT-II because GST cannot display MODE 7 (1st trip DTC) concerning this diagnosis. Therefore, using CONSULT-II or ECM (Diagnostic Test Mode II) is recommended.

Wiring Diagram

NEEC0185

EC-HO2S2H-01

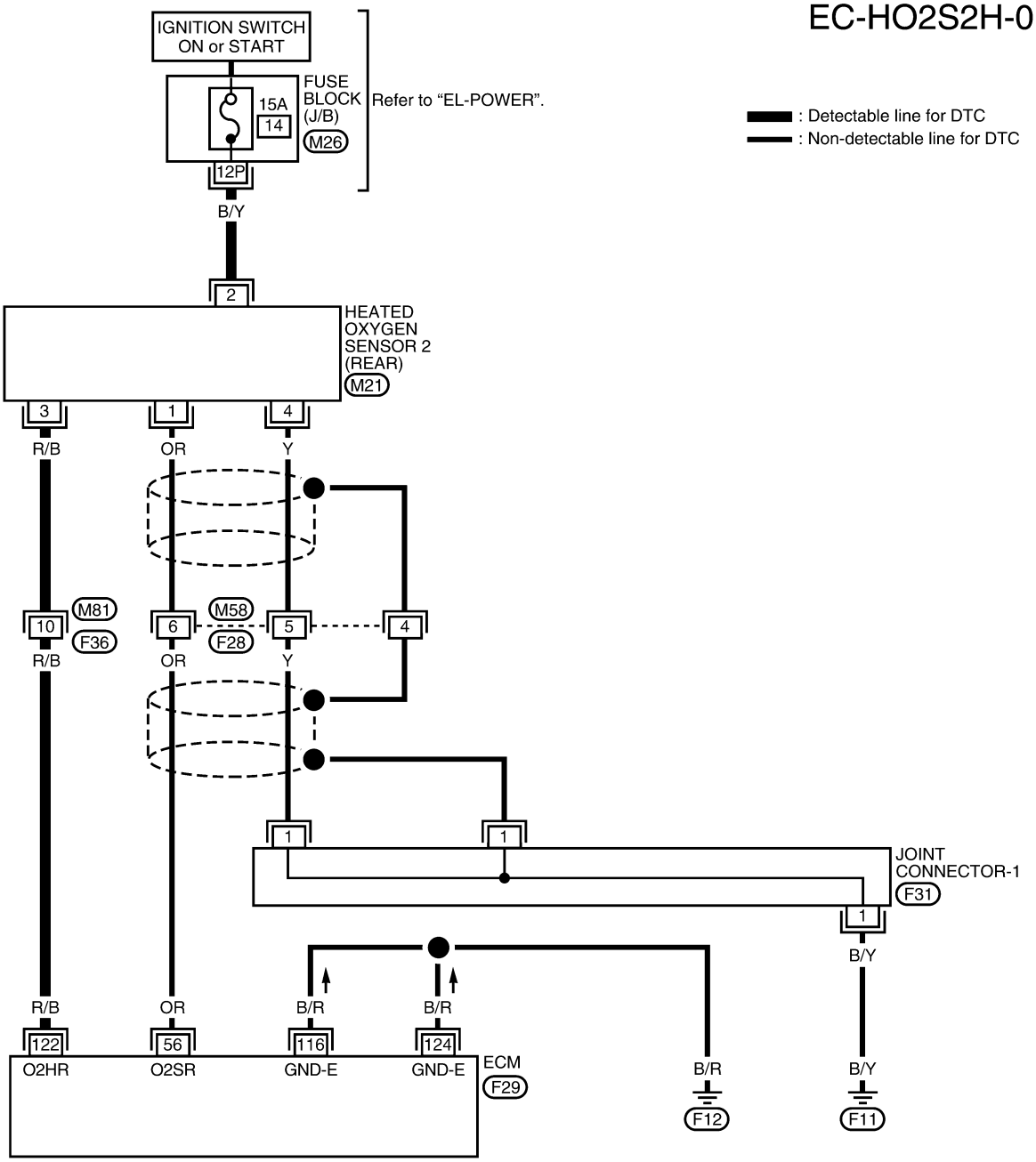

: Detectable line for DTC
: Non-detectable line for DTC

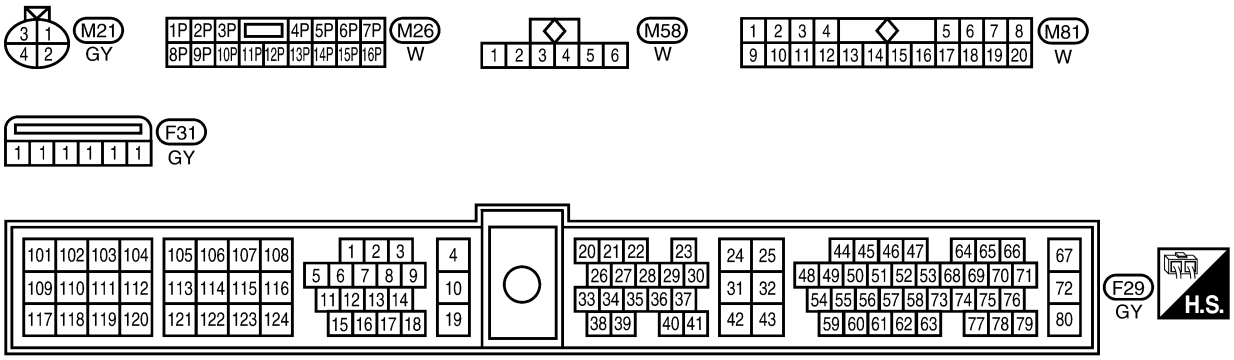

WEC775

Diagnostic Procedure

NEEC0186

1	CHECK POWER SUPPLY

1. Turn ignition switch OFF.
2. Disconnect heated oxygen sensor 2 (rear) harness connector.
3. Turn ignition switch ON.
4. Check voltage between terminal 2 and ground.

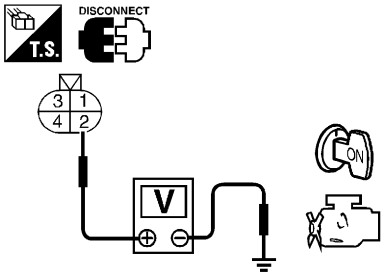

SEF218W

Voltage: Battery voltage

OK or NG

OK	▶	GO TO 3.
NG	▶	GO TO 2.

2	DETECT MALFUNCTIONING PART

Check the following.
- 15A fuse
- Harness for open or short between heated oxygen sensor 2 (rear) and 15A fuse

	▶	Repair harness or connectors.

3	CHECK GROUND CIRCUIT

1. Turn ignition switch OFF.
2. Disconnect ECM harness connector.
3. Check harness continuity between heated oxygen sensor 2 (rear) terminal 3 and ECM terminal 122. Refer to the wiring diagram.
   Continuity should exist.
4. Also check harness for short to power.

OK or NG

OK	▶	GO TO 5.
NG	▶	GO TO 4.

4	DETECT MALFUNCTIONING PART

Check the following.
- Harness connectors M58, F28
- Harness for open or short between heated oxygen sensor 2 (rear) heater and ECM

	▶	Repair open circuit or short to ground or short to power in harness or connectors.

5	CHECK HEATED OXYGEN SENSOR 2 HEATER (REAR)

Check the following.

1. Check resistance between terminals 2 and 3.

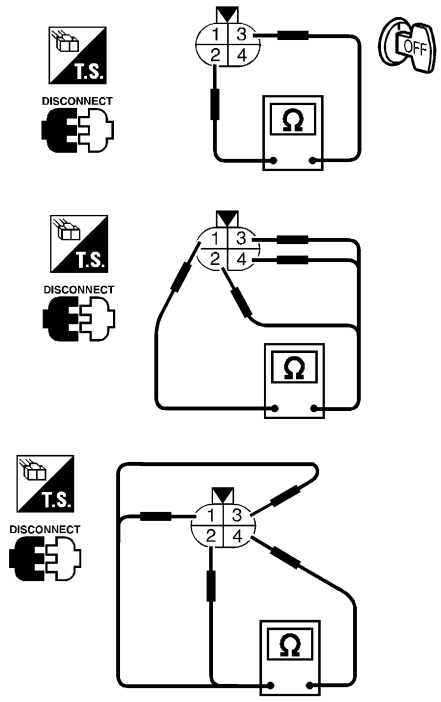

SEF221W

Resistance: 2.3 - 4.3Ω at 25°C (77°F)

2. Check continuity.

Terminal No.	Continuity
1 and 2, 3, 4	No
4 and 1, 2, 3	

MTBL0330

CAUTION:

- **Discard any heated oxygen sensor which has been dropped from a height of more than 0.5 m (19.7 in) onto a hard surface such as a concrete floor; use a new one.**
- **Before installing new oxygen sensor, clean exhaust system threads using Oxygen Sensor Thread Cleaner tool J-43897-18 or J-43897-12 and approved anti-seize lubricant.**

OK or NG

OK	▶	GO TO 6.
NG	▶	Replace heated oxygen sensor 2 (rear).

6	CHECK INTERMITTENT INCIDENT
Perform "TROUBLE DIAGNOSIS FOR INTERMITTENT INCIDENT", EC-148.	
▶	**INSPECTION END**

On Board Diagnosis Logic

NEEC0188

With the Air/Fuel Mixture Ratio Self-Learning Control, the actual mixture ratio can be brought closely to the theoretical mixture ratio based on the mixture ratio feedback signal from the heated oxygen sensor 1 (front). The ECM calculates the necessary compensation to correct the offset between the actual and the theoretical ratios.

In case the amount of the compensation value is extremely large (The actual mixture ratio is too lean.), the ECM judges the condition as the fuel injection system malfunction and lights up the MIL (2 trip detection logic).

Sensor	Input Signal to ECM	ECM function	Actuator
Heated oxygen sensor 1 (front)	Density of oxygen in exhaust gas (Mixture ratio feedback signal)	Fuel injection & mixture ratio control	Injectors

DTC No.	Malfunction is detected when ...	Check Items (Possible Cause)
P0171	• Fuel injection system does not operate properly. • The amount of mixture ratio compensation is too large. (The mixture ratio is too lean.)	• Intake air leaks • Heated oxygen sensor 1 (front) • Injectors • Exhaust gas leaks • Incorrect fuel pressure • Lack of fuel • Mass air flow sensor

4

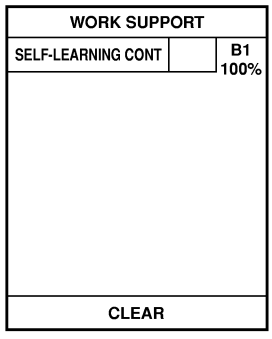

SEF215Z

6

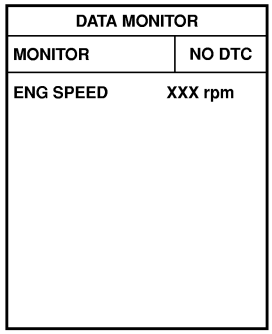

SEF058Y

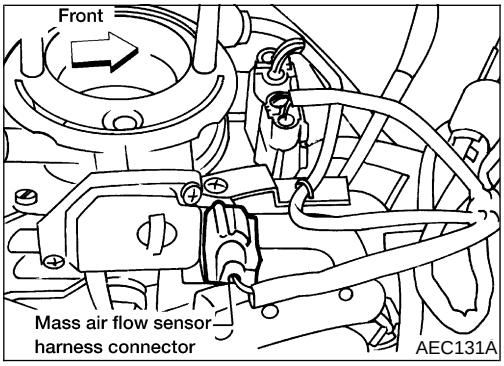

AEC131A

DTC Confirmation Procedure

NEEC0189

NOTE:

If "DTC Confirmation Procedure" has been previously conducted, always turn ignition switch OFF and wait at least 5 seconds before conducting the next test.

With CONSULT-II

1) Start engine and warm it up to normal operating temperature.
2) Turn ignition switch OFF and wait at least 5 seconds.
3) Turn ignition switch ON and select "SELF-LEARN CONTROL" in "WORK SUPPORT" mode with CONSULT-II.
4) Clear the self-learning control coefficient by touching "CLEAR".
5) Select "DATA MONITOR" mode with CONSULT-II.
6) Start engine again and let it idle for at least 10 minutes. The 1st trip DTC P0171 should be detected at this stage, if a malfunction exists. If so, go to "Diagnostic Procedure", EC-289.
7) If it is difficult to start engine at step 6, the fuel injection system has a malfunction.
8) Crank engine while depressing accelerator pedal. If engine starts, go to "Diagnostic Procedure", EC-289. If engine does not start, visually check for exhaust and intake air leak.

With GST

1) Start engine and warm it up to normal operating temperature.
2) Turn ignition switch OFF and wait at least 5 seconds.
3) Disconnect mass air flow sensor harness connector. Then restart and run engine for at least 3 seconds at idle speed.
4) Stop engine and reconnect mass air flow sensor harness connector.
5) Select "MODE 7" with GST. Make sure 1st trip DTC P0100 is detected.
6) Select "MODE 4" with GST and erase the 1st trip DTC P0100.

7) Start engine again and run it for at least 10 minutes at idle speed.
8) Select "MODE 7" with GST. The 1st trip DTC P0171 should be detected at this stage, if a malfunction exists. If so, go to "Diagnostic Procedure", EC-289.
9) If it is difficult to start engine at step 8, the fuel injection system has a malfunction.
10) Crank engine while depressing accelerator pedal. If engine starts, go to "Diagnostic Procedure", EC-289. If engine does not start, visually check for exhaust and intake air leak.

Wiring Diagram

NEEC0190

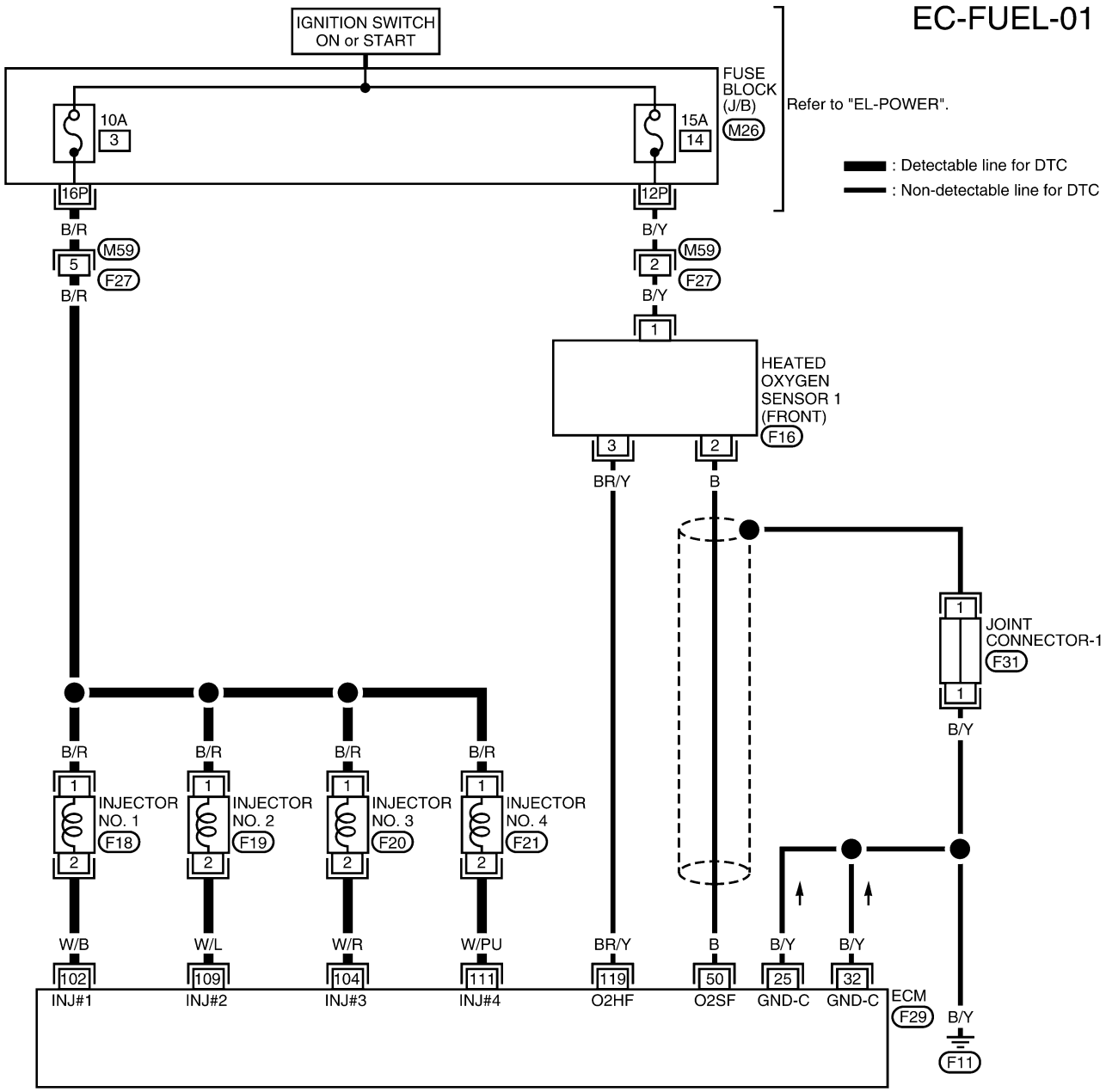

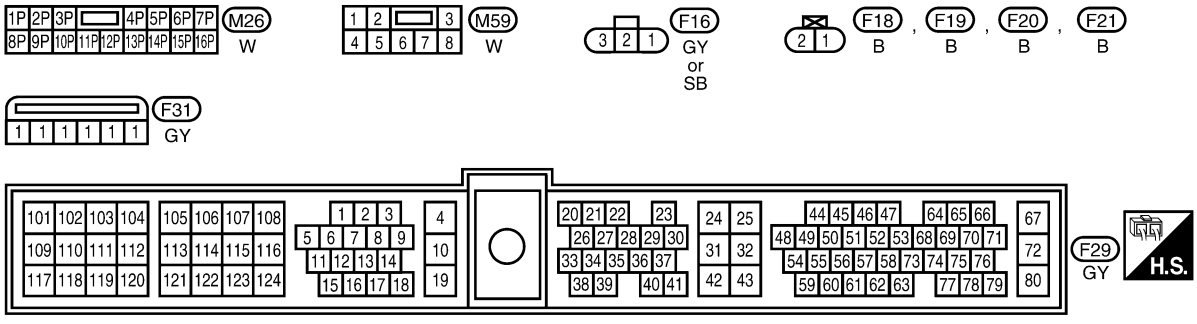

WEC152A

Diagnostic Procedure

NEEC0191

1	CHECK EXHAUST AIR LEAK	
1. Start engine and run it at idle. 2. Listen for an exhaust air leak before three way catalyst.		
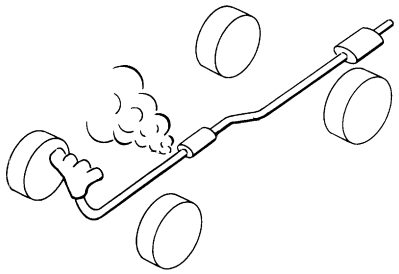 SEF099P		
OK or NG		
OK	▶	GO TO 2.
NG	▶	Repair or replace.

2	CHECK FOR INTAKE AIR LEAK	
Listen for an intake air leak between the mass air flow sensor and the intake manifold.		
OK or NG		
OK	▶	GO TO 3.
NG	▶	Repair or replace.

Diagnostic Procedure (Cont'd)

3	CHECK HEATED OXYGEN SENSOR 1 (FRONT) CIRCUIT

1. Turn ignition switch OFF.
2. Disconnect heated oxygen sensor 1 (front) harness connector and ECM harness connector.

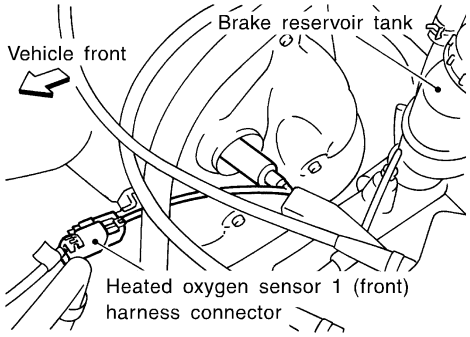

SEF331VA

3. Check harness continuity between ECM terminal 50 and terminal 2.

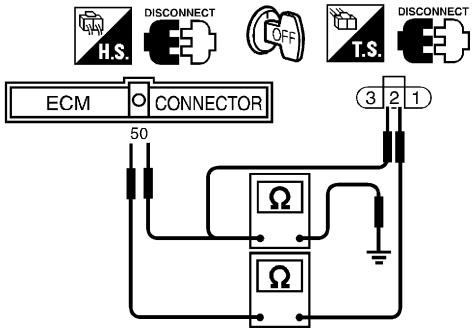

SEF141V

Continuity should exist.

4. Check harness continuity between ECM terminal 50 (or terminal 2) and ground.
   Continuity should not exist.
5. Also check harness for short to ground and short to power.

OK or NG

OK	▶	GO TO 4.
NG	▶	Repair open circuit or short to ground or short to power in harness or connectors.

4	CHECK FUEL PRESSURE

1. Release fuel pressure to zero.
   Refer to EC-57.
2. Install fuel pressure gauge and check fuel pressure.
   At idling:
   When fuel pressure regulator valve vacuum hose is connected.
   235 kPa (2.4 kg/cm^2, 34 psi)
   When fuel pressure regulator valve vacuum hose is disconnected.
   294 kPa (3.0 kg/cm^2, 43 psi)

OK or NG

OK	▶	GO TO 6.
NG	▶	GO TO 5.

5	DETECT MALFUNCTIONING PART

Check the following.
- Fuel pump and circuit Refer to EC-597.
- Fuel pressure regulator Refer to EC-58.
- Fuel lines Refer to "ENGINE MAINTENANCE", ***MA-19***.
- Fuel filter for clogging

	▶	Repair or replace.

6	CHECK MASS AIR FLOW SENSOR

With CONSULT-II

1. Start engine and warm it up to normal operating temperature.
2. Check "MASS AIR FLOW" in "DATA MONITOR" mode with CONSULT-II.
   at idling: 0.9 - 5.8 g·m/sec
   at 2,500 rpm: 7.5 - 13.2 g·m/sec

With GST

1. Start engine and warm it up to normal operating temperature.
2. Check mass air flow sensor signal in MODE 1 with GST.
   at idling: 0.9 - 5.8 g·m/sec
   at 2,500 rpm: 7.5 - 13.2 g·m/sec

OK or NG

OK	▶	GO TO 7.
NG	▶	Check connectors for rusted terminals or loose connections in the mass air flow sensor circuit or engine grounds. Refer to EC-156.

7	CHECK FUNCTION OF INJECTORS

With CONSULT-II

1. Install all parts removed.
2. Start engine.
3. Perform "POWER BALANCE" in "ACTIVE TEST" mode with CONSULT-II.

ACTIVE TEST	
POWER BALANCE	
MONITOR	
ENG SPEED	XXX rpm
MAS A/F SE-B1	XXX V
IACV-AAC/V	XXX %

SEF981Z

4. Make sure that each circuit produces a momentary engine speed drop.

Without CONSULT-II

1. Install all parts removed.
2. Start engine.
3. Listen to each injector operating sound.

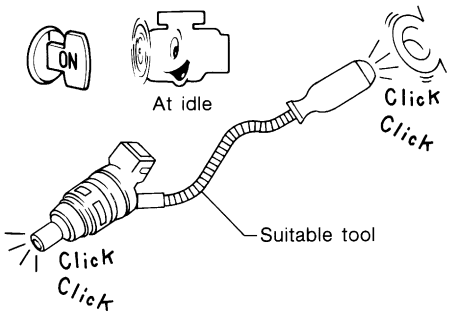

MEC703B

Clicking noise should be heard.

OK or NG

OK	▶	GO TO 8.
NG	▶	Perform trouble diagnosis for "INJECTORS", EC-589.

Diagnostic Procedure (Cont'd)

8	REMOVE INJECTOR
1. Confirm that the engine is cooled down and there are no fire hazards near the vehicle. 2. Turn ignition switch OFF. 3. Remove injector with fuel tube assembly. Refer to EC-58. Keep fuel hose and all injectors connected to injector gallery. The injector harness connectors should remain connected.	
▶	GO TO 9.

9	CHECK INJECTOR
1. Disconnect all ignition coil harness connectors. 2. Place pans or saucers under each injector. 3. Crank engine for about 3 seconds. Make sure that fuel sprays out from injectors.	

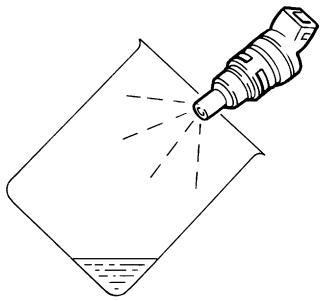

SEF595Q

Fuel should be sprayed evenly for each cylinder.

OK or NG

OK	▶	GO TO 10.
NG	▶	Replace injectors from which fuel does not spray out. Always replace O-ring with new one.

10	CHECK INTERMITTENT INCIDENT
Perform "TROUBLE DIAGNOSIS FOR INTERMITTENT INCIDENT", EC-148.	
▶	**INSPECTION END**

On Board Diagnosis Logic

NEEC0192

With the Air/Fuel Mixture Ratio Self-Learning Control, the actual mixture ratio can be brought closely to the theoretical mixture ratio based on the mixture ratio feedback signal from the heated oxygen sensor 1 (front). The ECM calculates the necessary compensation to correct the offset between the actual and the theoretical ratios.

In case the amount of the compensation value is extremely large (The actual mixture ratio is too rich.), the ECM judges the condition as the fuel injection system malfunction and lights up the MIL (2 trip detection logic).

Sensor	Input Signal to ECM	ECM function	Actuator
Heated oxygen sensor 1 (front)	Density of oxygen in exhaust gas (Mixture ratio feedback signal)	Fuel injection & mixture ratio control	Injectors

DTC No.	Malfunction is detected when ...	Check Items (Possible Cause)
P0172	• Fuel injection system does not operate properly. • The amount of mixture ratio compensation is too large. (The mixture ratio is too rich.)	• Heated oxygen sensor 1 (front) • Injectors • Exhaust gas leaks • Incorrect fuel pressure • Mass air flow sensor

4

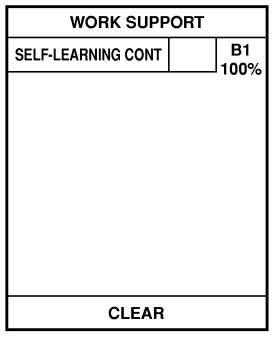

SEF215Z

6

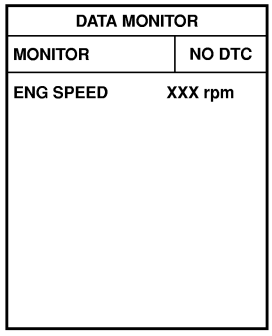

SEF058Y

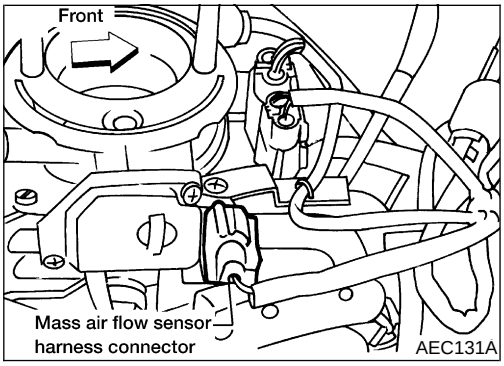

AEC131A

DTC Confirmation Procedure

NEEC0193

NOTE:

If "DTC Confirmation Procedure" has been previously conducted, always turn ignition switch OFF and wait at least 5 seconds before conducting the next test.

With CONSULT-II

1) Start engine and warm it up to normal operating temperature.
2) Turn ignition switch OFF and wait at least 5 seconds.
3) Turn ignition switch ON and select "SELF-LEARN CONTROL" in "WORK SUPPORT" mode with CONSULT-II.
4) Clear the self-learning control coefficient by touching "CLEAR".
5) Select "DATA MONITOR" mode with CONSULT-II.
6) Start engine again and let it idle for at least 10 minutes. The 1st trip DTC P0172 should be detected at this stage, if a malfunction exists. If so, go to "Diagnostic Procedure", EC-296.
7) If it is difficult to start engine at step 6, the fuel injection system has a malfunction.
8) Crank engine while depressing accelerator pedal. If engine starts, go to "Diagnostic Procedure", EC-296. If engine does not start, remove ignition plugs and check for fouling, etc.

With GST

1) Start engine and warm it up to normal operating temperature.
2) Turn ignition switch OFF and wait at least 5 seconds.
3) Disconnect mass air flow sensor harness connector. Then restart and run engine for at least 3 seconds at idle speed.
4) Stop engine and reconnect mass air flow sensor harness connector.
5) Select "MODE 7" with GST. Make sure 1st trip DTC P0100 is detected.
6) Select "MODE 4" with GST and erase the 1st trip DTC P0100.

7) Start engine again and run it for at least 10 minutes at idle speed.
8) Select "MODE 7" with GST. The 1st trip DTC P0172 should be detected at this stage, if a malfunction exists. If so, go to "Diagnostic Procedure", EC-296.
9) If it is difficult to start engine at step 8, the fuel injection system has a malfunction.
10) Crank engine while depressing accelerator pedal.
If engine starts, go to "Diagnostic Procedure", EC-296. If engine does not start, remove ignition plugs and check for fouling, etc.

Wiring Diagram

NEEC0194

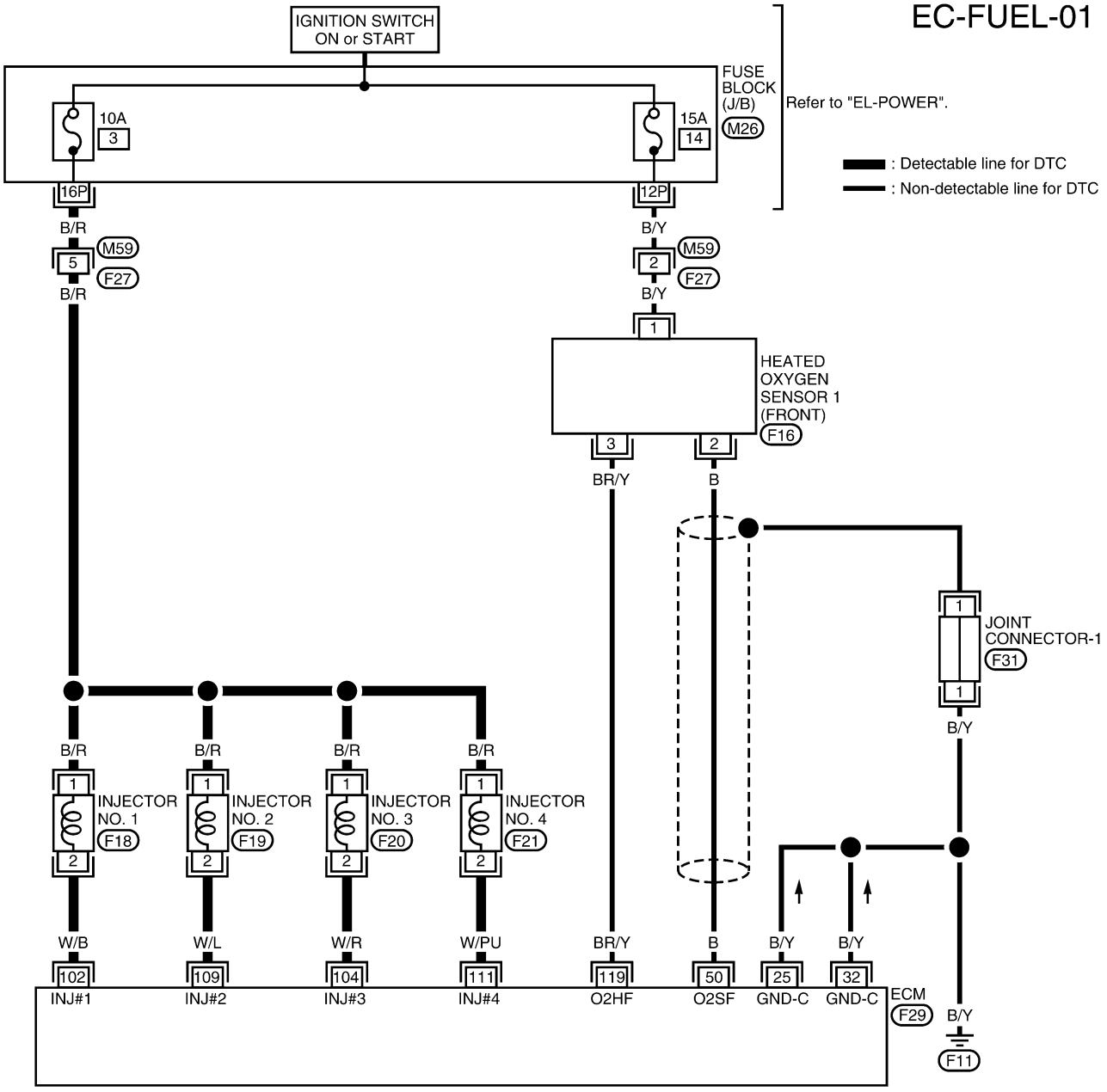

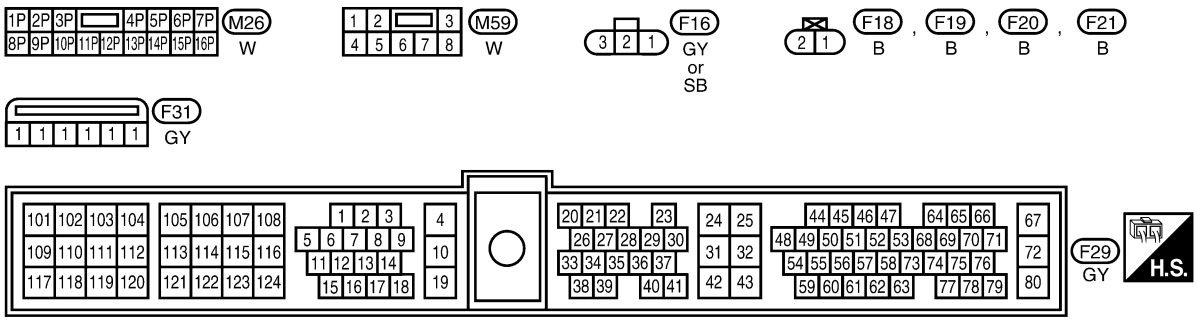

WEC152A

Diagnostic Procedure

NEEC0195

1	CHECK FOR EXHAUST AIR LEAK

1. Start engine and run it at idle.
2. Listen for an exhaust air leak before three way catalyst.

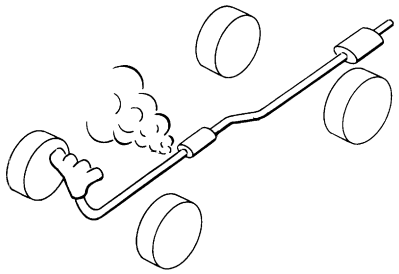

SEF099P

OK or NG

OK	▶	GO TO 2.
NG	▶	Repair or replace.

2	CHECK HEATED OXYGEN SENSOR 1 (FRONT) CIRCUIT

1. Turn ignition switch OFF.
2. Disconnect heated oxygen sensor 1 (front) harness connector and ECM harness connector.

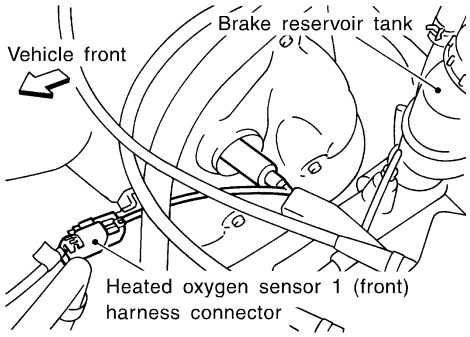

SEF331VA

3. Check harness continuity between ECM terminal 50 and terminal 2.

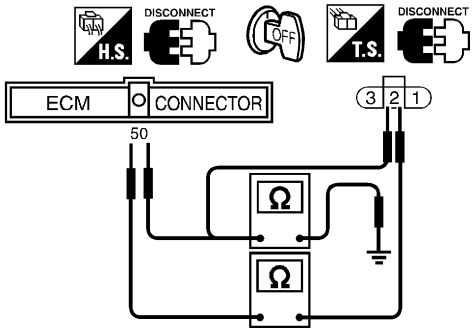

SEF141V

Continuity should exist.

4. Check harness continuity between ECM terminal 50 (or terminal 2) and ground.

Continuity should not exist.

5. Also check harness for short to ground and short to power.

OK or NG

OK	▶	GO TO 3.
NG	▶	Repair open circuit or short to ground or short to power in harness or connectors.

3	CHECK FUEL PRESSURE

1. Release fuel pressure to zero.
   Refer to EC-57.
2. Install fuel pressure gauge and check fuel pressure.
   At idling:
   When fuel pressure regulator valve vacuum hose is connected.
   Approximately 235 kPa (2.4 kg/cm^2, 34 psi)
   When fuel pressure regulator valve vacuum hose is disconnected.
   Approximately 294 kPa (3.0 kg/cm^2, 43 psi)

OK or NG

OK	▶	GO TO 5.
NG	▶	GO TO 4.

4	DETECT MALFUNCTIONING PART

Check the following.
- Fuel pump and circuit (Refer to EC-597.)
- Fuel pressure regulator (Refer to EC-58.)

	▶	Repair or replace.

5	CHECK MASS AIR FLOW SENSOR

With CONSULT-II
1. Start engine and warm it up to normal operating temperature.
2. Check "MASS AIR FLOW" in "DATA MONITOR" mode with CONSULT-II.
   at idling: 0.9 - 5.8 g·m/sec
   at 2,500 rpm: 7.5 - 13.2 g·m/sec

With GST
1. Start engine and warm it up to normal operating temperature.
2. Check mass air flow sensor signal in MODE 1 with GST.
   at idling: 0.9 - 5.8 g·m/sec
   at 2,500 rpm: 7.5 - 13.2 g·m/sec

OK or NG

OK	▶	GO TO 6.
NG	▶	Check connectors for rusted terminals or loose connections in the mass air flow sensor circuit or engine grounds. Refer to EC-161.

Diagnostic Procedure (Cont'd)

6	CHECK FUNCTION OF INJECTORS

With CONSULT-II

1. Install all parts removed.
2. Start engine.
3. Perform "POWER BALANCE" in "ACTIVE TEST" mode with CONSULT-II.

ACTIVE TEST	
POWER BALANCE	
MONITOR	
ENG SPEED	XXX rpm
MAS A/F SE-B1	XXX V
IACV-AAC/V	XXX %

SEF981Z

4. Make sure that each circuit produces a momentary engine speed drop.

Without CONSULT-II

1. Install all parts removed.
2. Start engine.
3. Listen to each injector operating sound.

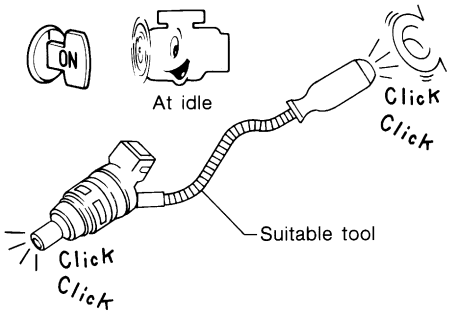

MEC703B

Clicking noise should be heard.

OK or NG

OK	▶	GO TO 7.
NG	▶	Perform trouble diagnosis for "INJECTORS", EC-589.

7	REMOVE INJECTOR

1. Confirm that the engine is cooled down and there are no fire hazards near the vehicle.
2. Turn ignition switch OFF.
3. Remove injector assembly. Refer to EC-58.
   Keep fuel hose and all injectors connected to injector gallery.

	▶	GO TO 8.

8	CHECK INJECTOR

1. Disconnect all injector harness connectors.
2. Disconnect all ignition coil harness connectors.
3. Prepare pans or saucers under each injectors.
4. Crank engine for about 3 seconds.
   Make sure fuel does not drip from injector.

OK or NG

OK (Does not drip)	▶	GO TO 9.
NG (Drips)	▶	Replace the injectors from which fuel is dripping. Always replace O-ring with new one.

9	CHECK INTERMITTENT INCIDENT
Perform "TROUBLE DIAGNOSIS FOR INTERMITTENT INCIDENT", EC-148.	
▶	INSPECTION END

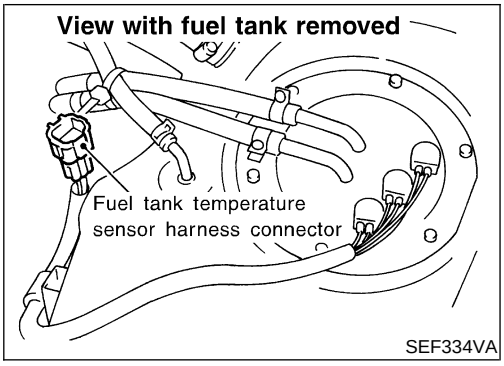

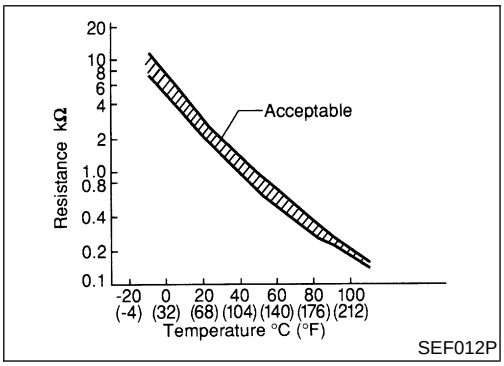

Component Description

NEEC0196

The fuel tank temperature sensor is used to detect the fuel temperature inside the fuel tank. The sensor modifies a voltage signal from the ECM. The modified signal returns to the ECM as the fuel temperature input. The sensor uses a thermistor which is sensitive to the change in temperature. The electrical resistance of the thermistor decreases as temperature increases.

<Reference data>

Fluid temperature °C (°F)	Voltage* V	Resistance kΩ
20 (68)	3.5	2.3 - 2.7
50 (122)	2.2	0.79 - 0.90

*: These data are reference values and are measured between ECM terminal 60 (Fuel tank temperature sensor) and ground.

CAUTION:

Do not use ECM ground terminals when measuring input/ output voltage. Doing so may result in damage to the ECM's transistor. Use a ground other than ECM terminals, such as the ground.

On Board Diagnosis Logic

NEEC0197

DTC No.	Malfunction is detected when ...	Check Items (Possible Cause)
P0180	• An excessively high or low voltage is sent to ECM. • Rationally incorrect voltage is sent to ECM, compared with the voltage signals from engine coolant temperature sensor and intake air temperature sensor.	• Harness or connectors (The sensor circuit is open or shorted.) • Fuel tank temperature sensor

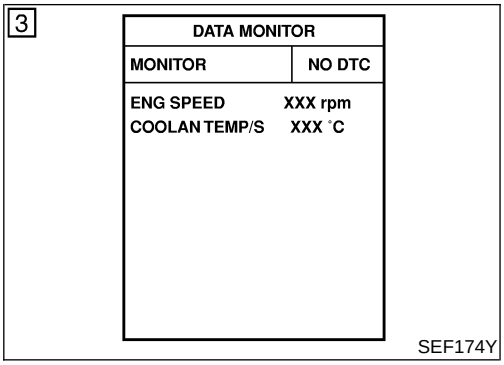

DTC Confirmation Procedure

=NEEC0198

NOTE:
If "DTC Confirmation Procedure" has been previously conducted, always turn ignition switch OFF and wait at least 5 seconds before conducting the next test.

With CONSULT-II

1) Turn ignition switch ON.
2) Select "DATA MONITOR" mode with CONSULT-II.
3) Wait at least 10 seconds.
   If 1st trip DTC is detected, go to "Diagnostic Procedure", EC-303.
   If the result is OK, go to following step.

NOTE:
If "COOLAN TEMP/S" is already less than 60°C (140°F) before step 4), the result will be OK. If "COOLAN TEMP/S" is above 60°C (140°F), go to the following step.

4) Check "COOLAN TEMP/S" signal.
   If the signal is less than 60°C (140°F), the result will be OK.
   If the signal is above 60°C (140°F), go to the following step.
5) Cool engine down until "COOLAN TEMP/S" signal is less than 60°C (140°F).
6) Wait at least 10 seconds.
7) If 1st trip DTC is detected, go to "Diagnostic Procedure", EC-303.

With GST

Follow the procedure "With CONSULT-II".

Wiring Diagram

NEEC0199

EC-FTTS-01

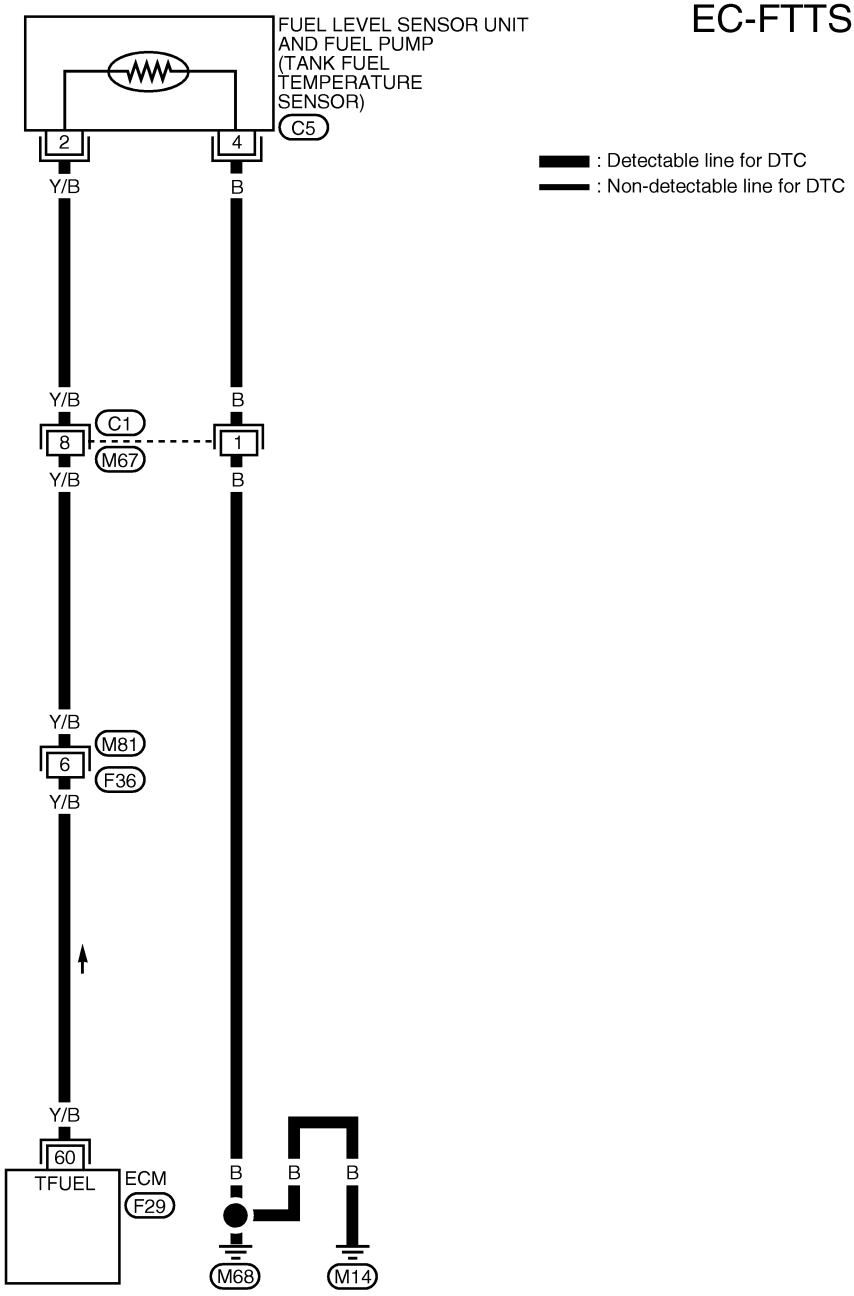

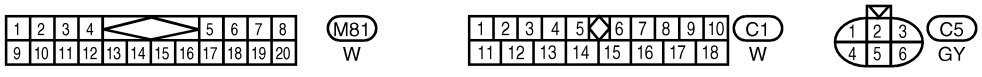

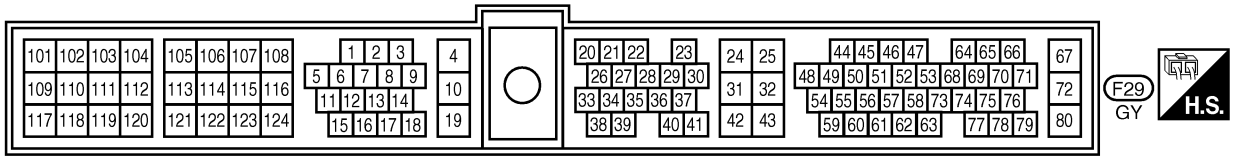

LEC526

Diagnostic Procedure

NEEC1075

1	CHECK POWER SUPPLY

1. Turn ignition switch OFF.
2. Disconnect fuel level sensor unit harness connector.

View with fuel tank removed

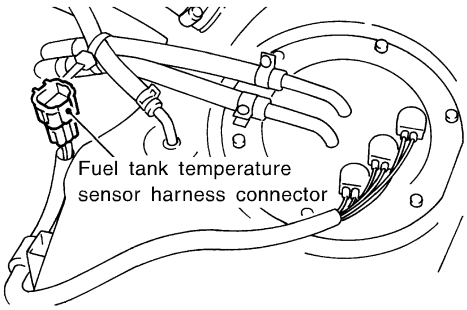

SEF334VA

3. Turn ignition switch ON.
4. Check voltage between terminal 2 and ground with CONSULT-II or tester.

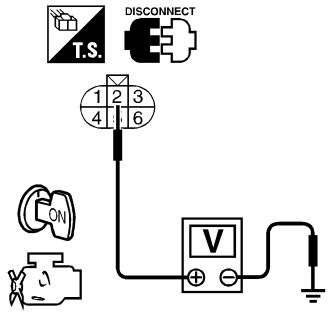

SEF850Z

Voltage: Approximately 5V

OK or NG

OK	▶	GO TO 3.
NG	▶	GO TO 2.

2	DETECT MALFUNCTIONING PART

Check the following.
- Harness connectors C1, M67
- Harness connectors M81, F36
- Harness for open or short between ECM and fuel tank temperature sensor

	▶	Repair harness or connector.

Diagnostic Procedure (Cont'd)

3	CHECK GROUND CIRCUIT

1. Turn ignition switch OFF.
2. Check harness continuity between terminal 4 and body ground.

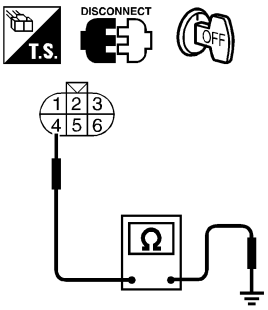

SEF851Z

Continuity should exist.

3. Also check harness for short to power.

OK or NG

OK	▶	GO TO 5.
NG	▶	GO TO 4.

4	DETECT MALFUNCTIONING PART

Check the following.
- Harness connectors C1, M67
- Harness for open or short between ECM and body ground

	▶	Repair open circuit or short to power in harness or connectors.

5	CHECK FUEL TANK TEMPERATURE SENSOR

1. Remove fuel level sensor unit.

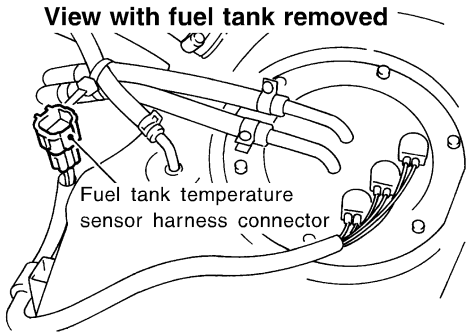

SEF334VA

2. Check resistance by heating with hot water or heat gun as shown in the figure.

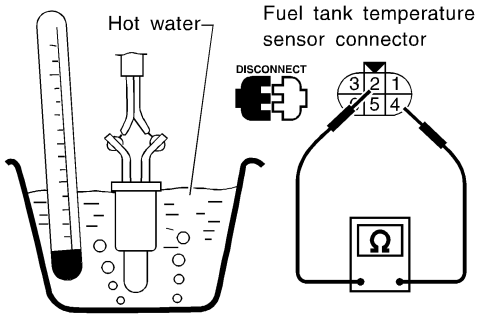

SEF852Z

Temperature °C (°F)	Resistance kΩ
20 (68)	2.3 - 2.7
50 (122)	0.79 - 0.90

MTBL0291

OK or NG

OK	▶	GO TO 6.
NG	▶	Replace fuel tank temperature sensor.

6	CHECK INTERMITTENT INCIDENT
Perform "TROUBLE DIAGNOSIS FOR INTERMITTENT INCIDENT", EC-148.	
▶	**INSPECTION END**

On Board Diagnosis Logic

NEEC0202

When a misfire occurs, engine speed will fluctuate. If the engine speed fluctuates enough to cause the CKP sensor signal to vary, the ECM can determine that a misfire is occurring.

Sensor	Input Signal to ECM	ECM function
Crankshaft position sensor (OBD)	Engine speed	On board diagnosis of misfire

The misfire detection logic consists of the following two conditions.

1. One Trip Detection Logic (Three Way Catalyst Damage)
   On the first trip that a misfire condition occurs that can damage the three way catalyst (TWC) due to overheating, the MIL will blink.
   When a misfire condition occurs, the ECM monitors the CKP sensor signal every 200 engine revolutions for a change.
   When the misfire condition decreases to a level that will not damage the TWC, the MIL will turn off.
   If another misfire condition occurs that can damage the TWC on a second trip, the MIL will blink.
   When the misfire condition decreases to a level that will not damage the TWC, the MIL will remain on.
   If another misfire condition occurs that can damage the TWC, the MIL will begin to blink again.
2. Two Trip Detection Logic (Exhaust quality deterioration)
   For misfire conditions that will not damage the TWC (but will affect vehicle emissions), the MIL will only light when the misfire is detected on a second trip. During this condition, the ECM monitors the CKP sensor signal every 1,000 engine revolutions.
   A misfire malfunction can be detected on any one cylinder or on multiple cylinders.

DTC No.	Malfunction is detected when ...	Check Items (Possible Cause)
P0300	• Multiple cylinders misfire.	• Improper spark plug • Insufficient compression • Incorrect fuel pressure • EGR valve • The injector circuit is open or shorted • Injectors • Intake air leak • The ignition secondary circuit is open or shorted • Lack of fuel • Drive plate/Flywheel • Heated oxygen sensor 1 (front) • Incorrect distributor rotor
P0301	• No. 1 cylinder misfires.	
P0302	• No. 2 cylinder misfires.	
P0303	• No. 3 cylinder misfires.	
P0304	• No. 4 cylinder misfires.	

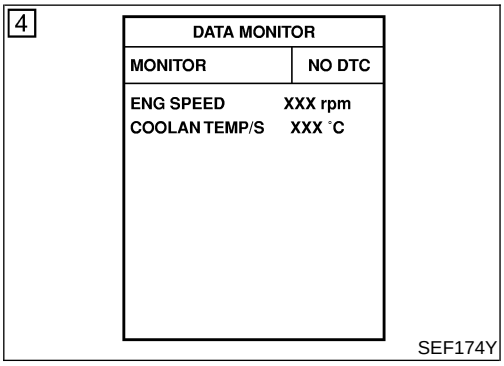

DTC Confirmation Procedure

NEEC0203

CAUTION:

Always drive vehicle at a safe speed.

NOTE:

If “DTC Confirmation Procedure” has been previously conducted, always turn ignition switch OFF and wait at least 5 seconds before conducting the next test.

With CONSULT-II

1) Turn ignition switch ON, and select “DATA MONITOR” mode with CONSULT-II.
2) Start engine and warm it up to normal operating temperature.
3) Turn ignition switch OFF and wait at least 5 seconds.
4) Start engine again and drive at 1,500 to 3,000 rpm for at least 3 minutes.
   Hold the accelerator pedal as steady as possible.

NOTE:

Refer to the freeze frame data for the test driving conditions.

5) If 1st trip DTC is detected, go to “Diagnostic Procedure”, EC-307.

With GST

Follow the procedure “With CONSULT-II”.

Diagnostic Procedure

NEEC0204

1	CHECK FOR INTAKE AIR LEAK	
1. Start engine and run it at idle speed. 2. Listen for the sound of the intake air leak. **OK or NG**		
OK	▶	GO TO 2.
NG	▶	Discover air leak location and repair.

2	CHECK FOR EXHAUST SYSTEM CLOGGING	
Stop engine and visually check exhaust tube, three way catalyst and muffler for dents. **OK or NG**		
OK	▶	GO TO 3.
NG	▶	Repair or replace it.

3	CHECK EGR FUNCTION	
Perform DTC Confirmation Procedure for DTC P1402 EGR FUNCTION (OPEN). Refer to EC-472. **OK or NG**		
OK	▶	GO TO 4.
NG	▶	Repair EGR system.

Diagnostic Procedure (Cont'd)

4	PERFORM POWER BALANCE TEST

With CONSULT-II

1. Perform "POWER BALANCE" in "ACTIVE TEST" mode.

ACTIVE TEST	
POWER BALANCE	
MONITOR	
ENG SPEED	XXX rpm
MAS A/F SE-B1	XXX V
IACV-AAC/V	XXX %

SEF981Z

2. Is there any cylinder which does not produce a momentary engine speed drop?

Without CONSULT-II

When disconnecting each injector harness connector one at a time, is there any cylinder which does not produce a momentary engine speed drop?

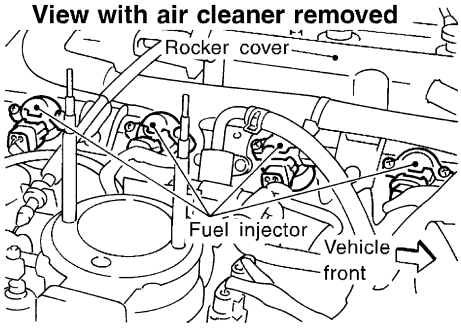

SEF319V

Yes or No

Yes	▶	GO TO 5.
No	▶	GO TO 8.

5	CHECK INJECTOR

Does each injector make an operating sound at idle?

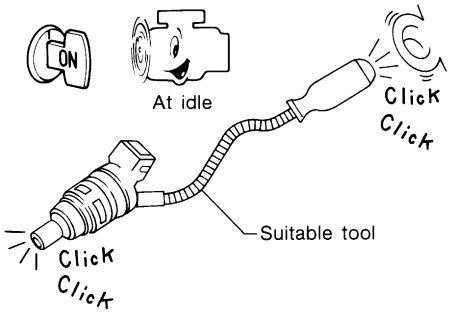

MEC703B

Yes or No

Yes	▶	GO TO 6.
No	▶	Check injector(s) and circuit(s). Refer to EC-589.

6	CHECK IGNITION SPARK

1. Turn ignition switch OFF.
2. Disconnect ignition wire from spark plug.
3. Connect a known good spark plug to the ignition wire.
4. Place end of spark plug against a suitable ground and crank engine.
5. Check for spark.

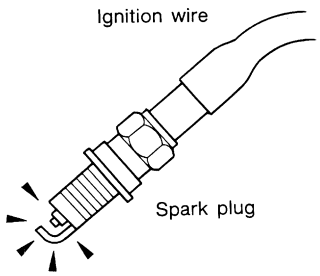

SEF282G

OK or NG

OK	▶	GO TO 8.
NG	▶	GO TO 7.

7	CHECK IGNITION WIRES

1. Inspect wires for cracks, damage, burned terminals and for improper fit.
2. Measure the resistance of wires to their distributor cap terminal. Move each wire while testing to check for intermittent breaks.

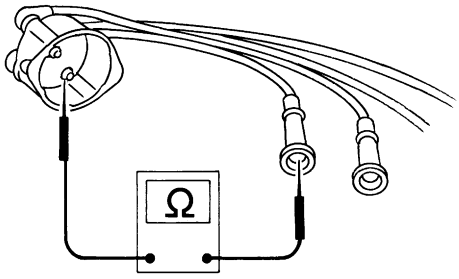

SEF174P

Resistance:
13.6 - 18.4 kΩ/m (4.15 - 5.61 kΩ/ft) at 25°C (77°F)

If the resistance exceeds the above specification, inspect ignition wire to distributor cap connection. Clean connection or replace the ignition wire with a new one.

OK or NG

OK	▶	Check distributor rotor head for incorrect parts. Check ignition coil, power transistor and their circuits. Refer to EC-579.
NG	▶	Replace.

Diagnostic Procedure (Cont'd)

8	CHECK SPARK PLUGS

Remove the spark plugs and check for fouling, etc.

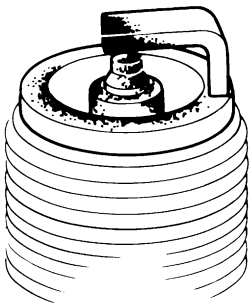

SEF156I

OK or NG

OK	▶	GO TO 9.
NG	▶	Repair or replace spark plug(s) with standard type one(s). For spark plug type, refer to "ENGINE MAINTENANCE", ***MA-17***.

9	CHECK COMPRESSION PRESSURE

Refer to ***EM-15***.

- Check compression pressure.

Standard:
1,226 kPa (12.5 kg/cm^2, 178 psi)/300 rpm
Minimum:
1,030 kPa (10.5 kg/cm^2, 149 psi)/300 rpm
Difference between each cylinder:
98 kPa (1.0 kg/cm^2, 14 psi)/300 rpm

OK or NG

OK	▶	GO TO 10.
NG	▶	Check pistons, piston rings, valves, valve seats and cylinder head gaskets.

10	CHECK FUEL PRESSURE

1. Install any parts removed.
2. Release fuel pressure to zero. Refer to EC-57.
3. Install fuel pressure gauge and check fuel pressure.

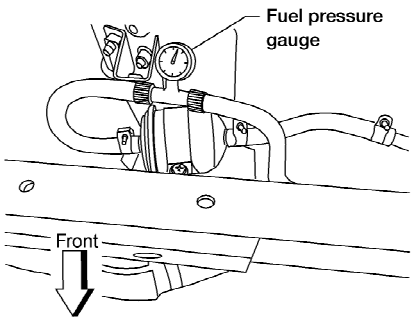

AEC064B

At idle: Approx. 235 kPa (2.4 kg/cm^2, 34 psi)

OK or NG

OK	▶	GO TO 12.
NG	▶	GO TO 11.

11	DETECT MALFUNCTIONING PART
Check the following. ● Fuel pump and circuit Refer to EC-597. ● Fuel pressure regulator Refer to EC-58. ● Fuel lines Refer to "ENGINE MAINTENANCE", ***MA-19***. ● Fuel filter for clogging	
▶	Repair or replace.

12	CHECK IGNITION TIMING

1. Check the following items. Refer to "Basic Inspection", EC-110.

Items	Specifications
Ignition timing	20° ± 2° BTDC
Base idle speed	750 ± 50 rpm (in "P" or "N" position)
Closed throttle position switch idle position adjustment	Feeler gauge thickness and switch condition 0.1 mm (0.004 in): ON 0.3 mm (0.012 in): OFF
Target idle speed	800 ± 50 rpm (in "P" or "N" position)

MTBL0328

OK or NG

OK (With CONSULT-II)	▶	GO TO 13.
OK (Without CONSULT-II)	▶	GO TO 14.
NG	▶	Adjust ignition timing.

Diagnostic Procedure (Cont'd)

13	CHECK HEATED OXYGEN SENSOR 1 (FRONT)

With CONSULT-II

1. Start engine and warm it up to normal operating temperature.
2. Select "MANU TRIG" in "DATA MONITOR" mode, and the trigger point is adjusted to 100%.
3. Select "HO2S1 (B1)" and "HO2S1 MNTR (B1)" in item selection.
4. Hold engine speed at 2,000 rpm under no load during the following steps.
5. Touch "START" on CONSULT-II screen.

DATA MONITOR	
MONITOR	NO DTC
ENG SPEED	XXX rpm
MAS A/F SE-B1	XXX V
COOLAN TEMP/S	XXX °C
HO2S1 (B1)	XXX V
HO2S1 MNTR (B1)	LEAN

SEF646Y

6. Check the following.

- "HO2S1 MNTR (B1)" in "DATA MONITOR" mode changes from "RICH" to "LEAN" to "RICH" 5 times in 10 seconds.
  5 times (cycles) are counted as shown below:

cycle	1	2	3	4	5
HO2S1 MNTR (B1)	R-L-R-L-R	L-R-L-R-L	R-L-R-L-R	L-R-L-R-L	R-L-R-L-R

R means HO2S1 MNTR (B1) indicates RICH
L means HO2S1 MNTR (B1) indicates LEAN

SEF217YA

R = "HO2S1 MNTR (B1)", "RICH"
L = "HO2S1 MNTR (B1)", "LEAN"

- "HO2S1 (B1)" voltage goes above 0.6V at least once.
- "HO2S1 (B1)" voltage goes below 0.3V at least once.
- "HO2S1 (B1)" voltage never exceeds 1.0V.

Trigger	ENG SPEED	HO2S1 (B1)
	rpm	V
XXX	XXX	XXX
XXX	XXX	XXX
XXX	XXX	XXX
XXX	XXX	XXX
XXX	XXX	XXX
XXX	XXX	XXX
XXX	XXX	XXX
XXX	XXX	XXX
XXX	XXX	XXX
XXX	XXX	XXX
XXX	XXX	XXX
XXX	XXX	XXX
XXX	XXX	XXX

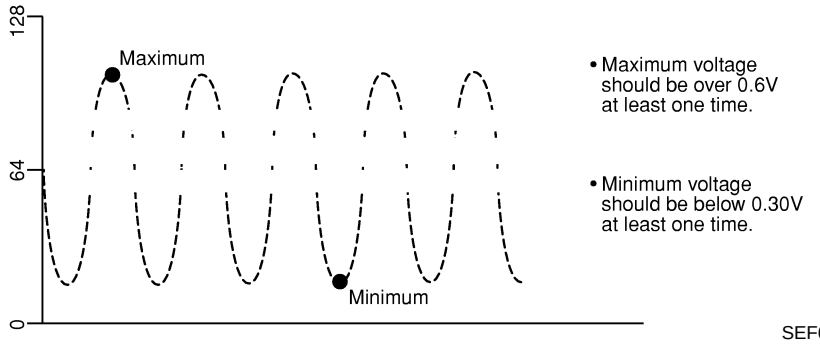

SEF648Y

CAUTION:

- **Discard any heated oxygen sensor which has been dropped from a height of more than 0.5 m (19.7 in) onto a hard surface such as a concrete floor; use a new one.**
- **Before installing new oxygen sensor, clean exhaust system threads using Oxygen Sensor Thread Cleaner tool J-43897-18 or J-43897-12 and approved anti-seize lubricant.**

OK or NG

OK	▶	GO TO 15.
NG	▶	Replace heated oxygen sensor 1 (front).

14	CHECK HEATED OXYGEN SENSOR 1 (FRONT)

Without CONSULT-II

1. Start engine and warm it up to normal operating temperature.
2. Set voltmeter probes between ECM terminal 50 [Heated oxygen sensor 1 (front) signal] and ECM ground.

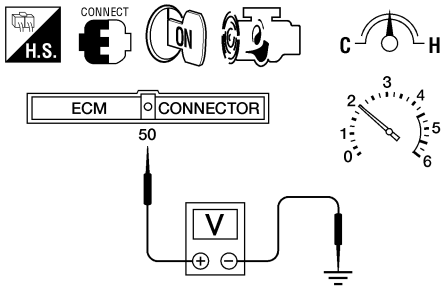

AEC873A

3. Check the following with engine speed held at 2,000 rpm constant under no load.

- Malfunction indicator lamp goes on more than five times within 10 seconds in Diagnostic Test Mode II [HEATED OXYGEN SENSOR 1 MONITOR].
- The maximum voltage is over 0.6V at least one time.
- The minimum voltage is below 0.3V at least one time.
- The voltage never exceeds 1.0V.

CAUTION:

- **Discard any heated oxygen sensor which has been dropped from a height of more than 0.5 m (19.7 in) onto a hard surface such as a concrete floor; use a new one.**
- **Before installing new oxygen sensor, clean exhaust system threads using Oxygen Sensor Thread Cleaner tool J-43897-18 or J-43897-12 and approved anti-seize lubricant.**

OK or NG

OK	▶	GO TO 15.
NG	▶	Replace heated oxygen sensor 1 (front).

15	CHECK MASS AIR FLOW SENSOR

With CONSULT-II

Check "MASS AIR FLOW" in "DATA MONITOR" mode with CONSULT-II.

at idling: 0.9 - 5.8 g·m/sec
at 2,500 rpm: 7.5 - 13.2 g·m/sec

With GST

Check mass air flow sensor signal in MODE 1 with GST.

at idling: 0.9 - 5.8 g·m/sec
at 2,500 rpm: 7.5 - 13.2 g·m/sec

OK or NG

OK	▶	GO TO 17.
NG	▶	GO TO 16.

16	CHECK CONNECTORS

Check connectors for rusted terminals or loose connections in the mass air flow sensor circuit or engine grounds.
Refer to EC-156.

OK or NG

NG	▶	Repair or replace it.

Diagnostic Procedure (Cont'd)

17	CHECK SYMPTOM MATRIX CHART	
Check items on the rough idle symptom in "Symptom Matrix Chart", EC-126.		
OK or NG		
OK	▶	GO TO 18.
NG	▶	Repair or replace.

18	ERASE THE 1ST TRIP DTC	
Some tests may cause a 1st trip DTC to be set. Erase the 1st trip DTC from the ECM memory after performing the tests. Refer to EC-85.		
	▶	GO TO 19.

19	CHECK INTERMITTENT INCIDENT	
Perform "TROUBLE DIAGNOSIS FOR INTERMITTENT INCIDENT", EC-148.		
	▶	**INSPECTION END**

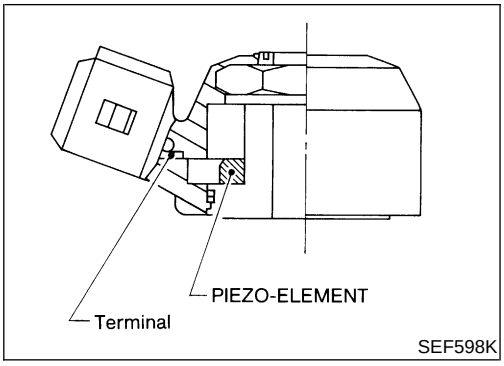

Component Description

NEEC0206

The knock sensor is attached to the cylinder block. It senses engine knocking using a piezoelectric element. A knocking vibration from the cylinder block is sensed as vibrational pressure. This pressure is converted into a voltage signal and sent to the ECM.
Freeze frame data will not be stored in the ECM for the knock sensor. The MIL will not light for knock sensor malfunction. The knock sensor has one trip detection logic.

ECM Terminals and Reference Value

NEEC0207

Specification data are reference values and are measured between each terminal and ground.

CAUTION:
Do not use ECM ground terminals when measuring input/output voltage. Doing so may result in damage to the ECM's transistor. Use a ground other than ECM terminals, such as the ground.

TERMINAL NO.	WIRE COLOR	ITEM	CONDITION	DATA (DC Voltage)
64	W	Knock sensor	**[Engine is running]** ● Idle speed	Approximately 2.4V

On Board Diagnosis Logic

NEEC0208

DTC No.	Malfunction is detected when ...	Check Items (Possible Cause)
P0325	● An excessively low or high voltage from the knock sensor is sent to ECM.	● Harness or connectors (The knock sensor circuit is open or shorted.) ● Knock sensor

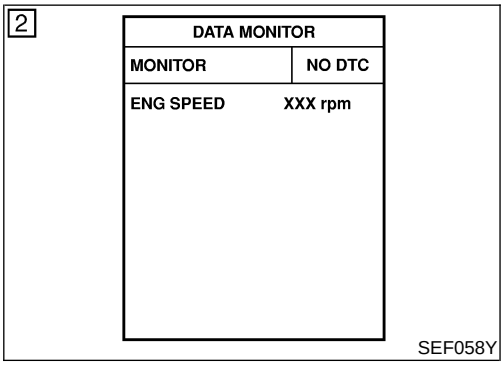

DTC Confirmation Procedure

NEEC0209

NOTE:
If "DTC Confirmation Procedure" has been previously conducted, always turn ignition switch OFF and wait at least 5 seconds before conducting the next test.

TESTING CONDITION:
Before performing the following procedure, confirm that battery voltage is more than 10V at idle.

With CONSULT-II

1) Turn ignition switch ON and select "DATA MONITOR" mode with CONSULT-II.
2) Start engine and run it for at least 5 seconds at idle speed.
3) If DTC is detected, go to "Diagnostic Procedure", EC-317.

With GST

Follow the procedure "With CONSULT-II".

Wiring Diagram

NEEC0210

EC-KS-01

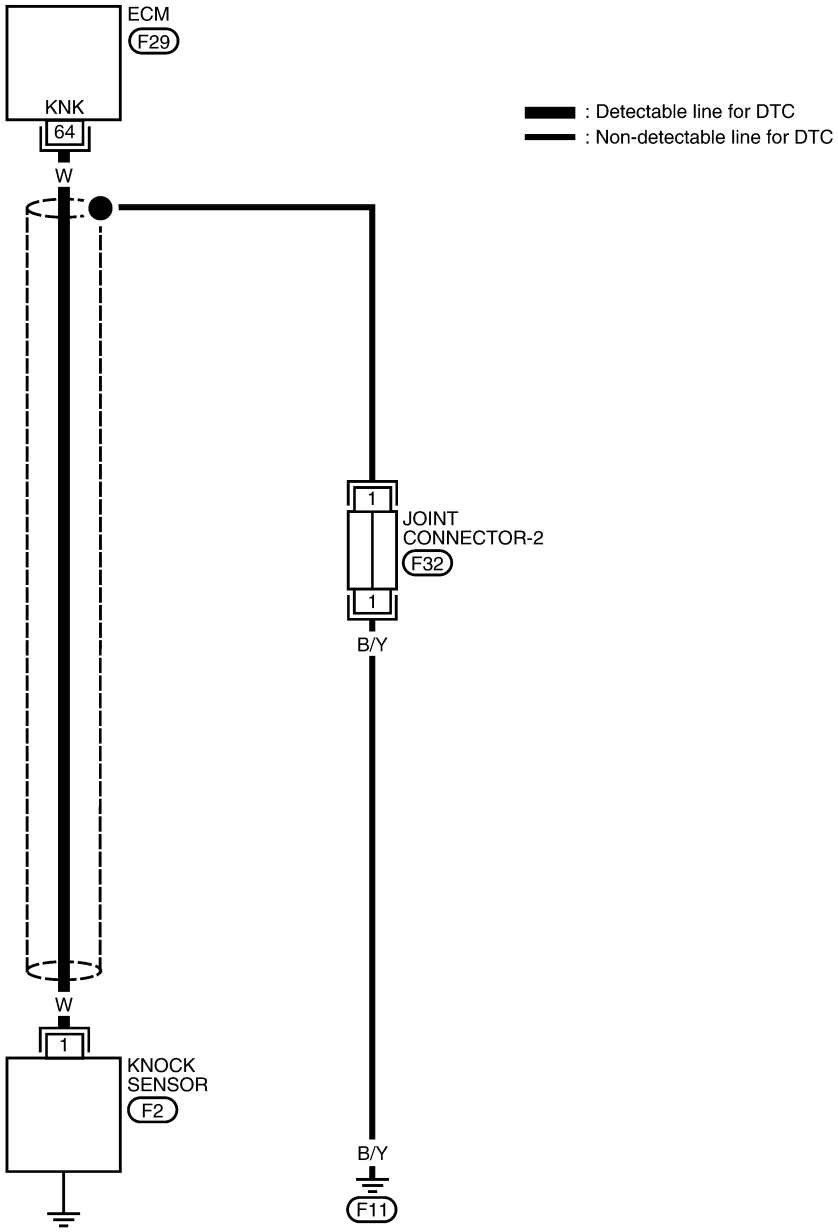



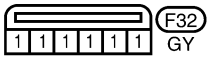

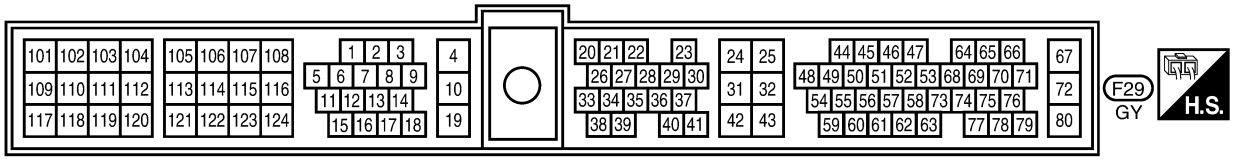

WEC777

Diagnostic Procedure

NEEC0211

1	RETIGHTEN GROUND SCREWS

Loosen and retighten engine ground screws.

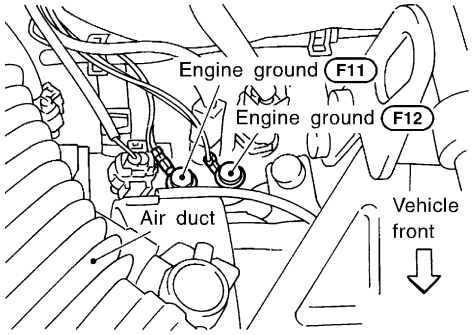

SEF325V

▶ GO TO 2.

2	CHECK INPUT SIGNAL CIRCUIT-1

1. Turn ignition switch OFF.
2. Disconnect ECM harness connector.
3. Check harness continuity between ECM terminal 64 and ground.

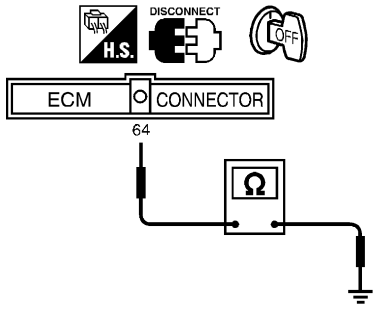

SEF173V

Resistance: Approximately 500 - 620 kΩ [at 25°C (77°F)]

It is necessary to use an ohmmeter which can measure more than 10 MΩ.

4. Also check harness for short to ground and short to power.

OK or NG

OK	▶	GO TO 4.
NG	▶	GO TO 3.

3	DETECT MALFUNCTIONING PART

Check the harness for open or short between knock sensor and ECM.

OK or NG

OK	▶	GO TO 4.
NG	▶	Repair open circuit or short to ground or short to power in harness or connectors.

Diagnostic Procedure (Cont'd)

4	CHECK KNOCK SENSOR

Use an ohmmeter which can measure more than 10 MΩ.
1. Disconnect knock sensor harness connector.
2. Check resistance between terminal 1 and ground.

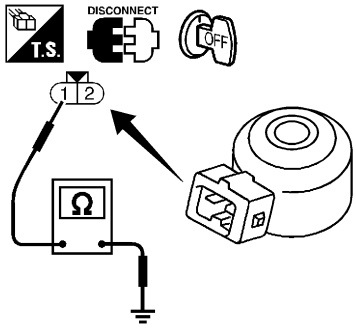

SEF174V

Resistance: 500 - 620 kΩ [at 25°C (77°F)]

CAUTION:

Discard any knock sensors that have been dropped or physically damaged. Use only new ones.

OK or NG

OK	▶	GO TO 5.
NG	▶	Replace knock sensor.

5	CHECK SHIELD CIRCUIT

1. Turn ignition switch OFF.
2. Remove joint connector-1.
3. Check the following. Refer to the wiring diagram.
- Continuity between joint connector-1 terminal 2 and ground
- Joint connector-1 (Refer to "HARNESS LAYOUT", ***EL-239***.)

Continuity should exist.

4. Also check harness for short to power.
5. Then reconnect harness connectors.

OK or NG

OK	▶	GO TO 7.
NG	▶	GO TO 6.

6	DETECT MALFUNCTIONING PART

Check the joint connector-2. (Refer to "HARNESS LAYOUT", ***EL-239***.)		
	▶	Repair open circuit or short to ground or short to power in harness or connectors.

7	CHECK INTERMITTENT INCIDENT

Perform "TROUBLE DIAGNOSIS FOR INTERMITTENT INCIDENT", EC-148.		
	▶	**INSPECTION END**

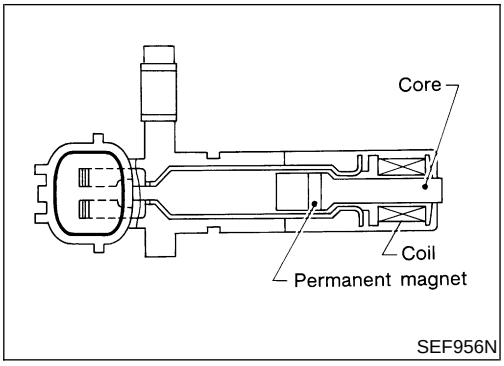

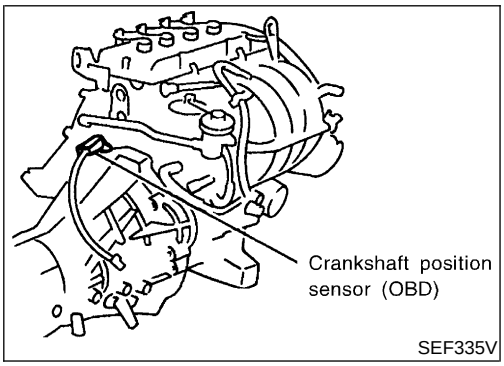

Component Description

NEEC0213

The crankshaft position sensor (OBD) is located on the transaxle housing facing the gear teeth (cogs) of the flywheel or drive plate. It detects the fluctuation of the engine revolution.
The sensor consists of a permanent magnet, core and coil.
When the engine is running, the high and low parts of the teeth cause the gap with the sensor to change.
The changing gap causes the magnetic field near the sensor to change.
Due to the changing magnetic field, the voltage from the sensor changes.
The ECM receives the voltage signal and detects the fluctuation of the engine revolution.
This sensor is not directly used to control the engine system. It is used only for the on board diagnosis.

ECM Terminals and Reference Value

NEEC0214

Specification data are reference values and are measured between each terminal and ground.

CAUTION:

Do not use ECM ground terminals when measuring input/output voltage. Doing so may result in damage to the ECM's transistor. Use a ground other than ECM terminals, such as the ground.

TERMINAL NO.	WIRE COLOR	ITEM	CONDITION	DATA (AC Voltage)
47	L	Crankshaft position sensor (OBD)	**[Engine is running]** ● **Warm-up condition** ● Idle speed	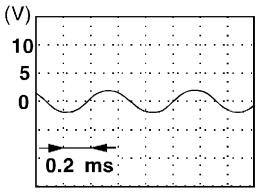
			[Engine is running] ● Engine speed is 2,000 rpm	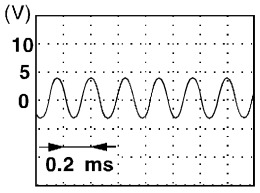

On Board Diagnosis Logic

NEEC0215

DTC No.	Malfunction is detected when ...	Check Items (Possible Cause)
P0335	● The proper pulse signal from the crankshaft position sensor (OBD) is not sent to ECM while the engine is running at the specified engine speed.	● Harness or connectors (The crankshaft position sensor (OBD) circuit is open.) ● Crankshaft position sensor (OBD) ● Dead battery

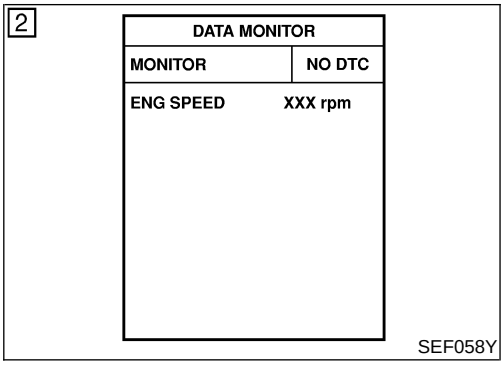

DTC Confirmation Procedure

NEEC0216

NOTE:
If “DTC Confirmation Procedure” has been previously conducted, always turn ignition switch OFF and wait at least 5 seconds before conducting the next test.

With CONSULT-II

1) Turn ignition switch ON and select “DATA MONITOR” mode with CONSULT-II.
2) Start engine and run it for at least 15 seconds at idle speed.
3) If 1st trip DTC is detected, go to “Diagnostic Procedure”, EC-322.

With GST

Follow the procedure “With CONSULT-II”.

Wiring Diagram

NEEC0217

EC-CKPS-01

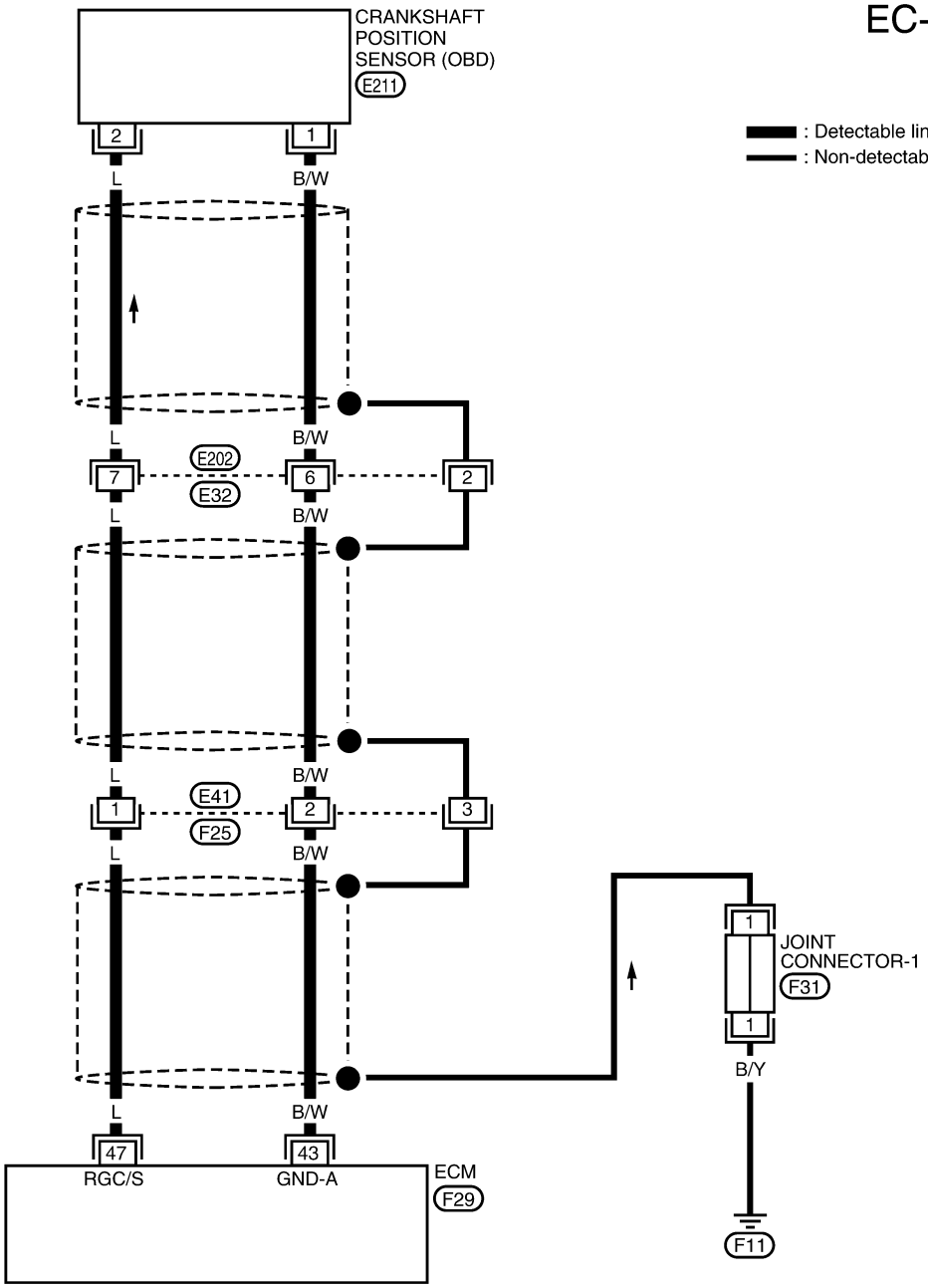

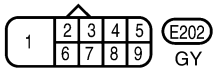



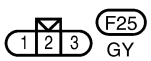



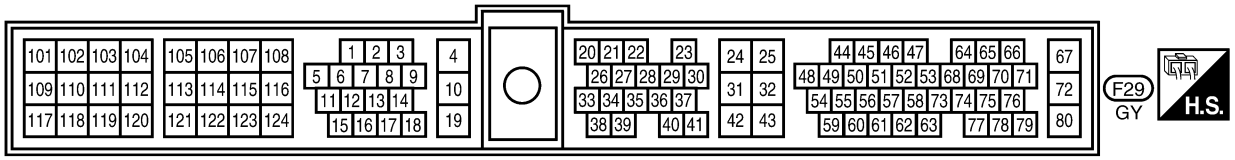

WEC778

Diagnostic Procedure

NEEC0218

1	RETIGHTEN GROUND SCREWS

1. Turn ignition switch OFF.
2. Loosen and retighten engine ground screws.

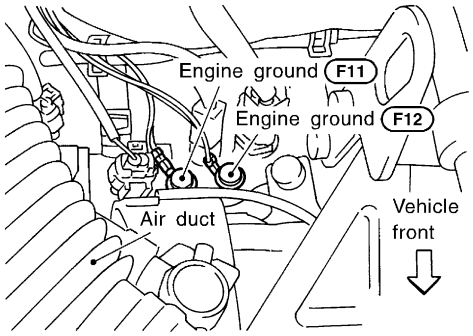

SEF325V

▶ GO TO 2.

2	CHECK INPUT SIGNAL CIRCUIT

1. Disconnect crankshaft position sensor (OBD) and ECM harness connectors.

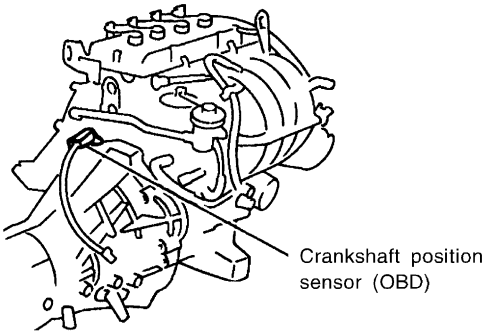

SEF335V

2. Check continuity between ECM terminal 47 and terminal 2.

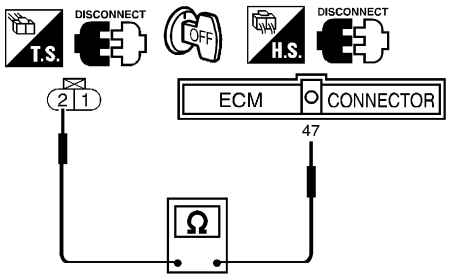

SEF175V

Continuity should exist.

3. Also check harness for short to ground and short to power.

OK or NG

OK	▶	GO TO 4.
NG	▶	GO TO 3.

3	DETECT MALFUNCTIONING PART
Check the following. ● Harness connectors E202, E32 ● Harness connectors E41, F25 ● Harness for open or short between crankshaft position sensor (OBD) and ECM	
▶	Repair open circuit or short to ground or short to power in harness or connectors.

4	CHECK GROUND CIRCUIT
1. Reconnect ECM harness connector. 2. Check harness continuity between crankshaft position sensor (OBD) terminal 1 and engine ground. Refer to the wiring diagram. **Continuity should exist.** 3. Also check harness for short to power. **OK or NG**	
OK ▶	GO TO 6.
NG ▶	GO TO 5.

5	DETECT MALFUNCTIONING PART
Check the following. ● Harness connectors E202, E32 ● Harness connectors E41, F25 ● Harness for open or short between crankshaft position sensor (OBD) and ECM	
▶	Repair open circuit or short to ground or short to power in harness or connectors.

6	CHECK SHIELD CIRCUIT
1. Turn ignition switch OFF. 2. Disconnect harness connector E32. 3. Check harness continuity between harness connector E32 terminal 2 and ground.	

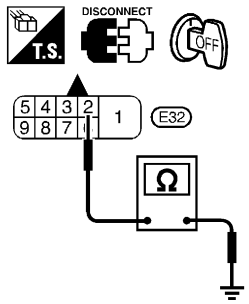

SEF177V

Continuity should exist.

4. Also check harness for short to power.
5. Then reconnect harness connectors.

OK or NG

OK ▶	GO TO 8.
NG ▶	GO TO 7.

Diagnostic Procedure (Cont'd)

7	DETECT MALFUNCTIONING PART
Check the following. ● Harness connectors E41, F25 ● Joint connector-1 (Refer to "HARNESS LAYOUT", ***EL-239***.) ● Harness for open or short between harness connector E32 and Engine ground	
▶	Repair open circuit or short to power in harness or connectors.

8	CHECK CRANKSHAFT POSITION SENSOR (OBD)

1. Disconnect crankshaft position sensor (OBD) harness connector.
2. Loosen the fixing bolt of the sensor.
3. Remove the sensor.
4. Visually check the sensor for chipping.

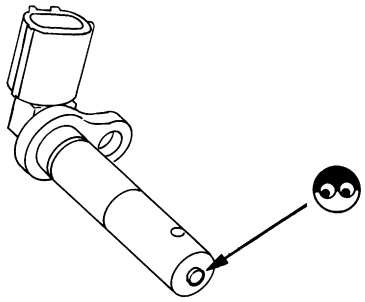

SEF960N

5. Check resistance as shown in the figure.

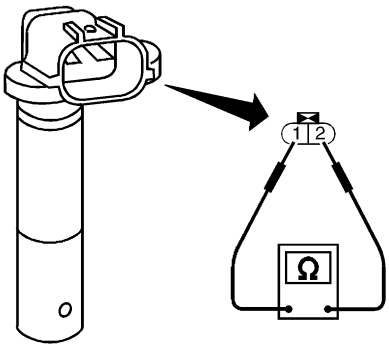

SEF231W

Resistance: Approximately 512 - 632Ω [at 20°C (68°F)]

OK or NG

OK	▶	GO TO 9.
NG	▶	Replace crankshaft position sensor (OBD).

9	CHECK INTERMITTENT INCIDENT
Perform "TROUBLE DIAGNOSIS FOR INTERMITTENT INCIDENT", EC-148.	
▶	**INSPECTION END**

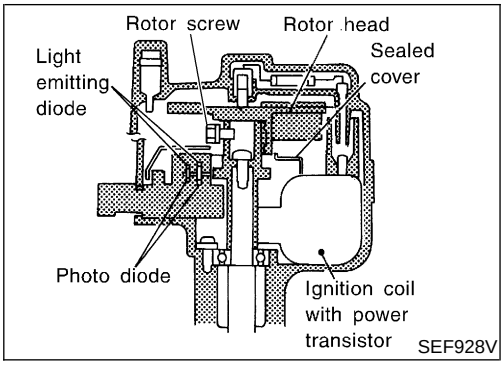

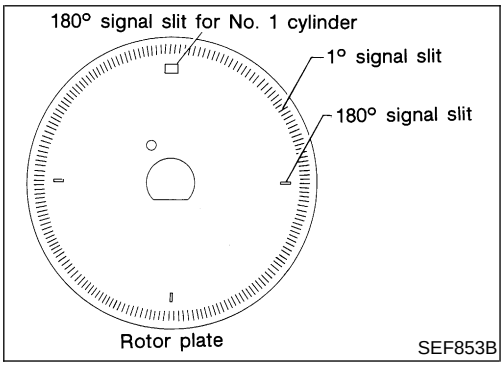

Component Description

NEEC0220

The camshaft position sensor is a basic component of the engine control system. It monitors engine speed and piston position. These input signals to the engine control system are used to control fuel injection, ignition timing and other functions.

The camshaft position sensor has a rotor plate and a wave-forming circuit. The rotor plate has 360 slits for a 1° (POS) signal and 4 slits for a 180° (REF) signal. The wave-forming circuit consists of Light Emitting Diodes (LED) and photo diodes.

The rotor plate is positioned between the LED and the photo diode. The LED transmits light to the photo diode. As the rotor plate turns, the slits cut the light to generate rough-shaped pulses. These pulses are converted into on-off signals by the wave-forming circuit and sent to the ECM.

The distributor is not repairable and must be replaced as an assembly except distributor cap and rotor head.

ECM Terminals and Reference Value

NEEC0221

Specification data are reference values and are measured between each terminal and ground.

CAUTION:

Do not use ECM ground terminals when measuring input/output voltage. Doing so may result in damage to the ECM's transistor. Use a ground other than ECM terminals, such as the ground.

TERMINAL NO.	WIRE COLOR	ITEM	CONDITION	DATA (DC Voltage)
4	LG/R	ECM relay (Self shut-off)	**[Engine is running]** **[Ignition switch OFF]** ● For a few seconds after turning ignition switch OFF	0 - 1V
			[Ignition switch OFF] ● More than a few seconds after turning ignition switch OFF	BATTERY VOLTAGE (11 - 14V)
44	PU	Camshaft position sensor (Reference signal)	**[Engine is running]** (Warm-up condition) ● Idle speed	0.2 - 0.5V 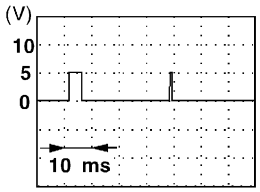
			[Engine is running] ● Engine speed is 2,000 rpm	0 - 0.5V 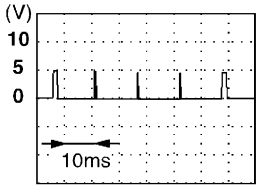

ECM Terminals and Reference Value (Cont'd)

TERMINAL NO.	WIRE COLOR	ITEM	CONDITION	DATA (DC Voltage)
49	LG	Camshaft position sensor (Position signal)	**[Engine is running]** ● **Warm-up condition** ● Idle speed	Approximately 2.6V 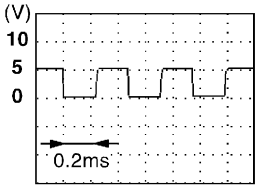
			[Engine is running] ● Engine speed is 2,000 rpm	Approximately 2.5 - 2.6V 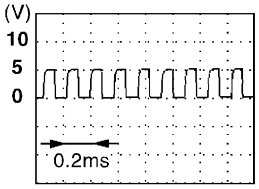
67	B/P	Power supply for ECM	**[Ignition switch ON]**	BATTERY VOLTAGE (11 - 14V)
72	B/P			
117	B/P	Current return	**[Engine is running]** ● Idle speed	BATTERY VOLTAGE (11 - 14V)

On Board Diagnosis Logic

NEEC0222

DTC No.	Malfunction is detected when ...		Check Items (Possible Cause)
P0340	A)	Either 1° or 180° signal is not sent to ECM for the first few seconds during engine cranking.	● Harness or connectors (The camshaft position sensor circuit is open or shorted.) ● Camshaft position sensor ● Starter motor (Refer to ***SC-10***.) ● Starting system circuit (Refer to ***SC-14***.) ● Dead (Weak) battery
	B)	Either 1° or 180° signal is not sent to ECM often enough while the engine speed is higher than the specified engine speed.	
	C)	The relation between 1° and 180° signal is not in the normal range during the specified engine speed.	

DTC Confirmation Procedure

=NEEC0223

Perform "Procedure for malfunction A" first. If DTC cannot be confirmed, perform "Procedure for malfunction B and C".

NOTE:
If "DTC Confirmation Procedure" has been previously conducted, always turn ignition switch OFF and wait at least 5 seconds before conducting the next test.

TESTING CONDITION:
Before performing the following procedure, confirm that battery voltage is more than 10.5V.

2

DATA MONITOR	
MONITOR	NO DTC
ENG SPEED	XXX rpm

SEF058Y

PROCEDURE FOR MALFUNCTION A

NEEC0223S01

With CONSULT-II

1) Turn ignition switch ON.
2) Select "DATA MONITOR" mode with CONSULT-II.
3) Crank engine for at least 2 seconds.
4) If 1st trip DTC is detected, go to "Diagnostic Procedure", EC-329.

With GST

Follow the procedure "With CONSULT-II".

3

DATA MONITOR	
MONITOR	NO DTC
ENG SPEED	XXX rpm

SEF058Y

PROCEDURE FOR MALFUNCTION B AND C

NEEC0223S02

With CONSULT-II

1) Turn ignition switch ON.
2) Select "DATA MONITOR" mode with CONSULT-II.
3) Start engine and run it for at least 2 seconds at idle speed.
4) If 1st trip DTC is detected, go to "Diagnostic Procedure", EC-329.

With GST

Follow the procedure "With CONSULT-II".

Wiring Diagram

NEEC0224

EC-CMPS-01

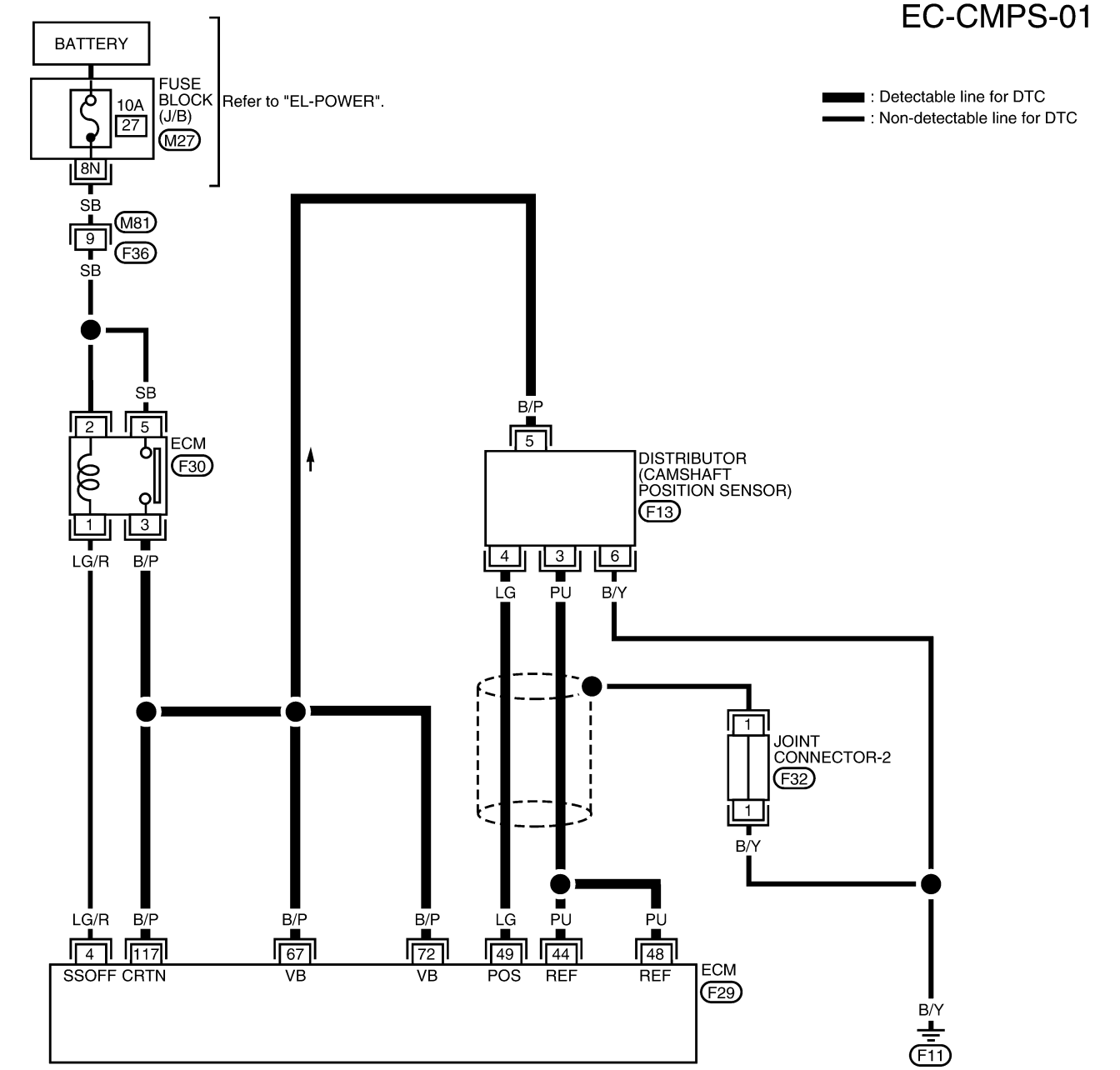

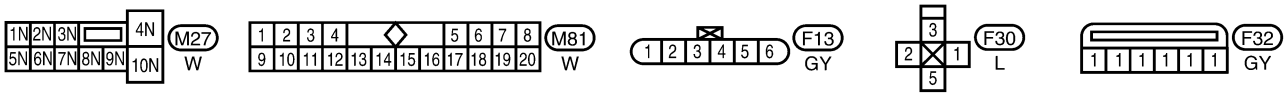

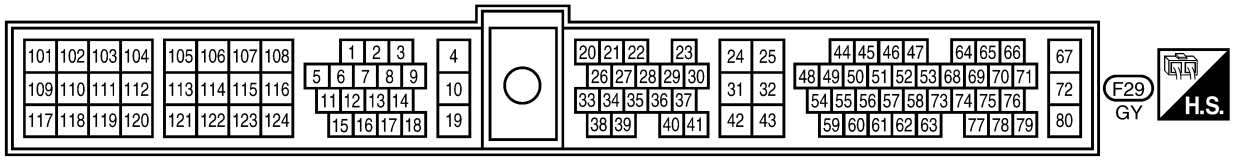

WEC779

Diagnostic Procedure

NEEC0225

1	CHECK STARTING SYSTEM	
Does the engine turn over? (Does the starter motor operate?) **Yes or No**		
Yes	▶	GO TO 2.
No	▶	Check starting system. (Refer to EL section.)

2	RETIGHTEN GROUND SCREWS	
1. Turn ignition switch OFF. 2. Loosen and retighten engine ground screws. 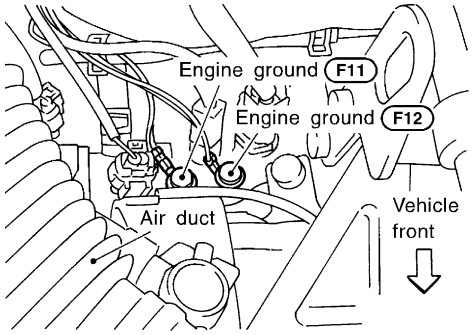 SEF325V		
	▶	GO TO 3.

Diagnostic Procedure (Cont'd)

3	CHECK POWER SUPPLY

1. Disconnect camshaft position sensor harness connector.

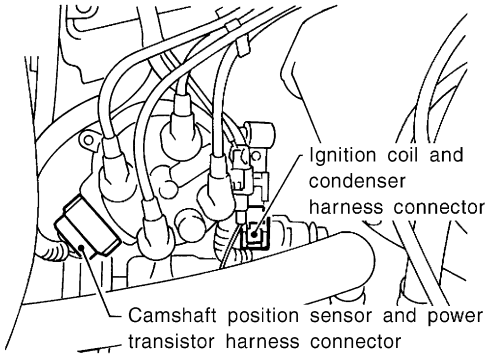

SEF128S

2. Turn ignition switch ON.
3. Check voltage between terminal 5 and ground with CONSULT-II or tester.

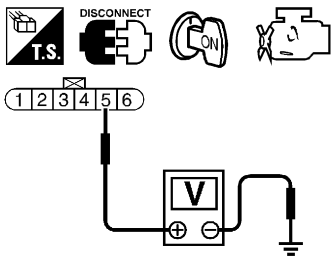

SEF040S

Voltage: Battery voltage

OK or NG

OK	▶	GO TO 5.
NG	▶	GO TO 4.

4	DETECT MALFUNCTIONING PART

Check the following.
- Harness for open or short between camshaft position sensor and ECM relay
- Harness for open or short between camshaft position sensor and ECM

	▶	Repair open circuit or short to ground or short to power in harness or connectors.

5	CHECK INPUT SIGNAL CIRCUIT

1. Turn ignition switch OFF.
2. Disconnect ECM harness connector.
3. Check harness continuity between sensor terminal 4 and ECM terminal 49, sensor terminal 3 and ECM terminals 44.

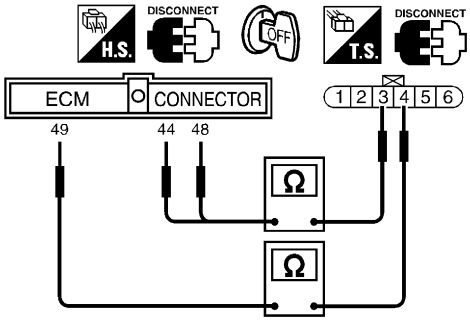

SEF178V

Continuity should exist.

4. Also check harness for short to ground and short to power.

OK or NG

OK	▶	GO TO 6.
NG	▶	Repair open circuit or short to ground or short to power in harness or connectors.

6	CHECK GROUND CIRCUIT

1. Turn ignition switch OFF.
2. Check harness continuity between distributor (camshaft position sensor) terminal 6 and engine ground. Refer to the wiring diagram.
   Continuity should exist.
3. Also check harness for short to power.

OK or NG

OK	▶	GO TO 7.
NG	▶	Repair open circuit or short to power in harness or connectors.

Diagnostic Procedure (Cont'd)

7	CHECK CAMSHAFT POSITION SENSOR

1. Start engine and warm it up to normal operating temperature.
2. Check voltage between ECM terminal 49 and engine ground, ECM terminal 44 and engine ground.

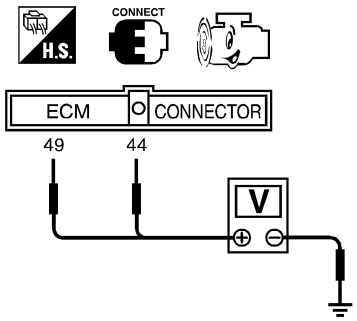

Terminal 44 and engine ground

Condition	Idle	2,000 rpm
Voltage	0.2 - 0.5V	0 - 0.5V
Pulse signal	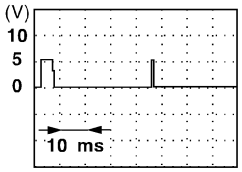	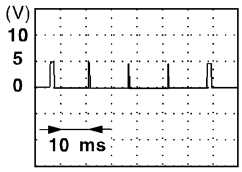

Terminal 49 and engine ground

Condition	Idle	2,000 rpm
Voltage	Approximately 2.6V	Approximately 2.5 - 2.6V
Pulse signal	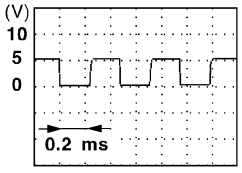	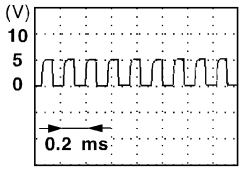

SEF868Z

OK or NG

OK	▶	GO TO 8.
NG	▶	Replace camshaft position sensor.

8	CHECK SHIELD CIRCUIT

1. Turn ignition switch OFF.
2. Disconnect joint connector-1.
3. Check the following.

- Continuity between joint connector-1 terminal 2 and ground
- Joint connector-1

(Refer to "HARNESS LAYOUT", ***EL-253***.)

Continuity should exist.

4. Also check harness for short to power.
5. Then reconnect joint connector-1.

OK or NG

OK	▶	GO TO 9.
NG	▶	Repair open circuit, short to power in harness or connectors.

9	CHECK INTERMITTENT INCIDENT

Perform "TROUBLE DIAGNOSIS FOR INTERMITTENT INCIDENT", EC-148.

▶ **INSPECTION END**

Description

SYSTEM DESCRIPTION

NEEC0227

NEEC0227S01

Sensor	Input Signal to ECM	ECM function	Actuator
Camshaft position sensor	Engine speed	EGR control	EGRC-solenoid valve
Mass air flow sensor	Amount of intake air		
Engine coolant temperature sensor	Engine coolant temperature		
Intake air temperature sensor	Intake air temperature		
Ignition switch	Start signal		
Throttle position sensor	Throttle position		
Vehicle speed sensor	Vehicle speed		

This system cuts and controls vacuum applied to the EGR valve to suit engine operating conditions. This cut-and-control operation is accomplished through the ECM and the EGRC-solenoid valve. When the ECM detects any of the following conditions, current flows through the solenoid valve is cut. This causes the vacuum to be discharged into the atmosphere. The EGR valve remains closed.

- Low engine coolant temperature
- Engine starting
- High-speed engine operation
- Engine idling
- Excessively high engine coolant temperature
- Mass air flow sensor malfunction
- Low intake air temperature

EGR and vacuum

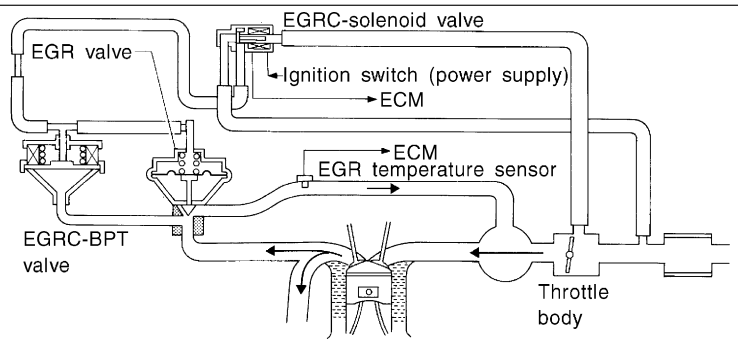

SEF641Q

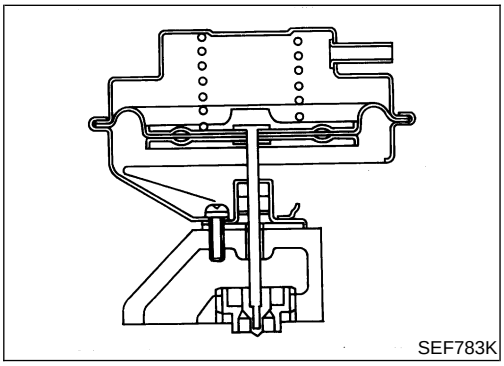

SEF783K

COMPONENT DESCRIPTION

NEEC0227S02

Exhaust Gas Recirculation (EGR) Valve

NEEC0227S0201

The EGR valve controls the amount of exhaust gas routed to the intake manifold. Vacuum is applied to the EGR valve in response to throttle valve opening. The vacuum controls the movement of a taper valve connected to the vacuum diaphragm in the EGR valve.

Description (Cont'd)

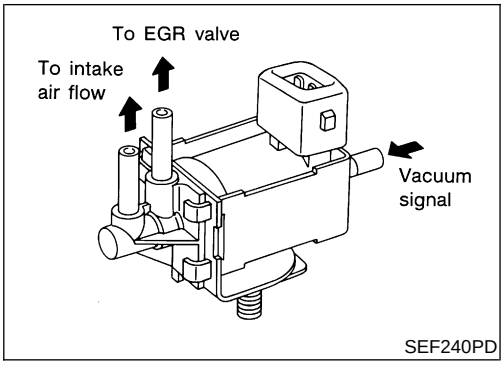

EGRC-Solenoid Valve

NEEC0227S0202

The EGRC-solenoid valve responds to signals from the ECM. When the ECM sends an ON (ground) signal, the coil in the solenoid valve is energized. The vacuum signal passes through the solenoid valve. The signal then reaches the EGR valve.
When the ECM sends an OFF signal, a plunger will then move to cut the vacuum signal from the intake manifold collector to the EGR valve.

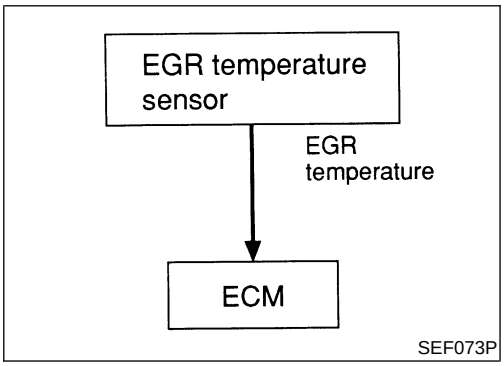

On Board Diagnosis Logic

NEEC0228

If the absence of EGR flow is detected by EGR temperature sensor under the condition that calls for EGR, a low-flow malfunction is diagnosed.

DTC No.	Malfunction is detected when ...	Check Items (Possible Cause)
P0400	• No EGR flow is detected under conditions that call for EGR.	• EGR valve stuck closed • EGRC-BPT valve • Vacuum hose • EGRC-solenoid valve • EGR passage • EGR temperature sensor • Exhaust gas leaks

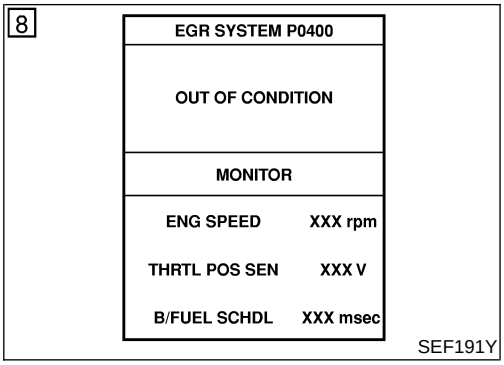

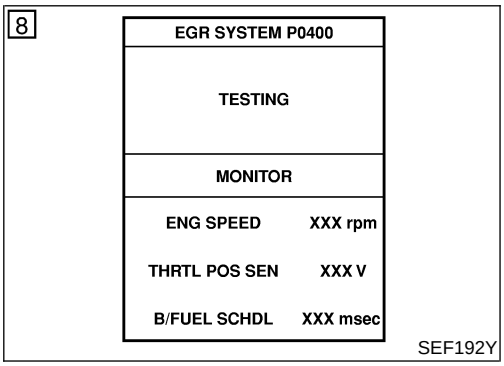

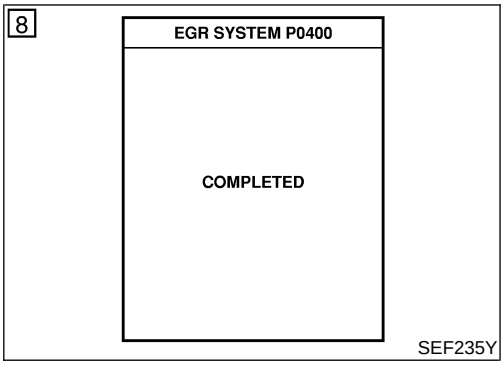

DTC Confirmation Procedure

NEEC0229

CAUTION:

Always drive vehicle at a safe speed.

NOTE:

- If "DTC Confirmation Procedure" has been previously conducted, always turn ignition switch OFF and wait at least 5 seconds before conducting the next test.
- P0400 will not be displayed at "SELF-DIAG RESULTS" mode with CONSULT-II even though DTC work support test result is "NG".

TESTING CONDITION:

For best results, perform the test at a temperature above 5°C (41°F).

With CONSULT-II

1) Turn ignition switch ON.
2) Check "COOLAN TEMP/S" in "DATA MONITOR" mode with CONSULT-II and confirm it is within the range listed below.

   COOLAN TEMP/S: Less than 40°C (104°F)

   If the value is out of range, park the vehicle in a cool place and allow the engine temperature to stabilize. Do not attempt to lower the coolant temperature with a fan or means other than ambient air. Doing so may produce an inaccurate diagnostic result.
3) Start engine and let it idle monitoring "COOLAN TEMP/S" value. When the "COOLAN TEMP/S" value reaches 70°C (158°F), immediately go to the next step.
4) Select "EGR SYSTEM P0400" of "EGR SYSTEM" in "DTC WORK SUPPORT" mode with CONSULT-II.
5) Touch "START".
6) Accelerate vehicle to a speed of 40 km/h (25 MPH) once and then stop vehicle with engine running.
   If "COMPLETED" appears on CONSULT-II screen, go to step 9.
   If "COMPLETED" does not appear on CONSULT-II screen, go to the following step.
7) Check the output voltage of "THRTL POS SEN" (at closed throttle position) and note it.
8) When the following conditions are met, "TESTING" will be displayed on the CONSULT-II screen. Maintain the conditions until "TESTING" changes to "COMPLETED". (It will take approximately 30 seconds or more.)

ENG SPEED	2,000 - 2,800 rpm
Vehicle speed	10 km/h (6 MPH) or more
B/FUEL SCHDL	7.0 - 10.0 msec
THRTL POS SEN	(X + 0.23) − (X + 0.74) V X = Voltage value measured at step 7
Selector lever	Suitable position

   If "TESTING" is not displayed after 5 minutes, retry from step 2.
9) Make sure that "OK" is displayed after touching "SELF-DIAG RESULTS". If "NG" is displayed, refer to "Diagnostic Procedure", EC-338.

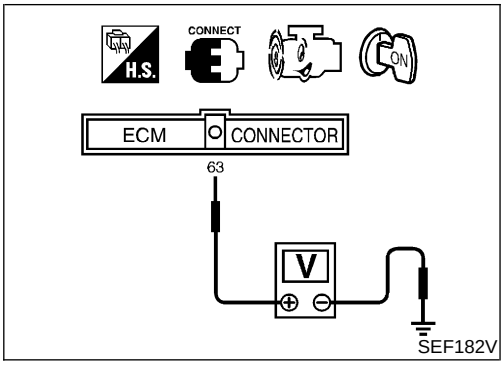

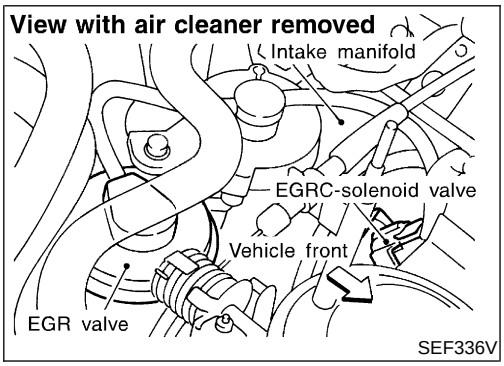

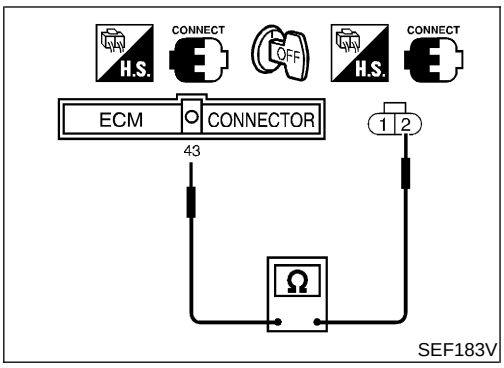

Overall Function Check

NEEC0230

Use this procedure to check the overall EGR function. During this check, a 1st trip DTC might not be confirmed.

Without CONSULT-II

1) Start engine and warm it up to normal operating temperature.
2) Check the EGR valve lifting when revving engine from 2,000 rpm to 4,000 rpm quickly under no load using the following methods.

- Disconnect EGRC-solenoid valve harness connector. (The DTC for EGRC-solenoid valve will be displayed, however, ignore it.)

EGR valve should lift up and down without sticking.

If NG, go to "Diagnostic Procedure", EC-338.

3) Check voltage between ECM terminal 63 (EGR temperature sensor signal) and ground at idle speed.

Less than 4.5V should exist.

If NG, go to next step.

4) Turn ignition switch OFF.
5) Check harness continuity between EGR temperature sensor harness connector terminal 2 and ECM terminal 43 (ECM ground).

Continuity should exist.

6) Check "EGR TEMPERATURE SENSOR". Refer to "CHECK EGR TEMPERATURE SENSOR" in "Diagnostic Procedure".

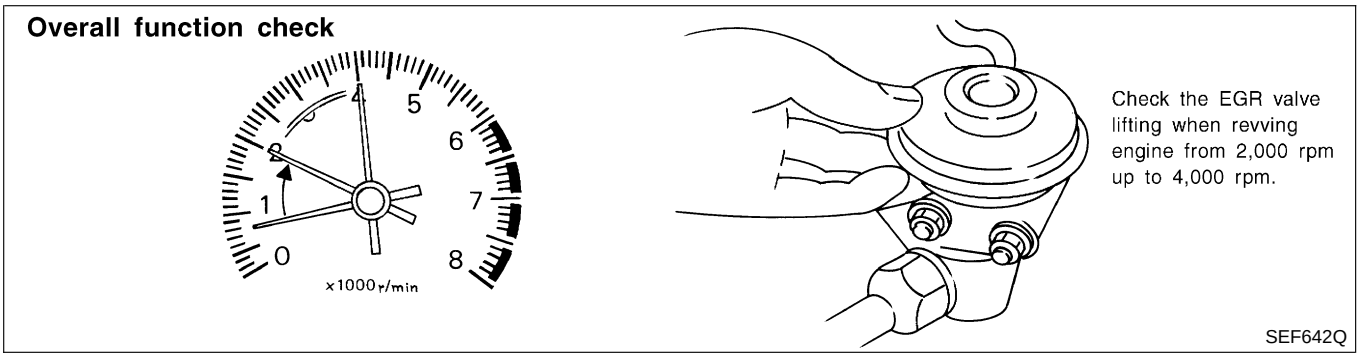

Wiring Diagram

NEEC0231

EC-EGRC1-01

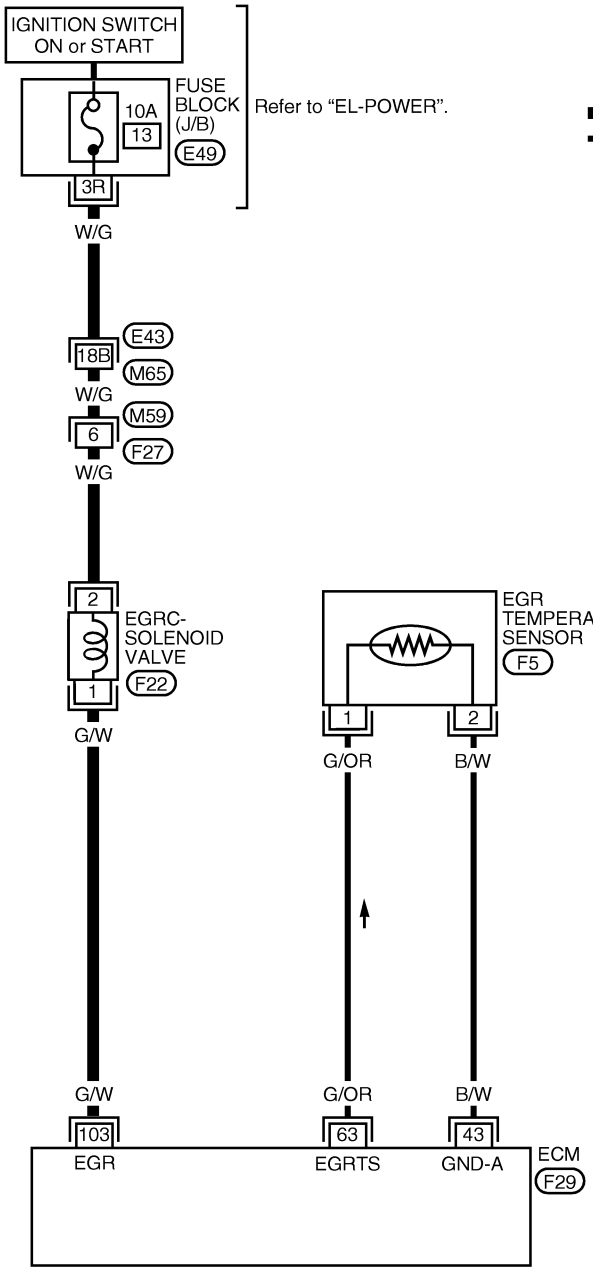

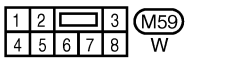



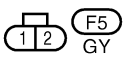

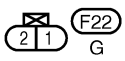

Refer to the following.
M65 , E43 - SUPER MULTIPLE JUNCTION (SMJ)

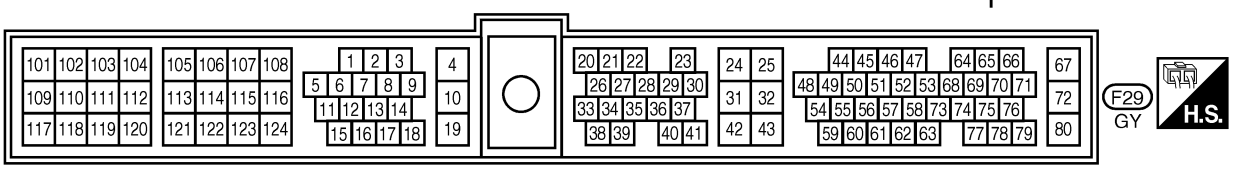

AEC995A

Diagnostic Procedure

NEEC0232

1	CHECK EXHAUST SYSTEM

1. Start engine.
2. Check exhaust pipes and muffler for leaks.

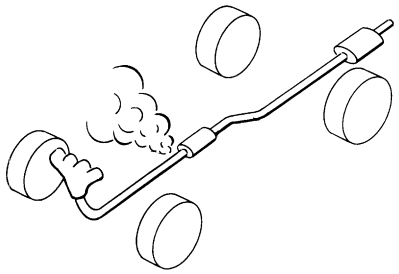

SEF099P

OK or NG

OK (With CONSULT-II)	▶	GO TO 2.
OK (Without CONSULT-II)	▶	GO TO 3.
NG	▶	Repair or replace exhaust system.

2	CHECK VACUUM SOURCE TO EGR VALVE

With CONSULT-II

1. Warm engine up to normal operating temperature.
2. Disconnect vacuum hose to EGR valve.
3. Check for vacuum existence at idle.

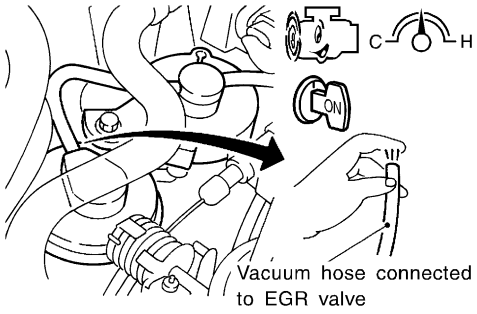

SEF337V

Vacuum should not exist at idle.

4. Select "EGRC SOLENOID VALVE" in "ACTIVE TEST" mode with CONSULT-II and turn the solenoid valve ON.
5. Check for vacuum existence when revving engine from 2,000 rpm up to 4,000 rpm.

ACTIVE TEST	
EGRC SOL/V	ON
(EGR)	CUT
MONITOR	
ENG SPEED	XXX rpm

SEF716Z

Vacuum should exist when revving engine.

OK or NG

OK	▶	GO TO 4.
NG	▶	GO TO 5.

Diagnostic Procedure (Cont'd)

3	CHECK VACUUM SOURCE TO EGR VALVE

Without CONSULT-II

1. Warm engine up to normal operating temperature.
2. Disconnect vacuum hose to EGR valve.
3. Check for vacuum existence at idle.

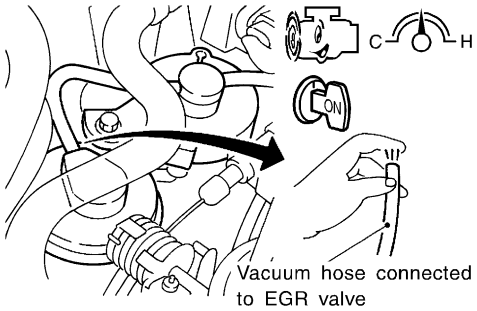

SEF337V

Vacuum should not exist at idle.

4. Disconnect EGRC-solenoid valve harness connector. (The 1st trip DTC for EGRC-solenoid valve will be displayed, but ignore it.)
5. Check for vacuum existence when revving engine from 2,000 rpm up to 4,000 rpm.
   Vacuum should exist when revving engine.

OK or NG

OK	▶	GO TO 4.
NG	▶	GO TO 5.

4	CHECK EGR VALVE

- Apply vacuum to EGR vacuum port with a hand vacuum pump.

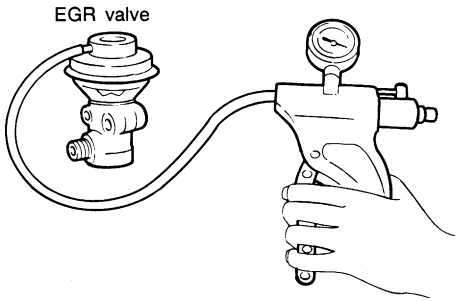

MEF137D

EGR valve spring should lift.

- Check for sticking.

OK or NG

OK	▶	GO TO 11.
NG	▶	Repair or replace EGR valve.

5	CHECK VACUUM HOSE

1. Turn ignition switch OFF.
2. Check vacuum hose for clogging, cracks or improper connection.

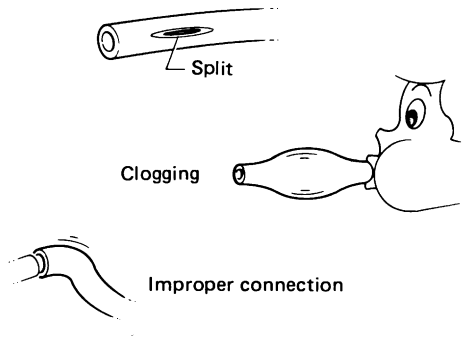

SEF109L

OK or NG

OK (With CONSULT-II)	▶	GO TO 6.
OK (Without CONSULT-II)	▶	GO TO 7.
NG	▶	Repair or replace vacuum hose.

6	CHECK EGRC-SOLENOID VALVE OPERATION

With CONSULT-II

1. Turn ignition switch ON.
2. Turn EGRC-solenoid valve "ON" and "OFF" in "ACTIVE TEST" mode with CONSULT-II and check operating sound.

ACTIVE TEST	
EGRC SOL/V	ON
(EGR)	CUT
MONITOR	
ENG SPEED	XXX rpm

SEF716Z

Clicking noise should be heard.

OK or NG

OK	▶	GO TO 8.
NG	▶	Repair or replace EGRC-solenoid valve or repair circuit.

7	CHECK EGRC-SOLENOID VALVE OPERATION

Without CONSULT-II

Check operating sound of the solenoid valve when disconnecting and reconnecting EGRC-solenoid valve harness connector. (The DTC or the 1st trip DTC for the EGRC-solenoid valve will be displayed, however, ignore it.)

Clicking noise should be heard.

OK or NG

OK	▶	GO TO 9.
NG	▶	GO TO 8.

Diagnostic Procedure (Cont'd)

8	DETECT MALFUNCTION PART

Check the following.
- Harness connectors E43, M65
- Harness connectors M59, F27
- 10A fuse
- Harness for open or short between fuse block and EGRC-solenoid valve
- Harness for open or short between ECM and EGRC-solenoid valve

▶ Repair open circuit or short to ground or short to power in harness or connectors.

9	CHECK EGRC-SOLENOID VALVE

With CONSULT-II

Check air passage continuity.

Perform "EGRC SOLENOID VALVE" in "ACTIVE TEST" mode.

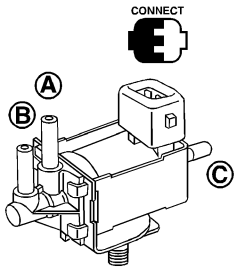

ACTIVE TEST	
EGRC SOL/V	ON
(EGR)	CUT
MONITOR	
ENG SPEED	XXX rpm

Condition EGRC SOLENOID VALVE	Air passage continuity between **A** and **B**	Air passage continuity between **A** and **C**
ON	Yes	No
OFF	No	Yes

SEF717Z

Without CONSULT-II

Check air passage continuity shown in the figure.

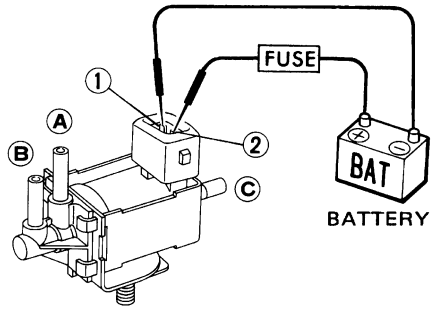

AEC919

Condition	Air passage continuity between **A** and **B**	Air passage continuity between **A** and **C**
12V direct current supply between terminals 1 and 2	Yes	No
No supply	No	Yes

MTBL0283

If NG or operation takes more than 1 second, replace solenoid valve.

OK or NG

OK	▶	GO TO 10.
NG	▶	If NG or operation takes more than 1 second, replace solenoid valve.

10	CHECK EGRC-BPT VALVE

1. Plug one of two ports of EGRC-BPT valve.
2. Vacuum from the other port and check for leakage while applying a pressure above 0.981 kPa (100 mmH_2O, 3.94 inH_2O) from under EGRC-BPT valve.

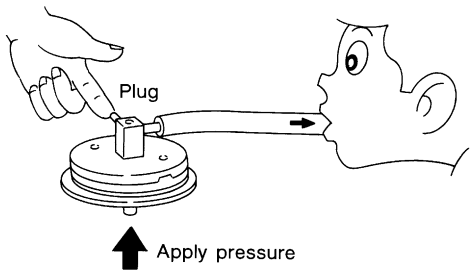

SEF083P

3. If a leakage is noted, replace the valve.

OK or NG

OK	▶	GO TO 11.
NG	▶	Replace EGRC-BPT valve.

11	CHECK EGR TEMPERATURE SENSOR

Check resistance change and resistance value.

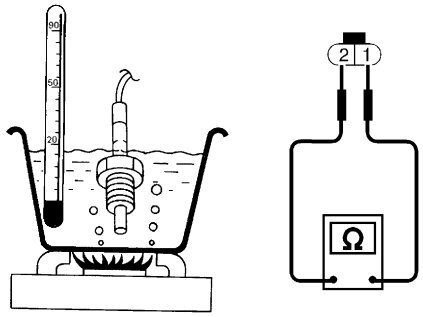

SEF643Q

<Reference data>

EGR temperature °C (°F)	Voltage V	Resistance MΩ
0 (32)	4.56	0.62 - 1.05
50 (122)	2.25	0.065 - 0.094
100 (212)	0.59	0.011 - 0.015

MTBL0549

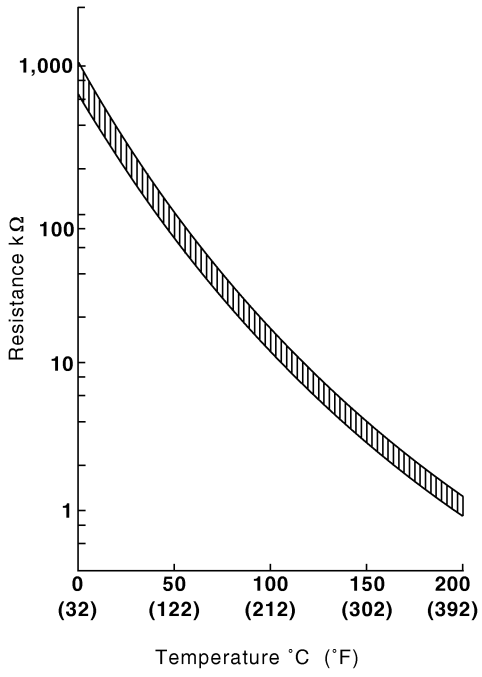

SEF068XB

OK or NG

OK	▶	GO TO 12.
NG	▶	Replace EGR temperature sensor.

12	CHECK INTERMITTENT INCIDENT
Perform "TROUBLE DIAGNOSIS FOR INTERMITTENT INCIDENT", EC-148.	
▶	**INSPECTION END**

Description

NEEC0234

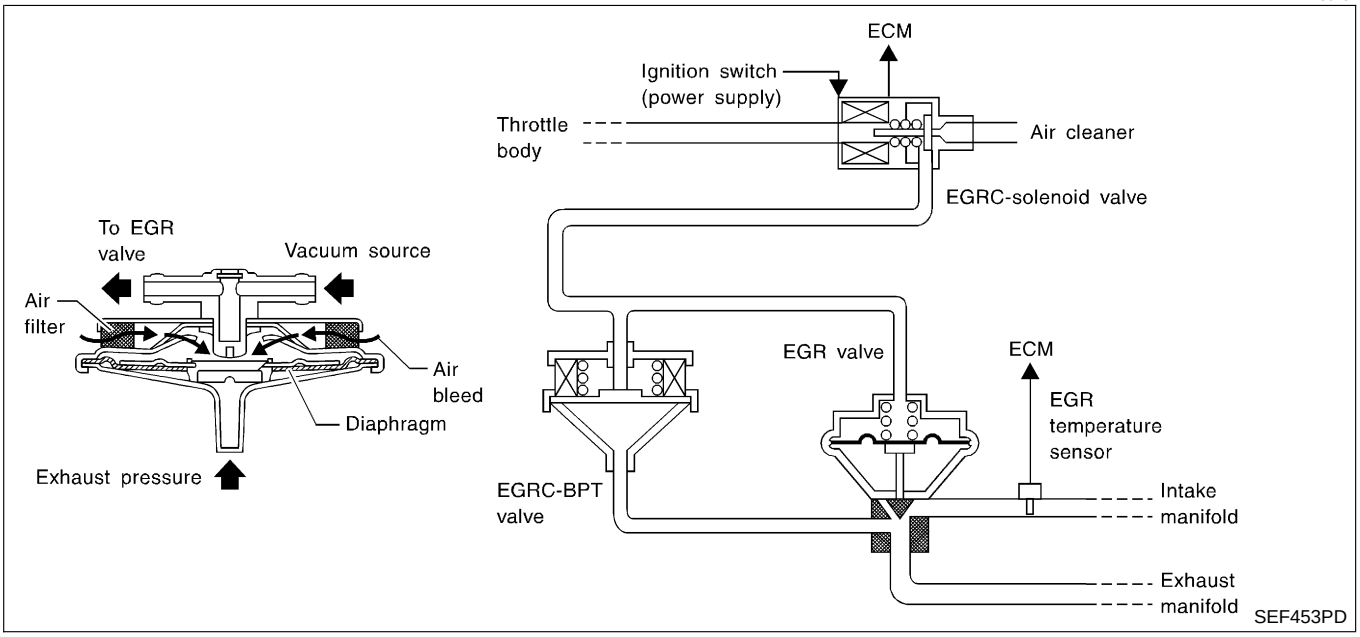

SYSTEM DESCRIPTION

NEEC0234S01

The EGRC-BPT valve monitors exhaust pressure to activate the diaphragm, controlling throttle body vacuum applied to the EGR valve. In other words, recirculated exhaust gas is controlled in response to positioning of the EGR valve or to engine operation.

On Board Diagnosis Logic

NEEC0235

If too much EGR flow exists due to an EGRC-BPT valve malfunction, off idle engine roughness will increase. If the roughness is large, then the vacuum to the EGR valve is interrupted through the EGRC-solenoid valve. If the engine roughness is reduced at that time, the EGRC-BPT valve malfunction is indicated.

DTC No.	Malfunction is detected when ...	Check Items (Possible Cause)
P0402	• The EGRC-BPT valve does not operate properly.	• EGRC-BPT valve • EGR valve • Loose or disconnected rubber tube • Blocked rubber tube • Camshaft position sensor • Blocked exhaust system • Orifice • Mass air flow sensor • EGRC-solenoid valve

1

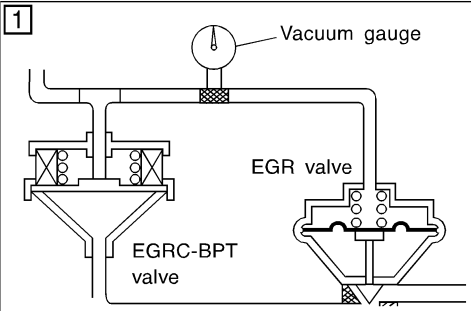

SEF930VA

8

EGRC-BPT VLV P0402	
OUT OF CONDITION	
MONITOR	
ENG SPEED	XXX rpm
THRTL POS SEN	XXX V
B/FUEL SCHDL	XXX msec

0% 20% 40% 60% 80% 100%

SEF718Z

8

EGRC-BPT VLV P0402	
TESTING	
MONITOR	
ENG SPEED	XXX rpm
THRTL POS SEN	XXX V
B/FUEL SCHDL	XXX msec

0% 20% 40% 60% 80% 100%

SEF719Z

8

PURG FLOW P0402
COMPLETED

SEF720Z

11

EGRC-BPT VLV P0402
INCREASE ENGINE SPEED AND MAINTAIN BETWEEN 2400 TO 3200 RPM. TOUCH NEXT.

2400 2800 3200

SEF384X

DTC Confirmation Procedure

NEEC0236

CAUTION:

Always drive vehicle at a safe speed.

NOTE:

If "DTC Confirmation Procedure" has been previously conducted, always turn ignition switch OFF and wait at least 5 seconds before conducting the next test.

TESTING CONDITION:

- **Always perform at a temperature above 5°C (41°F).**
- **Before performing the following procedure, confirm that battery voltage is more than 11V at idle.**

With CONSULT-II

1) Install vacuum gauge between EGRC-BPT valve and EGR valve as shown in the illustration.
2) Start engine and warm it up to normal operating temperature.
3) Stop engine and wait at least 5 seconds.
4) Turn ignition switch ON and select "EGRC-BPT/V P0402" of "EGR SYSTEM" in "DTC WORK SUPPORT" mode with CONSULT-II.
5) Start engine and let it idle.
6) Touch "START".
7) Check the output voltage of "THRTL POS SEN" (at closed throttle position) and note it.
8) When the following conditions are met, "TESTING" will be displayed on the CONSULT-II screen and the bar chart may increase. Maintain the conditions many times until "COMPLETED" appears.

Selector lever	Suitable position
ENG SPEED	1,400 - 2,000 rpm (M/T) 1,400 - 1,800 rpm (A/T)
Vehicle speed	30 - 100 km/h (19 - 62 MPH) (M/T) 30 - 55 km/h (19 - 34 MPH) (A/T)
B/FUEL SCHDL	5 - 7.5 msec (M/T) 5.5 - 8.0 msec (A/T)
THRTL POS SEN	(X – (X + 0.88) V X = Voltage value measured at step 7

NOTE:

- **The bar chart on CONSULT-II screen indicates the status of this test. However, the test may be finished before the bar chart becomes full scale.**
- **If the bar chart indication does not continue to progress, completely release accelerator pedal once and try to meet the conditions again.**
- **If "TESTING" does not appear on CONSULT-II screen, retry from step 2.**

9) If CONSULT-II instructs to carry out "Overall Function Check", go to next step. If "NG" is displayed, refer to "Diagnostic Procedure", EC-348.
10) Open engine hood.
11) Raise engine speed to 2,400 to 3,200 rpm under no-load and hold it. Then touch "NEXT" on CONSULT-II screen.

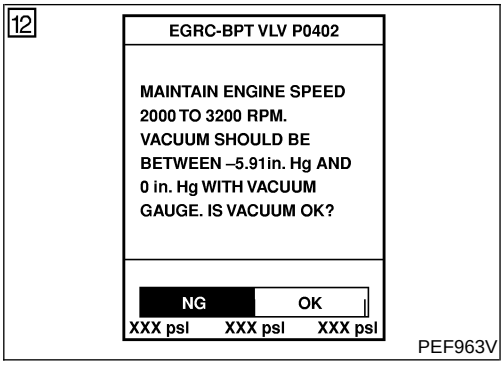

12) Check vacuum gauge while keeping engine speed at 2,400 to 3,200 rpm.
Vacuum should be 0 to −20 kPa (0 to −150 mmHg, 0 to −5.91 inHg).
If NG, go to "Diagnostic Procedure", EC-348.
If OK, touch "YES" on the CONSULT-II screen.
13) Check the EGR valve lifting when revving from 2,000 rpm to 4,000 rpm quickly under no load.
EGR valve should lift up, and go down without sticking when the engine is returned to idle.
If NG, check EGR valve.
If OK, touch "YES" or the CONSULT-II screen.
14) Check the rubber tube between intake manifold collector, EGRC-solenoid valve, EGR valve and EGRC-BPT valve for cracks, blockages or twisting.
If NG, repair or replace.
If OK, touch "YES" on the CONSULT-II screen.

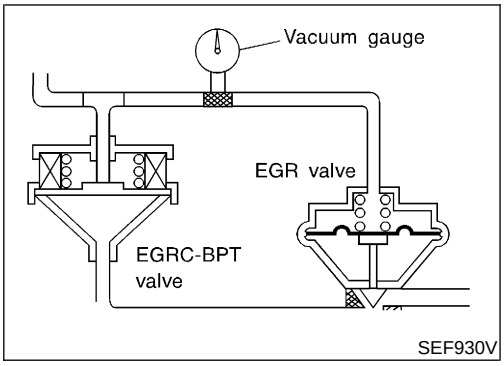

Overall Function Check

NEEC0237

Use this procedure to check the overall function of the EGRC-BPT valve. During this check, a 1st trip DTC might not be confirmed.

Without CONSULT-II

1) Install vacuum gauge between EGRC-BPT valve and EGR valve as shown in the illustration.
2) Lift up vehicle.
3) Start engine and shift to 1st gear position.
4) Check vacuum gauge while keeping engine speed at 2,400 to 3,200 rpm.
Vacuum should be 0 to −20 kPa (0 to −150 mmHg, 0 to −5.91 inHg).
If NG, go to "Diagnostic Procedure", EC-348.
If OK, go to next step.
5) Check the EGR valve lifting when revving from 2,000 rpm to 4,000 rpm quickly under no load.
EGR valve should lift up, and go down without sticking when the engine is returned to idle.
6) Check rubber tube between intake manifold collector, EGRC-solenoid valve, EGR valve and EGRC-BPT valve for misconnection, cracks or blockages.
7) If NG, go to "Diagnostic Procedure", EC-348.

Diagnostic Procedure

=NEEC0238

1	CHECK HOSE	
Check vacuum hose for clogging and improper connection.		
OK or NG		
OK	▶	GO TO 2.
NG	▶	Repair or replace vacuum hose.

2	CHECK EXHAUST SYSTEM	
Check exhaust system for collapse.		
OK or NG		
OK	▶	GO TO 3.
NG	▶	Repair or replace exhaust system.

3	CHECK ORIFICE	
Check if orifice is installed in vacuum hose between EGRC-BPT valve and EGRC-solenoid valve.		
OK or NG		
OK	▶	GO TO 4.
NG	▶	Replace vacuum hose.

4	CHECK EGRC-BPT VALVE	
1. Plug one of two ports of EGRC-BPT valve. 2. Vacuum from the other port and check leakage without applying any pressure from under EGR-BPT valve. **Leakage should exist.**		
OK or NG		
OK	▶	GO TO 5.
NG	▶	Replace EGRC-BPT valve.

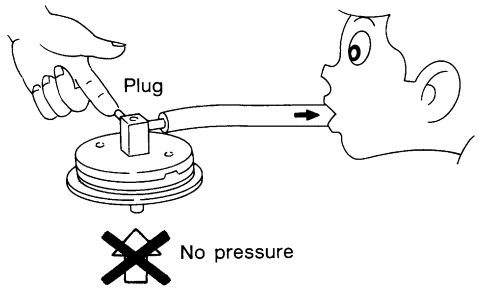

SEF172P

5 **CHECK CAMSHAFT POSITION SENSOR**

1. Start engine and warm it up to normal operating temperature.
2. Check voltage between ECM terminals 49 and engine ground, ECM terminal 44 and engine ground.

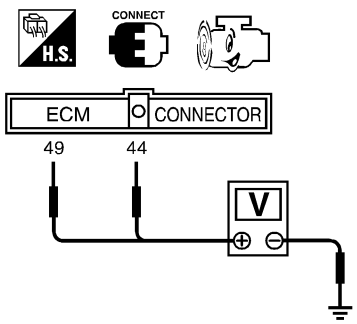

Terminal 44 and engine ground

Condition	Idle	2,000 rpm
Voltage	0.2 - 0.5V	0 - 0.5V
Pulse signal	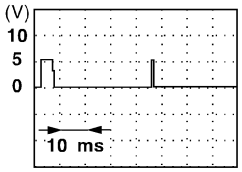	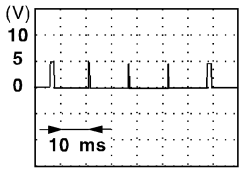

Terminal 49 and engine ground

Condition	Idle	2,000 rpm
Voltage	Approximately 2.6V	Approximately 2.5 - 2.6V
Pulse signal	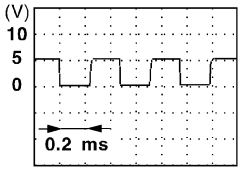	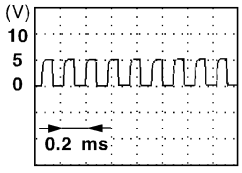

SEF868Z

OK or NG

OK	▶	GO TO 6.
NG	▶	Replace camshaft position sensor.

6 CHECK MASS AIR FLOW SENSOR

1. Turn ignition switch ON.
2. Start engine and warm it up to normal operating temperature.
3. Check voltage between ECM terminal 54 (Mass air flow sensor signal) and ground.

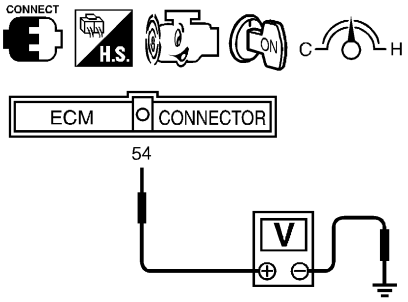

SEF326V

Conditions	Voltage V
Ignition switch "ON" (Engine stopped.)	Less than 1.0
Idle (Engine is warmed-up to normal operating temperature.)	0.9 - 1.8
2,500 rpm (Engine is warmed-up to normal operating temperature.)	1.9 - 2.3
Idle to about 4,000 rpm*	1.3 - 1.7 to Approx. 3.0

*: Check for linear voltage rise in response to increases to about 4,000 rpm in engine speed.

MTBL0326

4. If the voltage is out of specification, disconnect mass air flow sensor harness connector and connect it again. Repeat above check.
5. If NG, remove mass air flow sensor from air duct. Check hot wire for damage or dust.

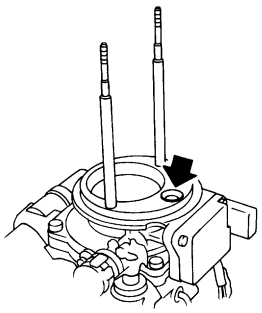

SEF893J

OK or NG

OK	▶	GO TO 7.
NG	▶	Replace mass air flow sensor.

7 **CHECK EGRC-SOLENOID VALVE**

With CONSULT-II

Check air passage continuity.

Perform "EGRC SOLENOID VALVE" in "ACTIVE TEST" mode.

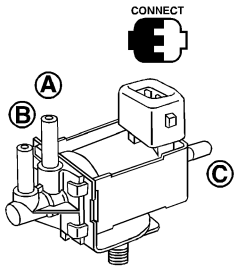

ACTIVE TEST	
EGRC SOL/V	ON
(EGR)	CUT
MONITOR	
ENG SPEED	XXX rpm

Condition EGRC SOLENOID VALVE	Air passage continuity between **A** and **B**	Air passage continuity between **A** and **C**
ON	Yes	No
OFF	No	Yes

SEF717Z

Without CONSULT-II

Check air passage continuity shown in the figure.

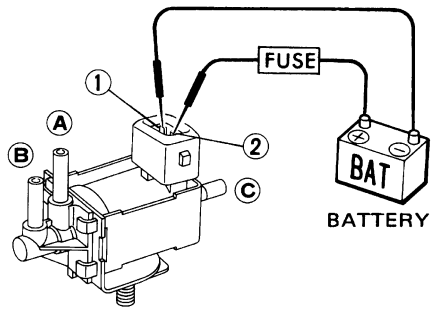

AEC919

Condition	Air passage continuity between **A** and **B**	Air passage continuity between **A** and **C**
12V direct current supply between terminals 1 and 2	Yes	No
No supply	No	Yes

MTBL0283

If NG or operation takes more than 1 second, replace solenoid valve.

OK or NG

OK	▶	GO TO 8.
NG	▶	Replace EGRC-solenoid valve.

Diagnostic Procedure (Cont'd)

8	CHECK EGR VALVE

- Apply vacuum to EGR vacuum port with a hand vacuum pump.

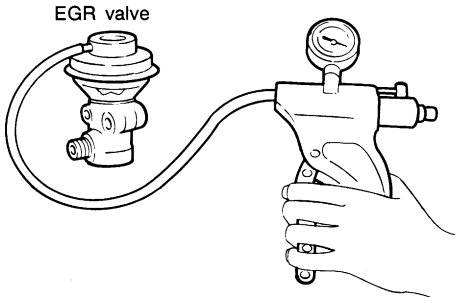

MEF137D

EGR valve spring should lift.

- Check for sticking.

OK or NG

OK	▶	GO TO 9.
NG	▶	Replace EGR valve.

9	CHECK INTERMITTENT INCIDENT
Perform "TROUBLE DIAGNOSIS FOR INTERMITTENT INCIDENT", EC-148.	
▶	**INSPECTION END**

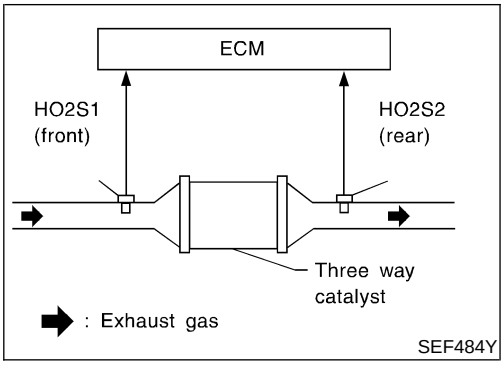

SEF484Y

On Board Diagnosis Logic

NEEC1050

The ECM monitors the switching frequency ratio of heated oxygen sensor 1 (front) and 2 (rear).
A three way catalyst* with high oxygen storage capacity will indicate a low switching frequency of rear heated oxygen sensor. As oxygen storage capacity decreases, the rear heated oxygen sensor switching frequency will increase.
When the frequency ratio of front and rear heated oxygen sensors approaches a specified limit value, the three way catalyst* malfunction is diagnosed.

DTC No.	Malfunction is detected when ...	Check Items (Possible Cause)
P0420 0702	• Three way catalyst does not operate properly. • Three way catalyst does not have enough oxygen storage capacity.	• Three way catalyst • Exhaust tube • Intake air leaks • Injectors • Injector leaks • Spark plug • Improper ignition timing

3

SRT WORK SUPPORT	
CATALYST	INCMP
EVAP SYSTEM	INCMP
O2 SEN HEATER	CMPLT
O2 SENSOR	INCMP
EGR SYSTEM	INCMP
MONITOR	
ENG SPEED	XXX rpm
MAS A/F SE B1	XXX V
B/FUEL SCHDL	XXX msec
A/F ALPHA-B1	XXX V
COOLAN TEMP/S	XX °C
HO2S1 (B1)	XXX V

SEF671Y

7

SRT WORK SUPPORT	
CATALYST	CMPLT
EVAP SYSTEM	INCMP
O2 SEN HEATER	CMPLT
O2 SENSOR	INCMP
EGR SYSTEM	INCMP
MONITOR	
ENG SPEED	XXX rpm
MAS A/F SE B1	XXX V
B/FUEL SCHDL	XXX msec
A/F ALPHA-B1	XXX V
COOLAN TEMP/S	XX °C
HO2S1 (B1)	XXX V

SEF672Y

SELF DIAG RESULTS	
DTC RESULTS	TIME
NO DTC IS DETECTED. FURTHER TESTING MAY BE REQUIRED.	

SEF560X

DTC Confirmation Procedure

NEEC1051

NOTE:
If "DTC Confirmation Procedure" has been previously conducted, always turn ignition switch "OFF" and wait at least 5 seconds before conducting the next test.

TESTING CONDITION:

- **Open engine hood before conducting following procedure.**
- **Do not hold engine speed more than specified minutes below.**

With CONSULT-II

1) Turn ignition switch "ON".
2) Select "DTC & SRT CONFIRMATION" then "SRT WORK SUPPORT" mode with CONSULT-II.
3) Start engine.
4) Rev engine up to 2,500 to 3,500 rpm and hold it for 3 consecutive minutes then release then accelerator pedal completely.
   If "INCMP" of "CATALYST" changes to "CMPLT", go to step 7.
5) Wait 5 seconds at idle.
6) Rev engine up to 2,500 to 3,500 rpm and hold it until "INCMP" of "CATALYST" changes to "CMPLT". (It will take maximum of approximately 5 minute.)
7) Select "SELF-DIAG RESULTS" mode with CONSULT-II.
   If the 1st trip DTC is detected, go to "DIAGNOSTIC PROCEDURE", EC-283. If not "COMPLT" stop engine and cool down "COOLANT TEMP/SE" to less than 70°C (158°F) and then retest from step 1).

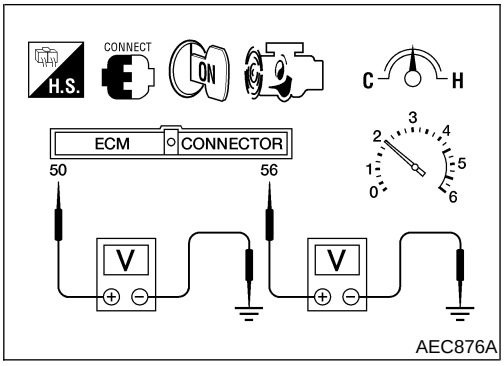

Overall Function Check

NEEC0242

Use this procedure to check the overall function of the three way catalyst. During this check, a 1st trip DTC might not be confirmed.

Without CONSULT-II

1) Start engine and drive vehicle at a speed of more than 70 km/h (43 MPH) for 2 consecutive minutes.
2) Stop vehicle with engine running.
3) Set voltmeters probes between ECM terminals 50 [Heated oxygen sensor 1 (front) signal], 56 [Heated oxygen sensor 2 (rear) signal] and engine ground.
4) Keep engine speed at 2,000 rpm constant under no load.
5) Make sure that the voltage switching frequency (high & low) between ECM terminal 56 and engine ground is much less than that of ECM terminal 50 and engine ground.
   Switching frequency ratio = A/B
   A: Heated oxygen sensor 2 (rear) voltage switching frequency
   B: Heated oxygen sensor 1 (front) voltage switching frequency
   This ratio should be less than 0.75.
   If the ratio is greater than above, it means three way catalyst does not operate properly.

NOTE:
If the voltage at terminal 50 does not switch periodically more than 5 times within 10 seconds at step 4, perform trouble diagnosis for DTC P0133 first. (See EC-198.)

Diagnostic Procedure

=NEEC0243

1	CHECK EXHAUST SYSTEM	
Visually check exhaust tubes and muffler for dent.		
OK or NG		
OK	▶	GO TO 2.
NG	▶	Repair or replace.

2	CHECK EXHAUST AIR LEAK	
1. Start engine and run it at idle. 2. Listen for an exhaust air leak before three way catalyst.		
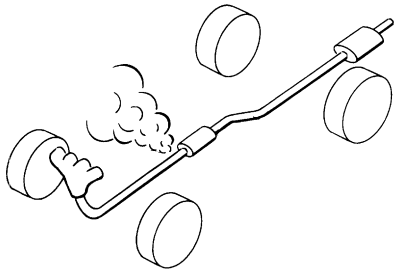 SEF099P		
OK or NG		
OK	▶	GO TO 3.
NG	▶	Repair or replace.

3	CHECK INTAKE AIR LEAK	
Listen for an intake air leak after the mass air flow sensor.		
OK or NG		
OK	▶	GO TO 4.
NG	▶	Repair or replace.

4	CHECK IGNITION TIMING	
1. Check the following items. Refer to “Basic Inspection”, EC-110.		

Items	Specifications
Ignition timing	20° ± 2° BTDC
Base idle speed	750 ± 50 rpm (in “P” or “N” position)
Closed throttle position switch idle position adjustment	Feeler gauge thickness and switch condition 0.1 mm (0.004 in): ON 0.3 mm (0.012 in): OFF
Target idle speed	800 ± 50 rpm (in “P” or “N” position)

MTBL0328

OK or NG		
OK	▶	GO TO 5.
NG	▶	Adjust ignition timing.

5	CHECK INJECTORS

1. Refer to Wiring Diagram for Injectors, EC-589.
2. Stop engine and then turn ignition switch ON.
3. Check voltage between ECM terminals 102, 104, 109 and 111 and ground with CONSULT-II or tester.

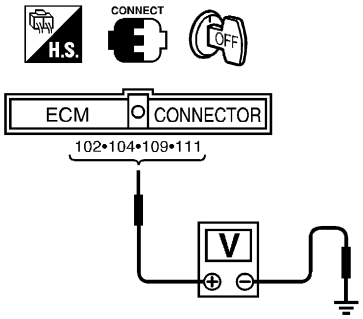

SEF189V

Battery voltage should exist.

OK or NG

OK	▶	GO TO 6.
NG	▶	Perform "Diagnostic Procedure" INJECTOR, EC-590.

6	CHECK IGNITION SPARK

1. Disconnect ignition wire from spark plug.
2. Connect a known good spark plug to the ignition wire.
3. Place end of spark plug against a suitable ground and crank engine.
4. Check for spark.

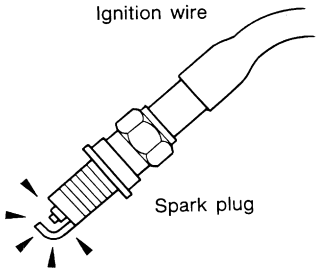

SEF282G

OK or NG

OK	▶	GO TO 8.
NG	▶	GO TO 7.

7	CHECK IGNITION WIRES

1. Inspect wires for cracks, damage, burned terminals and for improper fit.
2. Measure the resistance of wires to their distributor cap terminal. Move each wire while testing to check for intermittent breaks.

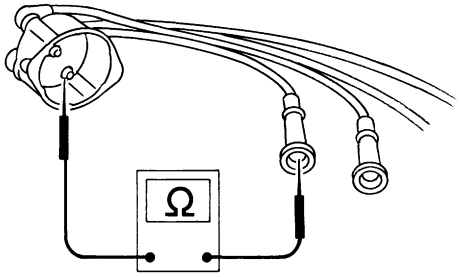

SEF174P

Resistance:
13.6 - 18.4 kΩ/m (4.15 - 5.61 kΩ/ft) at 25°C (77°F)

If the resistance exceeds the above specification, inspect ignition wire to distributor cap connection. Clean connection or replace the ignition wire with a new one.

OK or NG

OK	▶	Check ignition coil, power transistor and their circuits. Refer to EC-579.
NG	▶	Replace.

8	CHECK INJECTOR

1. Turn ignition switch OFF.
2. Remove injector assembly. Refer to EC-58.
   Keep fuel hose and all injectors connected to injector gallery.
3. Disconnect camshaft position sensor harness connector.
4. Turn ignition switch ON.
   Make sure fuel does not drip from injector.

OK or NG

OK (Does not drip.)	▶	GO TO 9.
NG (Drips.)	▶	Replace the injector(s) from which fuel is dripping.

9	CHECK INTERMITTENT INCIDENT

Perform "TROUBLE DIAGNOSIS FOR INTERMITTENT INCIDENT", EC-148.

Trouble is fixed.	▶	**INSPECTION END**
Trouble is not fixed.	▶	Replace three way catalyst.

On Board Diagnosis Logic

NEEC0244

NOTE:
If DTC P0440 OR P1440 is displayed with DTC P1448, perform trouble diagnosis for DTC P1448 first. (See EC-526.)

This diagnosis detects leaks in the EVAP purge line using engine intake manifold vacuum.
If pressure does not increase, the ECM will check for leaks in the line between the fuel tank and EVAP canister purge volume control solenoid valve under the following “Vacuum test” conditions.
The vacuum cut valve bypass valve is opened to clear the line between the fuel tank and the EVAP canister purge volume control solenoid valve. The EVAP canister vent control valve will then be closed to shut the EVAP purge line off. The EVAP canister purge volume control solenoid valve is opened to depressurize the EVAP purge line using intake manifold vacuum. After this occurs, the EVAP canister purge volume control solenoid valve will be closed.

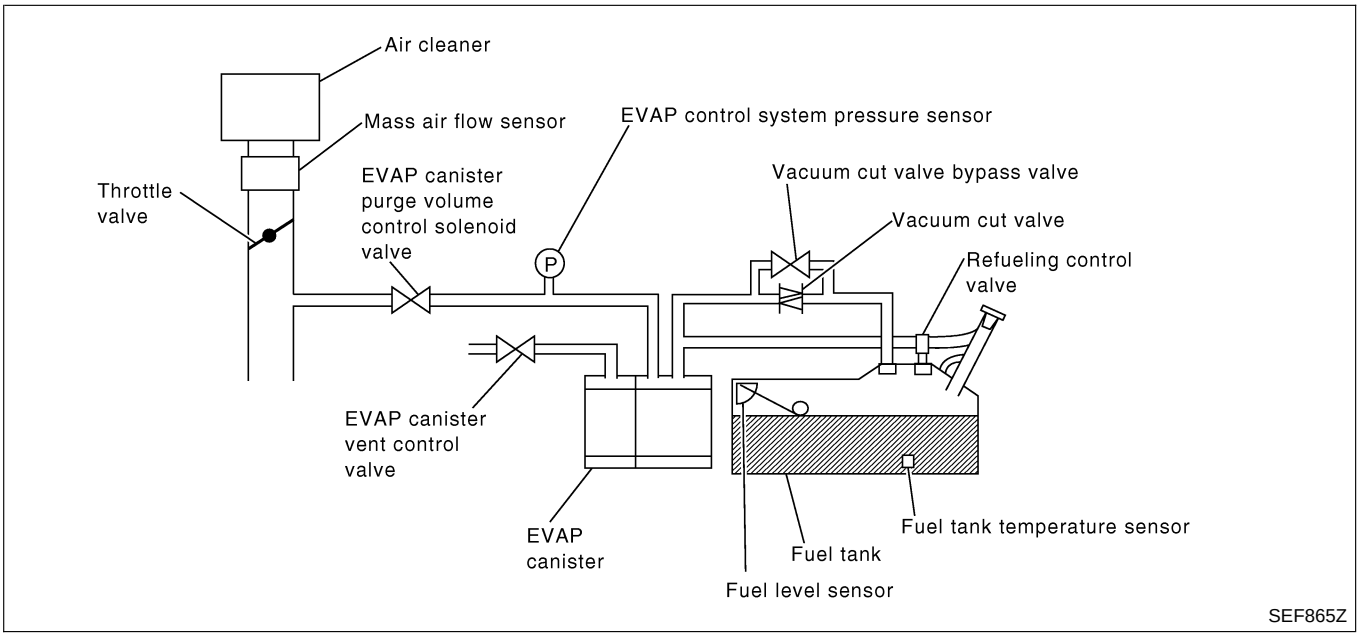

DTC No.	Malfunction is detected when ...	Check Items (Possible Cause)
P0440	• EVAP control system has a leak. • EVAP control system does not operate properly.	• Incorrect fuel tank vacuum relief valve • Incorrect fuel filler cap used • Fuel filler cap remains open or fails to close. • Foreign matter caught in fuel filler cap. • Leak is in line between intake manifold and EVAP canister purge volume control solenoid valve. • Foreign matter caught in EVAP canister vent control valve. • EVAP canister or fuel tank leaks • EVAP purge line (pipe and rubber tube) leaks • EVAP purge line rubber tube bent. • Blocked or bent rubber tube to EVAP control system pressure sensor • Loose or disconnected rubber tube • EVAP canister vent control valve and the circuit • EVAP canister purge volume control solenoid valve and the circuit • Absolute pressure sensor • Fuel tank temperature sensor • O-ring of EVAP canister vent control valve is missing or damaged. • Water separator • EVAP canister is saturated with water. • EVAP control system pressure sensor • Fuel level sensor and the circuit • Refueling control valve • ORVR system leaks

CAUTION:

- **Use only a genuine NISSAN fuel filler cap as a replacement. If an incorrect fuel filler cap is used, the MIL may come on.**
- **If the fuel filler cap is not tightened properly, the MIL may come on.**
- **Use only a genuine NISSAN rubber tube as a replacement.**

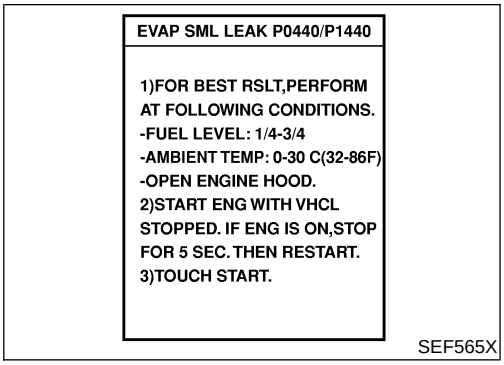

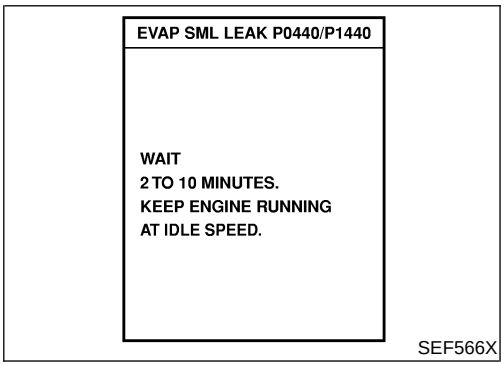

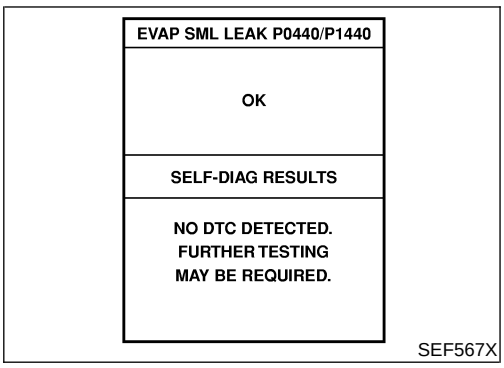

DTC Confirmation Procedure

NEEC0245

NOTE:

- **If DTC P0440 or P1440 is displayed with P1448, perform trouble diagnosis for DTC P1448 first. Refer to EC-526.**
- If "DTC Confirmation Procedure" has been previously conducted, always turn ignition switch OFF and wait at least 5 seconds before conducting the next test.

With CONSULT-II

TESTING CONDITION:

- **Perform "DTC WORK SUPPORT" when the fuel level is between 1/4 to 3/4 full and vehicle is placed on flat level surface.**
- **Always perform test at a temperature of 0 to 30°C (32 to 86°F).**
- **It is better that the fuel level is low.**

1) Turn ignition switch ON.
2) Turn ignition switch OFF and wait at least 5 seconds.
3) Turn ignition switch ON and select "DATA MONITOR" mode with CONSULT-II.
4) Check that the following conditions are met.

COOLAN TEMP/S	0 - 70°C (32 - 158°F)
INT/A TEMP SE	0 - 60°C (32 - 140°F)

5) Select "EVAP SML LEAK P0440" of "EVAPORATIVE SYSTEM" in "DTC WORK SUPPORT" mode with CONSULT-II. Follow the instruction displayed.

NOTE:

- **If the engine cannot be maintained within the range on CONSULT-II screen, go to "Basic Inspection", EC-110.**

6) Make sure that "OK" is displayed.
If "NG" is displayed, refer to "Diagnostic Procedure", EC-362.

NOTE:

Make sure that EVAP hoses are connected to EVAP canister purge volume control solenoid valve properly.

With GST

1) Start engine.
2) Drive vehicle according to "Driving pattern", EC-80.

NOTE:

Be sure to read the explanation of "Driving pattern" on EC-80 before driving vehicle.

3) Stop vehicle.
4) Select "MODE 1" with GST.

- If SRT of EVAP system is not set yet, go to the following step.
- If SRT of EVAP system is set, the result will be OK.

5) Turn ignition switch OFF and wait at least 5 seconds.
6) Start engine.
It is not necessary to cool engine down before driving.
7) Drive vehicle again according to the "Driving pattern", EC-80.
8) Stop vehicle.
9) Select "MODE 3" with GST.

- If P1447 is displayed on the screen, go to "Diagnostic Procedure", EC-518.
- If P0440 is displayed on the screen, go to "Diagnostic Procedure", EC-362.

- If P1440 is displayed on the screen, go to "Diagnostic Procedure", EC-481.
- If P0440, P1440 and P1447 are not displayed on the screen, go to the following step.

10) Select "MODE 1" with GST.

- If SRT of EVAP system is set, the result will be OK.
- If SRT of EVAP system is not set, go to step 5.

Diagnostic Procedure

=NEEC0246

1	CHECK FUEL FILLER CAP DESIGN

1. Turn ignition switch OFF.
2. Check for genuine NISSAN fuel filler cap design.

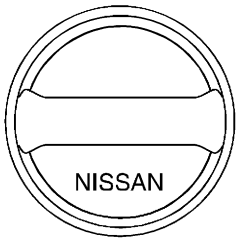

SEF915U

OK or NG

OK	▶	GO TO 2.
NG	▶	Replace with genuine NISSAN fuel filler cap.

2	CHECK FUEL FILLER CAP INSTALLATION

Check that the cap is tightened properly rotating the cap clockwise.

OK or NG

OK	▶	GO TO 3.
NG	▶	● Open fuel filler cap, then clean cap and fuel filler neck threads using air blower. ● Retighten until ratcheting sound is heard.

3	CHECK FUEL FILLER CAP FUNCTION

Check for air releasing sound while opening the fuel filler cap.

OK or NG

OK	▶	GO TO 5.
NG	▶	GO TO 4.

4	CHECK FUEL TANK VACUUM RELIEF VALVE (BUILT INTO FUEL FILLER CAP)

1. Wipe clean valve housing.
2. Check valve opening pressure and vacuum.

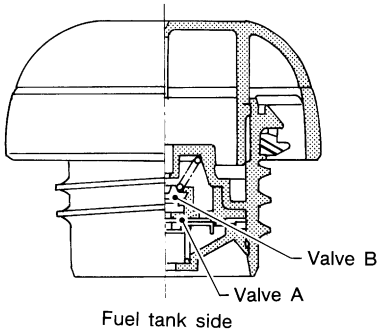

SEF427N

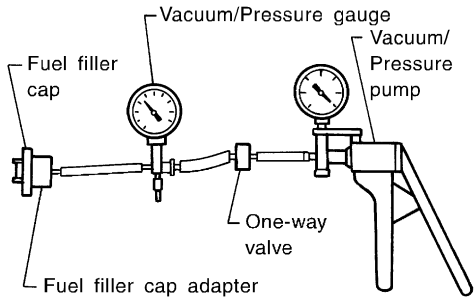

SEF943S

Pressure:
16.0 - 20.0 kPa (0.163 - 0.204 kg/cm^2, 2.32 - 2.90 psi)
Vacuum:
−6.0 to −3.5 kPa (−0.061 to −0.036 kg/cm^2, −0.87 to −0.51 psi)

CAUTION:
Use only a genuine NISSAN fuel filler cap as a replacement. If an incorrect fuel filler cap is used, the MIL may come on.

OK or NG

OK	▶	GO TO 5.
NG	▶	Replace fuel filler cap with a genuine one.

5	INSTALL PRESSURE PUMP

1. Install the EVAP service port adapter and the pressure pump securely to EVAP service port.

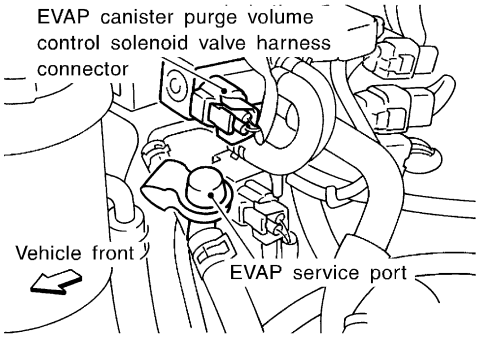

SEF339V

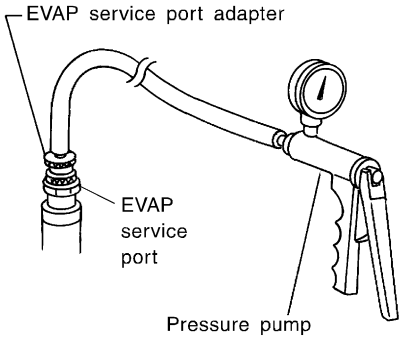

SEF462UE

NOTE:

- **Improper installation of service port may cause leaking.**

Models with CONSULT-II ▶	GO TO 6.
Models without CONSULT-II ▶	GO TO 7.

6	CHECK FOR EVAP LEAK

With CONSULT-II

1. Turn ignition switch ON.
2. Select "EVAP SYSTEM CLOSE" of "WORK SUPPORT" mode with CONSULT-II.

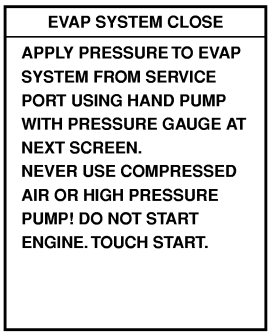

PEF658U

3. Touch "START" and apply pressure into the EVAP line until the pressure indicator reaches the middle of bar graph.
   NOTE:
   - **Never use compressed air or a high pressure pump.**
   - **Do not exceed 4.12 kPa (0.042 kg/cm^2, 0.6 psi) of pressure in the system.**

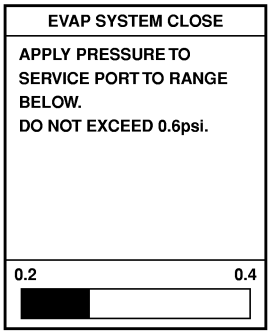

PEF917U

4. Using EVAP leak detector, locate the leak portion. For the leak detector, refer to instruction manual for more details. Refer to "EVAPORATIVE EMISSION LINE DRAWING", EC-43.

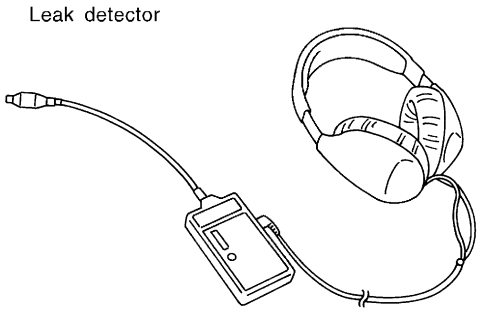

SEF200U

OK or NG

OK	▶	GO TO 8.
NG	▶	Repair or replace.

7	CHECK FOR EVAP LEAK

Without CONSULT-II

1. Turn ignition switch OFF.
2. Apply 12 volts DC to EVAP canister vent control valve. The valve will close. (Continue to apply 12 volts until the end of test.)

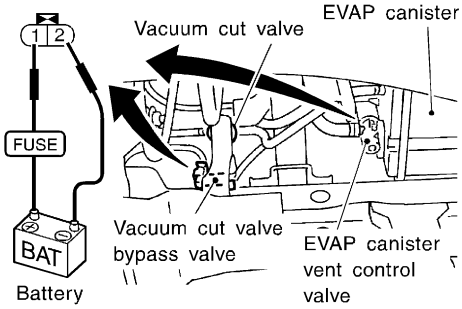

SEF503V

3. Apply 12 volts DC to vacuum cut valve bypass valve. The valve will open. (Continue to apply 12 volts until the end of test.) Shown in the above figure.
4. Pressurize the EVAP line using pressure pump with 1.3 to 2.7 kPa (10 to 20 mmHg, 0.39 to 0.79 inHg).
   NOTE:
   - **Never use compressed air or a high pressure pump.**
   - **Do not exceed 4.12 kPa (0.042 kg/cm^2, 0.6 psi) of pressure in the system.**
5. Using EVAP leak detector, locate the leak. For the leak detector, refer to instruction manual for more details. Refer to "EVAPORATIVE EMISSION LINE DRAWING", EC-43.

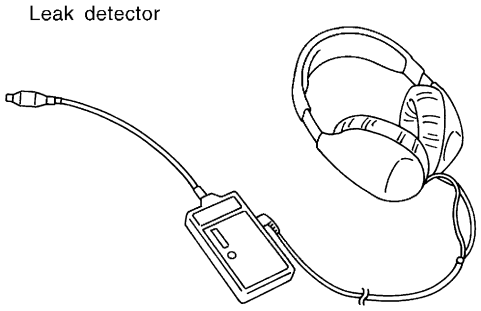

SEF200U

OK or NG

OK	▶	GO TO 8.
NG	▶	Repair or replace.

8	CHECK WATER SEPARATOR

1. Check visually for insect nests in the water separator air inlet.
2. Check visually for cracks or flaws in the appearance.
3. Check visually for cracks or flaws in the hose.
4. Check that **A** and **C** are not clogged by blowing air into **B** with **A**, and then **C** plugged.

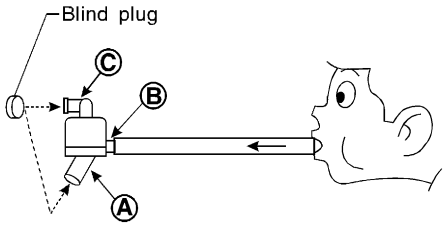

* Ⓐ: Bottom hole (To atmosphere)
Ⓑ: Emergency tube (From EVAP canister)
Ⓒ: Inlet port (To member)

SEF829T

5. In case of NG in items 2 - 4, replace the parts.

- **Do not disassemble water separator.**

OK or NG

OK	▶	GO TO 9.
NG	▶	Replace water separator.

9	CHECK EVAP CANISTER VENT CONTROL VALVE, O-RING AND CIRCUIT

Refer to "DTC Confirmation Procedure", EC-384.

OK or NG

OK	▶	GO TO 10.
NG	▶	Repair or replace EVAP canister vent control valve and O-ring or harness/connectors.

10	CHECK IF EVAP CANISTER IS SATURATED WITH WATER

1. Remove EVAP canister with EVAP canister vent control valve attached.
2. Check if water will drain from the EVAP canister.

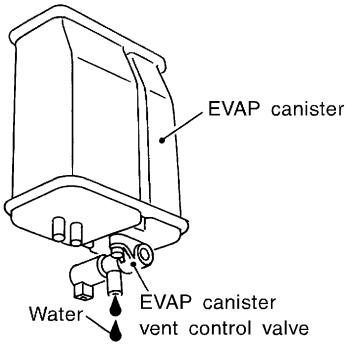

SEF596U

Yes or No

Yes	▶	GO TO 11.
No (With CONSULT-II)	▶	GO TO 13.
No (Without CONSULT-II)	▶	GO TO 14.

Diagnostic Procedure (Cont'd)

11	CHECK EVAP CANISTER
Weigh the EVAP canister with EVAP canister vent control valve attached. **The weight should be less than 1.8 kg (4.0 lb).** **OK or NG**	
OK (With CONSULT-II) ▶	GO TO 13.
OK (Without CONSULT-II) ▶	GO TO 14.
NG ▶	GO TO 12.

12	DETECT MALFUNCTIONING PART
Check the following. 1. Visually check the EVAP canister for damage. 2. Check hose connection between EVAP canister and water separator for clogging and poor connection.	
▶	Repair hose or replace EVAP canister.

13	CHECK EVAP CANISTER PURGE VOLUME CONTROL SOLENOID VALVE

With CONSULT-II

1. Disconnect vacuum hose to EVAP canister purge volume control solenoid valve at EVAP service port.
2. Start engine.
3. Perform "PURG VOL CONT/V" in "ACTIVE TEST" mode.

ACTIVE TEST	
PURG VOL CONT/V	XXX %
MONITOR	
ENG SPEED	XXX rpm
A/F ALPHA-B1	XXX %
HO2S1 MNTR (B1)	LEAN
THRTL POS SEN	XXX V

Vacuum should exist.

SEF595Y

4. Touch "Qu" on CONSULT-II screen to increase "PURG VOL CONT/V" opening to 100.0%.
5. Check vacuum hose for vacuum.
   Vacuum should exist.

OK or NG

OK ▶	GO TO 17.
NG ▶	GO TO 15.

14	CHECK EVAP CANISTER PURGE VOLUME CONTROL SOLENOID VALVE

Without CONSULT-II

1. Start engine and warm it up to normal operating temperature.
2. Stop engine.
3. Disconnect vacuum hose to EVAP canister purge volume control solenoid valve at EVAP service port.
4. Start engine and let it idle for at least 60 seconds.
5. Check vacuum hose for vacuum.
   Vacuum should exist.

OK or NG

OK ▶	GO TO 17.
NG ▶	GO TO 15.

15	CHECK VACUUM HOSE
Check vacuum hoses for clogging or disconnection. Refer to "Vacuum Hose Drawing", EC-33.	
OK or NG	
OK (With CONSULT-II) ▶	GO TO 16.
OK (Without CONSULT-II) ▶	GO TO 17.
NG ▶	Repair or reconnect the hose.

16	CHECK EVAP CANISTER PURGE VOLUME CONTROL SOLENOID VALVE

With CONSULT-II

1. Start engine.
2. Perform "PURG VOL CONT/V" in "ACTIVE TEST" mode with CONSULT-II. Check that engine speed varies according to the valve opening.
   If OK, inspection end. If NG, go to following step.

ACTIVE TEST	
PURG VOL CONT/V	XXX %
MONITOR	
ENG SPEED	XXX rpm
A/F ALPHA-B1	XXX %
HO2S1 MNTR (B1)	LEAN
THRTL POS SEN	XXX V

SEF801Y

3. Check air passage continuity.

Condition PURG VOL CONT/V value	Air passage continuity between **A** and **B**
100.0%	Yes
0.0%	No

MTBL0302

OK or NG

OK ▶	GO TO 18.
NG ▶	Replace EVAP canister purge volume control solenoid valve.

17	CHECK EVAP CANISTER PURGE VOLUME CONTROL SOLENOID VALVE

Without CONSULT-II

Check air passage continuity.

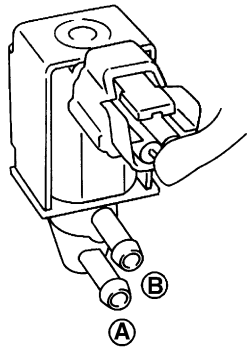

SEF660U

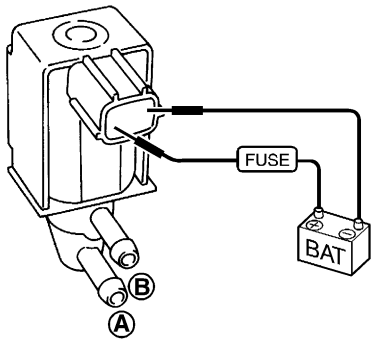

SEF661U

Condition	Air passage continuity between **A** and **B**
12V direct current supply between terminals	Yes
No supply	No

MTBL0303

OK or NG

OK	▶	GO TO 18.
NG	▶	Replace EVAP canister purge volume control solenoid valve.

18	CHECK FUEL TANK TEMPERATURE SENSOR

Check resistance by heating with hot water or heat gun as shown in the figure.

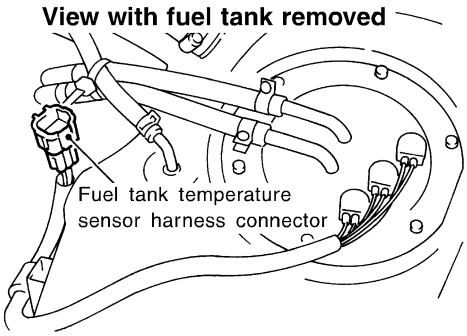

SEF334VA

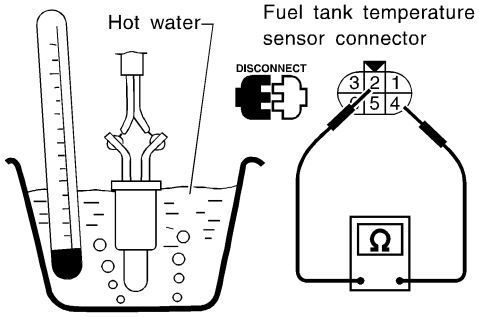

SEF852Z

Temperature °C (°F)	Resistance kΩ
20 (68)	2.3 - 2.7
50 (122)	0.79 - 0.90

MTBL0291

OK or NG

OK	▶	GO TO 19.
NG	▶	Replace fuel tank temperature sensor.

19	CHECK EVAP CONTROL SYSTEM PRESSURE SENSOR

1. Remove EVAP control system pressure sensor with its harness connector connected.

View with spare tire removed

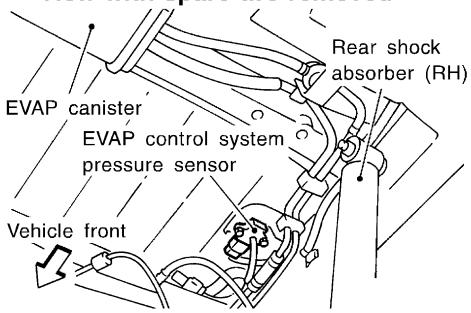

SEF341V

2. Remove hose from EVAP control system pressure sensor.
3. Use pump to apply vacuum and pressure to EVAP control system pressure sensor as shown in figure.
4. Check output voltage between ECM terminal 62 and engine ground.

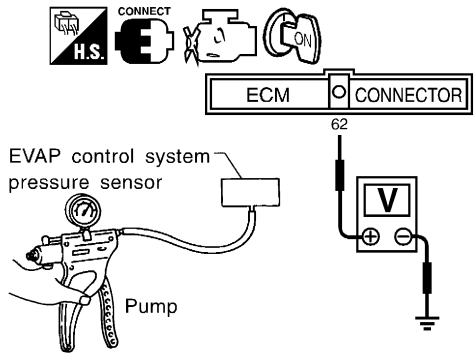

SEF198V

Pressure (Relative to atomospheric pressure)	Voltage (V)
0 kPa (0 mmHg, 0 inHg)	3.0 - 3.6
–9.3 kPa (–70 mmHg, –2.76 inHg)	0.4 - 0.6

MTBL0295

CAUTION:

- **Always calibrate the vacuum pump gauge when using it.**
- **Do not apply below −20 kPa (−150 mmHg, −5.91 inHg) or over 20 kPa (150 mmHg, 5.91 inHg) of pressure.**

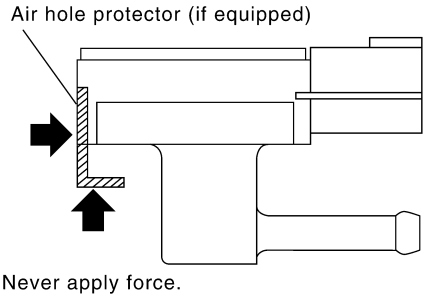

SEF799W

- **Never apply force to the air hole protector of the sensor, if equipped.**
- **Discard any EVAP control system pressure sensor which has been dropped from height of more than 0.5 m (19.7 in) onto a hard surface such as a concrete floor; use a new one.**

OK or NG

OK	▶	GO TO 20.
NG	▶	Replace EVAP control system pressure sensor.

20	CHECK EVAP PURGE LINE	
Check EVAP purge line (pipe, rubber tube, fuel tank and EVAP canister) for cracks or improper connection. Refer to "EVAPORATIVE EMISSION LINE DRAWING", EC-43.		
OK or NG		
OK	▶	GO TO 21.
NG	▶	Repair or reconnect the hose.

21	CLEAN EVAP PURGE LINE	
Clean EVAP purge line (pipe and rubber tube) using air blower.		
	▶	GO TO 22.

22	CHECK REFUELING EVAP VAPOR LINE	
Check refueling EVAP vapor line between EVAP canister and fuel tank for clogging, kink, looseness and improper connection. For location, refer to "ON BOARD REFUELING VAPOR RECOVERY (ORVR)", EC-45.		
OK or NG		
OK	▶	GO TO 23.
NG	▶	Repair or replace hoses and tubes.

23	CHECK SIGNAL LINE AND RECIRCULATION LINE	
Check signal line and recirculation line between filler neck tube and fuel tank for clogging, kink, cracks, looseness and improper connection.		
OK or NG		
OK	▶	GO TO 24.
NG	▶	Repair or replace hoses, tubes or filler neck tube.

Diagnostic Procedure (Cont'd)

24	CHECK REFUELING CONTROL VALVE

1. Remove fuel filler cap.
2. Check air continuity between hose ends A and B.
   Blow air into the hose end B. Air should flow freely into the fuel tank.
3. Blow air into hose end A and check there is no leakage.
4. Apply pressure to both hose ends A and B [20 kPa (150 mmHg, 5.91 inHg)] using a pressure pump and a suitable 3–way connector. Check that there is no leakage.

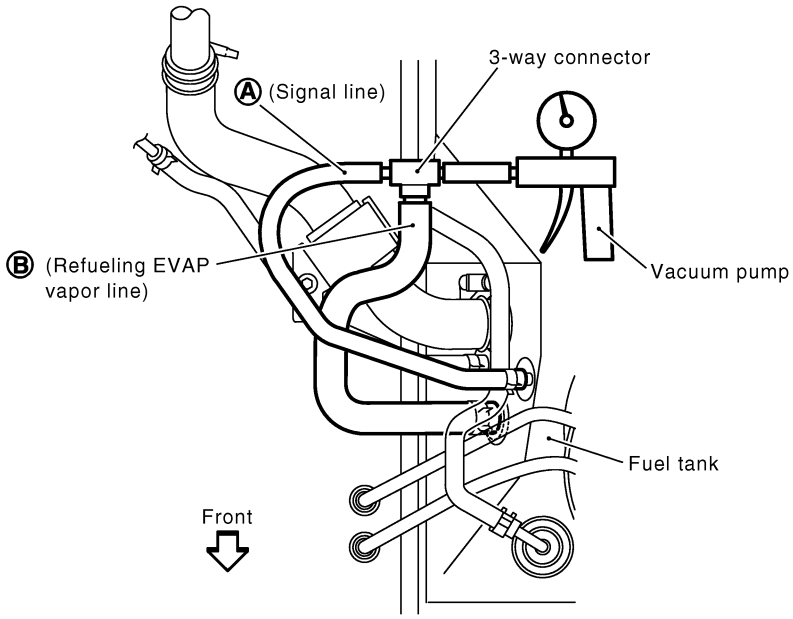

SEF707Z

OK or NG

OK	▶	GO TO 25.
NG	▶	Replace refueling control valve with fuel tank.

25	CHECK FUEL LEVEL SENSOR

1. Remove fuel level sensor assembly. Refer to ***FE-4***.
2. Refer to "FUEL LEVEL SENSOR CHECK", ***EL-82***

OK or NG

OK	▶	GO TO 26.
NG	▶	Replace fuel level sensor.

26	CHECK INTERMITTENT INCIDENT

Perform "TROUBLE DIAGNOSIS FOR INTERMITTENT INCIDENT", EC-148.

▶ **INSPECTION END**

Description

SYSTEM DESCRIPTION

NEEC0248

NEEC0248S01

Sensor	Input Signal to ECM	ECM function	Actuator
Camshaft position sensor	Engine speed	EVAP canister purge flow control	EVAP canister purge volume control solenoid valve
Mass air flow sensor	Amount of intake air		
Engine coolant temperature sensor	Engine coolant temperature		
Ignition switch	Start signal		
Throttle position sensor	Throttle position		
Throttle position switch	Closed throttle position		
Heated oxygen sensor 1 (front)	Density of oxygen in exhaust gas (Mixture ratio feedback signal)		
Fuel tank temperature sensor	Fuel temperature in fuel tank		
Vehicle speed sensor	Vehicle speed		

This system controls flow rate of fuel vapor from the EVAP canister. The opening of the vapor by-pass passage in the EVAP canister purge volume control solenoid valve changes to control the flow rate. The EVAP canister purge volume control solenoid valve repeats ON/OFF operation according to the signal sent from the ECM. The opening of the valve varies for optimum engine control. The optimum value stored in the ECM is determined by considering various engine conditions. When the engine is operating, the flow rate of fuel vapor from the EVAP canister is regulated as the air flow changes.

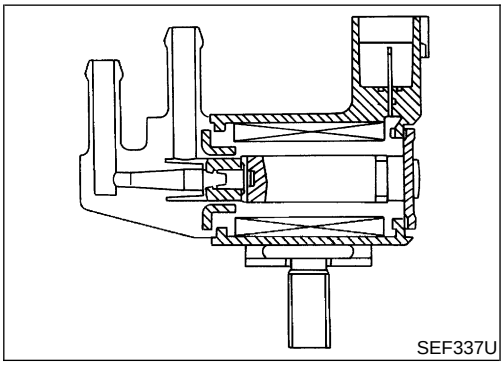
SEF337U

COMPONENT DESCRIPTION

NEEC0248S02

The EVAP canister purge volume control solenoid valve uses a ON/OFF duty to control the flow rate of fuel vapor from the EVAP canister. The EVAP canister purge volume control solenoid valve is moved by ON/OFF pulses from the ECM. The longer the ON pulse, the greater the amount of fuel vapor that will flow through the valve.

CONSULT-II Reference Value in Data Monitor Mode

NEEC0249

Specification data are reference values.

MONITOR ITEM	CONDITION		SPECIFICATION
PURG VOL C/V	• Engine: After warming up • Air conditioner switch “OFF” • Shift lever: “N” • No-load	Idle (Vehicle stopped)	0%
		2,000 rpm	—

ECM Terminals and Reference Value

NEEC0250

Specification data are reference values and are measured between each terminal and ground.

CAUTION:

Do not use ECM ground terminals when measuring input/output voltage. Doing so may result in damage to the ECM's transistor. Use a ground other than ECM terminals, such as the ground.

TERMINAL NO.	WIRE COLOR	ITEM	CONDITION	DATA (DC Voltage)
4	LG/R	ECM relay (Self-shut-off)	**[Engine is running]** **[Ignition switch OFF]** ● For a few seconds after turning ignition switch OFF	0 - 1V
			[Ignition switch OFF] ● A few seconds passed after turning ignition switch OFF	BATTERY VOLTAGE (11 - 14V)
5	R/Y	EVAP canister purge volume control solenoid valve	**[Engine is running]** ● Idle speed	BATTERY VOLTAGE (11 - 14V) 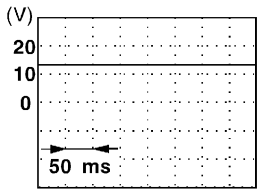
			[Engine is running] ● Engine speed is 2,000 rpm (More than 200 seconds after starting engine)	BATTERY VOLTAGE (11 - 14V) 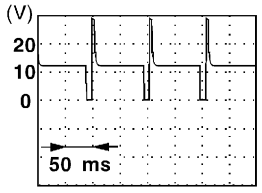
67	B/P	Power supply for ECM	**[Ignition switch ON]**	BATTERY VOLTAGE (11 - 14V)
72	B/P			
117	B/P	Current return	**[Engine is running]** ● Idle speed	BATTERY VOLTAGE (11 - 14V)

On Board Diagnosis Logic

NEEC0251

DTC No.	Malfunction is detected when ...	Check Items (Possible Cause)
P0443	An improper voltage signal is sent to ECM through the valve.	● Harness or connectors (The valve circuit is open or shorted.) ● EVAP canister purge volume control solenoid valve

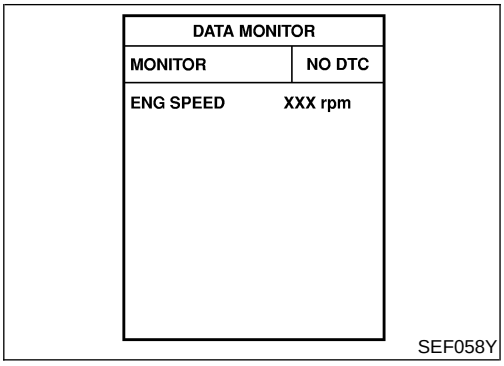

DTC Confirmation Procedure

=NEEC0252

NOTE:
If “DTC Confirmation Procedure” has been previously conducted, always turn ignition switch “OFF” and wait at least 5 seconds before conducting the next test.

TESTING CONDITION:
Before performing the following procedure, confirm battery voltage is more than 11V at idle.

With CONSULT-II

1) Turn ignition switch ON.
2) Select “DATA MONITOR” mode with CONSULT-II.
3) Start engine and let it idle for at least 30 seconds.
4) If 1st trip DTC is detected, go to “Diagnostic Procedure”, EC-379

With GST

Follow the procedure “With CONSULT-II”.

Wiring Diagram

NEEC0253

EC-PGC/V-01

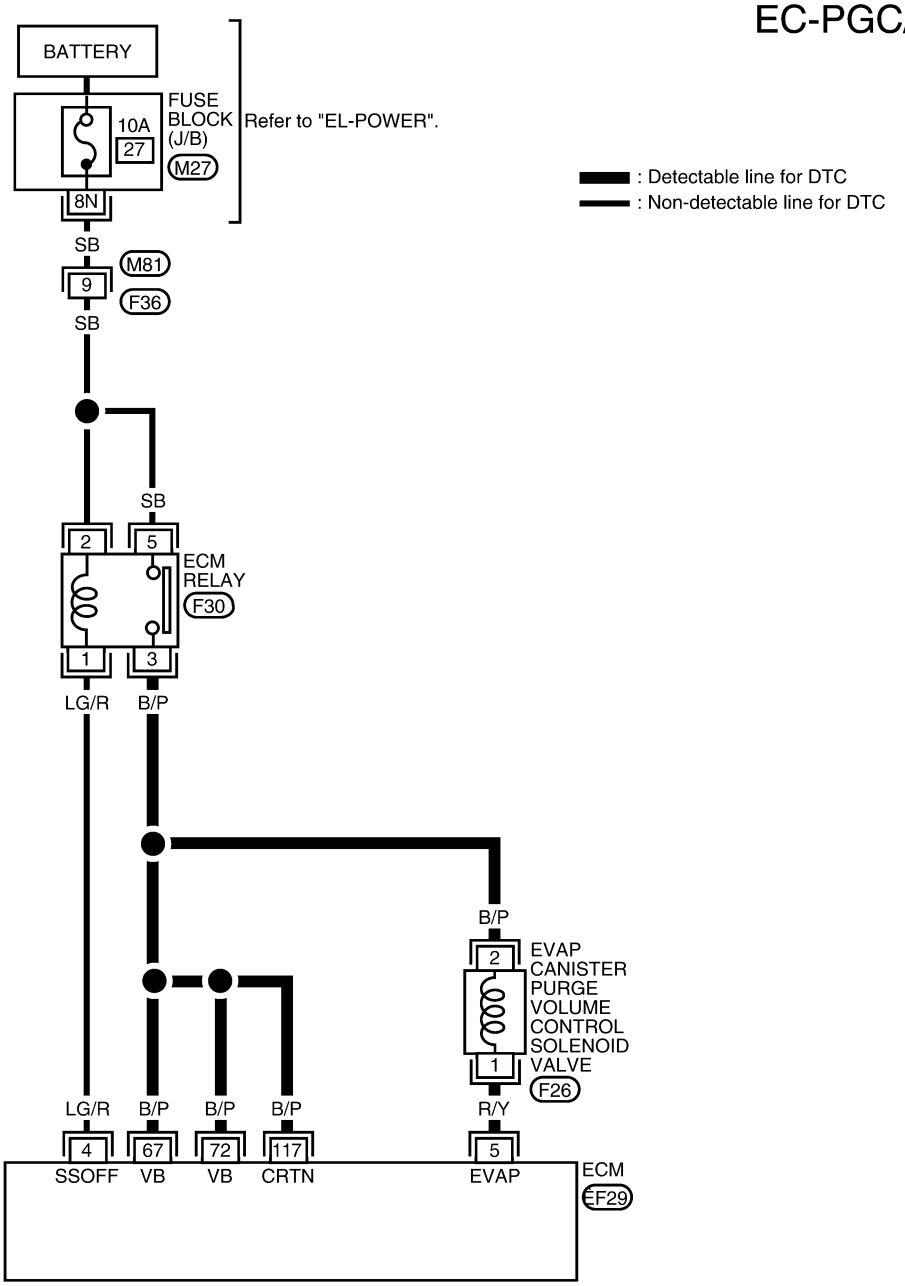

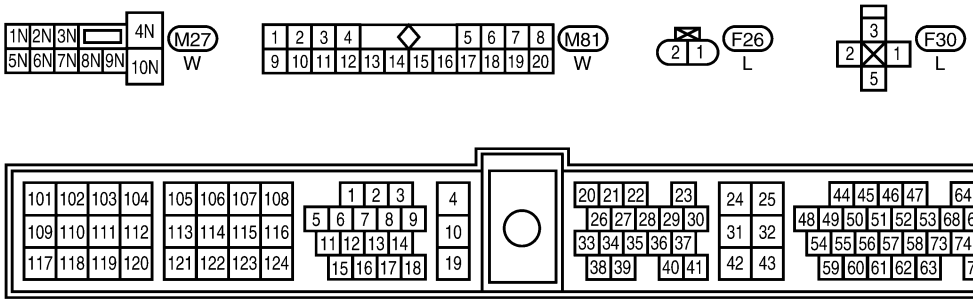

LEC484

Diagnostic Procedure

NEEC0254

1	CHECK POWER SUPPLY

1. Turn ignition switch OFF.
2. Disconnect EVAP canister purge volume control solenoid valve harness connector.

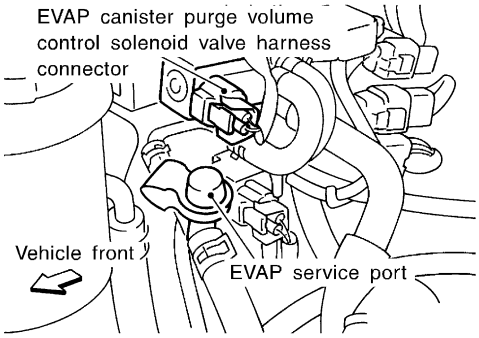

SEF339V

3. Turn ignition switch ON.
4. Check voltage between terminal 2 and ground with CONSULT-II or tester.

Voltage: Battery voltage

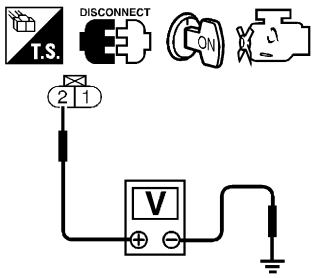

SEF192V

OK or NG

OK	▶	GO TO 3.
NG	▶	GO TO 2.

2	DETECT MALFUNCTIONING PART

Check the following.
- Harness for open or short between EVAP canister purge volume control solenoid valve and ECM relay
- Harness for open or short between EVAP canister purge volume control solenoid valve and ECM

	▶	Repair harness or connectors.

Diagnostic Procedure (Cont'd)

3	CHECK OUTPUT SIGNAL CIRCUIT

1. Turn ignition switch OFF.
2. Disconnect ECM harness connector.
3. Check harness continuity between ECM terminal 5 and terminal 1.
   Continuity should exist.

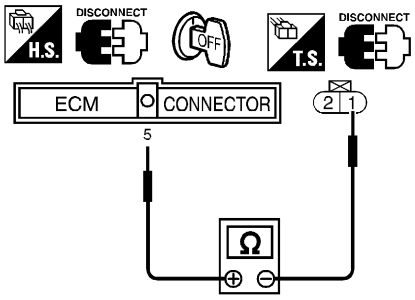

SEF193V

If OK, check harness for short to ground and short to power.

OK or NG

OK (With CONSULT-II)	▶	GO TO 5.
OK (Without CONSULT-II)	▶	GO TO 6.
NG	▶	GO TO 4.

4	DETECT MALFUNCTIONING PART

Check the harness for open or short between EVAP canister purge volume control solenoid valve and ECM.

	▶	Repair open circuit or short to ground or short to power in harness or connectors.

5	CHECK EVAP CANISTER PURGE VOLUME CONTROL SOLENOID VALVE

With CONSULT-II

1. Start engine.
2. Perform "PURG VOL CONT/V" in "ACTIVE TEST" mode with CONSULT-II. Check that engine speed varies according to the valve opening.
   If OK, inspection end. If NG, go to following step.

ACTIVE TEST	
PURG VOL CONT/V	XXX %
MONITOR	
ENG SPEED	XXX rpm
A/F ALPHA-B1	XXX %
HO2S1 MNTR (B1)	LEAN
THRTL POS SEN	XXX V

SEF801Y

3. Check air passage continuity.

Condition PURG VOL CONT/V value	Air passage continuity between **A** and **B**
100.0%	Yes
0.0%	No

MTBL0302

OK or NG

OK	▶	GO TO 7.
NG	▶	Replace EVAP canister purge volume control solenoid valve.

Diagnostic Procedure (Cont'd)

6	CHECK EVAP CANISTER PURGE VOLUME CONTROL SOLENOID VALVE

Without CONSULT-II

Check air passage continuity.

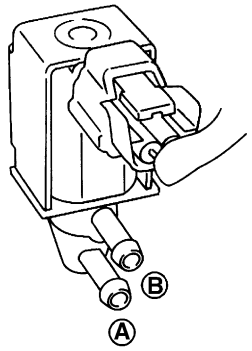

SEF660U

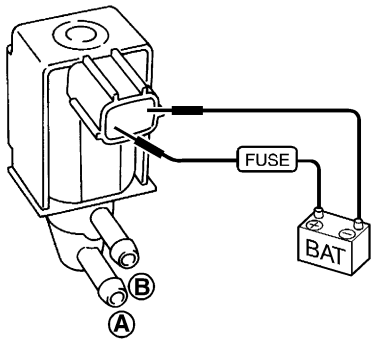

SEF661U

Condition	Air passage continuity between **A** and **B**
12V direct current supply between terminals	Yes
No supply	No

MTBL0303

OK or NG

OK	▶	GO TO 7.
NG	▶	Replace EVAP canister purge volume control solenoid valve.

7	CHECK INTERMITTENT INCIDENT
Refer to "TROUBLE DIAGNOSIS FOR INTERMITTENT INCIDENT", EC-148.	
▶	**INSPECTION END**

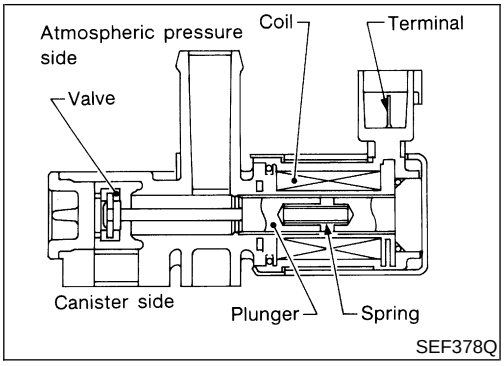

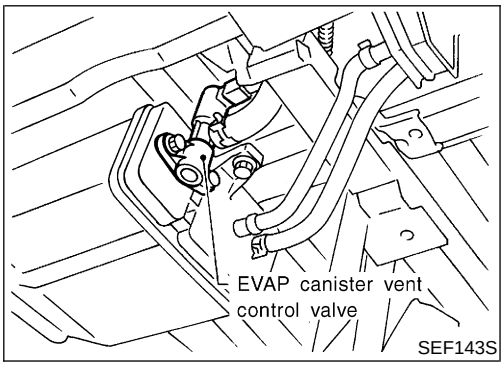

Component Description

NEEC0256

The EVAP canister vent control valve is located on the EVAP canister and is used to seal the canister vent.
This solenoid (the EVAP canister vent control valve) responds to signals from the ECM.
When the ECM sends an ON signal, the coil in the solenoid valve is energized.
A plunger will then move to seal the canister vent. The ability to seal the vent is necessary for the on board diagnosis of other evaporative emission control system components.
This solenoid valve is used only for diagnosis, and usually remains opened.
When the vent is closed, under normal purge conditions, the evaporative emission control system is depressurized and allows "EVAP Control System (Small Leak)" diagnosis.

CONSULT-II Reference Value in Data Monitor Mode

NEEC0257

Specification data are reference values.

MONITOR ITEM	CONDITION	SPECIFICATION
VENT CONT/V	• Ignition switch: ON	OFF

ECM Terminals and Reference Value

NEEC0258

Specification data are reference values and are measured between each terminal and ground.

CAUTION:

Do not use ECM ground terminals when measuring input/output voltage. Doing so may result in damage to the ECM's transistor. Use a ground other than ECM terminals, such as the ground.

TERMINAL NO.	WIRE COLOR	ITEM	CONDITION	DATA (DC Voltage)
108	R/G	EVAP canister vent control valve	**[Ignition switch ON]**	BATTERY VOLTAGE (11 - 14V)

On Board Diagnosis Logic

NEEC0259

DTC No.	Malfunction is detected when ...	Check Items (Possible Cause)
P0446	• An improper voltage signal is sent to ECM through EVAP canister vent control valve.	• Harness or connectors (EVAP canister vent control valve circuit is open or shorted.) • EVAP canister vent control valve

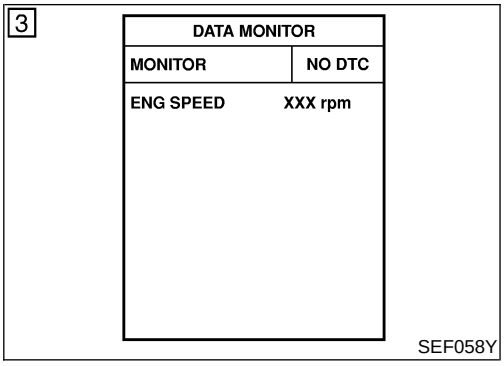

DTC Confirmation Procedure

NEEC0260

NOTE:
If “DTC Confirmation Procedure” has been previously conducted, always turn ignition switch “OFF” and wait at least 5 seconds before conducting the next test.

TESTING CONDITION:
Before performing the following procedure, confirm battery voltage is more than 11V at idle.

With CONSULT-II

1) Turn ignition switch ON.
2) Select “DATA MONITOR” mode with CONSULT-II.
3) Start engine and wait at least 5 seconds.
4) If 1st trip DTC is detected, go to “Diagnostic Procedure”, EC-386.

With GST

Follow the procedure “With CONSULT-II”.

Wiring Diagram

NEEC0261

EC-VENT/V-01

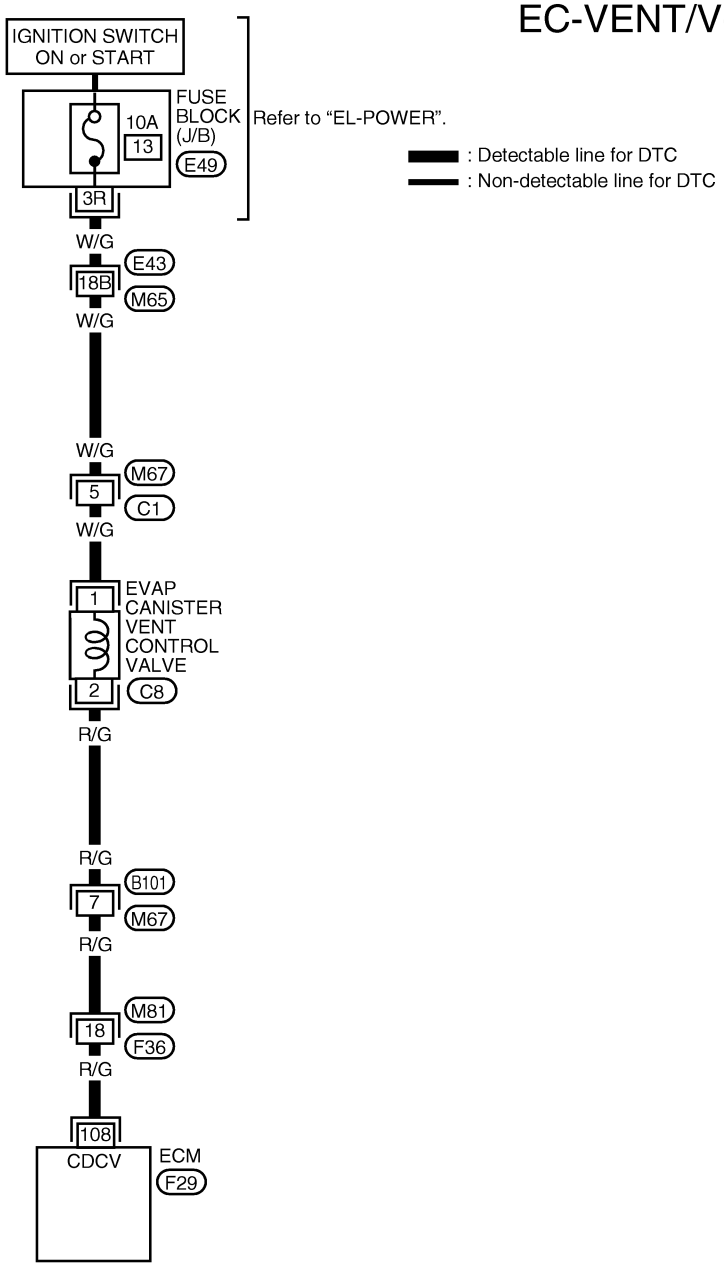

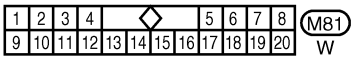



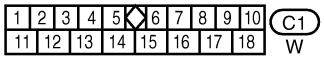

Refer to the following.
M65 , E43 - SUPER MULTIPLE JUNCTION (SMJ)

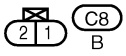

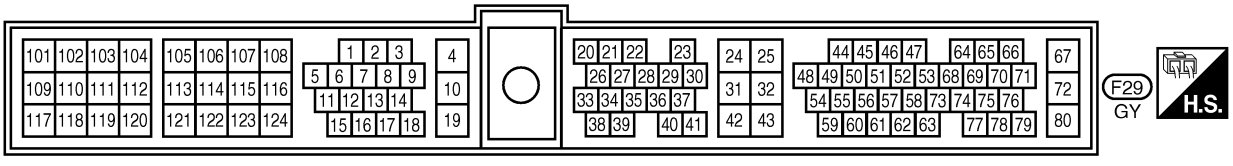

LEC527

Diagnostic Procedure

NEEC1052

1	INSPECTION START	
Do you have CONSULT-II?		
Yes or No		
Yes	▶	GO TO 2.
No	▶	GO TO 3.

2	CHECK CIRCUIT	
1. Turn ignition switch ON. 2. Perform “VENT CONTROL/V” in “ACTIVE TEST” mode.		

ACTIVE TEST	
VENT CONTROL/V	OFF
MONITOR	
ENG SPEED	XXX rpm
A/F ALPHA-B1	XXX %
HO2S1 (B1)	XXX V
THRTL POS SEN	XXX V

SEF802Y

3. Make sure that ratcheting sound is heard from the vent control valve.

OK or NG		
OK	▶	GO TO 7.
NG	▶	GO TO 3.

3	CHECK POWER SUPPLY

1. Turn ignition switch OFF.
2. Disconnect EVAP canister vent control valve harness connector.

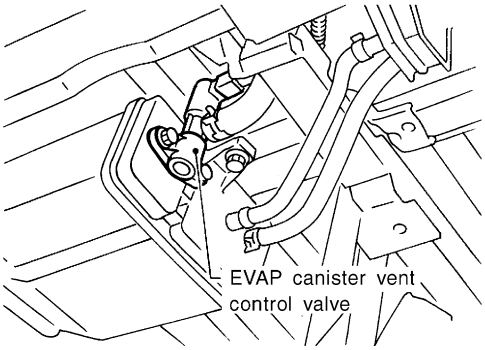

SEF143S

3. Turn ignition switch ON.
4. Check voltage between terminal 1 and ground with CONSULT-II or tester.

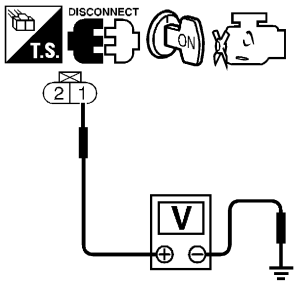

SEF240W

Voltage: Battery voltage

OK or NG

OK	▶	GO TO 5.
NG	▶	GO TO 4.

4	DETECT MALFUNCTIONING PART

Check the following.
- Harness connectors E43, M65
- Harness connectors M67, C1
- 10A fuse
- Harness for open or short between EVAP canister vent control valve and 10A fuse

	▶	Repair harness or connectors.

Diagnostic Procedure (Cont'd)

5	CHECK OUTPUT SIGNAL CIRCUIT

1. Turn ignition switch OFF.
2. Disconnect ECM harness connector.
3. Check harness continuity between ECM terminal 108 and terminal 2.

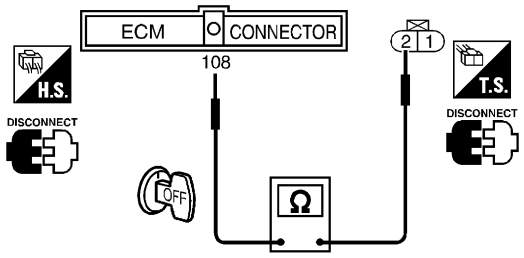

SEF241W

Continuity should exist.

4. Also check harness for short to ground and short to power.

OK or NG

OK	▶	GO TO 8.
NG	▶	GO TO 6.

6	DETECT MALFUNCTIONING PART

Check the following.
- Harness connectors C1, M67
- Harness connectors M81, F36
- Harness for open or short between EVAP canister vent control valve and ECM

	▶	Repair open circuit or short to ground or short to power in harness or connectors.

7	CHECK EVAP CANISTER VENT CONTROL VALVE AND O-RING

With CONSULT-II

Check air passage continuity.

Perform "VENT CONTROL/V" in "ACTIVE TEST" mode.

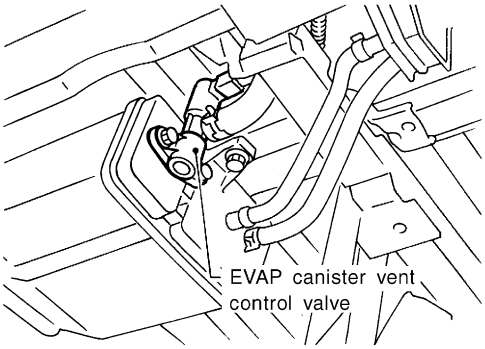

SEF143S

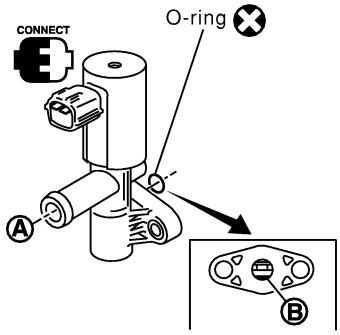

ACTIVE TEST	
VENT CONTROL/V	OFF
MONITOR	
ENG SPEED	XXX rpm
A/F ALPHA-B1	XXX %
HO2S1 (B1)	XXX V
THRTL POS SEN	XXX V

Condition VENT CONTROL/V	Air passage continuity between A and B
ON	No
OFF	Yes

Operation takes less than 1 second.

SEF803Y

If NG or operation takes more than 1 second, clean valve using air blower or replace as necessary.

If the portion B is rusted, replace EVAP canister vent control valve. Make sure new O-ring is installed properly.

OK or NG

OK	▶	GO TO 9.
NG	▶	Replace EVAP canister vent control valve and O-ring.

Diagnostic Procedure (Cont'd)

8	CHECK EVAP CANISTER VENT CONTROL VALVE AND O-RING

Without CONSULT-II

Check air passage continuity under the following conditions.

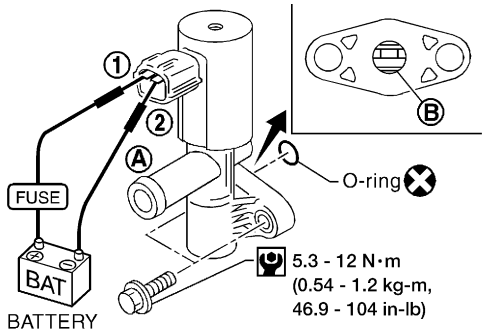

AEC783A

Condition	Air passage continuity between **A** and **B**
12V direct current supply between terminals 1 and 2	No
No supply	Yes

MTBL0297

If NG or operation takes more than 1 second, clean valve using air blower or replace as necessary.

If the portion B is rusted, replace EVAP canister vent control valve. Make sure new O-ring is installed properly.

OK or NG

OK	▶	GO TO 9.
NG	▶	Replace EVAP canister vent control valve and O-ring.

9	CHECK INTERMITTENT INCIDENT
Perform "TROUBLE DIAGNOSIS FOR INTERMITTENT INCIDENT", EC-148.	
▶	**INSPECTION END**

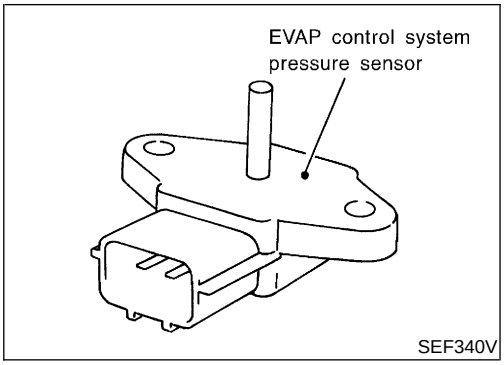

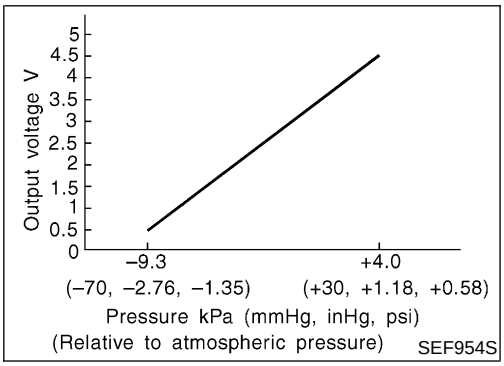

Component Description

NEEC0264

The EVAP control system pressure sensor detects pressure in the purge line. The sensor output voltage to the ECM increases as pressure increases. The EVAP control system pressure sensor is not used to control the engine system. It is used only for on board diagnosis.

CONSULT-II Reference Value in Data Monitor Mode

NEEC0265

Specification data are reference values.

MONITOR ITEM	CONDITION	SPECIFICATION
EVAP SYS PRES	• Ignition switch: ON	Approx. 3.4V

ECM Terminals and Reference Value

NEEC0266

Specification data are reference values and are measured between each terminal and ground.

CAUTION:

Do not use ECM ground terminals when measuring input/output voltage. Doing so may result in damage to the ECM's transistor. Use a ground other than ECM terminals, such as the ground.

TERMINAL NO.	WIRE COLOR	ITEM	CONDITION	DATA (DC Voltage)
42	BR	Sensors' power supply	**[Ignition switch ON]**	Approximately 5V
43	B/W	Sensors' ground	**[Engine is running]** • **Warm-up condition** • Idle speed	Approximately 0V
62	Y	EVAP control system pressure sensor	**[Ignition switch ON]**	Approximately 3.4V

On Board Diagnosis Logic

NEEC0267

DTC No.	Malfunction is detected when ...	Check Items (Possible Cause)
P0450	• An improper voltage signal from EVAP control system pressure sensor is sent to ECM.	• Harness or connectors (The EVAP control system pressure sensor circuit is open or shorted.) • Rubber hose to EVAP control system pressure is clogged, vent, kinked, disconnected or improper connection. • EVAP control system pressure sensor • EVAP canister vent control valve • EVAP canister purge volume control solenoid valve • EVAP canister • Rubber hose from EVAP canister vent control valve to water separator

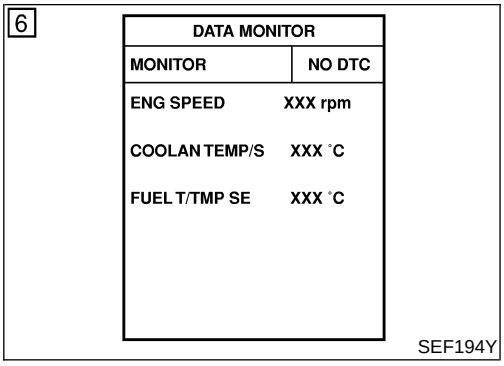

DTC Confirmation Procedure

=NEEC0268

NOTE:

If "DTC Confirmation Procedure" has been previously conducted, always turn ignition switch OFF and wait at least 5 seconds before conducting the next test.

TESTING CONDITION:

- **Always perform test at a temperature above 5°C (41°F).**
- **Before performing the following procedure, confirm battery voltage is more than 11V at idle.**

With CONSULT-II

1) Start engine and warm it up to normal operating temperature.
2) Turn ignition switch OFF and wait at least 5 seconds.
3) Turn ignition switch ON.
4) Select "DATA MONITOR" mode with CONSULT-II.
5) Make sure that "TANK F/TEMP SE" is more than 0°C (32°F).
6) Start engine and wait at least 20 seconds.
7) If 1st trip DTC is detected, go to "Diagnostic Procedure", EC-395.

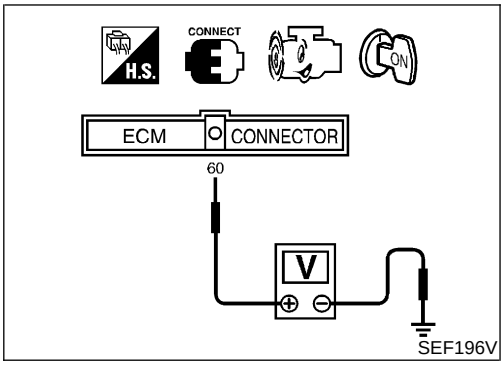

With GST

1) Start engine and warm it up to normal operating temperature.
2) Check that voltage between ECM terminal 60 (Fuel tank temperature sensor signal) and ground is less than 4.2V.
3) Turn ignition switch OFF and wait at least 5 seconds.
4) Start engine and wait at least 11 seconds.
5) Select "MODE 7" with GST.
6) If 1st trip DTC is detected, go to "Diagnostic Procedure", EC-395.

No Tools

1) Start engine and warm it up to normal operating temperature.
2) Check that voltage between ECM terminal 60 (Fuel tank temperature sensor signal) and ground is less than 4.2V.
3) Turn ignition switch OFF and wait at least 5 seconds.
4) Start engine and wait at least 11 seconds.
5) Turn ignition switch OFF, wait at least 5 seconds and then turn ON.
6) Perform "Diagnostic Test Mode II (Self-diagnostic results)" with ECM.
7) If 1st trip DTC is detected, go to "Diagnostic Procedure", EC-395.

Wiring Diagram

NEEC0269

EC-PRE/SE-01

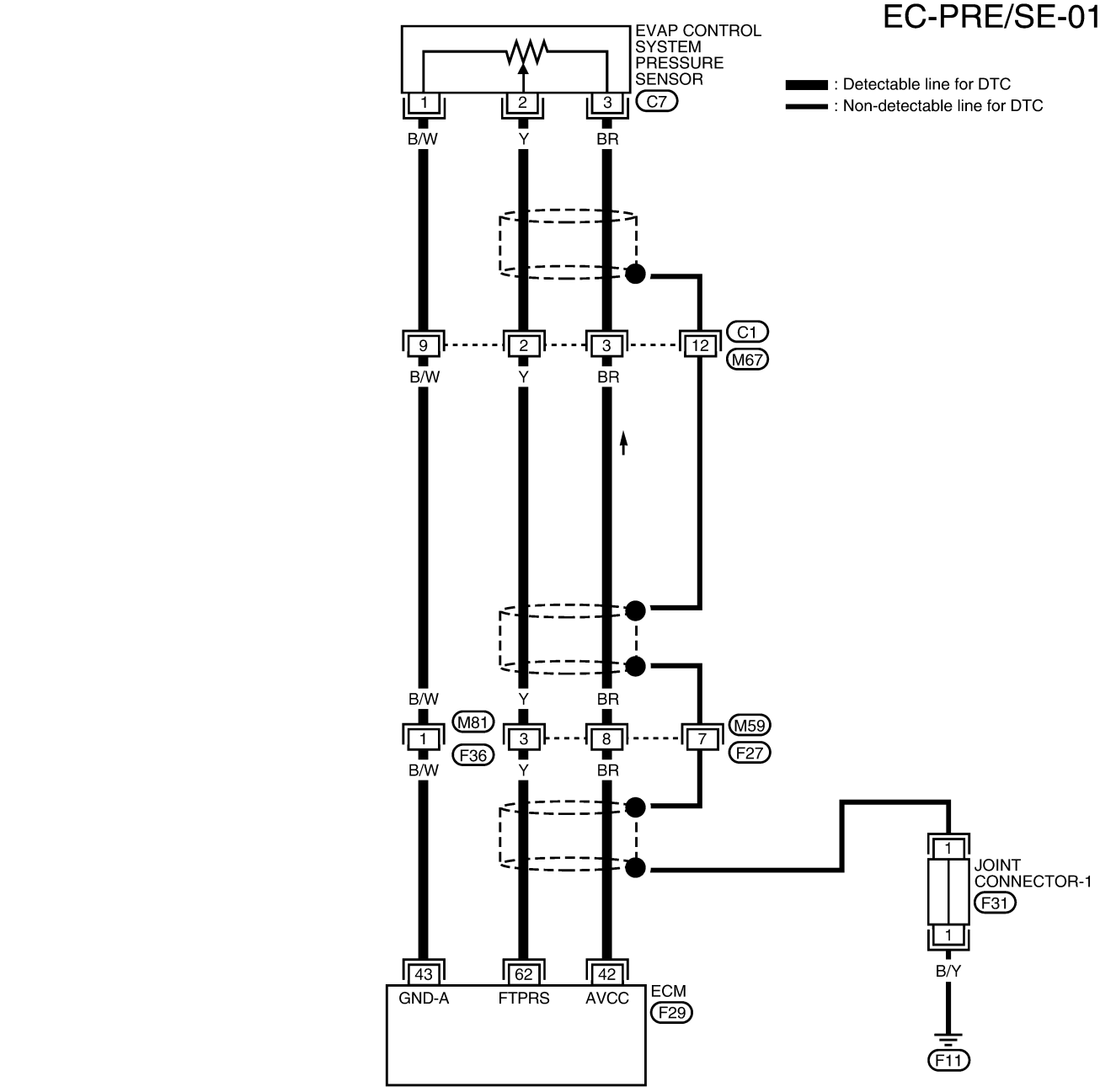

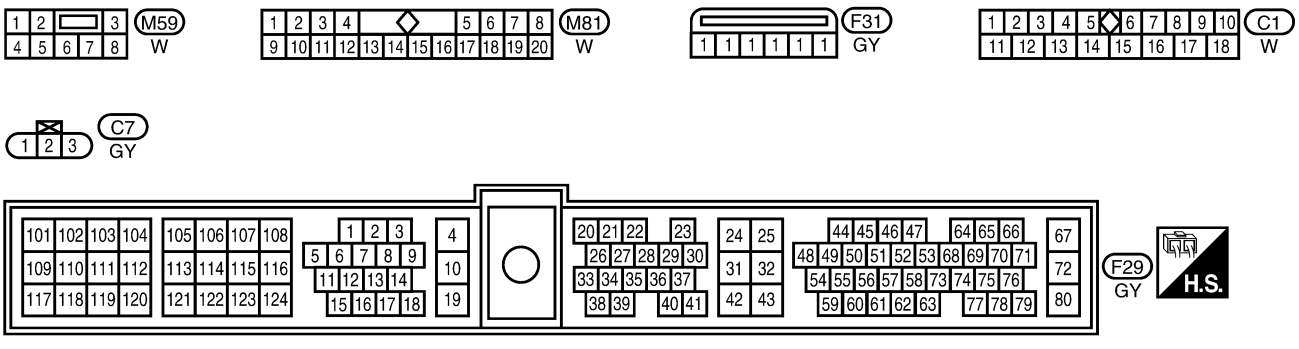

WEC780

Diagnostic Procedure

NEEC1053

1	CHECK RUBBER TUBE CONNECTED TO THE SENSOR	
Check rubber tube connected to the sensor for clogging, vent, kink, disconnection or improper connection.		
OK or NG		
OK	▶	GO TO 2.
NG	▶	Reconnect, repair or replace.

2	RETIGHTEN GROUND SCREWS	
1. Turn ignition switch OFF. 2. Loosen and retighten engine ground screws.		
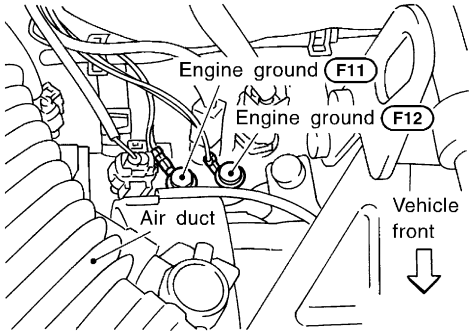 SEF325V		
	▶	GO TO 3.

3	CHECK HARNESS CONNECTOR	
1. Disconnect EVAP control system pressure sensor harness connector.		
View with spare tire removed 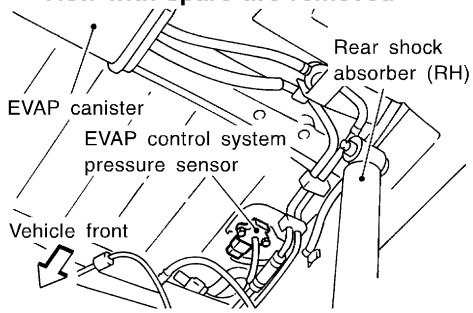 SEF341V		
2. Check sensor harness connector for water. **Water should not exist.**		
OK or NG		
OK	▶	GO TO 4.
NG	▶	Repair or replace harness connector.

Diagnostic Procedure (Cont'd)

4	CHECK POWER SUPPLY

1. Turn ignition switch ON.
2. Check voltage between terminal 3 and engine ground with CONSULT-II or tester.

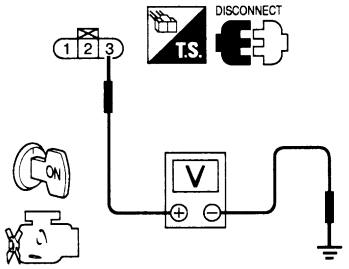

SEF410Q

Voltage: Approximately 5V

OK or NG

OK	▶	GO TO 6.
NG	▶	GO TO 5.

5	DETECT MALFUNCTIONING PART

Check the following.
- Harness connectors C1, M67
- Harness connectors M59, F27
- Harness connectors M81, F36
- Harness for open or short between EVAP control system pressure sensor and ECM

	▶	Repair harness or connectors.

6	CHECK GROUND CIRCUIT

1. Turn ignition switch OFF.
2. Check harness continuity between EVAP control system pressure sensor terminal 1 and engine ground.

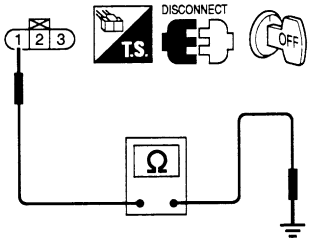

SEF411Q

Continuity should exist.

3. Also check harness for short to power.

OK or NG

OK	▶	GO TO 8.
NG	▶	GO TO 7.

7	DETECT MALFUNCTIONING PART
Check the following. ● Harness connectors C1, M67 ● Harness connectors M81, F36 ● Harness for open or short between EVAP control system pressure sensor and ECM	
▶	Repair open circuit or short to power in harness or connectors.

8	CHECK INPUT SIGNAL CIRCUIT

1. Disconnect ECM harness connector.
2. Check harness continuity between ECM terminal 62 and terminal 2.

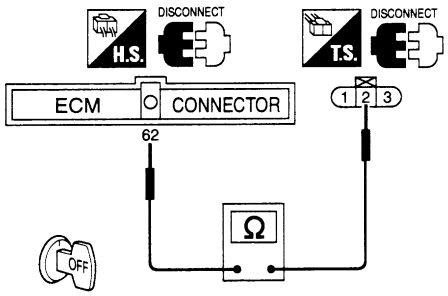

SEF412Q

Continuity should exist.

3. Also check harness for short to ground and short to power.

OK or NG

OK (With CONSULT-II)	▶	GO TO 10.
OK (Without CONSULT-II)	▶	GO TO 11.
NG	▶	GO TO 9.

9	DETECT MALFUNCTIONING PART
Check the following. ● Harness connectors C1, M67 ● Harness connectors M59, F27 ● Harness for open or short between EVAP control system pressure sensor and ECM	
▶	Repair open circuit or short to ground or short to power in harness or connectors.

Diagnostic Procedure (Cont'd)

10	CHECK EVAP CANISTER PURGE VOLUME CONTROL SOLENOID VALVE

With CONSULT-II

1. Start engine.
2. Perform "PURG VOL CONT/V" in "ACTIVE TEST" mode with CONSULT-II. Check that engine speed varies according to the valve opening. Check air passage continuity.
   If OK, inspection end. If NG, go to following step.

ACTIVE TEST	
PURG VOL CONT/V	XXX %
MONITOR	
ENG SPEED	XXX rpm
A/F ALPHA-B1	XXX %
HO2S1 MNTR (B1)	LEAN
THRTL POS SEN	XXX V

SEF801Y

3. Check air passage continuity.

Condition PURG VOL CONT/V value	Air passage continuity between **A** and **B**
100.0%	Yes
0.0%	No

MTBL0302

OK or NG

OK	▶	GO TO 12.
NG	▶	Replace EVAP canister purge volume control solenoid valve.

11	CHECK EVAP CANISTER PURGE VOLUME CONTROL SOLENOID VALVE

Without CONSULT-II
Check air passage continuity.

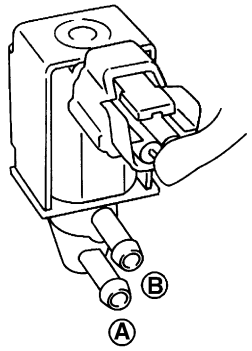

SEF660U

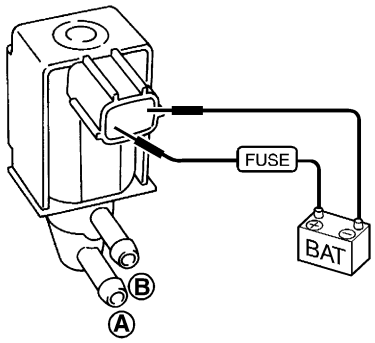

SEF661U

Condition	Air passage continuity between **A** and **B**
12V direct current supply between terminals	Yes
No supply	No

MTBL0303

OK or NG

OK	▶	GO TO 13.
NG	▶	Replace EVAP canister purge volume control solenoid valve.

Diagnostic Procedure (Cont'd)

12	CHECK EVAP CANISTER VENT CONTROL VALVE

With CONSULT-II

Check air passage continuity.

Perform "VENT CONTROL/V" in "ACTIVE TEST" mode.

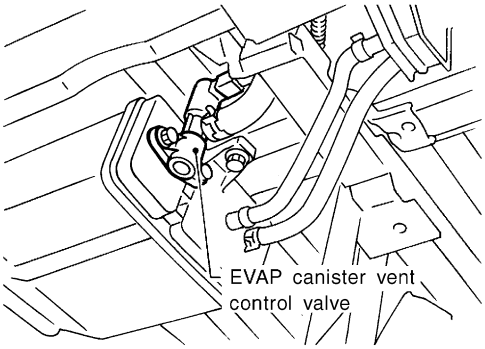

SEF143S

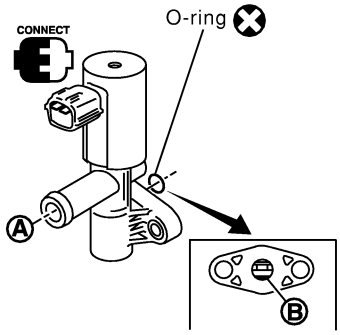

ACTIVE TEST	
VENT CONTROL/V	OFF
MONITOR	
ENG SPEED	XXX rpm
A/F ALPHA-B1	XXX %
HO2S1 (B1)	XXX V
THRTL POS SEN	XXX V

Condition VENT CONTROL/V	Air passage continuity between A and B
ON	No
OFF	Yes

Operation takes less than 1 second.

SEF803Y

If NG or operation takes more than 1 second, clean valve using air blower or replace as necessary.

If the portion B is rusted, replace EVAP canister vent control valve. Make sure new O-ring is installed properly.

OK or NG

OK	▶	GO TO 14.
NG	▶	Replace EVAP canister vent control valve.

13	CHECK EVAP CANISTER VENT CONTROL VALVE

Without CONSULT-II

Check air passage continuity under the following conditions.

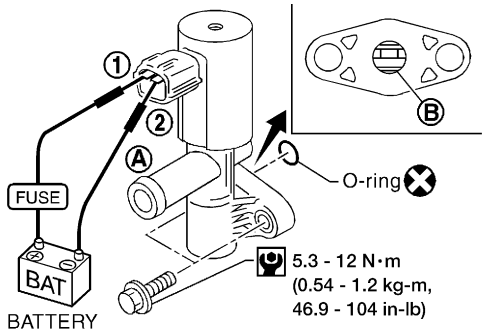

AEC783A

Condition	Air passage continuity between **A** and **B**
12V direct current supply between terminals 1 and 2	No
No supply	Yes

MTBL0297

If NG or operation takes more than 1 second, clean valve using air blower or replace as necessary.

If the portion B is rusted, replace EVAP canister vent control valve. Make sure new O-ring is installed properly.

OK or NG

OK	▶	GO TO 14.
NG	▶	Replace EVAP canister vent control valve.

Diagnostic Procedure (Cont'd)

14	CHECK EVAP CONTROL SYSTEM PRESSURE SENSOR

1. Remove EVAP control system pressure sensor with its harness connector connected.

View with spare tire removed

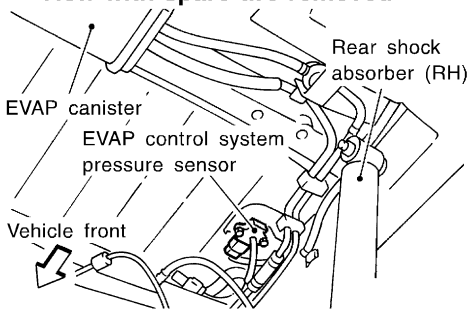

SEF341V

2. Remove hose from EVAP control system pressure sensor.
3. Use pump to apply vacuum and pressure to EVAP control system pressure sensor as shown in figure.
4. Check output voltage between ECM terminal 62 and engine ground.

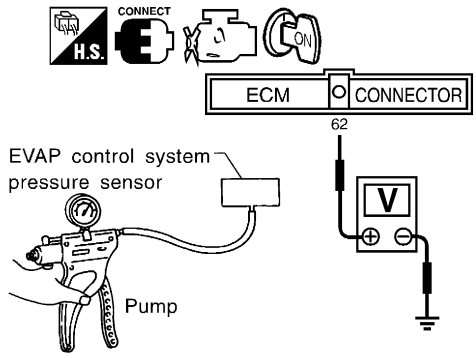

SEF198V

Pressure (Relative to atomospheric pressure)	Voltage (V)
0 kPa (0 mmHg, 0 inHg)	3.0 - 3.6
–9.3 kPa (–70 mmHg, –2.76 inHg)	0.4 - 0.6

MTBL0295

CAUTION:

- **Always calibrate the vacuum pump gauge when using it.**
- **Do not apply below −20 kPa (−150 mmHg, −5.91 inHg) or over 20 kPa (150 mmHg, 5.91 inHg) of pressure.**

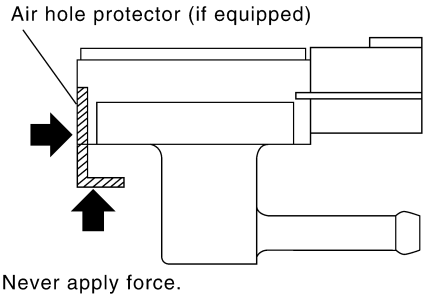

SEF799W

- **Never apply force to the air hole protector of the sensor, if equipped.**
- **Discard any EVAP control system pressure sensor which has been dropped from a height of more than 0.5 m (19.7 in) onto a hard surface such as a concrete floor; use a new one.**

OK or NG

OK	▶	GO TO 15.
NG	▶	Replace EVAP control system pressure sensor.

15	CHECK RUBBER TUBE FOR CLOGGING

Check obstructed water separator and rubber tube to EVAP canister vent control valve and clean the rubber tube using air blower.
Check water separator.
1. Check visually for insect nests in the water separator air inlet.
2. Check visually for cracks or flaws in the appearance.
3. Check visually for cracks or flaws in the hose.
4. Check that **A** and **C** are not clogged by blowing air into **B** with **A**, and then **C** plugged.

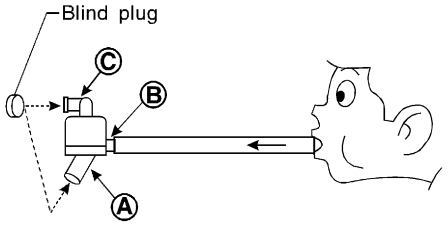

* Ⓐ: Bottom hole (To atmosphere)
Ⓑ: Emergency tube (From EVAP canister)
Ⓒ: Inlet port (To member)

SEF829T

5. In case of NG in items 2 - 4, replace the parts.
- **Do not disassemble water separator.**

OK or NG

OK	▶	GO TO 16.
NG	▶	Clean, repair or replace rubber tube and/or water separator.

16	CHECK IF EVAP CANISTER SATURATED WITH WATER

1. Remove EVAP canister with EVAP canister vent control valve attached.
2. Check if water will drain from the EVAP canister.

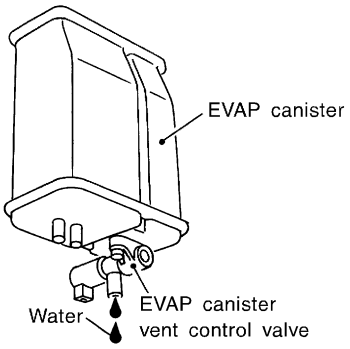

SEF596U

Yes or No

Yes	▶	GO TO 17.
No	▶	GO TO 19.

17	CHECK EVAP CANISTER

Weigh the EVAP canister with EVAP canister vent control valve attached.
The weight should be less than 1.8 kg (4.0 lb).

OK or NG

OK	▶	GO TO 19.
NG	▶	GO TO 18.

Diagnostic Procedure (Cont'd)

18	DETECT MALFUNCTIONING PART

Check the following.
1. Visually check the EVAP canister for damage.
2. Check hose connection between EVAP canister and water separator for clogging and poor connection.
3. Check water separator.
a. Check visually for insect nests in the water separator air inlet.
b. Check visually for cracks or flaws in the appearance.
c. Check visually for cracks or flaws in the hose.
d. Check that **A** and **C** are not clogged by blowing air into **B** with **A**, and then **C** plugged.

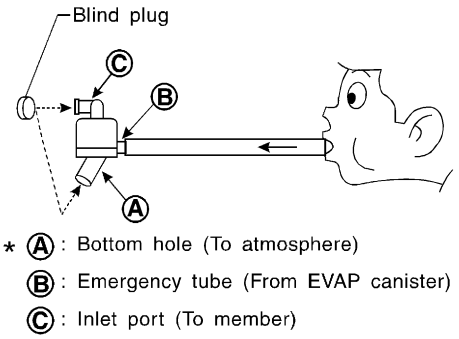

* Ⓐ : Bottom hole (To atmosphere)
Ⓑ : Emergency tube (From EVAP canister)
Ⓒ : Inlet port (To member)

SEF829T

e. In case of NG in items 2 - 4, replace the parts.
- **Do not disassemble water separator.**

▶	Repair hose or replace EVAP canister or water separator.

19	CHECK SHIELD CIRCUIT

1. Turn ignition switch OFF.
2. Reconnect disconnected harness connectors.
3. Disconnect harness connectors M67.
4. Check harness continuity between harness connector M67 terminal 12 and ground.

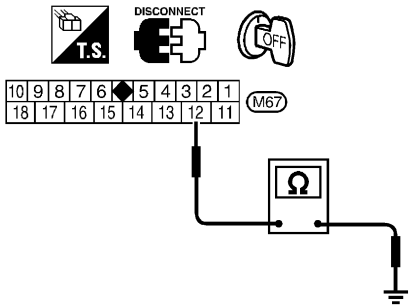

SEF197V

Continuity should exist.

5. Also check harness for short to power.
6. Then reconnect harness connectors.

OK or NG

OK	▶	GO TO 21.
NG	▶	GO TO 20.

20	DETECT MALFUNCTIONING PART

Check the following.
- Harness connectors M59, F27
- Joint connector-1 (Refer to "HARNESS LAYOUT", ***EL-239***.)
- Harness for open or short between harness connector M67 and engine ground

▶	Repair open circuit, short to power in harness or connectors.

21	**CHECK INTERMITTENT INCIDENT**
Perform "TROUBLE DIAGNOSIS FOR INTERMITTENT INCIDENT", EC-148.	
▶	**INSPECTION END**

On Board Diagnosis Logic

NEEC0951

NOTE:
If DTC P0455 is displayed with P1448, perform trouble diagnosis for DTC P1448 first. (See EC-517.)

This diagnosis detects a very large leak (fuel filler cap fell off etc.) in the EVAP system between the fuel tank and the EVAP canister purge volume control solenoid valve.

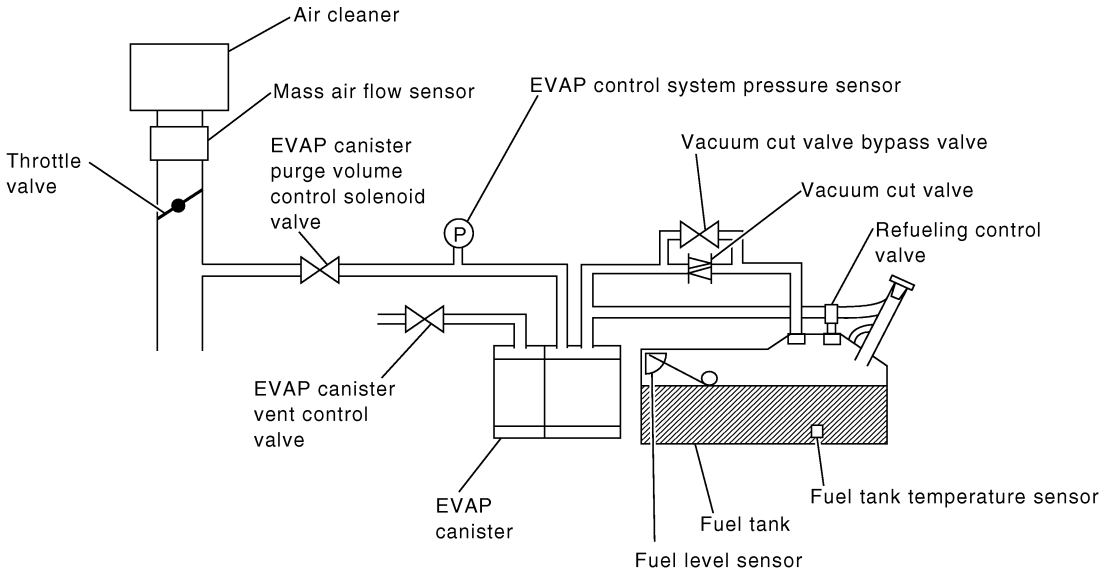

Malfunction is detected when EVAP control system has a very large leak, such as fuel filler cap fell off, EVAP control system does not operate properly.

CAUTION:

- **Use only a genuine NISSAN fuel filler cap as a replacement. If an incorrect fuel filler cap is used, the MIL may come on.**
- **If the fuel filler cap is not tightened properly, the MIL may come on.**
- **Use only a genuine NISSAN rubber tube as a replacement.**

POSSIBLE CAUSE

NEEC0951S01

- Fuel filler cap remains open or fails to close.
- Incorrect fuel tank vacuum relief valve
- Incorrect fuel filler cap used
- Foreign matter caught in fuel filler cap.
- Leak is in line between intake manifold and EVAP canister purge volume control solenoid valve.
- Foreign matter caught in EVAP canister vent control valve.
- EVAP canister or fuel tank leaks
- EVAP purge line (pipe and rubber tube) leaks
- EVAP purge line rubber tube bent.
- Blocked or bent rubber tube to EVAP control system pressure sensor
- Loose or disconnected rubber tube
- EVAP canister vent control valve and the circuit
- EVAP canister purge volume control solenoid valve and the circuit
- Absolute pressure sensor

- Fuel tank temperature sensor
- O-ring of EVAP canister vent control valve is missing or damaged.
- EVAP control system pressure sensor

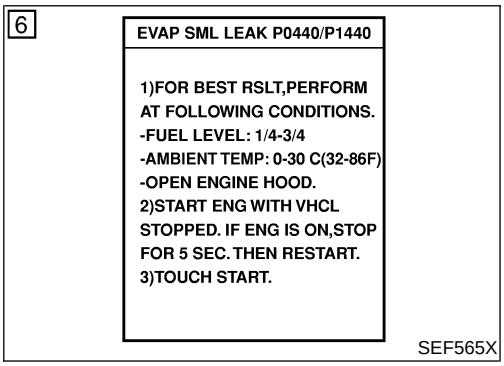

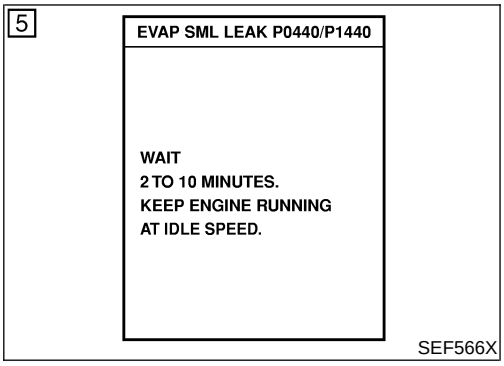

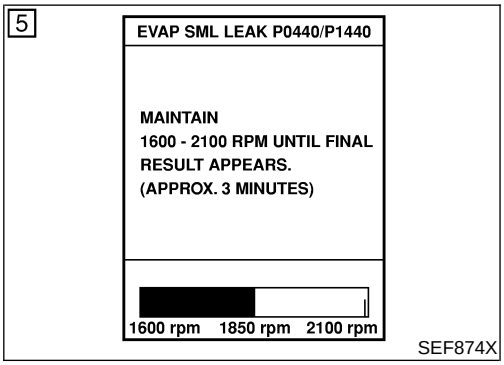

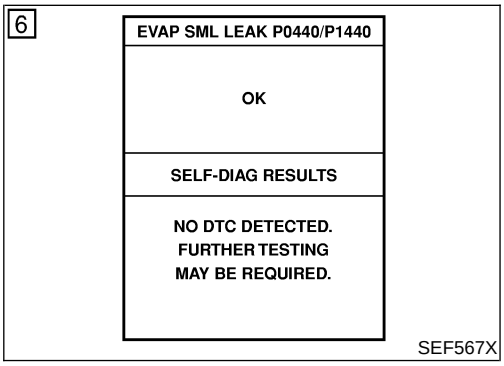

DTC Confirmation Procedure

NEEC0952

CAUTION:

Never remove fuel filter cap during the DTC confirmation procedure.

NOTE:

- **If DTC P0455 is displayed with P1448, perform trouble diagnosis for DTC P1448 first. (See EC-527.)**
- If "DTC Confirmation Procedure" has been previously conducted, always turn ignition switch OFF and wait at least 5 seconds before conducting the next test.
- **Make sure that EVAP hoses are connected to EVAP canister purge volume control solenoid valve properly.**

TESTING CONDITION:

- **Perform "DTC WORK SUPPORT" when the fuel level is between 1/4 to 3/4 full and vehicle is placed on flat level surface.**
- **Open engine hood before conducting the following procedure.**
- **It is better that the fuel level is low.**

With CONSULT-II

1) Tighten fuel filter cap securely until ratcheting sound is heard.
2) Turn ignition switch ON.
3) Turn ignition switch OFF and wait at least 5 seconds.
4) Turn ignition switch ON and select "DATA MONITOR" mode with CONSULT-II.
5) Make sure that the following conditions are met.
   COOLAN TEMP/S: 0 - 70°C (32 - 158°F)
   INT/A TEMP SE: 0 - 60°C (32 - 140°F)
6) Select "EVAP SML LEAK P0440" of "EVAPORATIVE SYSTEM" in "DTC WORK SUPPORT" mode with CONSULT-II. Follow the instruction displayed.

NOTE:

If the engine speed cannot be maintained within the range displayed on the CONSULT-II screen, go to "Basic Inspection", EC-110.

7) Make sure that "OK" is displayed.
   If "NG" is displayed, select "SELF-DIAG RESULTS" mode with CONSULT-II and make sure that "EVAP GROSS LEAK [P0455] is displayed. If it is displayed, refer to "Diagnostic Procedure", EC-408.
   If P0440 is displayed, perform "Diagnostic Procedure" for DTC P0440.

With GST

NOTE:
- Be sure to read the explanation of "Driving Pattern" on EC-80 before driving vehicle.
- It is better that the fuel level is low.

1) Start engine.
2) Drive vehicle according to "Driving Pattern", EC-80.
3) Stop vehicle.
4) Select "MODE 1" with GST.
- If SRT of EVAP system is not set yet, go to the following step.
- If SRT of EVAP system is set, the result will be OK.

5) Turn ignition switch "OFF" and wait at least 5 seconds.
6) Start engine.
   It is not necessary to cool engine down before driving.
7) Drive vehicle again according to the "Driving Pattern", EC-80.
8) Stop vehicle.
9) Select "MODE 3" with GST.
- If P0455 is displayed on the screen, go to "Diagnostic Procedure", EC-408.
- If P0440 is displayed on the screen, go to "Diagnostic Procedure", EC-362.
- If P1447 is displayed on the screen, go to "Diagnostic Procedure", EC-518.
- If P0440, P0455 and P1447 are not displayed on the screen, go to the following step.

10) Select "MODE 1" with GST.
- If SRT of EVAP system is set, the result will be OK.
- If SRT of EVAP system is not set, go to step 6.

Diagnostic Procedure

NEEC0953

1	CHECK FUEL FILLER CAP DESIGN	
1. Turn ignition switch OFF. 2. Check for genuine NISSAN fuel filler cap design. 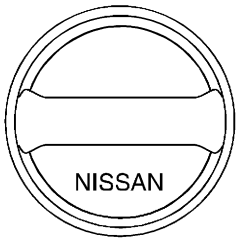 SEF915U **OK or NG**		
OK	▶	GO TO 2.
NG	▶	Replace with genuine NISSAN fuel filler cap.

2	CHECK FUEL FILLER CAP INSTALLATION	
Check that the cap is tightened properly by rotating the cap clockwise. **OK or NG**		
OK	▶	GO TO 3.
NG	▶	● Open fuel filler cap, then clean cap and fuel filler neck threads using air blower. ● Retighten until ratcheting sound is heard.

3	CHECK FUEL FILLER CAP FUNCTION	
Check for air releasing sound while opening the fuel filler cap. **OK or NG**		
OK	▶	GO TO 6.
NG	▶	GO TO 4.

4 CHECK FUEL TANK VACUUM RELIEF VALVE (BUILT INTO FUEL FILLER CAP)

1. Wipe clean valve housing.
2. Check valve opening pressure and vacuum.

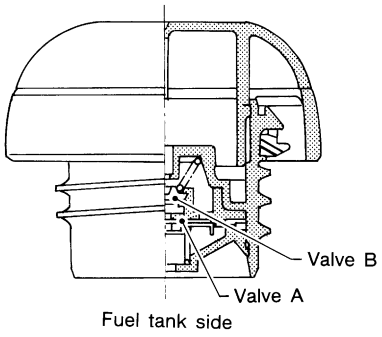

SEF427N

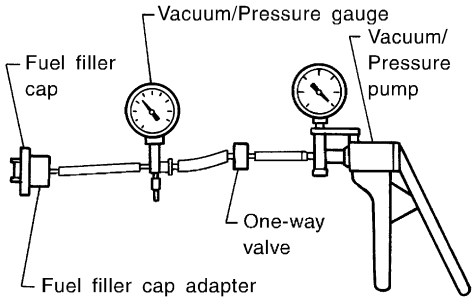

SEF943S

Pressure:
16.0 - 20.0 kPa (0.163 - 0.204 kg/cm^2, 2.32 - 2.90 psi)
Vacuum:
−6.0 to −3.5 kPa (−0.061 to −0.036 kg/cm^2, −0.87 to −0.51 psi)

CAUTION:
Use only a genuine fuel filler cap as a replacement. If an incorrect fuel filler cap is used, the MIL may come on.

OK or NG

OK	▶	GO TO 5.
NG	▶	Replace fuel filler cap with a genuine one.

Diagnostic Procedure (Cont'd)

5	CHECK EVAP PURGE LINE	
Check EVAP purge line (pipe, rubber tube, fuel tank and EVAP canister) for cracks or improper connection or disconnection. Refer to "Evaporative Emission System", EC-40.		
OK or NG		
OK	▶	GO TO 6.
NG	▶	Repair or reconnect the hose.

6	CLEAN EVAP PURGE LINE	
Clean EVAP purge line (pipe and rubber tube) using air blower.		
	▶	GO TO 7.

7	CHECK EVAP CANISTER VENT CONTROL VALVE, O-RING AND CIRCUIT	
Refer to "DTC Confirmation Procedure", EC-384.		
OK or NG		
OK	▶	GO TO 8.
NG	▶	Repair or replace EVAP canister vent control valve and O-ring or harness/connector.

8	INSTALL THE PRESSURE PUMP	
To locate the EVAP leak, install EVAP service port adapter and pressure pump to EVAP service port securely.		

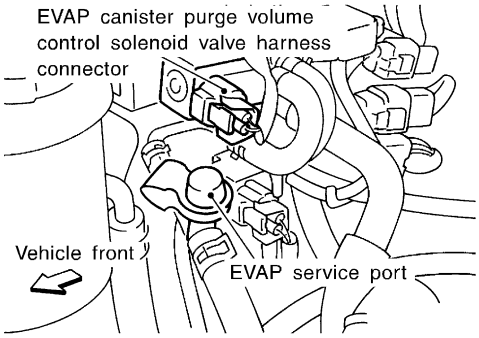

SEF339V

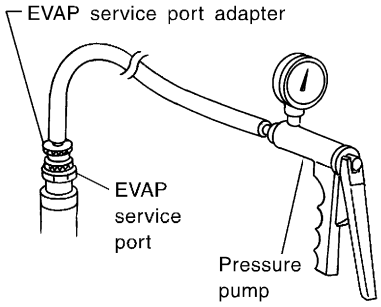

SEF916U

NOTE:
Improper installation of the EVAP service port adapter to the EVAP service port may cause leaking.

Models with CONSULT-II	▶	GO TO 9.
Models without CONSULT-II	▶	GO TO 10.

9	CHECK FOR EVAP LEAK

With CONSULT-II

1. Turn ignition switch ON.
2. Select "EVAP SYSTEM CLOSE" of "WORK SUPPORT" mode with CONSULT-II.

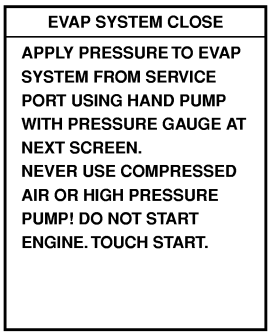

PEF658U

3. Touch "START" and apply pressure into the EVAP line until the pressure indicator reaches the middle of the bar graph.
   NOTE:
   - **Never use compressed air or a high pressure pump.**
   - **Do not exceed 4.12 kPa (0.042 kg/cm^2, 0.6 psi) of pressure in the system.**

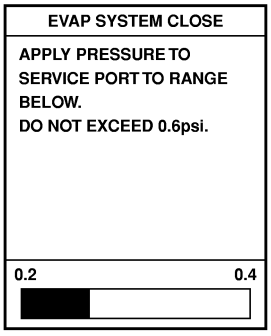

PEF917U

4. Using EVAP leak detector, locate the EVAP leak. For the leak detector, refer to the instruction manual for more details. Refer to "EVAPORATIVE EMISSION LINE DRAWING", EC-43.

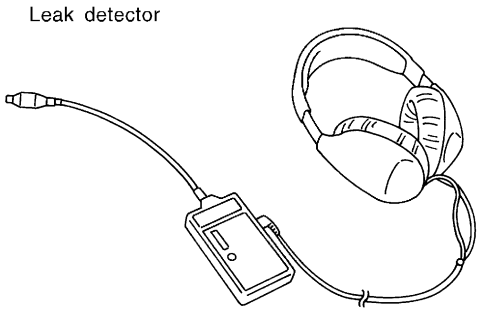

SEF200U

OK or NG

OK	▶	GO TO 11.
NG	▶	Repair or replace.

Diagnostic Procedure (Cont'd)

10	CHECK FOR EVAP LEAK

Without CONSULT-II

1. Turn ignition switch OFF.
2. Apply 12 volts DC to EVAP canister vent control valve. The valve will close. (Continue to apply 12 volts until the end of test.)
3. Apply 12 volts DC to vacuum cut valve bypass valve. The valve will open. (Continue to apply 12V until the end of test.)

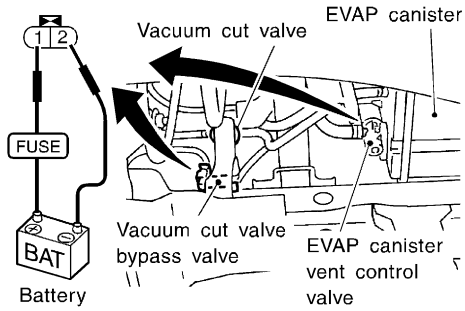

SEF503V

4. Pressurize the EVAP line using pressure pump with 1.3 to 2.7 kPa (10 to 20 mmHg, 0.39 to 0.79 inHg), then remove pump and EVAP service port adapter.
   NOTE:
   - **Never use compressed air or a high pressure pump.**
   - **Do not exceed 4.12 kPa (0.042 kg/cm^2, 0.6 psi) of pressure in the system.**
5. Using EVAP leak detector, locate the EVAP leak. For the leak detector, refer to the instruction manual for more details. Refer to "EVAPORATIVE EMISSION LINE DRAWING", EC-43.

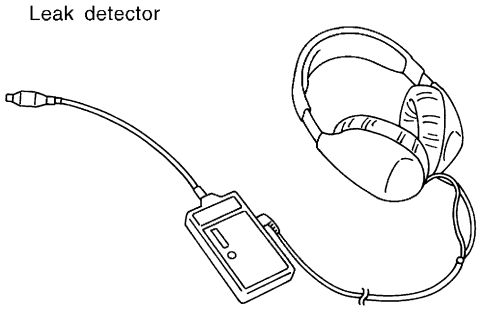

SEF200U

OK or NG

OK	▶	GO TO 12.
NG	▶	Repair or replace.

11	CHECK EVAP CANISTER PURGE VOLUME CONTROL SOLENOID VALVE OPERATION

With CONSULT-II
1. Disconnect vacuum hose to EVAP canister purge volume control solenoid valve at EVAP service port.
2. Start engine.
3. Perform "PURG VOL CONT/V" in "ACTIVE TEST" mode.
4. Touch "Qu" on CONSULT-II screen to increase "PURG VOL CONT/V" opening to 100.0%.
5. Check vacuum hose for vacuum when revving engine up to 2,000 rpm.

ACTIVE TEST	
PURG VOL CONT/V	XXX %
MONITOR	
ENG SPEED	XXX rpm
A/F ALPHA-B1	XXX %
HO2S1 MNTR (B1)	LEAN
THRTL POS SEN	XXX V

Vacuum should exist.

SEF595Y

OK or NG

OK	▶	GO TO 14.
NG	▶	GO TO 13.

12	CHECK EVAP CANISTER PURGE VOLUME CONTROL SOLENOID VALVE OPERATION

Without CONSULT-II
1. Start engine and warm it up to normal operating temperature.
2. Stop engine.
3. Disconnect vacuum hose to EVAP canister purge volume control solenoid valve at EVAP service port.
4. Start engine and let it idle for at least 80 seconds.
5. Check vacuum hose for vacuum when revving engine up to 2,000 rpm.
   Vacuum should exist.

OK or NG

OK	▶	GO TO 14.
NG	▶	GO TO 13.

13	CHECK VACUUM HOSE

Check vacuum hoses for clogging or disconnection. Refer to "Vacuum Hose Drawing", EC-33.

OK or NG

OK (With CONSULT-II)	▶	GO TO 14.
OK (Without CONSULT-II)	▶	GO TO 15.
NG	▶	Repair or reconnect the hose.

14	CHECK EVAP CANISTER PURGE VOLUME CONTROL SOLENOID VALVE

With CONSULT-II

1. Start engine.
2. Perform "PURG VOL CONT/V" in "ACTIVE TEST" mode with CONSULT-II. Check that engine speed varies according to the valve opening.

ACTIVE TEST	
PURG VOL CONT/V	XXX %
MONITOR	
ENG SPEED	XXX rpm
A/F ALPHA-B1	XXX %
HO2S1 MNTR (B1)	LEAN
THRTL POS SEN	XXX V

SEF801Y

If OK, inspection end. If NG, go to following step.

3. Check air passage continuity.

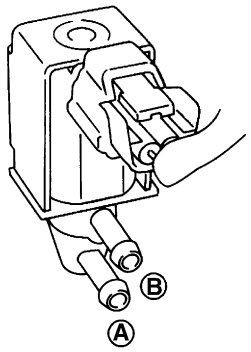

SEF660U

Condition PURG VOL CONT/V value	Air passage continuity between A and B
100.0%	Yes
0.0%	No

MTBL0241

OK or NG

OK	▶	GO TO 16.
NG	▶	Replace EVAP canister purge volume control solenoid valve.

15	CHECK EVAP CANISTER PURGE VOLUME CONTROL SOLENOID VALVE

Without CONSULT-II

Check air passage continuity.

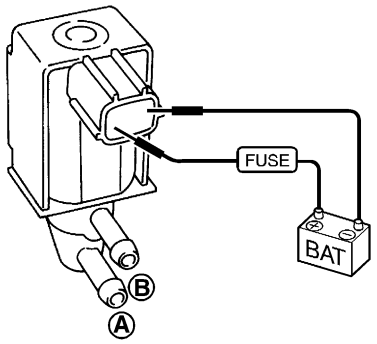

SEF661U

Condition	Air passage continuity between A and B
12V direct current supply between terminals 1 and 2	Yes
No supply	No

MTBL0242

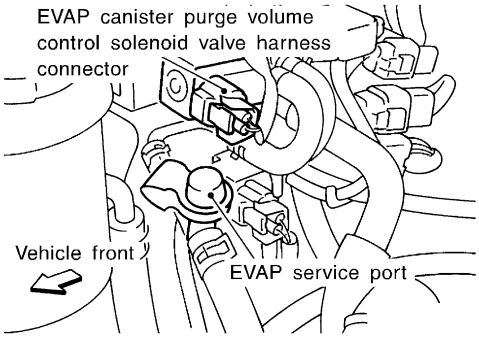

SEF339V

OK or NG

OK	▶	GO TO 16.
NG	▶	Replace EVAP canister purge volume control solenoid valve.

16	CHECK FUEL TANK TEMPERATURE SENSOR

Check resistance by heating with hot water or heat gun as shown in the figure.

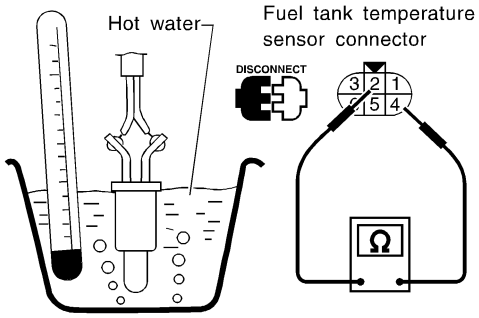

SEF852Z

Temperature °C (°F)	Resistance kΩ
20 (68)	2.3 - 2.7
50 (122)	0.79 - 0.90

MTBL0234

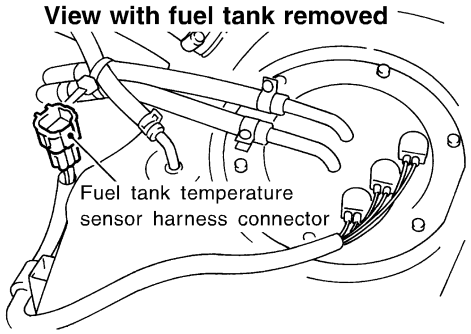

SEF334VA

OK or NG

OK	▶	GO TO 17.
NG	▶	Replace fuel tank temperature sensor, ***FE-4***.

17	CHECK EVAP CONTROL SYSTEM PRESSURE SENSOR

1. Remove EVAP control system pressure sensor with its harness connector connected.

View with spare tire removed

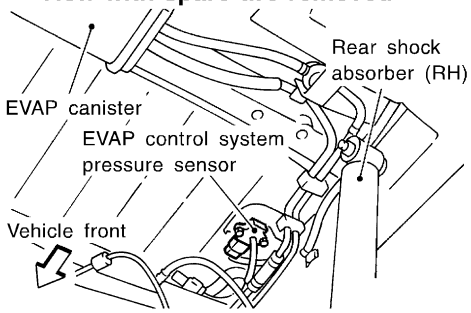

SEF341V

2. Remove hose from EVAP control system pressure sensor.
3. Turn ignition switch ON.
4. Use pump to apply vacuum and pressure to EVAP control system pressure sensor as shown in figure.
5. Check input voltage between ECM terminal 62 and ground.

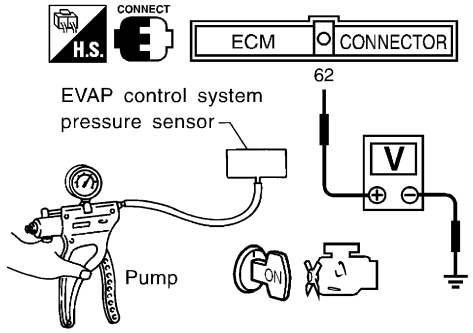

SEF894U

Pressure (Relative to atmosphericpressure)	Voltage (V)
0 kPa (0 mmHg, 0 inHg)	3.0 - 3.6
–9.3 kPa (–70 mmHg, –2.76 inHg)	0.4 - 0.6

MTBL0246

CAUTION:

- **Always calibrate the vacuum pump gauge when using it.**
- **Do not apply below −20 kPa (−150 mmHg, −5.91 inHg) or over 20 kPa (150 mmHg, 5.91 inHg) of pressure.**
- **Never apply force to the air hole protector of the sensor if equipped.**

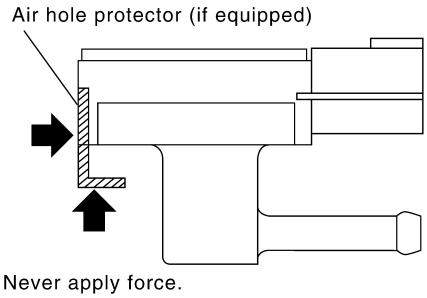

SEF799W

- **Discard and EVAP control system pressure sensor which has been dropped from a height of more than 0.5 m (19.7 in) onto a hard surface such as a concrete floor; use a new one.**

OK or NG

OK	▶	GO TO 18.
NG	▶	Replace EVAP control system pressure sensor.

Diagnostic Procedure (Cont'd)

18	CHECK FUEL LEVEL SENSOR	
1. Remove fuel level sensor assembly. Refer to ***FE-5***. 2. Refer to "FUEL LEVEL SENSOR UNIT CHECK", ***EL-82***.		
OK or NG		
OK	▶	GO TO 19.
NG	▶	Replace fuel level sensor.

19	CHECK INTERMITTENT INCIDENT
Refer to "TROUBLE DIAGNOSIS FOR INTERMITTENT INCIDENT", EC-148.	
▶	**INSPECTION END**

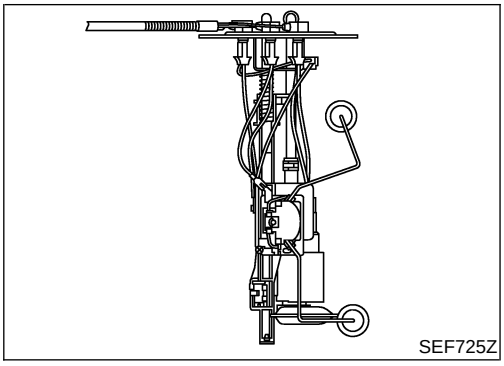
SEF725Z

Component Description

NEEC1012

The fuel level sensor is mounted in the fuel level sensor unit. The sensor detects a fuel level in the fuel tank and transmits a signal to the ECM.
It consists of two parts, one is mechanical float and the other side is variable resistor. Fuel level sensor output voltage changes depending on the movement of the fuel mechanical float.

On Board Diagnostic Logic

NEEC1013

When the vehicle is parked, naturally the fuel level in the fuel tank is stable. It means that output signal of the fuel level sensor does not change. If ECM senses sloshing signal from the sensor, fuel level sensor malfunction is detected.
Malfunction is detected when even though the vehicle is parked, a signal being varied is sent from the fuel level sensor to ECM.

Possible Cause

NEEC1014

- Fuel level sensor circuit
  (The fuel level sensor circuit is open or shorted.)
- Fuel level sensor

3

DATA MONITOR	
MONITOR	NO DTC
FUEL T/TMP SE	XXX °C
FUEL LEVEL SE	XXX V

SEF195Y

DTC Confirmation Procedure

NEEC1015

NOTE:
If "DTC Confirmation Procedure" has been previously conducted, always turn ignition switch "OFF" and wait at least 10 seconds before conducting the next test.

WITH CONSULT-II

NEEC1015S01

1) Turn ignition switch "ON".
2) Select "DATA MONITOR" mode with CONSULT-II.
3) Start engine and wait maximum of 2 consecutive minutes.
4) If 1st trip DTC is detected, go to "Diagnostic Procedure", EC-421.

WITH GST

NEEC1015S02

Follow the procedure "WITH CONSULT-II" above.

Wiring Diagram

NEEC1016

EC-FLS1-01

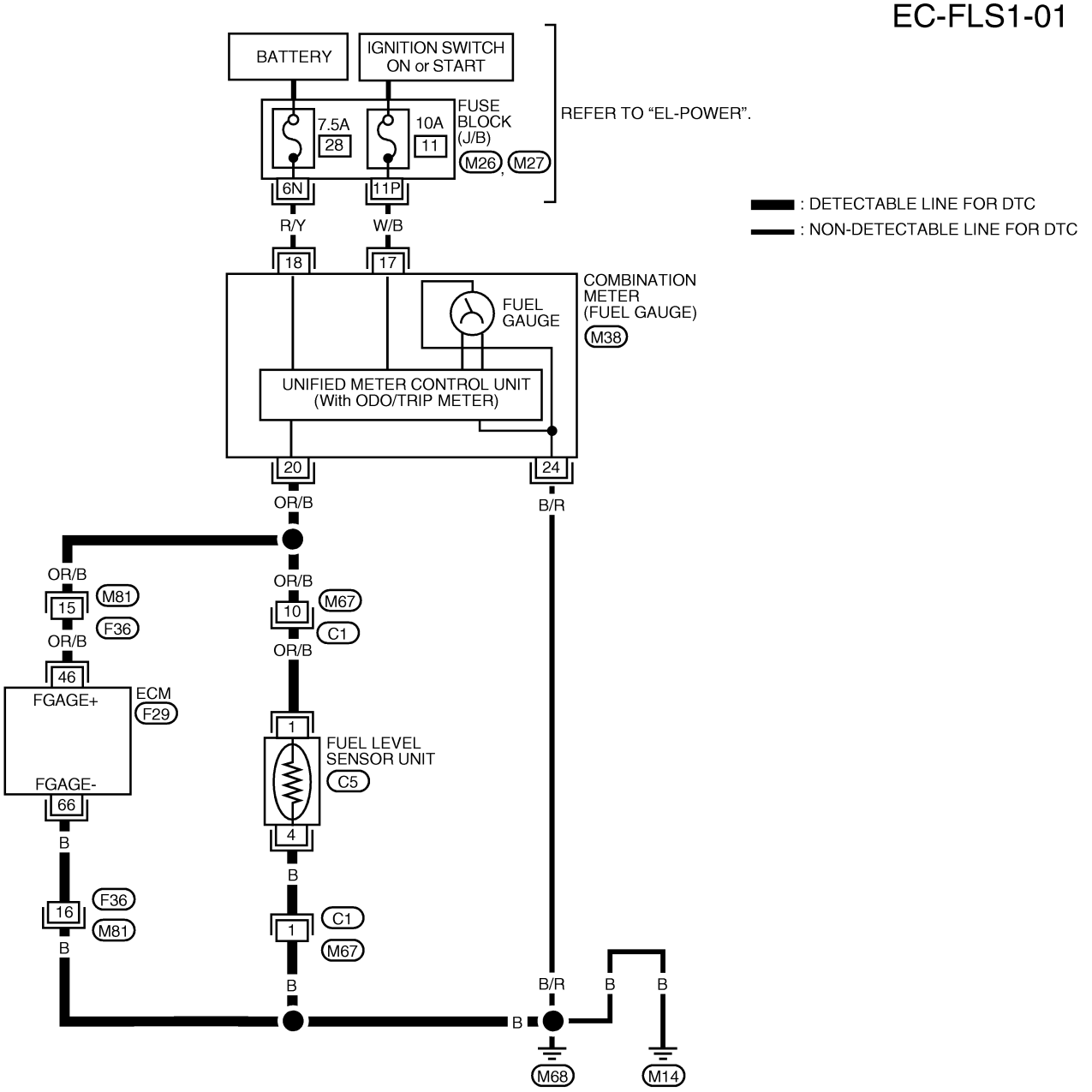

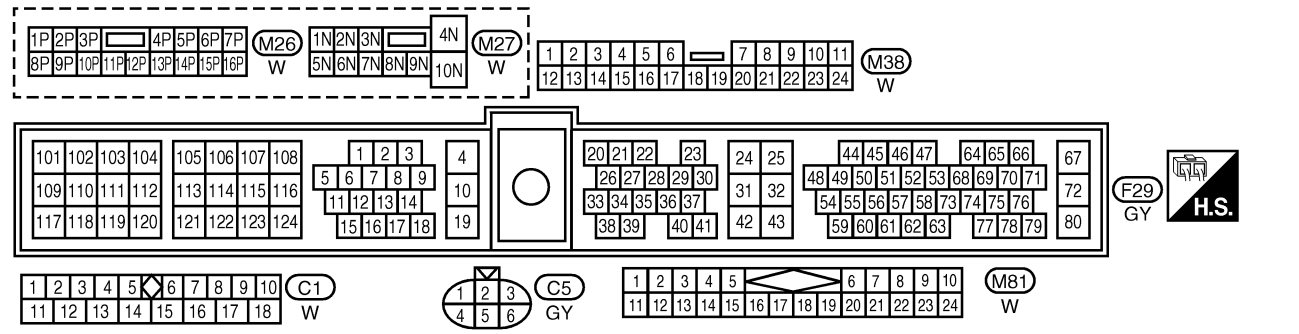

LEC534

Diagnostic Procedure

=NEEC1017

1	CHECK FUEL LEVEL SENSOR POWER SUPPLY CIRCUIT

1. Turn ignition switch “OFF”.
2. Disconnect fuel level sensor until harness connector.
3. Turn ignition switch “ON”.
4. Check voltage between fuel level sensor unit and fuel pump terminal 1 and ground with CONSULT-II or a tester.

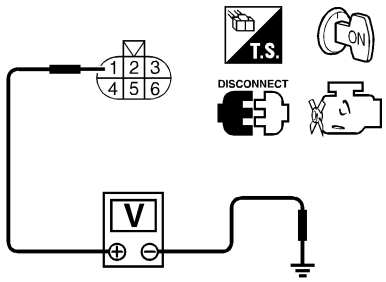

SEF863Z

Voltage: Battery voltage

OK or NG

OK	▶	GO TO 3.
NG	▶	GO TO 2.

2	DETECT MALFUNCTIONING PART

Check the following.
- Harness connectors M67, C1
- 7.5A fuse
- Harness for open or short between combination meter and fuel level sensor until and fuel pump

	▶	Repair or replace harness or connectors.

3	CHECK FUEL LEVEL SENSOR GROUND CIRCUIT FOR OPEN AND SHORT

1. Turn ignition switch “OFF”.
2. Check harness continuity between fuel level sensor unit terminal 4 and body ground. Refer to Wiring Diagram.
   Continuity should exist.
3. Also check harness for short to power.

OK or NG

OK	▶	GO TO 4.
NG	▶	Repair open circuit or short to power in harness or connectors.

4	CHECK FUEL LEVEL SENSOR INPUT SIGNAL CIRCUIT FOR OPEN AND SHORT

1. Disconnect ECM harness connector.
2. Check harness continuity between ECM terminal 46 and fuel level sensor unit terminal 1, ECM terminal 66 and fuel level sensor unit terminal 4. Refer to Wiring Diagram.
   Continuity should exist.
3. Also check harness for short to power.

OK or NG

OK	▶	GO TO 6.
NG	▶	GO TO 5.

Diagnostic Procedure (Cont'd)

5	DETECT MALFUNCTIONING PART
Check the following. ● Harness connectors M81, F36 ● Harness connectors M67, C1 ● Harness connectors F36, M81 ● Harness for open or short between ECM and fuel level sensor	
▶	Repair open circuit or short to ground or short to power in harness or connectors.

6	CHECK FUEL LEVEL SENSOR
Refer to ***EL-82***, "Fuel Level Sensor Unit Check".	
OK or NG	
OK ▶	GO TO 7.
NG ▶	Replace fuel level sensor unit.

7	CHECK INTERMITTENT INCIDENT
Refer to "TROUBLE DIAGNOSIS FOR INTERMITTENT INCIDENT", EC-148.	
▶	**INSPECTION END**

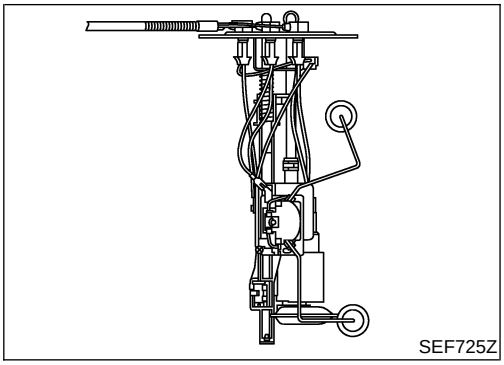
SEF725Z

Component Description

=NEEC1018

The fuel level sensor is mounted in the fuel level sensor unit. The sensor detects a fuel level in the fuel tank and transmits a signal to the ECM.
It consists of two parts, one is mechanical float and the other side is variable resistor. Fuel level sensor output voltage changes depending on the movement of the fuel mechanical float.

On Board Diagnostic Logic

NEEC1019

Driving long distances naturally affect fuel gauge level.
This diagnosis detects the fuel gauge malfunction of the gauge not moving even after a long distance has been driven.
Malfunction is detected when the output signal of the fuel level sensor does not change within the specified range even though the vehicle has been driven a long distance.

Possible Cause

NEEC1020

- Harness or connectors
  (The level sensor circuit is open or shorted.)
- Fuel level sensor

Overall Function Check

NEEC1021

Use this procedure to check the overall function of the fuel level sensor function. During this check, a 1st trip DTC might not be confirmed.

WARNING:

When performing following procedure, be sure to observe the handling of the fuel. Refer to *FE-5*, "Fuel Tank".

TESTING CONDITION:

Before starting overall function check, preparation of draining fuel and refilling fuel is required.

7

DATA MONITOR	
MONITOR	NO DTC
FUEL T/TMP SE	XXX °C
FUEL LEVEL SE	XXX V

SEF195Y

WITH CONSULT-II

NEEC1021S01

NOTE:

Start from step 11, if it is possible to confirm that the fuel cannot be drained by 30ℓ (7-7/8 US gal, 6-5/8 Imp gal) in advance.

1) Prepare a fuel container and a spare hose.
2) Release fuel pressure from fuel line, refer to "Fuel Pressure Release", EC-56.
3) Remove the fuel feed hose on the fuel level sensor unit.
4) Connect a spare fuel hose where the fuel feed hose was removed.

5) Turn ignition switch "OFF" and wait at least 10 seconds then turn "ON".
6) Select "FUEL LEVEL SE" in "DATA MONITOR" mode with CONSULT-II.
7) Check "FUEL LEVEL SE" output voltage and note it.
8) Select "FUEL PUMP" in "ACTIVE TEST" mode with CONSULT-II.
9) Touch "ON" and drain fuel approximately 30ℓ (7-7/8 US gal, 6-5/8 Imp gal) and stop it.
10) Fill fuel into the fuel tank for 30ℓ (7-7/8 US gal, 6-5/8 Imp gal).
11) Check "FUEL LEVEL SE" output voltage and note it.
12) Check "FUEL LEVEL SE" output voltage and confirm whether the voltage changes more than 0.03V during step 7 to 11.
If NG, check the fuel level sensor, refer to ***EL-82***, "FUEL LEVEL SENSOR UNIT CHECK".

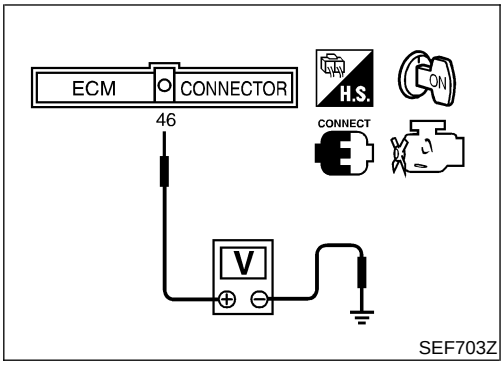

WITH GST

NEEC1021S02

NOTE:
Start from step 11, if it is possible to confirm that the fuel cannot be drained by 30ℓ (7-7/8 US gal, 6-5/8 Imp gal) in advance.

1) Prepare a fuel container and a spare hose.
2) Release fuel pressure from fuel line, refer to "Fuel Pressure Release", EC-56.
3) Remove the fuel feed hose on the fuel level sensor unit.
4) Connect a spare fuel hose where the fuel feed hose was removed.
5) Turn ignition switch "OFF".
6) Set voltmeters probe between ECM terminal 46 (fuel level sensor signal) and ground.
7) Turn ignition switch "ON".
8) Check voltage between ECM terminal 46 and ground and note it.
9) Drain fuel by 30ℓ (7-7/8 US gal, 6-5/8 Imp gal) from the fuel tank using proper equipment.
10) Fill fuel into the fuel tank for 30ℓ (7-7/8 US gal, 6-5/8 Imp gal).
11) Confirm that the voltage between ECM terminal 46 and ground changes more than 0.03V during step 8 - 10.
If NG, check component of fuel level sensor, refer to ***EL-82***, "FUEL LEVEL SENSOR UNIT CHECK".

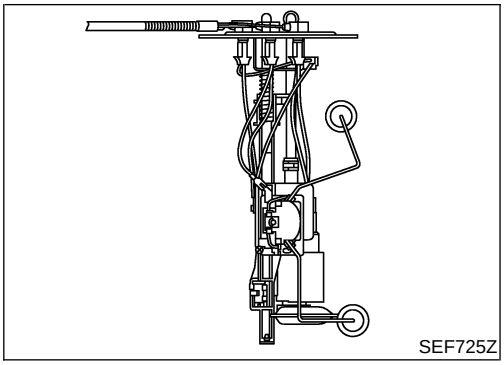
SEF725Z

Component Description

NEEC1022

The fuel level sensor is mounted in the fuel level sensor unit. The sensor detects a fuel level in the fuel tank and transmits a signal to the ECM.
It consists of two parts, one is mechanical float and the other side is variable resistor. Fuel level sensor output voltage changes depending on the movement of the fuel mechanical float.

On Board Diagnostic Logic

NEEC1023

ECM receives two signals from the fuel level sensor circuit.
One is fuel level sensor power supply circuit, and the other is fuel level sensor ground circuit.
This diagnosis indicates the former, to detect open or short circuit malfunction.
Malfunction is detected when an excessively low or high voltage is sent from the sensor is sent to ECM.

Possible Cause

NEEC1024

- Fuel level sensor circuit
  (The fuel level sensor circuit is open or shorted.)
- Fuel level sensor

DTC Confirmation Procedure

NEEC1025

NOTE:
If “DTC Confirmation Procedure” has been previously conducted, always turn ignition switch “OFF” and wait at least 10 seconds before conducting the next test.

TESTING CONDITION:
Before performing the following procedure, confirm that battery voltage is more than 11V at ignition switch “ON”.

2

DATA MONITOR	
MONITOR	NO DTC
FUEL T/TMP SE	XXX °C
FUEL LEVEL SE	XXX V

SEF195Y

WITH CONSULT-II

NEEC1025S01

1) Turn ignition switch “ON”.
2) Select “DATA MONITOR” mode with CONSULT-II.
3) Wait at least 5 seconds.
4) If 1st trip DTC is detected, go to “Diagnostic Procedure”, EC-427.

WITH GST

NEEC1025S02

Follow the procedure “WITH CONSULT-II” above.

Wiring Diagram

NEEC1026

EC-FLS2-01

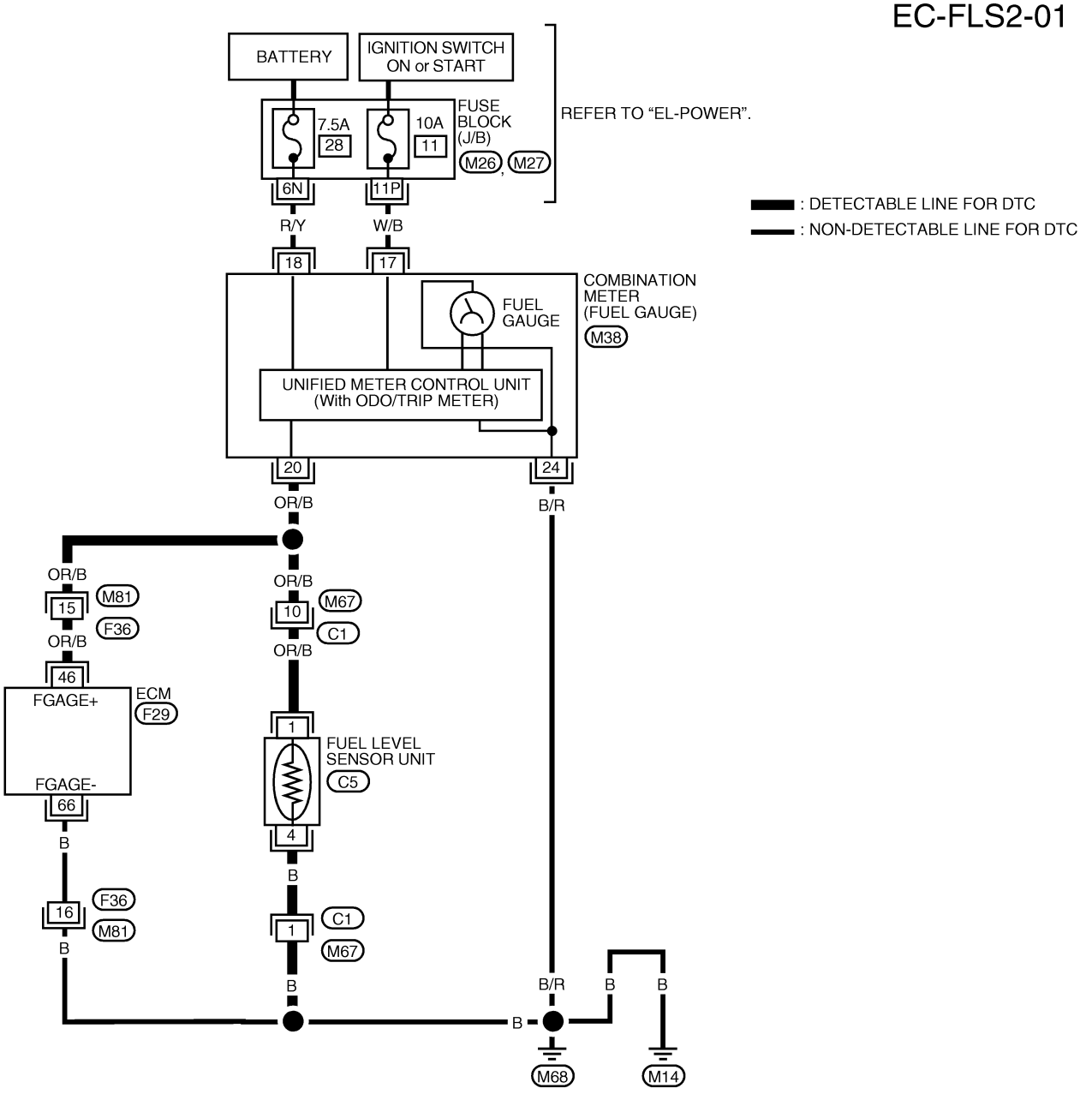

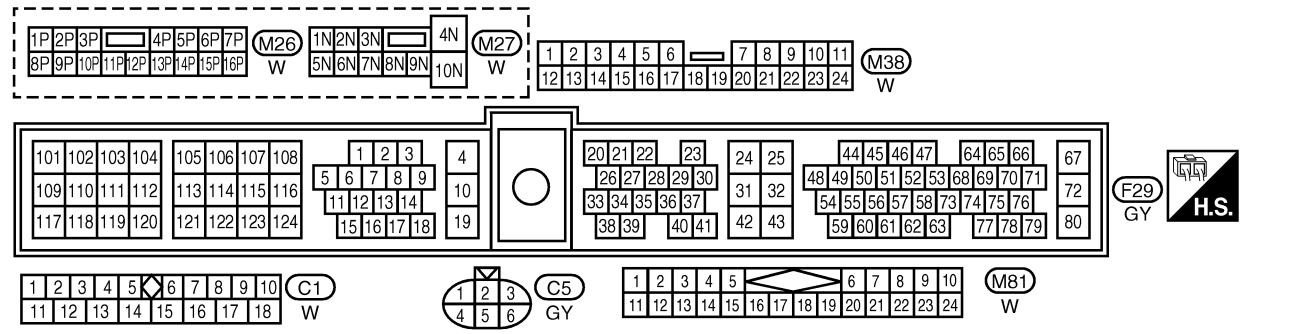

LEC535

Diagnostic Procedure

=NEEC1027

1	CHECK FUEL LEVEL SENSOR POWER SUPPLY CIRCUIT

1. Turn ignition switch “OFF”.
2. Disconnect fuel level sensor until harness connector.
3. Turn ignition switch “ON”.
4. Check voltage between fuel level sensor unit terminal 1 and ground, ECM terminal 46 and ground with CONSULT-II or tester.

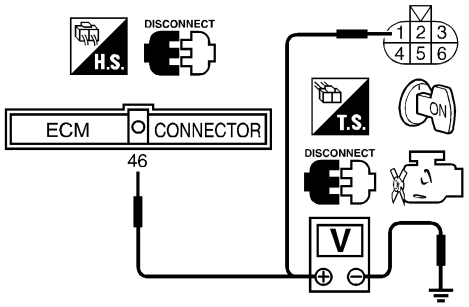

SEF864Z

Voltage: Battery voltage

OK or NG

OK	▶	GO TO 3.
NG	▶	GO TO 2.

2	DETECT MALFUNCTIONING PART

Check the following.
- Harness connectors M67, C1 and M81, F36
- 7.5A fuse
- Harness for open or short between combination meter and fuel level sensor until

	▶	Repair or replace harness or connectors.

3	CHECK FUEL LEVEL SENSOR GROUND CIRCUIT FOR OPEN AND SHORT

1. Turn ignition switch “OFF”.
2. Check harness continuity between fuel level sensor unit terminal 4 and body ground. Refer to Wiring Diagram.
   Continuity should exist.
3. Also check harness for short to power.

OK or NG

OK	▶	GO TO 4.
NG	▶	Repair open circuit or short to power in harness or connectors.

4	CHECK FUEL LEVEL SENSOR INPUT SIGNAL CIRCUIT FOR OPEN AND SHORT

1. Disconnect ECM harness connector.
2. Check harness continuity between ECM terminal 46 and fuel level sensor unit terminal 1. Refer to Wiring Diagram.
   Continuity should exist.
3. Also check harness for short to power.

OK or NG

OK	▶	GO TO 6.
NG	▶	GO TO 5.

Diagnostic Procedure (Cont'd)

5	DETECT MALFUNCTIONING PART
Check the following. ● Harness connectors M81, F36 ● Harness connectors M67, C1 ● Harness for open or short between ECM and fuel level sensor	
▶	Repair open circuit or short to power in harness on connectors.

6	CHECK FUEL LEVEL SENSOR
Refer to ***EL-82***, "Fuel Level Sensor Unit Check".	
OK or NG	
OK ▶	GO TO 7.
NG ▶	Replace fuel level sensor unit.

7	CHECK INTERMITTENT INCIDENT
Refer to "TROUBLE DIAGNOSIS FOR INTERMITTENT INCIDENT", EC-148.	
▶	**INSPECTION END**

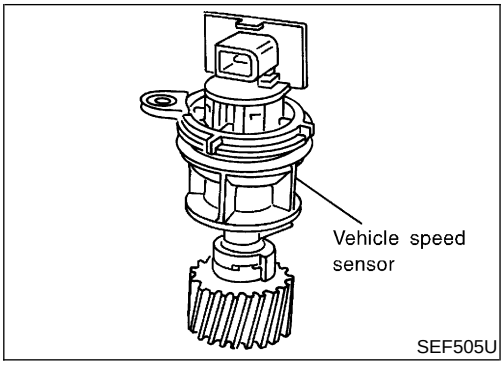

Component Description

NEEC0272

The vehicle speed sensor is installed in the transaxle. It contains a pulse generator which provides a vehicle speed signal to the speedometer. The speedometer then sends a signal to the ECM.

ECM Terminals and Reference Value

NEEC0273

Specification data are reference values and are measured between each terminal and ground.

CAUTION:

Do not use ECM ground terminals when measuring input/output voltage. Doing so may result in damage to the ECM's transistor. Use a ground other than ECM terminals, such as the ground.

TERMINAL NO.	WIRE COLOR	ITEM	CONDITION	DATA (DC Voltage)
29	G/B	Vehicle speed sensor	**[Engine is running]** ● Lift up the vehicle ● In 2nd gear position ● Vehicle speed is 40 km/h (25 MPH)	1 - 4V 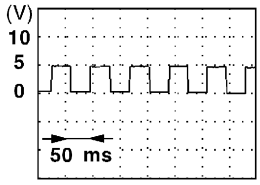 SEF003W

On Board Diagnosis Logic

NEEC0274

DTC No.	Malfunction is detected when ...	Check Items (Possible Cause)
P0500	● The almost 0 km/h (0 MPH) signal from vehicle speed sensor is sent to ECM even when vehicle is being driven.	● Harness or connector (The vehicle speed sensor circuit is open or shorted.) ● Vehicle speed sensor

DTC Confirmation Procedure

NEEC0275

CAUTION:

Always drive vehicle at a safe speed.

NOTE:

If "DTC Confirmation Procedure" has been previously conducted, always turn ignition switch OFF and wait at least 5 seconds before conducting the next test.

TESTING CONDITION:

This procedure may be conducted with the drive wheels lifted in the shop or by driving the vehicle. If a road test is expected to be easier, it is unnecessary to lift the vehicle.

DTC Confirmation Procedure (Cont'd)

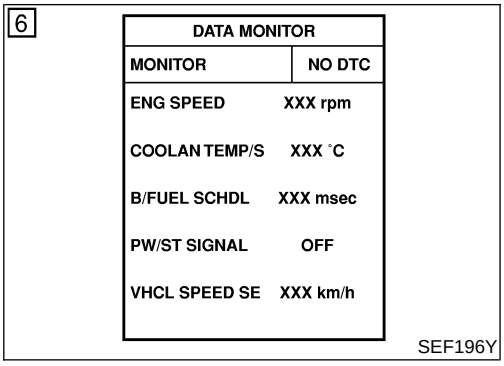

With CONSULT-II

1) Start engine
2) Read vehicle speed sensor signal in "DATA MONITOR" mode with CONSULT-II. The vehicle speed on CONSULT-II should exceed 10 km/h (6 MPH) when rotating wheels with suitable gear position.
3) If NG, go to "Diagnostic Procedure", EC-433.
   If OK, go to following step.
4) Select "DATA MONITOR" mode with CONSULT-II.
5) Warm engine up to normal operating temperature.
6) Maintain the following conditions for at least 10 consecutive seconds.

ENG SPEED	1,800 - 6,000 rpm (M/T) 1,600 - 6,000 rpm (A/T)
COOLAN TEMP/S	More than 70°C (158°F)
B/FUEL SCHDL	7 - 15 msec (M/T) 6 - 16 msec (A/T)
Selector lever	Suitable position
PW/ST SIGNAL	OFF

7) If 1st trip DTC is detected, go to "Diagnostic Procedure", EC-433.

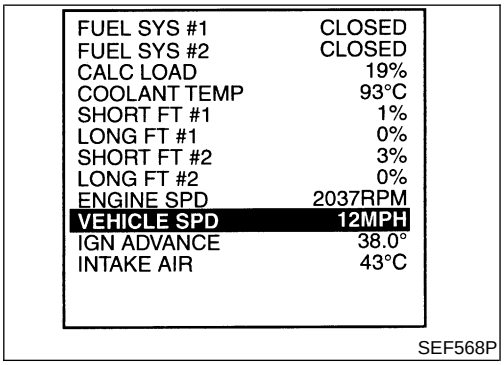

Overall Function Check

NEEC0276

Use this procedure to check the overall function of the EVAP canister vent control valve circuit. During this check, a 1st trip DTC might not be confirmed.

With GST

1) Lift up drive wheels.
2) Start engine.
3) Read vehicle speed sensor signal in "MODE 1" with GST.
   The vehicle speed sensor on GST should be able to exceed 10 km/h (6 MPH) when rotating wheels with suitable gear position.
4) If NG, go to "Diagnostic Procedure", EC-433.

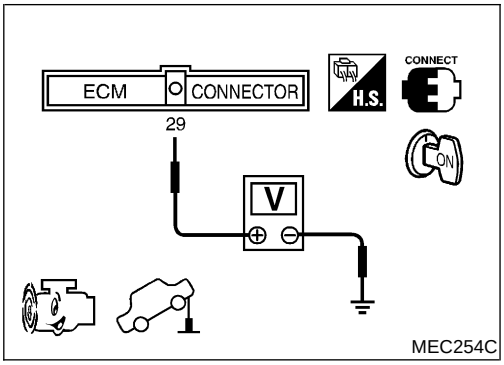

No Tools

1) Lift up drive wheels.
2) Start engine.
3) Read the voltage signal between ECM terminal 29 (Vehicle speed sensor signal) and ground with oscilloscope.
4) Verify that the oscilloscope screen shows the signal wave as shown at "ECM Terminals and Reference Value", EC-429.
5) If NG, go to "Diagnostic Procedure", EC-433.

Wiring Diagram

NEEC0277

EC-VSS-01

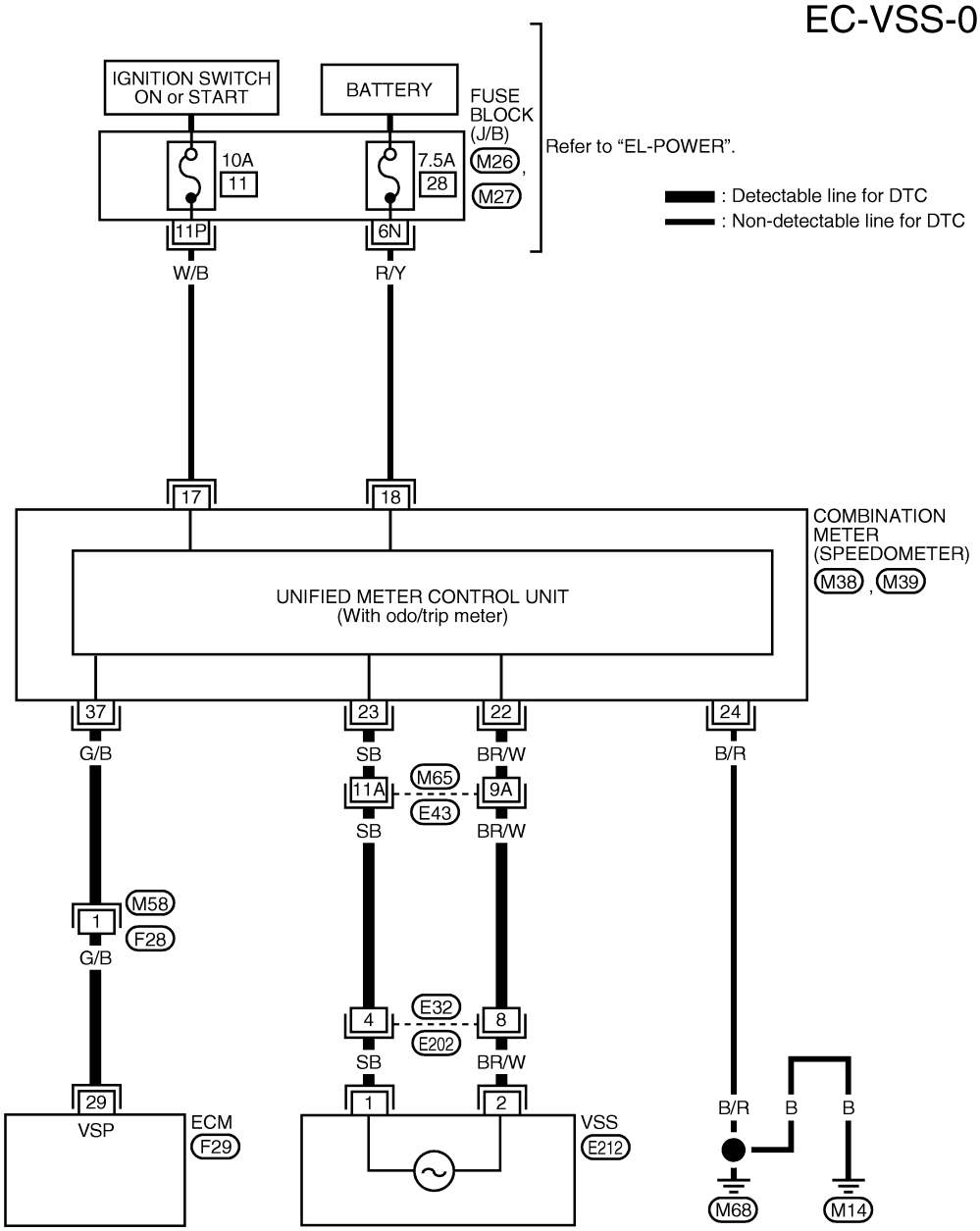

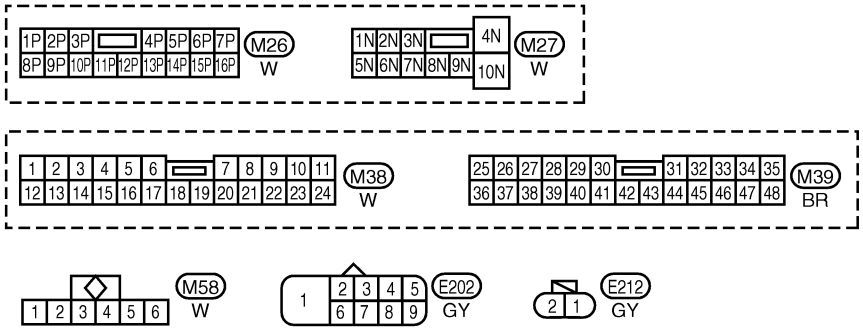

Refer to the following.
M65, E43 - SUPER MULTIPLE JUNCTION (SMJ)
F29 - ELECTRICAL UNITS

LEC529

Diagnostic Procedure

NEEC1054

1	CHECK INPUT SIGNAL CIRCUIT

1. Turn ignition switch OFF.
2. Disconnect ECM harness connector and combination meter harness connector M39.
3. Check harness continuity between ECM terminal 29 and meter terminal 37.

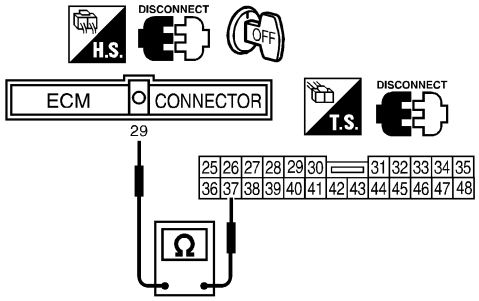

SEF853Z

Continuity should exist.

4. Also check harness for short to ground and short to power.

OK or NG

OK	▶	GO TO 3.
NG	▶	GO TO 2.

2	DETECT MALFUNCTIONING PART

Check the following.
- Harness connectors M58, F28
- Harness for open or short between ECM and combination meter

	▶	Repair open circuit or short to ground or short to power in harness or connectors.

3	CHECK SPEEDOMETER FUNCTION

Make sure that speedometer functions properly.

OK or NG

OK	▶	GO TO 5.
NG	▶	GO TO 4.

4	DETECT MALFUNCTIONING PART

Check the following.
- Harness connectors E43, M65
- Harness connectors E32, E202
- Harness for open or short between combination meter and vehicle speed sensor

	▶	Repair harness or connectors. Check vehicle speed sensor and its circuit. Refer to ***EL-79***.

5	CHECK INTERMITTENT INCIDENT

Perform “TROUBLE DIAGNOSIS FOR INTERMITTENT INCIDENT”, EC-148.

	▶	**INSPECTION END**

Description

NEEC0279

SYSTEM DESCRIPTION

NEEC0279S01

Sensor	Input Signal to ECM	ECM function	Actuator
Camshaft position sensor	Engine speed	ECM	IACV-AAC valve
Mass air flow sensor	Amount of intake air		
Engine coolant temperature sensor	Engine coolant temperature		
Ignition switch	Start signal		
Throttle position sensor	Throttle position		
PNP switch	Park/Neutral position		
Air conditioner switch	Air conditioner operation		
Power steering oil pressure switch	Power steering load signal		
Battery	Battery voltage		
Vehicle speed sensor	Vehicle speed		
Absolute pressure sensor	Ambient barometric pressure		
Intake air temperature sensor	Intake air temperature		

This system automatically controls engine idle speed to a specified level. Idle speed is controlled through fine adjustment of the amount of air which bypasses the throttle valve via IACV-AAC valve. The IACV-AAC valve repeats ON/OFF operation according to the signal sent from the ECM. The camshaft position sensor detects the actual engine speed and sends a signal to the ECM. The ECM then controls the ON/OFF time of the IACV-AAC valve so that engine speed coincides with the target value memorized in ECM. The target engine speed is the lowest speed at which the engine can operate steadily. The optimum value stored in the ECM is determined by taking into consideration various engine conditions, such as during warm up, deceleration, and engine load (air conditioner, power steering and cooling fan operation).

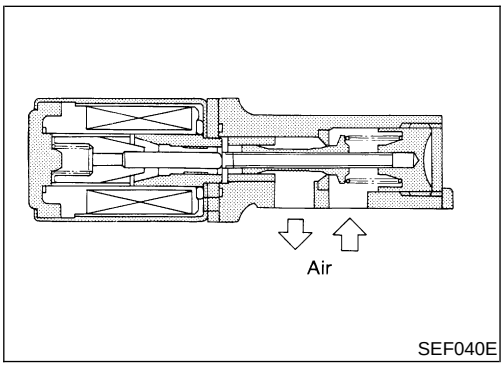

COMPONENT DESCRIPTION

NEEC0279S02

The IAC valve-AAC valve is moved by ON/OFF pulses from the ECM. The longer the ON pulse, the greater the amount of air that will flow through the valve. The more air that flows through the valve, the higher the idle speed.

CONSULT-II Reference Value in Data Monitor Mode

NEEC0280

MONITOR ITEM	CONDITION		SPECIFICATION
IACV-AAC/V	• Engine: After warming up • Air conditioner switch: OFF • Shift lever: “N” • No-load	Idle	Approx. 30%
		2,000 rpm	—

ECM Terminals and Reference Value

NEEC0281

Specification data are reference values and are measured between each terminal and ground.

CAUTION:

Do not use ECM ground terminals when measuring input/output voltage. Doing so may result in damage to the ECM’s transistor. Use a ground other than ECM terminals, such as the ground.

TERMINAL NO.	WIRE COLOR	ITEM	CONDITION	DATA (DC Voltage)
101	OR/L	IACV-AAC valve	**[Engine is running]** • **Warm-up condition** • Idle speed	10.5 - 11.5V 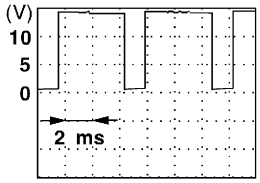 SEF015W
			[Engine is running] • **Warm-up condition** • Engine speed is 2,000 rpm	1 - 13V 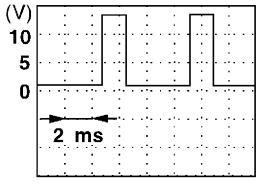 SEF016W

On Board Diagnosis Logic

NEEC0282

DTC No.		Malfunction is detected when ...	Check Items (Possible Cause)
P0505	A)	The IACV-AAC valve does not operate properly.	• Harness or connectors (The IACV-AAC valve circuit is open.) • IACV-AAC valve
	B)	The IACV-AAC valve does not operate properly.	• Harness or connectors (The IACV-AAC valve circuit is shorted.) • IACV-AAC valve

DTC Confirmation Procedure

=NEEC0283

NOTE:

- If “DTC Confirmation Procedure” has been previously conducted, always turn ignition switch OFF and wait at least 5 seconds before conducting the next test.
- **Perform “Procedure for malfunction A” first. If DTC cannot be confirmed, perform “Procedure for malfunction B”.**

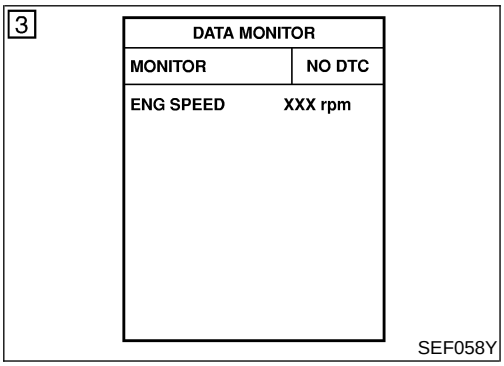

PROCEDURE FOR MALFUNCTION A

NEEC0283S01

TESTING CONDITION:

Before performing the following procedure, confirm battery voltage is more than 10.5V with ignition switch ON.

With CONSULT-II

1) Turn ignition switch ON.
2) Select “DATA MONITOR” mode with CONSULT-II.
3) Start engine and run it at idle at least 2 seconds.
4) If 1st trip DTC is detected, go to “Diagnostic Procedure”, EC-438.

With GST

Follow the procedure “With CONSULT-II”.

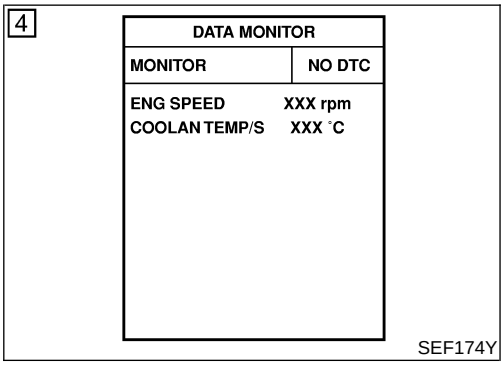

PROCEDURE FOR MALFUNCTION B

NEEC0283S02

TESTING CONDITION:

- **Before performing the following procedure, make sure battery voltage is more than 11V at idle.**
- **Always perform at a temperature above –10°C (14°F).**

With CONSULT-II

1) Start engine and warm it up to normal operating temperature.
2) Turn ignition switch OFF and wait at least 5 seconds.
3) Turn ignition switch ON again and select “DATA MONITOR” mode with CONSULT-II.
4) Start engine and run it for at least 6 minute at idle speed.
5) If 1st trip DTC is detected, go to “Diagnostic Procedure”, EC-438.

With GST

Follow the procedure “With CONSULT-II”.

Wiring Diagram

NEEC0284

EC-AAC/V-01

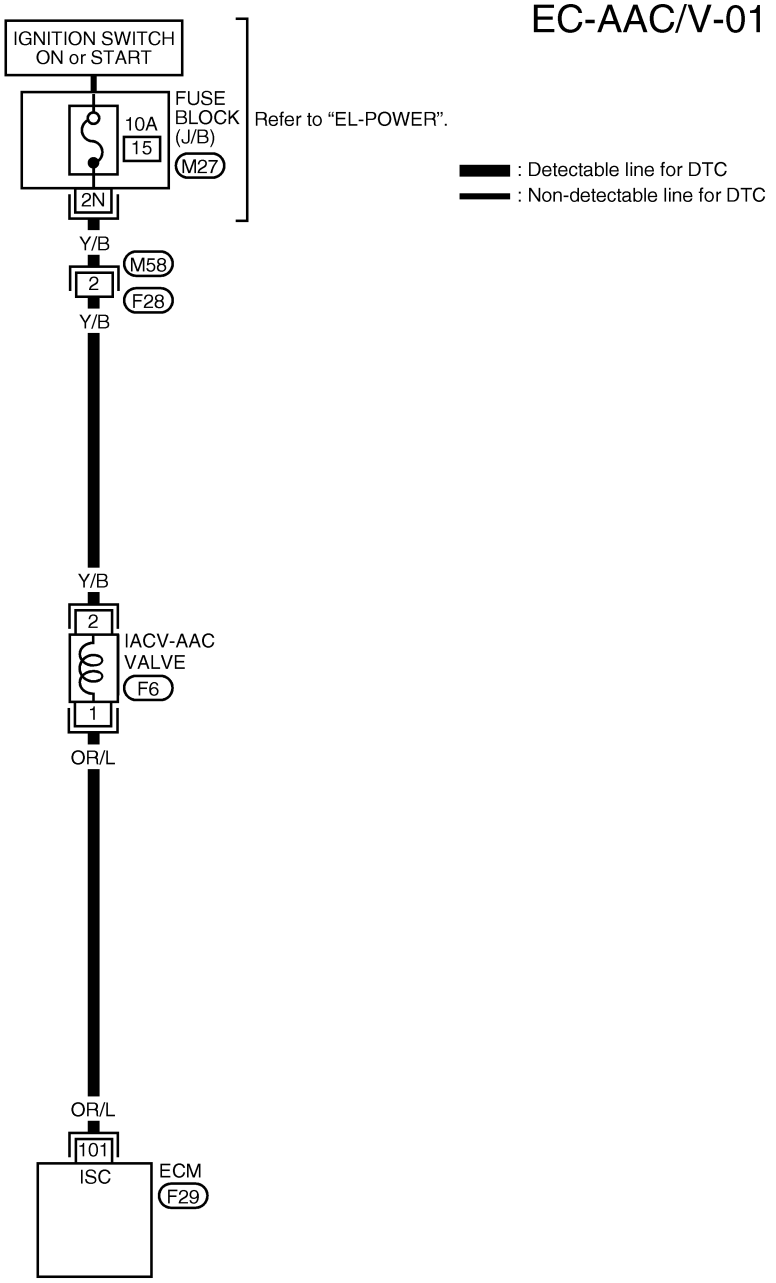

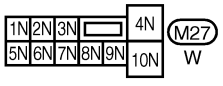

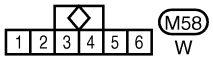



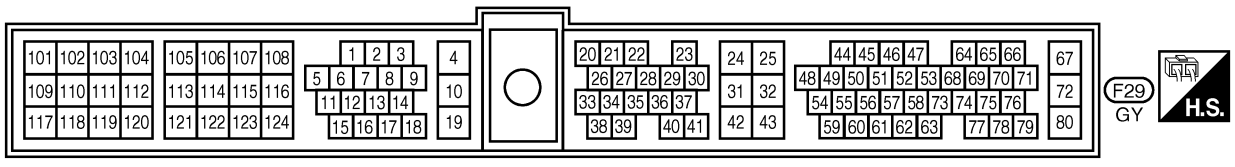

AEC001B

Diagnostic Procedure

NEEC0285

1	CHECK POWER SUPPLY

1. Stop engine.
2. Disconnect IACV-AAC valve harness connector.

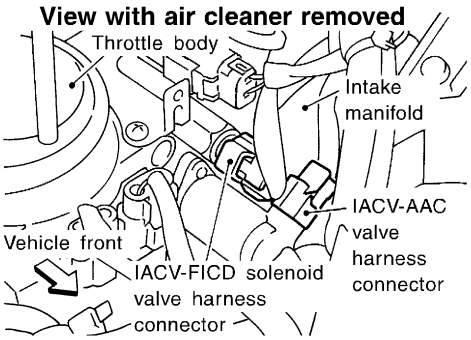

SEF342V

3. Turn ignition switch ON.
4. Check voltage between terminal 2 and ground with CONSULT-II or tester.

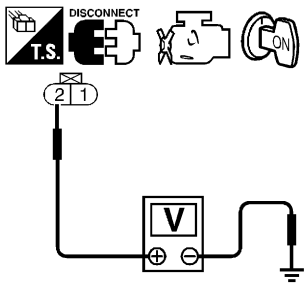

SEF247W

Voltage: Battery voltage

OK or NG

OK	▶	GO TO 3.
NG	▶	GO TO 2.

2	DETECT MALFUNCTIONING PART

Check the following.
- Harness connectors M58, F28
- 10A fuse
- Harness for open or short between IACV-AAC valve harness connector and 10A fuse

	▶	Repair harness or connectors.

3	CHECK OUTPUT SIGNAL CIRCUIT

1. Turn ignition switch OFF.
2. Disconnect ECM harness connector.
3. Check harness continuity between ECM terminal 101 and terminal 1.

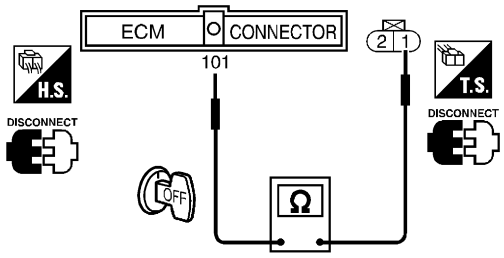

SEF248W

Continuity should exist.

4. Also check harness for short to ground and short to power.

OK or NG

OK	▶	GO TO 4.
NG	▶	Repair open circuit or short to ground or short to power in harness or connectors.

4	CHECK IACV-AAC VALVE

Disconnect IACV-AAC valve harness connector.

- Check IACV-AAC valve resistance.

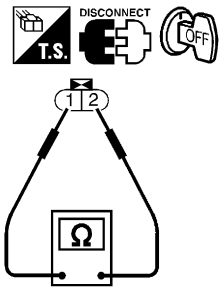

SEF249W

Resistance: Approximately 10 Ω [at 25°C (77°F)]

- Check plunger for seizing or sticking.
- Check for broken spring.

OK or NG

OK	▶	GO TO 5.
NG	▶	Replace IACV-AAC valve.

5	CHECK INTERMITTENT INCIDENT

Perform "TROUBLE DIAGNOSIS FOR INTERMITTENT INCIDENT", EC-148.

▶ **INSPECTION END**

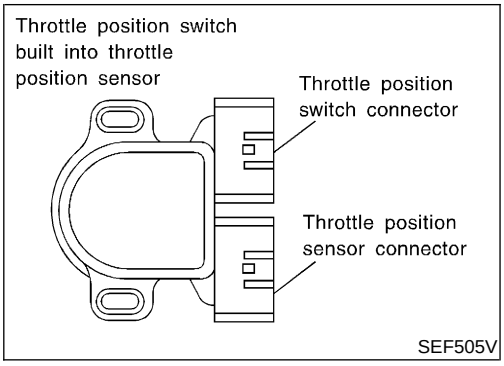

Component Description

NEEC0287

A closed throttle position switch and wide open throttle position switch are built into the throttle position sensor unit. The wide open throttle position switch is used only for A/T control.
When the throttle valve is in the closed position, the closed throttle position switch sends a voltage signal to the ECM. The ECM only uses this signal to open or close the EVAP canister purge control valve when the throttle position sensor is malfunctioning.

ECM Terminals and Reference Value

NEEC0288

Specification data are reference values and are measured between each terminal and ground.

CAUTION:

Do not use ECM ground terminals when measuring input/output voltage. Doing so may result in damage to the ECM's transistor. Use a ground other than ECM terminals, such as the ground.

TERMINAL NO.	WIRE COLOR	ITEM	CONDITION	DATA (DC Voltage)
28	BR/W	Throttle position switch (Closed position)	**[Ignition switch ON]** ● **Warm-up condition** ● Accelerator pedal released	BATTERY VOLTAGE (11 - 14V)
			[Ignition switch ON] ● Accelerator pedal depressed	Approximately 0V

On Board Diagnosis Logic

NEEC0289

DTC No.	Malfunction is detected when ...	Check Items (Possible Cause)
P0510	● Battery voltage from the closed throttle position switch is sent to ECM with the throttle valve opened.	● Harness or connectors (The closed throttle position switch circuit is shorted.) ● Closed throttle position switch ● Throttle position sensor

4

DATA MONITOR	
MONITOR	NO DTC
ENG SPEED	XXX rpm
COOLAN TEMP/S	XXX °C
CLSD THL/P SW	ON

SEF197Y

DATA MONITOR	
MONITOR	NO DTC
COOLAN TEMP/S	XXX °C
VHCL SPEED SE	XXX km/h
THRTL POS SEN	XXX V

SEF198Y

DTC Confirmation Procedure

=NEEC0290

CAUTION:

Always drive vehicle at a safe speed.

NOTE:

If "DTC Confirmation Procedure" has been previously conducted, always turn ignition switch OFF and wait at least 5 seconds before conducting the next test.

With CONSULT-II

1) Start engine and warm it up to normal operating temperature.
2) Select "CLSD THL/P SW" in "DATA MONITOR" mode with CONSULT-II and check the value under the following conditions.

Condition	Voltage
At idle	ON
At 2,000 rpm	OFF

If the result is NG, go to "Diagnostic Procedure", EC-443.
If OK, go to following step.

3) Select "DATA MONITOR" mode with CONSULT-II.
4) Drive the vehicle for at least 5 consecutive seconds under the following condition.

THRTL POS SEN	More than 2.5V
VHCL SPEED SE	More than 4 km/h (2 MPH)
Selector lever	Suitable position
Driving pattern	Driving vehicle uphill (Increased engine load) will help maintain the driving conditions required for this test.

5) If 1st trip DTC is detected, go to "Diagnostic Procedure", EC-443.

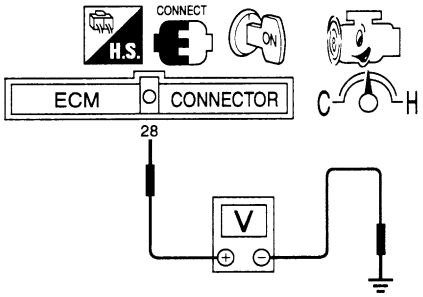

SEF422Q

Overall Function Check

NEEC0291

Use this procedure to check the overall function of the closed throttle position switch circuit. During this check, a 1st trip DTC might not be confirmed.

Without CONSULT-II

1) Start engine and warm it up to normal operating temperature.
2) Check the voltage between ECM terminal 28 (Closed throttle position switch signal) and ground under the following conditions.

Condition	Voltage
At idle	Battery voltage
At 2,000 rpm	Approximately 0 - 1V

3) If NG, go to "Diagnostic Procedure", EC-443.

Wiring Diagram

NEEC0292

EC-TP/SW-01

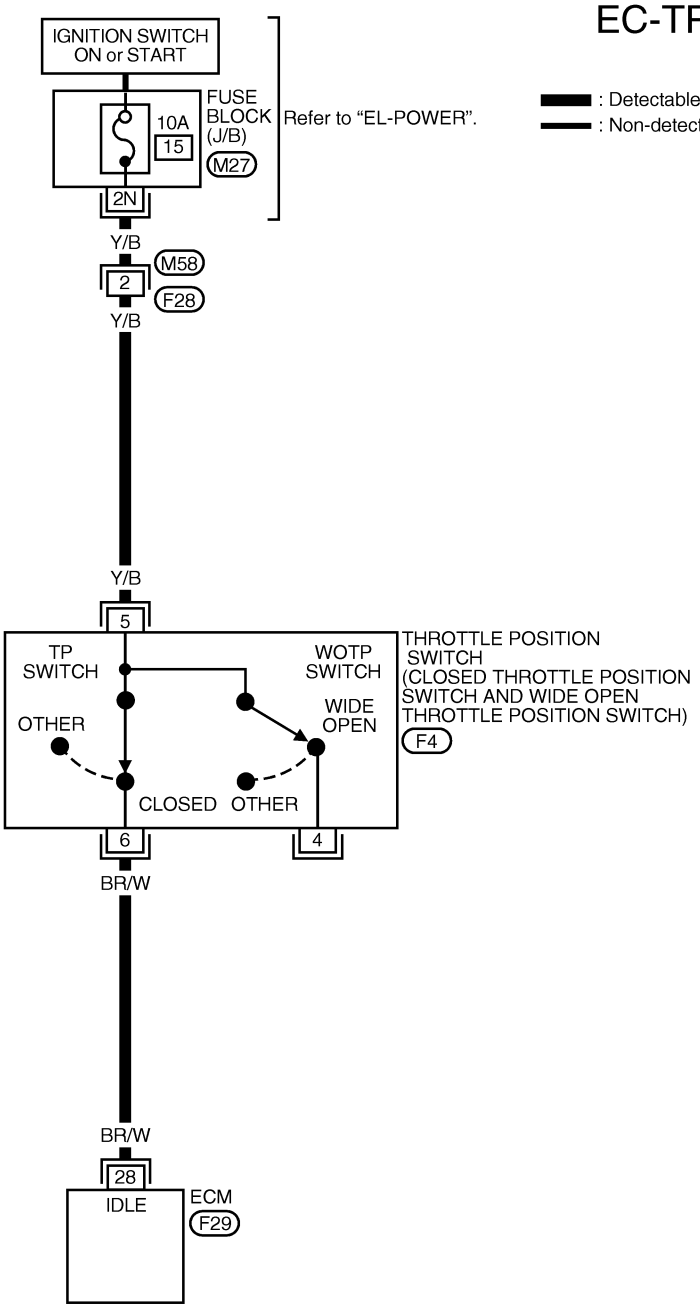

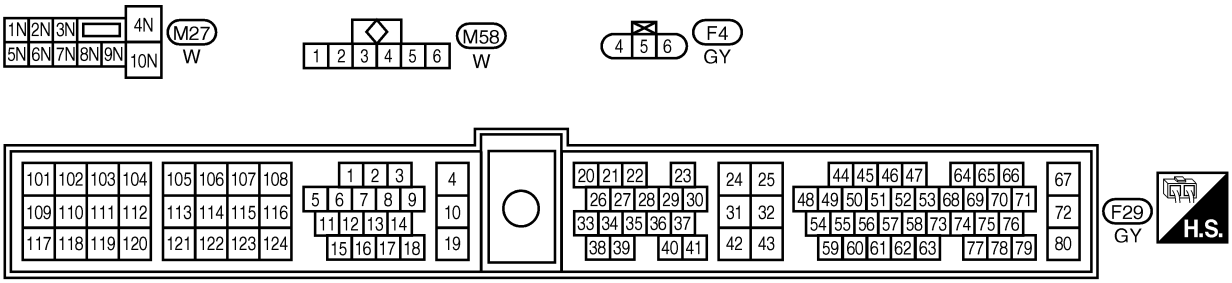

AEC002B

Diagnostic Procedure

NEEC0293

1	CHECK POWER SUPPLY

1. Turn ignition switch OFF.
2. Disconnect throttle position switch harness connector.

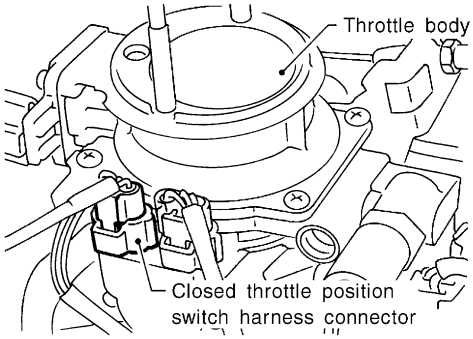

SEF158S

3. Turn ignition switch ON.
4. Check voltage between terminal 5 and engine ground with CONSULT-II or tester.

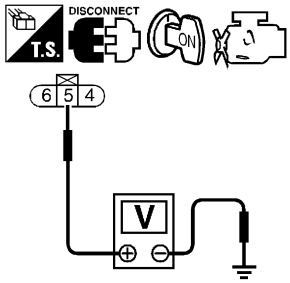

SEF250W

Voltage: Battery voltage

OK or NG

OK	▶	GO TO 3.
NG	▶	GO TO 2.

2	DETECT MALFUNCTIONING PART

Check the following.
- Harness connectors M58, F28
- 10A fuse
- Harness for open or short between throttle position switch and 10A fuse

	▶	Repair harness or connectors.

Diagnostic Procedure (Cont'd)

3	CHECK INPUT SIGNAL CIRCUIT

1. Turn ignition switch OFF.
2. Disconnect ECM harness connector.
3. Check harness continuity between ECM terminal 28 and terminal 6.

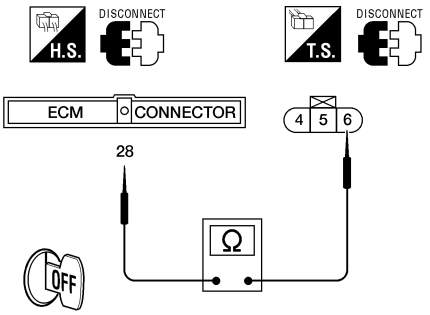

AEC571A

Continuity should exist.

4. Also check harness for short to ground and short to power.

OK or NG

OK	▶	GO TO 5.
NG	▶	GO TO 4.

4	DETECT MALFUNCTIONING PART

Check the harness for open or short between throttle position switch and ECM.

	▶	Repair open circuit or short to ground or short to power in harness or connectors.

5	ADJUST THROTTLE POSITION SWITCH IDLE POSITION

1. Check the following items. Refer to "Basic Inspection", EC-110.

Items	Specifications
Ignition timing	20° ± 2° BTDC
Base idle speed	750 ± 50 rpm (in "P" or "N" position)
Closed throttle position switch idle position adjustment	Feeler gauge thickness and switch condition 0.1 mm (0.004 in): ON 0.3 mm (0.012 in): OFF
Target idle speed	800 ± 50 rpm (in "P" or "N" position)

MTBL0328

	▶	GO TO 6.

6 CHECK CLOSED THROTTLE POSITION SWITCH

With CONSULT-II

1. Start engine and warm it up to normal operating temperature.
2. Stop engine and turn ignition switch ON.
3. Select "DATA MONITOR" mode with CONSULT-II.
4. Check indication of "CLSD THL/P SW" under the following conditions.

DATA MONITOR	
MONITOR	NO DTC
ENG SPEED	XXX rpm
COOLAN TEMP/S	XXX °C
CLSD THL/P SW	ON

Throttle valve conditions	CLSD THL/P SW
Completely closed	ON
Partially open or completely open	OFF

SEF721Z

NOTE:
Measurement must be made with closed throttle position switch installed in vehicle.
If NG, adjust closed throttle position switch. Refer to "Basic Inspection", EC-110.

5. If it is impossible to adjust closed throttle position switch in "Basic Inspection", replace closed throttle position switch.

Without CONSULT-II

1. Start engine and warm it up to normal operating temperature.
2. Turn ignition switch OFF.
3. Disconnect throttle position switch harness connector.
4. Check continuity between terminals 5 and 6 under the following conditions.

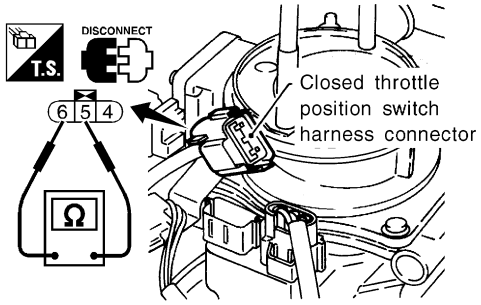

SEF159S

Throttle valve conditions	Continuity
Completely closed	Yes
Partially open or completely open	No

MTBL0299

NOTE:
Continuity measurement must be made with closed throttle position switch installed in vehicle.
If NG, adjust closed throttle position switch. Refer to "Basic Inspection", EC-110.

5. If it is impossible to adjust closed throttle position switch in "Basic Inspection", replace closed throttle position switch.

OK or NG

OK	▶	GO TO 7.
NG	▶	Replace throttle position switch.

7	CHECK THROTTLE POSITION SENSOR

With CONSULT-II

1. Start engine and warm it up to normal operating temperature.
2. Stop engine and turn ignition switch ON.
3. Select "DATA MONITOR" mode with CONSULT-II.
4. Check voltage of "THRTL POS SEN" under the following conditions.

DATA MONITOR	
MONITOR	NO DTC
COOLAN TEMP/S	XXX °C
VHCL SPEED SE	XXX km/h
THRTL POS SEN	XXX V

SEF198Y

NOTE:
Voltage measurement must be made with throttle position sensor installed in vehicle.
If NG, adjust closed throttle position switch. Refer to "Basic Inspection", EC-110.

5. If it is impossible to adjust closed throttle position switch in "Basic Inspection", replace throttle position sensor.

Without CONSULT-II

1. Start engine and warm it up to normal operating temperature.
2. Stop engine and turn ignition switch ON.
3. Check voltage between ECM terminal 23 (Throttle position sensor signal) and ground under the following conditions.

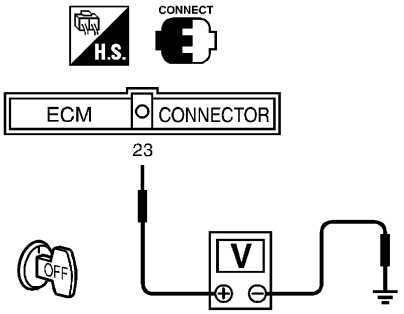

SEF767W

Throttle valve conditions	Voltage V
Completely closed	0.15 - 0.85 (a)
Partially open	Between (a) and (b)
Completely open	3.5 - 4.7 (b)

MTBL0329

NOTE:
Voltage measurement must be made with throttle position sensor installed in vehicle.
If NG, adjust closed throttle position switch. Refer to "Basic Inspection", EC-110.

4. If it is impossible to adjust closed throttle position switch in "Basic Inspection", replace throttle position sensor.

OK or NG

OK	▶	GO TO 8.
NG	▶	Replace throttle position sensor.

8	CHECK INTERMITTENT INCIDENT
Perform "TROUBLE DIAGNOSIS FOR INTERMITTENT INCIDENT", EC-148.	
▶	**INSPECTION END**

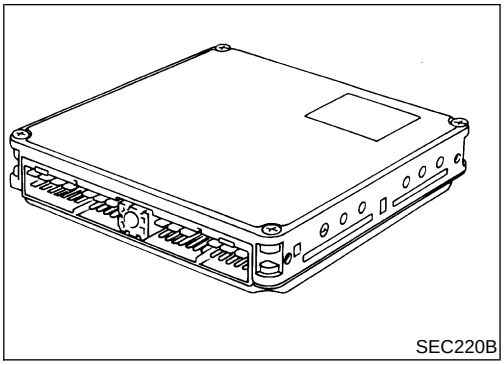

SEC220B

Component Description

NEEC0295

The ECM consists of a microcomputer, diagnostic test mode selector, and connectors for signal input and output and for power supply. The ECM controls the engine.

On Board Diagnosis Logic

NEEC0296

DTC No.	Malfunction is detected when ...	Check Items (Possible Cause)
P0605	• ECM calculation function is malfunctioning.	• ECM

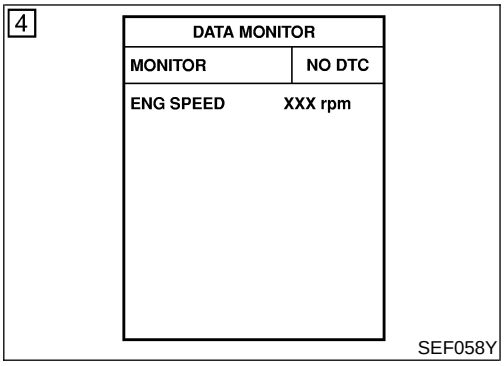

SEF058Y

DTC Confirmation Procedure

NEEC0297

NOTE:

If "DTC Confirmation Procedure" has been previously conducted, always turn ignition switch OFF and wait at least 5 seconds before conducting the next test.

With CONSULT-II

1) Turn ignition switch ON.
2) Select "DATA MONITOR" mode with CONSULT-II.
3) Start engine.
4) Run engine for at least 30 seconds at idle speed.
5) If 1st trip DTC is detected, go to "Diagnostic Procedure", EC-448.

With GST

Follow the procedure "With CONSULT-II".

Diagnostic Procedure

NEEC0298

1	INSPECTION START	
With CONSULT-II 1. Turn ignition switch ON. 2. Select “SELF DIAG RESULTS” mode with CONSULT-II. 3. Touch “ERASE”. 4. Perform “DTC Confirmation Procedure”. See previous page. 5. Is the 1st trip DTC P0605 displayed again?		
With GST 1. Turn ignition switch ON. 2. Select MODE 4 with GST. 3. Touch “ERASE”. 4. Perform “DTC Confirmation Procedure”. See previous page. 5. Is the 1st trip DTC P0605 displayed again?		
Yes or No		
Yes	▶	Replace ECM.
No	▶	**INSPECTION END**

On Board Diagnosis Logic

NEEC1028

Engine coolant temperature has not risen enough to open the thermostat even though the engine has run long enough.
This is due to a leak in the seal or the thermostat open stuck.
Malfunction is detected when the engine coolant temperature does not reach to specified temperature even though the engine has run long enough.

Possible Cause

NEEC1029

- Thermostat function
- Leakage from sealing portion of thermostat
- Engine coolant temperature sensor

DTC Confirmation Procedure

NEEC1030

NOTE:
If "DTC Confirmation Procedure" has been previously conducted, always turn ignition switch "OFF" and wait at least 5 seconds before conducting the next test.

TESTING CONDITION:

- **For best results, perform at ambient temperature of –10°C (14°F) or higher.**
- **For best results, perform at engine coolant temperature of –10°C (14°F) to 60°C (140°F).**

WITH CONSULT-II

NEEC1030S01

1) Replace thermostat with new one. Refer to ***LC-13***, "Thermostat". Use only a genuine NISSAN thermostat as a replacement. If an incorrect thermostat is used, the MIL may come on.
2) Turn ignition switch "ON".
3) Select "COOLAN TEMP/S" in "DATA MONITOR" mode with CONSULT-II.
4) Check that the "COOLAN TEMP/S" is above 60°C (140°F).
   If it is below 60°C (140°F), go to following step.
   If it is above 60°C (140°F), stop engine and cool down the engine to less than 60°C (140°F), then retry from step 1.
5) Drive vehicle for 10 consecutive minutes under the following conditions.

VHCL SPEED SE	80 - 120 km/h (50 - 75 MPH)

   If 1st trip DTC is detected, go to "Diagnostic Procedure", EC-450.

WITH GST

NEEC1030S02

1) Follow the prodedure "WITH CONSULT-II" above.

Diagnostic Procedure

NEEC1031

1	CHECK ENGINE COOLANT TEMPERATURE SENSOR

1. Turn ignition switch OFF.
2. Remove engine coolant temperature sensor.
3. Check resistance between engine coolant temperature sensor terminals under the following conditions.

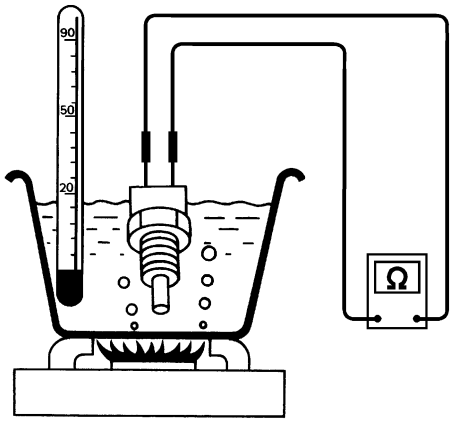

<Reference data>

Temperature °C (°F)	Resistance kΩ
20 (68)	2.1 - 2.9
50 (122)	0.68 - 1.00
90 (194)	0.236 - 0.260

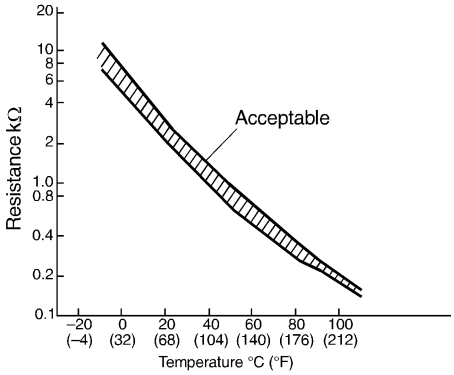

SEF304X

OK or NG

OK	▶	**INSPECTION END**
NG	▶	Replace engine coolant temperature sensor.

On Board Diagnosis Logic

NEEC0307

★ The closed loop control has the one trip detection logic.

DTC No.	Malfunction is detected when ...	Check Items (Possible Cause)
P1148	• The closed loop control function does not operate even when vehicle is driving in the specified condition.	• The heated oxygen sensor 1 (front) circuit is open or shorted. • Heated oxygen sensor 1 (front) • Heated oxygen sensor 1 heater (front)

3

DATA MONITOR	
MONITOR	NO DTC
ENG SPEED	XXX rpm
B/FUEL SCHDL	XXX msec
COOLAN TEMP/S	XXX °C
HO2S1 (B1)	XXX V
VHCL SPEED SE	XXX km/h

SEF682Y

DTC Confirmation Procedure

NEEC0308

CAUTION:

Always drive vehicle at a safe speed.

NOTE:

If "DTC Confirmation Procedure" has been previously conducted, always turn ignition switch "OFF" and wait at least 5 seconds before conducting the next test.

TESTING CONDITION:

- **Never raise engine speed above 3,000 rpm during the "DTC Confirmation Procedure". If the engine speed limit is exceeded, retry the procedure from step 4.**
- **Before performing the following procedure, confirm that battery voltage is more than 11V at idle.**

With CONSULT-II

1) Start engine and warm it up to normal operating temperature.
2) Select "DATA MONITOR" mode with CONSULT-II.
3) Hold engine speed at 2,000 rpm and check the following.
- "HO2S1 (B1)" voltage should go above 0.70V at least once.
- "HO2S1 (B1)" voltage should go below 0.21V at least once.
If the result is NG, perform "Diagnosis Procedure", EC-452.
If the result is OK, perform the following step.
4) Let engine idle at least 3 minutes.
5) Maintain the following condition at least 50 consecutive seconds.

B/FUEL SCHDL	4.0 msec or more
ENG SPEED	1,800 - 3,000 rpm
Selector lever	Suitable position
VHCL SPEED SE	More than 70 km/h (43 MPH)

During this test, P0130 DTC may be displayed on CONSULT-II screen.

6) If DTC is detected, go to "Diagnostic Procedure", EC-452.

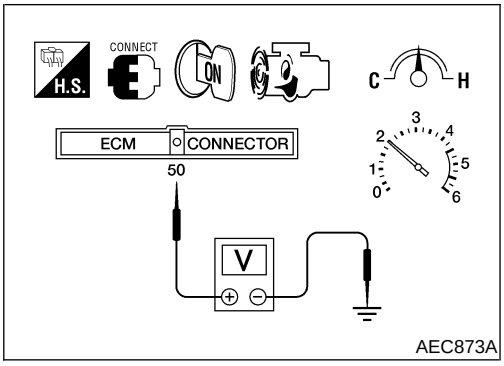

Overall Function Check

NEEC0309

Use this procedure to check the overall function of the closed loop control. During this check, a DTC might not be confirmed.

Without CONSULT-II

1) Start engine and warm it up to normal operating temperature.
2) Set voltmeter probes between ECM terminal 50 [Heated oxygen sensor 1 (front) signal] and engine ground.
3) Check the following with engine speed held at 2,000 rpm constant under no load.

- The voltage should go above 0.70V at least once.
- The voltage should go below 0.21V at least once.

4) If NG, go to “Diagnostic Procedure”, EC-452.

Diagnostic Procedure

NEEC0310

Refer to “Diagnostic Procedure” for DTC P0133, EC-224.

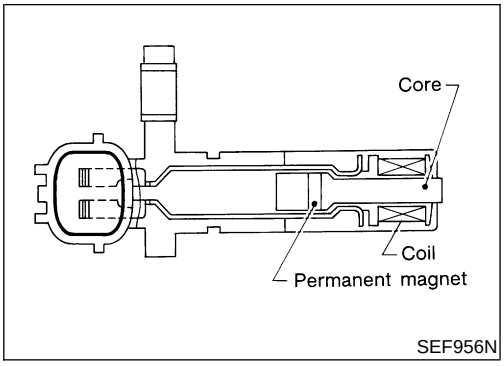

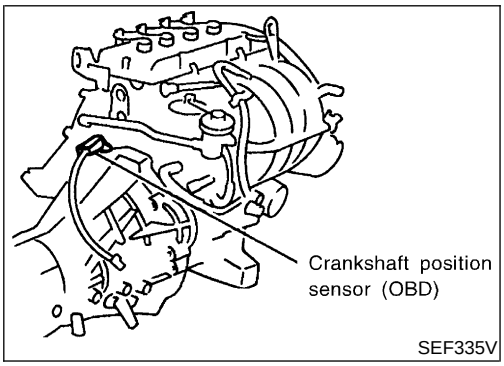

Component Description

NEEC0327

The crankshaft position sensor (OBD) is located on the transmission housing facing the gear teeth (cogs) of the flywheel or drive plate. It detects the fluctuation of the engine revolution.
The sensor consists of a permanent magnet, core and coil.
When the engine is running, the high and low parts of the teeth cause the gap with the sensor to change.
The changing gap causes the magnetic field near the sensor to change.
Due to the changing magnetic field, the voltage from the sensor changes.
The ECM receives the voltage signal and detects the fluctuation of the engine revolution.
This sensor is not used to control the engine system.
It is used only for the on board diagnosis.

ECM Terminals and Reference Value

NEEC0328

Specification data are reference values and are measured between each terminal and ground.

CAUTION:

Do not use ECM ground terminals when measuring input/output voltage. Doing so may result in damage to the ECM's transistor. Use a ground other than ECM terminals, such as the ground.

TERMINAL NO.	WIRE COLOR	ITEM	CONDITION	DATA (AC Voltage)
43	B/W	Sensors' ground	**[Engine is running]** ● **Warm-up condition** ● Idle speed	Approximately 0V
53	L	Crankshaft position sensor (OBD)	**[Engine is running]** ● **Warm-up condition** ● Idle speed	Approx. 0V 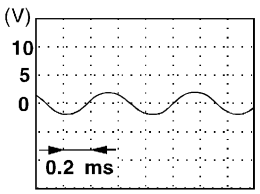
			[Engine is running] ● Engine speed is 2,000 rpm	Approx. 0V 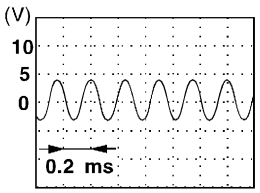

On Board Diagnosis Logic

NEEC0329

DTC No.	Malfunction is detected when ...	Check Items (Possible Cause)
P1336	• A chipping of the flywheel or drive plate gear tooth (cog) is detected by the ECM.	• Harness or connectors • Crankshaft position sensor (OBD) • Drive plate/Flywheel

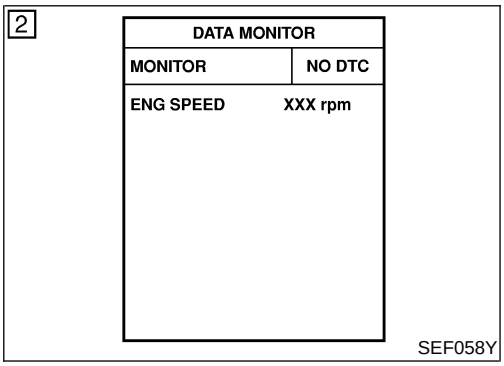

DTC Confirmation Procedure

NEEC0330

NOTE:

If “DTC Confirmation Procedure” has been previously conducted, always turn ignition switch OFF and wait at least 5 seconds before conducting the next test.

With CONSULT-II

1) Turn ignition switch ON and select “DATA MONITOR” mode with CONSULT-II.
2) Start engine and run it for at least 2 minutes at idle speed.
3) If 1st trip DTC is detected, go to “Diagnostic Procedure”, EC-456.

With GST

Follow the procedure “With CONSULT-II”.

Wiring Diagram

NEEC0331

EC-CKPS-01

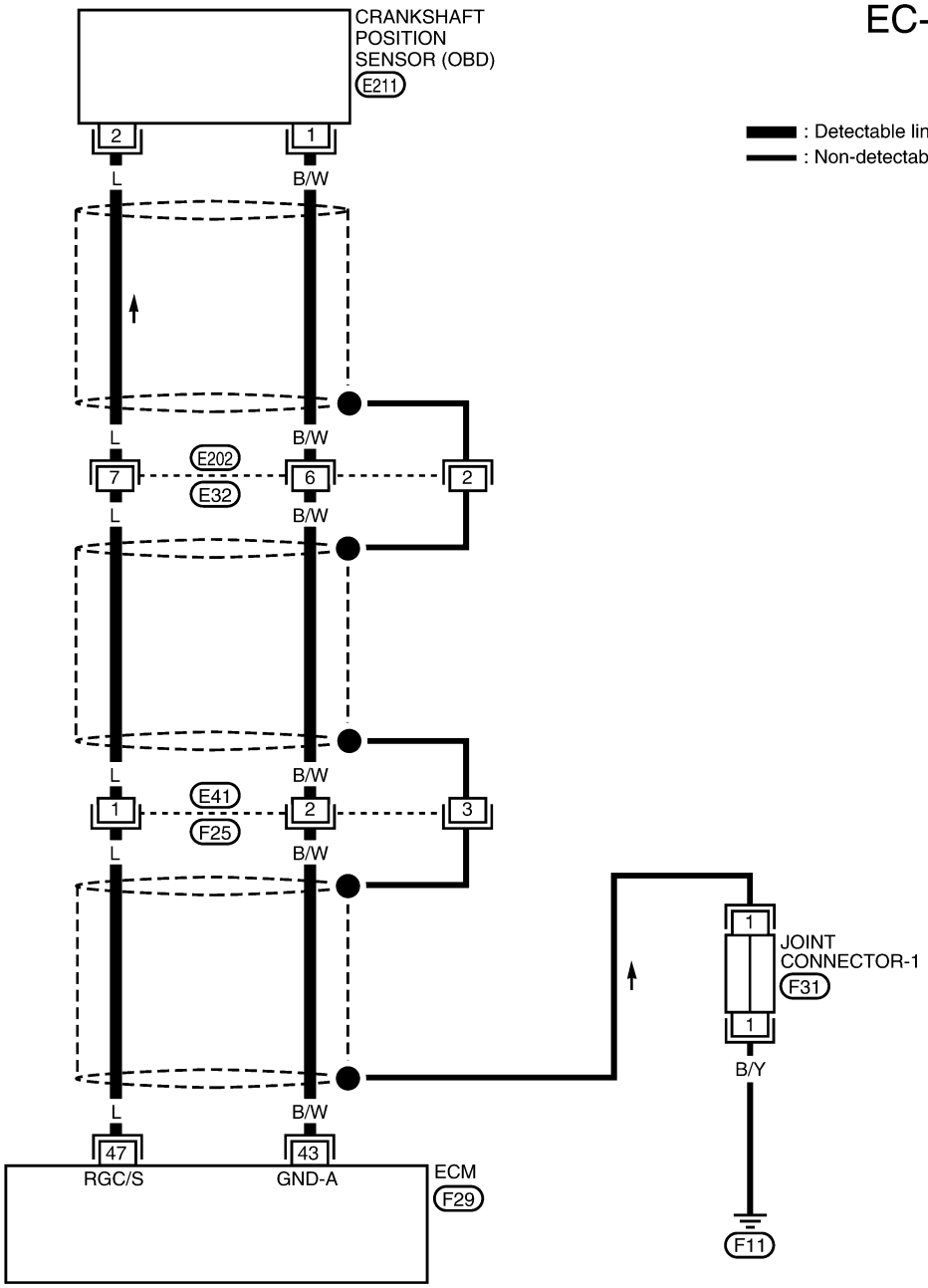

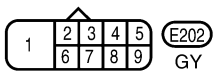



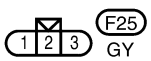



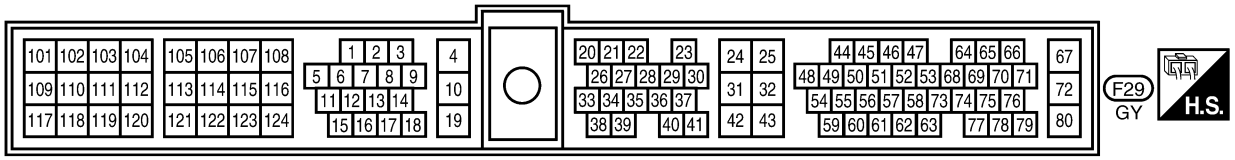

WEC778

Diagnostic Procedure

NEEC0332

1	RETIGHTEN GROUND SCREWS
1. Turn ignition switch OFF. 2. Loosen and retighten engine ground screws.	
▶	GO TO 2.

2	CHECK INPUT SIGNAL CIRCUIT

1. Disconnect crankshaft position sensor (OBD) and ECM harness connectors.

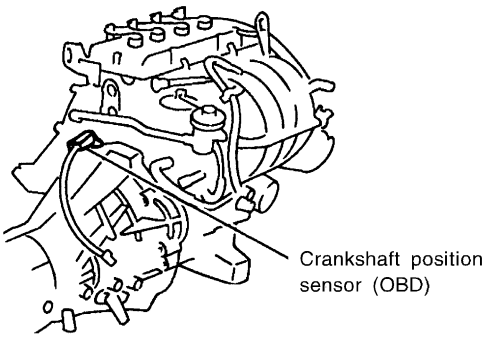

SEF335V

2. Check continuity between ECM terminal 47 and terminal 2.

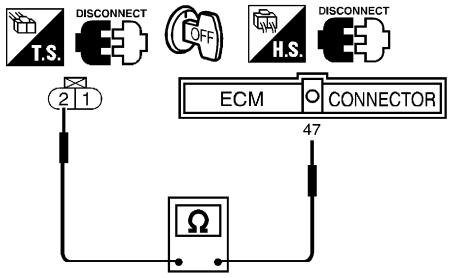

SEF175V

Continuity should exist.

3. Also check harness for short to ground and short to power.

OK or NG

OK	▶	GO TO 4.
NG	▶	GO TO 3.

3	DETECT MALFUNCTIONING PART
Check the following. ● Harness connectors E202, E32 ● Harness connectors E41, F25 ● Harness for open or short between crankshaft position sensor (OBD) and ECM	
▶	Repair open circuit or short to ground or short to power in harness or connectors.

4	CHECK GROUND CIRCUIT

1. Reconnect ECM harness connectors.
2. Check harness continuity between crankshaft position sensor (OBD) terminal 1 and engine ground. Refer to the wiring diagram.
   Continuity should exist.
3. Also check harness for short to power.

OK or NG

OK	▶	GO TO 6.
NG	▶	GO TO 5.

5	DETECT MALFUNCTIONING PART

Check the following.
- Harness connectors E202, E32
- Harness connectors E41, F25
- Harness for open or short between crankshaft position sensor (OBD) and ECM

	▶	Repair open circuit or short to ground or short to power in harness or connectors.

6	CHECK SHIELD CIRCUIT

1. Turn ignition switch OFF.
2. Disconnect harness connectors E32.
3. Check harness continuity between harness connector E32 terminal 2 and ground.

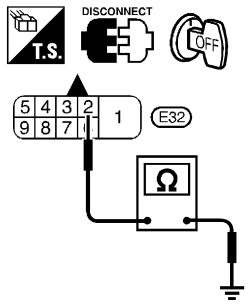

SEF552V

Continuity should exist

4. Also check harness for short to power.
5. Then reconnect harness connectors.

OK or NG

OK	▶	GO TO 8.
NG	▶	GO TO 7.

7	DETECT MALFUNCTIONING PART

Check the following.
- Harness connectors E41, F25
- Joint connector-1 (Refer to "HARNESS LAYOUT", ***EL-239***.)
- Harness for open or short between harness connector E32 and engine ground

	▶	Repair open circuit or short to ground or short to power in harness or connectors.

8	CHECK IMPROPER INSTALLATION

Loosen and retighten the fixing bolt of the crankshaft position sensor (OBD). Then retest.

Trouble is not fixed.	▶	GO TO 9.

Diagnostic Procedure (Cont'd)

9	CHECK CRANKSHAFT POSITION SENSOR (OBD)

1. Disconnect crankshaft position sensor (OBD) harness connector.
2. Loosen the fixing bolt of the sensor.
3. Remove the sensor.
4. Visually check the sensor for chipping.

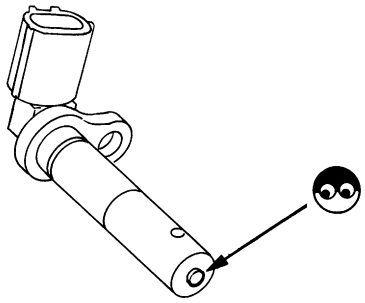

SEF960N

5. Check resistance as shown in the figure.

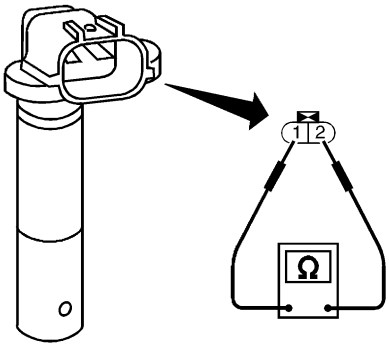

SEF231W

Resistance: Approximately 512 - 632Ω [at 20°C (68°F)]

OK or NG

OK	▶	GO TO 10.
NG	▶	Replace crankshaft position sensor (OBD).

10	CHECK GEAR TOOTH

Visually check for chipping flywheel or drive plate gear tooth (cog).

OK or NG

OK	▶	GO TO 11.
NG	▶	Replace the flywheel or drive plate.

11	CHECK INTERMITTENT INCIDENT

Perform "TROUBLE DIAGNOSIS FOR INTERMITTENT INCIDENT", EC-148.

▶ **INSPECTION END**

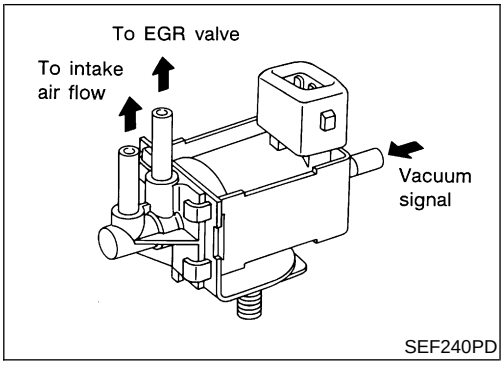

Component Description

NEEC0334

The EGRC-solenoid valve responds to signals from the ECM. When the ECM sends an ON (ground) signal, the coil in the solenoid valve is energized. The vacuum signal passes through the solenoid valve. The signal then reaches the EGR valve.
When the ECM sends an ON signal, a plunger will then move to cut the vacuum signal from the throttle body to the EGR valve.

CONSULT-II Reference Value in Data Monitor Mode

NEEC0335

Specification data are reference values.

MONITOR ITEM	CONDITION		SPECIFICATION
EGRC SOL/V	• Engine: After warming up • Air conditioner switch: “OFF” • Shift lever: “N” (A/T models) • No-load	Idle	ON
		Rev engine up from idle to 3,000 rpm quickly.	OFF

ECM Terminals and Reference Value

NEEC0336

Specification data are reference values and are measured between each terminal and ground.

CAUTION:
Do not use ECM ground terminals when measuring input/output voltage. Doing so may result in damage to the ECM’s transistor. Use a ground other than ECM terminals, such as the ground.

TERMINAL NO.	WIRE COLOR	ITEM	CONDITION	DATA (DC Voltage)
103	G/W	EGRC-solenoid valve	**[Engine is running]** • **Warm-up condition** • Idle speed	0 - 1V
			[Engine is running] • **Warm-up condition** • M/T models: Lift up drive wheels and shift to 1st gear position. • Rev engine up from 2,000 to 4,000 rpm.	BATTERY VOLTAGE (11 - 14V)

On Board Diagnosis Logic

NEEC0337

DTC No.	Malfunction is detected when ...	Check Items (Possible Cause)
P1400	• The improper voltage signal is sent to ECM through EGRC-solenoid valve.	• Harness or connectors (The EGRC-solenoid valve circuit is open or shorted.) • EGRC-solenoid valve

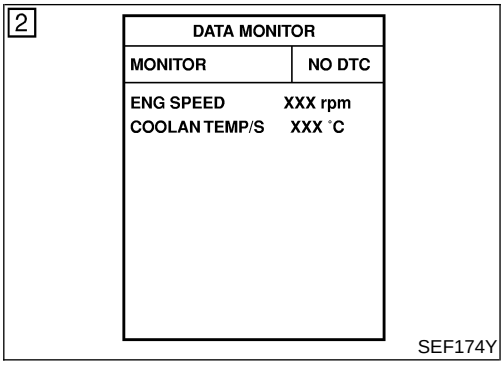

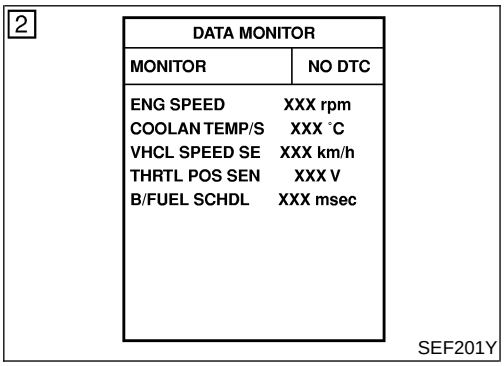

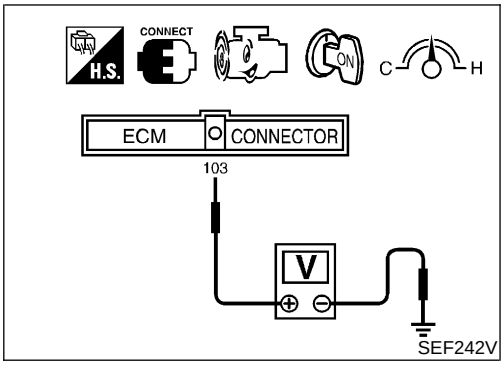

DTC Confirmation Procedure

NEEC0338

NOTE:
If “DTC Confirmation Procedure” has been previously conducted, always turn ignition switch “OFF” and wait at least 5 seconds before conducting the next test.

TESTING CONDITION:
Always perform at a temperature above –10°C (14°F).

With CONSULT-II

1) Start engine and warm it up to normal operating temperature.
2) Select “DATA MONITOR” mode with CONSULT-II.
3) Maintain the following conditions for at least 5 consecutive seconds.

ENG SPEED	Less than 3,000 rpm
B/FUEL SCHDL	Less than 12.6 msec
VHCL SPEED SE	Suitable speed

4) If 1st trip DTC is detected, go to “DIAGNOSTIC PROCEDURE”, EC-462.

With GST

- Follow the procedure with “CONSULT-II”.

Overall Function Check

NEEC0521

Use this procedure to check the overall function of the EGR temperature sensor. During this check, a 1st trip DTC might not be confirmed.

Without CONSULT-II

1) Start engine and warm it up to normal operating temperature.
2) Check the voltage between ECM terminal 103 and ground at idle.

   Voltage: 0 - 1V

3) Check that the voltage changes to battery voltage and returns to 0 - 1V when revving the engine from idle to 3,000 rpm quickly.
4) If NG, go to “DIAGNOSTIC PROCEDURE”, EC-462.

Wiring Diagram

NEEC0339

EC-EGRC/V-01

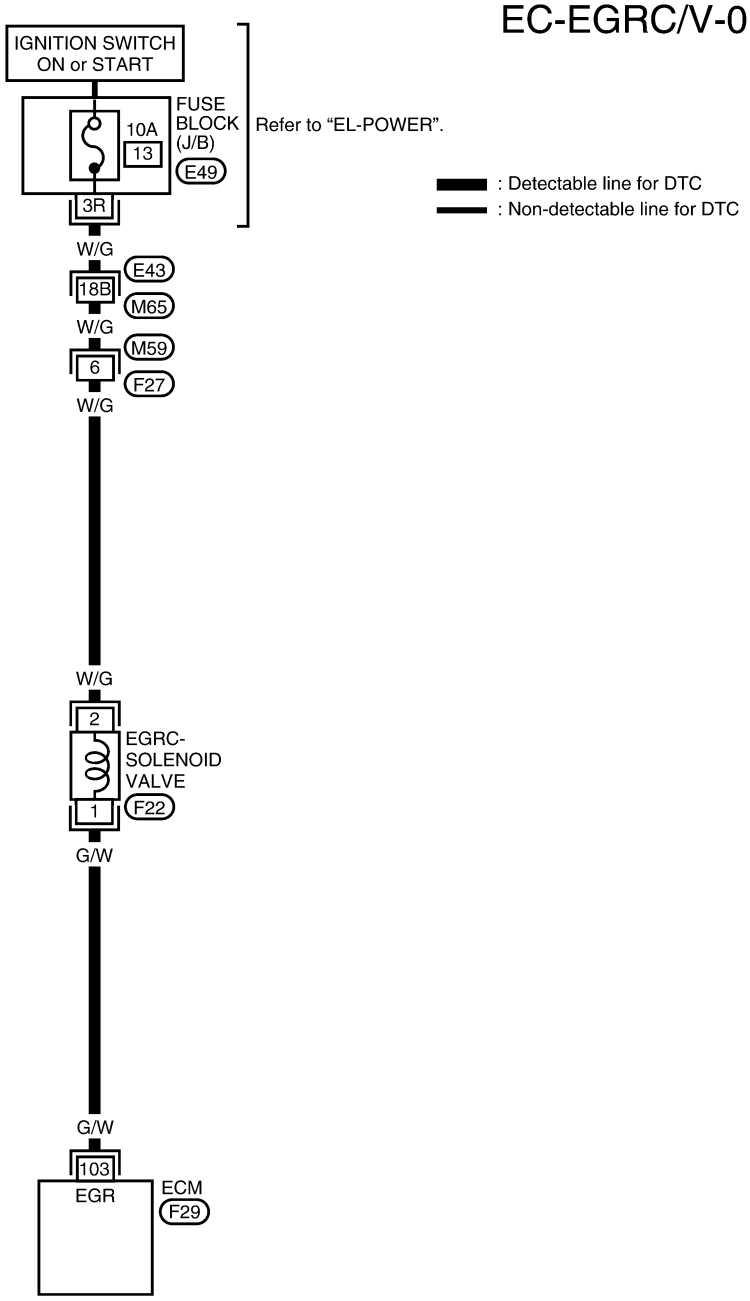

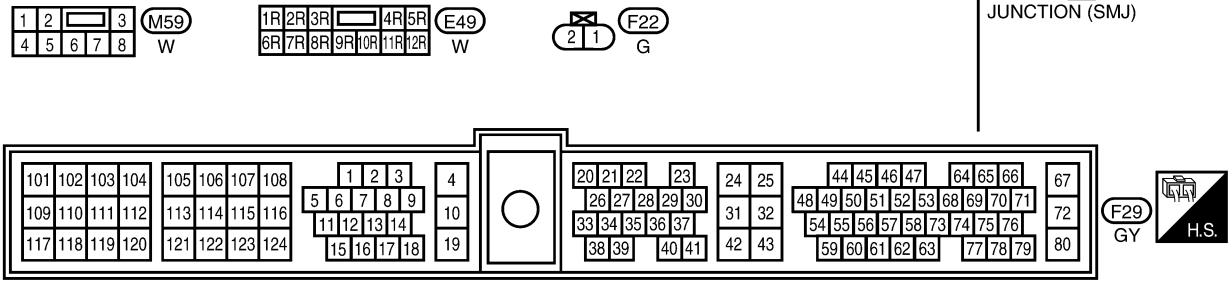

LEC487

Diagnostic Procedure

NEEC0340

1	CHECK EGRC-SOLENOID VALVE

With CONSULT-II

1. Turn ignition switch ON.
2. Turn EGRC-solenoid valve “ON” and “OFF” in “ACTIVE TEST” mode with CONSULT-II and check operating sound.

ACTIVE TEST	
EGRC SOL/V	ON
MONITOR	
ENG SPEED	XXX rpm

SEF722Z

Without CONSULT-II

1. Start engine and rev engine up to 3,000 rpm quickly.
2. When disconnecting and reconnecting the EGRC-solenoid valve harness connector, make sure that the EGRC-solenoid valve makes operating sound. (The DTC or the 1st trip DTC for the EGRC-solenoid valve will be displayed, however, ignore it.)

OK or NG

OK (With CONSULT-II) ▶	GO TO 5.
OK (Without CONSULT-II) ▶	GO TO 6.
NG ▶	GO TO 2.

2	CHECK POWER SUPPLY

1. Turn ignition switch OFF.
2. Disconnect EGRC-solenoid valve harness connector.

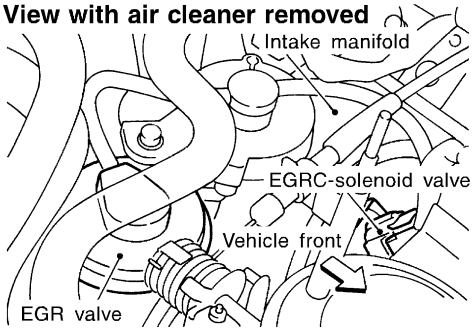

SEF336V

3. Turn ignition switch ON.
4. Check voltage between terminal 2 and ground with CONSULT-II or tester.

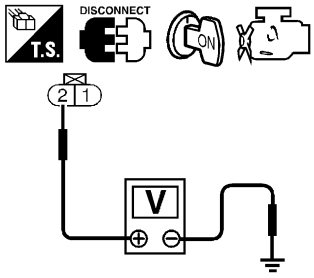

SEF192V

Voltage: Battery voltage

OK or NG

OK	▶	GO TO 4.
NG	▶	GO TO 3.

3	DETECT MALFUNCTIONING PART

Check the following.
- Harness connectors E43, M65
- Harness connectors M59, F27
- 10A fuse
- Harness for open or short between EGRC-solenoid valve and 10A fuse

	▶	Repair harness or connectors.

Diagnostic Procedure (Cont'd)

4	CHECK OUTPUT SIGNAL CIRCUIT

1. Turn ignition switch OFF.
2. Disconnect ECM harness connector.
3. Check harness continuity between ECM terminal 103 and terminal 1.

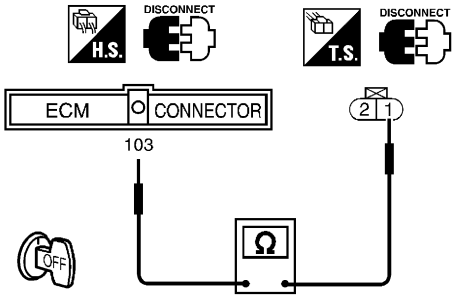

SEF243V

Continuity should exist.

4. Also check harness for short to ground and short to power.

OK or NG

OK (With CONSULT-II)	▶	GO TO 6.
OK (Without CONSULT-II)	▶	GO TO 7.
NG	▶	GO TO 5.

5	DETECT MALFUNCTIONING PART

Check the harness for open or short between EGRC-solenoid valve and ECM.

	▶	Repair open circuit or short to ground or short to power in harness or connectors.

6	CHECK EGRC-SOLENOID VALVE

With CONSULT-II

Check air passage continuity.

Perform "EGRC SOLENOID VALVE" in "ACTIVE TEST" mode.

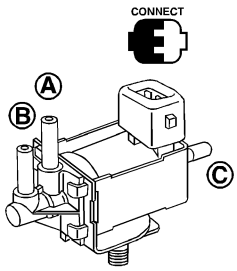

ACTIVE TEST	
EGRC SOL/V	ON
(EGR)	CUT
MONITOR	
ENG SPEED	XXX rpm

Condition EGRC SOLENOID VALVE	Air passage continuity between **A** and **B**	Air passage continuity between **A** and **C**
ON	Yes	No
OFF	No	Yes

SEF717Z

OK or NG

OK	▶	GO TO 8.
NG	▶	Replace EGRC-solenoid valve.

7	CHECK EGRC-SOLENOID VALVE

Without CONSULT-II

Check air passage continuity shown in the figure.

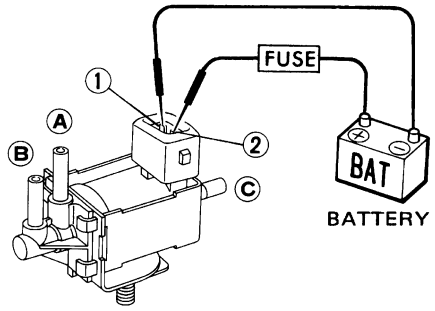

AEC919

Condition	Air passage continuity between **A** and **B**	Air passage continuity between **A** and **C**
12V direct current supply between terminals 1 and 2	Yes	No
No supply	No	Yes

MTBL0283

If NG or operation takes more than 1 second, replace solenoid valve.

OK or NG

OK	▶	GO TO 8.
NG	▶	Replace EGRC-solenoid valve.

8	CHECK INTERMITTENT INCIDENT
Perform "TROUBLE DIAGNOSIS FOR INTERMITTENT INCIDENT", EC-148.	
▶	**INSPECTION END**

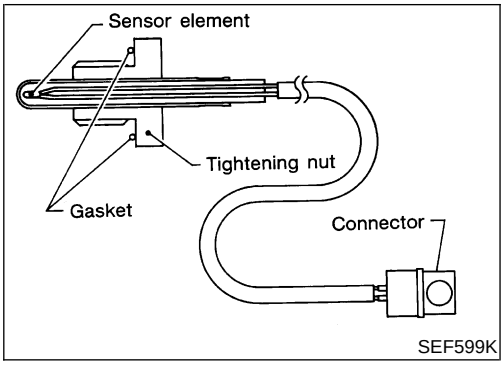

Component Description

NEEC0342

The EGR temperature sensor detects temperature changes in the EGR passageway. When the EGR valve opens, hot exhaust gases flow, and the temperature in the passageway changes. The EGR temperature sensor is a thermistor that modifies a voltage signal sent from the ECM. This modified signal then returns to the ECM as an input signal. As the temperature increases, EGR temperature sensor resistance decreases. This sensor is not used to control the engine system.
It is used only for the on board diagnosis.

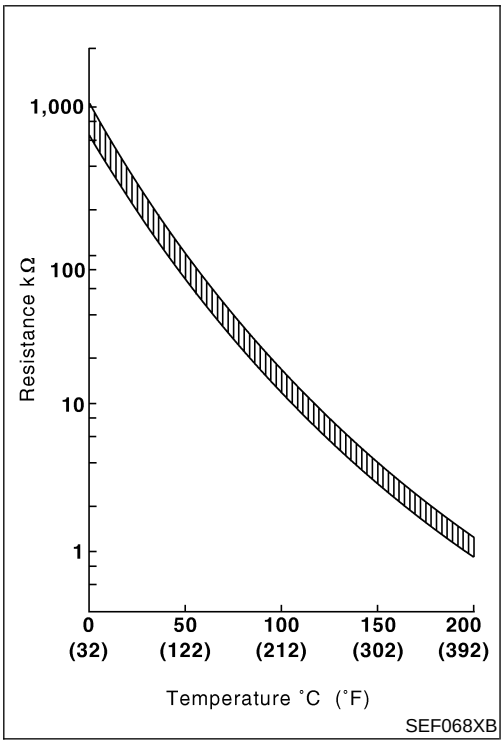

<Reference data>

EGR temperature °C (°F)	Voltage* V	Resistance MΩ
0 (32)	4.56	0.62 - 1.05
50 (122)	2.25	0.065 - 0.094
100 (212)	0.59	0.011 - 0.015

*: These data are reference values and are measured between ECM terminal 63 (EGR temperature sensor) and ground.
When EGR system is operating.
Voltage: 0 - 1.5V

On Board Diagnosis Logic

NEEC0343

DTC No.	Malfunction is detected when ...		Check Items (Possible Cause)
P1401	A)	An excessively low voltage from the EGR temperature sensor is sent to ECM even when engine coolant temperature is low.	• Harness or connectors (The EGR temperature sensor circuit is shorted.) • EGR temperature sensor • Malfunction of EGR function, EGRC-BPT valve or EGRC-solenoid valve
	B)	An excessively high voltage from the EGR temperature sensor is sent to ECM even when engine coolant temperature is high.	• Harness or connectors (The EGR temperature sensor circuit is open.) • EGR temperature sensor • Malfunction of EGR function, EGRC-BPT valve or EGRC-solenoid valve

4

DATA MONITOR	
MONITOR	NO DTC
ENG SPEED	XXX rpm
COOLAN TEMP/S	XXX °C

SEF174Y

DTC Confirmation Procedure

NEEC0344

Perform "PROCEDURE FOR MALFUNCTION A" first. If 1st trip DTC cannot be confirmed, perform "PROCEDURE FOR MALFUNCTION B".

NOTE:
If "DTC Confirmation Procedure" has been previously conducted, always turn ignition switch "OFF" and wait at least 5 seconds before conducting the next test.

PROCEDURE FOR MALFUNCTION A

NEEC0344S01

With CONSULT-II

1) Turn ignition switch ON.
2) Select "DATA MONITOR" mode with CONSULT-II.
3) Verify that engine coolant temperature is less than 50°C (122°F).
   If the engine coolant temperature is above the range, cool the engine down.
4) Start engine and let it idle for at least 8 seconds.
5) If 1st trip DTC is detected, go to "Diagnostic Procedure", EC-470.

With GST

- Follow the procedure "With CONSULT-II".

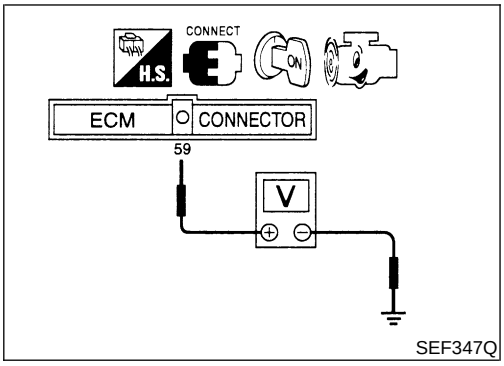

SEF347Q

9

DATA MONITOR	
MONITOR	NO DTC
ENG SPEED	XXX rpm
COOLAN TEMP/S	XXX °C
VHCL SPEED SE	XXX km/h
THRTL POS SEN	XXX V
B/FUEL SCHDL	XXX msec

SEF201Y

PROCEDURE FOR MALFUNCTION B

NEEC0344S02

CAUTION:
Always drive vehicle at a safe speed.

TESTING CONDITION:
Always perform the test at a temperature above 5°C (41°F).

With CONSULT-II

1) Start engine and warm it up to normal operating temperature.
2) Run engine at idle for at least 2 minutes.
3) Confirm that EGR valve is not lifting.
   If the result is NG, perform trouble diagnosis for DTC P1402. Refer to EC-472.
4) Select "DATA MONITOR" mode with CONSULT-II.
5) Read "EGR TEMP SEN" at about 1,500 rpm while holding the EGR valve in full open position by hand.
   Voltage should decrease to less than 1.0V.
   If the result is NG, go to "Diagnostic Procedure", EC-470.
   If the result is OK, go to following step.
6) Turn ignition switch OFF and wait at least 5 seconds.
7) Turn ignition switch ON.
8) Check the output voltage of "THRTL POS SEN" (at closed throttle position) and note it.
9) Start engine.

10) Maintain the following conditions for at least 5 consecutive seconds.

ENG SPEED	2,000 - 2,800 rpm
VHCL SPEED SE	10 km/h (6 MPH) or more
B/FUEL SCHDL	7 - 10.5 msec
THRTL POS SEN	(X + 0.23) − (X + 0.74) V X = Voltage value measured at step 7
Selector lever	Suitable position

11) If 1st trip DTC is detected, go to "Diagnostic Procedure", EC-470.

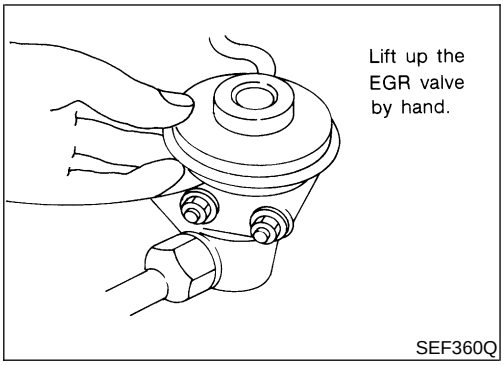

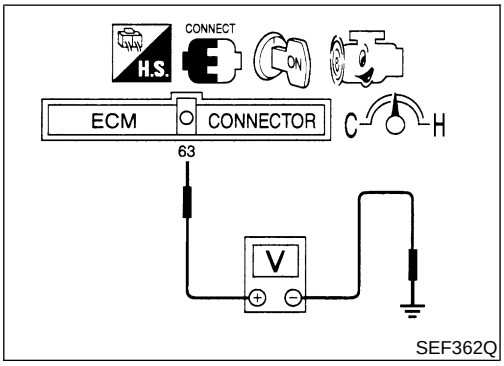

Overall Function Check

NEEC0345

Use this procedure to check the overall function of the EGR temperature sensor. During this check, a 1st trip DTC might not be confirmed.

PROCEDURE FOR MALFUNCTION B

NEEC0345S01

Without CONSULT-II

1) Start engine and warm it up to normal operating temperature.
2) Run engine at idle for at least 2 minutes.
3) Confirm that EGR valve is not lifting. If NG, perform trouble diagnosis for DTC P1402. Refer to EC-473.
4) Check voltage between ECM terminal 63 (EGR temperature sensor signal) and ground at about 1,500 rpm with EGR valve lifted up to the full position by hand.
   Voltage should decrease to less than 1.0V.
5) If NG, go to "Diagnostic Procedure", EC-470.
   If OK, perform trouble diagnoses for DTC P0400 and P1400. Refer to EC-333, 459.

Wiring Diagram

NEEC0346

EC-EGR/TS-01

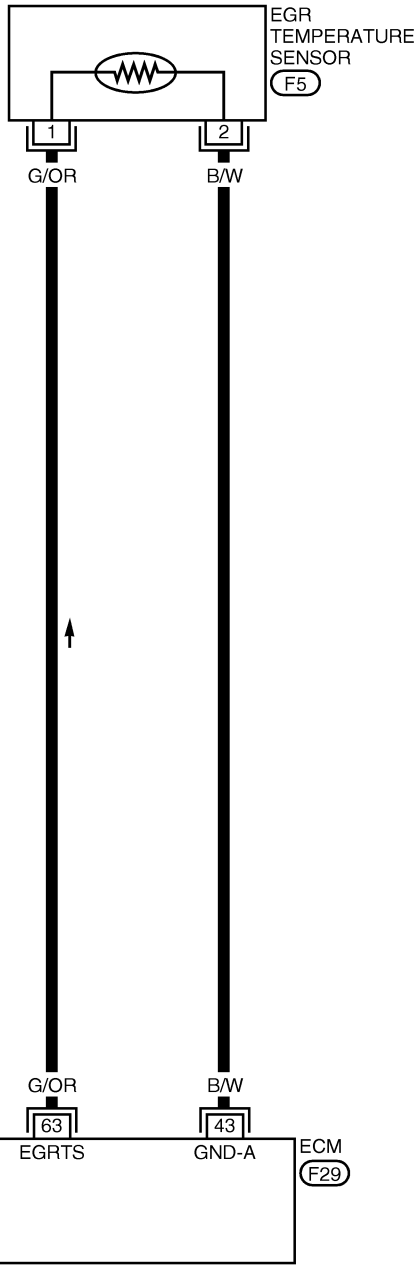

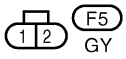

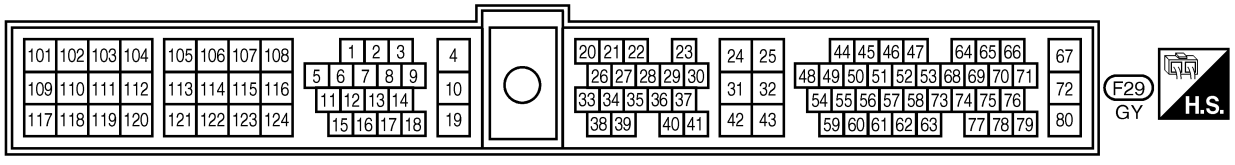

AEC006B

Diagnostic Procedure

NEEC0347

1	CHECK POWER SUPPLY

1. Turn ignition switch OFF.
2. Disconnect EGR temperature sensor harness connector.

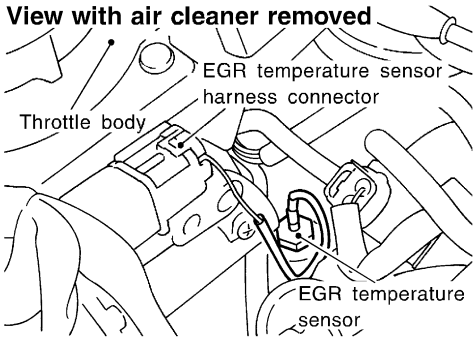

SEF345V

3. Turn ignition switch ON.
4. Check voltage between terminal 1 and ground with CONSULT-II or tester.

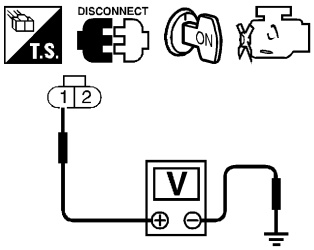

SEF263W

Voltage: Approximately 5V

OK or NG

OK	▶	GO TO 2.
NG	▶	Repair harness or connectors.

2	CHECK GROUND CIRCUIT

1. Turn ignition switch OFF.
2. Check harness continuity between EGR temperature sensor terminal 2 and engine ground. Refer to the wiring diagram.

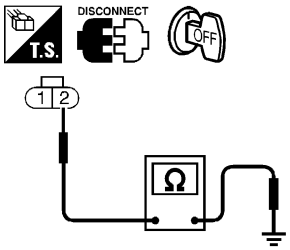

SEF264W

Continuity should exist.

3. Also check harness for short to power.

OK or NG

OK	▶	GO TO 4.
NG	▶	GO TO 3.

3	DETECT MALFUNCTIONING PART

Check the harness for open or short between EGR temperature sensor and ECM.		
	▶	Repair open circuit or short to ground or short to power in harness or connector.

4	CHECK EGR TEMPERATURE SENSOR

Check resistance change and resistance value.

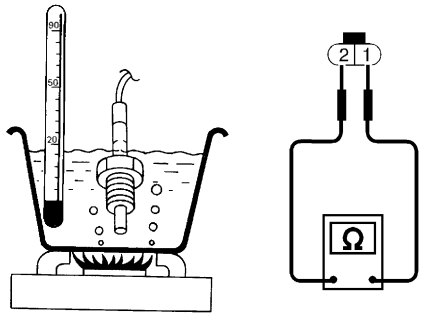

SEF643Q

<Reference data>

EGR temperature °C (°F)	Voltage V	Resistance MΩ
0 (32)	4.56	0.62 - 1.05
50 (122)	2.25	0.065 - 0.094
100 (212)	0.59	0.011 - 0.015

MTBL0549

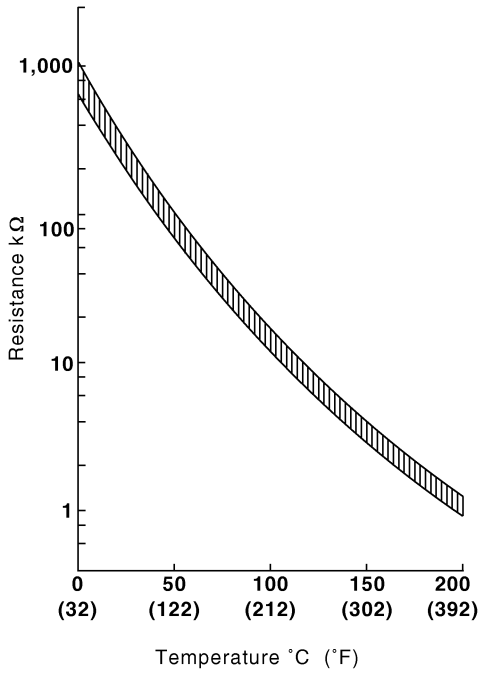

SEF068XB

OK or NG

OK	▶	GO TO 5.
NG	▶	Replace EGR temperature sensor.

5	CHECK INTERMITTENT INCIDENT
Perform "TROUBLE DIAGNOSIS FOR INTERMITTENT INCIDENT", EC-148.	
▶	**INSPECTION END**

Description

NEEC0349

SYSTEM DESCRIPTION

NEEC0349S01

Sensor	Input Signal to ECM	ECM function	Actuator
Camshaft position sensor	Engine speed	EGR control	EGRC-solenoid valve
Mass air flow sensor	Amount of intake air		
Engine coolant temperature sensor	Engine coolant temperature		
Ignition switch	Start signal		
Throttle position sensor	Throttle position		

This system cuts and controls vacuum applied to the EGR valve to suit engine operating conditions. This cut-and-control operation is accomplished through the ECM and the EGRC-solenoid valve. When the ECM detects any of the following conditions, current through the solenoid valve is cut. This causes the vacuum to be cut. The EGR valve remains closed.

- Low engine coolant temperature
- Engine starting
- High-speed engine operation
- Engine idling
- Excessively high engine coolant temperature
- Mass air flow sensor malfunction

EGR and vacuum

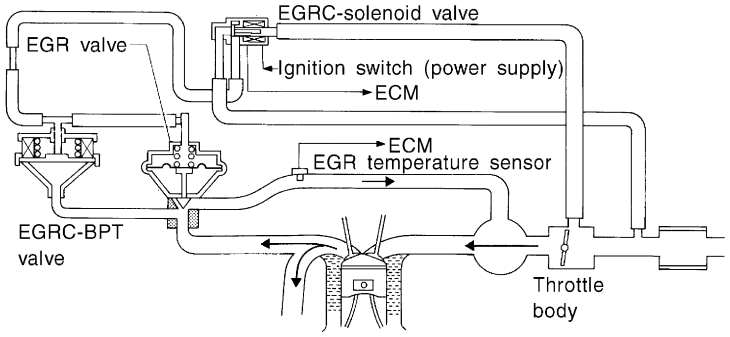

SEF641Q

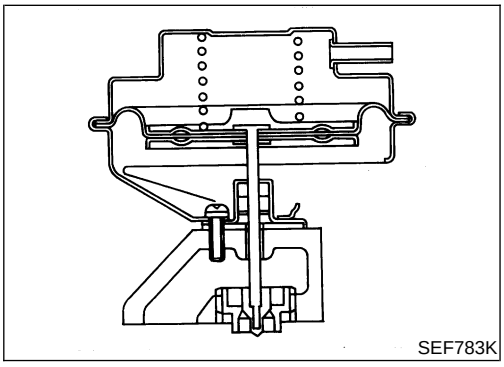

SEF783K

COMPONENT DESCRIPTION

NEEC0349S02

Exhaust Gas Recirculation (EGR) Valve

NEEC0349S0201

The EGR valve controls the amount of exhaust gas routed to the intake manifold. Vacuum is applied to the EGR valve in response to throttle valve opening. The vacuum controls the movement of a taper valve connected to the vacuum diaphragm in the EGR valve.

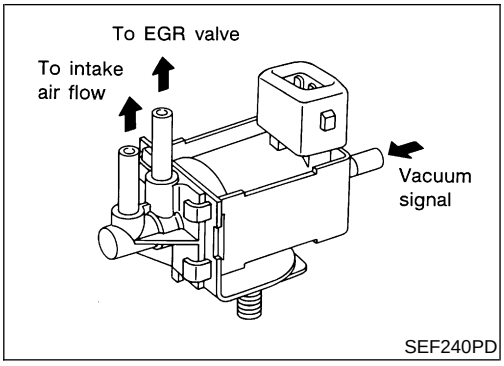

SEF240PD

EGRC-solenoid Valve

NEEC0349S0202

The EGRC-solenoid valve responds to signals from the ECM. When the ECM sends an ON (ground) signal, the coil in the solenoid valve is energized. The vacuum signal passes through the solenoid valve. A plunger will then move to cut the vacuum signal (from the throttle body to the EGR valve).
When the ECM sends an OFF signal, a plunger will then move to cut the vacuum signal from the throttle body to the EGR valve.

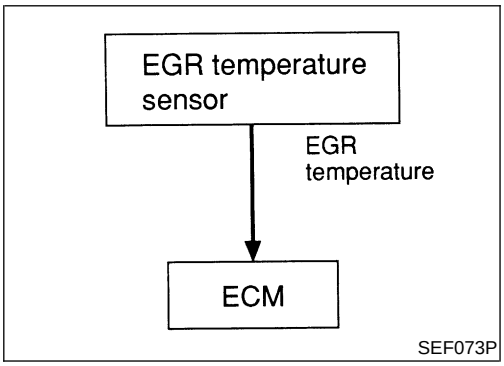

SEF073P

On Board Diagnosis Logic

NEEC0350

If EGR temperature sensor detects EGR flow under the condition that does not call for EGR, a high-flow malfunction is diagnosed.

NOTE:
Diagnosis for this DTC will occur when engine coolant temperature is approx. 50 to 60°C (122 to 140°F). Therefore, it will be better to turn ignition switch "ON" (Start engine) at the engine coolant temperature below 40°C (104°F) when starting DTC confirmation procedure.

DTC No.	Malfunction is detected when ...	Check Items (Possible Cause)
P1402	• EGR flow is detected under conditions that do not call for EGR.	• EGRC-solenoid valve • EGR valve leaking or stuck open • EGR temperature sensor • EGRC-BPT valve

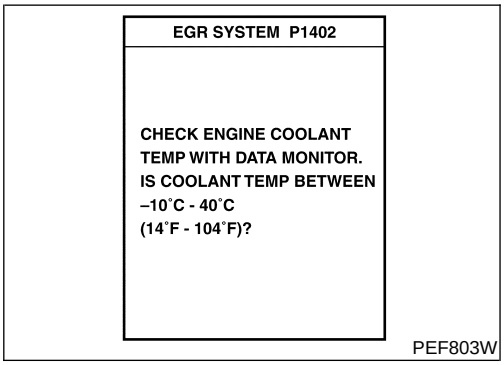

PEF803W

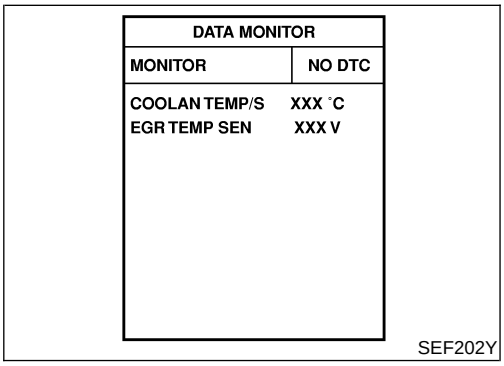

SEF202Y

DTC Confirmation Procedure

NEEC0351

NOTE:
If "DTC Confirmation Procedure" has been previously conducted, always turn ignition switch OFF and wait at least 5 seconds before conducting the next test.

TESTING CONDITION:

- **Engine coolant temperature and EGR temperature must be verified in "DATA MONITOR" mode with CONSULT-II before starting DTC WORK SUPPORT test. If it is out of range below, the test cannot be conducted.**
  COOLAN TEMP/S: −10 to 60°C (14 to 140°F)*
  EGR TEMP SEN: Less than 3.7V
  If the values are out of the ranges indicated above, park the vehicle in a cool place and allow the engine temperature to stabilize. Do not attempt to reduce the engine coolant or EGR temperature with a fan or means other than ambient air. Doing so may produce an inaccurate diagnostic result.

*: Although CONSULT-II screen displays "−10 to 60°C (14 to 140°F)" as a range of engine coolant temperature, ignore it.

DTC Confirmation Procedure (Cont'd)

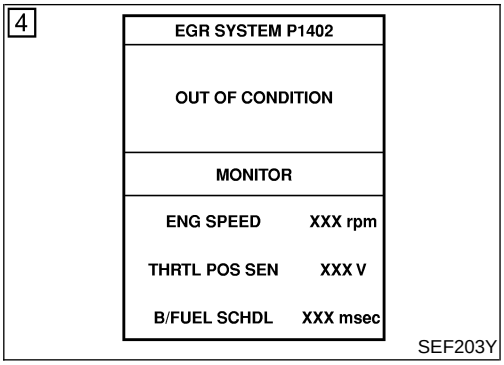

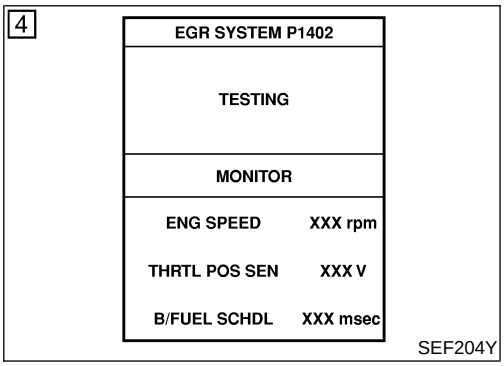

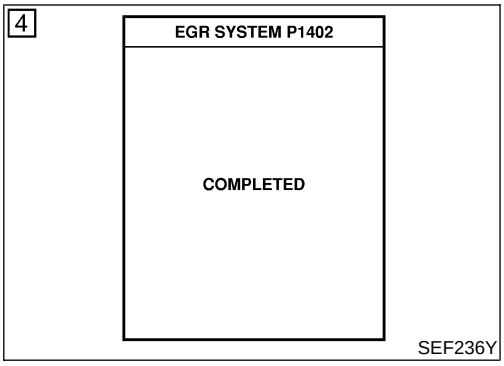

With CONSULT-II

1) Turn ignition switch OFF and wait at least 5 seconds, then turn ignition switch ON.
2) Select "EGR SYSTEM P1402" of "EGR SYSTEM" in "DTC WORK SUPPORT" mode with CONSULT-II.
3) Touch "START". Follow instruction of CONSULT-II.
4) Start engine and let it idle until "TESTING" on CONSULT-II screen is turned to "COMPLETED". (It will take 60 seconds or more.)
   If "TESTING" is not displayed after 5 minutes, turn ignition "OFF" and cool the engine coolant temperature to the range of −10 to 60°C (14 to 140°F). Retry from step 1.
5) Make sure that "OK" is displayed after touching "SELF-DIAG RESULTS". If "NG" is displayed, refer to "Diagnostic Procedure", EC-476.

With GST

1) Turn ignition switch ON and select "MODE 1" with GST.
2) Check that engine coolant temperature is within the range of −10 to 35°C (14 to 95°F).
3) Check that voltage between ECM terminal 63 (EGR temperature sensor signal) and ground is less than 4.8V.
4) Start engine and let it idle for at least 60 seconds.
5) Stop engine.
6) Perform from step 1 to 4.
7) Select "MODE 3" with GST.
8) If DTC is detected, go to "Diagnostic Procedure", EC-476.

Wiring Diagram

NEEC0352

EC-EGRC1-01

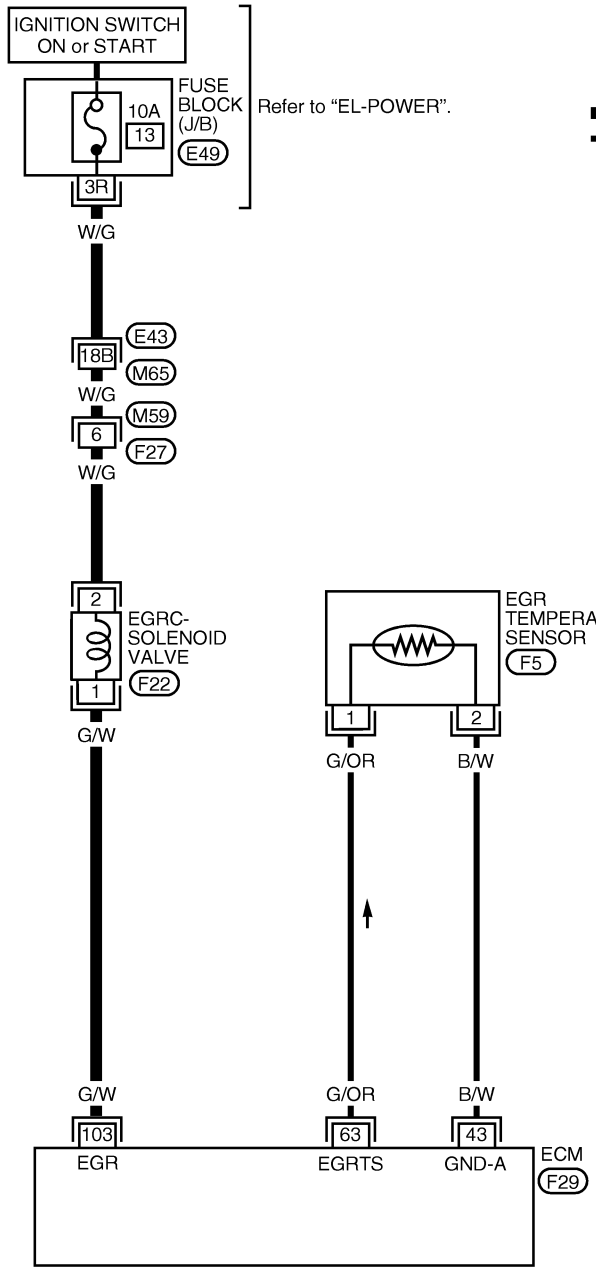

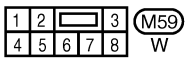



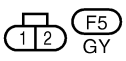

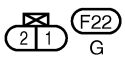

Refer to the following.
M65 , E43 - SUPER MULTIPLE JUNCTION (SMJ)

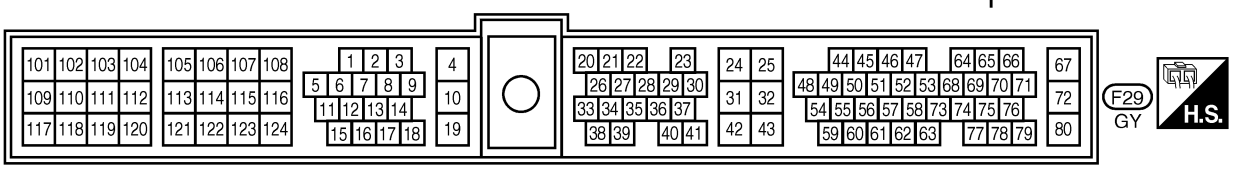

AEC995A

Diagnostic Procedure

NEEC0353

1	CHECK VACUUM HOSE

Check vacuum hose for clogging, cracks or improper connection.
Refer to “Vacuum Hose Drawing”, EC-33.

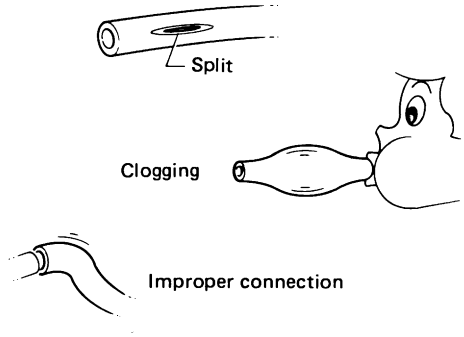

SEF109L

OK or NG

OK (With CONSULT-II)	▶	GO TO 2.
OK (Without CONSULT-II)	▶	GO TO 3.
NG	▶	Repair or replace vacuum hose.

2	CHECK EGRC-SOLENOID VALVE CIRCUIT

With CONSULT-II
1. Turn ignition switch ON.
2. Turn EGRC-solenoid valve “ON” and “OFF” in “ACTIVE TEST” mode with CONSULT-II and check operating sound.

ACTIVE TEST	
EGRC SOL/V	ON
(EGR)	CUT
MONITOR	
ENG SPEED	XXX rpm

SEF716Z

Clicking noise should be heard.

OK or NG

OK	▶	GO TO 5.
NG	▶	GO TO 4.

3	CHECK EGRC-SOLENOID VALVE CIRCUIT

Without CONSULT-II
1. Turn ignition switch OFF.
2. Disconnect ECM harness connector.
3. Turn ignition switch ON.
4. Check operating sound of the solenoid valve when disconnecting and reconnecting EGRC-solenoid valve harness connector. (The DTC or the 1st trip DTC for the EGRC-solenoid valve will be displayed, however, ignore it.)

OK or NG

OK	▶	GO TO 6.
NG	▶	GO TO 4.

4	DETECT MALFUNCTIONING PART	
Check the following. ● Harness connectors E43, M65 ● Harness connectors M59, F27 ● 10A fuse ● Harness for open or short between fuse block and EGRC-solenoid valve ● Harness for open or short between ECM and EGRC-solenoid valve		
OK or NG		
OK	▶	GO TO 5.
NG	▶	Repair open circuit or short to power in harness or connector.

5	CHECK EGRC-SOLENOID VALVE	

With CONSULT-II
Check air passage continuity.
Perform "EGRC SOLENOID VALVE" in "ACTIVE TEST" mode.

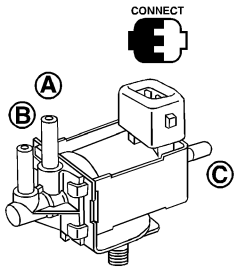

ACTIVE TEST	
EGRC SOL/V	ON
(EGR)	CUT
MONITOR	
ENG SPEED	XXX rpm

Condition EGRC SOLENOID VALVE	Air passage continuity between **A** and **B**	Air passage continuity between **A** and **C**
ON	Yes	No
OFF	No	Yes

SEF717Z

OK or NG

OK	▶	GO TO 7.
NG	▶	Replace EGRC-solenoid valve.

6	CHECK EGRC-SOLENOID VALVE

Without CONSULT-II

Check air passage continuity shown in the figure.

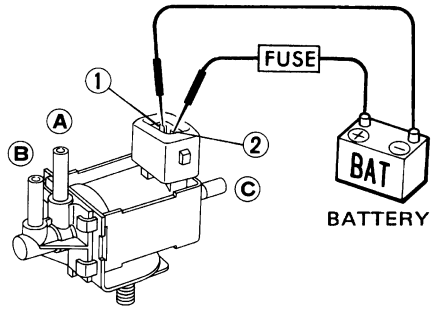

AEC919

Condition	Air passage continuity between **A** and **B**	Air passage continuity between **A** and **C**
12V direct current supply between terminals 1 and 2	Yes	No
No supply	No	Yes

MTBL0283

If NG or operation takes more than 1 second, replace solenoid valve.

OK or NG

OK	▶	GO TO 7.
NG	▶	Replace EGRC-solenoid valve.

7	CHECK EGR VALVE

- Apply vacuum to EGR vacuum port with a hand vacuum pump.

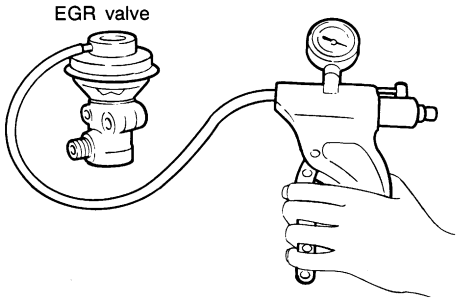

MEF137D

EGR valve spring should lift.

- Check for sticking.

OK or NG

OK	▶	GO TO 8.
NG	▶	Replace EGR valve.

8	CHECK EGRC-BPT VALVE

1. Plug one of two ports of EGRC-BPT valve.
2. Vacuum from the other port and check for leakage while applying a pressure above 0.981 kPa (100 mmH_2O, 3.94 inH_2O) from under EGRC-BPT valve.

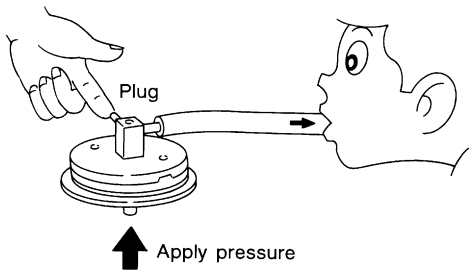

SEF083P

3. If a leakage is noted, replace the valve.

OK or NG

OK	▶	GO TO 9.
NG	▶	Replace EGRC-BPT valve.

9	CHECK EGR TEMPERATURE SENSOR

Check resistance change and resistance value.

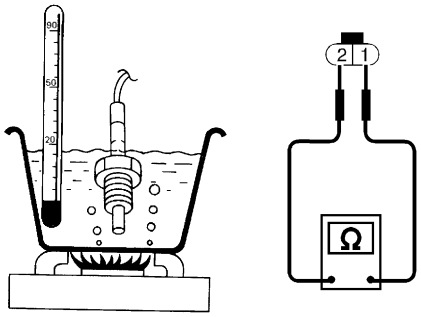

SEF643Q

<Reference data>

EGR temperature °C (°F)	Voltage V	Resistance MΩ
0 (32)	4.56	0.62 - 1.05
50 (122)	2.25	0.065 - 0.094
100 (212)	0.59	0.011 - 0.015

MTBL0549

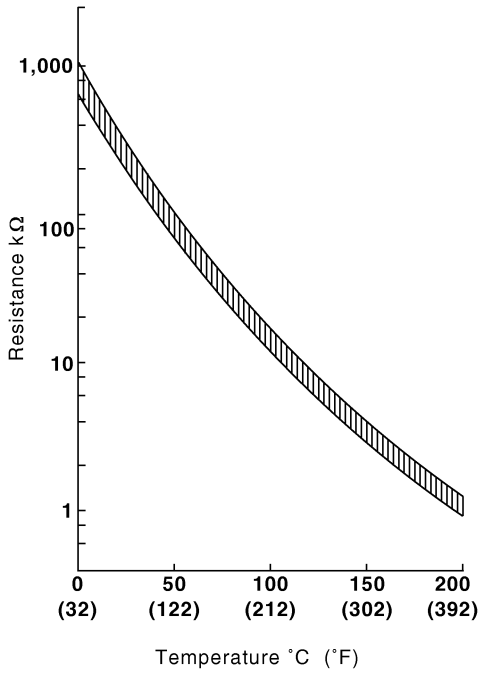

SEF068XB

OK or NG

OK	▶	GO TO 10.
NG	▶	Replace EGR temperature sensor.

10	CHECK INTERMITTENT INCIDENT
Perform "TROUBLE DIAGNOSIS FOR INTERMITTENT INCIDENT", EC-148.	
▶	**INSPECTION END**

On Board Diagnosis Logic

NEEC1055

NOTE:
If DTC P1440 is displayed with P1448, perform trouble diagnosis for DTC P1448 first. (See EC-526.)

This diagnosis detects leaks in the EVAP purge line using of vapor pressure in the fuel tank.
The EVAP canister vent control valve is closed to shut the EVAP purge line. The vacuum cut valve bypass valve will then be opened to clear the line between the fuel tank and the EVAP canister purge volume control solenoid valve. The EVAP control system pressure sensor can now monitor the pressure inside the fuel tank.
If pressure increases, the PCM will check for leaks in the line between the vacuum cut valve and EVAP canister purge volume control solenoid valve.

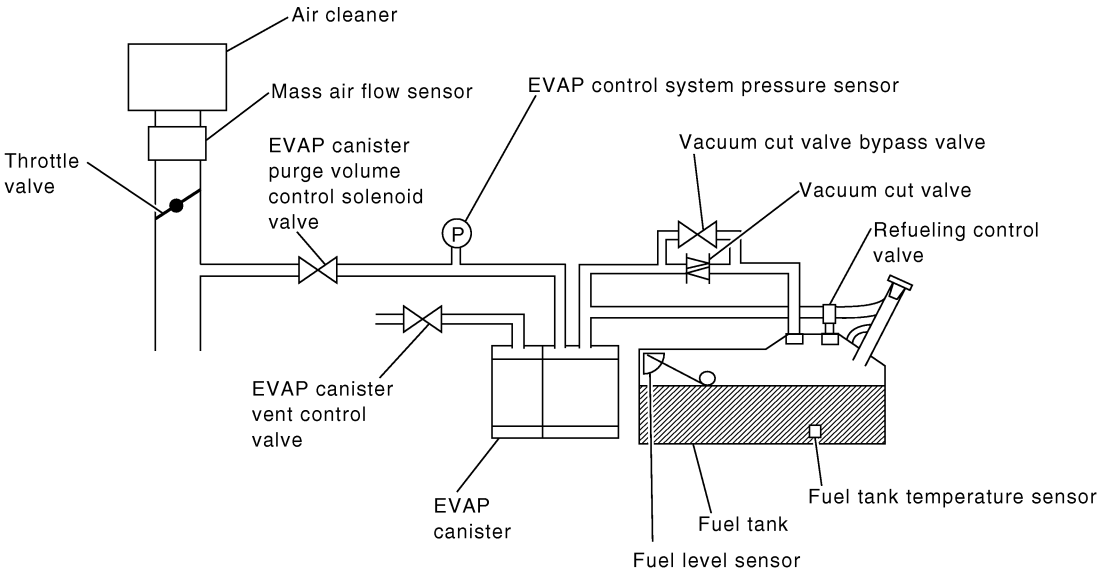

Malfunction is detected when EVAP control system has a leak, EVAP control system does not operate properly.

CAUTION:

- **Use only a genuine NISSAN fuel filler cap as a replacement. If an incorrect fuel filler cap is used, the MIL may come on.**
- **If the fuel filler cap is not tightened properly, the MIL may come on.**
- **Use only a genuine NISSAN rubber tube as a replacement.**

Possible Cause

NEEC1056

- Incorrect fuel tank vacuum relief valve
- Incorrect fuel filler cap used
- Fuel filler cap remains open or fails to close
- Foreign matter caught in fuel filler cap
- Leak is in line between intake manifold and EVAP canister purge volume control solenoid valve
- Foreign matter caught in EVAP canister vent control valve
- EVAP canister
- EVAP purge line (pipe and rubber tube) leaks

Possible Cause (Cont'd)

- EVAP purge line rubber tube bent
- Blocked or bent rubber tube to EVAP control system pressure sensor
- Loose or disconnected rubber tube
- EVAP canister vent control valve and the circuit
- EVAP canister purge volume control solenoid valve
- Fuel tank temperature sensor
- O-ring of EVAP canister vent control valve is missing or damaged
- Water separator
- EVAP canister is saturated with water
- Fuel level sensor and the circuit
- EVAP control system pressure sensor
- Refueling control valve
- ORVR system leaks
- Foreign matter caught in EVAP canister purge volume control solenoid valve

DTC Confirmation Procedure

NEEC1057

Refer to "P1441 EVAP CONTROL SYSTEM (VERY SMALL LEAK) (NEGATIVE PRESSURE)", EC-484.

Diagnostic Procedure

NEEC1058

Refer to "P1441 EVAP CONTROL SYSTEM (VERY SMALL LEAK) (NEGATIVE PRESSURE)", EC-486.

On Board Diagnosis Logic

NEEC1032

This diagnosis detects very small leaks in the EVAP line between the fuel tank and the EVAP canister purge volume control solenoid valve using intake manifold vacuum in the same way as conventional EVAP small leak diagnosis.
If the ECM judges a leak equivalent to a very small leak, the very small leak DTC P1441 will be detected. If the ECM judges a leak equivalent to a small leak, the EVAP small leak DTC P0440 will be detected. Correspondingly, if the ECM judges there is no leak, the diagnosis result is OK.

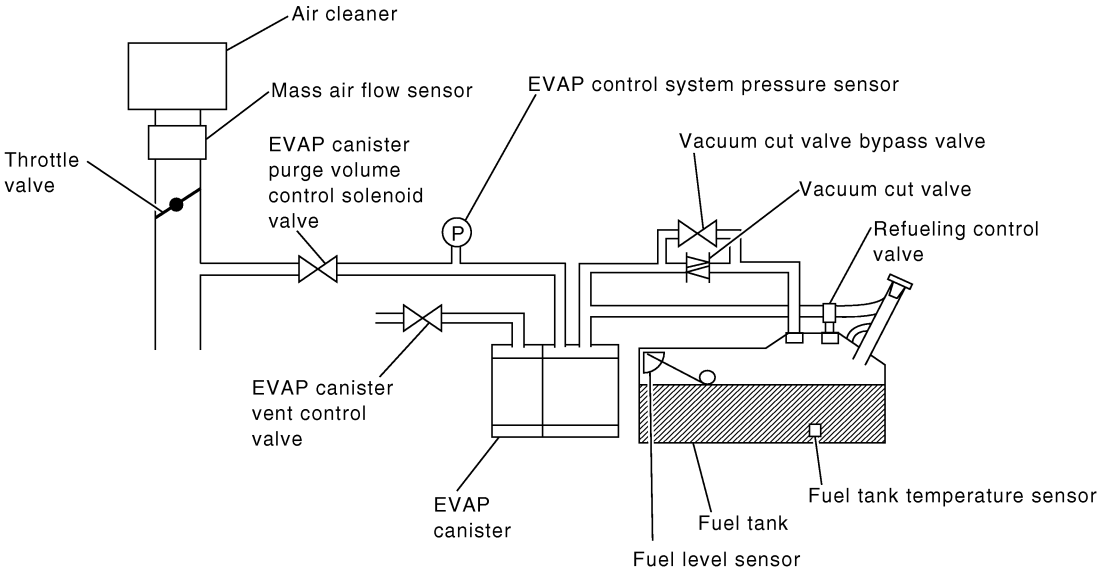

Malfunction is detected when EVAP control system has a very small leak, EVAP control system does not operate properly.

CAUTION:

- **Use only a genuine NISSAN fuel filler cap as a replacement. If an incorrect fuel filler cap is used, the MIL may come on.**
- **If the fuel filler cap is not tightened properly, the MIL may come on.**
- **Use only a genuine NISSAN rubber tube as a replacement.**

Possible Cause

NEEC1033

- Incorrect fuel tank vacuum relief valve
- Incorrect fuel filler cap used
- Fuel filler cap remains open or fails to close.
- Foreign matter caught in fuel filler cap.
- Leak is in line between intake manifold and EVAP canister purge volume control solenoid valve.
- Foreign matter caught in EVAP canister vent control valve.
- EVAP canister or fuel tank leaks
- EVAP purge line (pipe and rubber tube) leaks

Possible Cause (Cont'd)

- EVAP purge line rubber tube bent.
- Blocked or bent rubber tube to EVAP control system pressure sensor
- Loose or disconnected rubber tube
- EVAP canister vent control valve and the circuit
- EVAP canister purge volume control solenoid valve
- Absolute pressure sensor
- Fuel tank temperature sensor
- O-ring of EVAP canister vent control valve is missing or damaged.
- Water separator
- EVAP canister is saturated with water.
- Fuel level sensor and the circuit
- EVAP control system pressure sensor
- Refueling control valve
- ORVR system leaks
- Fuel level sensor and the circuit

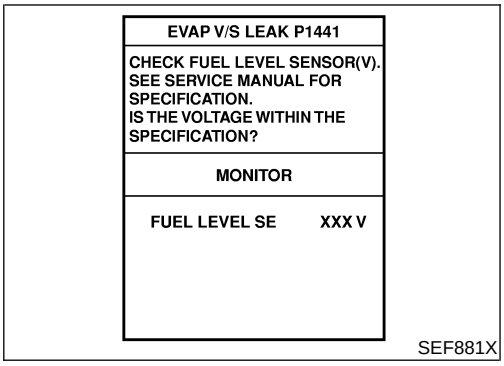

SEF881X

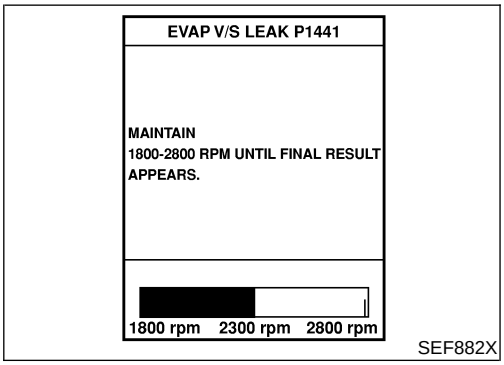

SEF882X

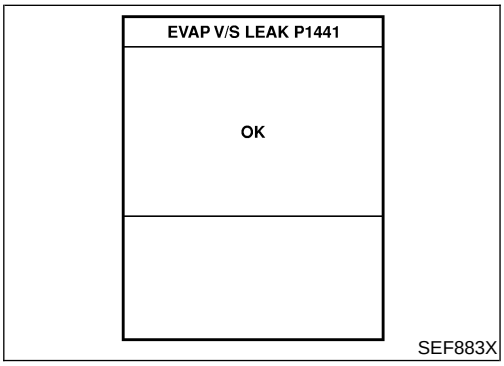

SEF883X

DTC Confirmation Procedure

NEEC1034

CAUTION:

Never remove fuel filler cap during the DTC confirmation procedure.

NOTE:

- **If DTC P1441 is displayed with P0440, perform TROUBLE DIAGNOSIS FOR DTC P1441 first.**
- **If "DIAGNOSTIC TROUBLE CODE CONFIRMATION PROCEDURE" has been previously conducted, always turn ignition switch "OFF" and wait at least 5 seconds before conducting the next test.**
- **After repair, make sure that the hoses and clips are installed properly.**

TESTING CONDITION:

- **Open engine hood before conducting following procedure.**
- **If any of following condition is met just before the DTC confirmation procedure, leave the vehicle for more than 1 hour.**

a) **Fuel filler cap is removed.**
b) **Refilled or drained the fuel.**
c) **EVAP component parts is/are removed.**

- **Before performing the following procedure, confirm that battery voltage is more than 11V at idle.**

With CONSULT-II

1) Turn ignition switch "ON" and select "DATA MONITOR" mode with CONSULT-II.
2) Make sure the following conditions are met.
   FUEL LEVEL SE: 1.16 - 0.25V
   COOLAN TEMP/S: 0 - 32°C (32 - 90°F)
   FUEL T/TMP SE: 0 - 32°C (32 - 90°F)
   INT A/TEMP SE: More than 0°C (32°F)
   If NG, turn ignition switch "OFF" and leave the vehicle in a cool

place (soak the vehicle) or refilling/draining fuel until the output voltage condition of the "FUEL LEVEL SE" meets within the range above and leave the vehicle for more than 1 hour. Then start from step 1).

3) Turn ignition switch "OFF" and wait at least 5 seconds.
4) Turn ignition switch "ON".
5) Select "EVAP VERY/SML LEAK P1441" of "EVAPORATIVE SYSTEM" in "DTC WORK SUPPORT" mode with CONSULT-II.
   Follow the instruction displayed.
6) Make sure that "OK" is displayed.
   If "NG" is displayed, refer to "Diagnostic Procedure", EC-486.

NOTE:

- **If the engine speed cannot be maintained within the range displayed on CONSULT-II screen, go to "Basic inspection", EC-110.**
- **Make sure that EVAP hoses are connected to EVAP canister purge volume control solenoid valve properly.**

OVERALL FUNCTION CHECK

NEEC1034S01

With GST

Use this procedure to check the overall function of the EVAP very small leak function. During this check, a 1st trip DTC might not be confirmed.

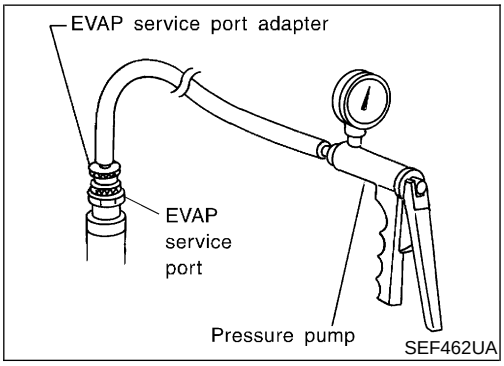

CAUTION:

- **Never use compressed air, doing so may damage the EVAP system.**
- **Do not start engine.**
- **Do not exceeded 4.12 kPa (0.042 kg/cm^2, 0.6 psi).**

1) Attach the EVAP service port adapter securely to the EVAP service port.
2) Set the pressure pump and a hose.
3) Also set a vacuum gauge via 3-way connector and a hose.
4) Turn ignition switch "ON".
5) Connect GST and select mode 8.
6) Using mode 8 control the EVAP canister vent control valve (close) and vacuum cut valve bypass valve (open).
7) Apply pressure and make sure the following conditions are satisfied.
   Pressure to be applied: 2.7 kPa (20 mmHg, 0.79 inHg)
   Time to be waited after the pressure drawn in to the EVAP system and the pressure to be dropped: 60 seconds and the pressure should not be dropped more than 0.4 kPa (3 mmHg, 0.12 inHg)
   If NG, go to diagnostic procedure, EC-486.

NOTE:
For more information, refer to GST instruction manual.

Diagnostic Procedure

NEEC1035

1	CHECK FUEL FILLER CAP DESIGN	
1. Turn ignition switch “OFF”. 2. Check for genuine NISSAN fuel filler cap design. 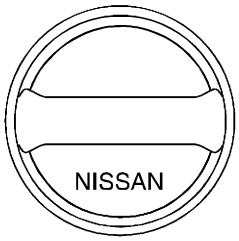 SEF915U		
OK or NG		
OK	▶	GO TO 2.
NG	▶	Replace with genuine NISSAN fuel filler cap.

2	CHECK FUEL FILLER CAP INSTALLATION	
Check that the cap is tightened properly by rotating the cap clockwise.		
OK or NG		
OK	▶	GO TO 3.
NG	▶	● Open fuel filler cap, then clean cap and fuel filler neck threads using air blower. ● Retighten until ratcheting sound is heard.

3	CHECK FUEL FILLER CAP FUNCTION	
Check for air releasing sound while opening the fuel filler cap.		
OK or NG		
OK	▶	GO TO 5.
NG	▶	GO TO 4.

4	CHECK FUEL TANK VACUUM RELIEF VALVE

1. Wipe clean valve housing.
2. Check valve opening pressure and vacuum.

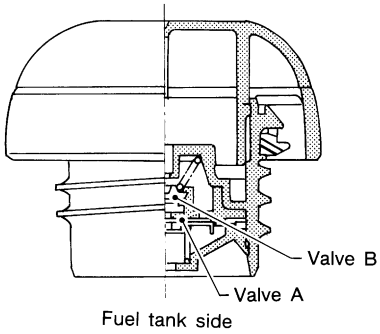

SEF427N

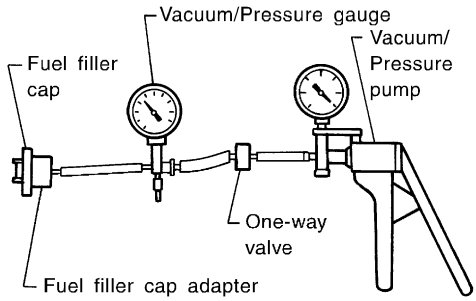

SEF943S

Pressure:
15.3 - 20.0 kPa (0.156 - 0.204 kg/cm^2, 2.22 - 2.90 psi)
Vacuum:
−6.0 to −3.3 kPa (−0.061 to −0.034 kg/cm^2, −0.87 to −0.48 psi)

CAUTION:
Use only a genuine fuel filler cap as a replacement. If an incorrect fuel filler cap is used, the MIL may come on.

OK or NG

OK	▶	GO TO 5.
NG	▶	Replace fuel filler cap with a genuine one.

5	INSTALL THE PRESSURE PUMP

To locate the EVAP leak, install EVAP service port adapter and pressure pump to EVAP service port securely.

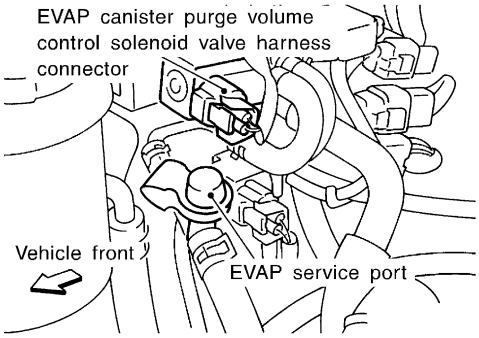

SEF339V

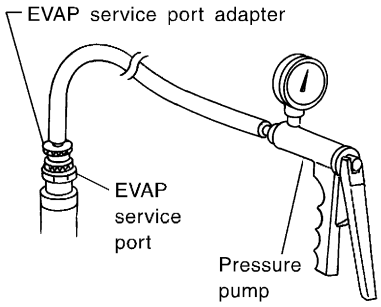

SEF916U

NOTE:
Improper installation of the EVAP service port adapter to the EVAP service port may cause leaking.

Models with CONSULT-II ▶	GO TO 6.
Models without CONSULT-II ▶	GO TO 7.

6	CHECK FOR EVAP LEAK

With CONSULT-II

1. Turn ignition switch "ON".
2. Select "EVAP SYSTEM CLOSE" of "WORK SUPPORT" mode with CONSULT-II.
3. Touch "START" and apply pressure into the EVAP line until the pressure indicator reaches the middle of the bar graph.
   NOTE:
   - **Never use compressed air or a high pressure pump.**
   - **Do not exceed 4.12 kPa (0.042 kg/cm^2, 0.6 psi) of pressure in the system.**

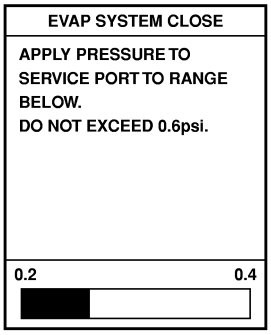

PEF917U

4. Using EVAP leak detector, locate the EVAP leak. For the leak detector, refer to the instruction manual for more details. Refer to "EVAPORATIVE EMISSION LINE DRAWING", EC-43.

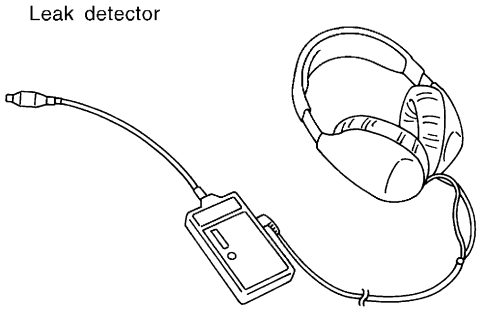

SEF200U

OK or NG

OK	▶	GO TO 8.
NG	▶	Repair or replace.

7	CHECK FOR EVAP LEAK

Without CONSULT-II

1. Turn ignition switch "OFF".
2. Apply 12 volts DC to EVAP canister vent control valve. The valve will close. (Continue to apply 12 volts until the end of test.)

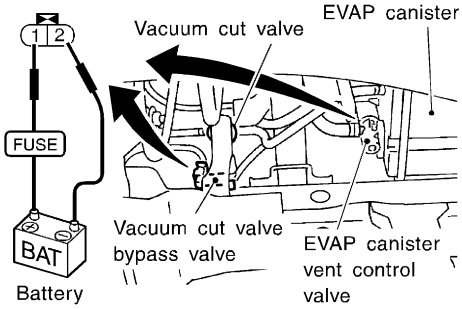

SEF503V

3. Apply 12 volts DC to vacuum cut valve bypass valve. The valve will open. (Continue to apply 12V until the end of test.)
4. Pressurize the EVAP line using pressure pump with 1.3 to 2.7 kPa (10 to 20 mmHg, 0.39 to 0.79 inHg), then remove pump and EVAP service port adapter.
   NOTE:
   - **Never use compressed air or a high pressure pump.**
   - **Do not exceed 4.12 kPa (0.042 kg/cm^2, 0.6 psi) of pressure in the system.**
5. Using EVAP leak detector, locate the EVAP leak. For the leak detector, refer to the instruction manual for more details. Refer to "EVAPORATIVE EMISSION LINE DRAWING", EC-43.

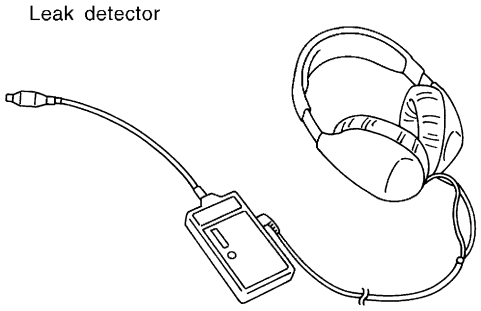

SEF200U

OK or NG

OK	▶	GO TO 8.
NG	▶	Repair or replace.

8	CHECK WATER SEPARATOR

1. Check visually for insect nests in the water separator air inlet.
2. Check visually for cracks or flaws in the appearance.
3. Check visually for cracks or flaws in the hose.
4. Check that **A** and **C** are not clogged by blowing air into **B** with **A**, and then **C** plugged.

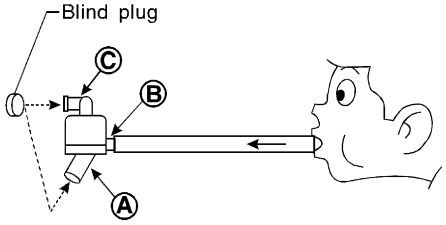

* Ⓐ: Bottom hole (To atmosphere)
Ⓑ: Emergency tube (From EVAP canister)
Ⓒ: Inlet port (To member)

SEF829T

5. In case of NG in items 2 - 4, replace the parts.

NOTE:
- Do not disassemble water separator.

OK or NG

OK	▶	GO TO 9.
NG	▶	Replace water separator.

9	CHECK EVAP CANISTER VENT CONTROL VALVE, O-RING AND CIRCUIT

Refer to "DTC Confirmation Procedure", EC-338.

OK or NG

OK	▶	GO TO 10.
NG	▶	Repair or replace EVAP canister vent control valve and O-ring or harness/connector.

10	CHECK IF EVAP CANISTER SATURATED WITH WATER

1. Remove EVAP canister with EVAP canister vent control valve attached.
2. Does water drain from the EVAP canister?

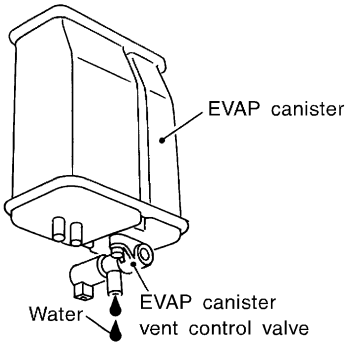

SEF596U

Yes or No

Yes	▶	GO TO 11.
No (With CONSULT-II)	▶	GO TO 13.
No (Without CONSULT-II)	▶	GO TO 14.

11	CHECK EVAP CANISTER
Weigh the EVAP canister with the EVAP canister vent control valve attached. **The weight should be less than 1.8 kg (4.0 lb).** **OK or NG**	
OK (With CONSULT-II) ▶	GO TO 13.
OK (Without CONSULT-II) ▶	GO TO 14.
NG ▶	GO TO 12.

12	DETECT MALFUNCTIONING PART
Check the following. ● EVAP canister for damage ● EVAP hose between EVAP canister and water separator for clogging or poor connection	
▶	Repair hose or replace EVAP canister.

13	CHECK EVAP CANISTER PURGE VOLUME CONTROL SOLENOID VALVE OPERATION

With CONSULT-II
1. Disconnect vacuum hose to EVAP canister purge volume control solenoid valve at EVAP service port.
2. Start engine.
3. Perform "PURG VOL CONT/V" in "ACTIVE TEST" mode.
4. Touch "Qu" on CONSULT-II screen to increase "PURG VOL CONT/V" opening to 100.0%.
5. Check vacuum hose for vacuum when revving engine up to 2,000 rpm.

ACTIVE TEST	
PURG VOL CONT/V	XXX %
MONITOR	
ENG SPEED	XXX rpm
A/F ALPHA-B1	XXX %
A/F ALPHA-B2	XXX %
HO2S1 MNTR (B1)	LEAN
HO2S1 MNTR (B2)	LEAN
THRTL POS SEN	XXX V

Vacuum should exist.

SEF984Y

OK or NG

OK ▶	GO TO 16.
NG ▶	GO TO 15.

14	CHECK EVAP CANISTER PURGE VOLUME CONTROL SOLENOID VALVE OPERATION

Without CONSULT-II
1. Start engine and warm it up to normal operating temperature.
2. Stop engine.
3. Disconnect vacuum hose to EVAP canister purge volume control solenoid valve at EVAP service port.
4. Start engine and let it idle for at least 80 seconds.
5. Check vacuum hose for vacuum when revving engine up to 2,000 rpm.

Vacuum should exist.

OK or NG

OK ▶	GO TO 17.
NG ▶	GO TO 15.

15	CHECK VACUUM HOSE	
Check vacuum hoses for clogging or disconnection. Refer to "Vacuum Hose Drawing", EC-33.		
OK or NG		
OK (With CONSULT-II)	▶	GO TO 16.
OK (Without CONSULT-II)	▶	GO TO 17.
NG	▶	Repair or reconnect the hose.

16	CHECK EVAP CANISTER PURGE VOLUME CONTROL SOLENOID VALVE	
With CONSULT-II 1. Start engine. 2. Perform "PURG VOL CONT/V" in "ACTIVE TEST" mode with CONSULT-II. Check that engine speed varies according to the valve opening.		
OK or NG		
OK	▶	GO TO 18.
NG	▶	GO TO 17.

ACTIVE TEST	
PURG VOL CONT/V	0.0%
MONITOR	
ENG SPEED	XXX rpm
A/F ALPHA-B1	XXX %
A/F ALPHA-B2	XXX %
HO2S1 MNTR (B1)	RICH
HO2S1 MNTR (B2)	RICH
THRTL POS SEN	XXX V

SEF985Y

17	CHECK EVAP CANISTER PURGE VOLUME CONTROL SOLENOID VALVE

With CONSULT-II

Check air passage continuity of EVAP canister purge volume control solenoid valve under the following conditions.

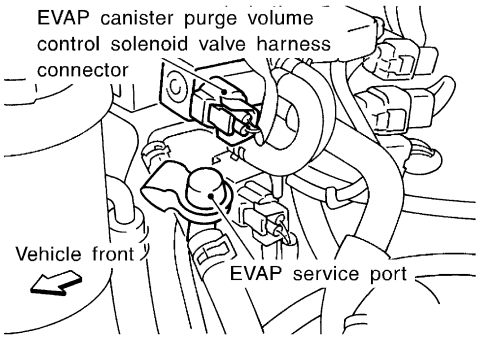

SEF339V

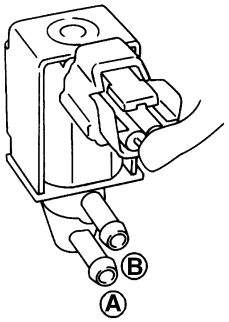

Condition PURG VOL CONT/V value	Air passage continuity between A and B
100.0%	Yes
0.0%	No

SEF334X

Without CONSULT-II

Check air passage continuity of EVAP canister purge volume control solenoid valve under the following conditions.

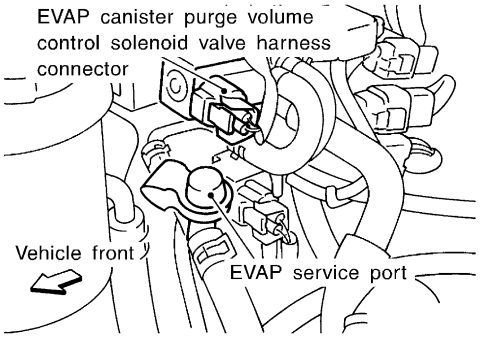

SEF339V

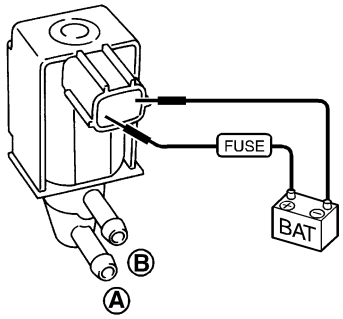

Condition	Air passage continuity between A and B
12V direct current supply between terminals 1 and 2	Yes
No supply	No

SEF335X

OK or NG

OK	▶	GO TO 18.
NG	▶	Replace EVAP canister purge volume control solenoid valve.

18	CHECK FUEL TANK TEMPERATURE SENSOR

1. Remove fuel level sensor unit.
2. Check resistance between fuel level sensor unit and fuel pump terminals 2 and 4 by heating with hot water or heat gun as shown in the figure.

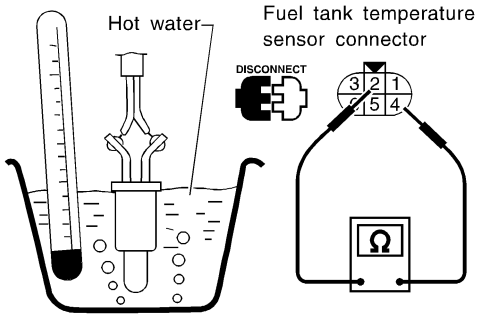

SEF852Z

Temperature °C (°F)	Resistance kΩ
20 (68)	2.3 - 2.7
50 (122)	0.79 - 0.90

MTBL0291

OK or NG

OK	▶	GO TO 19.
NG	▶	Replace fuel level sensor unit.

19	CHECK EVAP CONTROL SYSTEM PRESSURE SENSOR

1. Remove EVAP control system pressure sensor with its harness connector connected.
   CAUTION:
   - **Never apply force to the air hole protector of the sensor if equipped.**

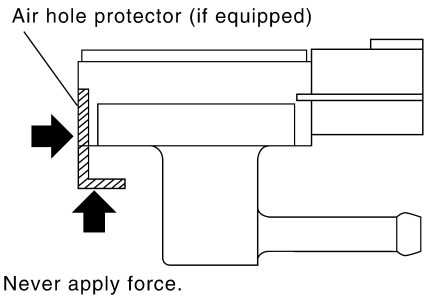

SEF799W

2. Remove hose from EVAP control system pressure sensor.
3. Turn ignition switch "ON".
4. Use pump to apply vacuum and pressure to EVAP control system pressure sensor as shown in figure.
   CAUTION:
   - **Always calibrate the vacuum pump gauge when using it.**
   - **Do not apply below −20 kPa (−150 mmHg, −5.91 inHg) or over 20 kPa (150 mmHg, 5.91 inHg) of pressure.**
5. Check input voltage between ECM terminal 62 and ground.

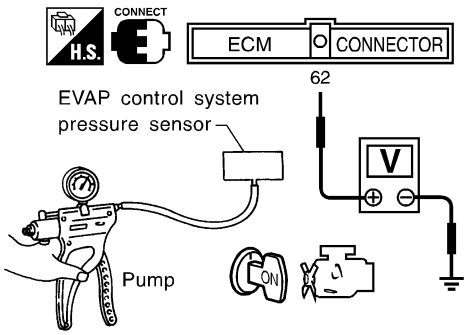

Pressure (Relative to atmospheric pressure)	Voltage V
0 kPa (0 mmHg, 0 inHg)	3.0 - 3.6
–9.3 kPa (–70 mmHg, –2.76 inHg)	0.4 - 0.6

SEF705Z

CAUTION:
- **Discard and EVAP control system pressure sensor which has been dropped from a height of more than 0.5 m (19.7 in) onto a hard surface such as a concrete floor; use a new one.**

OK or NG

OK	▶	GO TO 20.
NG	▶	Replace EVAP control system pressure sensor.

20	CHECK EVAP PURGE LINE

Check EVAP purge line (pipe, rubber tube, fuel tank and EVAP canister) for cracks or improper connection.
Refer to "Evaporative Emission System", EC-40.

OK or NG

OK	▶	GO TO 21.
NG	▶	Repair or reconnect the hose.

21	CLEAN EVAP PURGE LINE

Clean EVAP purge line (pipe and rubber tube) using air blower.

	▶	GO TO 22.

22	CHECK FUEL LEVEL SENSOR	
Refer to ***EL-82***, "Fuel Level Sensor Unit Check".		
OK or NG		
OK	▶	GO TO 23.
NG	▶	Replace fuel level sensor unit.

23	CHECK INTERMITTENT INCIDENT
Refer to "TROUBLE DIAGNOSIS FOR INTERMITTENT INCIDENT", EC-148.	
▶	**INSPECTION END**

Description

NEEC0359

SYSTEM DESCRIPTION

NEEC0359S01

Sensor	Input Signal to ECM	ECM function	Actuator
Camshaft position sensor	Engine speed	EVAP canister purge flow control	EVAP canister purge volume control solenoid valve
Mass air flow sensor	Amount of intake air		
Engine coolant temperature sensor	Engine coolant temperature		
Ignition switch	Start signal		
Throttle position sensor	Throttle position		
Throttle position switch	Closed throttle position		
Heated oxygen sensor 1 (front)	Density of oxygen in exhaust gas (Mixture ratio feedback signal)		
Fuel tank temperature sensor	Fuel temperature in fuel tank		
Vehicle speed sensor	Vehicle speed		

This system controls flow rate of fuel vapor from the EVAP canister. The opening of the vapor by-pass passage in the EVAP canister purge volume control solenoid valve changes to control the flow rate. The EVAP canister purge volume control solenoid valve repeats ON/OFF operation according to the signal sent from the ECM. The opening of the valve varies for optimum engine control. The optimum value stored in the ECM is determined by considering various engine conditions. When the engine is operating, the flow rate of fuel vapor from the EVAP canister is regulated as the air flow changes.

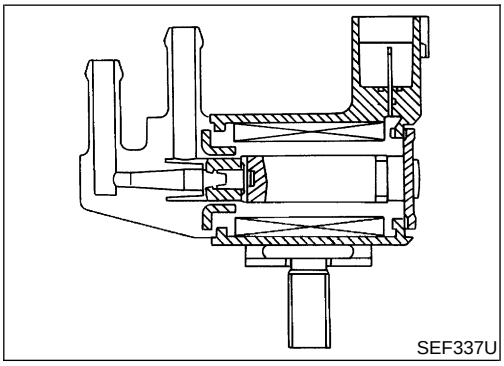
SEF337U

COMPONENT DESCRIPTION

NEEC0359S02

The EVAP canister purge volume control solenoid valve uses a ON/OFF duty to control the flow rate of fuel vapor from the EVAP canister. The EVAP canister purge volume control solenoid valve is moved by ON/OFF pulses from the ECM. The longer the ON pulse, the greater the amount of fuel vapor that will flow through the valve.

CONSULT-II Reference Value in Data Monitor Mode

NEEC0360

Specification data are reference values.

MONITOR ITEM	CONDITION		SPECIFICATION
PURG VOL C/V	• Engine: After warming up • Air conditioner switch “OFF” • Shift lever: “N” • No-load	Idle (Vehicle stopped)	0%
		2,000 rpm (200 seconds after starting engine)	—

ECM Terminals and Reference Value

NEEC0361

Specification data are reference values and are measured between each terminal and ground.

CAUTION:

Do not use ECM ground terminals when measuring input/output voltage. Doing so may result in damage to the ECM's transistor. Use a ground other than ECM terminals, such as the ground.

TERMINAL NO.	WIRE COLOR	ITEM	CONDITION	DATA (DC Voltage)
4	LG/R	ECM relay (Self-shut-off)	**[Engine is running]** **[Ignition switch "OFF"]** ● For a few seconds after turning ignition switch "OFF"	0 - 1V
			[Ignition switch "OFF"] ● A few seconds passed after turning ignition switch "OFF"	BATTERY VOLTAGE (11 - 14V)
5	R/Y	EVAP canister purge volume control solenoid valve	**[Engine is running]** ● Idle speed	BATTERY VOLTAGE (11 - 14V) 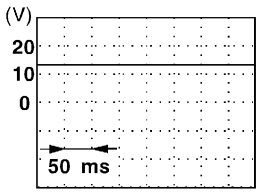
			[Engine is running] ● Engine speed is 2,000 rpm	BATTERY VOLTAGE (11 - 14V) 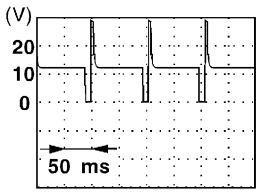
67	B/P	Power supply for ECM	**[Ignition switch "ON"]**	BATTERY VOLTAGE (11 - 14V)
72	B/P			
117	B/P	Current return	**[Engine is running]** ● Idle speed	BATTERY VOLTAGE (11 - 14V)

On Board Diagnosis Logic

NEEC0362

DTC No.	Malfunction is detected when ...	Check Items (Possible Cause)
P1444	The canister purge flow is detected during the specified driving conditions, even when EVAP canister purge volume control solenoid valve is completely closed.	● EVAP control system pressure sensor ● EVAP canister purge volume control solenoid valve (The valve is stuck open.) ● EVAP canister vent control valve ● EVAP canister ● Hoses (Hoses are connected incorrectly or clogged.)

DTC Confirmation Procedure

=NEEC0363

NOTE:
If “DTC Confirmation Procedure” has been previously conducted, always turn ignition switch “OFF” and wait at least 5 seconds before conducting the next test.

TESTING CONDITION:
Always perform test at a temperature of 5°C (41°F) or more.

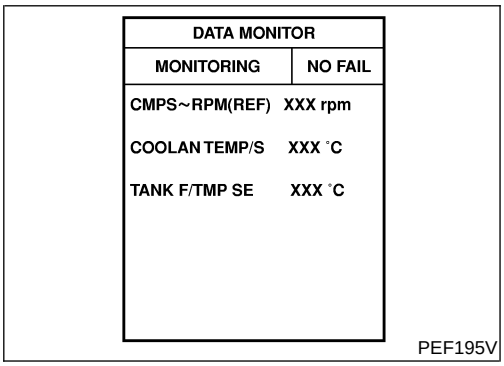

PEF195V

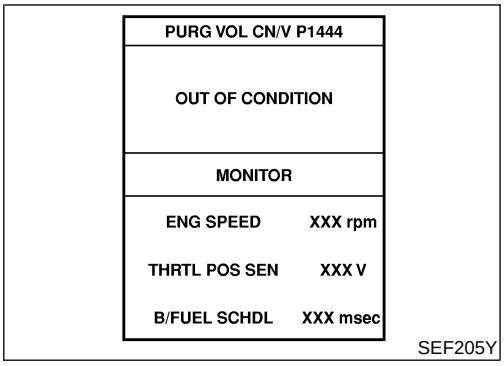

SEF205Y

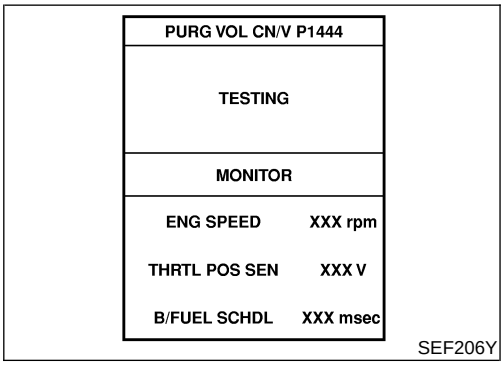

SEF206Y

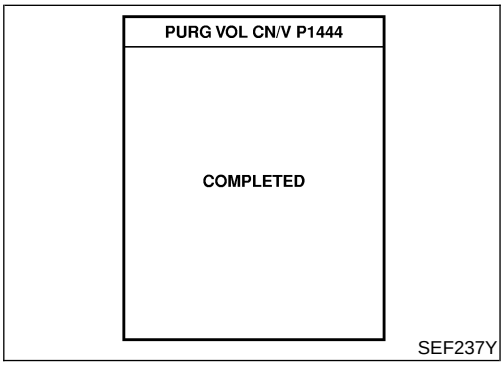

SEF237Y

With CONSULT-II

1) Start engine and warm it up to normal operating temperature.
2) Turn ignition switch OFF and wait at least 5 seconds.
3) Turn ignition switch ON.
4) Select “DATA MONITOR” mode with CONSULT-II.
5) Check that TANK F/TEMP SE is 0°C (32°F) or more.
6) Select “PURG VOL C/V P1444” of “EVAPORATIVE SYSTEM” in “DTC WORK SUPPORT” mode with CONSULT-II.
7) Touch “START”.
8) Start engine and let it idle until “TESTING” on CONSULT-II changes to “COMPLETED”. (It will take for at least 10 seconds.)
   If “TESTING” is not displayed after 5 minutes, retry from step 2.
9) Make sure that “OK” is displayed after touching “SELF-DIAG RESULTS”. If “NG” is displayed, refer to “Diagnostic Procedure”, EC-502.

With GST

Follow the procedure “With CONSULT-II”.

Wiring Diagram

NEEC0504

EC-PGC/V-01

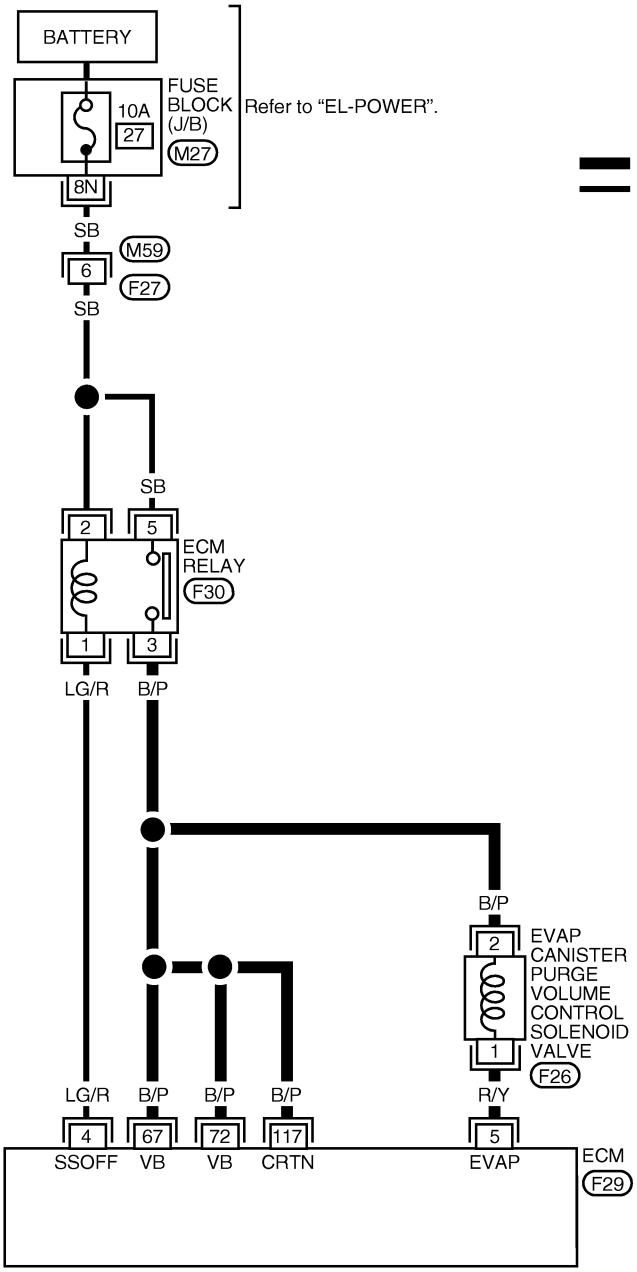

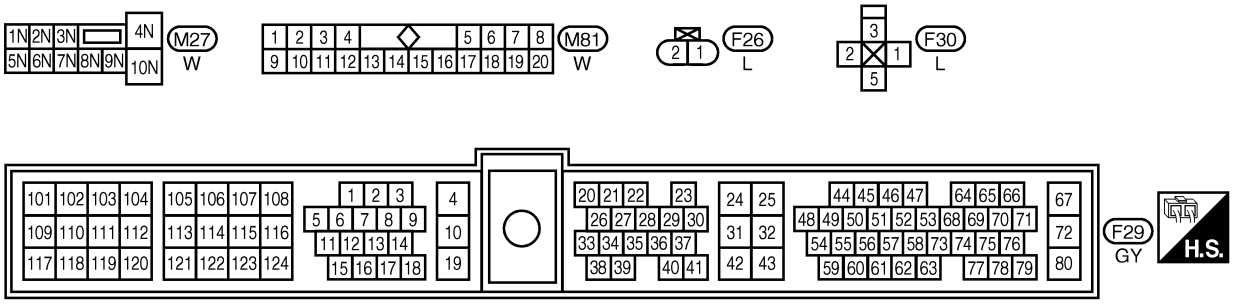

AEC996A

Diagnostic Procedure

=NEEC0364

1	CHECK POWER SUPPLY

1. Turn ignition switch OFF.
2. Disconnect EVAP canister purge volume control solenoid valve harness connector.

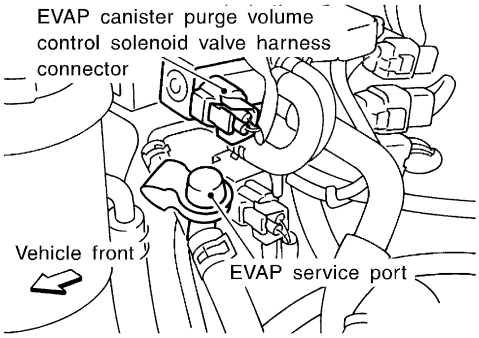

SEF339V

3. Turn ignition switch ON.
4. Check voltage between terminal 2 and engine ground with CONSULT-II or tester.

Voltage: Battery voltage

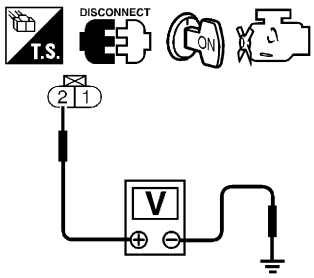

SEF192V

OK or NG

OK	▶	GO TO 3.
NG	▶	GO TO 2.

2	DETECT MALFUNCTIONING PART

Check the following.

- Harness for open or short between EVAP canister purge volume control solenoid valve and ECM relay
- Harness for open or short between EVAP canister purge volume control solenoid valve and ECM

	▶	Repair harness or connectors.

3	CHECK OUTPUT SIGNAL CIRCUIT

1. Turn ignition switch OFF.
2. Disconnect ECM harness connector.
3. Check harness continuity between ECM terminal 5 and terminal 1.
   Continuity should exist.

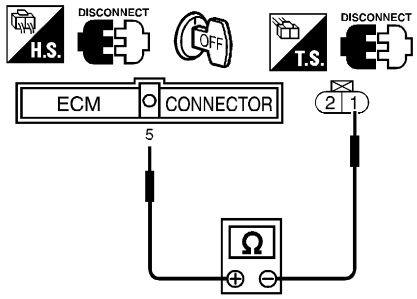

SEF193V

If OK, check harness for short to ground and short to power.

OK or NG

OK	▶	GO TO 5.
NG	▶	GO TO 4.

4	DETECT MALFUNCTIONING PART
Check the harness for open or short between EVAP canister purge volume control solenoid valve and ECM.	
▶	Repair open circuit or short to ground or short to power in harness or connectors.

Diagnostic Procedure (Cont'd)

5	CHECK EVAP CONTROL SYSTEM PRESSURE SENSOR

1. Remove EVAP control system pressure sensor with its harness connector connected.

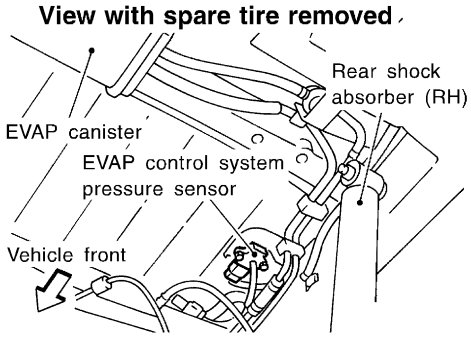

SEF341V

2. Remove hose from EVAP control system pressure sensor.
3. Use pump to apply vacuum and pressure to EVAP control system pressure sensor as shown in figure.
4. Check output voltage between ECM terminal 62 and engine ground.

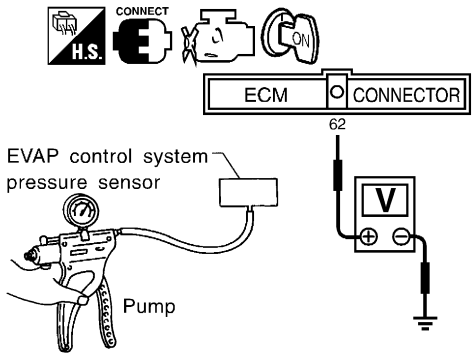

SEF198V

Pressure (Relative to atomospheric pressure)	Voltage (V)
0 kPa (0 mmHg, 0 inHg)	3.0 - 3.6
–9.3 kPa (–70 mmHg, –2.76 inHg)	0.4 - 0.6

MTBL0295

CAUTION:

- **Always calibrate the vacuum pump gauge when using it.**
- **Do not apply below −20 kPa (−150 mmHg, −5.91 inHg) or over 20 kPa (150 mmHg, 5.91 inHg) of pressure.**

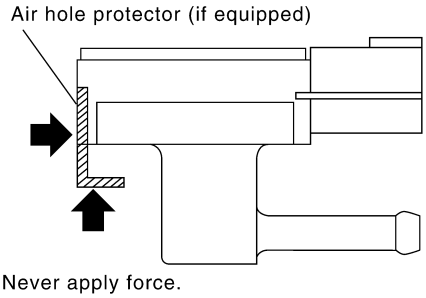

SEF799W

- **Never apply force to the air hole protector of the sensor, if equipped.**
- **Discard any EVAP control system pressure sensor which has been dropped from a height of more than 0.5 m (19.7 in) onto a hard surface such as a concrete floor; use a new one.**

OK or NG

OK (With CONSULT-II) ▶	GO TO 6.
OK (Without CONSULT-II) ▶	GO TO 7.
NG ▶	Replace EVAP control system pressure sensor.

6	CHECK EVAP CANISTER PURGE VOLUME CONTROL SOLENOID VALVE

With CONSULT-II

1. Start engine.
2. Perform "PURG VOL CONT/V" in "ACTIVE TEST" mode with CONSULT-II. Check that engine speed varies according to the valve opening. Check air passage continuity.
   If OK, inspection end. If NG, go to following step.

ACTIVE TEST	
PURG VOL CONT/V	XXX %
MONITOR	
ENG SPEED	XXX rpm
A/F ALPHA-B1	XXX %
HO2S1 MNTR (B1)	LEAN
THRTL POS SEN	XXX V

SEF801Y

3. Check air passage continuity.

Condition PURG VOL CONT/V value	Air passage continuity between **A** and **B**
100.0%	Yes
0.0%	No

MTBL0302

OK or NG

OK	▶	GO TO 8.
NG	▶	Replace EVAP canister purge volume control solenoid valve.

Diagnostic Procedure (Cont'd)

7	CHECK EVAP CANISTER PURGE VOLUME CONTROL SOLENOID VALVE

Without CONSULT-II

Check air passage continuity.

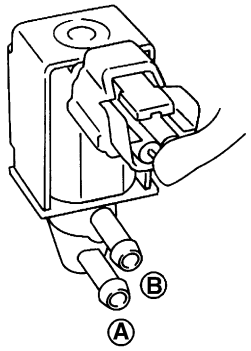

SEF660U

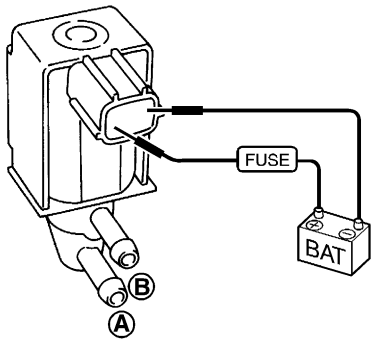

SEF661U

Condition	Air passage continuity between **A** and **B**
12V direct current supply between terminals	Yes
No supply	No

MTBL0303

OK or NG

OK	▶	GO TO 9.
NG	▶	Replace EVAP canister purge volume control solenoid valve.

8	CHECK EVAP CANISTER VENT CONTROL VALVE

With CONSULT-II

Check air passage continuity.

Perform "VENT CONTROL/V" in "ACTIVE TEST" mode.

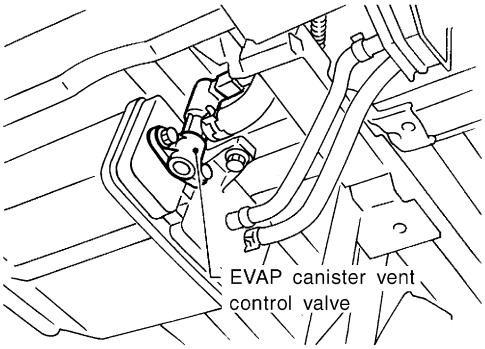

SEF143S

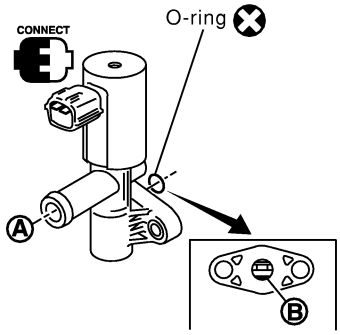

ACTIVE TEST	
VENT CONTROL/V	OFF
MONITOR	
ENG SPEED	XXX rpm
A/F ALPHA-B1	XXX %
HO2S1 (B1)	XXX V
THRTL POS SEN	XXX V

Condition VENT CONTROL/V	Air passage continuity between A and B
ON	No
OFF	Yes

Operation takes less than 1 second.

SEF803Y

OK or NG

OK	▶	GO TO 10.
NG	▶	Replace EVAP canister vent control valve.

Diagnostic Procedure (Cont'd)

9	CHECK EVAP CANISTER VENT CONTROL VALVE

Without CONSULT-II

Check air passage continuity shown in the figure.

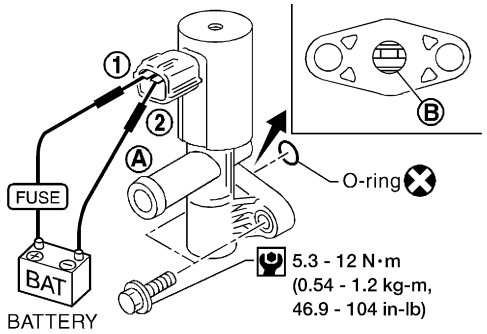

AEC783A

Condition	Air passage continuity between **A** and **B**
12V direct current supply between terminals 1 and 2	No
No supply	Yes

MTBL0297

If NG or operation takes more than 1 second, clean valve using air blower or replace as necessary.

If the portion B is rusted, replace EVAP canister vent control valve. Make sure new O-ring is installed properly.

OK or NG

OK	▶	GO TO 10.
NG	▶	Replace EVAP canister vent control valve.

10	CHECK RUBBER TUBE

Check for obstructed water separator and rubber tube connected to EVAP canister vent control valve and clean the rubber tube using air blower. Check water separator.

1. Check visually for insect nests in the water separator air inlet.
2. Check visually for cracks or flaws in the appearance.
3. Check visually for cracks or flaws in the hose.
4. Check that **A** and **C** are not clogged by blowing air into **B** with **A**, and then **C** plugged.

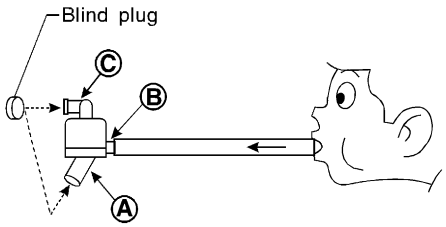

* A : Bottom hole (To atmosphere)
B : Emergency tube (From EVAP canister)
C : Inlet port (To member)

SEF829T

5. In case of NG in items 2 - 4, replace the parts.

- **Do not disassemble water separator.**

OK or NG

OK	▶	GO TO 11.
NG	▶	Clean, repair or replace rubber tube and/or water separator.

11	CHECK IF EVAP CANISTER SATURATED WITH WATER

1. Remove EVAP canister with EVAP canister vent control valve attached.
2. Check if water will drain from the EVAP canister.

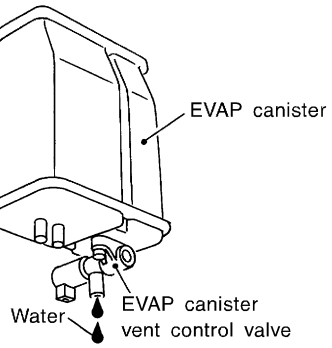

SEF596U

Yes or No

Yes	▶	GO TO 12.
No	▶	GO TO 14.

12	CHECK EVAP CANISTER

Weigh the EVAP canister with the EVAP canister vent control valve attached.
The weight should be less than 1.8 kg (4.0 lb).

OK or NG

OK	▶	GO TO 14.
NG	▶	GO TO 13.

13	DETECT MALFUNCTIONING PART

Check the following.
- EVAP canister for damage
- EVAP hose between EVAP canister and water separator for clogging or poor connection

	▶	Repair hose or replace EVAP canister.

14	CHECK INTERMITTENT INCIDENT

Refer to "TROUBLE DIAGNOSIS FOR INTERMITTENT INCIDENT", EC-148.

	▶	**INSPECTION END**

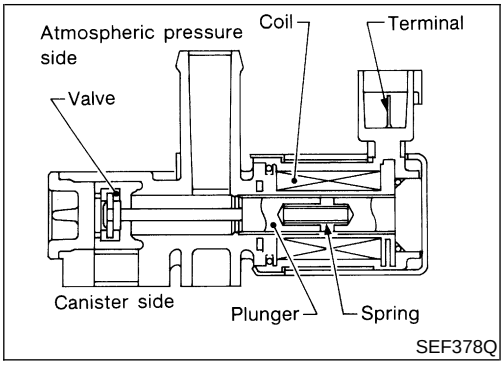

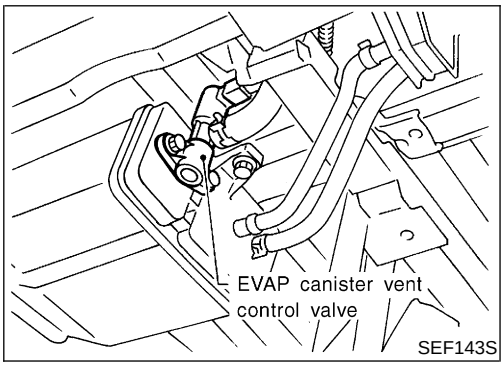

Component Description

NEEC0366

The EVAP canister vent control valve is located on the EVAP canister and is used to seal the canister vent.
This solenoid (the EVAP canister vent control valve) responds to signals from the ECM.
When the ECM sends an ON signal, the coil in the solenoid valve is energized.
A plunger will then move to seal the canister vent. The ability to seal the vent is necessary for the on board diagnosis of other evaporative emission control system components.
This solenoid valve is used only for diagnosis, and usually remains opened.
When the vent is closed, under normal purge conditions, the evaporative emission control system is depressurized and allows "EVAP Control System (Small Leak)" diagnosis.

CONSULT-II Reference Value in Data Monitor Mode

NEEC0367

Specification data are reference values.

MONITOR ITEM	CONDITION	SPECIFICATION
VENT CONT/V	• Ignition switch: ON	OFF

ECM Terminals and Reference Value

NEEC0368

Specification data are reference values and are measured between each terminal and ground.

CAUTION:

Do not use ECM ground terminals when measuring input/output voltage. Doing so may result in damage to the ECM's transistor. Use a ground other than ECM terminals, such as the ground.

TERMINAL NO.	WIRE COLOR	ITEM	CONDITION	DATA (DC Voltage)
108	R/G	EVAP canister vent control valve	**[Ignition switch "ON"]**	BATTERY VOLTAGE (11 - 14V)

On Board Diagnosis Logic

NEEC0369

DTC No.	Malfunction is detected when ...	Check Items (Possible Cause)
P1446	• EVAP canister vent control valve remains closed under specified driving conditions.	• EVAP canister vent control valve • EVAP control system pressure sensor and the circuit • Blocked rubber tube to EVAP canister vent control valve • Water separator • EVAP canister is saturated with water.

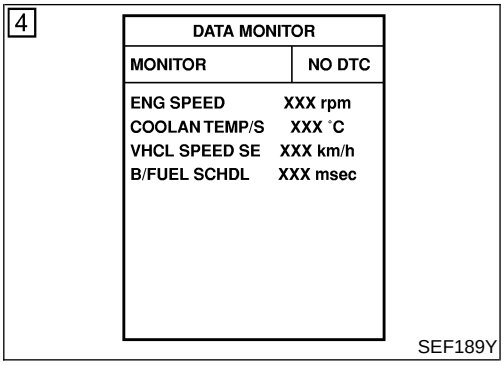

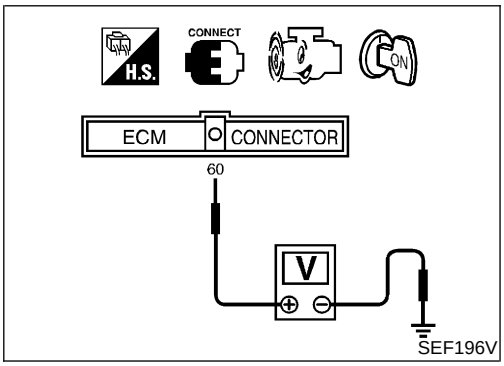

DTC Confirmation Procedure

NEEC0370

CAUTION:

Always drive vehicle at a safe speed.

NOTE:

If "DTC Confirmation Procedure" has been previously conducted, always turn ignition switch "OFF" and wait at least 5 seconds before conducting the next test.

TESTING CONDITION:

Always perform at a temperature above 0°C (32°F).

With CONSULT-II

1) Start engine and warm it up to normal operating temperature.
2) Turn ignition switch OFF and wait at least 5 seconds.
3) Turn ignition switch ON.
4) Select "DATA MONITOR" mode with CONSULT-II.
5) Check that TANK F/TMP SE is 0°C (32°F) or more.
6) Drive vehicle at a speed of approximately 80 km/h (50 MPH) for a maximum of 15 minutes.
7) If 1st trip DTC is detected, go to "DIAGNOSTIC PROCEDURE" on EC-512.

NOTE:

If a malfunction exists, NG result may be displayed quicker.

With GST

1) Start engine and warm it up to normal operating temperature.
2) Check that voltage between ECM terminal 60 (fuel tank temperature sensor signal) and ground is less than 4.2V.
3) Drive vehicle at a speed of approximately 80 km/h (50 MPH) for 15 minutes.
4) Select "MODE 7" with GST.
5) If 1st trip DTC is detected, go to "DIAGNOSTIC PROCEDURE" on EC-512.

Diagnostic Procedure

=NEEC0371

1	CHECK RUBBER TUBE FOR CLOGGING

Check obstructed water separator and rubber tube to EVAP canister vent control valve and clean the rubber tube using air blower.

Check water separator.

1. Check visually for insect nests in the water separator air inlet.
2. Check visually for cracks or flaws in the appearance.
3. Check visually for cracks or flaws in the hose.
4. Check that **A** and **C** are not clogged by blowing air into **B** with **A**, and then **C** plugged.

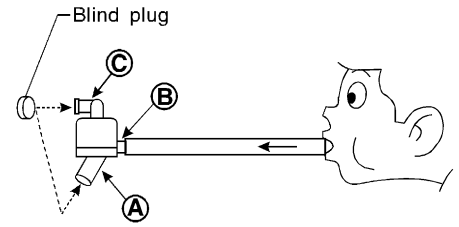

* Ⓐ: Bottom hole (To atmosphere)
Ⓑ: Emergency tube (From EVAP canister)
Ⓒ: Inlet port (To member)

SEF829T

5. In case of NG in items 2 - 4, replace the parts.

- **Do not disassemble water separator.**

OK or NG

OK (With CONSULT-II)	▶	GO TO 2.
OK (Without CONSULT-II)	▶	GO TO 3.
NG	▶	Clean, repair or replace rubber tube and/or water separator.

2	CHECK EVAP CANISTER VENT CONTROL VALVE AND O-RING

With CONSULT-II

Check air passage continuity.

Perform "VENT CONTROL/V" in "ACTIVE TEST" mode.

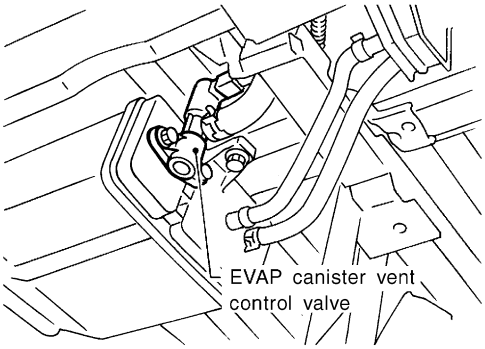

SEF143S

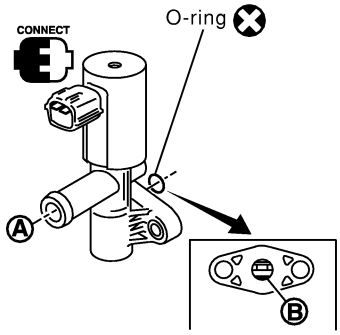

ACTIVE TEST	
VENT CONTROL/V	OFF
MONITOR	
ENG SPEED	XXX rpm
A/F ALPHA-B1	XXX %
HO2S1 (B1)	XXX V
THRTL POS SEN	XXX V

Condition VENT CONTROL/V	Air passage continuity between A and B
ON	No
OFF	Yes

Operation takes less than 1 second.

SEF803Y

OK or NG

OK	▶	GO TO 4.
NG	▶	Replace EVAP canister vent control valve and O-ring.

Diagnostic Procedure (Cont'd)

3	CHECK EVAP CANISTER VENT CONTROL VALVE AND O-RING

Without CONSULT-II

Check air passage continuity shown in the figure.

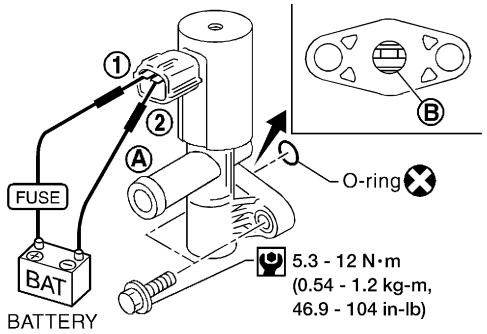

AEC783A

Condition	Air passage continuity between **A** and **B**
12V direct current supply between terminals 1 and 2	No
No supply	Yes

MTBL0297

If NG or operation takes more than 1 second, clean valve using air blower or replace as necessary.

If the portion B is rusted, replace EVAP canister vent control valve. Make sure new O-ring is installed properly.

OK or NG

OK	▶	GO TO 4.
NG	▶	Replace EVAP canister vent control valve and O-ring.

4	CHECK IF EVAP CANISTER IS SATURATED WITH WATER

1. Remove EVAP canister with EVAP canister vent control valve attached.
2. Check if water will drain from the EVAP canister.

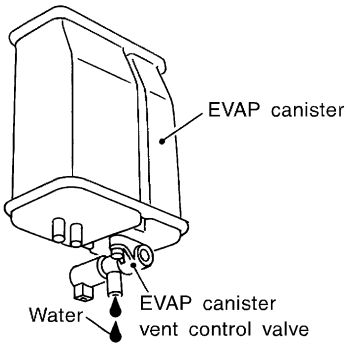

SEF596U

Yes or No

Yes	▶	GO TO 5.
No	▶	GO TO 7.

5	CHECK EVAP CANISTER

Weigh the EVAP canister with EVAP canister vent control valve attached.

The weight should be less than 1.8 kg (4.0 lb).

OK or NG

OK	▶	GO TO 7.
NG	▶	GO TO 6.

6	DETECT MALFUNCTIONING PART

Check the following.
1. Visually check the EVAP canister for damage.
2. Check hose connection between EVAP canister and water separator for clogging and poor connection.
3. Check water separator.

a. Check visually for insect nests in the water separator air inlet.
b. Check visually for cracks or flaws in the appearance.
c. Check visually for cracks or flaws in the hose.
d. Check that **A** and **C** are not clogged by blowing air into **B** with **A**, and then **C** plugged.

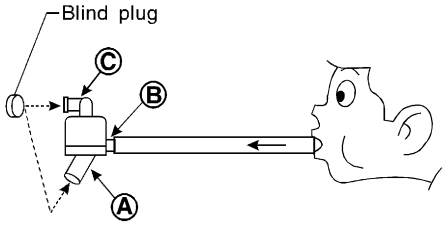

* Ⓐ: Bottom hole (To atmosphere)
Ⓑ: Emergency tube (From EVAP canister)
Ⓒ: Inlet port (To member)

SEF829T

e. In case of NG in items 2 - 4, replace the parts.
- **Do not disassemble water separator.**

▶	Repair hose or replace EVAP canister or water separator.

7	CHECK EVAP CONTROL SYSTEM PRESSURE SENSOR HOSE

Check disconnection or improper connection of hose connected to EVAP control system pressure sensor.

OK or NG

OK	▶	GO TO 8.
NG	▶	Install hose properly or replace it.

8	CHECK HARNESS CONNECTOR

1. Disconnect EVAP control system pressure sensor harness connector.
2. Check harness connector for water.
   Water should not exist.

OK or NG

OK	▶	GO TO 9.
NG	▶	Replace EVAP control system pressure sensor.

9	CHECK EVAP CONTROL SYSTEM PRESSURE SENSOR AND CIRCUIT

Refer to "DTC Confirmation Procedure", EC-393.

OK or NG

OK	▶	GO TO 10.
NG	▶	Replace EVAP control system pressure sensor and repair or replace harness and connector.

10	CHECK INTERMITTENT INCIDENT

Perform "TROUBLE DIAGNOSIS FOR INTERMITTENT INCIDENT", EC-148.

▶	**INSPECTION END**

System Description

NEEC0373

NOTE:
If both DTC P0510 and P1447 are displayed, perform trouble diagnosis for "DTC P0510" first. (See EC-440.)

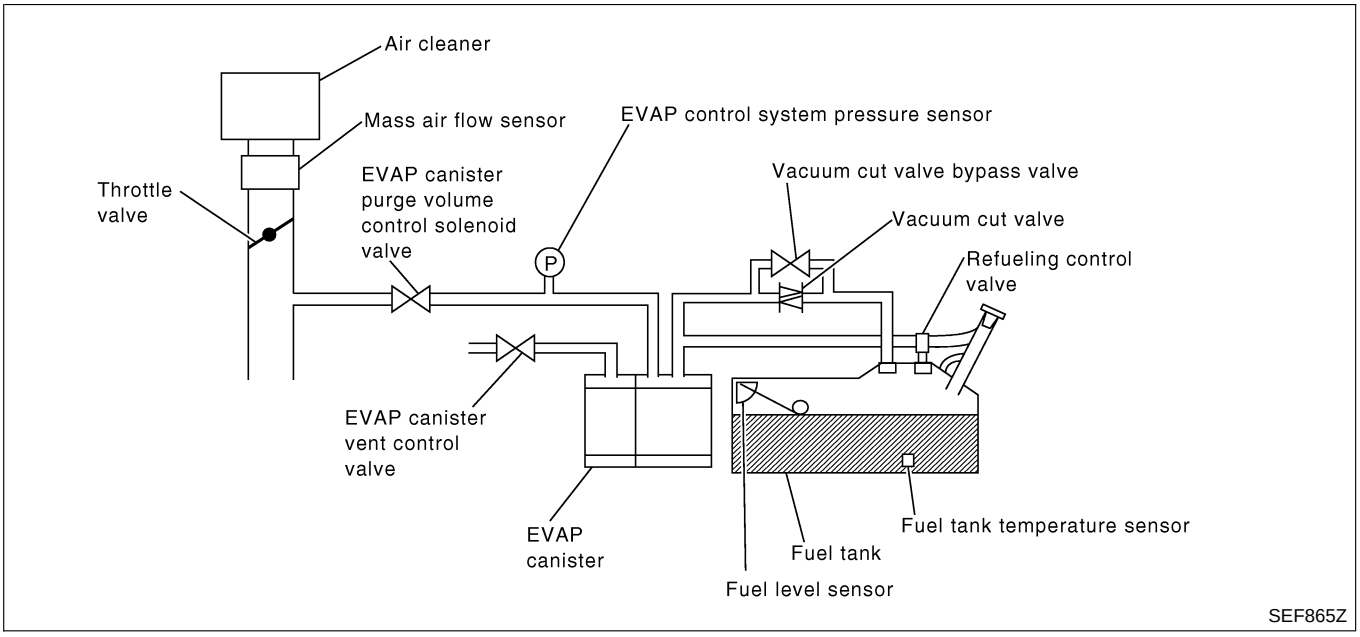

In this evaporative emission (EVAP) control system, purge flow occurs during non-closed throttle conditions. Purge volume is related to air intake volume. Under normal purge conditions (non-closed throttle), the EVAP canister purge volume control solenoid valve is open. Purge flow exposes the EVAP control system pressure sensor to intake manifold vacuum.

On Board Diagnosis Logic

NEEC0374

Under normal conditions (non-closed throttle), sensor output voltage indicates if pressure drop and purge flow are adequate. If not, a fault is determined.

DTC No.	Malfunction is detected when ...	Check Items (Possible Cause)
P1447	• EVAP control system does not operate properly. • EVAP control system has a leak between intake manifold and EVAP control system pressure sensor.	• EVAP canister purge volume control solenoid valve stuck closed • EVAP control system pressure sensor and the circuit • Loose, disconnected or improper connection of rubber tube • Blocked rubber tube • Cracked EVAP canister • Closed throttle position switch • Blocked purge port • EVAP canister vent control valve

5

PURG FLOW P1447	
OUT OF CONDITION	
MONITOR	
ENG SPEED	XXX rpm
THRTL POS SEN	XXX V
B/FUEL SCHDL	XXX msec

SEF207Y

6

PURG FLOW P1447	
TESTING	
MONITOR	
ENG SPEED	XXX rpm
THRTL POS SEN	XXX V
B/FUEL SCHDL	XXX msec

SEF208Y

6

PURG FLOW P1447
COMPLETED

SEF238Y

DTC Confirmation Procedure

NEEC0375

CAUTION:

Always drive vehicle at a safe speed.

NOTE:

If "DTC Confirmation Procedure" has been previously conducted, always turn ignition switch OFF and wait at least 5 seconds before conducting the next test.

TESTING CONDITION:

- **For best results perform test at a temperature of 5°C (41°F) or more.**
- **Before performing the following procedure, confirm that battery voltage is more than 11V at idle.**

With CONSULT-II

1) Start engine and warm it up to normal operating temperature.
2) Turn ignition switch OFF and wait at least 5 seconds.
3) Start engine and let it idle for at least 60 seconds.
4) Select "PURG FLOW P1447" of "EVAPORATIVE SYSTEM" in "DTC CONFIRMATION" mode with CONSULT-II.
5) Touch "START".
   If "COMPLETED" is displayed, go to step 7.
6) When the following conditions are met, "TESTING" will be displayed on the CONSULT-II screen. Maintain the conditions continuously until "TESTING" changes to "COMPLETED". (It will take at least 30 seconds.)

Selector lever	Suitable position
Vehicle speed	32 - 120 km/h (20 - 75 MPH)
ENG SPEED	500 - 3,750 rpm
Engine coolant temperature	More than 70°C (158°F)

   If "TESTING" is not changed for a long time, retry from step 2.
7) Make sure that "OK" is displayed after touching "SELF-DIAG RESULTS". If "NG" is displayed, refer to "Diagnostic Procedure".

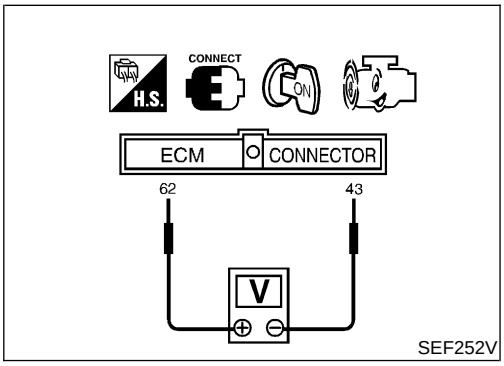

SEF252V

Overall Function Check

NEEC0376

Use this procedure to check the overall monitoring function of the EVAP control system purge flow monitoring. During this check, a 1st trip DTC might not be confirmed.

Without CONSULT-II

1) Lift up drive wheels.
2) Start engine and warm it up to normal operating temperature.
3) Turn ignition switch OFF, wait at least 5 seconds.
4) Start engine and wait at least 60 seconds.
5) Set voltmeter probes to ECM terminals 62 (EVAP control system pressure sensor signal) and 43 (ground).

6) Check EVAP control system pressure sensor value at idle speed and note it.
7) Establish and maintain the following conditions for at least 1 minute.

Air conditioner switch: ON
Steering wheel: Fully turned
Headlamp switch: ON
Rear window defogger switch: ON
Engine speed: Approx. 3,000 rpm
Gear position:
Any position other than "Neutral" or "Reverse"

Verify that EVAP control system pressure sensor value stays 0.1V less than the value at idle speed (measured at step 6) for at least 1 second.

Diagnostic Procedure

NEEC0377

1	CHECK EVAP CANISTER	
1. Turn ignition switch OFF. 2. Check EVAP canister for cracks. **OK or NG**		
OK (With CONSULT-II)	▶	GO TO 2.
OK (Without CONSULT-II)	▶	GO TO 3.
NG	▶	Replace EVAP canister.

2	CHECK PURGE FLOW

With CONSULT-II

1. Disconnect vacuum hose connected to EVAP canister purge volume control solenoid valve at EVAP service port and install vacuum gauge.

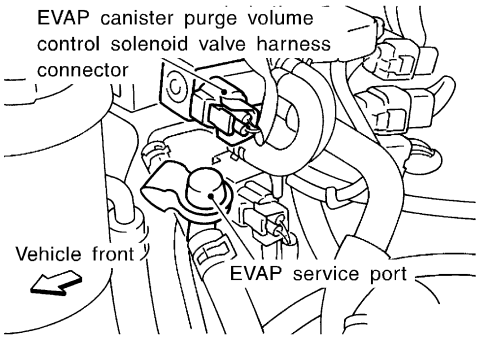

SEF339V

2. Start engine and let it idle.
3. Select "PURG VOL CONT/V" in "ACTIVE TEST" mode with CONSULT-II.

ACTIVE TEST	
PURG VOL CONT/V	XXX %
MONITOR	
ENG SPEED	XXX rpm
A/F ALPHA-B1	XXX %
HO2S1 MNTR (B1)	LEAN
THRTL POS SEN	XXX V

SEF801Y

4. Rev engine up to 2,000 rpm.
5. Touch "Qd" and "Qu" on CONSULT-II screen to adjust "PURG VOL CONT/V" opening.
   100.0%: Vacuum should exist.
   0.0%: Vacuum should not exist.

OK or NG

OK	▶	GO TO 8.
NG	▶	GO TO 4.

Diagnostic Procedure (Cont'd)

3	CHECK PURGE FLOW

Without CONSULT-II

1. Start engine and warm it up to normal operating temperature.
2. Stop engine.
3. Disconnect vacuum hose connected to EVAP canister purge volume control solenoid valve at EVAP service port and install vacuum gauge.

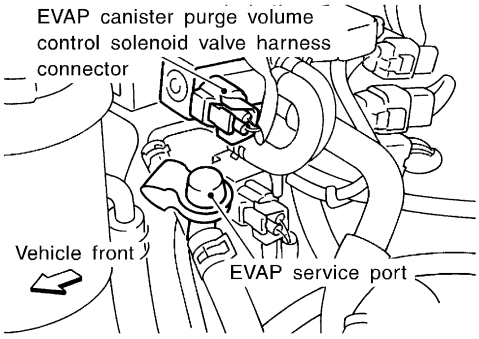

SEF339V

4. Start engine and let it idle for at least 60 seconds.
5. Check vacuum gauge indication when revving engine up to 2,000 rpm.
   Vacuum should exist.
6. Release the accelerator pedal fully and let idle.
   Vacuum should not exist.

OK or NG

OK	▶	GO TO 8.
NG	▶	GO TO 4.

4	CHECK EVAP PURGE LINE

Check EVAP purge line for improper connection or disconnection.
Refer to "EVAPORATIVE EMISSION LINE DRAWING", EC-43.

OK or NG

OK	▶	GO TO 5.
NG	▶	Repair it.

5 **CHECK EVAP PURGE HOSE AND PURGE PORT**

1. Disconnect purge hoses connected to EVAP service port **A** and EVAP canister purge volume control solenoid valve **B**.

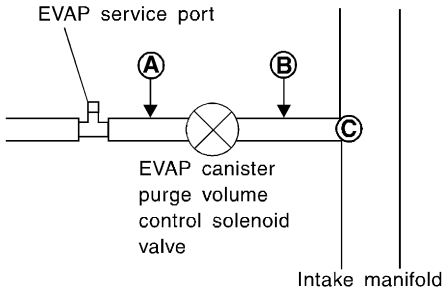

SEF367U

2. Blow air into each hose and EVAP purge port **C**.
3. Check that air flows freely.

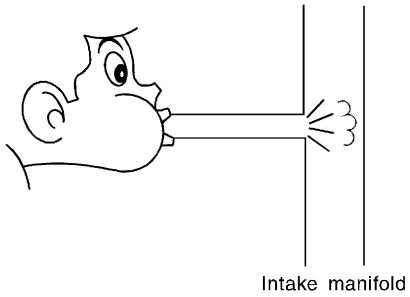

SEF368U

OK or NG

OK (With CONSULT-II)	▶	GO TO 6.
OK (Without CONSULT-II)	▶	GO TO 7.
NG	▶	Repair or clean hoses and/or purge port.

6 **CHECK EVAP CANISTER PURGE VOLUME CONTROL SOLENOID VALVE**

With CONSULT-II

1. Start engine.
2. Perform "PURG VOL CONT/V" in "ACTIVE TEST" mode with CONSULT-II. Check that engine speed varies according to the valve opening.
   If OK, inspection end. If NG, go to following step.
3. Check air passage continuity.

ACTIVE TEST	
PURG VOL CONT/V	XXX %
MONITOR	
ENG SPEED	XXX rpm
A/F ALPHA-B1	XXX %
HO2S1 MNTR (B1)	LEAN
THRTL POS SEN	XXX V

Condition PURG VOL CONT/V value	Air passage continuity between A and B
100.0%	Yes
0.0%	No

SEF723Z

OK or NG

OK	▶	GO TO 8.
NG	▶	Replace EVAP canister purge volume control solenoid valve.

Diagnostic Procedure (Cont'd)

7	CHECK EVAP CANISTER PURGE VOLUME CONTROL SOLENOID VALVE

Without CONSULT-II

Check air passage continuity.

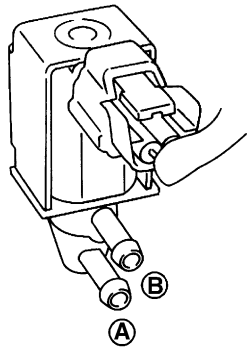

SEF660U

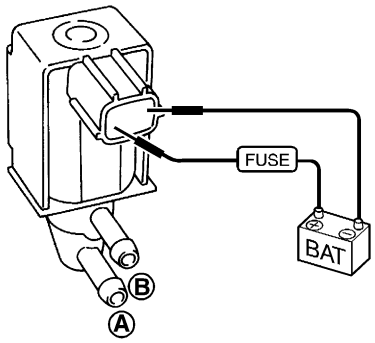

SEF661U

Condition	Air passage continuity between **A** and **B**
12V direct current supply between terminals	Yes
No supply	No

MTBL0303

OK or NG

OK	▶	GO TO 8.
NG	▶	Replace EVAP canister purge volume control solenoid valve.

8	CHECK EVAP CONTROL SYSTEM PRESSURE SENSOR HOSE

1. Turn ignition switch OFF.
2. Check disconnection or improper connection of hose connected to EVAP control system pressure sensor.

OK or NG

OK	▶	GO TO 9.
NG	▶	Repair it.

9	CHECK CONNECTOR

1. Disconnect EVAP control system pressure sensor harness connector.

View with spare tire removed

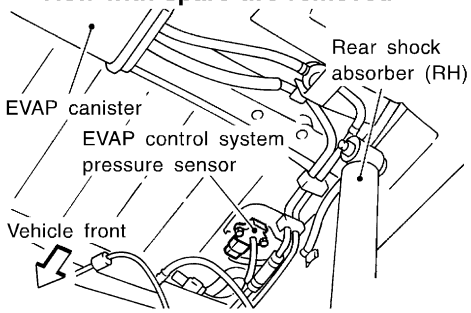

SEF341V

2. Check connectors for water.
Water should not exist.

OK or NG

OK	▶	GO TO 10.
NG	▶	Replace EVAP control system pressure sensor.

10	CHECK EVAP CONTROL SYSTEM PRESSURE SENSOR AND CIRCUIT

Refer to "DTC Confirmation Procedure" for DTC P0450, EC-393.

OK or NG

OK (With CONSULT-II)	▶	GO TO 11.
OK (Without CONSULT-II)	▶	GO TO 12.
NG	▶	Replace EVAP control system pressure sensor.

Diagnostic Procedure (Cont'd)

11	CHECK EVAP CANISTER VENT CONTROL VALVE

With CONSULT-II

Check air passage continuity.

Perform "VENT CONTROL/V" in "ACTIVE TEST" mode.

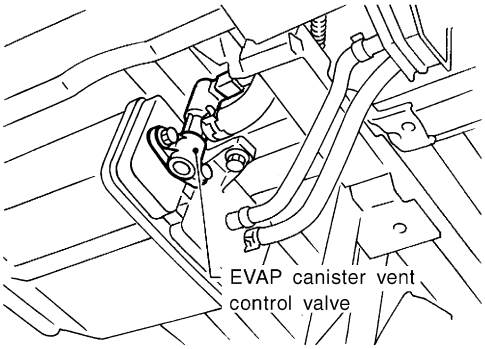

SEF143S

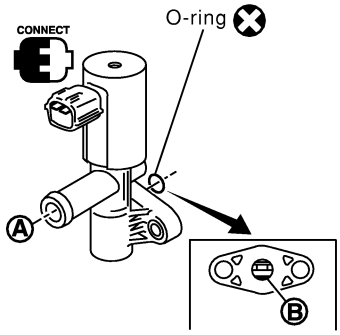

ACTIVE TEST	
VENT CONTROL/V	OFF
MONITOR	
ENG SPEED	XXX rpm
A/F ALPHA-B1	XXX %
HO2S1 (B1)	XXX V
THRTL POS SEN	XXX V

Condition VENT CONTROL/V	Air passage continuity between A and B
ON	No
OFF	Yes

Operation takes less than 1 second.

SEF803Y

OK or NG

OK	▶	GO TO 13.
NG	▶	Replace EVAP canister vent control valve.

12	CHECK EVAP CANISTER VENT CONTROL VALVE

Without CONSULT-II
Check air passage continuity shown in the figure.

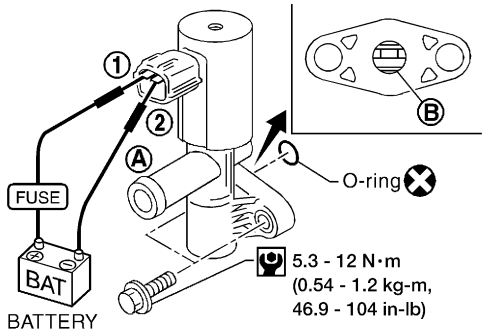

AEC783A

Condition	Air passage continuity between **A** and **B**
12V direct current supply between terminals 1 and 2	No
No supply	Yes

MTBL0297

If NG or operation takes more than 1 second, clean valve using air blower or replace as necessary.
If the portion B is rusted, replace EVAP canister vent control valve. Make sure new O-ring is installed properly.

OK or NG

OK	▶	GO TO 13.
NG	▶	Replace EVAP canister vent control valve.

13	CHECK EVAP PURGE LINE

Inspect EVAP purge line (pipe and rubber tube). Check for evidence of leaks.
Refer to "EVAPORATIVE EMISSION LINE DRAWING", EC-43.

OK or NG

OK	▶	GO TO 14.
NG	▶	Replace it.

14	CLEAN EVAP PURGE LINE

Clean EVAP purge line (pipe and rubber tube) using air blower.

▶ GO TO 15.

15	CHECK INTERMITTENT INCIDENT

Refer to "TROUBLE DIAGNOSIS FOR INTERMITTENT INCIDENT", EC-148.

▶ **INSPECTION END**

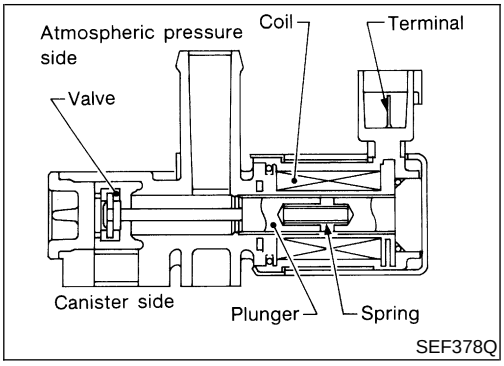

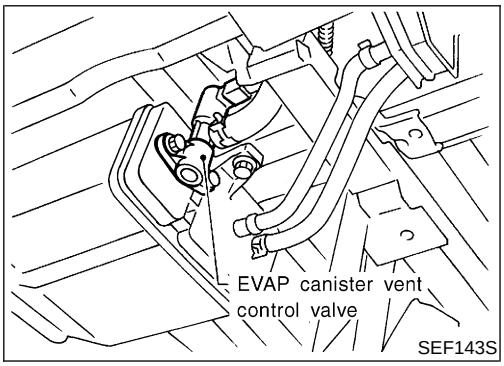

Component Description

NEEC0379

NOTE:
If DTC P1448 is displayed with P0440 or P1440, perform trouble diagnosis for DTC P1448 first.

The EVAP canister vent control valve is located on the EVAP canister and is used to seal the canister vent.
This solenoid (the EVAP canister vent control valve) responds to signals from the ECM.
When the ECM sends an ON signal, the coil in the solenoid valve is energized.
A plunger will then move to seal the canister vent. The ability to seal the vent is necessary for the on board diagnosis of other evaporative emission control system components.
This solenoid valve is used only for diagnosis, and usually remains opened.
When the vent is closed, under normal purge conditions, the evaporative emission control system is depressurized and allows "EVAP Control System (Small Leak)" diagnosis.

CONSULT-II Reference Value in Data Monitor Mode

NEEC0380

Specification data are reference values.

MONITOR ITEM	CONDITION	SPECIFICATION
VENT CONT/V	• Ignition switch: ON	OFF

ECM Terminals and Reference Value

NEEC0381

Specification data are reference values and are measured between each terminal and ground.

CAUTION:
Do not use ECM ground terminals when measuring input/output voltage. Doing so may result in damage to the ECM's transistor. Use a ground other than ECM terminals, such as the ground.

TERMINAL NO.	WIRE COLOR	ITEM	CONDITION	DATA (DC Voltage)
108	R/G	EVAP canister vent control valve	**[Ignition switch "ON"]**	BATTERY VOLTAGE (11 - 14V)

On Board Diagnosis Logic

NEEC0382

DTC No.	Malfunction is detected when ...	Check Items (Possible Cause)
P1448	• EVAP canister vent control valve remains opened under specified driving conditions.	• EVAP canister vent control valve • EVAP control system pressure sensor • Blocked rubber tube to EVAP canister vent control valve • Water separator • EVAP canister is saturated with water. • Vacuum cut valve

5

EVAP SML LEAK P0440/P1440

1)FOR BEST RSLT,PERFORM AT FOLLOWING CONDITIONS.
-FUEL LEVEL: 1/4-3/4
-AMBIENT TEMP: 0-30 C(32-86F)
-OPEN ENGINE HOOD.
2)START ENG WITH VHCL STOPPED. IF ENG IS ON,STOP FOR 5 SEC. THEN RESTART.
3)TOUCH START.

SEF565X

5

EVAP SML LEAK P0440/P1440

WAIT
2 TO 10 MINUTES.
KEEP ENGINE RUNNING AT IDLE SPEED.

SEF566X

6

EVAP SML LEAK P0440/P1440

OK

SELF-DIAG RESULTS

NO DTC DETECTED.
FURTHER TESTING MAY BE REQUIRED.

SEF567X

DTC Confirmation Procedure

NEEC0383

NOTE:

- **If DTC P1448 is displayed with P0440 or P1440, perform trouble diagnosis for DTC P1448 first.**
- If "DTC Confirmation Procedure" has been previously conducted, always turn ignition switch "OFF" and wait at least 5 seconds before conducting the next test.

With CONSULT-II

TESTING CONDITION:

- **Perform "DTC WORK SUPPORT" when the fuel level is less than 3/4 full and vehicle is placed on flat level surface.**
- **Always perform test at a temperature of 0 to 30°C (32 to 86°F).**
- **It is better that the fuel level is low.**

1) Turn ignition switch ON.
2) Turn ignition switch OFF and wait at least 5 seconds.
3) Turn ignition switch ON and select "DATA MONITOR" mode with CONSULT-II.
4) Check that the following conditions are met.

COOLAN TEMP/S	0 - 70°C (32 - 158°F)
INT/A TEMP SE	0 - 60°C (32 - 140°F)

5) Select "EVAP SML LEAK P0440" of "EVAPORATIVE SYSTEM" in "DTC WORK SUPPORT" mode with CONSULT-II. Follow the instruction displayed.

NOTE:

- **If the CONSULT-II screen shown at left is displayed, stop the engine and stabilize the vehicle temperature at 25°C (77°F) or cooler. After "TANK F/TMP SE" becomes less than 30°C (86°F), retest. (Use a fan to reduce the stabilization time.)**
- **If the engine speed cannot be maintained within the range displayed on CONSULT-II screen, go to "Basic Inspection", EC-110.**
- **The engine idle portion of this test (See illustration at left.) will take approximately 5 minutes.**

6) Make sure that "OK" is displayed.
If "NG" is displayed, go to following step.

NOTE:

Make sure that EVAP hoses are connected to EVAP canister purge volume control solenoid valve properly.

7) Stop engine and wait at least 5 seconds, then turn "ON".
8) Disconnect hose from water separator.
9) Select "VENT CONTROL/V" of "ACTIVE TEST" mode with CONSULT-II.
10) Touch "ON" and "OFF" alternately.

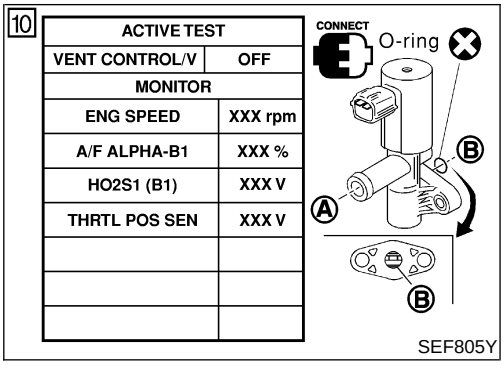

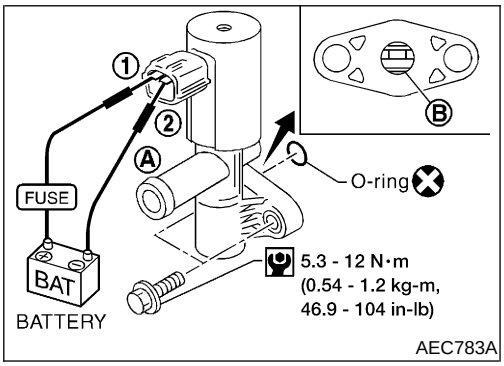

11) Make sure of the following.

Condition	Air passage continuity between **A** and **B**
Touching "ON"	No
Touching "OFF"	Yes

If the result is NG, go to "Diagnostic Procedure", EC-528.
If the result is OK, go to "Diagnostic Procedure" for DTC P0440, EC-362.

Overall Function Check

NEEC0384

Use this procedure to check the overall function of the EVAP canister vent control valve circuit. During this check, a DTC might not be confirmed.

Without CONSULT-II

1) Disconnect hose from water separator.
2) Disconnect EVAP canister vent control valve harness connector.
3) Verify the following.

Condition	Air passage continuity
12V direct current supply between terminals 1 and 2	No
No supply	Yes

If the result is NG, go to "Diagnostic Procedure", EC-528.
If the result is OK, perform trouble diagnosis for DTC P0440. Refer to EC-358.

Diagnostic Procedure

NEEC0385

1	**CHECK RUBBER TUBE**
1. Turn ignition switch OFF. 2. Check disconnection or obstruction of rubber tube connected to EVAP canister vent control valve.	
OK or NG	
OK (With CONSULT-II) ▶	GO TO 2.
OK (Without CONSULT-II) ▶	GO TO 3.
NG ▶	Repair or clean rubber tube.

2	CHECK EVAP CANISTER VENT CONTROL VALVE AND O-RING

With CONSULT-II

Check air passage continuity.

Perform "VENT CONTROL/V" in "ACTIVE TEST" mode.

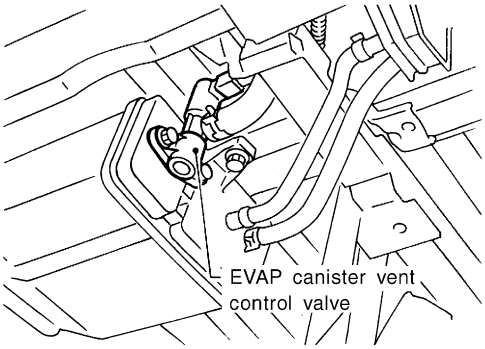

SEF143S

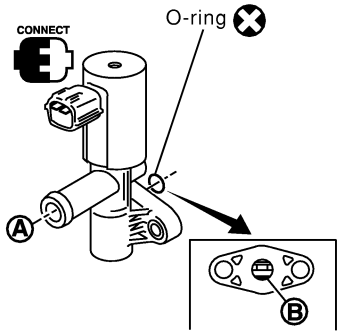

ACTIVE TEST	
VENT CONTROL/V	OFF
MONITOR	
ENG SPEED	XXX rpm
A/F ALPHA-B1	XXX %
HO2S1 (B1)	XXX V
THRTL POS SEN	XXX V

Condition VENT CONTROL/V	Air passage continuity between A and B
ON	No
OFF	Yes

Operation takes less than 1 second.

SEF803Y

OK or NG

OK	▶	GO TO 4.
NG	▶	Replace EVAP canister vent control valve and O-ring.

Diagnostic Procedure (Cont'd)

3	CHECK EVAP CANISTER VENT CONTROL VALVE AND O-RING

Without CONSULT-II

Check air passage continuity shown in the figure.

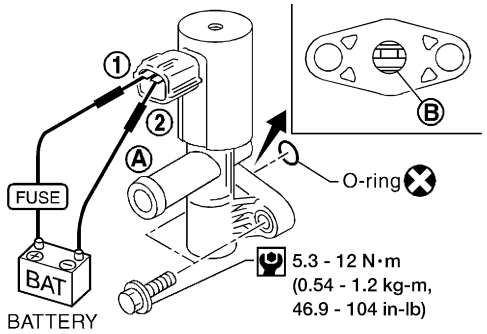

AEC783A

Condition	Air passage continuity between **A** and **B**
12V direct current supply between terminals 1 and 2	No
No supply	Yes

MTBL0297

If NG or operation takes more than 1 second, clean valve using air blower or replace as necessary.

If the portion B is rusted, replace EVAP canister vent control valve. Make sure new O-ring is installed properly.

OK or NG

OK	▶	GO TO 4.
NG	▶	Replace EVAP canister vent control valve and O-ring.

4	CHECK VACUUM CUT VALVE

Check vacuum cut valve as follows:

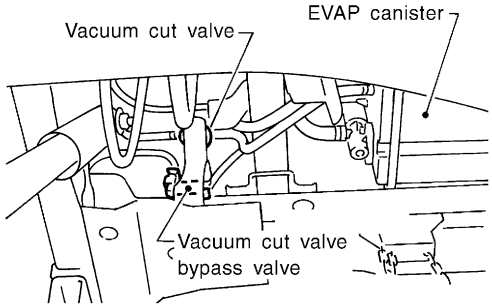

SEF186S

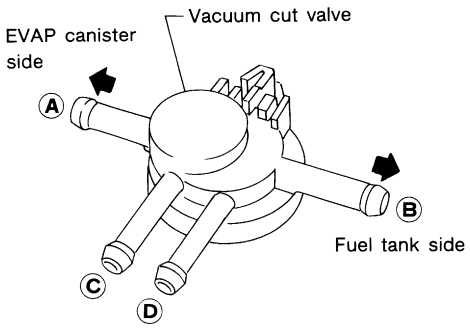

SEF379Q

1. Plug port **C** and **D** with fingers.
2. Apply vacuum to port **A** and check that there is no suction from port **B**.
3. Apply vacuum to port **B** and check that there is suction from port **A**.
4. Blow air in port **B** and check that there is a resistance to flow out of port **A**.
5. Open port **C** and **D**.
6. Blow air in port **A** check that air flows freely out of port **C**.
7. Blow air in port **B** check that air flows freely out of port **D**.

OK or NG

OK	▶	GO TO 5.
NG	▶	Replace vacuum cut valve.

5	CHECK IF EVAP CANISTER IS SATURATED WITH WATER

1. Remove EVAP canister with the vent control valve attached.
2. Check if water will drain from the EVAP canister.

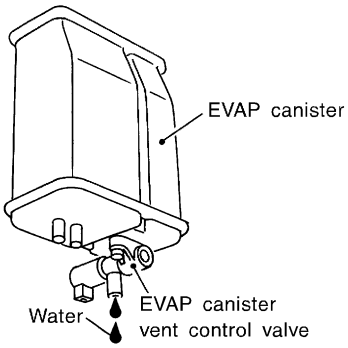

SEF596U

Yes or No

Yes	▶	GO TO 8.
No	▶	GO TO 6.

Diagnostic Procedure (Cont'd)

6	CHECK EVAP CANISTER	
Weigh the EVAP canister with EVAP canister vent control valve attached. **The weight should be less than 1.8 kg (4.0lb).** **OK or NG**		
OK	▶	GO TO 8.
NG	▶	GO TO 7.

7	DETECT MALFUNCTIONING PART	
Check the following. 1. Visually check the EVAP canister for damage. 2. Check hose connection between EVAP canister and water separator for clogging and poor connection. 3. Check water separator. a. Check visually for insect nests in the water separator air inlet. b. Check visually for cracks or flaws in the appearance. c. Check visually for cracks or flaws in the hose. d. Check that **A** and **C** are not clogged by blowing air into **B** with **A**, and then **C** plugged. 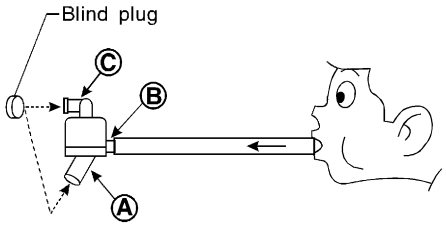 * Ⓐ: Bottom hole (To atmosphere) Ⓑ: Emergency tube (From EVAP canister) Ⓒ: Inlet port (To member) SEF829T e. In case of NG in items 2 - 4, replace the parts. ● **Do not disassemble water separator.**		
	▶	Repair hose or replace EVAP canister or water separator.

8	CHECK EVAP CONTROL SYSTEM PRESSURE SENSOR HOSE	
Check disconnection or improper connection of hose connected to EVAP control system pressure sensor. **OK or NG**		
OK	▶	GO TO 9.
NG	▶	Install hose property or replace it.

9	CHECK HARNESS CONNECTOR	
1. Disconnect EVAP control system pressure sensor harness connector. 2. Check harness connector for water. **Water should not exist.** **OK or NG**		
OK	▶	GO TO 10.
NG	▶	Replace EVAP control system pressure sensor.

10	CHECK EVAP CONTROL SYSTEM PRESSURE SENSOR	
Perform "DTC Confirmation Procedure", EC-393.		
OK or NG		
OK	▶	GO TO 11.
NG	▶	Replace EVAP control system pressure sensor and repair or replace harness and connector.

11	CHECK INTERMITTENT INCIDENT	
Perform "TROUBLE DIAGNOSIS FOR INTERMITTENT INCIDENT", EC-148.		
	▶	**INSPECTION END**

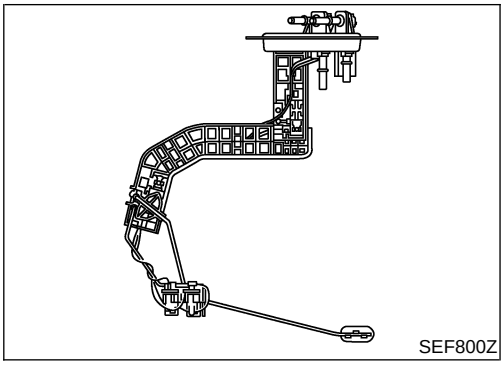
SEF800Z

Component Description

NEEC1036

The fuel level sensor is mounted in the fuel level sensor unit. The sensor detects a fuel level in the fuel tank and transmits a signal to the ECM.

It consists of two parts, one is mechanical float and the other side is variable resistor. Fuel level sensor output voltage changes depending on the movement of the fuel mechanical float.

On Board Diagnostic Logic

NEEC1037

ECM receives two signals from the fuel level sensor.

One is fuel level sensor power supply circuit, and the other is fuel level sensor ground circuit.

This diagnosis indicates the latter to detect open circuit malfunction. Malfunction is detected when a high voltage from the sensor is sent to ECM.

Possible Cause

NEEC1038

- Fuel level sensor circuit
  (The fuel level sensor circuit is open or shorted.)

DTC Confirmation Procedure

NEEC1039

NOTE:

If “DTC Confirmation Procedure” has been previously conducted, always turn ignition switch “OFF” and wait at least 10 seconds before conducting the next test.

3

DATA MONITOR	
MONITOR	NO DTC
FUEL T/TMP SE	XXX °C
FUEL LEVEL SE	XXX V

SEF195Y

WITH CONSULT-II

NEEC1039S01

1) Turn ignition switch “ON”.
2) Select “DATA MONITOR” mode with CONSULT-II.
3) Wait at least 5 seconds.
4) If 1st trip DTC is detected, go to “Diagnostic Procedure”, EC-536.

WITH GST

NEEC1039S02

Follow the procedure “WITH CONSULT-II” above.

Wiring Diagram

NEEC1040

EC-FLS3-01

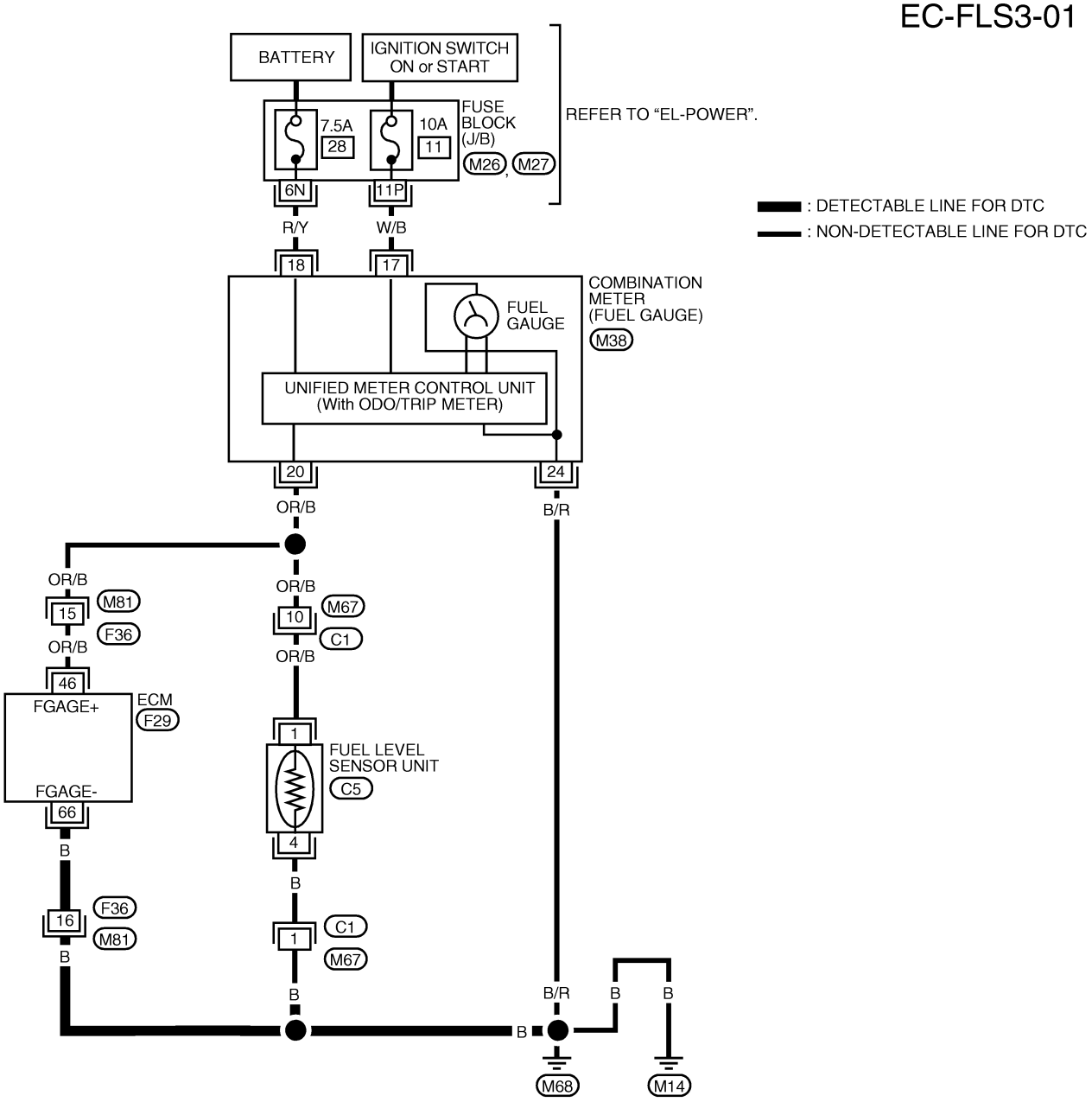

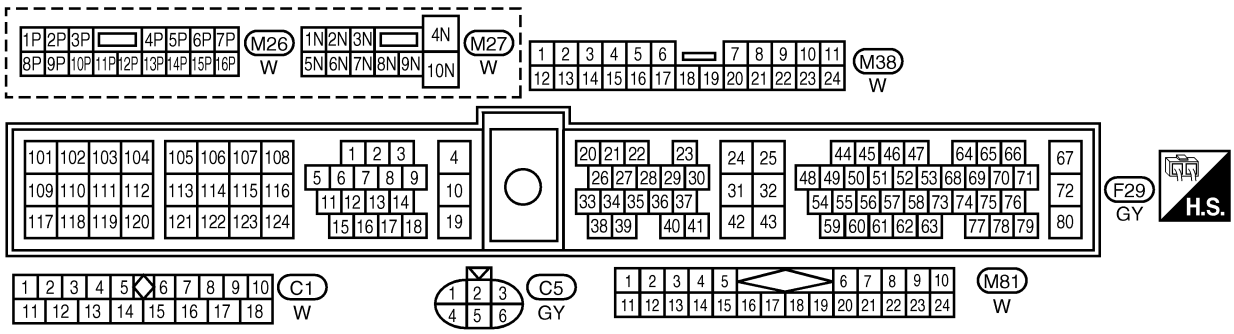

LEC536

Diagnostic Procedure

=NEEC1041

1	CHECK FUEL LEVEL SENSOR GROUND CIRCUIT FOR OPEN AND SHORT
1. Turn ignition switch “OFF”. 2. Disconnect ECM harness connector. 3. Check harness continuity between ECM terminal 66 and body ground. Refer to Wiring Diagram. **Continuity should exist.** 4. Also check harness for short to power. **OK or NG**	
OK ▶	GO TO 3.
NG ▶	GO TO 2.

2	DETECT MALFUNCTIONING PART
1. Check the following. ● Harness connectors F36, M81 ● Harness connectors M67, B101 ● Harness for open and short between ECM and body ground	
▶	Replace open circuit or short to power in harness or connectors.

3	CHECK FUEL LEVEL SENSOR
Refer to ***EL-82***, “Fuel Level Sensor Unit Check”. **OK or NG**	
OK ▶	GO TO 4.
NG ▶	Replace fuel level sensor unit.

4	CHECK INTERMITTENT INCIDENT
Refer to “TROUBLE DIAGNOSIS FOR INTERMITTENT INCIDENT”, EC-148 **OK or NG**	
▶	**INSPECTION END**

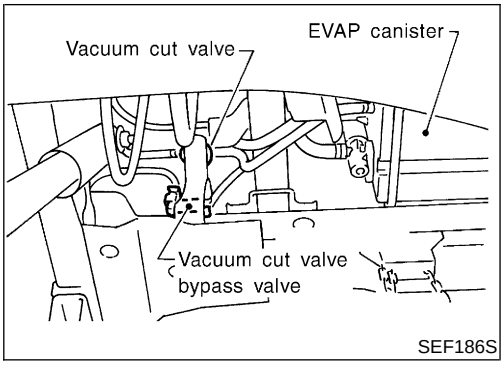

Description

NEEC0387

COMPONENT DESCRIPTION

NEEC0387S01

The vacuum cut valve and vacuum cut valve bypass valve are installed in parallel on the EVAP purge line between the fuel tank and the EVAP canister.

The vacuum cut valve prevents the intake manifold vacuum from being applied to the fuel tank.

The vacuum cut valve bypass valve is a solenoid type valve and generally remains closed. It opens only for on board diagnosis.

The vacuum cut valve bypass valve responds to signals from the ECM. When the ECM sends an ON (ground) signal, the valve is opened. The vacuum cut valve is then bypassed to apply intake manifold vacuum to the fuel tank.

EVAPORATIVE EMISSION SYSTEM DIAGRAM

NEEC0387S02

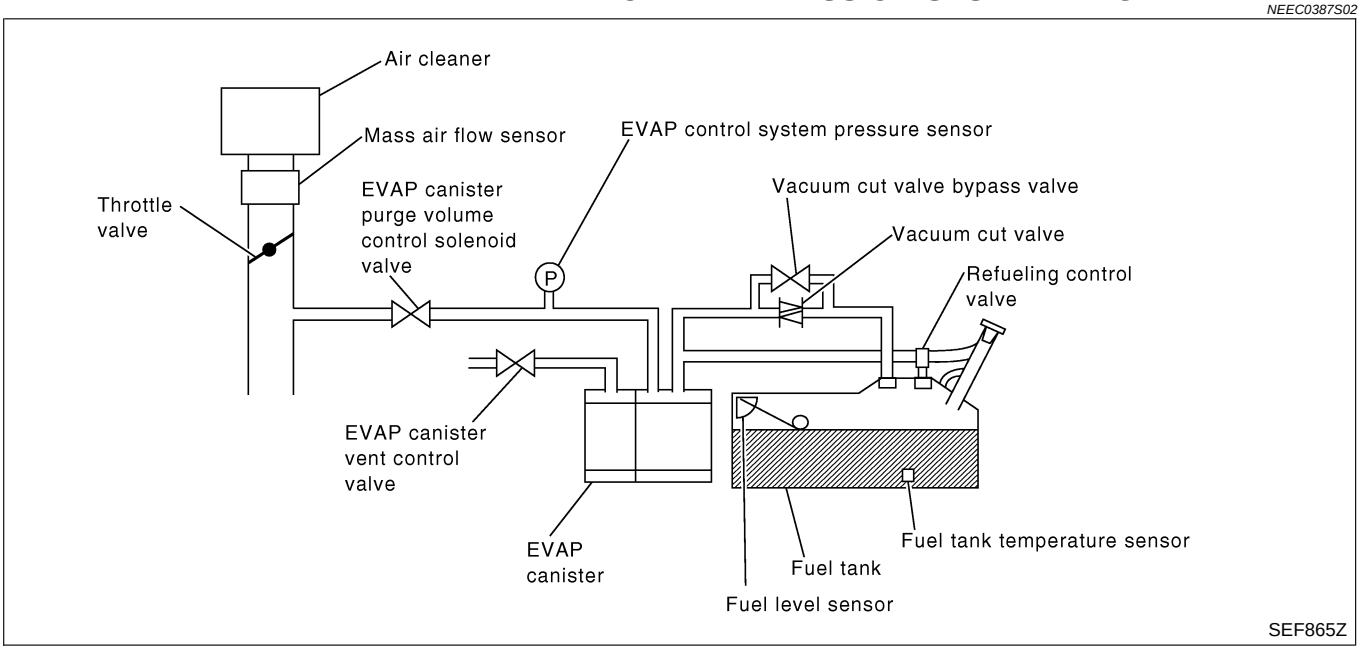

CONSULT-II Reference Value in Data Monitor Mode

NEEC0388

Specification data are reference values.

MONITOR ITEM	CONDITION	SPECIFICATION
VC/V BYPASS/V	• Ignition switch: ON	OFF

ECM Terminals and Reference Value

NEEC0389

Specification data are reference values and are measured between each terminal and ground.

CAUTION:

Do not use ECM ground terminals when measuring input/output voltage. Doing so may result in damage to the ECM's transistor. Use a ground other than ECM terminals, such as the ground.

TERMINAL NO.	WIRE COLOR	ITEM	CONDITION	DATA (DC Voltage)
120	P/B	Vacuum cut valve bypass valve	**[Ignition switch "ON"]**	BATTERY VOLTAGE (11 - 14V)

On Board Diagnosis Logic

NEEC0390

DTC No.	Malfunction is detected when ...	Check Items (Possible Cause)
P1490	• An improper voltage signal is sent to ECM through vacuum cut valve bypass valve.	• Harness or connectors (The vacuum cut valve bypass valve circuit is open or shorted.) • Vacuum cut valve bypass valve

DTC Confirmation Procedure

NEEC0391

NOTE:
If “DTC Confirmation Procedure” has been previously conducted, always turn ignition switch OFF and wait at least 5 seconds before conducting the next test.

TESTING CONDITION:
Before performing the following procedure, confirm battery voltage is more than 11V at idle.

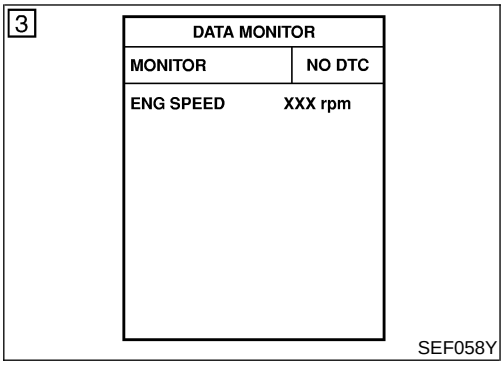

With CONSULT-II

1) Turn ignition switch ON.
2) Select “DATA MONITOR” mode with CONSULT-II.
3) Start engine and wait at least 5 seconds.
4) If 1st trip DTC is detected, go to “Diagnostic Procedure”, EC-540.

With GST

Follow the procedure “With CONSULT-II”.

Wiring Diagram

NEEC0392

EC-BYPS/V-01

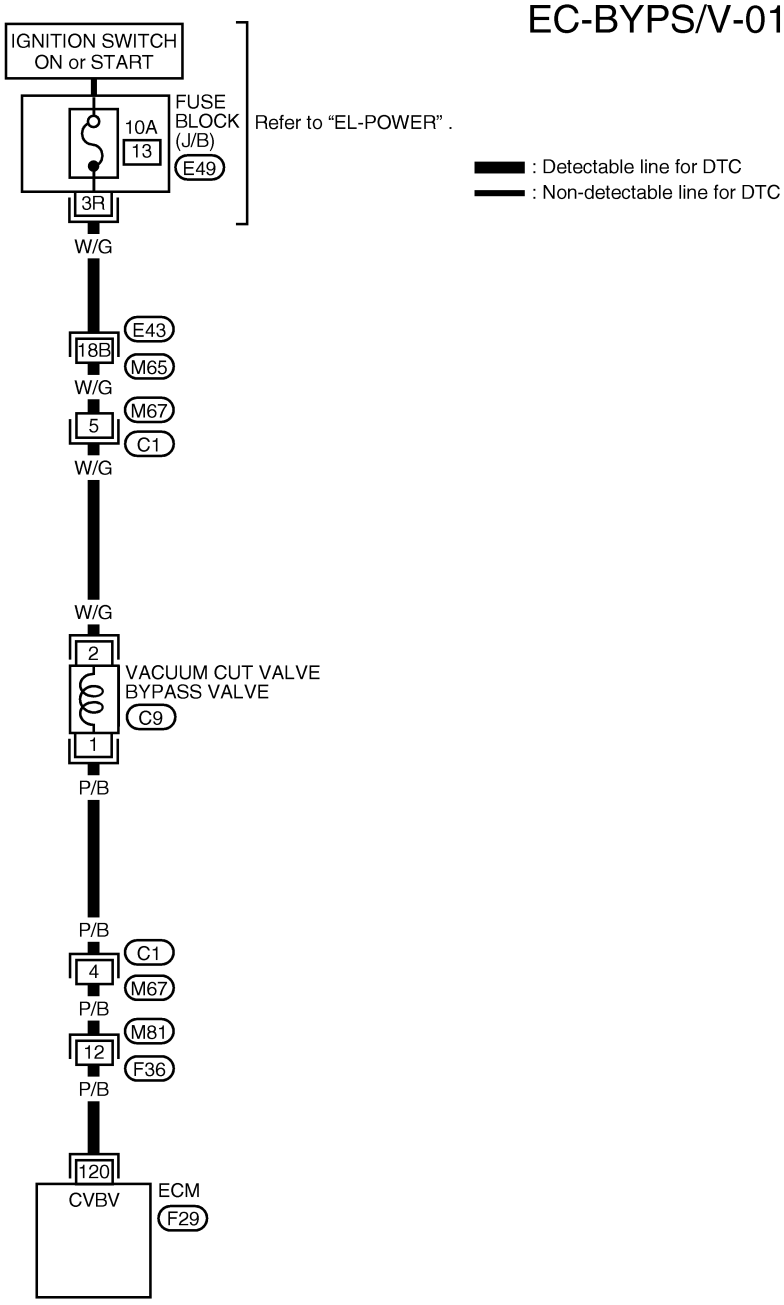

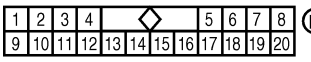





Refer to the following.
M65 , E43 - SUPER MULTIPLE JUNCTION (SMJ)

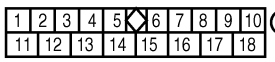

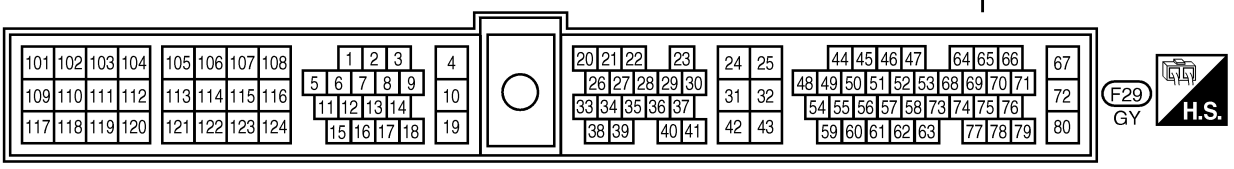

LEC530

Diagnostic Procedure

NEEC0393

1	INSPECTION START

Do you have CONSULT-II?

Yes or No

Yes	▶	GO TO 2.
No	▶	GO TO 3.

2	CHECK VACUUM CUT VALVE BYPASS VALVE CIRCUIT

1. Turn ignition switch ON.
2. Perform “VC/V BYPASS/V” in “ACTIVE TEST” mode.

ACTIVE TEST	
VC/V BYPASS/V	OFF
MONITOR	
ENG SPEED	XXX rpm
A/F ALPHA-B1	XXX %
HO2S1 MNTR (B1)	RICH
THRTL POS SEN	XXX V

SEF806Y

3. Make sure that clicking sound is heard from the vacuum cut valve bypass valve.

OK or NG

OK	▶	GO TO 7.
NG	▶	GO TO 3.

3	CHECK POWER SUPPLY

1. Turn ignition switch OFF.
2. Disconnect vacuum cut valve bypass valve harness connector.

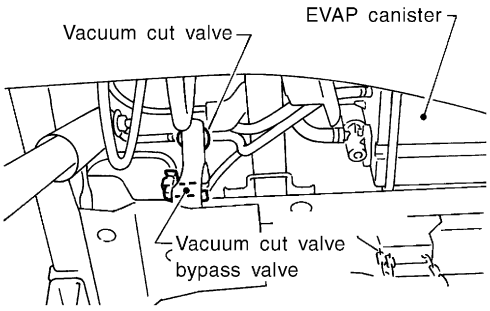

SEF186S

3. Turn ignition switch ON.
4. Check voltage between terminal 2 and ground with CONSULT-II or tester.

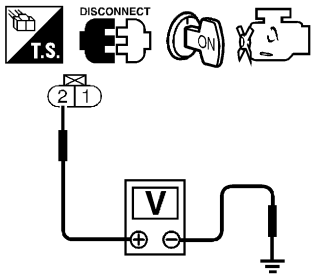

SEF192V

Voltage: Battery voltage

OK or NG

OK	▶	GO TO 5.
NG	▶	GO TO 4.

4	DETECT MALFUNCTIONING PART

Check the following.
- Harness connectors E43, M65
- Harness connectors M67, C1
- 10A fuse
- Harness for open or short between vacuum cut valve bypass valve and 10A fuse

	▶	Repair harness or connectors.

Diagnostic Procedure (Cont'd)

5	CHECK OUTPUT SIGNAL CIRCUIT

1. Turn ignition switch OFF.
2. Disconnect ECM harness connector.
3. Check harness continuity between ECM terminal 120 and terminal 1.

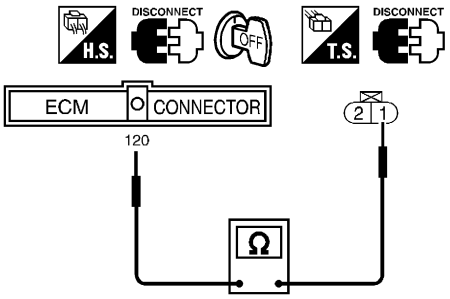

SEF253V

Continuity should exist.

4. Also check harness for short to ground and short to power.

OK or NG

OK	▶	GO TO 7.
NG	▶	GO TO 6.

6	DETECT MALFUNCTIONING PART

Check the following.
- Harness connectors M67, C1
- Harness connectors M81, F36
- Harness for open or short between vacuum cut valve bypass valve and ECM

	▶	Repair open circuit or short to ground or short to power in harness or connectors.

7	CHECK VACUUM CUT VALVE BYPASS VALVE

With CONSULT-II

Check air passage continuity.

Perform "VC/V BYPASS/V" in "ACTIVE TEST" mode.

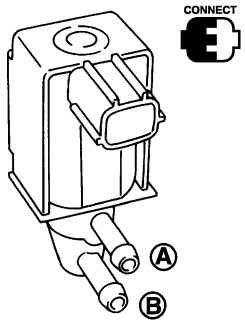

ACTIVE TEST	
VC/V BYPASS/V	OFF
MONITOR	
ENG SPEED	XXX rpm
A/F ALPHA-B1	XXX %
HO2S1 MNTR (B1)	RICH
THRTL POS SEN	XXX V

Condition VC/V BYPASS/V	Air passage continuity between A and B
ON	Yes
OFF	No

Operation takes less than 1 second.

SEF807Y

Without CONSULT-II

Check air passage continuity shown in the figure.

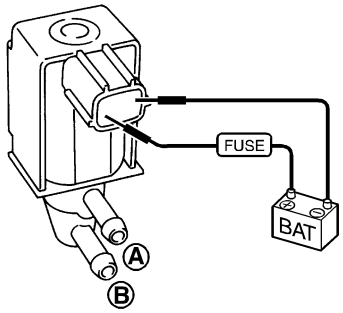

Condition	Air passage continuity between A and B
12V direct current supply between terminals 1 and 2	Yes
No supply	No

Operation takes less than 1 second.

SEF557Y

If NG or operation takes more than 1 second, replace vacuum cut valve bypass valve.

OK or NG

OK	▶	GO TO 8.
NG	▶	Replace vacuum cut valve bypass valve.

8	CHECK INTERMITTENT INCIDENT
Perform "TROUBLE DIAGNOSIS FOR INTERMITTENT INCIDENT", EC-148.	
▶	**INSPECTION END**

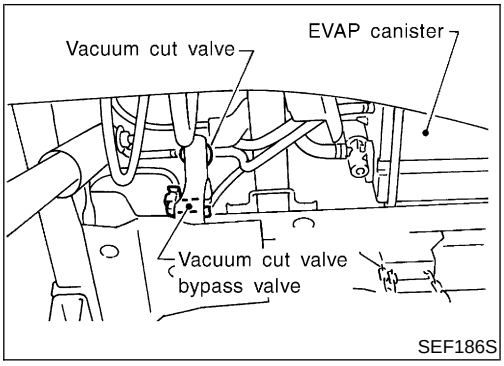

Description

NEEC0395

COMPONENT DESCRIPTION

NEEC0395S01

The vacuum cut valve and vacuum cut valve bypass valve are installed in parallel on the EVAP purge line between the fuel tank and the EVAP canister.

The vacuum cut valve prevents the intake manifold vacuum from being applied to the fuel tank.

The vacuum cut valve bypass valve is a solenoid type valve and generally remains closed. It opens only for on board diagnosis.

The vacuum cut valve bypass valve responds to signals from the ECM. When the ECM sends an ON (ground) signal, the valve is opened. The vacuum cut valve is then bypassed to apply intake manifold vacuum to the fuel tank.

EVAPORATIVE EMISSION SYSTEM DIAGRAM

NEEC0395S02

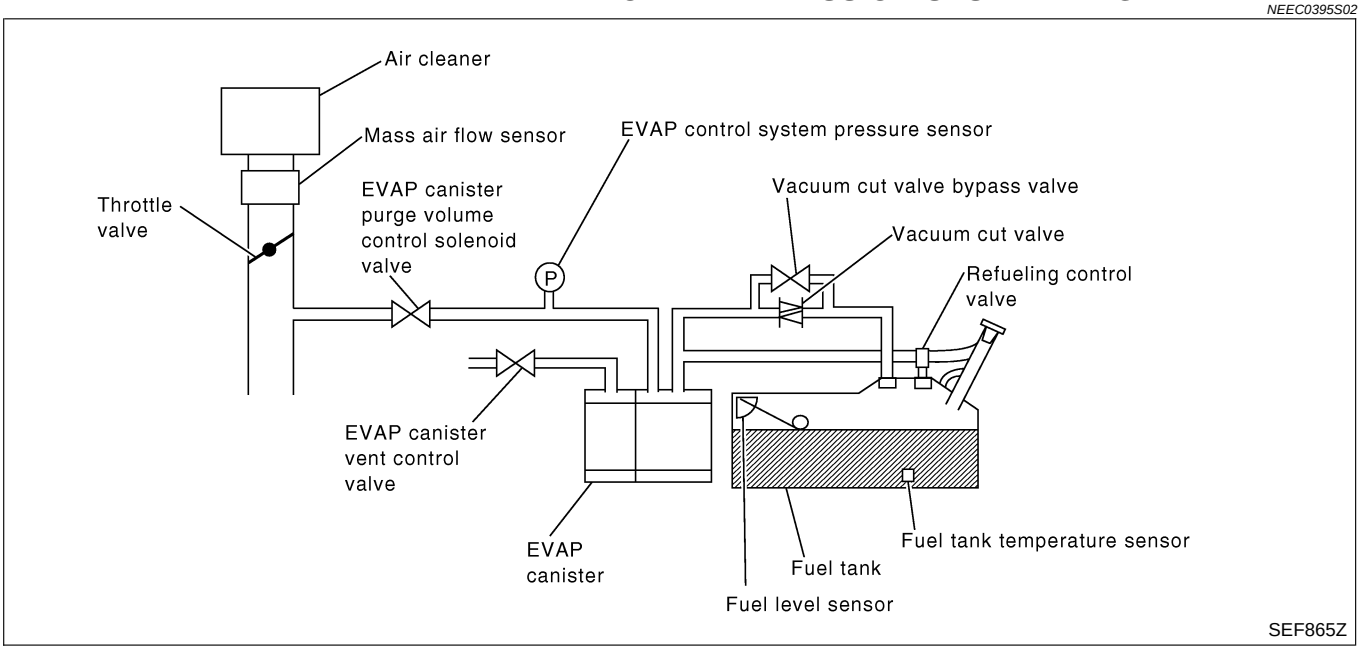

CONSULT-II Reference Value in Data Monitor Mode

NEEC0396

Specification data are reference values.

MONITOR ITEM	CONDITION	SPECIFICATION
VC/V BYPASS/V	• Ignition switch: ON	OFF

ECM Terminals and Reference Value

NEEC0397

Specification data are reference values and are measured between each terminal and ground.

CAUTION:

Do not use ECM ground terminals when measuring input/output voltage. Doing so may result in damage to the ECM's transistor. Use a ground other than ECM terminals, such as the ground.

TERMINAL NO.	WIRE COLOR	ITEM	CONDITION	DATA (DC Voltage)
120	P/B	Vacuum cut valve bypass valve	**[Ignition switch "ON"]**	BATTERY VOLTAGE (11 - 14V)

On Board Diagnosis Logic

NEEC0398

DTC No.	Malfunction is detected when ...	Check Items (Possible Cause)
P1491	Vacuum cut valve bypass valve does not operate properly.	• Vacuum cut valve bypass valve • Vacuum cut valve • Bypass hoses for clogging • EVAP control system pressure sensor • EVAP canister vent control valve • Hose between fuel tank and vacuum cut valve clogged • Hose between vacuum cut valve and EVAP canister clogged • EVAP canister • EVAP purge port of fuel tank for clogging

7

VC CUT/V BP/V P1491	
OUT OF CONDITION	
MONITOR	
ENG SPEED	XXX rpm
VHCL SPEED SE	XXX km/h
B/FUEL SCHDL	XXX msec

SEF210Y

7

VC CUT/V BP/V P1491	
TESTING	
MONITOR	
ENG SPEED	XXX rpm
VHCL SPEED SE	XXX km/h
B/FUEL SCHDL	XXX msec

SEF211Y

7

VC CUT/V BP/V P1491
COMPLETED

SEF239Y

DTC Confirmation Procedure

NEEC0399

CAUTION:

Always drive vehicle at a safe speed.

NOTE:

If “DTC Confirmation Procedure” has been previously conducted, always turn ignition switch “OFF” and wait at least 5 seconds before conducting the next test.

TESTING CONDITION:

- **Always perform test at a temperature of 5 to 30°C (41 to 86°F).**
- **This test may be conducted with the drive wheels lifted in the shop or by driving the vehicle. If a road test is expected to be easier, it is unnecessary to lift the vehicle.**
- **Before performing the following procedure, confirm that battery voltage is more than 11V at idle.**

With CONSULT-II

1) Turn ignition switch ON.
2) Start engine and warm it up to normal operating temperature.
3) Turn ignition switch OFF and wait at least 5 seconds.
4) Start engine and let it idle for at least 60 seconds.
5) Select “VC CUT/V BP/V P1491” of “EVAPORATIVE SYSTEM” in “DTC WORK SUPPORT” mode with CONSULT-II.
6) Touch “START”.
7) When the following conditions are met, “TESTING” will be displayed on the CONSULT-II screen. Maintain the conditions continuously until “TESTING” changes to “COMPLETED”. (It will take at least 30 seconds.)

ENG SPEED	More than 1,000 rpm
Selector lever	Suitable position
Vehicle speed	36 - 120 km/h (22 - 75 MPH)
B/FUEL SCHDL	Less than 10 msec

If "TESTING" is not displayed after 5 minutes, retry from step 3.

8) Make sure that "OK" is displayed after touching "SELF-DIAG RESULTS". If "NG" is displayed, refer to "Diagnostic Procedure".

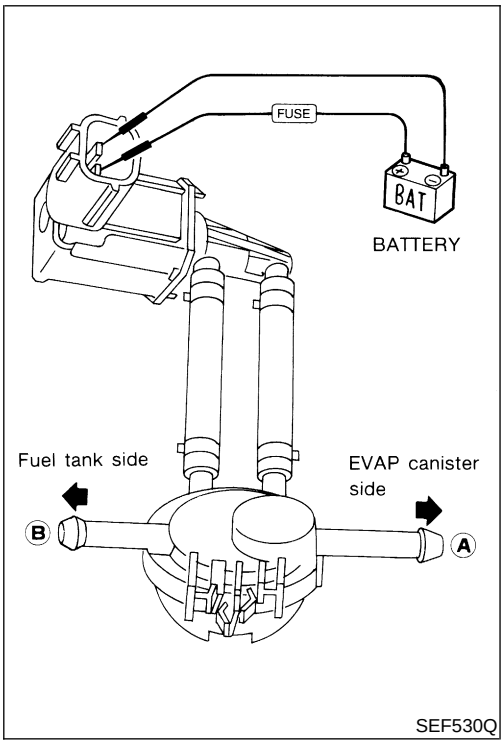

Overall Function Check

NEEC0400

Use this procedure to check the overall function of vacuum cut valve bypass valve. During this check, the 1st trip DTC might not be confirmed.

Without CONSULT-II

1. Remove vacuum cut valve and vacuum cut valve bypass valve as an assembly.
2. Apply vacuum to port **A** and check that there is no suction from port **B**.
3. Apply vacuum to port **B** and check that there is suction from port **A**.
4. Blow air in port **B** and check that there is a resistance to flow out of port **A**.
5. Supply battery voltage to the terminal.
6. Blow air in port **A** and check that air flows freely out of port **B**.
7. Blow air in port **B** and check that air flows freely out of port **A**.
8. If NG, go to "DIAGNOSTIC PROCEDURE" on EC-548.

Wiring Diagram

NEEC0505

EC-BYPS/V-01

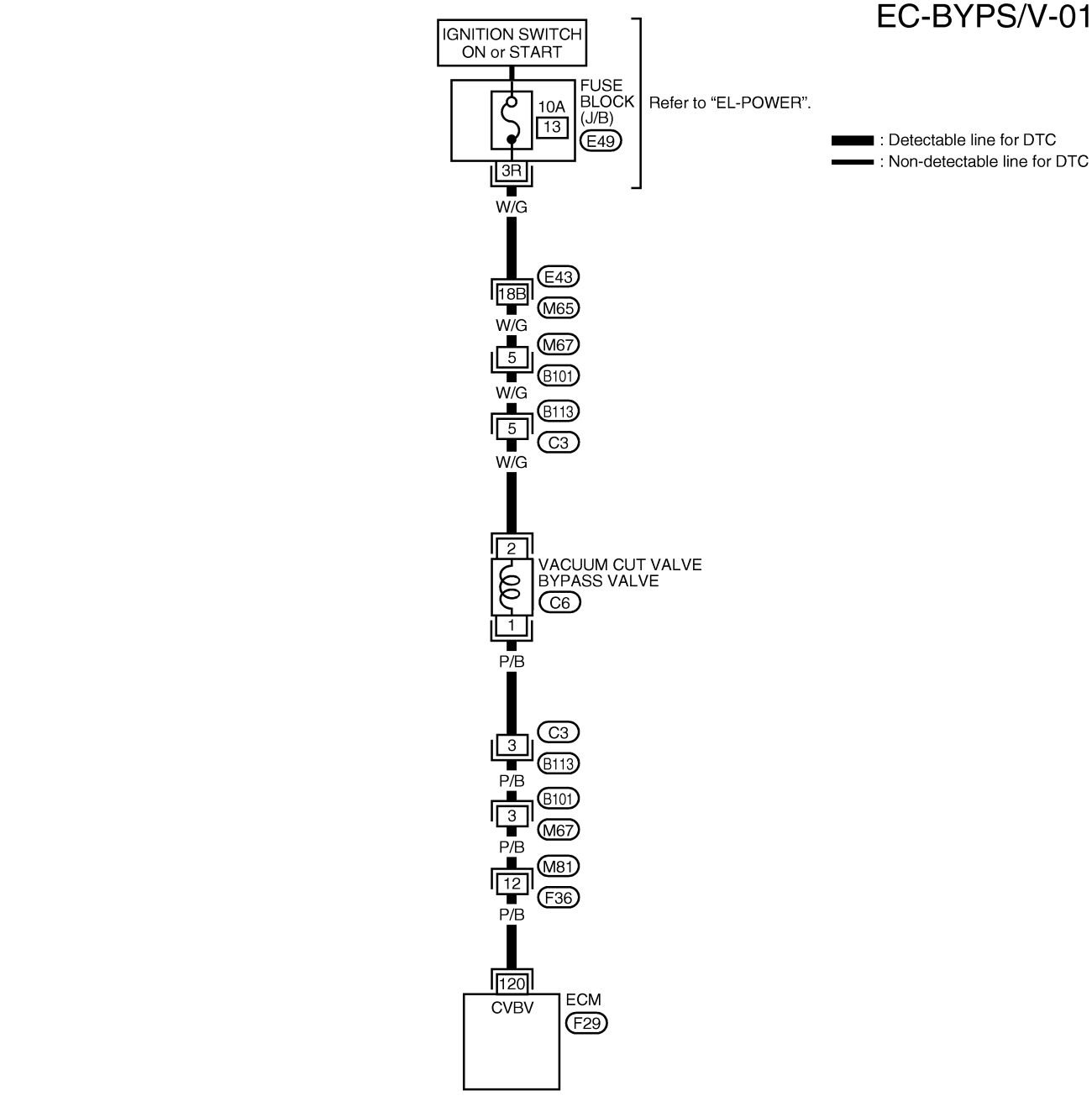

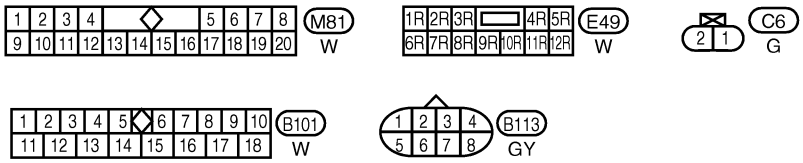

Refer to the following.
M65 , E43 - SUPER MULTIPLE JUNCTION (SMJ)

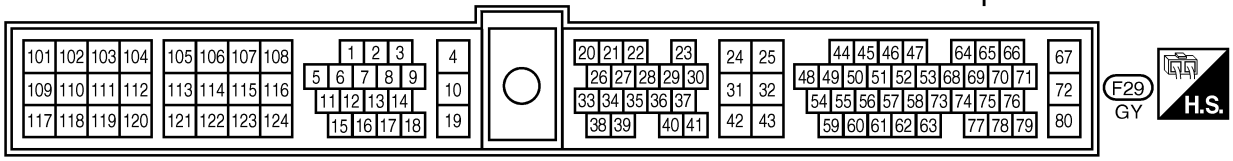

AEC007B

Diagnostic Procedure

NEEC0401

1	INSPECTION START

Do you have CONSULT-II?

Yes or No

Yes	▶	GO TO 2.
No	▶	GO TO 3.

2	CHECK COMPONENT

With CONSULT-II

1. Turn ignition switch OFF.
2. Remove vacuum cut valve and vacuum cut valve bypass valve as an assembly.
3. Apply vacuum to port A and check that there is no suction from port B.
4. Apply vacuum to port B and check that there is suction from port A.
5. Blow air in port B and check that there is a resistance to flow out of port A.
6. Turn ignition switch ON.
7. Select “VC/V BYPASS/V” in “ACTIVE TEST” mode with CONSULT-II and touch “ON”.
8. Blow air in port A and check that air flows freely out of port B.
9. Blow air in port B and check that air flows freely out of port A.

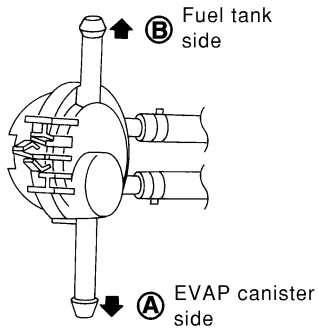

ACTIVE TEST	
VC/V BYPASS/V	OFF
MONITOR	
ENG SPEED	XXX rpm
A/F ALPHA-B1	XXX %
HO2S1 MNTR (B1)	RICH
THRTL POS SEN	XXX V

SEF808Y

OK or NG

OK	▶	GO TO 4.
NG	▶	GO TO 5.

3	CHECK COMPONENT

Without CONSULT-II

1. Turn ignition switch OFF.
2. Remove vacuum cut valve and vacuum cut valve bypass valve as an assembly.
3. Apply vacuum to port A and check that there is no suction from port B.
4. Apply vacuum to port B and check that there is suction from port A.
5. Blow air in port B and check that there is a resistance to flow out of port A.
6. Disconnect vacuum cut valve bypass valve harness connector.
7. Supply battery voltage to the terminal.
8. Blow air in port A and check that air flows freely out of port B.
9. Blow air in port B and check that air flows freely out of port A.

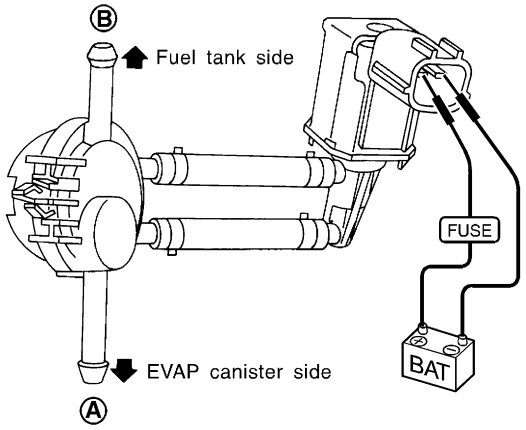

SEF914U

OK or NG

OK	▶	GO TO 4.
NG	▶	GO TO 5.

4	CHECK EVAP PURGE LINE

1. Check EVAP purge line between EVAP canister and fuel tank for clogging or disconnection.
2. Check EVAP purge port of fuel tank for clogging.
3. Check EVAP canister. Refer to EC-40.

OK or NG

OK	▶	GO TO 8.
NG (Step 1)	▶	Repair it.
NG (Step 2)	▶	Clean EVAP purge port.
NG (Step 3)	▶	Replace EVAP canister.

5	CHECK BYPASS HOSE

Check bypass hoses for clogging.

OK or NG

OK	▶	GO TO 6.
NG	▶	Repair or replace hoses.

6 CHECK VACUUM CUT VALVE BYPASS VALVE

With CONSULT-II

Check air passage continuity.

Perform "VC/V BYPASS/V" in "ACTIVE TEST" mode.

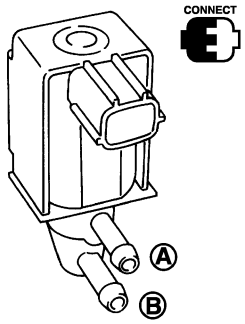

ACTIVE TEST	
VC/V BYPASS/V	OFF
MONITOR	
ENG SPEED	XXX rpm
A/F ALPHA-B1	XXX %
HO2S1 MNTR (B1)	RICH
THRTL POS SEN	XXX V

Condition VC/V BYPASS/V	Air passage continuity between A and B
ON	Yes
OFF	No

Operation takes less than 1 second.

SEF807Y

Without CONSULT-II

Check air passage continuity shown in the figure.

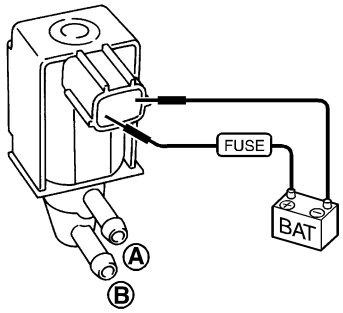

Condition	Air passage continuity between A and B
12V direct current supply between terminals 1 and 2	Yes
No supply	No

Operation takes less than 1 second.

SEF557Y

If NG or operation takes more than 1 second, replace vacuum cut valve bypass valve.

OK or NG

OK	▶	GO TO 7.
NG	▶	Replace vacuum cut valve bypass valve.

7	CHECK VACUUM CUT VALVE

Check vacuum cut valve as follows:

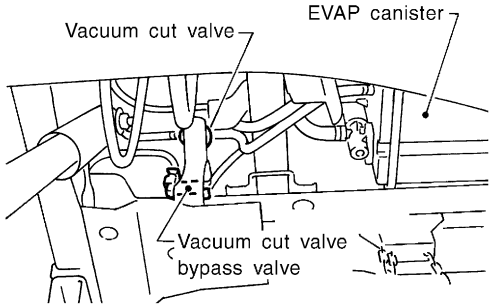

SEF186S

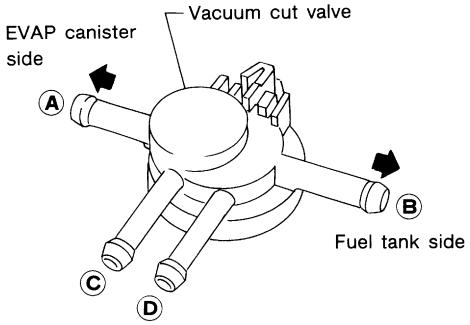

SEF379Q

1. Plug port **C** and **D** with fingers.
2. Apply vacuum to port **A** and check that there is no suction from port **B**.
3. Apply vacuum to port **B** and check that there is suction from port **A**.
4. Blow air in port **B** and check that there is a resistance to flow out of port **A**.
5. Open port **C** and **D**.
6. Blow air in port **A** check that air flows freely out of port **C**.
7. Blow air in port **B** check that air flows freely out of port **D**.

OK or NG

OK	▶	GO TO 8.
NG	▶	Replace vacuum cut valve.

8	CHECK EVAP CONTROL SYSTEM PRESSURE SENSOR HOSE

1. Turn ignition switch OFF.
2. Check disconnection or improper connection of hose connected to EVAP control system pressure sensor.

OK or NG

OK	▶	GO TO 9.
NG	▶	Repair it

9	CHECK CONNECTOR

1. Disconnect EVAP control system pressure sensor harness connector.

View with spare tire removed

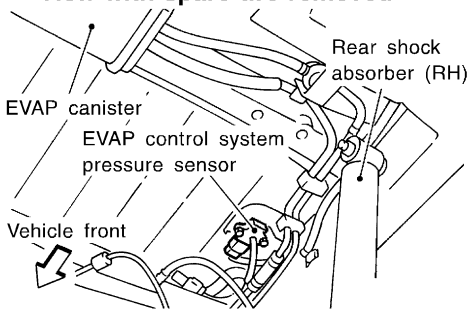

SEF341V

2. Check connectors for water.
   Water should not exist.

OK or NG

OK	▶	GO TO 10.
NG	▶	Replace EVAP control system pressure sensor.

10	CHECK COMPONENT AND CIRCUIT

(EVAP control system pressure sensor)
Refer to "DTC Confirmation Procedure" for DTC P0450, EC-393.

OK or NG

OK (With CONSULT-II)	▶	GO TO 11.
OK (Without CONSULT-II)	▶	GO TO 12.
NG	▶	Replace EVAP control system pressure sensor.

11	CHECK EVAP CANISTER VENT CONTROL VALVE

With CONSULT-II

Check air passage continuity.

Perform "VENT CONTROL/V" in "ACTIVE TEST" mode.

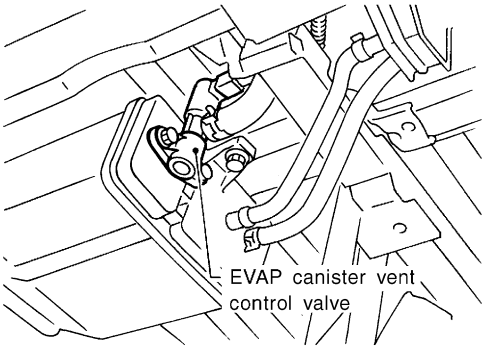

SEF143S

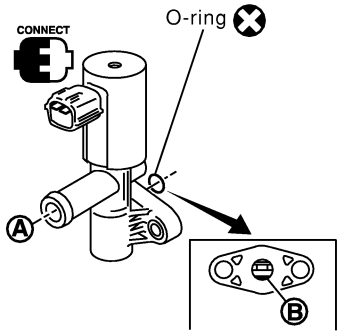

ACTIVE TEST	
VENT CONTROL/V	OFF
MONITOR	
ENG SPEED	XXX rpm
A/F ALPHA-B1	XXX %
HO2S1 (B1)	XXX V
THRTL POS SEN	XXX V

Condition VENT CONTROL/V	Air passage continuity between A and B
ON	No
OFF	Yes

Operation takes less than 1 second.

SEF803Y

OK or NG

OK	▶	GO TO 13.
NG	▶	Replace EVAP canister vent control valve.

Diagnostic Procedure (Cont'd)

12	CHECK EVAP CANISTER VENT CONTROL VALVE

Without CONSULT-II

Check air passage continuity shown in the figure.

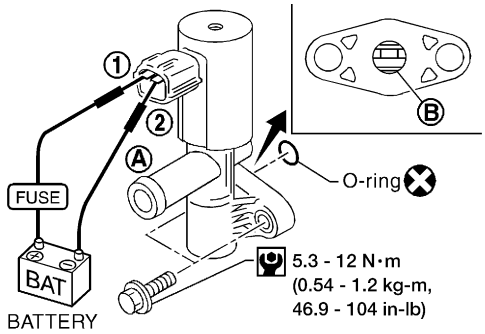

AEC783A

Condition	Air passage continuity between **A** and **B**
12V direct current supply between terminals 1 and 2	No
No supply	Yes

MTBL0297

If NG or operation takes more than 1 second, clean valve using air blower or replace as necessary.

If the portion B is rusted, replace EVAP canister vent control valve. Make sure new O-ring is installed properly.

OK or NG

OK	▶	GO TO 13.
NG	▶	Replace EVAP canister vent control valve.

13	CHECK INTERMITTENT INCIDENT
Refer to "TROUBLE DIAGNOSIS FOR INTERMITTENT INCIDENT", EC-148.	
▶	**INSPECTION END**

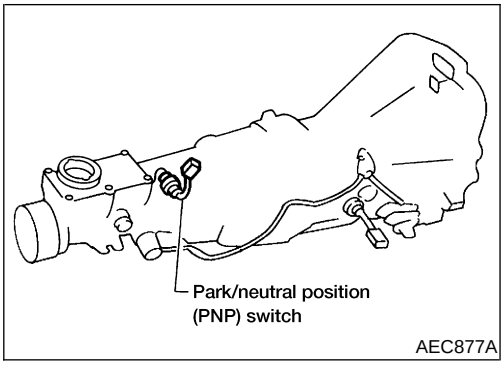

Component Description

NEEC0424

When the gear position is “N”, park/neutral position (PNP) switch is “ON”.

ECM detects the park/neutral position when continuity with ground exists.

CONSULT-II Reference Value in Data Monitor Mode

NEEC0425

Specification data are reference values.

MONITOR ITEM	CONDITION		SPECIFICATION
P/N POSI SW	• Ignition switch: ON	Shift lever: “N”	ON
		Except above	OFF

ECM Terminals and Reference Value

NEEC0426

Specification data are reference values and are measured between each terminal and ground.

CAUTION:

Do not use ECM ground terminals when measuring input/output voltage. Doing so may result in damage to the ECM’s transistor. Use a ground other than ECM terminals, such as the ground.

TERMINAL NO.	WIRE COLOR	ITEM	CONDITION	DATA (DC Voltage)
22	L/B	PNP switch	**[Ignition switch “ON”]** • Gear position is “Neutral position”	Approximately 0V
			[Ignition switch “ON”] • Except the above gear position	Approximately 5V

On Board Diagnosis Logic

NEEC0427

DTC No.	Malfunction is detected when ...	Check Items (Possible Cause)
P1706	• The signal of the PNP switch is not changed in the process of engine starting and driving.	• Harness or connectors (The PNP switch circuit is open or shorted.) • PNP switch

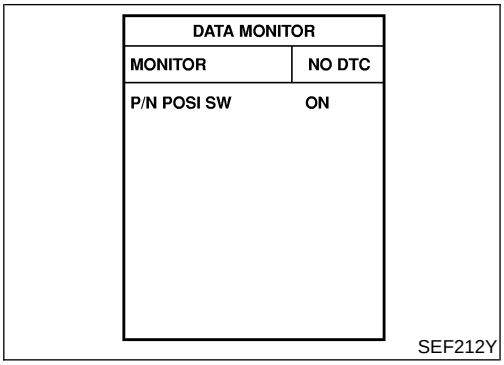

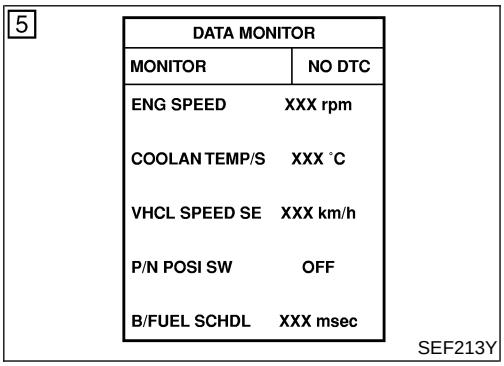

DTC Confirmation Procedure

=NEEC0428

CAUTION:

Always drive vehicle at a safe speed.

NOTE:

If “DTC Confirmation Procedure” has been previously conducted, always turn ignition switch “OFF” and wait at least 5 seconds before conducting the next test.

With CONSULT-II

1) Turn ignition switch ON.

2) Select “P/N POSI SW” in “DATA MONITOR” mode with CONSULT-II. Then check the “P/N POSI SW” signal under the following conditions.

Position (Selector lever)	Known-good signal
“N”	ON
Except the above position	OFF

If NG, go to “Diagnostic Procedure”, EC-559 (M/T models), EC-561 (A/T models).
If OK, go to following step.

3) Select “DATA MONITOR” mode with CONSULT-II.

4) Start engine and warm it up to normal operating temperature.

5) Maintain the following conditions for at least 60 consecutive seconds.

ENG SPEED	1,400 - 4,000 rpm
COOLAN TEMP/S	More than 70°C (158°F)
B/FUEL SCHDL	3.5 - 17 msec
VHCL SPEED SE	More than 64 km/h (More than 40 MPH)
Selector lever	Suitable position

6) If 1st trip DTC is detected, go to “Diagnostic Procedure”, EC-559 (M/T models), EC-561 (A/T models).

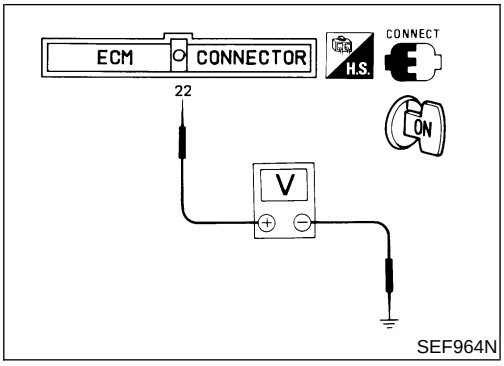

Overall Function Check

=NEEC0429

Use this procedure to check the overall function of the park/neutral position switch circuit. During this check, a 1st trip DTC might not be confirmed.

Without CONSULT-II

1) Turn ignition switch ON.
2) Check voltage between ECM terminal 22 (PNP switch signal) and body ground under the following conditions.

Condition (Gear position)	Voltage (V) (Known-good data)
"N" position	Approx. 0
Except the above position	Approx. 5

3) If NG, go to "Diagnostic Procedure", EC-559 (M/T models), EC-561 (A/T models).

Wiring Diagram

NEEC0430

EC-PNP/SW-01

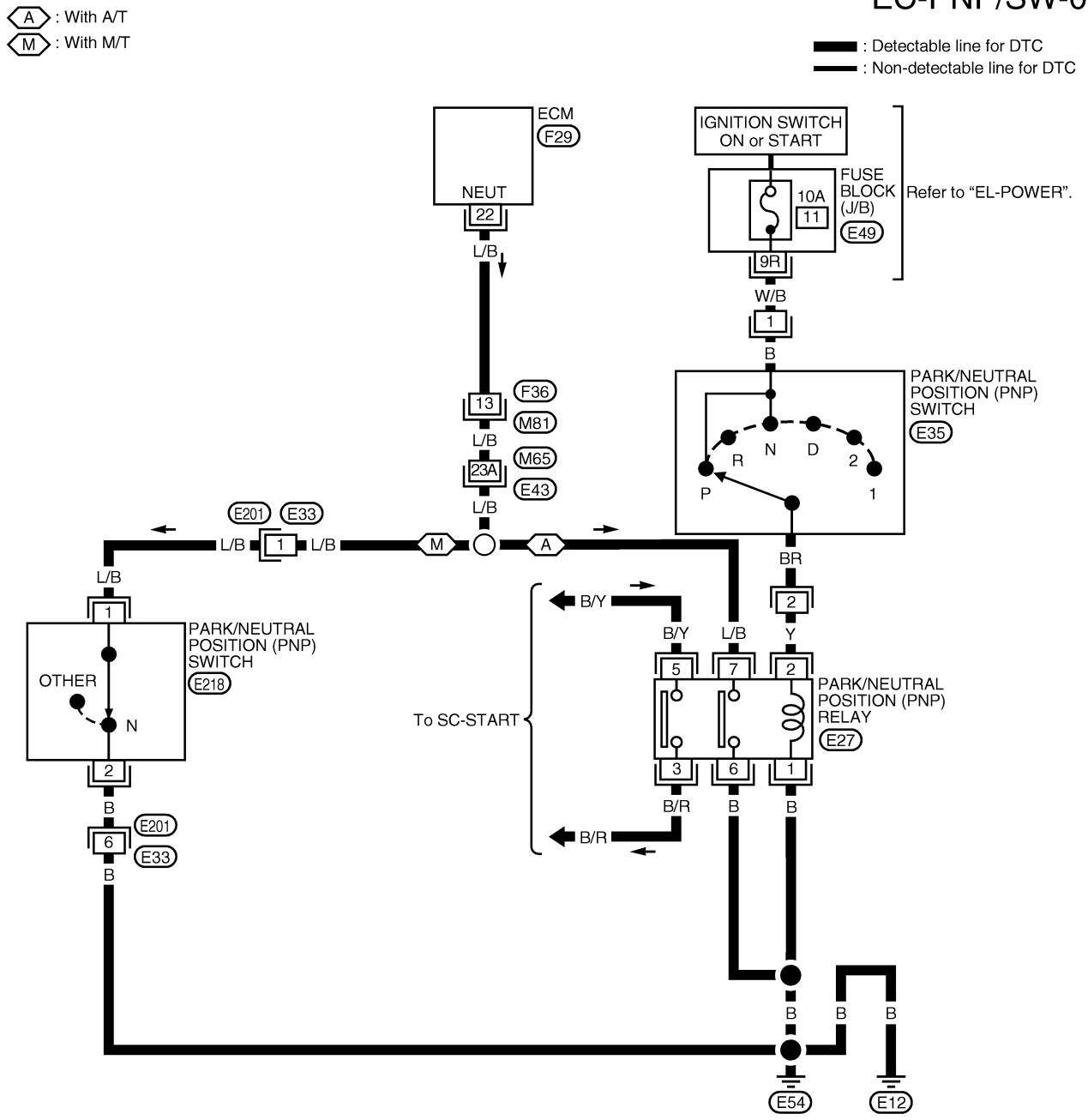

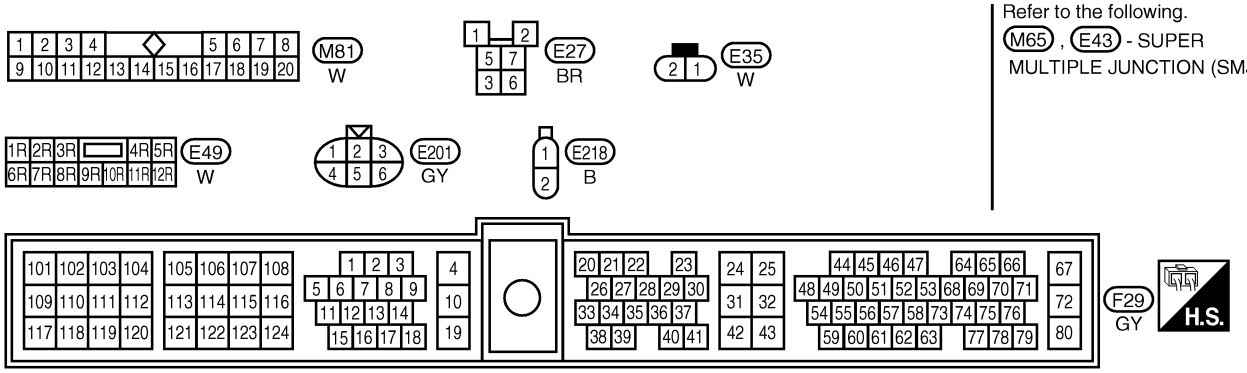

Refer to the following.
M65 , E43 - SUPER MULTIPLE JUNCTION (SMJ)

LEC531

Diagnostic Procedure For M/T Models

NEEC1059

1	CHECK GROUND CIRCUIT

1. Turn ignition switch OFF.
2. Disconnect park neutral position (PNP) switch harness connector.

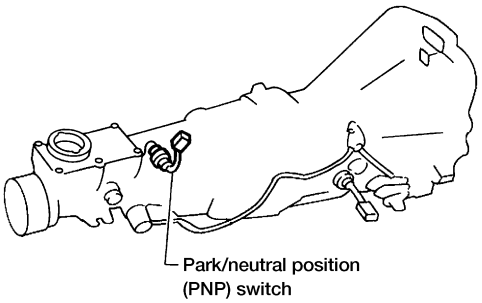

AEC877A

3. Check harness continuity between terminal 2 and body ground.

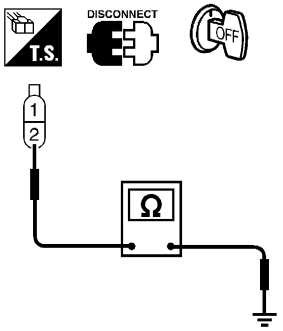

SEF218V

Continuity should exist.

4. Also check harness for short to power.

OK or NG

OK	▶	GO TO 3.
NG	▶	GO TO 2.

2	DETECT MALFUNCTIONING PART

Check the following.
- Harness connectors E33, E201
- Harness for open or short between PNP switch and body ground

	▶	Repair open circuit or short to power in harness or connectors.

3	CHECK INPUT SIGNAL CIRCUIT

1. Disconnect ECM harness connector.
2. Check harness continuity between ECM terminal 22 and terminal 1.

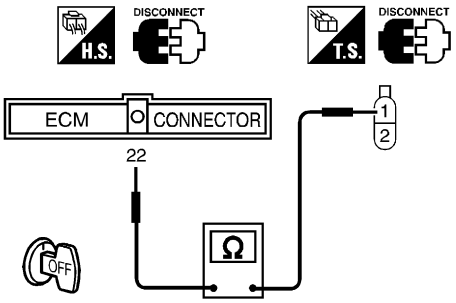

SEF219V

Continuity should exist.

3. Also check harness for short to ground and short to power.

OK or NG

OK	▶	GO TO 5.
NG	▶	GO TO 4.

4	DETECT MALFUNCTIONING PART

Check the following.
- Harness connectors F36, M81
- Harness connectors M65, E43
- Harness connectors E33, E201
- Harness for open or short between ECM and PNP switch

	▶	Repair open circuit or short to ground or short to power in harness or connectors.

5	CHECK PNP SWITCH

Refer to ***MT-8***.

OK or NG

OK	▶	GO TO 6.
NG	▶	Replace PNP switch.

6	CHECK INTERMITTENT INCIDENT

Perform "TROUBLE DIAGNOSIS FOR INTERMITTENT INCIDENT", EC-148.

	▶	**INSPECTION END**

Diagnostic Procedure For A/T Models

NEEC1060

1 **CHECK PNP SWITCH POWER SUPPLY CIRCUIT-I**

1. Turn ignition switch “OFF”.
2. Disconnect park/neutral position (PNP) relay.

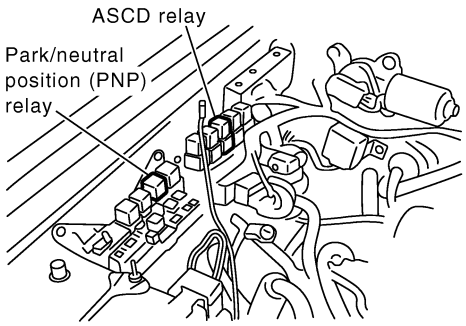

SEF857Z

3. Turn ignition switch “ON”.
4. Shift selector lever to “P” or “N” position.
5. Check voltage between terminal 2 and ground with CONSULT-II or tester.

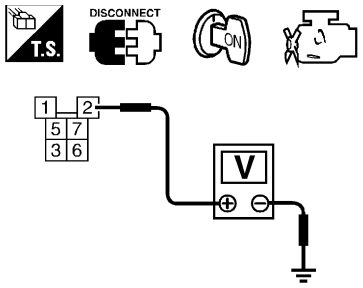

SEF661W

Voltage: Battery voltage

OK or NG

OK	▶	GO TO 6.
NG	▶	GO TO 2.

2 **CHECK PNP SWITCH POWER SUPPLY CIRCUIT-II**

1. Turn ignition switch “OFF”.
2. Disconnect park/neutral position (PNP) switch harness connector.

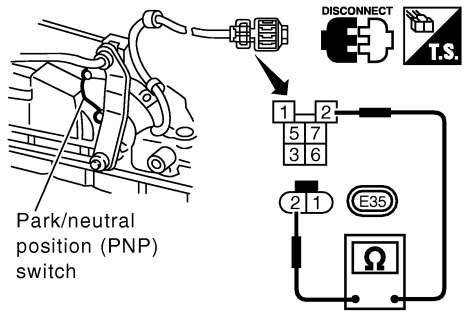

SEF854Z

3. Check harness continuity between park/neutral position (PNP) switch terminal 2 and park/neutral position (PNP) relay terminal 2.

Continuity should exist.

4. Also check harness for short to ground and short to power.

OK or NG

OK	▶	GO TO 3.
NG	▶	Repair open circuit or short to ground or short to power in harness or connectors.

3	CHECK PNP SWITCH POWER SUPPLY CIRCUIT-III

1. Turn ignition switch "OFF".
2. Check voltage between park/neutral position (PNP) switch terminal 1 and ground with CONSULT-II or tester.

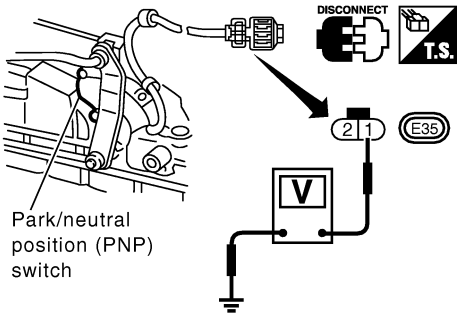

SEF855Z

Voltage: Battery voltage

OK or NG

OK	▶	GO TO 5.
NG	▶	GO TO 4.

4	DETECT MALFUNCTIONING PART

Check the following.
- Fuse block (J/B) connector E49
- 10A fuse
- Harness for open or short between park/neutral position (PNP) switch and fuse

	▶	Repair open circuit or short to power in harness or connectors.

5	CHECK PARK/NEUTRAL POSITION (PNP) SWITCH

Refer to "Component Inspection", "TROUBLE DIAGNOSES", ***AT-51***.

OK or NG

OK	▶	GO TO 11.
NG	▶	Replace park/neutral position (PNP) switch.

6	CHECK PNP RELAY GROUND CIRCUIT FOR OPEN AND SHORT

1. Turn ignition switch "OFF".
2. Check harness continuity between relay terminals 1, 6 and body ground. Refer to Wiring Diagram.
   Continuity should exist.
3. Also check harness for and short to power.

OK or NG

OK	▶	GO TO 8.
NG (With theft warning system)	▶	GO TO 7.
NG (Without theft warning system)	▶	Repair open circuit or short to ground or short to power in harness or connectors.

7	DETECT MALFUNCTIONING PART
Check the circuit between park/neutral position (PNP) relay and body ground. Refer to "STARTING SYSTEM", ***SC-10***.	
OK or NG	
OK ▶	GO TO 11.
NG ▶	Repair or replace.

8	CHECK PNP RELAY INPUT SIGNAL CIRCUIT FOR OPEN AND SHORT
1. Disconnect ECM harness connector. 2. Check harness continuity between ECM terminal 22 and relay terminal 7. Refer to Wiring Diagram. **Continuity should exist.** 3. Also check harness for short to ground and short to power.	
OK or NG	
OK ▶	GO TO 10.
NG ▶	GO TO 9.

9	DETECT MALFUNCTIONING PART
Check the following. ● Harness connectors F36, M81 ● Harness connectors M65, E43 ● Harness for open or short between ECM and park/neutral position (PNP) relay	
▶	Repair open circuit or short to ground or short to power in harness or connectors.

10	CHECK PARK/NEUTRAL POSITION (PNP) RELAY
1. Apply 12V direct current between park/neutral position (PNP) relay terminals 1 and 2. 2. Check continuity between park/neutral position (PNP) relay terminals 3 and 5, 6 and 7.	

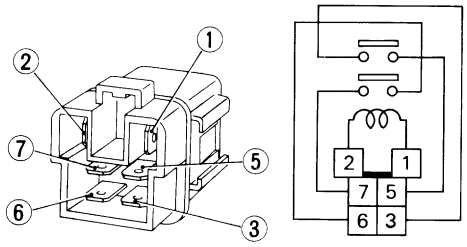

SEC202B

12V (1 and 2) applied: Continuity should exist.
No voltage applied: Continuity shoud not exist.

OK or NG	
OK ▶	GO TO 11.
NG ▶	Replace park/neutral position (PNP) relay.

11	CHECK INTERMITTENT INCIDENT
Refer to "TROUBLE DIGNOSIS FOR INTERMITTENT INCIDENT", EC-148.	
▶	**INSPECTION END**

System Description

NEEC1061

Sensor	Input Signal to ECM	ECM function	Actuator
Camshaft position sensor	Engine speed	Torque converter lock-up control	Torque converter clutch solenoid valve
Engine coolant temperature sensor	Engine coolant temeprature		
Throttle position sensor	Throttle position		

The ECM controls torque converter clutch solenoid valve to cancel the lock-up condition of A/T. When the solenoid valve is **turned on,** lock-up is **cancelled**. When the solenoid valve is turned off, A/T lock-up is operational.

Conditions for lock-up cancel:

Torque converter clutch solenoid valve is turned “ON” when;

- Throttle valve is fully closed (during idling or deceleration)
- Engine coolant temperature is below 40°C (104°F)
- Engine is stopped

Conditions for lock-up operation:

- Under 55 to 63 km/h (34 to 39 MPH) (2/8 throttle on flat road), lock-up does not operate even when the torque converter clutch solenoid valve is “OFF”.
- Over 58 to 66 km/h (36 to 41 MPH) (2/8 throttle on flat road), lock-up should operate because the torque converter clutch solenoid valve is “OFF”.

To confirm vehicle lock-up, the torque converter clutch solenoid valve must be in operation (“ON” during idle and deceleration, and “OFF” during acceleration) and engine speed should drop. When the accelerator pedal is depressed (less than 2/8) in lock-up, the engine speed should not change abruptly. If there is a big jump in engine speed, there will be no lock up.

CONSULT-II Reference Value in Data Monitor Mode

NEEC1062

MONITOR ITEM	CONDITON		SPECIFICATION
TCC SOL/V	• Engine: After warming up	Idle	ON
		2,000 rpm	OFF

ECM Terminals and Reference Value

NEEC1063

Specification data are reference values and measured between each terminal and ground.

CAUTION:

Do not use ECM ground terminals when measuring input/output voltage. Doing so may result in damage to the ECM’s transistor. Use a ground other than ECM terminals, such as the ground.

TERMINAL NO.	WIRE COLOR	ITEM	CONDITION	DATA (DC Voltage)
115	L/Y	Torque converter clutch solenoid valve (A/T models only)	**[Engine is running]** • Idle Speed	Approximately 1V
			• **[Engine is running]** • **Warm-up condition** • Engine speed is 2,000 rpm	BATTERY VOLTAGE (11 - 14V)

On Board Diagnosis Logic

NEEC1064

Diagnostic Trouble Code No.	Malfunction is detected when ...	Check Items (Possible Cause)
P1775	• An excessively low voltage from the solenoid is sent to ECM.	• Harness or connectors (The circuit is open or shorted). • Torque converter clutch solenoid valve

DTC Confirmation Procedure

NEEC1065

NOTE:

If “DTC Confirmation Procedure” has been previously conducted, always turn ignition switch “OFF” and wait at least 5 seconds before conducting the next test.

With CONSULT-II

1) Turn ignition switch “ON”.
2) Select “DATA MONITOR” mode with CONSULT-II.
3) Wait at least 5 seconds.
4) if 1st trip DTC is detected, go to “Diagnostic Procedure”, EC-565.

With GST

Folllow the procedure “With CONSULT-II”.

Wiring Diagram

NEEC1066

EC-LKUP-01

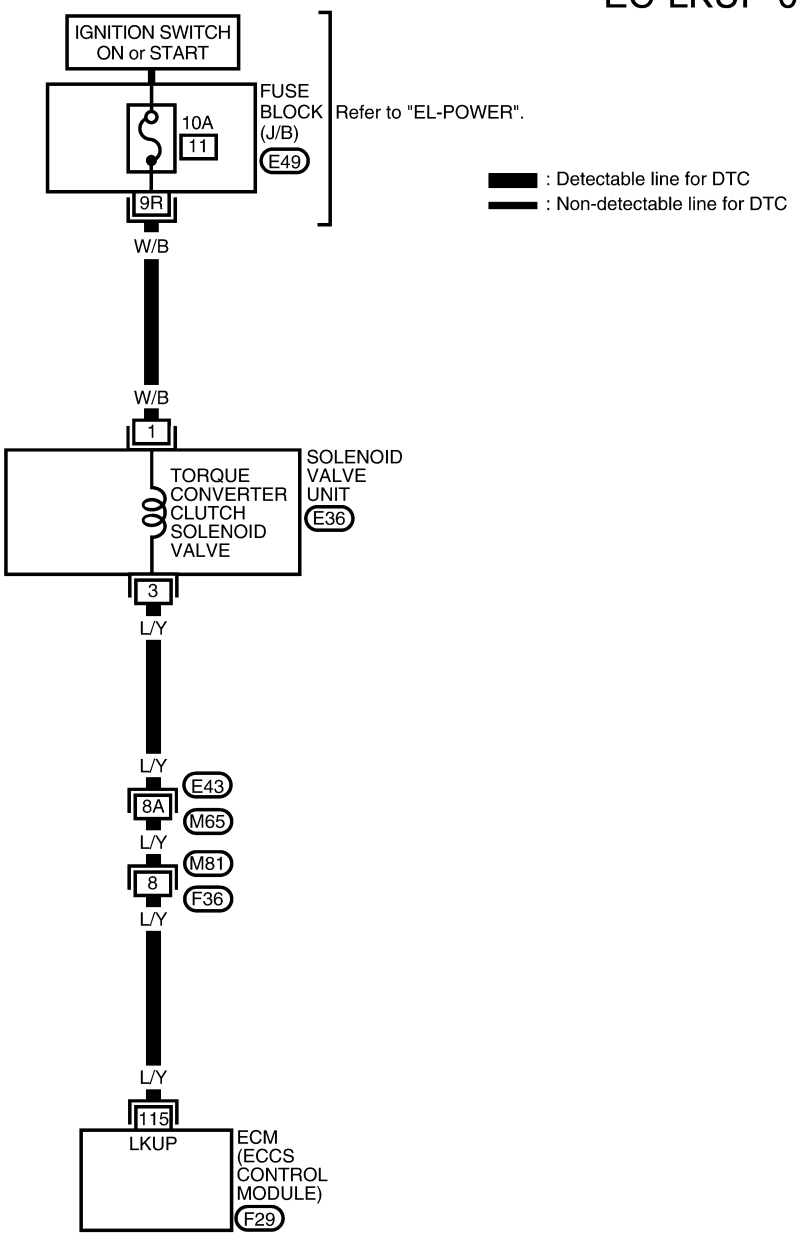

Refer to the following.
M65 , E43 - SUPER MULTIPLE JUNCTION (SMJ)

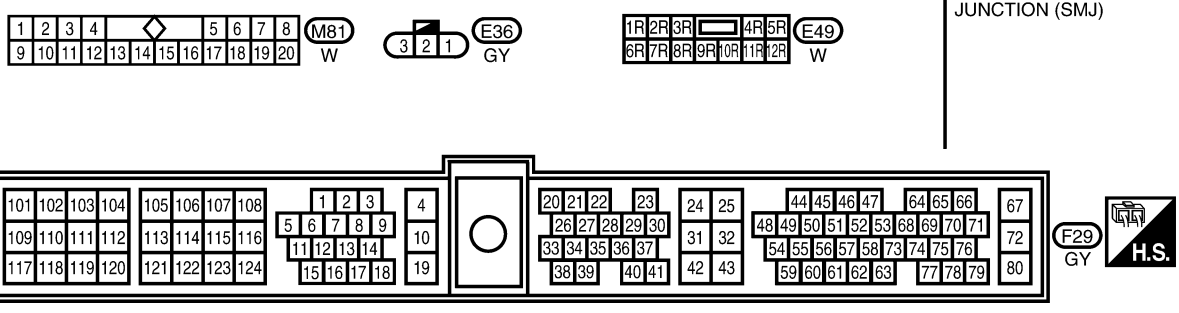

WEC817

Diagnostic Procedure

NEEC1067

1	CHECK POWER SUPPLY

1. Disconnect torque converter clutch solenoid valve harness connector.

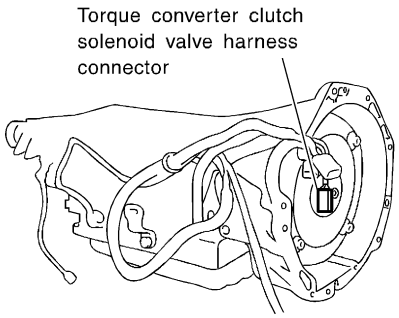

SEF507V

2. Turn ignition switch “ON”.
3. Check voltage between terminal 1 and ground with CONSULT-II or tester.

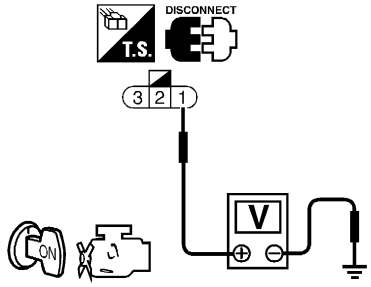

SEF422V

Voltage: Battery voltage

OK or NG

OK	▶	GO TO 3.
NG	▶	GO TO 2.

2	DETECT MALFUNCTIONING PART

Check the following.
- 10A fuse
- Harness continuity between torque converter clutch solenoid vlave and 10A fuse

	▶	Repair harness or connectors.

Diagnostic Procedure (Cont'd)

3	CHECK OUTPUT SIGNAL CIRCUIT

1. Turn ignition switch "OFF".
2. Disconnect ECM harness connector.
3. Check voltage between terminal 115 and termianl 3.

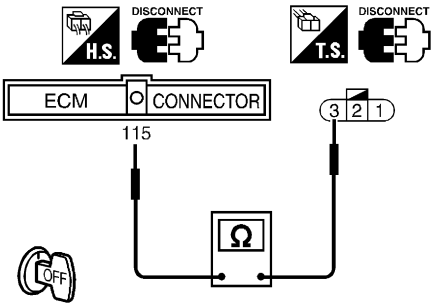

SEF232V

Continuity should exist.

OK or NG

OK	▶	GO TO 5.
NG	▶	GO TO 4.

4	DETECT MALFUNCTIONING PART

Check the following.

- Harness connectors E43, M65
- Harness connectors M81, F34
- Harness continuity between torque converter clutch solenoid valve and ECM

	▶	Repair open circuit, short to ground or short to power in harness or connectors.

5	CHECK TORQUE CONVERTER CLUTCH SOLENOID VALVE

1. Check resistance between torque converter clutch solenoid valve terminals 1 and 3.

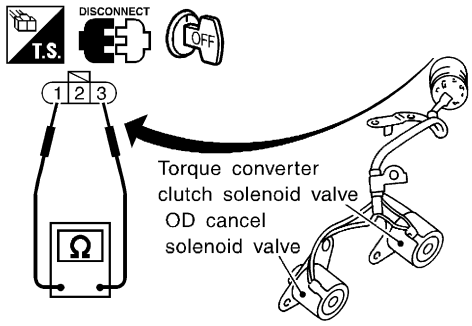

SEF233V

Resistance: Approximately 25Ω [at 25°C (77°F)]

2. Remove torque converter clutch solenoid valve. Refer to ***AT-63*** "ON-VEHICLE SERVICE".
3. Supply the solenoid valve terminals 1 and 3 with battery voltage and check the solenoid valve operation.

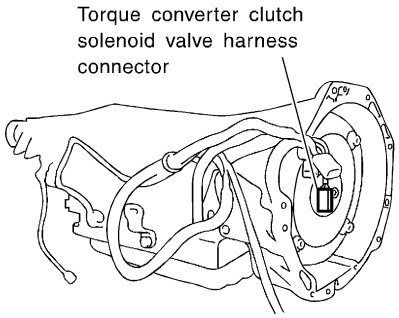

SEF507V

Torque converter clutch solenoid valve should be operated.

OK or NG

OK	▶	GO TO 6.
NG	▶	Replace torque converter clutch solenoid valve.

6	CHECK INTERMITTENT INCIDENT
Perform "TROUBLE DIAGNOSIS FOR INTEMITTENT INCIDENT", EC-148.	
▶	**INSPECTION END**

System Description

NEEC1068

ECM controls torque converter clutch solenoid valve with the signals below.

Sensor	Input Signal to ECM	ECM function	Actuator
Camshaft position sensor	Engine speed	Torque converter lock-up control	Torque converter clutch solenoid valve
Engine coolant temperature sensor	Engine coolant temeprature		
Throttle position sensor	Throttle position		
Vehicle speed sensor *1	Vehicle speed		

*1: This signal is used only for diagnosis.

The ECM controls torque converter clutch solenoid valve to cancel the lock-up condition of A/T. When the solenoid valve is **turned on,** lock-up is **cancelled**. When the solenoid valve is turned off, A/T lock-up is operational.

Conditions for lock-up cancel:

Torque converter clutch solenoid valve is turned “ON” when;

- Throttle valve is fully closed (during idling or deceleration)
- Engine coolant temperature is below 40°C (104°F)
- Engine is stopped

Conditions for lock-up operation:

- Under 55 to 63 km/h (34 to 39 MPH) (2/8 throttle on flat road), lock-up does not operate even when the torque converter clutch solenoid valve is “OFF”.
- Over 58 to 66 km/h (36 to 41 MPH) (2/8 throttle on flat road), lock-up should operate because the torque converter clutch solenoid valve is “OFF”.

To confirm vehicle lock-up, the torque converter clutch solenoid valve must be in operation (“ON” during idle and deceleration, and “OFF” during acceleration) and engine speed should drop. When the accelerator pedal is depressed (less than 2/8) in lock-up, the engine speed should not change abruptly. If there is a big jump in engine speed, there will be no lock up.

CONSULT-II Reference Value in Data Monitor Mode

NEEC1069

MONITOR ITEM	CONDITON		SPECIFICATION
TCC SOL/V	• Engine: After warming up	Idle	ON
		2,000 rpm	OFF

ECM Terminals and Reference Value

NEEC1070

Specification data are reference values and are measured between each terminal and ground.

CAUTION:

Do not use ECM ground terminals when measuring input/output voltage. Doing so may result in damage to the ECM's transistor. Use a ground other than ECM terminals, such as the ground.

TERMINAL NO.	WIRE COLOR	ITEM	CONDITION	DATA (DC Voltage)
115	L/Y	Torque converter clutch solenoid valve (A/T models only)	**[Engine is running]** ● Idle Speed	Approximately 1V
			● **[Engine is running]** ● **Warm-up condition** ● Engine speed is 2,000 rpm	BATTERY VOLTAGE (11 - 14V)

On Board Diagnosis Logic

NEEC1071

Diagnostic Trouble Code No.	Malfunction is detected when ...	Check Items (Possible Cause)
P1776	● A/T torque converter slip has occurred in lock-up condition.	● Torque converter clutch solenoid valve ● A/T hydraulic control system ● Torque converter

TCS S/V FNCTN P1776	
OUT OF CONDITION	
MONITOR	
CMPS~RPM(REF)	XXX rpm
THRTL POS SEN	XXX V
B/FUEL SCHDL	XXX msec

PEF859U

TCC S/V FNCTN P1776	
TESTING	
MONITOR	
CMPS~RPM(REF)	XXX rpm
THRTL POS SEN	XXX V
B/FUEL SCHDL	XXX msec

PEF235V

TCC S/V FNCTN P1776
COMPLETED

PEF861U

DTC Confirmation Procedure

NEEC1072

CAUTION:

Always drive vehicle at a safe speed.

NOTE:

If "DTC Confirmation Procedure" has been previously conducted, always turn ignition switch "OFF" and wait at least 5 seconds before conducting the next test.

TESTING CONDITION:

Always perform at a temperature above –10°C (14°F).

With Consult-II

1) Start engine and warm it up to normal operating temperature.
2) Turn ignition switch "OFF" and wait at least 5 seconds.
3) Start engine.
4) Select "TCC S/V FNCTN P1776" of "A/T (TCC S/V) in DTC WORK SUPPORT" mode with CONSULT-II.
5) Touch "START".
6) When the following conditions are met, "TESTING" will be displayed on the CONSULT-II screen. Maintain the conditions continuously until "TESTING changes to "COMPLETED". (It will take approximately 20 seconds.)

Selector lever		D (OD "ON")
Vehicle speed		76 - 100 km/h (47 - 62 MPH)
ENG SPEED	Single cab model	Less than 2,150 rpm
	King cab model	Less than 2,300 rpm
B/FUEL SCHDL		7 - 16 msec
THRTL POS SEN		Less than 1.3V

If "TESTING" is not displayed after 5 minutes, retry from step 2).

7) Male sure that"OK" is displayed after touching "SELF-DIAG

RESULTS".
If "NG" is dispalyed, refer to "DIAGNOSTIC PROCEDURE", EC-571.

With GST
Follow the procedure "With CONSULT-II".

Diagnostic Procedure

NEEC1073

1	CHECK TORQUE CONVERTER CLUTCH SOLENOID VALVE

1. Check resistance between torque converter clutch solenoid valve terminals 1 and 3.

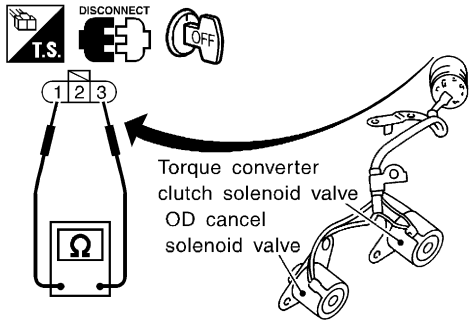

SEF233V

Resistance: Approximately 25Ω [at 25°C (77°F)]

2. Remove torque converter clutch solenoid valve. Refer to ***AT-63***, "ON-VEHICLE SERVICE".
3. Supply the solenoid valve terminals 1 and 3 with battery voltage and check the solenoid valve operation.

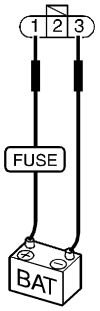

SEF234V

Torque converter clutch solenoid valve should be operated.

OK or NG

OK	▶	GO TO 2.
NG	▶	Replace torque converter clutch solenoid valve.

2	CHECK TORQUE CONVERTER CLUTCH CONTROL VALVE

1. Disassemble torque converter clutch control valve assembly. Refer to ***AT-90***, "REPAIR FOR COMPONENTS PARTS".
2. Check torque converter clutch control valve.

- Valve, and sleeve slide along valve bore under their own weight.
- Valve, and sleeve are free from burrs, dents and scratches.
- Control valve springs are free from damage, deformation and fatigue.
- Hydraulic line is free from obstacles.

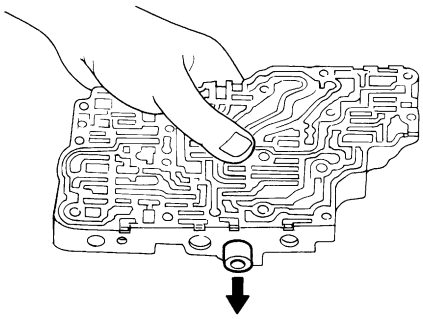

SAT740H

OK or NG

OK	▶	GO TO 3.
NG	▶	Replace torque converter clutch control valve.

3	CHECK VEHICLE SPEED SENSOR SIGANL

Check vehicle speed signal with CONSULT-II or speedometer if it is shows an actual vehicle speed.

OK or NG

OK	▶	GO TO 4.
NG	▶	Check The following: Vehicle speed sensor, Vehicle speed sensor driven gear. If NG, replace parts

4	CHECK INTERMITTENT INCIDENT

Perform "TROUBLE DIAGNOSIS FOR INTERMITTENT INCIDENT", EC-148.

▶ **INSPECTION END**

On Board Diagnosis Logic

NEEC0488

If the cooling fan or another component in the cooling system malfunctions, engine coolant temperature will rise.
When the engine coolant temperature reaches an abnormally high temperature condition, a malfunction is indicated.

Diagnostic Trouble Code No.	Malfunction is detected when ...	Check Items (Possible Cause)
OVERHEAT	• Engine coolant temperature reaches an abnormally high temperature.	• Harness or connectors (The cooling fan circuit is open or shorted.) • Cooling fan • Radiator hose • Radiator • Radiator cap • Water pump • Thermostat For more information, refer to “MAIN 12 CAUSES OF OVERHEATING”, EC-578.

CAUTION:

When a malfunction is indicated, be sure to replace the coolant. Refer to *MA-17*, “Changing Engine Coolant”. Also, replace the engine oil.

1) **Fill radiator with coolant up to specified level with a filling speed of 2 liters per minute. Be sure to use coolant with the proper mixture ratio. Refer to *MA-15*, “Anti-freeze Coolant Mixture Ratio”.**
2) **After refilling coolant, run engine to ensure that no water-flow noise is emitted.**

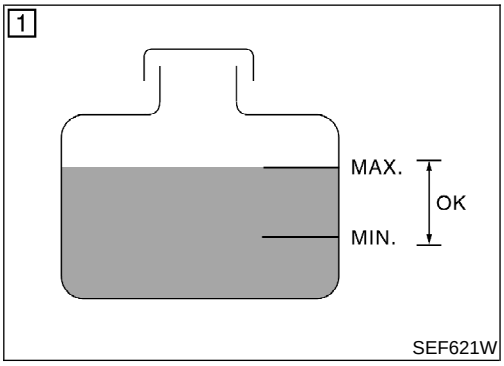

Overall Function Check

NEEC0489

WARNING:

Never remove the radiator cap when the engine is hot. Serious burns could be caused by high pressure fluid escaping from the radiator.
Wrap a thick cloth around cap. Carefully remove the cap by turning it a quarter turn to allow built-up pressure to escape. Then turn the cap all the way off.

With CONSULT-II

1) Check the coolant level in the reservoir tank and radiator.
Allow engine to cool before checking coolant level.
If the coolant level in the reservoir tank and/or radiator is below the proper range, skip the following steps and go to “Diagnostic Procedure”, EC-575.
2) Confirm whether customer filled the coolant or not. If customer filled the coolant, skip the following steps and go to “Diagnostic Procedure”, EC-575.

Diagnostic Procedure

NEEC0491

1	CHECK COOLING SYSTEM FOR LEAK

Apply pressure to the cooling system with a tester, and check if the pressure drops.

Testing pressure: 157 kPa (1.6 kg/cm^2, 23 psi)

CAUTION:

Higher than the specified pressure may cause radiator damage.

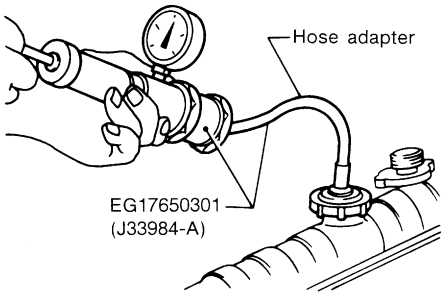

SLC754A

Pressure should not drop.

OK or NG

OK	▶	GO TO 2.
NG	▶	**Check the following for leak.** ● Hose ● Radiator ● Water pump Refer to ***LC-12***, “Water Pump”.

2	CHECK RADIATOR CAP

Apply pressure to cap with a tester.

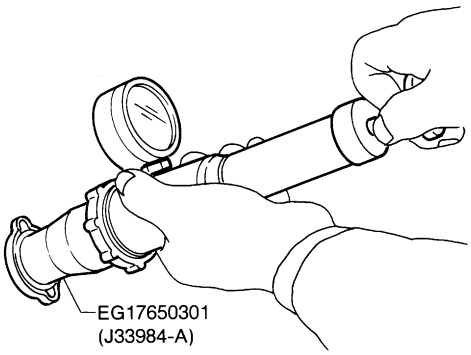

SLC755A

Radiator cap relief pressure:

78 - 98 kPa (0.8 - 1.0 kg/cm^2, 11 - 14 psi)

OK or NG

OK	▶	GO TO 3.
NG	▶	Replace radiator cap.

Diagnostic Procedure (Cont'd)

3	CHECK THERMOSTAT

1. Check valve seating condition at normal room temperatures.
   It should seat tightly.
2. Check valve opening temperature and valve lift.

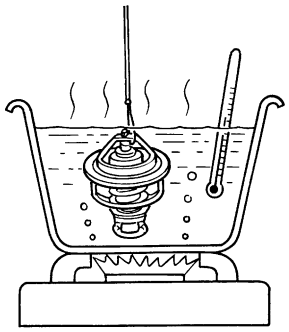

SLC343

Valve opening temperature:
76.5°C (170°F) [standard]
Valve lift:
More than 8 mm/90°C (0.31 in/194°F)

3. Check if valve is closed at 5°C (9°F) below valve opening temperature.

For details, refer to ***LC-13***, "Thermostat".

OK or NG

OK	▶	GO TO 4.
NG	▶	Replace thermostat.

4	CHECK ENGINE COOLANT TEMPERATURE SENSOR

Check resistance as shown in the figure.

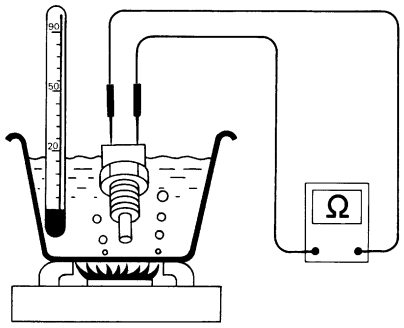

SEF152P

<Reference data>

Temperature °C (°F)	Resistance kΩ
20 (68)	2.1 - 2.9
50 (122)	0.68 - 1.00
90 (194)	0.236 - 0.260

MTBL0285

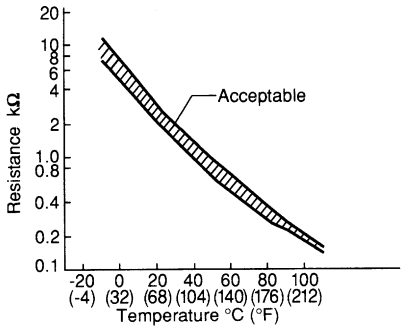

SEF012P

OK or NG

OK	▶	GO TO 5.
NG	▶	Replace engine coolant temperature sensor.

5	CHECK MAIN 12 CAUSES
If the cause cannot be isolated, go to "MAIN 12 CAUSES OF OVERHEATING", EC-578.	
▶	**INSPECTION END**

Perform FINAL CHECK by the following procedure after repair is completed.

1. Warm up engine. Run the vehicle for at least 20 minutes. Pay attention to engine coolant temperature gauge on the instrument panel. If the reading shows an abnormally high temperature, another part may be malfunctioning.
2. Stop vehicle and let engine idle. Check the intake and exhaust systems for leaks by listening for noise or visually inspecting the components.
3. Allow engine to cool and visually check for oil and coolant leaks. Then, perform "OVERALL FUNCTION CHECK".

Main 11 Causes of Overheating

NEEC0492

Engine	Step	Inspection item	Equipment	Standard	Reference page
OFF	1	• Blocked radiator • Blocked condenser • Blocked radiator grille • Blocked bumper	• Visual	No blocking	—
	2	• Coolant mixture	• Coolant tester	50 - 50% coolant mixture	See ***MA-13***, "RECOMMENDED FLUIDS AND LUBRICANTS".
	3	• Coolant level	• Visual	Coolant up to MAX level in reservoir tank and radiator filler neck	See ***MA-17***, "Changing Engine Coolant".
	4	• Radiator cap	• Pressure tester	78 - 98 kPa (0.8 - 1.0 kg/cm^2, 11 - 14 psi) 59 - 98 kPa (0.6 - 1.0 kg/cm^2, 9 - 14 psi) (Limit)	See ***LC-11***, "System Check".
ON*2	5	• Coolant leaks	• Visual	No leaks	See ***LC-11***, "System Check".
ON*2	6	• Thermostat	• Touch the upper and lower radiator hoses	Both hoses should be hot	See ***LC-13***, "Thermostat" and ***LC-14***, "Radiator".
OFF	7	• Combustion gas leak	• Color checker chemical tester 4 Gas analyzer	Negative	—
ON*3	8	• Coolant temperature gauge	• Visual	Gauge less than 3/4 when driving	—
		• Coolant overflow to reservoir tank	• Visual	No overflow during driving and idling	See ***MA-17***, "Changing Engine Coolant".
OFF*4	9	• Coolant return from reservoir tank to radiator	• Visual	Should be initial level in reservoir tank	See ***MA-16***, "ENGINE MAINTENANCE".
OFF	10	• Cylinder head	• Straight gauge feeler gauge	0.1 mm (0.004 in) Maximum distortion (warping)	See ***EM-31***, "Inspection".
	11	• Cylinder block and pistons	• Visual	No scuffing on cylinder walls or piston	See ***EM-45***, "Inspection".

*1: Turn the ignition switch ON.
*2: Engine running at 3,000 rpm for 10 minutes.
*3: Drive at 90 km/h (55 MPH) for 30 minutes and then let idle for 10 minutes.
*4: After 60 minutes of cool down time.
For more information, refer to ***LC-17***, OVERHEATING CAUSE ANALYSIS".

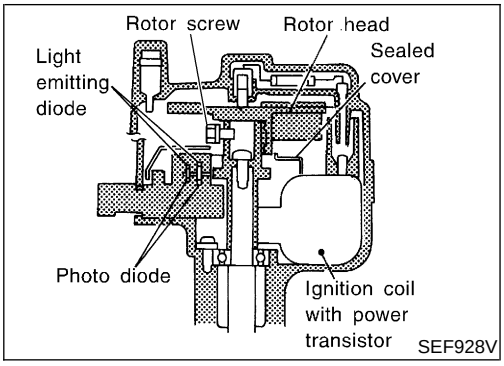

Component Description

NEEC0319

IGNITION COIL & POWER TRANSISTOR

NEEC0319S01

The ignition signal from the ECM is sent to the power transistor. The power transistor switches the ignition coil primary circuit on and off. As the primary circuit is turned on and off, the proper high voltage is induced in the coil secondary circuit.
The distributor is not repairable and must be replaced as an assembly except distributor cap and rotor head.

NOTE:
The rotor screw which secures the distributor rotor head to the distributor shaft must be tightened properly.

: 3.3 - 3.9 N·m (0.34 - 0.40 kg-m, 29.5 - 34.7 in-lb)

CONSULT-II Reference Value in Data Monitor Mode

NEEC0320

MONITOR ITEM	CONDITION		SPECIFICATION
IGN TIMING	• Engine: After warming up • Air conditioner switch: OFF • Shift lever: “N” • No-load	Idle	Approx. 20° BTDC
		2,000 rpm	More than 25° BTDC

ECM Terminals and Reference Value

=NEEC0321

Specification data are reference values and are measured between each terminal and ground.

CAUTION:

Do not use ECM ground terminals when measuring input/output voltage. Doing so may result in damage to the ECM's transistor. Use a ground other than ECM terminals, such as the ground.

TERMINAL NO.	WIRE COLOR	ITEM	CONDITION	DATA (DC Voltage)
1	PU/W	Ignition signal	**[Engine is running]** ● **Warm-up condition** ● Idle speed	0 - 0.5V 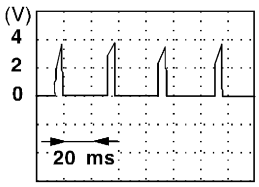 SEF996V
			[Engine is running] ● Engine speed is 2,000 rpm	0.2 - 1.0V 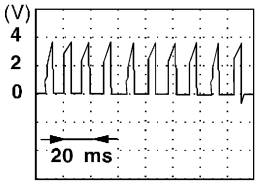 SEF997V
2	B	Ignition check	**[Engine is running]** ● **Warm-up condition** ● Idle speed	12 - 14V 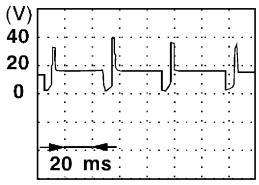 SEF998V
			[Engine is running] ● Engine speed is 2,000 rpm	12 - 13V 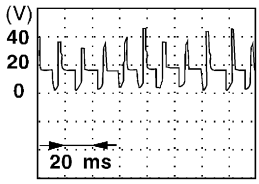 SEF999V

Wiring Diagram

NEEC0324

EC-IGN/SG-01

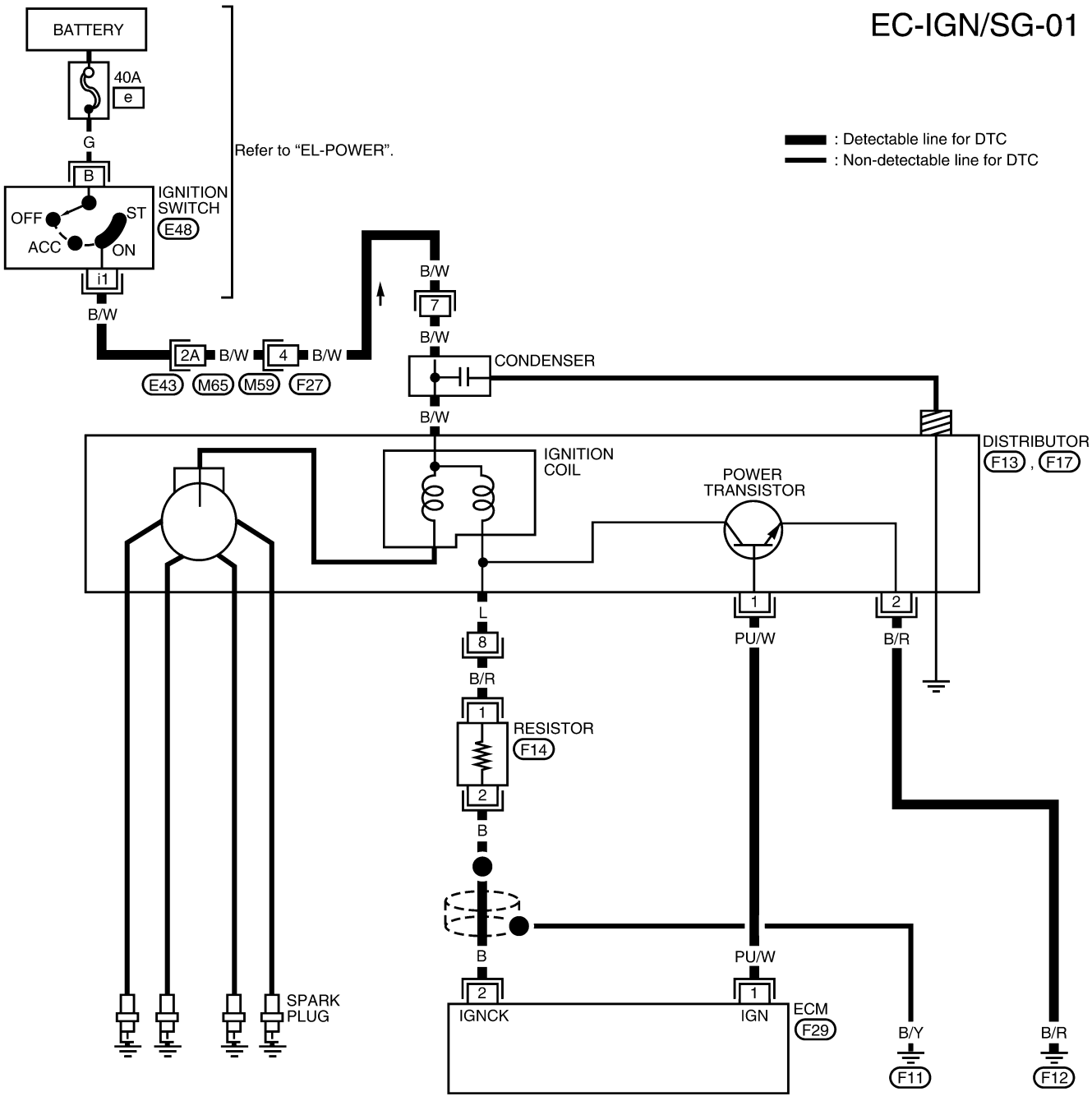

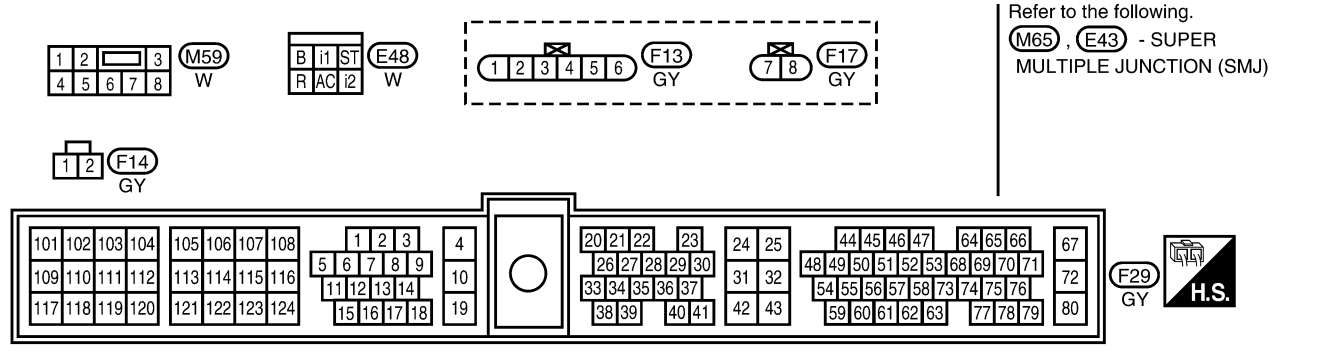

WEC781

Diagnostic Procedure

NEEC0325

1	INSPECTION START

Turn ignition switch “OFF”, and restart engine.
Is engine running?

Yes or No

Yes (With CONSULT-II)	▶	GO TO 2.
Yes (Without CONSULT-II)	▶	GO TO 3.
No	▶	GO TO 4.

2	CHECK OVERALL FUNCTION

With CONSULT-II

1. Perform “POWER BALANCE” in “ACTIVE TEST” mode with CONSULT-II.
2. Make sure that all circuits do not produce a momentary engine speed drop.

ACTIVE TEST	
POWER BALANCE	
MONITOR	
ENG SPEED	XXX rpm
MAS A/F SE-B1	XXX V
IACV-AAC/V	XXX %

SEF981Z

OK or NG

OK	▶	**INSPECTION END**
NG	▶	GO TO 7.

3	CHECK OVERALL FUNCTION

Without CONSULT-II

1. Let engine idle.
2. Read the voltage signal between ECM terminal 1 and ground with an oscilloscope.
3. Verify that the oscilloscope screen shows the signal wave as shown below.

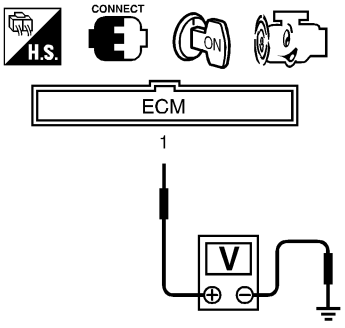

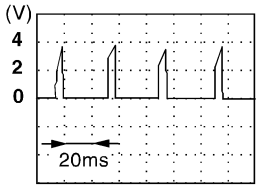

SEF984Z

OK or NG

OK	▶	**INSPECTION END**
NG	▶	GO TO 7.

4	CHECK POWER SUPPLY

1. Turn ignition switch OFF.
2. Disconnect ignition coil harness connector.

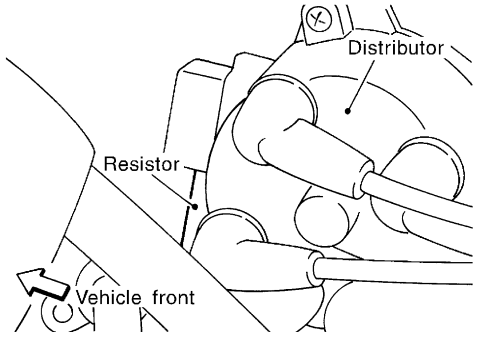

SEF344V

3. Turn ignition switch ON.
4. Check voltage between terminal 7 and ground with CONSULT-II or tester.

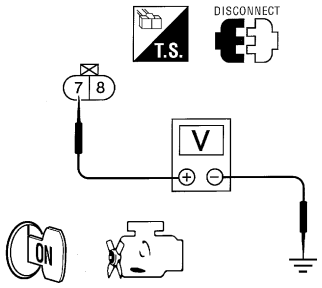

AEC698

Voltage: Battery voltage

OK or NG

OK	▶	GO TO 6.
NG	▶	GO TO 5.

5	DETECT MALFUNCTIONING PART

Check the following.
- Harness connectors E43, M65
- Harness connectors M59, F27
- Harness for open or short between ignition coil and ignition switch

	▶	Repair harness or connectors.

6	CHECK GROUND CIRCUIT

1. Turn ignition switch OFF.
2. Disconnect power transistor harness connector.
3. Check harness continuity between power transistor terminal 2 and engine ground. Refer to the wiring diagram.
   Continuity should exist.
4. Also check harness for short to power.

OK or NG

OK	▶	GO TO 7.
NG	▶	Repair open circuit or short to power in harness or connectors.

7	CHECK INPUT SIGNAL CIRCUIT

1. Disconnect ECM harness connector.
2. Check harness continuity between ECM terminal 1 and power transistor terminal 1.

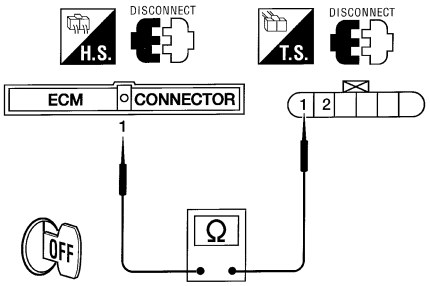

AEC700

Continuity should exist.

3. Also check harness for short to ground and short to power.

OK or NG

OK	▶	GO TO 8.
NG	▶	Repair open circuit or short to ground or short to power in harness or connectors.

8	CHECK IGNITION COIL

1. Disconnect ignition coil harness connector.
2. Remove distributor cap.
3. Check resistance as shown in the figure.

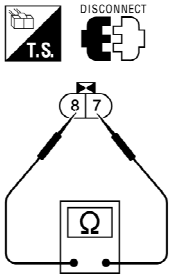

AEC150A

Terminal	Resistance [at 25°C (77°F)]
7 - 8	Less than 1Ω
7 - 9	7 - 13Ω

MTBL0300

If NG, replace distributor assembly as a unit.

OK or NG

OK	▶	GO TO 9.
NG	▶	Replace distributor assembly as a unit.

9 CHECK POWER TRANSISTOR

1. Disconnect camshaft position sensor & power transistor harness connector and ignition coil harness connector.
2. Check power transistor resistance between terminals 2 and 8.

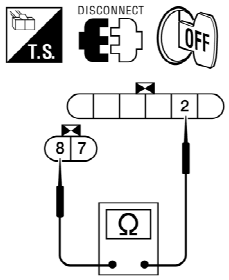

AEC151A

Terminals	Resistance	Result
2 and 8	Except 0Ω	OK
	0Ω	NG

MTBL0301

OK or NG

OK	▶	GO TO 10.
NG	▶	Replace distributor assembly.

10	CHECK INPUT SIGNAL CIRCUIT

1. Stop engine.
2. Disconnect ignition coil harness connector.
3. Strip tape covering resistor.
4. Disconnect resistor harness connector.

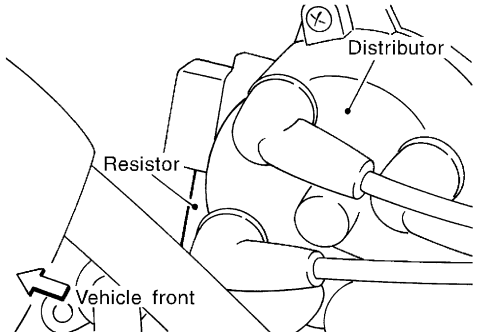

SEF344V

5. Disconnect ECM harness connector.
6. Check harness continuity between ignition coil terminal 8 and resistor terminal 1, resistor terminal 2 and ECM terminal 2.

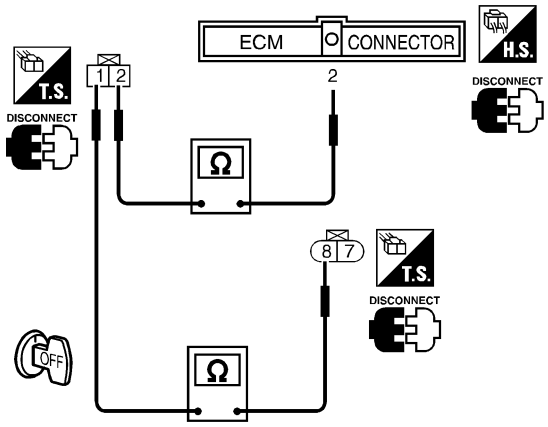

SEF179X

Continuity should exist.

7. Also check harness for short to ground and short to power.

OK or NG

OK	▶	GO TO 11.
NG	▶	Repair open circuit or short to ground or short to power in harness or connectors.

11	CHECK RESISTOR

1. Disconnect resistor harness connector.
2. Check resistance between terminals 1 and 2.

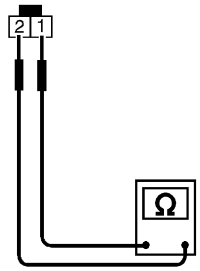

SEF240V

Resistance: Approximately 2.2 kΩ [at 25°C (77°F)]

OK or NG

OK	▶	GO TO 12.
NG	▶	Replace resistor.

12	CHECK INTERMITTENT INCIDENT

Perform "TROUBLE DIAGNOSIS FOR INTERMITTENT INCIDENT", EC-148.

▶ **INSPECTION END**

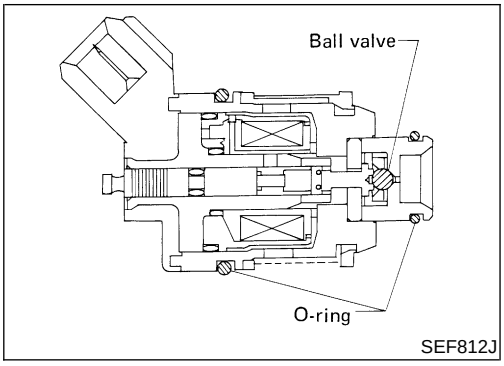

Component Description

NEEC0435

The fuel injector is a small, precise solenoid valve. When the ECM supplies a ground to the injector circuit, the coil in the injector is energized. The energized coil pulls the ball valve back and allows fuel to flow through the injector into the intake manifold. The amount of fuel injected depends upon the injection pulse duration. Pulse duration is the length of time the injector remains open. The ECM controls the injection pulse duration based on engine fuel needs.

ECM Terminals and Reference Value

NEEC0437

Specification data are reference values and are measured between each terminal and ground.

CAUTION:

Do not use ECM ground terminals when measuring input/output voltage. Doing so may result in damage to the ECM's transistor. Use a ground other than ECM terminals, such as the ground.

TERMINAL NO.	WIRE COLOR	ITEM	CONDITION	DATA (DC Voltage)
102 104 109 111	W/B W/R W/L W/PU	Injector No. 1 Injector No. 3 Injector No. 2 Injector No. 4	**[Engine is running]** ● **Warm-up condition** ● Idle speed	BATTERY VOLTAGE (11 - 14V) 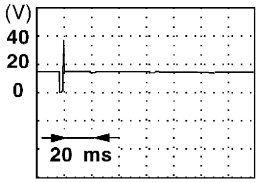 SEF011W
			[Engine is running] ● **Warm-up condition** ● Engine speed is 2,000 rpm	BATTERY VOLTAGE (11 - 14V) 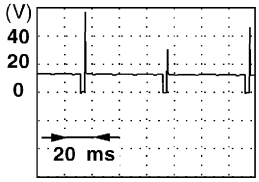 SEF012W

Wiring Diagram

NEEC0434

EC-INJECT-01

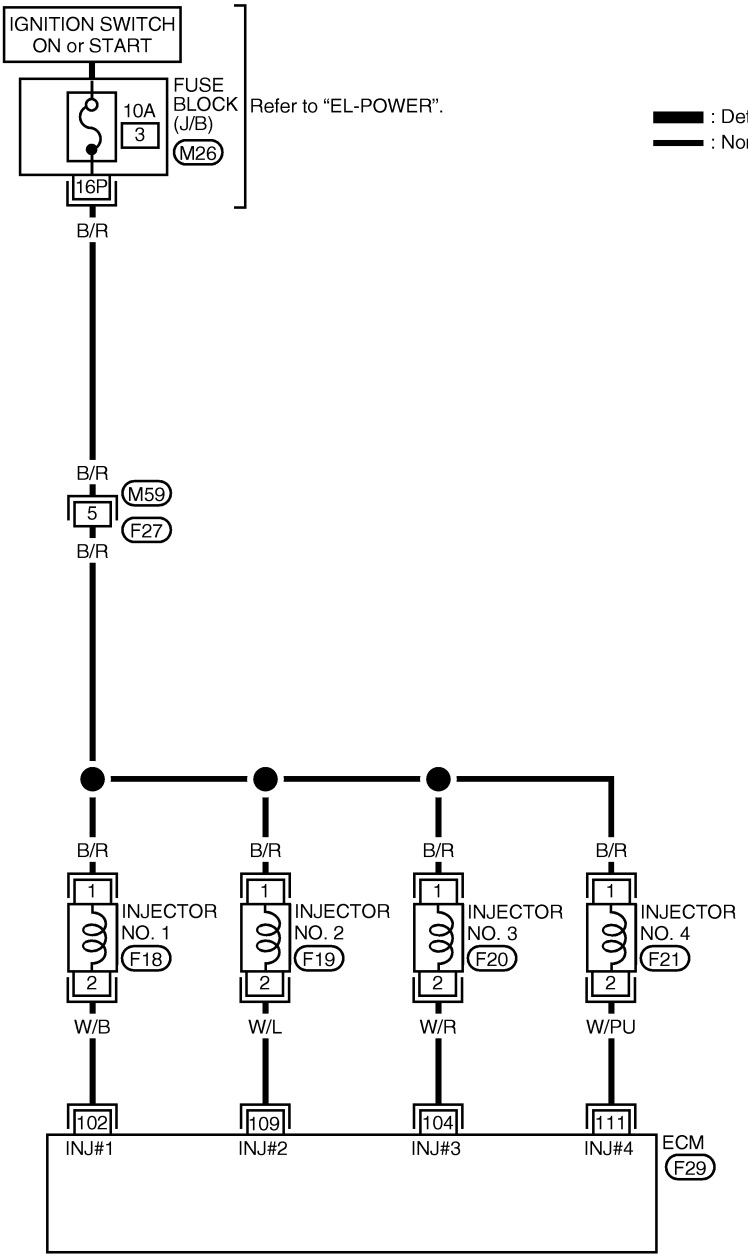



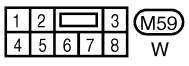



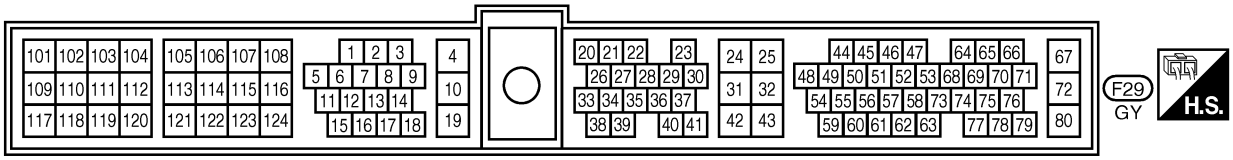

AEC009B

Diagnostic Procedure

NEEC0438

1 CHECK OVERALL FUNCTION

With CONSULT-II

1. Start engine.
2. Perform “POWER BALANCE” in “ACTIVE TEST” mode with CONSULT-II.

ACTIVE TEST	
POWER BALANCE	
MONITOR	
ENG SPEED	XXX rpm
MAS A/F SE-B1	XXX V
IACV-AAC/V	XXX %

SEF981Z

3. Make sure that each circuit produces a momentary engine speed drop.

Without CONSULT-II

1. Start engine.
2. Listen to each injector operating sound.

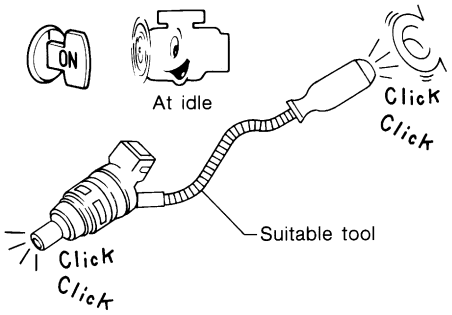

MEC703B

Clicking noise should be heard.

OK or NG

OK	▶	**INSPECTION END**
NG	▶	GO TO 2.

2	CHECK POWER SUPPLY

1. Stop engine.
2. Disconnect injector harness connector.
3. Turn ignition switch ON.
4. Check voltage between terminal 1 and ground with CONSULT-II or tester.

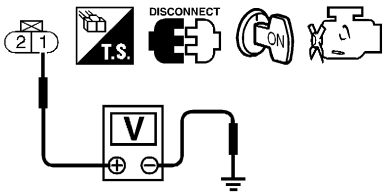

SEF271W

Voltage: Battery voltage

OK or NG

OK	▶	GO TO 4.
NG	▶	GO TO 3.

3	DETECT MALFUNCTIONING PART

Check the following.
- 10A fuse
- Harness connectors F27, M59
- 10A fuse
- Harness for open or short between injector and fuse

	▶	Repair harness or connectors.

4	CHECK OUTPUT SIGNAL CIRCUIT

1. Turn ignition switch OFF.
2. Disconnect ECM harness connector.
3. Check harness continuity between injector harness connector terminal 1 and ECM terminals 102, 104, 109, 111.

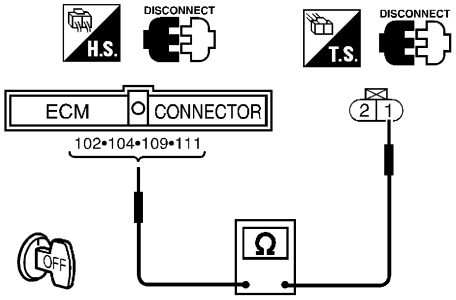

SEF223V

Continuity should exist.

4. Also check harness for short to ground and short to power.

OK or NG

OK	▶	GO TO 6.
NG	▶	GO TO 5.

5	DETECT MALFUNCTIONING PART

Check the harness for open or short between ECM and injector.

	▶	Repair open circuit or short to ground or short to power in harness or connectors.

6	CHECK INJECTOR

1. Disconnect injector harness connector.
2. Check resistance between terminals as shown in the figure.

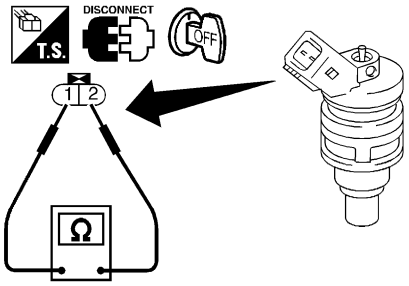

SEF273W

Resistance: 7.3 - 9.9Ω [at 25°C (77°F)]

OK or NG

OK	▶	GO TO 7.
NG	▶	Replace injector.

7	CHECK INTERMITTENT INCIDENT
Perform "TROUBLE DIAGNOSIS FOR INTERMITTENT INCIDENT", EC-148.	
▶	**INSPECTION END**

CONSULT-II Reference Value in Data Monitor Mode

NEEC0441

Specification data are reference values.

MONITOR ITEM	CONDITION	SPECIFICATION
START SIGNAL	● Ignition switch: ON → START → ON	OFF → ON → OFF

ECM Terminals and Reference Value

NEEC0442

Specification data are reference values and are measured between each terminal and ground.

CAUTION:

Do not use ECM ground terminals when measuring input/output voltage. Doing so may result in damage to the ECM's transistor. Use a ground other than ECM terminals, such as the ground.

TERMINAL NO.	WIRE COLOR	ITEM	CONDITION	DATA (DC Voltage)
20	L/OR	Start signal	**[Ignition switch "ON"]**	Approximately 0V
			[Ignition switch "START"]	BATTERY VOLTAGE (11 - 14V)

Wiring Diagram

NEEC0440

EC-S/SIG-01

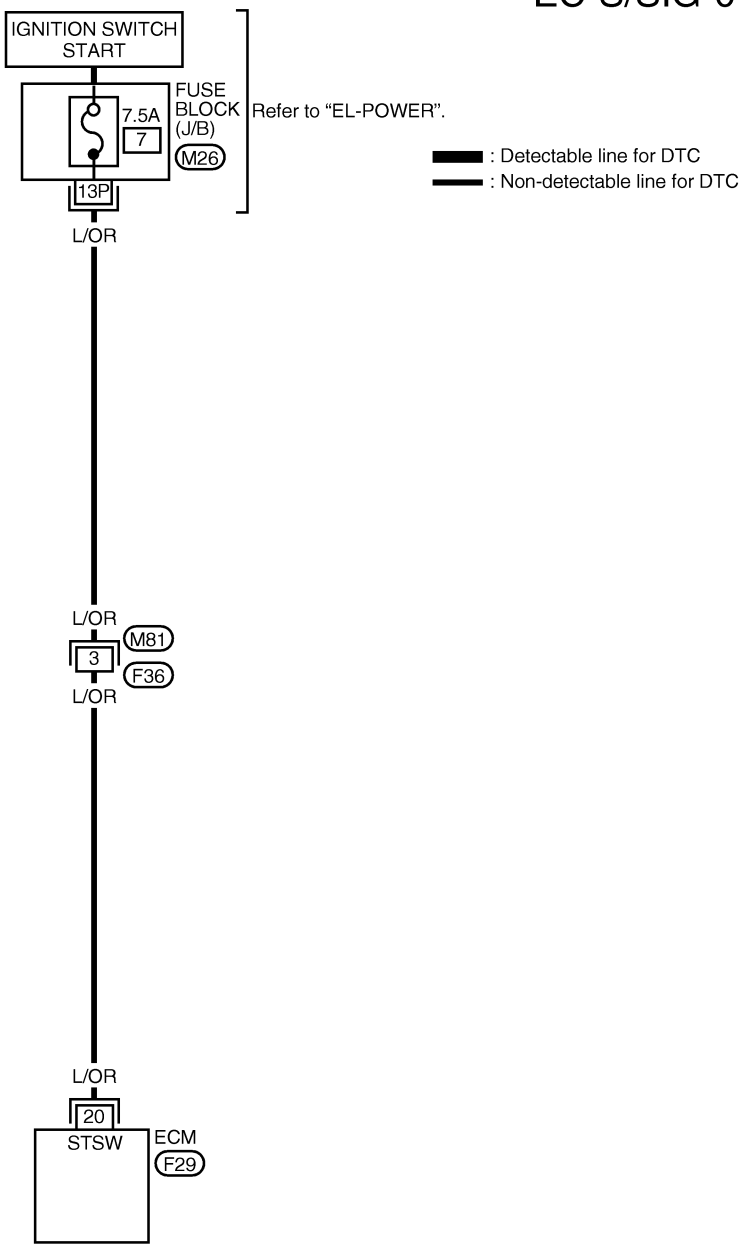



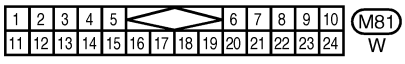

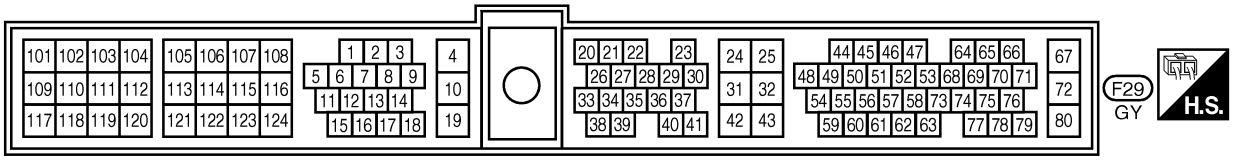

AEC975A

Diagnostic Procedure

=NEEC0443

1	INSPECTION START

Do you have CONSULT-II?

Yes or No

Yes	▶	GO TO 2.
No	▶	GO TO 3.

2	CHECK OVERALL FUNCTION

With CONSULT-II

1. Turn ignition switch ON.
2. Check “START SIGNAL” in “DATA MONITOR” mode with CONSULT-II under the following conditions.

DATA MONITOR	
MONITOR	NO DTC
START SIGNAL	OFF

Condition	“START SIGNAL”
Ignition switch “ON”	OFF
Ignition switch “START”	ON

SEF227Y

OK or NG

OK	▶	**INSPECTION END**
NG	▶	GO TO 4.

3	CHECK OVERALL FUNCTION

Without CONSULT-II

1. Turn ignition switch to START.
2. Check voltage between ECM terminal 20 and ground under the following conditions.

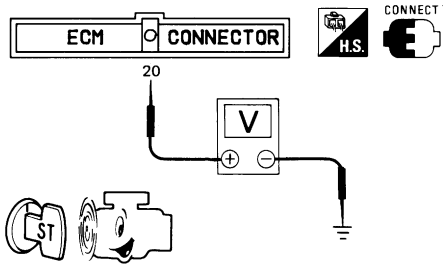

SEF109P

Condition	Voltage
Ignition switch “START”	Battery voltage
Except above	Approximately 0V

MTBL0143

OK or NG

OK	▶	**INSPECTION END**
NG	▶	GO TO 4.

Diagnostic Procedure (Cont'd)

4	DETECT MALFUNCTIONING PART	
Check the 7.5A fuse.		
OK or NG		
OK	▶	GO TO 5.
NG	▶	Replace 7.5A fuse.

5	CHECK INPUT SIGNAL CIRCUIT	
1. Turn ignition switch OFF. 2. Disconnect ECM harness connector and 7.5A fuse. 3. Check harness continuity between ECM terminal 20 and fuse block.		
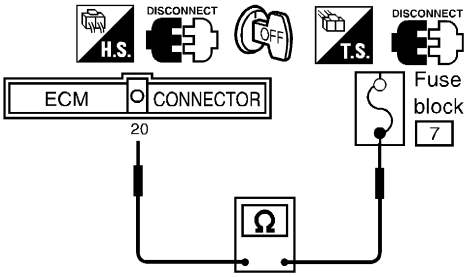 SEF224V		
Continuity should exist. 4. Also check harness for short to ground and short to power.		
OK or NG		
OK	▶	GO TO 7.
NG	▶	GO TO 6.

6	DETECT MALFUNCTIONING PART	
Check the following. ● Harness connectors M81, F36 ● Harness for open or short between ECM and fuse block		
OK or NG		
OK	▶	GO TO 7.
NG	▶	Repair open circuit or short to ground or short to power in harness or connectors.

7	CHECK INTERMITTENT INCIDENT	
Perform "TROUBLE DIAGNOSIS FOR INTERMITTENT INCIDENT", EC-148.		
	▶	**INSPECTION END**

System Description

NEEC0444

Sensor	Input Signal to ECM	ECM function	Actuator
Camshaft position sensor	Engine speed	ECM	Fuel pump relay
Ignition switch	Start signal		

The ECM activates the fuel pump for several seconds after the ignition switch is turned on to improve engine startability. If the ECM receives a 180° signal from the camshaft position sensor, it knows that the engine is rotating, and causes the pump to perform. If the 180° signal is not received when the ignition switch is on, the engine stalls. The ECM stops pump operation and prevents battery discharging, thereby improving safety. The ECM does not directly drive the fuel pump. It controls the ON/OFF fuel pump relay, which in turn controls the fuel pump.

Condition	Fuel pump operation
Ignition switch is turned to ON.	Operates for 5 seconds.
Engine running and cranking	Operates.
Except as shown above	Stops.

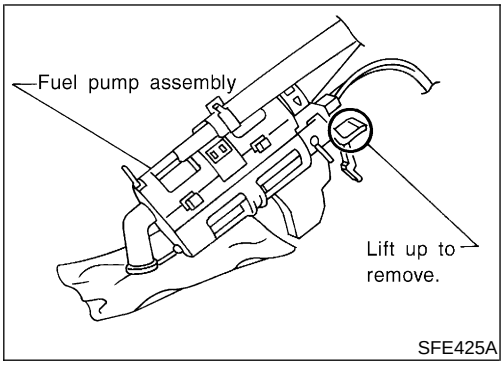

Component Description

NEEC0501

The fuel pump with a fuel damper is an in-tank type (the pump and damper are located in the fuel tank).

CONSULT-II Reference Value in Data Monitor Mode

NEEC0445

MONITOR ITEM	CONDITION	SPECIFICATION
FUEL PUMP RLY	• Ignition switch is turned to ON (Operates for 5 seconds) • Engine running and cranking	ON
	• Except as shown above	OFF

ECM Terminals and Reference Value

=NEEC0446

Specification data are reference values and are measured between each terminal and ground.

CAUTION:

Do not use ECM ground terminals when measuring input/output voltage. Doing so may result in damage to the ECM's transistor. Use a ground other than ECM terminals, such as the ground.

TERMINAL NO.	WIRE COLOR	ITEM	CONDITION	DATA (DC Voltage)
11	W/R	Fuel pump relay	**[Ignition switch "ON"]** ● For 5 seconds after turning ignition switch "ON" **[Engine is running]**	0 - 1V
			[Ignition switch "ON"] ● More than 5 seconds after turning ignition switch "ON"	BATTERY VOLTAGE (11 - 14V)

Wiring Diagram

NEEC0447

EC-F/PUMP-01

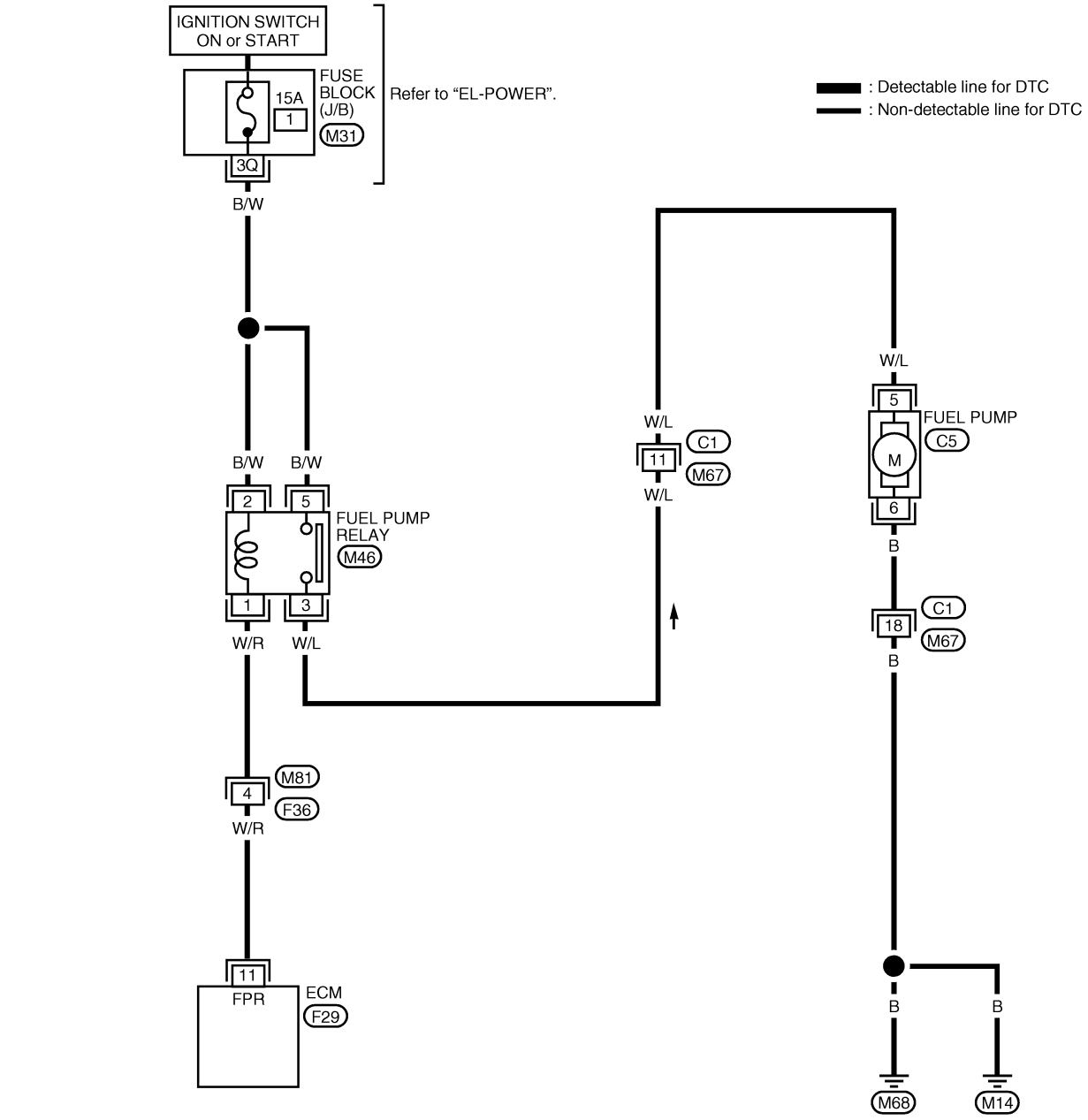

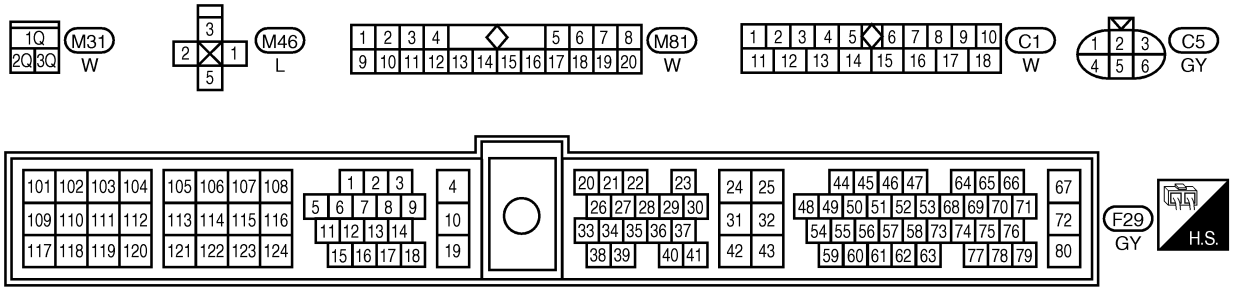

LEC533

Diagnostic Procedure

NEEC1074

1	CHECK OVERALL FUNCTION

1. Turn ignition switch ON.
2. Pinch fuel feed hose with two fingers.

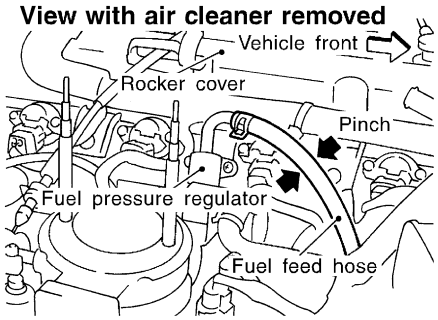

SEF348V

Fuel pressure pulsation should be felt on the fuel feed hose for 5 seconds after ignition switch is turned "ON".

OK or NG

OK	▶	**INSPECTION END**
NG	▶	GO TO 2.

2	CHECK POWER SUPPLY

1. Turn ignition switch OFF.
2. Disconnect fuel pump relay.

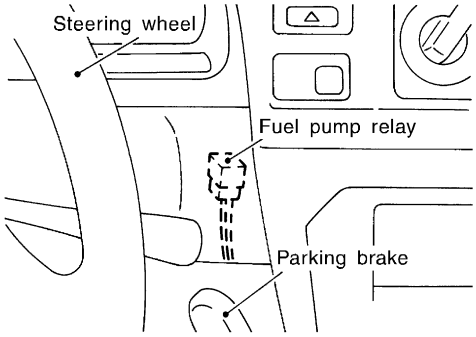

SEF349V

3. Turn ignition switch ON.
4. Check voltage between terminals 2, 5 and ground with CONSULT-II or tester.

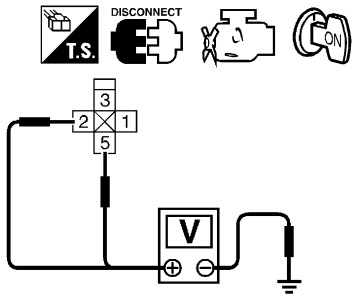

SEF225V

Voltage: Battery voltage

OK or NG

OK	▶	GO TO 4.
NG	▶	GO TO 3.

3	DETECT MALFUNCTIONING PART
Check the following. ● 15A fuse ● Harness for open or short between fuse and fuel pump relay	
▶	Repair harness or connectors.

4	CHECK POWER GROUND CIRCUIT

1. Turn ignition switch OFF.
2. Disconnect fuel pump harness connector.

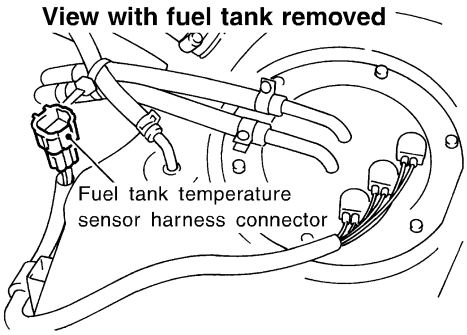

SEF334VA

3. Check harness continuity between terminal 6 and body ground, terminal 5 and fuel pump relay connector terminal 3.

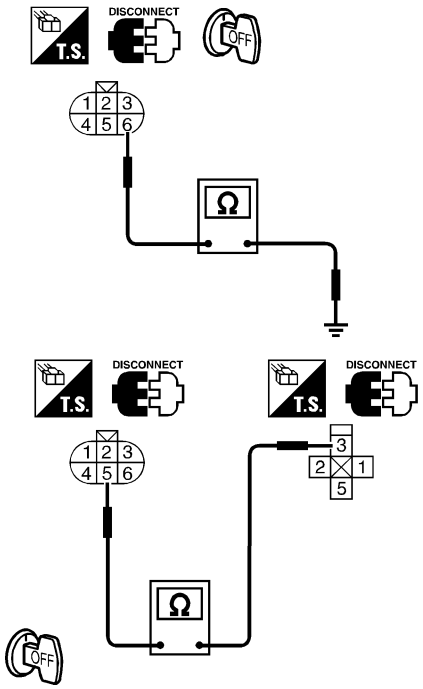

SEF858Z

Continuity should exist.

4. Also check harness for short to ground and short to power.

OK or NG

OK	▶	GO TO 6.
NG	▶	GO TO 5.

5	DETECT MALFUNCTIONING PART
Check the following. ● Harness connectors C1, M67 ● Harness for open or short between fuel pump and body ground ● Harness for open or short between fuel pump and fuel pump relay	
▶	Repair open circuit or short to ground or short to power in harness or connectors.

6	CHECK OUTPUT SIGNAL CIRCUIT
1. Disconnect ECM harness connector. 2. Check harness continuity between ECM terminal 11 and fuel pump relay connector terminal 1.	

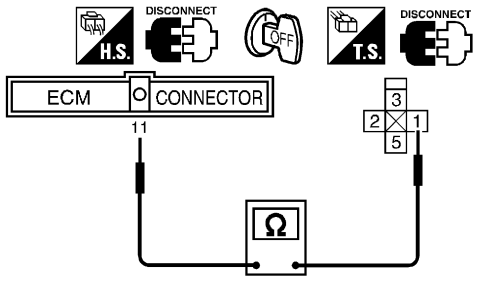

SEF227V

Continuity should exist.

3. Also check harness for short to ground and short to power.

OK or NG

OK	▶	GO TO 8.
NG	▶	GO TO 7.

7	DETECT MALFUNCTIONING PART
Check the following. ● Harness connectors F36, M81 ● Harness for open or short between ECM and fuel pump relay	
NG ▶	Repair open circuit or short to ground or short to power in harness or connectors.

8	CHECK FUEL PUMP RELAY

With CONSULT-II

1. Reconnect fuel pump relay, fuel pump harness connector and ECM harness connector.
2. Turn ignition switch ON.
3. Turn fuel pump relay "ON" and "OFF" in "ACTIVE TEST" mode with CONSULT-II and check operating sound.

ACTIVE TEST	
FUEL PUMP RELAY	ON
MONITOR	
ENG SPEED	XXX rpm

SEF724Z

Without CONSULT-II

Check continuity between terminals 3 and 5.

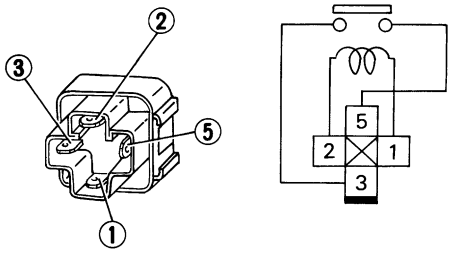

SEF511P

Conditions	Continuity
12V direct current supply between terminals 1 and 2	Yes
No current supply	No

MTBL0306

OK or NG

OK	▶	GO TO 9.
NG	▶	Replace fuel pump relay.

9	CHECK FUEL PUMP

1. Disconnect fuel pump harness connector.

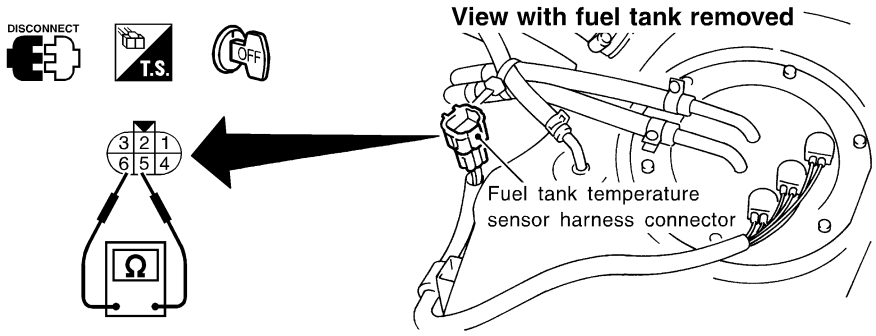

SEF846Z

2. Check resistance between terminals 5 and 6.

Resistance: 0.2 - 5.0Ω [at 25°C (77°F)]

OK or NG

OK	▶	GO TO 10.
NG	▶	Replace fuel pump.

10	CHECK INTERMITTENT INCIDENT
Perform "TROUBLE DIAGNOSIS FOR INTERMITTENT INCIDENT", EC-148.	
▶	**INSPECTION END**

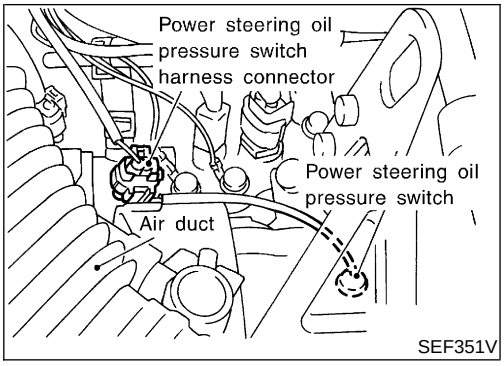

Component Description

NEEC0451

The power steering oil pressure switch is attached to the power steering high-pressure tube and detects a power steering load. When a power steering load is detected, it signals the ECM. The ECM adjusts the IACV-AAC valve to increase the idle speed and adjust for the increased load.

CONSULT-II Reference Value in Data Monitor Mode

NEEC0452

Specification data are reference values.

MONITOR ITEM	CONDITION		SPECIFICATION
PW/ST SIGNAL	● Engine: After warming up, idle the engine	Steering wheel in neutral position (forward direction)	OFF
		The steering wheel is fully turned	ON

ECM Terminals and Reference Value

NEEC0453

Specification data are reference values and are measured between each terminal and ground.

CAUTION:

Do not use ECM ground terminals when measuring input/output voltage. Doing so may result in damage to the ECM's transistor. Use a ground other than ECM terminals, such as the ground.

TERMINAL NO.	WIRE COLOR	ITEM	CONDITION	DATA (DC Voltage)
39	GY/R	Power steering oil pressure switch	**[Engine is running]** ● Steering wheel is fully turned	Approximately 0V
			[Engine is running] ● Steering wheel is not turned	Approximately 5V

Wiring Diagram

NEEC0450

EC-PST/SW-01

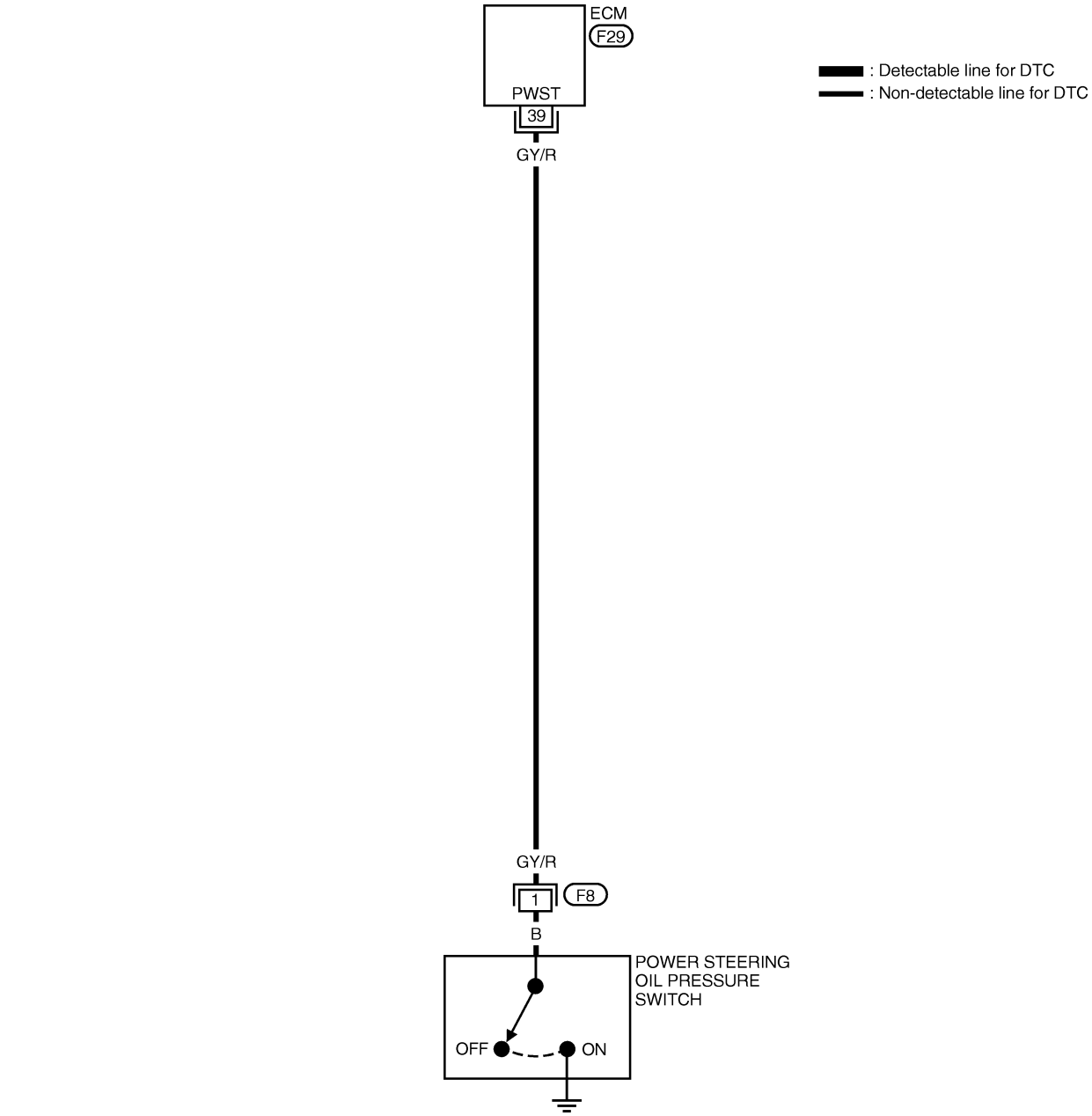

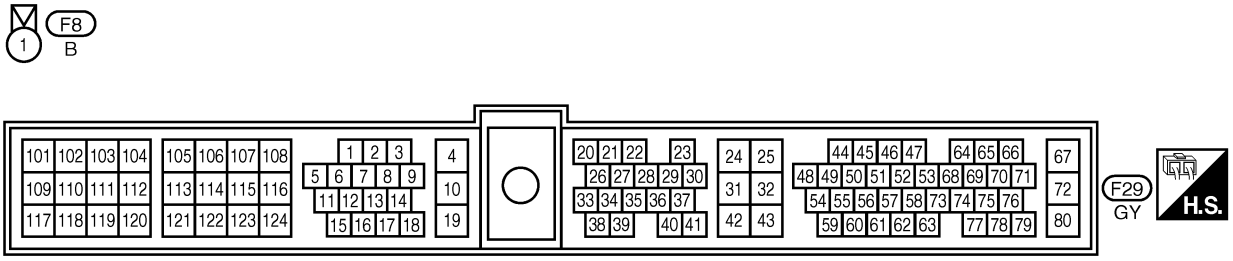

AEC012B

Diagnostic Procedure

=NEEC0454

1	INSPECTION START

Do you have CONSULT-II?

Yes or No

Yes	▶	GO TO 2.
No	▶	GO TO 3.

2	CHECK OVERALL FUNCTION

With CONSULT-II

1. Start engine.
2. Check “PW/ST SIGNAL” in “DATA MONITOR” mode with CONSULT-II under the following conditions.

DATA MONITOR	
MONITOR	NO DTC
PW/ST SIGNAL	OFF

Steering is in neutral position	OFF
Steering is turned	ON

SEF228Y

OK or NG

OK	▶	**INSPECTION END**
NG	▶	GO TO 4.

3	CHECK OVERALL FUNCTION

Without CONSULT-II

1. Start engine.
2. Check voltage between ECM terminal 39 and ground under the following conditions.

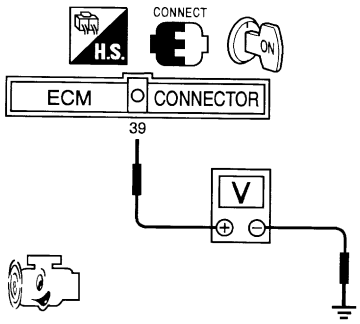

SEF662P

Condition	Voltage
When steering wheel is turned quickly	Approximately 0V
Except above	Approximately 5V

MTBL0142

OK or NG

OK	▶	**INSPECTION END**
NG	▶	GO TO 4.

Diagnostic Procedure (Cont'd)

4	CHECK INPUT SIGNAL CIRCUIT

1. Disconnect ECM harness connector.
2. Check harness continuity between ECM terminal 39 and terminal 1.

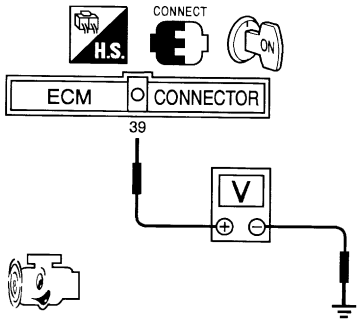

SEF662P

Continuity should exist.

3. Also check harness for short to ground and short to power.

OK or NG

OK	▶	GO TO 6.
NG	▶	GO TO 5.

5	DETECT MALFUNCTIONING PART

Check the harness for open or short between ECM and power steering oil pressure switch.

	▶	Repair open circuit or short to ground or short to power in harness or connectors.

6	CHECK POWER STEERING OIL PRESSURE SWITCH

1. Disconnect power steering oil pressure switch harness connector then start engine.
2. Check continuity between terminals 1 and ground.

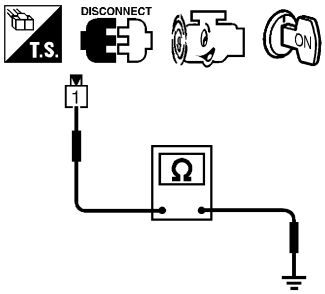

SEF230V

Conditions	Continuity
Steering wheel is being turned	Yes
Steering wheel is not being turned	No

MTBL0307

OK or NG

OK	▶	GO TO 7.
NG	▶	Replace power steering oil pressure switch.

7	CHECK INTERMITTENT INCIDENT

Perform "TROUBLE DIAGNOSIS FOR INTERMITTENT INCIDENT", EC-148.

	▶	**INSPECTION END**

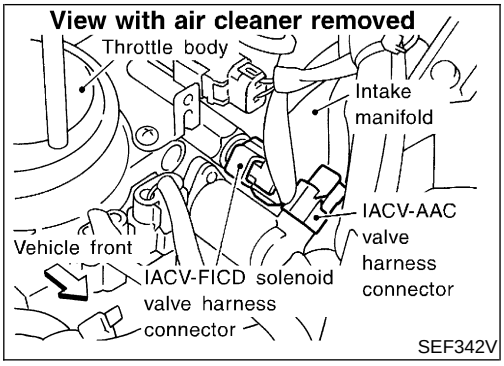

Component Description

NEEC0462

When the air conditioner is on, the IAC valve-FICD solenoid valve supplies additional air to adjust to the increased load.

ECM Terminals and Reference Value

NEEC0463

Specification data are reference values and are measured between each terminal and ground.

CAUTION:

Do not use ECM ground terminals when measuring input/output voltage. Doing so may result in damage to the ECM's transistor. Use a ground other than ECM terminals, such as the ground.

TERMINAL NO.	WIRE COLOR	ITEM	CONDITION	DATA (DC Voltage)
12	P	Air conditioner relay	**[Engine is running]** ● Both A/C switch and blower switch are ON★	Approximately 0V
			[Engine is running] ● A/C switch is OFF	BATTERY VOLTAGE (11 - 14V)
21	G/R	Air conditioner dual-pressure switch	**[Engine is running]** ● Both air conditioner switch and blower switch are ON (Compressor operates)	Approximately 0V
			[Engine is running] ● Air conditioner switch is OFF	BATTERY VOLTAGE (11 - 14V)

★ Ambient air temperature above 10°C (50°F) and in any mode except OFF.

Wiring Diagram

NEEC0461

EC-FICD-01

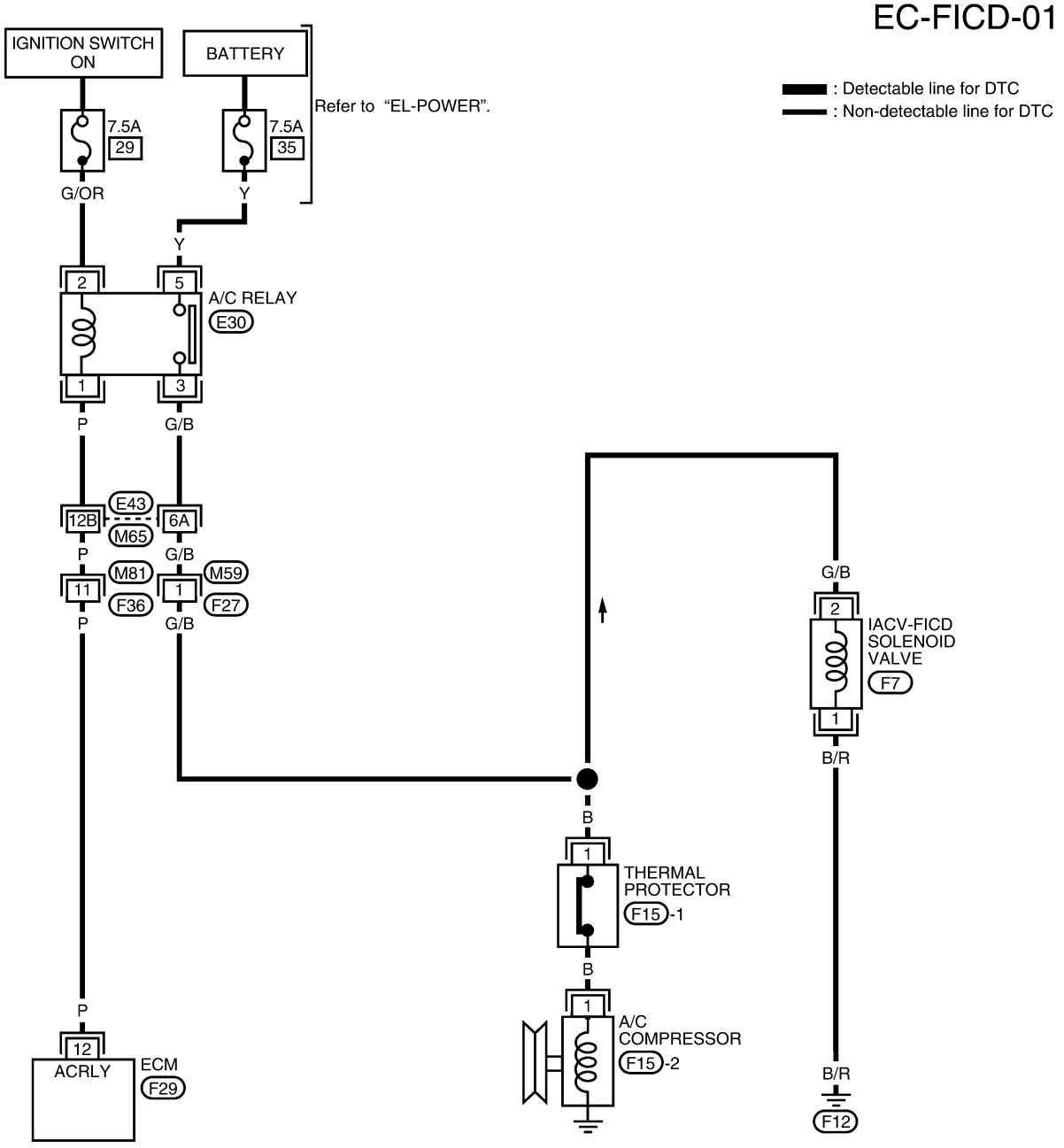

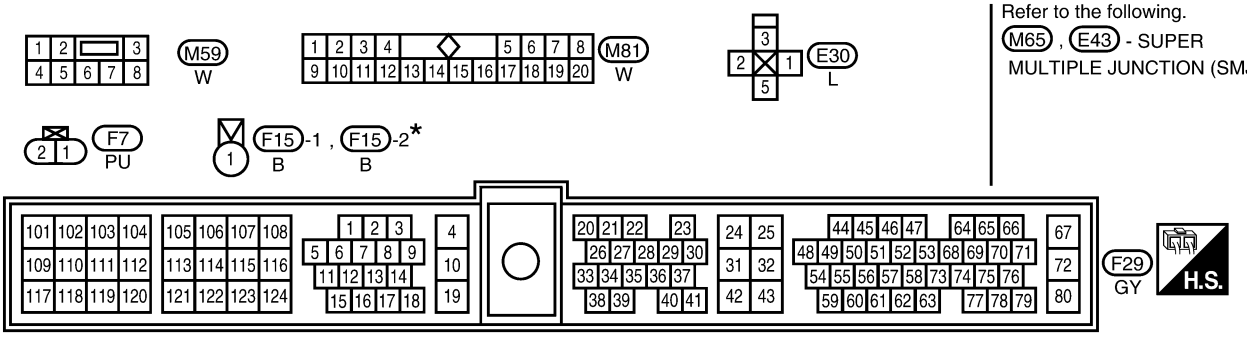

Refer to the following.
M65 , E43 - SUPER MULTIPLE JUNCTION (SMJ)

* : This connector is not shown in "HARNESS LAYOUT" of EL section.

WEC782

Diagnostic Procedure

=NEEC0464

1	CHECK OVERALL FUNCTION

1. Start engine and warm it up to normal operating temperature.
2. Check idle speed.
   800±50 rpm
   If NG, adjust idle speed.
3. Push air conditioner switch ON and turn fan switch to 4-speed.
4. Recheck idle speed.

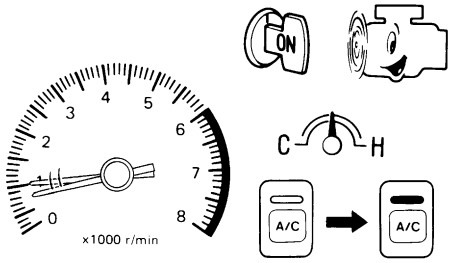

MEF634E

875 rpm or more

OK or NG

OK	▶	**INSPECTION END**
NG	▶	GO TO 2.

2	CHECK AIR CONDITIONER FUNCTION

Check if air conditioner compressor functions normally.

OK or NG

OK	▶	GO TO 3.
NG	▶	Refer to “Symptom Table” in “TROUBLE DIAGNOSIS”, ***HA-28***.

3	CHECK POWER SUPPLY

1. Stop engine.
2. Disconnect IACV-FICD solenoid valve harness connector.

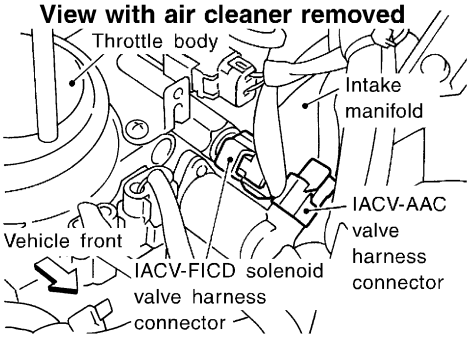

SEF342V

3. Start engine, then push A/C switch ON and turn fan switch to 4-speed.
4. Check voltage between terminal 2 and ground with CONSULT-II or tester.

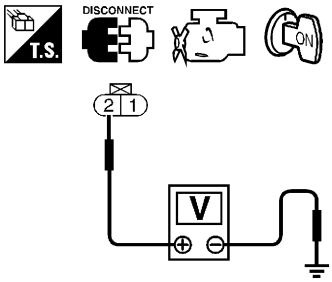

SEF133V

Voltage: Battery voltage

OK or NG

OK	▶	GO TO 5.
NG	▶	GO TO 4.

4	DETECT MALFUNCTIONING PART

Check the following.
- Harness connectors E43, M65
- Harness connectors M81, F36
- Harness connector M59, F27
- Harness for open or short between IACV-FICD solenoid valve harness connector and air conditioner relay

	▶	Repair open circuit, short to ground or short to power in harness or connectors.

5	CHECK GROUND CIRCUIT

1. Start engine and warm it up to normal operating temperature.
2. Turn ignition switch OFF.
3. Disconnect ambient air temperature switch harness connector.
4. Check harness continuity between solenoid valve terminal 1 and body ground.

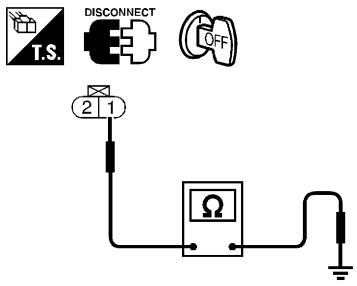

SEF134V

Continuity should exist.

5. Also check harness for short to power.

OK or NG

OK	▶	GO TO 7.
NG	▶	GO TO 6.

6	DETECT MALFUNCTIONING PART

Check the harness for open or short between IACV-FICD solenoid valve and body ground.

	▶	Repair open circuit or short to ground or short to power in harness or connectors.

7	CHECK IACV-FICD SOLENOID VALVE

Disconnect IACV-FICD solenoid valve harness connector.

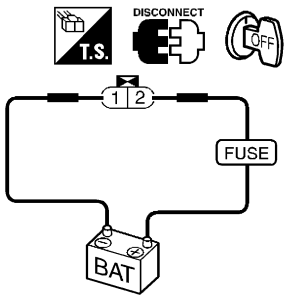

SEF231V

- Check for clicking sound when applying 12V direct current to terminals.
- Check plunger for seizing or sticking.
- Check for broken spring.

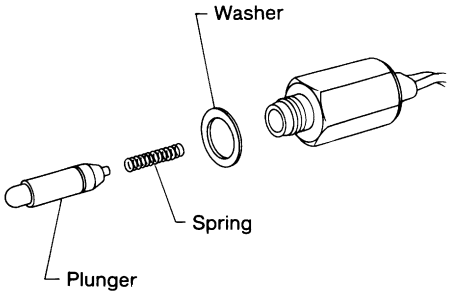

SEF097K

OK or NG

OK	▶	GO TO 8.
NG	▶	Replace IACV-FICD solenoid valve.

8	CHECK INTERMITTENT INCIDENT
Perform "TROUBLE DIAGNOSIS FOR INTERMITTENT INCIDENT", EC-148.	
▶	**INSPECTION END**

Wiring Diagram

NEEC0466

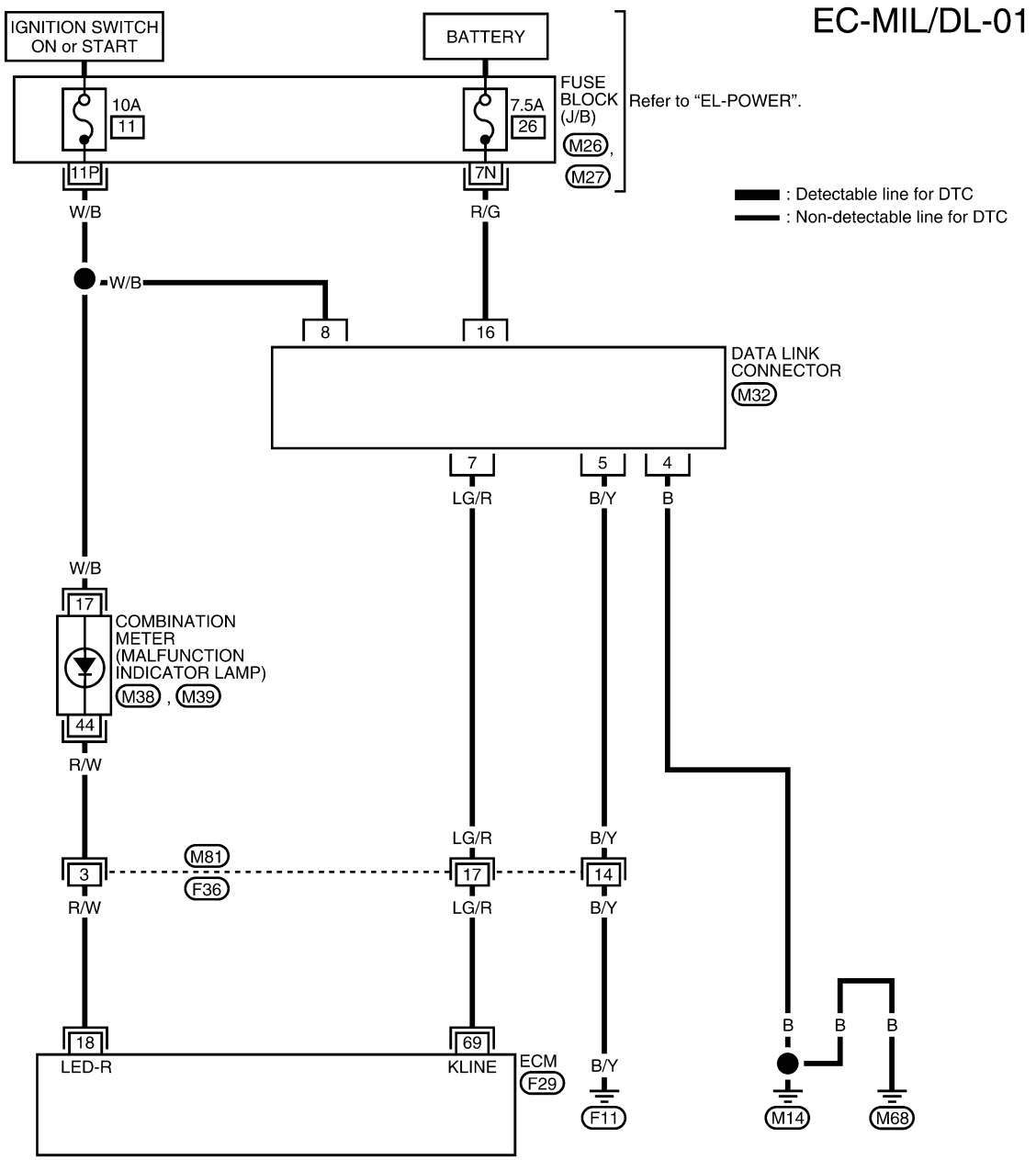

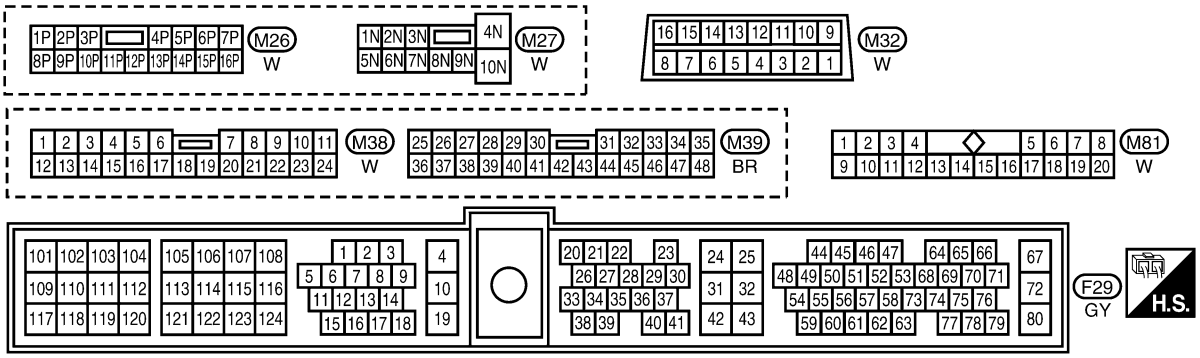

WEC153A

Fuel Pressure Regulator

NEEC0467

Fuel pressure at idling kPa (kg/cm^2, psi)	Vacuum hose is connected	Approximately 235 (2.4, 34)
	Vacuum hose is disconnected	Approximately 294 (3.0, 43)

Idle Speed and Ignition Timing

NEEC0468

Base idle speed*1 rpm	No-load*4 (in “P” or “N” position)	750±50
Target idle speed*2 rpm	No-load*4 (in “P” or “N” position)	800±50
Air conditioner: ON rpm	In “P” or “N” position	875 or more
Ignition timing*1	In “P” or “N” position	20°±2° BTDC

*1: Throttle position sensor harness connector disconnected or using CONSULT-II “WORK SUPPORT” mode
*2: Throttle position sensor harness connector connected
*3: Throttle position sensor harness connector disconnected
*4: Under the following conditions:

- Air conditioner switch: OFF
- Electrical load: OFF (Lights, heater fan & rear window defogger)
- Steering wheel: Kept in straight-ahead position

Ignition Coil

NEEC0469

Primary voltage V	Battery voltage 12
Primary resistance [at 20°C (68°F)] Ω	Approximately 1.0
Secondary resistance [at 20°C (68°F)] kΩ	Approximately 10

Mass Air Flow Sensor

NEEC0470

Supply voltage V	Battery voltage (11 - 14)
Output voltage V	0.9 - 1.8*
Mass air flow (Using CONSULT-II or GST) g·m/sec	0.9 - 5.8 at idle* 7.5 - 13.2 at 2,500 rpm*

*: Engine is warmed up to normal operating temperature and idling under no-load.

Engine Coolant Temperature Sensor

NEEC0471

Temperature °C (°F)	Resistance kΩ
20 (68)	2.1 - 2.9
50 (122)	0.68 - 1.00
90 (194)	0.236 - 0.260

EGR Temperature Sensor

NEEC0472

EGR temperature °C (°F)	Voltage (V)	Resistance (MΩ)
0 (32)	4.56	0.62 - 1.05
50 (122)	2.25	0.065 - 0.094
100 (212)	0.59	0.011 - 0.015

Fuel Pump

NEEC0473

Resistance [at 25°C (77°F)] Ω	0.2 - 5.0

IACV-AAC Valve

NEEC0474

Resistance [at 25°C (77°F)] Ω	Approximately 10.0

Injector

NEEC0475

Resistance [at 25°C (77°F)] Ω	7.3 - 9.9

Resistor

NEEC0476

Resistance [at 25°C (77°F)] Ω	Approximately 2.2

Throttle Position Sensor

NEEC0477

Throttle valve conditions	Voltage (at normal operating temp., engine off, ignition switch on)
Completely closed (a)	0.2 - 0.8V
Partially open	Between (a) and (b)
Completely open (b)	3.5 - 4.5V

Heated Oxygen Sensor 1 Heater (Front)

NEEC0478

Resistance [at 25°C (77°F)] Ω	2.3 - 4.3

Calculated Load Value

NEEC0479

	Calculated load value % (Using CONSULT-II or GST)
At idle	9.5 - 34.0%
At 2,500 rpm	13.9 - 24.9%

Intake Air Temperature Sensor

NEEC0480

Temperature °C (°F)	Resistance kΩ
20 (68)	2.1 - 2.9
80 (176)	0.27 - 0.38

Heated Oxygen Sensor 2 Heater (Rear)

NEEC0483

Resistance [at 25°C (77°F)] Ω	2.3 - 4.3

Crankshaft Position Sensor (OBD)

NEEC0484

Resistance [at 20°C (68°F)] Ω	512 - 632

Fuel Tank Temperature Sensor

NEEC0485

Temperature °C (°F)	Resistance kΩ
20 (68)	2.3 - 2.7
50 (122)	0.79 - 0.90

Alphabetical & P No. Index for DTC

NEEC0522

ALPHABETICAL INDEX FOR DTC

NEEC0522S01

Items (CONSULT-II screen terms)	DTC*1	Reference page
Unable to access ECM	—	EC-730
ABSL PRES SEN	P0105	EC-769
AIR TEMP SEN/CIRC	P0110	EC-771
A/T 1ST GR FNCTN	P0731	***AT-272***
A/T 2ND GR FNCTN	P0732	***AT-278***
A/T 3RD GR FNCTN	P0733	***AT-284***
A/T 4TH GR FNCTN	P0734	***AT-290***
A/T COMM LINE	P0600*4	EC-1061
A/T DIAG COMM LINE	P1605	EC-1171
A/T TCC S/V FNCTN	P0744	***AT-304***
ATF TEMP SEN/CIRC	P0710	***AT-256***
CAM POS SEN/CIRC	P0340	EC-967
CLOSED LOOP-B1	P1148	EC-1070
CLOSED LOOP-B2	P1168	EC-1070
CLOSED TP SW/CIRC	P0510	EC-1054
COOLANT T SEN/CIRC*2	P0115	EC-776
*COOLANT T SEN/CIRC	P0125	EC-794
CPS/CIRC (OBD) COG	P1336	EC-1089
CPS/CIRCUIT (OBD)	P0335	EC-961
CYL 1 MISFIRE	P0301	EC-948
CYL 2 MISFIRE	P0302	EC-948
CYL 3 MISFIRE	P0303	EC-948
CYL 4 MISFIRE	P0304	EC-948
CYL 5 MISFIRE	P0305	EC-948
CYL 6 MISFIRE	P0306	EC-948
ECM	P0605	EC-1066
ENGINE SPEED SIG	P0725	***AT-267***
ENG OVER TEMP	P0217	EC-927
ENG OVER TEMP	P1217*4	EC-1072
EVAP GROSS LEAK	P0455	EC-1018
EVAP PURG FLOW/MON	P1447	EC-1132
EVAP SYS PRES SEN	P0450	EC-1007
EVAP SMALL LEAK	P0440	EC-979
EVAP VERY SMALL LEAK	P1441	EC-1098
FUEL LEVL SEN/CIRC	P0464	EC-1039

Items (CONSULT-II screen terms)	DTC*1	Reference page
FUEL LEVL SEN/CIRC	P1464	EC-1152
FUEL LEVEL SENSOR	P0461	EC-1037
FUEL LV SE (SLOSH)	P0460	EC-1032
FUEL SYS LEAN/BK1	P0171	EC-905
FUEL SYS LEAN/BK2	P0174	EC-905
FUEL SYS RICH/BK1	P0172	EC-914
FUEL SYS RICH/BK2	P0175	EC-914
FUEL TEMP SEN/CIRC	P0180	EC-922
HO2S1 HTR (B1)	P0135	EC-850
HO2S1 HTR (B2)	P0155	EC-850
HO2S1 (B1)	P0130	EC-799
HO2S1 (B1)	P0131	EC-810
HO2S1 (B1)	P0132	EC-819
HO2S1 (B1)	P0133	EC-828
HO2S1 (B1)	P0134	EC-842
HO2S1 (B2)	P0150	EC-799
HO2S1 (B2)	P0151	EC-810
HO2S1 (B2)	P0152	EC-819
HO2S1 (B2)	P0153	EC-828
HO2S1 (B2)	P0154	EC-842
HO2S2 (B1)	P0137	EC-857
HO2S2 (B1)	P0138	EC-867
HO2S2 (B1)	P0139	EC-877
HO2S2 (B1)	P0140	EC-887
HO2S2 (B2)	P0157	EC-857
HO2S2 (B2)	P0158	EC-867
HO2S2 (B2)	P0159	EC-877
HO2S2 (B2)	P0160	EC-887
HO2S2 HTR (B1)	P0141	EC-897
HO2S2 HTR (B2)	P0161	EC-897
IACV/AAC VLV/CIRC	P0505	EC-1048
KNOCK SENSOR	P0325*4	EC-957
L/PRES SOL/CIRC	P0745	***AT-313***
MAF SEN/CIRCUIT*2	P0100	EC-760
MULTI CYL MISFIRE	P0300	EC-948
NO SELF DIAGNOSTIC FAILURE INDICATED	**P0000**	**—**
O/R CLTCH S/CIRC	P1760	***AT-337***

Alphabetical & P No. Index for DTC (Cont'd)

Items (CONSULT-II screen terms)	DTC*1	Reference page
P-N POS SW/CIRCUIT	P0705	EC-1174
PNP SW/CIRC	P0705	***AT-250***
PURG VOLUME CONT/V	P0443	EC-994
PURG VOLUME CONT/V	P1444	EC-1113
SFT SOL A/CIRC*2	P0750	***AT-318***
SFT SOL B/CIRC*2	P0755	***AT-323***
TCC SOLENOID/CIRC	P0740	***AT-299***
THERMOSTAT FNCTN	P1126	EC-1068
TP SEN/CIRC A/T*2	P1705	***AT-328***
TRTL POS SEN/CIRC*2	P0120	EC-781
TW CATALYST SYS-B1	P0420	EC-974
TW CATALYST SYS-B2	P0430	EC-974
VC CUT/V BYPASS/V	P1491	EC-1162
VC/V BYPASS/V	P1490	EC-1156
VEH SPEED SEN/CIRC*3	P0500	EC-1044
VEH SPD SEN/CIRC*3	P0720	***AT-262***
VENT CONTROL VALVE	P0446	EC-1001
VENT CONTROL VALVE	P1446	EC-1125
VENT CONTROL VALVE	P1448	EC-1144

*1: 1st trip DTC No. is the same as DTC No.

*2: When the fail-safe operation occurs, the MIL illuminates.

*3: The MIL illuminates when both the "Revolution sensor signal" and the "Vehicle speed sensor signal" meet the fail-safe condition at the same time.

*4: This DTC is displayed with CONSULT-II only.

NOTE:

Regarding D22 models, "-B1" and "BK1" indicate right bank and "-B2" and "BK2" indicate left bank.

P NO. INDEX FOR DTC

=NEEC0522S02

DTC*1	Items (CONSULT-II screen terms)	Reference page
—	Unable to access ECM	EC-730
P0000	**NO SELF DIAGNOSTIC FAILURE INDICATED**	**—**
P0100	MAF SEN/CIRCUIT*2	EC-760
P0105	ABSL PRES SEN/CIRC	EC-769
P0110	AIR TEMP SEN/CIRC	EC-771
P0115	COOLANT T SEN/CIRC*2	EC-776
P0120	THRTL POS SEN/CIRC*2	EC-781
P0125	*COOLANT T SEN/CIRC	EC-794
P0130	HO2S1 (B1)	EC-799
P0131	HO2S1 (B1)	EC-810
P0132	HO2S1 (B1)	EC-819
P0133	HO2S1 (B1)	EC-828
P0134	HO2S1 (B1)	EC-842
P0135	HO2S1 HTR (B1)	EC-850
P0137	HO2S2 (B1)	EC-857
P0138	HO2S2 (B1)	EC-867
P0139	HO2S2 (B1)	EC-877
P0140	HO2S2 (B1)	EC-887
P0141	HO2S2 HTR (B1)	EC-897
P0150	HO2S1 (B2)	EC-799
P0151	HO2S1 (B2)	EC-810
P0152	HO2S1 (B2)	EC-819
P0153	HO2S1 (B2)	EC-828
P0154	HO2S1 (B2)	EC-842
P0155	HO2S1 HTR (B2)	EC-850
P0157	HO2S2 (B2)	EC-857
P0158	HO2S2 (B2)	EC-867
P0159	HO2S2 (B2)	EC-877
P0160	HO2S2 (B2)	EC-887
P0161	HO2S2 HTR (B2)	EC-897
P0171	FUEL SYS LEAN/BK1	EC-905
P0172	FUEL SYS RICH/BK1	EC-914
P0174	FUEL SYS LEAN/BK2	EC-905
P0175	FUEL SYS RICH/BK2	EC-914
P0180	FUEL TEMP SEN/CIRC	EC-922
P0217	ENG OVER TEMP	EC-927

DTC*1	Items (CONSULT-II screen terms)	Reference page
P0300	MULTI CYL MISFIRE	EC-948
P0301	CYL 1 MISFIRE	EC-948
P0302	CYL 2 MISFIRE	EC-948
P0303	CYL 3 MISFIRE	EC-948
P0304	CYL 4 MISFIRE	EC-948
P0305	CYL 5 MISFIRE	EC-948
P0306	CYL 6 MISFIRE	EC-948
P0325*4	KNOCK SENSOR	EC-957
P0335	CPS/CIRCUIT (OBD)	EC-961
P0340	CAM POS SEN/CIRC	EC-967
P0420	TW CATALYST SYS-B1	EC-974
P0430	TW CATALYST SYS-B2	EC-974
P0440	EVAP SMALL LEAK	EC-979
P0443	PURG VOLUME CONT/V	EC-994
P0455	EVAP GROSS LEAK	EC-1018
P0446	VENT CONTROL VALVE	EC-1001
P0450	EVAP SYS PRES SEN	EC-1007
P0455	EVAP GROSS LEAK	EC-1018
P0460	FUEL LV SE (SLOSH)	EC-1098
P0461	FUEL LEVEL SENSOR	EC-1037
P0464	FUEL LEVEL SEN/CIRC	EC-1039
P0500	VEH SPEED SEN/CIRC*4	EC-1044
P0505	IACV/AAC VLV/CIRC	EC-1048
P0510	CLOSED TP SW/CIRC	EC-1054
P0600*4	A/T COMM LINE	EC-1061
P0605	ECM	EC-1066
P0705	PNP SW/CIRC	***AT-250***
P0710	ATF TEMP SEN/CIRC	***AT-256***
P0720	VEH SPD SEN/CIRC A/T*4	***AT-262***
P0725	ENGINE SPEED SIG	***AT-267***
P0731	A/T 1ST GR FNCTN	***AT-272***
P0732	A/T 2ND GR FNCTN	***AT-278***
P0733	A/T 3RD GR FNCTN	***AT-284***
P0734	A/T 4TH GR FNCTN	***AT-290***
P0740	TCC SOLENOID/CIRC	***AT-299***
P0744	A/T TCC S/V FNCTN	***AT-304***
P0745	L/PRESS SOL/CIRC	***AT-313***

DTC*1	Items (CONSULT-II screen terms)	Reference page
P0750	SFT SOL A/CIRC*2	***AT-318***
P0755	SFT SOL B/CIRC*2	***AT-323***
P1126	THERMOSTAT FNCTN	EC-1068
P1148	CLOSED LOOP-B1	EC-1070
P1168	CLOSED LOOP-B2	EC-1070
P1217*4	ENG OVER TEMP	EC-1072
P1336	CPS/CIRC (OBD) COG	EC-1089
P1441	EVAP VERY SMALL LEAK	EC-1098
P1444	PURG VOLUME CONT/V	EC-1113
P1446	VENT CONTROL VALVE	EC-1125
P1447	EVAP PURG FLOW/MON	EC-1132
P1448	VENT CONTROL VALVE	EC-1144
P1464	FUEL LEVL SEN/CIRC	EC-1152
P1490	VC/V BYPASS/V	EC-1156
P1491	VC CUT/V BYPASS/V	EC-1162
P1605	A/T DIAG COMM LINE	EC-1171
P1705	TP SEN/CIRC A/T*2	***AT-328***
P1706	P-N POS SW/CIRCUIT	EC-1174
P1760	O/R CLUTCH SOL/CIRC	***AT-337***

*1: 1st trip DTC No. is the same as DTC No.

*2: When the fail-safe operation occurs, the MIL illuminates.

*3: The MIL illuminates when both the "Revolution sensor signal" and the "Vehicle speed sensor signal" meet the fail-safe condition at the same time.

*4: This DTC is displayed with CONSULT-II only.

NOTE:

Regarding D22 models, "-B1" and "BK1" indicate right bank and "-B2" and "BK2" indicate left bank.

Supplemental Restraint System (SRS) “AIR BAG” and “SEAT BELT PRE-TENSIONER”

NEEC0523

The Supplemental Restraint System such as “AIR BAG” and “SEAT BELT PRE-TENSIONER” used along with a seat belt, help to reduce the risk or severity of injury to the driver and front passenger in a frontal collision. The Supplemental Restraint System consists of air bag modules (located in the center of the steering wheel and in the instrument panel on the passenger side), seat belt pre-tensioners, a diagnosis sensor unit, warning lamp, wiring harness, and spiral cable.

The vehicle (except Crew Cab model) is equipped with a passenger air bag deactivation switch. Because no rear seat exists where a rear-facing child restraint can be placed, the switch is designed to turn off the passenger air bag so that a rear-facing child restraint can be used in the front passenger seat. The switch is located in the center of the instrument panel, near the ashtray. When the switch is turned to the ON position, the passenger air bag is enabled and could inflate in a frontal collision. When the switch is turned to the OFF position, the passenger air bag is disabled and will not inflate in a frontal collision. A passenger air bag OFF indicator on the instrument panel lights up when the passenger air bag is switched OFF. The driver air bag always remains enabled and is not affected by the passenger air bag deactivation switch.

Information necessary to service the system safely is included in the **RS section** of this Service Manual.

WARNING:

- **To avoid rendering the SRS inoperative, which could increase the risk of personal injury or death in the event of a collision which would result in air bag inflation, all maintenance should be performed by an authorized NISSAN dealer.**
- **Improper maintenance, including incorrect removal and installation of the SRS, can lead to personal injury caused by unintentional activation of the system. For removal of Spiral Cable and Air Bag Module, see the RS section.**
- **Do not use electrical test equipment on any circuit related to the SRS unless instructed to in this Service Manual. Spiral cable and wiring harnesses (except “SEAT BELT PRE-TENSIONER”) covered with yellow insulation either just before the harness connectors or for the complete harness are related to the SRS.**
- **The vehicle (except Crew Cab model) is equipped with a passenger air bag deactivation switch which can be operated by the customer. When the passenger air bag is switched OFF, the passenger air bag is disabled and will not inflate in a frontal collision. When the passenger air bag is switched ON, the passenger air bag is enabled and could inflate in a frontal collision. After SRS maintenance or repair, make sure the passenger air bag deactivation switch is in the same position (ON or OFF) as when the vehicle arrived for service.**

Precautions for On Board Diagnostic (OBD) System of Engine and A/T

NEEC0524

The ECM has an on board diagnostic system. It will light up the malfunction indicator lamp (MIL) to warn the driver of a malfunction causing emission deterioration.

CAUTION:

- **Be sure to turn the ignition switch OFF and disconnect the negative battery terminal before any repair or inspection work. The open/short circuit of related switches, sensors, solenoid valves, etc. will cause the MIL to light up.**
- **Be sure to connect and lock the connectors securely after work. A loose (unlocked) connector will cause the MIL to light up due to the open circuit. (Be sure the connector is free from water, grease, dirt, bent terminals, etc.)**
- **Certain systems and components, especially those related to OBD, may use a new style slide-locking type harness connector. For description and how to disconnect, refer to *EL-5*, “HARNESS CONNECTOR”.**
- **Be sure to route and secure the harnesses properly after work. The interference of the harness with a bracket, etc. may cause the MIL to light up due to the short circuit.**
- **Be sure to connect rubber tubes properly after work. A misconnected or disconnected rubber tube may cause the MIL to light up due to the malfunction of the fuel injection system, etc.**
- **Be sure to erase the unnecessary malfunction information (repairs completed) from the ECM and TCM (Transmission control module) before returning the vehicle to the customer.**

Engine Fuel & Emission Control System

NEEC0525

ECM
- Do not disassemble ECM.
- Do not turn on board diagnostic test mode selector forcibly.
- If a battery terminal is disconnected, the memory will return to the ECM value.
  The ECM will now start to self-control at its initial value. Engine operation can vary slightly when the terminal is disconnected. However, this is not an indication of a problem. Do not replace parts because of a slight variation.

WIRELESS EQUIPMENT
- When installing CB ham radio or a mobile phone, be sure to observe the following as it may adversely affect electronic control systems depending on its installation location.

1) Keep the antenna as far away as possible from the electronic control units.
2) Keep the antenna feeder line more than 20 cm (7.9 in) away from the harness of electronic controls.
   Do not let them run parallel for a long distance.
3) Adjust the antenna and feeder line so that the standing-wave ratio can be kept smaller.
4) Be sure to ground the radio to vehicle body.

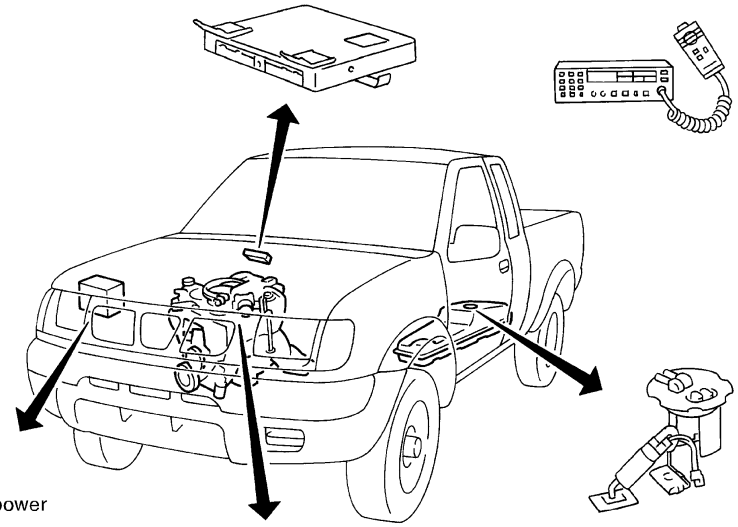

BATTERY
- Always use a 12 volt battery as power source.
- Do not attempt to disconnect battery cables while engine is running.

WHEN STARTING
- Do not depress accelerator pedal when starting.
- Immediately after starting, do not rev up engine unnecessarily.
- Do not rev up engine just prior to shutdown.

ECM PARTS HANDLING
- Handle mass air flow sensor carefully to avoid damage.
- Do not disassemble mass air flow sensor.
- Do not clean mass air flow sensor with any type of detergent.
- Do not disassemble IACV-AAC valve.
- Even a slight leak in the air intake system can cause serious problems.
- Do not shock or jar the camshaft position sensor or crankshaft position sensor (OBD).



FUEL PUMP
- Do not operate fuel pump when there is no fuel in lines.
- Tighten fuel hose clamps to the specified torque. (Refer to MA section.)

ECM HARNESS HANDLING
- Securely connect ECM harness connectors.
  A poor connection can cause an extremely high (surge) voltage to develop in coil and condenser, thus resulting in damage to ICs.
- Keep ECM harness at least 10 cm (3.9 in.) away from adjacent harnesses to prevent an ECM system malfunction due to receiving external noise, degraded operation of ICs, etc.
- Keep ECM parts and harnesses dry.
- Before removing parts, turn off ignition switch and then disconnect battery ground cable.

SEF236V

Precautions

NEEC0526

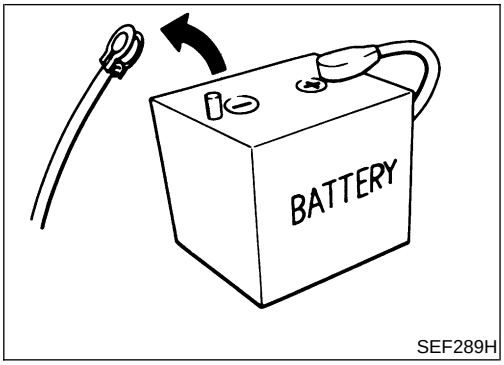

SEF289H

- **Before connecting or disconnecting the ECM harness connector, turn ignition switch OFF and disconnect negative battery terminal. Failure to do so may damage the ECM because battery voltage is applied to ECM even if ignition switch is turned off.**

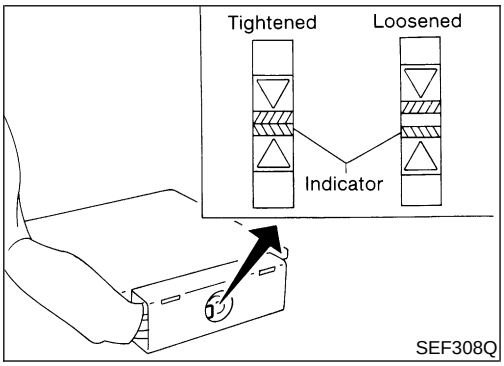

SEF308Q

- **When connecting ECM harness connector, tighten securing bolt until the gap between orange indicators disappears.**
  : 3 - 5 N·m (0.3 - 0.5 kg-m, 26 - 43 in-lb)

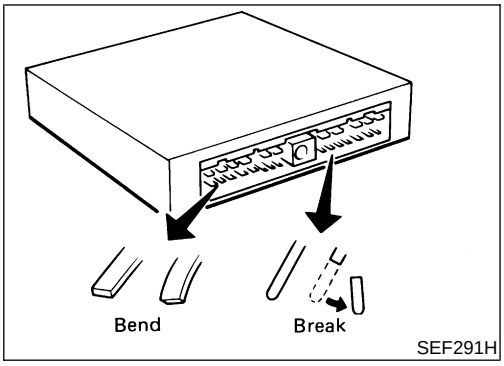

SEF291H

- **When connecting or disconnecting pin connectors into or from ECM, take care not to damage pin terminals (bend or break).**
  Make sure that there are not any bends or breaks on ECM pin terminal, when connecting pin connectors.

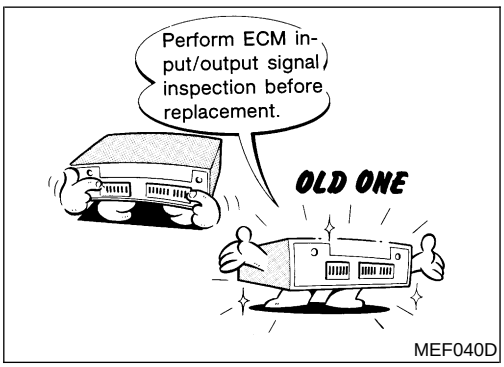

MEF040D

- **Before replacing ECM, perform “ECM Terminals and Reference Value” inspection and make sure ECM functions properly. Refer to EC-740.**

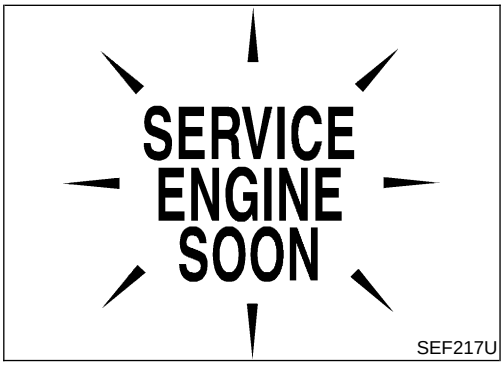

SEF217U

- **After performing each TROUBLE DIAGNOSIS, perform “DTC Confirmation Procedure” or “Overall Function Check”.**
  The DTC should not be displayed in the “DTC Confirmation Procedure” if the repair is completed. The “Overall Function Check” should be a good result if the repair is completed.

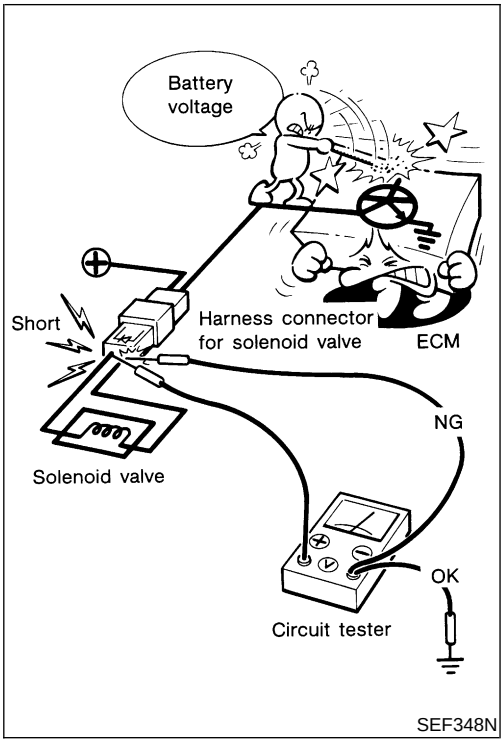

- **When measuring ECM signals with a circuit tester, never allow the two tester probes to contact.**
  Accidental contact of probes will cause a short circuit and damage the ECM power transistor.
- **Do not use ECM ground terminals when measuring input/output voltage. Doing so may result in damage to the ECM's transistor. Use a ground other than the ECM terminals, such as the ground.**

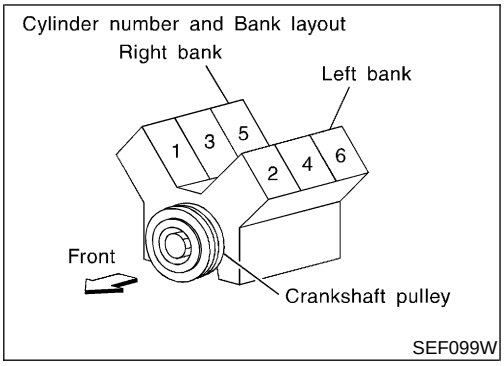

- **Regarding model D22, "-B1" indicates the right bank and "-B2" indicates the left bank as shown in the figure.**

Wiring Diagrams and Trouble Diagnosis

NEEC0527

When you read Wiring diagrams, refer to the following:

- ***GI-11***, "HOW TO READ WIRING DIAGRAMS"
- ***EL-9***, "POWER SUPPLY ROUTING"

When you perform trouble diagnosis, refer to the following:

- ***GI-34***, "How to Follow Test Groups in Trouble Diagnoses"
- ***GI-23***, "HOW TO PERFORM EFFICIENT DIAGNOSIS FOR AN ELECTRICAL INCIDENT"

Special Service Tools

NEEC0528

The actual shapes of Kent-Moore tools may differ from those of special service tools illustrated here.

Tool number (Kent-Moore No.) Tool name	Description	
KV10117100 (J36471-A) Heated oxygen sensor wrench	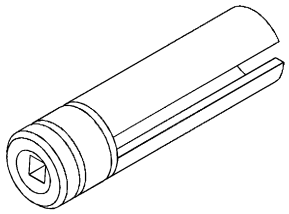 NT379	Loosening or tightening front heated oxygen sensor with 22 mm (0.87 in) hexagon nut
KV10114400 (J-38365) Heated oxygen sensor wrench	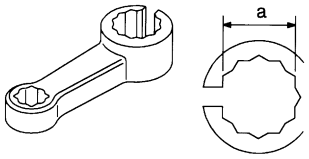 NT636	Loosening or tightening rear heated oxygen sensor **a: 22 mm (0.87 in)**
(J-44321) Fuel pressure gauge kit	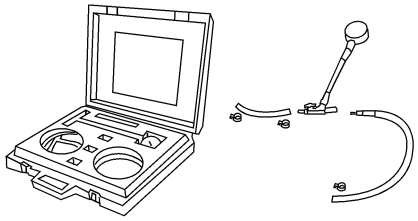 LEC642	Checking fuel pressure

Commercial Service Tools

NEEC0529

Tool name (Kent-Moore No.)	Description	
Leak detector (J41416)	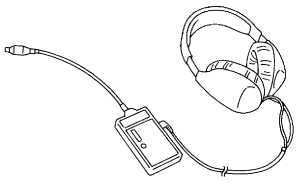 NT703	Locating the EVAP leak
EVAP service port adapter (J41413-OBD)	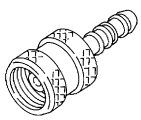 NT704	Applying positive pressure through EVAP service port

Tool name (Kent-Moore No.)	Description	
Hose clipper	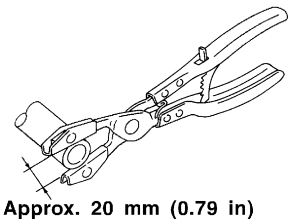 NT720	Clamping the EVAP purge hose between the fuel tank and EVAP canister applied to DTC P1440 [EVAP control system (small leak-positive pressure)]
Fuel filler cap adapter	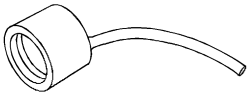 NT653	Checking fuel tank vacuum relief valve opening pressure
Socket wrench	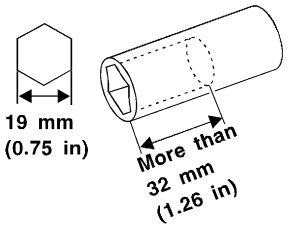 NT705	Removing and installing engine coolant temperature sensor
Oxygen sensor thread cleaner (J-43897-18) (J-43897-12)	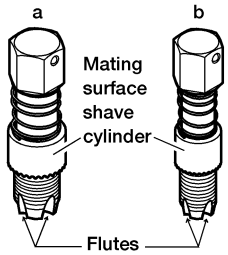 AEM488	Reconditioning the exhaust system threads before installing a new oxygen sensor. Use with anti-seize lubricant shown in "Commercial Service Tools". a: J-43897-18 18 mm diameter, for Zirconia Oxygen Sensor b: J-43897-12 12 mm diameter, for Titania Oxygen Sensor
Anti-seize lubricant (Permatex™ 133AR or equivalent meeting MIL specification MIL-A-907)	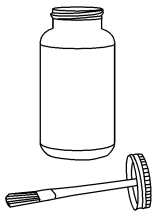 AEM489	Lubricating oxygen sensor thread cleaning tool when reconditioning exhaust system threads.

Engine Control Component Parts Location

NEEC0530

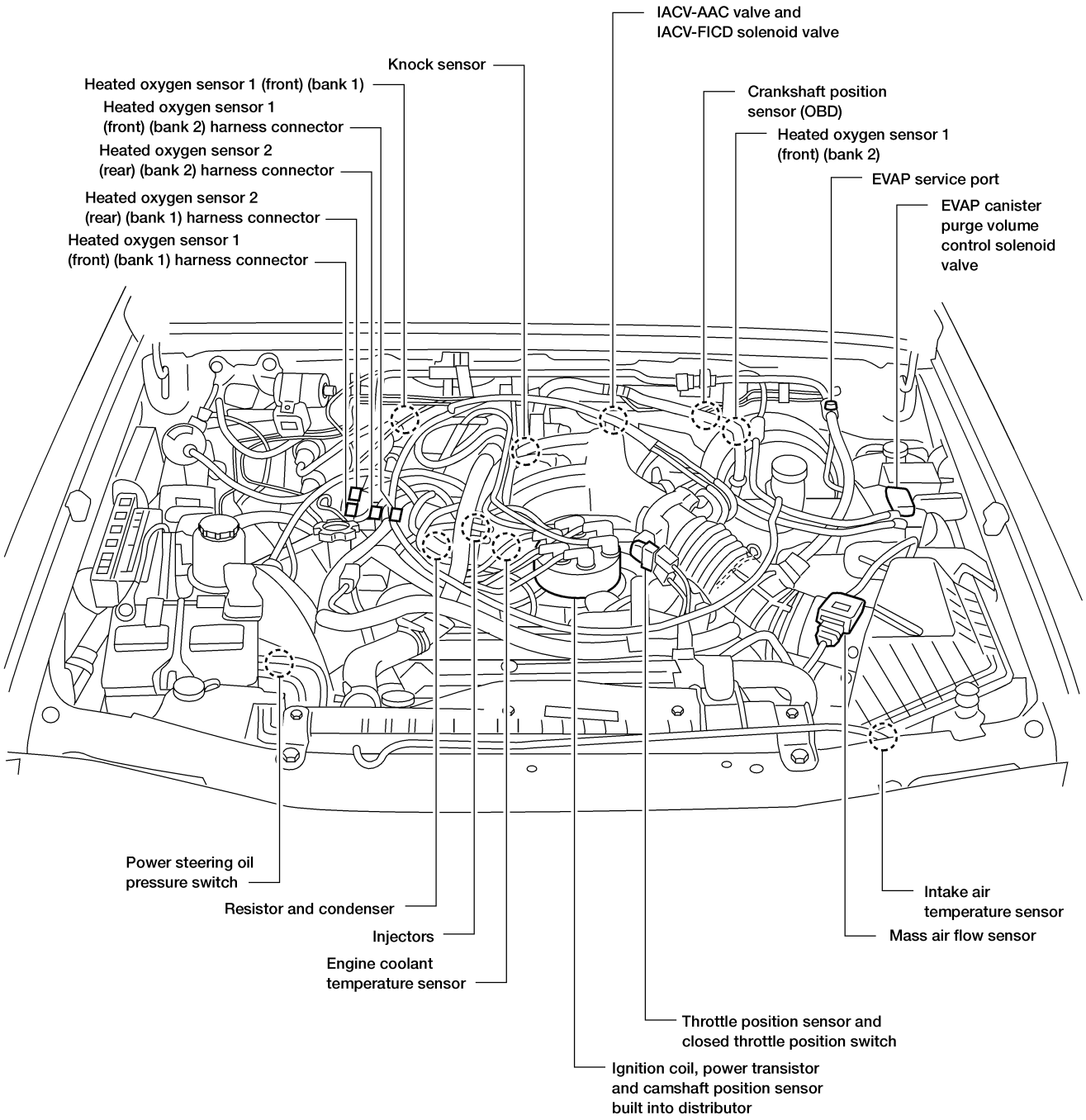

WEC544

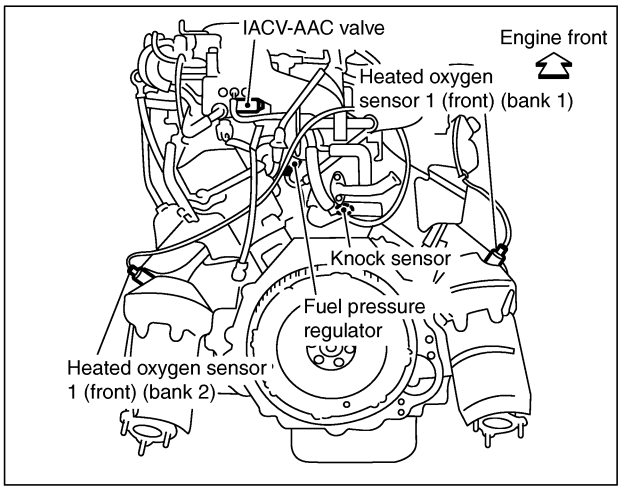
IACV-AAC valve
Engine front
Heated oxygen sensor 1 (front) (bank 1)
Knock sensor
Fuel pressure regulator
Heated oxygen sensor 1 (front) (bank 2)

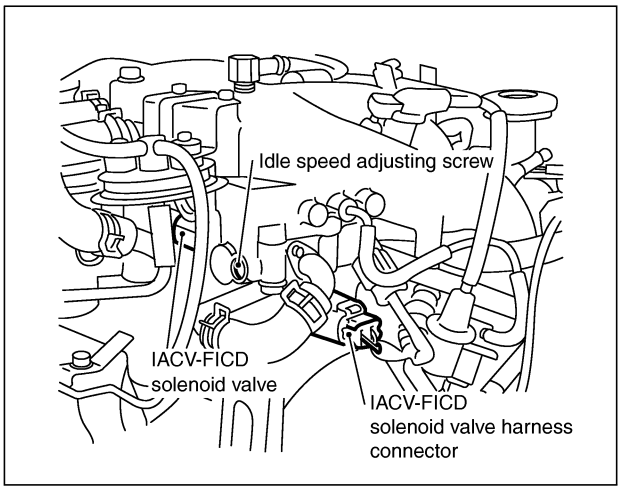
Idle speed adjusting screw
IACV-FICD solenoid valve
IACV-FICD solenoid valve harness connector

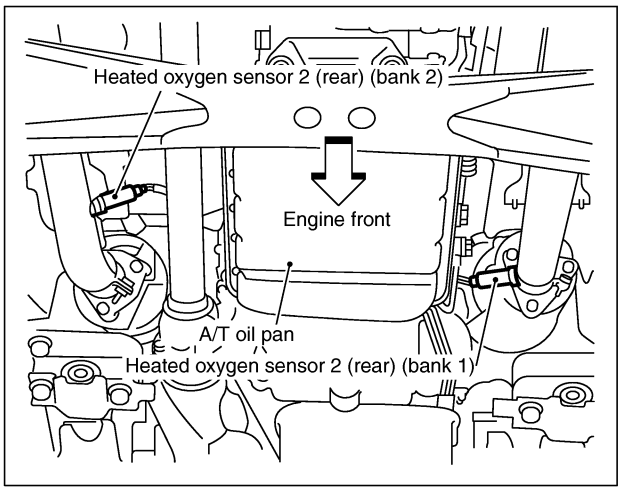
Heated oxygen sensor 2 (rear) (bank 2)
Engine front
A/T oil pan
Heated oxygen sensor 2 (rear) (bank 1)

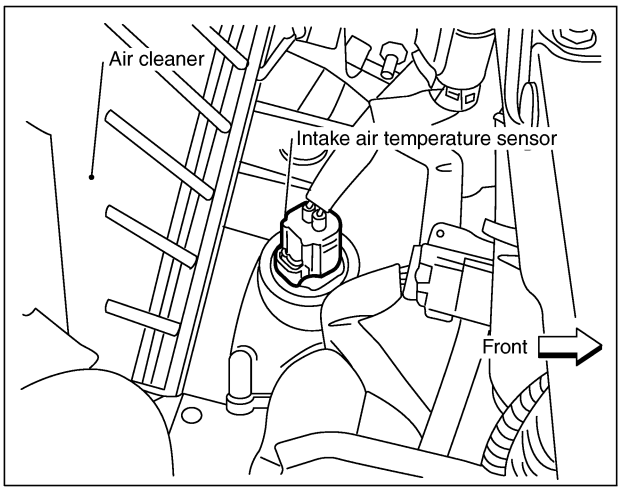
Air cleaner
Intake air temperature sensor
Front

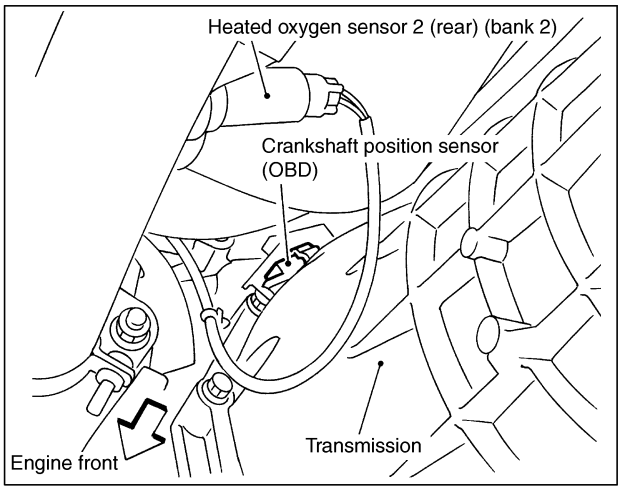
Heated oxygen sensor 2 (rear) (bank 2)
Crankshaft position sensor (OBD)
Transmission
Engine front

SEF792Z

Circuit Diagram

NEEC0531

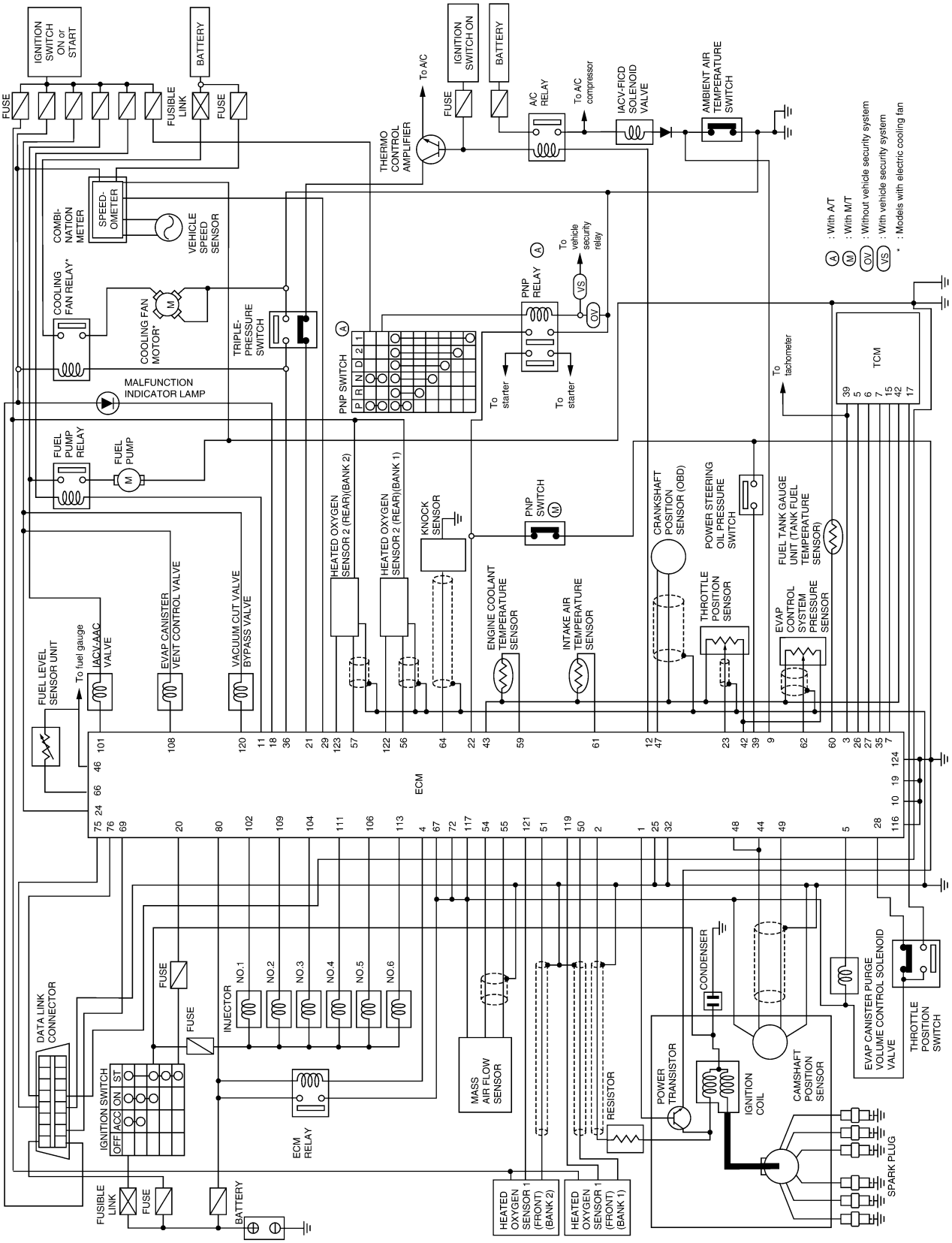

WEC154A

System Diagram

NEEC0532

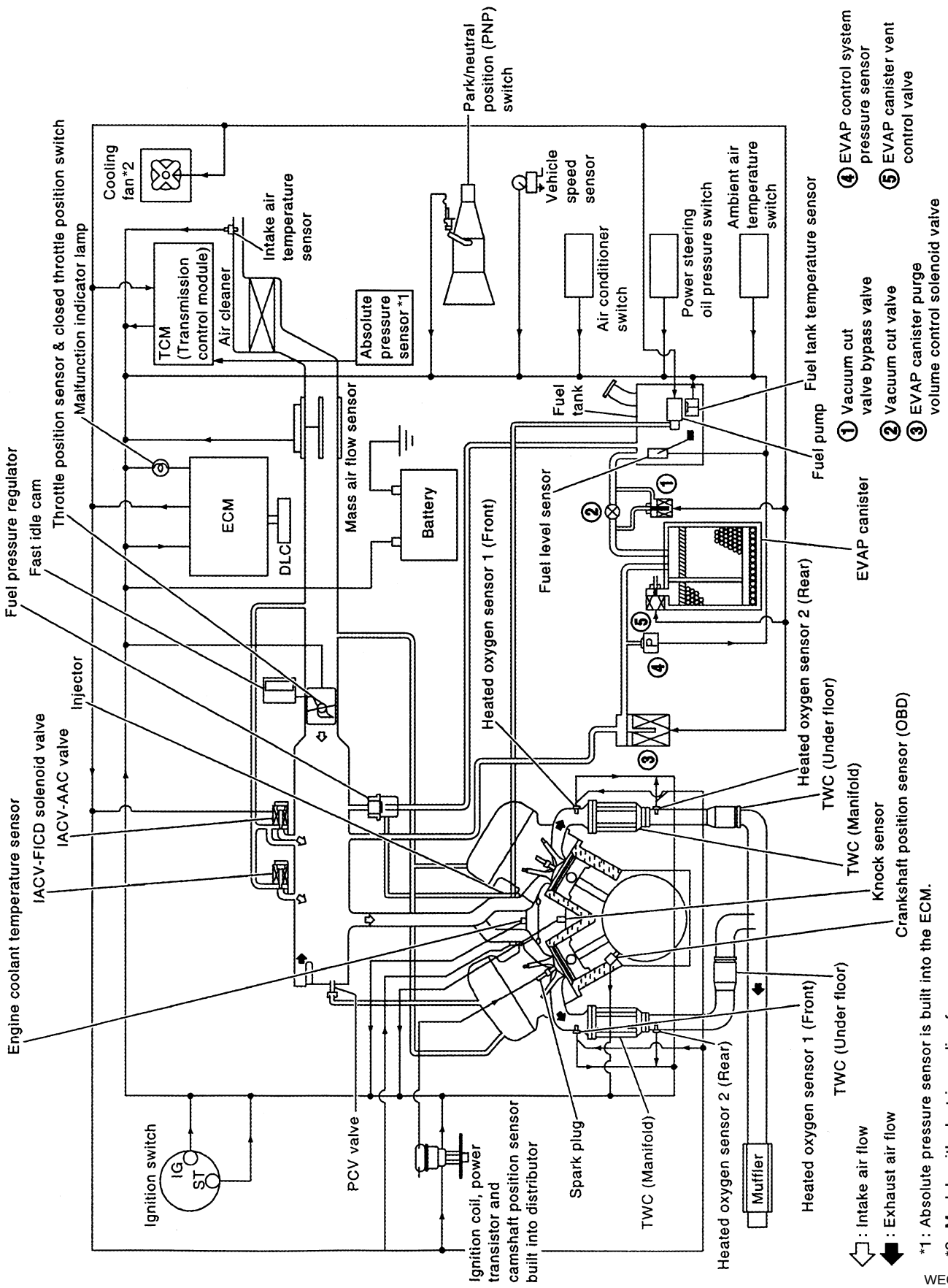

Vacuum Hose Drawing

NEEC0533

Refer to “System Diagram”, EC-633 for Vacuum Control System.

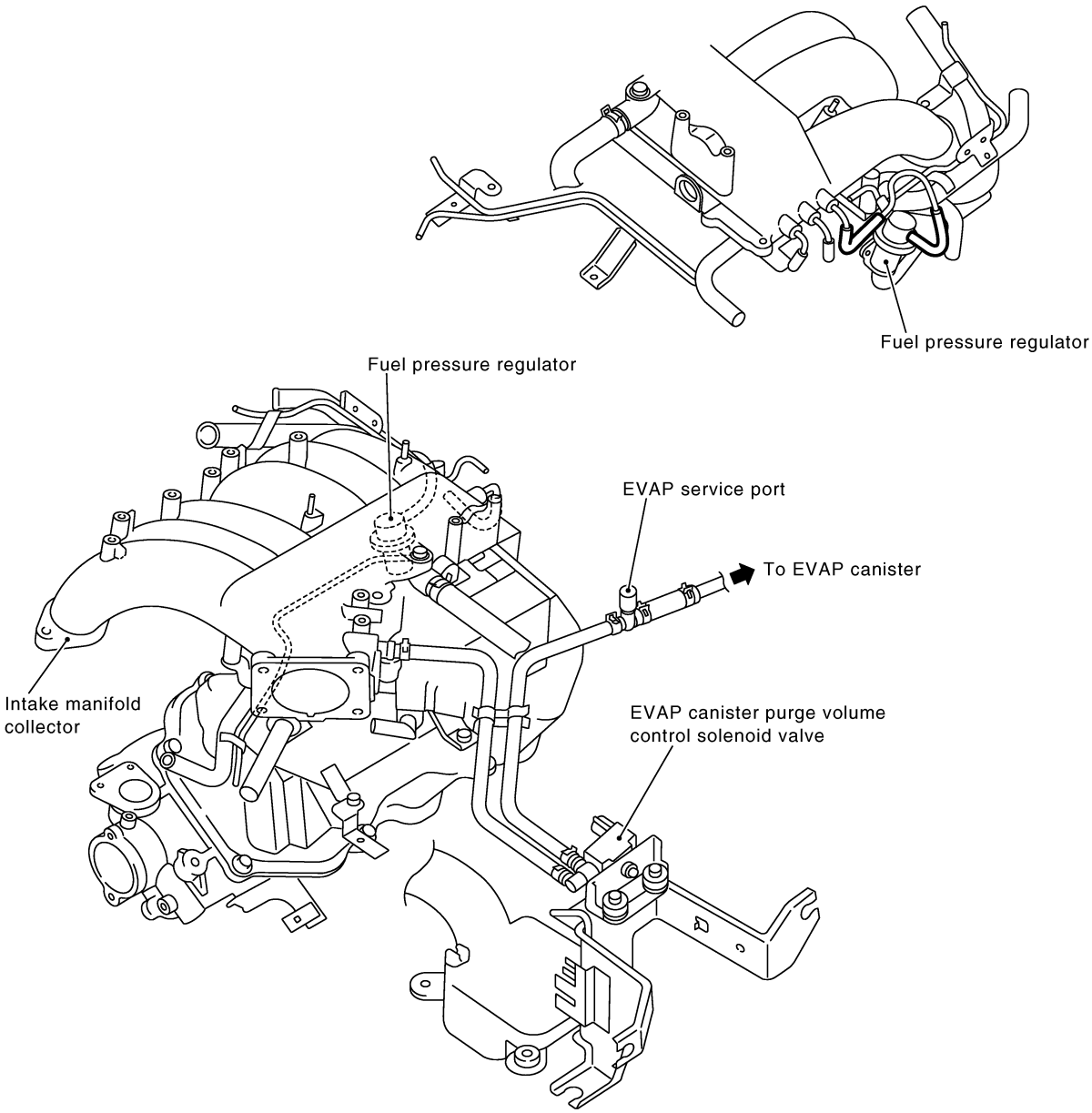

SEF794Z

NOTE:
Do not use soapy water or any type of solvent while installing vacuum hoses or purge hoses.

System Chart

NEEC0534

Input (Sensor)	ECM Function	Output (Actuator)
• Camshaft position sensor • Mass air flow sensor • Engine coolant temperature sensor • Heated oxygen sensor 1 (front) • Ignition switch • Throttle position sensor • Closed throttle position switch *4 • Park/neutral position (PNP) switch • Air conditioner switch • Knock sensor • Intake air temperature sensor • Absolute pressure sensor (Built into ECM) • EVAP control system pressure sensor *1 • Battery voltage • Power steering oil pressure switch • Vehicle speed sensor • Fuel tank temperature sensor *1 • Crankshaft position sensor (OBD) *1 • Rear heated oxygen sensor *3 • TCM (Transmission control module) *2 • Ambient air temperature switch	Fuel injection & mixture ratio control	Injectors
	Distributor ignition system	Power transistor
	Idle air control system	IACV-AAC valve and IACV-FICD solenoid valve
	Fuel pump control	Fuel pump relay
	On board diagnostic system	MIL (On the instrument panel)
	Heated oxygen sensor 1 heater (front) control	Heated oxygen sensor 1 heater (front)
	Heated oxygen sensor 2 heater (rear) control	Heated oxygen sensor 2 heater (rear)
	EVAP canister purge flow control	EVAP canister purge volume control solenoid valve
	Air conditioning cut control	Air conditioner relay
	Cooling fan control *5	Cooling fan relays*5
	ON BOARD DIAGNOSIS for EVAP system	• EVAP canister vent control valve • Vacuum cut valve bypass valve

*1: These sensors are not used to control the engine system. They are used only for the on board diagnosis.
*2: The DTC related to A/T will be sent to ECM.
*3: This sensor is not used to control the engine system under normal conditions.
*4: This switch will operate in place of the throttle position sensor to control EVAP parts if the sensor malfunctions.
*5: Models with electric cooling fan.

Multiport Fuel Injection (MFI) System

DESCRIPTION

Input/Output Signal Chart

NEEC0535

NEEC0535S01

Sensor	Input Signal to ECM	ECM function	Actuator
Camshaft position sensor	Engine speed and piston position	Fuel injection & mixture ratio control	Injectors
Mass air flow sensor	Amount of intake air		
Engine coolant temperature sensor	Engine coolant temperature		
Heated oxygen sensor 1 (front)	Density of oxygen in exhaust gas		
Throttle position sensor	Throttle position Throttle valve idle position		
Park/neutral position (PNP) switch	Gear position		
Vehicle speed sensor	Vehicle speed		
Ignition switch	Start signal		
Air conditioner switch	Air conditioner operation		
Knock sensor	Engine knocking condition		
Battery	Battery voltage		
Absolute pressure sensor (Built into ECM)	Ambient air barometric pressure		
Power steering oil pressure switch	Power steering operation		
Heated oxygen sensor 2 (rear)*	Density of oxygen in exhaust gas		

* Under normal conditions, this sensor is not for engine control operation.

Basic Multiport Fuel Injection System

NEEC0535S02

The amount of fuel injected from the fuel injector is determined by the ECM. The ECM controls the length of time the valve remains open (injection pulse duration). The amount of fuel injected is a program value in the ECM memory. The program value is preset by engine operating conditions. These conditions are determined by input signals (for engine speed and intake air) from both the camshaft position sensor and the mass air flow sensor.

Various Fuel Injection Increase/Decrease Compensation

NEEC0535S03

In addition, the amount of fuel injected is compensated to improve engine performance under various operating conditions as listed below.

<Fuel increase>

- During warm-up
- When starting the engine
- During acceleration
- Hot-engine operation
- When selector lever is changed from “N” to “D”
- High-load, high-speed operation

<Fuel decrease>

- During deceleration
- During high engine speed operation

Mixture Ratio Feedback Control (Closed loop control)

NEEC0535S04

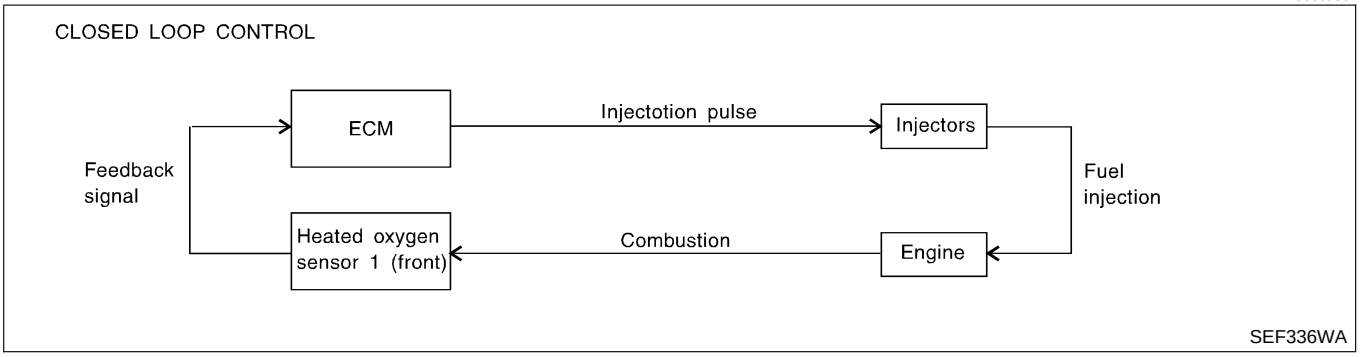

The mixture ratio feedback system provides the best air-fuel mixture ratio for driveability and emission control. The warm-up three way catalyst can then better reduce CO, HC and NOx emissions. This system uses a heated oxygen sensor 1 (front) in the exhaust manifold to monitor if the engine operation is rich or lean. The ECM adjusts the injection pulse width according to the sensor voltage signal. For more information about the heated oxygen sensor 1 (front), refer to EC-799. This maintains the mixture ratio within the range of stoichiometric (ideal air-fuel mixture).
This stage is referred to as the closed loop control condition.
Heated oxygen sensor 2 (rear) is located downstream of the warm-up three way catalyst. Even if the switching characteristics of the heated oxygen sensor 1 (front) shift, the air-fuel ratio is controlled to stoichiometric by the signal from the heated oxygen sensor 2 (rear).

Open Loop Control

NEEC0535S05

The open loop system condition refers to when the ECM detects any of the following conditions. Feedback control stops in order to maintain stabilized fuel combustion.

- Deceleration and acceleration
- High-load, high-speed operation
- Malfunction of heated oxygen sensor 1 (front) or its circuit
- Insufficient activation of heated oxygen sensor 1 (front) at low engine coolant temperature
- High engine coolant temperature
- During warm-up
- When starting the engine

Mixture Ratio Self-learning Control

NEEC0535S06

The mixture ratio feedback control system monitors the mixture ratio signal transmitted from the heated oxygen sensor 1 (front). This feedback signal is then sent to the ECM. The ECM controls the basic mixture ratio as close to the theoretical mixture ratio as possible. However, the basic mixture ratio is not necessarily controlled as originally designed. Both manufacturing differences (i.e., mass air flow sensor hot wire) and characteristic changes during operation (i.e., injector clogging) directly affect mixture ratio.
Accordingly, the difference between the basic and theoretical mixture ratios is monitored in this system. This is then computed in terms of "injection pulse duration" to automatically compensate for the difference between the two ratios.
"Fuel trim" refers to the feedback compensation value compared against the basic injection duration. Fuel trim includes short term fuel trim and long term fuel trim.
"Short term fuel trim" is the short-term fuel compensation used to maintain the mixture ratio at its theoretical value. The signal from the heated oxygen sensor 1 (front) indicates whether the mixture ratio is RICH or LEAN compared to the theoretical value. The signal then triggers a reduction in fuel volume if the mixture ratio is rich, and an increase in fuel volume if it is lean.
"Long term fuel trim" is overall fuel compensation carried out long-term to compensate for continual deviation of the short term fuel trim from the central value. Such deviation will occur due to individual engine differences, wear over time and changes in the usage environment.

Fuel Injection Timing

NEEC0535S07

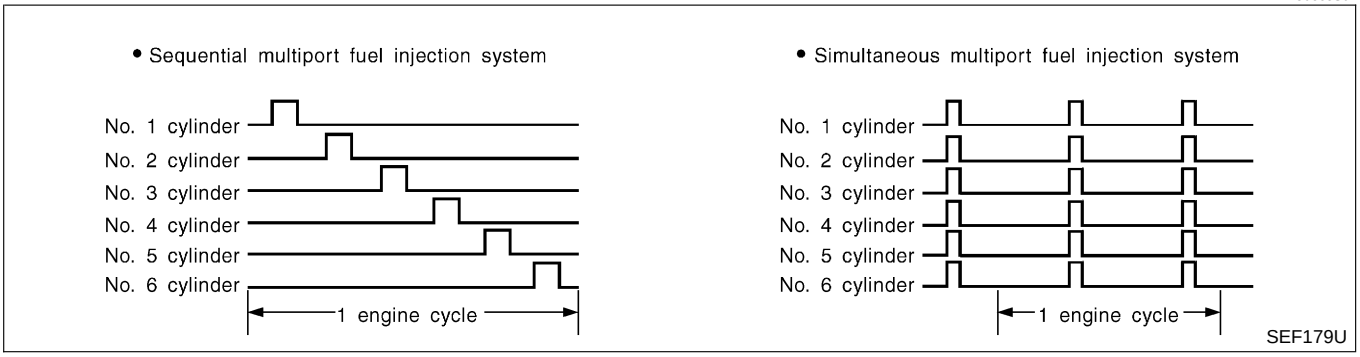

Two types of systems are used.

Sequential Multiport Fuel Injection System

NEEC0535S0701

Fuel is injected into each cylinder during each engine cycle according to the firing order. This system is used when the engine is running.

Simultaneous Multiport Fuel Injection System

NEEC0535S0702

Fuel is injected simultaneously into all six cylinders twice each engine cycle. In other words, pulse signals of the same width are simultaneously transmitted from the ECM.
The six injectors will then receive the signals two times for each engine cycle.
This system is used when the engine is being started and/or if the fail-safe system (CPU) is operating.

Fuel Shut-off

NEEC0535S08

Fuel to each cylinder is cut off during deceleration or operation of the engine at excessively high speeds.

Distributor Ignition (DI) System

DESCRIPTION

NEEC0536

Input/Output Signal Chart

NEEC0536S01

Sensor	Input Signal to ECM	ECM function	Actuator
Camshaft position sensor	Engine speed and piston position	Ignition timing control	Power transistor
Mass air flow sensor	Amount of intake air		
Engine coolant temperature sensor	Engine coolant temperature		
Throttle position sensor	Throttle position Throttle valve idle position		
Vehicle speed sensor	Vehicle speed		
Ignition switch	Start signal		
Knock sensor	Engine knocking		
Park/neutral position (PNP) switch	Gear position		
Battery	Battery voltage		

System Description

NEEC0536S02

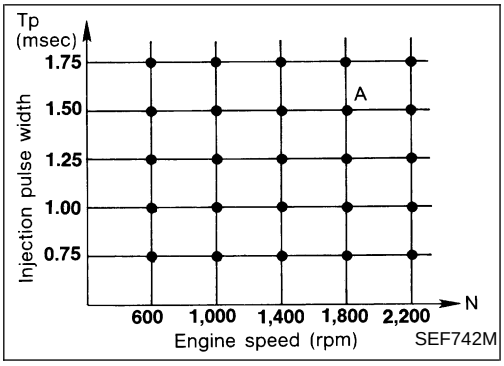

The ignition timing is controlled by the ECM to maintain the best air-fuel ratio for every running condition of the engine. The ignition timing data is stored in the ECM. This data forms the map shown.
The ECM receives information such as the injection pulse width and camshaft position sensor signal. Computing this information, ignition signals are transmitted to the power transistor.
e.g., N: 1,800 rpm, Tp: 1.50 msec
A °BTDC
During the following conditions, the ignition timing is revised by the ECM according to the other data stored in the ECM.

- At starting
- During warm-up
- At idle
- At low battery voltage
- During acceleration

The knock sensor retard system is designed only for emergencies. The basic ignition timing is programmed within the anti-knocking zone, if recommended fuel is used under dry conditions. The retard system does not operate under normal driving conditions. If engine knocking occurs, the knock sensor monitors the condition. The signal is transmitted to the ECM. The ECM retards the ignition timing to eliminate the knocking condition.

Air Conditioning Cut Control

DESCRIPTION

NEEC0537

Input/Output Signal Chart

NEEC0537S01

Sensor	Input Signal to ECM	ECM function	Actuator
Air conditioner switch	Air conditioner "ON" signal	Air conditioner cut control	Air conditioner relay
Throttle position sensor	Throttle valve opening angle		
Camshaft position sensor	Engine speed		
Engine coolant temperature sensor	Engine coolant temperature		
Ignition switch	Start signal		
Vehicle speed sensor	Vehicle speed		
Power steering oil pressure switch	Power steering operation		

System Description

NEEC0537S02

This system improves engine operation when the air conditioner is used.
Under the following conditions, the air conditioner is turned OFF.

- When the accelerator pedal is fully depressed.
- When cranking the engine.
- At high engine speeds.
- When the engine coolant temperature becomes excessively high.
- When operating power steering during low engine speed or low vehicle speed.
- When engine speed is excessively low.

DTC P0217 Coolant Overtemperature Enrichment Protection (Without Electric Cooling Fan)

DESCRIPTION

NEEC0538

Input/Output Signal Chart

NEEC0538S01

Sensor	Input Signal to ECM	ECM function	Actuator
Vehicle speed sensor	Vehicle speed	Fuel cut control	Injectors
Park/neutral position (PNP) switch	Neutral position		
Throttle position sensor	Throttle position		
Engine coolant temperature sensor	Engine coolant temperature		
Camshaft position sensor	Engine speed		

If the engine speed is above 2,500 rpm with no load (for example, in neutral and engine speed over 2,500 rpm) fuel will be cut off after some time. The exact time when the fuel is cut off varies based on engine speed. Fuel cut will operate until the engine speed reaches 2,000 rpm, then fuel cut is cancelled.

NOTE:
This function is different from deceleration control listed under “Multiport Fuel Injection (MFI) System”, EC-636.

Evaporative Emission System

DESCRIPTION

NEEC0539

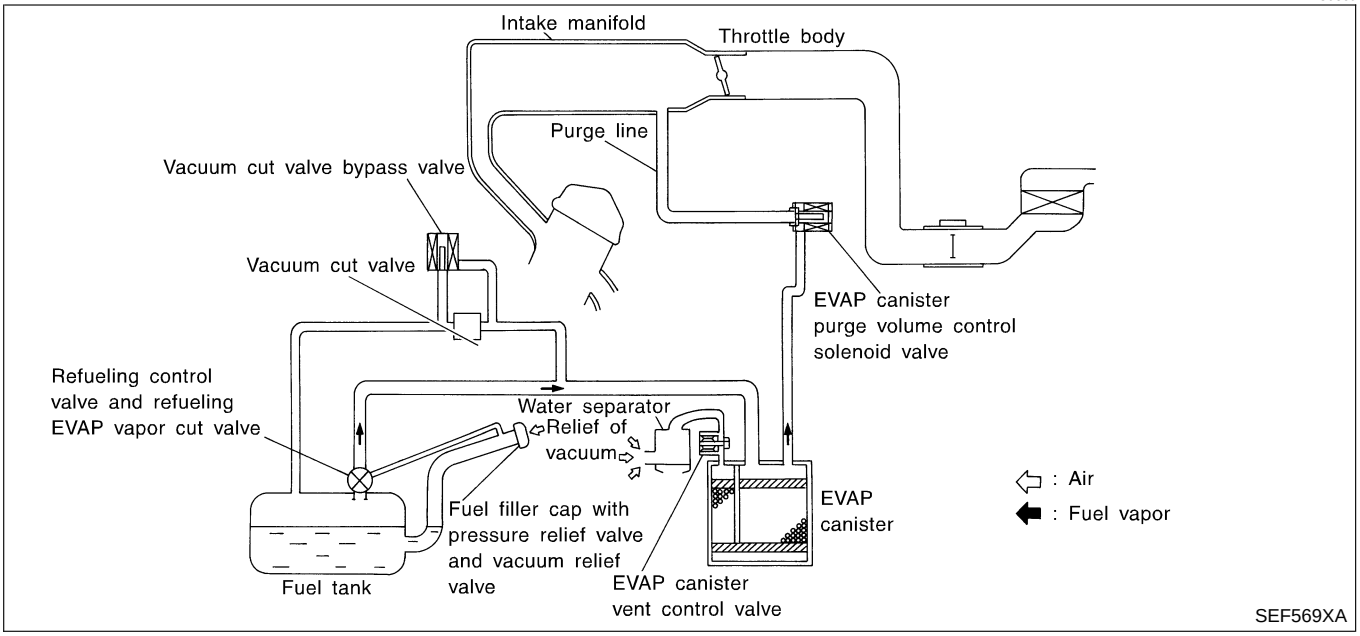

The evaporative emission system is used to reduce hydrocarbons emitted into the atmosphere from the fuel system. This reduction of hydrocarbons is accomplished by activated charcoals in the EVAP canister.
The fuel vapor in the sealed fuel tank is led into the EVAP canister which contains activated carbon and the vapor is stored there when the engine is not operating or when refueling to the fuel tank.
The vapor in the EVAP canister is purged by the air through the purge line to the intake manifold when the engine is operating. EVAP canister purge volume control solenoid valve is controlled by ECM. When the engine operates, the flow rate of vapor controlled by EVAP canister purge volume control solenoid valve is proportionally regulated as the air flow increases.
EVAP canister purge volume control solenoid valve also shuts off the vapor purge line during decelerating and idling.

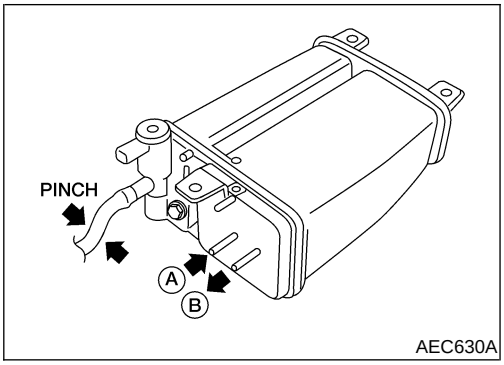

AEC630A

INSPECTION

NEEC0540

EVAP Canister

NEEC0540S01

Check EVAP canister as follows:

1. Pinch the fresh air hose.
2. Blow air into port **A** and check that it flows freely out of port **B**.

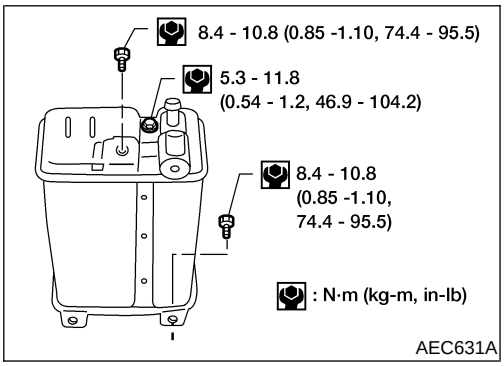

AEC631A

Tightening Torque

NEEC0540S02

Tighten EVAP canister as shown in the figure.

Make sure new O-ring is installed properly between EVAP canister and EVAP canister vent control valve.

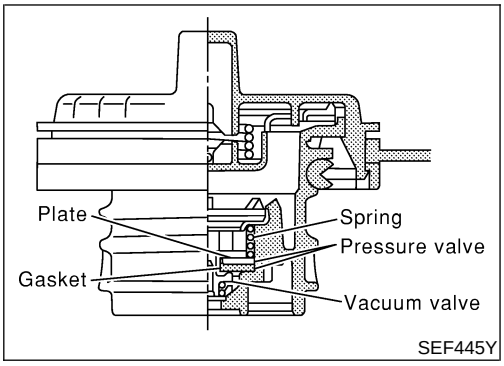

SEF445Y

Fuel Tank Vacuum Relief Valve (Built into fuel filler cap)

NEEC0540S03

1. Wipe clean valve housing.
2. Check valve opening pressure and vacuum.

Pressure:

15.3 - 20.0 kPa (0.156 - 0.204 kg/cm^2, 2.22 - 2.90 psi)

Vacuum:

−6.0 to −3.3 kPa (−0.061 to −0.034 kg/cm^2, −0.87 to −0.48 psi)

3. If out of specification, replace fuel filler cap as an assembly.

CAUTION:

Use only a genuine fuel filler cap as a replacement. If an incorrect fuel filler cap is used, the MIL may come ON

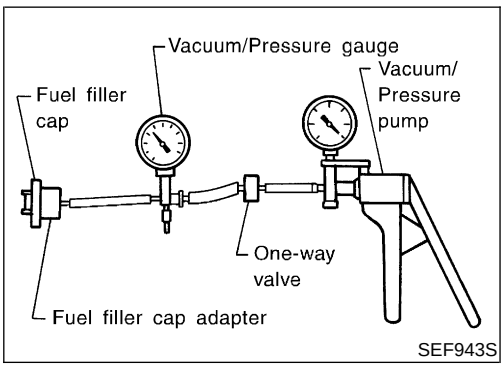

SEF943S

Vacuum Cut Valve and Vacuum Cut Valve Bypass Valve

NEEC0540S04

Refer to EC-1162.

Evaporative Emission (EVAP) Canister Purge Volume Control Solenoid Valve

NEEC0540S05

Refer to EC-994.

Tank Fuel Temperature Sensor

NEEC0540S06

Refer to EC-922.

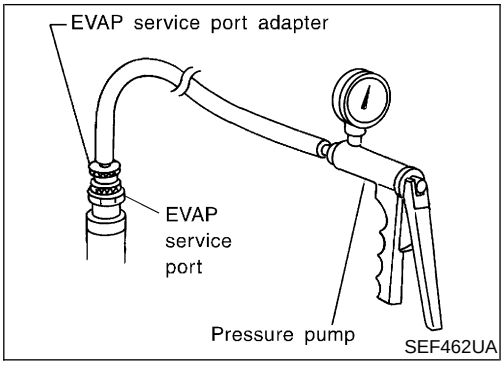

SEF462UA

Evap Service Port

NEEC0540S07

Positive pressure is delivered to the EVAP system through the EVAP service port. If fuel vapor leakage in the EVAP system occurs, use a leak detector to locate the leak.

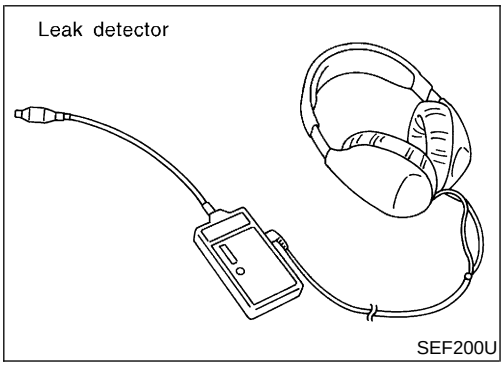

SEF200U

How to Detect Fuel Vapor Leakage

NEEC0540S08

CAUTION:

- **Never use compressed air or a high pressure pump.**
- **Do not exceed 4.12 kPa (0.042 kg/cm^2, 0.6 psi) of pressure in EVAP system.**

NOTE:

- Do not start engine.
- Improper installation of EVAP service port adapter to the EVAP service port may cause a leak.

With CONSULT-II

1) Attach the EVAP service port adapter securely to the EVAP service port.
2) Also attach the pressure pump and hose to the EVAP service port adapter.
3) Turn ignition switch ON.
4) Select the "EVAP SYSTEM CLOSE" of "WORK SUPPORT MODE" with CONSULT-II.
5) Touch "START". A bar graph (Pressure indicating display) will appear on the screen.
6) Apply positive pressure to the EVAP system until the pressure indicator reaches the middle of the bar graph.
7) Remove EVAP service port adapter and hose with pressure pump.
8) Locate the leak using a leak detector. Refer to "EVAPORATIVE EMISSION LINE DRAWING", EC-644.

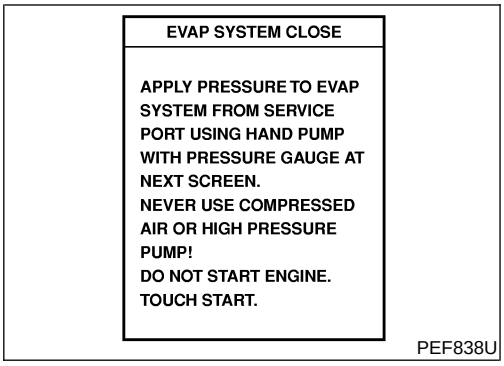

PEF838U

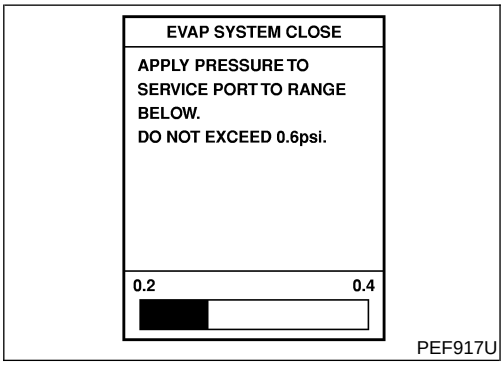

PEF917U

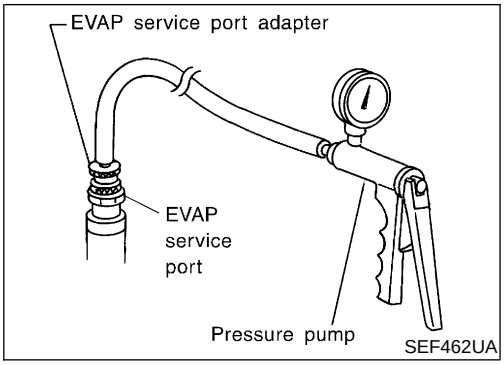

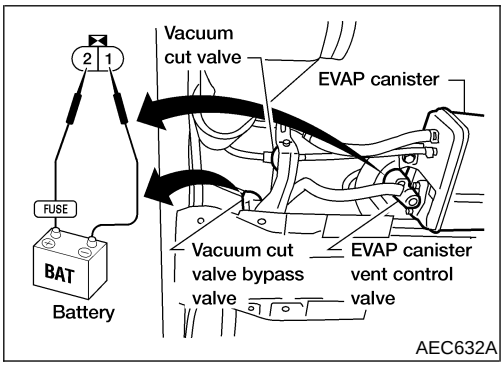

Without CONSULT-II

1) Attach the EVAP service port adapter securely to the EVAP service port.
2) Also attach the pressure pump with pressure gauge to the EVAP service port adapter.
3) Apply battery voltage to between the terminals of both EVAP canister vent control valve and vacuum cut valve bypass valve to make a closed EVAP system.
4) To locate the leak, deliver positive pressure to the EVAP system until pressure gauge points reach 1.38 to 2.76 kPa (0.014 to 0.028 kg/cm^2, 0.2 to 0.4 psi).
5) Remove EVAP service port adapter and hose with pressure pump.
6) Locate the leak using a leak detector. Refer to "EVAPORATIVE EMISSION LINE DRAWING", EC-644.

EVAPORATIVE EMISSION LINE DRAWING

NEEC0541

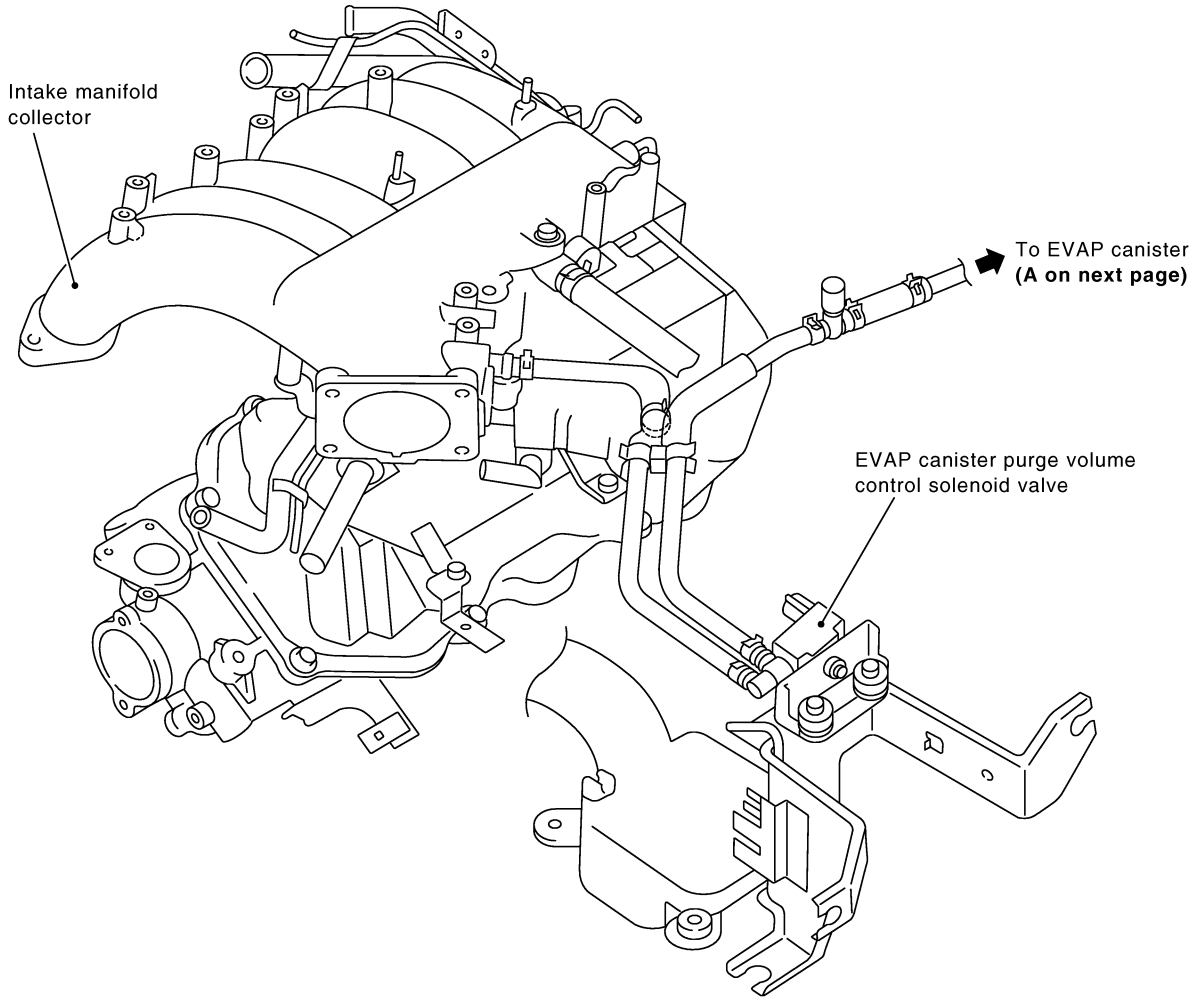

NOTE:
Do not use soapy water or any type of solvent while installing vacuum hoses or purge hoses.

SEF795Z

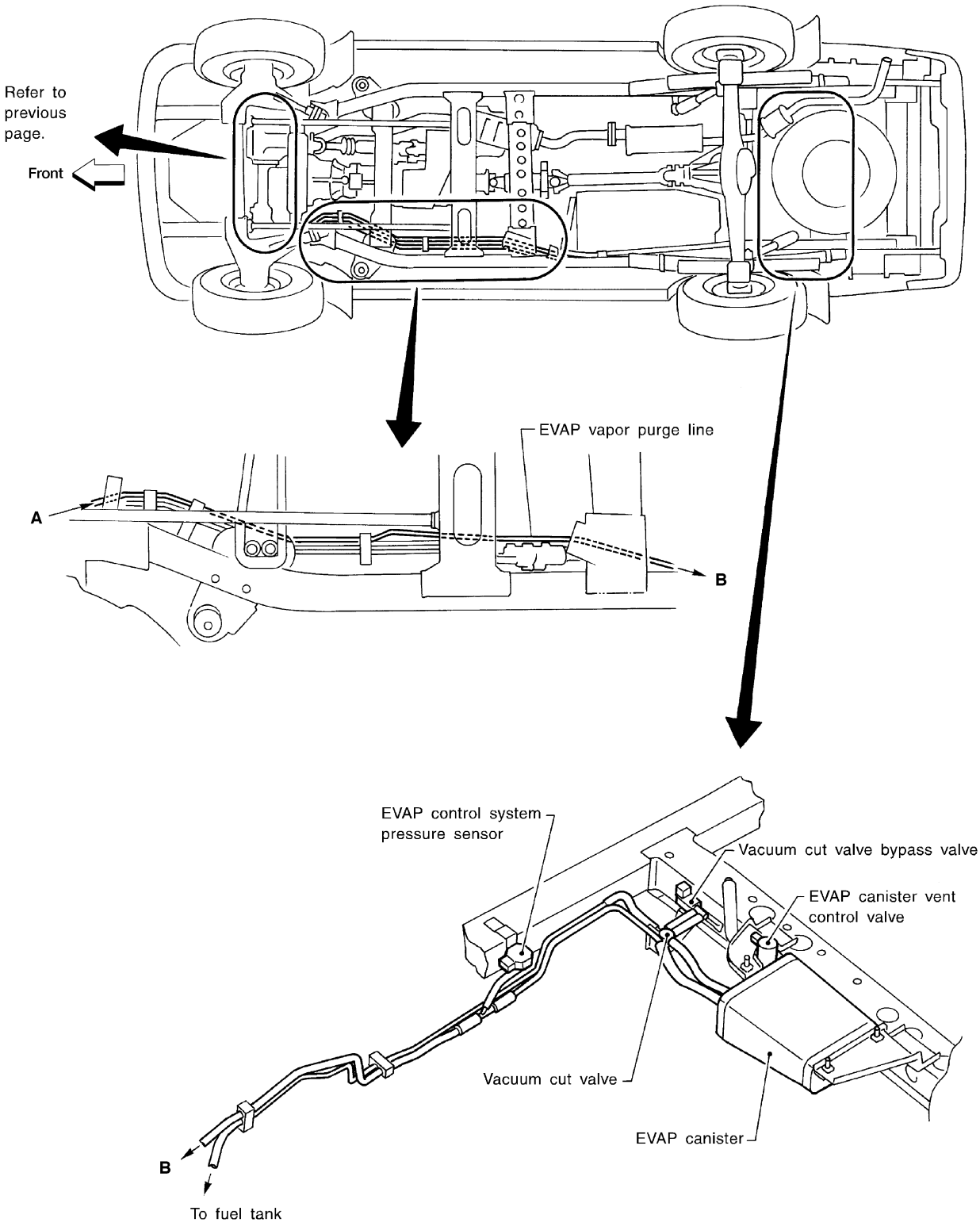
Refer to previous page.
Front
EVAP vapor purge line
A
B
EVAP control system pressure sensor
Vacuum cut valve bypass valve
EVAP canister vent control valve
Vacuum cut valve
EVAP canister
B
To fuel tank

AEC886A

On Board Refueling Vapor Recovery (ORVR)

NEEC0957

SYSTEM DESCRIPTION

NEEC0957S01

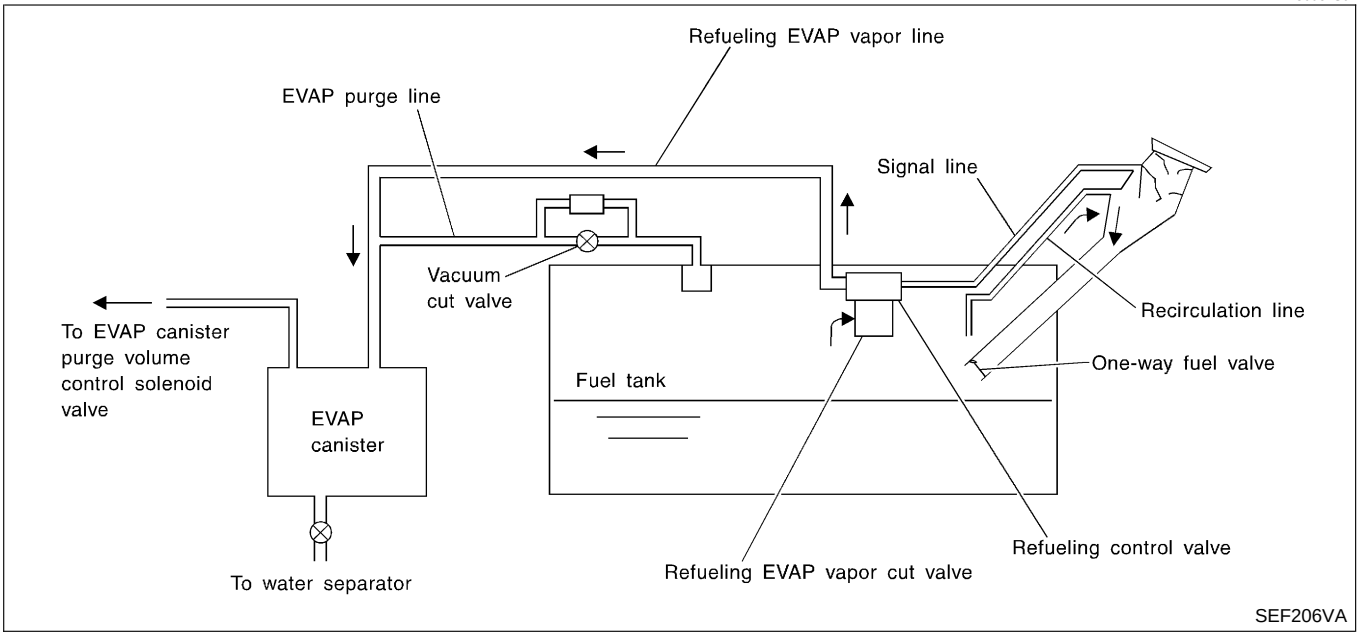

From the beginning of refueling, the fuel tank pressure goes up. When the pressure reaches the setting value of the refueling control valve (RCV) opening pressure, the RCV is opened. After RCV opens, the air and vapor inside the fuel tank go through refueling EVAP vapor cut valve, RCV and refueling vapor line to the EVAP canister. The vapor is absorbed by the EVAP canister and the air is released to the atmosphere.
When the refueling has reached the full level of the fuel tank, the refueling EVAP vapor cut valve is closed and refueling is stopped because of auto shut-off. The vapor which was absorbed by the EVAP canister is purged during driving.
The RCV is always closed during driving and the evaporative emission control system is operated the same as conventional system.

WARNING:

When conducting inspections below, be sure to observe the following:

- **Put a “CAUTION: INFLAMMABLE” sign in workshop.**
- **Do not smoke while servicing fuel system. Keep open flames and sparks away from work area.**
- **Be sure to furnish the workshop with a CO_2 fire extinguisher.**

CAUTION:

- **Before removing fuel line parts, carry out the following procedures:**

a) Put drained fuel in an explosion-proof container and put lid on securely.
b) Release fuel pressure from fuel line. Refer to “Fuel Pressure Release”, EC-658.
c) Disconnect battery ground cable.

- **Always replace O-ring when the fuel gauge retainer is removed.**
- **Do not kink or twist hose and tube when they are installed.**
- **Do not tighten hose and clamps excessively to avoid damaging hoses.**
- **After installation, run engine and check for fuel leaks at connection.**
- **Do not attempt to top off the fuel tank after the fuel pump nozzle shuts off automatically. Continued refueling may cause fuel overflow, resulting in fuel spray and possibly a fire.**

DIAGNOSTIC PROCEDURE

NEEC0957S02

Symptom: Fuel Odor from EVAP Canister Is Strong.

NEEC0957S0201

1	CHECK EVAP CANISTER
1. Remove EVAP canister with EVAP canister vent control valve attached. 2. Weigh the EVAP canister with EVAP canister vent control valve attached. The weight should be less than 1.8 kg (4.0 lb).	
OK or NG	
OK ▶	GO TO 2.
NG ▶	GO TO 3.

2	CHECK IF EVAP CANISTER SATURATED WITH WATER
Does water drain from the EVAP canister?	

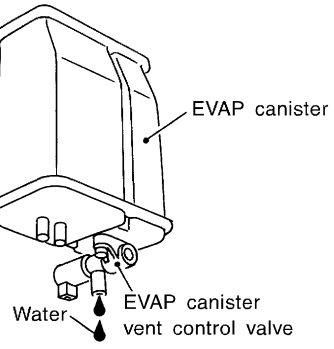

SEF596U

Yes or No	
Yes ▶	GO TO 3.
No (With CONSULT-II) ▶	GO TO 6.
No (Without CONSULT-II) ▶	GO TO 7.

3	REPLACE EVAP CANISTER
Replace EVAP canister with a new one.	
▶	GO TO 4.

4	CHECK WATER SEPARATOR

1. Check visually for insect nests in the water separator air inlet.
2. Check visually for cracks or flaws in the appearance.
3. Check visually for cracks or flaws in the hose.
4. Check that **A** and **C** are not clogged by blowing air into **B** with **A**, and then **C** plugged.

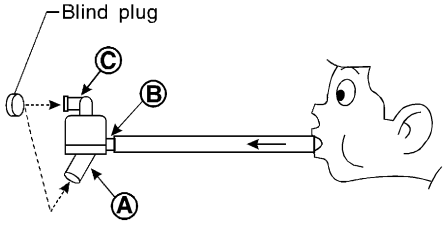

* Ⓐ: Bottom hole (To atmosphere)
Ⓑ: Emergency tube (From EVAP canister)
Ⓒ: Inlet port (To member)

SEF829T

5. In case of NG in items 2 - 4, replace the parts.

NOTE:
- Do not disassemble water separator.

OK or NG

OK	▶	GO TO 5.
NG	▶	Replace water separator.

5	DETECT MALFUNCTIONING PART

Check the EVAP hose between EVAP canister and water separator for clogging or poor connection.

	▶	Repair or replace EVAP hose.

6	CHECK REFUELING EVAP VAPOR CUT VALVE

With CONSULT-II

1. Remove fuel tank. Refer to ***FE-4***, "FUEL SYSTEM.
2. Drain fuel from the tank as follows:

a. Remove fuel feed hose located on the fuel gauge retainer.
b. Connect a spare fuel hose, one side to fuel gauge retainer where the hose was removed and the other side to a fuel container.
c. Drain fuel using "FUEL PUMP RELAY" in "ACTIVE TEST" mode with CONSULT-II.

3. Check refueling EVAP vapor cut valve for being stuck to close as follows.
   Blow air into the refueling EVAP vapor cut valve (from hose end B), and check that the air flows freely into the tank.
4. Check EVAP vapor cut valve for being stuck to open as follows.

a. Connect vacuum pump to hose ends A and B using a suitable 3-way connector.
b. Remove fuel gauge retainer with fuel gauge unit.
   Always replace O-ring with new one.
c. Put fuel tank upside down.
d. Apply vacuum pressure to both hose ends A and B [−13.3 kPa (−100 mmHg, −3.94 inHg)] with fuel gauge retainer remaining open and check that the pressure is applicable.

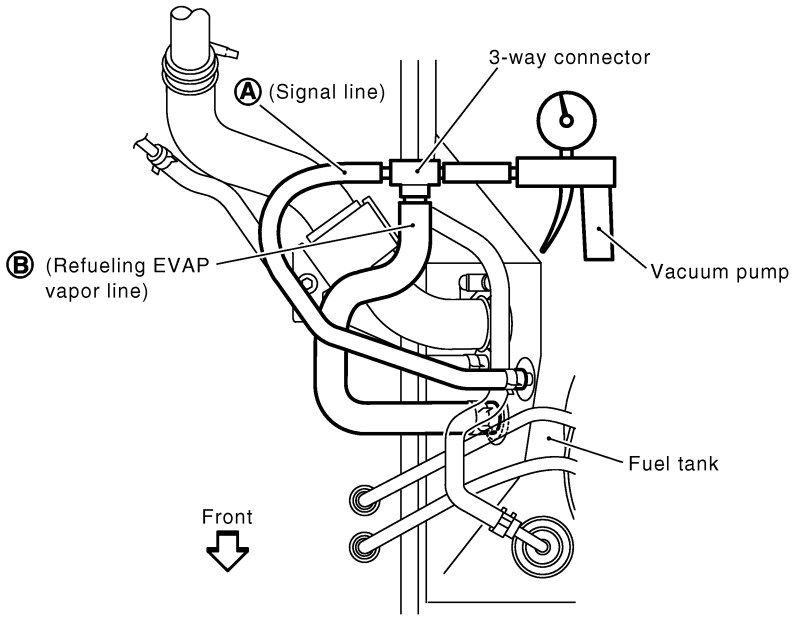

SEF707Z

OK or NG

OK	▶	GO TO 8.
NG	▶	Replace refueling EVAP vapor cut valve with fuel tank.

7	CHECK REFUELING EVAP VAPOR CUT VALVE

Without CONSULT-II

1. Remove fuel tank. Refer to ***FE-4***, "FUEL SYSTEM".
2. Drain fuel from the tank as follows:

a. Remove fuel gauge retainer.
b. Drain fuel from the tank using a hand pump into a fuel container.

3. Check refueling EVAP vapor cut valve for being stuck to close as follows.
   Blow air into the refueling EVAP vapor cut valve (from hose end B), and check that the air flows freely into the tank.
4. Check EVAP vapor cut valve for being stuck to open as follows.

a. Connect vacuum pump to hose ends A and B using a suitable 3-way connector.
b. Remove fuel gauge retainer with fuel gauge unit.
   Always replace O-ring with new one.
c. Put fuel tank upside down.
d. Apply vacuum pressure to both hose ends A and B [−13.3 kPa (−100 mmHg, −3.94 inHg)] with fuel gauge retainer remaining open and check that the pressure is applicable.

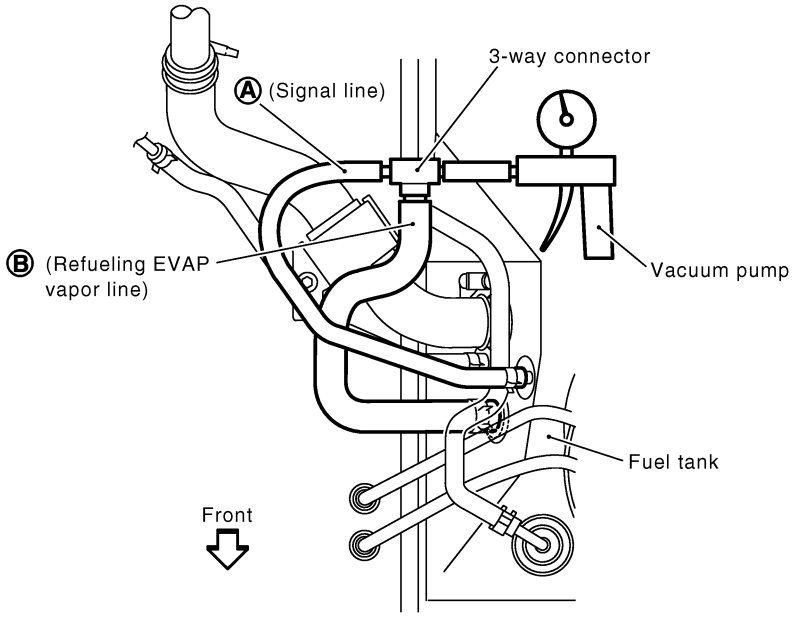

SEF707Z

OK or NG

OK	▶	GO TO 8.
NG	▶	Replace refueling EVAP vapor cut valve with fuel tank.

8	CHECK REFUELING CONTROL VALVE

1. Remove fuel filler cap.
2. Check air continuity between hose ends A and B.
   Blow air into the hose end B. Air should flow freely into the fuel tank.
3. Blow air into hose end A and check there is no leakage.
4. Apply pressure to both hose ends A and B [20 kPa (150 mmHg, 5.91 inHg)] using a pressure pump and a suitable 3-way connector. Check that there is no leakage.

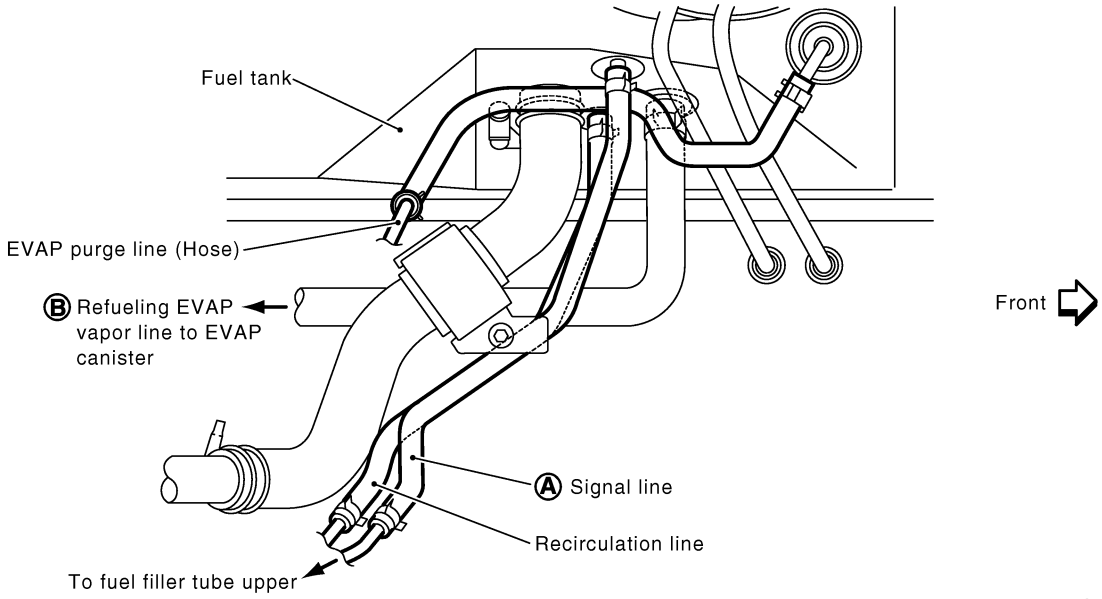

SEF706Z

OK or NG

OK	▶	**INSPECTION END**
NG	▶	Replace refueling control valve with fuel tank.

Symptom: Cannot Refuel/Fuel Odor From The Fuel Filler Opening Is Strong While Refueling.

NEEC0957S0202

1	CHECK EVAP CANISTER

1. Remove EVAP canister with EVAP canister vent control valve attached.
2. Weigh the EVAP canister with EVAP canister vent control valve attached.
   The weight should be less than 1.8 kg (4.0 lb).

OK or NG

OK	▶	GO TO 2.
NG	▶	GO TO 3.

2	CHECK IF EVAP CANISTER SATURATED WITH WATER

Does water drain from the EVAP canister?

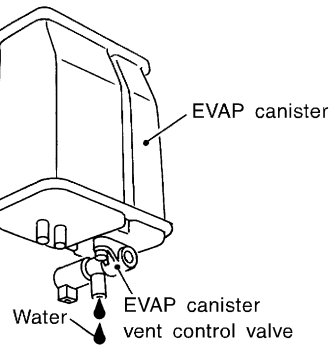

SEF596U

Yes or No

Yes	▶	GO TO 3.
No	▶	GO TO 6.

3	REPLACE EVAP CANISTER

Replace EVAP canister with a new one.

	▶	GO TO 4.

4	CHECK WATER SEPARATOR

1. Check visually for insect nests in the water separator air inlet.
2. Check visually for cracks or flaws in the appearance.
3. Check visually for cracks or flaws in the hose.
4. Check that **A** and **C** are not clogged by blowing air into **B** with **A**, and then **C** plugged.

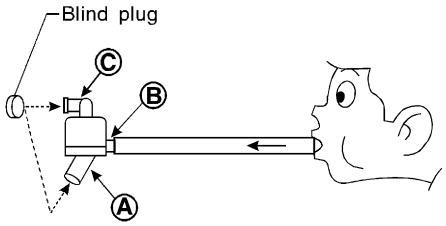

* Ⓐ: Bottom hole (To atmosphere)
Ⓑ: Emergency tube (From EVAP canister)
Ⓒ: Inlet port (To member)

SEF829T

5. In case of NG in items 2 - 4, replace the parts.

NOTE:

- Do not disassemble water separator.

OK or NG

OK	▶	GO TO 5.
NG	▶	Replace water separator.

5	DETECT MALFUNCTIONING PART

Check the EVAP hose between EVAP canister and water separator for clogging or poor connection.

	▶	Repair or replace EVAP hose.

6	CHECK VENT HOSES AND VENT TUBES	
Check hoses and tubes between EVAP canister and refueling control valve for clogging, kink, looseness and improper connection.		
OK or NG		
OK	▶	GO TO 7.
NG	▶	Repair or replace hoses and tubes.

7	CHECK FILLER NECK TUBE	
Check signal line and recirculation line for clogging, dents and cracks.		
OK or NG		
OK	▶	GO TO 8.
NG	▶	Replace filler neck tube.

8 CHECK REFUELING CONTROL VALVE

1. Remove fuel filler cap.
2. Check air continuity between hose ends A and B.
   Blow air into the hose end B. Air should flow freely into the fuel tank.
3. Blow air into hose end A and check there is no leakage.
4. Apply pressure to both hose ends A and B [20 kPa (150 mmHg, 5.91 inHg)] using a pressure pump and a suitable 3-way connector. Check that there is no leakage.

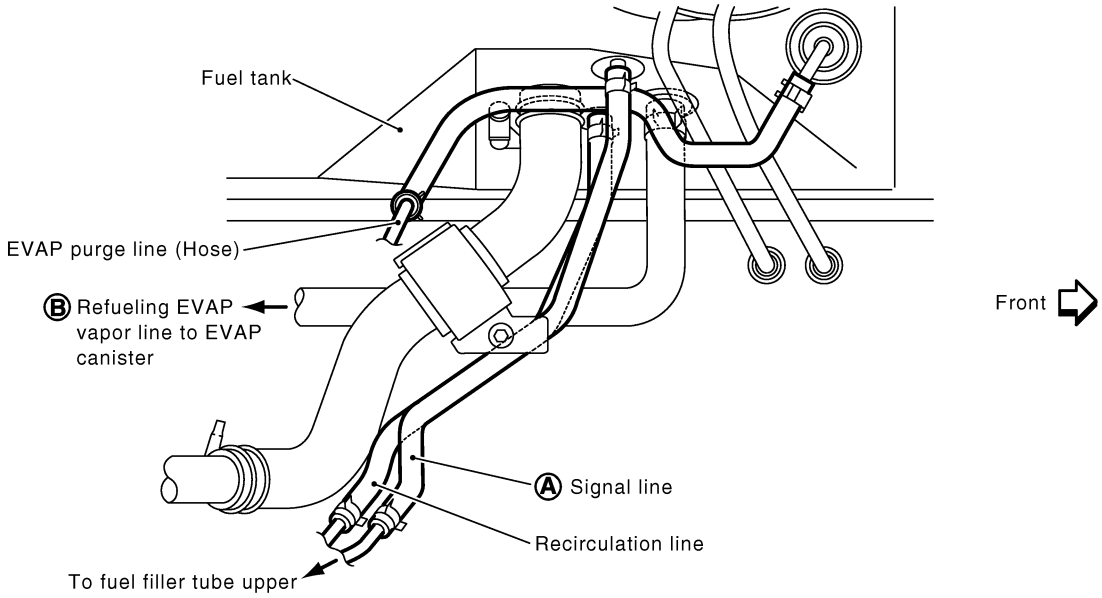

SEF706Z

OK or NG

OK (With CONSULT-II)	▶	GO TO 9.
OK (Without CONSULT-II)	▶	GO TO 10.
NG	▶	Replace refueling control valve with fuel tank.

9	CHECK REFUELING EVAP VAPOR CUT VALVE

With CONSULT-II

1. Remove fuel tank. Refer to ***FE-4***, "FUEL SYSTEM".
2. Drain fuel from the tank as follows:

a. Remove fuel feed hose located on the fuel gauge retainer.
b. Connect a spare fuel hose, one side to fuel gauge retainer where the hose was removed and the other side to a fuel container.
c. Drain fuel using "FUEL PUMP RELAY" in "ACTIVE TEST" mode with CONSULT-II.

3. Check refueling EVAP vapor cut valve for being stuck to close as follows.
   Blow air into the refueling EVAP vapor cut valve (from hose end B), and check that the air flows freely into the tank.
4. Check EVAP vapor cut valve for being stuck to open as follows.

a. Connect vacuum pump to hose ends A and B using a suitable 3-way connector.
b. Remove fuel gauge retainer with fuel gauge unit.
   Always replace O-ring with new one.
c. Put fuel tank upside down.
d. Apply vacuum pressure to both hose ends A and B [−13.3 kPa (−100 mmHg, −3.94 inHg)] with fuel gauge retainer remaining open and check that the pressure is applicable.

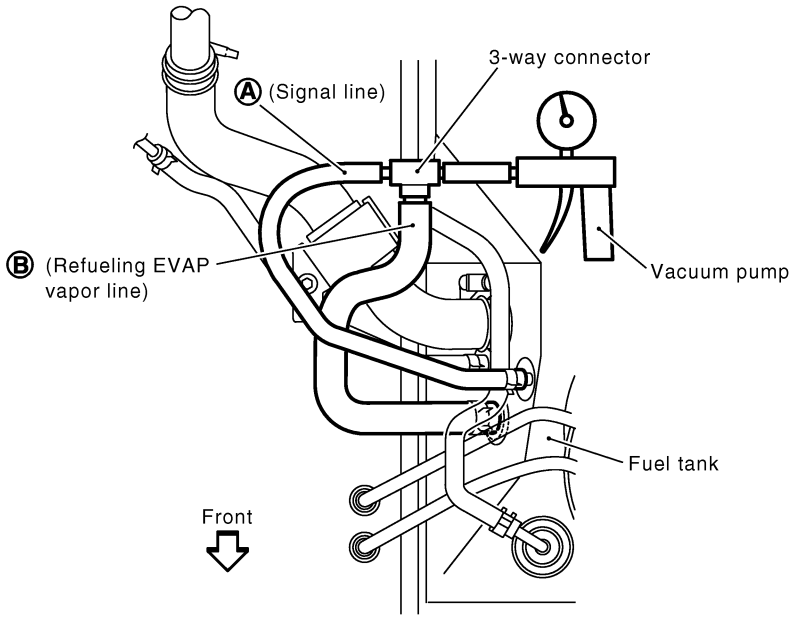

SEF707Z

OK or NG

OK	▶	GO TO 11.
NG	▶	Replace refueling EVAP vapor cut valve with fuel tank.

10	CHECK REFUELING EVAP VAPOR CUT VALVE

Without CONSULT-II

1. Remove fuel tank. Refer to ***FE-4***, "FUEL SYSTEM".
2. Drain fuel from the tank as follows:
a. Remove fuel gauge retainer.
b. Drain fuel from the tank using a hand pump into a fuel container.
3. Check refueling EVAP vapor cut valve for being stuck to close as follows.
   Blow air into the refueling EVAP vapor cut valve (from hose end B), and check that the air flows freely into the tank.
4. Check EVAP vapor cut valve for being stuck to open as follows.
a. Connect vacuum pump to hose ends A and B using a suitable 3-way connector.
b. Remove fuel gauge retainer with fuel gauge unit.
   Always replace O-ring with new one.
c. Put fuel tank upside down.
d. Apply vacuum pressure to both hose ends A and B [−13.3 kPa (−100 mmHg, −3.94 inHg)] with fuel gauge retainer remaining open and check that the pressure is applicable.

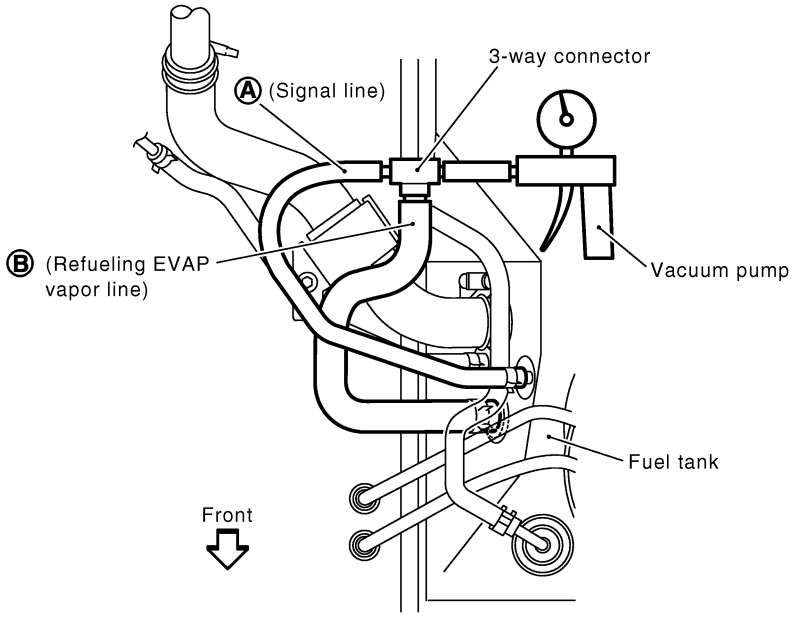

SEF707Z

OK or NG

OK	▶	GO TO 11.
NG	▶	Replace refueling EVAP vapor cut valve with fuel tank.

11	CHECK FUEL FILLER TUBE

Check filler neck tube and hose connected to the fuel tank for clogging, dents and cracks.

OK or NG

OK	▶	GO TO 12.
NG	▶	Replace fuel filler tube.

12	CHECK ONE-WAY FUEL VALVE-I

Check one-way valve for clogging.

OK or NG

OK	▶	GO TO 13.
NG	▶	Repair or replace one-way fuel valve with fuel tank.

13	CHECK ONE-WAY FUEL VALVE-II

1. Make sure that fuel is drained from the tank.
2. Remove fuel filler tube and hose.
3. Check one-way fuel valve for operation as follows.
   When a stick is inserted, the valve should open, when removing stick it should close.

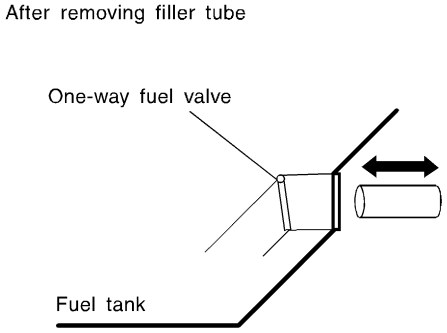

SEF665U

Do not drop any material into the tank.

OK or NG

OK	▶	**INSPECTION END**
NG	▶	Replace fuel filler tube or replace one-way fuel valve with fuel tank.

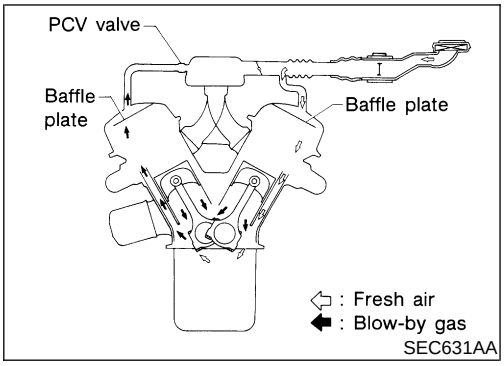

SEC631AA

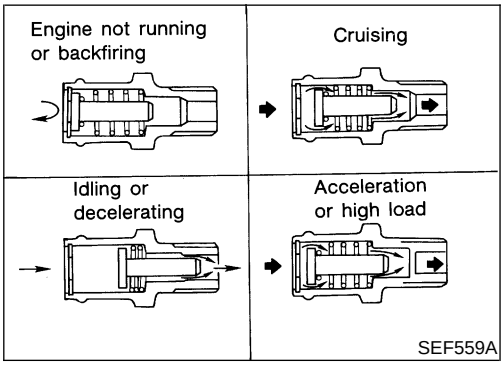

SEF559A

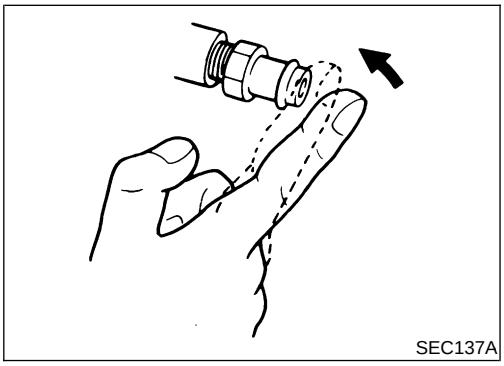

SEC137A

Positive Crankcase Ventilation

DESCRIPTION

NEEC0542

This system returns blow-by gas to the intake manifold.
The positive crankcase ventilation (PCV) valve is provided to conduct crankcase blow-by gas to the intake manifold.
During partial throttle operation of the engine, the intake manifold sucks the blow-by gas through the PCV valve.
Normally, the capacity of the valve is sufficient to handle any blow-by and a small amount of ventilating air.
The ventilating air is then drawn from the air inlet tubes into the crankcase. In this process the air passes through the hose connecting air inlet tubes to rocker cover.
Under full-throttle condition, the manifold vacuum is insufficient to draw the blow-by flow through the valve. The flow goes through the hose connection in the reverse direction.
On vehicles with an excessively high blow-by, the valve does not meet the requirement. This is because some of the flow will go through the hose connection to the air inlet tubes under all conditions.

INSPECTION

NEEC0543

PCV (Positive Crankcase Ventilation) Valve

NEEC0543S01

With engine running at idle, remove PCV valve ventilation hose from PCV valve; if the valve is working properly, a hissing noise will be heard as air passes through it and a strong vacuum should be felt immediately when a finger is placed over valve inlet.

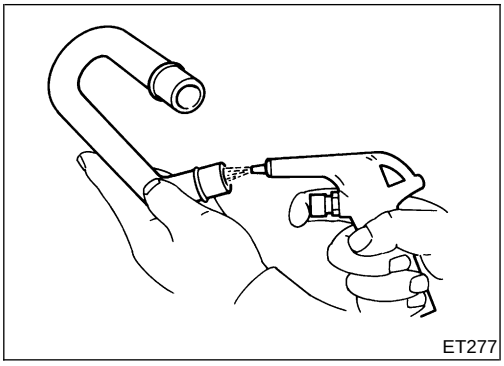

PCV Valve Ventilation Hose

NEEC0543S02

1. Check hoses and hose connections for leaks.
2. Disconnect all hoses and clean with compressed air. If any hose cannot be freed of obstructions, replace.

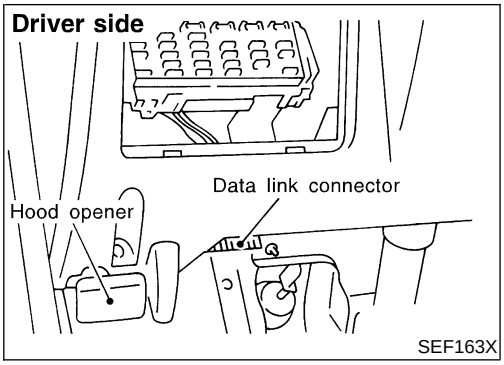

Fuel Pressure Release

NEEC0544

Before disconnecting fuel line, release fuel pressure from fuel line to eliminate danger.

WITH CONSULT-II

NEEC0544S01

1. Turn ignition switch ON.
2. Perform “FUEL PRESSURE RELEASE” in “WORK SUPPORT” mode with CONSULT-II.
3. Start engine.
4. After engine stalls, crank it two or three times to release all fuel pressure.
5. Turn ignition switch OFF.

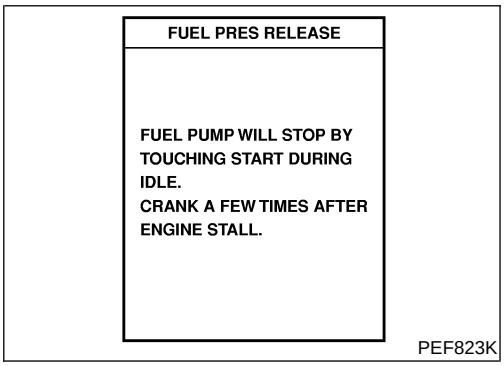

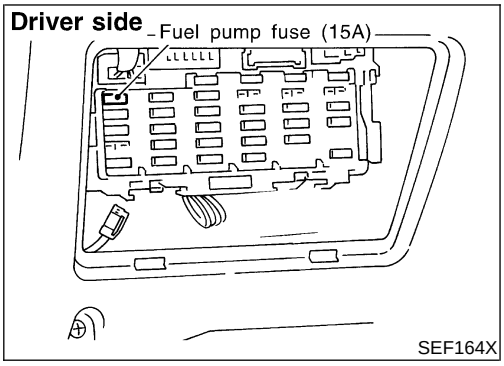

WITHOUT CONSULT-II

NEEC0544S02

1. Remove fuel pump fuse located in fuse box.
2. Start engine.
3. After engine stalls, crank it two or three times to release all fuel pressure.
4. Turn ignition switch OFF.
5. Reinstall fuel pump fuse after servicing fuel system.

Fuel Pressure Check

NEEC0545

- **Use Fuel Pressure Gauge J-44321 to check fuel pressure.**
- **Do not perform fuel pressure check with system operating. Fuel pressure gauge may indicate false readings.**

1. Release fuel pressure to zero.
2. Install the inline fuel quick disconnect fitting between the connection of the fuel feed hose (from tank) and the the fuel hose (to engine).

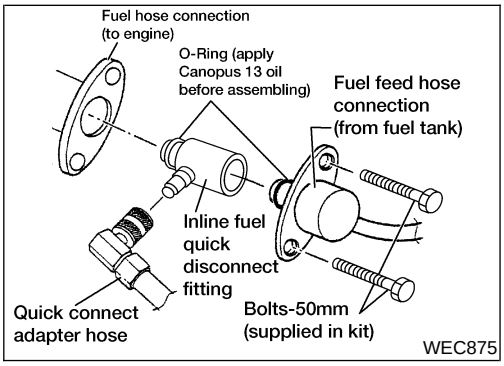

3. Connect the fuel pressure test gauge (quick connect adapter hose) to quick disconnect fitting.
4. Start engine and check for fuel leakage.
5. Read the indication of fuel pressure gauge.

At idling:

With vacuum hose connected

Approximately 235 kPa (2.4 kg/cm^2, 34 psi)

With vacuum hose disconnected

Approximately 294 kPa (3.0 kg/cm^2, 43 psi)

If results are unsatisfactory, perform Fuel Pressure Regulator Check.

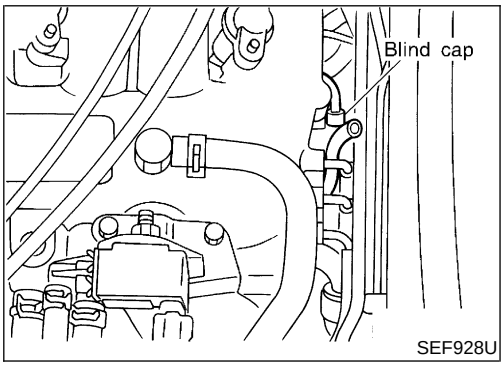

Fuel Pressure Regulator Check

NEEC0546

1. Stop engine and disconnect fuel pressure regulator vacuum hose from intake manifold.
2. Plug intake manifold with a blind cap.
3. Connect variable vacuum source to fuel pressure regulator.

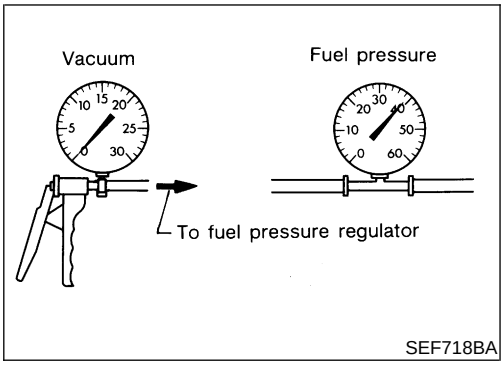

4. Start engine and read indication of fuel pressure gauge as vacuum is changed.

Fuel pressure should decrease as vacuum increases. If results are unsatisfactory, replace fuel pressure regulator.

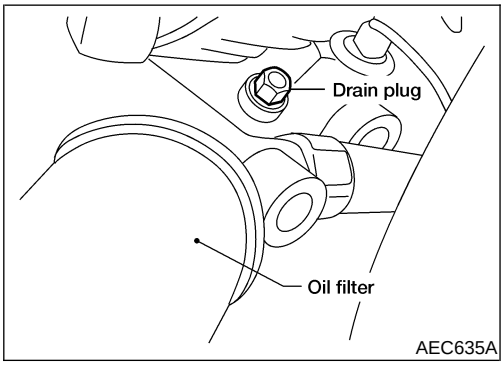

Injector

REMOVAL AND INSTALLATION

NEEC0547

1. Release fuel pressure to zero. Refer to EC-658.
2. Drain coolant.
3. Separate ASCD and accelerator control wire from intake manifold collector.
4. Remove intake manifold collector from engine.
   The following parts should be disconnected or removed.

a. Harness connectors for
- IACV-AAC valve
- IACV-FICD solenoid valve
- Throttle position sensor and closed throttle position switch assembly
- Ground harness

b. PCV valve ventilation hoses
c. Vacuum hoses for
- Brake booster
- Fuel pressure regulator

d. Air hoses from
- Air duct
- IACV-AAC valve

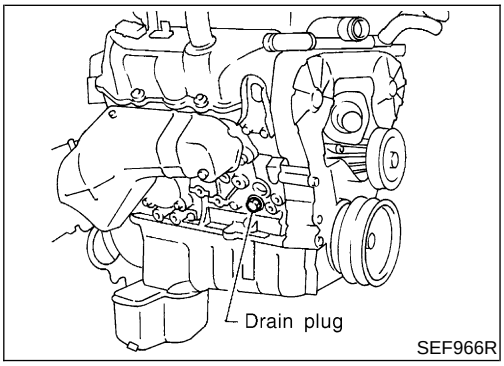

e. Water hoses for
- Throttle body
- Air relief plug

f. EVAP canister purge hose

5. Remove injector fuel tube assembly.
The following parts should be disconnected or removed.
- Vacuum hose for fuel pressure regulator
- Fuel feed and return hose
- All injectors harness connectors
- **Push injector tail piece.**
- **Do not pull on connector.**
- **Do not extract injector by pinching.**

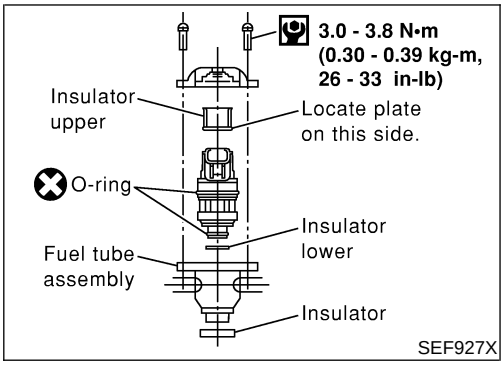

6. Push out any malfunctioning injector from injector fuel tube.
7. Replace or clean injector as necessary.
- **Always replace O-rings with new ones.**
- **Lubricate O-rings with engine oil.**

8. Install injector to injector fuel tube assembly.

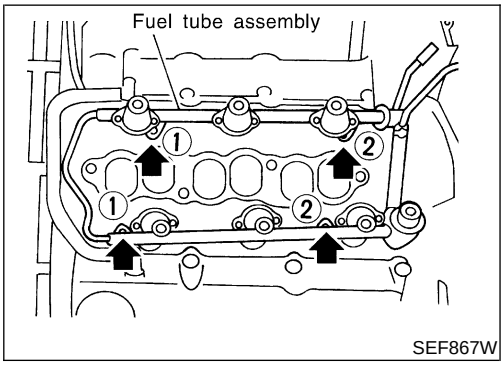

9. Install injectors with fuel tube assembly to intake manifold.
Tighten in numerical order shown in the figure.

a. First, tighten all bolts to 4.9 to 6.0 N·m (0.5 to 0.61 kg-m, 3.6 to 4.4 ft-lb).

b. Then, tighten all bolts to 10.8 to 14.7 N·m (1.1 to 1.5 kg-m, 8 to 11 ft-lb).

10. Reinstall any part removed in reverse order of removal.

CAUTION:
After properly connecting fuel hose to injector and fuel tube, check connection for fuel leakage.

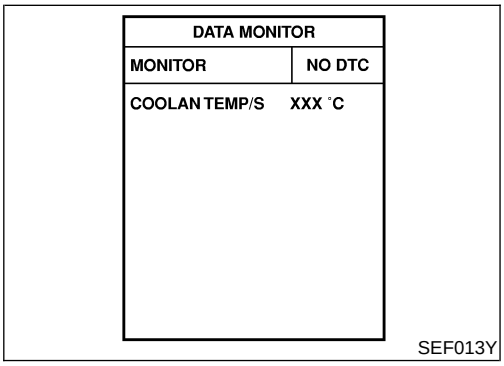

Fast Idle Cam (FIC)

INSPECTION AND ADJUSTMENT

NEEC0548

With CONSULT-II

NEEC0548S01

1. Turn ignition switch ON.
2. See "COOLAN TEMP/S" in "DATA MONITOR" mode with CONSULT-II.
3. When engine coolant temperature is 20 to 30°C (68 to 86°F), make sure that the center of mark **A** is aligned with mark **B** as shown in the figure.

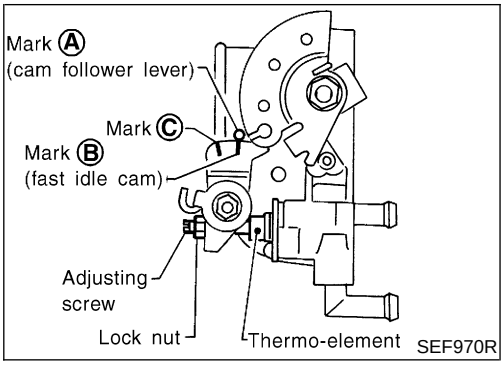

- If NG, adjust by turning adjusting screw.

  Lock nut:

  : 0.98 - 1.96 N·m (10 - 20 kg-cm, 8.7 - 17.4 in-lb)

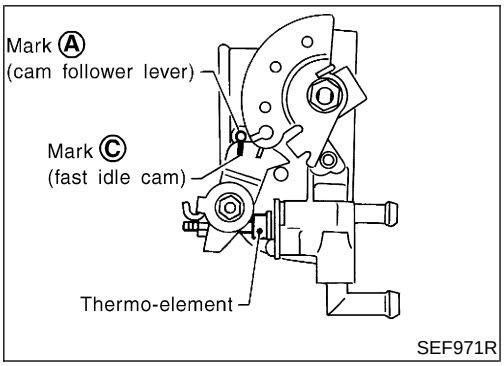

4. Start engine and warm it up.
5. When engine coolant temperature is 75 to 85°C (167 to 185°F), check the following.

- The center of mark **A** is aligned with mark **C**.
- The cam follower lever's roller is not touching the fast idle cam.
- If NG, replace thermo-element and perform the above inspection and adjustment again.

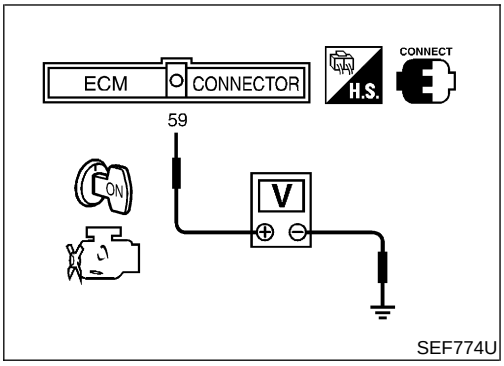

Without CONSULT-II

NEEC0548S02

1. Turn ignition switch ON.
2. Check voltage between ECM terminal 59 (Engine coolant temperature sensor signal) and ground.
3. When the voltage is between 3.12 to 3.52V, make sure that the center of mark **A** is aligned with mark **B** as shown in the figure.

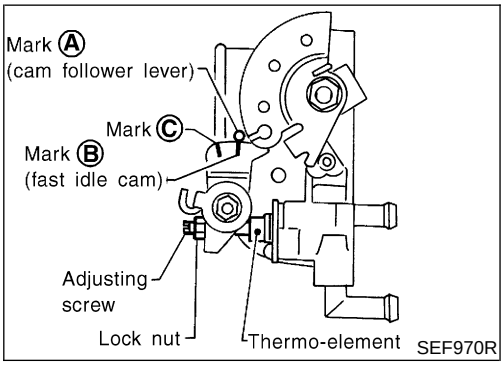

- If NG, adjust by turning adjusting screw.

  Lock nut:

  : 0.98 - 1.96 N·m (10 - 20 kg-cm, 8.7 - 17.4 in-lb)

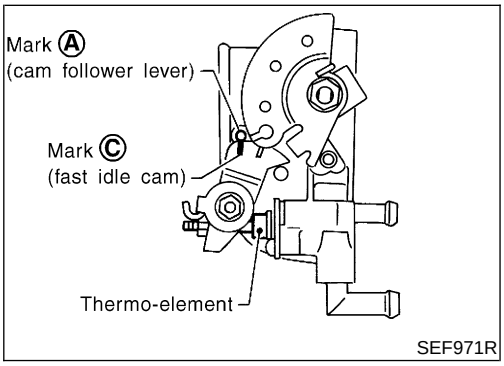

4. Start engine and warm it up.
5. When the voltage is between 1.10 to 1.36V, check the following.

- The center of mark **A** is aligned with mark **C**.
- The cam follower lever's roller is not touching the fast idle cam.
- If NG, replace thermo-element and perform the above inspection and adjustment again.

Idle Speed/Ignition Timing/Idle Mixture Ratio Adjustment

NEEC0549

PREPARATION

NEEC0549S01

1) Make sure that the following parts are in good order.
- Battery
- Ignition system
- Engine oil and coolant levels
- Fuses
- ECM harness connector
- Vacuum hoses
- Air intake system
  (Oil filler cap, oil level gauge, etc.)
- Fuel pressure
- Engine compression
- Throttle valve
- Evaporative emission system

2) On air conditioner equipped models, checks should be carried out while the air conditioner is OFF.
3) On automatic transmission equipped models, when checking idle rpm, ignition timing and mixture ratio, checks should be carried out while shift lever is in “N” position.
4) When measuring “CO” percentage, insert probe more than 40 cm (15.7 in) into tail pipe.
5) Turn off headlamps, heater blower, rear defogger.
6) Keep front wheels pointed straight ahead.
7) Make the check after the cooling fan has stopped.

Overall Inspection Sequence

NEEC0549S0101

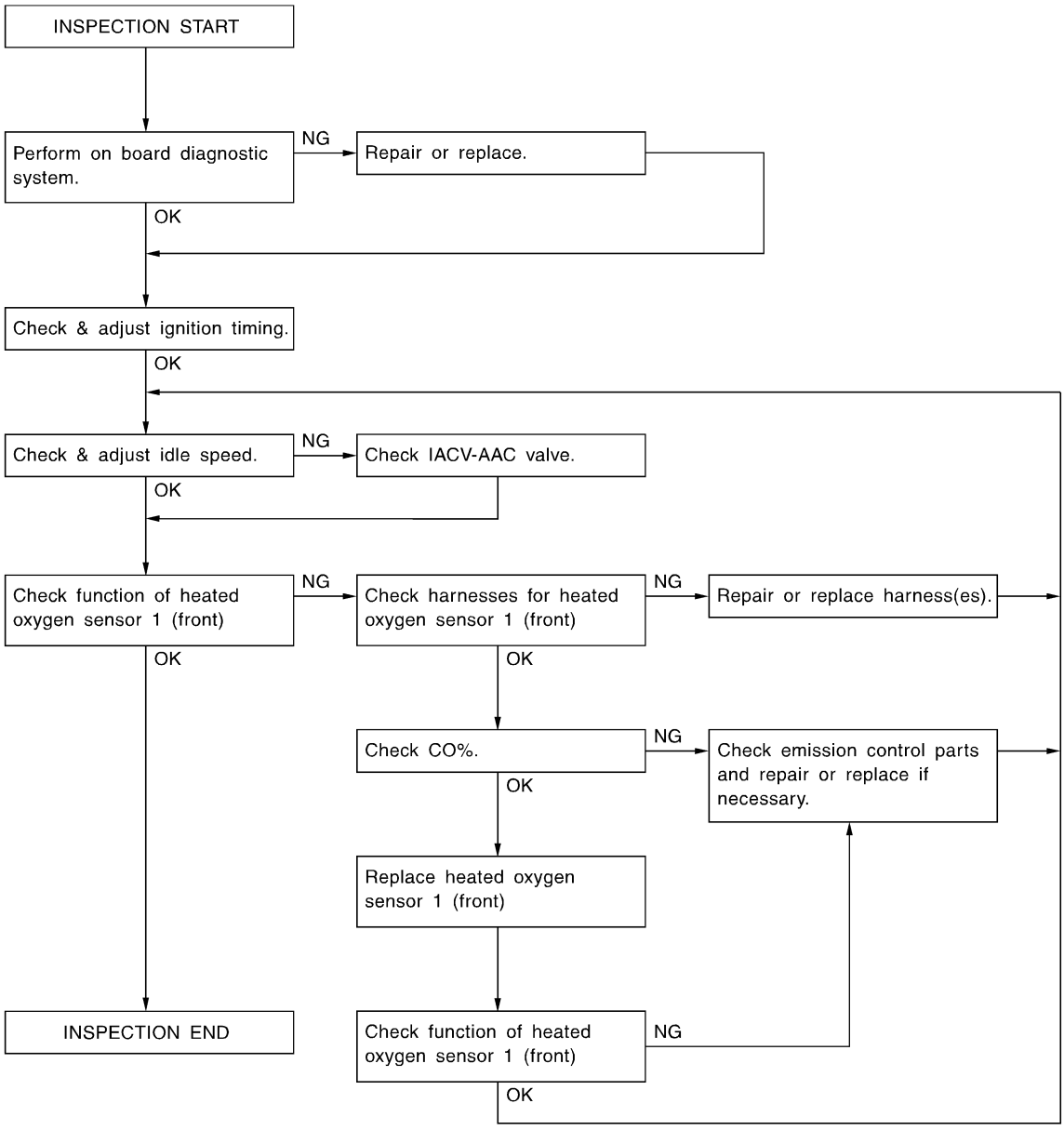

SEF554Y

NOTE:
If a vehicle contains a part which is operating outside of design specifications with no MIL illumination, the part shall not be replaced prior to emission testing unless it is determined that the part has been tampered with or abused in such a way that the diagnostic system cannot reasonably be expected to detect the resulting malfunction.

INSPECTION PROCEDURE

=NEEC0549S02

1	INSPECTION START

1. Visually check the following:
- Air cleaner clogging
- Hoses and ducts for leaks
- Electrical connectors
- Gasket
- Throttle valve and throttle position sensor operation

2. Start engine and warm it up until engine coolant temperature indicator points to the middle of gauge. Ensure engine stays below 1,000 rpm.

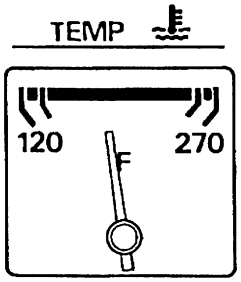

SEF976U

3. Open engine hood and run engine at about 2,000 rpm for about 2 minutes under no-load.

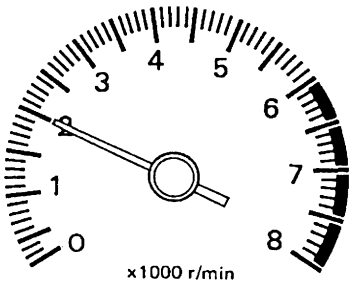

SEF977U

4. Make sure that no DTC is displayed with CONSULT-II or GST.

OK or NG

OK	▶	GO TO 2.
NG	▶	1. Repair or replace components as necessary. 2. GO TO 2.

2 CHECK IGNITION TIMING

1. Run engine at about 2,000 rpm for about 2 minutes under no-load.
2. Rev engine (2,000 to 3,000 rpm) two or three times under no-load, then run engine at idle speed.

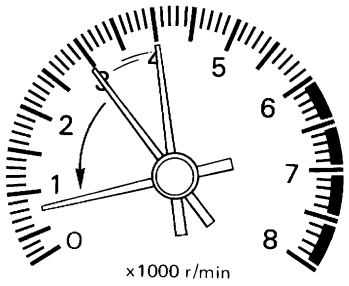

SEF978U

3. Turn off engine and disconnect throttle position sensor harness connector.

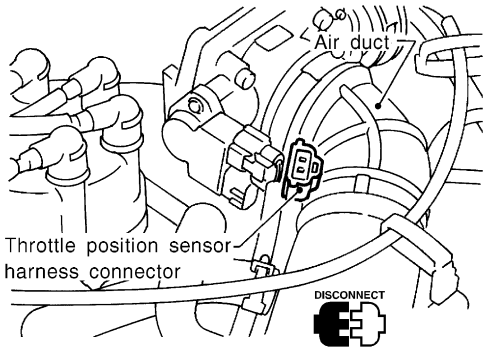

SEF975R

4. Start and rev engine (2,000 to 3,000 rpm) two or three times under no-load, then run at idle speed.
5. Check ignition timing with a timing light.

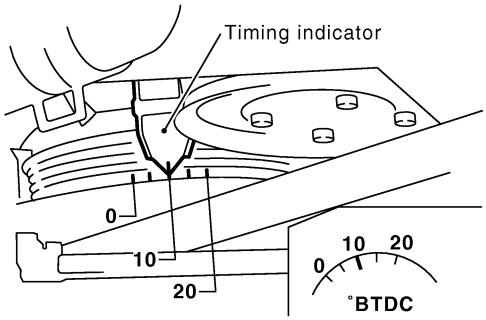

SEF927Z

10°±1° BTDC (in "P" or "N" position)

OK or NG

OK	▶	GO TO 4.
NG	▶	GO TO 3.

3	ADJUST IGNITION TIMING

1. Adjust ignition timing by turning distributor after loosening securing bolts.
2. Turn off engine and connect throttle position sensor harness connector to throttle position sensor.

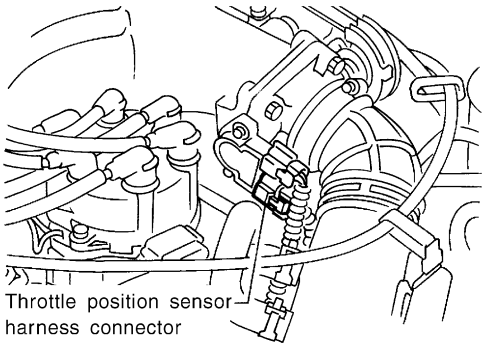

SEF972R

▶	GO TO 2.

4	CHECK BASE IDLE SPEED

With CONSULT-II

1. Read idle speed in "DATA MONITOR" mode with CONSULT-II.

DATA MONITOR	
MONITOR	NO DTC
ENG SPEED	XXX rpm

SEF058Y

700±50 rpm (in "P" or "N" position)

Without CONSULT-II

1. Check idle speed.

700±50 rpm (in "P" or "N" position)

OK or NG

OK	▶	GO TO 6.
NG	▶	GO TO 5.

5	ADJUST BASE IDLE SPEED

1. Rev engine (2,000 to 3,000 rpm) 2 or 3 times under no-load then run engine at idle speed.
2. Adjust idle speed by turning idle speed adjusting screw.

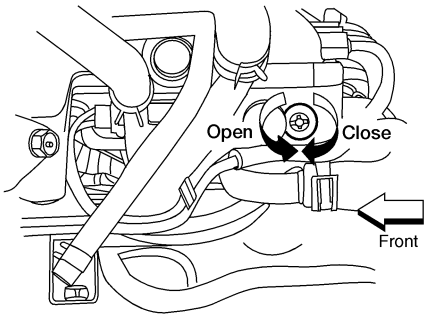

LEC513

700±50 rpm (in "P" or "N" position)

▶	GO TO 6.

6	CHECK TARGET IDLE SPEED

With CONSULT-II

1. Turn off engine and connect throttle position sensor harness connector.
2. Start and rev engine (2,000 to 3,000 rpm) 2 or 3 times under no-load then run at idle speed.
3. Read idle speed in "DATA MONITOR" mode with CONSULT-II.

DATA MONITOR	
MONITOR	NO DTC
ENG SPEED	XXX rpm

SEF058Y

750±50 rpm (in "P" or "N" position)

Without CONSULT-II

1. Turn off engine and connect throttle position sensor harness connector.
2. Start and rev engine (2,000 to 3,000 rpm) 2 or 3 times under no-load then run at idle speed.
3. Check idle speed.

750±50 rpm (in "P" or "N" position)

OK or NG

OK (With CONSULT-II) ▶	GO TO 8.
OK (Without CONSULT-II) ▶	GO TO 9.
NG ▶	GO TO 7.

7	DETECT MALFUNCTIONING PART
Check the following. 1. Check IACV-AAC valve and replace if necessary. Refer to EC-1048. 2. Check IACV-AAC valve harness and repair if necessary. Refer to EC-1048. 3. Check ECM function by substituting another known-good ECM. (ECM may be the cause of a problem, but this is rarely the case.)	
With CONSULT-II ▶	GO TO 8.
Without CONSULT-II ▶	GO TO 9.

8	CHECK HEATED OXYGEN SENSOR 1 (FRONT) (BANK 2) SIGNAL
With CONSULT-II 1. Run engine at about 2,000 rpm for about 2 minutes under no-load. 2. See "HO2S1 MNTR (B2)" in "DATA MONITOR" mode. 3. Running engine at 2,000 rpm under no-load (engine is warmed up to normal operating temperature.), check that the monitor fluctuates between "LEAN" and "RICH" more than 5 times during 10 seconds.	

DATA MONITOR	
MONITOR	NO DTC
ENG SPEED	XXX rpm
HO2S1 MNTR (B1)	LEAN
HO2S1 MNTR (B2)	RICH

1 time: RICH → LEAN → RICH
2 times: RICH → LEAN → RICH → LEAN → RICH

SEF945Y

OK or NG

OK ▶	GO TO 12.
NG (Monitor does not fluctuate.) ▶	GO TO 17.
NG (Monitor fluctuates less than 5 times.) ▶	GO TO 10.

9	CHECK HEATED OXYGEN SENSOR 1 (FRONT) (BANK 2) SIGNAL
Without CONSULT-II 1. Run engine at about 2,000 rpm for about 2 minutes under no-load. 2. Set voltmeter probe between ECM terminal 62 and ground. 3. Make sure that the voltage fluctuates between 0 - 0.3V and 0.6 - 1.0V more than 5 times during 10 seconds at 2,000 rpm. **1 time: 0 - 0.3V → 0.6 - 1.0V → 0 - 0.3V** **2 times: 0 - 0.3V → 0.6 - 1.0V → 0 - 0.3V → 0.6 - 1.0V → 0 - 0.3V**	

OK or NG

OK ▶	GO TO 12.
NG (Voltage does not fluctuate.) ▶	GO TO 17.
NG (Voltage fluctuates less than 5 times.) ▶	GO TO 10.

10	CHECK HEATED OXYGEN SENSOR 1 (FRONT) (BANK 2) SIGNAL

With CONSULT-II

1. Stop engine.
2. Replace heated oxygen sensor 1 (front) (bank 2).
3. Start engine and warm it up to normal operating temperature.
4. Run engine at approx. 2,000 rpm for approx. 2 minutes under no-load.
5. See "HO2S1 MNTR (B2)" in "DATA MONITOR" mode.
6. Running engine at 2,000 rpm under no-load (engine is warmed up to normal operating temperature.), check that the monitor fluctuates between "LEAN" and "RICH" more than 5 times during 10 seconds.
   1 time: RICH → LEAN → RICH
   2 times: RICH → LEAN → RICH → LEAN → RICH

Without CONSULT-II

1. Stop engine.
2. Replace heated oxygen sensor 1 (front) (bank 2).
3. Start engine and warm it up to normal operating temperature.
4. Run engine at approx. 2,000 rpm for approx. 2 minutes under no-load.
5. Set voltmeter probe between ECM terminal 62 and ground.
6. Make sure that the voltage fluctuates between 0 - 0.3V and 0.6 - 1.0V more than 5 times during 10 seconds at 2,000 rpm.
   1 time: 0 - 0.3V → 0.6 - 1.0V → 0 - 0.3V
   2 times: 0 - 0.3V → 0.6 - 1.0V → 0 - 0.3V → 0.6 - 1.0V → 0 - 0.3V

OK or NG

OK (With CONSULT-II)	▶	GO TO 12.
OK (Without CONSULT-II)	▶	GO TO 13.
NG	▶	GO TO 11.

11	DETECT MALFUNCTIONING PART

Check the following.

1. Check fuel pressure regulator. Refer to EC-659.
2. Check mass air flow sensor and its circuit. Refer to EC-760.
3. Check injector and its circuit. Refer to EC-1190.
   Clean or replace if necessary.
4. Check engine coolant temperature sensor and its circuit. Refer to EC-794.
5. Check ECM function by substituting another known good ECM.
   (ECM may be the cause of a problem, but this is rarely the case.)

	▶	GO TO 2.

12	CHECK HEATED OXYGEN SENSOR 1 (FRONT) (BANK 1) SIGNAL

With CONSULT-II

1. See "HO2S1 (B1)" in "DATA MONITOR" mode.
2. Maintaining engine at 2,000 rpm under no-load (engine is warmed up to normal operating temperature.), check that the monitor fluctuates between "LEAN" and "RICH" more than 5 times during 10 seconds.

DATA MONITOR	
MONITOR	NO DTC
ENG SPEED	XXX rpm
HO2S1 MNTR (B1)	LEAN
HO2S1 MNTR (B2)	RICH

1 time: RICH → LEAN → RICH
2 times: RICH → LEAN → RICH → LEAN → RICH

SEF945Y

OK or NG

OK	▶	**INSPECTION END**
NG (Monitor does not fluctuate.)	▶	GO TO 16.
NG (Monitor fluctuates less than 5 times.)	▶	GO TO 14.

13	CHECK HEATED OXYGEN SENSOR 1 (FRONT) (BANK 1) SIGNAL

Without CONSULT-II

1. Set voltmeter probe between ECM terminal 63 and ground.
2. Make sure that the voltage fluctuates between 0 - 0.3V and 0.6 - 1.0V more than 5 times during 10 seconds at 2,000 rpm.
   1 time: 0 - 0.3V → 0.6 - 1.0V → 0 - 0.3V
   2 times: 0 - 0.3V → 0.6 - 1.0V → 0 - 0.3V → 0.6 - 1.0V → 0 - 0.3V

OK or NG

OK	▶	**INSPECTION END**
NG (Voltage does not fluctuate.)	▶	GO TO 16.
NG (Voltage fluctuates less than 5 times.)	▶	GO TO 14.

14	CHECK HEATED OXYGEN SENSOR 1 (FRONT) (BANK 1) SIGNAL

With CONSULT-II

1. Stop engine.
2. Replace heated oxygen sensor 1 (front) (bank 1).
3. Start engine and warm it up to normal operating temperature.
4. Run engine at approx. 2,000 rpm for approx. 2 minutes under no-load.
5. See "HO2S1 MNTR (B1)" in "DATA MONITOR" mode.
6. Maintaining engine at 2,000 rpm under no-load (engine is warmed up to normal operating temperature.), check that the monitor fluctuates between "LEAN" and "RICH" more than 5 times during 10 seconds.
   1 time: RICH → LEAN → RICH
   2 times: RICH → LEAN → RICH → LEAN → RICH

Without CONSULT-II

1. Stop engine.
2. Replace heated oxygen sensor 1 (front) (bank 1).
3. Start engine and warm it up to normal operating temperature.
4. Run engine at approx. 2,000 rpm for approx. 2 minutes under no-load.
5. Set voltmeter probe between ECM terminal 63 and ground.
6. Make sure that the voltage fluctuates between 0 - 0.3V and 0.6 - 1.0V more than 5 times during 10 seconds at 2,000 rpm.
   1 time: 0 - 0.3V → 0.6 - 1.0V → 0 - 0.3V
   2 times: 0 - 0.3V → 0.6 - 1.0V → 0 - 0.3V → 0.6 - 1.0V → 0 - 0.3V

OK or NG

OK	▶	**INSPECTION END**
NG	▶	GO TO 15.

15	DETECT MALFUNCTIONING PART

Check the following.

1. Check fuel pressure regulator. Refer to EC-659.
2. Check mass air flow sensor and its circuit. Refer to EC-760.
3. Check injector and its circuit. Refer to EC-1190.
   Clean or replace if necessary.
4. Check engine coolant temperature sensor and its circuit. Refer to EC-794.
5. Check ECM function by substituting another known good ECM.
   (ECM may be the cause of a problem, but this is rarely the case.)

	▶	GO TO 2.

16	CHECK HEATED OXYGEN SENSOR 1 (FRONT) (BANK 1) HARNESS

1. Turn off engine and disconnect battery ground cable.
2. Disconnect ECM harness connector.
3. Disconnect heated oxygen sensor 1 (front) (bank 1) harness connector.
4. Check harness continuity between ECM terminal 50 and heated oxygen sensor 1 (front) (bank 1) harness connector.
   Continuity should exist.

OK or NG

OK	▶	1. Connect ECM harness connector. 2. GO TO 18.
NG	▶	1. Repair or replace harness. 2. GO TO 8. (With CONSULT-II) GO TO 9. (Without CONSULT-II)

17	CHECK HEATED OXYGEN SENSOR 1 (FRONT) (BANK 2) HARNESS

1. Turn off engine and disconnect battery ground cable.
2. Disconnect ECM harness connector.
3. Disconnect heated oxygen sensor 1 (front) (bank 2) harness connector.
4. Check harness continuity between ECM terminal 51 and heated oxygen sensor 1 (front) (bank 2) harness connector.
   Continuity should exist.

OK or NG

OK	▶	1. Connect ECM harness connector. 2. GO TO 18.
NG	▶	1. Repair or replace harness. 2. GO TO 8. (With CONSULT-II) GO TO 9. (Without CONSULT-II)

18	PREPARATION FOR "CO" % CHECK

With CONSULT-II

1. Select "COOLANT TEMP" in "ACTIVE TEST" mode.
2. Set "COOLANT TEMP" to 5°C (41°F) by touching "DWN" and "Qd".

ACTIVE TEST	
ENG COOLANT TEMP	XXX °C
MONITOR	
ENG SPEED	XXX rpm
INJ PULSE-B1	XXX msec
IGN TIMING	XXX BTDC

SEF172Y

Without CONSULT-II

1. Disconnect engine coolant temperature sensor harness connector.
2. Connect a resistor (4.4 kΩ) between terminals of engine coolant temperature sensor harness connector.

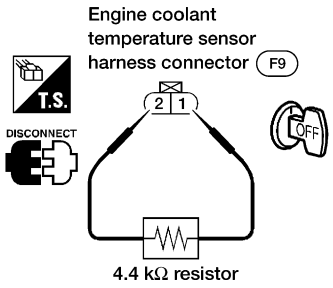

AEC036B

	▶	GO TO 19.

19	CHECK "CO" %

1. Start engine and warm it up until engine coolant temperature indicator points to the middle of gauge.

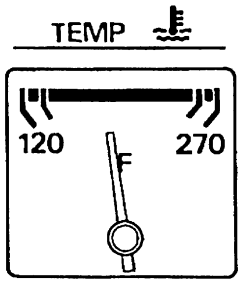

SEF976U

2. Rev engine (2,000 to 3,000 rpm) two or three times under no-load, then run engine at idle speed.

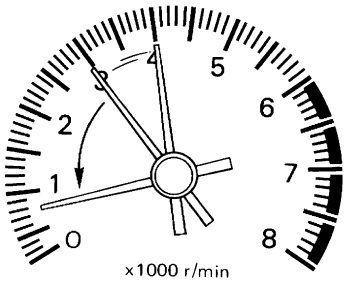

SEF978U

3. Check "CO" %.
   Idle CO: 1.5 - 9.5%
4. ⊗ **Without CONSULT-II**
   After checking CO%,

a. Disconnect the resistor from terminals of engine coolant temperature sensor.
b. Connect engine coolant temperature sensor harness connector to engine coolant temperature sensor.

OK or NG

OK	▶	1. Replace front heated oxygen sensor LH. 2. GO TO 10.
NG	▶	GO TO 20.

20	DETECT MALFUNCTIONING PART

Check the following.
1. Connect front heated oxygen sensor harness connectors to front heated oxygen sensors.
2. Check fuel pressure regulator. Refer to EC-659.
3. Check mass air flow sensor and its circuit. Refer to EC-760.
4. Check injector and its circuit. Refer to EC-1190.
   Clean or replace if necessary.
5. Check engine coolant temperature sensor and its circuit. Refer to EC-794.
6. Check ECM function by substituting another known good ECM.
   (ECM may be the cause of a problem, but this is rarely the case.)

	▶	GO TO 2.

Introduction

NEEC0550

The ECM has an on board diagnostic system, which detects malfunctions related to engine sensors or actuators. The ECM also records various emission-related diagnostic information including:

Emission-related diagnostic information	SAE Mode
Diagnostic Trouble Code (DTC)	Mode 3 of SAE J1979
Freeze Frame data	Mode 2 of SAE J1979
System Readiness Test (SRT) code	Mode 1 of SAE J1979
1st Trip Diagnostic Trouble Code (1st Trip DTC)	Mode 7 of SAE J1979
1st Trip Freeze Frame data	
Test values and Test limits	Mode 6 of SAE J1979

The above information can be checked using procedures listed in the table below.

X: Applicable —: Not applicable

	DTC	1st trip DTC	Freeze Frame data	1st trip Freeze Frame data	SRT code	Test value
CONSULT-II	X	X	X	X	X	—
GST	X	X*1	X	—	X	X

*1: 1st trip DTCs for self-diagnoses concerning SRT items cannot be shown on the GST display.

The malfunction indicator lamp (MIL) on the instrument panel lights up when the same malfunction is detected in two consecutive trips (Two trip detection logic), or when the ECM enters fail-safe mode. (Refer to EC-730.)

Two Trip Detection Logic

NEEC0551

When a malfunction is detected for the first time, 1st trip DTC and 1st trip Freeze Frame data are stored in the ECM memory. The MIL will not light up at this stage. <1st trip>
If the same malfunction is detected again during the next drive, the DTC and Freeze Frame data are stored in the ECM memory, and the MIL lights up. The MIL lights up at the same time when the DTC is stored. <2nd trip> The “trip” in the “Two Trip Detection Logic” means a driving mode in which self-diagnosis is performed during vehicle operation. Specific on board diagnostic items will cause the ECM to light up or blink the MIL, and store DTC and Freeze Frame data, even in the 1st trip, as shown below.

X: Applicable —: Not applicable

Items	MIL				DTC		1st trip DTC	
	1st trip		2nd trip		1st trip displaying	2nd trip displaying	1st trip displaying	2nd trip displaying
	Blinking	Lighting up	Blinking	Lighting up				
Coolant overtemperature enrichment protection — DTC: P0217	—	X	—	—	X	—	X	—
Misfire (Possible three way catalyst damage) — DTC: P0300 - P0306 is being detected	X	—	—	—	—	—	X	—
Misfire (Possible three way catalyst damage) — DTC: P0300 - P0306 is being detected	—	—	X	—	—	X	—	—
Closed loop control — DTC: P1148, P1168	—	X	—	—	X	—	X	—
Fail-safe items (Refer to EC-730.)	—	X	—	—	X*1	—	X*1	—
Except above	—	—	—	X	—	X	X	—

*1: Except “ECM”

Emission-related Diagnostic Information

NEEC0552

DTC AND 1ST TRIP DTC

NEEC0552S01

The 1st trip DTC (whose number is the same as the DTC number) is displayed for the latest self-diagnostic result obtained. If the ECM memory was cleared previously, and the 1st trip DTC did not reoccur, the 1st trip DTC will not be displayed.

If a malfunction is detected during the 1st trip, the 1st trip DTC is stored in the ECM memory. The MIL will not light up (two trip detection logic). If the same malfunction is not detected in the 2nd trip (meeting the required driving pattern), the 1st trip DTC is cleared from the ECM memory. If the same malfunction is detected in the 2nd trip, both the 1st trip DTC and DTC are stored in the ECM memory and the MIL lights up. In other words, the DTC is stored in the ECM memory and the MIL lights up when the same malfunction occurs in two consecutive trips. If a 1st trip DTC is stored and a non-diagnostic operation is performed between the 1st and 2nd trips, only the 1st trip DTC will continue to be stored. For malfunctions that blink or light up the MIL during the 1st trip, the DTC and 1st trip DTC are stored in the ECM memory.

Procedures for clearing the DTC and the 1st trip DTC from the ECM memory are described in “HOW TO ERASE EMISSION-RELATED DIAGNOSTIC INFORMATION”, EC-687.

For malfunctions in which 1st trip DTCs are displayed, refer to EC-684. These items are required by legal regulations to continuously monitor the system/component. In addition, the items monitored non-continuously are also displayed on CONSULT-II.

1st trip DTC is specified in Mode 7 of SAE J1979. 1st trip DTC detection occurs without lighting up the MIL and therefore does not warn the driver of a problem. However, 1st trip DTC detection will not prevent the vehicle from being tested, for example during Inspection/Maintenance (I/M) tests.

When a 1st trip DTC is detected, check, print out or write down and erase (1st trip) DTC and Freeze Frame data as specified in “Work Flow” procedure Step II, refer to EC-713. Then perform “DTC Confirmation Procedure” or “Overall Function Check” to try to duplicate the problem. If the malfunction is duplicated, the item requires repair.

How to Read DTC and 1st Trip DTC

NEEC0552S0101

DTC and 1st trip DTC can be read by the following methods.

With CONSULT-II

With GST

CONSULT-II or GST (Generic Scan Tool) Examples: P0340, P1320, P0705, P0750, etc.

These DTCs are prescribed by SAE J2012.

(CONSULT-II also displays the malfunctioning component or system.)

- **1st trip DTC No. is the same as DTC No.**
- **Output of a DTC indicates a malfunction. However, GST do not indicate whether the malfunction is still occurring or has occurred in the past and has returned to normal. CONSULT-II can identify malfunction status as shown below. Therefore, using CONSULT-II (if available) is recommended.**

A sample of CONSULT-II display for DTC and 1st trip DTC is shown below. DTC or 1st trip DTC of a malfunction is displayed in SELF-DIAGNOSTIC RESULTS mode of CONSULT-II. Time data indicates how many times the vehicle was driven after the last detection of a DTC.

If the DTC is being detected currently, the time data will be “0”.

If a 1st trip DTC is stored in the ECM, the time data will be “[1t]”.

DTC display

SELF DIAG RESULTS	
DTC RESULTS	TIME
MAF SEN/CIRCUIT [P0100]	0

1st trip DTC display

SELF DIAG RESULTS	
DTC RESULTS	TIME
MAF SEN/CIRCUIT [P0100]	1t

SEF992X

FREEZE FRAME DATA AND 1ST TRIP FREEZE FRAME DATA

NEEC0552S02

The ECM records the driving conditions such as fuel system status, calculated load value, engine coolant temperature, short term fuel trim, long term fuel trim, engine speed, vehicle speed and absolute pressure at the moment a malfunction is detected.

Data which are stored in the ECM memory, along with the 1st trip DTC, are called 1st trip freeze frame data.

The data, stored together with the DTC data, are called freeze frame data and displayed on CONSULT-II or GST. The 1st trip freeze frame data can only be displayed on the CONSULT-II screen, not on the GST. For details, see EC-700.
Only one set of freeze frame data (either 1st trip freeze frame data or freeze frame data) can be stored in the ECM. 1st trip freeze frame data is stored in the ECM memory along with the 1st trip DTC. There is no priority for 1st trip freeze frame data and it is updated each time a different 1st trip DTC is detected. However, once freeze frame data (2nd trip detection/MIL on) is stored in the ECM memory, 1st trip freeze frame data is no longer stored. Remember, only one set of freeze frame data can be stored in the ECM. The ECM has the following priorities to update the data.

Priority	Items	
1	Freeze frame data	Misfire — DTC: P0300 - P0306 Fuel Injection System Function — DTC: P0171, P0172, P0174, P0175
2		Except the above items (Includes A/T related items)
3	1st trip freeze frame data	

For example, the EGR malfunction (Priority: 2) was detected and the freeze frame data was stored in the 2nd trip. After that when the misfire (Priority: 1) is detected in another trip, the freeze frame data will be updated from the EGR malfunction to the misfire. The 1st trip freeze frame data is updated each time a different malfunction is detected. There is no priority for 1st trip freeze frame data. However, once freeze frame data is stored in the ECM memory, 1st trip freeze data is no longer stored (because only one freeze frame data or 1st trip freeze frame data can be stored in the ECM). If freeze frame data is stored in the ECM memory and freeze frame data with the same priority occurs later, the first (original) freeze frame data remains unchanged in the ECM memory.
Both 1st trip freeze frame data and freeze frame data (along with the DTCs) are cleared when the ECM memory is erased. Procedures for clearing the ECM memory are described in "HOW TO ERASE EMISSION-RELATED DIAGNOSTIC INFORMATION", EC-687.

SYSTEM READINESS TEST (SRT) CODE

NEEC0552S03

System Readiness Test (SRT) code is specified in Mode 1 of SAE J1979.
As part of enhanced emissions test for Inspection and Maintenance (I/M), certain states require that the status of srt be used to indicate whether the ECM has completed self-diagnosis of major emission systems and components. Completion must be verified in order for the emissions inspection to proceed.
If a vehicle is rejected for a State emissions inspection due to one or more SRT items indicating "INCMP", use the information in this service manual to set the SRT to "CMPLT".
In most cases, the ECM will automatically complete its self-diagnosis cycle during normal usage and the SRT status will indicate "CMPLT" for each application system. Once set as "CMPLT", the SRT status remains "CMPLT" until the self-diagnosis memory is erased.
Occasionally, certain portions of the self-diagnostic test may not be completed as a result of the customer's normal driving pattern and the SRT will indicate "INCMP" for these items.

NOTE:
The SRT will also indicate "INCMP" if the self-diagnosis memory is erased for any reason or if the ECM memory power supply is interrupted for several hours.

If, during the state emissions inspection, the SRT indicates "CMPLT" for all test items, the inspector will continue with the emissions test. However, if the SRT indicates "INCMP" for one or more of the SRT items, the vehicle is returned to the customer untested.

NOTE:
If MIL is "ON" during the state emissions inspection, the vehicle is also returned to the customer untested even though the SRT indicates "CMPLT" for all test items. Therefore, it is important to check SRT ("CMPLT") and DTC (No DTCs) before the inspection.

SRT Item

=NEEC0552S0314

The following table shows required self-diagnostic items to set the SRT to "CMPLT".

SRT item (CONSULT-II indication)	Performance Priority *	Required self-diagnostic items to set the SRT to "CMPLT"	Corresponding DTC No.
CATALYST	3	Three way catalyst function	P0420, P0430
EVAP SYSTEM	2	EVAP control system (small leak) (negative pressure)	P0440
	3	EVAP control system (very small leak) (negative pressure)/ (positive pressure)	P1441
	3	EVAP control system purge flow monitoring	P1447
O2 SENSOR	3	Heated oxygen sensor 1 (front) (circuit)	P0130, P0150
		Heated oxygen sensor 1 (front) (lean shift monitoring)	P0131, P0151
		Heated oxygen sensor 1 (front) (rich shift monitoring)	P0132, P0152
		Heated oxygen sensor 1 (front) (response monitoring)	P0133, P0153
		Heated oxygen sensor 1 (front) (high voltage)	P0134, P0154
		Heated oxygen sensor 2 (rear) (min. voltage monitoring)	P0137, P0157
		Heated oxygen sensor 2 (rear) (max. voltage monitoring)	P0138, P0158
		Heated oxygen sensor 2 (rear) (response monitoring)	P0139, P0159
		Heated oxygen sensor 2 (rear) (high voltage)	P0140, P0160
O2 SEN HEATER	3	Front heated oxygen sensor heater	P0135, P0155
		Rear heated oxygen sensor heater	P0141, P0161

*: If completion of several SRTs is required, perform driving patterns (DTC confirmation procedure) one by one based on the priority for models with CONSULT-II.

SRT Set Timing

NEEC0552S0301

SRT is set as "CMPLT" after self-diagnosis has been performed one or more times. Completion of SRT will occur if the result is OK or NG. The set timing is different between them and is shown in the following table.

Self-diagnosis result		Example				
		Diagnosis	Ignition OFF – ON – OFF	Ignition OFF – ON – OFF	Ignition OFF – ON – OFF	Ignition OFF – ON – OFF
All OK	Case 1	P0400	OK (1)	– (1)	OK (2)	– (2)
		P0402	OK (1)	– (1)	– (1)	OK (2)
		P1402	OK (1)	OK (2)	– (2)	– (2)
		SRT of EGR	"CMPLT"	"CMPLT"	"CMPLT"	"CMPLT"
	Case 2	P0400	OK (1)	– (1)	– (1)	– (1)
		P0402	– (0)	– (0)	OK (1)	– (1)
		P1402	OK (1)	OK (2)	– (2)	– (2)
		SRT of EGR	"INCMP"	"INCMP"	"CMPLT"	"CMPLT"
NG exists	Case 3	P0400	OK	OK	–	–
		P0402	–	–	–	–
		P1402	NG	–	NG	NG (Consecutive NG)
		(1st trip) DTC	1st trip DTC	–	1st trip DTC	DTC (=MIL "ON")
		SRT of EGR	"INCMP"	"INCMP"	"INCMP"	"CMPLT"

OK: Self-diagnosis is carried out and the result is OK.

NG: Self-diagnosis is carried out and the result is OK.

–: Self-diagnosis is not carried out.

When all SRT related self-diagnoses showed OK results in a same cycle (Ignition OFF – ON – OFF), the SRT will indicate "CMPLT".

→ Case 1 above

When all SRT related self-diagnoses show OK results through several different cycles, the SRT will indicate "CMPLT" at the time the respective self-diagnoses have at least one OK result.

→ Case 2 above

If one or more SRT related self-diagnoses showed NG results in 2 consecutive cycles, the SRT will also indicate "CMPLT".

→ Case 3 above

The previous table shows that the minimum number of cycles for setting SRT as "INCMP" is one (1) for each self-diagnosis (Case 1 and 2) or two (2) for one self-diagnosis (Case 3). However, in preparation for the State emissions inspection, it is unnecessary of each self-diagnosis to be executed twice (Case 3) because of the following reasons;

- The SRT will indicate "CMPLT" at the time the respective self-diagnoses have one (1) OK result.
- The emissions inspection requires "CMPLT" of the SRT only with OK self-diagnosis result.
- When, during SRT driving pattern, 1st trip DTC (NG) is detected prior to "CMPLT" of SRT, the self-diagnosis memory must be erased from ECM after repair.
- If the 1st trip DTC is erased, all the SRT will indicate "INCMP".

NOTE:

SRT can be set as "CMPLT" together with the DTC(s). Therefore, DTC check must always be carried out prior to the State emission inspection even though the SRT indicates "CMPLT".

SRT Service Procedure

NEEC0552S0302

If a vehicle has been rejected for the State emissions inspection due to one or more SRT items indicating "INCMP", review the following flowchart diagnostic sequence on the next page.

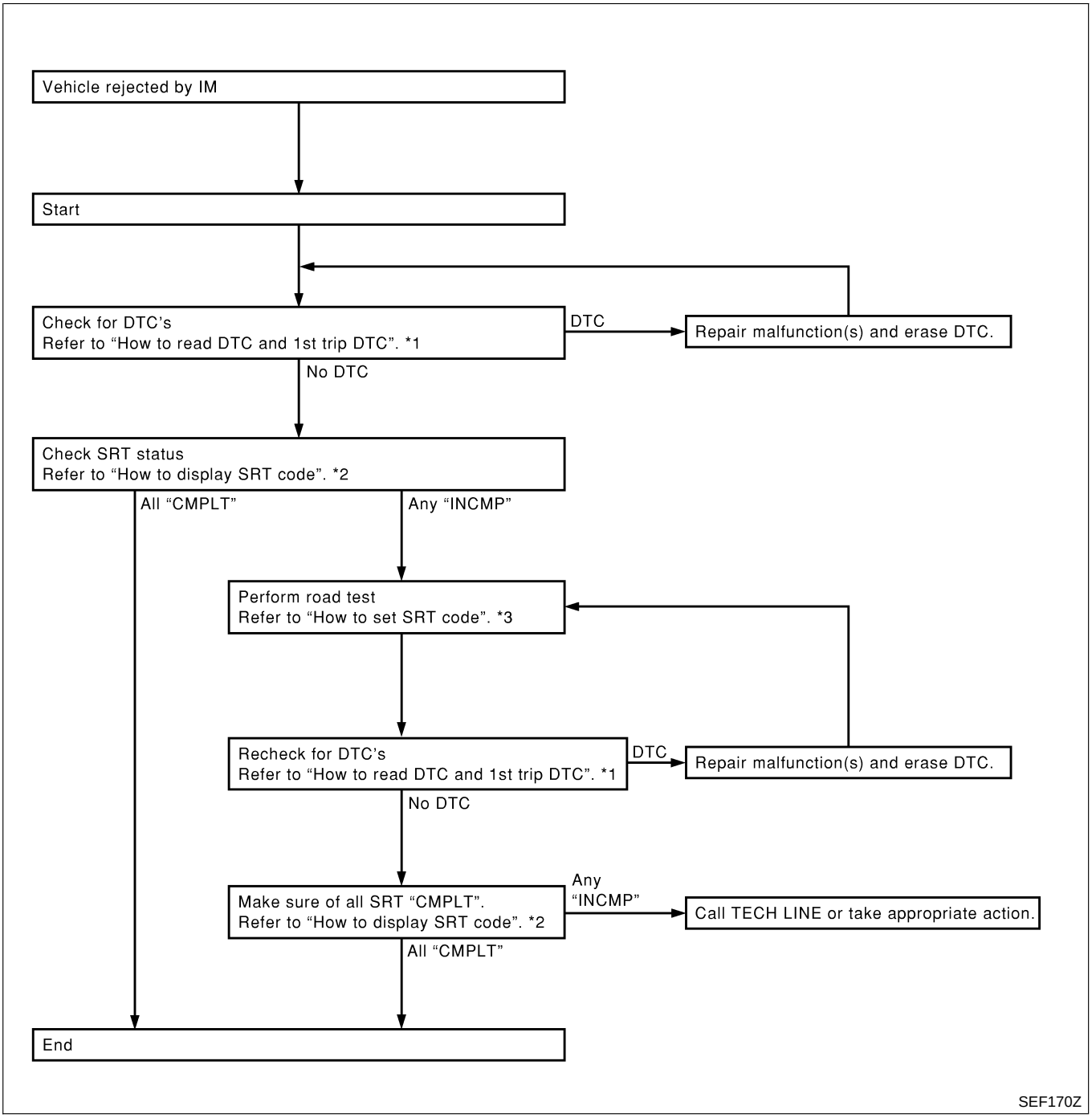

*1 EC-675 *2 EC-679 *3 EC-680

How to Display SRT Code

NEEC0552S0303

1. **With CONSULT-II**
   Selecting "SRT STATUS" in "DTC CONFIRMATION" mode with CONSULT-II.
   For items whose SRT codes are set, a "CMPLT" is displayed on the CONSULT-II screen; for items whose SRT codes are not set, "INCMP" is displayed.
2. **With GST**
   Selecting Mode 1 with GST (Generic Scan Tool)

A sample of CONSULT-II display for SRT code is shown below.
"INCMP" means the self-diagnosis is incomplete and SRT is not set. "CMPLT" means the self-diagnosis is complete and SRT is set.

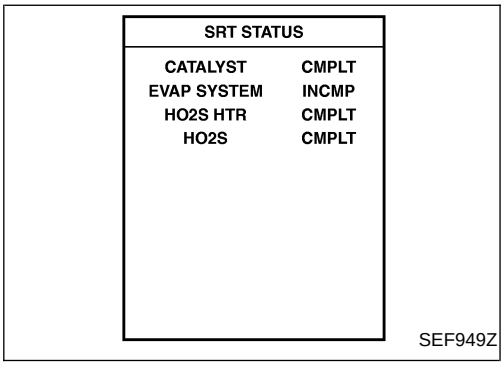

How to Set SRT Code

NEEC0552S0304

To set all SRT codes, self-diagnosis for the items indicated above must be performed one or more times. Each diagnosis may require a long period of actual driving under various conditions.

With CONSULT-II

Perform corresponding DTC confirmation procedure one by one based on "Performance Priority" in the table on EC-675.

Without CONSULT-II

The most efficient driving pattern in which SRT codes can be properly set is explained on EC-681. The driving pattern should be performed one or more times to set all SRT codes.

Driving Pattern

NEEC0552S0305

Driving pattern

Note: Always drive vehicle in safe manner according to traffic conditions and obey all traffic laws.
Refer to next page for more information and explanation of chart.

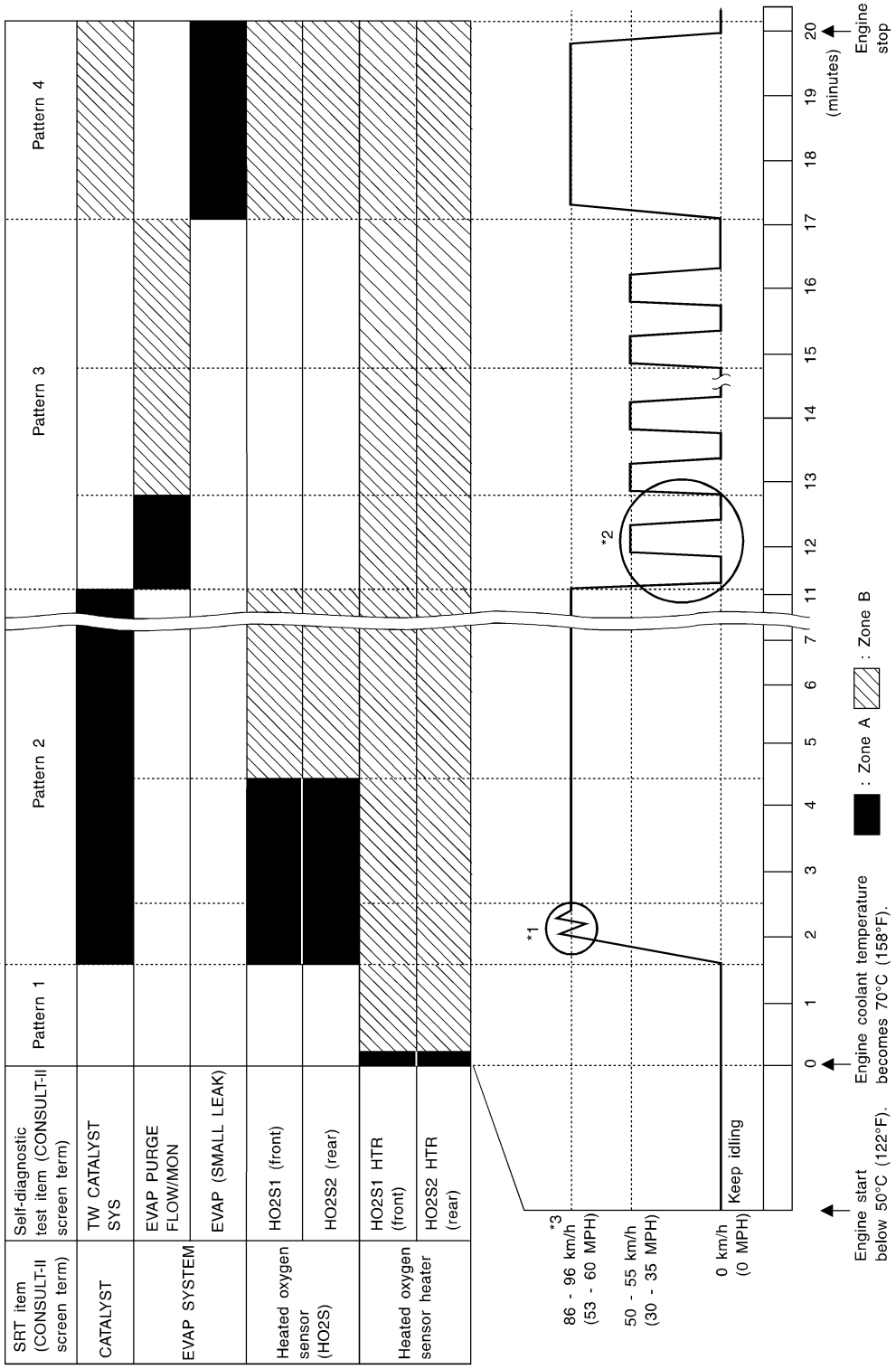

SEF947Y

- The time required for each diagnosis varies with road surface conditions, weather, altitude, individual driving habits, etc.
  Zone A refers to the range where the time required, for the diagnosis under normal conditions*, is the shortest.
  Zone B refers to the range where the diagnosis can still be performed if the diagnosis is not completed within zone A.

*: Normal conditions refer to the following:

− Sea level
− Flat road
− Ambient air temperature: 20 - 30°C (68 - 86°F)
− Diagnosis is performed as quickly as possible under normal conditions.
  Under different conditions [For example: ambient air temperature other than 20 - 30°C (68 - 86°F)], diagnosis may also be performed.

Pattern 1:

- **The engine is started at the engine coolant temperature of −10 to 35°C (14 to 95°F) (where the voltage between the ECM terminal 59 and ground is 3.0 - 4.3V).**
- **The engine must be operated at idle speed until the engine coolant temperature is greater than 70°C (158°F) (where the voltage between the ECM terminal 59 and ground is lower than 1.4V).**
- **The engine is started at the tank fuel temperature of warmer than 0°C (32°F) (where the voltage between the ECM terminal 60 and ground is less than 4.1V).**

Pattern 2:

- When steady-state driving is performed again even after it is interrupted, each diagnosis can be conducted. In this case, the time required for diagnosis may be extended.

Pattern 3:

- The driving pattern outlined in *2 must be repeated at least 3 times.

Pattern 4:

- Tests are performed after the engine has been operated for at least 17 minutes.
- The accelerator pedal must be held very steady during steady-state driving.
- If the accelerator pedal is moved, the test must be conducted all over again.

*1: Depress the accelerator pedal until vehicle speed is 90 km/h (56 MPH), then release the accelerator pedal and keep it released for more than 10 seconds. Depress the accelerator pedal until vehicle speed is 90 km/h (56 MPH) again.

*2: Operate the vehicle in the following driving pattern.

1) Decelerate vehicle to 0 km/h (0 MPH) and let engine idle.
2) Repeat driving pattern shown below at least 10 times.

- **During acceleration, hold the accelerator pedal as steady as possible.**

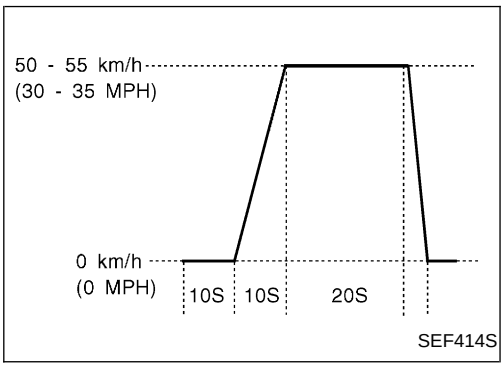

*3: Checking the vehicle speed with CONSULT-II or GST is advised.

Suggested Transmission Gear Position for A/T Models

Set the selector lever in the "D" position with the overdrive switch turned ON.

Suggested upshift speeds for M/T models

Shown below are suggested vehicle speeds for shifting into a higher gear. These suggestions relate to fuel economy and vehicle performance. Actual upshift speeds will vary according to road conditions, the weather and individual driving habits.

	For normal acceleration in low altitude areas [less than 1,219 m (4,000 ft)]:		For quick acceleration in low altitude areas and high altitude areas [over 1,219 m (4,000 ft)]:
Gear change	ACCEL shift point km/h (MPH)	CRUISE shift point km/h (MPH)	km/h (MPH)
1st to 2nd	24 (15)	24 (15)	24 (15)
2nd to 3rd	40 (25)	29 (18)	40 (25)
3rd to 4th	58 (36)	48 (30)	64 (40)
4th to 5th	64 (40)	63 (39)	72 (45)

Suggested Maximum Speed in Each Gear

Downshift to a lower gear if the engine is not running smoothly, or if you need to accelerate.
Do not exceed the maximum suggested speed (shown below) in any gear. For level road driving, use the highest gear suggested for that speed. Always observe posted speed limits and drive according to the road conditions to ensure safe operation. Do not over-rev the engine when shifting to a lower gear as it may cause engine damage or loss of vehicle control.

Gear	km/h (MPH) 2WD (AUTO mode)
1st	50 (30)
2nd	95 (60)

TEST VALUE AND TEST LIMIT (GST ONLY — NOT APPLICABLE TO CONSULT-II)

NEEC0552S04

The following is the information specified in Mode 6 of SAE J1979.
The test value is a parameter used to determine whether a system/circuit diagnostic test is "OK" or "NG" while being monitored by the ECM during self-diagnosis. The test limit is a reference value which is specified as the maximum or minimum value and is compared with the test value being monitored.
Items for which these data (test value and test limit) are displayed are the same as SRT code items (30 test items).
These data (test value and test limit) are specified by Test ID (TID) and Component ID (CID) and can be displayed on the GST screen.

X: Applicable —: Not applicable

SRT item	Self-diagnostic test item	Test value (GST display)		Test limit	Application
		TID	CID		
CATALYST	Three way catalyst function (Right bank)	01H	01H	Max.	X
	Three way catalyst function (Left bank)	03H	02H	Max.	X
EVAP SYSTEM	EVAP control system (Small leak)	05H	03H	Max.	X
	EVAP control system purge flow monitoring	06H	83H	Min.	X

SRT item	Self-diagnostic test item	Test value (GST display)		Test limit	Application
		TID	CID		
O2 SENSOR	Heated oxygen sensor 1 (front) (bank 1)	09H	04H	Max.	X
		0AH	84H	Min.	X
		0BH	04H	Max.	X
		0CH	04H	Max.	X
		0DH	04H	Max.	X
	Heated oxygen sensor 1 (front) (bank 2)	11H	05H	Max.	X
		12H	85H	Min.	X
		13H	05H	Max.	X
		14H	05H	Max.	X
		15H	05H	Max.	X
	Heated oxygen sensor 2 (rear) (bank 1)	19H	86H	Min.	X
		1AH	86H	Min.	X
		1BH	06H	Max.	X
		1CH	06H	Max.	X
	Heated oxygen sensor 2 (rear) (bank 2)	21H	87H	Min.	X
		22H	87H	Min.	X
		23H	07H	Max.	X
		24H	07H	Max.	X
O2 SENSOR HEATER	Heated oxygen sensor 1 (front) (bank 1)	29H	08H	Max.	X
		2AH	88H	Min.	X
	Heated oxygen sensor 1 (front) (bank 2)	2BH	09H	Max.	X
		2CH	89H	Min.	X
	Heated oxygen sensor 2 (rear) (bank 1)	2DH	0AH	Max.	X
		2EH	8AH	Min.	X
	Heated oxygen sensor 2 (rear) (bank 2)	2FH	0BH	Max.	X
		30H	8BH	Min.	X

EMISSION-RELATED DIAGNOSTIC INFORMATION ITEMS

NEEC0552S05

X: Applicable —: Not applicable

Items (CONSULT-II screen terms)	DTC*1	SRT code	Test value/ Test limit (GST only)	1st trip DTC*1	Reference page
NO SELF DIAGNOSTIC FAILURE INDICATED	**P0000**	—	—	—	—
MAF SEN/CIRCUIT	P0100	—	—	X	EC-760
ABSL PRES SEN/CIRC	P0105	—	—	X	EC-769
AIR TEMP SEN/CIRC	P0110	—	—	X	EC-771
COOLANT T SEN/CIRC	P0115	—	—	X	EC-776
THRTL POS SEN/CIRC	P0120	—	—	X	EC-781

Items (CONSULT-II screen terms)	DTC*1	SRT code	Test value/ Test limit (GST only)	1st trip DTC*1	Reference page
*COOLAN T SEN/CIRC	P0125	—	—	X	EC-794
HO2S1 (B1)	P0130	X	X	X*2	EC-799
HO2S1 (B1)	P0131	X	X	X*2	EC-810
HO2S1 (B1)	P0132	X	X	X*2	EC-819
HO2S1 (B1)	P0133	X	X	X*2	EC-828
HO2S1 (B1)	P0134	X	X	X*2	EC-842
HO2S1 HTR (B1)	P0135	X	X	X*2	EC-850
HO2S2 (B1)	P0137	X	X	X*2	EC-857
HO2S2 (B1)	P0138	X	X	X*2	EC-867
HO2S2 (B1)	P0139	X	X	X*2	EC-877
HO2S2 (B1)	P0140	X	X	X*2	EC-887
HO2S2 HTR (B1)	P0141	X	X	X*2	EC-897
HO2S1 (B2)	P0150	X	X	X*2	EC-799
HO2S1 (B2)	P0151	X	X	X*2	EC-810
HO2S1 (B2)	P0152	X	X	X*2	EC-819
HO2S1 (B2)	P0153	X	X	X*2	EC-828
HO2S1 (B2)	P0154	X	X	X*2	EC-842
HO2S1 HTR (B2)	P0155	X	X	X*2	EC-850
HO2S2 (B2)	P0157	X	X	X*2	EC-857
HO2S2 (B2)	P0158	X	X	X*2	EC-867
HO2S2 (B2)	P0159	X	X	X*2	EC-877
HO2S2 (B2)	P0160	X	X	X*2	EC-887
HO2S2 HTR (B2)	P0161	X	X	X*2	EC-897
FUEL SYS LEAN/BK1	P0171	—	—	X	EC-905
FUEL SYS RICH/BK1	P0172	—	—	X	EC-914
FUEL SYS LEAN/BK2	P0174	—	—	X	EC-905
FUEL SYS RICH/BK2	P0175	—	—	X	EC-914
FUEL TEMP SEN/CIRC	P0180	—	—	X	EC-922
ENG OVER TEMP	P0217	—	—	X	EC-927
MULTI CYL MISFIRE	P0300	—	—	X	EC-948
CYL 1 MISFIRE	P0301	—	—	X	EC-948
CYL 2 MISFIRE	P0302	—	—	X	EC-948
CYL 3 MISFIRE	P0303	—	—	X	EC-948
CYL 4 MISFIRE	P0304	—	—	X	EC-948
CYL 5 MISFIRE	P0305	—	—	X	EC-948
CYL 6 MISFIRE	P0306	—	—	X	EC-948
KNOCK SEN/CIRC	P0325	—	—	—	EC-957

Items (CONSULT-II screen terms)	DTC*1	SRT code	Test value/ Test limit (GST only)	1st trip DTC*1	Reference page
CPS/CIRCUIT (OBD)	P0335	—	—	X	EC-961
CAM POS SEN/CIRC	P0340	—	—	X	EC-967
TW CATALYST SYS-B1	P0420	X	X	X*2	EC-974
TW CATALYST SYS-B2	P0430	X	X	X*2	EC-974
EVAP SMALL LEAK	P0440	X	X	X*2	EC-979
PURG VOLUME CONT/V	P0443	—	—	X	EC-994
VENT CONTROL VALVE	P0446	—	—	X	EC-1001
EVAP SYS PRES SEN	P0450	—	—	X	EC-1007
EVAP GROSS LEAK	P0455	X	X	X	EC-1018
VEH SPEED SEN/CIRC	P0500	—	—	X	EC-1044
IACV/AAC VLV/CIRC	P0505	—	—	X	EC-1048
CLOSED TP SW/CIRC	P0510	—	—	X	EC-1054
A/T COMM LINE	P0600	—	—	—	EC-1061
ECM	P0605	—	—	X	EC-1066
PNP SW/CIRC	P0705	—	—	X	***AT-250***
ATF TEMP SEN/CIRC	P0710	—	—	X	***AT-256***
VEH SPD SEN/CIR AT	P0720	—	—	X	***AT-262***
ENGINE SPEED SIG	P0725	—	—	X	***AT-267***
A/T 1ST GR FNCTN	P0731	—	—	X	***AT-272***
A/T 2ND GR FNCTN	P0732	—	—	X	***AT-278***
A/T 3RD GR FNCTN	P0733	—	—	X	***AT-284***
A/T 4TH GR FNCTN	P0734	—	—	X	***AT-290***
TCC SOLENOID/CIRC	P0740	—	—	X	***AT-299***
A/T TCC S/V FNCTN	P0744	—	—	X	***AT-304***
L/PRESS SOL/CIRC	P0745	—	—	X	***AT-313***
SFT SOL A/CIRC	P0750	—	—	X	***AT-318***
SFT SOL B/CIRC	P0755	—	—	X	***AT-323***
CLOSED LOOP-B1	P1148	—	—	X	EC-1070
CLOSED LOOP-B2	P1168	—	—	X	EC-1070
ENG OVER TEMP	P1217	—	—	X	EC-1072
CPS/CIRC (OBD) COG	P1336	—	—	X	EC-1089
EVAP VERY SMALL LEAK	P1441	X	X	X*2	EC-1098
PURG VOLUME CONT/V	P1444	—	—	X	EC-1113
VENT CONTROL VALVE	P1446	—	—	X	EC-1125
EVAP PURG FLOW/MON	P1447	X	X	X*2	EC-1132
VENT CONTROL VALVE	P1448	—	—	X	EC-1144
VC/V BYPASS/V	P1490	—	—	X	EC-1156

Items (CONSULT-II screen terms)	DTC*1	SRT code	Test value/ Test limit (GST only)	1st trip DTC*1	Reference page
VC CUT/V BYPASS/V	P1491	—	—	X	EC-1162
A/T DIAG COMM LINE	P1605	—	—	X	EC-1171
TP SEN/CIRC A/T	P1705	—	—	X	***AT-328***
P-N POS SW/CIRCUIT	P1706	—	—	X	EC-1174
O/R CLTCH SOL/CIRC	P1760	—	—	X	***AT-337***

*1: 1st trip DTC No. is the same as DTC No.

*2: These are not displayed with GST.

NOTE:

Regarding D22 models, "-B1" and "BK1" indicate right bank and "-B2" and "BK2" indicate left bank.

HOW TO ERASE EMISSION-RELATED DIAGNOSTIC INFORMATION

NEEC0552S06

How to Erase DTC (Ⓐ With CONSULT-II)

NEEC0552S0601

NOTE:

If the DTC is not for A/T related items (see EC-618), skip steps 2 through 4.

1. If the ignition switch stays ON after repair work, be sure to turn ignition switch OFF once. Wait at least 5 seconds and then turn it ON (engine stopped) again.
2. Turn CONSULT-II "ON" and touch "A/T".
3. Touch "SELF-DIAG RESULTS".
4. Touch "ERASE". [The DTC in the TCM (Transmission control module) will be erased.] Then touch "BACK" twice.
5. Touch "ENGINE".
6. Touch "SELF-DIAG RESULTS".
7. Touch "ERASE". (The DTC in the ECM will be erased.)

- If DTCs are displayed for both ECM and TCM (Transmission control module), they need to be erased individually from the ECM and TCM (Transmission control module).

How to erase DTC (With CONSULT-II)

1. If the ignition switch stays "ON" after repair work, be sure to turn ignition switch "OFF" once. Wait at least 5 seconds and then turn it "ON" (engine stopped) again.

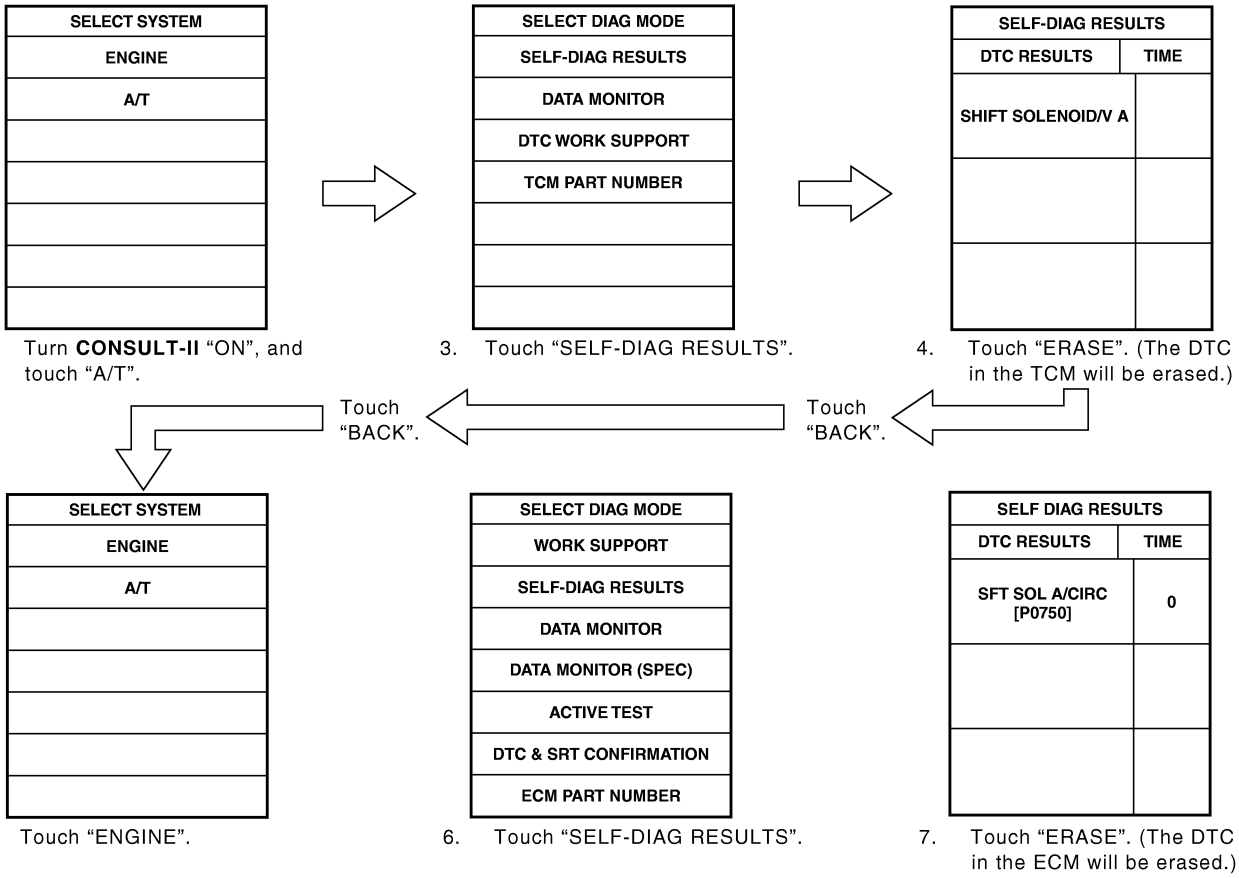

SEF823YD

The emission related diagnostic information in the ECM can be erased by selecting "ERASE" in the "SELF-DIAG RESULTS" mode with CONSULT-II.

How to Erase DTC (GST With GST)

NEEC0552S0602

NOTE:

If the DTC is not for A/T related items (see EC-618), skip step 2.

1. If the ignition switch stays ON after repair work, be sure to turn ignition switch OFF once. Wait at least 5 seconds and then turn it ON (engine stopped) again.
2. Perform "SELF-DIAGNOSTIC PROCEDURE (Without CONSULT-II)" in AT section titled "TROUBLE DIAGNOSIS", "Self-diagnosis". (The engine warm-up step can be skipped when performing the diagnosis only to erase the DTC.)
3. Select Mode 4 with GST (Generic Scan Tool).

The emission related diagnostic information in the ECM can be erased by selecting Mode 4 with GST.

- **If the battery is disconnected, the emission-related diagnostic information will be lost after approx. 24 hours.**
- **Erasing the emission-related diagnostic information using CONSULT-II or GST is easier and quicker than switching the mode selector on the ECM.**
- **The following data are cleared when the ECM memory is erased.**

1) Diagnostic trouble codes
2) 1st trip diagnostic trouble codes
3) Freeze frame data
4) 1st trip freeze frame data
5) System readiness test (SRT) codes
6) Test values
7) Others

Actual work procedures are explained using a DTC as an example. Be careful so that not only the DTC, but all of the data listed above, are cleared from the ECM memory during work procedures.

Malfunction Indicator Lamp (MIL)

DESCRIPTION

NEEC0553

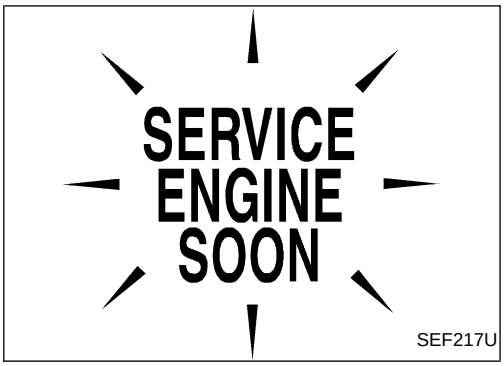

The MIL is located on the instrument panel.

1. The MIL will light up when the ignition switch is turned ON without the engine running. This is a bulb check.
- If the MIL does not light up, refer to ***EL-84***, “WARNING LAMPS” or see EC-1216.
2. When the engine is started, the MIL should go OFF.
   If the MIL remains on, the on board diagnostic system has detected an engine system malfunction.

Malfunction Indicator Lamp (MIL) (Cont'd)

On Board Diagnostic System Function

=NEEC0553S01

The on board diagnostic system has the following two functions.

Diagnostic Test Mode	KEY and ENG. Status	Function	Explanation of Function
Mode I	Ignition switch in ON position  Engine stopped 	BULB CHECK	This function checks the MIL bulb for damage (blown, open circuit, etc.). If the MIL does not come on, check MIL circuit. (See EC-1216.)
	Engine running 	MALFUNCTION WARNING	This is a usual driving condition. When a malfunction is detected twice in two consecutive driving cycles (two trip detection logic), the MIL will light up to inform the driver that a malfunction has been detected. The following malfunctions will light up or blink the MIL in the 1st trip. ● Coolant overtemperature enrichment protection ● "Misfire (Possible three way catalyst damage)" ● "Closed loop control" ● Fail-safe mode

Diagnostic Test Mode I — Bulb Check

NEEC0553S03

In this mode, the MIL on the instrument panel should stay ON. If it remains OFF, check the bulb. Refer to ***EL-84***, "WARNING LAMPS" or see EC-1216.

Diagnostic Test Mode I — Malfunction Warning

NEEC0553S04

MIL	Condition
ON	When the malfunction is detected or the ECM's CPU is malfunctioning.
OFF	No malfunction.

OBD System Operation Chart

NEEC0554

RELATIONSHIP BETWEEN MIL, 1ST TRIP DTC, DTC, AND DETECTABLE ITEMS

NEEC0554S01

- When a malfunction is detected for the first time, the 1st trip DTC and the 1st trip freeze frame data are stored in the ECM memory.
- When the same malfunction is detected in two consecutive trips, the DTC and the freeze frame data are stored in the ECM memory, and the MIL will come on. For details, refer to "Two Trip Detection Logic" on EC-674.
- The MIL will go off after the vehicle is driven 3 times with no malfunction. The drive is counted only when the recorded driving pattern is met (as stored in the ECM). If another malfunction occurs while counting, the counter will reset.
- The DTC and the freeze frame data will be stored until the vehicle is driven 40 times (driving pattern A) without the same malfunction recurring (except for Misfire and Fuel Injection System). For Misfire and Fuel Injection System, the DTC and freeze frame data will be stored until the vehicle is driven 80 times (driving pattern C) without the same malfunction recurring. The "TIME" in "SELF-DIAGNOSTIC RESULTS" mode of CONSULT-II will count the number of times the vehicle is driven.
- The 1st trip DTC is not displayed when the self-diagnosis results in "OK" for the 2nd trip.

SUMMARY CHART

NEEC0554S02

Items	Fuel Injection System	Misfire	Other
MIL (goes off)	3 (pattern B)	3 (pattern B)	3 (pattern B)
DTC, Freeze Frame Data (no display)	80 (pattern C)	80 (pattern C)	40 (pattern A)

Items	Fuel Injection System	Misfire	Other
1st Trip DTC (clear)	1 (pattern C), *1	1 (pattern C), *1	1 (pattern B)
1st Trip Freeze Frame Data (clear)	*1, *2	*1, *2	1 (pattern B)

For details about patterns "B" and "C" under "Fuel Injection System" and "Misfire", see EC-693.
For details about patterns "A" and "B" under "Other", see EC-695.
*1: Clear timing is at the moment OK is detected.
*2: Clear timing is when the same malfunction is detected in the 2nd trip.

OBD System Operation Chart (Cont'd)

RELATIONSHIP BETWEEN MIL, DTC, 1ST TRIP DTC AND DRIVING PATTERNS FOR "MISFIRE" <EXHAUST QUALITY DETERIORATION>, "FUEL INJECTION SYSTEM"

=NEEC0554S03

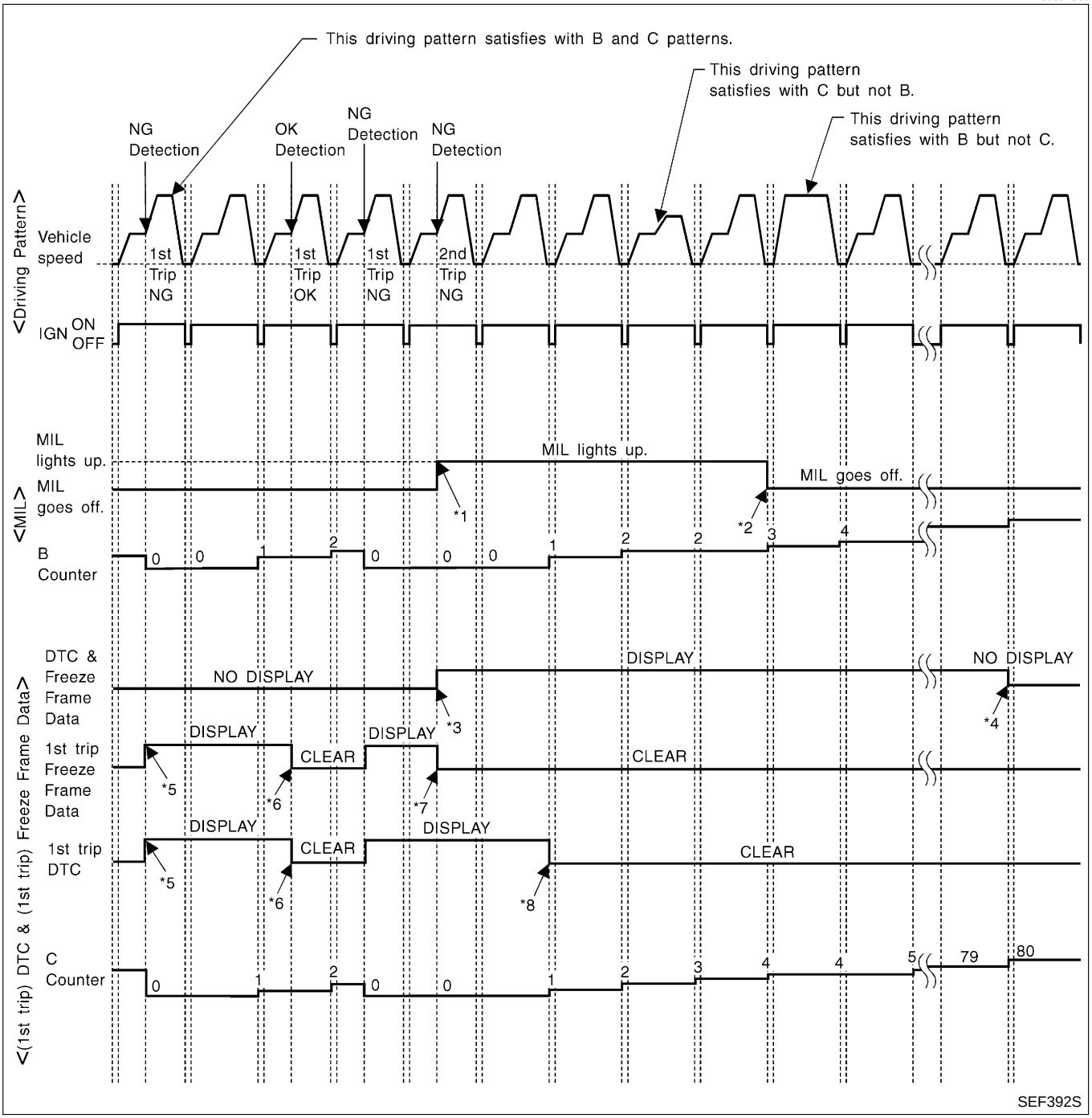

*1: When the same malfunction is detected in two consecutive trips, MIL will light up.

*2: MIL will go off after vehicle is driven 3 times (pattern B) without any malfunctions.

*3: When the same malfunction is detected in two consecutive trips, the DTC and the freeze frame data will be stored in ECM.

*4: The DTC and the freeze frame data will not be displayed any longer after vehicle is driven 80 times (pattern C) without the same malfunction. (The DTC and the freeze frame data still remain in ECM.)

*5: When a malfunction is detected for the first time, the 1st trip DTC and the 1st trip freeze frame data will be stored in ECM.

*6: The 1st trip DTC and the 1st trip freeze frame data will be cleared at the moment OK is detected.

*7: When the same malfunction is detected in the 2nd trip, the 1st trip freeze frame data will be cleared.

*8: 1st trip DTC will be cleared when vehicle is driven once (pattern C) without the same malfunction after DTC is stored in ECM.

EXPLANATION FOR DRIVING PATTERNS FOR "MISFIRE <EXHAUST QUALITY DETERIORATION>", "FUEL INJECTION SYSTEM"

NEEC0554S04

<Driving Pattern B>

NEEC0554S0401

Driving pattern B means the vehicle operation as follows:
All components and systems should be monitored at least once by the OBD system.

- The B counter will be cleared when the malfunction is detected once regardless of the driving pattern.
- The B counter will be counted up when driving pattern B is satisfied without any malfunction.
- The MIL will go off when the B counter reaches 3. (*2 in "OBD SYSTEM OPERATION CHART")

<Driving Pattern C>

NEEC0554S0402

Driving pattern C means the vehicle operation as follows:

1) The following conditions should be satisfied at the same time:
   Engine speed: (Engine speed in the freeze frame data) ±375 rpm
   Calculated load value: (Calculated load value in the freeze frame data) x (1±0.1) [%]
   Engine coolant temperature (T) condition:

- When the freeze frame data shows lower than 70°C (158°F), "T" should be lower than 70°C (158°F).
- When the freeze frame data shows higher than or equal to 70°C (158°F), "T" should be higher than or equal to 70°C (158°F).

Example:
If the stored freeze frame data is as follows:
Engine speed: 850 rpm, Calculated load value: 30%, Engine coolant temperature: 80°C (176°F)
To be satisfied with driving pattern C, the vehicle should run under the following conditions:
Engine speed: 475 - 1,225 rpm, Calculated load value: 27 - 33%, Engine coolant temperature: more than 70°C (158°F)

- The C counter will be cleared when the malfunction is detected regardless of (1).
- The C counter will be counted up when (1) is satisfied without the same malfunction.
- The DTC will not be displayed after C counter reaches 80.
- The 1st trip DTC will be cleared when C counter is counted once without the same malfunction after DTC is stored in ECM.

RELATIONSHIP BETWEEN MIL, DTC, 1ST TRIP DTC AND DRIVING PATTERNS EXCEPT FOR "MISFIRE <EXHAUST QUALITY DETERIORATION>", "FUEL INJECTION SYSTEM"

NEEC0554S05

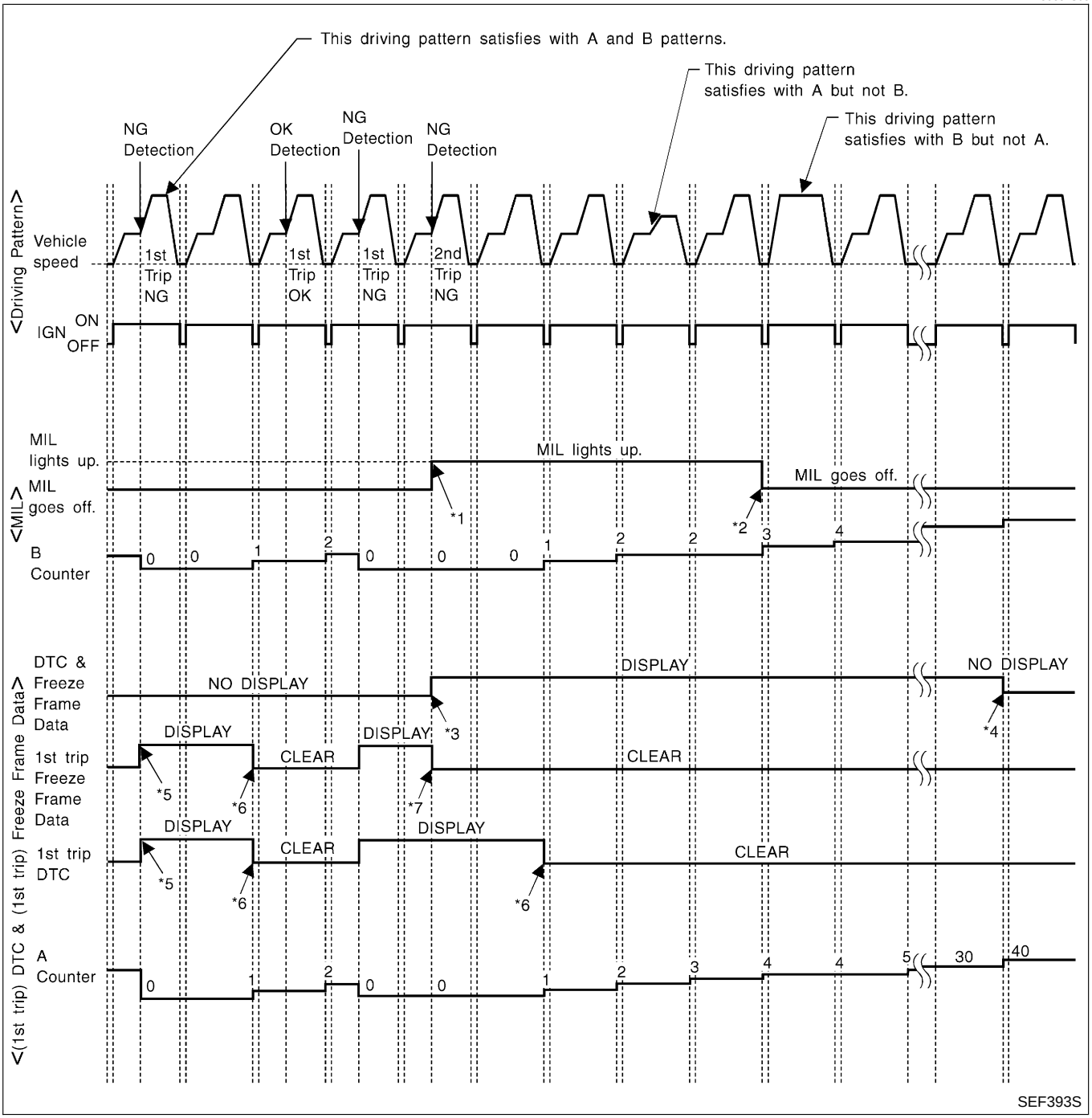

*1: When the same malfunction is detected in two consecutive trips, MIL will light up.

*2: MIL will go off after vehicle is driven 3 times (pattern B) without any malfunctions.

*3: When the same malfunction is detected in two consecutive trips, the DTC and the freeze frame data will be stored in ECM.

*4: The DTC and the freeze frame data will not be displayed any longer after vehicle is driven 40 times (pattern A) without the same malfunction.
(The DTC and the freeze frame data still remain in ECM.)

*5: When a malfunction is detected for the first time, the 1st trip DTC and the 1st trip freeze frame data will be stored in ECM.

*6: 1st trip DTC will be cleared after vehicle is driven once (pattern B) without the same malfunction.

*7: When the same malfunction is detected in the 2nd trip, the 1st trip freeze frame data will be cleared.

EXPLANATION FOR DRIVING PATTERNS EXCEPT FOR "MISFIRE <EXHAUST QUALITY DETERIORATION>", "FUEL INJECTION SYSTEM"

NEEC0554S06

<Driving Pattern A>

NEEC0554S0601

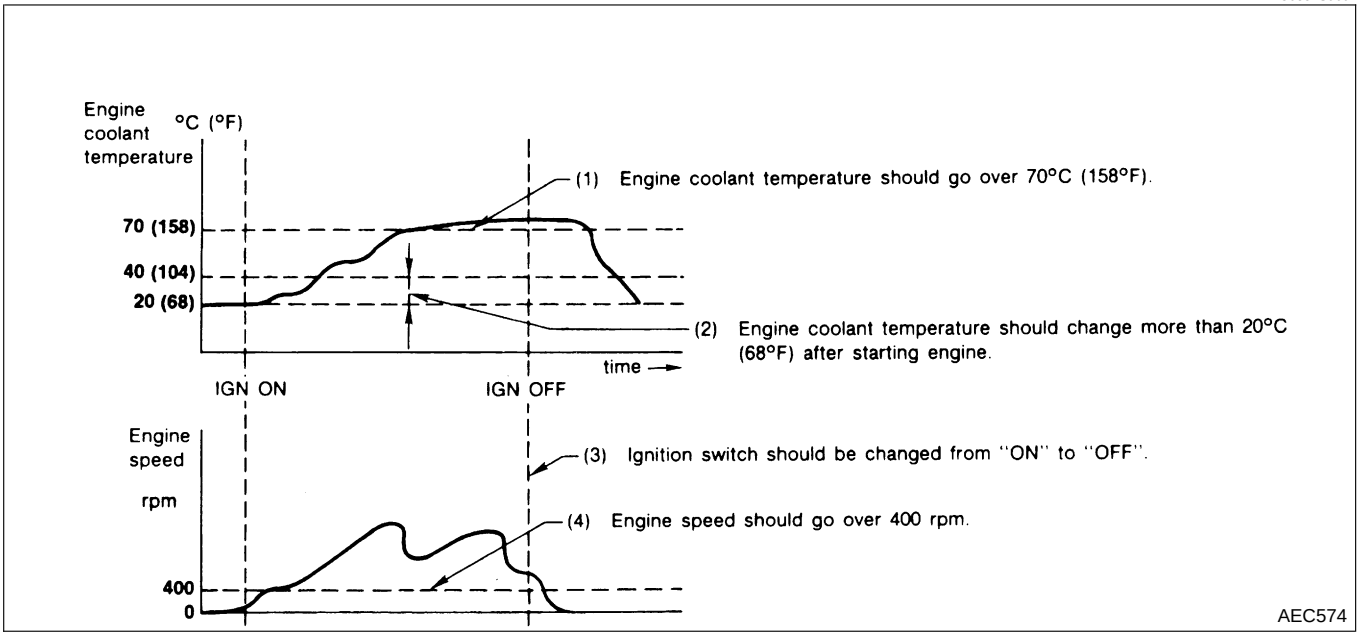

- The A counter will be cleared when the malfunction is detected regardless of (1) - (4).
- The A counter will be counted up when (1) - (4) are satisfied without the same malfunction.
- The DTC will not be displayed after the A counter reaches 40.

<Driving Pattern B>

NEEC0554S0602

Driving pattern B means the vehicle operation as follows:
All components and systems should be monitored at least once by the OBD system.

- The B counter will be cleared when the malfunction is detected once regardless of the driving pattern.
- The B counter will be counted up when driving pattern B is satisfied without any malfunctions.
- The MIL will go off when the B counter reaches 3 (*2 in "OBD SYSTEM OPERATION CHART").

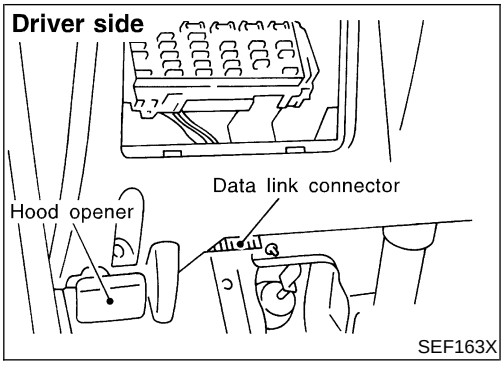

SEF163X

CONSULT-II

=NEEC0555

CONSULT-II INSPECTION PROCEDURE

NEEC0555S01

1. Turn ignition switch OFF.
2. Connect “CONSULT-II” to data link connector which is located under LH dash panel near the fuse box cover.

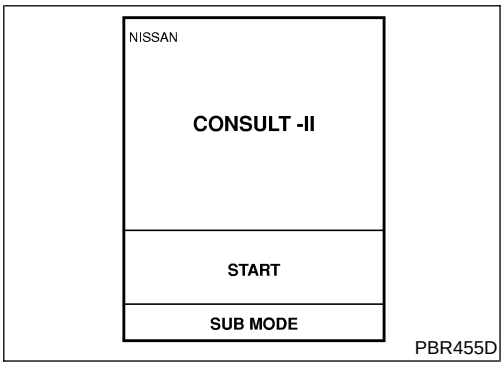

PBR455D

3. Turn ignition switch ON.
4. Touch “START”.

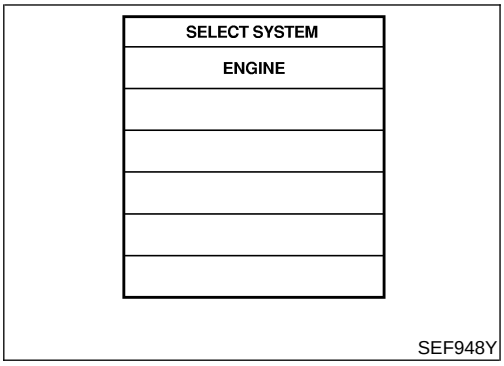

SEF948Y

5. Touch “ENGINE”.

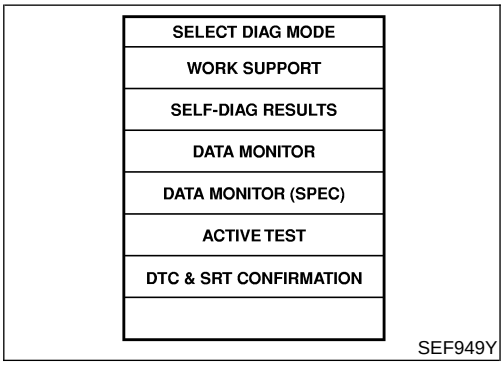

SEF949Y

6. Perform each diagnostic test mode according to each service procedure.

For further information, see the CONSULT-II Operation Manual.

ENGINE CONTROL COMPONENT PARTS/CONTROL SYSTEMS APPLICATION

NEEC0555S02

		Item	DIAGNOSTIC TEST MODE							
			WORK SUP-PORT	SELF-DIAGNOSTIC RESULTS		DATA MONI-TOR	DATA MONI-TOR (SPEC)	ACTIVE TEST	DTC & SRT CONFIRMATION	
				DTC*1	FREEZE FRAME DATA*2				SRT STA-TUS	DTC WORK SUP-PORT
ENGINE CONTROL COMPONENT PARTS	INPUT	Camshaft position sensor		X	X	X	X			
		Mass air flow sensor		X		X	X			
		Engine coolant temperature sensor		X	X	X	X	X		
		Heated oxygen sensor 1 (front)		X		X	X		X	X
		Heated oxygen sensor 2 (rear)		X		X	X		X	X
		Vehicle speed sensor		X	X	X	X			
		Throttle position sensor		X		X	X			
		Fuel tank temperature sensor		X		X	X	X		
		EVAP control system pressure sensor		X		X	X			
		Absolute pressure sensor		X		X	X			
		Intake air temperature sensor		X		X	X			
		Crankshaft position sensor (OBD)		X			X			
		Knock sensor		X			X			
		Ignition switch (start signal)				X	X			
		Closed throttle position switch		X		X	X			
		Closed throttle position switch (throttle position sensor signal)				X	X			
		Air conditioner switch				X	X			
		Park/neutral position (PNP) switch		X		X	X			
		Power steering oil pressure switch				X	X			
		Battery voltage				X	X			
		Ambient air temperature switch				X	X			

Item			DIAGNOSTIC TEST MODE							
			WORK SUPPORT	SELF-DIAGNOSTIC RESULTS		DATA MONITOR	DATA MONITOR (SPEC)	ACTIVE TEST	DTC & SRT CONFIRMATION	
				DTC*1	FREEZE FRAME DATA*2				SRT STATUS	DTC WORK SUPPORT
ENGINE CONTROL COMPONENT PARTS	OUTPUT	Injectors				X	X	X		
		Power transistor (Ignition timing)				X	X	X		
		IACV-AAC valve	X	X		X	X	X		
		EVAP canister purge volume control solenoid valve		X		X	X	X		X
		Air conditioner relay				X	X			
		Fuel pump relay	X			X	X	X		
		Cooling fan*3		X		X	X	X		
		Heated oxygen sensor 1 heater (front)		X		X	X		X	
		Heated oxygen sensor 2 heater (rear)		X		X	X		X	
		EVAP canister vent control valve		X		X	X	X		
		Vacuum cut valve bypass valve		X		X	X	X		X
		Calculated load value			X	X	X			

X: Applicable

*1: This item includes 1st trip DTCs.

*2: This mode includes 1st trip freeze frame data or freeze frame data. The items appear on CONSULT-II screen in freeze frame data mode only if a 1st trip DTC or DTC is detected. For details, refer to EC-675.

*3: Models with electric cooling fan.

FUNCTION

=NEEC0555S03

Diagnostic test mode	Function
Work support	This mode enables a technician to adjust some devices faster and more accurately by following the indications on the CONSULT-II unit.
Self-diagnostic results	Self-diagnostic results such as 1st trip DTC, DTCs and 1st trip freeze frame data or freeze frame data can be read and erased quickly.*1
Data monitor	Input/Output data in the ECM can be read.
Data monitor (SPEC)	Input/Output specification of the basic fuel schedule, AFM, A/F feedback control value and the other data monitor items can be read.
Active test	Diagnostic Test Mode in which CONSULT-II drives some actuators apart from the ECMs and also shifts some parameters in a specified range.
DTC confirmation	The status of system monitoring tests and the self-diagnosis status/result can be confirmed.
ECM part number	ECM part number can be read.

*1 The following emission-related diagnostic information is cleared when the ECM memory is erased.
1) Diagnostic trouble codes
2) 1st trip diagnostic trouble codes
3) Freeze frame data
4) 1st trip freeze frame data
5) System readiness test (SRT) codes
6) Test values
7) Others

WORK SUPPORT MODE

NEEC0555S04

WORK ITEM	CONDITION	USAGE
TP SW/TP SEN IDLE POSI ADJ	● FOLLOW THE BASIC INSPECTION INSTRUCTION IN THE SERVICE MANUAL.	When adjusting the idle throttle position
TARGET IGNITION TIMING ADJ	● IDLE CONDITION	When adjusting target ignition timing After adjustment, confirm target ignition timing with a timing light by turning the distributor.
FUEL PRESSURE RELEASE	● FUEL PUMP WILL STOP BY TOUCHING "START" DURING IDLING. CRANK A FEW TIMES AFTER ENGINE STALLS.	When releasing fuel pressure from fuel line
SELF-LEARNING CONT	● THE COEFFICIENT OF SELF-LEARNING CONTROL MIXTURE RATIO RETURNS TO THE ORIGINAL COEFFICIENT.	When clean the coefficient of self-learning control valve

CONSULT-II (Cont'd)

WORK ITEM	CONDITION	USAGE
EVAP SYSTEM CLOSE	OPEN THE VACUUM CUT VALVE BYPASS VALVE AND CLOSE THE EVAP CANISTER VENT CONTROL VALVE IN ORDER TO MAKE EVAP SYSTEM CLOSE UNDER THE FOLLOWING CONDITIONS. ● IGN SW ON ● ENGINE NOT RUNNING ● AMBIENT TEMPERATURE IS ABOVE 0°C (32°F). ● NO VACUUM AND NO HIGH PRESSURE IN EVAP SYSTEM ● FUEL TANK TEMP. IS MORE THAN 0°C (32°F). ● WITHIN 10 MINUTES AFTER STARTING "EVAP SYSTEM CLOSE" ● WHEN TRYING TO EXECUTE "EVAP SYSTEM CLOSE" UNDER THE CONDITION EXCEPT ABOVE, CONSULT-II WILL DISCONTINUE IT AND DISPLAY APPROPRIATE INSTRUCTION. **NOTE:** **WHEN STARTING ENGINE, CONSULT-II MAY DISPLAY "BATTERY VOLTAGE IS LOW. CHARGE BATTERY", EVEN IN USING CHARGED BATTERY.**	When detecting EVAP vapor leak point of EVAP system
TARGET IDLE RPM ADJ	SET ENGINE SPEED AT THE SPECIFIED VALUE UNDER THE FOLLOWING CONDITIONS. ● ENGINE WARMED UP ● NO-LOAD	When adjusting initial ignition timing and idle speed

SELF-DIAGNOSTIC MODE

NEEC0555S05

DTC and 1st Trip DTC

NEEC0555S0501

Regarding items of "DTC and 1st trip DTC", refer to "TROUBLE DIAGNOSIS — INDEX" (See EC-618.)

Freeze Frame Data and 1st Trip Freeze Frame Data

NEEC0555S0502

Freeze frame data item *1	Description
DIAG TROUBLE CODE [PXXXX]	● The engine control component part/control system has a trouble code, it is displayed as "PXXXX". (Refer to "TROUBLE DIAGNOSIS — INDEX", EC-618.)
FUEL SYS-B1 *2	● "Fuel injection system status" at the moment a malfunction is detected is displayed. ● One mode in the following is displayed. "MODE 2": Open loop due to detected system malfunction "MODE 3": Open loop due to driving conditions (power enrichment, deceleration enrichment) "MODE 4": Closed loop - using oxygen sensor(s) as feedback for fuel control "MODE 5": Open loop - has not yet satisfied condition to go to closed loop
FUEL SYS-B2 *2	
CAL/LD VALUE [%]	● The calculated load value at the moment a malfunction is detected is displayed.
COOLANT TEMP [°C] or [°F]	● The engine coolant temperature at the moment a malfunction is detected is displayed.
S-FUEL TRIM-B1 [%]	● "Short-term fuel trim" at the moment a malfunction is detected is displayed. ● The short-term fuel trim indicates dynamic or instantaneous feedback compensation to the base fuel schedule.
S-FUEL TRIM-B2 [%]	
L-FUEL TRIM-B1 [%]	● "Long-term fuel trim" at the moment a malfunction is detected is displayed. ● The long-term fuel trim indicates much more gradual feedback compensation to the base fuel schedule than short-term fuel trim.
L-FUEL TRIM-B2 [%]	
ENGINE SPEED [rpm]	● The engine speed at the moment a malfunction is detected is displayed.
VHCL SPEED [km/h] or [mph]	● The vehicle speed at the moment a malfunction is detected is displayed.

Freeze frame data item *1	Description
ABSOL PRESS [kPa] or [kg/cm^2] or [psi]	• The absolute pressure at the moment a malfunction is detected is displayed.
B/FUEL SCHDL [msec]	• The base fuel schedule at the moment a malfunction is detected is displayed.
INT/A TEMP SE [°C] or [°F]	• The intake air temperature at the moment a malfunction is detected is displayed.

*1: The items are the same as those of 1st trip freeze frame data.
*2: Regarding D22 model, "-B1" indicates right bank and "-B2" indicates left bank.

DATA MONITOR MODE

=NEEC0555S06

Monitored item [Unit]	ECM input signals	Main signals	Description	Remarks
ENG SPEED [rpm]	○		• Indicates the engine speed computed from the REF signal (120° signal) of the camshaft position sensor.	
MAS AIR/FL SE [V]	○	○	• The signal voltage of the mass air flow sensor is displayed.	• When the engine is stopped, a certain value is indicated.
COOLAN TEMP/S [°C] or [°F]	○	○	• The engine coolant temperature (determined by the signal voltage of the engine coolant temperature sensor) is displayed.	• When the engine coolant temperature sensor is open or short-circuited, ECM enters fail-safe mode. The engine coolant temperature determined by the ECM is displayed.
HO2S1 (B1) [V]	○	○	• The signal voltage of the heated oxygen sensor 1 (front) is displayed.	
HO2S1 (B2) [V]	○	○		
HO2S2 (B1) [V]	○	○	• The signal voltage of the heated oxygen sensor 2 (rear) is displayed.	
HO2S2 (B2) [V]	○	○		
HO2S1 MNTR (B1) [RICH/LEAN]	○		• Display of heated oxygen sensor 1 (front) signal during air-fuel ratio feedback control: RICH ... means the mixture became "rich", and control is being affected toward a leaner mixture. LEAN ... means the mixture became "lean", and control is being affected toward a rich mixture.	• After turning ON the ignition switch, "RICH" is displayed until air-fuel mixture ratio feedback control begins. • When the air-fuel ratio feedback is clamped, the value just before the clamping is displayed continuously.
HO2S1 MNTR (B2) [RICH/LEAN]	○			
HO2S2 MNTR (B1) [RICH/LEAN]	○		• Display of heated oxygen sensor 2 (rear) signal: RICH ... means the amount of oxygen after three way catalyst is relatively small. LEAN ... means the amount of oxygen after three way catalyst is relatively large.	• When the engine is stopped, a certain value is indicated.
HO2S2 MNTR (B2) [RICH/LEAN]	○			
VHCL SPEED SE [km/h] or [mph]	○	○	• The vehicle speed computed from the vehicle speed sensor signal is displayed.	
BATTERY VOLT [V]	○	○	• The power supply voltage of ECM is displayed.	
THRTL POS SEN [V]	○	○	• The throttle position sensor signal voltage is displayed.	
TANK F/TMP SE [°C] or [°F]	○		• The fuel temperature judged from the fuel tank temperature sensor signal voltage is displayed.	
INT/A TEMP SE [°C] or [°F]	○		• The intake air temperature determined by the signal voltage of the intake air temperature sensor is indicated.	
EVAP SYS PRES [V]			• The signal voltage of EVAP control system pressure sensor is displayed.	
ABSOL PRES/SE [V]			• The signal voltage of the absolute pressure sensor is displayed.	

Monitored item [Unit]	ECM input signals	Main signals	Description	Remarks
FUEL LEVEL SE [V]	○		• The signal voltage of the fuel level sensor is displayed.	
START SIGNAL [ON/OFF]	○	○	• Indicates [ON/OFF] condition from the starter signal.	• After starting the engine, [OFF] is displayed regardless of the starter signal.
CLSD THL POS [ON/OFF]	○	○	• Indicates idle position [ON/OFF] computed by ECM according to the throttle position sensor signal.	
CLSD THL/P SW [ON/OFF]			• Indicates mechanical contact [ON/OFF] condition of the closed throttle position switch.	
AIR COND SIG [ON/OFF]	○	○	• Indicates [ON/OFF] condition of the air conditioner switch as determined by the air conditioner signal.	
P/N POSI SW [ON/OFF]	○	○	• Indicates [ON/OFF] condition from the park/neutral position (PNP) switch signal.	
PW/ST SIGNAL [ON/OFF]	○	○	• [ON/OFF] condition of the power steering oil pressure switch determined by the power steering oil pressure signal is indicated.	
AMB TEMP SW [ON/OFF]	○	○	• Indicates [ON/OFF] condition from the ambient air temperature switch signal.	
IGNITION SW [ON/OFF]	○		• Indicates [ON/OFF] condition from ignition switch.	
INJ PULSE-B2 [msec]		○	• Indicates the actual fuel injection pulse width compensated by ECM according to the input signals.	• When the engine is stopped, a certain computed value is indicated.
INJ PULSE-B1 [msec]				
B/FUEL SCHDL [msec]		○	• "Base fuel schedule" indicates the fuel injection pulse width programmed into ECM, prior to any learned on board correction.	
IGN TIMING [BTDC]		○	• Indicates the ignition timing computed by ECM according to the input signals.	• When the engine is stopped, a certain value is indicated.
IACV-AAC/V [%]		○	• Indicates the IACV-AAC valve control value computed by ECM according to the input signals.	
PURG VOL C/V [%]		○	• Indicates the EVAP canister purge volume control solenoid valve control value computed by the ECM according to the input signals. • The opening becomes larger as the value increases.	
A/F ALPHA-B2 [%]			• The mean value of the air-fuel ratio feedback correction factor per cycle is indicated.	• When the engine is stopped, a certain value is indicated. • This data also includes the data for the air-fuel ratio learning control.
A/F ALPHA-B1 [%]				
AIR COND RLY [ON/OFF]			• The air conditioner relay control condition (determined by ECM according to the input signal) is indicated.	

CONSULT-II (Cont'd)

Monitored item [Unit]	ECM input signals	Main signals	Description	Remarks
FUEL PUMP RLY [ON/OFF]			• Indicates the fuel pump relay control condition determined by ECM according to the input signals.	
COOLING FAN* [ON/OFF]			• Indicates the control condition of the cooling fan (determined by ECM according to the input signal). ON ... Operation OFF ... Stop	
VENT CONT/V [ON/OFF]			• The control condition of the EVAP canister vent control valve (determined by ECM according to the input signal) is indicated. • ON ... Closed OFF ... Open	
HO2S1 HTR (B1) [ON/OFF]			• Indicates [ON/OFF] condition of front heated oxygen sensor heater determined by ECM according to the input signals.	
HO2S1 HTR (B1) [ON/OFF]				
HO2S2 HTR (B1) [ON/OFF]			• Indicates [ON/OFF] condition of rear heated oxygen sensor heater determined by ECM according to the input signals.	
HO2S2 HTR (B2) [ON/OFF]				
VC/V BYPASS/V [ON/OFF]			• The control condition of the vacuum cut valve bypass valve (determined by ECM according to the input signal) is indicated. • ON ... Open OFF ... Closed	
CAL/LD VALUE [%]			• "Calculated load value" indicates the value of the current airflow divided by peak airflow.	
ABSOL TH·P/S [%]			• "Absolute throttle position sensor" indicates the throttle opening computed by ECM according to the signal voltage of the throttle position sensor.	
MASS AIRFLOW [g·m/s]			• Indicates the mass airflow computed by ECM according to the signal voltage of the mass airflow sensor.	
VOLTAGE [V]			• Voltage measured by the voltage probe.	
FREQUENCY [msec] or [Hz] or [%]			• Pulse width, frequency or duty cycle measured by the pulse probe.	• Only "#" is displayed if item is unable to be measured. • Figures with "#"s are temporary ones. They are the same figures as an actual piece of data which was just previously measured.

NOTE:

- Any monitored item that does not match the vehicle being diagnosed is deleted from the display automatically.
- Regarding D22 model, "-B1" indicates right bank and "-B2" indicates left bank.

*: Models with electric cooling fan.

DATA MONITOR (SPEC) MODE

NEEC0555S11

Monitored item [Unit]	ECM input signals	Main signals	Description	Remarks
MAS A/F SE-B1 [V]	○	○	• The signal voltage of the mass air flow sensor specification is displayed.	• When the engine is running, specification range is indicated.
B/FUEL SCHDL [msec]			• "Base fuel schedule" indicates the fuel injection pulse width programmed into ECM, prior to any learned on board correction.	• When the engine is running, specification range is indicated.
A/F ALPHA-B1 [%]		○	• Indicates the mean value of the air-fuel ratio feedback correction factor per cycle.	• When the engine is running, specification range is indicated. • This data also includes the data for the air-fuel ratio learning control.
A/F ALPHA-B2 [%]		○		

NOTE:

- Any monitored item that does not match the vehicle being diagnosed is deleted from the display automatically.
- Regarding D22 model, "B1" indicates bank 1 and "B2" indicates bank 2.

ACTIVE TEST MODE

NEEC0555S07

TEST ITEM	CONDITION	JUDGEMENT	CHECK ITEM (REMEDY)
FUEL INJECTION	• Engine: Return to the original trouble condition • Change the amount of fuel injection using CONSULT-II.	If trouble symptom disappears, see CHECK ITEM.	• Harness and connector • Fuel injectors • Front heated oxygen sensor
IGNITION TIMING	• Engine: Return to the original trouble condition • Timing light: Set • Retard the ignition timing using CONSULT-II.	If trouble symptom disappears, see CHECK ITEM.	• Adjust initial ignition timing
IACV-AAC/V OPENING	• Engine: After warming up, idle the engine. • Change the IACV-AAC valve opening percent using CONSULT-II.	Engine speed changes according to the opening percent.	• Harness and connector • IACV-AAC valve
POWER BALANCE	• Engine: After warming up, idle the engine. • A/C switch "OFF" • Shift lever "N" • Cut off each injector signal one at a time using CONSULT-II.	Engine runs rough or dies.	• Harness and connector • Compression • Injectors • Power transistor • Spark plugs • Ignition coils
ENG COOLANT TEMP	• Engine: Return to the original trouble condition • Change the engine coolant temperature using CONSULT-II.	If trouble symptom disappears, see CHECK ITEM.	• Harness and connector • Engine coolant temperature sensor • Fuel injectors
COOLING FAN*	• Ignition switch: ON • Turn the cooling fan "ON" and "OFF" using CONSULT-II.	Cooling fan moves and stops.	• Harness and connector • Cooling fan motor • Cooling fan relay
FUEL PUMP RELAY	• Ignition switch: ON (Engine stopped) • Turn the fuel pump relay "ON" and "OFF" using CONSULT-II and listen to operating sound.	Fuel pump relay makes the operating sound.	• Harness and connector • Fuel pump relay

CONSULT-II (Cont'd)

TEST ITEM	CONDITION	JUDGEMENT	CHECK ITEM (REMEDY)
PURG VOL CONT/V	• Engine: After warming up, run engine at 1,500 rpm. • Change the EVAP canister purge volume control solenoid valve opening percent using CONSULT-II.	Engine speed changes according to the opening percent.	• Harness and connector • Solenoid valve
FUEL/T TEMP SEN	• Change the fuel tank temperature using CONSULT-II.		
VENT CONTROL/V	• Ignition switch: ON (Engine stopped) • Turn solenoid valve "ON" and "OFF" with the CONSULT-II and listen to operating sound.	Solenoid valve makes an operating sound.	• Harness and connector • Solenoid valve
VC/V BYPASS/V	• Ignition switch: ON (Engine stopped) • Turn solenoid valve "ON" and "OFF" with the CONSULT-II and listen to operating sound.	Solenoid valve makes an operating sound.	• Harness and connector • Solenoid valve

*: Models with electric cooling fan.

DTC CONFIRMATION MODE

NEEC0555S08

SRT STATUS Mode

NEEC0555S0801

For details, refer to "SYSTEM READINESS TEST (SRT) CODE", EC-676.

SRT WORK SUPPORT Mode

NEEC0555S0803

SRT status and some of the data monitor item can be read.

DTC Work Support Mode

NEEC0555S0802

Test mode	Test item	Condition	Reference page
EVAPORATIVE SYSTEM	EVAP SML LEAK P0440	Refer to corresponding trouble diagnosis for DTC.	EC-979
	EVAP VERY SML LEAK P1441		EC-1098
	PURG VOL CN/V P1444		EC-1113
	PURGE FLOW P1447		EC-1132
	VC CUT/V BP/V P1491		EC-1162
HEATED OXYGEN SENSOR 1 (FRONT)	HO2S1 (B1) P0130		EC-799
	HO2S1 (B1) P0131		EC-810
	HO2S1 (B1) P0132		EC-819
	HO2S1 (B1) P0133		EC-828
	HO2S1 (B2) P0150		EC-799
	HO2S1 (B2) P0151		EC-810
	HO2S1 (B2) P0152		EC-819
	HO2S1 (B2) P0153		EC-828
HEATED OXYGEN SENSOR 2 (REAR)	HO2S2 (B1) P0137		EC-857
	HO2S2 (B1) P0138		EC-867
	HO2S2 (B1) P0139		EC-877
	HO2S2 (B2) P0157		EC-857
	HO2S2 (B2) P0158		EC-867
	HO2S2 (B2) P0159		EC-877

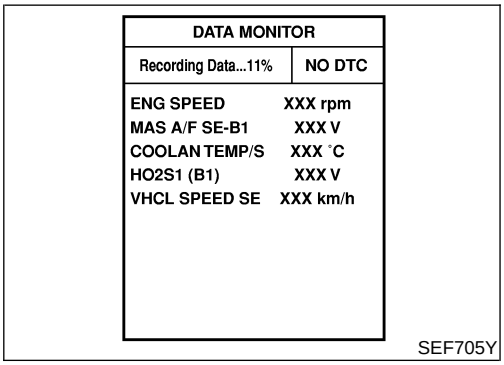

SEF705Y

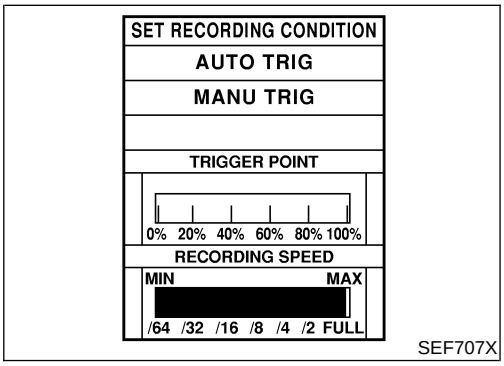

SEF707X

REAL TIME DIAGNOSIS IN DATA MONITOR MODE (RECORDING VEHICLE DATA)

NEEC0555S09

CONSULT-II has two kinds of triggers and they can be selected by touching "SETTING" in "DATA MONITOR" mode.

1) "AUTO TRIG" (Automatic trigger):

- The malfunction will be identified on the CONSULT-II screen in real time.
  In other words, DTC/1st trip DTC and malfunction item will be displayed if the malfunction is detected by ECM.
  At the moment a malfunction is detected by ECM, "MONITOR" in "DATA MONITOR" screen is changed to "Recording Data ... xx%" as shown at left, and the data after the malfunction detection is recorded. Then when the percentage reached 100%, "REAL-TIME DIAG" screen is displayed. If "STOP" is touched on the screen during " Recording Data ... xx%", "REAL-TIME DIAG" screen is also displayed.
  The recording time after the malfunction detection and the recording speed can be changed by "TRIGGER POINT" and "Recording Speed". Refer to CONSULT-II OPERATION MANUAL.

2) "MANU TRIG" (Manual trigger):

- DTC/1st trip DTC and malfunction item will not be displayed

automatically on CONSULT-II screen even though a malfunction is detected by ECM.
DATA MONITOR can be performed continuously even though a malfunction is detected.

Use these triggers as follows:

1) "AUTO TRIG"

- While trying to detect the DTC/1st trip DTC by performing the "DTC Confirmation Procedure", be sure to select to "DATA MONITOR (AUTO TRIG)" mode. You can confirm the malfunction at the moment it is detected.
- While narrowing down the possible causes, CONSULT-II should be set in "DATA MONITOR (AUTO TRIG)" mode, especially in case the incident is intermittent.
  When you are inspecting the circuit by gently shaking (or twisting) the suspicious connectors, components and harness in the "DTC Confirmation Procedure", the moment a malfunction is found the DTC/1st trip DTC will be displayed. (Refer to ***GI-24***, "Incident Simulation Tests" in "HOW TO PERFORM EFFICIENT DIAGNOSIS FOR AN ELECTRICAL INCIDENT".

2) "MANU TRIG"

- If the malfunction is displayed as soon as "DATA MONITOR" is selected, reset CONSULT-II to "MANU TRIG". By selecting "MANU TRIG" you can monitor and store the data. The data can be utilized for further diagnosis, such as a comparison with the value for the normal operating condition.

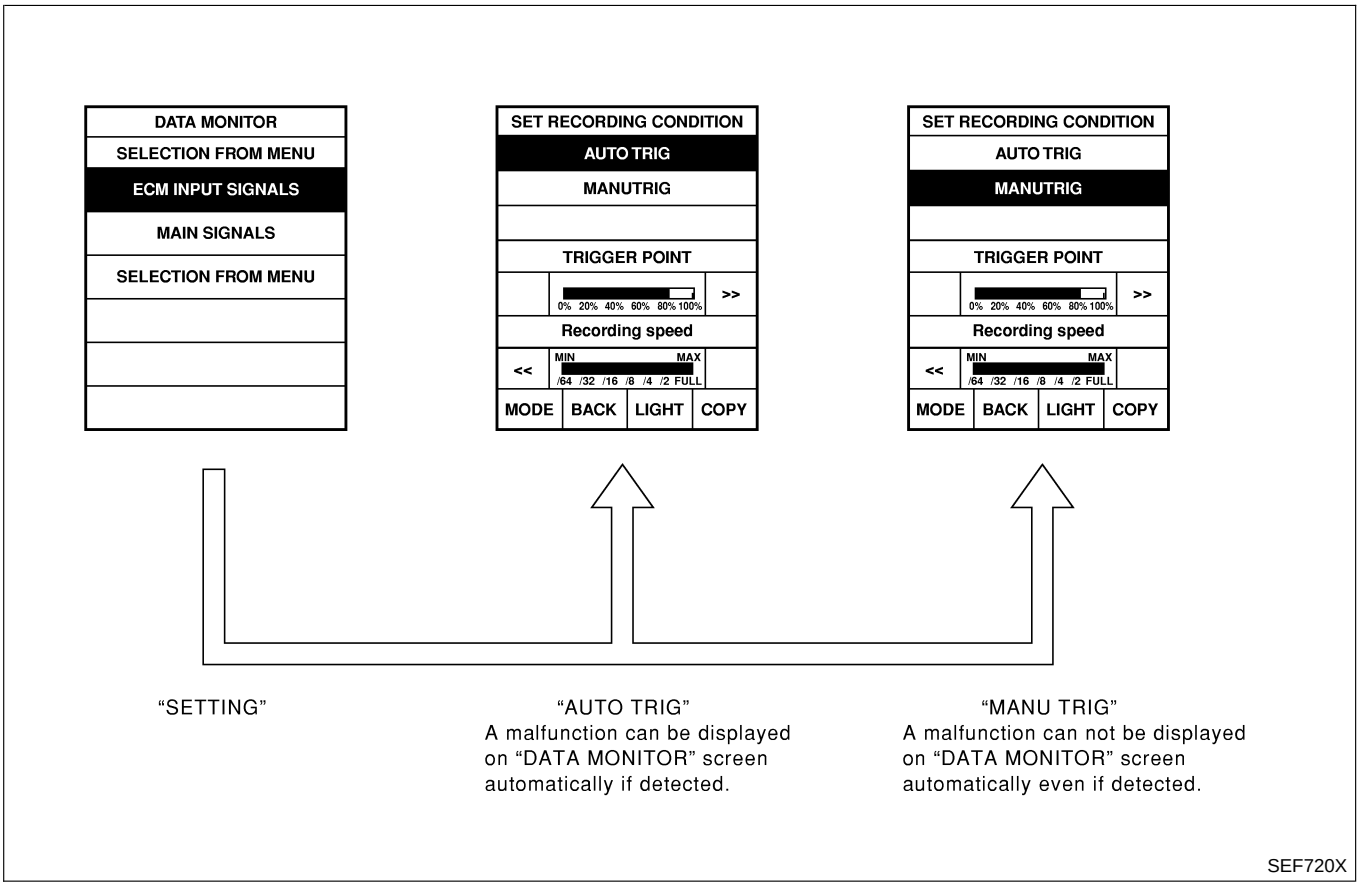

Generic Scan Tool (GST): Sample

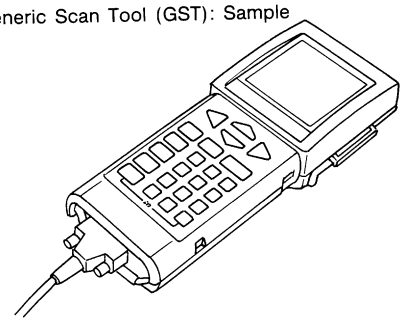

SEF139P

Generic Scan Tool (GST)

=NEEC0556

DESCRIPTION

NEEC0556S01

Generic Scan Tool (OBDII scan tool) complying with SAE J1978 has 7 different functions explained on the next page.
ISO9141 is used as the protocol.
The name “GST” or “Generic Scan Tool” is used in this service manual.

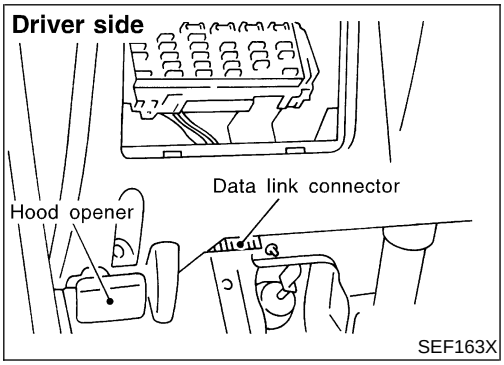

SEF163X

GST INSPECTION PROCEDURE

NEEC0556S02

1. Turn ignition switch OFF.
2. Connect “GST” to data link connector for GST which is located under LH dash panel near the fuse box cover.

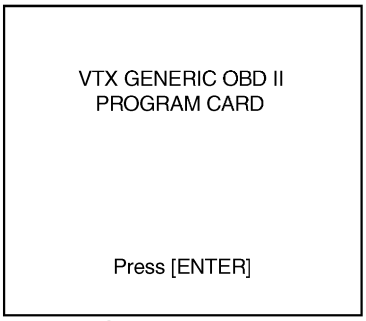

Sample screen*

AEC059B

3. Turn ignition switch ON.
4. Enter the program according to instruction on the screen or in the operation manual.

(*: Regarding GST screens in this section, sample screens are shown.)

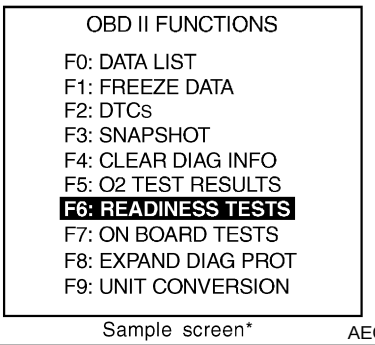

Sample screen*

AEC060B

5. Perform each diagnostic mode according to each service procedure.

For further information, see the GST Operation Manual of the tool maker.

Generic Scan Tool (GST) (Cont'd)

FUNCTION

NEEC0556S03

Diagnostic test mode		Function
MODE 1	READINESS TESTS	This mode gains access to current emission-related data values, including analog inputs and outputs, digital inputs and outputs, and system status information.
MODE 2	(FREEZE DATA)	This mode gains access to emission-related data value which were stored by ECM during the freeze frame. [For details, refer to "Freeze Frame Data" (EC-700).]
MODE 3	DTCs	This mode gains access to emission-related power train trouble codes which were stored by ECM.
MODE 4	CLEAR DIAG INFO	This mode can clear all emission-related diagnostic information. This includes: ● Clear number of diagnostic trouble codes (MODE 1) ● Clear diagnostic trouble codes (MODE 3) ● Clear trouble code for freeze frame data (MODE 1) ● Clear freeze frame data (MODE 2) ● Reset status of system monitoring test (MODE 1) ● Clear on board monitoring test results (MODE 6 and 7)
MODE 6	(ON BOARD TESTS)	This mode accesses the results of on board diagnostic monitoring tests of specific components/systems that are not continuously monitored.
MODE 7	(ON BOARD TESTS)	This mode enables the off board test drive to obtain test results for emission-related powertrain components/systems that are continuously monitored during normal driving conditions.
MODE 8	—	This mode can close EVAP system in ignition switch "ON" position (Engine stopped). When this mode is performed, the following parts can be opened or closed. ● EVAP canister vent control valve open ● Vacuum cut valve bypass valve closed In the following conditions, this mode cannot function. ● Low ambient temperature ● Low battery voltage ● Engine running ● Ignition switch OFF ● Low fuel temperature ● Too much pressure is applied to EVAP system
MODE 9	CALIBRATION ID	This mode is to enable the off-board to request vehicle specific vehicle information such as Vehicle Identification Number (VIN) and calibration IDs.

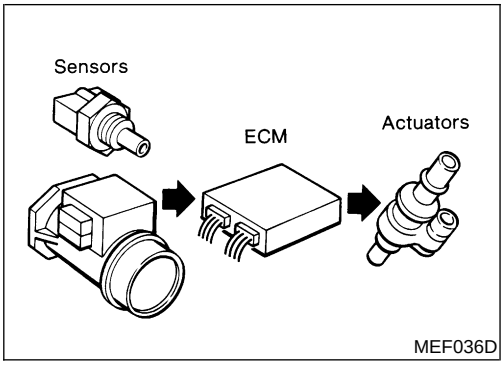

MEF036D

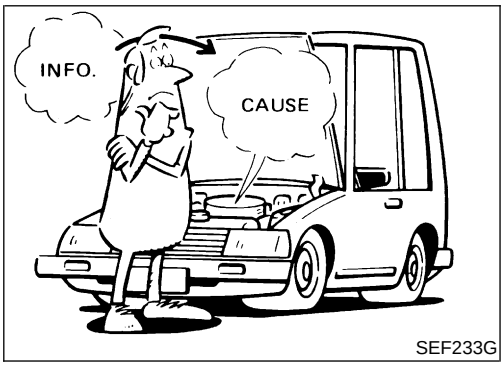

SEF233G

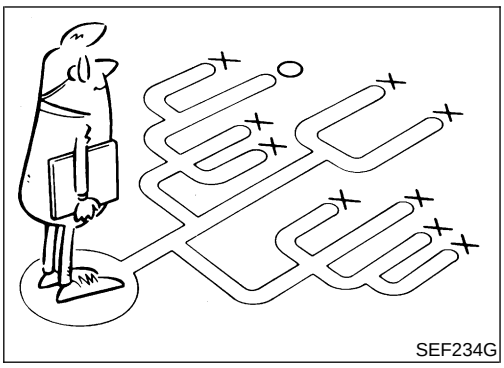
SEF234G

KEY POINTS

WHAT ..... Vehicle & engine model
WHEN ..... Date, Frequencies
WHERE..... Road conditions
HOW ..... Operating conditions, Weather conditions, Symptoms

SEF907L

Introduction

NEEC0557

The engine has an ECM to control major systems such as fuel control, ignition control, idle air control system, etc. The ECM accepts input signals from sensors and instantly drives actuators. It is essential that both input and output signals are proper and stable. At the same time, it is important that there are no problems such as vacuum leaks, fouled spark plugs, or other problems with the engine.

It is much more difficult to diagnose a problem that occurs intermittently rather than continuously. Most intermittent problems are caused by poor electric connections or improper wiring. In this case, careful checking of suspected circuits may help prevent the replacement of good parts.

A visual check only may not find the cause of the problems. A road test with CONSULT-II (or GST) or a circuit tester connected should be performed. Follow the “Work Flow” on EC-713.

Before undertaking actual checks, take a few minutes to talk with a customer who approaches with a driveability complaint. The customer can supply good information about such problems, especially intermittent ones. Find out what symptoms are present and under what conditions they occur. A “Diagnostic Worksheet” like the example on next page should be used.

Start your diagnosis by looking for “conventional” problems first. This will help troubleshoot driveability problems on an electronically controlled engine vehicle.

DIAGNOSTIC WORKSHEET

NEEC0557S01

There are many operating conditions that lead to the malfunction of engine components. A good grasp of such conditions can make trouble-shooting faster and more accurate.

In general, each customer feels differently about a problem. It is important to fully understand the symptoms or conditions for a customer complaint.

Utilize a diagnostic worksheet like the one on the next page in order to organize all the information for troubleshooting.

Some conditions may cause the MIL to come on steady or blink and DTC to be detected. Examples:

- Vehicle ran out of fuel, which caused the engine to misfire.
- Fuel filler cap was left off or incorrectly screwed on, allowing fuel to evaporate into the atmosphere [for the models with EVAP (SMALL LEAK) diagnosis].

Worksheet Sample

NEEC0557S0101

Customer name MR/MS		Model & Year	VIN
Engine #		Trans.	Mileage
Incident Date		Manuf. Date	In Service Date
Fuel and fuel filler cap		☐ Vehicle ran out of fuel causing misfire ☐ Fuel filler cap was left off or incorrectly screwed on.	
Symptoms	☐ Startability	☐ Inpossible to start ☐ No combustion ☐ Partial combustion ☐ Partial combustion affected by throttle position ☐ Partial combustion NOT affected by throttle position ☐ Possible but hard to start ☐ Others [ ]	
	☐ Idling	☐ No fast idle ☐ Unstable ☐ High idle ☐ Low idle ☐ Others [ ]	
	☐ Driveability	☐ Stumble ☐ Surge ☐ Knock ☐ Lack of power ☐ Intake backfire ☐ Exhaust backfire ☐ Others [ ]	
	☐ Engine stall	☐ At the time of start ☐ While idling ☐ While accelerating ☐ While decelerating ☐ Just after stopping ☐ While loading	
Incident occurrence		☐ Just after delivery ☐ Recently ☐ In the morning ☐ At night ☐ In the daytime	
Frequency		☐ All the time ☐ Under certain conditions ☐ Sometimes	
Weather conditions		☐ Not affected	
	Weather	☐ Fine ☐ Raining ☐ Snowing ☐ Others [ ]	
	Temperature	☐ Hot ☐ Warm ☐ Cool ☐ Cold ☐ Humid ˚F	
Engine conditions		☐ Cold ☐ During warm-up ☐ After warm-up Engine speed 0 2,000 4,000 6,000 8,000 rpm	
Road conditions		☐ In town ☐ In suburbs ☐ Highway ☐ Off road (up/down)	
Driving conditions		☐ Not affected ☐ At starting ☐ While idling ☐ At racing ☐ While accelerating ☐ While cruising ☐ While decelerating ☐ While turning (RH/LH) Vehicle speed 0 10 20 30 40 50 60 MPH	
Malfunction indicator lamp		☐ Turned on ☐ Not turned on	

MTBL0017

Work Flow

NEEC0558

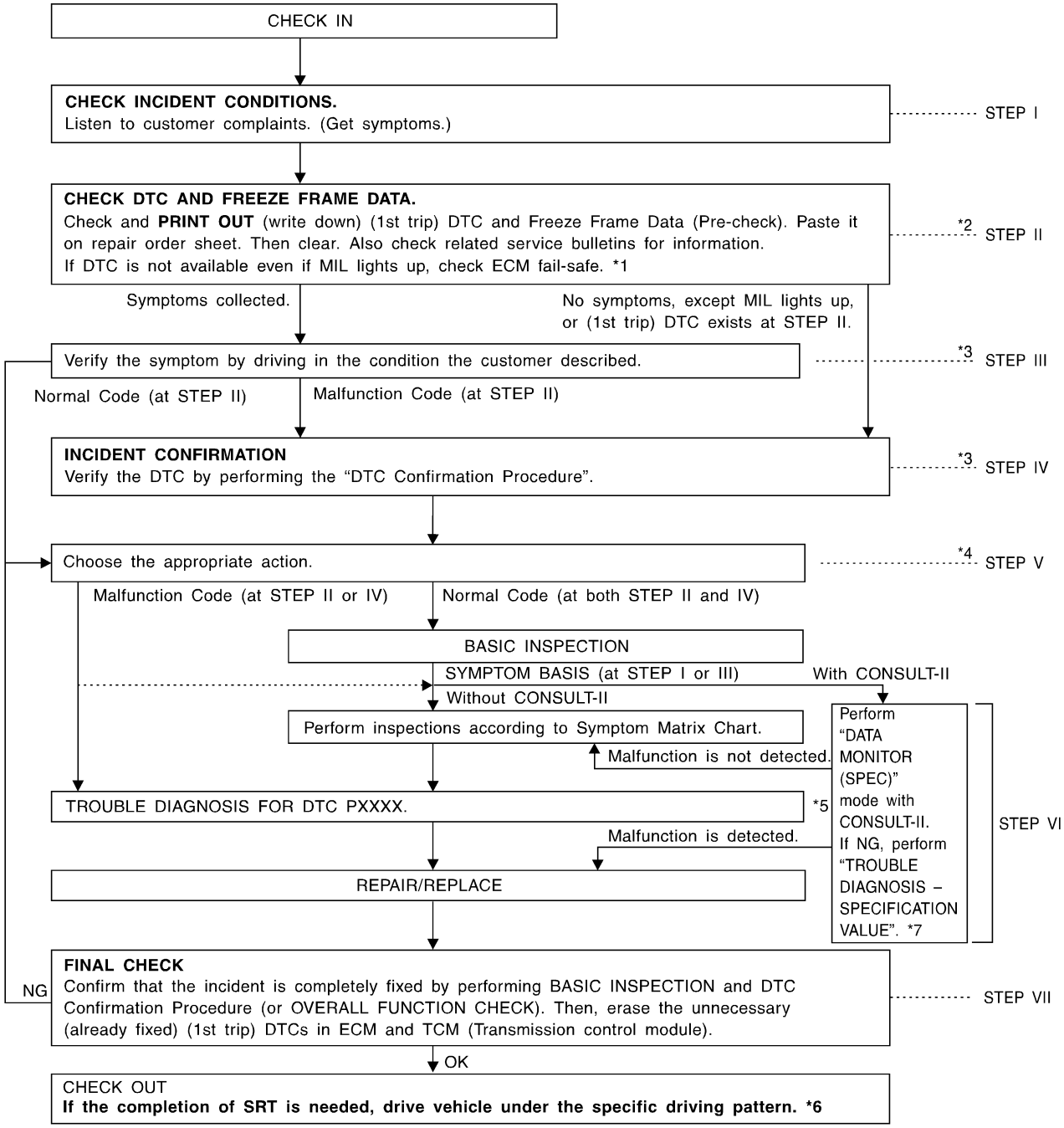

SEF510ZF

*1 EC-730

*2 If time data of "SELF-DIAG RESULTS" is other than "0" or "[1t]", perform "TROUBLE DIAGNOSIS FOR INTERMITTENT INCIDENT", EC-753.

*3 If the incident cannot be verified, perform "TROUBLE DIAGNOSIS FOR INTERMITTENT INCIDENT", EC-753.

*4 If the on board diagnostic system cannot be performed, check main power supply and ground circuit. Refer to "TROUBLE DIAGNOSIS FOR POWER SUPPLY", EC-754.

*5 If malfunctioning part cannot be detected, perform "TROUBLE DIAGNOSIS FOR INTERMITTENT INCIDENT", EC-753.

*6 EC-681

*7 EC-749

Work Flow (Cont'd)

DESCRIPTION FOR WORK FLOW

NEEC0558S01

STEP	DESCRIPTION
STEP I	Get detailed information about the conditions and the environment when the incident/symptom occurred using the "DIAGNOSTIC WORK SHEET", EC-712.
STEP II	Before confirming the concern, check and write down (print out using CONSULT-II or GST) the (1st trip) DTC and the (1st trip) freeze frame data, then erase the DTC and the data. (Refer to EC-687.) The (1st trip) DTC and the (1st trip) freeze frame data can be used when duplicating the incident at STEP III & IV. If the incident cannot be verified, perform "TROUBLE DIAGNOSIS FOR INTERMITTENT INCIDENT", EC-753. Study the relationship between the cause, specified by (1st trip) DTC, and the symptom described by the customer. (The "Symptom Matrix Chart" will be useful. See EC-731.) Also check related service bulletins for information.
STEP III	Try to confirm the symptom and under what conditions the incident occurs. The "DIAGNOSTIC WORK SHEET" and the freeze frame data are useful to verify the incident. Connect CONSULT-II to the vehicle in DATA MONITOR (AUTO TRIG) mode and check real time diagnosis results. If the incident cannot be verified, perform "TROUBLE DIAGNOSIS FOR INTERMITTENT INCIDENT", EC-753. If the malfunction code is detected, skip STEP IV and perform STEP V.
STEP IV	Try to detect the (1st trip) DTC by driving in (or performing) the "DTC Confirmation Procedure". Check and read the (1st trip) DTC and (1st trip) freeze frame data by using CONSULT-II or GST. During the (1st trip) DTC verification, be sure to connect CONSULT-II to the vehicle in DATA MONITOR (AUTO TRIG) mode and check real time diagnosis results. If the incident cannot be verified, perform "TROUBLE DIAGNOSIS FOR INTERMITTENT INCIDENT", EC-753. In case the "DTC Confirmation Procedure" is not available, perform the "Overall Function Check" instead. The (1st trip) DTC cannot be displayed by this check, however, this simplified "check" is an effective alternative. The "NG" result of the "Overall Function Check" is the same as the (1st trip) DTC detection.
STEP V	Take the appropriate action based on the results of STEP I through IV. If the malfunction code is indicated, proceed to TROUBLE DIAGNOSIS FOR DTC PXXXX. If the normal code is indicated, proceed to the BASIC INSPECTION. (Refer to EC-715.) If CONSULT-II is available, perform "DATA MONITOR (SPEC)" mode with CONSULT-II and proceed to the "TROUBLE DIAGNOSIS — SPECIFICATION VALUE", EC-749. (If malfunction is detected, proceed to "REPAIR REPLACE".) Then perform inspections according to the Symptom Matrix Chart. (Refer to EC-731.)
STEP VI	Identify where to begin diagnosis based on the relationship study between symptom and possible causes. Inspect the system for mechanical binding, loose connectors or wiring damage using (tracing) "Harness Layouts". Gently shake the related connectors, components or wiring harness with CONSULT-II set in "DATA MONITOR (AUTO TRIG)" mode. Check the voltage of the related ECM terminals or monitor the output data from the related sensors with CONSULT-II. Refer to EC-735, EC-740. The "Diagnostic Procedure" in EC section contains a description based on open circuit inspection. A short circuit inspection is also required for the circuit check in the Diagnostic Procedure. For details, refer to ***GI-23***, "HOW TO PERFORM EFFICIENT DIAGNOSIS FOR AN ELECTRICAL INCIDENT", "Circuit Inspection". Repair or replace the malfunction parts. If malfunctioning part cannot be detected, perform "TROUBLE DIAGNOSIS FOR INTERMITTENT INCIDENT", EC-753.
STEP VII	Once you have repaired the circuit or replaced a component, you need to run the engine in the same conditions and circumstances which resulted in the customer's initial complaint. Perform the "DTC Confirmation Procedure" and confirm the normal code [DTC No. P0000 or 0505] is detected. If the incident is still detected in the final check, perform STEP VI by using a different method from the previous one. Before returning the vehicle to the customer, be sure to erase the unnecessary (already fixed) (1st trip) DTC in ECM and TCM (Transmission control module). (Refer to EC-687.)

Basic Inspection

NEEC0559

Precaution:
Perform Basic Inspection without electrical or mechanical loads applied;

- Headlamp switch is OFF,
- Air conditioner switch is OFF,
- Rear window defogger switch is OFF,
- Steering wheel is in the straight-ahead position, etc.

1	INSPECTION START	
1. Check service records for any recent repairs that may indicate a related problem, or the current need for scheduled maintenance. 2. Open engine hood and check the following: ● Harness connectors for improper connections ● Vacuum hoses for splits, kinks, or improper connections ● Wiring for improper connections, pinches, or cuts 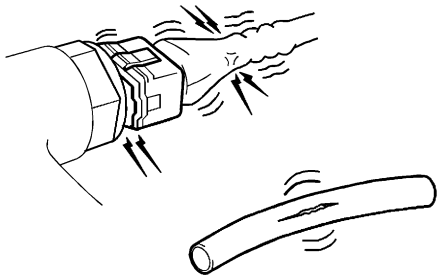 SEF983U		
Models with CONSULT-II	▶	GO TO 2.
Models with GST	▶	GO TO 2.
Models with No Tools	▶	GO TO 16.

2	CONNECT CONSULT-II OR GST TO THE VEHICLE	
With CONSULT-II Connect “CONSULT-II” to the data link connector for CONSULT-II and select “ENGINE” from the menu. Refer to EC-696.		
With GST Connect “GST” to the data link connector for GST. Refer to EC-709.		
Models with CONSULT-II	▶	GO TO 3.
Models with GST	▶	GO TO 15.

3	CHECK FI CAM FUNCTION

With CONSULT-II

1. Turn ignition switch ON.
2. Select "COOLAN TEMP/S" in "DATA MONITOR" mode with CONSULT-II.
3. Start engine and warm it up.

DATA MONITOR	
MONITOR	NO DTC
COOLAN TEMP/S	XXX °C

SEF013Y

4. When engine coolant temperature is 75 to 85°C (167 to 185°F), check the following.

- The center of mark **A** is aligned with mark **C**.
- The cam follower lever's roller is not touching the fast idle cam.

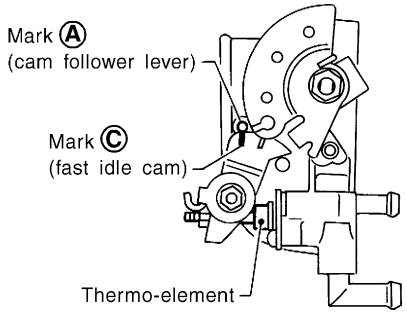

SEF971R

OK or NG

OK	▶	GO TO 4.
NG	▶	1. Check FI cam. Refer to "Fast Idle Cam (FIC)", EC-660. 2. GO TO 4.

4	CHECK IGNITION TIMING

With CONSULT-II

1. Warm up engine to normal operating temperature.
2. Select "TARGET IDLE RPM ADJ" in "WORK SUPPORT" mode and touch "START".

TARGET IDLE RPM ADJ
SET ENGINE RPM AT THE SPECIFIED VALUE UNDER THE FOLLOWING CONDITION. -ENG WARMED UP ENOUGH -NO LOAD

SEC019C

3. Check ignition timing at idle using a timing light.

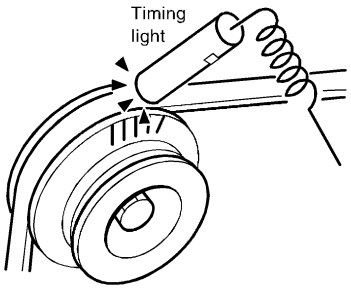

SEF984U

Ignition timing: 10°±2° BTDC

OK or NG

OK	▶	GO TO 5.
NG	▶	1. Adjust ignition timing by turning distributor. Refer to "Idle Speed/Ignition Timing/Idle Mixture Ratio Adjustment", EC-662. 2. GO TO 5.

5	CHECK BASE IDLE SPEED

With CONSULT-II

1. Select "TARGET IDLE RPM ADJ" in "WORK SUPPORT" mode and touch "START".

TARGET IDLE RPM ADJ
SET ENGINE RPM AT THE SPECIFIED VALUE UNDER THE FOLLOWING CONDITION. -ENG WARMED UP ENOUGH -NO LOAD

SEC019C

2. Check idle speed.

700±50 rpm (in "P" or "N" position)

OK or NG

OK	▶	GO TO 6.
NG	▶	1. Adjust engine speed by turning idle speed adjusting screw. Refer to "Idle Speed/Ignition Timing/Idle Mixture Ratio Adjustment", EC-662. 2. GO TO 6.

6	CHECK CLOSED THROTTLE POSITION SWITCH IDLE POSITION-I

With CONSULT-II
NOTE:
Always check ignition timing and base idle speed before performing the following.
1. Warm up engine to normal operating temperature.
2. Check FI cam, refer to procedure 3.
3. Stop engine.

▶	GO TO 7.

7	CHECK CLOSED THROTTLE POSITION SWITCH IDLE POSITION-II

1. Turn ignition switch ON.
2. Select "CLSD THL/P SW" in "DATA MONITOR" mode.
3. Read "CLSD THL/P SW" signal under the following conditions.

- Insert a 0.3 mm (0.012 in) and 0.4 mm (0.016 in) feeler gauge alternately between the throttle adjust screw (TAS) and throttle drum as shown in the figure and check the signal.

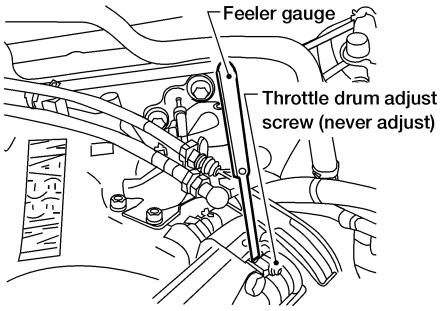

LEC517

DATA MONITOR	
MONITOR	NO DTC
CLSD THL/P SW	ON

SEF173Y

"CLSD THL/P SW" signal should remain "ON" while inserting 0.3 mm (0.012 in) feeler gauge.
"CLSD THL/P SW" signal should remain "OFF" while inserting 0.4 mm (0.016 in) feeler gauge.

OK or NG

OK	▶	GO TO 12.
NG	▶	GO TO 8.

8	ADJUSTMENT THROTTLE POSITION SWITCH IDLE POSITION

With CONSULT-II
NOTE:
- **Never adjust throttle adjust screw (TAS).**
- **Do not touch throttle drum when checking "CLSD THL/P SW" signal, doing so may cause an incorrect adjustment.**

1. Warm up engine to normal operating temperature.
2. Check FI cam. Refer to procedure 3.
3. Stop engine.
4. Loosen throttle position sensor fixing bolts.

▶	GO TO 9.

9	ADJUSTMENT CLOSED THROTTLE POSITION SWITCH IDLE POSITION-II

1. Turn ignition switch ON.
2. Select "CLSD THL/P SW" in "DATA MONITOR" mode.
3. Insert 0.35 mm (0.0138 in) feeler gauge between throttle adjust screw and throttle drum as shown in the figure.

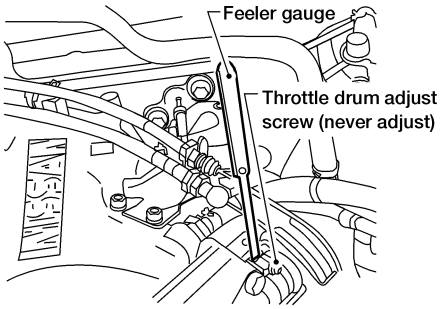

LEC517

4. Open throttle valve and then close.
5. Check "CLSD THL/P SW" signal.

DATA MONITOR	
MONITOR	NO DTC
CLSD THL/P SW	OFF

SEF305Y

"CLSD THL/P SW" signal should remain "OFF" when the throttle valve is closed.

OK or NG

OK	▶	GO TO 10.
NG	▶	GO TO 8.

10	ADJUSTMENT THROTTLE POSITION SWITCH IDLE POSITION-III

With CONSULT-II

Turn throttle position sensor body clockwise until "CLSD THL/P SW" signal switches to "OFF".

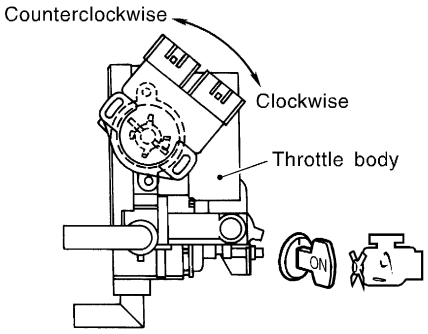

SEF689W

	▶	GO TO 11.

11	ADJUSTMENT THROTTLE POSITION SWITCH IDLE POSITION-IV

With CONSULT-II

1. Remove 0.35 mm (0.0138 in) feeler gauge then insert 0.3 mm (0.012 in) feeler gauge.
2. Temporarily tighten sensor body fixing bolts as follows.

- **Gradually move the sensor body counterclockwise and stop it when "CLSD THL/P SW" signal switches from "OFF" to "ON", then temporarily tighten sensor body fixing bolts.**

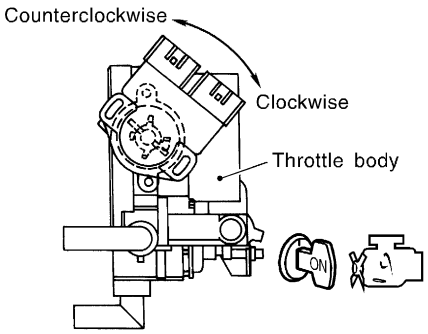

SEF689W

3. Make sure two or three times that the signal is "ON" when the throttle valve is closed and "OFF" when it is opened.
4. Remove 0.3 mm (0.012 in) feeler gauge then insert 0.4 mm (0.016 in) feeler gauge.
5. Make sure two or three times that the signal remains "OFF" when the throttle valve is closed.
6. Tighten throttle position sensor.
7. Check the "CLSD THL/P SW" signal again.
   The signal remains "OFF" while closing throttle valve.

OK or NG

OK	▶	GO TO 12.
NG	▶	GO TO 8.

12	RESET THROTTLE POSITION SENSOR IDLE POSITION MEMORY

With CONSULT-II

NOTE:

Always warm up engine to normal operating temperature. If engine is cool, the throttle position sensor idle position memory will not be reset correctly.

1. Remove feeler gauge.
2. Start engine.
3. Warm up engine to normal operating temperature.
4. Select "CLSD THL POS" in "DATA MONITOR" mode.
5. Stop engine. (Turn ignition switch OFF.)
6. Turn ignition switch ON and wait at least 5 seconds.

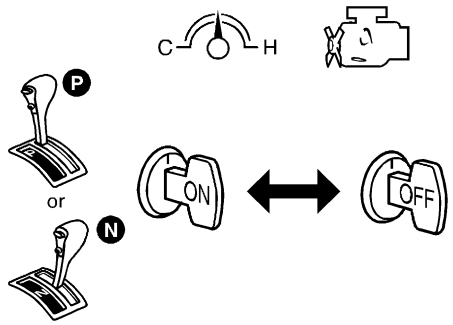

SEF864V

7. Turn ignition switch OFF and wait at least 5 seconds.
8. Repeat steps 5 and 6 until "CLSD THL POS" signal changes to "ON".

DATA MONITOR	
MONITOR	NO DTC
ENG SPEED	XXX rpm
COOLAN TEMP/S	XXX °C
CLSD THL/P SW	ON

SEF197Y

	▶	GO TO 13.

13	CHECK TARGET IDLE SPEED

With CONSULT-II

1. Start engine and warm it up to normal operating temperature.
2. Select "ENG SPEED" in "DATA MONITOR" mode.
3. Check idle speed.

750±50 rpm (in "P" or "N" position)

OK or NG

OK	▶	**INSPECTION END**
NG	▶	Adjust idle speed. Refer to "Idle Speed/Ignition Timing/Idle Mixture Ratio Adjustment", EC-662.

14	CHECK FI CAM FUNCTION

With GST

1. Turn ignition switch ON.
2. Select "MODE 1" with GST.
3. Start engine and warm it up.
4. When engine coolant temperature is 75 to 85°C (167 to 185°F), check the following.

- The center of mark **A** is aligned with mark **C**.
- The cam follower lever's roller is not touching the fast idle cam.

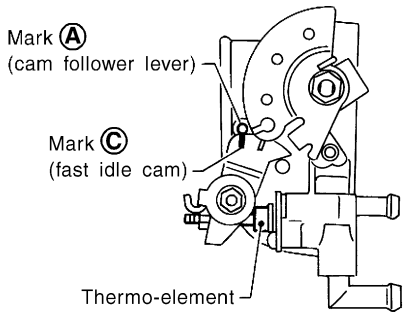

SEF971R

OK or NG

OK	▶	GO TO 16.
NG	▶	1. Check FI cam. Refer to "Fast Idle Cam (FIC)", EC-660. 2. GO TO 16.

15	CHECK FI CAM FUNCTION

No Tools

1. Set the voltmeter between ECM terminal 59 (Engine coolant temperature sensor signal) and ground.
2. Start engine and warm it up.

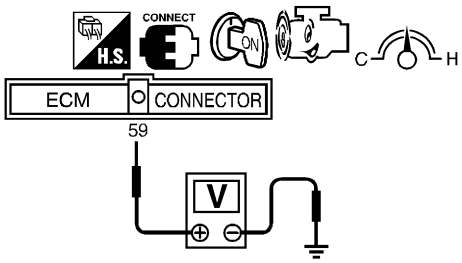

SEF119W

3. When the voltage is between 1.10 to 1.36V, check the following.
- The center of mark **A** is aligned with mark **C**.
- The cam follower lever's roller is not touching the fast idle cam.

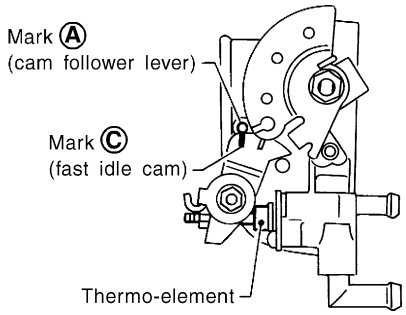

SEF971R

OK or NG

OK	▶	GO TO 16.
NG	▶	1. Check FI cam. Refer to "Fast Idle Cam (FIC)", EC-660. 2. GO TO 16.

16	CHECK IGNITION TIMING

Without CONSULT-II

1. Warm up engine to normal operating temperature.
2. Stop engine and disconnect throttle position sensor harness connector.

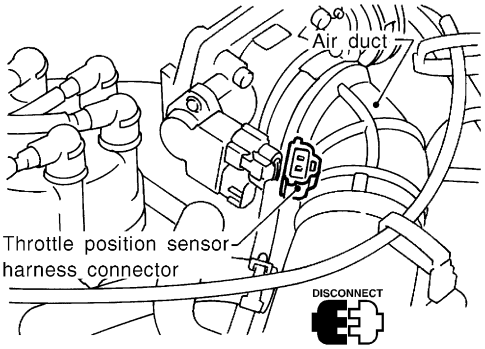

SEF975R

3. Start engine.
4. Check ignition timing at idle using a timing light.

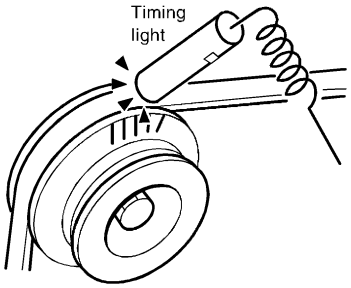

SEF984U

Ignition timing: 10°±2° BTDC

OK or NG

OK	▶	GO TO 17.
NG	▶	1. Adjust ignition timing by turning distributor. Refer to "Idle Speed/Ignition Timing/ Idle Mixture Ratio Adjustment", EC-662. 2. GO TO 17.

17	CHECK BASE IDLE SPEED

Without CONSULT-II

Does engine speed fall to the following speed?

700±50 rpm (in "P" or "N" position)

OK or NG

OK	▶	GO TO 18.
NG	▶	1. Adjust engine speed by turning idle speed adjusting screw. Refer to "Idle Speed/ Ignition Timing/ Idle Mixture Ratio Adjustment", EC-662. 2. GO TO 18.

18	CHECK CLOSED THROTTLE POSITION SWITCH IDLE POSITION

Without CONSULT-II

NOTE:

Always check ignition timing and base idle speed before performing the following.

1. Warm up engine to normal operating temperature.
2. Check FI cam, refer to procedure 12 or 13.
3. Stop engine.

	▶	GO TO 19.

19	CHECK CLOSED THROTTLE POSITION SWITCH IDLE POSITION-I

1. Disconnect closed throttle position switch harness connector.
2. Check continuity between closed throttle position switch terminals **5** and **6** under the following conditions.

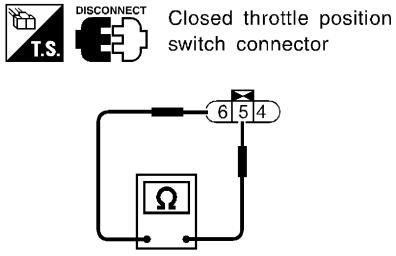

SEF862V

- Insert the 0.3 mm (0.012 in) and 0.4 mm (0.016 in) feeler gauge alternately between the throttle adjust screw (TAS) and throttle drum as shown in the figure.

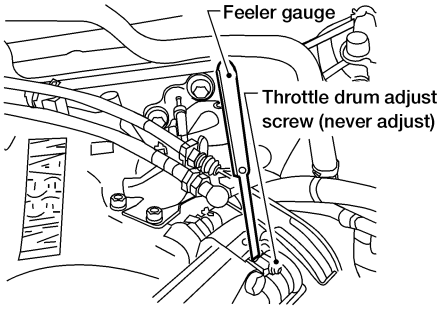

LEC517

"Continuity should exist" while inserting 0.3 mm (0.012 in) feeler gauge.
"Continuity should not exist" while inserting 0.4 mm (0.016 in) feeler gauge.

OK or NG

OK	▶	GO TO 24.
NG	▶	GO TO 20.

20	ADJUSTMENT THROTTLE POSITION SWITCH IDLE POSITION

Without CONSULT-II
NOTE:
- **Never adjust throttle adjust screw (TAS).**
- **Do not touch throttle drum when checking "continuity", doing so may cause an incorrect adjustment.**

1. Warm up engine to normal operating temperature.
2. Check FI cam. Refer to procedure 12 or 13.
3. Stop engine.
4. Loosen throttle position sensor fixing bolts.

	▶	GO TO 21.

21	ADJUSTMENT CLOSED THROTTLE POSITION SWITCH IDLE POSITION-II

1. Disconnect closed throttle position switch harness connector.
2. Insert 0.35 mm (0.0138 in) feeler gauge between the throttle adjust screw and throttle drum as shown in the figure.

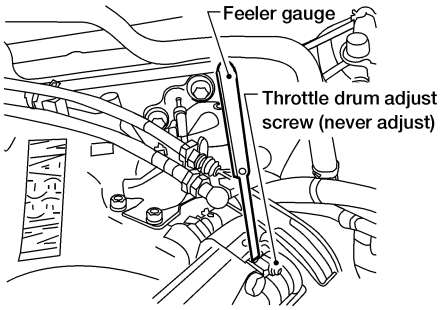

LEC517

3. Open throttle valve then close.
4. Check continuity between closed throttle position switch terminals 5 and 6.

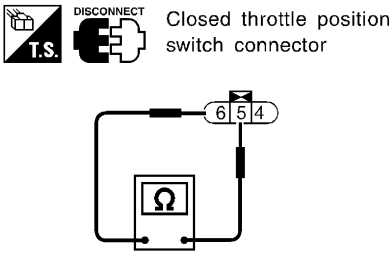

SEF862V

Continuity should not exist while closing the throttle position sensor.

OK or NG

OK	▶	GO TO 23.
NG	▶	GO TO 22.

22	ADJUSTMENT THROTTLE POSITION SWITCH IDLE POSITION-III

Without CONSULT-II

Turn throttle position sensor body clockwise until continuity does not exist.

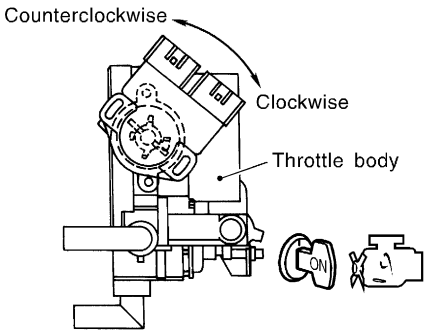

SEF689W

	▶	GO TO 23.

23	ADJUSTMENT THROTTLE POSITION SWITCH IDLE POSITION-IV

Without CONSULT-II

1. Remove 0.35 mm (0.0138 in) feeler gauge then insert 0.3 mm (0.012 in) feeler gauge.
2. Temporarily tighten sensor body fixing bolts as follows.

- **Gradually move the sensor body counterclockwise and stop it when the continuity comes to exist, then temporarily tighten sensor body fixing bolts.**

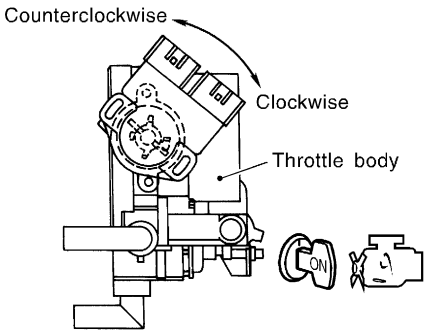

SEF689W

3. Make sure two or three times that the continuity exists when the throttle valve is closed and continuity does not exist when it is opened.
4. Remove 0.3 mm (0.012 in) feeler gauge then insert 0.4 mm (0.016 in) feeler gauge.
5. Make sure two or three times that the continuity does not exist when the throttle valve is closed.
6. Tighten throttle position sensor.
7. Check the continuity again.

Continuity does not exist while closing the throttle valve.

OK or NG

OK	▶	GO TO 24.
NG	▶	GO TO 20.

24	RESET THROTTLE POSITION SENSOR IDLE POSITION MEMORY

Without CONSULT-II

NOTE:

Always warm up engine to normal operating temperature. If engine is cool, the throttle position sensor idle position memory will not be reset correctly.

1. Remove feeler gauge.
2. Start engine.
3. Warm up engine to normal operating temperature.
4. Stop engine. (Turn ignition switch OFF.)
5. Turn ignition switch ON and wait at least 5 seconds.

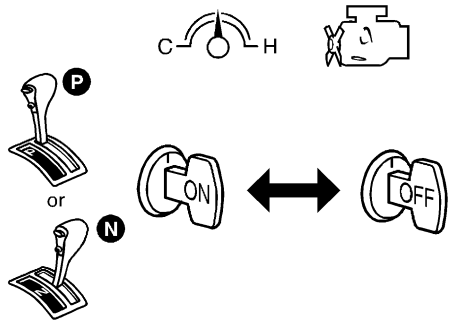

SEF864V

6. Turn ignition switch OFF and wait at least 5 seconds.
7. Repeat steps 4 and 5, 20 times.

	▶	GO TO 25.

25	REINSTALLATION
⊗ **Without CONSULT-II** 1. Reconnect throttle position sensor harness connector and closed throttle position switch harness connector. 2. Start engine and rev it (2,000 to 3,000 rpm) two or three times under no-load and then run engine at idle speed.	
▶	GO TO 26.

26	CHECK TARGET IDLE SPEED	
⊗ **Without CONSULT-II** 1. Start engine and warm it up to normal operating temperature. 2. Check idle speed. **750±50 rpm (in "P" or "N" position)**		
	OK or NG	
OK	▶	GO TO 27.
NG	▶	1. Adjust idle speed. Refer to "Idle Speed/Ignition Timing/Idle Mixture Ratio Adjustment", EC-662. 2. GO TO 27.

27	ERASE UNNECESSARY DTC
After this inspection, unnecessary DTC No. might be displayed. Erase the stored memory in ECM and TCM (Transmission control module). Refer to "HOW TO ERASE EMISSION-RELATED DIAGNOSTIC INFORMATION", EC-687 and ***AT-179***, "HOW TO ERASE DTC".	
▶	**INSPECTION END**

DTC Inspection Priority Chart

NEEC0560

If some DTCs are displayed at the same time, perform inspections one by one based on the following priority chart.

Priority	Detected items (DTC)
1	• P0100 Mass air flow sensor • P0110 Intake air temperature sensor • P0115 P0125 Engine coolant temperature sensor • P0120 Throttle position sensor • P0180 Fuel tank temperature sensor • P0325 Knock sensor • P0335 P1336 Crankshaft position sensor (OBD) • P0340 Camshaft position sensor • P0460 P0461 P1464 Fuel level sensor • P0500 Vehicle speed sensor • P0600 A/T communication line • P0605 ECM • P1605 A/T diagnosis communication line • P1706 Park/Neutral position (PNP) switch
2	• P0105 Absolute pressure sensor (0803) • P0130-P0134, P0150-P0154 Heated oxygen sensor 1 (front) • P0135 P0155 Heated oxygen sensor 1 heater (front) • P0137-P0140, P0157-P0160 Heated oxygen sensor 2 (rear) • P0141 P0161 Heated oxygen sensor 2 heater (rear) • P0217 Engine coolant overtemperature enrichment protection • P0443 P1444 EVAP canister purge volume control solenoid valve • P0446 P1446 P1448 EVAP canister vent control valve • P0450 EVAP control system pressure sensor • P0510 Closed throttle position switch • P0705-P0755 P1705 P1760 A/T related sensors, solenoid valves and switches • P1441 EVAP control system (VERY SMALL LEAK) • P1447 EVAP control system purge flow monitoring • P1490 P1491 Vacuum cut valve bypass valve
3	• P0171 P0172 P0174 P0175 Fuel injection system function • P0306 - P0300 Misfire • P0420 P0430 Three way catalyst function • P0440 EVAP control system (SMALL LEAK) • P0455 EVAP control system (GROSS LEAK) • P0505 IACV-AAC valve • P0731-P0734 P0744 A/T function • P1148 P1168 Closed loop control

Fail-safe Chart

=NEEC0561

The ECM enters fail-safe mode, if any of the following malfunctions is detected due to the open or short circuit. When the ECM enters the fail-safe mode, the MIL illuminates.

<table>
<tr><th>DTC No.
CONSULT-II GST</th><th>Detected items</th><th colspan="2">Engine operating condition in fail-safe mode</th></tr>
<tr><td>P0100</td><td>Mass air flow sensor circuit</td><td colspan="2">Engine speed will not rise more than 2,400 rpm due to the fuel cut.</td></tr>
<tr><td rowspan="5">P0115</td><td rowspan="5">Engine coolant temperature sensor circuit</td><td colspan="2">Engine coolant temperature will be determined by ECM based on the time after turning ignition switch ON or START.
CONSULT-II displays the engine coolant temperature decided by ECM.</td></tr>
<tr><td>Condition</td><td>Engine coolant temperature decided (CONSULT-II display)</td></tr>
<tr><td>Just as ignition switch is turned ON or Start</td><td>40°C (104°F)</td></tr>
<tr><td>More than approx. 4 minutes after ignition ON or Start</td><td>80°C (176°F)</td></tr>
<tr><td>Except as shown above</td><td>40 - 80°C (104 - 176°F)
(Depends on the time)</td></tr>
<tr><td rowspan="4">P0120</td><td rowspan="4">Throttle position sensor circuit</td><td colspan="2">Throttle position will be determined based on the injected fuel amount and the engine speed.
Therefore, acceleration will be poor.</td></tr>
<tr><td>Condition</td><td>Driving condition</td></tr>
<tr><td>When engine is idling</td><td>Normal</td></tr>
<tr><td>When accelerating</td><td>Poor acceleration</td></tr>
<tr><td rowspan="8">Unable to access ECM</td><td rowspan="8">ECM</td><td colspan="2">ECM fail-safe activating condition
The computing function of the ECM was judged to be malfunctioning.
When the fail-safe system activates (i.e., if the ECM detects a malfunction condition in the CPU of ECM), the MIL on the instrument panel lights to warn the driver.
However it is not possible to access ECM and DTC cannot be confirmed.
Engine control with fail-safe
When ECM fail-safe is operating, fuel injection, ignition timing, fuel pump operation, and IACV-AAC valve operation are controlled under certain limitations.</td></tr>
<tr><td></td><td>ECM fail-safe operation</td></tr>
<tr><td>Engine speed</td><td>Engine speed will not rise more than 3,000 rpm</td></tr>
<tr><td>Fuel injection</td><td>Simultaneous multiport fuel injection system</td></tr>
<tr><td>Ignition timing</td><td>Ignition timing is fixed at the preset value</td></tr>
<tr><td>Fuel pump</td><td>Fuel pump relay is “ON” when engine is running and “OFF” when engine stalls</td></tr>
<tr><td>IACV-AAC valve</td><td>Full open</td></tr>
<tr><td colspan="2">Replace ECM, if ECM fail-safe condition is confirmed.</td></tr>
</table>

Symptom Matrix Chart

NEEC0562

SYSTEM — BASIC ENGINE CONTROL SYSTEM

NEEC0562S01

		SYMPTOM													Reference page
		HARD/NO START/RESTART (EXCP. HA)	ENGINE STALL	HESITATION/SURGING/FLAT SPOT	SPARK KNOCK/DETONATION	LACK OF POWER/POOR ACCELERATION	HIGH IDLE/LOW IDLE	ROUGH IDLE/HUNTING	IDLING VIBRATION	SLOW/NO RETURN TO IDLE	OVERHEATS/WATER TEMPERATURE HIGH	EXCESSIVE FUEL CONSUMPTION	EXCESSIVE OIL CONSUMPTION	BATTERY DEAD (UNDER CHARGE)	
Warranty symptom code		AA	AB	AC	AD	AE	AF	AG	AH	AJ	AK	AL	AM	HA	
Fuel	Fuel pump circuit	1	1	2	3	2		3	2			3		1	EC-1198
	Injector circuit							2							EC-1190
	Fuel pressure regulator system	4	4	4	4	4	4	4	3	3		4			EC-659
	Evaporative emission system														EC-640
Air	Positive crankcase ventilation system												1		EC-656
	Incorrect idle speed adjustment	3	3				1	1	1	1		1			EC-662
	IACV-AAC valve circuit	2	1	3	3	3	2	2	2	2		3		1	EC-1048
	IACV-FICD solenoid valve circuit		2				3	3							EC-1211
Ignition	Incorrect ignition timing adjustment	3	3	1	1	1		1	1			1			EC-662
	Ignition circuit	1	1	2	2	2		2	2			2			EC-1183
Main power supply and ground circuit		1	2	3	3	3		3	2		1	3		1	EC-754
Air conditioner circuit		2					3			2					***HA-26***

1 - 6: The numbers refer to the order of inspection.

(continued on next page)

Symptom Matrix Chart (Cont'd)

	SYMPTOM													Reference page
	HARD/NO START/RESTART (EXCP. HA)	ENGINE STALL	HESITATION/SURGING/FLAT SPOT	SPARK KNOCK/DETONATION	LACK OF POWER/POOR ACCELERATION	HIGH IDLE/LOW IDLE	ROUGH IDLE/HUNTING	IDLING VIBRATION	SLOW/NO RETURN TO IDLE	OVERHEATS/WATER TEMPERATURE HIGH	EXCESSIVE FUEL CONSUMPTION	EXCESSIVE OIL CONSUMPTION	BATTERY DEAD (UNDER CHARGE)	
Warranty symptom code	AA	AB	AC	AD	AE	AF	AG	AH	AJ	AK	AL	AM	HA	
Camshaft position sensor circuit	1	1	2	2	2		2	2			2			EC-967
Mass air flow sensor circuit				3										EC-760
Heated oxygen sensor 1 (front) circuit														EC-799
Engine coolant temperature sensor circuit	1	2	3		3	3			2		3			EC-776, 794
Throttle position sensor circuit		1	2		2	2					2			EC-781
Incorrect throttle position sensor adjustment		3	1		1	1	1	1	1		1			EC-715
Vehicle speed sensor circuit		2	3		3						3			EC-1044
Knock sensor circuit				3										EC-957
ECM	2	2				3	3	2	2	1				EC-1066, 730
Start signal circuit	1													EC-1195
Park/neutral position (PNP) switch circuit			3		3		3	2			3			EC-1174
Power steering oil pressure switch circuit		2												EC-1206

1 - 6: The numbers refer to the order of inspection.

(continued on next page)

SYSTEM — ENGINE MECHANICAL & OTHER

NEEC0562S02

		SYMPTOM													Reference section
		HARD/NO START/RESTART (EXCP. HA)	ENGINE STALL	HESITATION/SURGING/FLAT SPOT	SPARK KNOCK/DETONATION	LACK OF POWER/POOR ACCELERATION	HIGH IDLE/LOW IDLE	ROUGH IDLE/HUNTING	IDLING VIBRATION	SLOW/NO RETURN TO IDLE	OVERHEATS/WATER TEMPERATURE HIGH	EXCESSIVE FUEL CONSUMPTION	EXCESSIVE OIL CONSUMPTION	BATTERY DEAD (UNDER CHARGE)	
Warranty symptom code		AA	AB	AC	AD	AE	AF	AG	AH	AJ	AK	AL	AM	HA	
Fuel	Fuel tank	5	5												***FE-4***
	Fuel piping			5	5	5		5	4			5			—
	Vapor lock														
	Valve deposit	5		5	5	5		5	4			5			
	Poor fuel (Heavy weight gasoline, Low octane)														
Air	Air duct	5	5	5	5	5	5	5	4	4		5			
	Air cleaner														
	Air leakage from air duct (Mass air flow sensor — throttle body)														
	Throttle body, Throttle wire														***FE-3***
	Air leakage from intake manifold/ Collector/Gasket														—
Cranking	Battery	1	1	1		1		1	1			1		1	***SC-4***
	Generator circuit														
	Starter circuit														
	Park/neutral position (PNP) switch														***AT-250***
	Drive plate/Flywheel	6													***EM-123***

1 - 6: The numbers refer to the order of inspection.

(continued on next page)

Symptom Matrix Chart (Cont'd)

		SYMPTOM													Reference section
		HARD/NO START/RESTART (EXCP. HA)	ENGINE STALL	HESITATION/SURGING/FLAT SPOT	SPARK KNOCK/DETONATION	LACK OF POWER/POOR ACCELERATION	HIGH IDLE/LOW IDLE	ROUGH IDLE/HUNTING	IDLING VIBRATION	SLOW/NO RETURN TO IDLE	OVERHEATS/WATER TEMPERATURE HIGH	EXCESSIVE FUEL CONSUMPTION	EXCESSIVE OIL CONSUMPTION	BATTERY DEAD (UNDER CHARGE)	
Warranty symptom code		AA	AB	AC	AD	AE	AF	AG	AH	AJ	AK	AL	AM	HA	
Engine	Cylinder head	5	5	5	5	5		5	5			5			***EM-85***, ***EM-96*** and ***EM-116***
	Cylinder head gasket										2		2		
	Cylinder block	6	6	6	6	6		6	6			6	3		
	Piston														
	Piston ring														
	Connecting rod														
	Bearing														
	Crankshaft														
Valve mechanism	Timing chain	6	6	6	6	6		6	6			6			
	Camshaft														
	Intake valve												2		
	Exhaust valve														
	Hydraulic lash adjuster														
Exhaust	Exhaust manifold/Tube/Muffler/ Gasket	6	6	6	6	6		6	6			6			***FE-8***
	Three way catalyst														
Lubrication	Oil pan/Oil strainer/Oil pump/Oil filter/Oil gallery	6	6	6	6	6		6	6			6	2		***MA-30***, ***EM-80*** and ***LC-20***
	Oil level (Low/Filthy) oil														***MA-30***
Cooling	Radiator/Hose/Radiator filler cap	6	6	6	6	6		6	6		2	6			***LC-27***
	Thermostat						5			5					
	Water pump														
	Water gallery														
	Cooling fan						5			5					
	Coolant level (low)/Contaminated coolant														***MA-27***

1 - 6: The numbers refer to the order of inspection.

CONSULT-II Reference Value in Data Monitor Mode

NEEC0563

Remarks:

- Specification data are reference values.
- Specification data are output/input values which are detected or supplied by the ECM at the connector.

  * Specification data may not be directly related to their components signals/values/operations.

  i.e. Adjust ignition timing with a timing light before monitoring IGN TIMING, because the monitor may show the specification data in spite of the ignition timing not being adjusted to the specification data. This IGN TIMING monitors the data calculated by the ECM according to the signals input from the camshaft position sensor and other ignition timing related sensors.
- If the real-time diagnosis results are NG and the on board diagnostic system results are OK when diagnosing the mass air flow sensor, first check to see if the fuel pump control circuit is normal.

MONITOR ITEM	CONDITION		SPECIFICATION
CMPS·RPM (POS) ENG SPEED	• Tachometer: Connect • Run engine and compare tachometer indication with the CONSULT-II value.		Almost the same speed as the CONSULT-II value.
MAS AIR/FL SE	• Engine: After warming up • Air conditioner switch: OFF • Shift lever: “N” • No-load	Idle	1.0 - 1.7V
		2,500 rpm	1.7 - 2.3V
COOLAN TEMP/S	• Engine: After warming up		More than 70°C (158°F)
HO2S1 (B1) HO2S1 (B2)	• Engine: After warming up	Maintaining engine speed at 2,000 rpm	0 - 0.3V ⟷ Approx. 0.6 - 1.0V
HO2S1 MNTR (B1) HO2S1 MNTR (B2)			LEAN ⟷ RICH Changes more than 5 times during 10 seconds.
HO2S2 (B1) HO2S2 (B2)	• Engine: After warming up	Maintaining engine speed at 2,000 rpm	0 - 0.3V ⟷ Approx. 0.6 - 1.0V
HO2S2 MNTR (B1) HO2S2 MNTR (B2)			LEAN ⟷ RICH
VHCL SPEED SE	• Turn drive wheels and compare speedometer indication with the CONSULT-II value		Almost the same speed as the CONSULT-II value
BATTERY VOLT	• Ignition switch: ON (Engine stopped)		11 - 14V
THRTL POS SEN	• Engine: After warming up, idle the engine	Throttle valve: fully closed (a)	0.15 - 0.85V
	• Engine: After warming up • Ignition switch: ON (Engine stopped)	Throttle valve: Partially open	Between (a) and (b)
		Throttle valve: fully opened (b)	3.5 - 4.7V
START SIGNAL	• Ignition switch: ON → START → ON		OFF → ON → OFF
CLSD THL POS CLSD THL/P SW	• Engine: After warming up, idle the engine	Throttle valve: Idle position	ON
		Throttle valve: Slightly open	OFF
AIR COND SIG	• Engine: After warming up, idle the engine	Air conditioner switch: OFF	OFF
		Air conditioner switch: ON (Compressor operates.)	ON
P/N POSI SW	• Ignition switch: ON	Shift lever: “P” or “N”	ON
		Except above	OFF
PW/ST SIGNAL	• Engine: After warming up, idle the engine	Steering wheel in neutral position (forward direction)	OFF
		The steering wheel is turned	ON

CONSULT-II Reference Value in Data Monitor Mode (Cont'd)

MONITOR ITEM	CONDITION		SPECIFICATION
AMB TEMP SW	• Ignition switch: ON • Compare ambient air temperature with the following:	Below 19°C (66°F)	OFF
		Above 25°C (77°F)	ON
IGNITION SW	• Ignition switch: ON → OFF → ON		ON → OFF → ON
INJ PULSE-B2 INJ PULSE-B1	• Engine: After warming up • Air conditioner switch: OFF • Shift lever: "N" • No-load	Idle	2.4 - 3.7 msec
		2,000 rpm	1.9 - 3.3 msec
B/FUEL SCHDL	• Engine: After warming up • Air conditioner switch: OFF • Shift lever: "N" • No-load	Idle	1.0 - 1.6 msec
		2,000 rpm	0.7 - 1.4 msec
IGN TIMING	• Engine: After warming up • Air conditioner switch: OFF • Shift lever: "N" • No-load	Idle	10°±2 BTDC
		2,000 rpm	More than 25° BTDC
IACV-AAC/V	• Engine: After warming up • Air conditioner switch: OFF • Shift lever: "N" • No-load	Idle	10 - 20%
		2,000 rpm	—
PURG VOL C/V	• Engine: After warming up • Air conditioner switch: OFF • Shift lever: "N" • No-load	Idle	0 %
		2,000 rpm	—
A/F ALPHA-B2 A/F ALPHA-B1	• Engine: After warming up	Maintaining engine speed at 2,000 rpm	54 - 155%
EVAP SYS PRES	• Ignition switch: ON		Approx. 3.4V
AIR COND RLY	• Air conditioner switch: OFF → ON		OFF → ON
FUEL PUMP RLY	• Ignition switch is turned to ON (Operates for 5 seconds) • Engine running and cranking		ON
	Except as shown above		OFF
COOLING FAN*	• After warming up engine, idle the engine. • Air conditioner switch: OFF	Engine coolant temperature is 94°C (201°F) or less	OFF
		Engine coolant temperature is 95°C (203°F) or more	ON
VENT CONT/V	• Ignition switch: ON		OFF
HO2S1 HTR (B1) HO2S1 HTR (B2)	• Engine speed: Below 3,200 rpm		ON
	• Engine speed: Above 3,200 rpm		OFF
HO2S2 HTR (B1) HO2S2 HTR (B2)	• Ignition switch: ON (Engine stopped) • Engine speed: Above 3,200 rpm		OFF
	• Engine speed: Below 3,200 rpm [After driving for 2 minutes at a speed of 70 km/h (43 MPH) or more]		ON
VC/V BYPASS/V	Ignition switch: ON		OFF
CAL/LD VALUE	• Engine: After warming up • Air conditioner switch: OFF • Shift lever: "N" • No-load	Idle	18.5 - 26.0%
		2,500 rpm	18.0 - 21.0%

MONITOR ITEM	CONDITION		SPECIFICATION
ABSOL TH·P/S	• Engine: After warming up • Ignition switch: ON • More than -40.0 kpa (-300 mmHg, -11.81 inHg) of vacuum is applied to the throttle opener with a hand vacuum pump.	Throttle valve: fully closed	0.0%
	• Engine: After warming up • Ignition switch: ON (Engine stopped)	Throttle valve: fully opened	Approx. 80%
MASS AIRFLOW	• Engine: After warming up • Air conditioner switch: OFF • Shift lever: "N" • No-load	Idle	3.3 - 4.8 g·m/s
		2,500 rpm	12.0 - 14.9 g·m/s
ABSOL PRES/SE	• Ignition switch: ON (Engine stopped)		Approx. 4.4V
	• Engine speed: Idle	For 5 seconds after starting engine	Approx. 4.4V
		More than 5 seconds after starting engine	Approx. 1.3V

*: Models with electric cooling fan.

Major Sensor Reference Graph in Data Monitor Mode

NEEC0564

The following are the major sensor reference graphs in "DATA MONITOR" mode.
(Select "HI SPEED" in "DATA MONITOR" with CONSULT-II.)

THRTL POS SEN, ABSOL TH·P/S, CLSD THL POS

NEEC0564S01

Below is the data for "THRTL POS SEN", "ABSOL TH·P/S" and "CLSD THL POS" when depressing the accelerator pedal with the ignition switch ON.
The signal of "THRTL POS SEN" and "ABSOL TH·P/S" should rise gradually without any intermittent drop or rise after "CLSD THL POS" is changed from "ON" to "OFF".

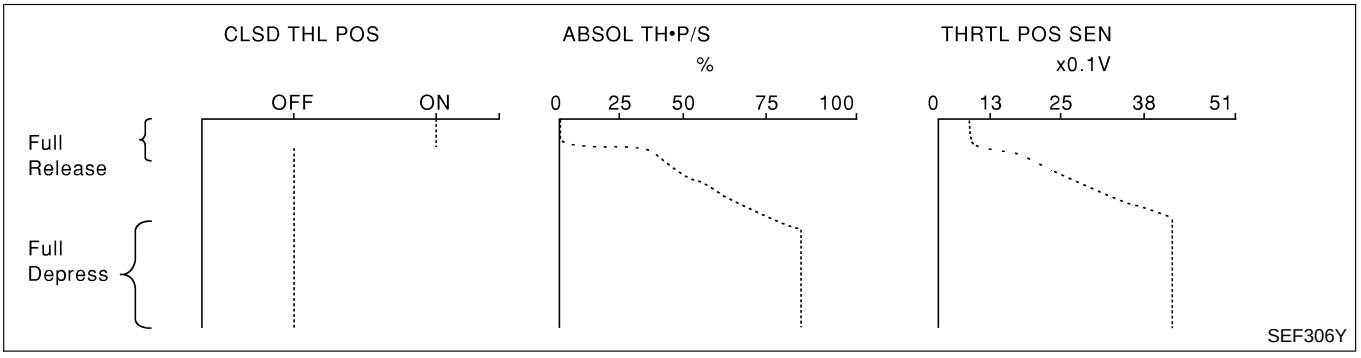

ENG SPEED, MAS AIR/FL SE, THRTL POS SEN, RR O2 SEN-B1, FR O2 SEN-B1, INJ PULSE-B1

NEEC0564S02

Below is the data for "ENG SPEED", "MAS AIR/FL SE", "THRTL POS SEN", "HO2S2 (B1)", "HO2S1 (B1)" and "INJ PULSE-B1" when revving engine quickly up to 4,800 rpm under no load after warming up engine sufficiently.
Each value is for reference, the exact value may vary.

Major Sensor Reference Graph in Data Monitor Mode (Cont'd)

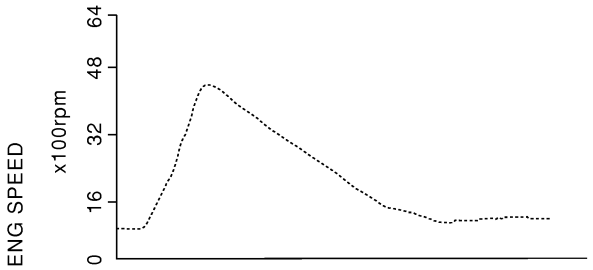

• "ENG SPEED" should increase gradually while depressing the accelerator pedal and should decrease gradually after releasing the pedal without any intemittent drop or rise.

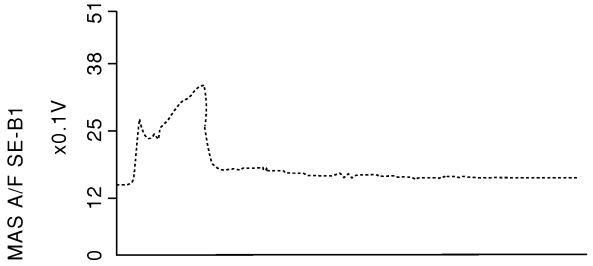

• "MAS A/F SE-B1" should increase when depressing the accelerator pedal and should decrease at the moment "THRTL POS SEN" is closed (accelerator pedal is released).

SEF241Y

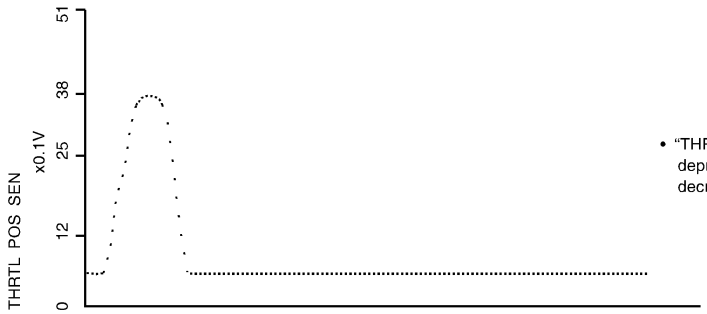

- "THRTL POS SEN" should increase while depressing the accelerator pedal and should decrease while releasing it.

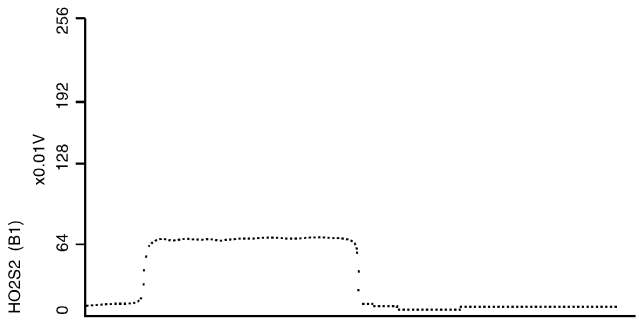

- "HO2S2 (B1)" may increase immediately after depressing the accelerator pedal and may decrease after releasing the pedal.

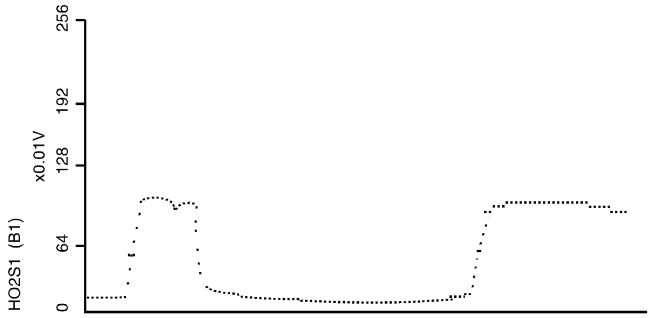

- "HO2S1 (B1)" may increase immediately after depressing the accelerator pedal and may decrease after releasing the pedal.

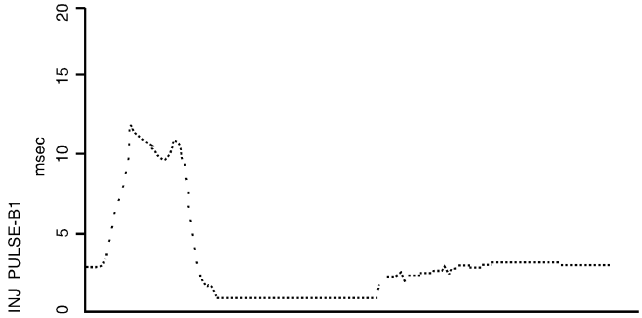

- "INJ PULSE-B1" should increase when depressing the accelerator pedal and should decrease when the pedal is released.

SEF242YD

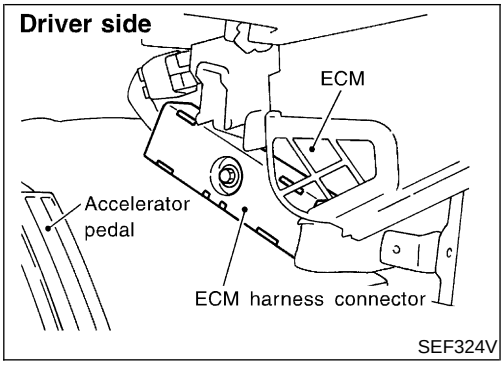

ECM Terminals and Reference Value

NEEC0565

PREPARATION

NEEC0565S01

1. ECM is located behind the instrument lower cover. For this inspection:

- Remove instrument lower cover.

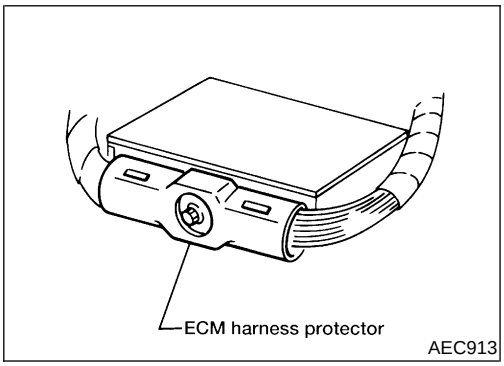

2. Remove ECM harness protector.

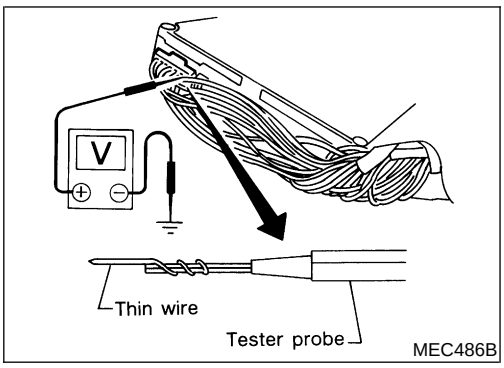

3. Perform all voltage measurements with the connector connected. Extend tester probe as shown to perform tests easily.

- Open harness securing clip to make testing easier.
- Use extreme care not to touch 2 pins at one time.
- Data is for comparison and may not be exact.

ECM HARNESS CONNECTOR TERMINAL LAYOUT

NEEC0565S02

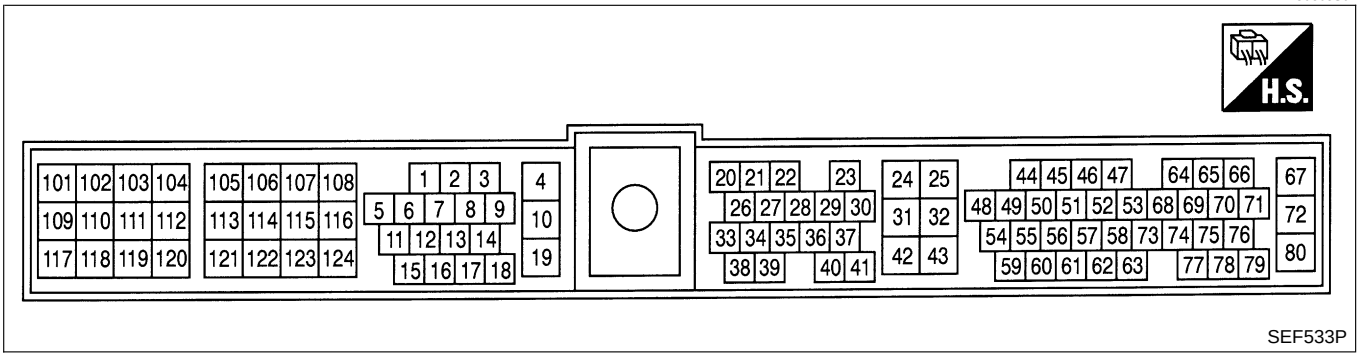

ECM INSPECTION TABLE

NEEC0565S03

Specification data are reference values and are measured between each terminal and ground.

CAUTION:

Do not use ECM ground terminals when measuring input/ output voltage. Doing so may result in damage to the ECM's transistor. Use a ground other than the ECM terminals, such as the ground.

TERMINAL NO.	WIRE COLOR	ITEM	CONDITION	DATA (DC Voltage)
1	PU/W	Ignition signal	**[Engine is running]** ● Idle speed	Approximately 0.7V 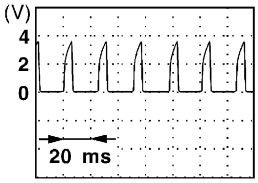 SEF988U
			[Engine is running] ● Engine speed is 2,000 rpm	1.1 - 1.5V 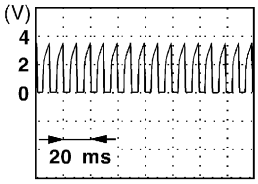 SEF989U
3	R/L	Tachometer	**[Engine is running]** ● **Warm-up condition** ● Idle speed	1 - 2V 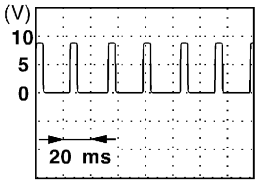 SEF992U
			[Engine is running] ● Engine speed is 2,000 rpm	3 - 5V 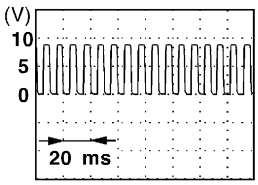 SEF993U
4	OR/B	ECM relay (Self shut-off)	**[Engine is running]** **[Ignition switch OFF]** ● For a few seconds after turning ignition switch OFF	0 - 1.5V
			[Ignition switch OFF] ● A few seconds passed after turning ignition switch OFF	BATTERY VOLTAGE (11 - 14V)

ECM Terminals and Reference Value (Cont'd)

TERMINAL NO.	WIRE COLOR	ITEM	CONDITION	DATA (DC Voltage)
5	R/Y	EVAP canister purge volume control solenoid valve	**[Engine is running]** ● Idle speed	BATTERY VOLTAGE (11 - 14V) 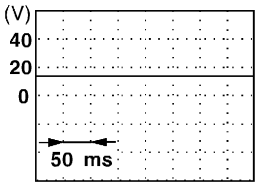 SEF994U
			[Engine is running] ● Engine speed is 2,000 rpm (More than 100 seconds after starting engine)	BATTERY VOLTAGE (11 - 14V) 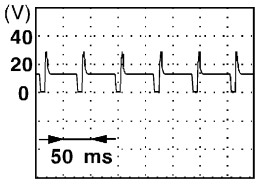 SEF995U
7	Y/G	A/T check signal	**[Ignition switch ON]** **[Engine is running]**	0 - 3.0V
9	B/Y	Ambient air temperature switch	**[Engine is running]** ● Idle speed ● Ambient air temperature is above 25°C (77°F) ● Air conditioner is operating	0V
			[Engine is running] ● Idle speed ● Ambient air temperature is below 19°C (66°F) ● Air conditioner is operating	BATTERY VOLTAGE (11 - 14V)
			[Engine is running] ● Idle speed ● Ambient air temperature is below 19°C (66°F) ● Air conditioner is not operating	Approximately 5V
10	B/R	ECM ground	**[Engine is running]** ● Idle speed	Engine ground
11	W/R	Fuel pump relay	**[Ignition switch ON]** ● For 5 seconds after turning ignition switch ON **[Engine is running]**	0 - 1V
			[Ignition switch ON] ● More than 5 seconds after turning ignition switch ON	BATTERY VOLTAGE (11 - 14V)
12	P	Air conditioner relay	**[Engine is running]** ● Both A/C switch and blower switch are ON*1	0 - 1V
			[Engine is running] ● A/C switch is OFF	BATTERY VOLTAGE (11 - 14V)
18	R/W	Malfunction indicator lamp	**[Ignition switch ON]**	0 - 1V
			[Engine is running] ● Idle speed	BATTERY VOLTAGE (11 - 14V)
19	B/R	ECM ground	**[Engine is running]** ● Idle speed	Engine ground

TERMINAL NO.	WIRE COLOR	ITEM	CONDITION	DATA (DC Voltage)
20	L/OR	Start signal	**[Ignition switch ON]**	Approximately 0V
			[Ignition switch START]	9 - 12V
21	G/R	Air conditioner switch	**[Engine is running]** ● Both A/C switch and blower switch are ON (Compressor operates)*1	Approximately 0V
			[Engine is running] ● A/C switch is OFF	BATTERY VOLTAGE (11 - 14V)
22	L/B	Park/neutral position (PNP) switch	**[Ignition switch ON]** ● Gear position is "N" or "P"	Approximately 0V
			[Ignition switch ON] ● Except the above gear position	Approximately 5V
23	L	Throttle position sensor	**[Engine is running]** ● **Warm-up condition** ● More than -40.0 kpa (-300 mmHg, -11.81 inHg) of vacuum is applied to the throttle opener with a hand vacuum pump. ● Accelerator pedal fully released	0.15 - 0.85V
			[Ignition switch ON] ● Accelerator pedal fully depressed	3.5 - 4.7V
24	W/L	Ignition switch	**[Ignition switch OFF]**	0V
			[Ignition switch ON]	BATTERY VOLTAGE (11 - 14V)
25	B/Y	ECM ground	**[Engine is running]** ● Idle speed	Engine ground
26	PU/W	A/T signal No. 1	**[Ignition switch ON]** **[Engine is running]** ● Idle speed	6 - 8V
27	P/B	A/T signal No. 2	**[Ignition switch ON]** **[Engine is running]** ● Idle speed	6 - 8V
28	BR/W	Throttle position switch (Closed position)	**[Engine is running]** ● **Warm-up condition** ● More than -40.0 kpa (-300 mmHg, -11.81 inHg) of vacuum is applied to the throttle opener with a hand vacuum pump. ● Accelerator pedal fully released	BATTERY VOLTAGE (11 - 14V)
			[Ignition switch ON] ● Accelerator pedal depressed	Approximately 0V
29	G/B	Vehicle speed sensor	**[Engine is running]** ● Lift up the vehicle. ● In 2nd gear position ● Vehicle speed is 40 km/h (25 MPH)	2 - 3V 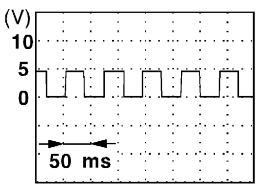 SEF996U
32	B/Y	ECM ground	**[Engine is running]** ● Idle speed	Engine ground (Probe this terminal with (−) tester probe when measuring)

ECM Terminals and Reference Value (Cont'd)

TERMINAL NO.	WIRE COLOR	ITEM	CONDITION	DATA (DC Voltage)
35	G/R	A/T signal No. 3	**[Ignition switch ON]**	0V
36	LG/R	Cooling fan relay*2	**[Engine is running]** ● Cooling fan is not operating	BATTERY VOLTAGE (11 - 14V)
			[Engine is running] ● Cooling fan is operating	0 - 1V
39	GY/R	Power steering oil pressure switch	**[Engine is running]** ● Steering wheel is being turned	Approximately 0V
			[Engine is running] ● Steering wheel is not being turned	Approximately 5V
42	B/W	Sensors' power supply	**[Ignition switch ON]**	Approximately 5V
43	BR	Sensors' ground	**[Engine is running]** ● **Warm-up condition** ● Idle speed	Approximately 0V
44	PU	Camshaft position sensor (Reference signal)	**[Engine is running]** ● Idle speed	0.3 - 0.5V 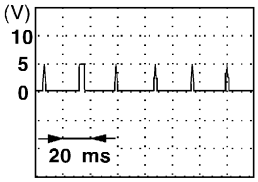 SEF997U
			[Engine is running] ● Engine speed is 2,000 rpm	0.3 - 0.5V 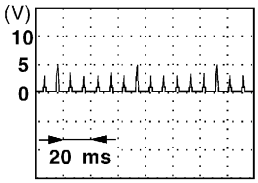 SEF998U
46	P/B	Fuel level sensor	**[Ignition switch ON]**	Approximately 0 - 4.8V Output voltage varies with fuel level.
47	L	Crankshaft position sensor (OBD)	**[Engine is running]** ● **Warm-up condition** ● Idle speed	1 - 2V (AC range) 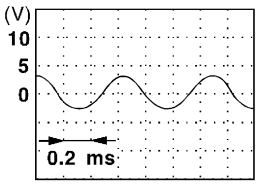 SEF690W
			[Engine is running] ● Engine speed is 2,000 rpm	3 - 4V (AC range) 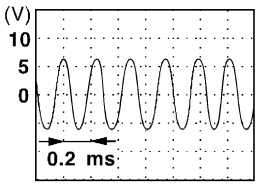 SEF691W

TERMINAL NO.	WIRE COLOR	ITEM	CONDITION	DATA (DC Voltage)
49	LG	Camshaft position sensor (Position signal)	**[Engine is running]** ● **Warm-up condition** ● Idle speed	Approximately 2.5V 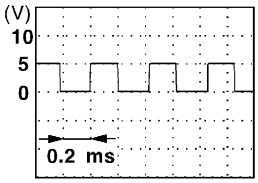 SEF999U
			[Engine is running] ● Engine speed is 2,000 rpm	Approximately 2.5V 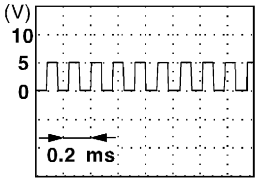 SEF001V
50	B	Heated oxygen sensor 1 (front) (bank 1)	**[Engine is running]** ● **Warm-up condition** ● Engine speed is 2,000 rpm	0 - Approximately 1.0V 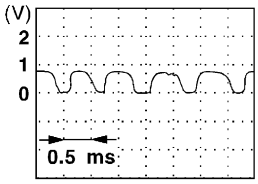 SEF002V
51	G	Heated oxygen sensor 1 (front) (bank 2)	**[Engine is running]** ● **Warm-up condition** ● Engine speed is 2,000 rpm	0 - Approximately 1.0V 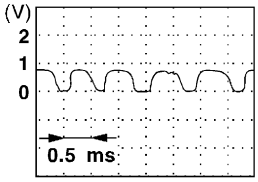 SEF002V
54	R	Mass air flow sensor	**[Engine is running]** ● **Warm-up condition** ● Idle speed	1.0 - 1.7V
			[Engine is running] ● **Warm-up condition** ● Engine speed is 2,500 rpm	1.7 - 2.3V
55	G	Mass air flow sensor ground	**[Engine is running]** ● **Warm-up condition** ● Idle speed	Approximately 0V
56	OR	Heated oxygen sensor 2 (rear) (bank 1)	**[Engine is running]** ● **Warm-up condition** ● Engine speed is 2,000 rpm	0 - Approximately 1.0V
57	Y	Heated oxygen sensor 2 (rear) (bank 2)	**[Engine is running]** ● **Warm-up condition** ● Engine speed is 2,000 rpm	0 - Approximately 1.0V
59	LG/R	Engine coolant temperature sensor	**[Engine is running]**	Approximately 0 - 4.8V Output voltage varies with engine coolant temperature

ECM Terminals and Reference Value (Cont'd)

TERMINAL NO.	WIRE COLOR	ITEM	CONDITION	DATA (DC Voltage)
60	Y/B	Fuel tank temperature sensor	**[Engine is running]**	Approximately 0 - 4.8V Output voltage varies with fuel temperature
61	PU/R	Intake air temperature sensor	**[Engine is running]**	Approximately 0 - 4.8V Output voltage varies with intake air temperature.
62	Y	EVAP control system pressure sensor	**[Ignition switch ON]**	Approximately 3.4V
64	W	Knock sensor	**[Engine is running]** ● Idle speed	Approximately 2.5V
66	B	Fuel level sensor ground	**[Engine is running]** ● Idle speed	Approximately 0V
67	B/P	Power supply for ECM	**[Ignition switch ON]**	BATTERY VOLTAGE (11 - 14V)
69	LG/R	Data link connector for GST	**[Engine is running]** ● Idle speed (GST is disconnected)	6 - 10V
72	B/P	Power supply for ECM	**[Ignition switch ON]**	BATTERY VOLTAGE (11 - 14V)
75	Y/R	Data link connector for CONSULT-II	**[Engine is running]** ● Idle speed (Connect CONSULT-II and turned on.)	0 - 4V
76	GY/L			3 - 9V
80	SB	Power supply (Back-up)	**[Ignition switch OFF]**	BATTERY VOLTAGE (11 - 14V)
101	OR/L	IACV-AAC valve	**[Engine is running]** ● **Warm-up condition** ● Idle speed	8 - 11V 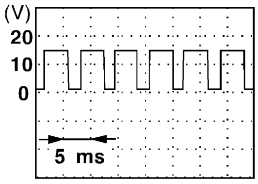 SEF005V
			[Engine is running] ● **Warm-up condition** ● Engine speed is 3,000 rpm	7 - 10V 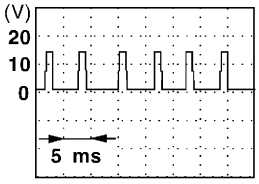 SEF692W

TERMINAL NO.	WIRE COLOR	ITEM	CONDITION	DATA (DC Voltage)
102 104 106 109 111 113	W/B W/R W/G W/L W/PU W	Injector No. 1 Injector No. 3 Injector No. 5 Injector No. 2 Injector No. 4 Injector No. 6	**[Engine is running]** ● **Warm-up condition** ● Idle speed	BATTERY VOLTAGE (11 - 14V) 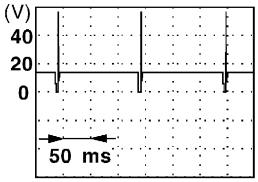 SEF007V
			[Engine is running] ● **Warm-up condition** ● Engine speed is 2,000 rpm	BATTERY VOLTAGE (11 - 14V) 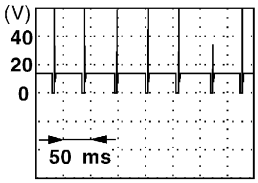 SEF008V
108	R/G	EVAP canister vent control valve	**[Ignition switch ON]**	BATTERY VOLTAGE (11 - 14V)
116	B/R	ECM ground	**[Engine is running]** ● Idle speed	Engine ground
117	B/P	Current return	**[Engine is running]** ● Idle speed	BATTERY VOLTAGE (11 - 14V)
119	BR/Y	Heated oxygen sensor 1 heater (front) (bank 1)	**[Engine is running]** ● Engine speed is below 3,200 rpm	Approximately 0.4V
			[Engine is running] ● Engine speed is above 3,200 rpm	BATTERY VOLTAGE (11 - 14V)
120	P/B	Vacuum cut valve bypass valve	**[Ignition switch ON]**	BATTERY VOLTAGE (11 - 14V)
121	BR	Heated oxygen sensor 1 heater (front) (bank 2)	**[Engine is running]** ● Engine speed is below 3,200 rpm	Approximately 0.4V
			[Engine is running] ● Engine speed is above 3,200 rpm	BATTERY VOLTAGE (11 - 14V)
122	R/B	Heated oxygen sensor 2 heater (rear) (bank 1)	**[Engine is running]** ● Engine speed is below 3,200 rpm ● After driving for 2 minutes at a speed of 70 km/h (43 MPH) or more.	Approximately 0.4V
			[Ignition switch ON] ● Engine stopped **[Engine is running]** ● Engine speed is above 3,200 rpm	BATTERY VOLTAGE (11 - 14V)
123	R/Y	Heated oxygen sensor 2 heater (rear) (bank 2)	**[Engine is running]** ● Engine speed is below 3,200 rpm ● After driving for 2 minutes at a speed of 70 km/h (43 MPH) or more.	Approximately 0.4V
			[Ignition switch ON] ● Engine stopped **[Engine is running]** ● Engine speed is above 3,200 rpm	BATTERY VOLTAGE (11 - 14V)

ECM Terminals and Reference Value (Cont'd)

TERMINAL NO.	WIRE COLOR	ITEM	CONDITION	DATA (DC Voltage)
124	B/R	ECM ground	**[Engine is running]** ● Idle speed	Engine ground

*1: Any mode except OFF, ambient air temperature is above 25°C (77°F).

*2: Models with electric cooling fan.

Description

NEEC0958

The specification (SP) value indicates the tolerance of the value that is displayed in “DATA MONITOR (SPEC)” mode of CONSULT-II during normal operation of the Engine Control System. When the value in “DATA MONITOR (SPEC)” mode is within the SP value, the Engine Control System is confirmed OK. When the value in “DATA MONITOR (SPEC)” mode is NOT within the SP value, the Engine Control System may have one or more malfunctions.

The SP value is used to detect malfunctions that may affect the Engine Control System, but will not light the MIL.

The SP value will be displayed for the following three items:

- B/FUEL SCHDL (The fuel injection pulse width programmed into ECM prior to any learned on board correction)
- A/F ALPHA-B1/B2 (The mean value of air-fuel ratio feedback correction factor per cycle)
- MAS A/F SE-B1 (The signal voltage of the mass air flow sensor)

Testing Condition

NEEC0959

- Vehicle driven distance: More than 5,000 km (3,100 miles)
- Barometric pressure: 101.3 kPa (760.0 mmHg, 29.92 inHg)±3 kPa (22.5 mmHg, 0.89 inHg)
- Atmospheric temperature: 20 - 30°C (68 - 86°F)
- Engine coolant temperature: 75 - 95°C (167 - 203°F)
- Transmission: Warmed-up*1
- Electrical load: Not applied*2
- Engine speed: Idle

*1: For A/T models, after the engine is warmed up to normal operating temperature, drive vehicle until “FLUID TEMP SE” (A/T fluid temperature sensor signal) indicates less than 0.9V. For M/T models, drive vehicle for 5 minutes after the engine is warmed up to normal operating temperature.

*2: Rear window defogger switch, air conditioner switch, lighting switch are “OFF”. Cooling fans are not operating. Steering wheel is straight ahead.

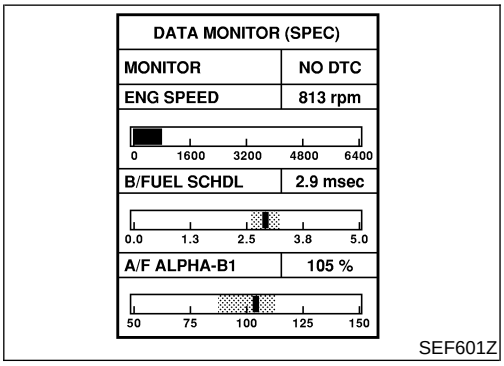

Inspection Procedure

NEEC0960

NOTE:

Perform “DATA MONITOR (SPEC)” mode in maximum scale display.

1. Perform “Basic Inspection”, EC-715.
2. Confirm that the testing conditions indicated above are met.
3. Select “B/FUEL SCHDL”, “A/F ALPHA-B1”, “A/F ALPHA-B2” and “MAS A/F SE-B1” in “DATA MONITOR (SPEC)” mode with CONSULT-II.
4. Make sure that monitor items are within the SP value.
5. If NG, go to “Diagnostic Procedure”, EC-750.

Diagnostic Procedure

NEEC0961

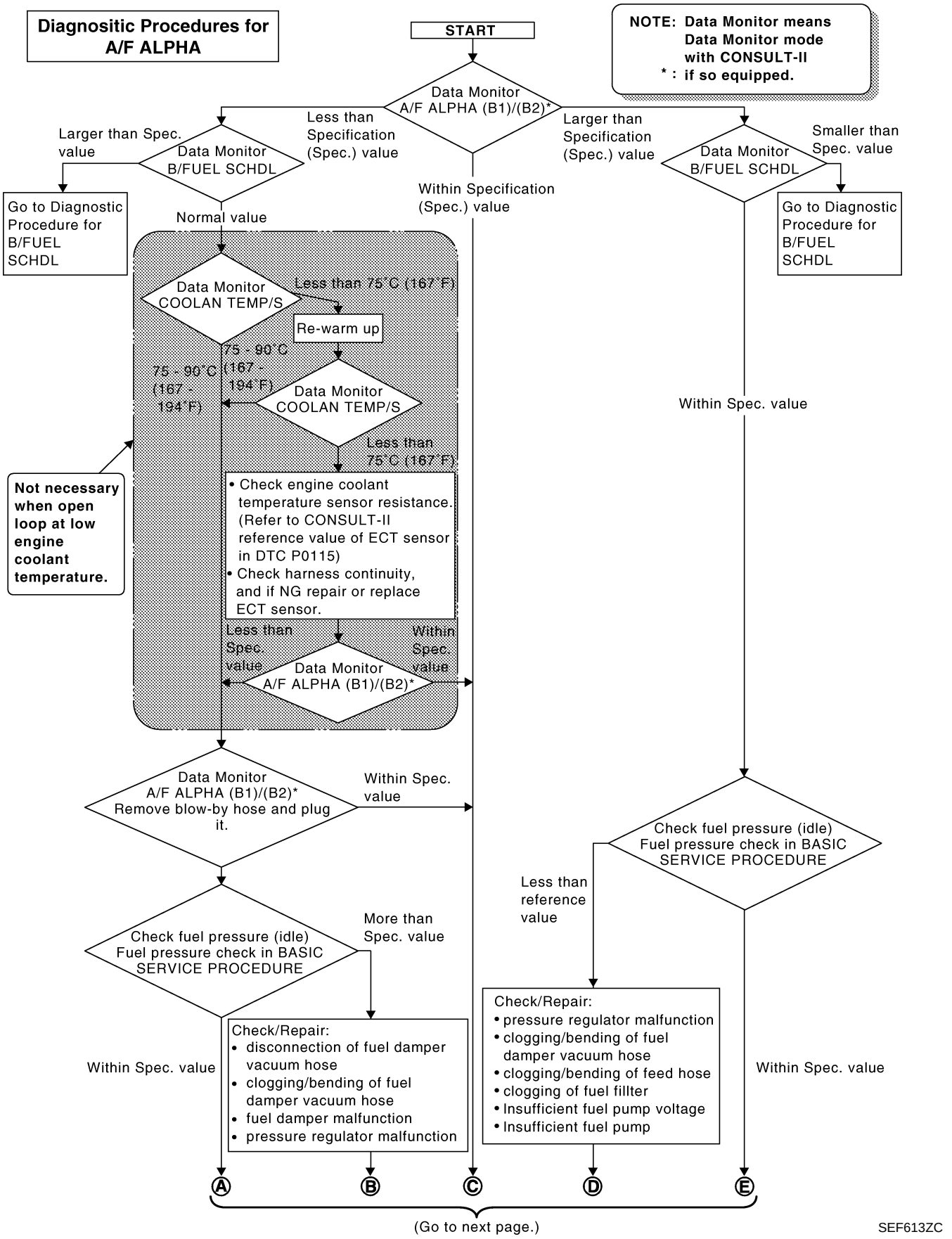

SEF613ZC

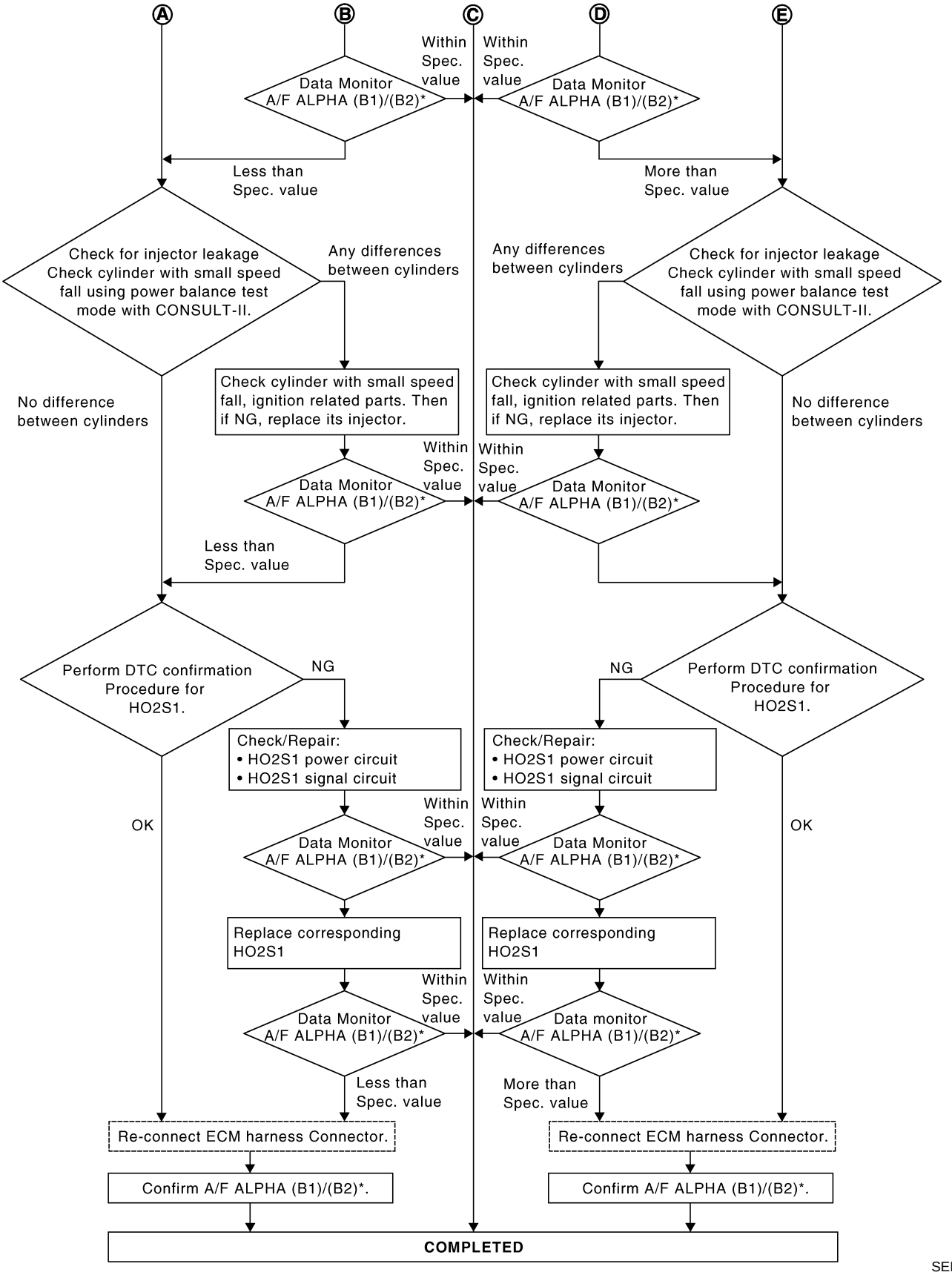
Ⓐ
Ⓑ
Ⓒ
Ⓓ
Ⓔ
Within Spec. value
Within Spec. value
Data Monitor A/F ALPHA (B1)/(B2)*
Data Monitor A/F ALPHA (B1)/(B2)*
Less than Spec. value
More than Spec. value
Check for injector leakage Check cylinder with small speed fall using power balance test mode with CONSULT-II.
Any differences between cylinders
Any differences between cylinders
Check for injector leakage Check cylinder with small speed fall using power balance test mode with CONSULT-II.
No difference between cylinders
Check cylinder with small speed fall, ignition related parts. Then if NG, replace its injector.
Check cylinder with small speed fall, ignition related parts. Then if NG, replace its injector.
No difference between cylinders
Within Spec. value
Within Spec. value
Data Monitor A/F ALPHA (B1)/(B2)*
Data Monitor A/F ALPHA (B1)/(B2)*
Less than Spec. value
Perform DTC confirmation Procedure for HO2S1.
NG
NG
Perform DTC confirmation Procedure for HO2S1.
Check/Repair:
• HO2S1 power circuit
• HO2S1 signal circuit
Check/Repair:
• HO2S1 power circuit
• HO2S1 signal circuit
OK
Within Spec. value
Within Spec. value
OK
Data Monitor A/F ALPHA (B1)/(B2)*
Data Monitor A/F ALPHA (B1)/(B2)*
Replace corresponding HO2S1
Replace corresponding HO2S1
Within Spec. value
Within Spec. value
Data Monitor A/F ALPHA (B1)/(B2)*
Data monitor A/F ALPHA (B1)/(B2)*
Less than Spec. value
More than Spec. value
Re-connect ECM harness Connector.
Re-connect ECM harness Connector.
Confirm A/F ALPHA (B1)/(B2)*.
Confirm A/F ALPHA (B1)/(B2)*.
COMPLETED

SEF768Z

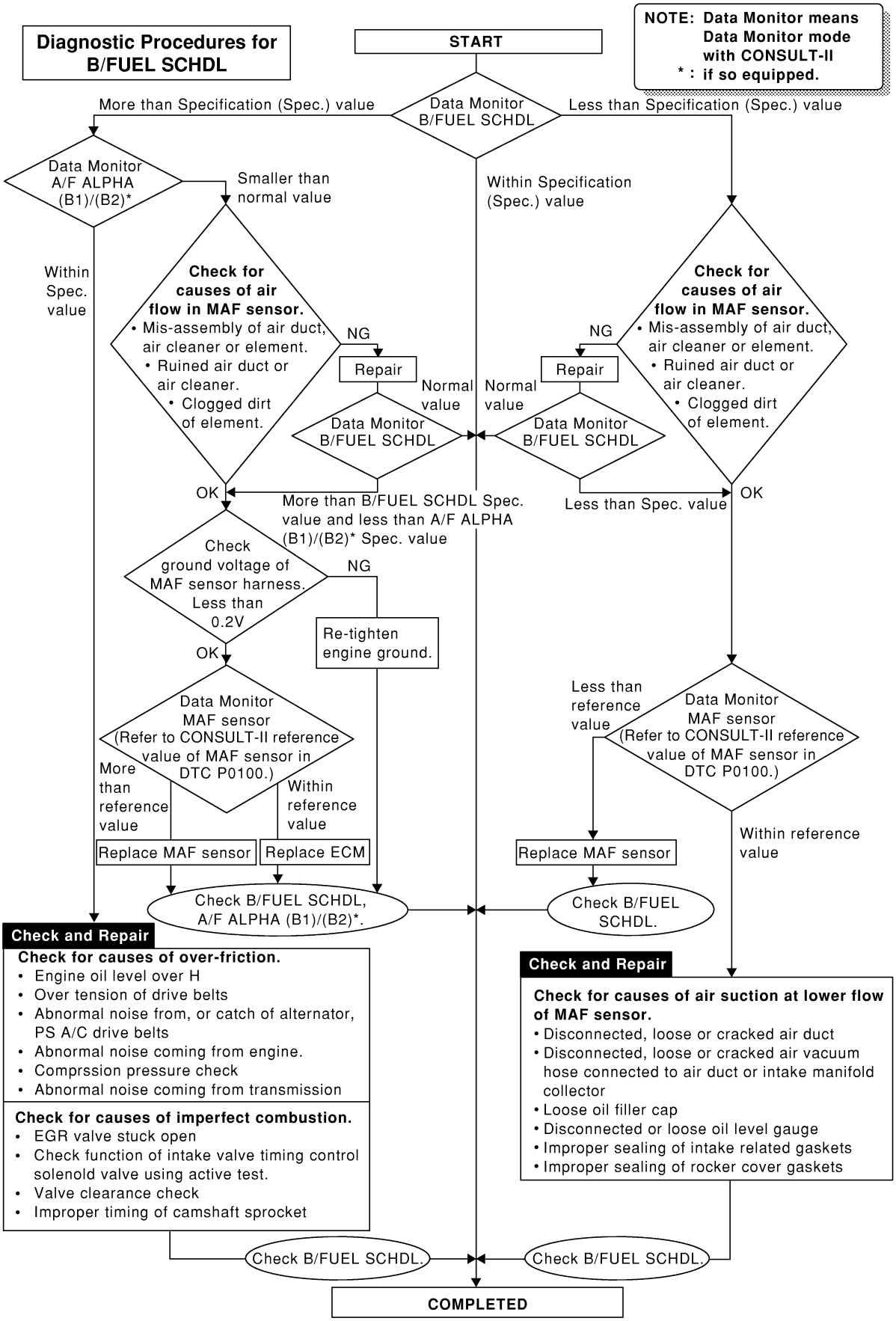
Diagnostic Procedures for B/FUEL SCHDL
START
NOTE: Data Monitor means Data Monitor mode with CONSULT-II
* : if so equipped.
Data Monitor B/FUEL SCHDL
More than Specification (Spec.) value
Less than Specification (Spec.) value
Within Specification (Spec.) value
Data Monitor A/F ALPHA (B1)/(B2)*
Smaller than normal value
Within Spec. value
Check for causes of air flow in MAF sensor.
• Mis-assembly of air duct, air cleaner or element.
• Ruined air duct or air cleaner.
• Clogged dirt of element.
NG
Repair
Normal value
Data Monitor B/FUEL SCHDL
OK
More than B/FUEL SCHDL Spec. value and less than A/F ALPHA (B1)/(B2)* Spec. value
Less than Spec. value
Check ground voltage of MAF sensor harness. Less than 0.2V
Re-tighten engine ground.
Data Monitor MAF sensor (Refer to CONSULT-II reference value of MAF sensor in DTC P0100.)
More than reference value
Within reference value
Less than reference value
Replace MAF sensor
Replace ECM
Check B/FUEL SCHDL, A/F ALPHA (B1)/(B2)*.
Check B/FUEL SCHDL.
Check and Repair
Check for causes of over-friction.
• Engine oil level over H
• Over tension of drive belts
• Abnormal noise from, or catch of alternator, PS A/C drive belts
• Abnormal noise coming from engine.
• Comprssion pressure check
• Abnormal noise coming from transmission
Check for causes of imperfect combustion.
• EGR valve stuck open
• Check function of intake valve timing control solenold valve using active test.
• Valve clearance check
• Improper timing of camshaft sprocket
Check and Repair
Check for causes of air suction at lower flow of MAF sensor.
• Disconnected, loose or cracked air duct
• Disconnected, loose or cracked air vacuum hose connected to air duct or intake manifold collector
• Loose oil filler cap
• Disconnected or loose oil level gauge
• Improper sealing of intake related gaskets
• Improper sealing of rocker cover gaskets
Check B/FUEL SCHDL.
Check B/FUEL SCHDL.
COMPLETED
SEF615Z

Description

NEEC0566

Intermittent incidents (I/I) may occur. In many cases, the problem resolves itself (the part or circuit function returns to normal without intervention). It is important to realize that the symptoms described in the customer's complaint often do not recur on (1st trip) DTC visits. Realize also that the most frequent cause of I/I occurrences is poor electrical connections. Because of this, the conditions under which the incident occurred may not be clear. Therefore, circuit checks made as part of the standard diagnostic procedure may not indicate the specific problem area.

COMMON I/I REPORT SITUATIONS

NEEC0566S01

STEP in Work Flow	Situation
II	The CONSULT-II is used. The SELF-DIAG RESULTS screen shows time data other than "0" or "[1t]".
III	The symptom described by the customer does not recur.
IV	(1st trip) DTC does not appear during the DTC Confirmation Procedure.
VI	The Diagnostic Procedure for PXXXX does not indicate the problem area.

Diagnostic Procedure

NEEC0567

1	INSPECTION START
Erase (1st trip) DTCs. Refer to "HOW TO ERASE EMISSION - RELATED INFORMATION", EC-687.	
▶	GO TO 2.

2	CHECK GROUND TERMINALS	
Check ground terminals for corroding or loose connection. Refer to "Circuit Inspection", "GROUND INSPECTION", ***GI-29***.		
OK or NG		
OK	▶	GO TO 3.
NG	▶	Repair or replace.

3	SEARCH FOR ELECTRICAL INCIDENT	
Perform "Incident Simulation Tests", ***GI-24***.		
OK or NG		
OK	▶	GO TO 4.
NG	▶	Repair or replace.

4	CHECK CONNECTOR TERMINALS	
Refer to "How to Check Enlarged Contact Spring of Terminal", ***GI-21***.		
OK or NG		
OK	▶	**INSPECTION END**
NG	▶	Repair or replace connector.

Main Power Supply and Ground Circuit

WIRING DIAGRAM

NEEC0568

EC-MAIN-01

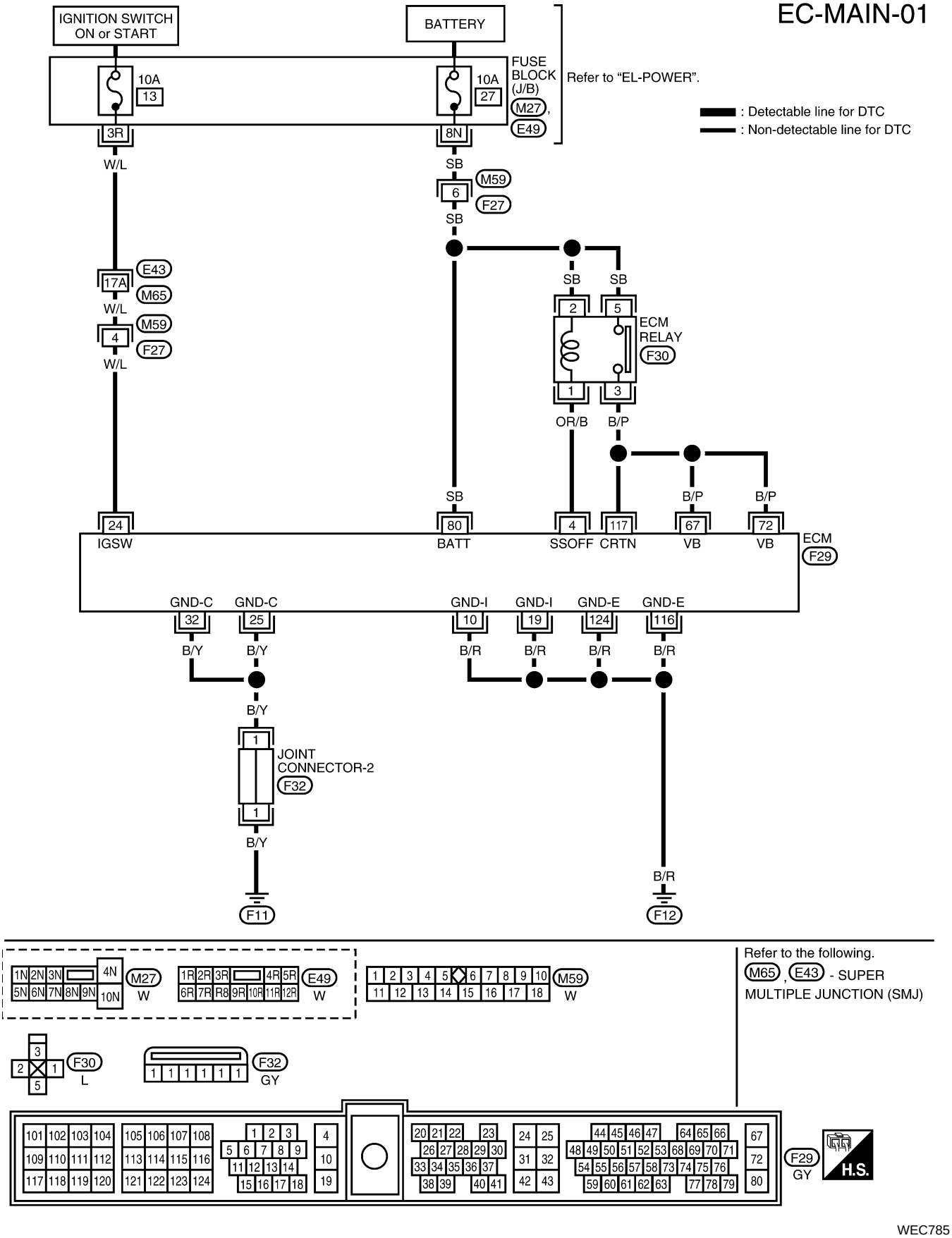

WEC785

ECM TERMINALS AND REFERENCE VALUE

NEEC0569

Specification data are reference values and are measured between each terminal and ground.

CAUTION:

Do not use ECM ground terminals when measuring input/output voltage. Doing so may result in damage to the ECM's transistor. Use a ground other than the ECM terminals, such as the ground.

TERMINAL NO.	WIRE COLOR	ITEM	CONDITION	DATA (DC Voltage)
4	OR/B	ECM relay (Self-shutoff)	**[Engine is running]** **[Ignition switch OFF]** ● For a few seconds after turning ignition switch OFF	0 - 1.5V
			[Ignition switch OFF] ● A few seconds passed after turning ignition switch OFF	BATTERY VOLTAGE (11 - 14V)
10	B/R	ECM ground	**[Engine is running]** ● Idle speed	Engine ground
19	B/R	ECM ground	**[Engine is running]** ● Idle speed	Engine ground
24	W/L	Ignition switch	**[Ignition switch OFF]**	0V
			[Ignition switch ON]	BATTERY VOLTAGE (11 - 14V)
25	B/Y	ECM ground	**[Engine is running]** ● Idle speed	Engine ground
32	B/Y	ECM ground	**[Engine is running]** ● Idle speed	Engine ground (Probe this terminal with (−) tester probe when measuring)
67	B/P	Power supply for ECM	**[Ignition switch ON]**	BATTERY VOLTAGE (11 - 14V)
72	B/P			
80	SB	Power supply (Back-up)	**[Ignition switch OFF]**	BATTERY VOLTAGE (11 - 14V)
116	B/R	ECM ground	**[Engine is running]** ● Idle speed	Engine ground
117	B/P	Current return	**[Engine is running]** ● Idle speed	BATTERY VOLTAGE (11 - 14V)
124	B/R	ECM ground	**[Engine is running]** ● Idle speed	Engine ground

DIAGNOSTIC PROCEDURE

NEEC0570

1	INSPECTION START	
Start engine. **Is engine running?**		
	Yes or No	
Yes	▶	GO TO 6.
No	▶	GO TO 2.

2	CHECK ECM POWER SUPPLY CIRCUIT-I

1. Turn ignition switch OFF and then ON.
2. Check voltage between ECM terminal 24 and ground with CONSULT-II or tester.

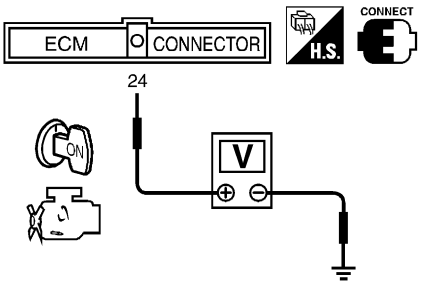

SEF674U

Voltage: Battery voltage

OK or NG

OK	▶	GO TO 4.
NG	▶	GO TO 3.

3	DETECT MALFUNCTIONING PART

Check the following.
- Harness connectors E74, M82
- Harness connectors M59, F27
- Fuse block (J/B) connector E49
- 10A fuse
- Harness for open or short between ECM and fuse

	▶	Repair harness or connectors.

4	CHECK ECM GROUND CIRCUIT-I FOR OPEN AND SHORT

1. Turn ignition switch OFF.
2. Disconnect ECM harness connector.
3. Check harness continuity between ECM terminals 10, 19, 25, 32, 116, 124 and engine ground.
   Refer to WIRING DIAGRAM.
   Continuity should exist.
4. Also check harness for short to power.

OK or NG

OK	▶	GO TO 15.
NG	▶	GO TO 5.

5	DETECT MALFUNCTIONING PART

Check the following.
- Joint connector-2
- Harness for open between ECM and engine ground

	▶	Repair open circuit or short to power in harness or connectors.

6	CHECK ECM POWER SUPPLY CIRCUIT-II

1. Stop engine.
2. Check voltage between ECM terminal 80 and ground with CONSULT-II or tester.

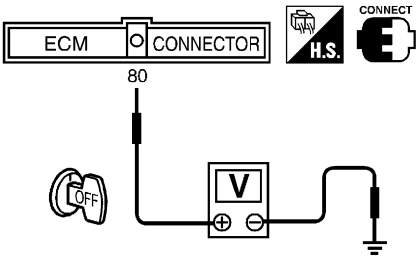

SEF678U

Voltage: Battery voltage

OK or NG

OK	▶	GO TO 8.
NG	▶	GO TO 7.

7	DETECT MALFUNCTIONING PART

Check the following.
- Harness connectors M59, F27
- Fuse block (J/B) connector M27
- 10A fuse
- Harness for open or short between ECM and fuse

	▶	Repair harness or connectors.

8	CHECK ECM POWER SUPPLY CIRCUIT-III

1. Turn ignition switch ON and then OFF.
2. Check voltage between ECM terminals 67, 72, 117 and ground with CONSULT-II or tester.

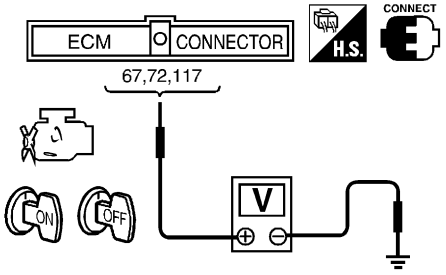

SEF679U

Voltage:
After turning ignition switch OFF, battery voltage will exist for a few seconds, then drop to approximately 0V.

OK or NG

OK	▶	GO TO 14.
NG (Battery voltage does not exist.)	▶	GO TO 9.
NG (Battery voltage exists for more than a few seconds.)	▶	GO TO 13.

9	CHECK ECM POWER SUPPLY CIRCUIT-IV

1. Disconnect ECM relay.

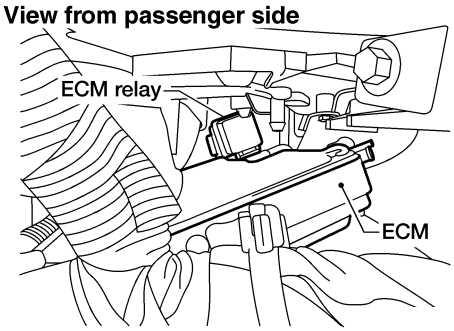

AEC927A

2. Check voltage between terminals 2, 5 and ground with CONSULT-II or tester.

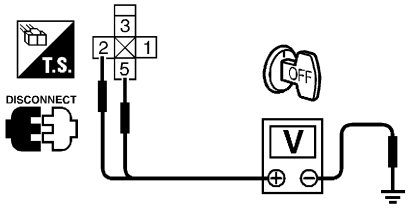

SEF625W

Voltage: Battery voltage

OK or NG

OK	▶	GO TO 11.
NG	▶	GO TO 10.

10	DETECT MALFUNCTIONING PART

Check the following.
- Harness for open or short between ECM relay and harness connector F27

	▶	Repair open circuit or short to ground or short to power in harness or connectors.

11	CHECK ECM OUTPUT SIGNAL CIRCUIT FOR OPEN AND SHORT

1. Disconnect ECM harness connector.
2. Check harness continuity between ECM terminal 4 and ECM relay terminal 1.
   Refer to WIRING DIAGRAM.
   Continuity should exist.
3. Also check harness for short to ground and short to power.

OK or NG

OK	▶	GO TO 12.
NG	▶	Repair open circuit or short to ground or short to power in harness or connectors.

12	CHECK HARNESS CONTINUITY BETWEEN ECM RELAY AND ECM FOR OPEN AND SHORT

1. Check harness continuity between ECM terminals 67, 72, 117 and ECM relay terminal 3.
   Refer to WIRING DIAGRAM.
   Continuity should exist.
2. Also check harness for short to ground and short to power.

OK or NG

OK	▶	GO TO 13.
NG	▶	Repair open circuit or short to ground or short to power in harness or connectors.

13	CHECK ECM RELAY

1. Apply 12V direct current between relay terminals 1 and 2.
2. Check continuity between relay terminals 3 and 5.

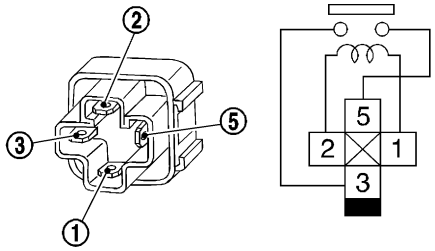

SEF039W

12V (1 - 2) applied: Continuity exists.
No voltage applied: No continuity

OK or NG

OK	▶	GO TO 14.
NG	▶	Replace ECM relay.

14	CHECK ECM GROUND CIRCUIT-II FOR OPEN AND SHORT

1. Turn ignition switch OFF.
2. Disconnect ECM harness connector.
3. Check harness continuity between ECM terminals 10, 19, 25, 32, 116, 124 and engine ground.
   Refer to WIRING DIAGRAM.
   Continuity should exist.
4. Also check harness for short to power.

OK or NG

OK	▶	GO TO 15.
NG	▶	GO TO 5.

15	CHECK INTERMITTENT INCIDENT
Refer to "TROUBLE DIAGNOSIS FOR INTERMITTENT INCIDENT", EC-753.	
▶	**INSPECTION END**

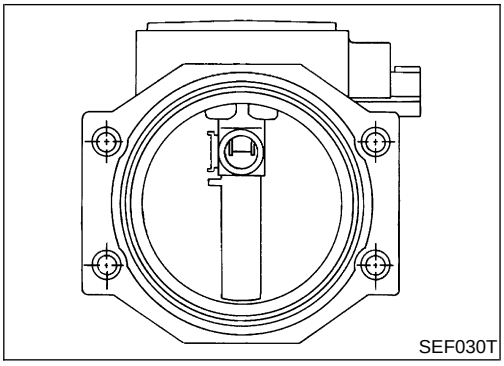
SEF030T

Component Description

NEEC0571

The mass air flow sensor is placed in the stream of intake air. It measures the intake flow rate by measuring a part of the entire intake flow. It consists of a hot wire that is supplied with electric current from the ECM. The temperature of the hot wire is controlled by the ECM a certain amount. The heat generated by the hot wire is reduced as the intake air flows around it. The more air, the greater the heat loss.
Therefore, the ECM must supply more electric current to maintain the temperature of the hot wire as air flow increases. The ECM detects the air flow by means of this current change.

CONSULT-II Reference Value in Data Monitor Mode

NEEC0572

Specification data are reference values.

MONITOR ITEM	CONDITION		SPECIFICATION
MAS AIR/FL SE	• Engine: After warming up • Air conditioner switch: OFF • Shift lever: “N” • No-load	Idle	1.0 - 1.7V
		2,500 rpm	1.7 - 2.3V
CAL/LD VALUE	ditto	Idle	18.5 - 26.0%
		2,500 rpm	18.0 - 21.0%
MASS AIRFLOW	ditto	Idle	3.3 - 4.8 g·m/s
		2,500 rpm	12.0 - 14.9 g·m/s

ECM Terminals and Reference Value

NEEC0573

Specification data are reference values and are measured between each terminal and ground.

CAUTION:
Do not use ECM ground terminals when measuring input/output voltage. Doing so may result in damage to the ECM’s transistor. Use a ground other than the ECM terminals, such as the ground.

TERMINAL NO.	WIRE COLOR	ITEM	CONDITION	DATA (DC Voltage)
54	R	Mass air flow sensor	**[Engine is running]** • **Warm-up condition** • Idle speed	1.0 - 1.7V
			[Engine is running] • **Warm-up condition** • Engine speed is 2,500 rpm	1.7 - 2.3V
55	G	Mass air flow sensor ground	**[Engine is running]** • **Warm-up condition** • Idle speed	Approximately 0V

On Board Diagnosis Logic

NEEC0574

Malfunction is detected when
(Malfunction A) an excessively high voltage from the sensor is sent to ECM when engine is not running,
(Malfunction B) an excessively low voltage from the sensor is sent to ECM when engine is running,
(Malfunction C) a high voltage from the sensor is sent to ECM under light load driving condition,
(Malfunction D) a low voltage from the sensor is sent to ECM under heavy load driving condition.

POSSIBLE CAUSE

NEEC0574S01

Malfunction A or C

NEEC0574S0101

- Harness or connectors
  (The sensor circuit is open or shorted.)
- Mass air flow sensor

Malfunction B or D

NEEC0574S0102

- Harness or connectors
  (The sensor circuit is open or shorted.)
- Intake air leaks
- Mass air flow sensor

FAIL-SAFE MODE

NEEC0574S02

When the malfunction B is detected, the ECM enters fail-safe mode and the MIL lights up.

Detected items	Engine operating condition in fail-safe mode
Mass air flow sensor circuit	Engine speed will not rise more than 2,400 rpm due to the fuel cut.

DTC Confirmation Procedure

NEEC0575

Perform "PROCEDURE FOR MALFUNCTION A" first.
If the 1st trip DTC cannot be confirmed, perform "PROCEDURE FOR MALFUNCTION B".
If there is no problem on "PROCEDURE FOR MALFUNCTION B", perform "PROCEDURE FOR MALFUNCTION C".
If there is no problem on "PROCEDURE FOR MALFUNCTION C", perform "PROCEDURE FOR MALFUNCTION D".

NOTE:
If "DTC Confirmation Procedure" has been previously conducted, always turn ignition switch OFF and wait at least 5 seconds before conducting the next test.

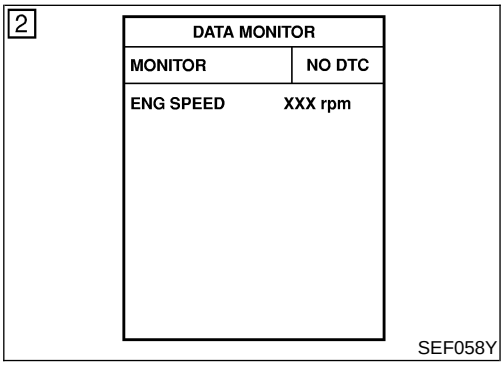

PROCEDURE FOR MALFUNCTION A

NEEC0575S01

With CONSULT-II

1) Turn ignition switch ON.
2) Select "DATA MONITOR" mode with CONSULT-II.
3) Wait at least 6 seconds.
4) If 1st trip DTC is detected, go to "Diagnostic Procedure", EC-765.

With GST

Follow the procedure "With CONSULT-II".

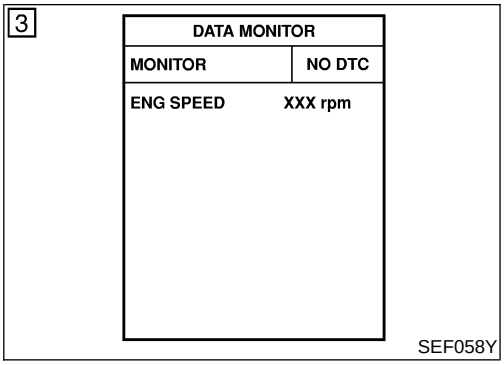

PROCEDURE FOR MALFUNCTION B

NEEC0575S02

With CONSULT-II

1) Turn ignition switch ON.
2) Select "DATA MONITOR" mode with CONSULT-II.
3) Start engine and wait 5 seconds at most.
4) If 1st trip DTC is detected, go to "Diagnostic Procedure", EC-765.

With GST

Follow the procedure "With CONSULT-II".

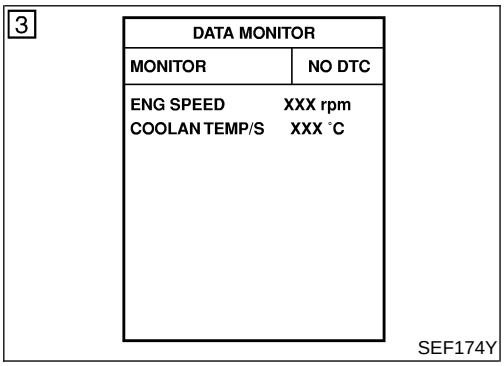

PROCEDURE FOR MALFUNCTION C

NEEC0575S03

NOTE:

If engine will not start or stops soon, wait at least 10 seconds with engine stopped (Ignition switch ON) instead of running engine at idle speed.

With CONSULT-II

1) Turn ignition switch ON.
2) Select "DATA MONITOR" mode with CONSULT-II.
3) Start engine and warm it up to normal operating temperature.
4) Run engine for at least 10 seconds at idle speed.
5) If 1st trip DTC is detected, go to "Diagnostic Procedure", EC-765.

With GST

Follow the procedure "With CONSULT-II".

6

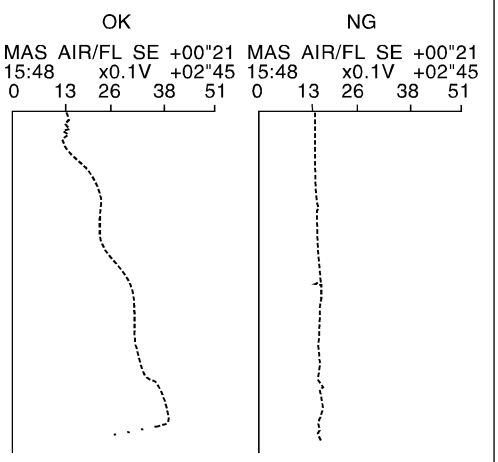

SEF998NA

7

DATA MONITOR	
MONITOR	NO DTC
ENG SPEED	XXX rpm
VHCL SPEED SE	XXX km/h
THRTL POS SEN	XXX V

SEF175Y

CALC LOAD	20%
COOLANT TEMP	95°C
SHORT FT #1	2%
LONG FT #1	0%
SHORT FT #2	4%
LONG FT #2	0%
ENGINE SPD	2637RPM
VEHICLE SPD	0MPH
IGN ADVANCE	41.0°
INTAKE AIR	41°C
MAF	14.1gm/sec
THROTTLE POS	3%

SEF534P

PROCEDURE FOR MALFUNCTION D

NEEC0575S04

CAUTION:

Always drive vehicle at a safe speed.

With CONSULT-II

1) Turn ignition switch "ON".
2) Start engine and warm it up to normal operating temperature. **If engine cannot be started, go to "Diagnostic Procedure", EC-765.**
3) Select "DATA MONITOR" mode with CONSULT-II.
4) Check the voltage of MAS AIR/FL SE with "DATA MONITOR".
5) Increases engine speed to about 4,000 rpm.
6) Monitor the linear voltage rise in response to engine speed increases.
   If NG, go to "Diagnostic Procedure", EC-765.
   If OK, go to following step.
7) Maintain the following conditions for at least 10 consecutive seconds.

ENG SPEED	More than 2,000 rpm
THRTL POS SEN	More than 3V
Selector lever	Suitable position
Driving location	Driving vehicle uphill (Increased engine load) will help maintain the driving conditions required for this test.

8) If 1st trip DTC is detected, go to "Diagnostic Procedure", EC-765.

Overall Function Check

NEEC0576

PROCEDURE FOR MALFUNCTION D

NEEC0576S01

Use this procedure to check the overall function of the mass air flow sensor circuit. During this check, a 1st trip DTC might not be confirmed.

With GST

1) Start engine and warm it up to normal operating temperature.
2) Select "MODE 1" with GST.
3) Check the mass air flow sensor signal with "MODE 1".
4) Check for linear mass air flow sensor signal value rise in response to increases to about 4,000 rpm in engine speed.
5) If NG, go to "Diagnostic Procedure", EC-765.

Wiring Diagram

NEEC0577

EC-MAFS-01

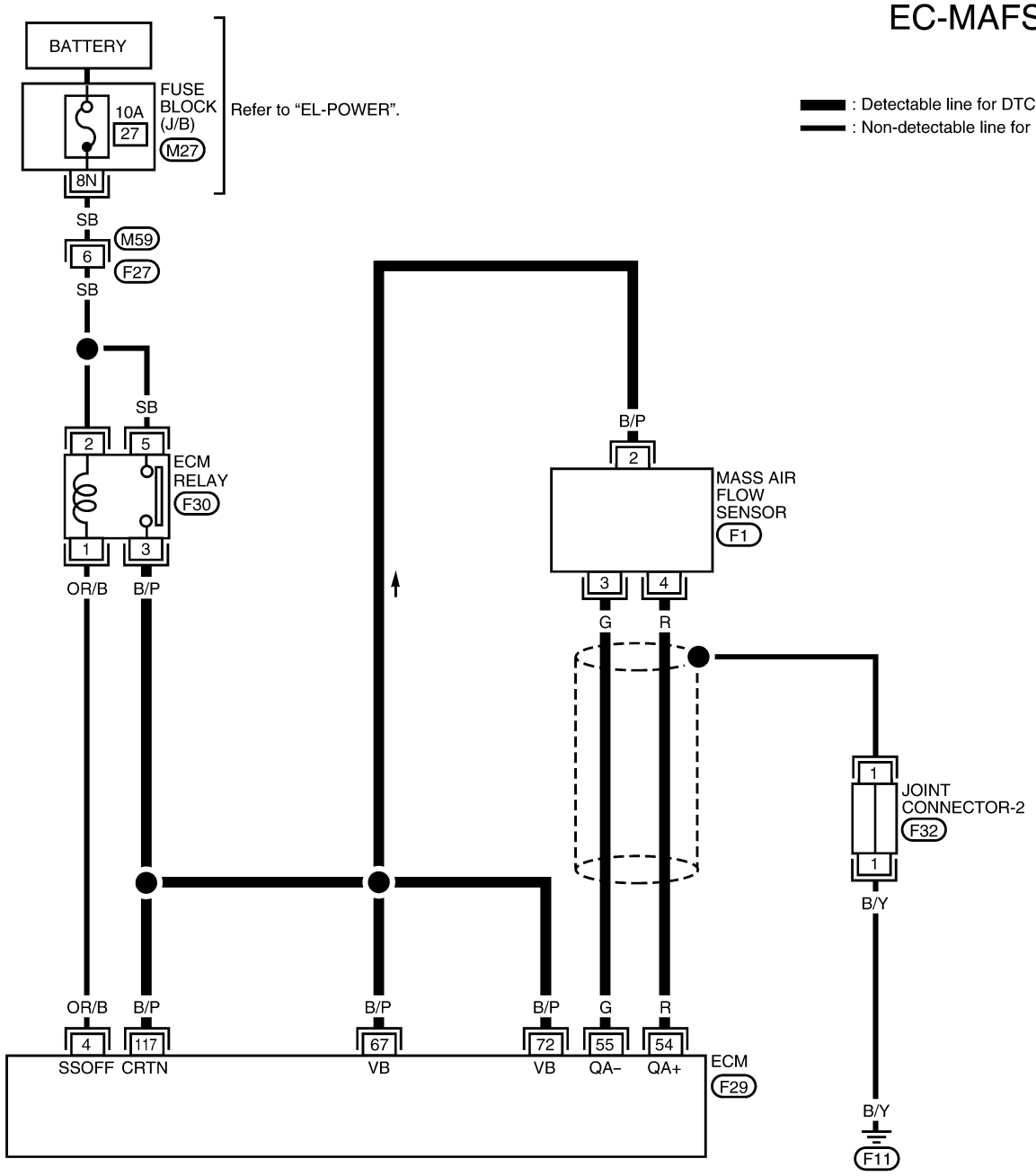

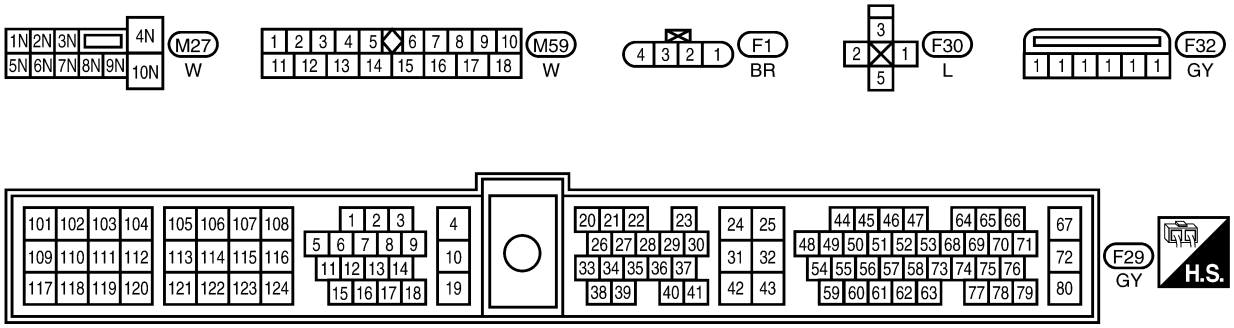

WEC786

Diagnostic Procedure

NEEC0578

1	INSPECTION START

Which malfunction (A, B, C or D) is duplicated?

MALFUNCTION	Type
A and/or C	I
B and/or D	II

MTBL0063

Type I or Type II

Type I	▶	GO TO 3.
Type II	▶	GO TO 2.

2	CHECK INTAKE SYSTEM

Check the following for connection.
- Air duct
- Vacuum hoses
- Intake air passage between air duct to intake manifold collector

OK or NG

OK	▶	GO TO 3.
NG	▶	Reconnect the parts.

3	RETIGHTEN GROUND SCREWS

1. Turn ignition switch OFF.
2. Loosen and retighten engine ground screws.

Engine ground

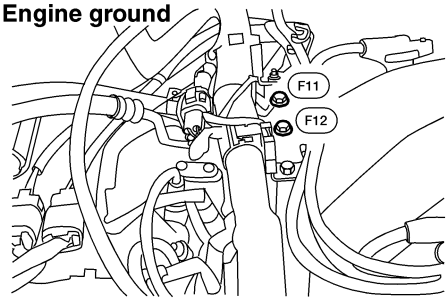

LEC518

	▶	GO TO 4.

4	CHECK MAFS POWER SUPPLY CIRCUIT

1. Disconnect mass air flow sensor harness connector.

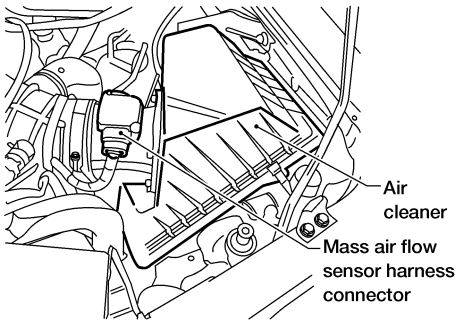

AEC641A

2. Turn ignition switch ON.
3. Check voltage between terminal 2 and ground with CONSULT-II or tester.

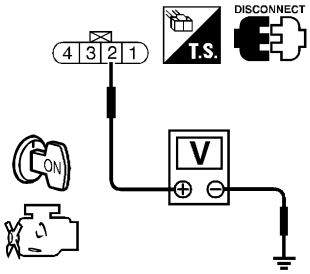

SEF627W

Voltage: Battery voltage

OK or NG

OK	▶	GO TO 6.
NG	▶	GO TO 5.

5	DETECT MALFUNCTIONING PART

Check the following.
- Harness for open or short between ECM relay and mass air flow sensor
- Harness for open or short between mass air flow sensor and ECM

	▶	Repair harness or connectors.

6	CHECK MAFS GROUND CIRCUIT FOR OPEN AND SHORT

1. Turn ignition switch OFF.
2. Disconnect ECM harness connector.
3. Check harness continuity between MAFS terminal 3 and ECM terminal 55.
   Refer to Wiring Diagram.
   Continuity should exist.
4. Also check harness for short to ground and short to power.

OK or NG

OK	▶	GO TO 7.
NG	▶	Repair open circuit or short to ground or short to power in harness or connectors.

7	CHECK MAFS INPUT SIGNAL CIRCUIT FOR OPEN AND SHORT

1. Check harness continuity between MAFS terminal 4 and ECM terminal 54.
   Refer to Wiring Diagram.
   Continuity should exist.
2. Also check harness for short to ground and short to power.

OK or NG

OK	▶	GO TO 8.
NG	▶	Repair open circuit or short to ground or short to power in harness or connectors.

8	CHECK MASS AIR FLOW SENSOR

1. Reconnect harness connectors disconnected.
2. Start engine and warm it up to normal operating temperature.
3. Check voltage between ECM terminal 54 (Mass air flow sensor signal) and ground.

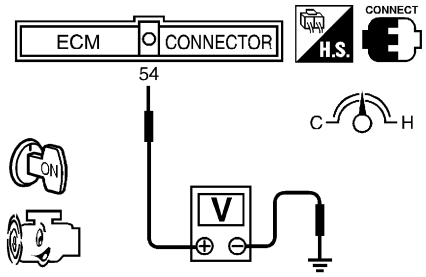

SEF747U

Condition	Voltage V
Ignition switch "ON" (Engine stopped.)	Less than 1.0
Idle (Engine is warmed-up to normal operating temperature.)	1.0 - 1.7
2,500 rpm (Engine is warmed-up to normal operating temperature.)	1.7 - 2.3
Idle to about 4,000 rpm*	1.0 - 1.7 to Approx. 4.0

MTBL0227

4. If the voltage is out of specification, disconnect mass air flow sensor harness connector and connect it again. Then repeat above check.
5. If NG, remove mass air flow sensor from air duct. Check hot wire for damage or dust.

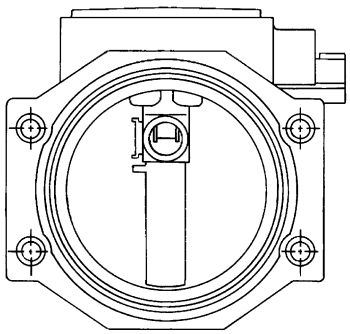

SEF030T

OK or NG

OK	▶	GO TO 9.
NG	▶	Replace mass air flow sensor.

Diagnostic Procedure (Cont'd)

9	CHECK MAFS SHIELD CIRCUIT FOR OPEN AND SHORT

1. Turn ignition switch OFF.
2. Disconnect joint connector-2.
3. Check the following.

- Continuity between joint connector terminal 1 and ground
  Refer to Wiring Diagram.
- Joint connector
  (Refer to ***EL-238***, "HARNESS LAYOUT".)

Continuity should exist.

4. Also check harness for short to power.
5. Then reconnect joint connector-2.

OK or NG

OK	▶	GO TO 10.
NG	▶	Repair open circuit or short to power in harness or connectors.

10	CHECK INTERMITTENT INCIDENT

Refer to "TROUBLE DIAGNOSIS FOR INTERMITTENT INCIDENT", EC-753.

▶ **INSPECTION END**

Component Description

NEEC0579

The absolute pressure sensor is built into ECM. The sensor detects ambient barometric pressure and sends the voltage signal to the microcomputer.

On Board Diagnosis Logic

NEEC0580

Malfunction is detected when an excessively low or high voltage from the sensor is sent to the micro computer.

POSSIBLE CAUSE

NEEC0580S01

- ECM

DTC Confirmation Procedure

NEEC0581

NOTE:

If "DTC Confirmation Procedure" has been previously conducted, always turn ignition switch OFF and wait at least 5 seconds before conducting the next test.

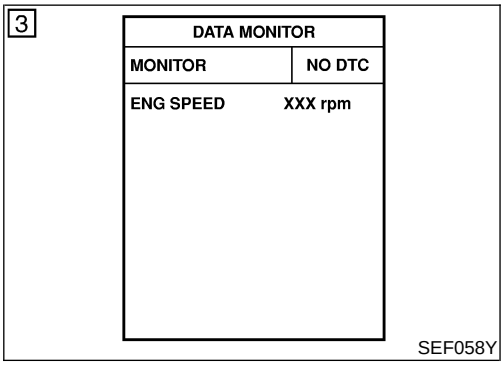

With CONSULT-II

1) Turn ignition switch ON.
2) Select "DATA MONITOR" mode with CONSULT-II.
3) Wait at least 6 seconds.
4) If 1st trip DTC is detected, go to "Diagnostic Procedure", EC-770.

With GST

Follow the procedure "With CONSULT-II".

Diagnostic Procedure

NEEC0962

1	INSPECTION START	
With CONSULT-II 1. Turn ignition switch ON. 2. Select “SELF DIAG RESULTS” mode with CONSULT-II. 3. Touch “ERASE”. 4. **Perform “DTC Confirmation Procedure”.** See EC-769. 5. Is the 1st trip DTC P0105 displayed again?		
With GST 1. Turn ignition switch ON. 2. Select MODE 4 with GST. 3. Touch “ERASE”. 4. **Perform “DTC Confirmation Procedure”.** See EC-769. 5. Is the 1st trip DTC P0105 displayed again?		
Yes or No		
Yes	▶	Replace ECM.
No	▶	**INSPECTION END**

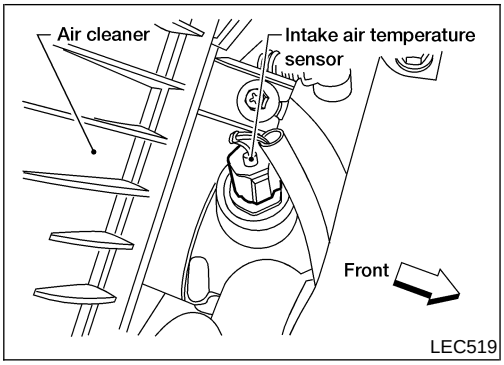

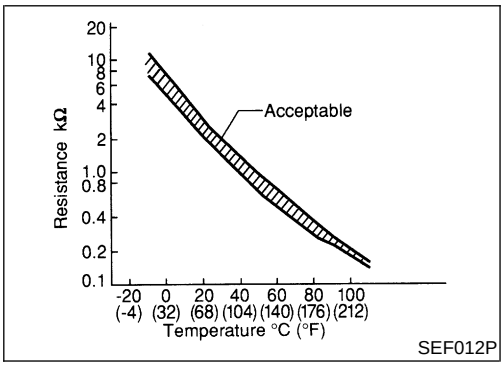

Component Description

NEEC0585

The intake air temperature sensor is mounted to the air duct housing. The sensor detects intake air temperature and transmits a signal to the ECM.

The temperature sensing unit uses a thermistor which is sensitive to the change in temperature. Electrical resistance of the thermistor decreases in response to the temperature rise.

<Reference data>

Intake air temperature °C (°F)	Voltage* (V)	Resistance kΩ
20 (68)	3.5	2.1 - 2.9
80 (176)	1.23	0.27 - 0.38

*: These data are reference values and are measured between ECM terminal 61 (Intake air temperature sensor) and ground.

CAUTION:

Do not use ECM ground terminals when measuring input/ output voltage. Doing so may result in damage to the ECM's transistor. Use a ground other than the ECM terminals, such as the ground.

On Board Diagnosis Logic

NEEC0586

Malfunction is detected when

(Malfunction A) an excessively low or high voltage from the sensor is sent to ECM,

(Malfunction B) rationally incorrect voltage from the sensor is sent to ECM, compared with the voltage signal from engine coolant temperature sensor.

POSSIBLE CAUSE

NEEC0586S01

- Harness or connectors
  (The sensor circuit is open or shorted.)
- Intake air temperature sensor

DTC Confirmation Procedure

NEEC0587

Perform "PROCEDURE FOR MALFUNCTION A" first. If 1st trip DTC cannot be confirmed, perform "PROCEDURE FOR MALFUNCTION B".

NOTE:

If "DTC Confirmation Procedure" has been previously conducted, always turn ignition switch OFF and wait at least 5 seconds before conducting the next test.

3

DATA MONITOR	
MONITOR	NO DTC
ENG SPEED	XXX rpm

SEF058Y

5

DATA MONITOR	
MONITOR	NO DTC
COOLAN TEMP/S	XXX °C
VHCL SPEED SE	XXX km/h

SEF176Y

PROCEDURE FOR MALFUNCTION A

NEEC0587S01

With CONSULT-II

1) Turn ignition switch ON.
2) Select "DATA MONITOR" mode with CONSULT-II.
3) Wait at least 5 seconds.
4) If 1st trip DTC is detected, go to "Diagnostic Procedure", EC-774.

With GST

Follow the procedure "With CONSULT-II".

PROCEDURE FOR MALFUNCTION B

NEEC0587S02

CAUTION:

Always drive vehicle at a safe speed.

TESTING CONDITION:

This test may be conducted with the drive wheels lifted in the shop or by driving the vehicle. If a road test is expected to be easier, it is unnecessary to lift the vehicle.

With CONSULT-II

1) Wait until engine coolant temperature is less than 90°C (194°F).

a) Turn ignition switch ON.
b) Select "DATA MONITOR" mode with CONSULT-II.
c) Check the engine coolant temperature.
d) If the engine coolant temperature is not less than 90°C (194°F), turn ignition switch OFF and cool down engine.

- Perform the following steps before engine coolant temperature is above 90°C (194°F).

2) Turn ignition switch ON.
3) Select "DATA MONITOR" mode with CONSULT-II.
4) Start engine.
5) Hold vehicle speed at more than 70 km/h (43 MPH) for 100 consecutive seconds.
6) If 1st trip DTC is detected, go to "Diagnostic Procedure", EC-774.

With GST

Follow the procedure "With CONSULT-II".

Wiring Diagram

NEEC0588

EC-IATS-01

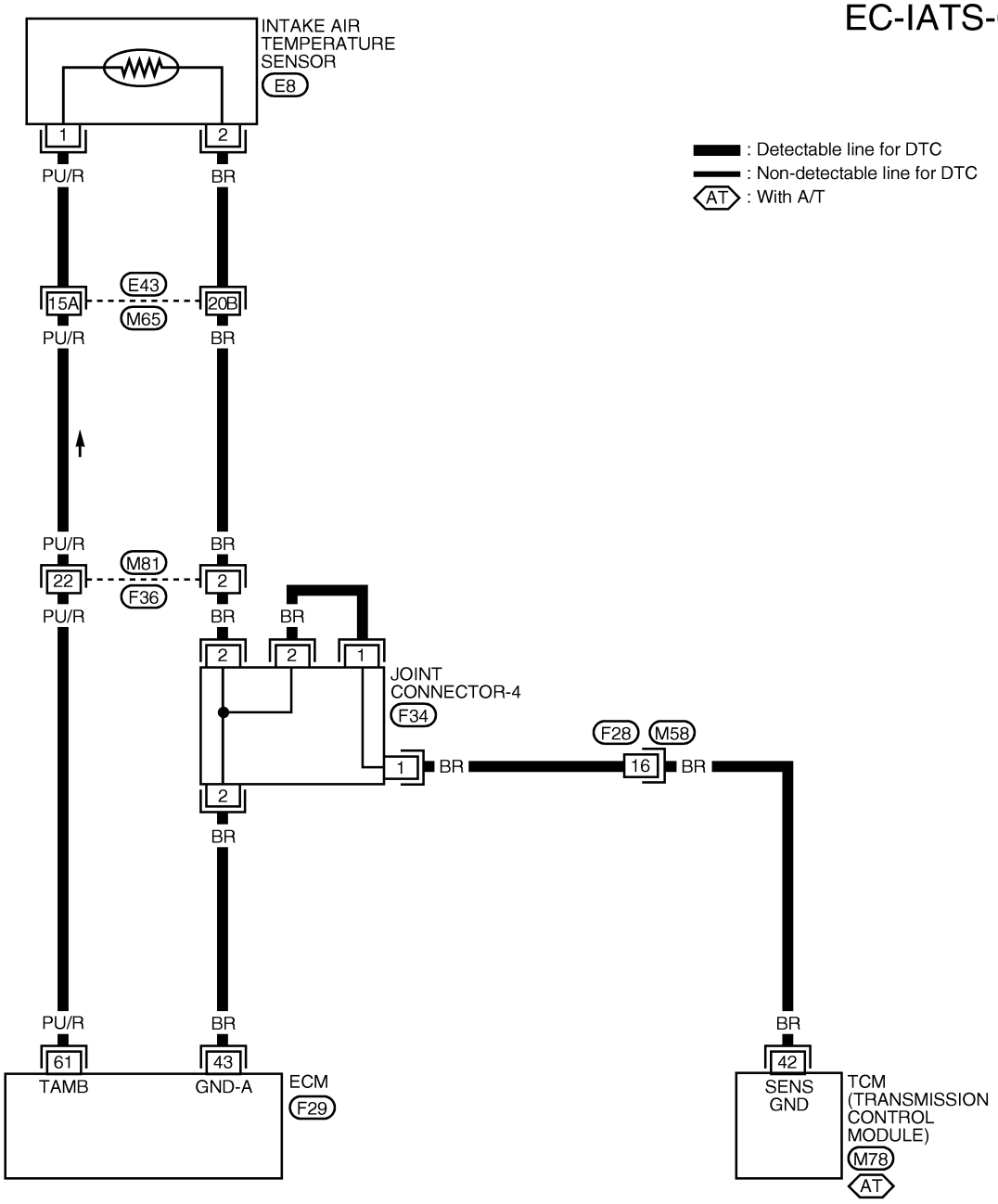

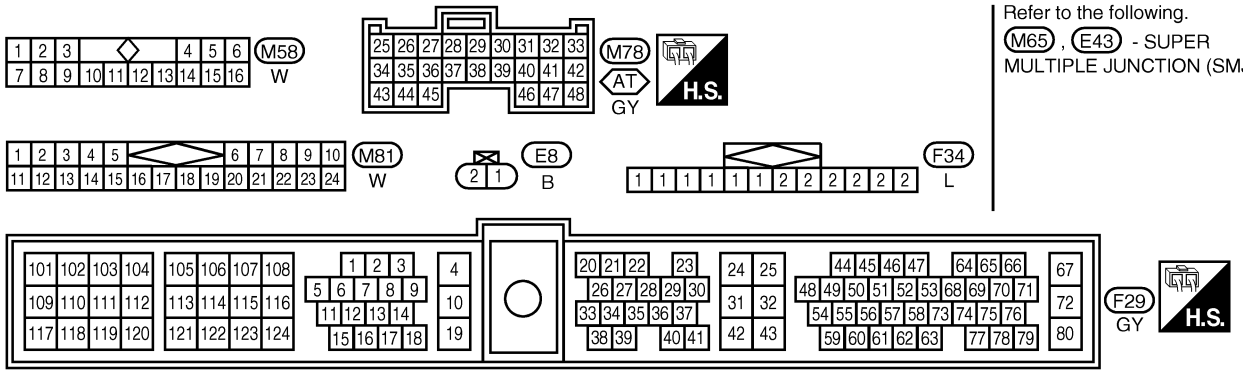

Refer to the following.
M65 , E43 - SUPER MULTIPLE JUNCTION (SMJ)

AEC941A

Diagnostic Procedure

NEEC0589

1	CHECK INTAKE AIR TEMPERATURE SENSOR POWER SUPPLY CIRCUIT

1. Turn ignition switch OFF.
2. Disconnect intake air temperature sensor harness connector.

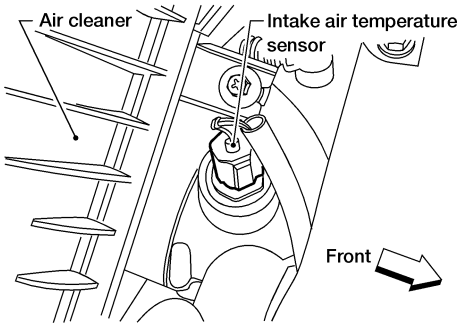

LEC519

3. Turn ignition switch ON.
4. Check voltage between terminal 1 and ground.

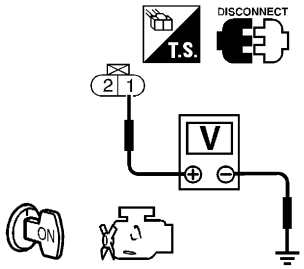

SEF203W

Voltage: Approximately 5V

OK or NG

OK	▶	GO TO 3.
NG	▶	GO TO 2.

2	DETECT MALFUNCTIONING PART

Check the following.
- Harness connectors E43, M65
- Harness connectors M81, F36
- Harness for open or short between ECM and intake air temperature sensor

	▶	Repair harness or connectors.

3	CHECK INTAKE AIR TEMPERATURE SENSOR GROUND CIRCUIT FOR OPEN AND SHORT

1. Turn ignition switch OFF.
2. Check harness continuity between sensor terminal 2 and engine ground.
   Refer to Wiring Diagram.
   Continuity should exist.
3. Also check harness for short to power.

OK or NG

OK	▶	GO TO 5.
NG	▶	GO TO 4.

4	DETECT MALFUNCTIONING PART
Check the following. ● Harness connectors E43, M65 ● Harness connectors M81, F36 ● Harness connectors F28, M58 ● Joint connector-4 ● Harness for open or short between ECM and intake air temperature sensor ● Harness for open or short between TCM (Transmission Control Module) and intake air temperature sensor	
▶	Repair open circuit or short to power in harness or connectors.

5	CHECK INTAKE AIR TEMPERATURE SENSOR

Check resistance as shown in the figure.

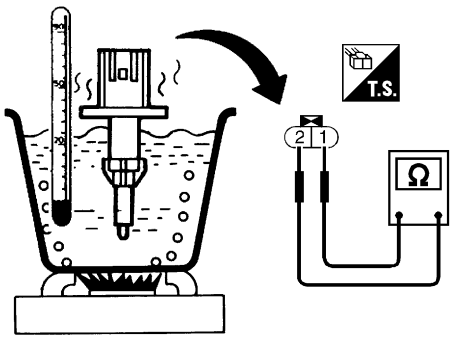

SEF947Q

<Reference data>

Intake air temperature °C (°F)	Resistance kΩ
20 (68)	2.1 - 2.9
80 (176)	0.27 - 0.38

MTBL0228

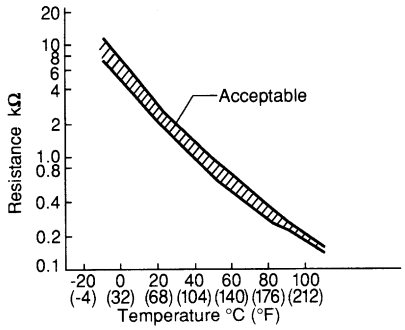

SEF012P

OK or NG

OK	▶	GO TO 6.
NG	▶	Replace intake air temperature sensor.

6	CHECK INTERMITTENT INCIDENT
Refer to "TROUBLE DIAGNOSIS FOR INTERMITTENT INCIDENT", EC-753.	
▶	**INSPECTION END**

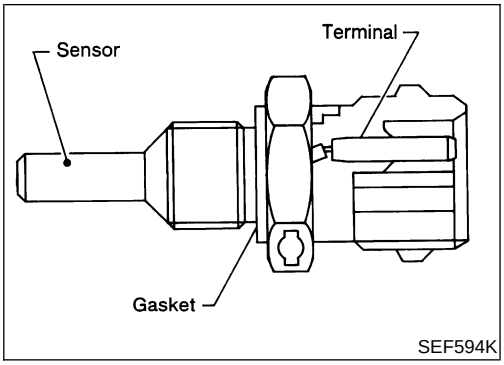

SEF594K

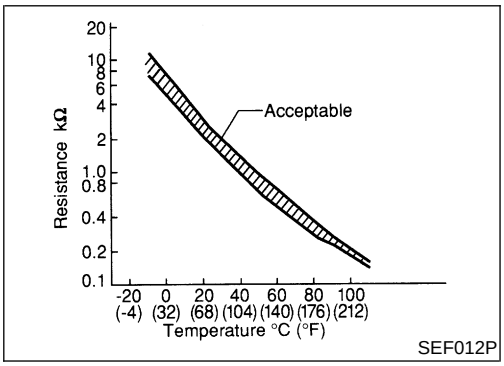

SEF012P

Component Description

NEEC0590

The engine coolant temperature sensor is used to detect the engine coolant temperature. The sensor modifies a voltage signal from the ECM. The modified signal returns to the ECM as the engine coolant temperature input. The sensor uses a thermistor which is sensitive to the change in temperature. The electrical resistance of the thermistor decreases as temperature increases.

<Reference data>

Engine coolant temperature °C (°F)	Voltage* (V)	Resistance (kΩ)
−10 (14)	4.4	7.0 - 11.4
20 (68)	3.5	2.1 - 2.9
50 (122)	2.2	0.68 - 1.00
90 (194)	0.9	0.236 - 0.260

*: These data are reference values and are measured between ECM terminal 59 (Engine coolant temperature sensor) and ground.

CAUTION:

Do not use ECM ground terminals when measuring input/ output voltage. Doing so may result in damage to the ECM's transistor. Use a ground other than the ECM terminals, such as the ground.

On Board Diagnosis Logic

NEEC0591

Malfunction is detected when an excessively high or low voltage from the sensor is sent to ECM.

POSSIBLE CAUSE

NEEC0591S01

- Harness or connectors
  (The sensor circuit is open or shorted.)
- Engine coolant temperature sensor

FAIL-SAFE MODE

NEEC0591S02

When this malfunction is detected, the ECM enters fail-safe mode and the MIL lights up.

Detected items	Engine operating condition in fail-safe mode	
Engine coolant temperature sensor circuit	Engine coolant temperature will be determined by ECM based on the time after turning ignition switch ON or START. CONSULT-II displays the engine coolant temperature decided by ECM.	
	Condition	Engine coolant temperature decided (CONSULT-II display)
	Just as ignition switch is turned ON or Start	40°C (104°F)
	More than approx. 4 minutes after ignition ON or Start	80°C (176°F)
	Except as shown above	40 - 80°C (104 - 176°F) (Depends on the time)

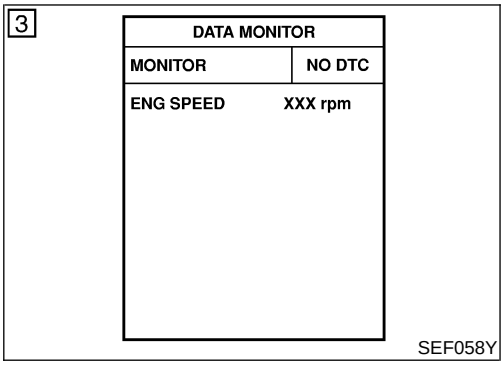

DTC Confirmation Procedure

NEEC0592

NOTE:

If "DTC Confirmation Procedure" has been previously conducted, always turn ignition switch OFF and wait at least 5 seconds before conducting the next test.

With CONSULT-II

1) Turn ignition switch ON.
2) Select "DATA MONITOR" mode with CONSULT-II.
3) Wait at least 5 seconds.
4) If 1st trip DTC is detected, go to "Diagnostic Procedure", EC-779.

With GST

Follow the procedure "With CONSULT-II".

Wiring Diagram

NEEC0593

EC-ECTS-01

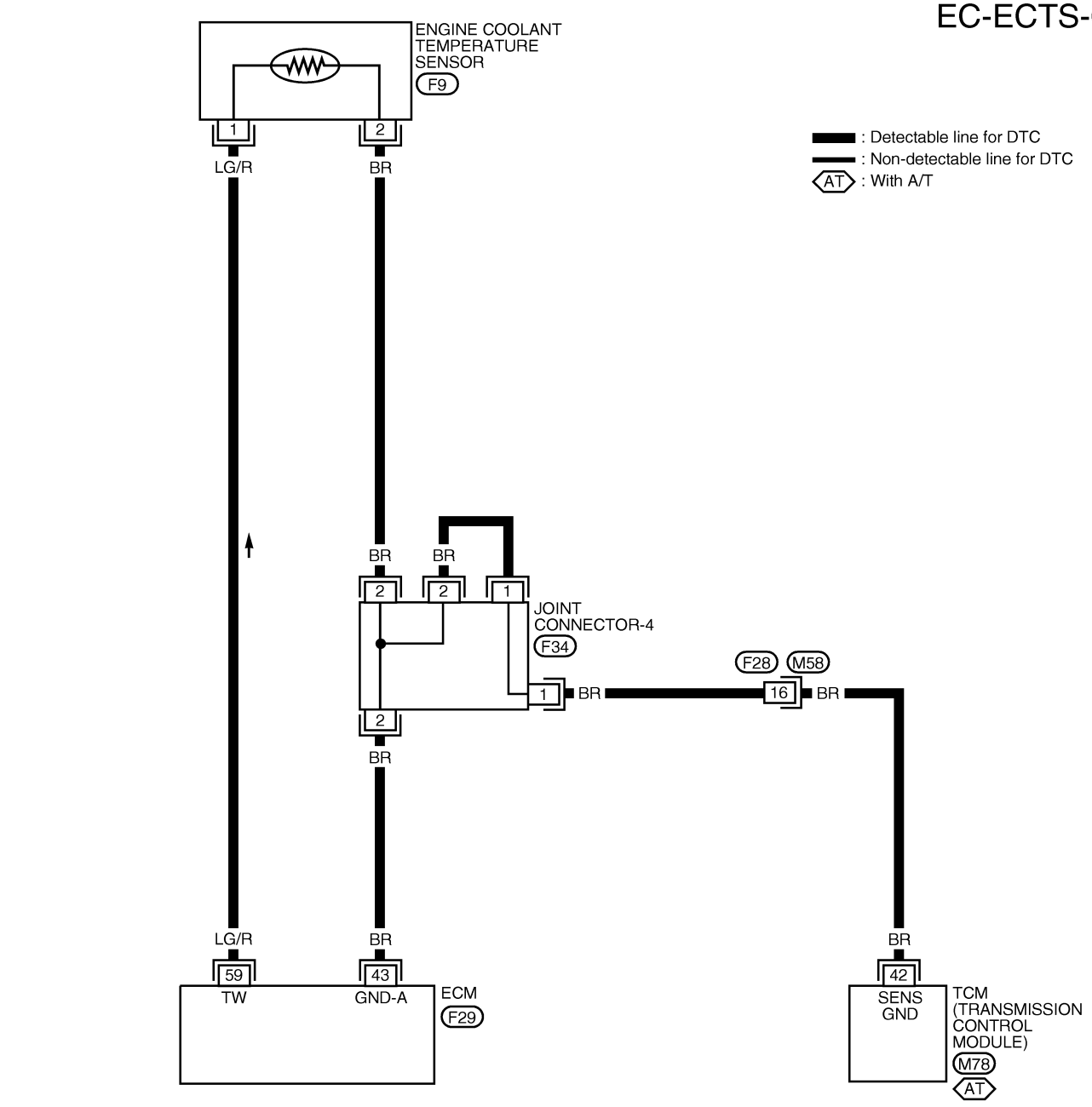

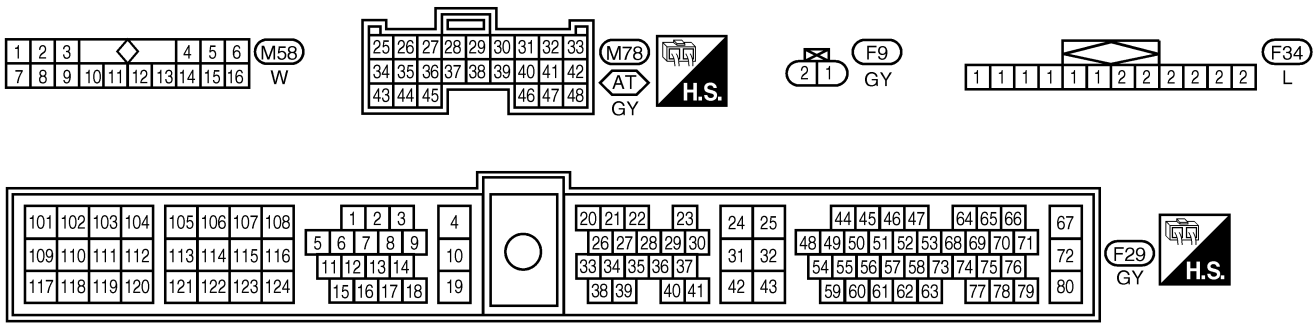

AEC942A

Diagnostic Procedure

NEEC0594

1	CHECK ECTS POWER SUPPLY CIRCUIT

1. Turn ignition switch OFF.
2. Disconnect engine coolant temperature sensor harness connector.

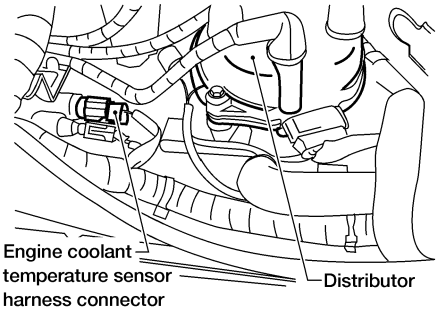

AEC643A

3. Turn ignition switch ON.
4. Check voltage between ECTS terminal 1 and ground with CONSULT-II or tester.

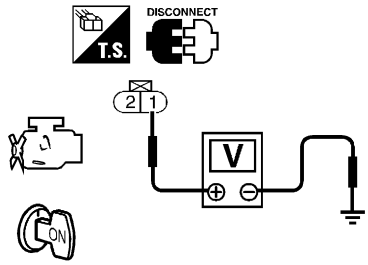

SEF206W

Voltage: Approximately 5V

OK or NG

OK	▶	GO TO 2.
NG	▶	Repair open circuit or short to ground or short to power in harness or connectors.

2	CHECK ECTS GROUND CIRCUIT FOR OPEN AND SHORT

1. Turn ignition switch OFF.
2. Check harness continuity between ECTS terminal 2 and engine ground.
   Refer to Wiring Diagram.
   Continuity should exist.
3. Also check harness for short to power.

OK or NG

OK	▶	GO TO 4.
NG	▶	GO TO 3.

3	DETECT MALFUNCTIONING PART

Check the following.
- Harness connectors F28, M58
- Joint connector-4
- Harness for open or short between ECM and engine coolant temperature sensor
- Harness for open or short between TCM (Transmission Control Module) and engine coolant temperature sensor

	▶	Repair open circuit or short to power in harness or connectors.

Diagnostic Procedure (Cont'd)

4	CHECK ENGINE COOLANT TEMPERATURE SENSOR

Check resistance as shown in the figure.

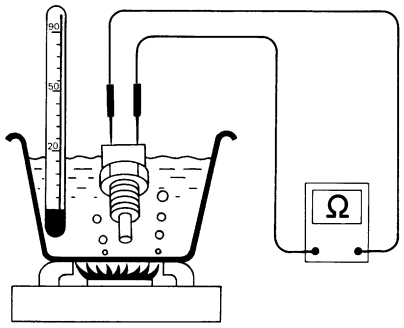

SEF152P

<Reference data>

Temperature °C (°F)	Resistance kΩ
20 (68)	2.1 - 2.9
50 (122)	0.68 - 1.00
90 (194)	0.236 - 0.260

MTBL0229

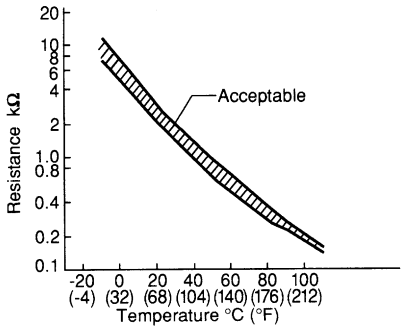

SEF012P

OK or NG

OK	▶	GO TO 5.
NG	▶	Replace engine coolant temperature sensor.

5	CHECK INTERMITTENT INCIDENT
Refer to "TROUBLE DIAGNOSIS FOR INTERMITTENT INCIDENT", EC-753.	
▶	**INSPECTION END**

Description

NEEC0595

NOTE:
If DTC P0120 (0403) is displayed with DTC P0510 (0203), first perform the trouble diagnosis for DTC P0510. Refer to EC-1054.

COMPONENT DESCRIPTION

NEEC0595S01

The throttle position sensor responds to the accelerator pedal movement. This sensor is a kind of potentiometer which transforms the throttle position into output voltage, and emits the voltage signal to the ECM. In addition, the sensor detects the opening and closing speed of the throttle valve and feeds the voltage signal to the ECM.
Idle position of the throttle valve is determined by the ECM receiving the signal from the throttle position sensor. This sensor controls engine operation such as fuel cut. On the other hand, the “Wide open and closed throttle position switch”, which is built into the throttle position sensor unit, is not used for engine control.

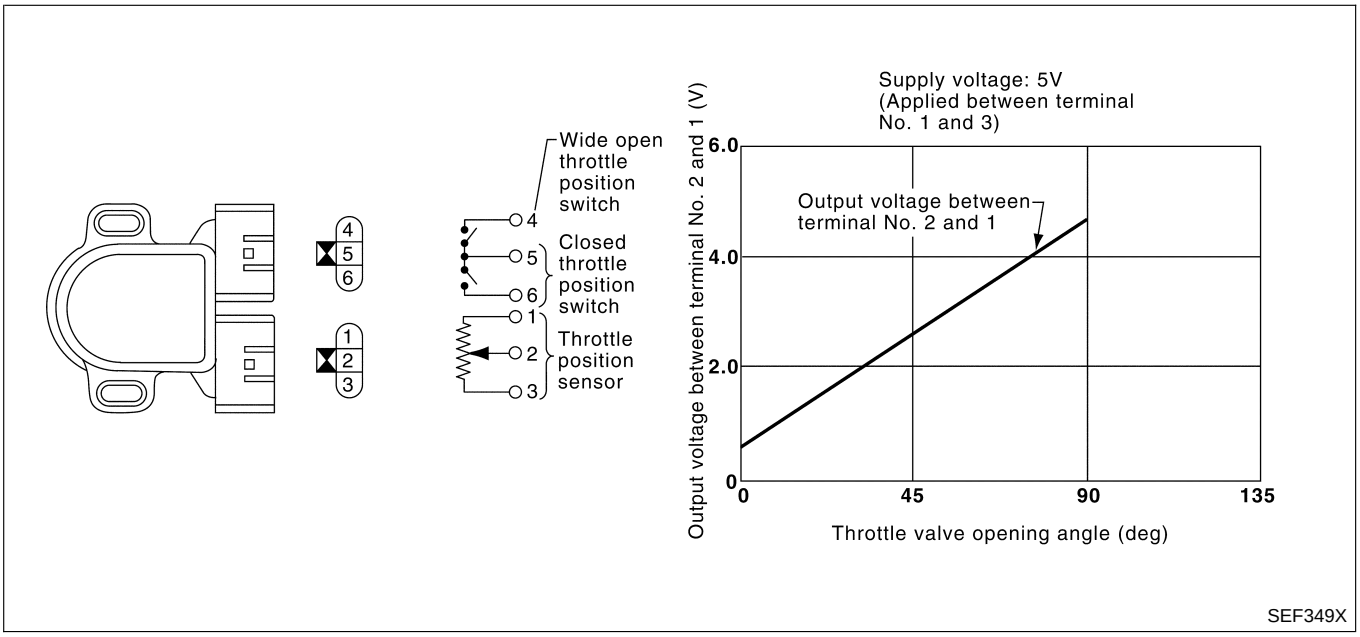

CONSULT-II Reference Value in Data Monitor Mode

NEEC0596

Specification data are reference values.

MONITOR ITEM	CONDITION		SPECIFICATION
THRTL POS SEN	• Engine: After warming up, idle the engine	Throttle valve: fully closed (a)	0.15 - 0.85V
	• Engine: After warming up • Ignition switch: ON (Engine stopped)	Throttle valve: Partially open	Between (a) and (b)
		Throttle valve: fully opened (b)	3.5 - 4.7V
ABSOL TH·P/S	• Engine: After warming up • Ignition switch: ON • More than -40.0 kpa (-300 mmHg, -11.81 inHg) of vacuum is applied to the throttle opener with a hand vacuum pump.	Throttle valve: fully closed	0.0%
	• Engine: After warming up • Ignition switch: ON (Engine stopped)	Throttle valve: fully opened	Approx. 80%

ECM Terminals and Reference Value

=NEEC0597

Specification data are reference values and are measured between each terminal and ground.

CAUTION:

Do not use ECM ground terminals when measuring input/output voltage. Doing so may result in damage to the ECM's transistor. Use a ground other than the ECM terminals, such as the ground.

TERMINAL NO.	WIRE COLOR	ITEM	CONDITION	DATA (DC Voltage)
23	L	Throttle position sensor	**[Engine is running]** ● **Warm-up condition** ● Accelerator pedal fully released	0.15 - 0.85V
			[Ignition switch ON] ● Accelerator pedal fully depressed	3.5 - 4.7V
42	B/W	Sensors' power supply	**[Ignition switch ON]**	Approximately 5V
43	BR	Sensors' ground	**[Engine is running]** ● **Warm-up condition** ● Idle speed	Approximately 0V

On Board Diagnosis Logic

NEEC0598

Malfunction is detected when
(Malfunction A) an excessively low or high voltage from the sensor is sent to ECM,
(Malfunction B) a high voltage from the sensor is sent to ECM under light load driving conditions,
(Malfunction C) a low voltage from the sensor is sent to ECM under heavy load driving conditions.

POSSIBLE CAUSE

NEEC0598S01

Malfunction A

NEEC0598S0101

- Harness or connectors
  (The throttle position sensor circuit is open or shorted.)
- Throttle position sensor

Malfunction B

NEEC0598S0102

- Harness or connectors
  (The throttle position sensor circuit is open or shorted.)
- Throttle position sensor
- Fuel injector
- Camshaft position sensor
- Mass air flow sensor

Malfunction C

NEEC0598S0103

- Harness or connectors
  (The throttle position sensor circuit is open or shorted.)
- Intake air leaks
- Throttle position sensor

FAIL-SAFE MODE

NEEC0598S02

When the malfunction A is detected, the ECM enters fail-safe mode and the MIL lights up.

Detected items	Engine operating condition in fail-safe mode	
Throttle position sensor circuit	Throttle position will be determined based on the injected fuel amount and the engine speed. Therefore, acceleration will be poor.	
	Condition	Driving condition
	When engine is idling	Normal
	When accelerating	Poor acceleration

DTC Confirmation Procedure

NEEC0599

NOTE:

- **Perform "PROCEDURE FOR MALFUNCTION A" first. If the 1st trip DTC cannot be confirmed, perform "PROCEDURE FOR MALFUNCTION B".**
  If there is no problem on "PROCEDURE FOR MALFUNCTION B", perform "PROCEDURE FOR MALFUNCTION C".
- If "DTC Confirmation Procedure" has been previously conducted, always turn ignition switch OFF and wait at least 5 seconds before conducting the next test.

PROCEDURE FOR MALFUNCTION A

NEEC0599S01

CAUTION:

Always drive vehicle at a safe speed.

TESTING CONDITION:

- **Before performing the following procedure, confirm that battery voltage is more than 10V at idle.**
- **This test may be conducted with the drive wheels lifted in the shop or by driving the vehicle. If a road test is expected to be easier, it is unnecessary to lift the vehicle.**

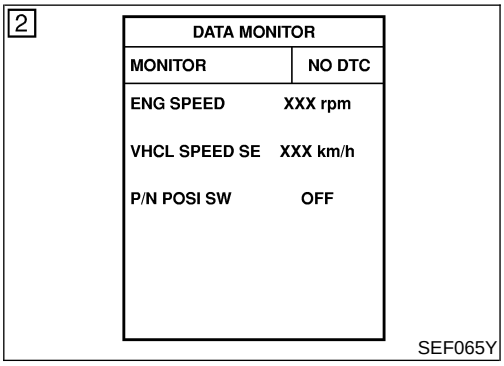

With CONSULT-II

1) Turn ignition switch ON and select "DATA MONITOR" mode with CONSULT-II.
2) Start engine and maintain the following conditions for at least 5 consecutive seconds.

Vehicle speed	More than 5 km/h (3 MPH)
Selector lever	Suitable position except "P" or "N" position

3) If 1st trip DTC is detected, go to "Diagnostic Procedure", EC-787.

With GST

Follow the procedure "With CONSULT-II".

3

DATA MONITOR	
MONITOR	NO DTC
ENG SPEED	XXX rpm

SEF058Y

PROCEDURE FOR MALFUNCTION B

NEEC0599S02

With CONSULT-II

1) Turn ignition switch ON.
2) Select "DATA MONITOR" mode with CONSULT-II.
3) Start engine and let it idle for at least 10 seconds.
   If idle speed is over 1,000 rpm, maintain the following conditions for at least 10 seconds to keep engine speed below 1,000 rpm.

Selector lever	Suitable position except "P" or "N"
Brake pedal	Depressed
Vehicle speed	0 km/h (0 MPH)

4) If 1st trip DTC is detected, go to "Diagnostic Procedure", EC-787.

With GST

Follow the procedure "With CONSULT-II".

6

DATA MONITOR	
MONITOR	NO DTC
THRTL POS SEN	XXX V
ABSOL TH-P/S	XXX %

SEF177Y

PROCEDURE FOR MALFUNCTION C

NEEC0599S03

CAUTION:

Always drive vehicle at a safe speed.

With CONSULT-II

1) Start engine and warm it up to normal operating temperature.
2) Turn ignition switch OFF and wait at least 5 seconds.
3) Turn ignition switch ON.
4) Select "MANU TRIG" and "HI SPEED" in "DATA MONITOR" mode with CONSULT-II.
5) Select "THRTL POS SEN" and "ABSOL TH·P/S" in "DATA MONITOR" mode with CONSULT-II.
6) Press RECORD on CONSULT-II SCREEN at the same time accelerator pedal is depressed.
7) Print out the recorded graph and check the following:

- The voltage rise is linear in response to accelerator pedal depression.
- The voltage when accelerator pedal is fully depressed is approximately 4V.
  If NG, go to "Diagnostic Procedure", EC-787.
  If OK, go to following step.

7

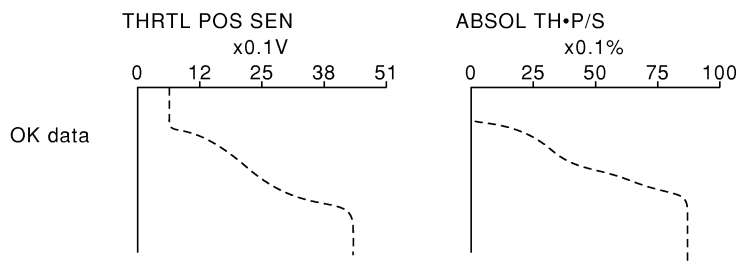

Trigger	THRTL POS SEN	ABSOL TH/PO SEN
	V	%
00"43	2.52	48.8
00"44	2.64	52.0
00"45	2.76	54.9
00"46	2.88	57.4
00"47	3.00	60.5
00"48	3.12	63.3
00"49	3.24	66.1
00"50	3.34	68.9
00"51	3.46	71.4
00"52	3.56	74.2
00"53	3.68	77.0
00"54	3.80	79.8

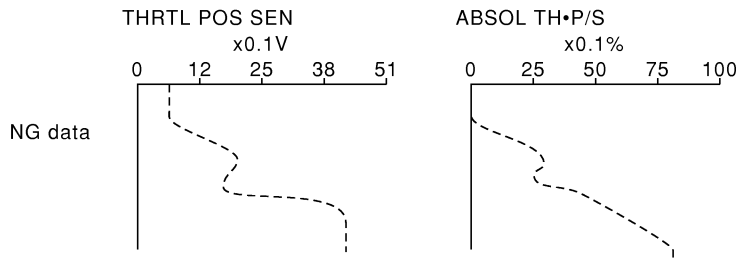

Trigger	THRTL POS SEN	ABSOL TH/PO SEN
	V	%
00"33	1.96	38.7
00"34	2.02	39.1
00"35	2.08	39.5
00"36	2.14	39.9
00"37	2.20	41.3
00"38	2.26	42.7
00"39	2.32	44.4
00"41	2.26	42.7
00"42	2.20	41.3
00"43	2.58	50.4
00"44	2.66	52.5
00"45	2.76	54.9

SEF174Z

9

DATA MONITOR	
MONITORING	NO DTC
ENG SPEED	XXX rpm
MAS AIR/FL SE	XXX V
COOLAN TEMP/S	XXX °C
IACV-AAC/V	XXX %

SEF805Z

8) Select "AUTO TRIG" in "DATA MONITOR" mode with CONSULT-II.
9) Maintain the following conditions for at least 10 consecutive seconds.

CMPS·RPM (REF)	More than 2,000 rpm
MAS AIR/FL SE	More than 3V
COOLAN TEMP/S	More than 70°C (158°F)
IACV-AAC/V	Less than 80%
Selector lever	Suitable position
Driving location	Driving vehicle uphill (Increased engine load) will help maintain the driving conditions required for this test.

10) If 1st trip DTC is detected, go to "Diagnostic Procedure", EC-787.

With GST
Follow the procedure "With CONSULT-II".

Wiring Diagram

NEEC0600

EC-TPS-01

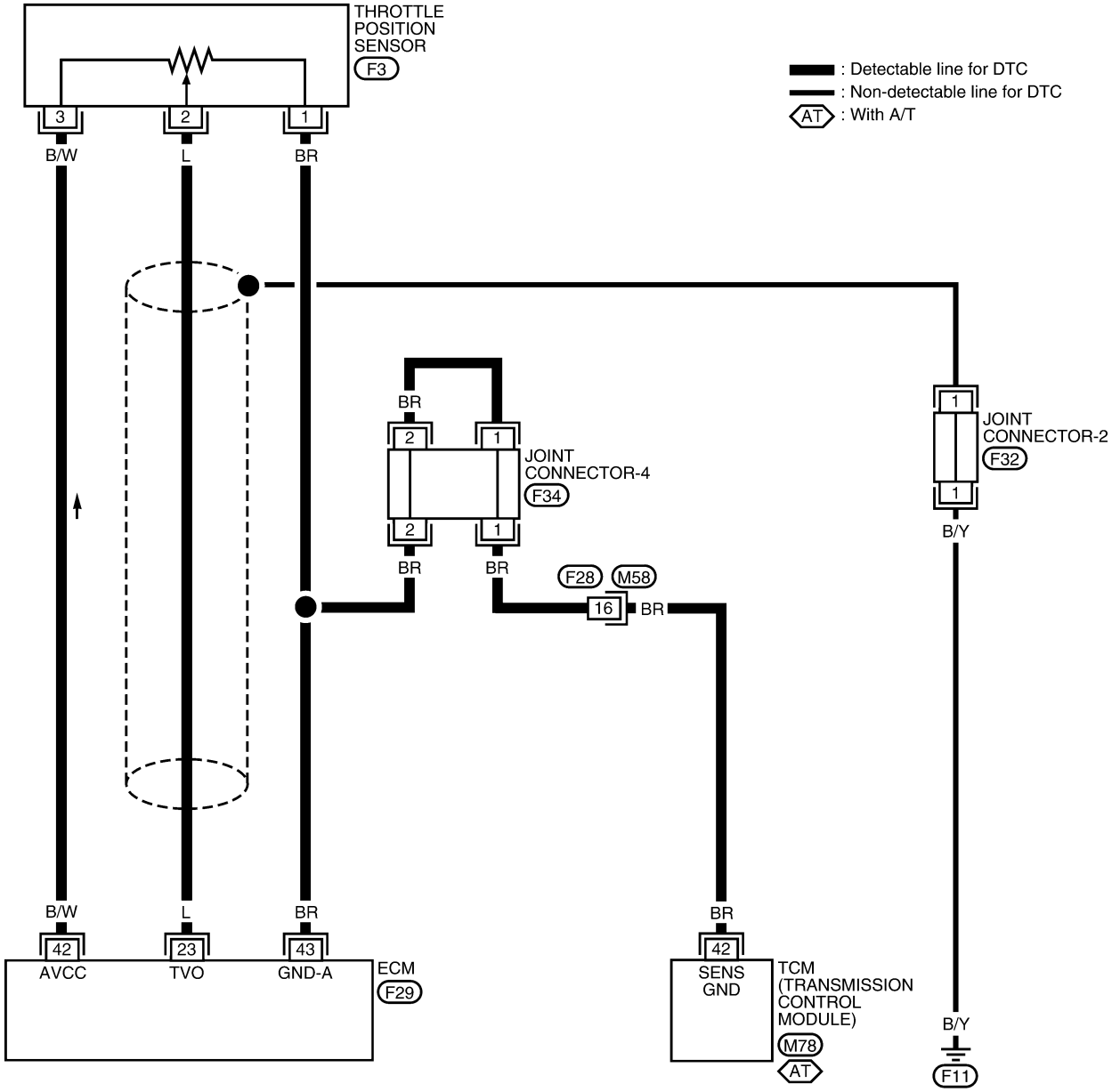

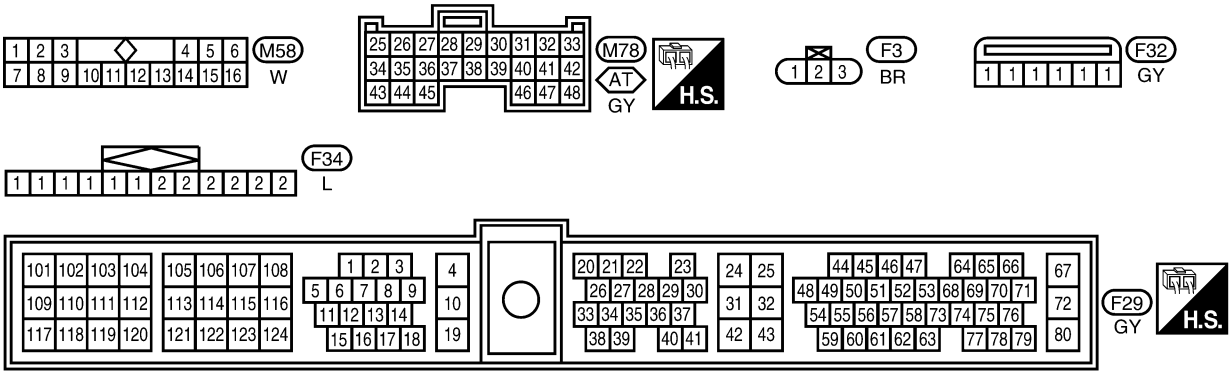

WEC787

Diagnostic Procedure

NEEC0601

1 INSPECTION START

Which malfunction A, B or C is duplicated?

MALFUNCTION	Type
A	A
B	B
C	C

MTBL0066

Type A, B or C

Type A or B	▶	GO TO 4.
Type C	▶	GO TO 2.

2 ADJUST THROTTLE POSITION SENSOR

Check the following items. Refer to “Basic Inspection”, EC-715.

Items	Specifications
Ignition timing	10° ± 2° BTDC
Base idle speed	700 ± 50 rpm (in “P” or “N” position)
Closed throttle position switch idle position adjustment	Feeler gauge thickness and switch condition 0.3 mm (0.012 in): ON 0.4 mm (0.016 in): OFF
Target idle speed	750 ± 50 rpm (in “P” or “N” position)

MTBL0576

	▶	GO TO 3.

3 CHECK INTAKE SYSTEM.

1. Turn ignition switch OFF.
2. Check the following for connection.
- Air duct
- Vacuum hoses
- Intake air passage between air duct to intake manifold collector

OK or NG

OK	▶	GO TO 4.
NG	▶	Reconnect the parts.

4	RETIGHTEN GROUND SCREWS

1. Turn ignition switch OFF.
2. Loosen and retighten engine ground screws.

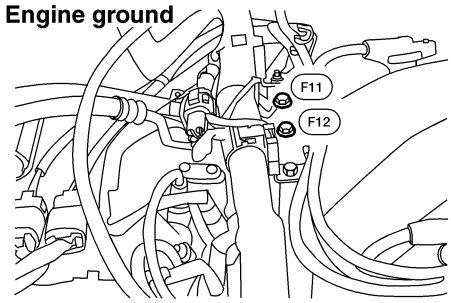

LEC518

	▶	GO TO 5.

5	CHECK THROTTLE POSITION SENSOR POWER SUPPLY CIRCUIT

1. Disconnect throttle position sensor harness connector.

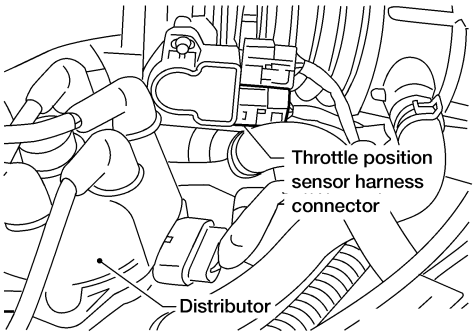

AEC638A

2. Turn ignition switch ON.
3. Check voltage between sensor terminal 3 and ground with CONSULT-II or tester.

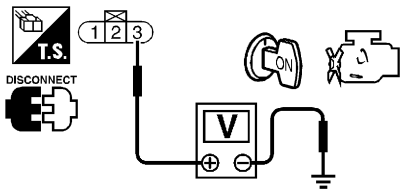

SEF630W

Voltage: Approximately 5V

OK or NG

OK	▶	GO TO 6.
NG	▶	Repair open circuit or short to ground or short to power in harness or connectors.

6	CHECK THROTTLE POSITION SENSOR GROUND CIRCUIT FOR OPEN AND SHORT

1. Turn ignition switch OFF.
2. Check harness continuity between sensor terminal 1 and engine ground.
   Refer to Wiring Diagram.
   Continuity should exist.
3. Also check harness for short to power.

OK or NG

OK	▶	GO TO 8.
NG	▶	GO TO 7.

7	DETECT MALFUNCTIONING PART

Check the following.
- Harness connectors F28, M58
- Joint connector-4
- Harness for open or short between ECM and throttle position sensor
- Harness for open or short between TCM (Transmission Control Module) and throttle position sensor

	▶	Repair open circuit or short to power in harness or connectors.

8	CHECK THROTTLE POSITION SENSOR INPUT SIGNAL CIRCUIT FOR OPEN AND SHORT

1. Disconnect ECM harness connector.
2. Check harness continuity between ECM terminal 23 and sensor terminal 2.
   Refer to Wiring Diagram.
   Continuity should exist.
3. Also check harness for short to ground and short to power.

OK or NG

OK (With CONSULT-II)	▶	GO TO 9.
OK (Without CONSULT-II)	▶	GO TO 10.
NG	▶	Repair open circuit or short to ground or short to power in harness or connectors.

9	CHECK THROTTLE POSITION SENSOR

With CONSULT-II
1. Start engine and warm it up to normal operating temperature.
2. Stop engine (ignition switch OFF).
3. Turn ignition switch ON.
4. Select "DATA MONITOR" mode with CONSULT-II.
5. Check voltage of "THRTL POS SEN" under the following conditions.
   Voltage measurement must be made with throttle position sensor installed in vehicle.

DATA MONITOR	
MONITOR	NO DTC
ENG SPEED	XXX rpm
COOLAN TEMP/S	XXX °C
THRTL POS SEN	XXX V

Throttle valve conditions	THRTL POS SEN
Completely closed (a)	0.15 - 0.85V
Partially open	Between (a) and (b)
Completely open (b)	3.5 - 4.7V

SEF062Y

OK or NG

OK	▶	GO TO 12.
NG	▶	GO TO 11.

Diagnostic Procedure (Cont'd)

10	CHECK THROTTLE POSITION SENSOR

Without CONSULT-II

1. Start engine and warm it up to normal operating temperature.
2. Stop engine (ignition switch OFF).
3. Turn ignition switch ON.
4. Check voltage between ECM terminal 23 (Throttle position sensor signal) and ground.
   Voltage measurement must be made with throttle position sensor installed in vehicle.

Throttle valve conditions	Voltage
Completely closed (a)	0.15 - 0.85V
Partially open	Between (a) and (b)
Completely open (b)	3.5 - 4.7V

MTBL0231

OK or NG

OK	▶	GO TO 12.
NG	▶	GO TO 11.

11	ADJUST CLOSED THROTTLE POSITION SWITCH

Adjust closed throttle position switch. Refer to "Basic Inspection", EC-715.

Items	Specifications
Ignition timing	10° ± 2° BTDC
Base idle speed	700 ± 50 rpm (in "P" or "N" position)
Closed throttle position switch idle position adjustment	Feeler gauge thickness and switch condition 0.3 mm (0.012 in): ON 0.4 mm (0.016 in): OFF
Target idle speed	750 ± 50 rpm (in "P" or "N" position)

MTBL0576

OK or NG

OK	▶	GO TO 12.
NG	▶	Replace throttle position sensor. To adjust it, perform "Basic Inspection", EC-715.

12 CHECK MASS AIR FLOW SENSOR

1. Reconnect harness connectors disconnected.
2. Start engine and warm it up to normal operating temperature.
3. Check voltage between ECM terminal 54 (Mass air flow sensor signal) and ground.

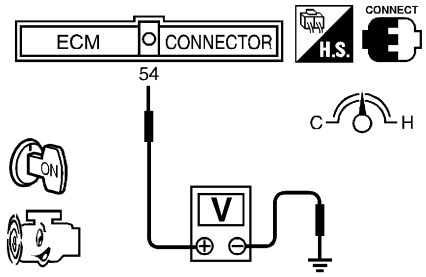

SEF747U

Condition	Voltage V
Ignition switch "ON" (Engine stopped.)	Less than 1.0
Idle (Engine is warmed-up to normal operating temperature.)	1.0 - 1.7
2,500 rpm (Engine is warmed-up to normal operating temperature.)	1.7 - 2.3
Idle to about 4,000 rpm*	1.0 - 1.7 to Approx. 4.0

MTBL0227

4. If the voltage is out of specification, disconnect mass air flow sensor harness connector and connect it again. Then repeat above check.
5. If NG, remove mass air flow sensor from air duct. Check hot wire for damage or dust.

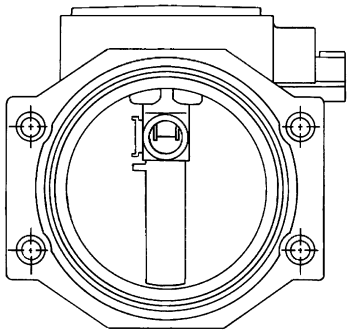

SEF030T

OK or NG

OK	▶	GO TO 13.
NG	▶	Replace mass air flow sensor.

13 CHECK CAMSHAFT POSITION SENSOR

1. Install any parts removed.
2. Start engine.
3. Check voltage between ECM terminals 44, 48 and ground, ECM terminal 49 and ground with DC range.

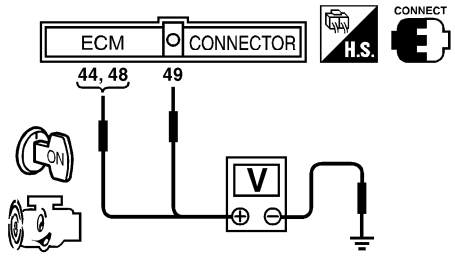

Terminal 44 or 48 and engine ground

Condition	Idle	2,000 rpm
Voltage	0.3 - 0.5V	0.3 - 0.5V
Pulse signal	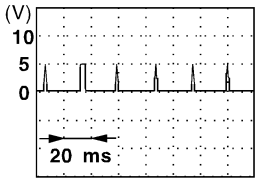	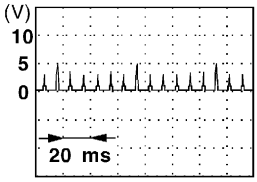

Terminal 49 and engine ground

Condition	Idle	2,000 rpm
Voltage	Approximately 2.5V	Approximately 2.5V
Pulse signal	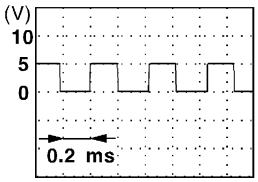	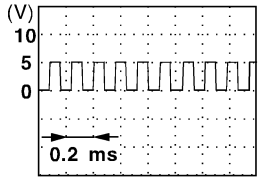

AEC072B

OK or NG

OK	▶	GO TO 14.
NG	▶	Replace distributor assembly with camshaft position sensor.

14 CHECK FUEL INJECTOR

1. Disconnect injector harness connector.
2. Check resistance between terminals as shown in the figure.

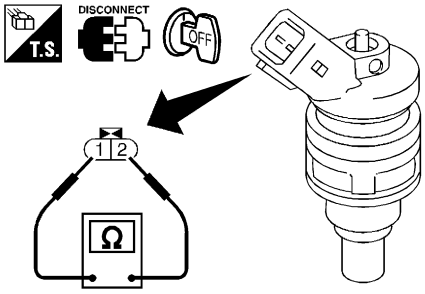

SEF625V

Resistance: 10 - 14Ω [at 25°C (77°F)]

OK or NG

OK	▶	GO TO 15.
NG	▶	Replace fuel injector.

15	CHECK THROTTLE POSITION SENSOR SHIELD CIRCUIT FOR OPEN AND SHORT	
1. Turn ignition switch OFF. 2. Disconnect joint connector-2. 3. Check the following. ● Continuity between joint connector terminal 1 and ground ● Joint connector (Refer to ***EL-238***, "HARNESS LAYOUT".) **Continuity should exist.** 4. Also check harness for short to power. 5. Then reconnect joint connector-2.		
OK or NG		
OK	▶	GO TO 16.
NG	▶	Repair open circuit or short to power in harness or connectors.

16	CHECK INTERMITTENT INCIDENT	
Refer to "TROUBLE DIAGNOSIS FOR INTERMITTENT INCIDENT", EC-753.		
	▶	**INSPECTION END**

Description

NEEC0602

NOTE:
If DTC P0125 (0908) is displayed with P0115 (0103), first perform the trouble diagnosis for DTC P0115. Refer to EC-776.

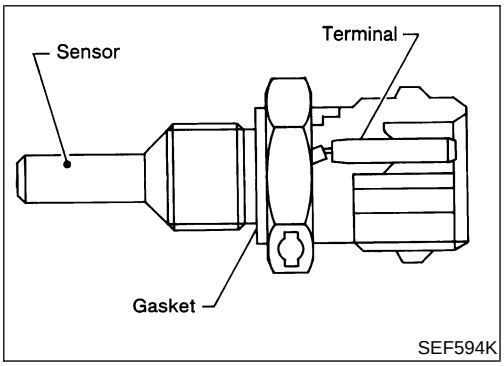

COMPONENT DESCRIPTION

NEEC0602S01

The engine coolant temperature sensor is used to detect the engine coolant temperature. The sensor modifies a voltage signal from the ECM. The modified signal returns to the ECM as the engine coolant temperature input. The sensor uses a thermistor which is sensitive to the change in temperature. The electrical resistance of the thermistor decreases as temperature increases.

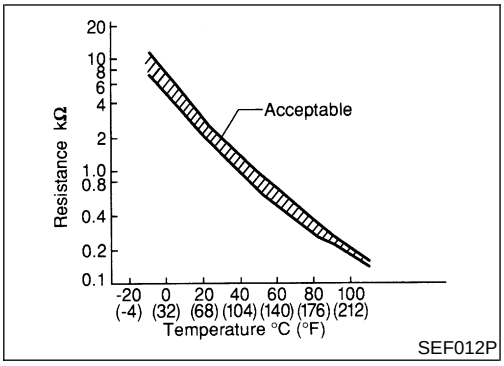

<Reference data>

Engine coolant temperature °C (°F)	Voltage* (V)	Resistance (kΩ)
−10 (14)	4.4	9.2
20 (68)	3.5	2.1 - 2.9
50 (122)	2.2	0.68 - 1.00
90 (194)	0.9	0.236 - 0.260

*: These data are reference values and are measured between ECM terminal 59 (Engine coolant temperature sensor) and ground.

CAUTION:
Do not use ECM ground terminals when measuring input/output voltage. Doing so may result in damage to the ECM's transistor. Use a ground other than the ECM terminals, such as the ground.

On Board Diagnosis Logic

NEEC0603

Malfunction is detected when voltage sent to ECM from the sensor is not practical, even when some time has passed after starting the engine, or engine coolant temperature is insufficient for closed loop fuel control.

POSSIBLE CAUSE

NEEC0603S01

- Harness or connectors
  (High resistance in the circuit)
- Engine coolant temperature sensor
- Thermostat

4

DATA MONITOR	
MONITOR	NO DTC
ENG SPEED	XXX rpm
COOLAN TEMP/S	XXX °C

SEF174Y

DTC Confirmation Procedure

=NEEC0604

CAUTION:

Be careful not to overheat engine.

NOTE:

If “DTC Confirmation Procedure” has been previously conducted, always turn ignition switch OFF and wait at least 5 seconds before conducting the next test.

With CONSULT-II

1) Turn ignition switch ON.
2) Select “DATA MONITOR” mode with CONSULT-II.
3) Check that “COOLAN TEMP/S” is above 10°C (50°F).
   If it is above 10°C (50°F), the test result will be OK.
   If it is below 10°C (50°F), go to following step.
4) Start engine and run it for 65 minutes at idle speed.
   If “COOLAN TEMP/S” increases to more than 10°C (50°F) within 65 minutes, stop engine because the test result will be OK.
5) If 1st trip DTC is detected, go to “Diagnostic Procedure”, EC-797.

With GST

Follow the procedure “With CONSULT-II”.

Wiring Diagram

NEEC0605

EC-ECTS-01

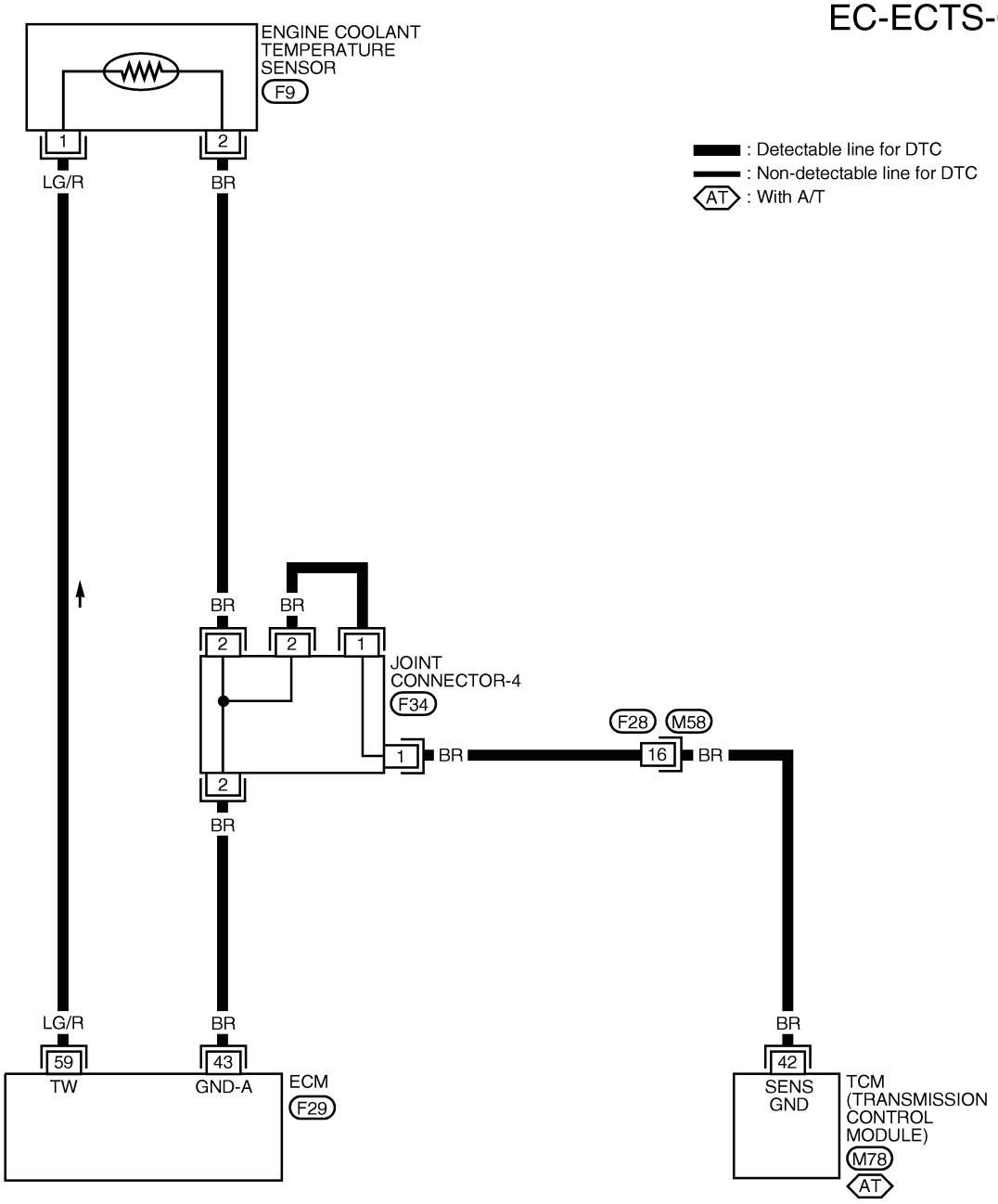

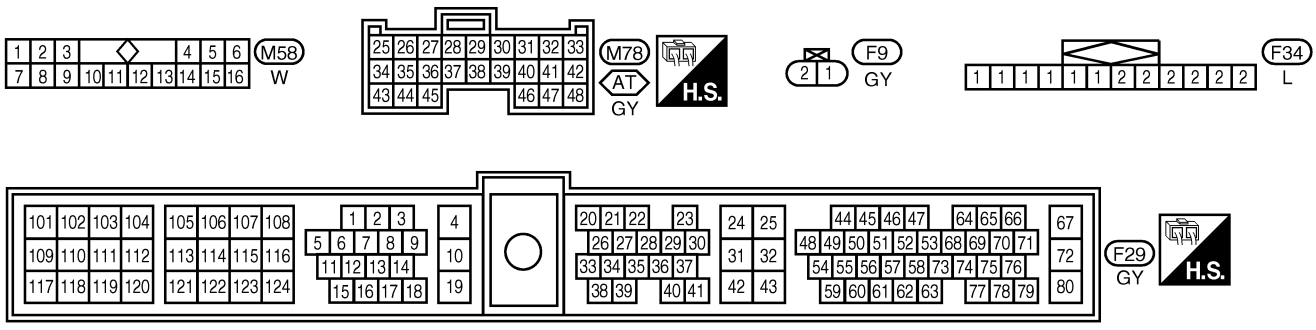

AEC942A

Diagnostic Procedure

NEEC0606

1	CHECK ECTS POWER SUPPLY CIRCUIT

1. Turn ignition switch OFF.
2. Disconnect engine coolant temperature sensor harness connector.

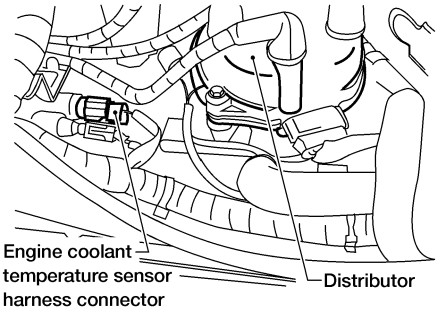

AEC643A

3. Turn ignition switch ON.
4. Check voltage between ECTS terminal 1 and ground with CONSULT-II or tester.

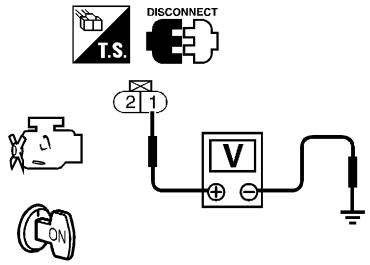

SEF206W

Voltage: Approximately 5V

OK or NG

OK	▶	GO TO 2.
NG	▶	Repair open circuit or short to ground or short to power in harness or connectors.

2	CHECK ECTS GROUND CIRCUIT FOR OPEN AND SHORT

1. Turn ignition switch OFF.
2. Check harness continuity between ECTS terminal 2 and engine ground.
   Refer to Wiring Diagram.
   Continuity should exist.
3. Also check harness for short to power.

OK or NG

OK	▶	GO TO 4.
NG	▶	GO TO 3.

3	DETECT MALFUNCTIONING PART

Check the following.
- Harness connectors F28, M58
- Joint connector-4
- Harness for open or short between ECM and engine coolant temperature sensor
- Harness for open or short between TCM (Transmission Control Module) and engine coolant temperature sensor

	▶	Repair open circuit or short to power in harness or connectors.

4	CHECK ENGINE COOLANT TEMPERATURE SENSOR

Check resistance as shown in the figure.

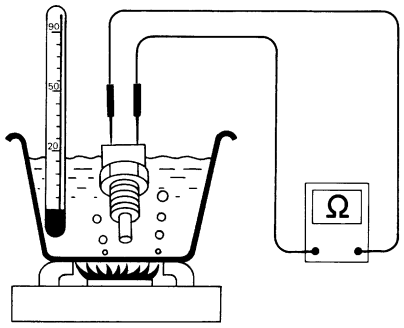

SEF152P

<Reference data>

Temperature °C (°F)	Resistance kΩ
20 (68)	2.1 - 2.9
50 (122)	0.68 - 1.00
90 (194)	0.236 - 0.260

MTBL0229

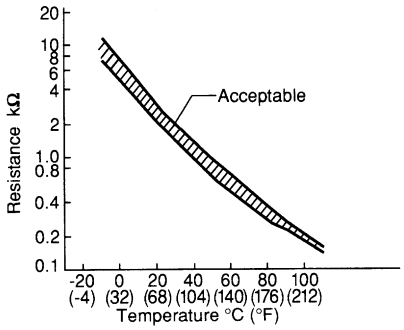

SEF012P

OK or NG

OK	▶	GO TO 5.
NG	▶	Replace engine coolant temperature sensor.

5	CHECK THERMOSTAT OPERATION

When the engine is cold [lower than 70°C (158°F)] condition, grasp lower radiator hose and confirm the engine coolant does not flow.

OK or NG

OK	▶	GO TO 6.
NG	▶	Repair or replace thermostat. Refer to ***LC-30***, "Thermostat".

6	CHECK INTERMITTENT INCIDENT

Refer to "TROUBLE DIAGNOSIS FOR INTERMITTENT INCIDENT", EC-753.

▶ **INSPECTION END**

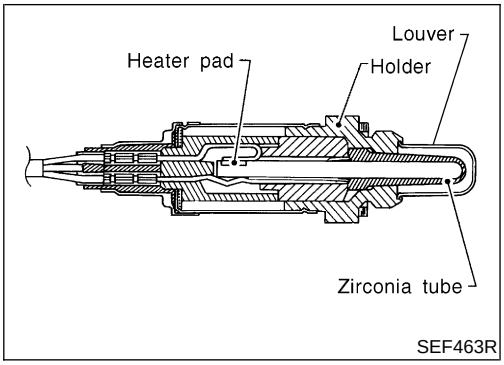

SEF463R

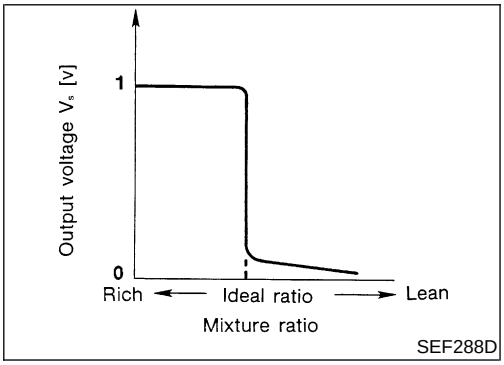

SEF288D

Component Description

NEEC0607

The heated oxygen sensor 1 (front) is placed into the front tube. It detects the amount of oxygen in the exhaust gas compared to the outside air. The heated oxygen sensor 1 (front) has a closed-end tube made of ceramic zirconia. The zirconia generates voltage from approximately 1V in richer conditions to 0V in leaner conditions. The heated oxygen sensor 1 (front) signal is sent to the ECM. The ECM adjusts the injection pulse duration to achieve the ideal air-fuel ratio. The ideal air-fuel ratio occurs near the radical change from 1V to 0V.

CONSULT-II Reference Value in Data Monitor Mode

NEEC0608

Specification data are reference values.

MONITOR ITEM	CONDITION		SPECIFICATION
HO2S1 (B1) HO2S1 (B2)	● Engine: After warming up	Maintaining engine speed at 2,000 rpm	0 - 0.3V ⟷ Approx. 0.6 - 1.0V
HO2S1 MNTR (B1) HO2S1 MNTR (B2)			LEAN ⟷ RICH Changes more than 5 times during 10 seconds.

ECM Terminals and Reference Value

NEEC0609

Specification data are reference values and are measured between each terminal and ground.

CAUTION:

Do not use ECM ground terminals when measuring input/output voltage. Doing so may result in damage to the ECM's transistor. Use a ground other than the ECM terminals, such as the ground.

TERMINAL NO.	WIRE COLOR	ITEM	CONDITION	DATA (DC Voltage)
50	B	Heated oxygen sensor 1 (front) (bank 1)	**[Engine is running]** ● After warming up to normal operating temperature and engine speed is 2,000 rpm	0 - Approximately 1.0V 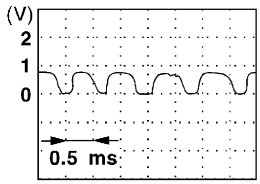 SEF002V
51	G	Heated oxygen sensor 1 (front) (bank 2)		

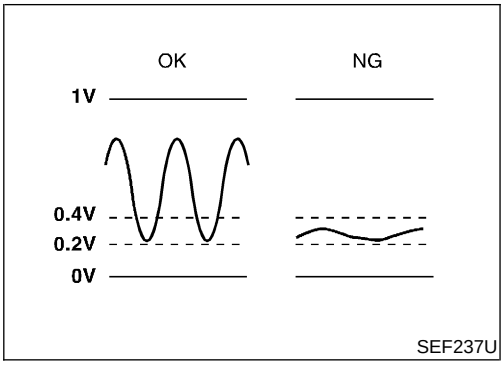

On Board Diagnosis Logic

NEEC0610

Under the condition in which the heated oxygen sensor 1 (front) signal is not input, the ECM circuits will read a continuous approximately 0.3V. Therefore, for this diagnosis, the time that output voltage is within 200 to 400 mV range is monitored, and the diagnosis checks that this time is not inordinately long.
Malfunction is detected when the voltage from the sensor is constantly approx. 0.3V.

POSSIBLE CAUSE

NEEC0610S01

- Harness or connectors
  (The sensor circuit is open or shorted.)
- Heated oxygen sensor 1 (front)

5

HO2S1 (B1) P0130	
OUT OF CONDITION	
MONITOR	
ENG SPEED	XXX rpm
B/FUEL SCHDL	XXX msec
COOLAN TEMP/S	XXX °C
VHCL SPEED SEN	XXX km/h

SEF332Z

5

HO2S1 (B1) P0130	
TESTING	
MONITOR	
ENG SPEED	XXX rpm
B/FUEL SCHDL	XXX msec
COOLAN TEMP/S	XXX °C
VHCL SPEED SEN	XXX km/h

SEF333Z

5

HO2S1 (B1) P0130
COMPLETED

SEF645Y

DTC Confirmation Procedure

=NEEC0611

CAUTION:

Always drive vehicle at a safe speed.

NOTE:

If "DTC Confirmation Procedure" has been previously conducted, always turn ignition switch OFF and wait at least 5 seconds before conducting the next test.

TESTING CONDITION:

Before performing the following procedure, confirm that battery voltage is more than 11V at idle.

With CONSULT-II

1) Start engine and warm it up to normal operating temperature.
2) Select "HO2S1 (B1)/(B2) P0130/P0150" of "HO2S1" in "DTC WORK SUPPORT" mode with CONSULT-II.
3) Touch "START".
4) Let it idle for at least 3.5 minutes.

NOTE:

Never raise engine speed above 3,200 rpm after this step. If the engine speed limit is exceeded, return to step 4.

5) When the following conditions are met, "TESTING" will be displayed on the CONSULT-II screen. Maintain the conditions continuously until "TESTING" changes to "COMPLETED". (It will take approximately 10 to 60 seconds.)

ENG SPEED	1,800 - 3,100 rpm
Vehicle speed	More than 65 km/h (40 MPH)
B/FUEL SCHDL	2.3 - 13 msec
Selector lever	Suitable position

If "TESTING" is not displayed after 5 minutes, retry from step 2.

6) Make sure that "OK" is displayed after touching "SELF-DIAG RESULTS". If "NG" is displayed, refer to "Diagnostic Procedure", EC-805.

During this test, P1148 and P1168 may be stored in ECM.

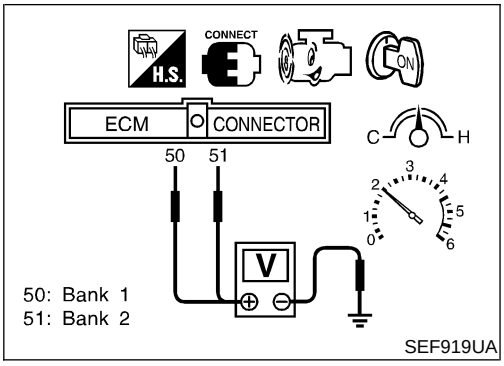

Overall Function Check

=NEEC0612

Use this procedure to check the overall function of the heated oxygen sensor 1 (front) circuit. During this check, a 1st trip DTC might not be confirmed.

Without CONSULT-II

1) Start engine and warm it up to normal operating temperature.
2) Set voltmeter probes between ECM terminal 50 (bank 1 signal) or 51 (bank 2 signal) and engine ground.
3) Check the following with engine speed held at 2,000 rpm constant under no load.

- The voltage does not remain in the range of 0.2 - 0.4V.

4) If NG, go to “Diagnostic Procedure”, EC-805.

Wiring Diagram

NEEC0613

RIGHT BANK

NEEC0613S01

EC-O2S1B1-01

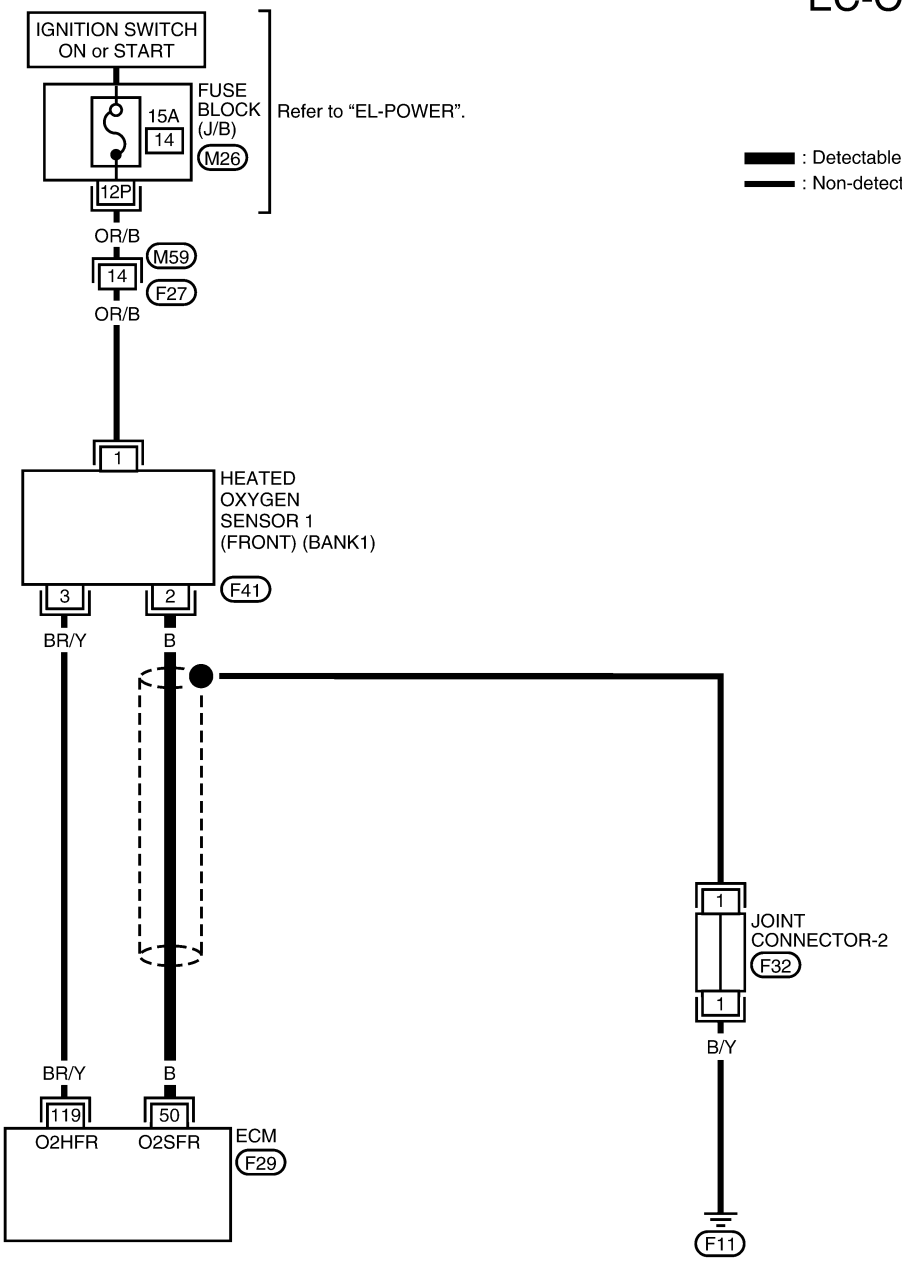

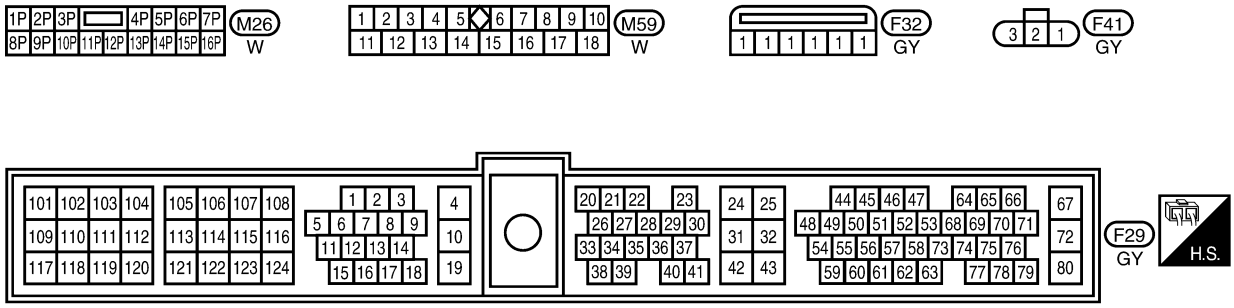

WEC788

Wiring Diagram (Cont'd)

LEFT BANK

NEEC0613S02

EC-O2S1B2-01

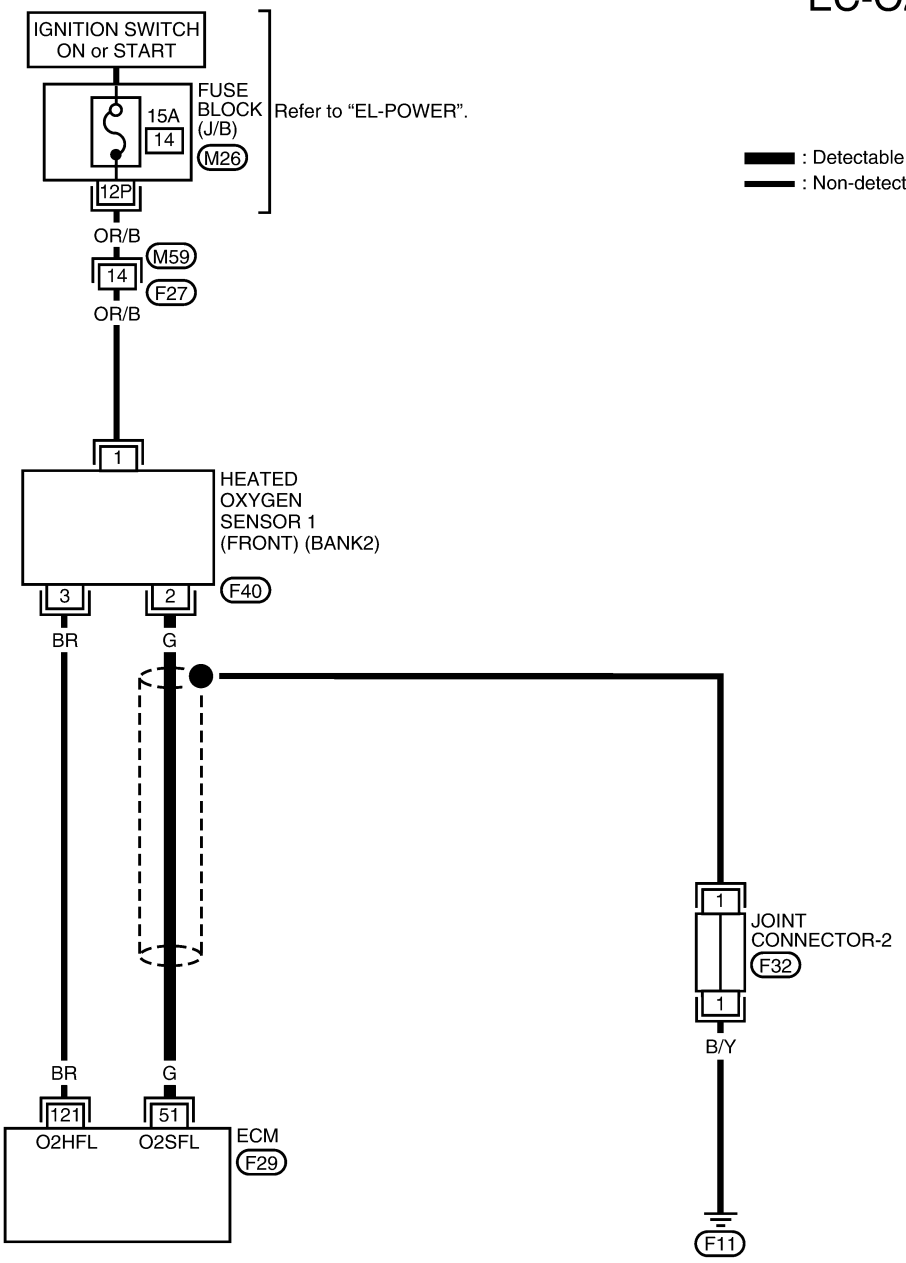



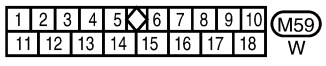

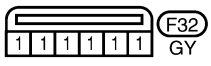

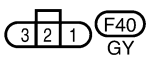

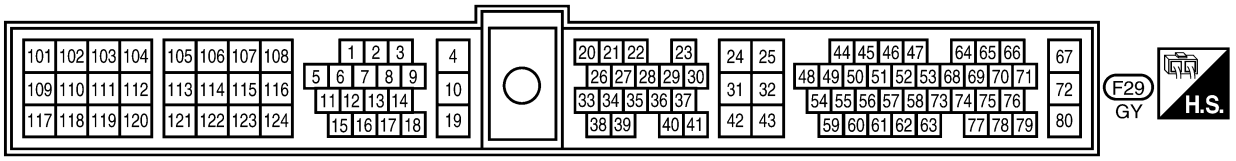

WEC789

Diagnostic Procedure

NEEC0614

1	INSPECTION START

1. Turn ignition switch OFF.
2. Loosen and retighten engine ground screws.

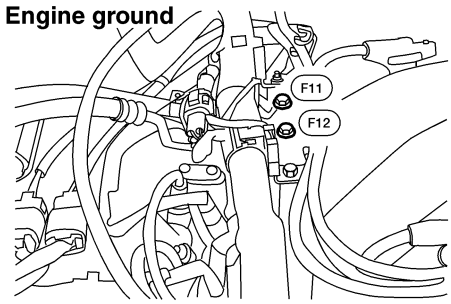

LEC518

3. Make sure HO2S 1 (front) harness protector color, and disconnect corresponding heated oxygen sensor 1 (front) harness connector.

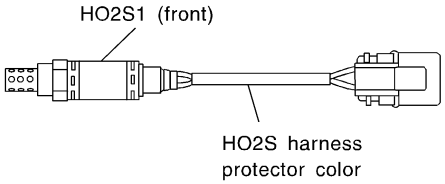

HO2S1 (front) (bank 1): Black
HO2S1 (front) (bank 2): Blue

SEF505Y

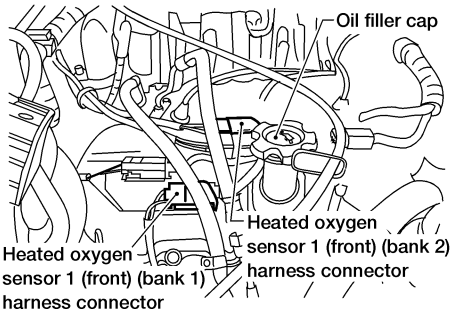

WEC545

▶	GO TO 2.

Diagnostic Procedure (Cont'd)

2 CHECK HO2S 1 (FRONT) INPUT SIGNAL CIRCUIT FOR OPEN AND SHORT

1. Disconnect ECM harness connector.
2. Check harness continuity between ECM terminal and HO2S1 terminal as follows. Refer to Wiring Diagram.

DTC	Terminals		Bank
	ECM	Sensor	
P0130	50	2	Bank 1 (Right)
P0150	51	2	Bank 2 (Left)

SEF803Z

Continuity should exist.

3. Check harness continuity between ECM terminal or HO2S1 terminal and ground as follows. Refer to Wiring Diagram.

DTC	Terminals		Bank
	ECM or sensor	Ground	
P0130	50 or 2	Ground	Bank 1 (Right)
P0150	51 or 2	Ground	Bank 2 (Left)

SEF816Z

Continuity should not exist.

4. Also check harness for short to power.

OK or NG

OK (With CONSULT-II) ▶	GO TO 3.
OK (Without CONSULT-II) ▶	GO TO 4.
NG ▶	Repair open circuit or short to ground or short to power in harness or connectors.

3 **CHECK HEATED OXYGEN SENSOR 1 (FRONT)**

With CONSULT-II

1. Start engine and warm it up to normal operating temperature.
2. Select "MANU TRIG" and "HI SPEED" in "DATA MONITOR" mode with CONSULT-II, and select "HO2S1 (B1)/(B2)" and "HO2S1 MNTR (B1)/(B2)".
3. Hold engine speed at 2,000 rpm under no load during the following steps.
4. Touch "RECORD" on CONSULT-II screen.

DATA MONITOR	
MONITOR	NO DTC
ENG SPEED	XXX rpm
COOLAN TEMP/S	XXX °C
HO2S1 (B1)	XXX V
HO2S2 (B2)	XXX V

SEF967Y

5. Check the following.

- "HO2S1 MNTR (B1)/(B2)" in "DATA MONITOR" mode changes from "RICH" to "LEAN" to "RICH" 5 times in 10 seconds. 5 times (cycles) are counted as shown below.

Bank 1

cycle	1	2	3	4	5
HO2S1 MNTR (B1)	R-L	R-L	R-L	R-L	R-L

Bank 2

cycle	1	2	3	4	5
HO2S1 MNTR (B2)	R-L	R-L	R-L	R-L	R-L

R means HO2S1 MNTR (B1)/(B2) indicates RICH

L means HO2S1 MNTR (B1)/(B2) indicates LEAN

SEF647Y

- "HO2S1 (B1)/(B2)" voltage goes above 0.6V at least once.
- "HO2S1 (B1)/(B2)" voltage goes below 0.3V at least once.
- "HO2S1 (B1)/(B2)" voltage never exceeds 1.0V.

Trigger	ENG SPEED	HO2S1 (B1)
	rpm	V
XXX	XXX	XXX
XXX	XXX	XXX
XXX	XXX	XXX
XXX	XXX	XXX
XXX	XXX	XXX
XXX	XXX	XXX
XXX	XXX	XXX
XXX	XXX	XXX
XXX	XXX	XXX
XXX	XXX	XXX
XXX	XXX	XXX
XXX	XXX	XXX
XXX	XXX	XXX

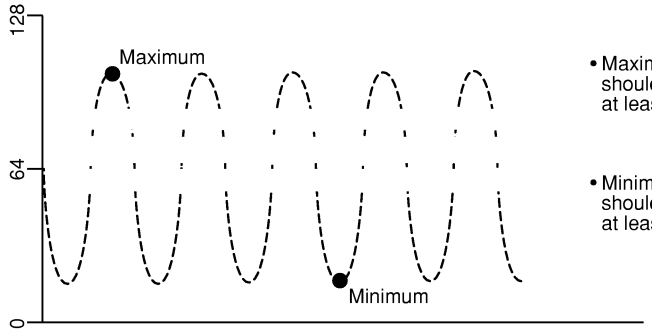

SEF648Y

CAUTION:

- **Discard any heated oxygen sensor which has been dropped from a height of more than 0.5 m (19.7 in) onto a hard surface such as a concrete floor; use a new one.**
- **Before installing new oxygen sensor, clean exhaust system threads using Oxygen Sensor Thread Cleaner tool J-43897-18 or J-43897-12 and approved anti-seize lubricant.**

OK or NG

OK	▶	GO TO 5.
NG	▶	Replace malfunctioning heated oxygen sensor 1 (front).

Diagnostic Procedure (Cont'd)

4	CHECK HEATED OXYGEN SENSOR 1 (FRONT)

Without CONSULT-II

1. Start engine and warm it up to normal operating temperature.
2. Set voltmeter probes between ECM terminal 50 (bank 1 signal) or 51 (bank 2 signal) and engine ground.
3. Check the following with engine speed held at 2,000 rpm constant under no load.

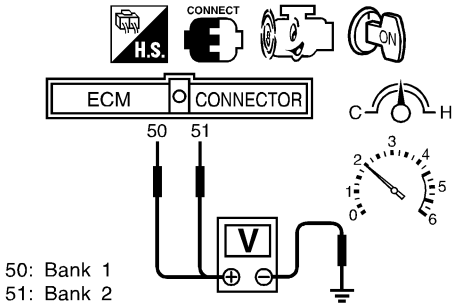

50: Bank 1
51: Bank 2

- The voltage fluctuates between 0 to 0.3V and 0.6 to 1.0V more than 5 times within 10 seconds.
- The maximum voltage is over 0.6V at least one time.
- The minimum voltage is below 0.3V at least one time.
- The voltage never exceeds 1.0V.

1 time: 0 - 0.3V → 0.6 - 1.0V → 0 - 0.3V
2 times: 0 - 0.3V → 0.6 - 1.0V → 0 - 0.3V → 0.6 - 1.0V → 0 - 0.3V

SEF796Z

CAUTION:
Discard any heated oxygen sensor which has been dropped from a height of more than 0.5 m (19.7 in) onto a hard surface such as a concrete floor; use a new one.

OK or NG

OK	▶	GO TO 6.
NG	▶	GO TO 5.

5	REPLACE HEATED OXYGEN SENSOR 1 (FRONT)

1. Turn ignition switch "OFF".
2. Check heated oxygen sensor 1 (front) harness protector color.

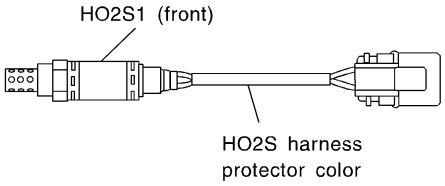

HO2S1 (front) (bank 1): Black
HO2S1 (front) (bank 2): Blue

SEF505Y

CAUTION:
Before installing new oxygen sensor, clean exhaust system threads using Oxygen Sensor Thread Cleaner tool J-43897-18 or J-43897-12 and approved anti-seize lubricant.

	▶	Replace malfunctioning heated oxygen sensor 1 (front).

6	CHECK HO2S 1 (FRONT) SHIELD CIRCUIT FOR OPEN AND SHORT	
1. Turn ignition switch OFF. 2. Disconnect joint connector-2. 3. Check the following. ● Continuity between joint connector terminal 1 and ground ● Joint connector (Refer to ***EL-238***, "HARNESS LAYOUT".) **Continuity should exist.** 4. Also check harness for short to power. 5. Then reconnect joint connector-2. **OK or NG**		
OK	▶	GO TO 7.
NG	▶	Repair open circuit or short to ground or short to power in harness or connectors.

7	CHECK INTERMITTENT INCIDENT
Refer to "TROUBLE DIAGNOSIS FOR INTERMITTENT INCIDENT", EC-753.	
▶	**INSPECTION END**

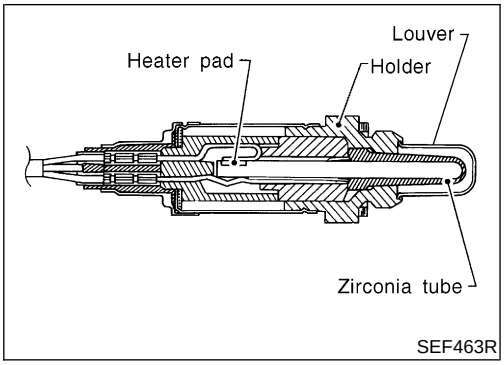

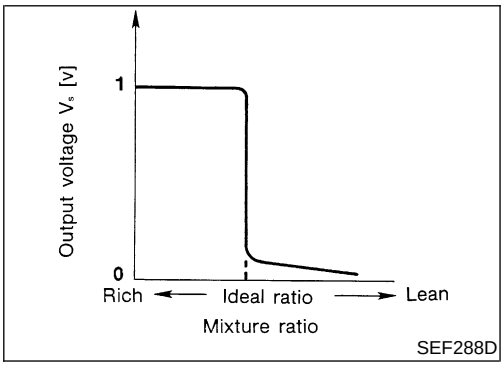

Component Description

NEEC0615

The heated oxygen sensor 1 (front) is placed into the front tube. It detects the amount of oxygen in the exhaust gas compared to the outside air. The heated oxygen sensor 1 (front) has a closed-end tube made of ceramic zirconia. The zirconia generates voltage from approximately 1V in richer conditions to 0V in leaner conditions. The heated oxygen sensor 1 (front) signal is sent to the ECM. The ECM adjusts the injection pulse duration to achieve the ideal air-fuel ratio. The ideal air-fuel ratio occurs near the radical change from 1V to 0V.

CONSULT-II Reference Value in Data Monitor Mode

NEEC0616

Specification data are reference values.

MONITOR ITEM	CONDITION		SPECIFICATION
HO2S1 (B1) HO2S1 (B2)	● Engine: After warming up	Maintaining engine speed at 2,000 rpm	0 - 0.3V ⟷ Approx. 0.6 - 1.0V
HO2S1 MNTR (B1) HO2S1 MNTR (B2)			LEAN ⟷ RICH Changes more than 5 times during 10 seconds.

ECM Terminals and Reference Value

NEEC0617

Specification data are reference values and are measured between each terminal and ground.

CAUTION:

Do not use ECM ground terminals when measuring input/output voltage. Doing so may result in damage to the ECM's transistor. Use a ground other than the ECM terminals, such as the ground.

TERMINAL NO.	WIRE COLOR	ITEM	CONDITION	DATA (DC Voltage)
50	B	Heated oxygen sensor (bank 1)	**[Engine is running]** ● After warming up to normal operating temperature and engine speed is 2,000 rpm	0 - Approximately 1.0V 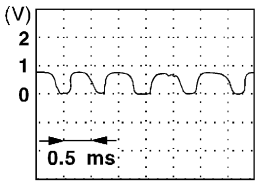 SEF002V
51	G	Heated oxygen sensor (bank 2)		

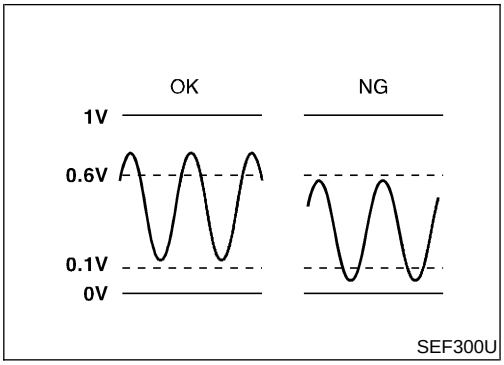

On Board Diagnosis Logic

NEEC0618

To judge the malfunction, the output from the heated oxygen sensor (front) is monitored to determine whether the “rich” output is sufficiently high and whether the “lean” output is sufficiently low. When both the outputs are shifting to the lean side, the malfunction will be detected.
Malfunction is detected when the maximum and minimum voltage from the sensor are not reached to the specified voltages.

POSSIBLE CAUSE

NEEC0618S01

- Heated oxygen sensor 1 (front)
- Heated oxygen sensor 1 heater (front)
- Fuel pressure
- Injectors
- Intake air leaks

DTC Confirmation Procedure

=NEEC0619

CAUTION:

Always drive vehicle at a safe speed.

NOTE:

If “DTC Confirmation Procedure” has been previously conducted, always turn ignition switch OFF and wait at least 5 seconds before conducting the next test.

TESTING CONDITION:

- **Always perform at a temperature above −10°C (14°F).**
- **Before performing following procedure, confirm that battery voltage is more than 11V at idle.**

6

HO2S1 (B1) P0130	
TESTING	
MONITOR	
ENG SPEED	XXX rpm
B/FUEL SCHDL	XXX msec
COOLAN TEMP/S	XXX °C
VHCL SPEED SEN	XXX km/h

SEF334Z

6

HO2S1 (B1) P0131	
TESTING	
MONITOR	
ENG SPEED	XXX rpm
B/FUEL SCHDL	XXX msec
COOLAN TEMP/S	XXX °C
VHCL SPEED SE	XXX km/h

SEF335Z

6

HO2S1 (B1) P0131
COMPLETED

SEF651Y

With CONSULT-II

1) Start engine and warm it up to normal operating temperature.
2) Stop engine and wait at least 5 seconds.
3) Turn ignition switch “ON” and select “HO2S1 (B1)/(B2) P0131/P0151” of “HO2S1” in “DTC WORK SUPPORT” mode with CONSULT-II.
4) Touch “START”.
5) Start engine and let it idle for at least 3.5 minutes.

NOTE:

Never raise engine speed above 3,200 rpm after this step. If the engine speed limit is exceeded, return to step 5.

6) When the following conditions are met, “TESTING” will be displayed on the CONSULT-II screen. Maintain the conditions continuously until “TESTING” changes to “COMPLETED”. (It will take approximately 50 seconds or more.)

EGN SPEED	1,200 - 3,100 rpm
Vehicle speed	Less than 100 km/h (62 MPH)
B/FUEL SCHDL	2.8 - 11 msec
Selector lever	Suitable position

If “TESTING” is not displayed after 5 minutes, retry from step 2.

7) Make sure that “OK” is displayed after touching “SELF-DIAG RESULTS”. If “NG” is displayed, refer to “Diagnostic Procedure”, EC-813.

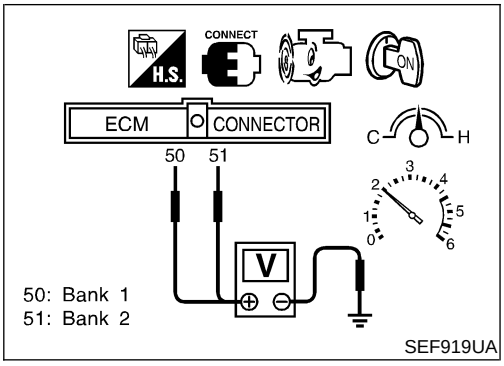

Overall Function Check

NEEC0620

Use this procedure to check the overall function of the heated oxygen sensor 1 (front) circuit. During this check, a 1st trip DTC might not be confirmed.

Without CONSULT-II

1) Start engine and warm it up to normal operating temperature.
2) Set voltmeter probes between ECM terminal 50 (bank 1 signal) or 51 (bank 2 signal) and engine ground.
3) Check one of the following with engine speed held at 2,000 rpm constant under no load.

- The maximum voltage is over 0.6V at least one time.
- The minimum voltage is over 0.1V at least one time.

4) If NG, go to “Diagnostic Procedure”, EC-813.

Diagnostic Procedure

NEEC0621

1	RETIGHTEN GROUND SCREWS

1. Turn ignition switch OFF.
2. Loosen and retighten engine ground screws.

Engine ground

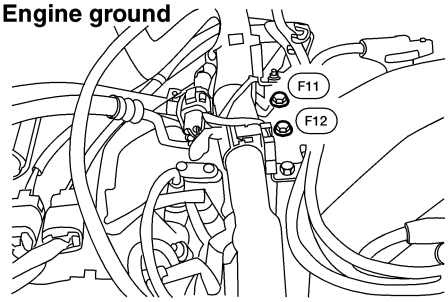

LEC518

▶	GO TO 2.

2	RETIGHTEN HEATED OXYGEN SENSOR 1 (FRONT)

Loosen and retighten corresponding heated oxygen sensor 1 (front).

Tightening torque:
40 - 60 N·m (4.1 - 6.1 kg-m, 30 - 44 ft-lb)

▶	GO TO 3.

Diagnostic Procedure (Cont'd)

3	CLEAR THE SELF-LEARNING DATA

With CONSULT-II

1. Start engine and warm it up to normal operating temperature.
2. Select "SELF-LEARNING CONT" in "WORK SUPPORT" mode with CONSULT-II.
3. Clear the self-learning control coefficient by touching "CLEAR".

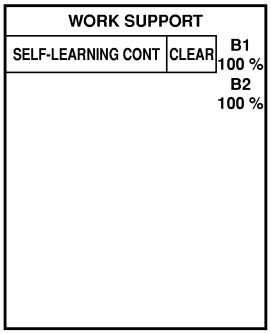

SEF968Y

4. Run engine for at least 10 minutes at idle speed.
   Is the 1st trip DTC P0171 or P0174 detected?
   Is it difficult to start engine?

Without CONSULT-II

1. Start engine and warm it up to normal operating temperature.
2. Turn ignition switch OFF.
3. Disconnect mass air flow sensor harness connector, and restart and run engine for at least 5 seconds at idle speed.
4. Stop engine and reconnect mass air flow sensor harness connector.
5. Make sure 1st trip DTC P0100 is displayed.
6. Erase the 1st trip DTC memory. Refer to "HOW TO ERASE EMISSION-RELATED DIAGNOSTIC INFORMATION", EC-687.
7. Make sure DTC P0000 is displayed.
8. Run engine for at least 10 minutes at idle speed.
   Is the 1st trip DTC P0171 or P0174 detected?
   Is it difficult to start engine?

Yes or No

Yes	▶	Perform trouble diagnosis for DTC P0171, P0174. Refer to EC-905.
No	▶	GO TO 4.

4	CHECK HEATED OXYGEN SENSOR 1 HEATER (FRONT)

1. Stop engine.
2. Check heated oxygen sensor 1 (front) harness protector color.

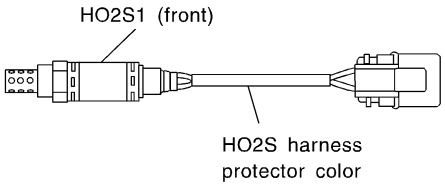

HO2S1 (front) (bank 1): Black
HO2S1 (front) (bank 2): Blue

SEF505Y

3. Check resistance between HO2S1 (front) terminals 3 and 1.

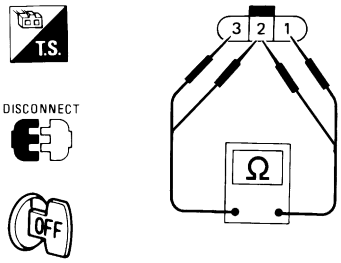

AEC158A

Resistance: 2.3 - 4.3Ω at 25°C (77°F)

4. Check continuity between HO2S1 (front) terminals 2 and 1, 3 and 2.

Continuity should not exist.

CAUTION:

- **Discard any heated oxygen sensor which has been dropped from a height of more than 0.5 m (19.7 in) onto a hard surface such as a concrete floor; use a new one.**
- **Before installing new oxygen sensor, clean exhaust system threads using Oxygen Sensor Thread Cleaner tool J-43897-18 or J-43897-12 and approved anti-seize lubricant.**

OK or NG

OK (With CONSULT-II)	▶	GO TO 5.
OK (Without CONSULT-II)	▶	GO TO 6.
NG	▶	Replace malfunctioning heated oxygen sensor 1 (front).

Diagnostic Procedure (Cont'd)

5	CHECK HEATED OXYGEN SENSOR 1 (FRONT)

With CONSULT-II

1. Start engine and warm it up to normal operating temperature.
2. Select "MANU TRIG" and "HI SPEED" in "DATA MONITOR" mode with CONSULT-II, and select "HO2S1 (B1)/(B2)" and "HO2S1 MNTR (B1)/(B2)".
3. Hold engine speed at 2,000 rpm under no load during the following steps.
4. Touch "RECORD" on CONSULT-II screen.

DATA MONITOR	
MONITOR	NO DTC
ENG SPEED	XXX rpm
COOLAN TEMP/S	XXX °C
HO2S1 (B1)	XXX V
HO2S2 (B2)	XXX V

SEF967Y

5. Check the following.

- "HO2S1 MNTR (B1)/(B2)" in "DATA MONITOR" mode changes from "RICH" to "LEAN" to "RICH" 5 times in 10 seconds. 5 times (cycles) are counted as shown below.

Bank 1

cycle	1	2	3	4	5
HO2S1 MNTR (B1)	R-L	R-L	R-L	R-L	R-L

Bank 2

cycle	1	2	3	4	5
HO2S1 MNTR (B2)	R-L	R-L	R-L	R-L	R-L

R means HO2S1 MNTR (B1)/(B2) indicates RICH

L means HO2S1 MNTR (B1)/(B2) indicates LEAN

SEF647Y

- "HO2S1 (B1)/(B2)" voltage goes above 0.6V at least once.
- "HO2S1 (B1)/(B2)" voltage goes below 0.3V at least once.
- "HO2S1 (B1)/(B2)" voltage never exceeds 1.0V.

Trigger	ENG SPEED	HO2S1 (B1)
	rpm	V
XXX	XXX	XXX
XXX	XXX	XXX
XXX	XXX	XXX
XXX	XXX	XXX
XXX	XXX	XXX
XXX	XXX	XXX
XXX	XXX	XXX
XXX	XXX	XXX
XXX	XXX	XXX
XXX	XXX	XXX
XXX	XXX	XXX
XXX	XXX	XXX
XXX	XXX	XXX

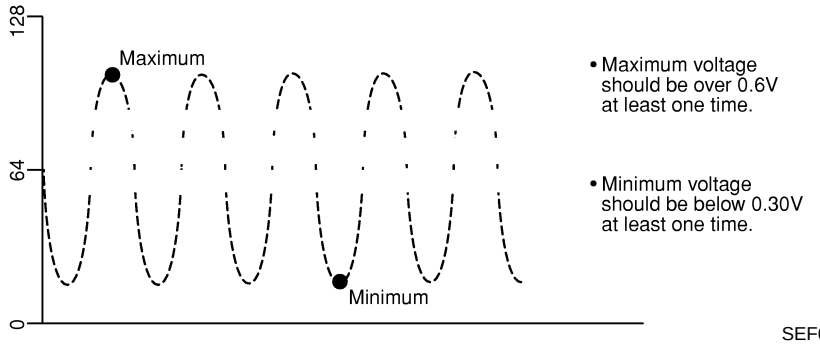

SEF648Y

CAUTION:

- **Discard any heated oxygen sensor which has been dropped from a height of more than 0.5 m (19.7 in) onto a hard surface such as a concrete floor; use a new one.**
- **Before installing new oxygen sensor, clean exhaust system threads using Oxygen Sensor Thread Cleaner tool J-43897-18 or J-43897-12 and approved anti-seize lubricant.**

OK or NG

OK	▶	GO TO 7.
NG	▶	Replace malfunctioning heated oxygen sensor 1 (front).

6	CHECK FRONT HEATED OXYGEN SENSOR 1 (FRONT)

Without CONSULT-II

1. Start engine and warm it up to normal operating temperature.
2. Set voltmeter probes between ECM terminal 50 (bank 1 signal) or 51 (bank 2 signal) and engine ground.
3. Check the following with engine speed held at 2,000 rpm constant under no load.

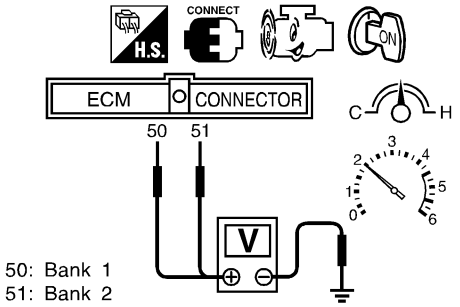

50: Bank 1
51: Bank 2

- The voltage fluctuates between 0 to 0.3V and 0.6 to 1.0V more than 5 times within 10 seconds.
- The maximum voltage is over 0.6V at least one time.
- The minimum voltage is below 0.3V at least one time.
- The voltage never exceeds 1.0V.

1 time: 0 - 0.3V → 0.6 - 1.0V → 0 - 0.3V
2 times: 0 - 0.3V → 0.6 - 1.0V → 0 - 0.3V → 0.6 - 1.0V → 0 - 0.3V

SEF796Z

CAUTION:
Discard any heated oxygen sensor which has been dropped from a height of more than 0.5 m (19.7 in) onto a hard surface such as a concrete floor; use a new one.

OK or NG

OK	▶	GO TO 8.
NG	▶	GO TO 7.

7	REPLACE HEATED OXYGEN SENSOR 1 (FRONT)

1. Turn ignition switch "OFF".
2. Check heated oxygen sensor 1 (front) harness protector color.

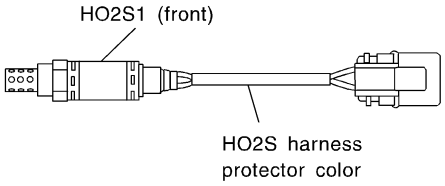

HO2S1 (front) (bank 1): Black
HO2S1 (front) (bank 2): Blue

SEF505Y

CAUTION:
Before installing new oxygen sensor, clean exhaust system threads using Oxygen Sensor Thread Cleaner tool J-43897-18 or J-43897-12 and approved anti-seize lubricant.

	▶	Replace malfunctioning heated oxygen sensor 1 (front).

Diagnostic Procedure (Cont'd)

8	CHECK HO2S1 (FRONT) SHIELD CIRCUIT FOR OPEN AND SHORT

1. Turn ignition switch OFF.
2. Disconnect joint connector.
3. For circuit, refer to "DTC P0130, P0150 HEATED OXYGEN SENSOR 1 (FRONT) (BANK 1)/(BANK 2) (CIRCUIT)", EC-799.
4. Check the following.

- Continuity between joint connector terminal 1 and ground
- Joint connector
  (Refer to ***EL-238***, "HARNESS LAYOUT".)

Continuity should exist.

5. Also check harness for short to power.
6. Then reconnect joint connector.

OK or NG

OK	▶	GO TO 9.
NG	▶	Repair open circuit or short to power in harness or connectors.

9	CHECK INTERMITTENT INCIDENT

Refer to "TROUBLE DIAGNOSIS FOR INTERMITTENT INCIDENT", EC-753.
For circuit, refer to "DTC P0130, P0150 HEATED OXYGEN SENSOR (FRONT) (BANK 1)/(BANK 2) (CIRCUIT)", EC-799.

	▶	**INSPECTION END**

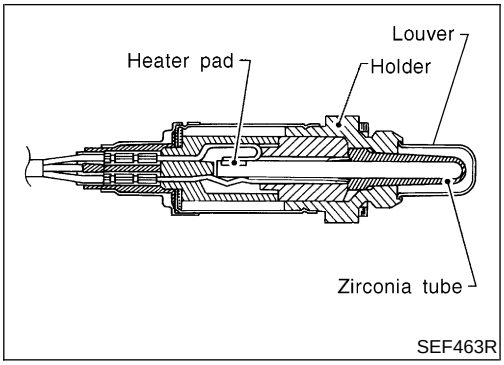

SEF463R

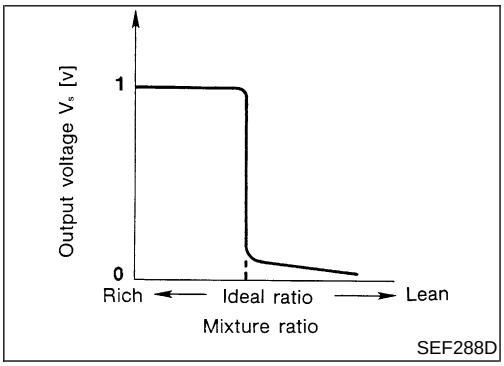

SEF288D

Component Description

NEEC0622

The heated oxygen sensor 1 (front) is placed into the front tube. It detects the amount of oxygen in the exhaust gas compared to the outside air. The heated oxygen sensor 1 (front) has a closed-end tube made of ceramic zirconia. The zirconia generates voltage from approximately 1V in richer conditions to 0V in leaner conditions. The heated oxygen sensor 1 (front) signal is sent to the ECM. The ECM adjusts the injection pulse duration to achieve the ideal air-fuel ratio. The ideal air-fuel ratio occurs near the radical change from 1V to 0V.

CONSULT-II Reference Value in Data Monitor Mode

NEEC0623

Specification data are reference values.

MONITOR ITEM	CONDITION		SPECIFICATION
HO2S1 (B1) HO2S1 (B2)	● Engine: After warming up	Maintaining engine speed at 2,000 rpm	0 - 0.3V ⟷ Approx. 0.6 - 1.0V
HO2S1 MNTR (B1) HO2S1 MNTR (B2)			LEAN ⟷ RICH Changes more than 5 times during 10 seconds.

ECM Terminals and Reference Value

NEEC0624

Specification data are reference values and are measured between each terminal and ground.

CAUTION:

Do not use ECM ground terminals when measuring input/output voltage. Doing so may result in damage to the ECM's transistor. Use a ground other than the ECM terminals, such as the ground.

TERMINAL NO.	WIRE COLOR	ITEM	CONDITION	DATA (DC Voltage)
50	B	Heated oxygen sensor 1 (front) (Bank 1)	**[Engine is running]** ● After warming up to normal operating temperature and engine speed is 2,000 rpm	0 - Approximately 1.0V 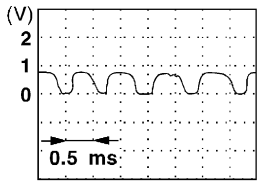 SEF002V
51	G	Heated oxygen sensor 1 (front) (Bank 2)		

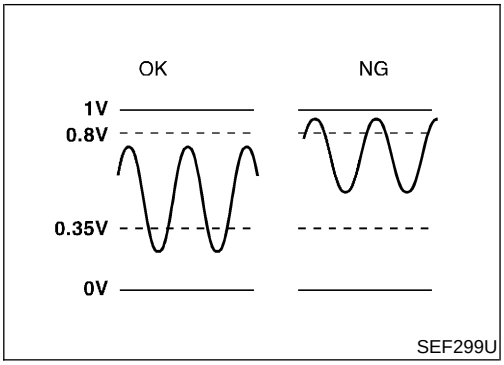

On Board Diagnosis Logic

NEEC0625

To judge the malfunction, the output from the heated oxygen sensor 1 (front) is monitored to determine whether the “rich” output is sufficiently high. The “lean” output is sufficiently low. When both the outputs are shifting to the rich side, the malfunction will be detected.
Malfunction is detected when the maximum and minimum voltages from the sensor are beyond the specified voltages.

POSSIBLE CAUSE

NEEC0625S01

- Heated oxygen sensor 1 (front)
- Fuel pressure
- Injectors
- Heated oxygen sensor 1 heater (front)

DTC Confirmation Procedure

=NEEC0626

CAUTION:
Always drive vehicle at a safe speed.

NOTE:
If "DTC Confirmation Procedure" has been previously conducted, always turn ignition switch OFF and wait at least 5 seconds before conducting the next test.

TESTING CONDITION:

- **Always perform at a temperature above −10°C (14°F).**
- **Before performing the following procedure, confirm that battery voltage is more than 11V at idle.**

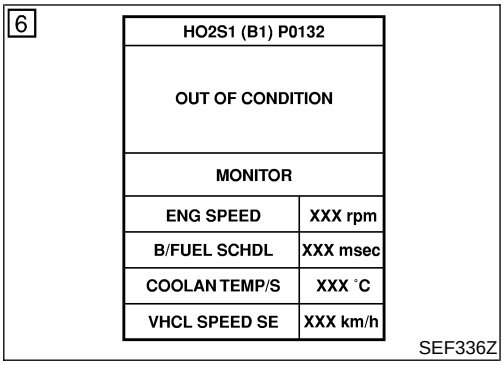

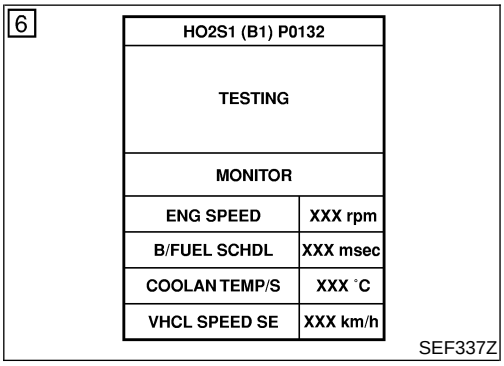

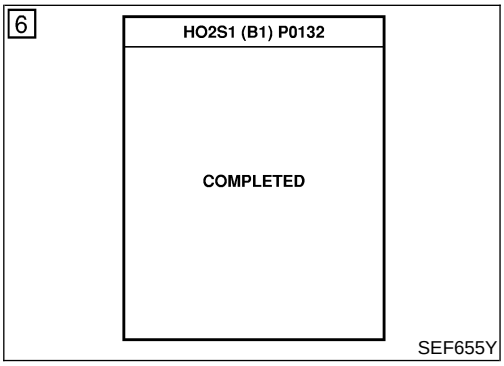

With CONSULT-II

1) Start engine and warm it up to normal operating temperature.
2) Stop engine and wait at least 5 seconds.
3) Turn ignition switch ON and select "HO2S1 (B1)/(B2) P0132/P0152" of "HO2S1" in "DTC WORK SUPPORT" mode with CONSULT-II.
4) Touch "START".
5) Start engine and let it idle for at least 3.5 minutes.

NOTE:
Never raise engine speed above 3,200 rpm after this step. If the engine speed limit is exceeded, return to step 5.

6) When the following conditions are met, "TESTING" will be displayed on the CONSULT-II screen. Maintain the conditions continuously until "TESTING" changes to "COMPLETED". (It will take approximately 50 seconds or more.)

ENG SPEED	1,200 - 3,100 rpm
Vehicle speed	Less than 100 km/h (62 MPH)
B/FUEL SCHDL	2.8 - 11 msec
Selector lever	Suitable position

If "TESTING" is not displayed after 5 minutes, retry from step 2.

7) Make sure that "OK" is displayed after touching "SELF-DIAG RESULTS". If "NG" is displayed, refer to "Diagnostic Procedure", EC-822.

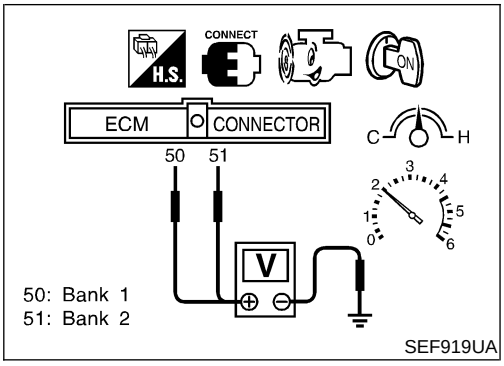

Overall Function Check

NEEC0627

Use this procedure to check the overall function of the heated oxygen sensor 1 (front) circuit. During this check, a 1st trip DTC might not be confirmed.

Without CONSULT-II

1) Start engine and warm it up to normal operating temperature.
2) Set voltmeter probes between ECM terminal 50 (bank 1 signal) or 51 (bank 2 signal) and engine ground.
3) Check one of the following with engine speed held at 2,000 rpm constant under no load.
   - The maximum voltage is below 0.8V at least one time.
   - The minimum voltage is below 0.35V at least one time.
4) If NG, go to “Diagnostic Procedure”, EC-822.

Diagnostic Procedure

NEEC0628

1	RETIGHTEN GROUND SCREWS

1. Turn ignition switch OFF.
2. Loosen and retighten engine ground screws.

Engine ground

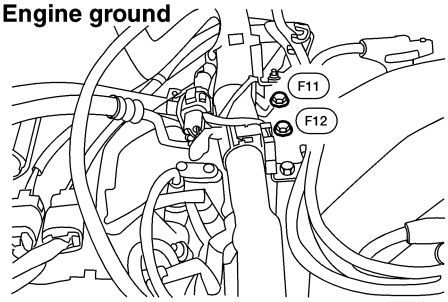

LEC518

▶	GO TO 2.

2	RETIGHTEN HEATED OXYGEN SENSOR 1 (FRONT)

Loosen and retighten corresponding heated oxygen sensor 1 (front).

Tightening torque:
40 - 60 N·m (4.1 - 6.1 kg-m, 30 - 44 ft-lb)

▶	GO TO 3.

3	CLEAR THE SELF-LEARNING DATA

With CONSULT-II

1. Start engine and warm it up to normal operating temperature.
2. Select "SELF-LEARNING CONT" in "WORK SUPPORT" mode with CONSULT-II.
3. Clear the self-learning control coefficient by touching "CLEAR".

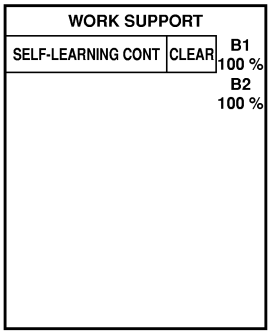

SEF968Y

4. Run engine for at least 10 minutes at idle speed.
   Is the 1st trip DTC P0172 or P0175 detected?
   Is it difficult to start engine?

Without CONSULT-II

1. Start engine and warm it up to normal operating temperature.
2. Turn ignition switch OFF.
3. Disconnect mass air flow sensor harness connector, and restart and run engine for at least 5 seconds at idle speed.
4. Stop engine and reconnect mass air flow sensor harness connector.
5. Make sure 1st trip DTC P0100 is displayed.
6. Erase the 1st trip DTC memory. Refer to "HOW TO ERASE EMISSION-RELATED DIAGNOSTIC INFORMATION", EC-687.
7. Make sure DTC P0000 is displayed.
8. Run engine for at least 10 minutes at idle speed.
   Is the 1st trip DTC P0172 or P0175 detected?
   Is it difficult to start engine?

Yes or No

Yes	▶	Perform trouble diagnosis for DTC P0172, P0175. Refer to EC-914.
No	▶	GO TO 4.

4	CHECK HO2S 1 (FRONT) CONNECTOR FOR WATER

1. Turn ignition switch "OFF".
2. Check heated oxygen sensor 1 (front) harness protector color.

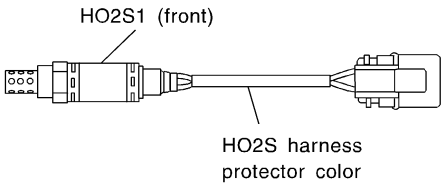

HO2S1 (front) (bank 1): Black
HO2S1 (front) (bank 2): Blue

SEF505Y

3. Disconnect heated oxygen sensor 1 (front) harness connector.
4. Check connectors for water.
   Water should not exist.

OK or NG

OK	▶	GO TO 5.
NG	▶	Repair or replace harness or connectors.

Diagnostic Procedure (Cont'd)

5	CHECK HEATED OXYGEN SENSOR 1 HEATER (FRONT)

Check resistance between HO2S1 (front) terminals 3 and 1.

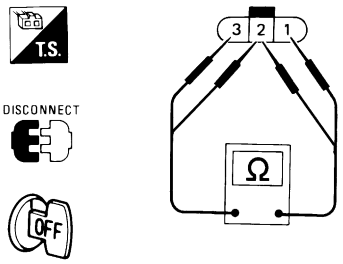

AEC158A

Resistance: 2.3 - 4.3Ω at 25°C (77°F)

Check continuity between HO2S1 (front) terminals 2 and 1, 3 and 2.

Continuity should not exist.

CAUTION:

Discard any heated oxygen sensor which has been dropped from a height of more than 0.5 m (19.7 in) onto a hard surface such as a concrete floor; use a new one.

OK or NG

OK (With CONSULT-II)	▶	GO TO 6.
OK (Without CONSULT-II)	▶	GO TO 7.
NG	▶	GO TO 8.

6	CHECK HEATED OXYGEN SENSOR 1 (FRONT)

With CONSULT-II

1. Start engine and warm it up to normal operating temperature.
2. Select "MANU TRIG" and "HI SPEED" in "DATA MONITOR" mode with CONSULT-II, and select "HO2S1 (B1)/(B2)" and "HO2S1 MNTR (B1)/(B2)".
3. Hold engine speed at 2,000 rpm under no load during the following steps.
4. Touch "RECORD" on CONSULT-II screen.

DATA MONITOR	
MONITOR	NO DTC
ENG SPEED	XXX rpm
COOLAN TEMP/S	XXX °C
HO2S1 (B1)	XXX V
HO2S2 (B2)	XXX V

SEF967Y

5. Check the following.

- "HO2S1 MNTR (B1)/(B2)" in "DATA MONITOR" mode changes from "RICH" to "LEAN" to "RICH" 5 times in 10 seconds. 5 times (cycles) are counted as shown below.

Bank 1

cycle	1	2	3	4	5
HO2S1 MNTR (B1)	R-L	R-L	R-L	R-L	R-L

Bank 2

cycle	1	2	3	4	5
HO2S1 MNTR (B2)	R-L	R-L	R-L	R-L	R-L

R means HO2S1 MNTR (B1)/(B2) indicates RICH

L means HO2S1 MNTR (B1)/(B2) indicates LEAN

SEF647Y

- "HO2S1 (B1)/(B2)" voltage goes above 0.6V at least once.
- "HO2S1 (B1)/(B2)" voltage goes below 0.3V at least once.
- "HO2S1 (B1)/(B2)" voltage never exceeds 1.0V.

Trigger	ENG SPEED	HO2S1 (B1)
	rpm	V
XXX	XXX	XXX
XXX	XXX	XXX
XXX	XXX	XXX
XXX	XXX	XXX
XXX	XXX	XXX
XXX	XXX	XXX
XXX	XXX	XXX
XXX	XXX	XXX
XXX	XXX	XXX
XXX	XXX	XXX
XXX	XXX	XXX
XXX	XXX	XXX
XXX	XXX	XXX

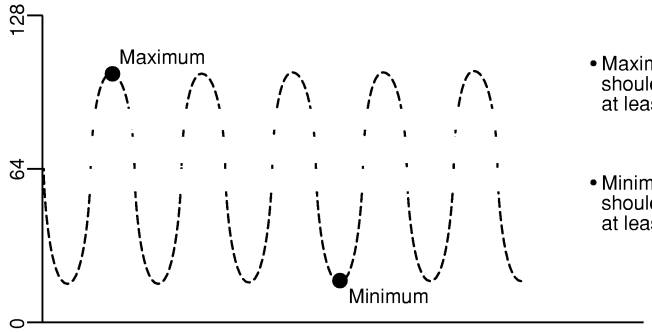

SEF648Y

CAUTION:

- **Discard any heated oxygen sensor which has been dropped from a height of more than 0.5 m (19.7 in) onto a hard surface such as a concrete floor; use a new one.**
- **Before installing new oxygen sensor, clean exhaust system threads using Oxygen Sensor Thread Cleaner tool J-43897-18 or J-43897-12 and approved anti-seize lubricant.**

OK or NG

OK	▶	GO TO 9.
NG	▶	GO TO 8.

Diagnostic Procedure (Cont'd)

7	CHECK HEATED OXYGEN SENSOR 1 (FRONT)

Without CONSULT-II

1. Start engine and warm it up to normal operating temperature.
2. Set voltmeter probes between ECM terminal 50 (bank 1 signal) or 51 (bank 2 signal) and engine ground.
3. Check the following with engine speed held at 2,000 rpm constant under no load.

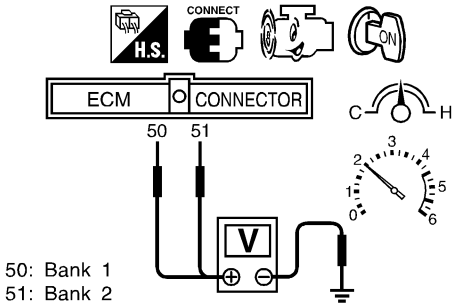

- The voltage fluctuates between 0 to 0.3V and 0.6 to 1.0V more than 5 times within 10 seconds.
- The maximum voltage is over 0.6V at least one time.
- The minimum voltage is below 0.3V at least one time.
- The voltage never exceeds 1.0V.

1 time: 0 - 0.3V → 0.6 - 1.0V → 0 - 0.3V
2 times: 0 - 0.3V → 0.6 - 1.0V → 0 - 0.3V → 0.6 - 1.0V → 0 - 0.3V

SEF796Z

CAUTION:
Discard any heated oxygen sensor which has been dropped from a height of more than 0.5 m (19.7 in) onto a hard surface such as a concrete floor; use a new one.

OK or NG

OK	▶	GO TO 8.
NG	▶	GO TO 8.

8	REPLACE HEATED OXYGEN SENSOR 1 (FRONT)

1. Turn ignition switch "OFF".
2. Check heated oxygen sensor 1 (front) harness protector color.

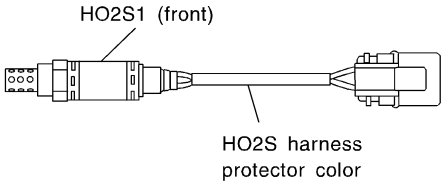

HO2S1 (front) (bank 1): Black
HO2S1 (front) (bank 2): Blue

SEF505Y

CAUTION:
Before installing new oxygen sensor, clean exhaust system threads using Oxygen Sensor Thread Cleaner tool J-43897-18 or J-43897-12 and approved anti-seize lubricant.

	▶	Replace malfunctioning heated oxygen sensor 1 (front).

9	CHECK HO2S1 (FRONT) SHIELD CIRCUIT FOR OPEN AND SHORT

1. Turn ignition switch OFF.
2. Disconnect joint connector.
   For circuit, refer to "DTC P0130, P0150 FRONT HEATED OXYGEN SENSOR (FRONT) (BANK 1)/(BANK 2) (CIRCUIT)", EC-799.
3. Check the following.

- Continuity between joint connector terminal 1 and ground
- Joint connector
  (Refer to ***EL-238***, "HARNESS LAYOUT".)

Continuity should exist.

4. Also check harness for short to power.
5. Then reconnect joint connector.

OK or NG

OK	▶	GO TO 10.
NG	▶	Repair open circuit or short to power in harness or connectors.

10	CHECK INTERMITTENT INCIDENT

Refer to "TROUBLE DIAGNOSIS FOR INTERMITTENT INCIDENT", EC-753.
For circuit, refer to "DTC P0130, P0150 FRONT HEATED OXYGEN SENSOR (FRONT) (BANK 1)/(BANK 2) (CIRCUIT)", EC-799.

	▶	**INSPECTION END**

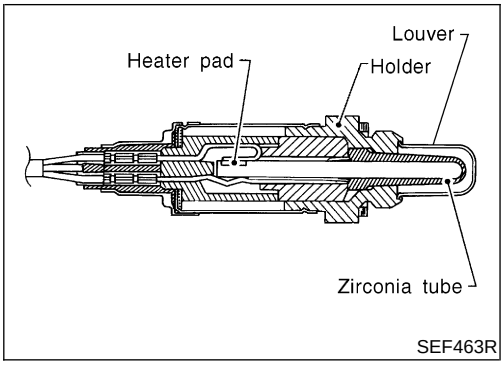

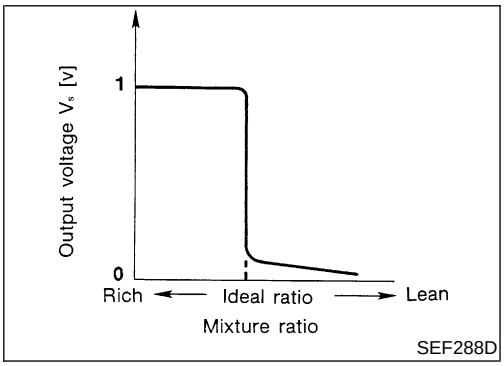

Component Description

NEEC0629

The heated oxygen sensor 1 (front) is placed into the front tube. It detects the amount of oxygen in the exhaust gas compared to the outside air. The heated oxygen sensor 1 (front) has a closed-end tube made of ceramic zirconia. The zirconia generates voltage from approximately 1V in richer conditions to 0V in leaner conditions. The heated oxygen sensor 1 (front) signal is sent to the ECM. The ECM adjusts the injection pulse duration to achieve the ideal air-fuel ratio. The ideal air-fuel ratio occurs near the radical change from 1V to 0V.

CONSULT-II Reference Value in Data Monitor Mode

NEEC0630

Specification data are reference values.

MONITOR ITEM	CONDITION		SPECIFICATION
HO2S1 (B1) HO2S1 (B2)	● Engine: After warming up	Maintaining engine speed at 2,000 rpm	0 - 0.3V ⟷ Approx. 0.6 - 1.0V
HO2S1 MNTR (B1) HO2S1 MNTR (B2)			LEAN ⟷ RICH Changes more than 5 times during 10 seconds.

ECM Terminals and Reference Value

NEEC0631

Specification data are reference values and are measured between each terminal and ground.

CAUTION:

Do not use ECM ground terminals when measuring input/output voltage. Doing so may result in damage to the ECM's transistor. Use a ground other than the ECM terminals, such as the ground.

TERMINAL NO.	WIRE COLOR	ITEM	CONDITION	DATA (DC Voltage)
50	B	Heated oxygen sensor 1 (front) (Bank 1)	**[Engine is running]** ● After warming up to normal operating temperature and engine speed is 2,000 rpm	0 - Approximately 1.0V 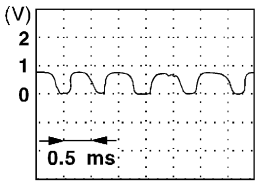 SEF002V
51	G	Heated oxygen sensor 1 (front) (Bank 2)		

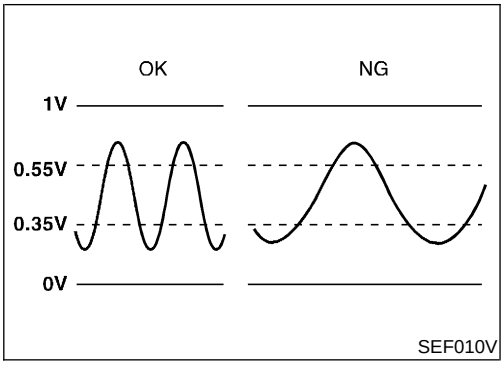

On Board Diagnosis Logic

NEEC0632

To judge the malfunction of heated oxygen sensor 1 (front), this diagnosis measures response time of heated oxygen sensor 1 (front) signal. The time is compensated by engine operating (speed and load), fuel feedback control constant, and heated oxygen sensor 1 (front) temperature index. Judgment is based on whether the compensated time (heated oxygen sensor 1 (front) cycling time index) is inordinately long or not.
Malfunction is detected when the response of the voltage from the sensor takes more than the specified time.

POSSIBLE CAUSE

NEEC0632S01

- Harness or connectors
  (The sensor circuit is open or shorted.)
- Heated oxygen sensor 1 (front)
- Heated oxygen sensor 1 heater (front)
- Fuel pressure
- Injectors
- Intake air leaks
- Exhaust gas leaks
- PCV valve
- Mass air flow sensor

DTC Confirmation Procedure

NEEC0633

CAUTION:
Always drive vehicle at a safe speed.

NOTE:
If “DTC Confirmation Procedure” has been previously always turn ignition switch OFF and wait at least 5 seconds before conducting the next test.

TESTING CONDITION:

- **Always perform at a temperature above −10°C (14°F).**
- **Before performing the following procedure, confirm that battery voltage is more than 11V at idle.**

DTC Confirmation Procedure (Cont'd)

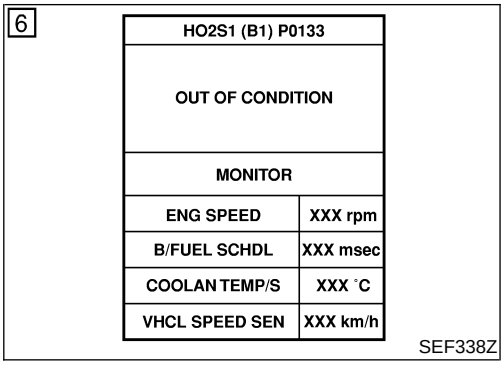

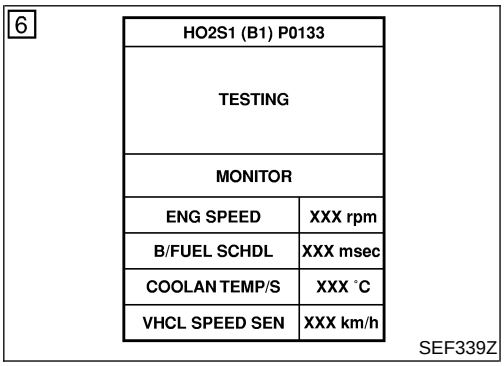

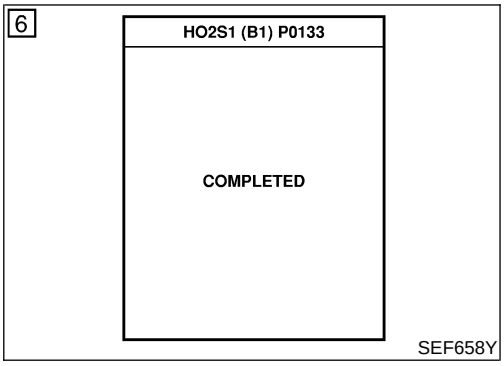

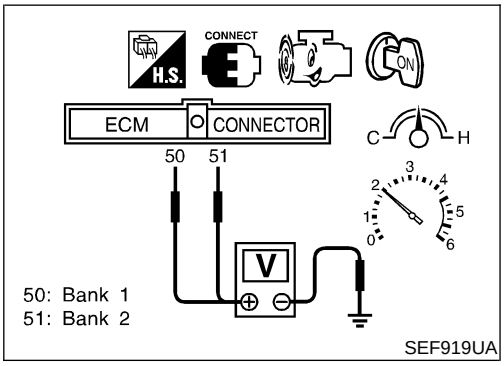

With CONSULT-II

1) Start engine and warm it up to normal operating temperature.
2) Stop engine and wait at least 5 seconds.
3) Turn ignition switch ON and select "HO2S1 (B1)/(B2) P0133/ P0153" of "HO2S1" in "DTC WORK SUPPORT" mode with CONSULT-II.
4) Touch "START".
5) Start engine and let it idle for at least 3.5 minutes.

NOTE:
Never raise engine speed above 3,200 rpm after this step. If the engine speed limit is exceeded, return to step 5.

6) When the following conditions are met, "TESTING" will be displayed on the CONSULT-II screen. Maintain the conditions continuously until "TESTING" changes to "COMPLETED". (It will take approximately 40 to 50 seconds.)

ENG SPEED	1,800 - 3,300 rpm
Vehicle speed	More than 80 km/h (50 MPH)
B/FUEL SCHDL	2.8 - 13 msec
Selector lever	Suitable position

If "TESTING" is not displayed after 5 minutes, retry from step 2.

7) Make sure that "OK" is displayed after touching "SELF-DIAG RESULTS". If "NG" is displayed, refer to "Diagnostic Procedure", EC-833.

Overall Function Check

NEEC0634

Use this procedure to check the overall function of the heated oxygen sensor 1 (front) circuit. During this check, a 1st trip DTC might not be confirmed.

Without CONSULT-II

1) Start engine and warm it up to normal operating temperature.
2) Set voltmeter probes between ECM terminal 50 (bank 1 signal) or 51 (bank 2 signal) and engine ground.
3) Check the following with engine speed held at 2,000 rpm constant under no load.

- The voltage fluctuates between 0 to 0.3V and 0.6 to 1.0V more than 5 times within 10 seconds.
  1 time: 0 - 0.3V → 0.6 - 1.0V → 0 - 0.3V
  2 times: 0 - 0.3V → 0.6 - 1.0V → 0 - 0.3V → 0.6 - 1.0V → 0 - 0.3V

4) If NG, go to "Diagnostic Procedure", EC-833.

Wiring Diagram

NEEC0635

RIGHT BANK

NEEC0635S01

EC-O2S1B1-01

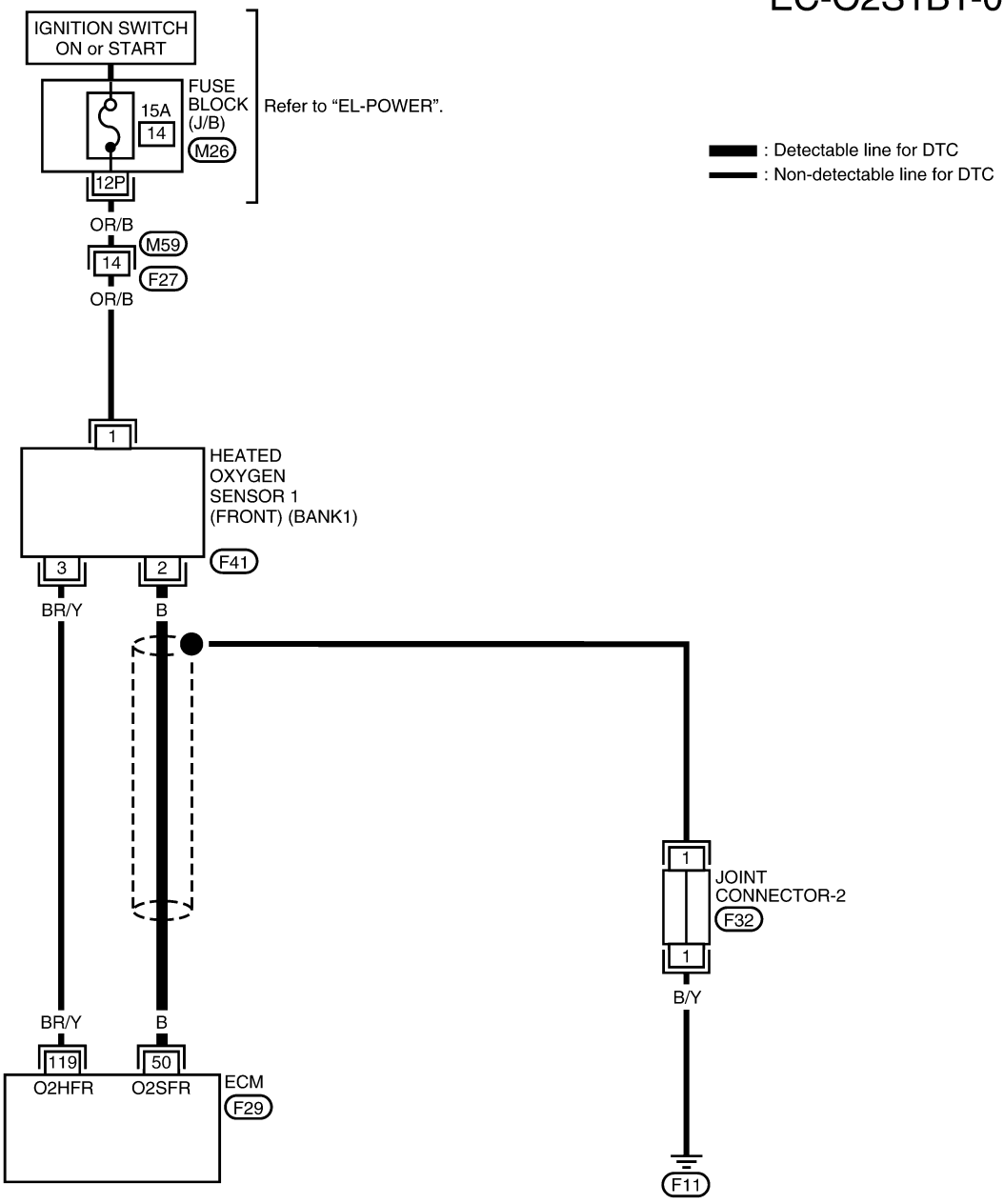

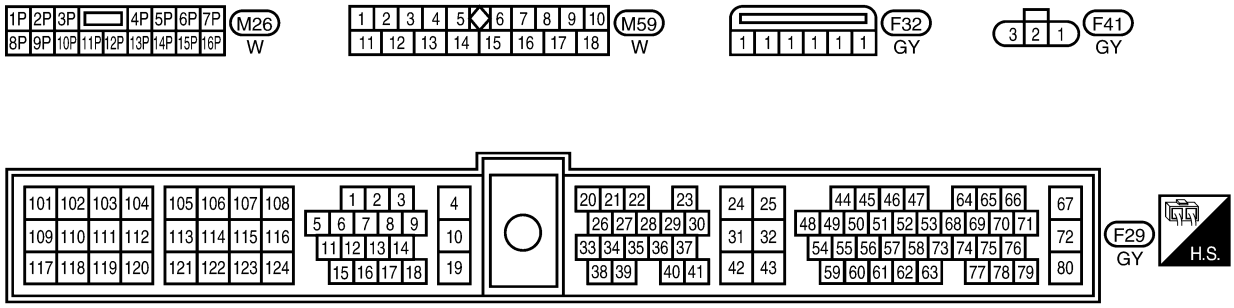

WEC788

Wiring Diagram (Cont'd)

LEFT BANK

NEEC0635S02

EC-O2S1B2-01

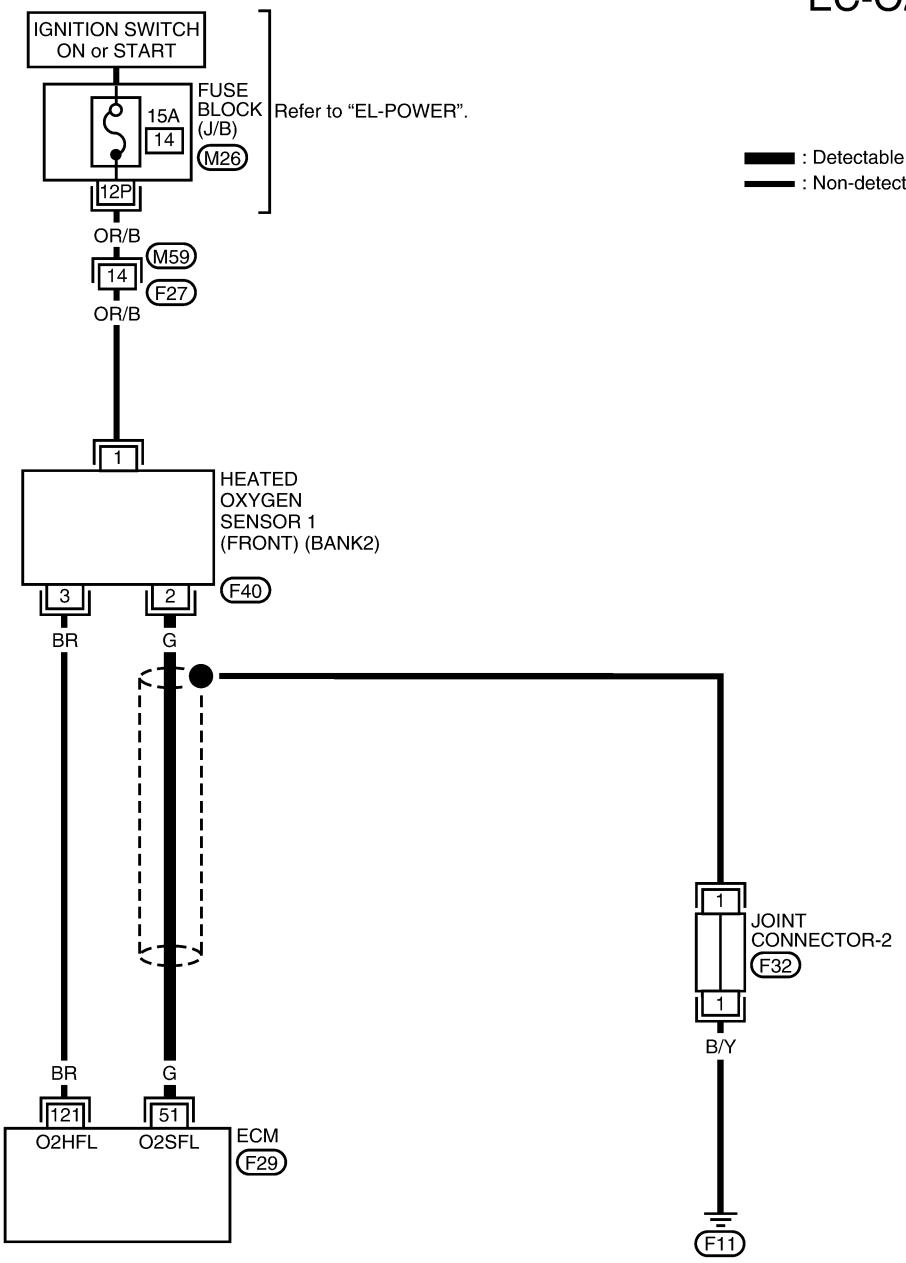

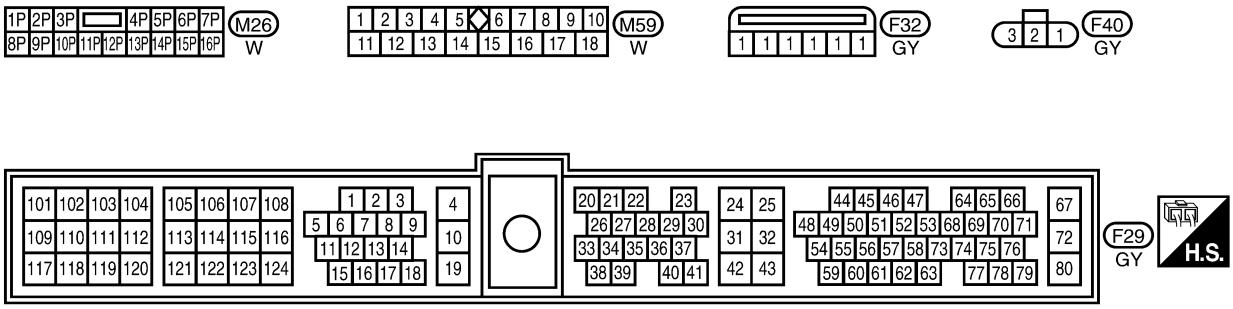

WEC789

Diagnostic Procedure

NEEC0636

1	RETIGHTEN GROUND SCREWS

1. Turn ignition switch OFF.
2. Loosen and retighten engine ground screws.

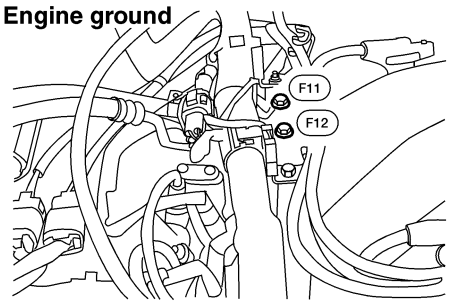

LEC518

▶ GO TO 2.

2	RETIGHTEN HEATED OXYGEN SENSOR 1 (FRONT)

Loosen and retighten corresponding heated oxygen sensor 1 (front).

Tightening torque:
40 - 60 N·m (4.1 - 6.1 kg-m, 30 - 44 ft-lb)

▶ GO TO 3.

3	CHECK FOR EXHAUST AIR LEAK

1. Start engine and run it at idle.
2. Listen for an exhaust air leak before three way catalyst.

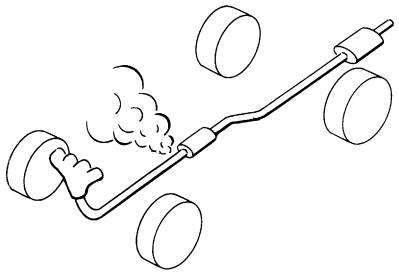

SEF099P

OK or NG

OK	▶	GO TO 4.
NG	▶	Repair or replace.

4	CHECK FOR INTAKE AIR LEAK

Listen for an intake air leak after the mass air flow sensor.

OK or NG

OK	▶	GO TO 5.
NG	▶	Repair or replace.

Diagnostic Procedure (Cont'd)

5	CLEAR THE SELF-LEARNING DATA

With CONSULT-II

1. Start engine and warm it up to normal operating temperature.
2. Select "SELF-LEARNING CONT" in "WORK SUPPORT" mode with CONSULT-II.
3. Clear the self-learning control coefficient by touching "CLEAR".

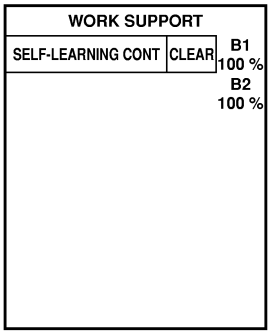

SEF968Y

4. Run engine for at least 10 minutes at idle speed.
   Is the 1st trip DTC P0171, P0172, P0174 or P0175 detected?
   Is it difficult to start engine?

Without CONSULT-II

1. Start engine and warm it up to normal operating temperature.
2. Turn ignition switch OFF.
3. Disconnect mass air flow sensor harness connector, and restart and run engine for at least 5 seconds at idle speed.
4. Stop engine and reconnect mass air flow sensor harness connector.
5. Make sure 1st trip DTC P0100 is displayed.
6. Erase the 1st trip DTC memory. Refer to "HOW TO ERASE EMISSION-RELATED DIAGNOSTIC INFORMATION", EC-687.
7. Make sure DTC P0000 is displayed.
8. Run engine for at least 10 minutes at idle speed.
   Is the 1st trip DTC P0171, P0172, P0174 or P0175 detected?
   Is it difficult to start engine?

Yes or No

Yes	▶	Perform trouble diagnosis for DTC P0171, P0174 or P0172, P0175. Refer to EC-905, 914.
No	▶	GO TO 6.

6 **CHECK HO2S1 (FRONT) INPUT SIGNAL CIRCUIT FOR OPEN AND SHORT**

1. Turn ignition switch OFF.
2. Check heated oxygen sensor 1 (front) harness protector.

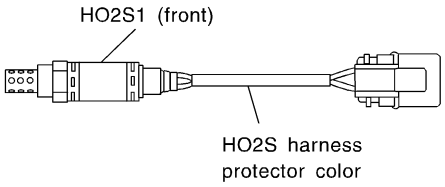

HO2S1 (front) (bank 1): Black
HO2S1 (front) (bank 2): Blue

SEF505Y

3. Disconnect corresponding heated oxygen sensor 1 (front) harness connector.

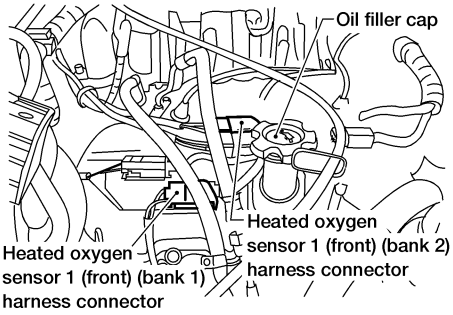

WEC545

4. Disconnect ECM harness connector.
5. Check harness continuity between ECM terminal and HO2S1 terminal as follows. Refer to Wiring Diagram.

DTC	Terminals		Bank
	ECM	Sensor	
P0133	50	2	Bank 1 (Right)
P0153	51	2	Bank 2 (Left)

MTBL0587

Continuity should exist.

6. Check harness continuity between ECM terminal or HO2S1 terminal and ground as follows. Refer to Wiring Diagram.

DTC	Terminals		Bank
	ECM or sensor	Ground	
P0133	50 or 2	Ground	Bank 1 (Right)
P0153	51 or 2	Ground	Bank 2 (Left)

MTBL0588

Continuity should not exist.

7. Also check harness for short to power.

OK or NG

OK	▶	GO TO 7.
NG	▶	Repair open circuit or short to ground or short to power in harness or connectors.

Diagnostic Procedure (Cont'd)

7	CHECK HEATED OXYGEN SENSOR 1 HEATER (FRONT)

Check resistance between HO2S1 (front) terminals 3 and 1.

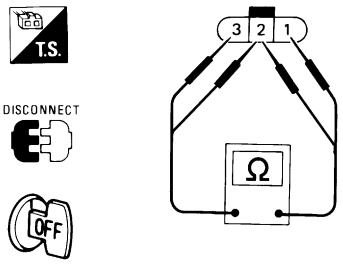

AEC158A

Resistance: 2.3 - 4.3Ω at 25°C (77°F)

Check continuity between HO2S1 (front) terminals 2 and 1, 3 and 2.

Continuity should not exist.

CAUTION:

- **Discard any heated oxygen sensor which has been dropped from a height of more than 0.5 m (19.7 in) onto a hard surface such as a concrete floor; use a new one.**
- **Before installing new oxygen sensor, clean exhaust system threads using Oxygen Sensor Thread Cleaner tool J-43897-18 or J-43897-12 and approved anti-seize lubricant.**

OK or NG

OK	▶	GO TO 8.
NG	▶	GO TO 12.

8 **CHECK MASS AIR FLOW SENSOR**

1. Reconnect harness connectors disconnected.
2. Start engine and warm it up to normal operating temperature.
3. Check voltage between ECM terminal 54 (Mass air flow sensor signal) and ground.

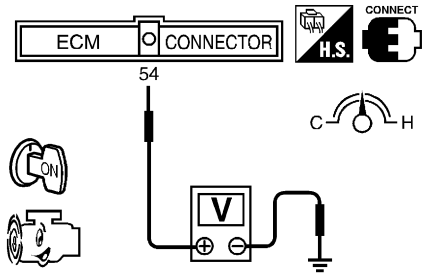

SEF747U

Condition	Voltage V
Ignition switch "ON" (Engine stopped.)	Less than 1.0
Idle (Engine is warmed-up to normal operating temperature.)	1.0 - 1.7
2,500 rpm (Engine is warmed-up to normal operating temperature.)	1.7 - 2.3
Idle to about 4,000 rpm*	1.0 - 1.7 to Approx. 4.0

MTBL0227

4. If the voltage is out of specification, disconnect mass air flow sensor harness connector and connect it again. Then repeat above check.
5. If NG, remove mass air flow sensor from air duct. Check hot wire for damage or dust.

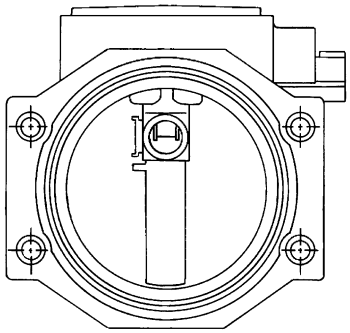

SEF030T

OK or NG

OK	▶	GO TO 9.
NG	▶	Replace mass air flow sensor.

Diagnostic Procedure (Cont'd)

9	CHECK PCV VALVE

With engine running at idle, remove PCV valve ventilation hose from PCV valve; make sure that a hissing noise will be heard as air passes through it and a strong vacuum should be felt immediately when a finger is placed over valve inlet.

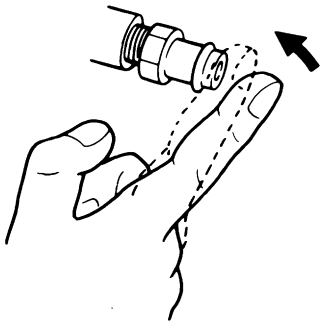

SEC137A

OK or NG

OK (With CONSULT-II)	▶	GO TO 10.
OK (Without CONSULT-II)	▶	GO TO 11.
NG	▶	Replace PCV valve.

10	CHECK FRONT HEATED OXYGEN SENSOR

With CONSULT-II

1. Start engine and warm it up to normal operating temperature.
2. Select "MANU TRIG" and "HI SPEED" in "DATA MONITOR" mode with CONSULT-II, and select "HO2S1 (B1)/(B2)" and "HO2S1 MNTR (B1)/(B2)".
3. Hold engine speed at 2,000 rpm under no load during the following steps.
4. Touch "RECORD" on CONSULT-II screen.

DATA MONITOR	
MONITOR	NO DTC
ENG SPEED	XXX rpm
COOLAN TEMP/S	XXX °C
HO2S1 (B1)	XXX V
HO2S2 (B2)	XXX V

SEF967Y

5. Check the following.

- "HO2S1 MNTR (B1)/(B2)" in "DATA MONITOR" mode changes from "RICH" to "LEAN" to "RICH" 5 times in 10 seconds. 5 times (cycles) are counted as shown below.

Bank 1

cycle	1	2	3	4	5
HO2S1 MNTR (B1)	R-L	R-L	R-L	R-L	R-L

Bank 2

cycle	1	2	3	4	5
HO2S1 MNTR (B2)	R-L	R-L	R-L	R-L	R-L

R means HO2S1 MNTR (B1)/(B2) indicates RICH

L means HO2S1 MNTR (B1)/(B2) indicates LEAN

SEF647Y

- "HO2S1 (B1)/(B2)" voltage goes above 0.6V at least once.
- "HO2S1 (B1)/(B2)" voltage goes below 0.3V at least once.
- "HO2S1 (B1)/(B2)" voltage never exceeds 1.0V.

Trigger	ENG SPEED	HO2S1 (B1)
	rpm	V
XXX	XXX	XXX
XXX	XXX	XXX
XXX	XXX	XXX
XXX	XXX	XXX
XXX	XXX	XXX
XXX	XXX	XXX
XXX	XXX	XXX
XXX	XXX	XXX
XXX	XXX	XXX
XXX	XXX	XXX
XXX	XXX	XXX
XXX	XXX	XXX
XXX	XXX	XXX

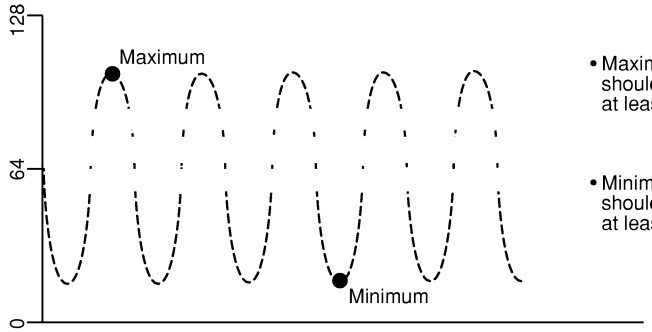

SEF648Y

CAUTION:

- **Discard any heated oxygen sensor which has been dropped from a height of more than 0.5 m (19.7 in) onto a hard surface such as a concrete floor; use a new one.**
- **Before installing new oxygen sensor, clean exhaust system threads using Oxygen Sensor Thread Cleaner tool J-43897-18 or J-43897-12 and approved anti-seize lubricant.**

OK or NG

OK	▶	GO TO 12.
NG	▶	Replace malfunctioning heated oxygen sensor 1 (front).

Diagnostic Procedure (Cont'd)

11	CHECK FRONT HEATED OXYGEN SENSOR 1 (FRONT)

Without CONSULT-II

1. Start engine and warm it up to normal operating temperature.
2. Set voltmeter probes between ECM terminal 50 (bank 1 signal) or 51 (bank 2 signal) and engine ground.
3. Check the following with engine speed held at 2,000 rpm constant under no load.

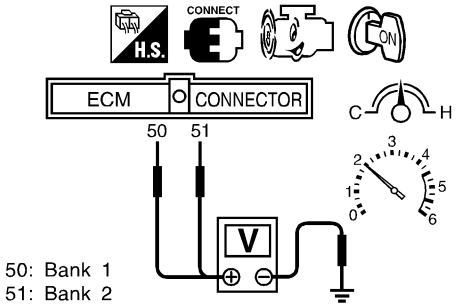

- The voltage fluctuates between 0 to 0.3V and 0.6 to 1.0V more than 5 times within 10 seconds.
- The maximum voltage is over 0.6V at least one time.
- The minimum voltage is below 0.3V at least one time.
- The voltage never exceeds 1.0V.

1 time: 0 - 0.3V → 0.6 - 1.0V → 0 - 0.3V
2 times: 0 - 0.3V → 0.6 - 1.0V → 0 - 0.3V → 0.6 - 1.0V → 0 - 0.3V

SEF796Z

CAUTION:
Discard any heated oxygen sensor which has been dropped from a height of more than 0.5 m (19.7 in) onto a hard surface such as a concrete floor; use a new one.

OK or NG

OK	▶	GO TO 13.
NG	▶	GO TO 12.

12	REPLACE HEATED OXYGEN SENSOR 1 (FRONT)

1. Turn ignition switch "OFF".
2. Check heated oxygen sensor 1 (front) harness protector color.

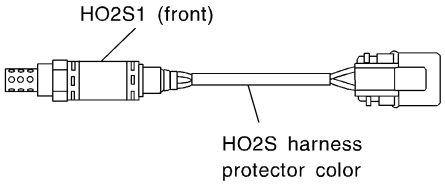

HO2S1 (front) (bank 1): Black
HO2S1 (front) (bank 2): Blue

SEF505Y

CAUTION:
Before installing new oxygen sensor, clean exhaust system threads using Oxygen Sensor Thread Cleaner tool J-43897-18 or J-43897-12 and approved anti-seize lubricant.

	▶	Replace malfunctioning heated oxygen sensor 1 (front).

13	CHECK HO2S1 (FRONT) SHIELD CIRCUIT FOR OPEN AND SHORT	
1. Turn ignition switch OFF. 2. Disconnect joint connector. 3. Check the following. ● Continuity between joint connector terminal 1 and ground ● Joint connector (Refer to ***EL-238***, "HARNESS LAYOUT".) **Continuity should exist.** 4. Also check harness for short to power. 5. Then reconnect joint connector. **OK or NG**		
OK	▶	GO TO 14.
NG	▶	Repair open circuit or short to power in harness or connectors.

14	CHECK INTERMITTENT INCIDENT
Refer to "TROUBLE DIAGNOSIS FOR INTERMITTENT INCIDENT", EC-753.	
▶	**INSPECTION END**

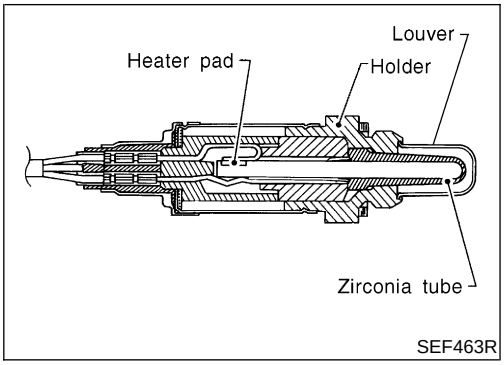

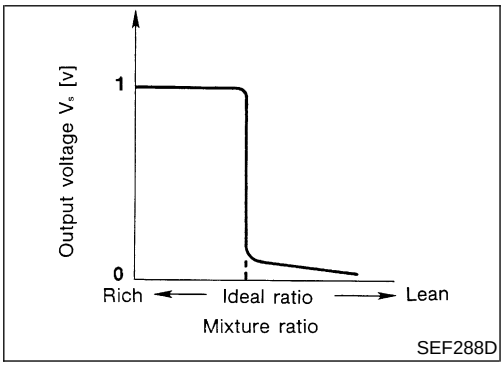

Component Description

NEEC0637

The heated oxygen sensor 1 (front) is placed into the front tube. It detects the amount of oxygen in the exhaust gas compared to the outside air. The heated oxygen sensor 1 (front) has a closed-end tube made of ceramic zirconia. The zirconia generates voltage from approximately 1V in richer conditions to 0V in leaner conditions. The heated oxygen sensor 1 (front) signal is sent to the ECM. The ECM adjusts the injection pulse duration to achieve the ideal air-fuel ratio. The ideal air-fuel ratio occurs near the radical change from 1V to 0V.

CONSULT-II Reference Value in Data Monitor Mode

NEEC0638

Specification data are reference values.

MONITOR ITEM	CONDITION		SPECIFICATION
HO2S1 (B1) HO2S1 (B2)	● Engine: After warming up	Maintaining engine speed at 2,000 rpm	0 - 0.3V ⟷ Approx. 0.6 - 1.0V
HO2S1 MNTR (B1) HO2S1 MNTR (B2)			LEAN ⟷ RICH Changes more than 5 times during 10 seconds.

ECM Terminals and Reference Value

NEEC0639

Specification data are reference values and are measured between each terminal and ground.

CAUTION:

Do not use ECM ground terminals when measuring input/output voltage. Doing so may result in damage to the ECM's transistor. Use a ground other than the ECM terminals, such as the ground.

TERMINAL NO.	WIRE COLOR	ITEM	CONDITION	DATA (DC Voltage)
50	B	Heated oxygen sensor 1 (front) RH	**[Engine is running]** ● After warming up to normal operating temperature and engine speed is 2,000 rpm	0 - Approximately 1.0V 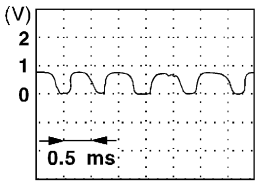 SEF002V
51	G	Heated oxygen sensor 1 (front) LH		

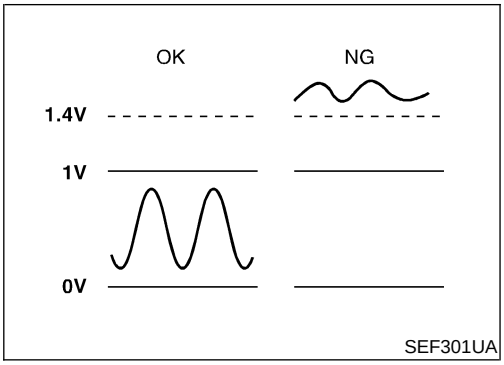

SEF301UA

5

DATA MONITOR	
MONITOR	NO DTC
ENG SPEED	XXX rpm
COOLAN TEMP/S	XXX ˚C

SEF174Y

On Board Diagnosis Logic

NEEC0640

To judge the malfunction, the diagnosis checks that the heated oxygen sensor 1 (front) output is not inordinately high.
Malfunction is detected when an excessively high voltage from the sensor is sent to ECM.

POSSIBLE CAUSE

NEEC0640S01

- Harness or connectors
  (The sensor circuit is open or shorted.)
- Heated oxygen sensor 1 (front)

DTC Confirmation Procedure

NEEC0641

NOTE:
If “DTC Confirmation Procedure” has been previously conducted, always turn ignition switch OFF and wait at least 5 seconds before conducting the next test.

With CONSULT-II

1) Start engine and warm it up to normal operating temperature.
2) Turn ignition switch OFF and wait at least 5 seconds.
3) Turn ignition switch ON.
4) Select “DATA MONITOR” mode with CONSULT-II.
5) Restart engine and let it idle for 25 seconds.
6) If 1st trip DTC is detected, go to “Diagnostic Procedure”, EC-846.

With GST

Follow the procedure “With CONSULT-II”.

- **When using GST, “DTC Confirmation Procedure” should be performed twice as much as when using CONSULT-II because GST cannot display MODE 7 (1st trip DTC) concerning this diagnosis. Therefore, using CONSULT-II is recommended.**

Wiring Diagram

NEEC0642

RIGHT BANK

NEEC0642S01

EC-O2S1B1-01

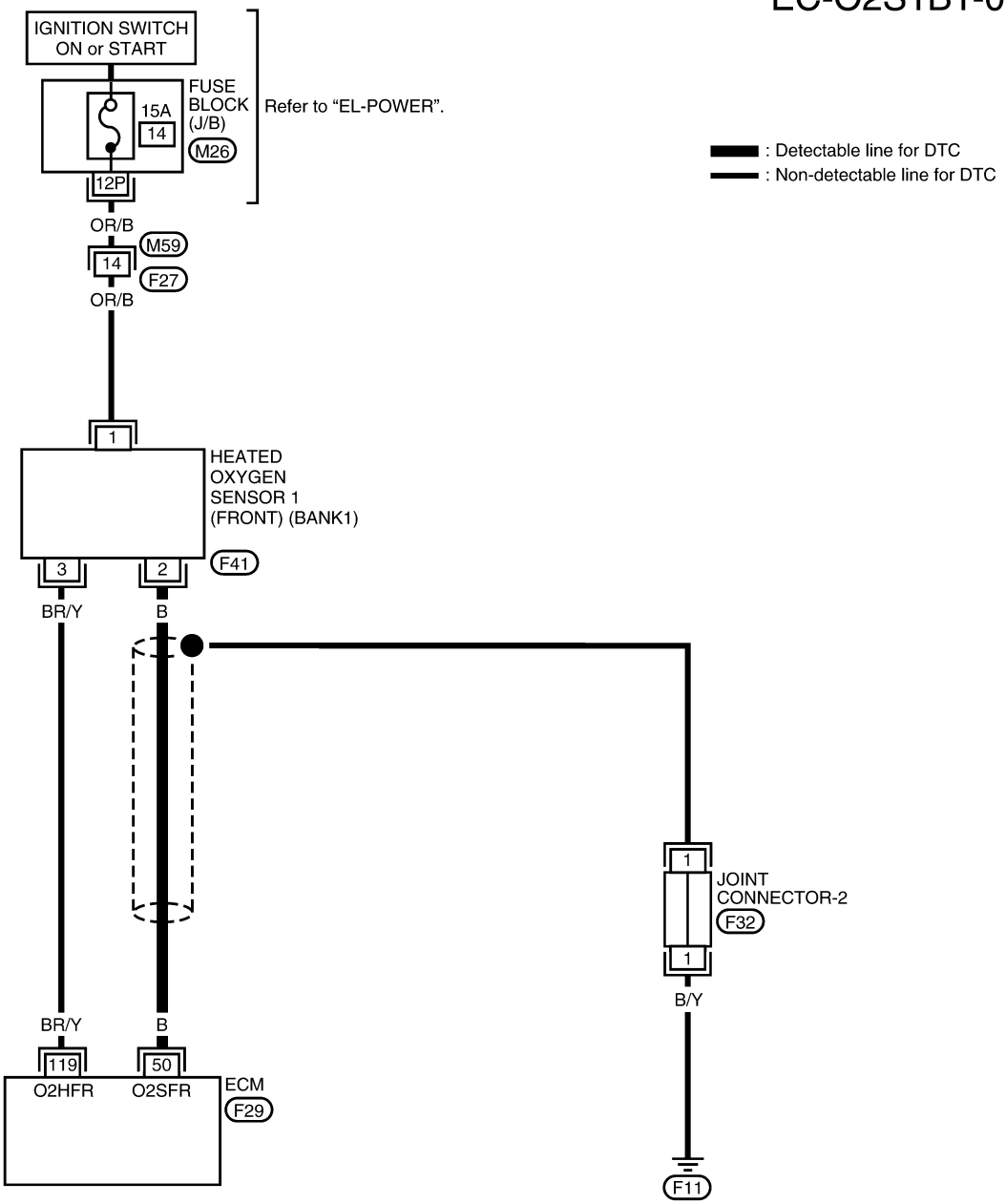

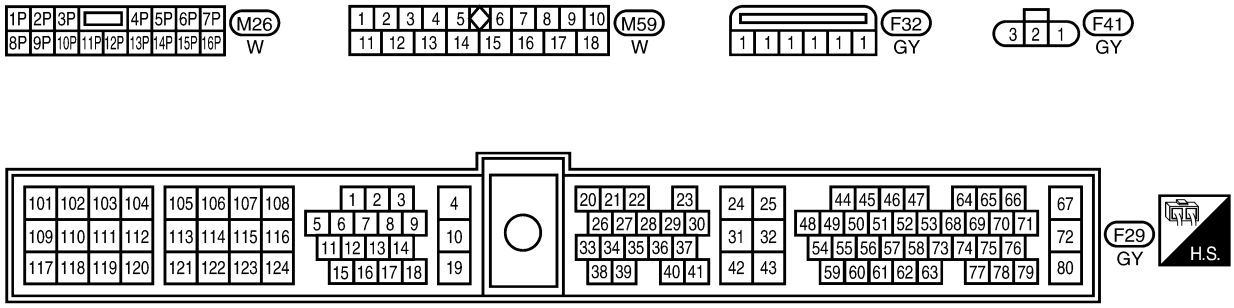

WEC788

LEFT BANK

NEEC0642S02

EC-O2S1B2-01

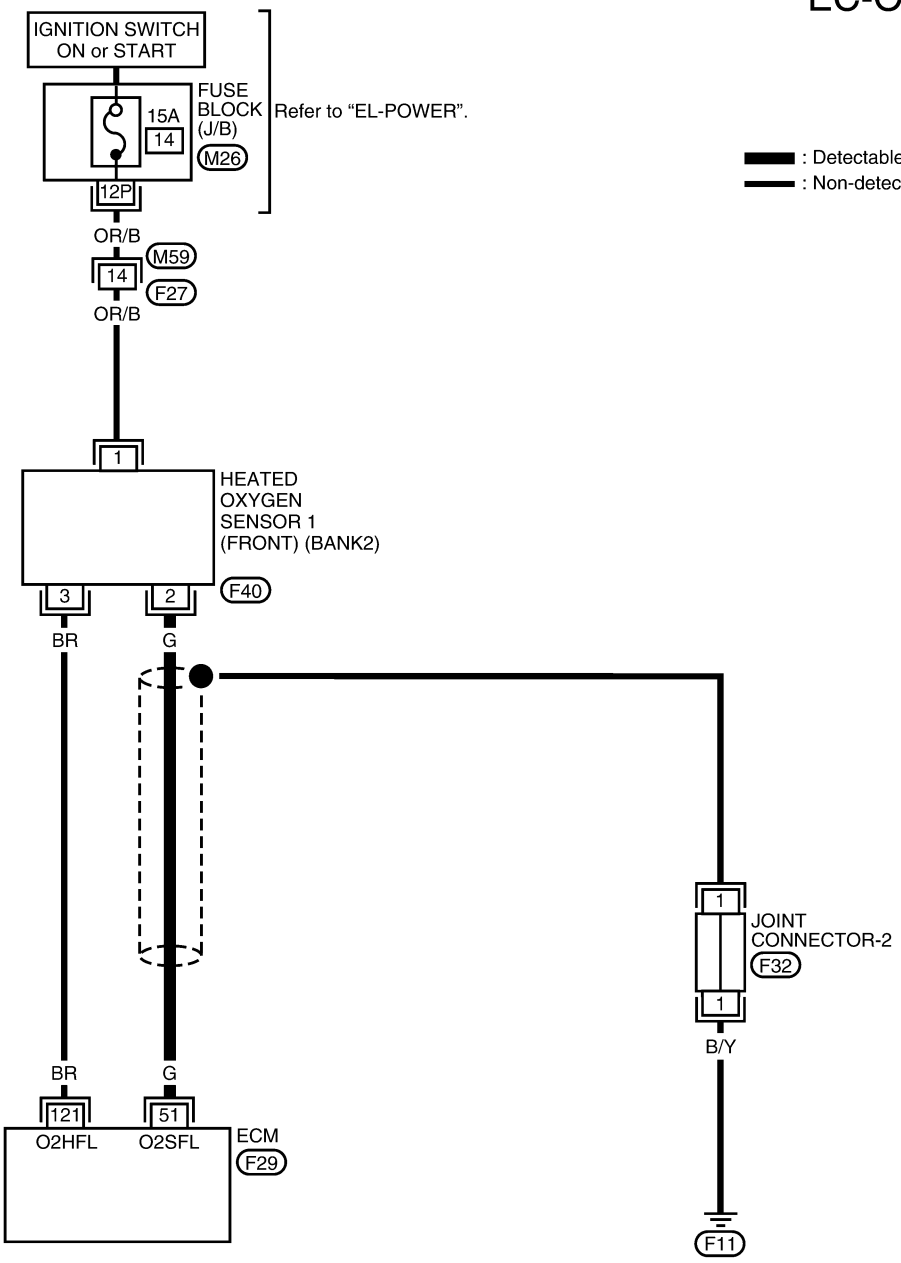



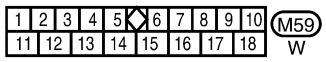

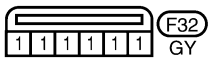

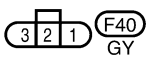

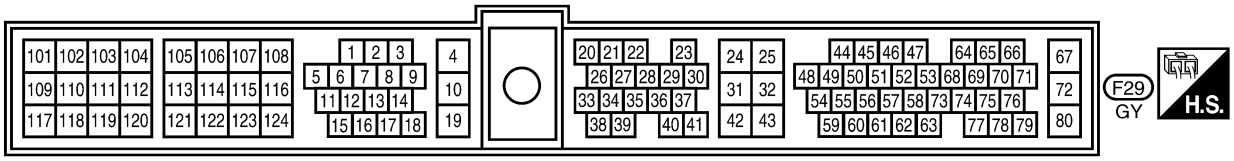

WEC789

Diagnostic Procedure

NEEC0643

1	INSPECTION START

1. Turn ignition switch OFF.
2. Check heated oxygen sensor 1 (front) harness protector.

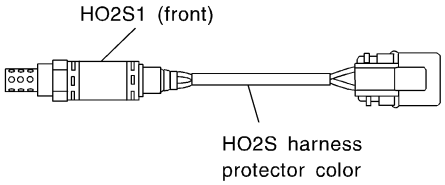

HO2S1 (front) (bank 1): Black
HO2S1 (front) (bank 2): Blue

SEF505Y

3. Disconnect corresponding heated oxygen sensor 1 (front) harness connector.

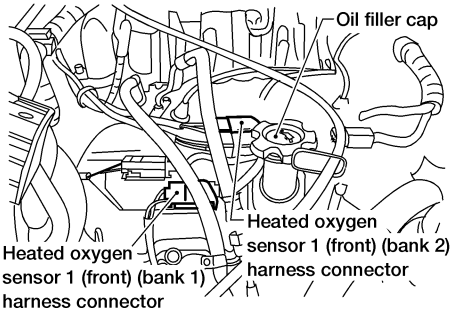

WEC545

▶	GO TO 2.

2	RETIGHTEN HEATED OXYGEN SENSOR 1 (FRONT)

1. Loosen and retighten corresponding heated oxygen sensor 1 (front).
   Tightening torque:
   40 - 60 N·m (4.1 - 6.1 kg-m, 30 - 44 ft-lb)

▶	GO TO 3.

3	CHECK HO2S1 (FRONT) INPUT SIGNAL CIRCUIT FOR OPEN AND SHORT

1. Disconnect ECM harness connector.
2. Check harness continuity between ECM terminal and HO2S1 (front) terminal as follows. Refer to Wiring Diagram.

DTC	Terminals		Bank
	ECM	Sensor	
P0134	50	2	Bank 1 (Right)
P0154	51	2	Bank 2 (Left)

SEF819Z

Continuity should exist.

3. Check harness continuity between ECM terminal or HO2S1 (front) terminal and ground as follows. Refer to Wiring Diagram.

DTC	Terminals		Bank
	ECM or sensor	Ground	
P0134	50 or 2	Ground	Bank 1 (Right)
P0154	51 or 2	Ground	Bank 2 (Left)

SEF820Z

Continuity should not exist.

4. Also check harness for short to power.

OK or NG

OK	▶	GO TO 4.
NG	▶	Repair open circuit or short to ground or short to power in harness or connectors.

4	CHECK FRONT HO2S1 (FRONT) CONNECTOR FOR WATER

1. Disconnect heated oxygen sensor 1 (front) harness connector.
2. Check connectors for water.

Water should not exist.

OK or NG

OK (With CONSULT-II)	▶	GO TO 5.
OK (Without CONSULT-II)	▶	GO TO 6.
NG	▶	Repair or replace harness or connectors.

Diagnostic Procedure (Cont'd)

5	CHECK HEATED OXYGEN SENSOR 1 (FRONT)

With CONSULT-II

1. Start engine and warm it up to normal operating temperature.
2. Select "MANU TRIG" and "HI SPEED" in "DATA MONITOR" mode with CONSULT-II, and select "HO2S1 (B1)/(B2)" and "HO2S1 MNTR (B1)/(B2)".
3. Hold engine speed at 2,000 rpm under no load during the following steps.
4. Touch "RECORD" on CONSULT-II screen.

DATA MONITOR	
MONITOR	NO DTC
ENG SPEED	XXX rpm
COOLAN TEMP/S	XXX °C
HO2S1 (B1)	XXX V
HO2S2 (B2)	XXX V

SEF967Y

5. Check the following.

- "HO2S1 MNTR (B1)/(B2)" in "DATA MONITOR" mode changes from "RICH" to "LEAN" to "RICH" 5 times in 10 seconds. 5 times (cycles) are counted as shown left:

Bank 1

cycle	1	2	3	4	5
HO2S1 MNTR (B1)	R-L	R-L	R-L	R-L	R-L

Bank 2

cycle	1	2	3	4	5
HO2S1 MNTR (B2)	R-L	R-L	R-L	R-L	R-L

R means HO2S1 MNTR (B1)/(B2) indicates RICH

L means HO2S1 MNTR (B1)/(B2) indicates LEAN

SEF647Y

- "HO2S1 (B1)/(B2)" voltage goes above 0.6V at least once.
- "HO2S1 (B1)/(B2)" voltage goes below 0.3V at least once.
- "HO2S1 (B1)/(B2)" voltage never exceeds 1.0V.

Trigger	ENG SPEED	HO2S1 (B1)
	rpm	V
XXX	XXX	XXX
XXX	XXX	XXX
XXX	XXX	XXX
XXX	XXX	XXX
XXX	XXX	XXX
XXX	XXX	XXX
XXX	XXX	XXX
XXX	XXX	XXX
XXX	XXX	XXX
XXX	XXX	XXX
XXX	XXX	XXX
XXX	XXX	XXX
XXX	XXX	XXX

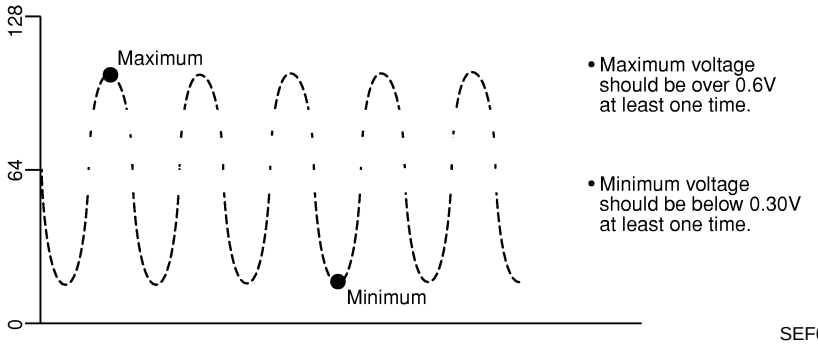

SEF648Y

CAUTION:

- **Discard any heated oxygen sensor which has been dropped from a height of more than 0.5 m (19.7 in) onto a hard surface such as a concrete floor; use a new one.**
- **Before installing new oxygen sensor, clean exhaust system threads using Oxygen Sensor Thread Cleaner tool J-43897-18 or J-43897-12 and approved anti-seize lubricant.**

OK or NG

OK	▶	GO TO 8.
NG	▶	GO TO 7.

6	CHECK HEATED OXYGEN SENSOR 1 (FRONT)

Without CONSULT-II

1. Start engine and warm it up to normal operating temperature.
2. Set voltmeter probes between ECM terminal 50 (bank 1 signal) or 51 (bank 2 signal) and engine ground.
3. Check the following with engine speed held at 2,000 rpm constant under no load.

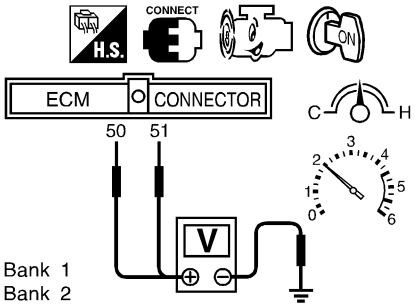

- The voltage fluctuates between 0 to 0.3V and 0.6 to 1.0V more than 5 times within 10 seconds.
- The maximum voltage is over 0.6V at least one time.
- The minimum voltage is below 0.3V at least one time.
- The voltage never exceeds 1.0V.

1 time: 0 - 0.3V → 0.6 - 1.0V → 0 - 0.3V
2 times: 0 - 0.3V → 0.6 - 1.0V → 0 - 0.3V → 0.6 - 1.0V → 0 - 0.3V

SEF796Z

CAUTION:
Discard any heated oxygen sensor which has been dropped from a height of more than 0.5 m (19.7 in) onto a hard surface such as a concrete floor; use a new one.

OK or NG

OK	▶	GO TO 8.
NG	▶	GO TO 7.

7	REPLACE HEATED OXYGEN SENSOR 1 (FRONT)

1. Turn ignition switch "OFF".
2. Check heated oxygen sensor 1 (front) harness protector color.

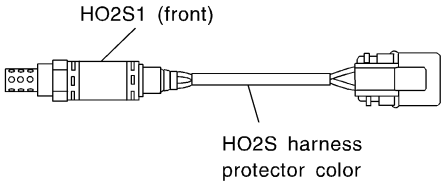

HO2S1 (front) (bank 1): Black
HO2S1 (front) (bank 2): Blue

SEF505Y

CAUTION:
Before installing new oxygen sensor, clean exhaust system threads using Oxygen Sensor Thread Cleaner tool J-43897-18 or J-43897-12 and approved anti-seize lubricant.

	▶	Replace malfunctioning heated oxygen sensor 1 (front).

8	CHECK INTERMITTENT INCIDENT
Refer to "TROUBLE DIAGNOSIS FOR INTERMITTENT INCIDENT", EC-753.	
	▶ **INSPECTION END**

Description

NEEC0644

SYSTEM DESCRIPTION

NEEC0644S01

Sensor	Input Signal to ECM	ECM function	Actuator
Camshaft position sensor	Engine speed	Heated oxygen sensor 1 heater (front) control	Heated oxygen sensor 1 heaters (front)

The ECM performs ON/OFF control of the heated oxygen sensor 1 heaters (front) corresponding to the engine speed.

OPERATION

NEEC0644S02

Engine speed rpm	Heated oxygen sensor 1 heaters (front)
Above 3,200	OFF
Below 3,200	ON

CONSULT-II Reference Value in Data Monitor Mode

NEEC0645

Specification data are reference values.

MONITOR ITEM	CONDITION	SPECIFICATION
HO2S1 HTR (B1) HO2S1 HTR (B2)	• Engine speed: Below 3,200 rpm	ON
	• Engine speed: Above 3,200 rpm	OFF

ECM Terminals and Reference Value

NEEC0646

Specification data are reference values and are measured between each terminal and ground.

CAUTION:

Do not use ECM ground terminals when measuring input/output voltage. Doing so may result in damage to the ECM's transistor. Use a ground other than the ECM terminals, such as the ground.

TERMINAL NO.	WIRE COLOR	ITEM	CONDITION	DATA (DC Voltage)
119 (Bank 1)	BR/Y	Heated oxygen sensor 1 heater (front)	**[Engine is running]** • Engine speed is below 3,200 rpm	Approximately 0.4V
121 (Bank 2)	BR		**[Engine is running]** • Engine speed is above 3,200 rpm	BATTERY VOLTAGE (11 - 14V)

On Board Diagnosis Logic

NEEC0647

Malfunction is detected when the current amperage in the heated oxygen sensor 1 heater (front) circuit is out of the normal range. [An improper voltage drop signal is sent to ECM through the heated oxygen sensor 1 heater (front).]

POSSIBLE CAUSE

NEEC0647S01

- Harness or connectors
  [The heated oxygen sensor 1 heater (front) circuit is open or shorted.]
- Heated oxygen sensor 1 heater (front)

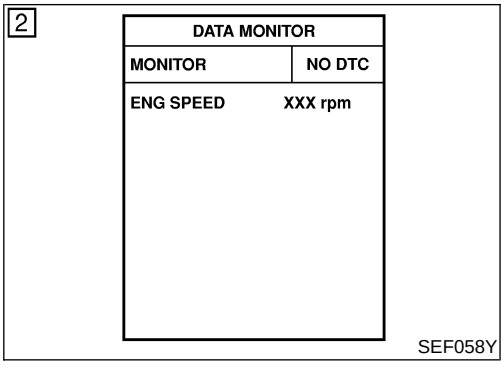

DTC Confirmation Procedure

NEEC0648

NOTE:
If "DTC Confirmation Procedure" has been previously conducted, always turn ignition switch OFF and wait at least 5 seconds before conducting the next test.

TESTING CONDITION:
Before performing the following procedure, confirm that battery voltage is between 10.5V and 16V at idle.

With CONSULT-II

1) Turn ignition switch ON and select "DATA MONITOR" mode with CONSULT-II.
2) Start engine and run it for at least 6 seconds at idle speed.
3) If 1st trip DTC is detected, go to "Diagnostic Procedure", EC-854.

With GST

1) Start engine and run it for at least 6 seconds at idle speed.
2) Turn ignition switch OFF, wait at least 5 seconds and then turn ON.
3) Start engine and run it for at 6 seconds at idle speed.
4) Select "MODE 3" with GST.
5) If 1st trip DTC is detected, go to "Diagnostic Procedure", EC-854.

- **When using GST, "DTC Confirmation Procedure" should be performed twice as much as when using CONSULT-II because GST cannot display MODE 7 (1st trip DTC) concerning this diagnosis. Therefore, using CONSULT-II is recommended.**

Wiring Diagram

NEEC0649

RIGHT BANK

NEEC0649S01

EC-O2H1B1-01

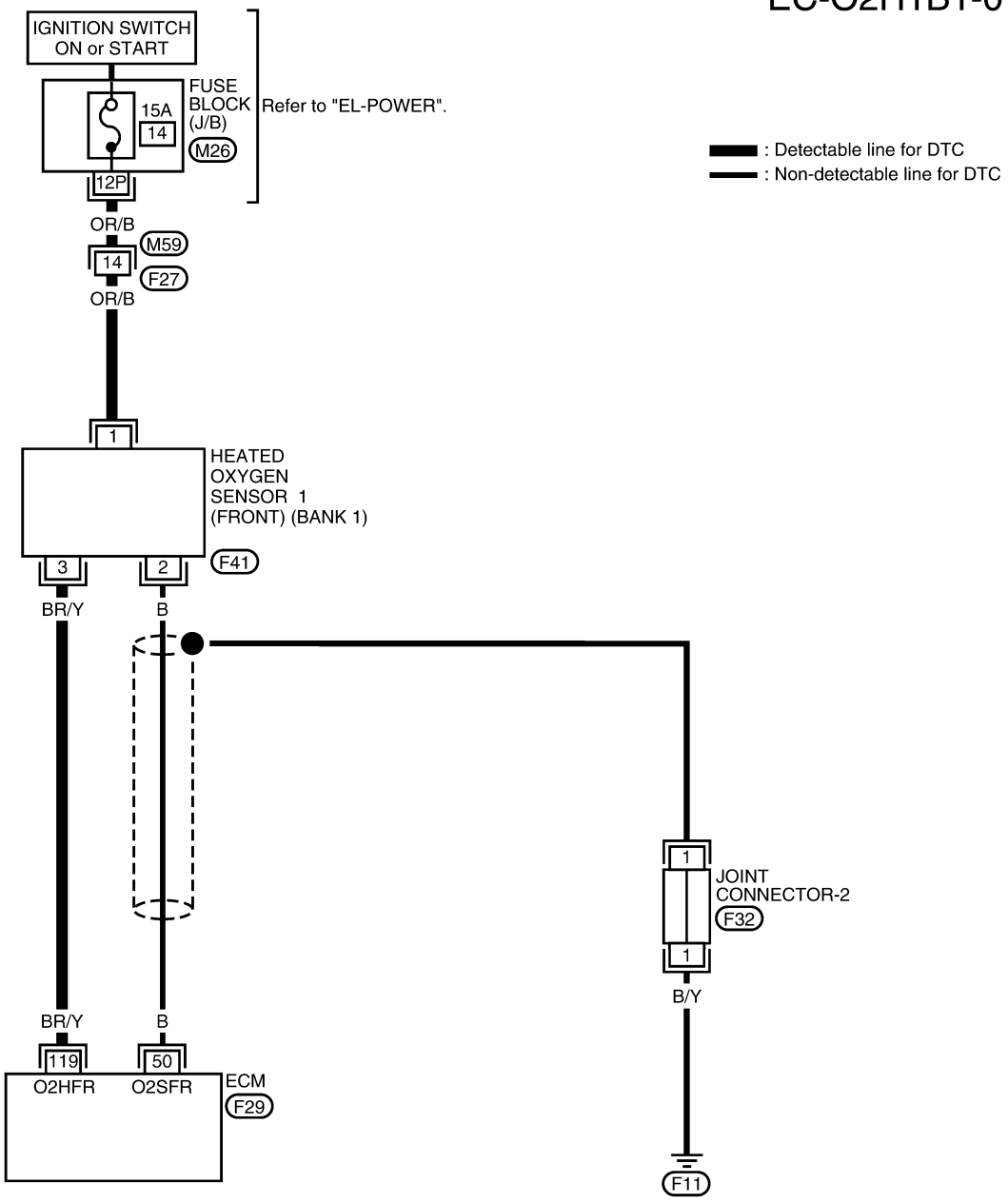



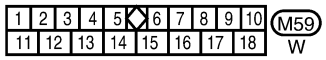

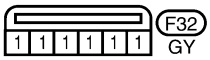

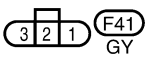

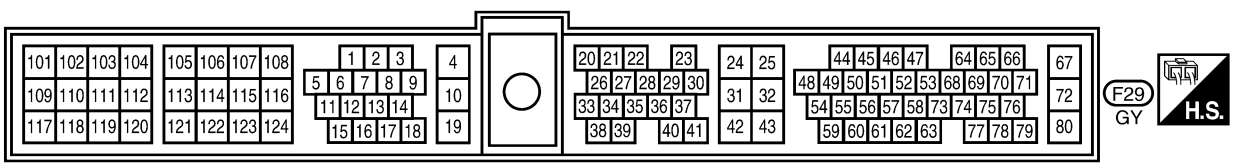

WEC790

LEFT BANK

NEEC0649S02

EC-O2H1B2-01

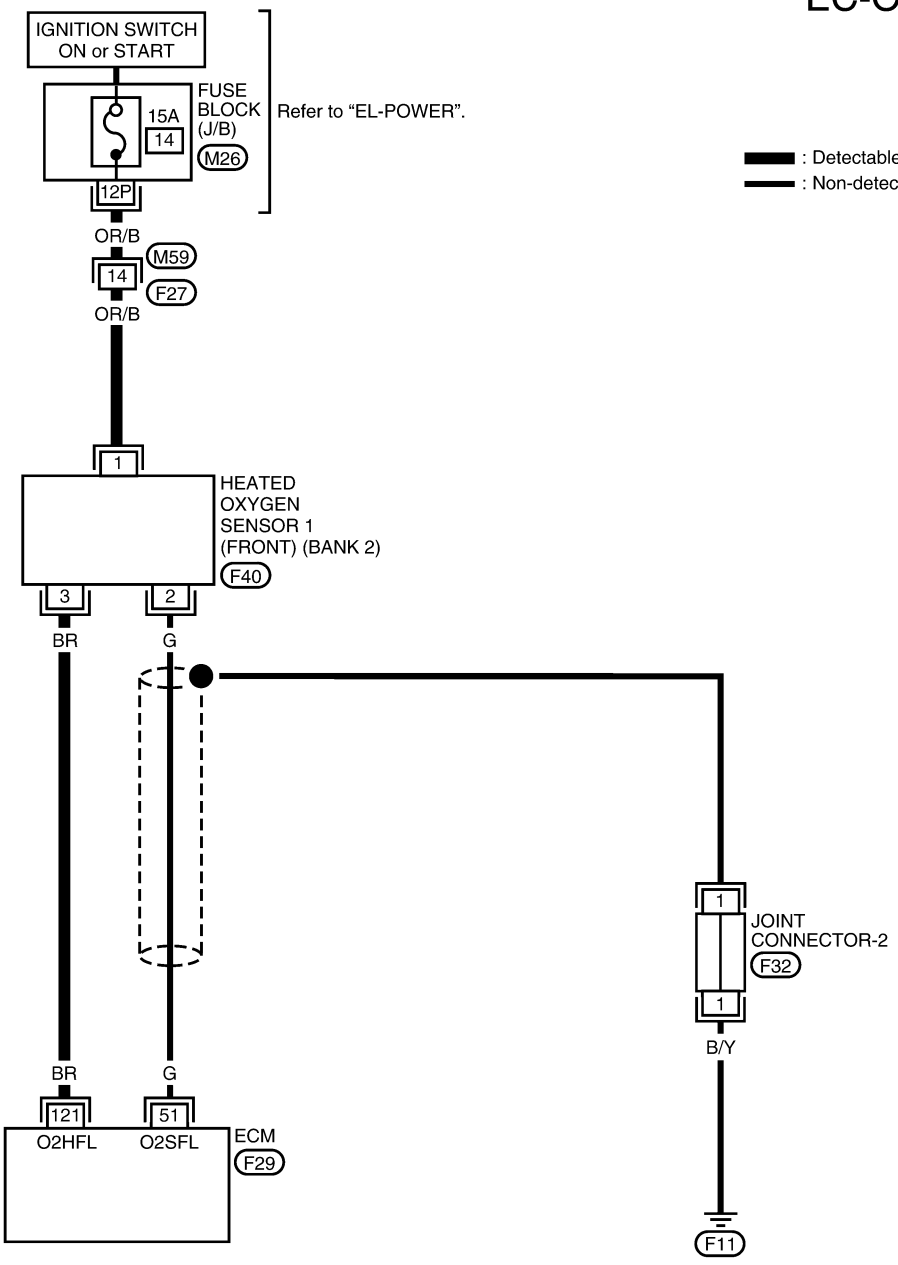

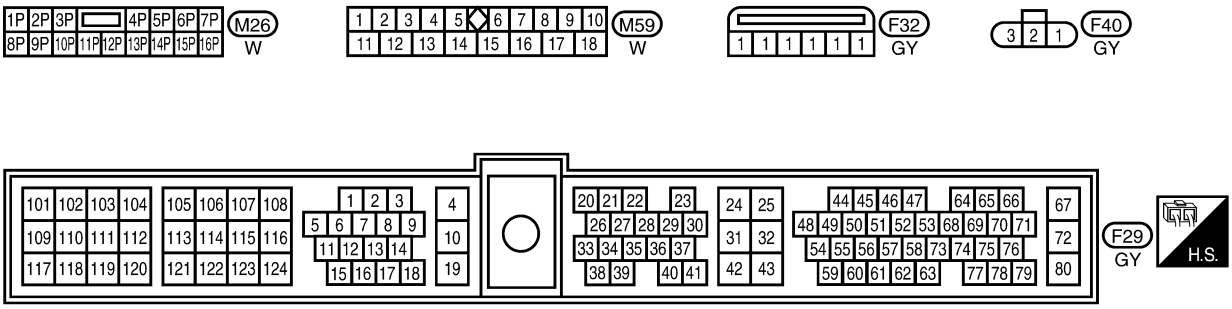

WEC791

Diagnostic Procedure

NEEC0650

1	CHECK HO2S1 (FRONT) POWER SUPPLY CIRCUIT

1. Turn ignition switch OFF.
2. Check heated oxygen sensor 1 (front) harness protector.

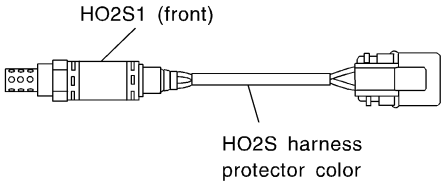

HO2S1 (front) (bank 1): Black
HO2S1 (front) (bank 2): Blue

SEF505Y

3. Disconnect corresponding heated oxygen sensor 1 (front) harness connector.

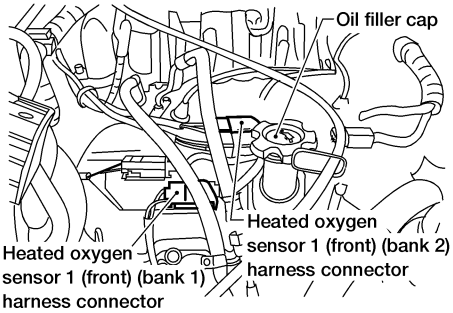

WEC545

4. Turn ignition switch ON.
5. Check voltage between FRONT HO2S terminal 1 and ground with CONSULT-II or tester.

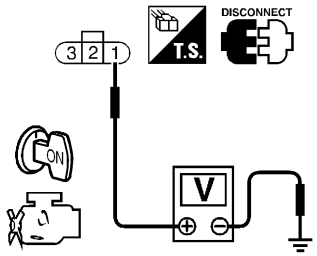

SEF633W

Voltage: Battery voltage

OK or NG

OK	▶	GO TO 3.
NG	▶	GO TO 2.

2	DETECT MALFUNCTIONING PART

Check the following.
- Harness connectors M59, F27
- Fuse block (J/B) connector M26
- 10A fuse
- Harness for open or short between heated oxygen sensor 1 (front) and fuse

	▶	Repair harness or connectors.

3	CHECK HO2S1 HEATER (FRONT) OUTPUT CIRCUIT FOR OPEN AND SHORT

1. Turn ignition switch OFF.
2. Disconnect ECM harness connector.
3. Check harness continuity between ECM terminal and HO2S1 (front) terminal as follows. Refer to Wiring Diagram.

DTC	Terminals		Bank
	ECM	Sensor	
P0135	119	3	Bank 1 (Right)
P0155	121	3	Bank 2 (Left)

SEF821Z

Continuity should exist.

4. Also check harness for short to ground and short to power.

OK or NG

OK	▶	GO TO 4.
NG	▶	Repair open circuit or short to ground or short to power in harness or connectors.

4	CHECK HEATED OXYGEN SENSOR 1 HEATER (FRONT)

Check resistance between HO2S1 (front) terminals 3 and 1.

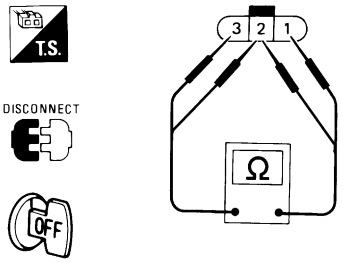

AEC158A

Resistance: 2.3 - 4.3Ω at 25°C (77°F)

Check continuity between HO2S1 (front) terminals 2 and 1, 3 and 2.

Continuity should not exist.

CAUTION:

- **Discard any heated oxygen sensor which has been dropped from a height of more than 0.5 m (19.7 in) onto a hard surface such as a concrete floor; use a new one.**
- **Before installing new oxygen sensor, clean exhaust system threads using Oxygen Sensor Thread Cleaner tool J-43897-18 or J-43897-12 and approved anti-seize lubricant.**

OK or NG

OK	▶	GO TO 6.
NG	▶	GO TO 5.

Diagnostic Procedure (Cont'd)

5	REPLACE HEATED OXYGEN SENSOR 1 (FRONT)

1. Turn ignition switch "OFF".
2. Check heated oxygen sensor 1 (front) harness protector color.

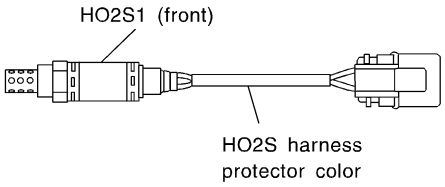

HO2S1 (front) (bank 1): Black
HO2S1 (front) (bank 2): Blue

SEF505Y

CAUTION:
Before installing new oxygen sensor, clean exhaust system threads using Oxygen Sensor Thread Cleaner tool J-43897-18 or J-43897-12 and approved anti-seize lubricant.

▶	Replace malfunctioning heated oxygen sensor 1 (front).

6	CHECK INTERMITTENT INCIDENT

Refer to "TROUBLE DIAGNOSIS FOR INTERMITTENT INCIDENT", EC-753.

▶	INSPECTION END

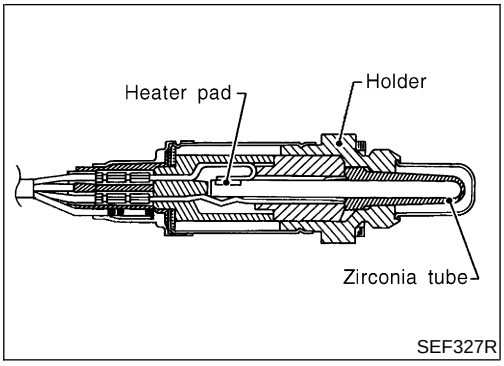

Component Description

NEEC0651

The heated oxygen sensor 2 (rear), after three way catalyst, monitors the oxygen level in the exhaust gas on each bank.
Even if switching characteristics of the heated oxygen sensor 1 (front) are shifted, the air fuel ratio is controlled to stoichiometric, by the signal from the heated oxygen sensor 2 (rear).
This sensor is made of ceramic zirconia. The zirconia generates voltage from approximately 1V in richer conditions to 0V in leaner conditions.
Under normal conditions the heated oxygen sensor 2 (rear) is not used for engine control operation.

CONSULT-II Reference Value in Data Monitor Mode

NEEC0652

Specification data are reference values.

MONITOR ITEM	CONDITION		SPECIFICATION
HO2S2 (B1) HO2S2 (B2)	● Engine: After warming up	Revving engine from idle up to 2,000 rpm	0 - 0.3V ⟷ Approx. 0.6 - 1.0V
HO2S2 MNTR (B1) HO2S2 MNTR (B2)			LEAN ⟷ RICH

ECM Terminals and Reference Value

NEEC0653

Specification data are reference values and are measured between each terminal and ground.

CAUTION:
Do not use ECM ground terminals when measuring input/output voltage. Doing so may result in damage to the ECM's transistor. Use a ground other than the ECM terminals, such as the ground.

TERMINAL NO.	WIRE COLOR	ITEM	CONDITION	DATA (DC Voltage)
56	OR	Heated oxygen sensor 2 (rear) (bank 1)	**[Engine is running]** ● **Warm-up condition** ● Revving engine from idle up to 2,000 rpm	0 - Approximately 1.0V
57	Y	Heated oxygen sensor 2 (rear) (bank 2)		

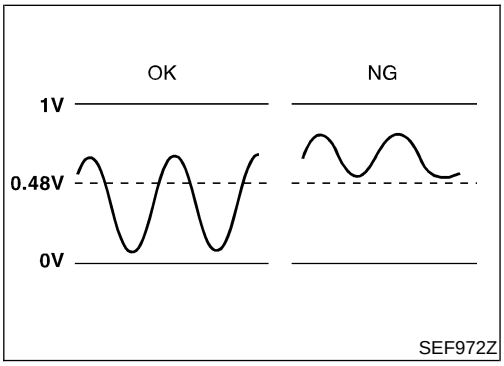

On Board Diagnosis Logic

NEEC0654

The heated oxygen sensor 2 (rear) has a much longer switching time between rich and lean than the heated oxygen sensor 1 (front). The oxygen storage capacity before the three way catalyst causes the longer switching time. To judge the malfunctions of heated oxygen sensor 2 (rear), ECM monitors whether the minimum voltage of sensor is sufficiently low during the various driving condition such as fuel-cut.
Malfunction is detected when the minimum voltage from the sensor is not reached to the specified voltage.

POSSIBLE CAUSE

NEEC0654S01

- Harness or connectors
  (The sensor circuit is open or shorted.)
- Heated oxygen sensor 2 (rear)
- Fuel pressure
- Injectors

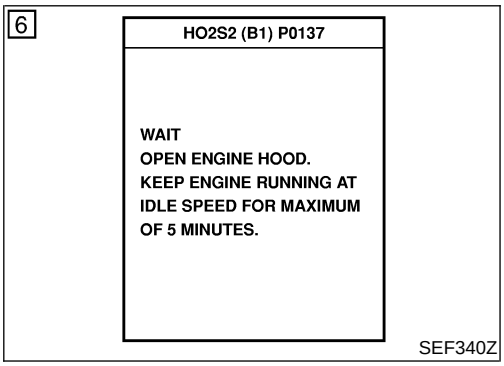

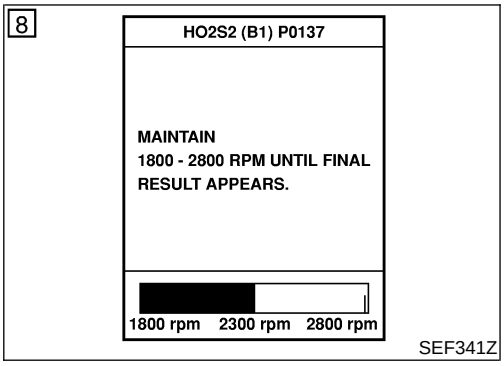

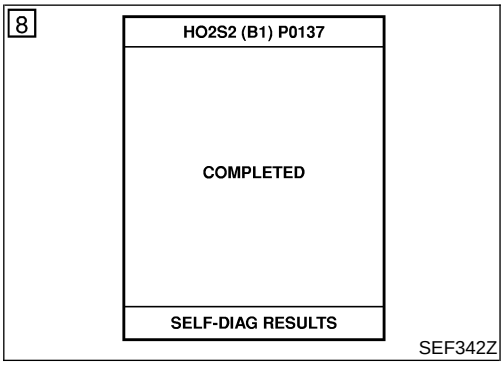

DTC Confirmation Procedure

NEEC0655

NOTE:
If "DIAGNOSTIC TROUBLE CODE CONFIRMATION PROCEDURE" has been previously conducted, always turn ignition switch OFF and wait at least 5 seconds before conducting the next test.

TESTING CONDITION:
Open engine hood before conducting following procedure
With CONSULT-II

1) Start engine and warm it up to normal operating temperature.
2) Turn ignition switch OFF and wait at least 5 seconds.
3) Turn ignition switch ON.
4) Select "DATA MONITOR" mode with CONSULT-II.
5) Make sure that "COOLANT TEMP/S" is more than 70°C (158°F).
6) Select "HO2S2 (B1)/(B2) P0137/P0157" of "HO2S2" in DTC WORK SUPPORT" mode with CONSULT.
7) Start engine and follow the instructions of CONSULT-II.
8) Make sure that "OK" is displayed after touching "SELF_DIAG RESULTS".
   If NG is displayed, refer to "DIAGNOSTIC PROCEDURE", EC-862.
   If "CAN NOT BE DIAGNOSED" is displayed, perform the following.

a) Stop engine and cool down "COOLANT TEMP/S" to less than 70°C (158°F).
b) Turn ignition switch ON.
c) Select "DATA MONITOR" mode with CONSULT-II.
d) Start engine.
e) Perform from step 6) again when the "COOLANT TEMP/S" reaches to 70°C (158°F)

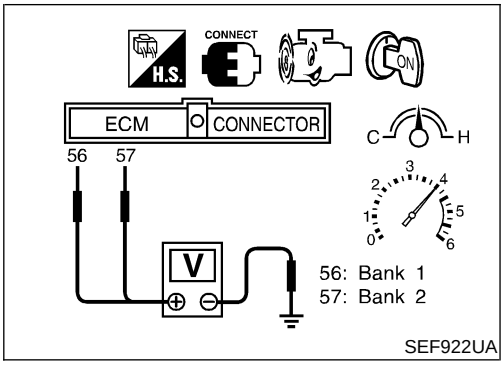

Overall Function Check

=NEEC0656

Use this procedure to check the overall function of the heated oxygen sensor 2 (rear) circuit. During this check, a 1st trip DTC might not be confirmed.

CAUTION:

Always drive vehicle at a safe speed.

Without CONSULT-II

1) Start engine and drive vehicle at a speed of more than 70 km/h (43 MPH) for 2 consecutive minutes.
2) Stop vehicle with engine running.
3) Set voltmeter probes between ECM terminal 56 (bank 1 signal) or 57 (bank 2 signal) and engine ground.
4) Check the voltage when racing up to 4,000 rpm under no load at least 10 times.
   (depress and release accelerator pedal as soon as possible)
   The voltage should be below 0.48V at least once during this procedure.
   If the voltage can be confirmed in step 4, step 5 is not necessary.
5) Keep vehicle at idling for 10 minutes, then check the voltage. Or check the voltage when coasting from 80 km/h (50 MPH) in 3rd gear position (M/T), “D” position with “O/D” OFF (A/T).
   The voltage should be below 0.48V at least once during this procedure.
6) If NG, go to “Diagnostic Procedure”, EC-862.

Wiring Diagram

NEEC0657

RIGHT BANK

NEEC0657S01

EC-O2S2B1-01

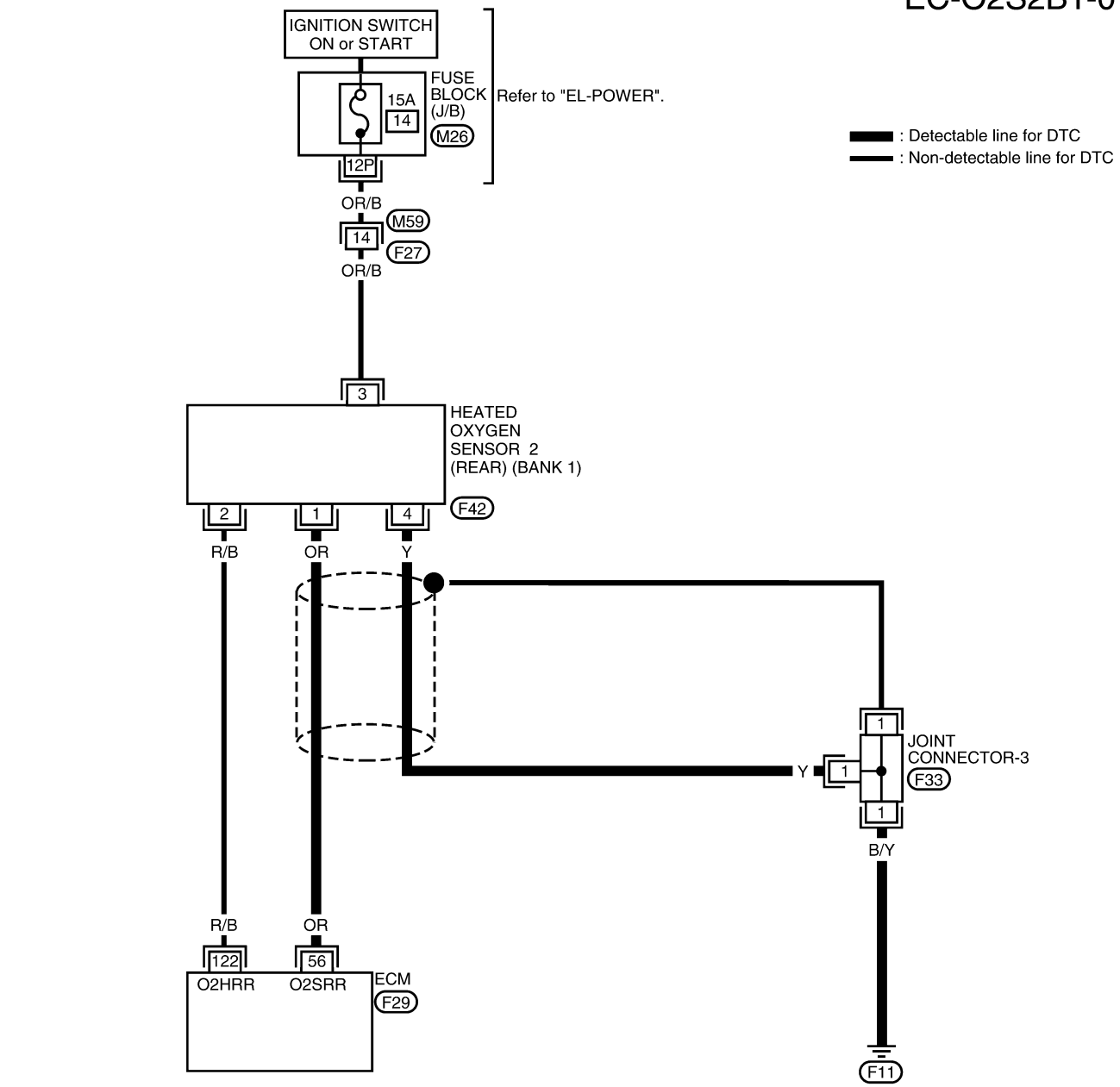

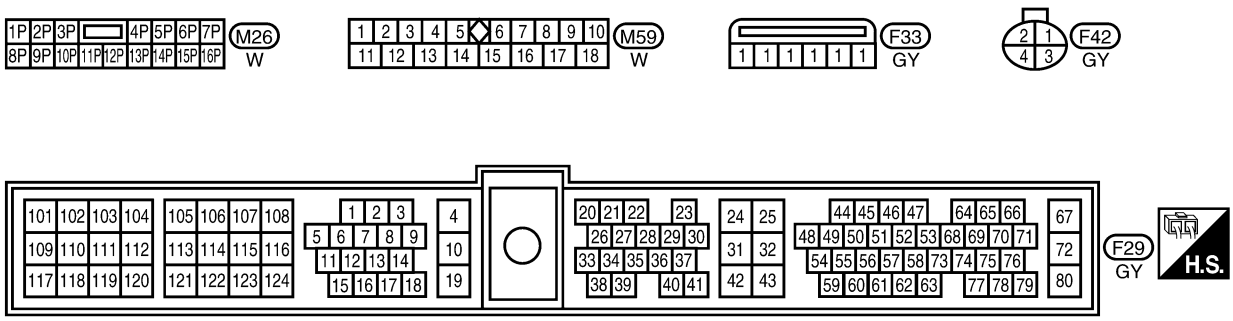

WEC792

LEFT BANK

NEEC0657S02

EC-O2S2B2-01

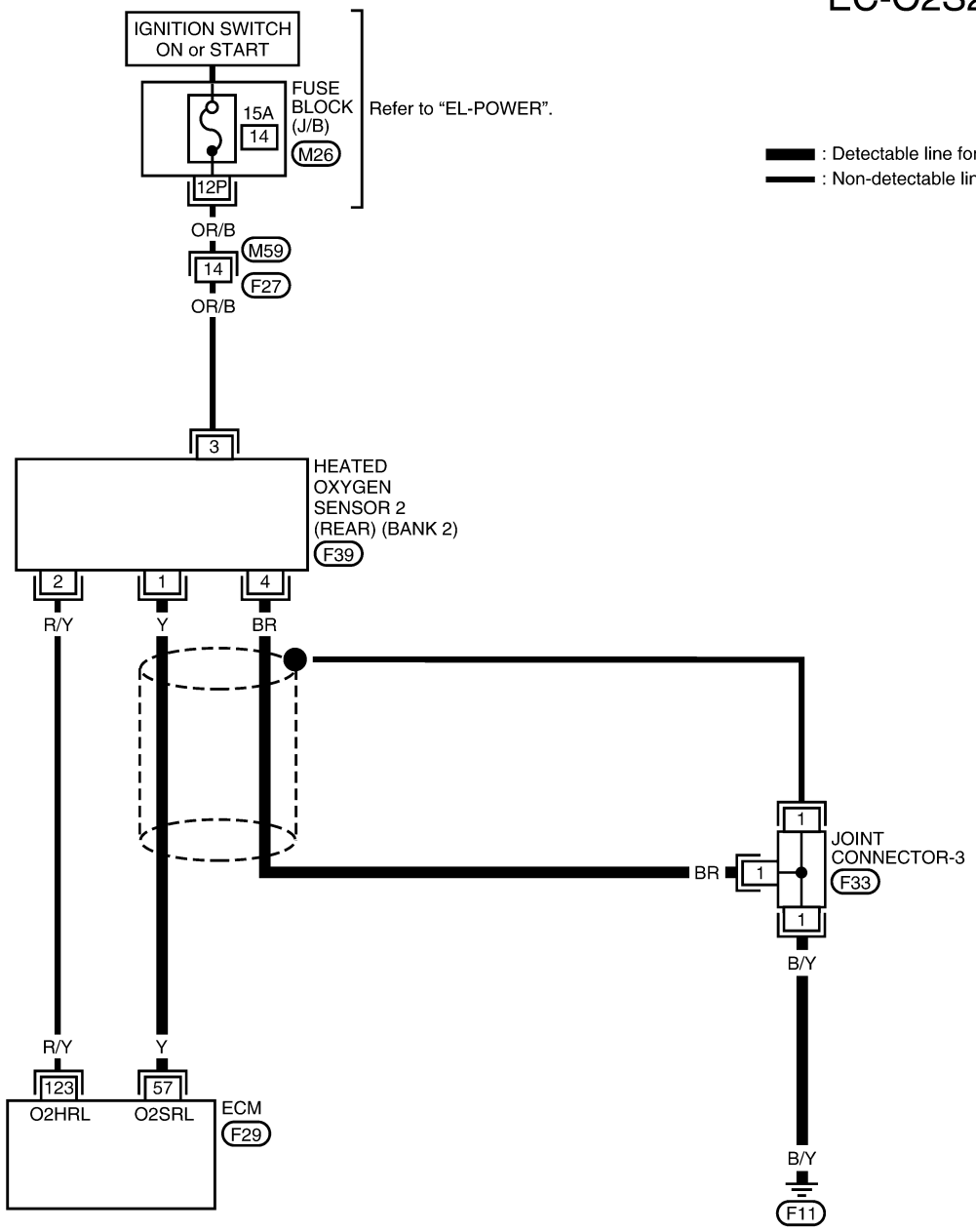

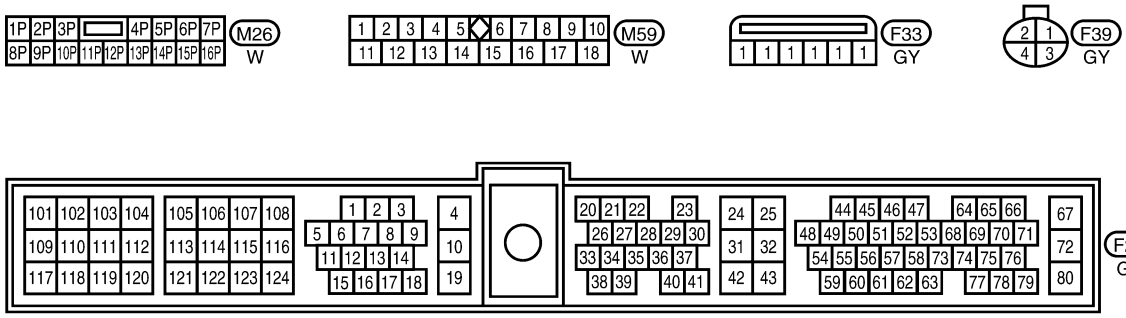

WEC793

Diagnostic Procedure

NEEC0658

1	RETIGHTEN GROUND SCREWS

1. Turn ignition switch OFF.
2. Loosen and retighten engine ground screws.

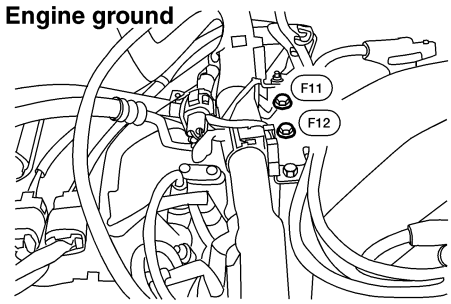

LEC518

	▶	GO TO 2.

2	CLEAR THE SELF-LEARNING DATA

With CONSULT-II

1. Start engine and warm it up to normal operating temperature.
2. Select “SELF-LEARNING CONT” in “WORK SUPPORT” mode with CONSULT-II.
3. Clear the self-learning control coefficient by touching “CLEAR”.

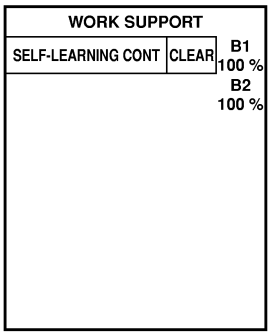

SEF968Y

4. Run engine for at least 10 minutes at idle speed.
   Is the 1st trip DTC P0172 or P0175 detected?
   Is it difficult to start engine?

Without CONSULT-II

1. Start engine and warm it up to normal operating temperature.
2. Turn ignition switch OFF.
3. Disconnect mass air flow sensor harness connector, and restart and run engine for at least 5 seconds at idle speed.
4. Stop engine and reconnect mass air flow sensor harness connector.
5. Make sure 1st trip DTC P0100 is displayed.
6. Erase the 1st trip DTC memory. Refer to “HOW TO ERASE EMISSION-RELATED DIAGNOSTIC INFORMATION”, EC-687.
7. Make sure DTC P0000 is displayed.
8. Run engine for at least 10 minutes at idle speed.
   Is the 1st trip DTC P0172 or P0175 detected?
   Is it difficult to start engine?

Yes or No

Yes	▶	Perform trouble diagnosis for DTC P0172, P0175. Refer to EC-915.
No	▶	GO TO 3.

3 **CHECK HO2S2 (REAR) INPUT SIGNAL CIRCUIT FOR OPEN AND SHORT**

1. Turn ignition switch "OFF".
2. Check heated oxygen sensor 2 (rear) harness protector color.

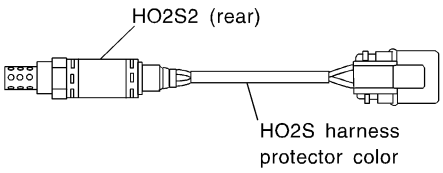

HO2S2 (rear) (bank 1): White or Gray
HO2S2 (rear) (bank 2): Red or Red/Brown

SEF372Z

3. Disconnect corresponding heated oxygen sensor 2 (rear) harness connector.

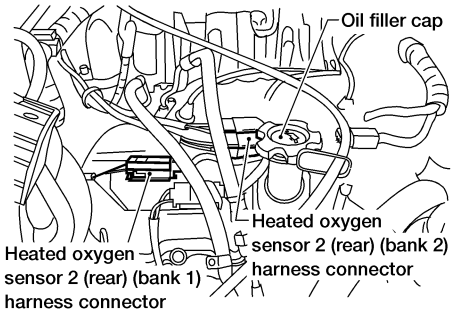

WEC546

4. Disconnect ECM harness connector.
5. Check harness continuity between ECM terminal and HO2S2 (rear) terminal as follows. Refer to Wiring Diagram.

DTC	Terminals		Bank
	ECM	Sensor	
P0137	56	1	Bank 1 (Right)
P0157	57	1	Bank 2 (Left)

MTBL0589

Continuity should exist.

6. Check harness continuity between ECM terminal or HO2S2 (rear) terminal and ground as follows. Refer to Wiring Diagram.

DTC	Terminals		Bank
	ECM or sensor	Ground	
P0137	56 or 1	Ground	Bank 1 (Right)
P0157	57 or 1	Ground	Bank 2 (Left)

MTBL0590

Continuity should not exist.

7. Also check harness for short to power.

OK or NG

OK	▶	GO TO 4.
NG	▶	Repair open circuit or short to ground or short to power in harness or connectors.

Diagnostic Procedure (Cont'd)

4	CHECK HO2S GROUND CIRCUIT FOR OPEN AND SHORT

1. Check harness continuity between HO2S2 (rear) terminal 4 and engine ground.
   Refer to Wiring Diagram.
   Continuity should exist.
2. Also check harness for short to power.

OK or NG

OK (With CONSULT-II)	▶	GO TO 6.
OK (Without CONSULT-II)	▶	GO TO 7.
NG	▶	GO TO 5.

5	DETECT MALFUNCTIONING PART

Check the following.
- Joint connector-3
- Harness for open between heated oxygen sensor 2 (rear) and engine ground.

	▶	Repair open circuit or short to power in harness or connectors.

6	CHECK HEATED OXYGEN SENSOR 2 (REAR)

With CONSULT-II
1. Start engine and drive vehicle at a speed of more than 70 km/h (43 MPH) for 2 consecutive minutes.
2. Stop vehicle with engine running.
3. Select "FUEL INJECTION" in "ACTIVE TEST" mode, and select "HO2S2 (B1)/(B2)" as the monitor item with CONSULT-II.
4. Check "HO2S2 (B1)/(B2)" at idle speed when adjusting "FUEL INJECTION" to ±25%.

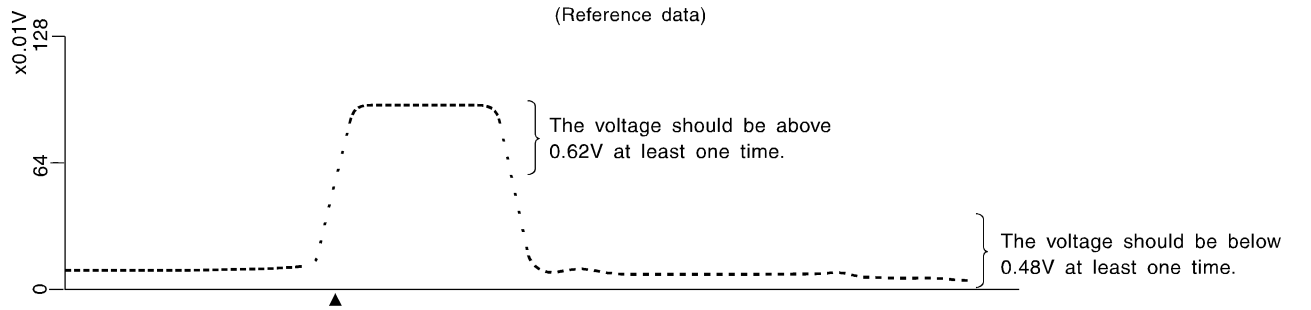

SEF989RD

"HO2S2 (B1)/(B2)" should be above 0.62V at least once when the "FUEL INJECTION" is +25%.
"HO2S2 (B1)/(B2)" should be below 0.48V at least once when the "FUEL INJECTION" is −25%.
CAUTION:
Discard any heated oxygen sensor which has been dropped from a height of more than 0.5 m (19.7 in) onto a hard surface such as a concrete floor; use a new one.

OK or NG

OK	▶	GO TO 9.
NG	▶	GO TO 8.

7	CHECK HEATED OXYGEN SENSOR 2 (REAR)

Without CONSULT-II

1. Start engine and drive vehicle at a speed of more than 70 km/h (43 MPH) for 2 consecutive minutes.
2. Stop vehicle with engine running.
3. Set voltmeter probes between ECM terminal 56 (bank 1 signal) or 57 (bank 2 signal) and engine ground.
4. Check the voltage when racing up to 4,000 rpm under no load at least 10 times.
   (depress and release accelerator pedal as soon as possible)

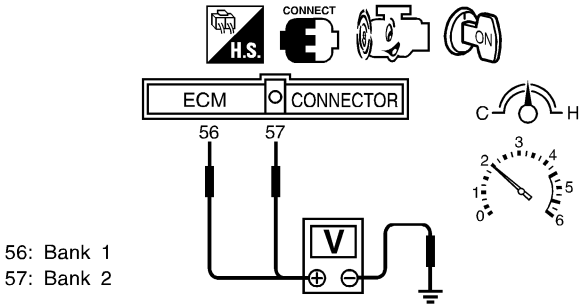

56: Bank 1
57: Bank 2

The voltage should be above 0.62V at least once during this procedure.

SEF797ZB

5. Keep vehicle at idling for 10 minutes, then check the voltage. Or check the voltage when coasting from 80 km/h (50 MPH) in 3rd gear position (M/T), "D" position with "O/D" OFF (A/T).
   The voltage should be below 0.48V at least once during this procedure.

CAUTION:
Discard any heated oxygen sensor which has been dropped from a height of more than 0.5 m (19.7 in) onto a hard surface such as a concrete floor; use a new one.

OK or NG

OK	▶	GO TO 9.
NG	▶	GO TO 8.

8	REPLACE HEATED OXYGEN SENSOR 2 (REAR)

1. Stop vehicle and turn ignitioin switch OFF.
2. Check heated oxygen sensor 2 (rear) harness protector color.

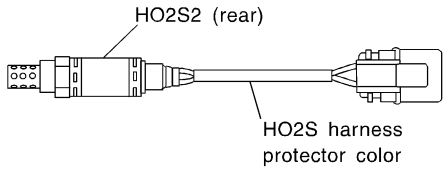

HO2S2 (rear) (bank 1): White or Gray
HO2S2 (rear) (bank 2): Red or Red/Brown

SEF372Z

CAUTION:
Before installing new oxygen sensor, clean exhaust system threads using Oxygen Sensor Thread Cleaner tool J-43897-18 or J-43897-12 and approved anti-seize lubricant.

	▶	Replace malfunctioning heated oxygen sensor 2 (rear).

Diagnostic Procedure (Cont'd)

9	CHECK HO2S2 (REAR) SHIELD CIRCUIT FOR OPEN AND SHORT	
1. Turn ignition switch OFF. 2. Disconnect joint connector-3. 3. Check the following. ● Continuity between joint connector terminal 1 and ground ● Joint connector (Refer to ***EL-238***, "HARNESS LAYOUT".) **Continuity should exist.** 4. Also check harness for short to power. 5. Then reconnect joint connector-3.		
OK or NG		
OK	▶	GO TO 10.
NG	▶	Repair open circuit or short to power in harness or connectors.

10	CHECK INTERMITTENT INCIDENT
Refer to "TROUBLE DIAGNOSIS FOR INTERMITTENT INCIDENT", EC-753.	
▶	**INSPECTION END**

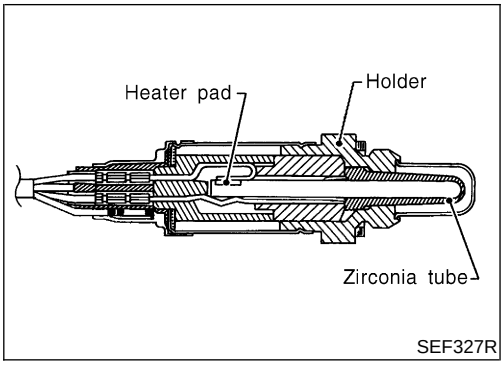

Component Description

NEEC0659

The heated oxygen sensor 2 (rear), after three way catalyst, monitors the oxygen level in the exhaust gas on each bank.
Even if switching characteristics of the heated oxygen sensor 1 (front) are shifted, the air fuel ratio is controlled to stoichiometric, by the signal from the heated oxygen sensor 2 (rear).
This sensor is made of ceramic zirconia. The zirconia generates voltage from approximately 1V in richer conditions to 0V in leaner conditions.
Under normal conditions the heated oxygen sensor 2 (rear) is not used for engine control operation.

CONSULT-II Reference Value in Data Monitor Mode

NEEC0660

Specification data are reference values.

MONITOR ITEM	CONDITION		SPECIFICATION
HO2S2 (B1) HO2S2 (B2)	● Engine: After warming up	Revving engine from idle up to 2,000 rpm	0 - 0.3V ⟷ Approx. 0.6 - 1.0V
HO2S2 MNTR (B1) HO2S2 MNTR (B2)			LEAN ⟷ RICH

ECM Terminals and Reference Value

NEEC0661

Specification data are reference values and are measured between each terminal and ground.

CAUTION:
Do not use ECM ground terminals when measuring input/output voltage. Doing so may result in damage to the ECM's transistor. Use a ground other than the ECM terminals, such as the ground.

TERMINAL NO.	WIRE COLOR	ITEM	CONDITION	DATA (DC Voltage)
56	OR	Heated oxygen sensor 2 (rear) (bank 1)	**[Engine is running]** ● **Warm-up condition** ● Revving engine from idle up to 2,000 rpm	0 - Approximately 1.0V
57	Y	Heated oxygen sensor 2 (rear) (bank 2)		

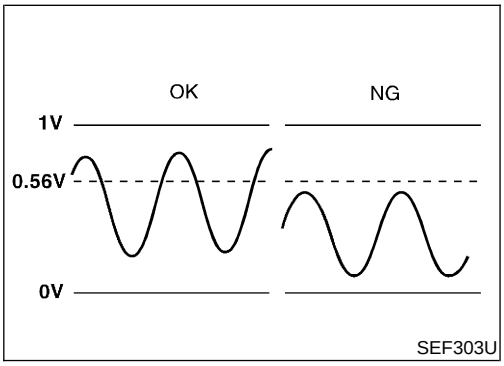

On Board Diagnosis Logic

NEEC0662

The heated oxygen sensor 2 (rear) has a much longer switching time between rich and lean than the heated oxygen sensor 1 (front). The oxygen storage capacity before the three way catalyst causes the longer switching time. To judge the malfunctions of heated oxygen sensor 2 (rear), ECM monitors whether the maximum voltage of the sensor is sufficiently high during the various driving condition such as fuel-cut.
Malfunction is detected when the maximum voltage from the sensor is not reached to the specified voltage.

POSSIBLE CAUSE

NEEC0662S01

- Harness or connectors
  (The sensor circuit is open or shorted.)
- Heated oxygen sensor 2 (rear)
- Fuel pressure
- Injectors
- Intake air leaks

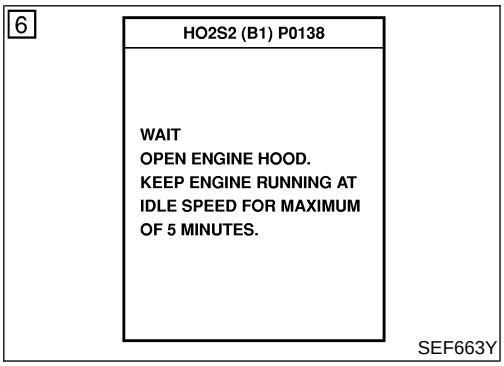

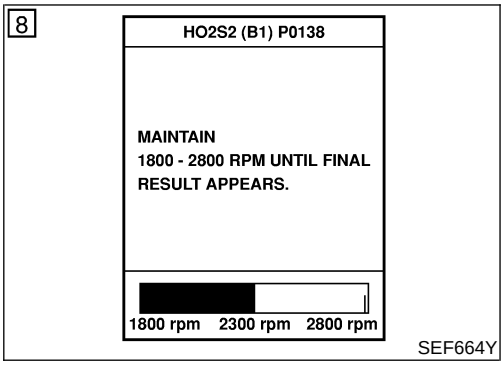

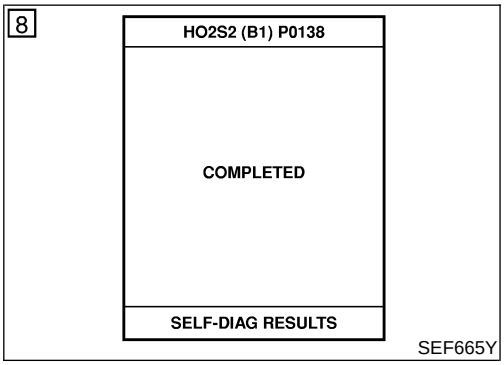

DTC Confirmation Procedure

NEEC0663

NOTE:
If "DIAGNOSTIC TROUBLE CODE CONFIRMATION PROCEDURE" has been previously conducted, always turn ignition switch OFF and wait at least 5 seconds before conducting the next test.

TESTING CONDITION:
Open engine hood before conducting following procedure
With CONSULT-II

1) Start engine and warm it up to normal operating temperature.
2) Turn ignition switch OFF and wait at least 5 seconds.
3) Turn ignition switch ON.
4) Select "DATA MONITOR" mode with CONSULT-II.
5) Make sure that "COOLANT TEMP/S" is more than 70°C (158°F).
6) Select "HO2S2 (B1)/(B2), P0138/P0158" of "HO2S2" in DTC WORK SUPPORT" mode with CONSULT-II.
7) Start engine and follow the instructions of CONSULT-II.
8) Make sure that "OK" is displayed after touching "SELF-DIAG RESULTS".
   If NG is displayed, refer to "DIAGNOSTIC PROCEDURE", EC-872.
   If "CAN NOT BE DIAGNOSED" is displayed, perform the following.

a) Stop engine and cool down "COOLANT TEMP/S" to less than 70°C (158°F).
b) Turn ignition switch ON.
c) Select "DATA MONITOR" mode with CONSULT-II.
d) Start engine.
e) Perform from step 6) again when the "COOLANT TEMP/S" reaches to 70°C (158°F)

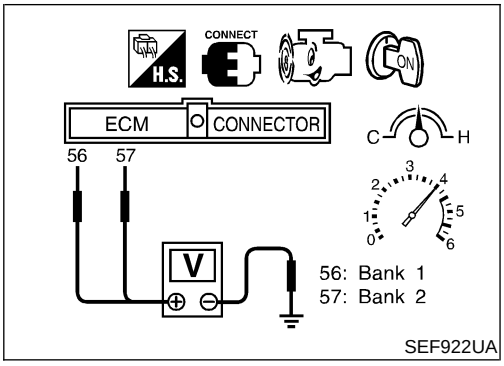

Overall Function Check

=NEEC0664

Use this procedure to check the overall function of the heated oxygen sensor 2 (rear) circuit. During this check, a 1st trip DTC might not be confirmed.

CAUTION:

Always drive vehicle at a safe speed.

Without CONSULT-II

1) Start engine and drive vehicle at a speed of more than 70 km/h (43 MPH) for 2 consecutive minutes.
2) Stop vehicle with engine running.
3) Set voltmeter probes between ECM terminal 56 (bank 1 signal) or 57 (bank 2 signal) and engine ground.
4) Check the voltage when racing up to 4,000 rpm under no load at least 10 times.
   (depress and release accelerator pedal as soon as possible)
   The voltage should be above 0.62V at least once during this procedure.
   If the voltage can be confirmed in step 4, step 5 is not necessary.
5) Keep vehicle at idling for 10 minutes, then check the voltage. Or check the voltage when coasting from 80 km/h (50 MPH) in 3rd gear position (M/T), “D” position with “O/D” OFF (A/T).
   The voltage should be above 0.62V at least once during this procedure.
6) If NG, go to “Diagnostic Procedure”, EC-872.

Wiring Diagram

NEEC0665

RIGHT BANK

NEEC0665S01

EC-O2S2B1-01

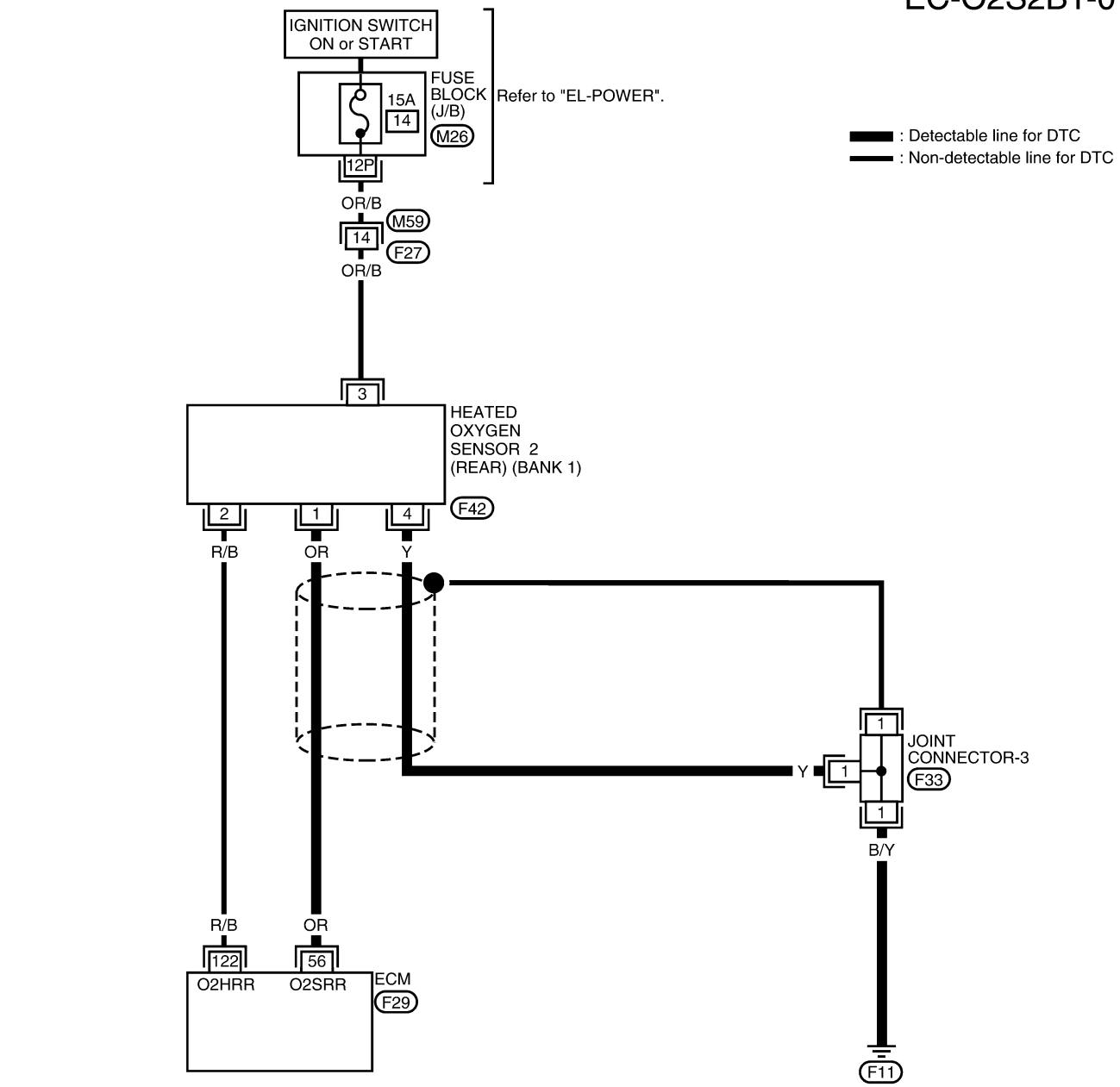

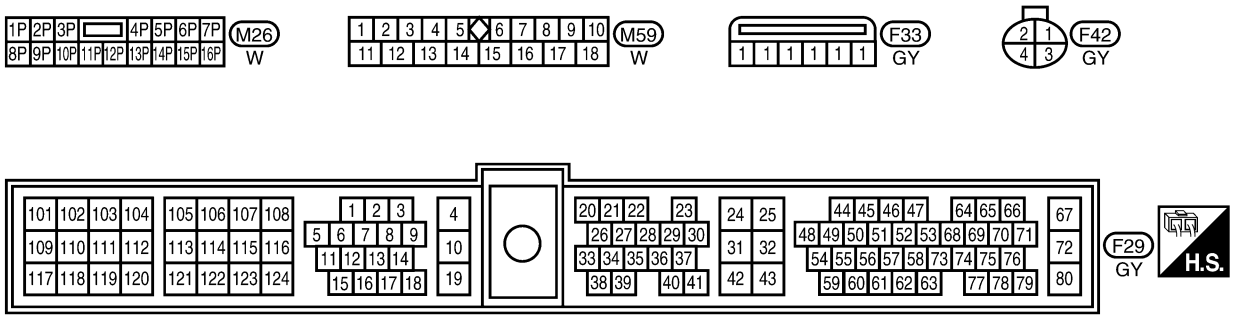

WEC792

LEFT BANK

NEEC0665S02

EC-O2S2B2-01

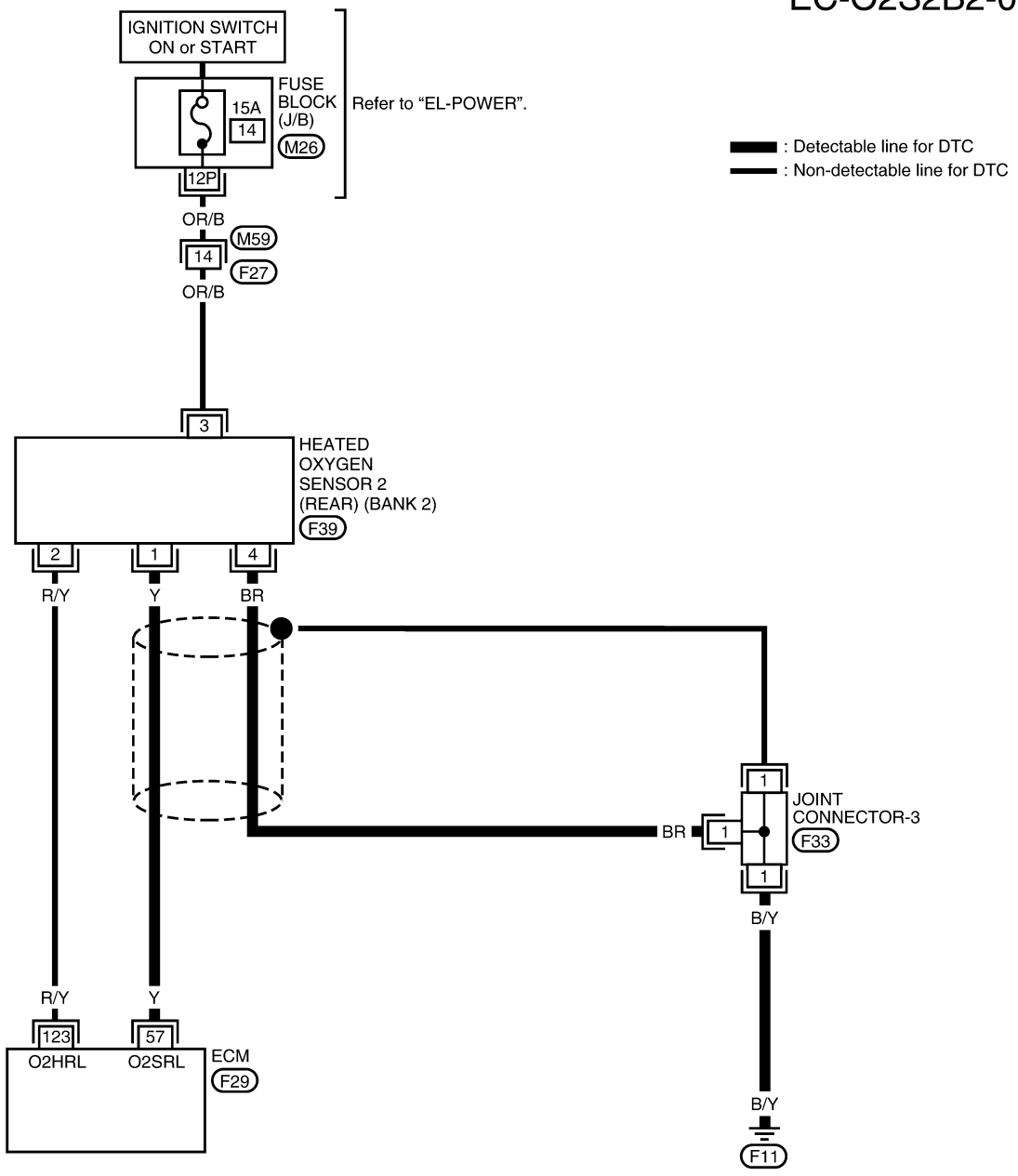

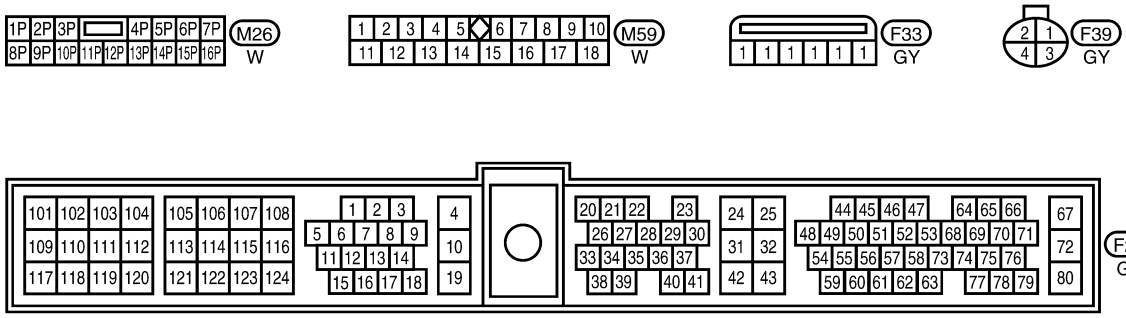

WEC793

Diagnostic Procedure

NEEC0666

1	RETIGHTEN GROUND SCREWS

1. Turn ignition switch OFF.
2. Loosen and retighten engine ground screws.

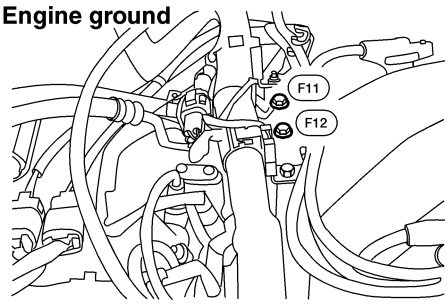

LEC518

	▶	GO TO 2.

2	CLEAR THE SELF-LEARNING DATA

With CONSULT-II

1. Start engine and warm it up to normal operating temperature.
2. Select “SELF-LEARNING CONT” in “WORK SUPPORT” mode with CONSULT-II.
3. Clear the self-learning control coefficient by touching “CLEAR”.

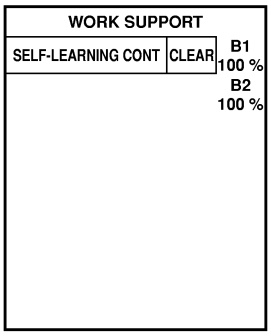

SEF968Y

4. Run engine for at least 10 minutes at idle speed.
   Is the 1st trip DTC P0171 or P0174 detected?
   Is it difficult to start engine?

Without CONSULT-II

1. Start engine and warm it up to normal operating temperature.
2. Turn ignition switch OFF.
3. Disconnect mass air flow sensor harness connector, and restart and run engine for at least 5 seconds at idle speed.
4. Stop engine and reconnect mass air flow sensor harness connector.
5. Make sure 1st trip DTC P0100 is displayed.
6. Erase the 1st trip DTC memory. Refer to “HOW TO ERASE EMISSION-RELATED DIAGNOSTIC INFORMATION”, EC-687.
7. Make sure DTC P0000 is displayed.
8. Run engine for at least 10 minutes at idle speed.
   Is the 1st trip DTC P0171 or P0174 detected?
   Is it difficult to start engine?

Yes or No

Yes	▶	Perform trouble diagnosis for DTC P0171, P0174. Refer to EC-906.
No	▶	GO TO 3.

3 **CHECK HO2S2 (REAR) INPUT SIGNAL CIRCUIT FOR OPEN AND SHORT**

1. Turn ignition switch "OFF".
2. Check heated oxygen sensor 2 (rear) harness protector color.

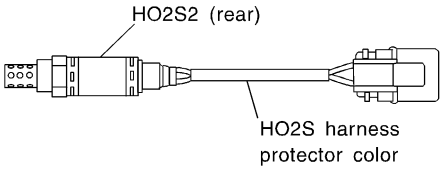

HO2S2 (rear) (bank 1): White or Gray
HO2S2 (rear) (bank 2): Red or Red/Brown

SEF372Z

3. Disconnect corresponding heated oxygen sensor 2 (rear) harness connector.
4. Disconnect ECM harness connector.
5. Check harness continuity between ECM terminal and HO2S2 (rear) terminal as follows. Refer to Wiring Diagram.

DTC	Terminals		Bank
	ECM	Sensor	
P0138	56	1	Bank 1 (Right)
P0158	57	1	Bank 2 (Left)

SEF824Z

Continuity should exist.

6. Check harness continuity between ECM terminal or HO2S2 (rear) terminal and ground as follows. Refer to Wiring Diagram.

DTC	Terminals		Bank
	ECM or sensor	Ground	
P0138	56 or 1	Ground	Bank 1 (Right)
P0158	57 or 1	Ground	Bank 2 (Left)

SEF825Z

Continuity should not exist.

7. Also check harness for short to power.

OK or NG

OK	▶	GO TO 4.
NG	▶	Repair open circuit or short to ground or short to power in harness or connectors.

Diagnostic Procedure (Cont'd)

4	CHECK HO2S2 (REAR) GROUND CIRCUIT FOR OPEN AND SHORT

1. Check harness continuity between HO2S2 terminal 4 and engine ground.
   Refer to Wiring Diagram.
   Continuity should exist.
2. Also check harness for short to power.

OK or NG

OK (With CONSULT-II)	▶	GO TO 6.
OK (Without CONSULT-II)	▶	GO TO 7.
NG	▶	GO TO 5.

5	DETECT MALFUNCTIONING PART

Check the following.
- Joint connector-3
- Harness for open between heated oxygen sensor 2 (rear) and engine ground.

	▶	Repair open circuit or short to power in harness or connectors.

6	CHECK HEATED OXYGEN SENSOR 2 (REAR)

With CONSULT-II
1. Start engine and drive vehicle at a speed of more than 70 km/h (43 MPH) for 2 consecutive minutes.
2. Stop vehicle with engine running.
3. Select "FUEL INJECTION" in "ACTIVE TEST" mode, and select "HO2S2 (B1)/(B2)" as the monitor item with CONSULT-II.
4. Check "HO2S2 (B1)/(B2)" at idle speed when adjusting "FUEL INJECTION" to ±25%.

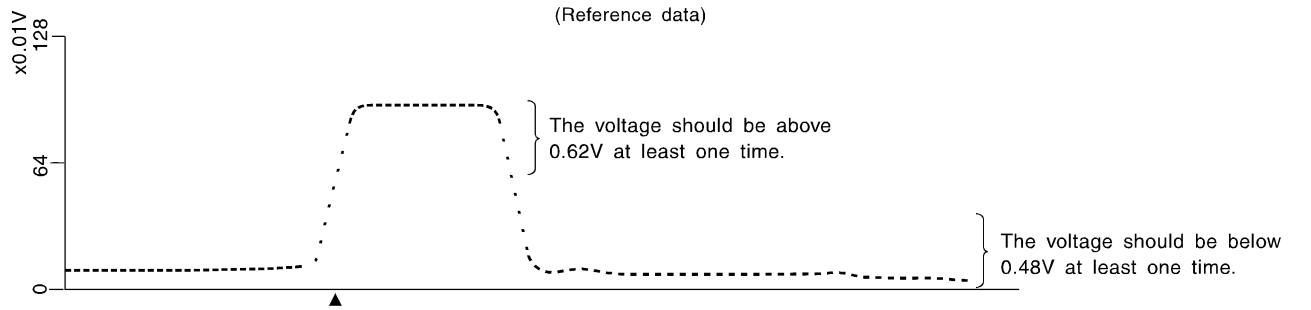

SEF989RD

"HO2S2 (B1)/(B2)" should be above 0.62V at least once when the "FUEL INJECTION" is +25%.
"HO2S2 (B1)/(B2)" should be below 0.48V at least once when the "FUEL INJECTION" is −25%.

CAUTION:
- **Discard any heated oxygen sensor which has been dropped from a height of more than 0.5 m (19.7 in) onto a hard surface such as a concrete floor; use a new one.**
- **Before installing new oxygen sensor, clean exhaust system threads using Oxygen Sensor Thread Cleaner tool J-43897-18 or J-43897-12 and approved anti-seize lubricant.**

OK or NG

OK	▶	GO TO 9.
NG	▶	GO TO 8.

7	CHECK HEATED OXYGEN SENSOR 2 (REAR)

Without CONSULT-II

1. Start engine and drive vehicle at a speed of more than 70 km/h (43 MPH) for 2 consecutive minutes.
2. Stop vehicle with engine running.
3. Set voltmeter probes between ECM terminal 56 (bank 1 signal) or 57 (bank 2 signal) and engine ground.
4. Check the voltage when racing up to 4,000 rpm under no load at least 10 times.
   (depress and release accelerator pedal as soon as possible)

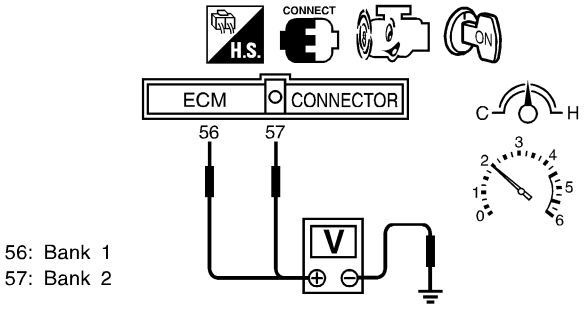

56: Bank 1
57: Bank 2

The voltage should be above 0.62V at least once during this procedure.

SEF797ZB

5. Keep vehicle at idling for 10 minutes, then check the voltage. Or check the voltage when coasting from 80 km/h (50 MPH) in 3rd gear position (M/T), "D" position with "O/D" OFF (A/T).
   The voltage should be below 0.48V at least once during this procedure.

CAUTION:
Discard any heated oxygen sensor which has been dropped from a height of more than 0.5 m (19.7 in) onto a hard surface such as a concrete floor; use a new one.

OK or NG

OK	▶	GO TO 9.
NG	▶	GO TO 8.

8	REPLACE HEATED OXYGEN SENSOR 2 (REAR)

1. Stop vehicle and turn ignitioin switch OFF.
2. Check heated oxygen sensor 2 (rear) harness protector color.

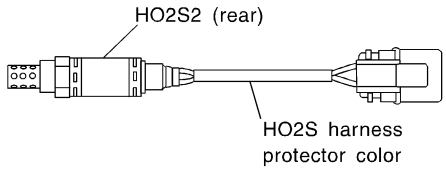

HO2S2 (rear) (bank 1): White or Gray
HO2S2 (rear) (bank 2): Red or Red/Brown

SEF372Z

CAUTION:
Before installing new oxygen sensor, clean exhaust system threads using Oxygen Sensor Thread Cleaner tool J-43897-18 or J-43897-12 and approved anti-seize lubricant.

	▶	Replace malfunctioning heated oxygen sensor 2 (rear).

Diagnostic Procedure (Cont'd)

9	CHECK HO2S2 (REAR) SHIELD CIRCUIT FOR OPEN AND SHORT

1. Turn ignition switch OFF.
2. Disconnect joint connector.
3. Check the following.

- Continuity between joint connector terminal 1 and ground
- Joint connector

(Refer to ***EL-238***, "HARNESS LAYOUT".)

Continuity should exist.

4. Also check harness for short to power.
5. Then reconnect joint connector.

OK or NG

OK	▶	GO TO 10.
NG	▶	Repair open circuit or short to power in harness or connectors.

10	CHECK INTERMITTENT INCIDENT

Refer to "TROUBLE DIAGNOSIS FOR INTERMITTENT INCIDENT", EC-753.

▶ **INSPECTION END**

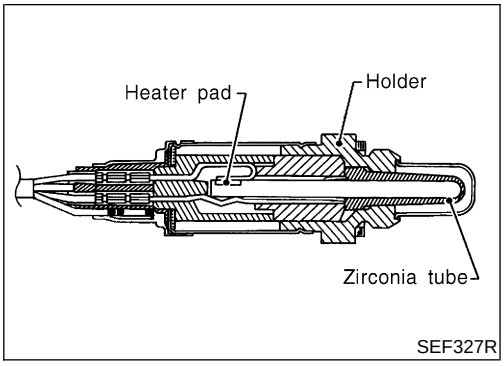

Component Description

NEEC0667

The heated oxygen sensor 2 (rear), after three way catalyst, monitors the oxygen level in the exhaust gas on each bank.
Even if switching characteristics of the heated oxygen sensor 1 (front) are shifted, the air fuel ratio is controlled to stoichiometric, by the signal from the heated oxygen sensor 2 (rear).
This sensor is made of ceramic zirconia. The zirconia generates voltage from approximately 1V in richer conditions to 0V in leaner conditions.
Under normal conditions the heated oxygen sensor 2 (rear) is not used for engine control operation.

CONSULT-II Reference Value in Data Monitor Mode

NEEC0668

Specification data are reference values.

MONITOR ITEM	CONDITION		SPECIFICATION
HO2S2 (B1) HO2S2 (B2)	● Engine: After warming up	Revving engine from idle up to 2,000 rpm	0 - 0.3V ⟷ Approx. 0.6 - 1.0V
HO2S2 MNTR (B1) HO2S2 MNTR (B2)			LEAN ⟷ RICH

ECM Terminals and Reference Value

NEEC0669

Specification data are reference values and are measured between each terminal and ground.

CAUTION:
Do not use ECM ground terminals when measuring input/output voltage. Doing so may result in damage to the ECM's transistor. Use a ground other than the ECM terminals, such as the ground.

TERMINAL NO.	WIRE COLOR	ITEM	CONDITION	DATA (DC Voltage)
56	OR	Heated oxygen sensor 2 (rear) (bank 1)	**[Engine is running]** ● Revving engine from idle up to 2,000 rpm	0 - Approximately 1.0V
57	Y	Heated oxygen sensor 2 (rear) (bank 2)		

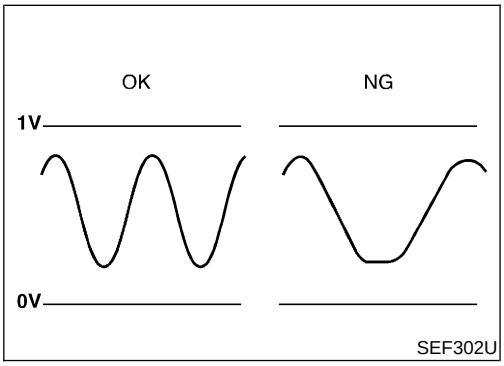

On Board Diagnosis Logic

NEEC0670

The heated oxygen sensor 2 (rear) has a much longer switching time between rich and lean than the heated oxygen sensor 1 (front). The oxygen storage capacity before the three way catalyst causes the longer switching time. To judge the malfunctions of heated oxygen sensor 2 (rear), ECM monitors whether the switching response of the sensor's voltage is faster than specified during the various driving condition such as fuel-cut.
Malfunction is detected when it takes more time for the sensor to respond between rich and lean than the specified time.

POSSIBLE CAUSE

NEEC0670S01

- Harness or connectors
  (The sensor circuit is open or shorted.)
- Heated oxygen sensor 2 (rear)
- Fuel pressure
- Injectors
- Intake air leaks

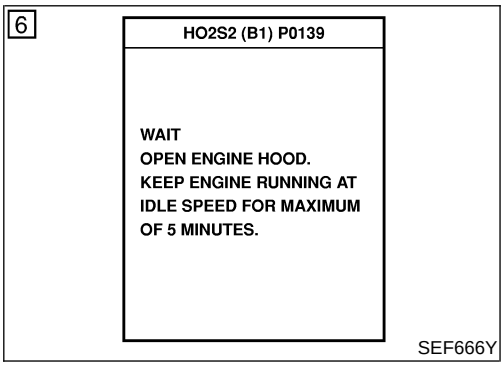

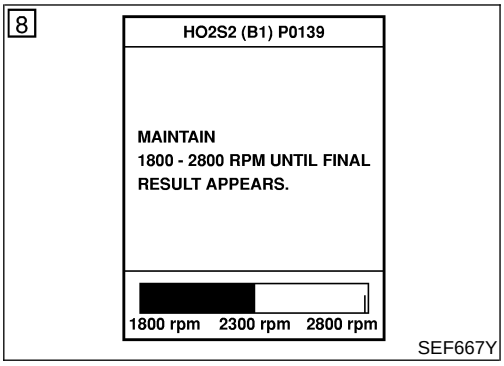

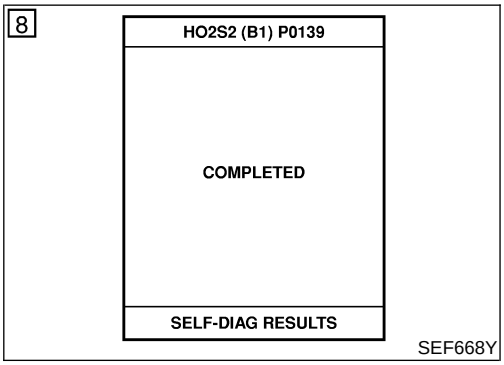

DTC Confirmation Procedure

NEEC0671

NOTE:
If "DIAGNOSTIC TROUBLE CODE CONFIRMATION PROCEDURE" has been previously conducted, always turn ignition switch OFF and wait at least 5 seconds before conducting the next test.

TESTING CONDITION:
Open engine hood before conducting following procedure
With CONSULT-II

1) Start engine and warm it up to normal operating temperature.
2) Turn ignition switch OFF and wait at least 5 seconds.
3) Turn ignition switch ON.
4) Select "DATA MONITOR" mode with CONSULT-II.
5) Make sure that "COOLANT TEMP/S" is more than 70°C (158°F).
6) Select "HO2S2 (B1)/(B2) P0139/P0159" of "HO2S2" in DTC WORK SUPPORT" mode with CONSULT-II.
7) Start engine and follow the instructions of CONSULT-II.
8) Make sure that "OK" is displayed after touching "SELF-DIAG RESULTS".
   If NG is displayed, refer to "DIAGNOSTIC PROCEDURE", EC-882.
   If "CAN NOT BE DIAGNOSED" is displayed, perform the following.

a) Stop engine and cool down "COOLANT TEMP/S" to less than 70°C (158°F).
b) Turn ignition switch ON.
c) Select "DATA MONITOR" mode with CONSULT-II.
d) Start engine.
e) Perform from step 6) again when the "COOLANT TEMP/S" reaches to 70°C (158°F)

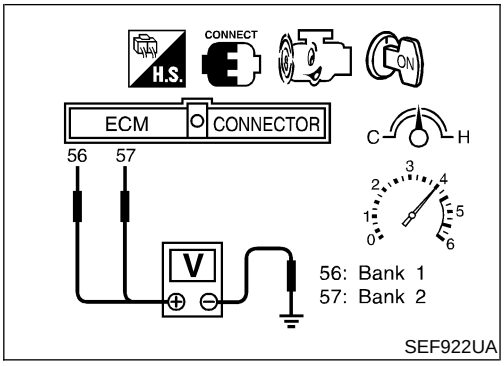

Overall Function Check

=NEEC0672

Use this procedure to check the overall function of the heated oxygen sensor 2 (rear) circuit. During this check, a 1st trip DTC might not be confirmed.

CAUTION:

Always drive vehicle at a safe speed.

Without CONSULT-II

1) Start engine and drive vehicle at a speed of more than 70 km/h (43 MPH) for 2 consecutive minutes.
2) Stop vehicle with engine running.
3) Set voltmeter probes between ECM terminal 56 (bank 1 signal) or 57 (bank 2 signal) and engine ground.
4) Check the voltage when racing up to 4,000 rpm under no load at least 10 times.
   (depress and release accelerator pedal as soon as possible)
   The voltage should change at more than 0.06V for 1 second during this procedure.
   If the voltage can be confirmed in step 4, step 5 is not necessary.
5) Keep vehicle at idling for 10 minutes, then check the voltage. Or check the voltage when coasting from 80 km/h (50 MPH) in 3rd gear position (M/T), “D” position with “O/D” OFF (A/T).
   The voltage should change at more than 0.06V for 1 second during this procedure.
6) If NG, go to “Diagnostic Procedure”, EC-882.

Wiring Diagram

NEEC0673

RIGHT BANK

NEEC0673S01

EC-O2S2B1-01

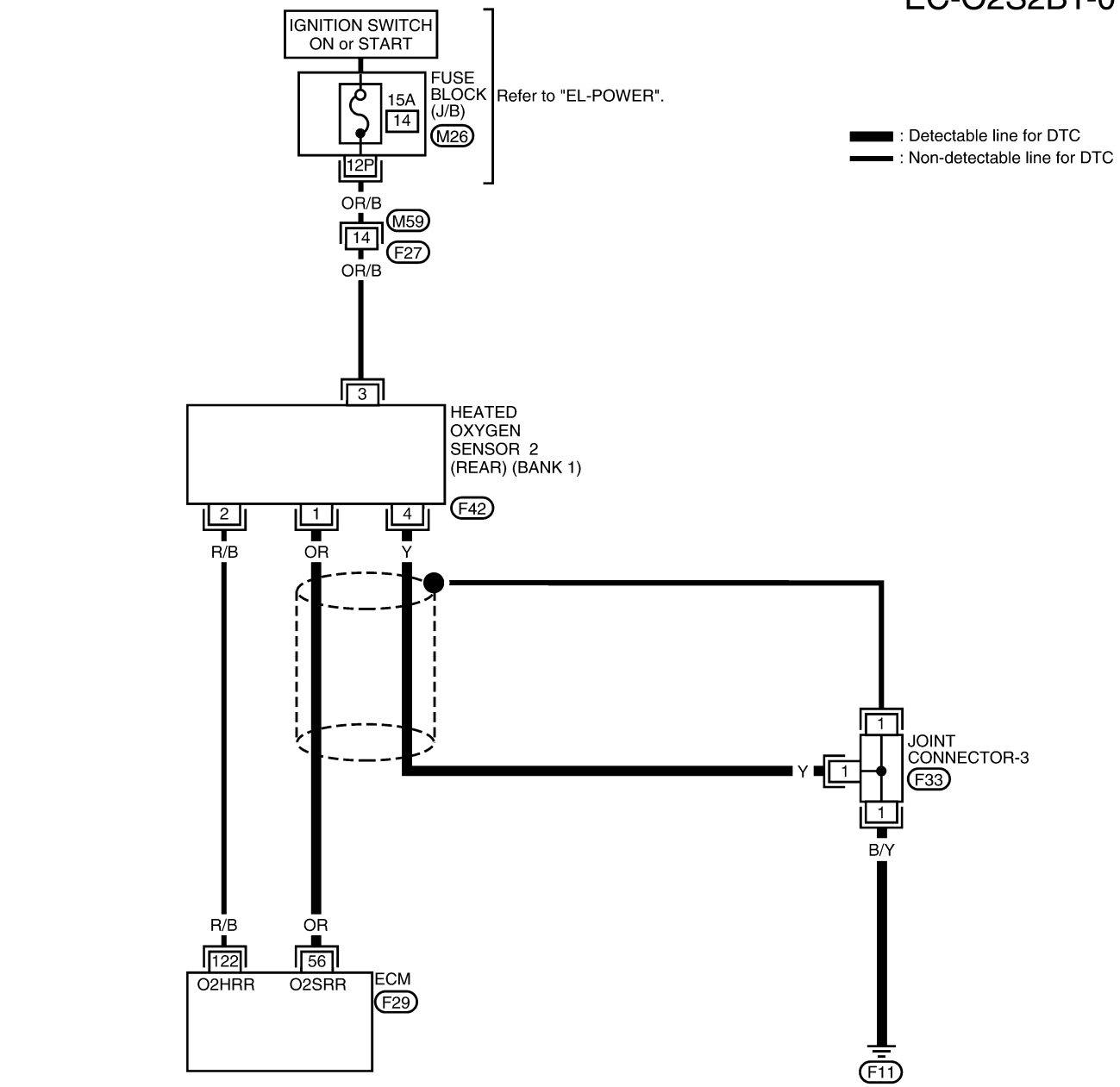

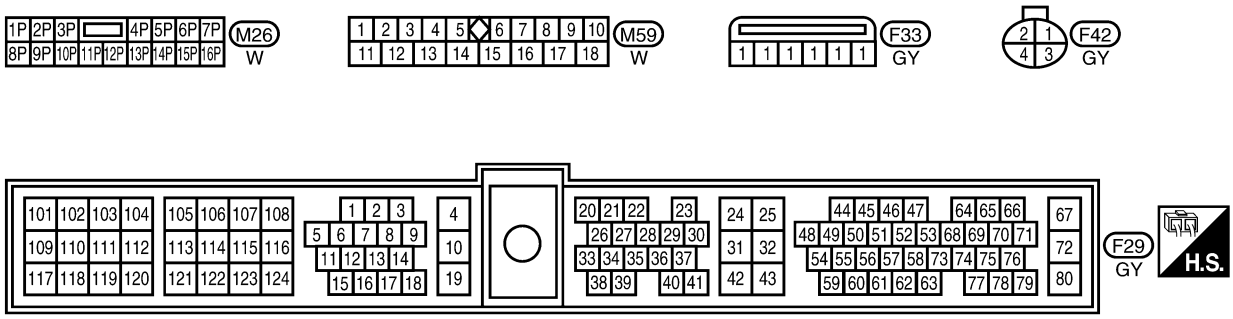

WEC792

LEFT BANK

NEEC0673S02

EC-O2S2B2-01

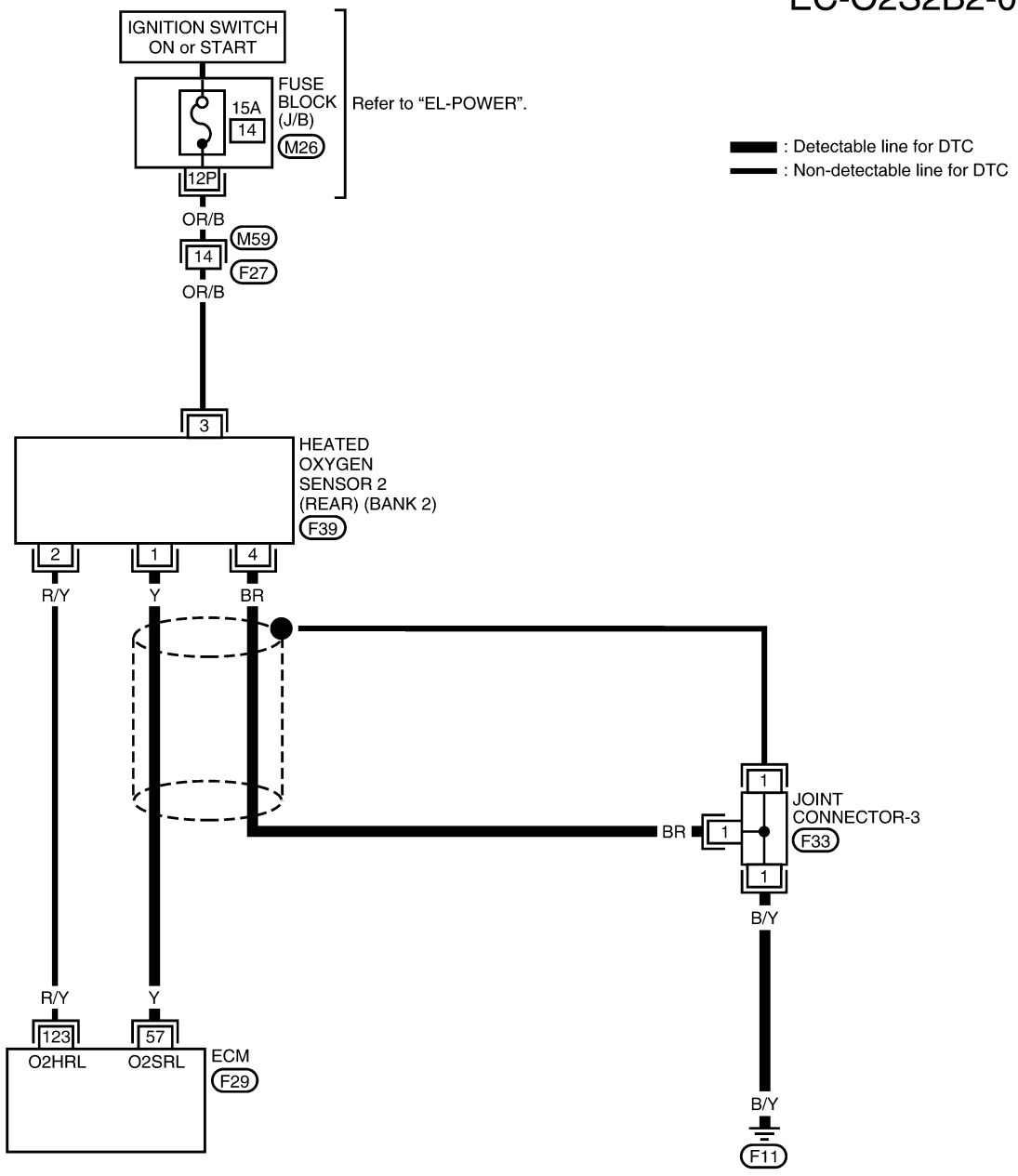

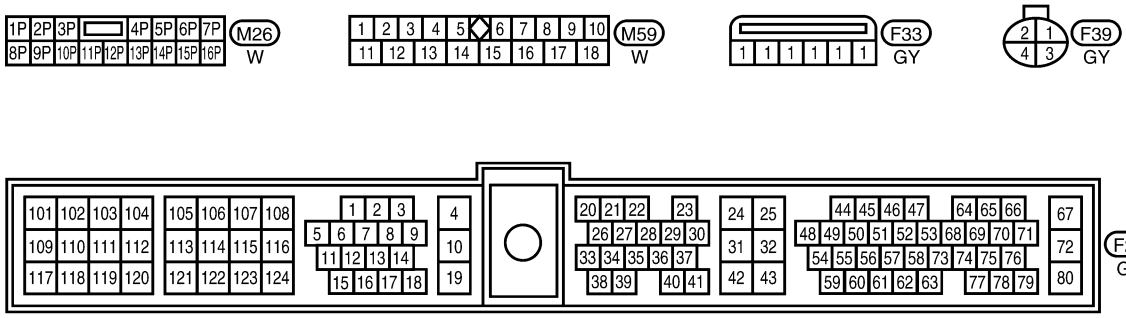

WEC793

Diagnostic Procedure

NEEC0674

1	RETIGHTEN GROUND SCREWS

1. Turn ignition switch OFF.
2. Loosen and retighten engine ground screws.

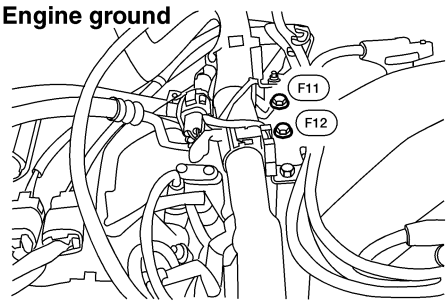

LEC518

	▶	GO TO 2.

2	CLEAR THE SELF-LEARNING DATA

With CONSULT-II

1. Start engine and warm it up to normal operating temperature.
2. Select “SELF-LEARNING CONT” in “WORK SUPPORT” mode with CONSULT-II.
3. Clear the self-learning control coefficient by touching “CLEAR”.

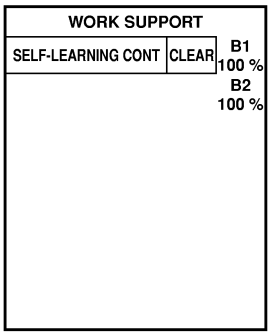

SEF968Y

4. Run engine for at least 10 minutes at idle speed.
   Is the 1st trip DTC P0171, P0172, P0174 or P0175 detected?
   Is it difficult to start engine?

Without CONSULT-II

1. Start engine and warm it up to normal operating temperature.
2. Turn ignition switch OFF.
3. Disconnect mass air flow sensor harness connector, and restart and run engine for at least 5 seconds at idle speed.
4. Stop engine and reconnect mass air flow sensor harness connector.
5. Make sure 1st trip DTC P0100 is displayed.
6. Erase the 1st trip DTC memory. Refer to “HOW TO ERASE EMISSION-RELATED DIAGNOSTIC INFORMATION”, EC-687.
7. Make sure DTC P0000 is displayed.
8. Run engine for at least 10 minutes at idle speed.
   Is the 1st trip DTC P0171, P0172, P0174 or P0175 detected?
   Is it difficult to start engine?

Yes or No

Yes	▶	Perform trouble diagnosis for DTC P0171, P0174 or P0172, P0175. Refer to EC-905, 914.
No	▶	GO TO 3.

3 **CHECK HO2S2 (REAR) INPUT SIGNAL CIRCUIT FOR OPEN AND SHORT**

1. Turn ignition switch "OFF".
2. Check heated oxygen sensor 2 (rear) harness protector color.

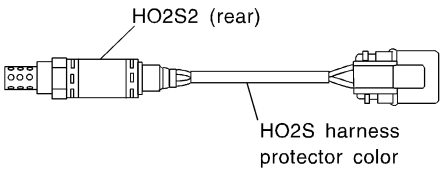

HO2S2 (rear) (bank 1): White or Gray
HO2S2 (rear) (bank 2): Red or Red/Brown

SEF372Z

3. Disconnect corresponding heated oxygen sensor 2 (rear) harness connector.

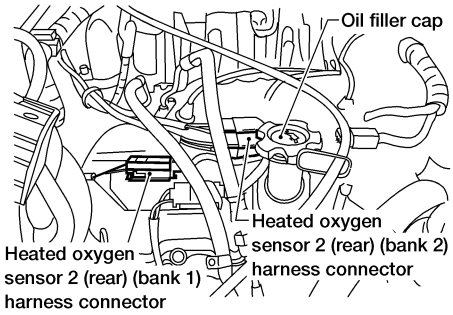

WEC546

4. Disconnect ECM harness connector.
5. Check harness continuity between ECM terminal and HO2S2 (rear) terminal as follows. Refer to Wiring Diagram.

DTC	Terminals		Bank
	ECM	Sensor	
P0139	56	1	Bank 1 (Right)
P0159	57	1	Bank 2 (Left)

MTBL0591

Continuity should exist.

6. Check harness continuity between ECM terminal or HO2S2 (rear) terminal and ground as follows. Refer to Wiring Diagram.

DTC	Terminals		Bank
	ECM or sensor	Ground	
P0139	56 or 1	Ground	Bank 1 (Right)
P0159	57 or 1	Ground	Bank 2 (Left)

MTBL0592

Continuity should not exist.

7. Also check harness for short to power.

OK or NG

OK	▶	GO TO 4.
NG	▶	Repair open circuit or short to ground or short to power in harness or connectors.

Diagnostic Procedure (Cont'd)

4	CHECK HO2S2 (REAR) GROUND CIRCUIT FOR OPEN AND SHORT

1. Check harness continuity between HO2S2 (rear) terminal 4 and engine ground. Refer to Wiring Diagram.
   Continuity should exist.
2. Also check harness for short to power.

OK or NG

OK (With CONSULT-II)	▶	GO TO 6.
OK (Without CONSULT-II)	▶	GO TO 7.
NG	▶	GO TO 5.

5	DETECT MALFUNCTIONING PART

Check the following.
- Joint connector-3
- Harness for open between heated oxygen sensor 2 (rear) and engine ground.

	▶	Repair open circuit or short to power in harness or connectors.

6	CHECK HEATED OXYGEN SENSOR 2 (REAR)

With CONSULT-II
1. Start engine and drive vehicle at a speed of more than 70 km/h (43 MPH) for 2 consecutive minutes.
2. Stop vehicle with engine running.
3. Select "FUEL INJECTION" in "ACTIVE TEST" mode, and select "HO2S2 (B1)/(B2)" as the monitor item with CONSULT-II.
4. Check "HO2S2 (B1)/(B2)" at idle speed when adjusting "FUEL INJECTION" to ±25%.

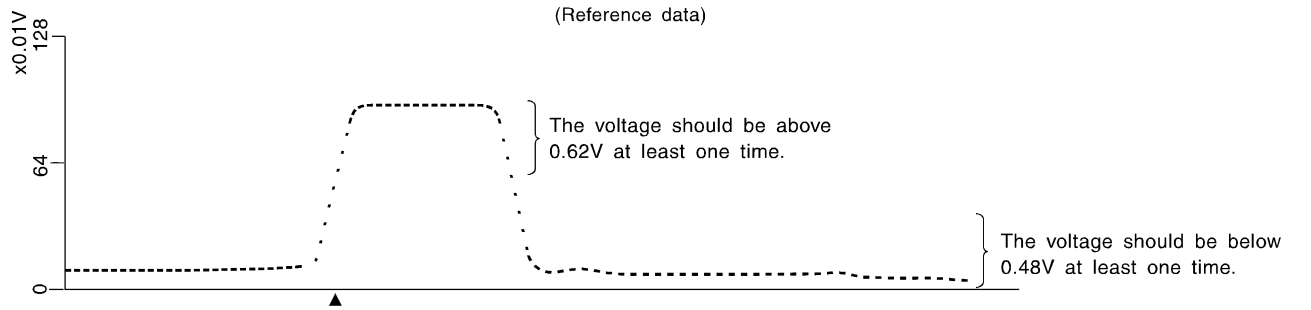

SEF989RD

"HO2S2 (B1)/(B2)" should be above 0.62V at least once when the "FUEL INJECTION" is +25%.
"HO2S2 (B1)/(B2)" should be below 0.48V at least once when the "FUEL INJECTION" is −25%.

CAUTION:
Discard any heated oxygen sensor which has been dropped from a height of more than 0.5 m (19.7 in) onto a hard surface such as a concrete floor; use a new one.

OK or NG

OK	▶	GO TO 9.
NG	▶	GO TO 8.

7	CHECK HEATED OXYGEN SENSOR 2 (REAR)

Without CONSULT-II

1. Start engine and drive vehicle at a speed of more than 70 km/h (43 MPH) for 2 consecutive minutes.
2. Stop vehicle with engine running.
3. Set voltmeter probes between ECM terminal 56 (bank 1 signal) or 57 (bank 2 signal) and engine ground.
4. Check the voltage when racing up to 4,000 rpm under no load at least 10 times.
   (depress and release accelerator pedal as soon as possible)

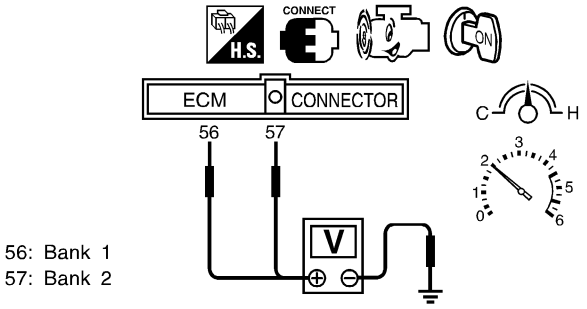

56: Bank 1
57: Bank 2

The voltage should be above 0.62V at least once during this procedure.

SEF797ZB

5. Keep vehicle at idling for 10 minutes, then check the voltage. Or check the voltage when coasting from 80 km/h (50 MPH) in 3rd gear position (M/T), "D" position with "O/D" OFF (A/T).
   The voltage should be below 0.48V at least once during this procedure.

CAUTION:
Discard any heated oxygen sensor which has been dropped from a height of more than 0.5 m (19.7 in) onto a hard surface such as a concrete floor; use a new one.

OK or NG

OK	▶	GO TO 9.
NG	▶	GO TO 8.

8	REPLACE HEATED OXYGEN SENSOR 2 (REAR)

1. Stop vehicle and turn ignitioin switch OFF.
2. Check heated oxygen sensor 2 (rear) harness protector color.

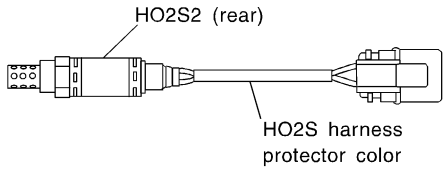

HO2S2 (rear) (bank 1): White or Gray
HO2S2 (rear) (bank 2): Red or Red/Brown

SEF372Z

CAUTION:
Before installing new oxygen sensor, clean exhaust system threads using Oxygen Sensor Thread Cleaner tool J-43897-18 or J-43897-12 and approved anti-seize lubricant.

	▶	Replace malfunctioning heated oxygen sensor 2 (rear).

Diagnostic Procedure (Cont'd)

9	CHECK HO2S2 (REAR) SHIELD CIRCUIT FOR OPEN AND SHORT	
1. Turn ignition switch OFF. 2. Disconnect joint connector. 3. Check the following. ● Continuity between joint connector terminal 1 and ground ● Joint connector (Refer to ***EL-238***, "HARNESS LAYOUT".) **Continuity should exist.** 4. Also check harness for short to power. 5. Then reconnect joint connector.		
OK or NG		
OK	▶	GO TO 10.
NG	▶	Repair open circuit or short to power in harness or connectors.

10	CHECK INTERMITTENT INCIDENT
Refer to "TROUBLE DIAGNOSIS FOR INTERMITTENT INCIDENT", EC-753.	
▶	**INSPECTION END**

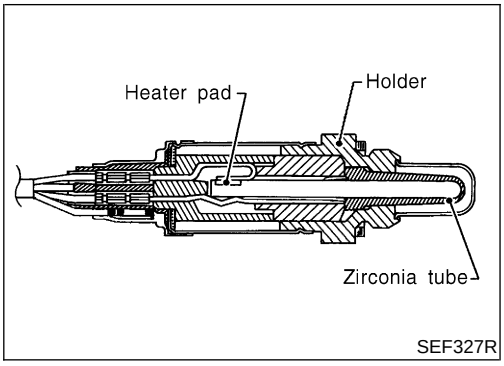

Component Description

NEEC0675

The heated oxygen sensor 2 (rear), after three way catalyst, monitors the oxygen level in the exhaust gas on each bank.
Even if switching characteristics of the heated oxygen sensor 1 (front) are shifted, the air fuel ratio is controlled to stoichiometric, by the signal from the heated oxygen sensor 2 (rear).
This sensor is made of ceramic zirconia. The zirconia generates voltage from approximately 1V in richer conditions to 0V in leaner conditions.
Under normal conditions the heated oxygen sensor 2 (rear) is not used for engine control operation.

CONSULT-II Reference Value in Data Monitor Mode

NEEC0676

Specification data are reference values.

MONITOR ITEM	CONDITION		SPECIFICATION
HO2S2 (B1) HO2S2 (B2)	● Engine: After warming up	Revving engine from idle up to 2,000 rpm	0 - 0.3V ⟷ Approx. 0.6 - 1.0V
HO2S2 MNTR (B1) HO2S2 MNTR (B2)			LEAN ⟷ RICH

ECM Terminals and Reference Value

NEEC0677

Specification data are reference values and are measured between each terminal and ground.

CAUTION:
Do not use ECM ground terminals when measuring input/output voltage. Doing so may result in damage to the ECM's transistor. Use a ground other than the ECM terminals, such as the ground.

TERMINAL NO.	WIRE COLOR	ITEM	CONDITION	DATA (DC Voltage)
56	OR	Heated oxygen sensor 2 (rear) (bank 1)	**[Engine is running]** ● **Warm-up condition** ● Revving engine from idle up to 2,000 rpm	0 - Approximately 1.0V
57	Y	Heated oxygen sensor 2 (rear) (bank 2)		

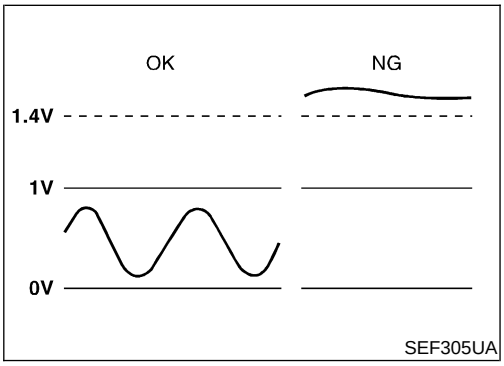

On Board Diagnosis Logic

NEEC0678

The heated oxygen sensor 2 (rear) has a much longer switching time between rich and lean than the heated oxygen sensor 1 (front). The oxygen storage capacity before the three way catalyst causes the longer switching time. To judge the malfunctions of heated oxygen sensor 2 (rear), ECM monitors whether the voltage is unusually high during the various driving condition such as fuel-cut.
Malfunction is detected when an excessively high voltage from the sensor is sent to ECM.

POSSIBLE CAUSE

NEEC0678S01

- Harness or connectors
  (The sensor circuit is open or shorted.)
- Heated oxygen sensor 2 (rear)

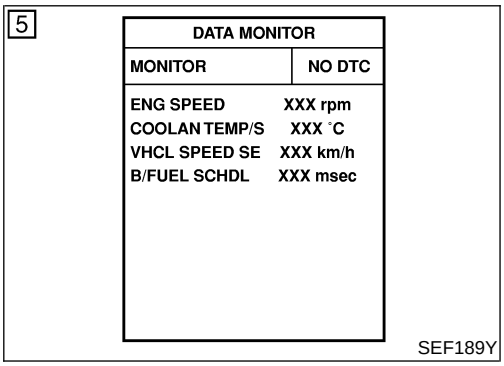

DTC Confirmation Procedure

NEEC0679

CAUTION:

Always drive vehicle at a safe speed.

NOTE:

If "DTC Confirmation Procedure" has been previously conducted, always turn ignition switch OFF and wait at least 5 seconds before conducting the next test.

With CONSULT-II

1) Turn ignition switch ON and select "DATA MONITOR" mode with CONSULT-II.
2) Start engine and drive vehicle at a speed of more than 70 km/h (43 MPH) for 2 consecutive minutes.
3) Stop vehicle with engine running.
4) Let engine idle for 1 minute.
5) Maintain the following conditions for at least 5 consecutive seconds.

END SPEED	Less than 3,600 rpm
COOLAN TEMP/S	More than 70°C (158°F)
Selector lever	Suitable position

6) If 1st trip DTC is detected, go to "Diagnostic Procedure", EC-892.

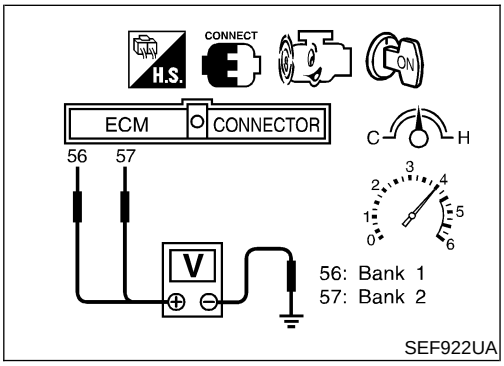

Overall Function Check

NEEC0680

Use this procedure to check the overall function of the heated oxygen sensor 2 (rear) circuit. During this check, a 1st trip DTC might not be confirmed.

Without CONSULT-II

1) Start engine and drive vehicle at a speed of more than 70 km/h (43 MPH) for 2 consecutive minutes.
2) Stop vehicle with engine running.
3) Set voltmeter probes between ECM terminal 56 (bank 1 signal) or 57 (bank 2 signal) and engine ground.
4) Check the voltage when racing up to 4,000 rpm under no load

at least 10 times.
(depress and release accelerator pedal as soon as possible)
The voltage should be below 1.4V during this procedure.

5) If NG, go to "Diagnostic Procedure", EC-892.

Wiring Diagram

NEEC0681

RIGHT BANK

NEEC0681S01

EC-O2S2B1-01

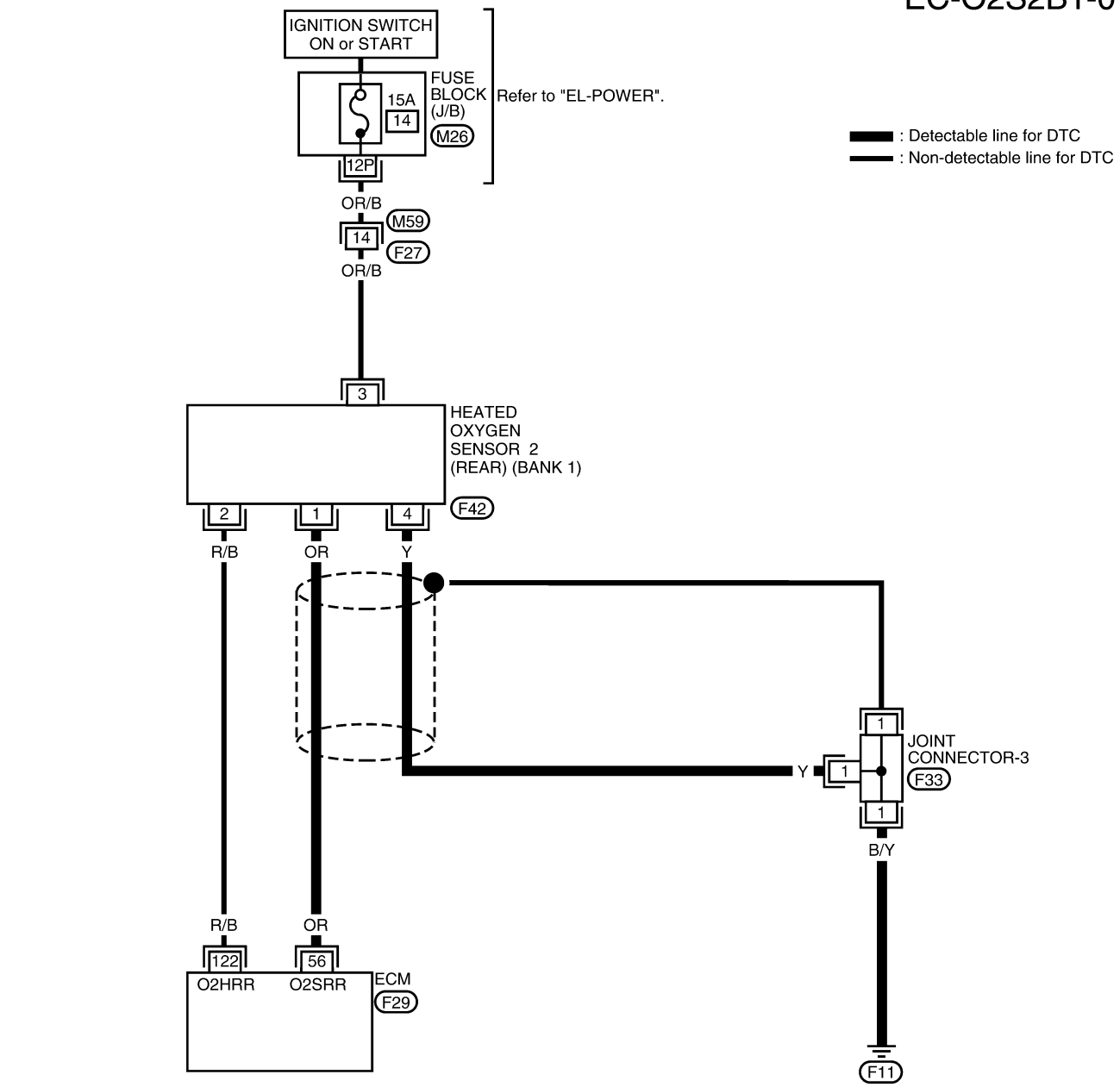

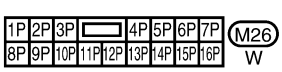

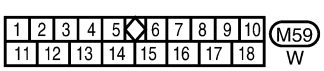

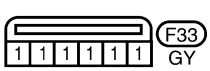

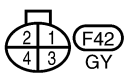

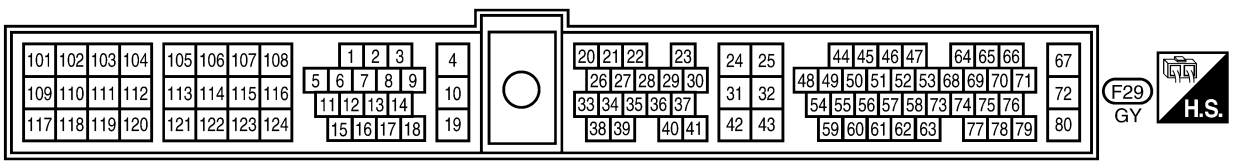

WEC792

LEFT BANK

NEEC0681S02

EC-O2S2B2-01

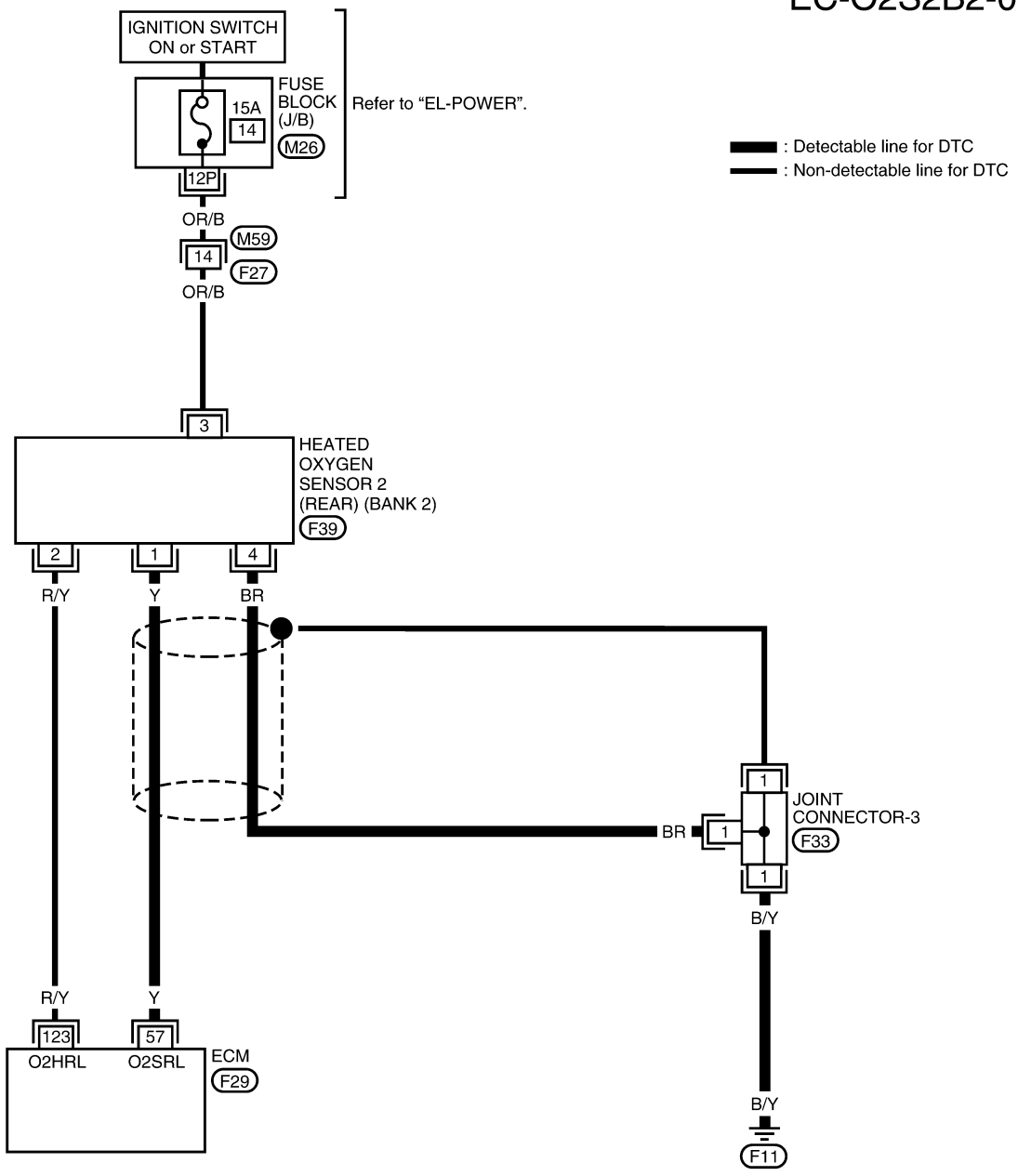

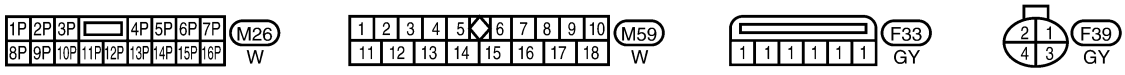

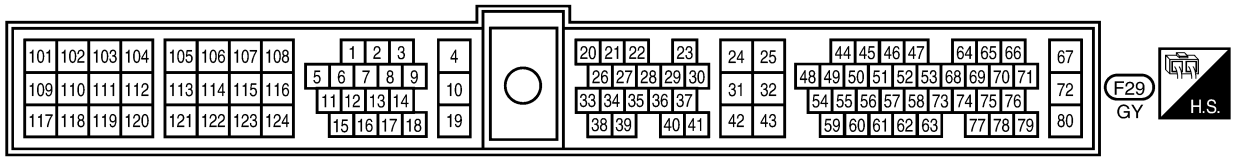

WEC793

Diagnostic Procedure

NEEC0682

1	INSPECTION START

1. Turn ignition switch OFF.
2. Loosen and retighten engine ground screws.

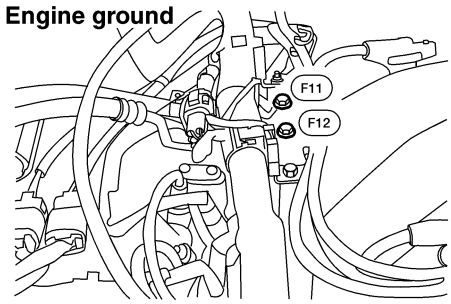

LEC518

3. Check heated oxygen sensor 2 (rear) harness protector color.

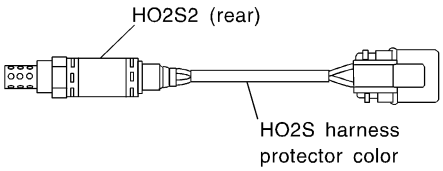

HO2S2 (rear) (bank 1): White or Gray
HO2S2 (rear) (bank 2): Red or Red/Brown

SEF372Z

4. Disconnect corresponding heated oxygen sensor 2 (rear) harness connector.
5. Disconnect ECM harness connector.

▶	GO TO 2.

2	CHECK HO2S2 (REAR) INPUT SIGNAL CIRCUIT FOR OPEN AND SHORT

1. Check harness continuity between ECM terminal and HO2S2 terminal as follows. Refer to Wiring Diagram.

DTC	Terminals		Bank
	ECM	Sensor	
P0140	56	1	Bank 1 (Right)
P0160	57	1	Bank 2 (Left)

SEF828Z

Continuity should exist.

2. Check harness continuity between ECM terminal or HO2S2 terminal and ground as follows. Refer to Wiring Diagram.

DTC	Terminals		Bank
	ECM or sensor	Ground	
P0140	56 or 1	Ground	Bank 1 (Right)
P0160	57 or 1	Ground	Bank 2 (Left)

SEF829Z

Continuity should not exist.

3. Also check harness for short to power.

OK or NG

OK	▶	GO TO 3.
NG	▶	Repair open circuit or short to ground or short to power in harness or connectors.

3	CHECK HO2S2 (REAR) GROUND CIRCUIT FOR OPEN AND SHORT

1. Check harness continuity between HO2S2 terminal 4 and engine ground. Refer to Wiring Diagram.
   Continuity should exist.
2. Also check harness for short to power.

OK or NG

OK	▶	GO TO 5.
NG	▶	GO TO 4.

4	DETECT MALFUNCTIONING PART

Check the following.
- Joint connector-3
- Harness for open between heated oxygen sensor 2 (rear) and engine ground.

	▶	Repair open circuit to ground or short to power in harness or connectors.

Diagnostic Procedure (Cont'd)

5	CHECK HO2S2 (REAR) CONNECTORS FOR WATER
Check heated oxygen sensor 2 (rear) connector and harness connector for water. **Water should not exist.**	
OK or NG	
OK (With CONSULT-II) ▶	GO TO 6.
OK (Without CONSULT-II) ▶	GO TO 7.
NG ▶	Repair or replace harness or connectors.

6	CHECK HEATED OXYGEN SENSOR 2 (REAR)

With CONSULT-II

1. Start engine and drive vehicle at a speed of more than 70 km/h (43 MPH) for 2 consecutive minutes.
2. Stop vehicle with engine running.
3. Select "FUEL INJECTION" in "ACTIVE TEST" mode, and select "HO2S2 (B1)/(B2)" as the monitor item with CONSULT-II.
4. Check "HO2S2 (B1)/(B2)" at idle speed when adjusting "FUEL INJECTION" to ±25%.

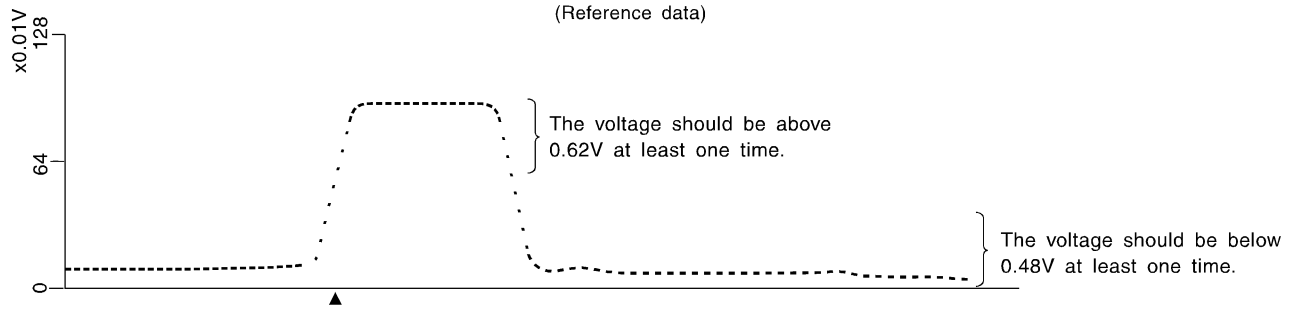

SEF989RD

"HO2S2 (B1)/(B2)" should be above 0.62V at least once when the "FUEL INJECTION" is +25%.
"HO2S2 (B1)/(B2)" should be below 0.48V at least once when the "FUEL INJECTION" is −25%.

CAUTION:
Discard any heated oxygen sensor which has been dropped from a height of more than 0.5 m (19.7 in) onto a hard surface such as a concrete floor; use a new one.

OK or NG	
OK ▶	GO TO 9.
NG ▶	GO TO 8.

7	CHECK HEATED OXYGEN SENSOR 2 (REAR)

Without CONSULT-II

1. Start engine and drive vehicle at a speed of more than 70 km/h (43 MPH) for 2 consecutive minutes.
2. Stop vehicle with engine running.
3. Set voltmeter probes between ECM terminal 56 (bank 1 signal) or 57 (bank 2 signal) and engine ground.
4. Check the voltage when racing up to 4,000 rpm under no load at least 10 times.
   (depress and release accelerator pedal as soon as possible)

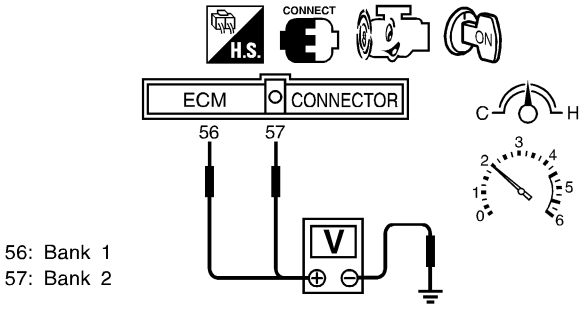

56: Bank 1
57: Bank 2

The voltage should be above 0.62V at least once during this procedure.

SEF797ZB

5. Keep vehicle at idling for 10 minutes, then check the voltage. Or check the voltage when coasting from 80 km/h (50 MPH) in 3rd gear position (M/T), "D" position with "O/D" OFF (A/T).
   The voltage should be below 0.48V at least once during this procedure.

CAUTION:
Discard any heated oxygen sensor which has been dropped from a height of more than 0.5 m (19.7 in) onto a hard surface such as a concrete floor; use a new one.

OK or NG

OK	▶	GO TO 9.
NG	▶	GO TO 8.

8	REPLACE HEATED OXYGEN SENSOR 2 (REAR)

1. Stop vehicle and turn ignitioin switch OFF.
2. Check heated oxygen sensor 2 (rear) harness protector color.

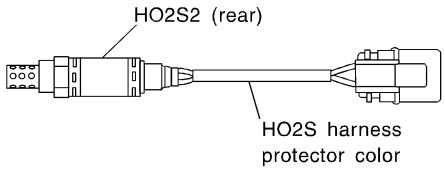

HO2S2 (rear) (bank 1): White or Gray
HO2S2 (rear) (bank 2): Red or Red/Brown

SEF372Z

CAUTION:
Before installing new oxygen sensor, clean exhaust system threads using Oxygen Sensor Thread Cleaner tool J-43897-18 or J-43897-12 and approved anti-seize lubricant.

	▶	Replace malfunctioning heated oxygen sensor 2 (rear).

Diagnostic Procedure (Cont'd)

9	CHECK HO2S2 (REAR) SHIELD CIRCUIT FOR OPEN AND SHORT

1. Turn ignition switch OFF.
2. Disconnect joint connector.
3. Check the following.

- Continuity between joint connector terminal 1 and ground
- Joint connector

(Refer to ***EL-238***, "HARNESS LAYOUT".)

Continuity should exist.

4. Also check harness for short to power.
5. Then reconnect joint connector.

OK or NG

OK	▶	GO TO 10.
NG	▶	Repair open circuit or short to power in harness or connectors.

10	CHECK INTERMITTENT INCIDENT

Refer to "TROUBLE DIAGNOSIS FOR INTERMITTENT INCIDENT", EC-753.

▶ **INSPECTION END**

Description

NEEC0683

SYSTEM DESCRIPTION

NEEC0683S01

Sensor	Input Signal to ECM	ECM function	Actuator
Camshaft position sensor	Engine speed	Heated oxygen sensor 2 heater (rear) control	Heated oxygen sensor 2 heaters

The ECM performs ON/OFF control of the heated oxygen sensor 2 heaters (rear) corresponding to the engine speed.

OPERATION

NEEC0683S02

Engine speed rpm	Heated oxygen sensor 2 heaters (rear)
Above 3,200	OFF
Below 3,200	ON

CONSULT-II Reference Value in Data Monitor Mode

NEEC0684

Specification data are reference values.

MONITOR ITEM	CONDITION	SPECIFICATION
HO2S2 HTR (B1) HO2S2 HTR (B2)	• Ignition switch: ON (Engine stopped) • Engine is running above 3,200 rpm.	OFF
	• Engine is running below 3,200 rpm after driving for 2 minutes at a speed of 70 km/h (43 MPH) or more.	ON

ECM Terminals and Reference Value

NEEC0685

Specification data are reference values and are measured between each terminal and ground.

CAUTION:

Do not use ECM ground terminals when measuring input/output voltage. Doing so may result in damage to the ECM's transistor. Use a ground other than the ECM terminals, such as the ground.

TERMINAL NO.	WIRE COLOR	ITEM	CONDITION	DATA (DC Voltage)
122	R/B	Heated oxygen sensor 2 heater (rear) (bank 1)	**[Ignition switch "ON"]** • Engine stopped **[Engine is running]** • Engine speed is above 3,200 rpm	BATTERY VOLTAGE (11 - 14V)
			[Engine is running] • Engine speed is below 3,200 rpm • After driving for 2 minutes at a speed of 70 km/h (43 MPH) or more	Approximately 0.4V
123	R/Y	Heated oxygen sensor 2 heater (rear) (bank 2)	**[Ignition switch "ON"]** • Engine stopped **[Engine is running]** • Engine speed is above 3,200 rpm	BATTERY VOLTAGE (11 - 14V)
			[Engine is running] • Engine speed is below 3,200 rpm • After driving for 2 minutes at a speed of 70 km/h (43 MPH) or more	Approximately 0.4V

On Board Diagnosis Logic

NEEC0686

Malfunction is detected when the current amperage in the heated oxygen sensor 2 heater (rear) circuit is out of the normal range.
[An improper voltage drop signal is sent to ECM through the heated oxygen sensor 2 heater (rear).]

POSSIBLE CAUSE

NEEC0686S01

- Harness or connectors
  (The heated oxygen sensor 2 heater (rear) circuit is open or shorted.)
- Heated oxygen sensor 2 heater (rear)

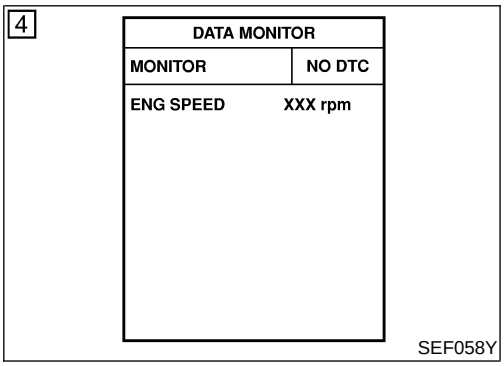

DTC Confirmation Procedure

NEEC0687

NOTE:
If “DTC Confirmation Procedure” has been previously conducted, always turn ignition switch OFF and wait at least 5 seconds before conducting the next test.

TESTING CONDITION:
Before performing the following procedure, confirm that battery voltage is between 10.5V and 16V at idle.

With CONSULT-II

1) Turn ignition switch ON and select “DATA MONITOR” mode with CONSULT-II.
2) Start engine.
3) Drive vehicle at a speed of more than 70 km/h (43 MPH) for 2 consecutive minutes.
4) Stop vehicle and let engine idle for at least 6 seconds.
5) If 1st trip DTC is detected, go to “Diagnostic Procedure”, EC-901.

With GST

Follow the procedure “With CONSULT-II”.

Wiring Diagram

NEEC0688

RIGHT BANK

NEEC0688S01

EC-O2H2B1-01

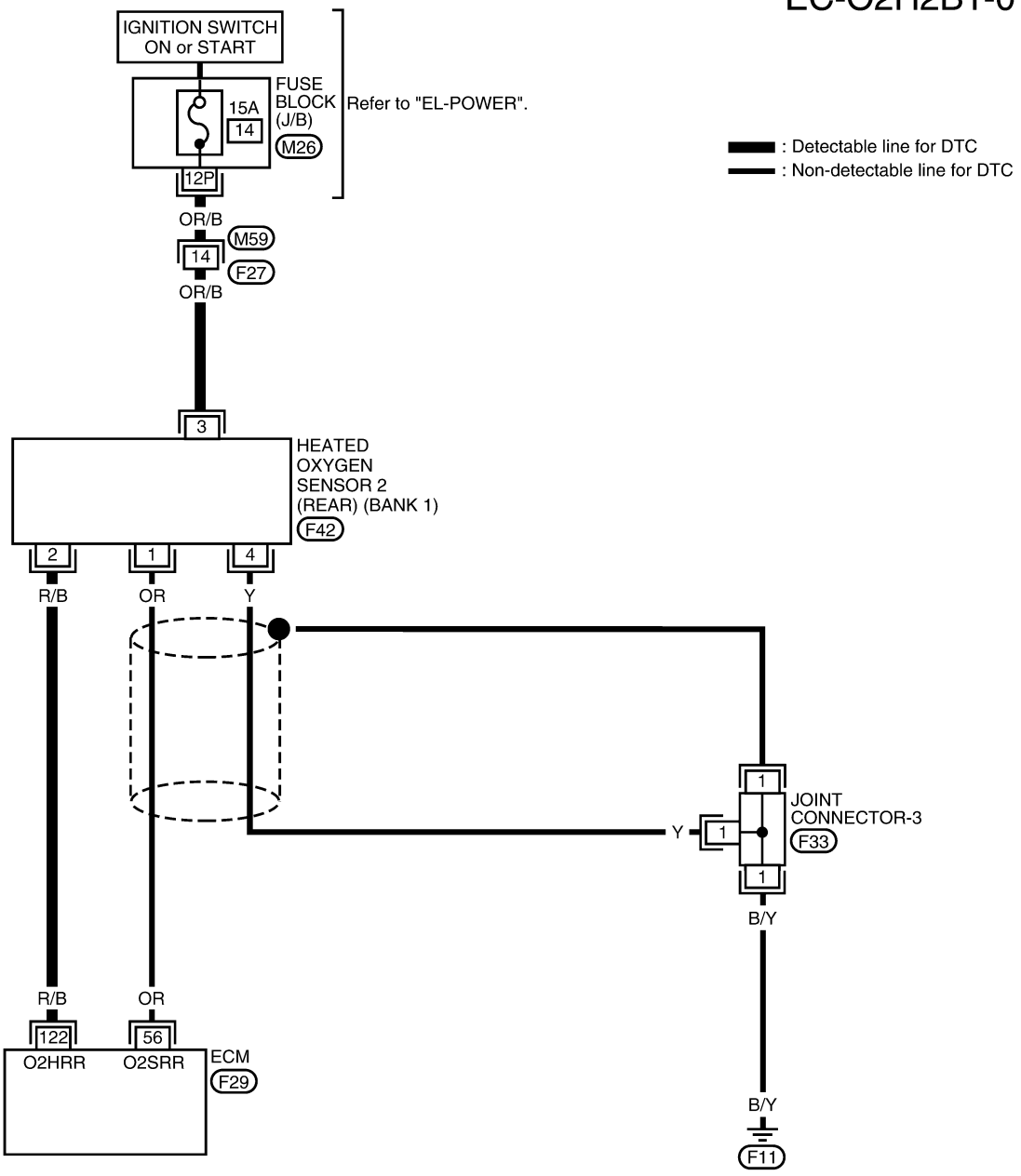

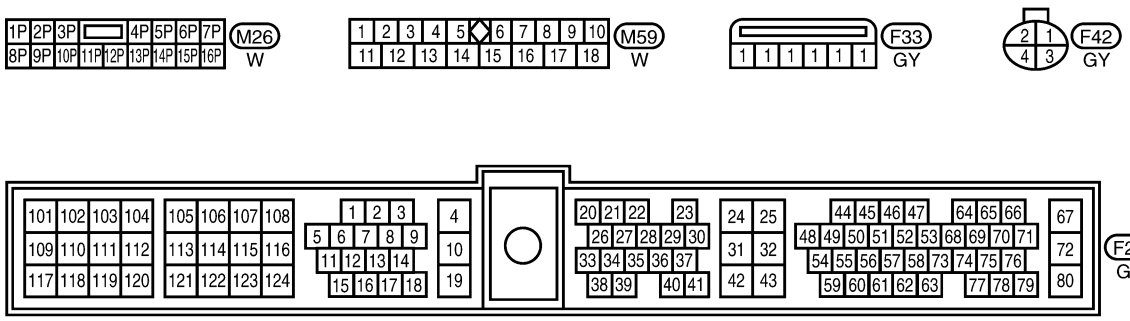

WEC794

Wiring Diagram (Cont'd)

LEFT BANK

NEEC0688S02

EC-O2H2B2-01

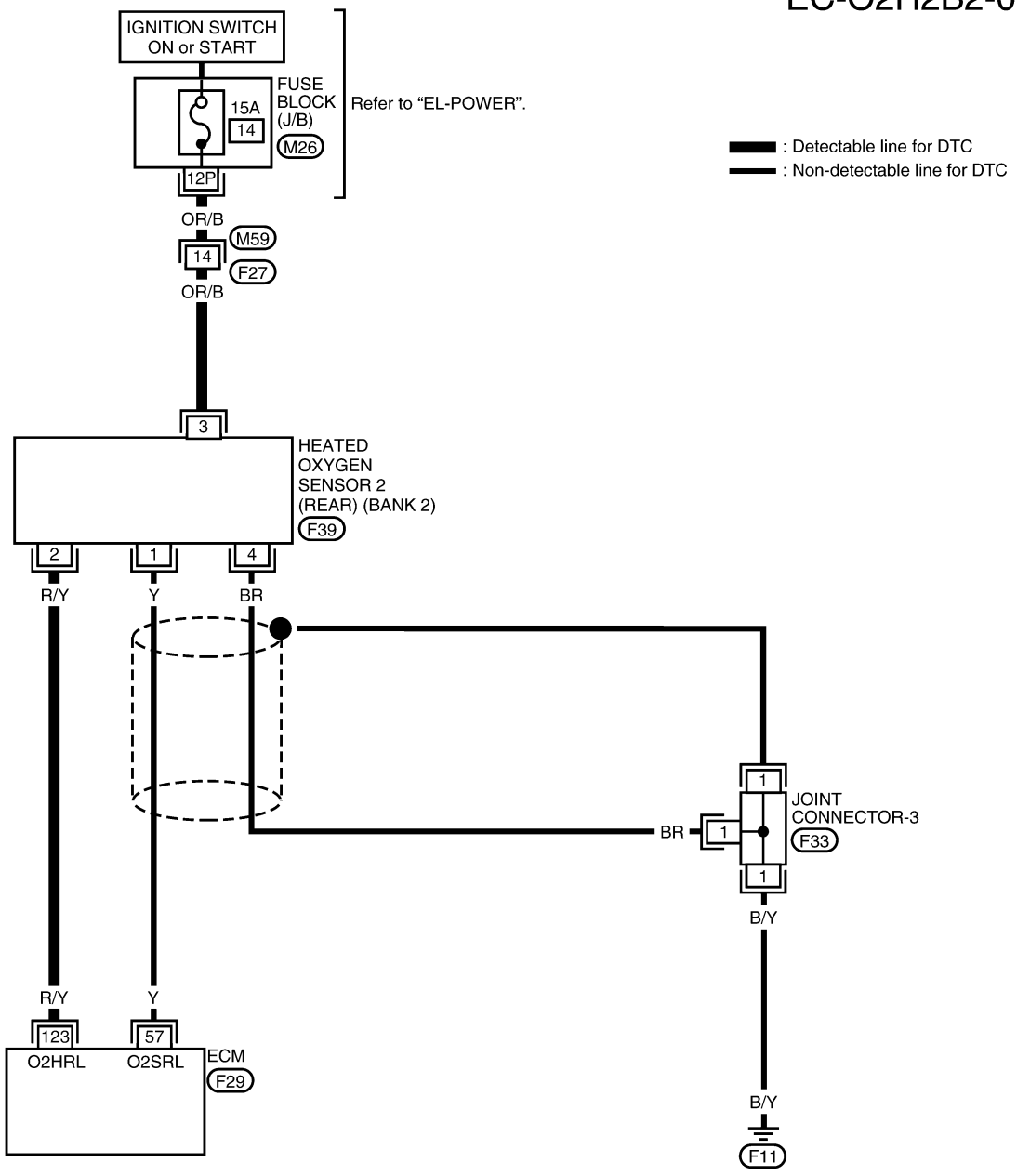

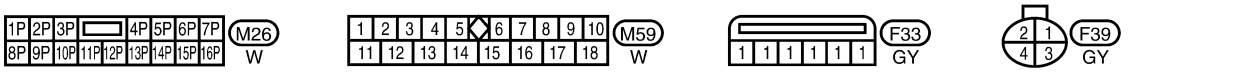

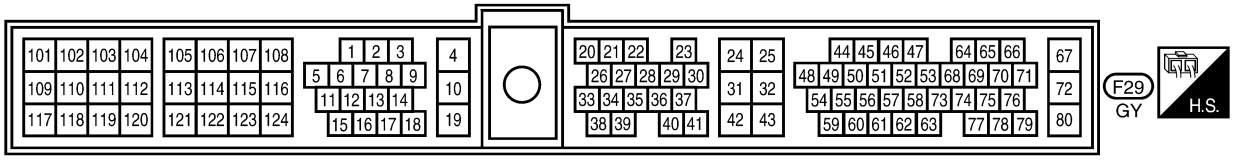

WEC795

Diagnostic Procedure

NEEC0689

1	CHECK HO2S2 (REAR) POWER SUPPLY CIRCUIT

1. Turn ignition switch “OFF”.
2. Check heated oxygen sensor 2 (rear) harness protector color.

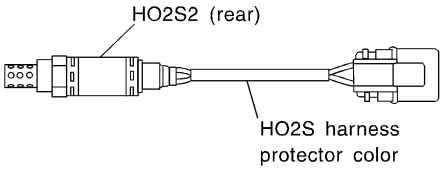

HO2S2 (rear) (bank 1): White or Gray
HO2S2 (rear) (bank 2): Red or Red/Brown

SEF372Z

3. Disconnect corresponding heated oxygen sensor 2 (rear) harness connector.

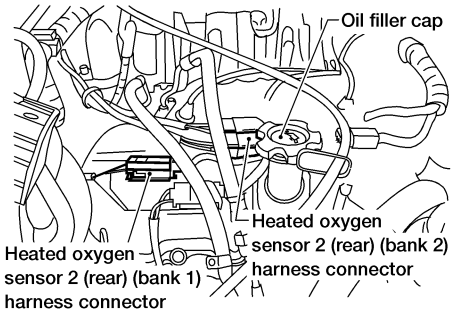

WEC546

4. Turn ignition switch ON.
5. Check voltage between HO2S2 terminal 3 and ground.

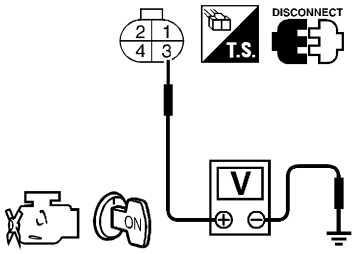

SEF637W

Voltage: Battery voltage

OK or NG

OK	▶	GO TO 3.
NG	▶	GO TO 2.

2	DETECT MALFUNCTIONING PART

Check the following.
- Harness connectors M59, F27
- Fuse block (J/B) connector M26
- 10A fuse
- Harness for open or short between heated oxygen sensor 2 (rear) and fuse

	▶	Repair harness or connectors.

Diagnostic Procedure (Cont'd)

3	CHECK HO2S2 HEATER (REAR) OUTPUT CIRCUIT FOR OPEN AND SHORT

1. Turn ignition switch OFF.
2. Disconnect ECM harness connector.
3. Check harness continuity between ECM terminal and HO2S2 (rear) terminal as follows. Refer to Wiring Diagram.

DTC	Terminals		Bank
	ECM	Sensor	
P0141	122	2	Bank 1 (Right)
P0161	123	2	Bank 2 (Left)

SEF830Z

Continuity should exist.

4. Also check harness for short to ground and short to power.

OK or NG

OK	▶	GO TO 5.
NG	▶	GO TO 4.

4	DETECT MALFUNCTIONING PART

Check the following.
- Joint connector-3
- Harness for open or short between heated oxygen sensor 2 (rear) and engine ground.

	▶	Repair open circuit or short to ground or short to power in harness or connectors.

5	CHECK HEATED OXYGEN SENSOR 2 HEATER (REAR)

Check the following.

1. Check resistance between HO2S2 (rear) terminals 2 and 3.

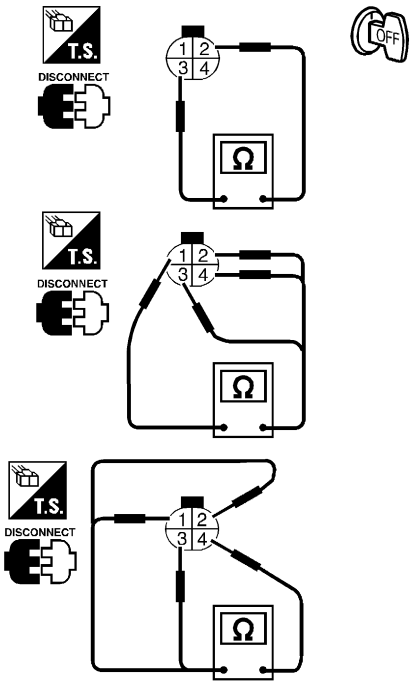

SEF716W

Resistance: 2.3 - 4.3Ω at 25°C (77°F)

2. Check continuity.

Terminal No.	Continuity
1 and 2, 3, 4	No
4 and 1, 2, 3	

MTBL0233

CAUTION:

Discard any heated oxygen sensor which has been dropped from a height of more than 0.5 m (19.7 in) onto a hard surface such as a concrete floor; use a new one.

OK or NG

OK	▶	GO TO 7.
NG	▶	GO TO 6.

Diagnostic Procedure (Cont'd)

6	REPLACE HEATED OXYGEN SENSOR 2 (REAR)

Check heated oxygen sensor 2 (rear) harness protector color.

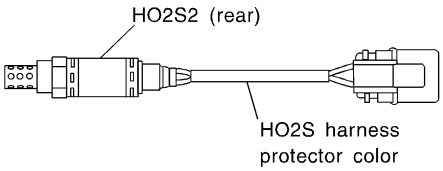

HO2S2 (rear) (bank 1): White or Gray
HO2S2 (rear) (bank 2): Red or Red/Brown

SEF372Z

CAUTION:
Before installing new oxygen sensor, clean exhaust system threads using Oxygen Sensor Thread Cleaner tool J-43897-18 or J-43897-12 and approved anti-seize lubricant.

▶	Replace malfunctioning heated oxygen sensor 2 (rear).

7	CHECK INTERMITTENT INCIDENT

Refer to "TROUBLE DIAGNOSIS FOR INTERMITTENT INCIDENT", EC-753.

▶	**INSPECTION END**

On Board Diagnosis Logic

NEEC0690

With the Air/Fuel Mixture Ratio Self-Learning Control, the actual mixture ratio can be brought closely to the theoretical mixture ratio based on the mixture ratio feedback signal from the heated oxygen sensors 1 (front). The ECM calculates the necessary compensation to correct the offset between the actual and the theoretical ratios. In case the amount of the compensation value is extremely large (The actual mixture ratio is too lean.), the ECM judges the condition as the fuel injection system malfunction and light up the MIL (2 trip detection logic).

Sensor	Input Signal to ECM	ECM function	Actuator
Heated oxygen sensors 1 (front)	Density of oxygen in exhaust gas (Mixture ratio feedback signal)	Fuel injection control	Injectors

Malfunction is detected when fuel injection system does not operate properly, the amount of mixture ratio compensation is too large. (The mixture ratio is too lean.)

POSSIBLE CAUSE

NEEC0690S01

- Intake air leaks
- Heated oxygen sensor 1 (front)
- Injectors
- Exhaust gas leaks
- Incorrect fuel pressure
- Lack of fuel
- Mass air flow sensor

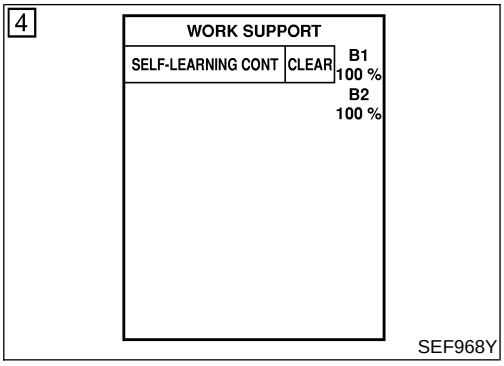

DTC Confirmation Procedure

=NEEC0691

NOTE:

If “DTC Confirmation Procedure” has been previously conducted, always turn ignition switch OFF and wait at least 5 seconds before conducting the next test.

With CONSULT-II

1) Start engine and warm it up to normal operating temperature.
2) Turn ignition switch OFF and wait at least 5 seconds.
3) Turn ignition switch ON and select “SELF-LEARN CONTROL” in “WORK SUPPORT” mode with CONSULT-II.
4) Clear the self-learning control coefficient by touching “CLEAR”.
5) Select “DATA MONITOR” mode with CONSULT-II.
6) Start engine again and let it idle for at least 10 minutes.
   The 1st trip DTC P0171 or P0174 should be detected at this stage, if a malfunction exists. If so, go to “Diagnostic Procedure”, EC-909.
7) If it is difficult to start engine at step 6, the fuel injection system has a malfunction, too.
8) Crank engine while depressing accelerator pedal. If engine starts, go to “Diagnostic Procedure”, EC-909. If engine does not start, check exhaust and intake air leak visually.

With GST

Follow the procedure “With CONSULT-II”.

Wiring Diagram

NEEC0692

RIGHT BANK

NEEC0692S01

EC-FUELB1-01

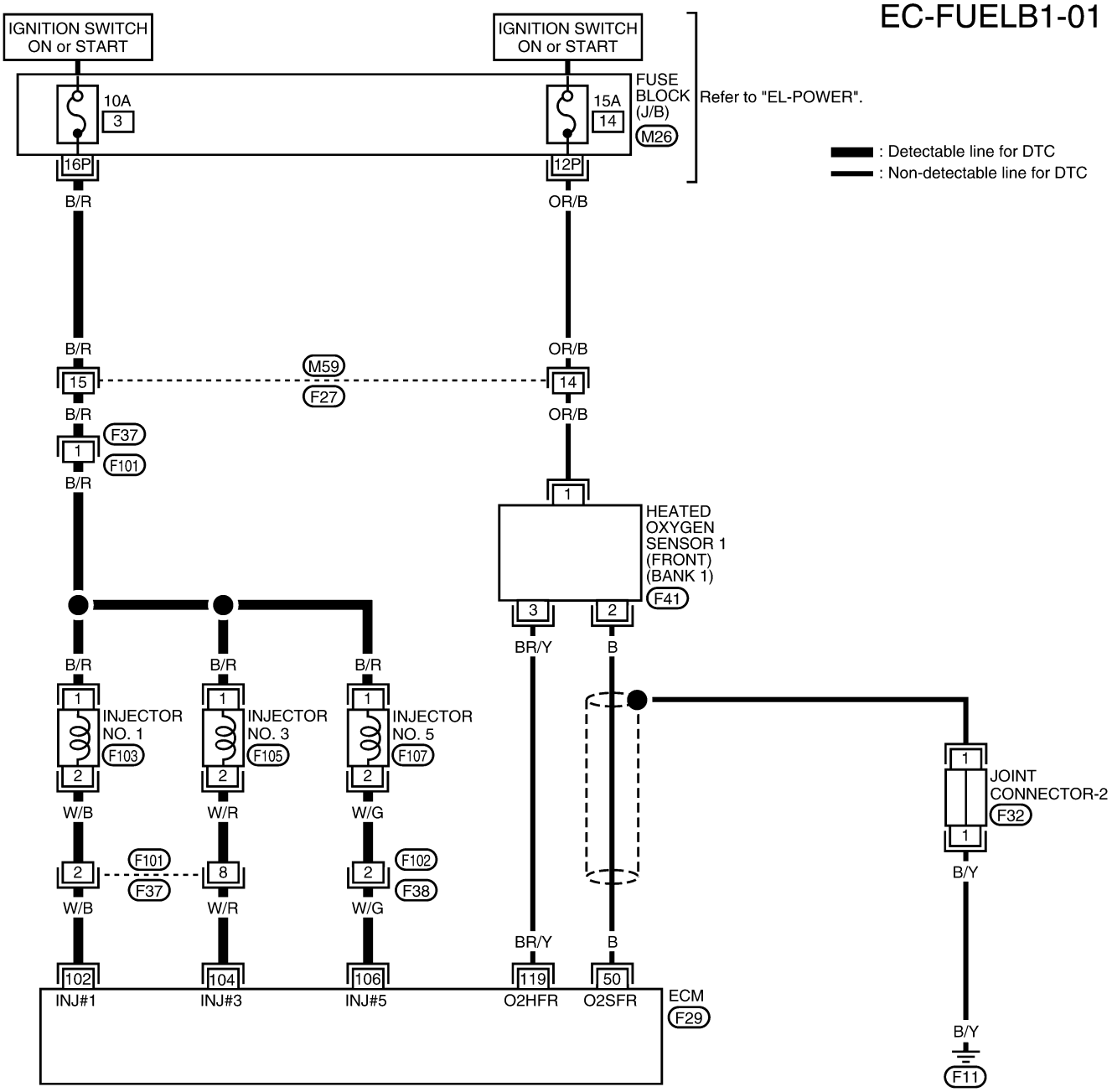

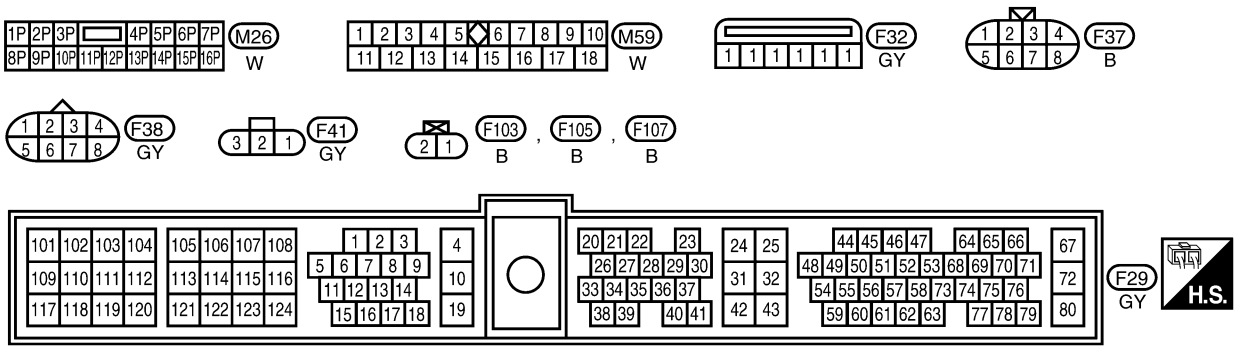

WEC796

Wiring Diagram (Cont'd)

LEFT BANK

NEEC0692S02

EC-FUELB2-01

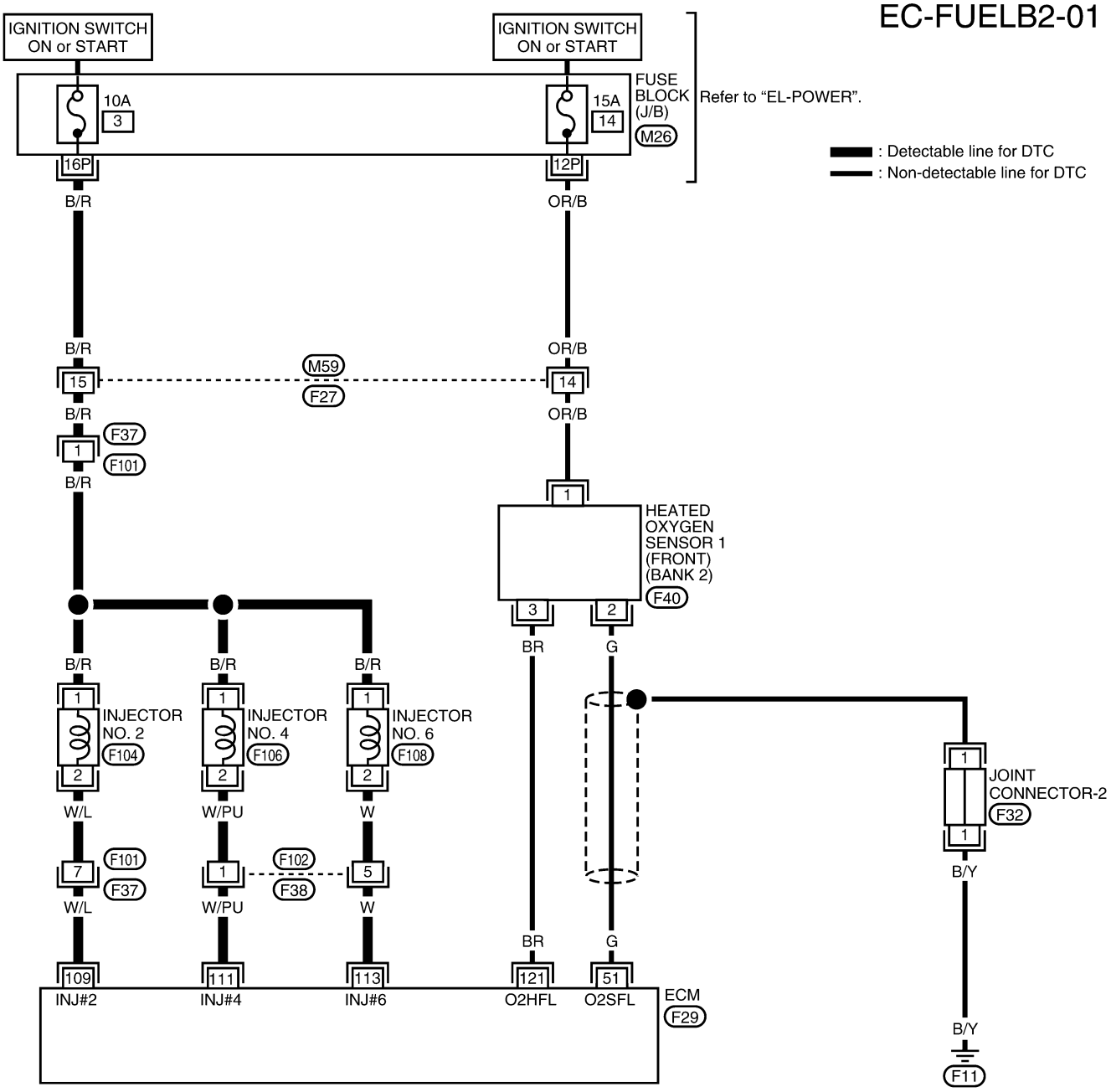

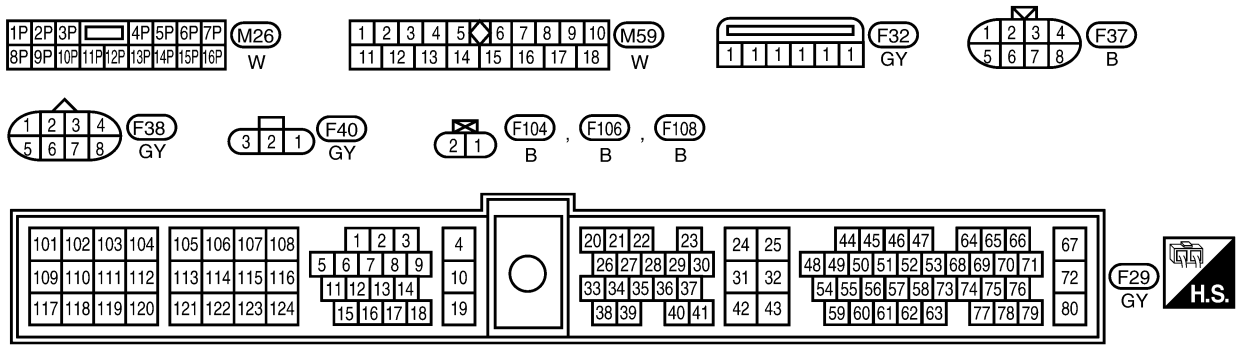

WEC797

Diagnostic Procedure

NEEC0693

1	CHECK EXHAUST AIR LEAK

1. Start engine and run it at idle.
2. Listen for an exhaust air leak before three way catalyst.

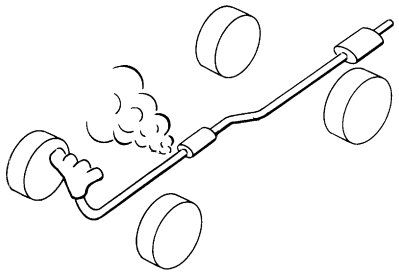

SEF099P

OK or NG

OK	▶	GO TO 2.
NG	▶	Repair or replace.

2	CHECK FOR INTAKE AIR LEAK

Listen for an intake air leak after the mass air flow sensor.

OK or NG

OK	▶	GO TO 3.
NG	▶	Repair or replace.

Diagnostic Procedure (Cont'd)

3	CHECK HEATED OXYGEN SENSOR 1 (FRONT) CIRCUIT FOR OPEN AND SHORT

1. Turn ignition switch OFF.
2. Disconnect corresponding heated oxygen sensor 1 (front) harness connector.
3. Disconnect ECM harness connector.
4. Check harness continuity between ECM terminal and HO2S1 (front) terminal as follows.
   Refer to Wiring Diagram.

DTC	Terminals		Bank
	ECM	Sensor	
P0171	50	2	Bank 1 (Right)
P0174	51	2	Bank 2 (Left)

SEF831Z

Continuity should exist.

5. Check harness continuity between ECM terminal or HO2S1 (front) terminal and ground as follows.
   Refer to Wiring Diagram.

DTC	Terminals		Bank
	ECM or sensor	Ground	
P0171	50 or 2	Ground	Bank 1 (Right)
P0174	51 or 2	Ground	Bank 2 (Left)

SEF832Z

Continuity should not exist.

6. Also check harness for short to power.

OK or NG

OK	▶	GO TO 4.
NG	▶	Repair open circuit or short to ground or short to power in harness or connectors.

4	CHECK FUEL PRESSURE

1. Release fuel pressure to zero.
   Refer to EC-658.
2. Install fuel pressure gauge and check fuel pressure.

At idling:

When fuel pressure regulator valve vacuum hose is connected.

235 kPa (2.4 kg/cm^2, 34 psi)

When fuel pressure regulator valve vacuum hose is disconnected.

294 kPa (3.0 kg/cm^2, 43 psi)

OK or NG

OK	▶	GO TO 6.
NG	▶	GO TO 5.

5	DETECT MALFUNCTIONING PART	
Check the following. ● Fuel pump and circuit (Refer to EC-1198.) ● Fuel pressure regulator (Refer to EC-659.) ● Fuel lines (Refer to ***MA-29***, "ENGINE MAINTENANCE".) ● Fuel filter for clogging		
	▶	Repair or replace.

6	CHECK MASS AIR FLOW SENSOR	
With CONSULT-II 1. Install all parts removed. 2. Check "MASS AIR FLOW" in "DATA MONITOR" mode with CONSULT-II. **3.3 - 4.8 g·m/sec: at idling** **12.0 - 14.9 g·m/sec: at 2,500 rpm**		
With GST 1. Install all parts removed. 2. Check mass air flow sensor signal in MODE 1 with GST. **3.3 - 4.8 g·m/sec: at idling** **12.0 - 14.9 g·m/sec: at 2,500 rpm**		
OK or NG		
OK	▶	GO TO 7.
NG	▶	Check connectors for rusted terminals or loose connections in the mass air flow sensor circuit or engine grounds. Refer to EC-760.

7	CHECK FUNCTION OF INJECTORS

With CONSULT-II

1. Start engine.
2. Perform "POWER BALANCE" in "ACTIVE TEST" mode with CONSULT-II.

ACTIVE TEST	
POWER BALANCE	
MONITOR	
ENG SPEED	XXX rpm
MAS A/F SE-B1	XXX V
IACV-AAC/V	XXX %

SEF981Z

3. Make sure that each circuit produces a momentary engine speed drop.

Without CONSULT-II

1. Start engine.
2. Listen to each injector operating sound.

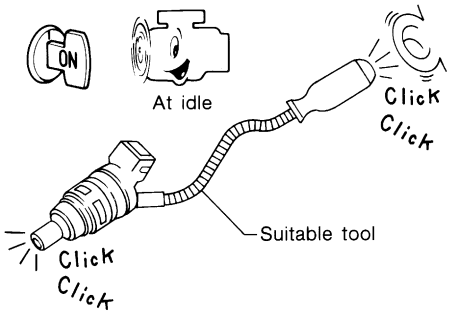

MEC703B

Clicking noise should be heard.

OK or NG

OK	▶	GO TO 8.
NG	▶	Perform trouble diagnosis for "INJECTORS", EC-1190.

8	CHECK INJECTOR

1. Confirm that the engine is cooled down and there are no fire hazards near the vehicle.
2. Turn ignition switch OFF.
3. Disconnect injector harness connectors on left bank (for DTC P0171), right bank (for DTC P0174).
4. Remove injector gallery assembly. Refer to EC-659.
   Keep fuel hose and all injectors connected to injector gallery.
   The injector harness connectors on right bank (for DTC P0171), left bank (for DTC P0174) should remain connected.
5. Disconnect all ignition coil harness connectors.
6. Prepare pans or saucers under each injector.
7. Crank engine for about 3 seconds. Make sure that fuel sprays out from injectors.

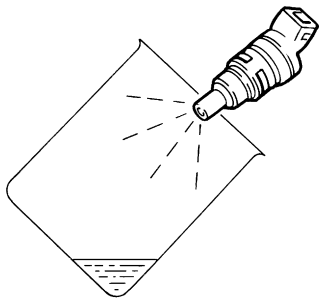

SEF595Q

Fuel should be sprayed evenly for each injector.

OK or NG

OK	▶	GO TO 9.
NG	▶	Replace injectors from which fuel does not spray out. Always replace O-ring with new ones.

9	CHECK INTERMITTENT INCIDENT

Refer to "TROUBLE DIAGNOSIS FOR INTERMITTENT INCIDENT", EC-753.

▶ **INSPECTION END**

On Board Diagnosis Logic

NEEC0694

With the Air/Fuel Mixture Ratio Self-Learning Control, the actual mixture ratio can be brought closely to the theoretical mixture ratio based on the mixture ratio feedback signal from the heated oxygen sensors 1 (front). The ECM calculates the necessary compensation to correct the offset between the actual and the theoretical ratios. In case the amount of the compensation value is extremely large (The actual mixture ratio is too rich.), the ECM judges the condition as the fuel injection system malfunction and light up the MIL (2 trip detection logic).

Sensor	Input Signal to ECM	ECM function	Actuator
Heated oxygen sensors 1 (front)	Density of oxygen in exhaust gas (Mixture ratio feedback signal)	Fuel injection control	Injectors

Malfunction is detected when fuel injection system does not operate properly, the amount of mixture ratio compensation is too large. (The mixture ratio is too rich.)

POSSIBLE CAUSE

NEEC0694S01

- Heated oxygen sensor 1 (front)
- Injectors
- Exhaust gas leaks
- Incorrect fuel pressure
- Mass air flow sensor

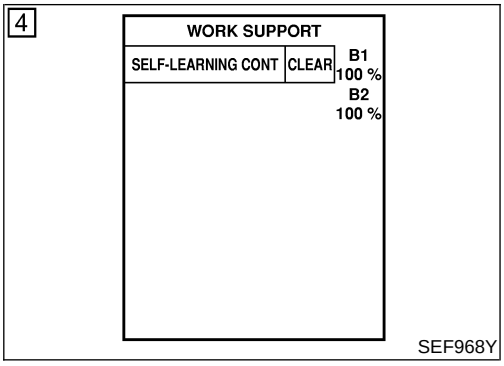

DTC Confirmation Procedure

=NEEC0695

NOTE:
If "DTC Confirmation Procedure" has been previously conducted, always turn ignition switch OFF and wait at least 5 seconds before conducting the next test.

With CONSULT-II

1) Start engine and warm it up to normal operating temperature.
2) Turn ignition switch OFF and wait at least 5 seconds.
3) Turn ignition switch ON and select "SELF-LEARN CONTROL" in "WORK SUPPORT" mode with CONSULT-II.
4) Clear the self-learning control coefficient by touching "CLEAR".
5) Select "DATA MONITOR" mode with CONSULT-II.
6) Start engine again and let it idle for at least 10 minutes.
   The 1st trip DTC P0172, P0175 should be detected at this stage, if a malfunction exists. If so, go to "Diagnostic Procedure", EC-918.
7) If it is difficult to start engine at step 6, the fuel injection system has a malfunction, too.
8) Crank engine while depressing accelerator pedal.
   If engine starts, go to "Diagnostic Procedure", EC-918. If engine does not start, remove ignition plugs and check for fouling, etc.

With GST

Follow the procedure "With CONSULT-II".

Wiring Diagram

NEEC0696

RIGHT BANK

NEEC0696S01

EC-FUELB1-01

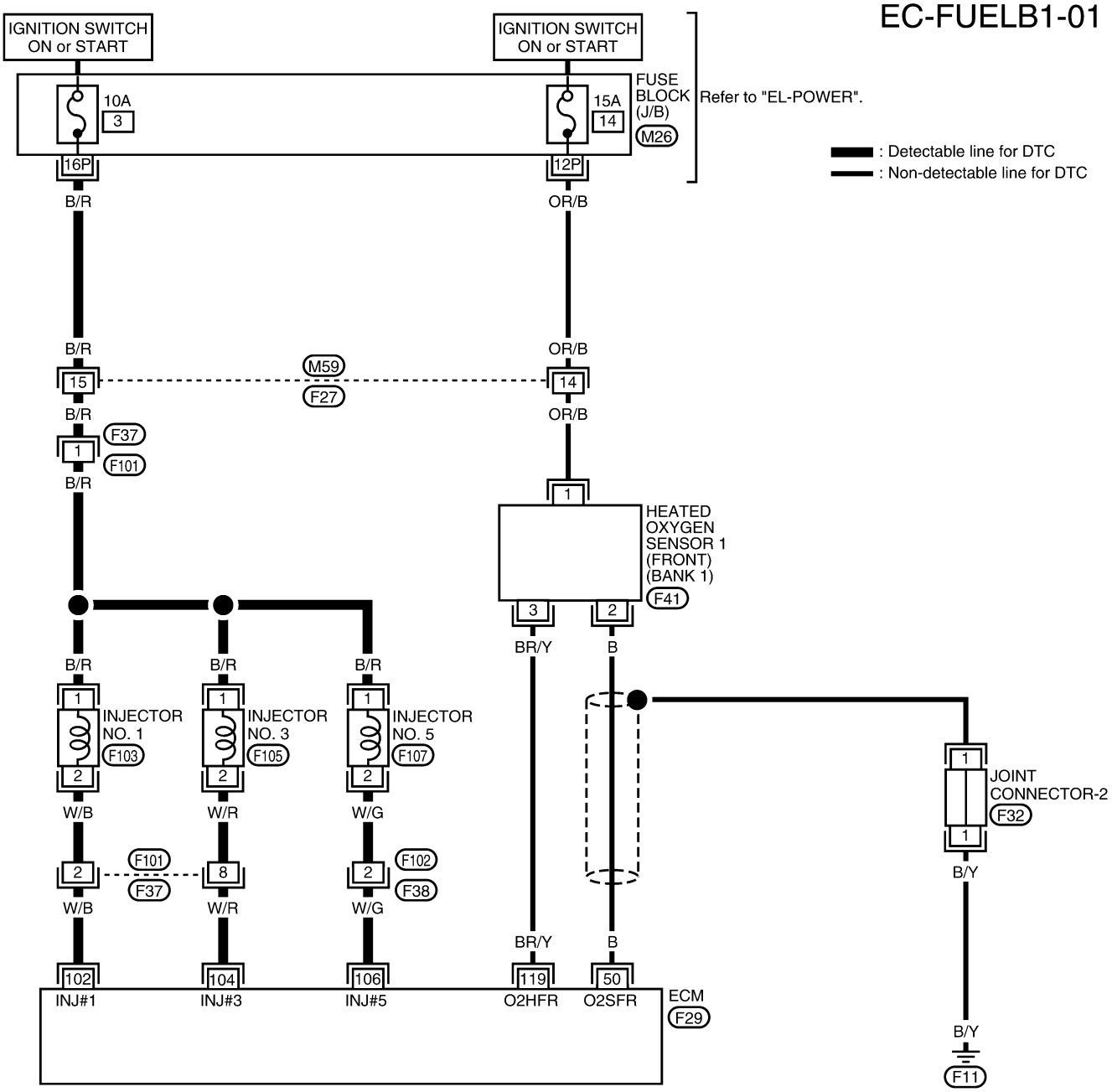

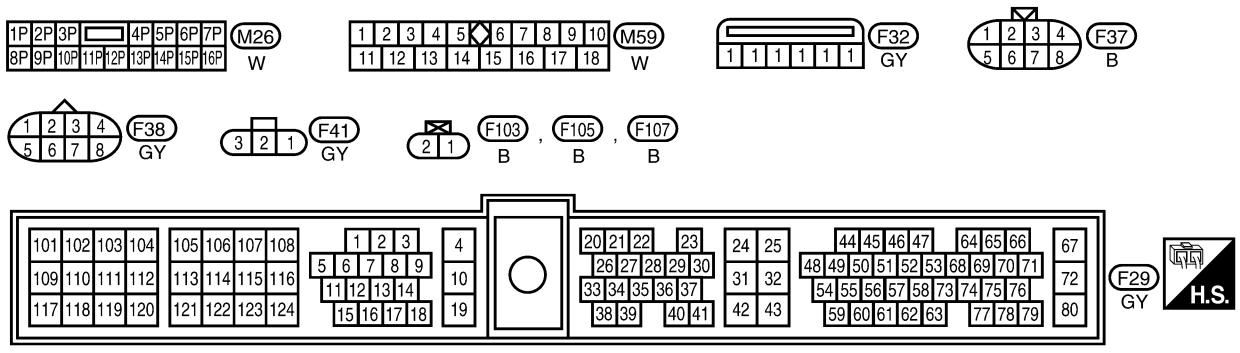

WEC796

LEFT BANK

NEEC0696S02

EC-FUELB2-01

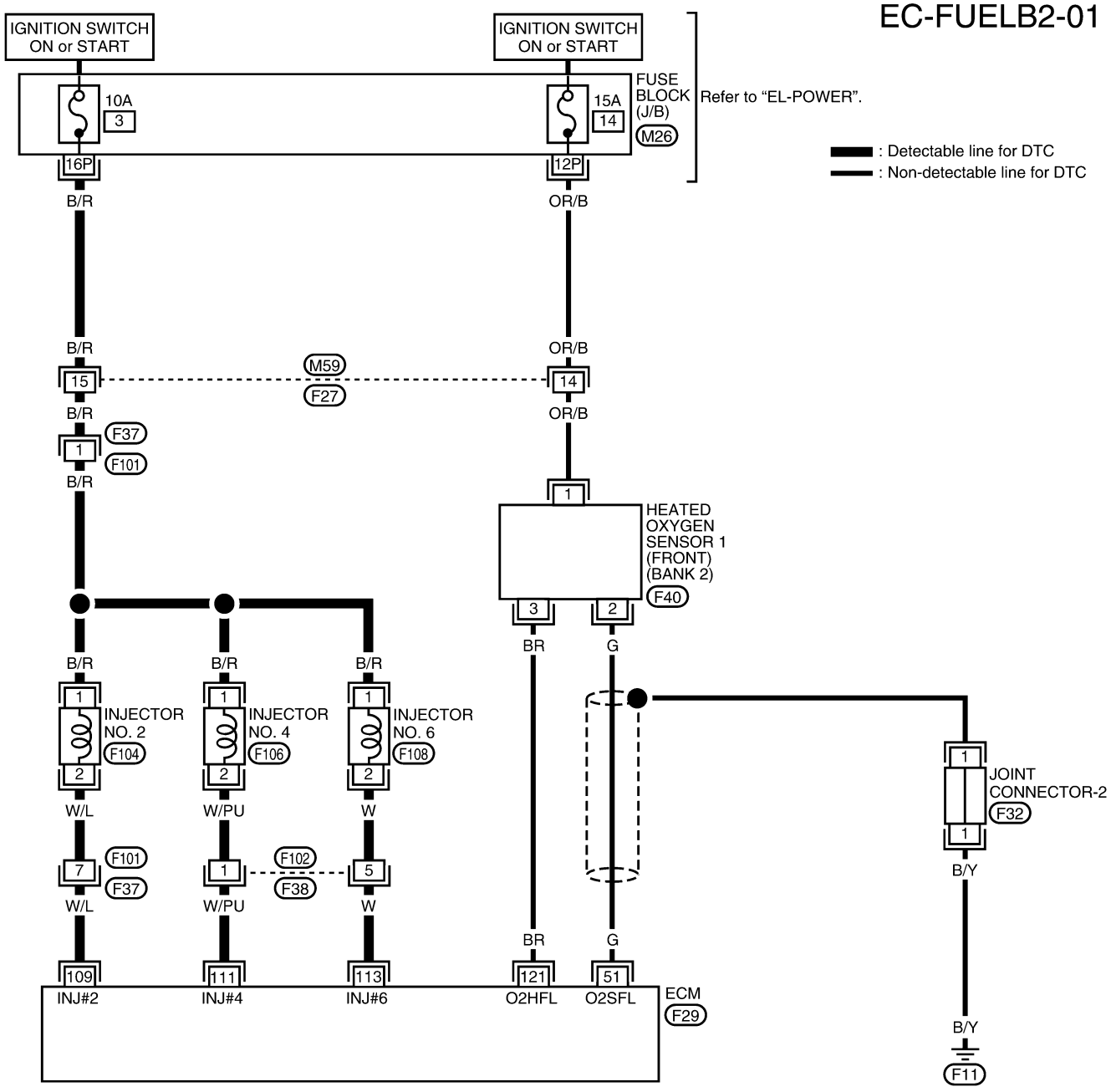

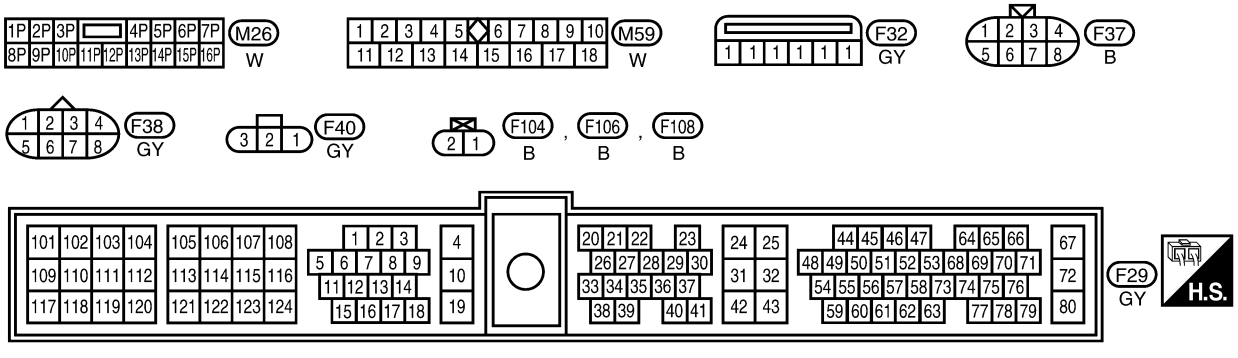

WEC797

Diagnostic Procedure

NEEC0697

1	CHECK EXHAUST AIR LEAK

1. Start engine and run it at idle.
2. Listen for an exhaust air leak before three way catalyst.

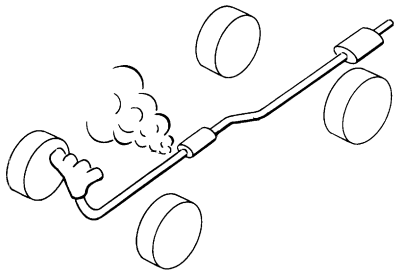

SEF099P

OK or NG

OK	▶	GO TO 2.
NG	▶	Repair or replace.

2	CHECK FOR INTAKE AIR LEAK

Listen for an intake air leak after the mass air flow sensor.

OK or NG

OK	▶	GO TO 3.
NG	▶	Repair or replace.

3	CHECK HEATED OXYGEN SENSOR 1 (FRONT) CIRCUIT FOR OPEN AND SHORT

1. Turn ignition switch OFF.
2. Disconnect corresponding heated oxygen sensor 1 (front) harness connector.
3. Disconnect ECM harness connector.
4. Check harness continuity between ECM terminal and HO2S1 (front) terminal as follows.
   Refer to Wiring Diagram.

DTC	Terminals		Bank
	ECM	Sensor	
P0172	50	2	Bank 1 (Right)
P0175	51	2	Bank 2 (Left)

SEF833Z

Continuity should exist.

5. Check harness continuity between ECM terminal or HO2S1 (front) terminal and ground as follows.
   Refer to Wiring Diagram.

DTC	Terminals		Bank
	ECM or sensor	Ground	
P0172	50 or 2	Ground	Bank 1 (Right)
P0175	51 or 2	Ground	Bank 2 (Left)

SEF834Z

Continuity should not exist.

6. Also check harness for short to power.

OK or NG

OK	▶	GO TO 4.
NG	▶	Repair open circuit or short to ground or short to power in harness or connectors.

4	CHECK FUEL PRESSURE

1. Release fuel pressure to zero.
   Refer to EC-658.
2. Install fuel pressure gauge and check fuel pressure.

At idling:

When fuel pressure regulator valve vacuum hose is connected.

235 kPa (2.4 kg/cm^2, 34 psi)

When fuel pressure regulator valve vacuum hose is disconnected.

294 kPa (3.0 kg/cm^2, 43 psi)

OK or NG

OK	▶	GO TO 6.
NG	▶	GO TO 5.

Diagnostic Procedure (Cont'd)

5	DETECT MALFUNCTIONING PART
Check the following. ● Fuel pump and circuit (Refer to EC-1198.) ● Fuel pressure regulator (Refer to EC-659.)	
▶	Repair or replace.

6	CHECK MASS AIR FLOW SENSOR
With CONSULT-II 1. Install all parts removed. 2. Check "MASS AIR FLOW" in "DATA MONITOR" mode with CONSULT-II. **3.3 - 4.8 g·m/sec: at idling** **12.0 - 14.9 g·m/sec: at 2,500 rpm**	
With GST 1. Install all parts removed. 2. Check mass air flow sensor signal in MODE 1 with GST. **3.3 - 4.8 g·m/sec: at idling** **12.0 - 14.9 g·m/sec: at 2,500 rpm**	
OK or NG	
OK ▶	GO TO 7.
NG ▶	Check connectors for rusted terminals or loose connections in the mass air flow sensor circuit or engine grounds. Refer to EC-760.

7	CHECK FUNCTION OF INJECTORS

With CONSULT-II

1. Start engine.
2. Perform "POWER BALANCE" in "ACTIVE TEST" mode with CONSULT-II.

ACTIVE TEST	
POWER BALANCE	
MONITOR	
ENG SPEED	XXX rpm
MAS A/F SE-B1	XXX V
IACV-AAC/V	XXX %

SEF981Z

3. Make sure that each circuit produces a momentary engine speed drop.

Without CONSULT-II

1. Start engine.
2. Listen to each injector operating sound.

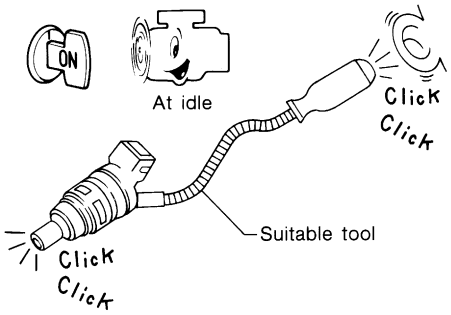

MEC703B

Clicking noise should be heard.

OK or NG

OK	▶	GO TO 8.
NG	▶	Perform trouble diagnosis for "INJECTORS", EC-1190.

8	CHECK INJECTOR

1. Remove injector assembly. Refer to EC-659.
   Keep fuel hose and all injectors connected to injector gallery.
2. Confirm that the engine is cooled down and there are no fire hazards near the vehicle.
3. Disconnect injector harness connectors left bank (for DTC P0172), right bank (for P0175).
   The injector harness connectors on right bank (for P0172), left bank (for P0175) should remain connected.
4. Disconnect all ignition coil harness connectors.
5. Prepare pans or saucers under each injectors.
6. Crank engine for about 3 seconds.
   Make sure fuel does not drip from injector.

OK or NG

OK (Does not drip)	▶	GO TO 9.
NG (Drips)	▶	Replace the injectors from which fuel is dripping. Always replace O-ring with new one.

9	CHECK INTERMITTENT INCIDENT

Refer to "TROUBLE DIAGNOSIS FOR INTERMITTENT INCIDENT", EC-753.

▶ **INSPECTION END**

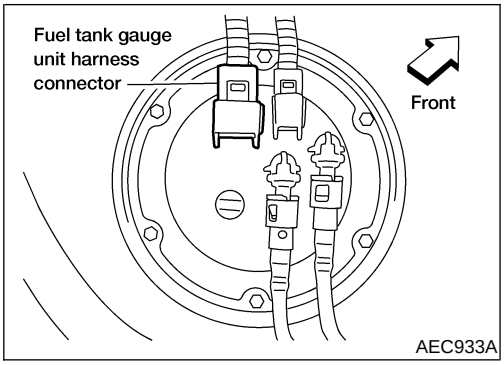

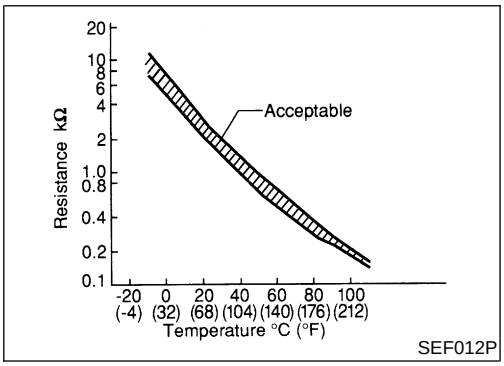

Component Description

NEEC0698

The fuel tank temperature sensor is used to detect the fuel temperature inside the fuel tank. The sensor modifies a voltage signal from the ECM. The modified signal returns to the ECM as the fuel temperature input. The sensor uses a thermistor which is sensitive to the change in temperature. The electrical resistance of the thermistor decreases as temperature increases.

<Reference data>

Fluid temperature °C (°F)	Voltage* (V)	Resistance (kΩ)
20 (68)	3.5	2.3 - 2.7
50 (122)	2.2	0.79 - 0.90

*: These data are reference values and are measured between ECM terminal 60 (Fuel tank temperature sensor) and ground.

CAUTION:

Do not use ECM ground terminals when measuring input/ output voltage. Doing so may result in damage to the ECM's transistor. Use a ground other than the ECM terminals, such as the ground.

On Board Diagnosis Logic

NEEC0699

Malfunction is detected when an excessively high or low voltage is sent to ECM, rationally incorrect voltage is sent to ECM, compared with the voltage signals from engine coolant temperature sensor and intake air temperature sensor.

POSSIBLE CAUSE

NEEC0699S01

- Harness or connectors
  (The sensor circuit is open or shorted.)
- Fuel tank temperature sensor

DTC Confirmation Procedure

=NEEC0700

NOTE:
If “DTC Confirmation Procedure” has been previously conducted, always turn ignition switch “OFF” and wait at least 5 seconds before conducting the next test.

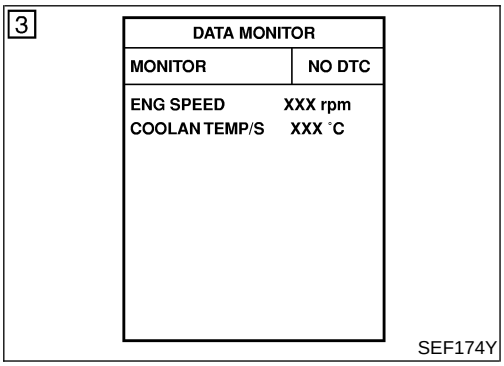

With CONSULT-II

1) Turn ignition switch ON.
2) Select “DATA MONITOR” mode with CONSULT-II.
3) Wait at least 10 seconds.
   If the result is NG, go to “Diagnostic Procedure”, EC-925.
   If the result is OK, go to following step.
4) Check “COOLAN TEMP/S” value.
   If “COOLAN TEMP/S” is less than 60°C (140°F), the result will be OK.
   If “COOLAN TEMP/S” is above 60°C (140°F), go to the following step.
5) Cool engine down until “COOLAN TEMP/S” is less than 60°C (140°F).
6) Wait at least 10 seconds.
7) If 1st trip DTC is detected, go to “Diagnostic Procedure”, EC-925.

With GST

Follow the procedure “With CONSULT-II”.

Wiring Diagram

NEEC0701

EC-FTTS-01

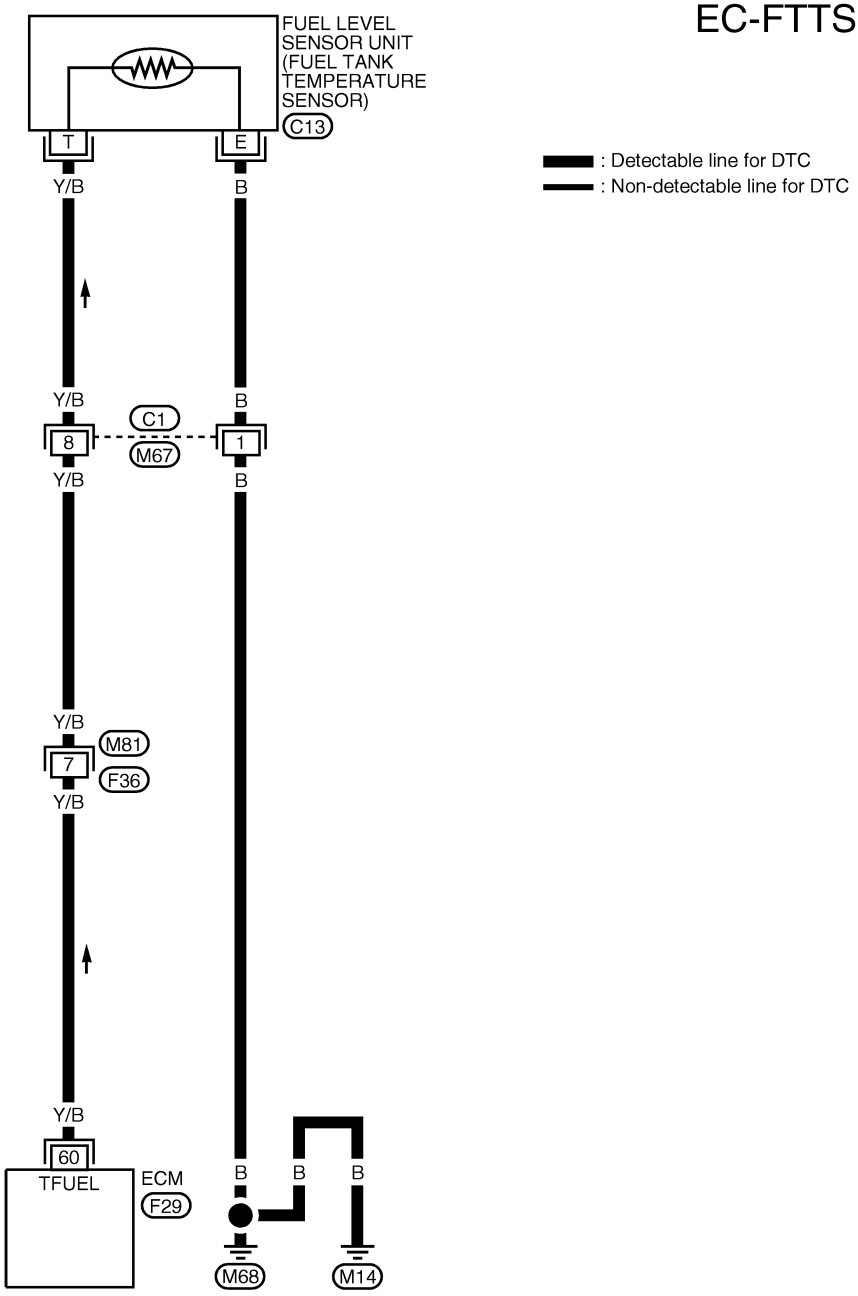

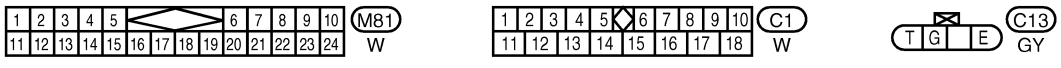

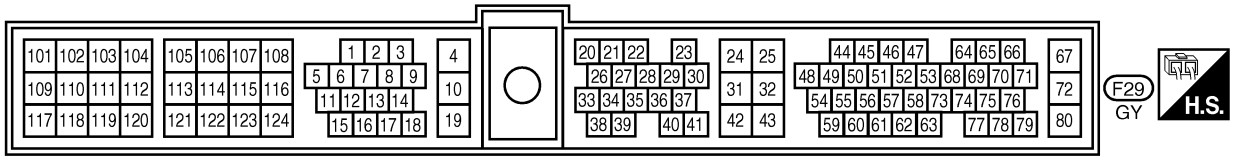

LEC538

Diagnostic Procedure

NEEC0702

1	CHECK FUEL TANK TEMPERATURE SENSOR POWER SUPPLY CIRCUIT

1. Turn ignition switch OFF.
2. Disconnect fuel tank gauge unit harness connector.

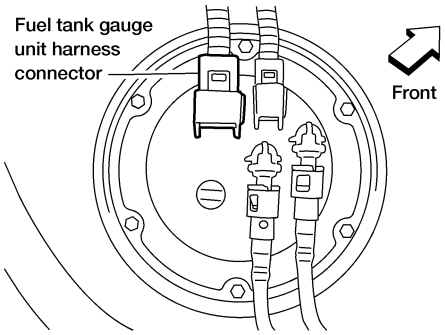

AEC933A

3. Turn ignition switch ON.
4. Check voltage between terminal 1 and ground with CONSULT-II or tester.

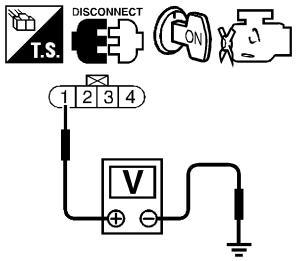

SEF639W

Voltage: Approximately 5V

OK or NG

OK	▶	GO TO 3.
NG	▶	GO TO 2.

2	DETECT MALFUNCTIONING PART

Check the following.
- Harness connectors B101, M67
- Harness connectors M81, F36
- Harness for open or short between ECM and fuel tank temperature sensor

	▶	Repair harness or connector.

3	CHECK FUEL TANK TEMPERATURE SENSOR GROUND CIRCUIT FOR OPEN AND SHORT

1. Turn ignition switch OFF.
2. Check harness continuity between sensor terminal 4 and body ground. Refer to Wiring Diagram.
   Continuity should exist.
3. Also check harness for short to power.

OK or NG

OK	▶	GO TO 5.
NG	▶	GO TO 4.

4	DETECT MALFUNCTIONING PART

Check harness for open between fuel tank temperature sensor and body ground.

	▶	Repair open circuit or short to power in harness or connectors.

Diagnostic Procedure (Cont'd)

5	CHECK FUEL TANK TEMPERATURE SENSOR

Check resistance by heating with hot water or heat gun as shown in the figure.

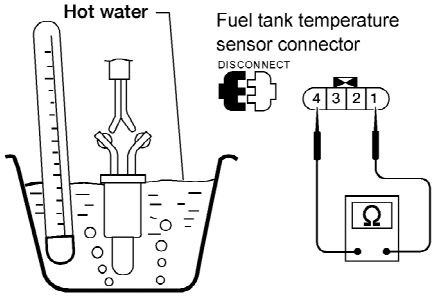

AEC052B

Temperature °C (°F)	Resistance kΩ
20 (68)	2.3 - 2.7
50 (122)	0.79 - 0.90

MTBL0234

OK or NG

OK	▶	GO TO 6.
NG	▶	Replace fuel tank temperature sensor.

6	CHECK INTERMITTENT INCIDENT
Refer to "TROUBLE DIAGNOSIS FOR INTERMITTENT INCIDENT", EC-753.	
▶	**INSPECTION END**

System Description

NEEC0963

COOLING FAN CONTROL

NEEC0963S01

Sensor	Input Signal to ECM	ECM function	Actuator
Vehicle speed sensor	Vehicle speed	Cooling fan control	Cooling fan relay(s)
Engine coolant temperature sensor	Engine coolant temperature		
Ignition switch	Start signal		
Camshaft position sensor	Engine speed		

The ECM controls the cooling fan corresponding to the signals sent from the vehicle speed and engine coolant temperature. The control system has 2-step control [ON/OFF].

OPERATION

NEEC0963S02

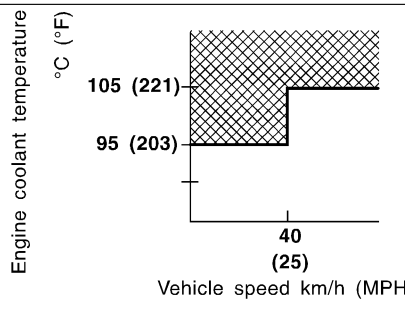

SEF666WA

CONSULT-II Reference Value in Data Monitor Mode

NEEC0964

Specification data are reference values.

MONITOR ITEM	CONDITION		SPECIFICATION
COOLING FAN	• Engine: Idling, after warming up • Air conditioner switch: OFF	Engine coolant temperature is 94°C (201°F) or less.	OFF
		Engine coolant temperature is 95°C (203°F) or more.	ON

On Board Diagnosis Logic

NEEC0965

This diagnosis checks whether the engine coolant temperature is extraordinary high, even when the load is not heavy.
When malfunction is detected, the malfunction indicator lamp (MIL) will light up even in the first trip.
Malfunction is detected when engine coolant temperature is excessively high under normal engine speed.

Possible Cause

NEEC0966

- Harness or connectors
  (The cooling fan circuit is open or shorted)
- Cooling fan
- Thermostat
- Improper ignition timing
- Engine coolant temperature sensor
- Blocked radiator
- Blocked front end (Improper fitting of nose mask)
- Crushed vehicle frontal area (Vehicle frontal is collided but not repaired)
- Blocked air passage by improper installation of front fog lamp or fog lamps.
- Improper mixture ratio of coolant
- Damaged bumper

For more information, refer to “MAIN 12 CAUSES OF OVERHEATING”, EC-940.

Overall Function Check

=NEEC0704

Use this procedure to check the overall function of the engine coolant over temperature enrichment protection check, a DTC might not be confirmed.

WARNING:

Never remove the radiator cap when the engine is hot. Serious burns could be caused by high-pressure fluid escaping from the radiator.

Wrap a thick cloth around the cap. Carefully remove the cap by turning it a quarter turn to allow built-up pressure to escape. Then turn the cap all the way off.

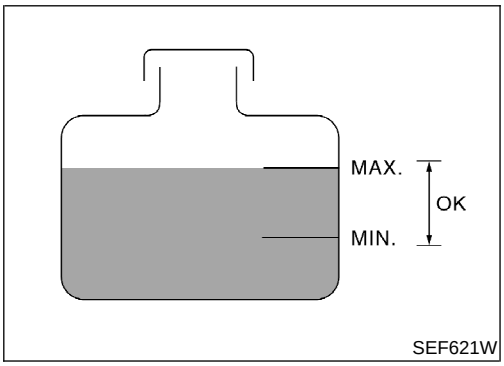

WITH CONSULT-II

NEEC0704S01

1. Check the coolant level and mixture ratio (Using coolant tester) in the reservoir tank and radiator.
   Allow engine to cool before checking coolant level and mixture ratio.
   - If the coolant level in the reservoir and/or the radiator is below the proper range, skip following steps and go to “Diagnostic Procedure”, EC-933.
   - If the coolant mixture ratio is out of range between 45 to 55%, replace the coolant. Refer to ***MA-27***, “Changing Engine Coolant”.

   a) Fill radiator with coolant up to specified level with a filling speed of 2 liters per minute like pouring coolant by kettle. Be sure to use coolant with the proper mixture ratio. Refer to ***MA-15***, “Anti-freeze Coolant Mixture Ratio”.

   b) After refilling coolant, run engine to ensure that no water-flow noise is emitted. After checking or replacing coolant, go to step 3) below.
2. Confirm whether customer filled the engine coolant or not. If customer filled the engine coolant, skip following steps and go to “Diagnostic Procedure”, EC-933.
3. Turn ignition switch ON.
4. Perform “COOLANT TEMP” in “ACTIVE TEST” mode with CONSULT-II.
   - Set “COOLANT TEMP” to 95°C (194°F) and make sure that cooling fan operates. If NG, go to “Diagnostic Procedure”, EC-933. After repair, go to next step.
5. Check for blocked coolant passage.
   Warm up engine to normal operating temperature, then grasp upper and lower radiator hoses and make sure that coolant flows.
   If NG, go to step 6 of “Diagnostic Procedure”, EC-933. After repair, go to next step.
   Be extremely careful not to touch any moving or adjacent parts.
6. Check radiator for blocked air passage
   Check for blocked condenser or radiator (condenser or radiator fins damaged, condenser or radiator clogged), after market fog lamps ...etc. Check for condenser or radiator fin damage, shroud damage, vehicle front end for clogging of debris or insects ...etc.
   Check for improper fitting of front end cover, damaged radiator grille or bumper, vehicle frontal area damaged by collision but not repaired.
   If NG, take appropriate action and then go to next step.
7. Check ECT sensor for proper operation. Refer to step 7 of

"Diagnostic Procedure", EC-933. If NG, replace ECT sensor and go to next step.

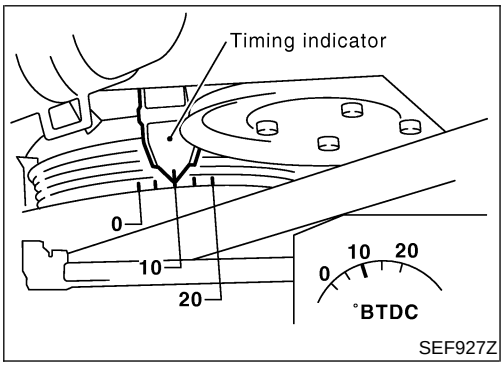

SEF927Z

8. Check ignition timing. Refer to "Basic Inspection", EC-715. Make sure that ignition timing is 10° ± 1° at 700 ± 50 rpm. If NG, adjust ignition timing and then recheck.

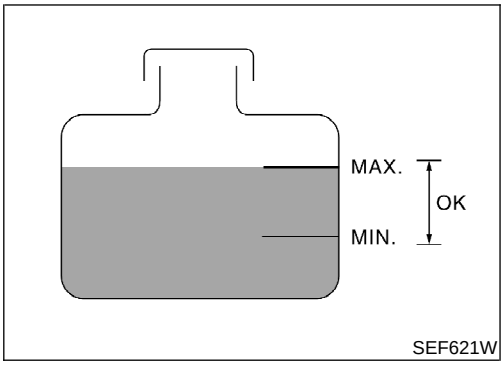

SEF621W

⊗ WITHOUT CONSULT-II

NEEC0704S02

1. Check the coolant level and mixture ratio (Using coolant tester) in the reservoir tank and radiator.
   Allow engine to cool before checking coolant level and mixture ratio.

- If the coolant level in the reservoir and/or radiator is below the proper range, skip the following steps and go to step 3 of "Diagnostic Procedure", EC-933.
- If the coolant mixture ratio is out of range between 45 to 55%, replace the coolant. Refer to ***MA-27***, "Changing Engine Coolant".

a) Fill radiator with coolant up to specified level with a filling speed of 2 liters per minute like pouring coolant by kettle. Be sure to use coolant with the proper mixture ratio. Refer to ***MA-15***, "Anti-freeze Coolant Mixture Ratio".

b) After refilling coolant, run engine to ensure that no water-flow noise is emitted. After checking or replacing coolant, go to step 3) below.

2. Confirm whether customer filled the engine coolant or not. If customer filled engine coolant, skip following steps and go to "Diagnostic Procedure", EC-933.
3. Turn ignition switch OFF.
4. Disconnect engine coolant temperature sensor harness connector.

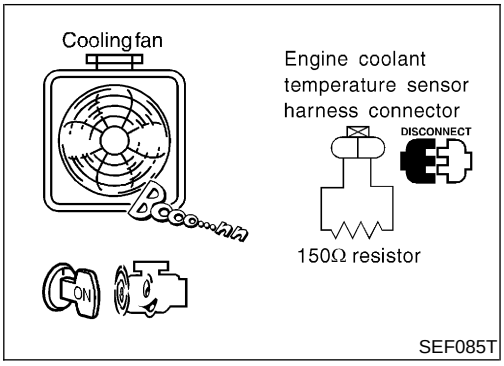

5. Connect 150Ω resistor to engine coolant temperature sensor harness connector.
6. Start engine and make sure that cooling fan operates.
   Be careful not to overheat engine.
7. Check for blocked coolant passage.
   Warm up engine to normal operating temperature, then grasp upper and lower radiator hoses and make sure that coolant flows.
   If NG, go to step 6 of "Diagnostic Procedure", EC-933. After repair, go to next step.
   Be extremely careful not to touch any moving or adjacent parts.
8. Check radiator for blocked air passage
   Check for blocked condenser or radiator (condenser or radiator fins damaged, condenser or radiator clogged), after market fog lamps,...etc. Check for condenser or radiator fin damage, shroud damage, vehicle front end for clogging of debris or insects ...etc.
   Check for improper fitting of front end cover, damaged radiator grille or bumper, vehicle frontal area damaged by collision but not repaired.
   If NG, take appropriate action and then go to next step.
9. Check ECT sensor for proper operation. Refer to step 6 of "Diagnostic Procedure", EC-933. If NG, replace ECT sensor and go to next step.

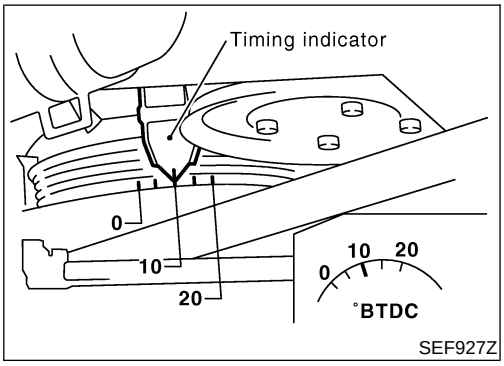

10. Check ignition timing. Refer to "Basic Inspection", EC-715.
    Make sure that ignition timing is 10° ± 1° at 700 ± 50 rpm.
    If NG, adjust ignition timing and then recheck.

Wiring Diagram

NEEC0705

EC-COOL/F-01

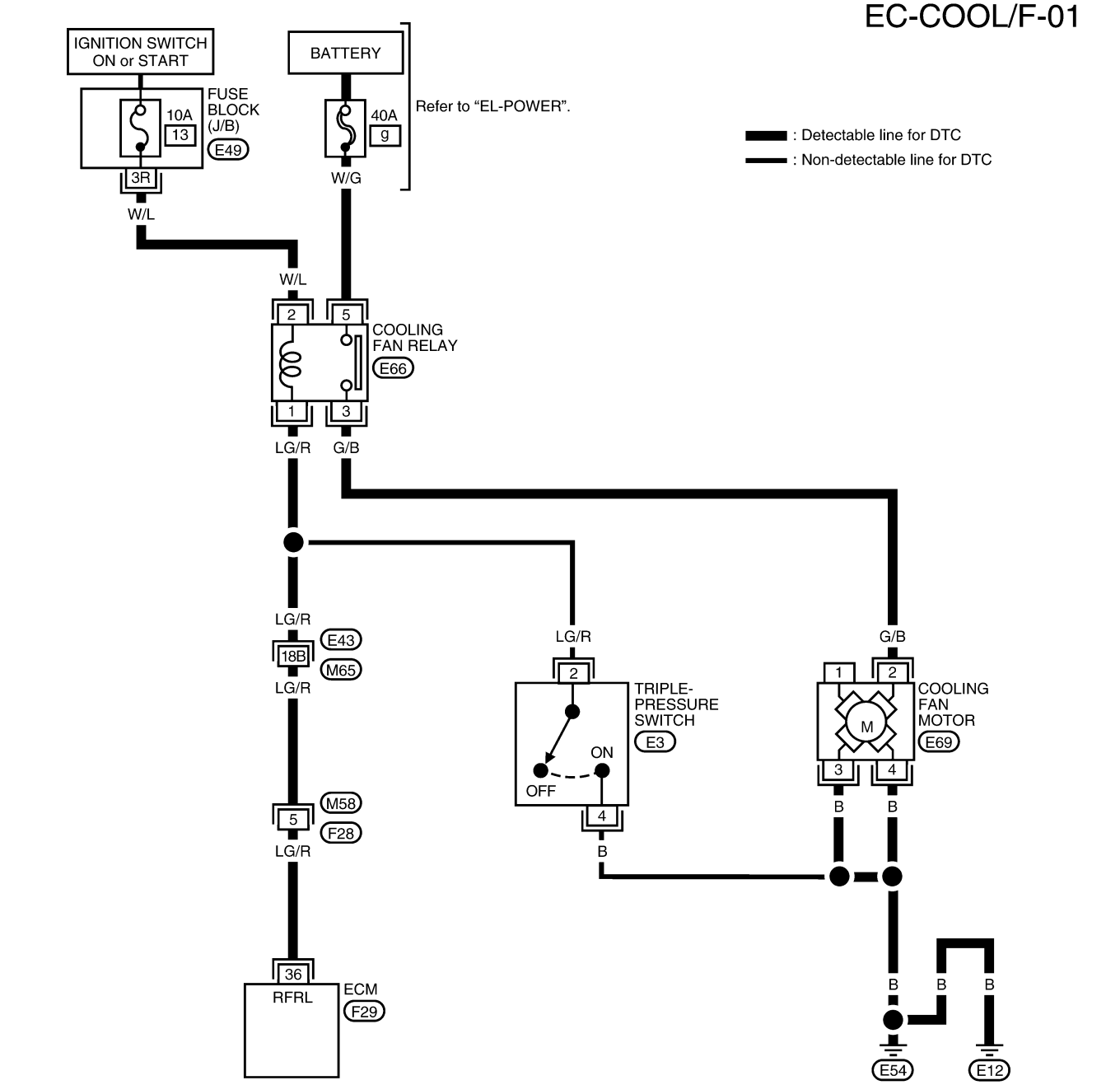

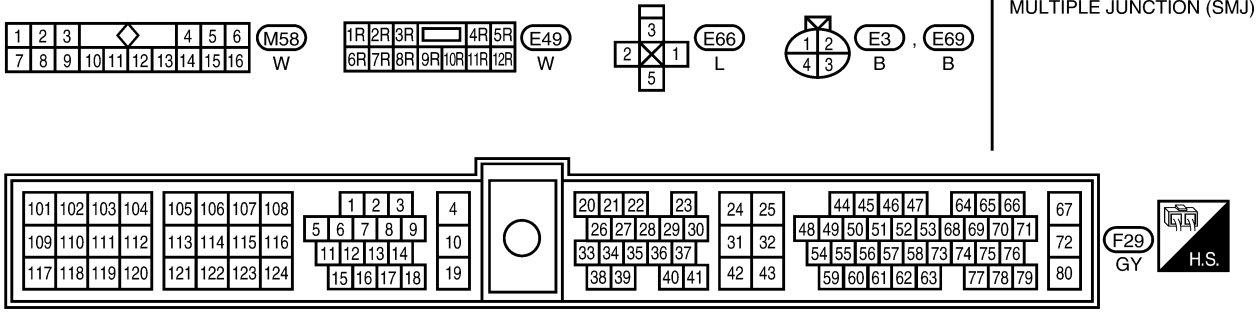

LEC504

Diagnostic Procedure

NEEC0706

1	INSPECTION START

Do you have CONSULT-II?

Yes or No

Yes	▶	GO TO 2.
No	▶	GO TO 3.

2	CHECK COOLING FAN OPERATION

With CONSULT-II

1. Turn ignition switch ON.
2. Perform “COOLING FAN” in “ACTIVE TEST” mode with CONSULT-II.

ACTIVE TEST	
COOLING FAN	OFF
MONITOR	
COOLAN TEMP/S	XXX °C

SEF376X

Does cooling fan rotate?

Yes or No

Yes	▶	GO TO 4.
No	▶	GO TO 9.

3	CHECK COOLING FAN OPERATION

Without CONSULT-II

1. Turn ignition switch OFF.
2. Disconnect engine coolant temperature sensor harness connector.
3. Connect 150Ω resistor to engine coolant temperature sensor harness connector.
4. Start engine and make sure that cooling fan operates.

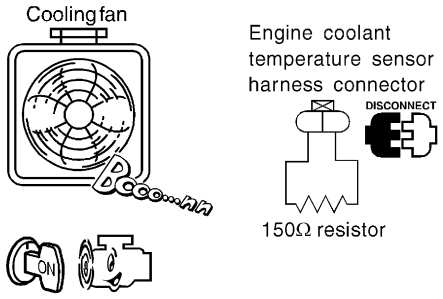

SEF085T

OK or NG

OK	▶	GO TO 4.
NG	▶	GO TO 9.

Diagnostic Procedure (Cont'd)

4	CHECK COOLING SYSTEM FOR LEAK

Apply pressure to the cooling system with a tester, and check if the pressure drops.

CAUTION:

Higher than the specified pressure may cause radiator damage.

Testing pressure: 157 kPa (1.6 kg/cm^2, 23 psi)

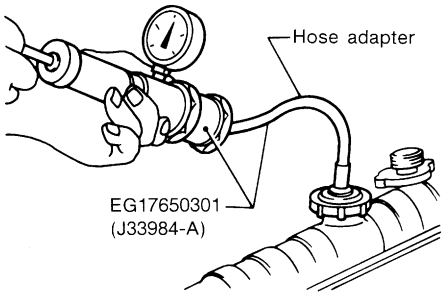

SLC754A

Pressure should not drop.

OK or NG

OK	▶	GO TO 5.
NG	▶	**Check the following for leak:** ● Hose ● Radiator ● Water pump Refer to ***LC-29***, "Water Pump".

5	CHECK RADIATOR CAP

Apply pressure to cap with a tester and check radiator cap relief pressure.

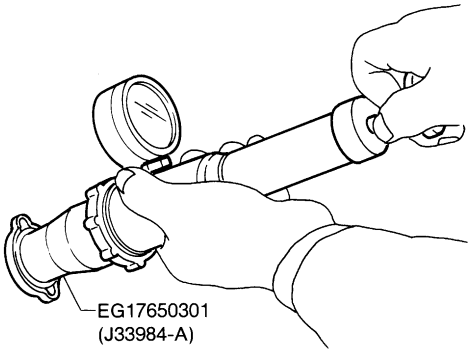

SLC755A

Radiator cap relief pressure:

59 - 98 kPa (0.6 - 1.0 kg/cm^2, 9 - 14 psi)

OK or NG

OK	▶	GO TO 6.
NG	▶	Replace radiator cap.

6	CHECK THERMOSTAT

1. Check valve seating condition at normal room temperatures.
   It should seat tightly.
2. Check valve opening temperature and valve lift.

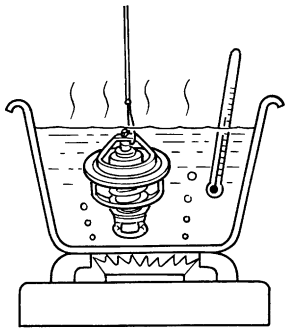

SLC343

Valve opening temperature:
82°C (180°F) [standard]
Valve lift:
More than 10 mm/95°C (0.31 in/203°F)

3. Check if valve is closed at 5°C (9°F) below valve opening temperature.

For details, refer to ***LC-30***, "Thermostat".

OK or NG

OK	▶	GO TO 7.
NG	▶	Replace thermostat.

Diagnostic Procedure (Cont'd)

7	CHECK ENGINE COOLANT TEMPERATURE SENSOR

Check resistance as shown in the figure.

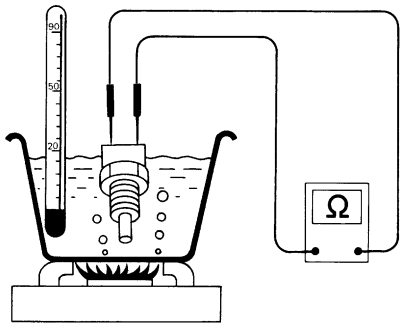

SEF152P

<Reference data>

Temperature °C (°F)	Resistance kΩ
20 (68)	2.1 - 2.9
50 (122)	0.68 - 1.00
90 (194)	0.236 - 0.260

MTBL0229

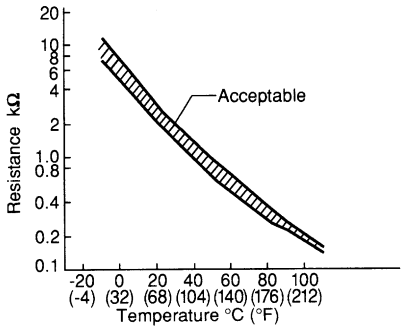

SEF012P

OK or NG

OK	▶	GO TO 8.
NG	▶	Replace engine coolant temperature sensor.

8	CHECK MAIN 12 CAUSES

If the cause cannot be isolated, go to "MAIN 12 CAUSES OF OVERHEATING", EC-940.

▶ **INSPECTION END**

9	CHECK COOLING FAN RELAY POWER SUPPLY CIRCUIT

1. Turn ignition switch OFF.
2. Disconnect cooling fan relay.

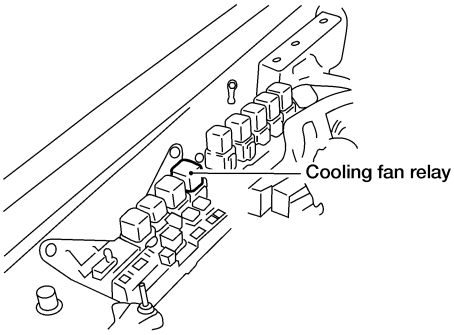

AEC932A

3. Turn ignition switch ON.
4. Check voltage between terminals 2, 5 and ground with CONSULT-II or tester.

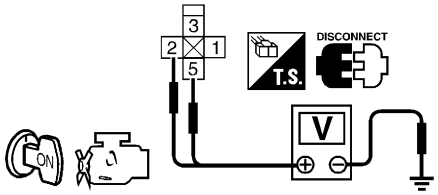

SEF667W

Voltage: Battery voltage

OK or NG

OK	▶	GO TO 11.
NG	▶	GO TO 10.

10	DETECT MALFUNCTIONING PART

Check the following.
- Fuse block (J/B) connector E49
- 10A fuse
- 40A fusible link
- Harness for open or short between cooling fan relay and fuse
- Harness for open or short between cooling fan relay and battery

	▶	Repair open circuit or short to ground or short to power in harness or connectors.

Diagnostic Procedure (Cont'd)

11	CHECK COOLING FAN MOTOR POWER SUPPLY AND GROUND CIRCUIT FOR OPEN AND SHORT

1. Turn ignition switch OFF.
2. Disconnect cooling fan motor harness connector.

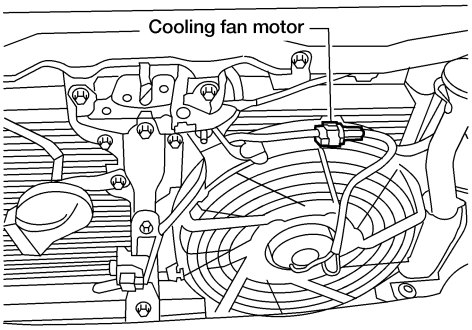

AEC931A

3. Check harness continuity between relay terminal 3 and motor terminal 2, motor terminals 3, 4 and body ground. Refer to Wiring Diagram.
   Continuity should exist.
4. Also check harness for short to ground and short to power.

OK or NG

OK	▶	GO TO 12.
NG	▶	Repair open circuit or short to ground or short to power in harness or connectors.

12	CHECK COOLING FAN RELAY OUTPUT SIGNAL CIRCUIT FOR OPEN AND SHORT

1. Disconnect ECM harness connector.
2. Check harness continuity between ECM terminal 36 and relay terminal 1. Refer to Wiring Diagram.
   Continuity should exist.
3. Also check harness for short to ground and short to power.

OK or NG

OK	▶	GO TO 14.
NG	▶	GO TO 13.

13	DETECT MALFUNCTIONING PART

Check the following.
- Harness connectors E43, M65
- Harness connectors M58, F28
- Harness for open or short between cooling fan relay and ECM

	▶	Repair open circuit or short to ground or short to power in harness or connectors.

14	CHECK COOLING FAN RELAY

Check continuity between terminals 3 and 5.

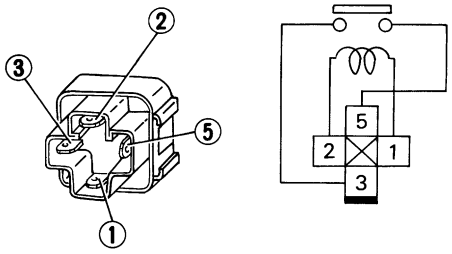

SEF511P

Conditions	Continuity
12V direct current supply between terminals 1 and 2	Yes
No current supply	No

MTBL0252

OK or NG

OK	▶	GO TO 15.
NG	▶	Replace cooling fan relay.

15	CHECK COOLING FAN MOTOR

1. Disconnect cooling fan motor harness connector.
2. Supply cooling fan motor terminals with battery voltage and check operation.

	Terminals	
	(+)	(–)
Cooling fan motor	2	3, 4

MTBL0253

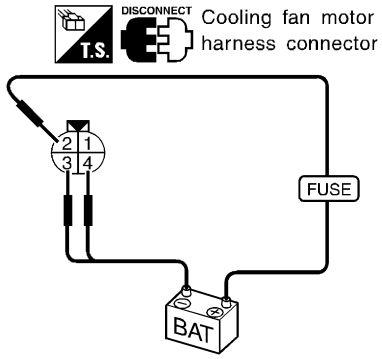

SEF670W

Cooling fan motor should operate.

OK or NG

OK	▶	GO TO 16.
NG	▶	Replace cooling fan motor.

16	CHECK INTERMITTENT INCIDENT

Perform "TROUBLE DIAGNOSIS FOR INTERMITTENT INCIDENT", EC-753.

▶ **INSPECTION END**

Main 12 Causes of Overheating

NEEC0707

Engine	Step	Inspection item	Equipment	Standard	Reference page
OFF	1	• Blocked radiator • Blocked condenser • Blocked radiator grille • Blocked bumper	• Visual	No blocking	—
	2	• Coolant mixture	• Coolant tester	50 - 50% coolant mixture	See ***MA-13***, “RECOMMENDED FLUIDS AND LUBRICANTS”.
	3	• Coolant level	• Visual	Coolant up to MAX level in reservoir tank and radiator filler neck	See ***MA-27***, “Changing Engine Coolant”.
	4	• Radiator cap	• Pressure tester	59 - 98 kPa (0.6 - 1.0 kg/cm^2, 9 - 14 psi) (Limit)	See ***LC-25***, “System Check”.
ON*2	5	• Coolant leaks	• Visual	No leaks	See ***LC-25***, “System Check”.
ON*2	6	• Thermostat	• Touch the upper and lower radiator hoses	Both hoses should be hot	See ***LC-30***, “Thermostat” and ***LC-32***, “Radiator”.
ON*1	7	• Cooling fan	• CONSULT-II	Operating	See “TROUBLE DIAGNOSIS FOR OVERHEAT” (EC-1072).
OFF	8	• Combustion gas leak	• Color checker chemical tester 4 Gas analyzer	Negative	—
ON*3	9	• Coolant temperature gauge	• Visual	Gauge less than 3/4 when driving	—
		• Coolant overflow to reservoir tank	• Visual	No overflow during driving and idling	See ***MA-27***, “Changing Engine Coolant”.
OFF*4	10	• Coolant return from reservoir tank to radiator	• Visual	Should be initial level in reservoir tank	See ***MA-27***, “ENGINE MAINTENANCE”.
OFF	11	• Cylinder head	• Straight gauge feeler gauge	0.1 mm (0.004 in) Maximum distortion (warping)	See ***EM-96***, “Inspection”.
	12	• Cylinder block and pistons	• Visual	No scuffing on cylinder walls or piston	See ***EM-116***, “Inspection”.

*1: Turn the ignition switch ON.

*2: Engine running at 3,000 rpm for 10 minutes.

*3: Drive at 90 km/h (55 MPH) for 30 minutes and then let idle for 10 minutes.

*4: After 60 minutes of cool down time.

For more information, refer to ***LC-35***, “OVERHEATING CAUSE ANALYSIS”.

On Board Diagnosis Logic

NEEC1512

This diagnosis checks whether the engine coolant temperature is extraordinary high, even when the load is not heavy.
When malfunction is detected, the malfunction indicator lamp (MIL) will light up even in the first trip.
Malfunction is detected when engine coolant temperature is excessively high under normal engine speed.

Possible Cause

NEEC1513

- Cooling fan (Crankshaft driven)
- Thermostat
- Improper ignition timing
- Engine coolant temperature sensor
- Blocked radiator
- Blocked front end (Improper fitting of nose mask)
- Crushed vehicle frontal area (Vehicle frontal is collided but not repaired)
- Blocked air passage by improper installation of front fog lamp or fog lamps.
- Improper mixture ratio of coolant
- Damaged bumper

For more information, refer to “MAIN 12 CAUSES OF OVERHEATING”, EC-947.

Overall Function Check

=NEEC1514

Use this procedure to check the overall function of the engine coolant over temperature enrichment protection check, a DTC might not be confirmed.

WARNING:

Never remove the radiator cap when the engine is hot. Serious burns could be caused by high-pressure fluid escaping from the radiator.

Wrap a thick cloth around the cap. Carefully remove the cap by turning it a quarter turn to allow built-up pressure to escape. Then turn the cap all the way off.

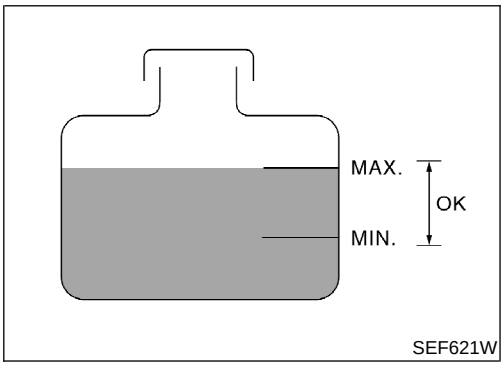

WITH CONSULT-II

NEEC1514S01

1. Check the coolant level and mixture ratio (Using coolant tester) in the reservoir tank and radiator.
   Allow engine to cool before checking coolant level and mixture ratio.

- If the coolant level in the reservoir and/or the radiator is below the proper range, skip following steps and go to “Diagnostic Procedure”, EC-944.
- If the coolant mixture ratio is out of range between 45 to 55%, replace the coolant. Refer to ***MA-27***, “Changing Engine Coolant”.

a) Fill radiator with coolant up to specified level with a filling speed of 2 liters per minute like pouring coolant by kettle. Be sure to use coolant with the proper mixture ratio. Refer to ***MA-15***, “Anti-freeze Coolant Mixture Ratio”.

b) After refilling coolant, run engine to ensure that no water-flow noise is emitted. After checking or replacing coolant, go to step 3) below.

2. Confirm whether customer filled the engine coolant or not. If customer filled the engine coolant, skip following steps and go to “Diagnostic Procedure”, EC-944.
3. Start engine and make sure that cooling fan (crankshaft driven) operates. If NG, go to “Diagnostic Procedure”, EC-944. After repair, go to next step.
4. Check for blocked coolant passage.
   Warm up engine to normal operating temperature, then grasp upper and lower radiator hoses and make sure that coolant flows.
   If NG, go to step 4 of “Diagnostic Procedure”, EC-944. After repair, go to next step.
   Be extremely careful not to touch any moving or adjacent parts.
5. Check radiator for blocked air passage
   Check for blocked condenser or radiator (condenser or radiator fins damaged, condenser or radiator clogged), after market fog lamps ...etc. Check for condenser or radiator fin damage, shroud damage, vehicle front end for clogging of debris or insects ...etc.
   Check for improper fitting of front end cover, damaged radiator grille or bumper, vehicle frontal area damaged by collision but not repaired.
   If NG, take appropriate action and then go to next step.
6. Check ECT sensor for proper operation. Refer to step 5 of “Diagnostic Procedure”, EC-944. If NG, replace ECT sensor and go to next step.

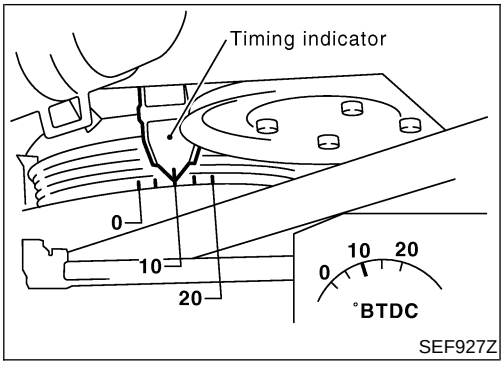

SEF927Z

7. Check ignition timing. Refer to "Basic Inspection", EC-715.
Make sure that ignition timing is 10° ± 1° at 700 ± 50 rpm.
If NG, adjust ignition timing and then recheck.

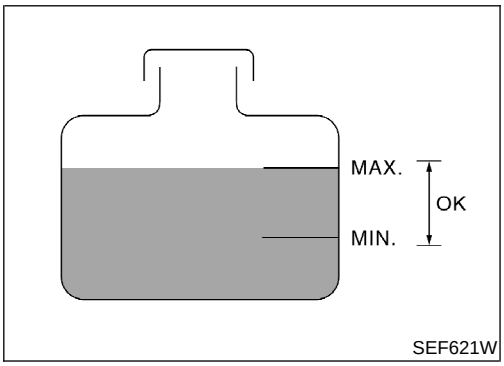

SEF621W

⊗ WITHOUT CONSULT-II

NEEC1514S02

1. Check the coolant level and mixture ratio (Using coolant tester) in the reservoir tank and radiator.
Allow engine to cool before checking coolant level and mixture ratio.

- If the coolant level in the reservoir and/or radiator is below the proper range, skip the following steps and go to step 3 of "Diagnostic Procedure", EC-944.
- If the coolant mixture ratio is out of range between 45 to 55%, replace the coolant. Refer to ***MA-27***, "Changing Engine Coolant".

a) Fill radiator with coolant up to specified level with a filling speed of 2 liters per minute like pouring coolant by kettle. Be sure to use coolant with the proper mixture ratio. Refer to ***MA-15***, "Anti-freeze Coolant Mixture Ratio".

b) After refilling coolant, run engine to ensure that no water-flow noise is emitted. After checking or replacing coolant, go to step 3) below.

2. Confirm whether customer filled the engine coolant or not. If customer filled engine coolant, skip following steps and go to "Diagnostic Procedure", EC-944.

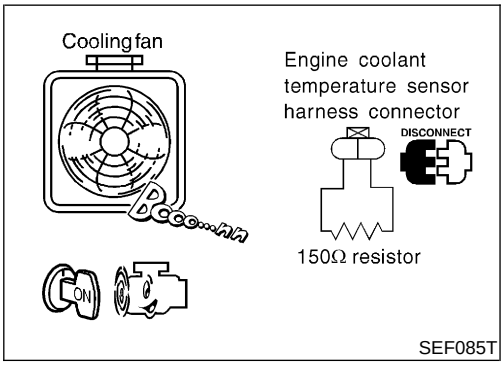

SEF085T

3. Start engine and make sure that cooling fan (crankshaft driven) operates.
Be careful not to overheat engine.
If NG, go to step 9 of "Diagnostic Procedure", EC-944. After repair, go to next step.
4. Check for blocked coolant passage.
Warm up engine to normal operating temperature, then grasp upper and lower radiator hoses and make sure that coolant flows.
If NG, go to step 4 of "Diagnostic Procedure", EC-944. After repair, go to next step.
Be extremely careful not to touch any moving or adjacent parts.
5. Check radiator for blocked air passage
Check for blocked condenser or radiator (condenser or radiator fins damaged, condenser or radiator clogged), after market fog lamps,...etc. Check for condenser or radiator fin damage, shroud damage, vehicle front end for clogging of debris or insects ...etc.
Check for improper fitting of front end cover, damaged radiator grille or bumper, vehicle frontal area damaged by collision but not repaired.
If NG, take appropriate action and then go to next step.
6. Check ECT sensor for proper operation. Refer to step 5 of

"Diagnostic Procedure", EC-944. If NG, replace ECT sensor and go to next step.

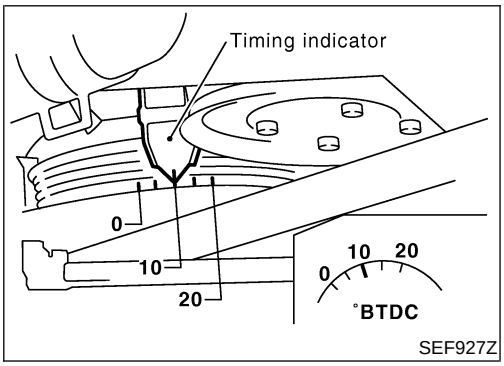

7. Check ignition timing. Refer to "Basic Inspection", EC-715. Make sure that ignition timing is 10° ± 1° at 700 ± 50 rpm. If NG, adjust ignition timing and then recheck.

Diagnostic Procedure

NEEC1516

1	CHECK COOLING FAN (CRANKSHAFT DRIVEN) OPERATION	
Start engine and make sure that cooling fan (crankshaft driven) operates. **OK or NG**		
OK	▶	GO TO 2.
NG	▶	Check cooling fan (crankshaft driven). Refer to ***LC-33***, "Cooling Fan".

2	CHECK COOLING SYSTEM FOR LEAK	
Apply pressure to the cooling system with a tester, and check if the pressure drops. **CAUTION:** **Higher than the specified pressure may cause radiator damage.** **Testing pressure: 157 kPa (1.6 kg/cm^2, 23 psi)** 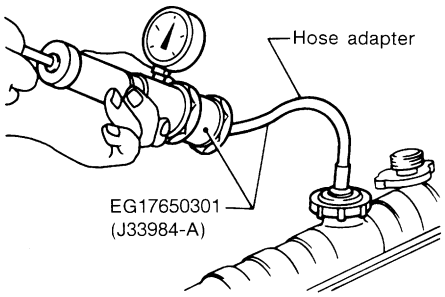 SLC754A **Pressure should not drop.** **OK or NG**		
OK	▶	GO TO 3.
NG	▶	**Check the following for leak:** ● Hose ● Radiator ● Water pump Refer to ***LC-29***, "Water Pump".

3	CHECK RADIATOR CAP

Apply pressure to cap with a tester and check radiator cap relief pressure.

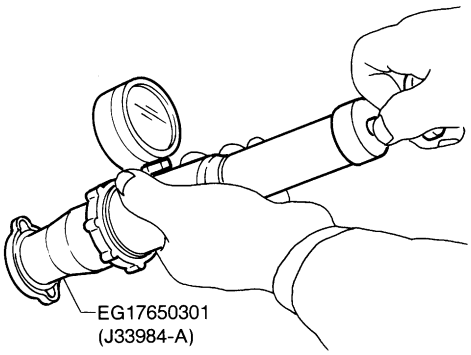

SLC755A

Radiator cap relief pressure:
59 - 98 kPa (0.6 - 1.0 kg/cm^2, 9 - 14 psi)

OK or NG

OK	▶	GO TO 4.
NG	▶	Replace radiator cap.

4	CHECK THERMOSTAT

1. Check valve seating condition at normal room temperatures.
   It should seat tightly.
2. Check valve opening temperature and valve lift.

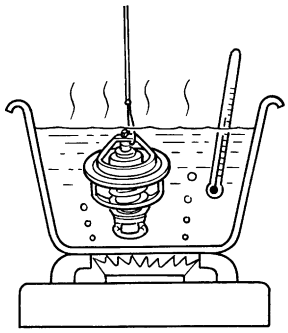

SLC343

Valve opening temperature:
82°C (180°F) [standard]
Valve lift:
More than 10 mm/95°C (0.31 in/203°F)

3. Check if valve is closed at 5°C (9°F) below valve opening temperature.

For details, refer to ***LC-30***, "Thermostat".

OK or NG

OK	▶	GO TO 5.
NG	▶	Replace thermostat.

Diagnostic Procedure (Cont'd)

5	CHECK ENGINE COOLANT TEMPERATURE SENSOR

Check resistance as shown in the figure.

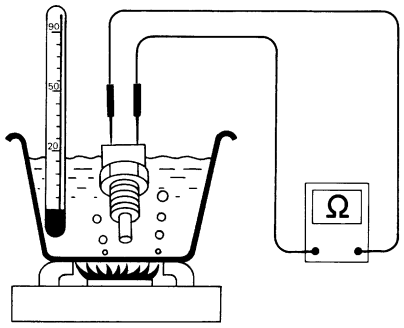

SEF152P

<Reference data>

Temperature °C (°F)	Resistance kΩ
20 (68)	2.1 - 2.9
50 (122)	0.68 - 1.00
90 (194)	0.236 - 0.260

MTBL0229

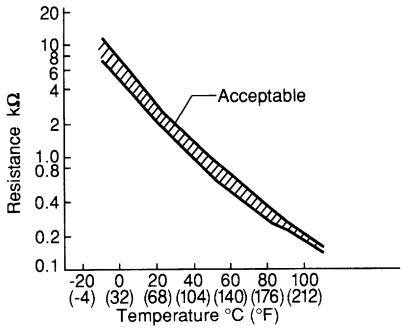

SEF012P

OK or NG

OK	▶	GO TO 6.
NG	▶	Replace engine coolant temperature sensor.

6	CHECK MAIN 12 CAUSES

If the cause cannot be isolated, go to "MAIN 12 CAUSES OF OVERHEATING", EC-947.

▶ **INSPECTION END**

Main 12 Causes of Overheating

NEEC1517

Engine	Step	Inspection item	Equipment	Standard	Reference page
OFF	1	• Blocked radiator • Blocked condenser • Blocked radiator grille • Blocked bumper	• Visual	No blocking	—
	2	• Coolant mixture	• Coolant tester	50 - 50% coolant mixture	See ***MA-13***, "RECOMMENDED FLUIDS AND LUBRICANTS".
	3	• Coolant level	• Visual	Coolant up to MAX level in reservoir tank and radiator filler neck	See ***MA-27***, "Changing Engine Coolant".
	4	• Radiator cap	• Pressure tester	59 - 98 kPa (0.6 - 1.0 kg/cm^2, 9 - 14 psi) (Limit)	See ***LC-25***, "System Check".
ON*2	5	• Coolant leaks	• Visual	No leaks	See ***LC-25***, "System Check".
ON*2	6	• Thermostat	• Touch the upper and lower radiator hoses	Both hoses should be hot	See ***LC-30***, "Thermostat" and ***LC-32***, "Radiator".
ON*1	7	• Cooling fan (Crankshaft driven)	• Visual	Operating	See ***LC-33***, "Cooling Fan".
OFF	8	• Combustion gas leak	• Color checker chemical tester 4 Gas analyzer	Negative	—
ON*3	9	• Coolant temperature gauge	• Visual	Gauge less than 3/4 when driving	—
		• Coolant overflow to reservoir tank	• Visual	No overflow during driving and idling	See ***MA-27***, "Changing Engine Coolant".
OFF*4	10	• Coolant return from reservoir tank to radiator	• Visual	Should be initial level in reservoir tank	See ***MA-27***, "ENGINE MAINTENANCE".
OFF	11	• Cylinder head	• Straight gauge feeler gauge	0.1 mm (0.004 in) Maximum distortion (warping)	See ***EM-96***, "Inspection".
	12	• Cylinder block and pistons	• Visual	No scuffing on cylinder walls or piston	See ***EM-116***, "Inspection".

*1: Turn the ignition switch ON.
*2: Engine running at 3,000 rpm for 10 minutes.
*3: Drive at 90 km/h (55 MPH) for 30 minutes and then let idle for 10 minutes.
*4: After 60 minutes of cool down time.
For more information, refer to ***LC-35***, "OVERHEATING CAUSE ANALYSIS".

On Board Diagnosis Logic

NEEC0708

When a misfire occurs, engine speed will fluctuate. If the engine speed fluctuates enough to cause the CKP sensor signal to vary, ECM can determine that a misfire is occurring.

Sensor	Input Signal to ECM	ECM function
Crankshaft position sensor (OBD)	Engine speed	On board diagnosis of misfire

The misfire detection logic consists of the following two conditions.

1. One Trip Detection Logic (Three Way Catalyst Damage)
   On the first trip that a misfire condition occurs that can damage the three way catalyst (TWC) due to overheating, the MIL will blink.
   When a misfire condition occurs, the ECM monitors the CKP sensor signal every 200 engine revolutions for a change.
   When the misfire condition decreases to a level that will not damage the TWC, the MIL will turn off. If another misfire condition occurs that can damage the TWC on a second trip, the MIL will blink. When the misfire condition decreases to a level that will not damage the TWC, the MIL will remain on. If another misfire condition occurs that can damage the TWC, the MIL will begin to blink again.
2. Two Trip Detection Logic (Exhaust quality deterioration)
   For misfire conditions that will not damage the TWC (but will affect vehicle emissions), the MIL will only light when the misfire is detected on a second trip. During this condition, the ECM monitors the CKP sensor signal every 1,000 engine revolutions.
   A misfire malfunction can be detected on any one cylinder or on multiple cylinders.

Malfunction is detected when multiple cylinders misfire, No. 1 cylinder misfires, No. 2 cylinder misfires, No. 3 cylinder misfires, No. 4 cylinder misfires, No. 5 cylinder misfires and No. 6 cylinder misfires.

POSSIBLE CAUSE

NEEC0708S01

- Improper spark plug
- Insufficient compression
- Incorrect fuel pressure
- The injector circuit is open or shorted
- Injectors
- Intake air leak
- The ignition secondary circuit is open or shorted
- Lack of fuel
- Drive plate or flywheel
- Heated oxygen sensor 1 (front)
- Incorrect distributor rotor

4

DATA MONITOR	
MONITOR	NO DTC
ENG SPEED	XXX rpm
COOLAN TEMP/S	XXX °C
VHCL SPEED SE	XXX km/h
P/N POSI SW	OFF
B/FUEL SCHDL	XXX msec

SEF213Y

DTC Confirmation Procedure

=NEEC0709

CAUTION:
Always drive vehicle at a safe speed.

NOTE:
If "DTC Confirmation Procedure" has been previously conducted, always turn ignition switch OFF and wait at least 5 seconds before conducting the next test.

With CONSULT-II

1) Turn ignition switch ON, and select "DATA MONITOR" mode with CONSULT-II.
2) Start engine and warm it up to normal operating temperature.
3) Turn ignition switch OFF and wait at least 5 seconds.
4) Start engine again and drive at 1,500 to 3,000 rpm for at least 3 minutes.
   Hold the accelerator pedal as steady as possible.

NOTE:
Refer to the freeze frame data for the test driving conditions.

5) If 1st trip DTC is detected, go to "Diagnostic Procedure", EC-949.

With GST

Follow the procedure "With CONSULT-II".

Diagnostic Procedure

NEEC0710

1	CHECK FOR INTAKE AIR LEAK	
1. Start engine and run it at idle speed. 2. Listen for the sound of the intake air leak.		
OK or NG		
OK	▶	GO TO 2.
NG	▶	Discover air leak location and repair.

2	CHECK FOR EXHAUST SYSTEM CLOGGING	
Stop engine and visually check exhaust tube, three way catalyst and muffler for dents.		
OK or NG		
OK	▶	GO TO 3.
NG	▶	Repair or replace it.

Diagnostic Procedure (Cont'd)

3	PERFORM POWER BALANCE TEST

With CONSULT-II

1. Perform "POWER BALANCE" in "ACTIVE TEST" mode.

ACTIVE TEST	
POWER BALANCE	
MONITOR	
ENG SPEED	XXX rpm
MAS A/F SE-B1	XXX V
IACV-AAC/V	XXX %

SEF981Z

2. Is there any cylinder which does not produce a momentary engine speed drop?

Without CONSULT-II

When disconnecting each injector harness connector one at a time, is there any cylinder which does not produce a momentary engine speed drop?

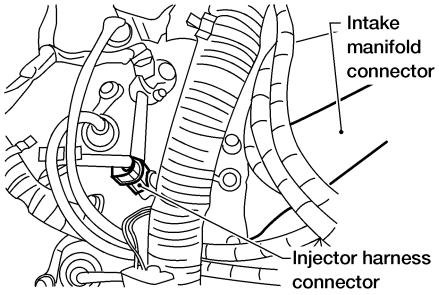

AEC646A

Yes or No

Yes	▶	GO TO 4.
No	▶	GO TO 7.

4	CHECK INJECTOR

Does each injector make an operating sound at idle?

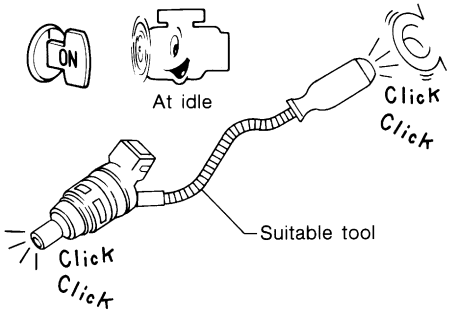

MEC703B

Yes or No

Yes	▶	GO TO 5.
No	▶	Check injector(s) and circuit(s). Refer to EC-1190.

5	CHECK IGNITION SPARK

1. Disconnect ignition wire from spark plug.
2. Connect a known good spark plug to the ignition wire.
3. Place end of spark plug against a suitable ground and crank engine.
4. Check for spark.

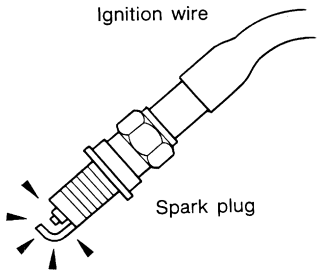

SEF282G

OK or NG

OK	▶	GO TO 7.
NG	▶	GO TO 6.

6	CHECK IGNITION WIRES

1. Inspect wires for cracks, damage, burned terminals and for improper fit.
2. Measure the resistance of wires to their distributor cap terminal. Move each wire while testing to check for intermittent breaks.

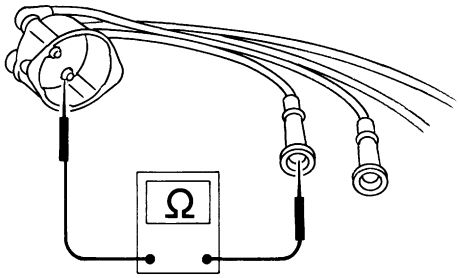

SEF174P

Resistance:

Cylinder No.	Resistance kΩ [at 25°C (77°F)]
1	Approximately 6.5
2	Approximately 10.0
3	Approximately 8.5
4	Approximately 12.5
5	Approximately 8.5
6	Approximately 11.0

MTBL0235

If the resistance exceeds the above specification, inspect ignition wire to distributor cap connection. Clean connection or replace the ignition wire with a new one.

OK or NG

OK	▶	**Check the following:** • Distributor rotor head for incorrect parts • Ignition coil, power transistor and their circuits Refer to EC-1183.
NG	▶	Replace.

Diagnostic Procedure (Cont'd)

7	CHECK SPARK PLUGS

Remove the spark plugs and check for fouling, etc.

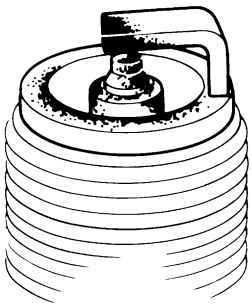

SEF156I

OK or NG

OK	▶	GO TO 8.
NG	▶	Repair or replace spark plug(s) with standard type one(s). For spark plug type, refer to ***MA-32***, "ENGINE MAINTENANCE".

8	CHECK COMPRESSION PRESSURE

Refer to ***EM-78***.

- Check compression pressure.

Standard:
1,196 kPa (12.2 kg/cm^2, 173 psi)/300 rpm
Minimum:
883 kPa (9.0 kg/cm^2, 128 psi)/300 rpm
Difference between each cylinder:
98 kPa (1.0 kg/cm^2, 14 psi)/300 rpm

OK or NG

OK	▶	GO TO 9.
NG	▶	Check pistons, piston rings, valves, valve seats and cylinder head gaskets.

9	CHECK FUEL PRESSURE

1. Install any parts removed.
2. Release fuel pressure to zero.
   Refer to EC-658.
3. Install fuel pressure gauge and check fuel pressure.

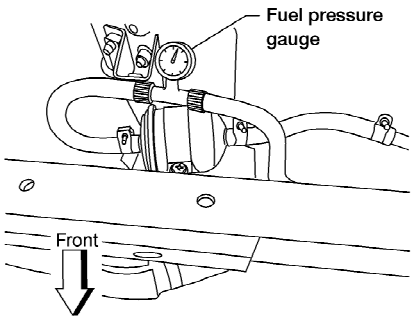

AEC064B

At idle:
Approx. 235 kPa (2.4 kg/cm^2, 34 psi)

OK or NG

OK	▶	GO TO 11.
NG	▶	GO TO 10.

10	DETECT MALFUNCTIONING PART
Check the following. ● Fuel pump and circuit (Refer to EC-1198.) ● Fuel pressure regulator (Refer to EC-659.) ● Fuel lines (Refer to ***MA-29***, "ENGINE MAINTENANCE".) ● Fuel filter for clogging	
▶	Repair or replace.

11	CHECK IGNITION TIMING

Check the following items. Refer to "Basic Inspection", EC-715.

Items	Specifications
Ignition timing	10° ± 2° BTDC
Base idle speed	700 ± 50 rpm (in "P" or "N" position)
Closed throttle position switch idle position adjustment	Feeler gauge thickness and switch condition 0.3 mm (0.012 in): ON 0.4 mm (0.016 in): OFF
Target idle speed	750 ± 50 rpm (in "P" or "N" position)

MTBL0576

OK or NG

OK (With CONSULT-II) ▶	GO TO 12.
OK (Without CONSULT-II) ▶	GO TO 13.
NG ▶	Adjust ignition timing.

Diagnostic Procedure (Cont'd)

12	CHECK HEATED OXYGEN SENSOR 1 (FRONT)

With CONSULT-II

1. Start engine and warm it up to normal operating temperature.
2. Select "MANU TRIG" and "HI SPEED" in "DATA MONITOR" mode with CONSULT-II, and select "HO2S1 (B1)/(B2)" and "HO2S1 MNTR (B1)/(B2)".
3. Hold engine speed at 2,000 rpm under no load during the following steps.
4. Touch "RECORD" on CONSULT-II screen.

DATA MONITOR	
MONITOR	NO DTC
ENG SPEED	XXX rpm
COOLAN TEMP/S	XXX °C
HO2S1 (B1)	XXX V
HO2S2 (B2)	XXX V

SEF967Y

5. Check the following.

- "HO2S1 MNTR (B1)/(B2)" in "DATA MONITOR" mode changes from "RICH" to "LEAN" to "RICH" 5 times in 10 seconds. 5 times (cycles) are counted as shown left:

Bank 1

cycle	1	2	3	4	5
HO2S1 MNTR (B1)	R-L	R-L	R-L	R-L	R-L

Bank 2

cycle	1	2	3	4	5
HO2S1 MNTR (B2)	R-L	R-L	R-L	R-L	R-L

R means HO2S1 MNTR (B1)/(B2) indicates RICH

L means HO2S1 MNTR (B1)/(B2) indicates LEAN

SEF647Y

- "HO2S1 (B1)/(B2)" voltage goes above 0.6V at least once.
- "HO2S1 (B1)/(B2)" voltage goes below 0.3V at least once.
- "HO2S1 (B1)/(B2)" voltage never exceeds 1.0V.

Trigger	ENG SPEED	HO2S1 (B1)
	rpm	V
XXX	XXX	XXX
XXX	XXX	XXX
XXX	XXX	XXX
XXX	XXX	XXX
XXX	XXX	XXX
XXX	XXX	XXX
XXX	XXX	XXX
XXX	XXX	XXX
XXX	XXX	XXX
XXX	XXX	XXX
XXX	XXX	XXX
XXX	XXX	XXX
XXX	XXX	XXX

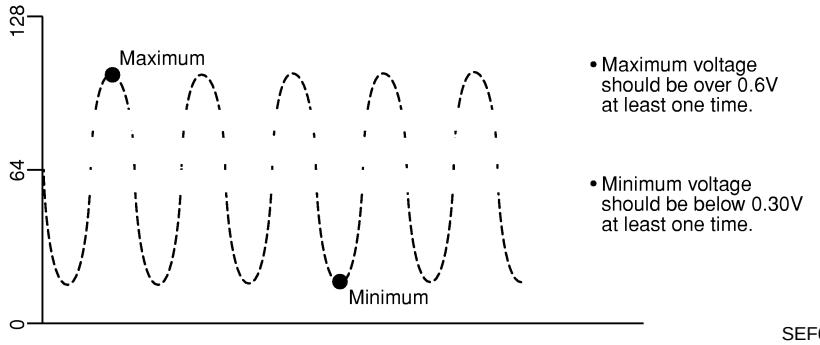

SEF648Y

CAUTION:

- **Discard any heated oxygen sensor which has been dropped from a height of more than 0.5 m (19.7 in) onto a hard surface such as a concrete floor; use a new one.**
- **Before installing new oxygen sensor, clean exhaust system threads using Oxygen Sensor Thread Cleaner tool J-43897-18 or J-43897-12 and approved anti-seize lubricant.**

OK or NG

OK	▶	GO TO 14.
NG	▶	Replace heated oxygen sensor 1 (front).

13	CHECK FRONT HEATED OXYGEN SENSOR LH/RH

Without CONSULT-II

1. Start engine and warm it up to normal operating temperature.
2. Set voltmeter probes between ECM terminal 50 (right bank sensor signal) or 51 (left bank sensor signal) and engine ground.
3. Check the following with engine speed held at 2,000 rpm constant under no load.

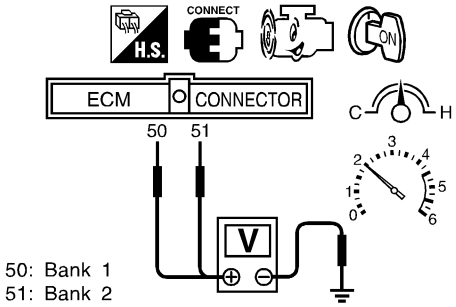

- The voltage fluctuates between 0 to 0.3V and 0.6 to 1.0V more than 5 times within 10 seconds.
- The maximum voltage is over 0.6V at least one time.
- The minimum voltage is below 0.3V at least one time.
- The voltage never exceeds 1.0V.

1 time: 0 - 0.3V → 0.6 - 1.0V → 0 - 0.3V
2 times: 0 - 0.3V → 0.6 - 1.0V → 0 - 0.3V → 0.6 - 1.0V → 0 - 0.3V

SEF796Z

CAUTION:
Discard any heated oxygen sensor which has been dropped from a height of more than 0.5 m (19.7 in) onto a hard surface such as a concrete floor; use a new one.

OK or NG

OK	▶	GO TO 15.
NG	▶	GO TO 14.

14	REPLACE HEATED OXYGEN SENSOR 2 (REAR)

1. Stop vehicle and turn ignitioin switch OFF.
2. Check heated oxygen sensor 2 (rear) harness protector color.

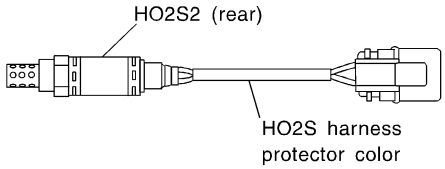

HO2S2 (rear) (bank 1): White or Gray
HO2S2 (rear) (bank 2): Red or Red/Brown

SEF372Z

CAUTION:
Before installing new oxygen sensor, clean exhaust system threads using Oxygen Sensor Thread Cleaner tool J-43897-18 or J-43897-12 and approved anti-seize lubricant.

	▶	Replace malfunctioning heated oxygen sensor 2 (rear).

Diagnostic Procedure (Cont'd)

15	CHECK MASS AIR FLOW SENSOR
With CONSULT-II Check mass air flow sensor signal in "DATA MONITOR" mode with CONSULT-II. **3.3 - 4.8 g·m/sec: at idling** **12.0 - 14.9 g·m/sec: at 2,500 rpm**	
With GST Check mass air flow sensor signal in MODE 1 with GST. **3.3 - 4.8 g·m/sec: at idling** **12.0 - 14.9 g·m/sec: at 2,500 rpm**	
OK or NG	
OK ▶	GO TO 16.
NG ▶	Check connectors for rusted terminals or loose connections in the mass air flow sensor circuit or engine grounds. Refer to EC-760.

16	CHECK SYMPTOM MATRIX CHART
Check items on the rough idle symptom in "Symptom Matrix Chart", EC-731.	
OK or NG	
OK ▶	GO TO 17.
NG ▶	Repair or replace.

17	ERASE THE 1ST TRIP DTC
Some tests may cause a 1st trip DTC to be set. Erase the 1st trip DTC from the ECM memory after performing the tests. Refer to EC-687.	
▶	GO TO 18.

18	CHECK INTERMITTENT INCIDENT
Refer to "TROUBLE DIAGNOSIS FOR INTERMITTENT INCIDENT", EC-753.	
▶	**INSPECTION END**

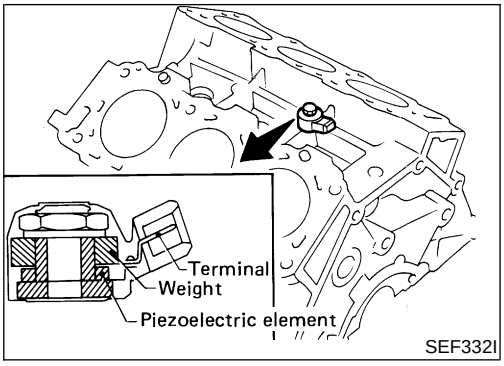

Component Description

NEEC0711

The knock sensor is attached to the cylinder block. It senses engine knocking using a piezoelectric element. A knocking vibration from the cylinder block is sensed as vibrational pressure. This pressure is converted into a voltage signal and sent to the ECM.

Freeze frame data will not be stored in the ECM for the knock sensor. The MIL will not light for knock sensor malfunction. The knock sensor has one trip detection logic.

ECM Terminals and Reference Value

NEEC0712

Specification data are reference values and are measured between each terminal and ground.

CAUTION:

Do not use ECM ground terminals when measuring input/output voltage. Doing so may result in damage to the ECM's transistor. Use a ground other than the ECM terminals, such as the ground.

TERMINAL NO.	WIRE COLOR	ITEM	CONDITION	DATA (DC Voltage)
64	W	Knock sensor	**[Engine is running]** ● Idle speed	Approximately 2.5V

On Board Diagnosis Logic

NEEC0713

Malfunction is detected when an excessively low or high voltage from the knock sensor is sent to ECM.

POSSIBLE CAUSE

NEEC0713S01

- Harness or connectors
  (The knock sensor circuit is open or shorted.)
- Knock sensor

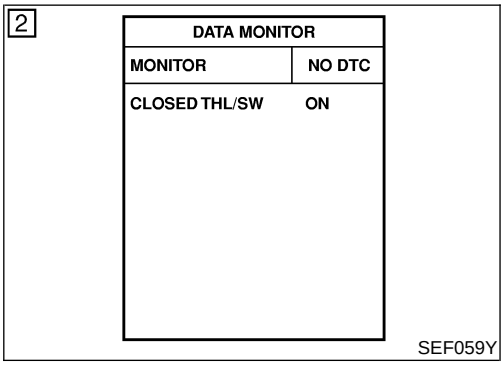

DTC Confirmation Procedure

NEEC0714

NOTE:

If "DTC Confirmation Procedure" has been previously conducted, always turn ignition switch OFF and wait at least 5 seconds before conducting the next test.

TESTING CONDITION:

Before performing the following procedure, confirm that battery voltage is more than 10V at idle.

With CONSULT-II

1) Turn ignition switch ON and select "DATA MONITOR" mode with CONSULT-II.
2) Start engine and run it for at least 5 seconds at idle speed.
3) If DTC is detected, go to "Diagnostic Procedure", EC-959.

With GST

Follow the procedure "With CONSULT-II".

Wiring Diagram

NEEC0715

EC-KS-01

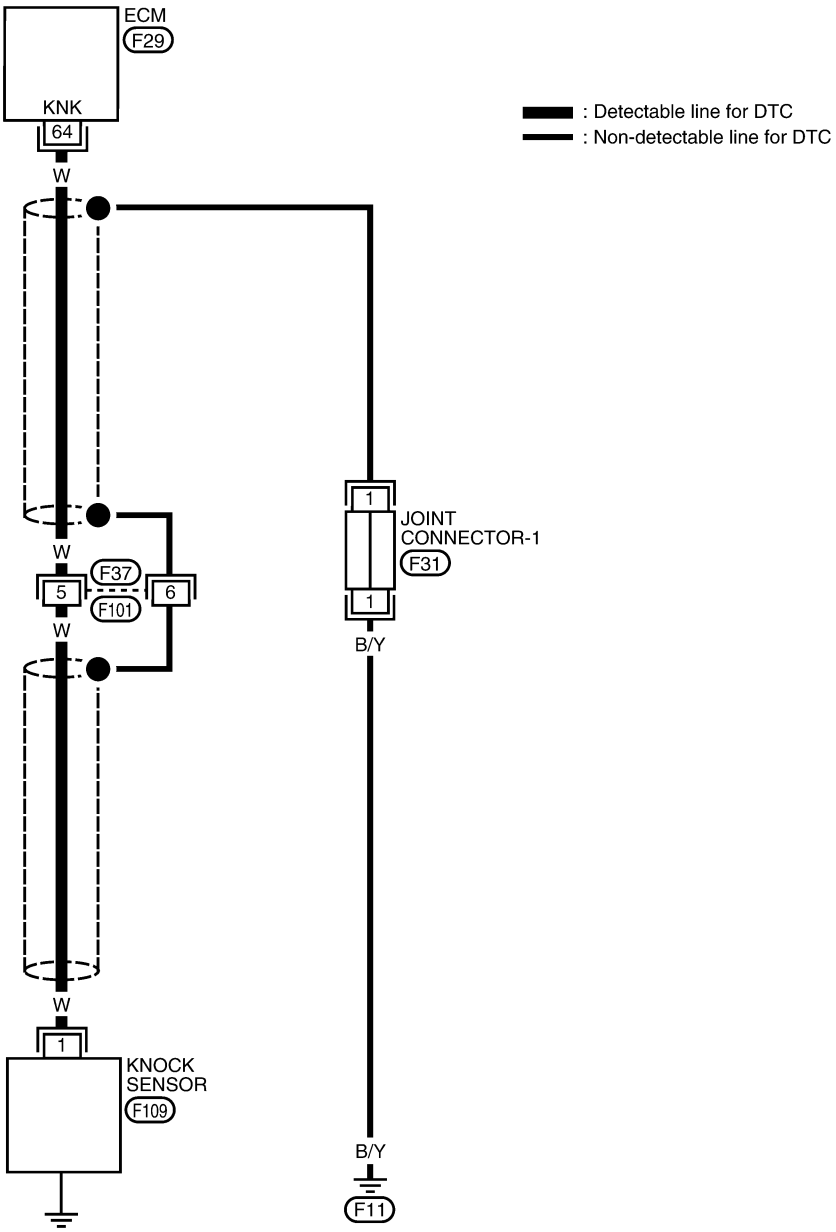

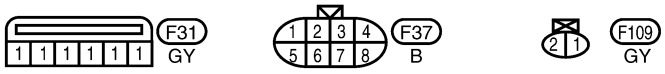

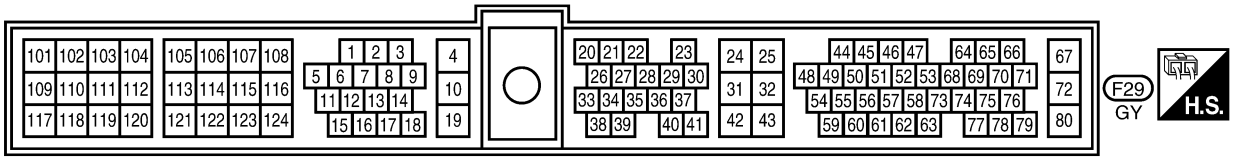

WEC798

Diagnostic Procedure

NEEC0716

1	CHECK KNOCK SENSOR INPUT SIGNAL CIRCUIT FOR OPEN AND SHORT-I

1. Turn ignition switch OFF.
2. Disconnect ECM harness connector.
3. Check resistance between ECM terminal 64 and engine ground.
   NOTE:
   It is necessary to use an ohmmeter which can measure more than 10 MΩ.
   Resistance:
   Approximately 500 - 620 kΩ [at 25°C (77°F)]
4. Also check harness for short to ground and short to power.

OK or NG

OK	▶	GO TO 5.
NG	▶	GO TO 2.

2	CHECK INPUT SIGNAL CIRCUIT-II

1. Disconnect knock sensor harness connector.
2. Check harness continuity between ECM terminal 64 and knock sensor terminal 1. Refer to Wiring Diagram.
   Continuity should exist.
3. Also check harness for short to ground and short to power.

OK or NG

OK	▶	GO TO 4.
NG	▶	GO TO 3.

3	DETECT MALFUNCTIONING PART

Check the following.
- Harness connector F37, F101
- Harness for open or short between ECM and knock sensor

	▶	Repair open circuit or short to ground or short to power in harness or connectors.

4	CHECK KNOCK SENSOR

- Use an ohmmeter which can measure more than 10 MΩ.

1. Disconnect knock sensor harness connector.
2. Check resistance between terminal 1 and ground.

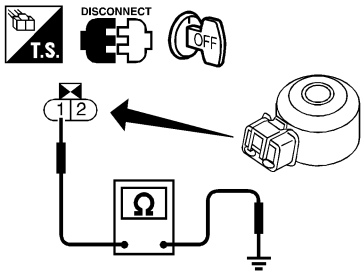

Resistance: 500 - 620 kΩ [at 25°C (77°F)]

SEF799Z

CAUTION:
Do not use any knock sensors that have been dropped or physically damaged. Use only new ones.

OK or NG

OK	▶	GO TO 8.
NG	▶	Replace knock sensor.

5	RETIGHTEN GROUND SCREWS

Loose and retighten engine ground screws.

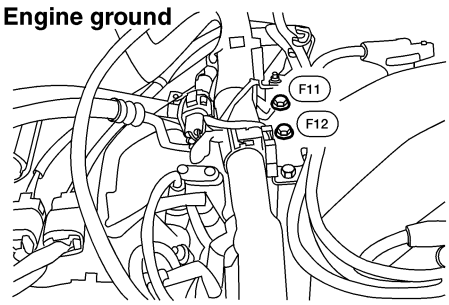

LEC518

▶	GO TO 6.

6	CHECK KNOCK SENSOR SHIELD CIRCUIT FOR OPEN AND SHORT

1. Disconnect harness connectors F37, F101.
2. Check harness continuity between harness connector F37 terminal 6 and engine ground. Refer to Wiring Diagram.
   Continuity should exist.
3. Also check harness for short to power.

OK or NG

OK	▶	GO TO 8.
NG	▶	GO TO 7.

7	DETECT MALFUNCTIONING PART

Check the following.
- Harness connectors F37, F101
- Joint connectors-1
- Harness for open between harness connector F37 and engine ground

▶	Repair open circuit or short to power in harness or connectors.

8	CHECK INTERMITTENT INCIDENT

Refer to "TROUBLE DIAGNOSIS FOR INTERMITTENT INCIDENT", EC-753.

▶	**INSPECTION END**

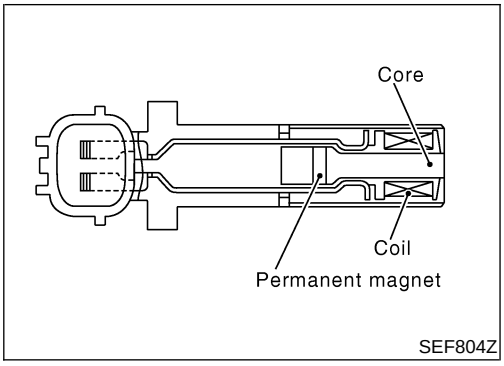

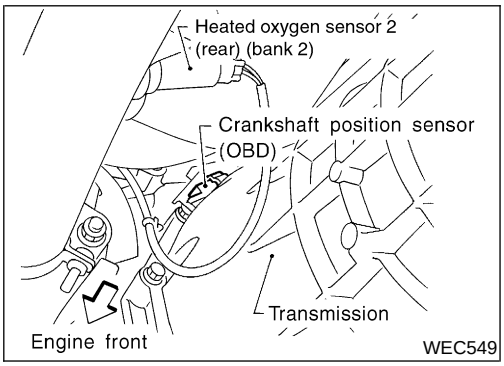

Component Description

NEEC0717

The crankshaft position sensor (OBD) is located on the transaxle housing facing the gear teeth (cogs) of the flywheel or drive plate. It detects the fluctuation of the engine revolution.
The sensor consists of a permanent magnet, core and coil.
When the engine is running, the high and low parts of the teeth cause the gap with the sensor to change.
The changing gap causes the magnetic field near the sensor to change.
Due to the changing magnetic field, the voltage from the sensor changes.
The ECM receives the voltage signal and detects the fluctuation of the engine revolution.
This sensor is not used to control the engine system. It is used only for the on board diagnosis.

ECM Terminals and Reference Value

NEEC0718

Specification data are reference values and are measured between each terminal and ground.

CAUTION:

Do not use ECM ground terminals when measuring input/output voltage. Doing so may result in damage to the ECM's transistor. Use a ground other than the ECM terminals, such as the ground.

TERMINAL NO.	WIRE COLOR	ITEM	CONDITION	DATA (AC Voltage)
47	L	Crankshaft position sensor (OBD)	**[Engine is running]** ● **Warm-up condition** ● Idle speed	1 - 2V (AC range) 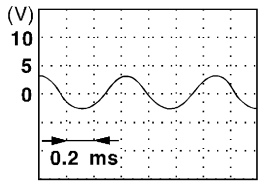 SEF690W
			[Engine is running] ● Engine speed is 2,000 rpm	3 - 4V (AC range) 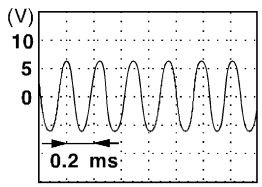 SEF691W

On Board Diagnosis Logic

NEEC0719

Malfunction is detected when the proper pulse signal from the crankshaft position sensor (OBD) is not sent to ECM while the engine is running at the specified engine speed.

POSSIBLE CAUSE

NEEC0719S01

- Harness or connectors
  [The crankshaft position sensor (OBD) circuit is open.]
- Crankshaft position sensor (OBD)

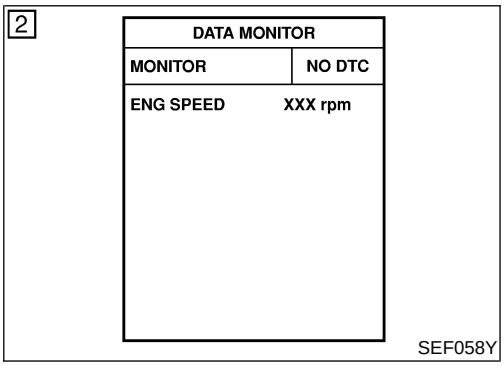

DTC Confirmation Procedure

NEEC0720

NOTE:

If “DTC Confirmation Procedure” has been previously conducted, always turn ignition switch OFF and wait at least 5 seconds before conducting the next test.

With CONSULT-II

1) Turn ignition switch ON and select “DATA MONITOR” mode with CONSULT-II.
2) Start engine and run it for at least 15 seconds at idle speed.
3) If 1st trip DTC is detected, go to “Diagnostic Procedure”, EC-964.

With GST

Follow the procedure “With CONSULT-II”.

Wiring Diagram

NEEC0721

EC-CKPS-01

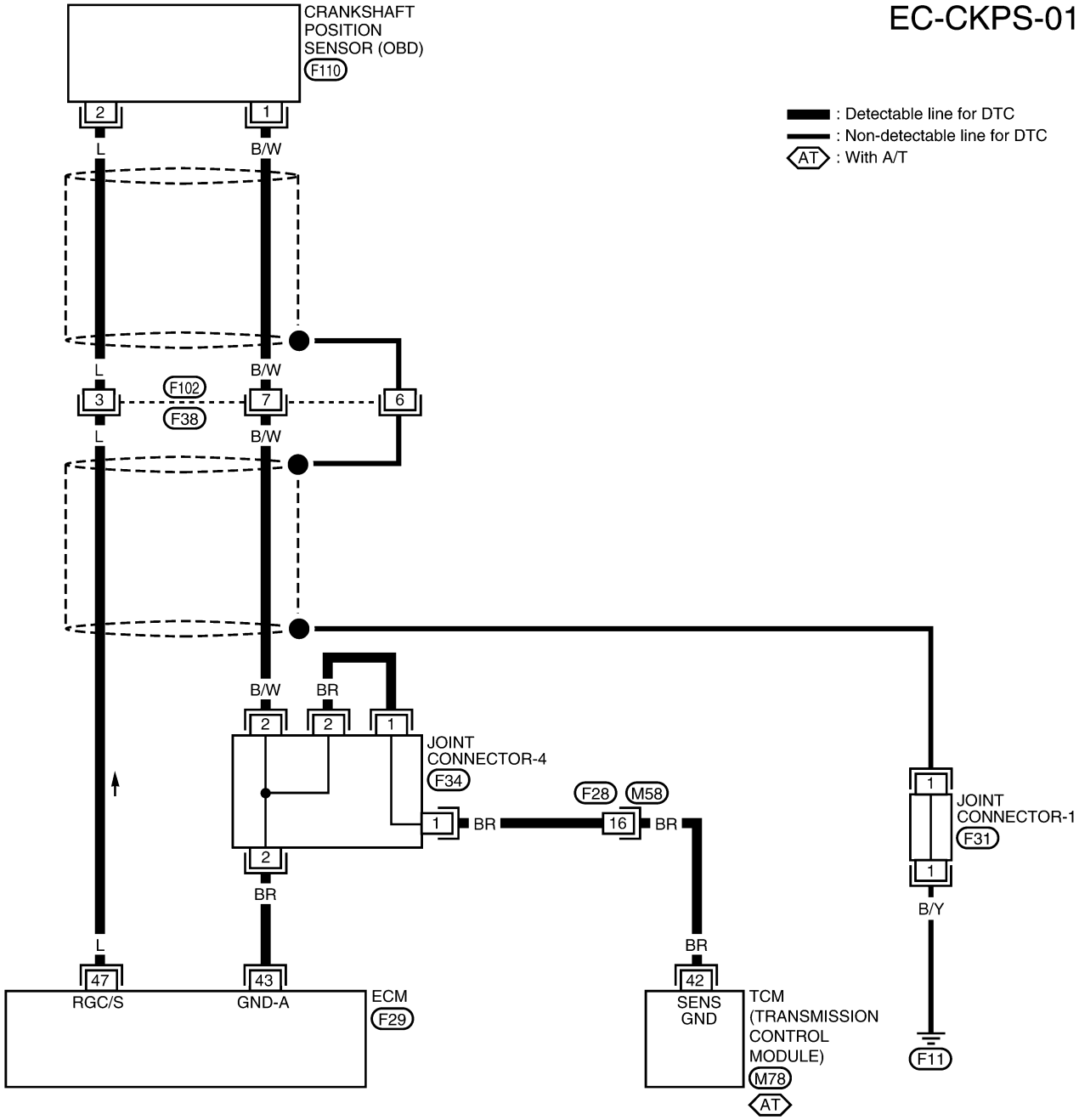

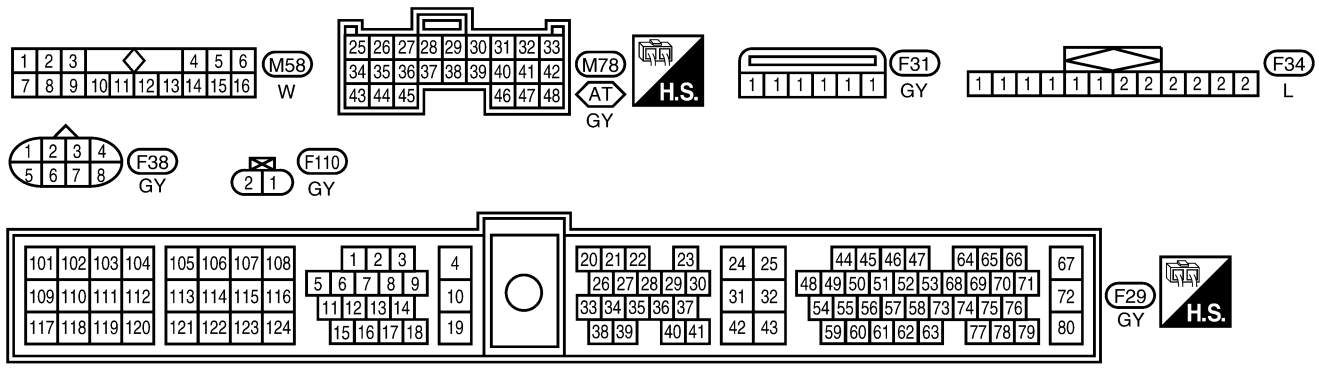

WEC799

Diagnostic Procedure

NEEC0722

1	RETIGHTEN GROUND SCREWS

1. Turn ignition switch OFF.
2. Loosen and retighten engine ground screws.

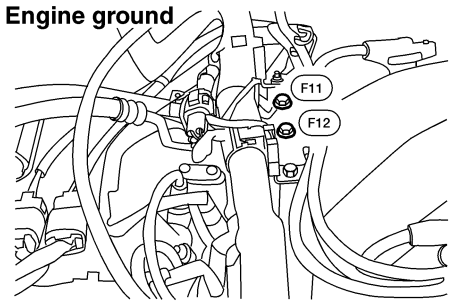

LEC518

	▶	GO TO 2.

2	CHECK CKPS (OBD) INPUT SIGNAL CIRCUIT FOR OPEN AND SHORT

1. Disconnect crankshaft position sensor (OBD) and ECM harness connectors.

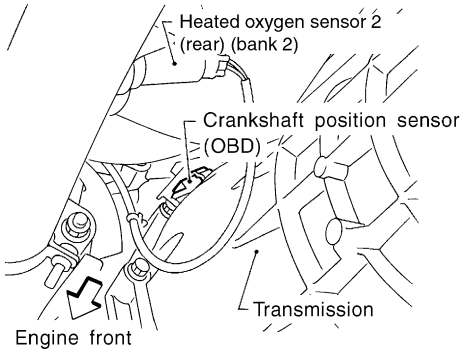

WEC549

2. Check continuity between ECM terminal 47 and sensor terminal 2. Refer to Wiring Diagram.
   Continuity should exist.
3. Also check harness for short to ground and short to power.

OK or NG

OK	▶	GO TO 4.
NG	▶	GO TO 3.

3	DETECT MALFUNCTIONING PART

Check the following.
- Harness connectors F38, F102
- Harness for open or short between ECM and crankshaft position sensor (OBD)

	▶	Repair open circuit or short to ground or short to power in harness or connectors.

4	CHECK CKPS (OBD) GROUND CIRCUIT FOR OPEN AND SHORT	
1. Reconnect ECM harness connector. 2. Check harness continuity between sensor terminal 1 and engine ground. Refer to Wiring Diagram. **Continuity should exist.** 3. Also check harness for short to ground and short to power. **OK or NG**		
OK	▶	GO TO 6.
NG	▶	GO TO 5.

5	DETECT MALFUNCTIONING PART	
Check the following. ● Harness connectors F38, F102 ● Harness connectors F28, M58 ● Joint connector-4 ● Harness for open or short between crankshaft position sensor (OBD) and ECM ● Harness for open or short between crankshaft position sensor (OBD) and TCM (Transmission Control Module)		
	▶	Repair open circuit or short to ground or short to power in harness or connectors.

6	CHECK CRANKSHAFT POSITION SENSOR (OBD)	
1. Disconnect crankshaft position sensor (OBD) harness connector. 2. Loosen the fixing bolt of the sensor. 3. Remove the sensor. 4. Visually check the sensor for chipping.		

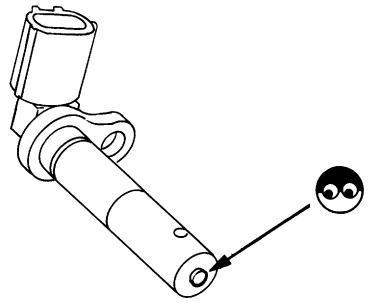

SEF960N

5. Check resistance as shown in the figure.

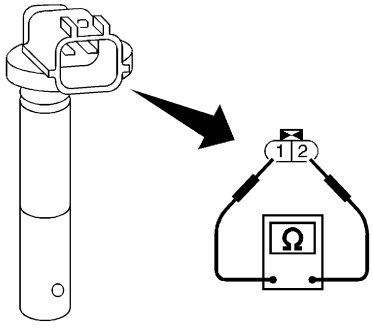

SEF504V

Resistance: Approximately 512 - 632Ω [at 20°C (68°F)]

OK or NG

OK	▶	GO TO 7.
NG	▶	Replace crankshaft position sensor (OBD).

Diagnostic Procedure (Cont'd)

7	CHECK CKPS (OBD) SHIELD CIRCUIT FOR OPEN AND SHORT
1. Disconnect harness connectors F38, F102. 2. Check harness continuity between harness connector F38 terminal 6 and engine ground. Refer to Wiring Diagram. **Continuity should exist.** 3. Also check harness for short to power.	
OK or NG	
OK ▶	GO TO 9.
NG ▶	GO TO 8.

8	DETECT MALFUNCTIONING PART
Check the following. ● Harness connectors F38, F102 ● Joint connector-1 ● Harness for open between harness connector F38 and engine ground	
▶	Repair open circuit or short to power in harness or connectors.

9	CHECK INTERMITTENT INCIDENT
Refer to "TROUBLE DIAGNOSIS FOR INTERMITTENT INCIDENT", EC-753.	
▶	**INSPECTION END**

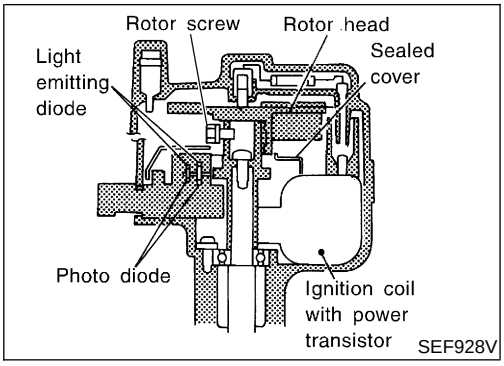

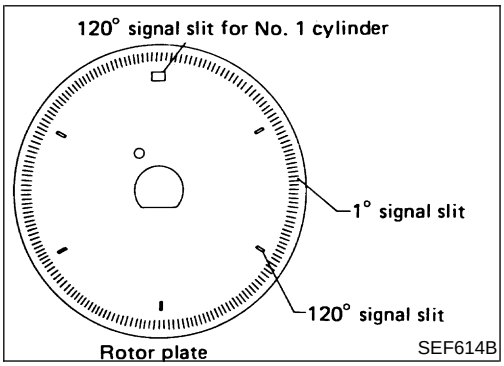

Component Description

NEEC0723

The camshaft position sensor is a basic component of the engine control system. It monitors engine speed and piston position. These input signals to the ECM are used to control fuel injection, ignition timing and other functions.

The camshaft position sensor has a rotor plate and a wave-forming circuit. The rotor plate has 360 slits for a 1° (POS) signal and 6 slits for a 120° (REF) signal. The wave-forming circuit consists of Light Emitting Diodes (LED) and photo diodes.

The rotor plate is positioned between the LED and the photo diode. The LED transmits light to the photo diode. As the rotor plate turns, the slits cut the light to generate rough-shaped pulses. These pulses are converted into on-off signals by the wave-forming circuit and sent to the ECM.

The distributor is not repairable and must be replaced as an assembly except distributor cap and rotor head.

NOTE:

The rotor screw which secures the distributor rotor head to the distributor shaft must be torqued properly.

: 3.6±0.3 N·m (37±3 kg-cm, 32±3 in-lb)

ECM Terminals and Reference Value

NEEC0724

Specification data are reference values and are measured between each terminal and ground.

CAUTION:

Do not use ECM ground terminals when measuring input/output voltage. Doing so may result in damage to the ECM's transistor. Use a ground other than the ECM terminals, such as the ground.

TERMINAL NO.	WIRE COLOR	ITEM	CONDITION	DATA (DC Voltage)
4	OR/B	ECM relay (Self shut-off)	**[Engine is running]** **[Ignition switch OFF]** ● For a few seconds after turning ignition switch OFF	0 - 1.5V
			[Ignition switch OFF] ● A few seconds passed after turning ignition switch OFF	BATTERY VOLTAGE (11 - 14V)
44	PU	Camshaft position sensor (Reference signal)	**[Engine is running]** ● Idle speed	0.3 - 0.5V 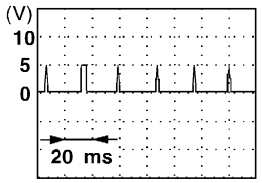 SEF997U
48	PU		**[Engine is running]** ● Engine speed is 2,000 rpm	0.3 - 0.5V 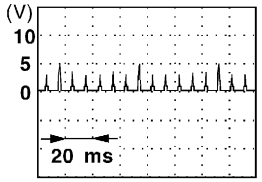 SEF998U

ECM Terminals and Reference Value (Cont'd)

TERMINAL NO.	WIRE COLOR	ITEM	CONDITION	DATA (DC Voltage)
49	LG	Camshaft position sensor (Position signal)	**[Engine is running]** ● **Warm-up condition** ● Idle speed	Approximately 2.5V 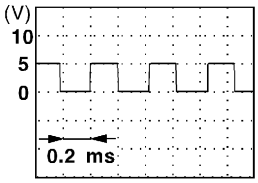 SEF999U
			[Engine is running] ● Engine speed is 2,000 rpm	Approximately 2.5V 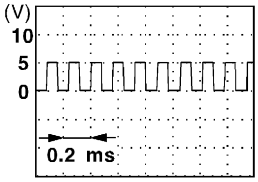 SEF001V
67	B/P	Power supply for ECM	**[Ignition switch ON]**	BATTERY VOLTAGE (11 - 14V)
72	B/P			
117	B/P	Current return	**[Engine is running]** ● Idle speed	BATTERY VOLTAGE (11 - 14V)

On Board Diagnosis Logic

NEEC0725

Malfunction is detected when
(Malfunction A) either 1° or 120° signal is not sent to ECM for the first few seconds during engine cranking,
(Malfunction B) either 1° or 120° signal is not sent to ECM often enough while the engine speed is higher than the specified engine speed,
(Malfunction C) the relation between 1° and 120° signal is not in the normal range during the specified engine speed.

POSSIBLE CAUSE

NEEC0725S01

- Harness or connectors
  (The camshaft position sensor circuit is open or shorted.)
- Camshaft position sensor
- Starter motor (Refer to ***SC-10***.)
- Starting system circuit (Refer to ***SC-10***.)
- Dead (Weak) battery

DTC Confirmation Procedure

NEEC0726

NOTE:

- **Perform "PROCEDURE FOR MALFUNCTION A" first. If DTC cannot be confirmed, perform "PROCEDURE FOR MALFUNCTION B AND C".**
- If "DTC Confirmation Procedure" has been previously conducted, always turn ignition switch OFF and wait at least 5 seconds before conducting the next test.

TESTING CONDITION:

Before performing the following procedure, confirm that battery voltage is more than 10.5V at idle.

2

DATA MONITOR	
MONITOR	NO DTC
COOLAN TEMP/S	XXX °C

SEF013Y

PROCEDURE FOR MALFUNCTION A

NEEC0726S01

With CONSULT-II

1) Turn ignition switch ON.
2) Select "DATA MONITOR" mode with CONSULT-II.
3) Crank engine for at least 2 seconds.
4) If 1st trip DTC is detected, go to "Diagnostic Procedure", EC-971.

With GST

Follow the procedure "With CONSULT-II".

3

DATA MONITOR	
MONITOR	NO DTC
ENG SPEED	XXX rpm

SEF058Y

PROCEDURE FOR MALFUNCTION B AND C

NEEC0726S02

With CONSULT-II

1) Turn ignition switch ON.
2) Select "DATA MONITOR" mode with CONSULT-II.
3) Start engine and run it for at least 2 seconds at idle speed.
4) If 1st trip DTC is detected, go to "Diagnostic Procedure", EC-971.

With GST

Follow the procedure "With CONSULT-II".

Wiring Diagram

NEEC0727

EC-CMPS-01

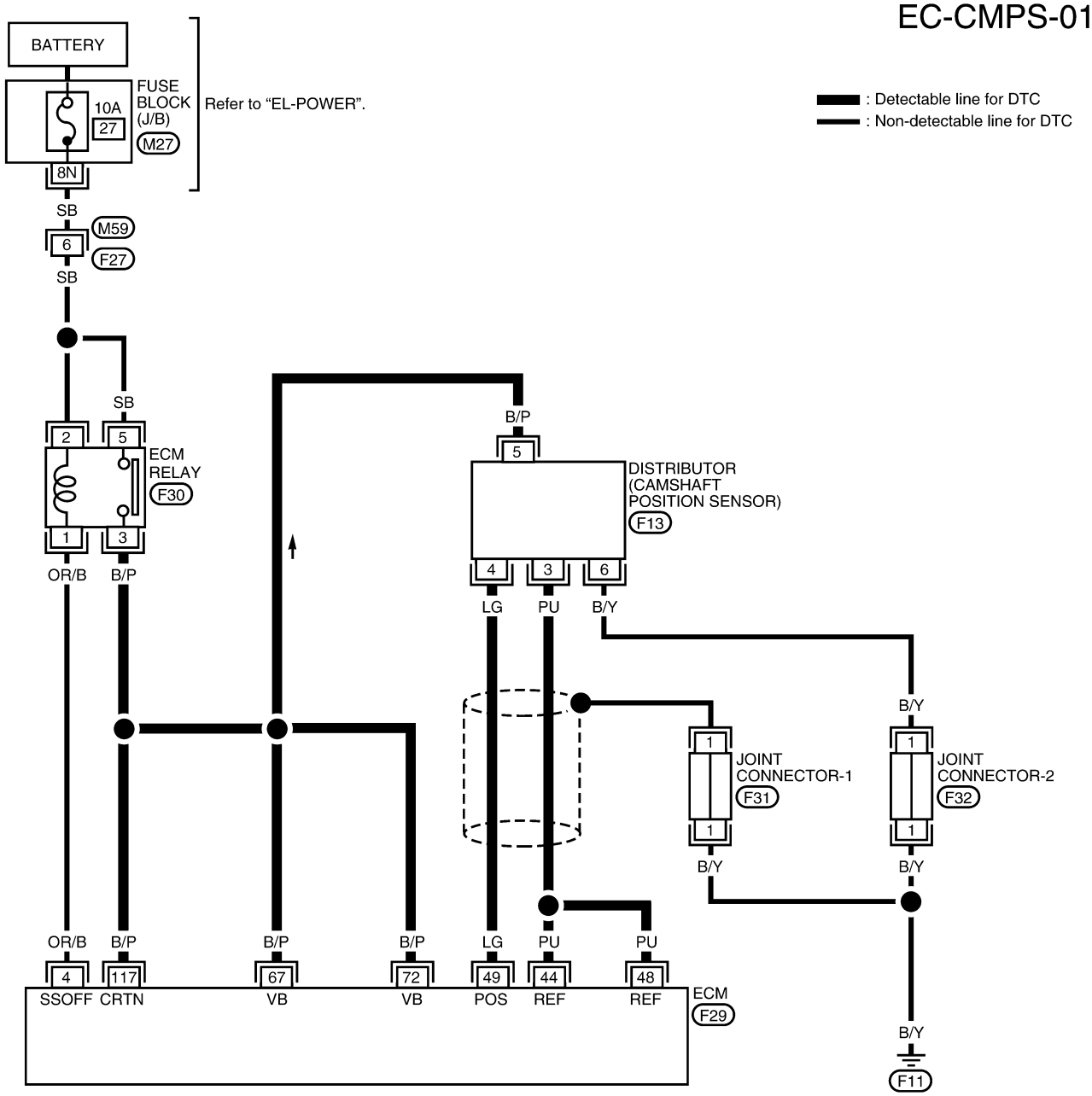

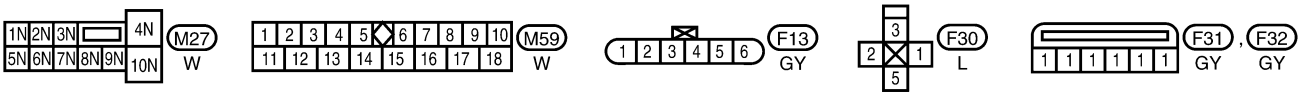

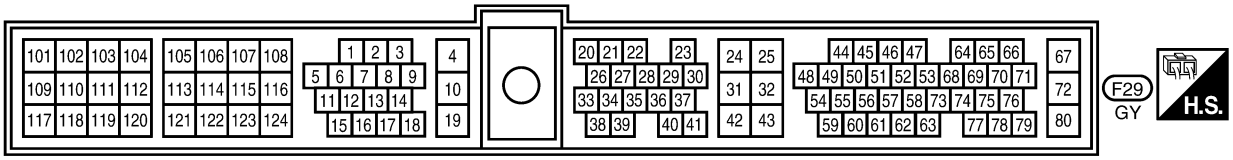

WEC800

Diagnostic Procedure

NEEC0728

1	RETIGHTEN GROUND SCREWS

1. Turn ignition switch OFF.
2. Loosen and retighten engine ground screws.

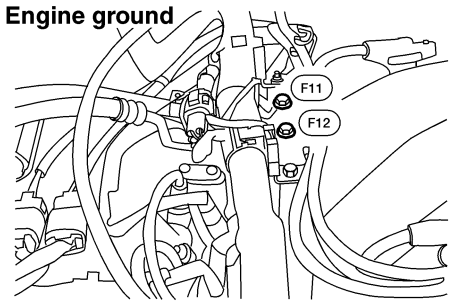

LEC518

▶ GO TO 2.

2	CHECK CMPS POWER SUPPLY CIRCUIT

1. Disconnect camshaft position sensor harness connector.

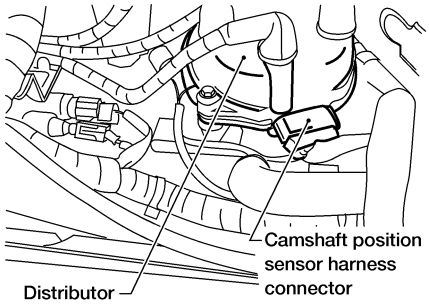

AEC647A

2. Turn ignition switch ON.
3. Check voltage between terminal 5 and ground with CONSULT or tester.

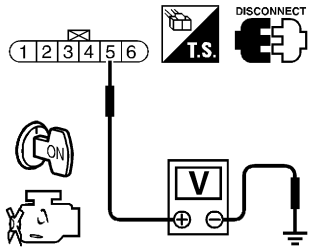

SEF708U

Voltage: Battery voltage

OK or NG

OK	▶	GO TO 4.
NG	▶	GO TO 3.

3	DETECT MALFUNCTIONING PART

Check the following.
- Harness for open or short between camshaft position sensor and ECM relay
- Harness for open or short between camshaft position sensor and ECM

▶ Repair harness or connectors.

Diagnostic Procedure (Cont'd)

4	CHECK CMPS INPUT SIGNAL CIRCUIT FOR OPEN AND SHORT

1. Turn ignition switch OFF.
2. Disconnect ECM harness connector.
3. Check harness continuity between sensor terminal 4 and ECM terminal 49, sensor terminal 3 and ECM terminals 44, 48. Refer to Wiring Diagram.
   Continuity should exist.
4. Also check harness for short to ground and short to power.

OK or NG

OK	▶	GO TO 5.
NG	▶	Repair open circuit or short to ground or short to power in harness or connectors.

5	CHECK CMPS GROUND CIRCUIT FOR OPEN AND SHORT

1. Turn ignition switch OFF.
2. Check harness continuity between sensor terminal 6 and engine ground.
   Continuity should exist.
3. Also check harness for short to power.

OK or NG

OK	▶	GO TO 7.
NG	▶	GO TO 6.

6	DETECT MALFUNCTIONING PART

Check the following.
- Joint connector-2
- Harness for open between camshaft position sensor and engine ground

	▶	Repair open circuit or short to power in harness or connector.

7	CHECK CAMSHAFT POSITION SENSOR

1. Install any parts removed.
2. Start engine.
3. Check voltage between ECM terminals 44, 48 and ground, ECM terminal 49 and ground with DC range.

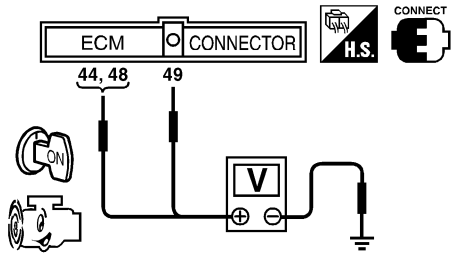

Terminal 44 or 48 and engine ground

Condition	Idle	2,000 rpm
Voltage	0.3 - 0.5V	0.3 - 0.5V
Pulse signal	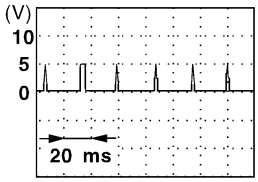	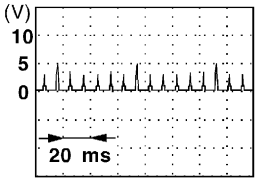

Terminal 49 and engine ground

Condition	Idle	2,000 rpm
Voltage	Approximately 2.5V	Approximately 2.5V
Pulse signal	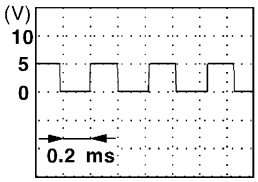	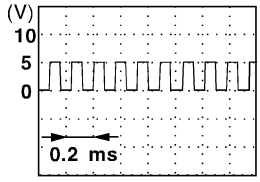

AEC072B

OK or NG

OK	▶	GO TO 8.
NG	▶	Replace distributor assembly with camshaft position sensor.

8	CHECK CMPS SHIELD CIRCUIT FOR OPEN AND SHORT

1. Turn ignition switch OFF.
2. Disconnect joint connector-1.
3. Check the following.
- Continuity between joint connector terminal 1 and ground
- Joint connector
  (Refer to ***EL-238***, "HARNESS LAYOUT".)

Continuity should exist.

4. Also check harness for short to power.
5. Then reconnect joint connector-1.

OK or NG

OK	▶	GO TO 9.
NG	▶	Repair open circuit or short to power in harness or connectors.

9	CHECK INTERMITTENT INCIDENT

Refer to "TROUBLE DIAGNOSIS FOR INTERMITTENT INCIDENT", EC-753.

▶ **INSPECTION END**

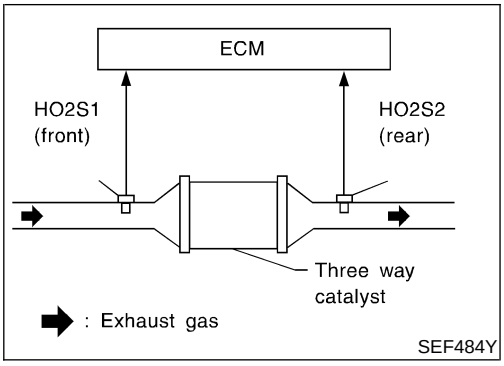

SEF484Y

On Board Diagnosis Logic

NEEC0740

The ECM monitors the switching frequency ratio of heated oxygen sensors 1 (front) and 2 (rear).
A warm-up three way catalyst with high oxygen storage capacity will indicate a low switching frequency of heated oxygen sensor 2 (rear). As oxygen storage capacity decreases, the heated oxygen sensor 2 (rear) switching frequency will increase.
When the frequency ratio of heated oxygen sensors 1 (front) and 2 (rear) approaches a specified limit value, the warm-up three way catalyst malfunction is diagnosed.
Malfunction is detected when warm-up three way catalyst does not operate properly, warm-up three way catalyst does not have enough oxygen storage capacity.

POSSIBLE CAUSE

NEEC0740S01

- Warm-up three way catalyst
- Exhaust tube
- Intake air leaks
- Injectors
- Injector leaks
- Spark plug
- Improper ignition timing

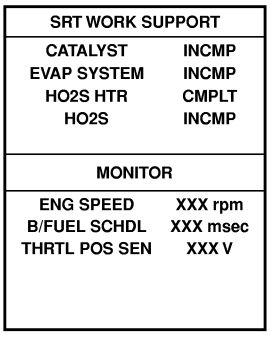
SRT WORK SUPPORT	
CATALYST	INCMP
EVAP SYSTEM	INCMP
HO2S HTR	CMPLT
HO2S	INCMP
MONITOR	
ENG SPEED	XXX rpm
B/FUEL SCHDL	XXX msec
THRTL POS SEN	XXX V

SEF344Z

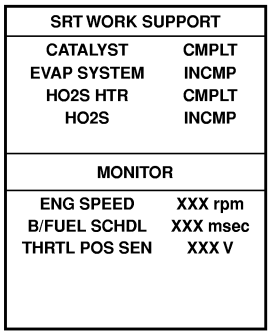
SRT WORK SUPPORT	
CATALYST	CMPLT
EVAP SYSTEM	INCMP
HO2S HTR	CMPLT
HO2S	INCMP
MONITOR	
ENG SPEED	XXX rpm
B/FUEL SCHDL	XXX msec
THRTL POS SEN	XXX V

SEF345Z

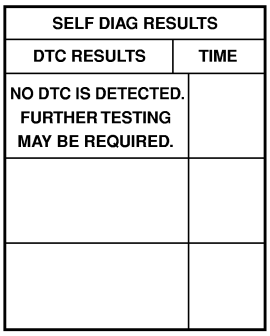
SELF DIAG RESULTS	
DTC RESULTS	TIME
NO DTC IS DETECTED. FURTHER TESTING MAY BE REQUIRED.	

SEF560X

DTC Confirmation Procedure

NEEC0741

NOTE:
If “DTC Confirmation Procedure” has been previously conducted, always turn ignition switch OFF and wait at least 5 seconds before conducting the next test.

With CONSULT-II

TESTING CONDITION

- **Open engine hood before conducting the following procedure.**
- **Do not hold engine speed for more than the specified minutes below.**

1) Turn ignition switch ON.
2) Select “DTC & SRT CONFIRMATION” the SRT WORK SUPPORT” mode with CONSULT-II.
3) Start engine.
4) Rev engine up to 2,500 to 3,500 rpm and hold it for 3 consecutive minutes then release the accelerator pedal completely.
5) Wait 5 seconds at idle.
6) Rev engine up to 2,000 to 3,000 rpm and maintain it until “INCMP” of “CATALYST” changes to “CMPLT” (It will take maximum of approximately 5 minute.).
7) Select “SELF-DIAG RESULTS” mode with CONSULT-II.
   If the 1st trip DTC is detected, go to “DIAGNOSTIC PROCEDURE”, EC-976. If not “CMPLT”, stop engine and cool down “COOLANT TEMP/S” to less than 70°C (158°F) and retest from step 1).

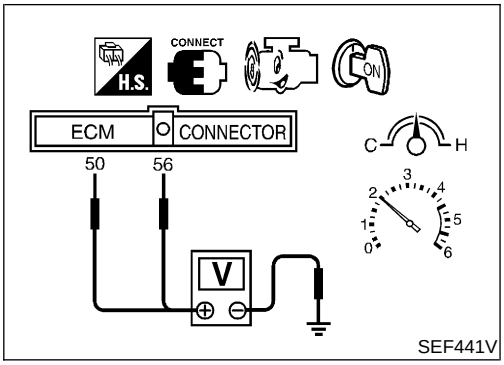

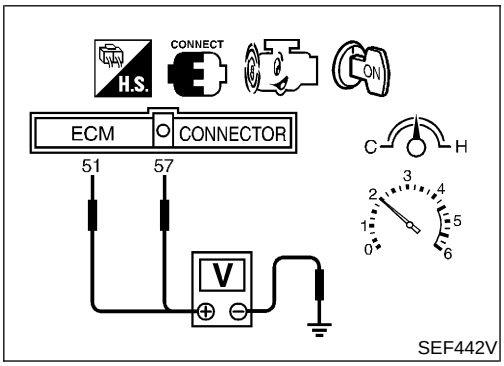

Overall Function Check

NEEC0742

Use this procedure to check the overall function of the warm-up three way catalyst. During this check, a 1st trip DTC might not be confirmed.

CAUTION:

Always drive vehicle at a safe speed.

Without CONSULT-II

1) Start engine and drive vehicle at a speed of more than 70 km/h (43 MPH) for 2 consecutive minutes.
2) Stop vehicle with engine running.
3) Set voltmeters probes between ECM terminals 50 [heated oxygen sensor 1 (front) (bank 1) signal], 51 [heated oxygen sensor 1 (front) (bank 2) signal] and engine ground, and ECM terminals 56 [heated oxygen sensor 2 (rear) (bank 1) signal], 57 [heated oxygen sensor 2 (rear) (bank 2) signal] and engine ground.
4) Keep engine speed at 2,000 rpm constant under no load.
5) Make sure that the voltage switching frequency (high & low) between ECM terminals 56 and engine ground, or 57 and engine ground is very less than that of ECM terminals 50 and engine ground, or 51 and engine ground.
   Switching frequency ratio = A/B
   A: Heated oxygen sensor 2 (rear) voltage switching frequency
   B: Heated oxygen sensor 1 (front) voltage switching frequency
   This ratio should be less than 0.75.
   If the ratio is greater than above, it means warm-up three way catalyst does not operate properly. Go to “Diagnostic Procedure”, EC-976.

NOTE:

If the voltage at terminal 50 or 51 does not switch periodically more than 5 times within 10 seconds at step 5, perform trouble diagnosis for “DTC P0133, P0153” first. (See EC-828.)

Diagnostic Procedure

=NEEC0743

1	CHECK EXHAUST SYSTEM	
Visually check exhaust tubes and muffler for dent.		
OK or NG		
OK	▶	GO TO 2.
NG	▶	Repair or replace it.

2	CHECK EXHAUST AIR LEAK	
1. Start engine and run it at idle. 2. Listen for an exhaust air leak before the warm-up three way catalyst.		
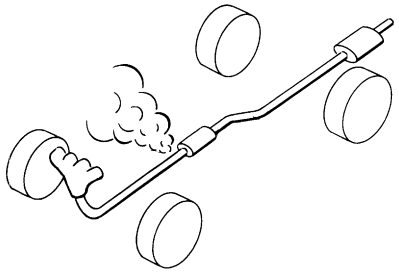 SEF099P		
OK or NG		
OK	▶	GO TO 3.
NG	▶	Repair or replace.

3	CHECK INTAKE AIR LEAK	
Listen for an intake air leak after the mass air flow sensor.		
OK or NG		
OK	▶	GO TO 4.
NG	▶	Repair or replace.

4	CHECK IGNITION TIMING	
Check the following items. Refer to “Basic Inspection”, EC-715.		

Items	Specifications
Ignition timing	10° ± 2° BTDC
Base idle speed	700 ± 50 rpm (in “P” or “N” position)
Closed throttle position switch idle position adjustment	Feeler gauge thickness and switch condition 0.3 mm (0.012 in): ON 0.4 mm (0.016 in): OFF
Target idle speed	750 ± 50 rpm (in “P” or “N” position)

MTBL0576

OK or NG		
OK	▶	GO TO 5.
NG	▶	Adjust ignition timing.

5	CHECK INJECTORS

1. Refer to WIRING DIAGRAM for Injectors, EC-1190.
2. Stop engine and then turn ignition switch ON.
3. Check voltage between ECM terminals 102, 104, 106, 109, 111 and 113 and ground with CONSULT-II or tester.

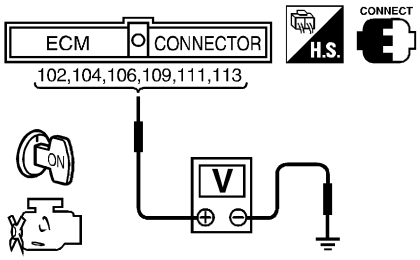

SEF711U

Battery voltage should exist.

OK or NG

OK	▶	GO TO 6.
NG	▶	Perform "Diagnostic Procedure", "INJECTOR", EC-1191.

6	CHECK IGNITION SPARK

1. Turn ignition switch OFF.
2. Disconnect ignition wire from spark plug.
3. Connect a known good spark plug to the ignition wire.
4. Place end of spark plug against a suitable ground and crank engine.
5. Check for spark.

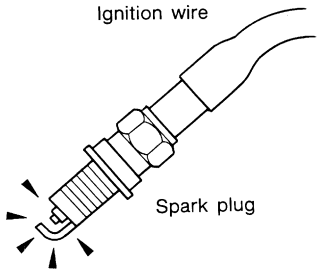

SEF282G

OK or NG

OK	▶	GO TO 8.
NG	▶	GO TO 7.

Diagnostic Procedure (Cont'd)

7	CHECK IGNITION WIRES

1. Inspect wires for cracks, damage, burned terminals and for improper fit.
2. Measure the resistance of wires to their distributor cap terminal. Move each wire while testing to check for intermittent breaks.

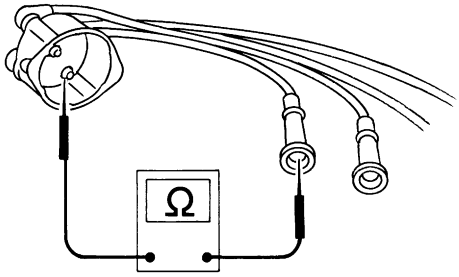

SEF174P

Resistance:

Cylinder No.	Resistance kΩ [at 25°C (77°F)]
1	Approximately 6.5
2	Approximately 10.0
3	Approximately 8.5
4	Approximately 12.5
5	Approximately 8.5
6	Approximately 11.0

MTBL0235

If the resistance exceeds the above specification, inspect ignition wire to distributor cap connection. Clean connection or replace the ignition wire with a new one.

OK or NG

OK	▶	Check ignition coil, power transistor and their circuits. Refer to EC-1183.
NG	▶	Replace.

8	CHECK INJECTOR

1. Turn ignition switch OFF.
2. Remove injector assembly.
   Refer to EC-659.
   Keep fuel hose and all injectors connected to injector gallery.
3. Disconnect all ignition coil harness connectors.
4. Turn ignition switch ON.
   Make sure fuel does not drip from injector.

OK or NG

OK (Does not drip)	▶	GO TO 9.
NG (Drips)	▶	Replace the injector(s) from which fuel is dripping.

9	CHECK INTERMITTENT INCIDENT

Refer to "TROUBLE DIAGNOSIS FOR INTERMITTENT INCIDENT", EC-753.

Trouble is fixed	▶	**INSPECTION END**
Trouble is not fixed	▶	Replace warm-up three way catalyst.

On Board Diagnosis Logic

NEEC0744

NOTE:
If DTC P0440 is displayed with P1448, perform trouble diagnosis for DTC P1448 first. (See EC-1144.)

This diagnosis detects leaks in the EVAP purge line using engine intake manifold vacuum.
If pressure does not increase, the ECM will check for leaks in the line between the fuel tank and EVAP canister purge volume control solenoid valve, under the following “Vacuum test” conditions.
The vacuum cut valve bypass valve is opened to clear the line between the fuel tank and the EVAP canister purge volume control solenoid valve. The EVAP canister vent control valve will then be closed to shut the EVAP purge line off. The EVAP canister purge volume control solenoid valve is opened to depressurize the EVAP purge line using intake manifold vacuum. After this occurs, the EVAP canister purge volume control solenoid valve will be closed.

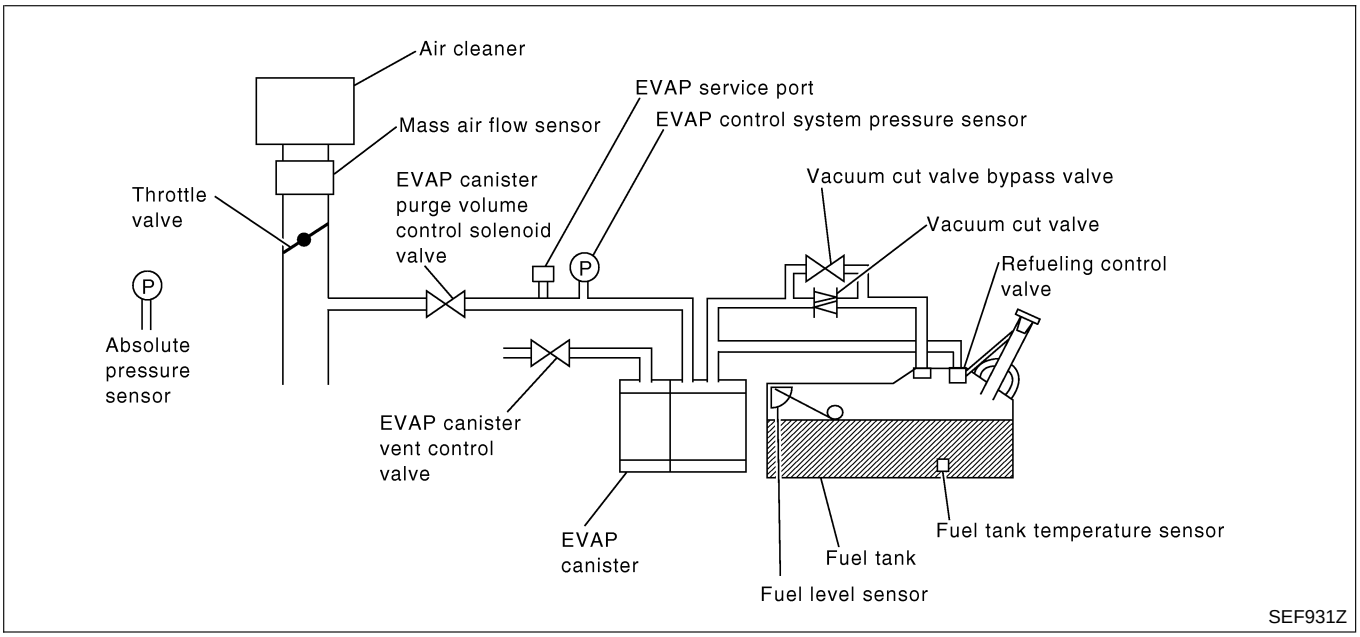

Malfunction is detected when EVAP control system has a leak, EVAP control system does not operate properly.

CAUTION:

- **Use only a genuine NISSAN fuel filler cap as a replacement. If an incorrect fuel filler cap is used, the MIL may come on.**
- **If the fuel filler cap is not tightened properly, the MIL may come on.**
- **Use only a genuine NISSAN rubber tube as a replacement.**

POSSIBLE CAUSE

NEEC0744S01

- Incorrect fuel tank vacuum relief valve
- Incorrect fuel filler cap used
- Fuel filler cap remains open or fails to close.
- Foreign matter caught in fuel filler cap.
- Leak is in line between intake manifold and EVAP canister purge volume control solenoid valve.
- Foreign matter caught in EVAP canister vent control valve.
- EVAP canister or fuel tank leaks
- EVAP purge line (pipe and rubber tube) leaks
- EVAP purge line rubber tube bent.

- Blocked or bent rubber tube to EVAP control system pressure sensor
- Loose or disconnected rubber tube
- EVAP canister vent control valve and the circuit
- EVAP canister purge volume control solenoid valve and the circuit
- Absolute pressure sensor
- Fuel tank temperature sensor
- O-ring of EVAP canister vent control valve is missing or damaged.
- Water separator
- EVAP canister is saturated with water.
- EVAP control system pressure sensor
- Fuel level sensor and the circuit.
- Refueling EVAP vapor cut
- ORVR system leaks

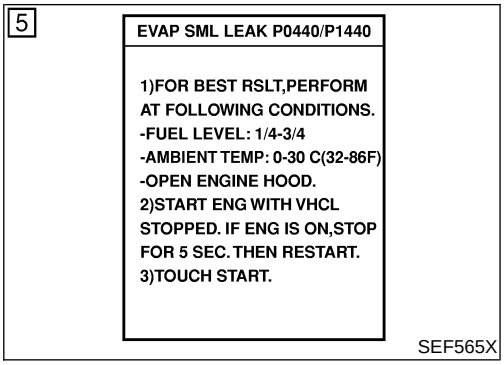

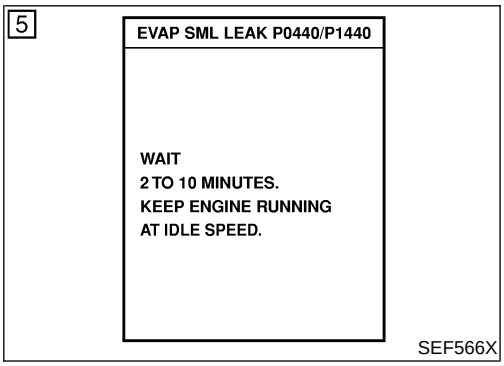

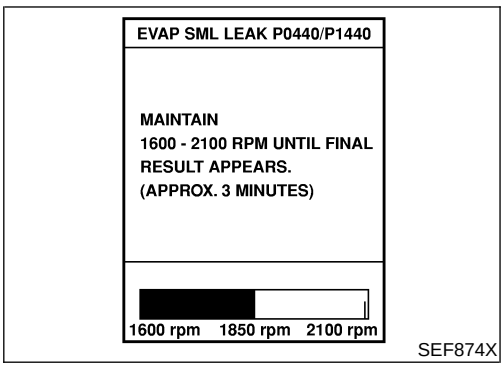

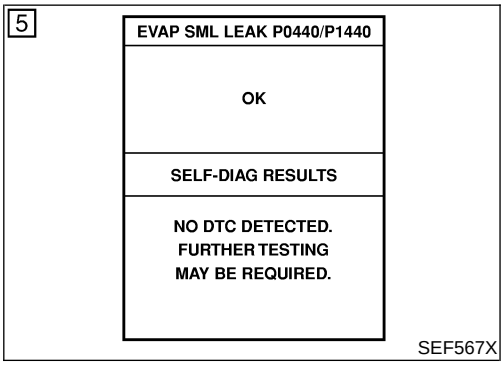

DTC Confirmation Procedure

NEEC0745

NOTE:

- **If DTC P0440 is displayed with P1448, perform trouble diagnosis for DTC P1448 first. (See EC-1144.)**
- If "DTC Confirmation Procedure" has been previously conducted, always turn ignition switch OFF and wait at least 5 seconds before conducting the next test.

TESTING CONDITION:

- **Perform "DTC WORK SUPPORT" when the fuel level is between 1/4 to 3/4 full and vehicle is placed on flat level surface.**
- **Open engine hood before conducting the following procedure.**

With CONSULT-II

1) Turn ignition switch ON.
2) Turn ignition switch OFF and wait at least 5 seconds.
3) Turn ignition switch ON and select "DATA MONITOR" mode with CONSULT-II.
4) Make sure that the following conditions are met.
   COOLAN TEMP/S: 0 - 32°C (32 - 90°F)
   INT/A TEMP SE: More than 0°C (32°F)
5) Select "EVAP SML LEAK P0440" of "EVAPORATIVE SYSTEM" in "DTC WORK SUPPORT" mode with CONSULT-II. Follow the instruction displayed.

NOTE:

If the engine speed cannot be maintained within the range displayed on the CONSULT-II screen, go to "Basic Inspection", EC-715.

6) Make sure that "OK" is displayed.
   If "NG" is displayed, refer to "Diagnostic Procedure", EC-982.

NOTE:

Make sure that EVAP hoses are connected to EVAP canister purge volume control solenoid valve properly.

With GST

NOTE:

Be sure to read the explanation of "Driving Pattern" on EC-681 before driving vehicle.

1) Start engine.
2) Drive vehicle according to "Driving Pattern", EC-681.
3) Stop vehicle.
4) Select "MODE 1" with GST.
   - If SRT of EVAP system is not set yet, go to the following step.
   - If SRT of EVAP system is set, the result will be OK.
5) Turn ignition switch OFF and wait at least 5 seconds.
6) Start engine.
   It is not necessary to cool engine down before driving.
7) Drive vehicle again according to the "Driving Pattern", EC-681.
8) Stop vehicle.
9) Select "MODE 3" with GST.
   - If P0440 is displayed on the screen, go to "Diagnostic Procedure", EC-982.
   - If P1447 is displayed on the screen, go to "Diagnostic Procedure" for "DTC P1447", EC-1135.
   - If P0440 and P1447 are not displayed on the screen, go to the following step.

10) Select "MODE 1" with GST.
- If SRT of EVAP system is set, the result will be OK.
- If SRT of EVAP system is not set, go to step 6.

Diagnostic Procedure

NEEC0967

1	CHECK FUEL FILLER CAP DESIGN

1. Turn ignition switch "OFF".
2. Check for genuine NISSAN fuel filler cap design.

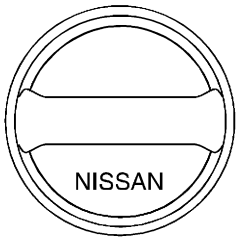

SEF915U

OK or NG

OK	▶	GO TO 2.
NG	▶	Replace with genuine NISSAN fuel filler cap.

2	CHECK FUEL FILLER CAP INSTALLATION

Check that the cap is tightened properly by rotating the cap clockwise.

OK or NG

OK	▶	GO TO 3.
NG	▶	• Open fuel filler cap, then clean cap and fuel filler neck threads using air blower. • Retighten until ratcheting sound is heard.

3	CHECK FUEL FILLER CAP FUNCTION

Check for air releasing sound while opening the fuel filler cap.

OK or NG

OK	▶	GO TO 6.
NG	▶	GO TO 4.

4	CHECK FUEL TANK VACUUM RELIEF VALVE

Refer to "Evaporative Emission System", EC-640.

OK or NG

OK	▶	GO TO 5.
NG	▶	Replace fuel filler cap with a genuine one.

5	INSTALL THE PRESSURE PUMP

To locate the EVAP leak, install EVAP service port adapter and pressure pump to EVAP service port securely.

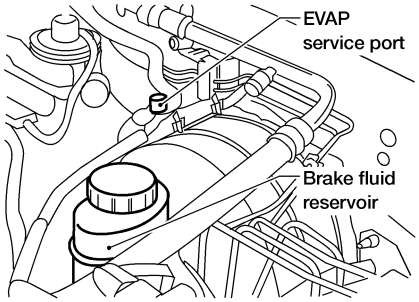

AEC649A

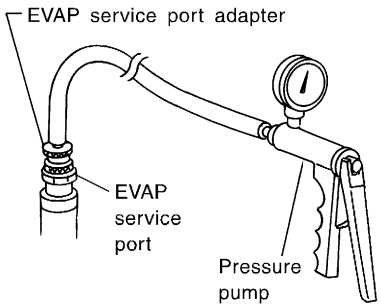

SEF916U

NOTE:
Improper installation of the EVAP service port adapter to the EVAP service port may cause leaking.

Models with CONSULT-II ▶	GO TO 6.
Models without CONSULT-II ▶	GO TO 7.

Diagnostic Procedure (Cont'd)

6	CHECK FOR EVAP LEAK

With CONSULT-II

1. Turn ignition switch "ON".
2. Select "EVAP SYSTEM CLOSE" of "WORK SUPPORT" mode with CONSULT-II.
3. Touch "START" and apply pressure into the EVAP line until the pressure indicator reaches the middle of the bar graph.
   NOTE:
   - **Never use compressed air or a high pressure pump.**
   - **Do not exceed 4.12 kPa (0.042 kg/cm^2, 0.6 psi) of pressure in the system.**

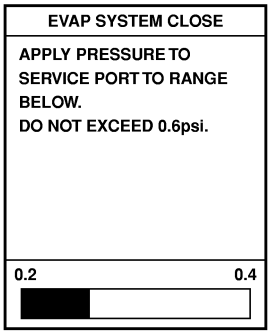

PEF917U

4. Using EVAP leak detector, locate the EVAP leak. For the leak detector, refer to the instruction manual for more details. Refer to "EVAPORATIVE EMISSION LINE DRAWING", EC-644.

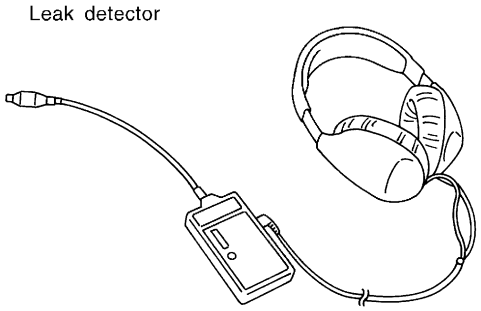

SEF200U

OK or NG

OK	▶	GO TO 8.
NG	▶	Repair or replace.

7	CHECK FOR EVAP LEAK

Without CONSULT-II

1. Turn ignition switch "OFF".
2. Apply 12 volts DC to EVAP canister vent control valve. The valve will close. (Continue to apply 12 volts until the end of test.)
3. Apply 12 volts DC to vacuum cut valve bypass valve. The valve will open. (Continue to apply 12V until the end of test.)

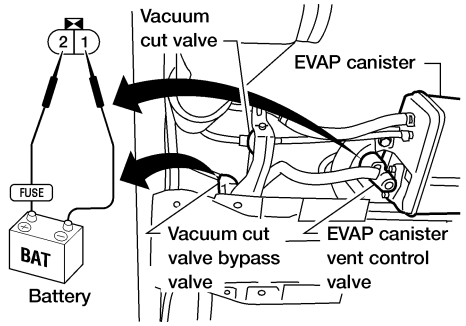

AEC632A

4. Pressurize the EVAP line using pressure pump with 1.3 to 2.7 kPa (10 to 20 mmHg, 0.39 to 0.79 inHg), then remove pump and EVAP service port adapter.
   NOTE:
   - **Never use compressed air or a high pressure pump.**
   - **Do not exceed 4.12 kPa (0.042 kg/cm^2, 0.6 psi) of pressure in the system.**
5. Using EVAP leak detector, locate the EVAP leak. For the leak detector, refer to the instruction manual for more details. Refer to "EVAPORATIVE EMISSION LINE DRAWING", EC-644.

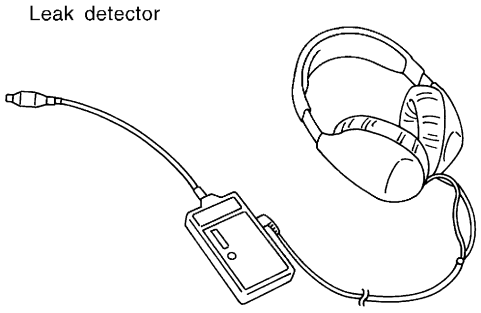

SEF200U

OK or NG

OK	▶	GO TO 8.
NG	▶	Repair or replace.

Diagnostic Procedure (Cont'd)

8	CHECK WATER SEPARATOR

1. Check visually for insect nests in the water separator air inlet.
2. Check visually for cracks or flaws in the appearance.
3. Check visually for cracks or flaws in the hose.
4. Check that **A** and **C** are not clogged by blowing air into **B** with **A**, and then **C** plugged.

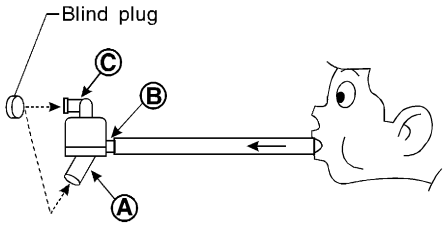

* Ⓐ: Bottom hole (To atmosphere)
Ⓑ: Emergency tube (From EVAP canister)
Ⓒ: Inlet port (To member)

SEF829T

5. In case of NG in items 2 - 4, replace the parts.

NOTE:

- Do not disassemble water separator.

OK or NG

OK	▶	GO TO 9.
NG	▶	Replace water separator.

9	CHECK EVAP CANISTER VENT CONTROL VALVE, O-RING AND CIRCUIT

Refer to "DTC Confirmation Procedure", EC-1002.

OK or NG

OK	▶	GO TO 10.
NG	▶	Repair or replace EVAP canister vent control valve and O-ring or harness/connector.

10	CHECK IF EVAP CANISTER SATURATED WITH WATER

1. Remove EVAP canister with EVAP canister vent control valve attached.
2. Check if water will drain from the EVAP canister.

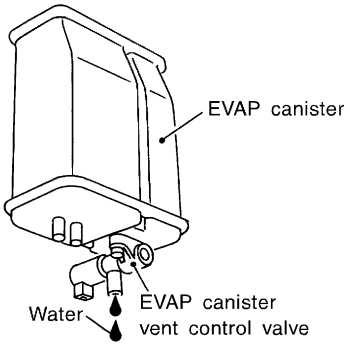

SEF596U

Yes or No

Yes	▶	GO TO 11.
No (With CONSULT-II)	▶	GO TO 13.
No (Without CONSULT-II)	▶	GO TO 14.

11	CHECK EVAP CANISTER
Weigh the EVAP canister with the EVAP canister vent control valve attached. **The weight should be less than 1.8 kg (4.0 lb).**	
OK or NG	
OK (With CONSULT-II) ▶	GO TO 13.
OK (Without CONSULT-II) ▶	GO TO 14.
NG ▶	GO TO 12.

12	DETECT MALFUNCTIONING PART
Check the following. ● EVAP canister for damage ● EVAP hose between EVAP canister and water separator for clogging or poor connection	
▶	Repair hose or replace EVAP canister.

13	CHECK EVAP CANISTER PURGE VOLUME CONTROL SOLENOID VALVE OPERATION

With CONSULT-II

1. Disconnect vacuum hose to EVAP canister purge volume control solenoid valve at EVAP service port.
2. Start engine.
3. Perform "PURG VOL CONT/V" in "ACTIVE TEST" mode.
4. Touch "Qu" on CONSULT-II screen to increase "PURG VOL CONT/V" opening to 100.0%.
5. Check vacuum hose for vacuum when revving engine up to 2,000 rpm.

ACTIVE TEST	
PURG VOL CONT/V	XXX %
MONITOR	
ENG SPEED	XXX rpm
A/F ALPHA-B1	XXX %
A/F ALPHA-B2	XXX %
HO2S1 MNTR (B1)	LEAN
HO2S1 MNTR (B2)	LEAN
THRTL POS SEN	XXX V

Vacuum should exist.

SEF984Y

OK or NG

OK ▶	GO TO 17.
NG ▶	GO TO 15.

14	CHECK EVAP CANISTER PURGE VOLUME CONTROL SOLENOID VALVE OPERATION

Without CONSULT-II

1. Start engine and warm it up to normal operating temperature.
2. Stop engine.
3. Disconnect vacuum hose to EVAP canister purge volume control solenoid valve at EVAP service port.
4. Start engine and let it idle for at least 80 seconds.
5. Check vacuum hose for vacuum when revving engine up to 2,000 rpm.
   Vacuum should exist.

OK or NG

OK ▶	GO TO 17.
NG ▶	GO TO 15.

Diagnostic Procedure (Cont'd)

15	CHECK VACUUM HOSE
Check vacuum hoses for clogging or disconnection. Refer to "Vacuum Hose Drawing", EC-634.	
OK or NG	
OK ▶	GO TO 16.
NG ▶	Repair or reconnect the hose.

16	CHECK EVAP CANISTER PURGE VOLUME CONTROL SOLENOID VALVE

With CONSULT-II

1. Start engine.
2. Perform "PURG VOL CONT/V" in "ACTIVE TEST" mode with CONSULT-II. Check that engine speed varies according to the valve opening.

ACTIVE TEST	
PURG VOL CONT/V	0.0%
MONITOR	
ENG SPEED	XXX rpm
A/F ALPHA-B1	XXX %
A/F ALPHA-B2	XXX %
HO2S1 MNTR (B1)	RICH
HO2S1 MNTR (B2)	RICH
THRTL POS SEN	XXX V

SEF985Y

OK or NG

OK ▶	GO TO 18.
NG ▶	GO TO 17.

17	CHECK EVAP CANISTER PURGE VOLUME CONTROL SOLENOID VALVE

With CONSULT-II

Check air passage continuity of EVAP canister purge volume control solenoid valve under the following conditions.

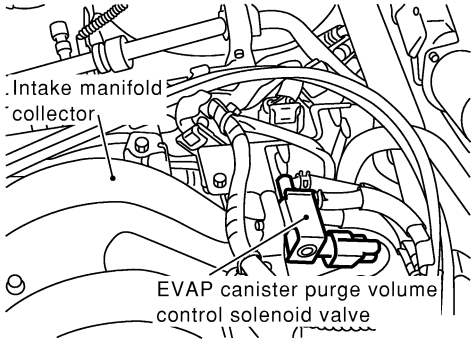

SEF266X

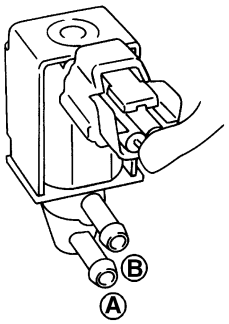

Condition PURG VOL CONT/V value	Air passage continuity between A and B
100.0%	Yes
0.0%	No

SEF334X

Without CONSULT-II

Check air passage continuity of EVAP canister purge volume control solenoid valve under the following conditions.

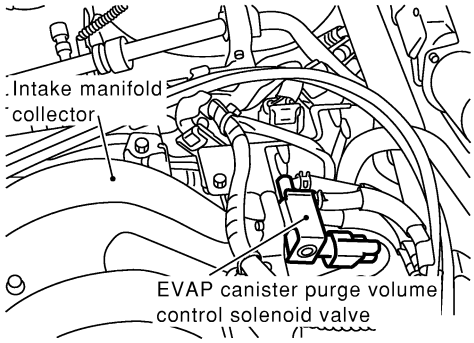

SEF266X

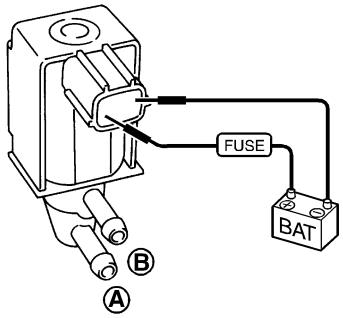

Condition	Air passage continuity between A and B
12V direct current supply between terminals 1 and 2	Yes
No supply	No

SEF335X

OK or NG

OK	▶	GO TO 18.
NG	▶	Replace EVAP canister purge volume control solenoid valve.

Diagnostic Procedure (Cont'd)

18	CHECK FUEL TANK TEMPERATURE SENSOR

1. Remove fuel level sensor unit.
2. Check resistance between fuel level sensor unit and fuel pump terminals 1 and 2 by heating with hot water or heat gun as shown in the figure.

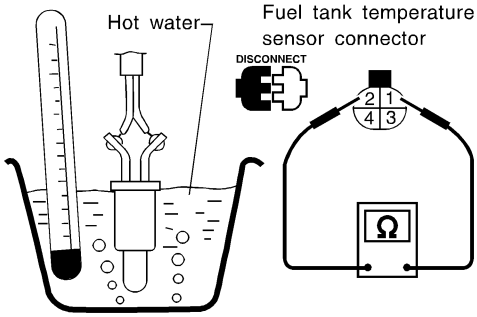

Temperature °C (°F)	Resistance kΩ
20 (68)	2.3 - 2.7
50 (122)	0.79 - 0.90

SEF974Y

OK or NG

OK	▶	GO TO 19.
NG	▶	Replace fuel tank temperature sensor.

19	CHECK EVAP CONTROL SYSTEM PRESSURE SENSOR

1. Remove EVAP control system pressure sensor with its harness connector connected.

CAUTION:

- **Never apply force to the air hole protector of the sensor if equipped.**

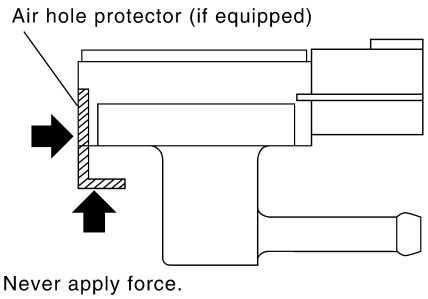

SEF799W

2. Remove hose from EVAP control system pressure sensor.
3. Turn ignition switch "ON".
4. Use pump to apply vacuum and pressure to EVAP control system pressure sensor as shown in figure.

CAUTION:

- **Always calibrate the vacuum pump gauge when using it.**
- **Do not apply below −20 kPa (−150 mmHg, −5.91 inHg) or over 20 kPa (150 mmHg, 5.91 inHg) of pressure.**

5. Check input voltage between ECM terminal 84 and ground.

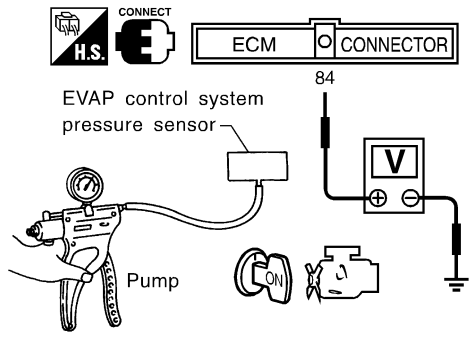

Pressure (Relative to atmospheric pressure)	Voltage V
0 kPa (0 mmHg, 0 inHg)	3.0 - 3.6
–9.3 kPa (–70 mmHg, –2.76 inHg)	0.4 - 0.6

SEF342X

CAUTION:

- **Discard and EVAP control system pressure sensor which has been dropped from a height of more than 0.5 m (19.7 in) onto a hard surface such as a concrete floor; use a new one.**

OK or NG

OK	▶	GO TO 20.
NG	▶	Replace EVAP control system pressure sensor.

20	CHECK EVAP PURGE LINE

Check EVAP purge line (pipe, rubber tube, fuel tank and EVAP canister) for cracks or improper connection.
Refer to "Evaporative Emission System", EC-640.

OK or NG

OK	▶	GO TO 21.
NG	▶	Repair or reconnect the hose.

21	CLEAN EVAP PURGE LINE

Clean EVAP purge line (pipe and rubber tube) using air blower.

▶ GO TO 22.

Diagnostic Procedure (Cont'd)

22	CHECK REFUELING EVAP VAPOR LINE	
Check refueling EVAP vapor line between EVAP canister and fuel tank for clogging, kink, looseness and improper connection. For location, refer to "ON BOARD REFUELING VAPOR RECOVERY (ORVR)", EC-646.		
OK or NG		
OK	▶	GO TO 23.
NG	▶	Repair or replace hoses and tubes.

23	CHECK SIGNAL LINE AND RECIRCULATION LINE	
Check signal line and recirculation line between filler neck tube and fuel tank for clogging, kink, cracks, looseness and improper connection.		
OK or NG		
OK	▶	GO TO 24.
NG	▶	Repair or replace hoses, tubes or filler neck tube.

24	CHECK REFUELING CONTROL VALVE	

1. Remove fuel filler cap.
2. Check air continuity between hose ends A and B.
   Blow air into the hose end B. Air should flow freely into the fuel tank.
3. Blow air into hose end A and check there is no leakage.
4. Apply pressure to both hose ends A and B [20 kPa (150 mmHg, 5.91 inHg)] using a pressure pump and a suitable 3-way connector. Check that there is no leakage.

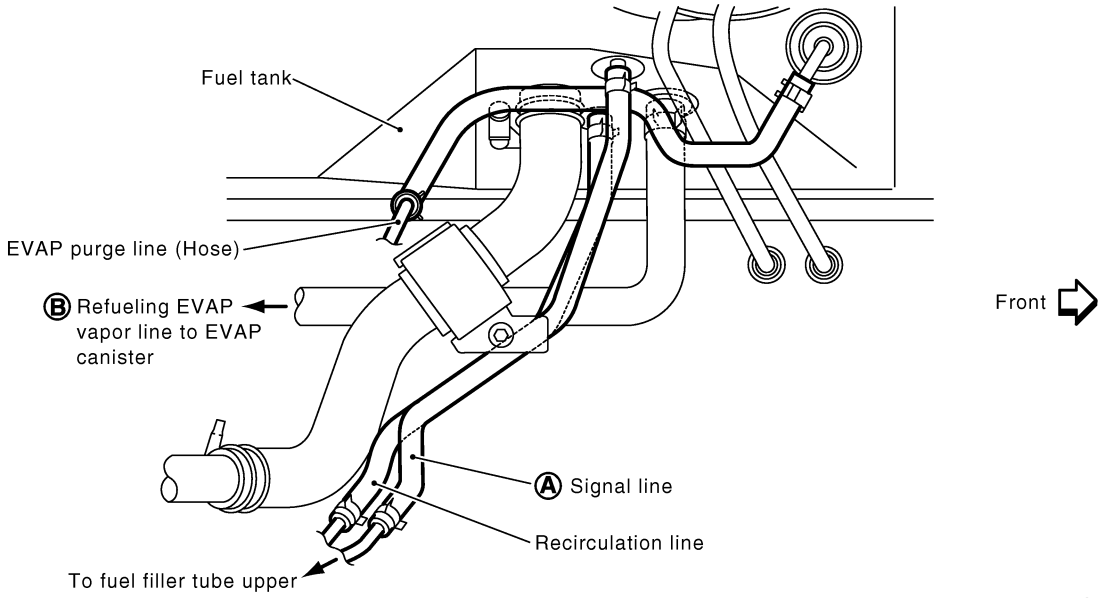

SEF706Z

OK or NG		
OK	▶	GO TO 25.
NG	▶	Replace refueling control valve with fuel tank.

25	CHECK FUEL LEVEL SENSOR	
Refer to ***EL-82***, "Fuel Level Sensor Unit Check".		
OK or NG		
OK	▶	GO TO 26.
NG	▶	Replace fuel level sensor unit.

26	CHECK INTERMITTENT INCIDENT
Refer to "TROUBLE DIAGNOSIS FOR INTERMITTENT INCIDENT", EC-753.	
▶	INSPECTION END

Description

NEEC0747

SYSTEM DESCRIPTION

NEEC0747S01

Sensor	Input Signal to ECM	ECM function	Actuator
Camshaft position sensor	Engine speed	EVAP canister purge flow control	EVAP canister purge volume control solenoid valve
Mass air flow sensor	Amount of intake air		
Engine coolant temperature sensor	Engine coolant temperature		
Ignition switch	Start signal		
Throttle position sensor	Throttle position		
Throttle position switch	Closed throttle position		
Heated oxygen sensors 1 (front)	Density of oxygen in exhaust gas (Mixture ratio feedback signal)		
Fuel tank temperature sensor	Fuel temperature in fuel tank		
Vehicle speed sensor	Vehicle speed		

This system controls flow rate of fuel vapor from the EVAP canister. The opening of the vapor by-pass passage in the EVAP canister purge volume control solenoid valve changes to control the flow rate. The EVAP canister purge volume control solenoid valve repeats ON/OFF operation according to the signal sent from the ECM. The opening of the valve varies for optimum engine control. The optimum value stored in the ECM is determined by considering various engine conditions. When the engine is operating, the flow rate of fuel vapor from the EVAP canister is regulated as the air flow changes.

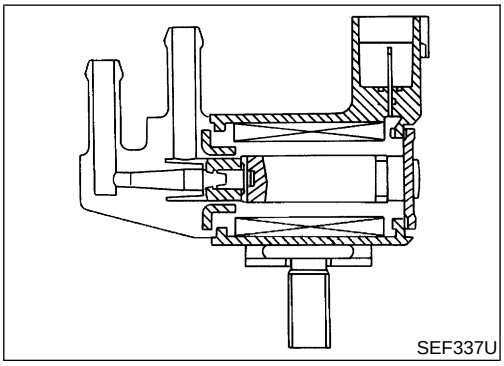
SEF337U

COMPONENT DESCRIPTION

NEEC0747S02

The EVAP canister purge volume control solenoid valve uses a ON/OFF duty to control the flow rate of fuel vapor from the EVAP canister. The EVAP canister purge volume control solenoid valve is moved by ON/OFF pulses from the ECM. The longer the ON pulse, the greater the amount of fuel vapor that will flow through the valve.

CONSULT-II Reference Value in Data Monitor Mode

NEEC0748

Specification data are reference values.

MONITOR ITEM	CONDITION		SPECIFICATION
PURG VOL C/V	• Engine: After warming up • Air conditioner switch OFF • Shift lever: “N” • No-load	Idle (Vehicle stopped)	0%
		2,000 rpm	—

ECM Terminals and Reference Value

NEEC0749

Specification data are reference values and are measured between each terminal and ground.

CAUTION:

Do not use ECM ground terminals when measuring input/output voltage. Doing so may result in damage to the ECM's transistor. Use a ground other than the ECM terminals, such as the ground.

TERMINAL NO.	WIRE COLOR	ITEM	CONDITION	DATA (DC Voltage)
4	OR/B	ECM relay (Self shut-off)	**[Engine is running]** **[Ignition switch OFF]** ● For a few seconds after turning ignition switch OFF	0 - 1.5V
			[Ignition switch OFF] ● A few seconds passed after turning ignition switch OFF	BATTERY VOLTAGE (11 - 14V)
5	R/Y	EVAP canister purge volume control solenoid valve	**[Engine is running]** ● Idle speed	BATTERY VOLTAGE (11 - 14V) 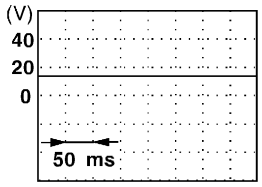 SEF994U
			[Engine is running] ● Engine speed is 2,000 rpm (More than 100 seconds after starting engine)	BATTERY VOLTAGE (11 - 14V) 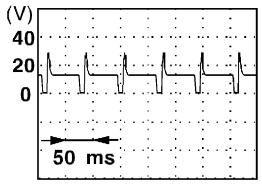 SEF995U
67	B/P	Power supply for ECM	**[Ignition switch ON]**	BATTERY VOLTAGE (11 - 14V)
72	B/P			
117	B/P	Current return	**[Engine is running]** ● Idle speed	BATTERY VOLTAGE (11 - 14V)

On Board Diagnosis Logic

=NEEC0750

Malfunction is detected when an improper voltage signal is sent to ECM through the valve.

POSSIBLE CAUSE

NEEC0750S01

- Harness or connectors
  (The valve circuit is open or shorted.)
- EVAP canister purge volume control solenoid valve

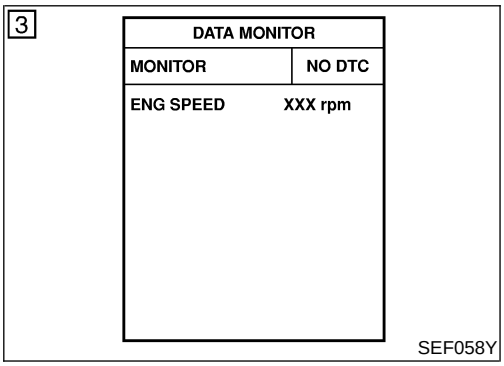

DTC Confirmation Procedure

NEEC0751

NOTE:

If “DTC Confirmation Procedure” has been previously conducted, always turn ignition switch OFF and wait at least 5 seconds before conducting the next test.

TESTING CONDITION:

Before performing the following procedure, confirm battery voltage is more than 11V at idle.

With CONSULT-II

1) Turn ignition switch ON.
2) Select “DATA MONITOR” mode with CONSULT-II.
3) Start engine and let it idle for at least 13 seconds.
4) If 1st trip DTC is detected, go to “Diagnostic Procedure”, EC-998.

With GST

Follow the procedure “With CONSULT-II”.

Wiring Diagram

NEEC0752

EC-PGC/V-01

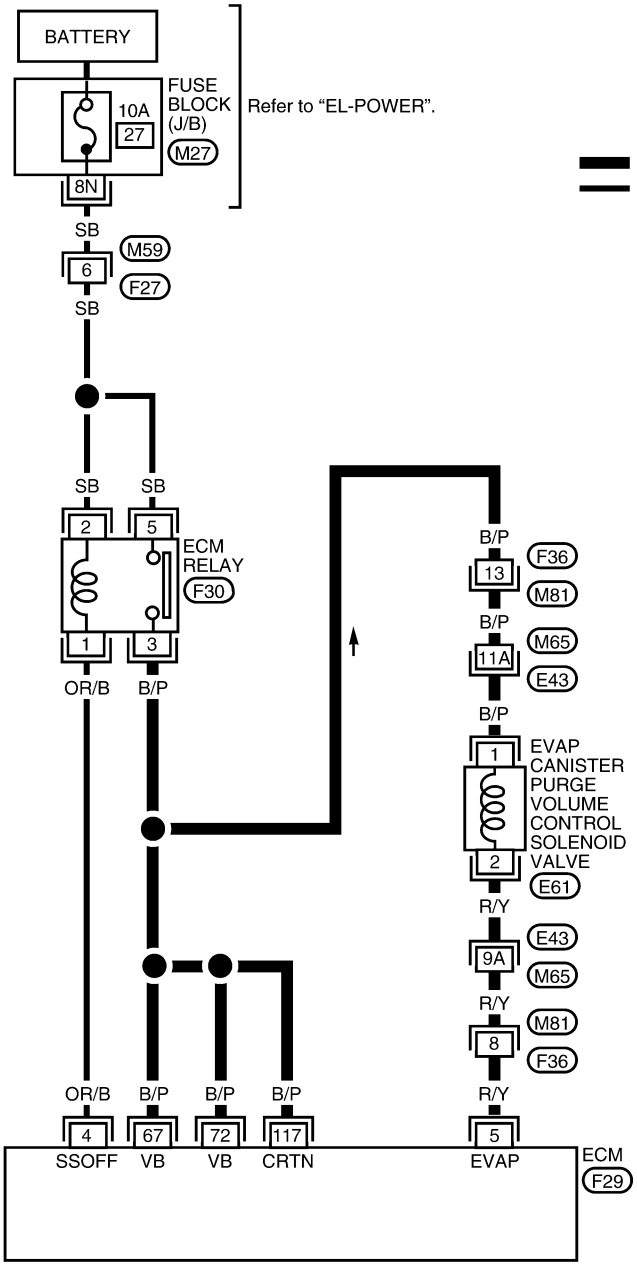

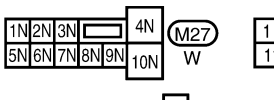

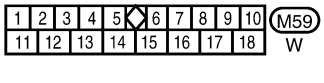

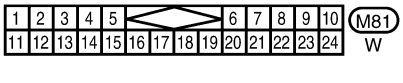

Refer to the following.
M65, E43 - SUPER MULTIPLE JUNCTION (SMJ)

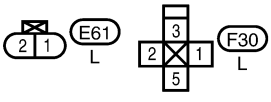

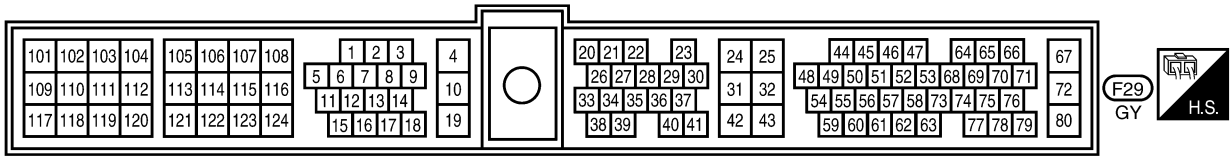

LEC813

Diagnostic Procedure

NEEC0753

1	CHECK EVAP CANISTER PURGE VOLUME CONTROL SOLENOID VALVE POWER SUPPLY CIRCUIT

1. Turn ignition switch OFF.
2. Disconnect EVAP canister purge volume control solenoid valve harness connector.

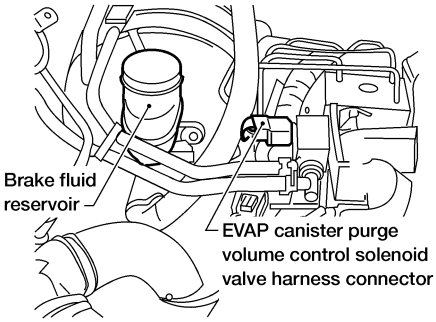

AEC652A

3. Turn ignition switch ON.
4. Check voltage between terminal 1 and ground with CONSULT-II or tester.

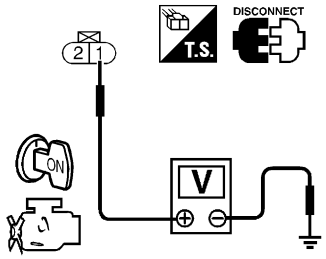

SEF646W

Voltage: Battery voltage

OK or NG

OK	▶	GO TO 3.
NG	▶	GO TO 2.

2	DETECT MALFUNCTIONING PART

Check the following.
- Harness connectors F36, M81
- Harness connectors M82, E74
- Harness for open or short between EVAP canister purge volume control solenoid valve and ECM relay

	▶	Repair harness or connectors.

3	CHECK EVAP CANISTER PURGE VOLUME CONTROL SOLENOID VALVE OUTPUT SIGNAL CIRCUIT FOR OPEN AND SHORT

1. Turn ignition switch OFF.
2. Disconnect ECM harness connector.
3. Check harness continuity between ECM terminal 5 and solenoid terminal 2.
   Refer to Wiring Diagram.
   Continuity should exist.
4. Also check harness for short to ground and short to power.

OK or NG

OK (With CONSULT-II)	▶	GO TO 5.
OK (Without CONSULT-II)	▶	GO TO 6.
NG	▶	GO TO 4.

4	DETECT MALFUNCTIONING PART
Check the following. ● Harness connectors E74, M82 ● Harness connectors M81, F36 ● Harness for open or short between EVAP canister purge volume control solenoid valve and ECM	
▶	Repair open circuit or short to ground or short to power in harness or connectors.

5	CHECK EVAP CANISTER PURGE VOLUME CONTROL SOLENOID VALVE OPERATION

With CONSULT-II

1. Start engine.
2. Perform "PURG VOL CONT/V" in "ACTIVE TEST" mode with CONSULT-II. Check that engine speed varies according to the valve opening.

ACTIVE TEST	
PURG VOL CONT/V	0.0%
MONITOR	
ENG SPEED	XXX rpm
A/F ALPHA-B1	XXX %
A/F ALPHA-B2	XXX %
HO2S1 MNTR (B1)	RICH
HO2S1 MNTR (B2)	RICH
THRTL POS SEN	XXX V

SEF985Y

OK or NG

OK	▶	GO TO 7.
NG	▶	GO TO 6.

Diagnostic Procedure (Cont'd)

6	CHECK EVAP CANISTER PURGE VOLUME CONTROL SOLENOID VALVE

With CONSULT-II

1. Check air passage continuity under the following conditions.

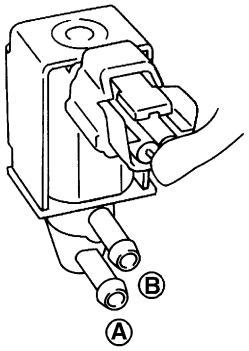

SEF660U

Condition PURG VOL CONT/V value	Air passage continuity between A and B
100.0%	Yes
0.0%	No

MTBL0241

Without CONSULT-II

1. Check air passage continuity under the following conditions.

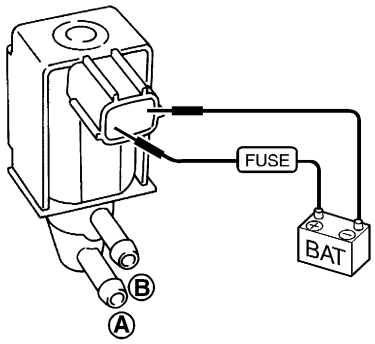

SEF661U

Condition	Air passage continuity between A and B
12V direct current supply between terminals 1 and 2	Yes
No supply	No

MTBL0242

OK or NG

OK	▶	GO TO 7.
NG	▶	Replace EVAP canister purge volume control solenoid valve.

7	CHECK INTERMITTENT INCIDENT
Refer to "TROUBLE DIAGNOSIS FOR INTERMITTENT INCIDENT", EC-753.	
▶	**INSPECTION END**

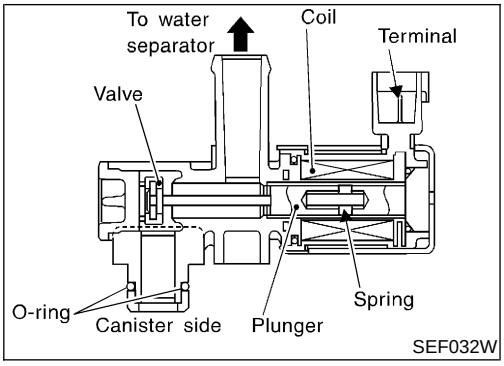

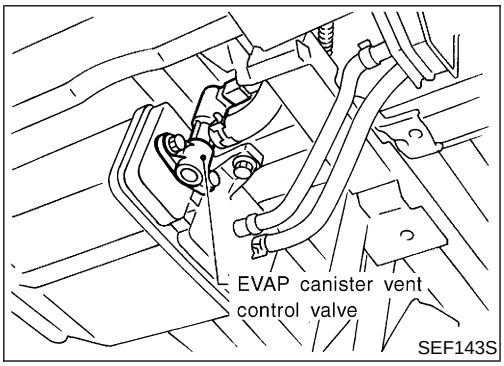

Component Description

NEEC0754

The EVAP canister vent control valve is located on the EVAP canister and is used to seal the canister vent.
This solenoid valve responds to signals from the ECM. When the ECM sends an ON signal, the coil in the solenoid valve is energized. A plunger will then move to seal the canister vent. The ability to seal the vent is necessary for the on board diagnosis of other evaporative emission control system components.
This solenoid valve is used only for diagnosis, and usually remains opened.
When the vent is closed, under normal purge conditions, the evaporative emission control system is depressurized and allows "EVAP Control System (Small Leak)" diagnosis.

CONSULT-II Reference Value in Data Monitor Mode

NEEC0755

Specification data are reference values.

MONITOR ITEM	CONDITION	SPECIFICATION
VENT CONT/V	• Ignition switch: ON	OFF

ECM Terminals and Reference Value

NEEC0756

Specification data are reference values and are measured between each terminal and ground.

CAUTION:

Do not use ECM ground terminals when measuring input/output voltage. Doing so may result in damage to the ECM's transistor. Use a ground other than the ECM terminals, such as the ground.

TERMINAL NO.	WIRE COLOR	ITEM	CONDITION	DATA (DC Voltage)
108	R/G	EVAP canister vent control valve	**[Ignition switch ON]**	BATTERY VOLTAGE (11 - 14V)

On Board Diagnosis Logic

=NEEC0757

Malfunction is detected when an improper voltage signal is sent to ECM through EVAP canister vent control valve.

POSSIBLE CAUSE

NEEC0757S01

- Harness or connectors
  (The valve circuit is open or shorted.)
- EVAP canister vent control valve

DTC Confirmation Procedure

NEEC0758

NOTE:

If “DTC Confirmation Procedure” has been previously conducted, always turn ignition switch OFF and wait at least 5 seconds before conducting the next test.

TESTING CONDITION:

Before performing the following procedure, confirm battery voltage is more than 11V at idle.

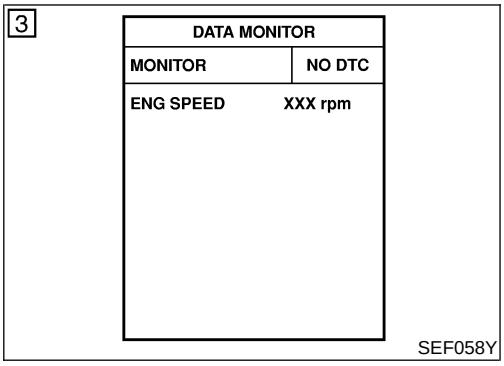

With CONSULT-II

1) Turn ignition switch ON.
2) Select “DATA MONITOR” mode with CONSULT-II.
3) Start engine and wait at least 8 seconds.
4) If 1st trip DTC is detected, go to “Diagnostic Procedure”, EC-1004.

With GST

Follow the procedure “With CONSULT-II”.

Wiring Diagram

NEEC0759

EC-VENT/V-01

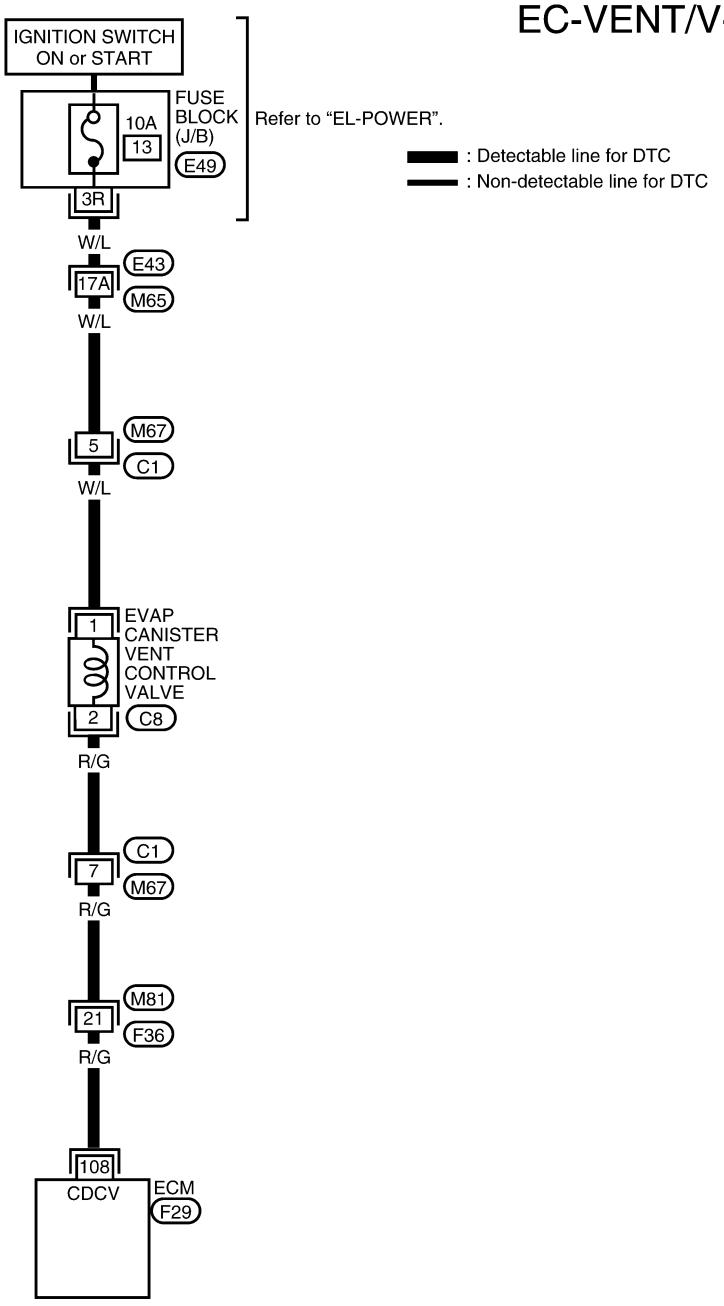





Refer to the following.
M65 , E43 - SUPER MULTIPLE JUNCTION (SMJ)

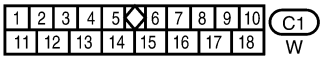

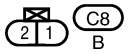

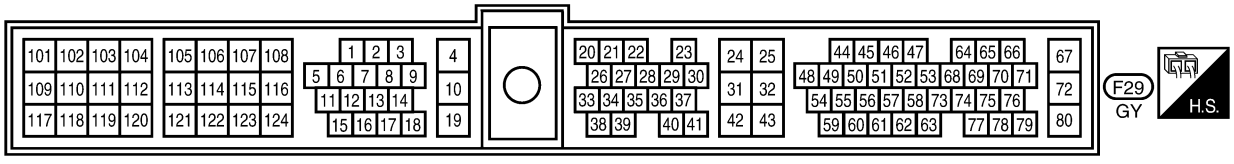

LEC814

Diagnostic Procedure

NEEC1042

1	INSPECTION START	
Do you have CONSULT-II? **Yes or No**		
Yes	▶	GO TO 2.
No	▶	GO TO 3.

2	CHECK EVAP CANISTER VENT CONTROL VALVE CIRCUIT	
1. Turn ignition switch “OFF” and then turn “ON”. 2. Select “VENT CONTROL/V” in “ACTIVE TEST” mode with CONSULT-II. 3. Touch “ON/OFF” on CONSULT-II screen.		

ACTIVE TEST	
VENT CONTROL/V	OFF
MONITOR	
ENG SPEED	XXX rpm
A/F ALPHA-B1	XXX %
A/F ALPHA-B2	XXX %
HO2S1 (B1)	XXX V
HO2S1 (B2)	XXX V
THRTL POS SEN	XXX V

SEF989Y

4. Check for operating sound of the valve. **Clicking noise should be heard.** **OK or NG**		
OK	▶	GO TO 7.
NG	▶	GO TO 3.

3	CHECK EVAP CANISTER VENT CONTROL VALVE POWER SUPPLY CIRCUIT

1. Turn ignition switch "OFF".
2. Disconnect EVAP canister vent control valve harness connector.

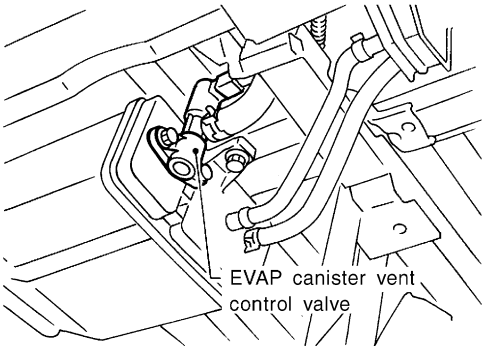

SEF143S

3. Turn ignition switch "ON".
4. Check voltage between terminal 1 and ground with CONSULT-II or tester.

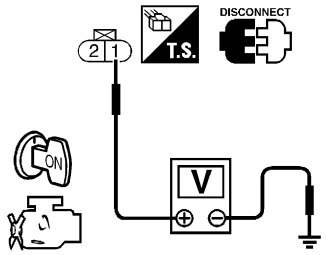

SEF648W

Voltage: Battery voltage

OK or NG

OK	▶	GO TO 5.
NG	▶	GO TO 4.

4	DETECT MALFUNCTIONING PART

Check the following.
- Harness connectors E74, M82
- Harness connectors M67, C1
- Fuse block (J/B) connector E49
- 10A fuse
- Harness for open or short between EVAP canister vent control valve and fuse

	▶	Repair harness or connectors.

5	CHECK EVAP CANISTER VENT CONTROL VALVE OUTPUT SIGNAL CIRCUIT FOR OPEN AND SHORT

1. Turn ignition switch "OFF".
2. Disconnect ECM harness connector.
3. Check harness continuity between ECM terminal 108 and valve terminal 2.
   Refer to Wiring Diagram.
   Continuity should exist.
4. Also check harness for short to ground and short to power.

OK or NG

OK	▶	GO TO 7.
NG	▶	GO TO 6.

Diagnostic Procedure (Cont'd)

6	DETECT MALFUNCTIONING PART
Check the following. ● Harness connectors C1, M67 ● Harness connectors M81, F36 ● Harness for open or short between EVAP canister vent control valve and ECM	
▶	Repair open circuit or short to ground or short to power in harness or connectors.

7	CHECK EVAP CANISTER VENT CONTROL VALVE

With CONSULT-II

1. Perform "VENT CONTROL/V" in "ACTIVE TEST" mode.
2. Check air passage continuity and operation delay time.

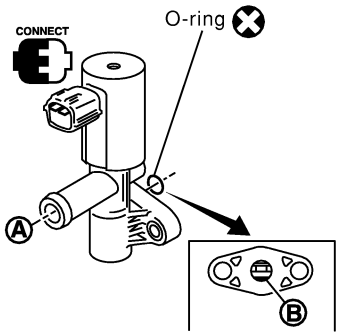

ACTIVE TEST	
VENT CONTROL/V	OFF
MONITOR	
ENG SPEED	XXX rpm
A/F ALPHA-B1	XXX %
A/F ALPHA-B2	XXX %
HO2S1 (B1)	XXX V
HO2S1 (B2)	XXX V
THRTL POS SEN	XXX V

Condition VENT CONTROL/V	Air passage continuity between A and B
ON	No
OFF	Yes

Operation takes less than 1 second.

SEF991Y

Without CONSULT-II

1. Check air passage continuity and operation delay time under the following conditions.

Condition	Air passage continuity between A and B
12V direct current supply between terminals 1 and 2	No
OFF	Yes

MTBL0240

If NG or operation takes more than 1 second, clean valve using air blower or replace as necessary.
If portion **B** is rusted, replace control valve.

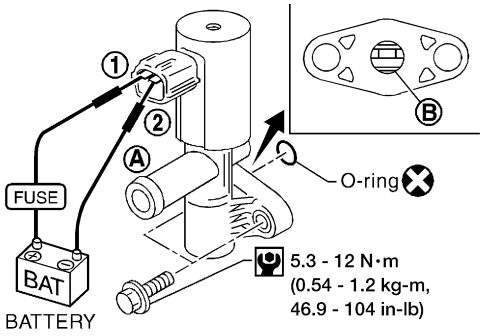

AEC783A

Make sure new O-ring is installed properly.

OK or NG

OK	▶	GO TO 8.
NG	▶	Replace EVAP canister vent control valve.

8	CHECK INTERMITTENT INCIDENT
Refer to "TROUBLE DIAGNOSIS FOR INTERMITTENT INCIDENT", EC-148.	
▶	**INSPECTION END**

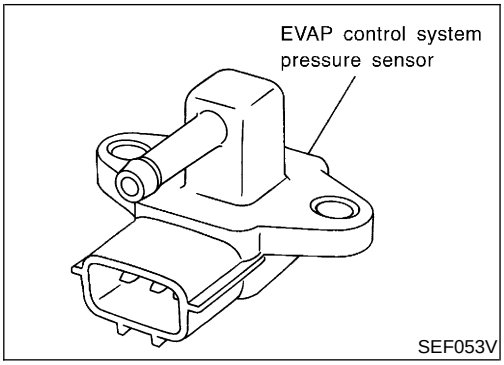

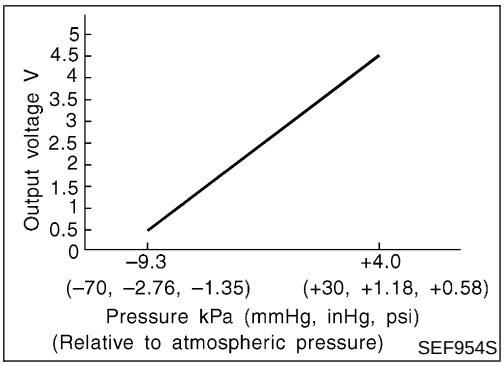

Component Description

NEEC0761

The EVAP control system pressure sensor detects pressure in the purge line. The sensor output voltage to the ECM increases as pressure increases. The EVAP control system pressure sensor is not used to control the engine system. It is used only for on board diagnosis.

CONSULT-II Reference Value in Data Monitor Mode

NEEC0762

Specification data are reference values.

MONITOR ITEM	CONDITION	SPECIFICATION
EVAP SYS PRES	• Ignition switch: ON	Approx. 3.4V

ECM Terminals and Reference Value

NEEC0763

Specification data are reference values and are measured between each terminal and ground.

CAUTION:

Do not use ECM ground terminals when measuring input/output voltage. Doing so may result in damage to the ECM's transistor. Use a ground other than the ECM terminals, such as the ground.

TERMINAL NO.	WIRE COLOR	ITEM	CONDITION	DATA (DC Voltage)
42	B/W	Sensors' power supply	**[Ignition switch ON]**	Approximately 5V
43	BR	Sensors' ground	**[Engine is running]** • **Warm-up condition** • Idle speed	Approximately 0V
62	Y	EVAP control system pressure sensor	**[Ignition switch ON]**	Approximately 3.4V

On Board Diagnosis Logic

=NEEC0764

Malfunction is detected when an improper voltage signal from EVAP control system pressure sensor is sent to ECM.

POSSIBLE CAUSE

NEEC0764S01

- Harness or connectors
  (The EVAP control system pressure sensor circuit is open or shorted.)
- Rubber hose to EVAP control system pressure sensor is clogged, vent, kinked, disconnected or improper connection.
- EVAP control system pressure sensor
- EVAP canister vent control valve
- EVAP canister purge volume control solenoid valve
- EVAP canister
- Rubber hose from EVAP canister vent control valve to water separator

DTC Confirmation Procedure

NEEC0765

NOTE:
If “DTC Confirmation Procedure” has been previously conducted, always turn ignition switch OFF and wait at least 5 seconds before conducting the next test.

TESTING CONDITION:
Always perform test at a temperature of 5°C (41°F) or more.

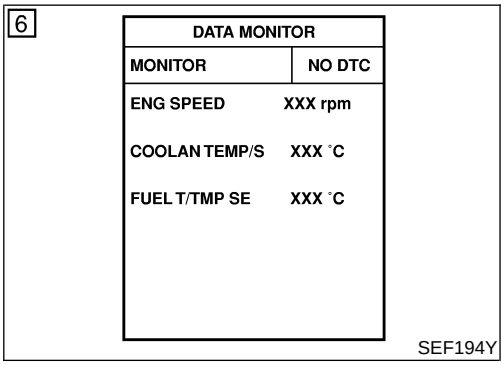

With CONSULT-II

1) Start engine and warm it up to normal operating temperature.
2) Turn ignition switch OFF and wait at least 5 seconds.
3) Turn ignition switch ON.
4) Select “DATA MONITOR” mode with CONSULT-II.
5) Make sure that “TANK F/TEMP SE” is more than 0°C (32°F).
6) Start engine and wait at least 20 seconds.
7) If 1st trip DTC is detected, go to “Diagnostic Procedure”, EC-1010.

With GST

Follow the procedure “With CONSULT-II”.

Wiring Diagram

NEEC0766

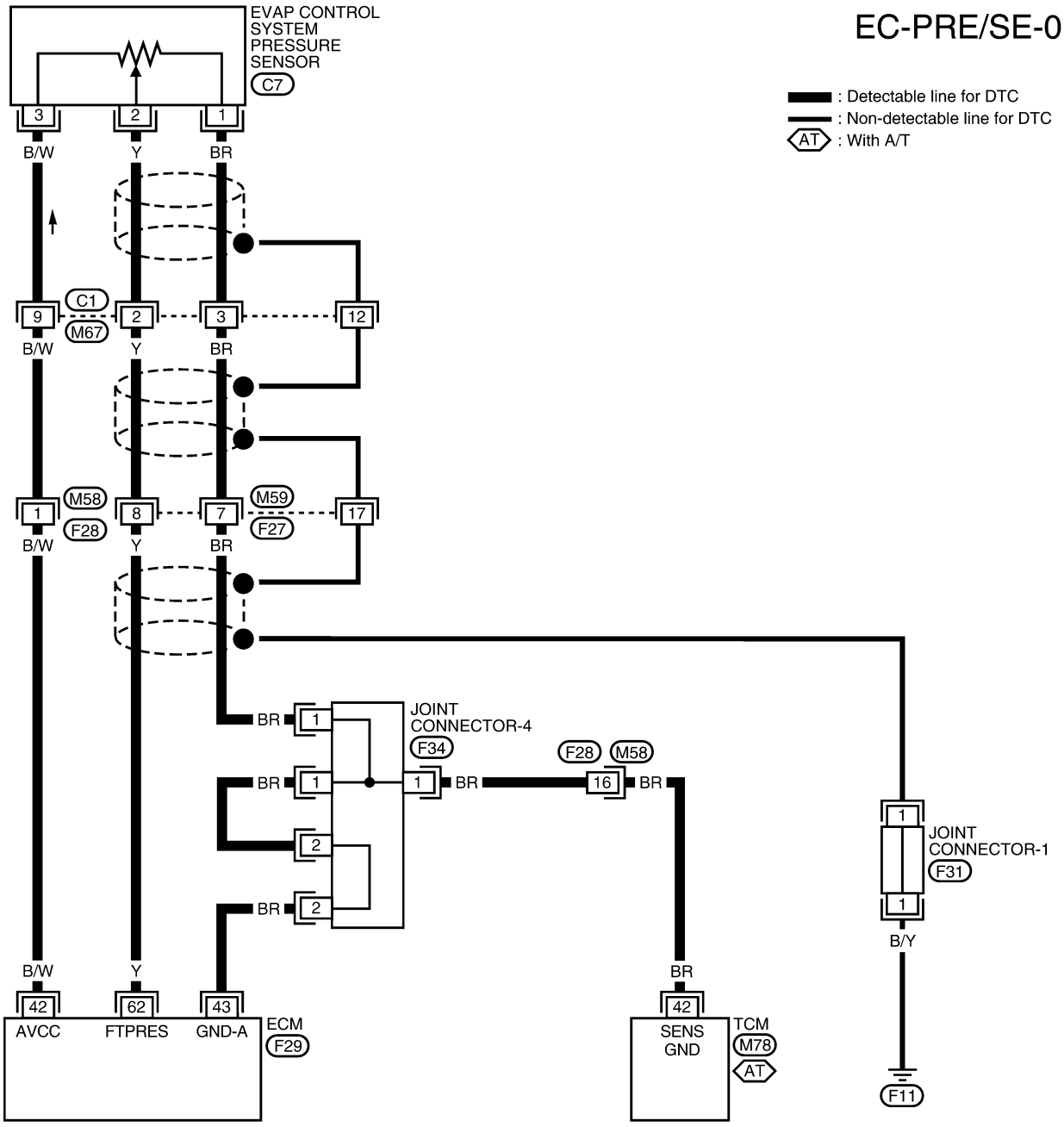

WEC801

Diagnostic Procedure

NEEC1043

1	CHECK RUBBER TUBE

1. Turn ignition switch “OFF”.
2. Check rubber tube connected to the sensor for clogging, vent, kink, disconnection or improper connection.

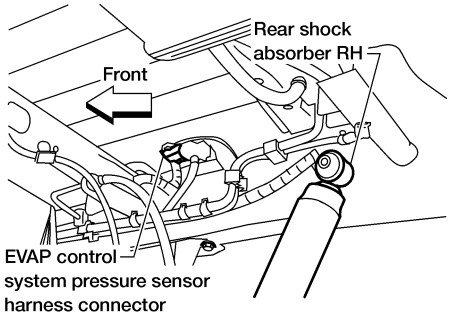

AEC651A

OK or NG

OK	▶	GO TO 2.
NG	▶	Reconnect, repair or replace.

2	RETIGHTEN GROUND SCREWS

1. Loosen and retighten engine ground screws.

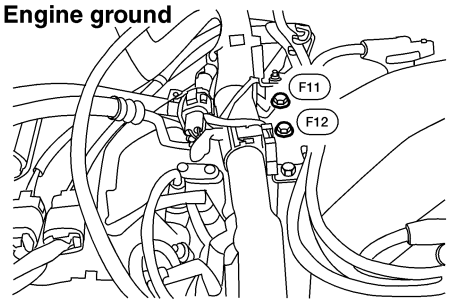

LEC518

	▶	GO TO 3.

3	CHECK CONNECTOR

1. Disconnect EVAP control system pressure sensor harness connector.
2. Check sensor harness connector for water.
   Water should not exist.

OK or NG

OK	▶	GO TO 4.
NG	▶	Repair or replace harness connector.

4	CHECK EVAP CONTROL SYSTEM PRESSURE SENSOR POWER SUPPLY CIRCUIT

1. Turn ignition switch "ON".
2. Check voltage between terminal 3 and ground with CONSULT-II or tester.

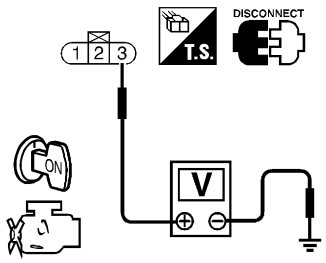

SEF889U

Voltage: Approximately 5V

OK or NG

OK	▶	GO TO 6.
NG	▶	GO TO 5.

5	DETECT MALFUNCTIONING PART

Check the following.
- Harness connectors C1, M67
- Harness connectors M58, F28
- Harness for open or short between EVAP control system pressure sensor and ECM

	▶	Repair harness or connectors.

6	CHECK EVAP CONTROL SYSTEM PRESSURE SENSOR GROUND CIRCUIT FOR OPEN AND SHORT

1. Turn ignition switch "OFF".
2. Check harness continuity between sensor terminal 1 and engine ground.
   Refer to Wiring Diagram.
   Continuity should exist.
3. Also check harness for short to power.

OK or NG

OK	▶	GO TO 8.
NG	▶	GO TO 7.

7	DETECT MALFUNCTIONING PART

Check the following.
- Harness connectors C1, M67
- Harness connectors M59, F27
- Joint connector-4
- Harness for open or short between EVAP control system pressure sensor and ECM
- Harness for open or short between EVAP control system pressure sensor and TCM (Transmission Control Module)

	▶	Repair open circuit or short to power in harness or connectors.

Diagnostic Procedure (Cont'd)

8	CHECK EVAP CONTROL SYSTEM PRESSURE SENSOR INPUT SIGNAL CIRCUIT FOR OPEN AND SHORT

1. Disconnect ECM harness connector.
2. Check harness continuity between ECM terminal 62 and sensor terminal 2. Refer to Wiring Diagram.
   Continuity should exist.
3. Also check harness for short to ground and short to power.

OK or NG

OK (With CONSULT-II)	▶	GO TO 10.
OK (Without CONSULT-II)	▶	GO TO 11.
NG	▶	GO TO 9.

9	DETECT MALFUNCTIONING PART

Check the following.
- Harness connectors C1, M67
- Harness connectors M59, F27
- Harness for open or short between ECM and EVAP control system pressure sensor

	▶	Repair open circuit or short to ground or short to power in harness or connectors.

10	CHECK EVAP CANISTER PURGE VOLUME CONTROL SOLENOID VALVE

With CONSULT-II
1. Start engine.
2. Perform "PURG VOL CONT/V" in "ACTIVE TEST" mode with CONSULT-II. Check that engine speed varies according to the valve opening.

ACTIVE TEST	
PURG VOL CONT/V	0.0%
MONITOR	
ENG SPEED	XXX rpm
FR O2 MNTR-B1	RICH
FR O2 MNTR-B2	RICH
THRTL POS SEN	XXX V
A/F ALPHA-B1	XXX %
A/F ALPHA-B2	XXX %

SEF068Y

OK or NG

OK	▶	GO TO 12.
NG	▶	GO TO 11.

11	CHECK EVAP CANISTER PURGE VOLUME CONTROL SOLENOID VALVE

With CONSULT-II

1. Check air passage continuity under the following conditions.

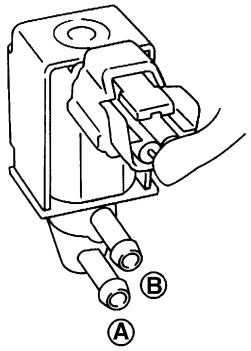

SEF660U

Condition PURG VOL CONT/V value	Air passage continuity between A and B
100.0%	Yes
0.0%	No

MTBL0241

Without CONSULT-II

1. Check air passage continuity under the following conditions.

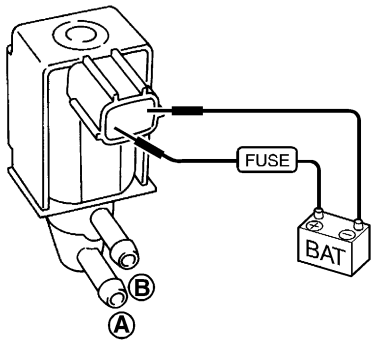

SEF661U

Condition	Air passage continuity between A and B
12V direct current supply between terminals 1 and 2	Yes
No supply	No

MTBL0242

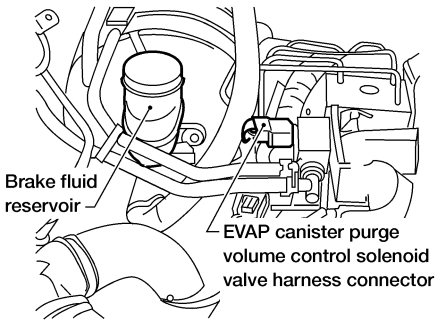

AEC652A

OK or NG

OK	▶	GO TO 12.
NG	▶	Replace EVAP canister purge volume control solenoid valve.

Diagnostic Procedure (Cont'd)

12 CHECK EVAP CANISTER VENT CONTROL VALVE

With CONSULT-II

1. Perform "VENT CONTROL/V" in "ACTIVE TEST" mode.
2. Check air passage continuity and operation delay time under the following conditions.

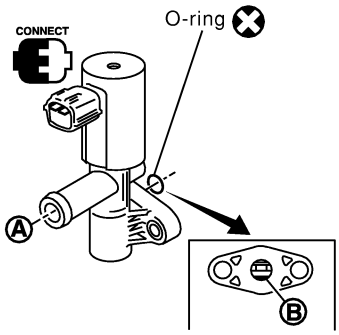

ACTIVE TEST	
VENT CONTROL/V	OFF
MONITOR	
ENG SPEED	XXX rpm
A/F ALPHA-B1	XXX %
A/F ALPHA-B2	XXX %
HO2S1 (B1)	XXX V
HO2S1 (B2)	XXX V
THRTL POS SEN	XXX V

Condition VENT CONTROL/V	Air passage continuity between A and B
ON	No
OFF	Yes

Operation takes less than 1 second.

SEF991Y

Without CONSULT-II

1. Check air passage continuity and operation delay time under the following conditions.

Condition	Air passage continuity between A and B
12V direct current supply between terminals 1 and 2	No
OFF	Yes

MTBL0240

If NG or operation takes more than 1 second, clean valve using air blower or replace as necessary.
If portion **B** is rusted, replace control valve.

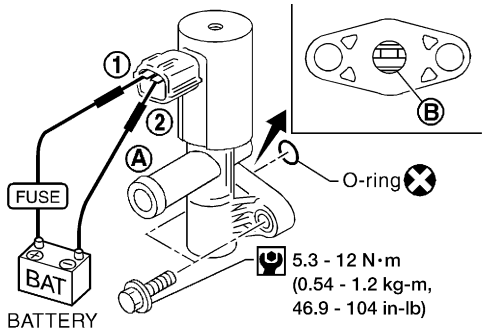

AEC783A

Make sure new O-ring is installed properly.

OK or NG

OK	▶	GO TO 13.
NG	▶	Replace EVAP canister vent control valve.

13	CHECK EVAP CONTROL SYSTEM PRESSURE SENSOR

1. Remove EVAP control system pressure sensor with its harness connector connected.
2. Remove hose from EVAP control system pressure sensor.
3. Turn ignition switch "ON".
4. Use pump to apply vacuum and pressure to EVAP control system pressure sensor as shown in figure.
5. Check input voltage between ECM terminal 62 and ground.

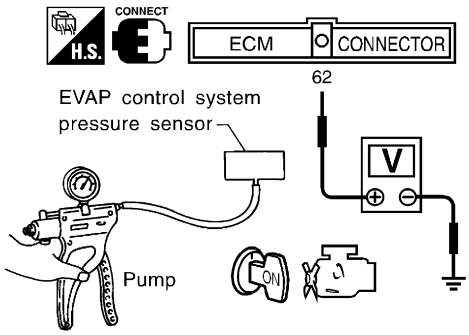

SEF894U

Pressure (Relative to atmosphericpressure)	Voltage (V)
0 kPa (0 mmHg, 0 inHg)	3.0 - 3.6
–9.3 kPa (–70 mmHg, –2.76 inHg)	0.4 - 0.6

MTBL0246

CAUTION:

- **Always calibrate the vacuum pump gauge when using it.**
- **Do not apply below −20 kPa (−150 mmHg, −5.91 inHg) or over 20 kPa (150 mmHg, 5.91 inHg) of pressure.**
- **Never apply force to the air hole protector of the sensor if equipped.**

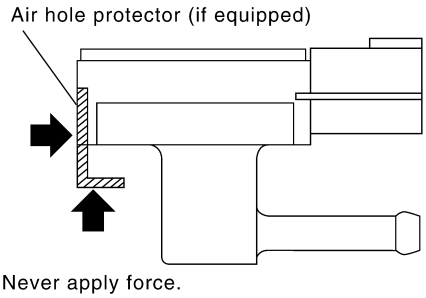

SEF799W

- **Discard and EVAP control system pressure sensor which has been dropped from a height of more than 0.5 m (19.7 in) onto a hard surface such as a concrete floor; use a new one.**

OK or NG

OK	▶	GO TO 14.
NG	▶	Replace EVAP control system pressure sensor.

14	CHECK RUBBER TUBE

Check obstructed rubber tube connected to EVAP canister vent control valve.

OK or NG

OK	▶	GO TO 15.
NG	▶	Clean, repair or replace rubber tube.

Diagnostic Procedure (Cont'd)

15	CHECK WATER SEPARATOR

1. Check visually for insect nests in the water separator air inlet.
2. Check visually for cracks or flaws in the appearance.
3. Check visually for cracks or flaws in the hose.
4. Check that **A** and **C** are not clogged by blowing air into **B** with **A**, and then **C** plugged.

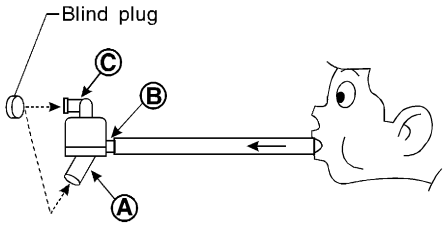

* Ⓐ: Bottom hole (To atmosphere)
Ⓑ: Emergency tube (From EVAP canister)
Ⓒ: Inlet port (To member)

SEF829T

5. In case of NG in items 2 - 4, replace the parts.

NOTE:
- Do not disassemble water separator.

OK or NG

OK	▶	GO TO 16.
NG	▶	Replace water separator.

16	CHECK IF EVAP CANISTER SATURATED WITH WATER

1. Remove EVAP canister with EVAP canister vent control valve attached.
2. Check if water will drain from the EVAP canister.

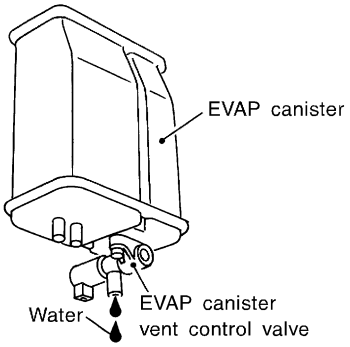

SEF596U

Yes or No

Yes	▶	GO TO 17.
No	▶	GO TO 19.

17	CHECK EVAP CANISTER

Weigh the EVAP canister with the EVAP canister vent control valve attached.
The weight should be less than 1.8 kg (4.0 lb).

OK or NG

OK	▶	GO TO 19.
NG	▶	GO TO 18.

18	DETECT MALFUNCTIONING PART
Check the following. ● EVAP canister for damage ● EVAP hose between EVAP canister and water separator for clogging or poor connection	
▶	Repair hose or replace EVAP canister.

19	CHECK EVAP CONTROL SYSTEM PRESSURE SENSOR SHIELD CIRCUIT FOR OPEN AND SHORT
1. Reconnect harness connectors disconnected. 2. Disconnect harness connectors C1, M67. 3. Check harness continuity between harness connector M67 terminal 12 and engine ground. **Continuity should exist.** 4. Also check harness for short to power. **OK or NG**	
OK ▶	GO TO 21.
NG ▶	GO TO 20.

20	DETECT MALFUNCTIONING PART
Check the following. ● Harness connector M67 ● Harness connectors M59, F27 ● Joint connector-1 ● Harness for open between harness connector M67 and engine ground	
▶	Repair open circuit or short to power in harness or connectors.

21	CHECK INTERMITTENT INCIDENT
Refer to "TROUBLE DIAGNOSIS FOR INTERMITTENT INCIDENT", EC-148.	
▶	**INSPECTION END**

On Board Diagnosis Logic

NEEC0954

NOTE:
If DTC P0455 is displayed with P1448, perform trouble diagnosis for DTC P1448 first. (See EC-1148.)

This diagnosis detects a very large leak (fuel filler cap fell off etc.) in the EVAP system between the fuel tank and the EVAP canister purge volume control solenoid valve.

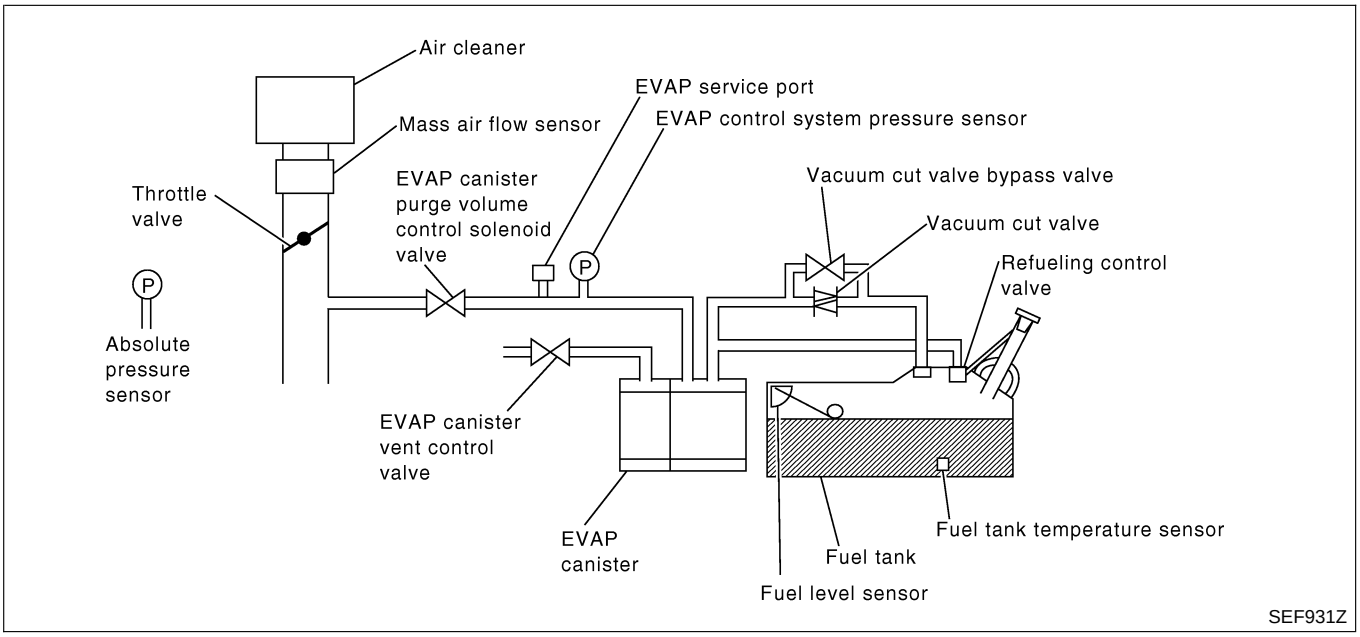

Malfunction is detected when EVAP control system has a very large leak, such as fuel filler cap fell off, EVAP control system does not operate properly.

CAUTION:

- **Fuel filler cap remains open or fails to close.**
- **Use only a genuine NISSAN fuel filler cap as a replacement. If an incorrect fuel filler cap is used, the MIL may come on.**
- **Use only a genuine NISSAN rubber tube as a replacement.**

POSSIBLE CAUSE

NEEC0954S01

- Fuel filler cap remains open or fails to close.
- Incorrect fuel tank vacuum relief valve
- Incorrect fuel filler cap used
- Foreign matter caught in fuel filler cap.
- Leak is in line between intake manifold and EVAP canister purge volume control solenoid valve.
- Foreign matter caught in EVAP canister vent control valve.
- EVAP canister or fuel tank leaks
- EVAP purge line (pipe and rubber tube) leaks
- EVAP purge line rubber tube bent.
- Blocked or bent rubber tube to EVAP control system pressure sensor
- Loose or disconnected rubber tube
- EVAP canister vent control valve and the circuit
- EVAP canister purge volume control solenoid valve and the circuit
- Absolute pressure sensor
- Fuel tank temperature sensor

- O-ring of EVAP canister vent control valve is missing or damaged.
- EVAP control system pressure sensor
- Refueling control valve
- ORVR system leaks

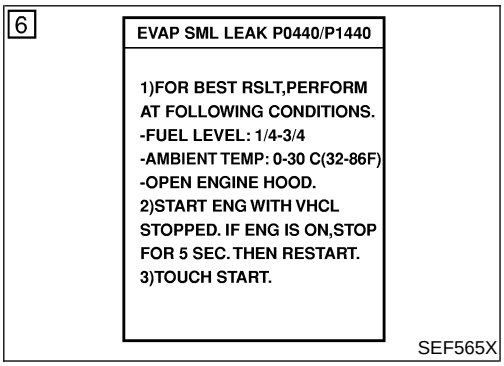

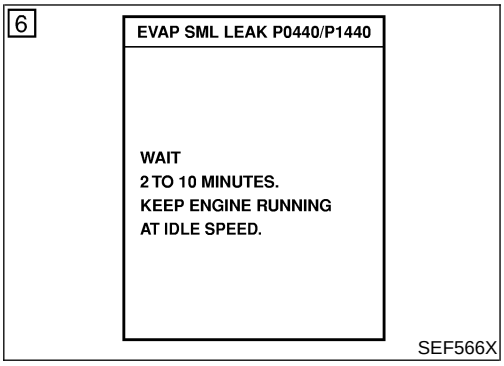

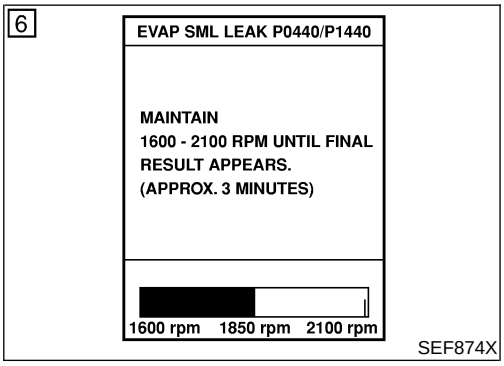

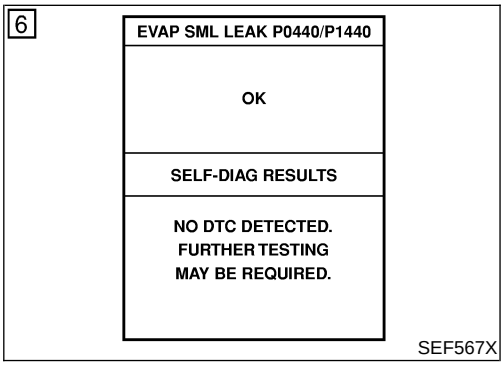

DTC Confirmation Procedure

NEEC0955

CAUTION:

Never remove fuel filter cap during the DTC confirmation procedure.

NOTE:

- **If DTC P0455 is displayed with P1448, perform trouble diagnosis for DTC P1448 first. (See EC-1148.)**
- **Make sure that EVAP hoses are connected to EVAP canister purge volume control solenoid valve properly.**
- If "DTC Confirmation Procedure" has been previously conducted, always turn ignition switch OFF and wait at least 5 seconds before conducting the next test.

TESTING CONDITION:

- **Perform "DTC WORK SUPPORT" when the fuel level is between 1/4 to 3/4 full and vehicle is placed on flat level surface.**
- **Open engine hood before conducting the following procedure.**

With CONSULT-II

1) Tighten fuel filter cap securely until ratcheting sound is heard.
2) Turn ignition switch ON.
3) Turn ignition switch OFF and wait at least 5 seconds.
4) Turn ignition switch ON and select "DATA MONITOR" mode with CONSULT-II.
5) Make sure that the following conditions are met.
   COOLAN TEMP/S: 0 - 32°C (32 - 90°F)
   INT/A TEMP SE: More than 0°C (32°F)
6) Select "EVAP SML LEAK P0440" of "EVAPORATIVE SYSTEM" in "DTC WORK SUPPORT" mode with CONSULT-II. Follow the instruction displayed.

NOTE:

If the engine speed cannot be maintained within the range displayed on the CONSULT-II screen, go to "Basic Inspection", EC-715.

7) Make sure that "OK" is displayed.
   If "NG" is displayed, select "SELF-DIAG RESULTS" mode with CONSULT-II and make sure that "EVAP GROSS LEAK [P0455] is displayed, refer to "Diagnostic Procedure", EC-1021.
   If P0440 is displayed, perform "Diagnostic Procedure" for DTC P0440.

With GST

NOTE:

Be sure to read the explanation of "Driving Pattern" on EC-681 before driving vehicle.

DTC Confirmation Procedure (Cont'd)

1) Start engine.
2) Drive vehicle according to "Driving Pattern", EC-681.
3) Stop vehicle.
4) Select "MODE 1" with GST.

- If SRT of EVAP system is not set yet, go to the following step.
- If SRT of EVAP system is set, the result will be OK.

5) Turn ignition switch "OFF" and wait at least 5 seconds.
6) Start engine.
   It is not necessary to cool engine down before driving.
7) Drive vehicle again according to the "Driving Pattern", EC-681.
8) Stop vehicle.
9) Select "MODE 3" with GST.

- If P0455 is displayed on the screen, go to "Diagnostic Procedure", EC-1021.
- If P0440 is displayed on the screen, go to "Diagnostic Procedure", EC-982.
- If P1447 is displayed on the screen, go to "Diagnostic Procedure" for "DTC P1447", EC-1135.
- If P0440, P0455 and P1447 are not displayed on the screen, go to the following step.

10) Select "MODE 1" with GST.

- If SRT of EVAP system is set, the result will be OK.
- If SRT of EVAP system is not set, go to step 6.

Diagnostic Procedure

=NEEC0956

1	CHECK FUEL FILLER CAP DESIGN

1. Turn ignition switch OFF.
2. Check for genuine NISSAN fuel filler cap design.

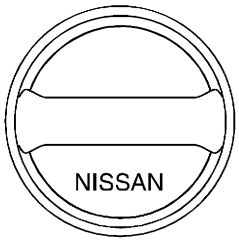

SEF915U

OK or NG

OK	▶	GO TO 2.
NG	▶	Replace with genuine NISSAN fuel filler cap.

2	CHECK FUEL FILLER CAP INSTALLATION

Check that the cap is tightened properly by rotating the cap clockwise.

OK or NG

OK	▶	GO TO 3.
NG	▶	• Open fuel filler cap, then clean cap and fuel filler neck threads using air blower. • Retighten until ratcheting sound is heard.

3	CHECK FUEL FILLER CAP FUNCTION

Check for air releasing sound while opening the fuel filler cap.

OK or NG

OK	▶	GO TO 5.
NG	▶	GO TO 4.

Diagnostic Procedure (Cont'd)

4	CHECK FUEL TANK VACUUM RELIEF VALVE (BUILT INTO FUEL FILLER CAP)

1. Wipe clean valve housing.
2. Check valve opening pressure and vacuum.

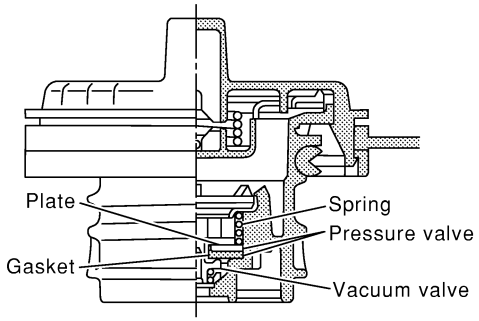

SEF445Y

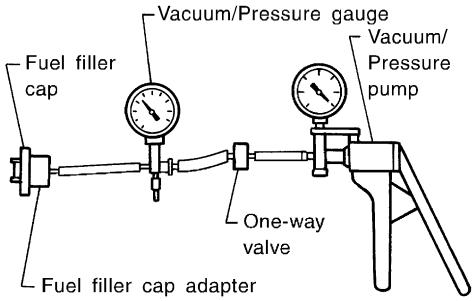

SEF943S

Pressure:
15.3 - 20.0 kPa (0.156 - 0.204 kg/cm^2, 2.22 - 2.90 psi)
Vacuum:
−6.0 to −3.3 kPa (−0.061 to −0.034 kg/cm^2, −0.87 to −0.48 psi)

CAUTION:
Use only a genuine fuel filler cap as a replacement. If an incorrect fuel filler cap is used, the MIL may come on.

OK or NG

OK	▶	GO TO 5.
NG	▶	Replace fuel filler cap with a genuine one.

5	CHECK EVAP PURGE LINE

Check EVAP purge line (pipe, rubber tube, fuel tank and EVAP canister) for cracks, improper connection or disconnection. Refer to "Evaporative Emission System", EC-641.

OK or NG

OK	▶	GO TO 6.
NG	▶	Repair or reconnect the hose.

6	CLEAN EVAP PURGE LINE

Clean EVAP purge line (pipe and rubber tube) using air blower.

	▶	GO TO 7.

7	CHECK EVAP CANISTER VENT CONTROL VALVE, O-RING AND CIRCUIT

Refer to "DTC Confirmation Procedure", EC-1002.

OK or NG

OK	▶	GO TO 8.
NG	▶	Repair or replace EVAP canister vent control valve and O-ring or harness/connector.

8	INSTALL THE PRESSURE PUMP

To locate the EVAP leak, install EVAP service port adapter and pressure pump to EVAP service port securely.

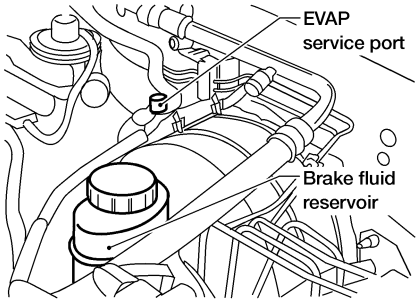

AEC649A

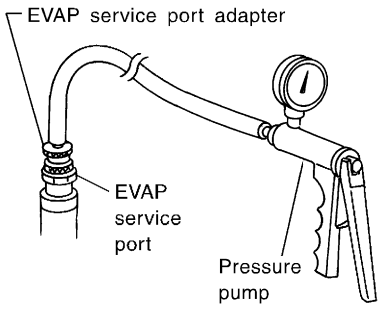

SEF916U

NOTE:
Improper installation of the EVAP service port adapter to the EVAP service port may cause leaking.

Models with CONSULT-II ▶	GO TO 9.
Models without CONSULT-II ▶	GO TO 10.

9	CHECK FOR EVAP LEAK

With CONSULT-II

1. Turn ignition switch ON.
2. Select "EVAP SYSTEM CLOSE" of "WORK SUPPORT" mode with CONSULT-II.
3. Touch "START" and apply pressure into the EVAP line until the pressure indicator reaches the middle of the bar graph.
   NOTE:
   - **Never use compressed air or a high pressure pump.**
   - **Do not exceed 4.12 kPa (0.042 kg/cm^2, 0.6 psi) of pressure in the system.**

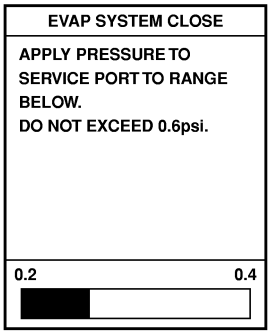

PEF917U

4. Using EVAP leak detector, locate the EVAP leak. For the leak detector, refer to the instruction manual for more details. Refer to "EVAPORATIVE EMISSION LINE DRAWING", EC-644.

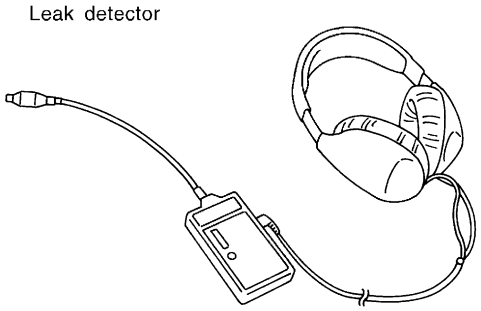

SEF200U

OK or NG

OK	▶	GO TO 11.
NG	▶	Repair or replace.

10	CHECK FOR EVAP LEAK

Without CONSULT-II

1. Turn ignition switch OFF.
2. Apply 12 volts DC to EVAP canister vent control valve. The valve will close. (Continue to apply 12 volts until the end of test.)
3. Apply 12 volts DC to vacuum cut valve bypass valve. The valve will open. (Continue to apply 12 volts until the end of test.)

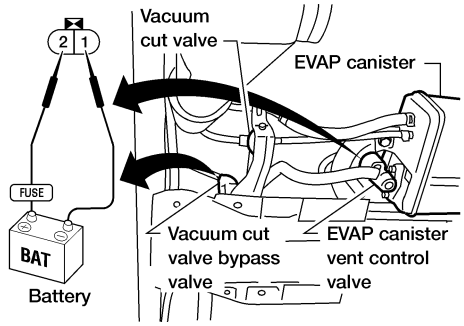

AEC632A

4. Pressurize the EVAP line using pressure pump with 1.3 to 2.7 kPa (10 to 20 mmHg, 0.39 to 0.79 inHg), then remove pump and EVAP service port adapter.
   NOTE:
   - **Never use compressed air or a high pressure pump.**
   - **Do not exceed 4.12 kPa (0.042 kg/cm^2, 0.6 psi) of pressure in the system.**
5. Using EVAP leak detector, locate the EVAP leak. For the leak detector, refer to the instruction manual for more details. Refer to "EVAPORATIVE EMISSION LINE DRAWING", EC-644.

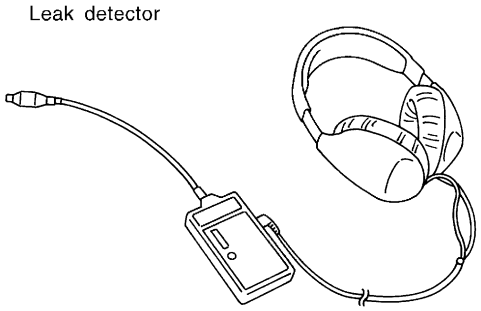

SEF200U

OK or NG

OK	▶	GO TO 12.
NG	▶	Repair or replace.

Diagnostic Procedure (Cont'd)

11	CHECK EVAP CANISTER PURGE VOLUME CONTROL SOLENOID VALVE OPERATION

With CONSULT-II

1. Disconnect vacuum hose to EVAP canister purge volume control solenoid valve at EVAP service port.
2. Start engine.
3. Perform "PURG VOL CONT/V" in "ACTIVE TEST" mode.
4. Touch "Qu" on CONSULT-II screen to increase "PURG VOL CONT/V" opening to 100.0%.
5. Check vacuum hose for vacuum when revving engine up to 2,000 rpm.

ACTIVE TEST	
PURG VOL CONT/V	XXX %
MONITOR	
ENG SPEED	XXX rpm
A/F ALPHA-B1	XXX %
A/F ALPHA-B2	XXX %
HO2S1 MNTR (B1)	LEAN
HO2S1 MNTR (B2)	LEAN
THRTL POS SEN	XXX V

Vacuum should exist.

SEF984Y

Vacuum should exist.

OK or NG

OK	▶	GO TO 14.
NG	▶	GO TO 13.

12	CHECK EVAP CANISTER PURGE VOLUME CONTROL SOLENOID VALVE OPERATION

Without CONSULT-II

1. Start engine and warm it up to normal operating temperature.
2. Stop engine.
3. Disconnect vacuum hose to EVAP canister purge volume control solenoid valve at EVAP service port.
4. Start engine and let it idle for at least 80 seconds.
5. Check vacuum hose for vacuum when revving engine up to 2,000 rpm.
   Vacuum should exist.

OK or NG

OK	▶	GO TO 15.
NG	▶	GO TO 13.

13	CHECK VACUUM HOSE

Check vacuum hoses for clogging or disconnection. Refer to "Vacuum Hose Drawing", EC-634.

OK or NG

OK (With CONSULT-II)	▶	GO TO 14.
OK (Without CONSULT-II)	▶	GO TO 15.
NG	▶	Repair or reconnect the hose.

14	CHECK EVAP CANISTER PURGE VOLUME CONTROL SOLENOID VALVE

With CONSULT-II

1. Start engine.
2. Perform "PURG VOL CONT/V" in "ACTIVE TEST" mode with CONSULT-II. Check that engine speed varies according to the valve opening.

ACTIVE TEST	
PURG VOL CONT/V	0.0%
MONITOR	
ENG SPEED	XXX rpm
A/F ALPHA-B1	XXX %
A/F ALPHA-B2	XXX %
HO2S1 MNTR (B1)	RICH
HO2S1 MNTR (B2)	RICH
THRTL POS SEN	XXX V

SEF985Y

If OK, inspection end. If NG, go to following step.

3. Check air passage continuity.

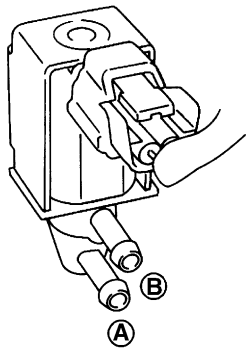

SEF660U

Condition PURG VOL CONT/V value	Air passage continuity between A and B
100.0%	Yes
0.0%	No

MTBL0241

OK or NG

OK	▶	GO TO 16.
NG	▶	Replace EVAP canister purge volume control solenoid valve.

15	CHECK EVAP CANISTER PURGE VOLUME CONTROL SOLENOID VALVE

Without CONSULT-II
Check air passage continuity.

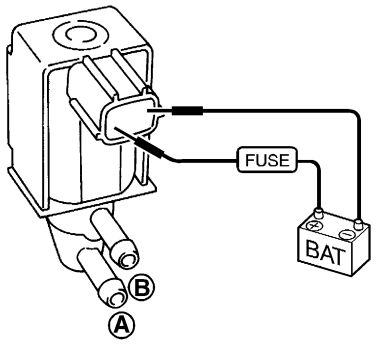

SEF661U

Condition	Air passage continuity between A and B
12V direct current supply between terminals 1 and 2	Yes
No supply	No

MTBL0242

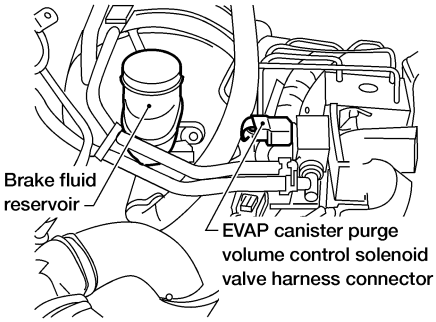

AEC652A

OK or NG

OK	▶	GO TO 16.
NG	▶	Replace EVAP canister purge volume control solenoid valve.

16	CHECK ABSOLUTE PRESSURE SENSOR

With CONSULT-II
1. Turn ignition switch ON.
2. Select "SELF DIAG RESULTS" mode with CONSULT-II.
3. Touch "ERASE".
4. **Perform "DTC Confirmation Procedure".**
   See EC-769.
5. Is the 1st trip DTC P0105 displayed again?

OK or NG

OK	▶	GO TO 17.
NG	▶	Replace ECM.

17	CHECK FUEL TANK TEMPERATURE SENSOR

Check resistance by heating with hot water or heat gun as shown in the figure.

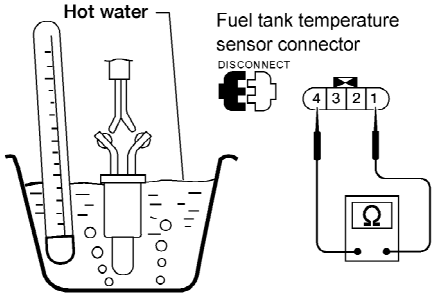

AEC052B

Temperature °C (°F)	Resistance kΩ
20 (68)	2.3 - 2.7
50 (122)	0.79 - 0.90

MTBL0234

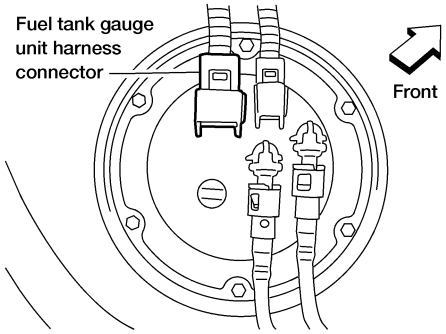

AEC933A

OK or NG

OK	▶	GO TO 18.
NG	▶	Replace fuel tank temperature sensor.

18	CHECK EVAP CONTROL SYSTEM PRESSURE SENSOR

1. Remove EVAP control system pressure sensor with its harness connector connected.
2. Remove hose from EVAP control system pressure sensor.
3. Turn ignition switch ON.
4. Use pump to apply vacuum and pressure to EVAP control system pressure sensor as shown in figure.
5. Check input voltage between ECM terminal 62 and ground.

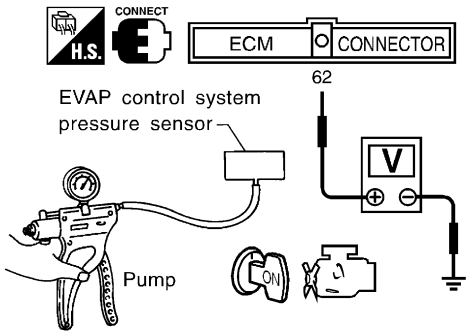

SEF894U

Pressure (Relative to atmosphericpressure)	Voltage (V)
0 kPa (0 mmHg, 0 inHg)	3.0 - 3.6
–9.3 kPa (–70 mmHg, –2.76 inHg)	0.4 - 0.6

MTBL0246

CAUTION:

- **Always calibrate the vacuum pump gauge when using it.**
- **Do not apply below −20 kPa (−150 mmHg, −5.91 inHg) or over 20 kPa (150 mmHg, 5.91 inHg) of pressure.**
- **Never apply force to the air hole protector of the sensor if equipped.**

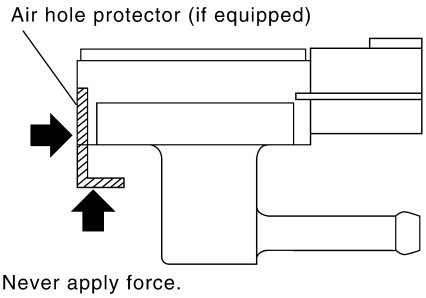

SEF799W

- **Discard and EVAP control system pressure sensor which has been dropped from a height of more than 0.5 m (19.7 in) onto a hard surface such as a concrete floor; use a new one.**

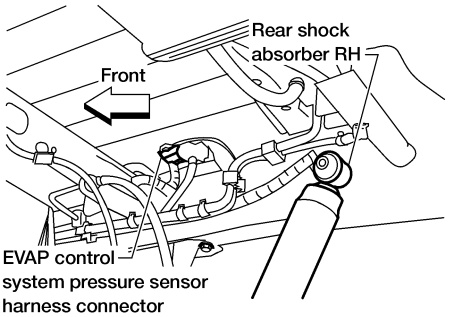

AEC651A

OK or NG

OK	▶	GO TO 19.
NG	▶	Replace EVAP control system pressure sensor.

19	CHECK INTERMITTENT INCIDENT
Refer to "TROUBLE DIAGNOSIS FOR INTERMITTENT INCIDENT", EC-753.	
▶	INSPECTION END

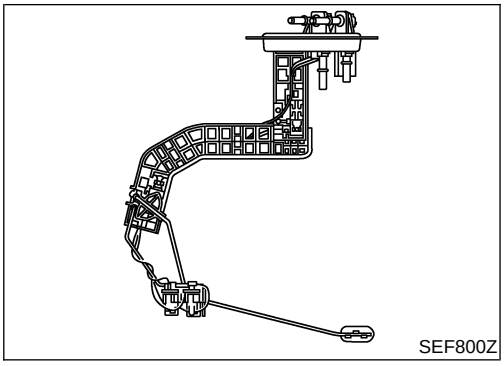
SEF800Z

Component Description

NEEC0968

The fuel level sensor is mounted in the fuel level sensor unit. The sensor detects a fuel level in the fuel tank and transmits a signal to the ECM.
It consists of two parts, one is mechanical float and the other side is variable resistor. Fuel level sensor output voltage changes depending on the movement of the fuel mechanical float.

ECM Terminals and Reference Value

NEEC0974

Specification data are reference values and are measured between each terminal and ground.

CAUTION:
Do not use ECM ground terminals when measuring input/output voltage. Doing so may result in damage to the ECM's transistor. Use a ground other than ECM terminals, such as the ground.

TERMINAL NO.	WIRE COLOR	ITEM	CONDITION	DATA (DC Voltage)
46	P/B	Fuel level sensor	**[Ignition switch "ON"]**	Approximately 0 - 4.8V Output voltage varies with fuel level.
66	B	Fuel level sensor ground	**[Engine is running]** ● Idle speed	Approximately 0V

On Board Diagnosis Logic

NEEC0969

When the vehicle is parked, naturally the fuel level in the fuel tank is stable. It means that output signal of the fuel level sensor does not change. If ECM senses sloshing signal from the sensor, fuel level sensor malfunction is detected.
Malfunction is detected when even though the vehicle is parked, a signal being varied is sent from the fuel level sensor to ECM.

POSSIBLE CAUSE

NEEC0969S01

- Fuel level sensor circuit
  (The fuel level sensor circuit is open or shorted.)
- Fuel level sensor

3

DATA MONITOR	
MONITOR	NO DTC
FUEL T/TMP SE	XXX °C
FUEL LEVEL SE	XXX V

SEF195Y

DTC Confirmation Procedure

NEEC0971

NOTE:
If "DTC Confirmation Procedure" has been previously conducted, always turn ignition switch "OFF" and wait at least 5 seconds before conducting the next test.

WITH CONSULT-II

NEEC0971S01

1) Turn ignition switch "ON".
2) Select "DATA MONITOR" mode with CONSULT-II.
3) Start engine and wait maximum of 2 consecutive minutes.
4) If 1st trip DTC is detected, go to "Diagnostic Procedure", EC-1035.

WITH GST

NEEC0971S02

Follow the procedure "WITH CONSULT-II" above.

Wiring Diagram

NEEC0972

EC-FLS1-01

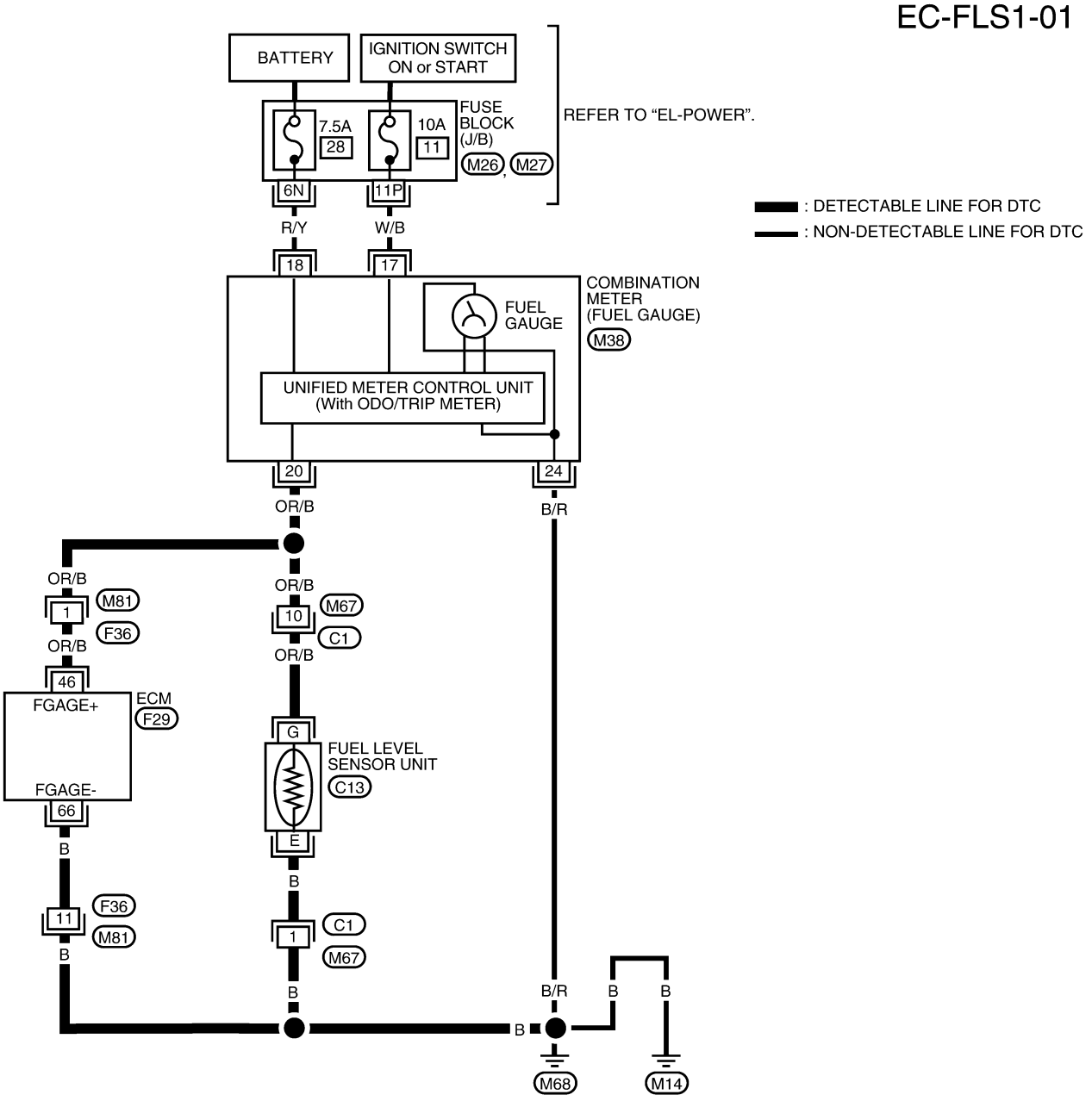

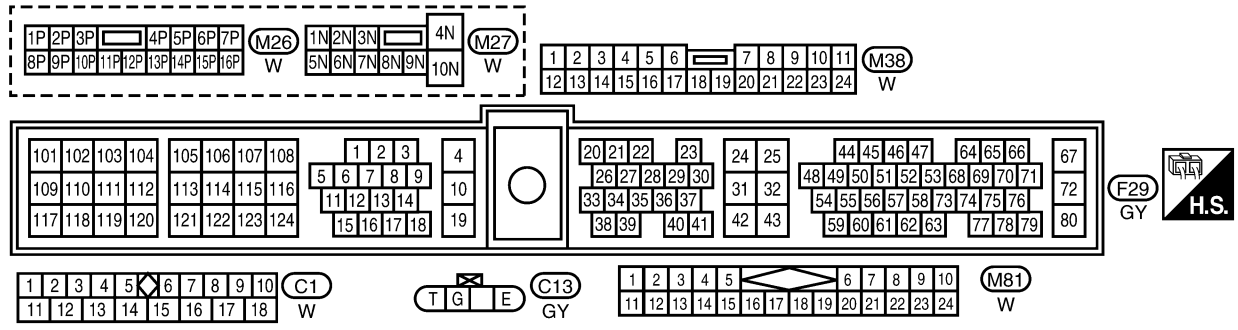

WEC818

Diagnostic Procedure

=NEEC0973

1	CHECK FUEL LEVEL SENSOR POWER SUPPLY CIRCUIT

1. Turn ignition switch “OFF”.
2. Disconnect fuel level sensor until and fuel pump harness connector.
3. Turn ignition switch “ON”.
4. Check voltage between fuel level sensor unit and fuel pump terminal G and ground with CONSULT-II or a tester.

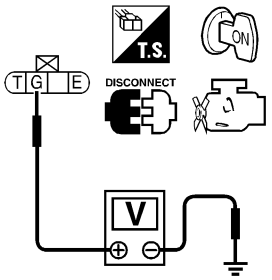

Voltage: Approximately 12V

SEF904Z

OK or NG

OK	▶	GO TO 3.
NG	▶	GO TO 2.

2	DETECT MALFUNCTIONING PART

Check the following.
- Harness connectors M67, C1
- Harness for open or short between combination meter and fuel level sensor until and fuel pump

	▶	Repair or replace harness or connectors.

3	CHECK FUEL LEVEL SENSOR GROUND CIRCUIT FOR OPEN AND SHORT

1. Turn ignition switch “OFF”.
2. Check harness continuity between fuel level sensor unit and fuel pump terminal E and body ground. Refer to Wiring Diagram.
   Continuity should exist.
3. Also check harness for short to power.

OK or NG

OK	▶	GO TO 5.
NG	▶	GO TO 4.

4	DETECT MALFUNCTIONING PART

Check the harness connectors C1, M67.

	▶	Repair or replace harness or connectors.

5	CHECK FUEL LEVEL SENSOR INPUT SIGNAL CIRCUIT FOR OPEN AND SHORT

1. Disconnect ECM harness connector.
2. Check harness continuity between ECM terminal 46 and fuel level sensor unit and fuel pump terminal G, ECM terminal 66 and fuel level sensor unit and fuel pump terminal E. Refer to Wiring Diagram.
   Continuity should exist.
3. Also check harness for short to ground and short to power.

OK or NG

OK	▶	GO TO 7.
NG	▶	GO TO 6.

Diagnostic Procedure (Cont'd)

6	DETECT MALFUNCTIONING PART
Check the following. ● Harness connectors M67, C1 ● Harness connectors M81, F36 ● Harness for open or short between ECM and fuel level sensor	
▶	Repair open circuit or short to ground or short to power in harness or connectors.

7	CHECK FUEL LEVEL SENSOR
Refer to ***EL-82***, "FUEL LEVEL SENSOR UNIT CHECK".	
OK or NG	
OK ▶	GO TO 7.
NG ▶	Replace fuel level sensor unit.

8	CHECK INTERMITTENT INCIDENT
Refer to "TROUBLE DIAGNOSIS FOR INTERMITTENT INCIDENT", EC-753.	
▶	**INSPECTION END**

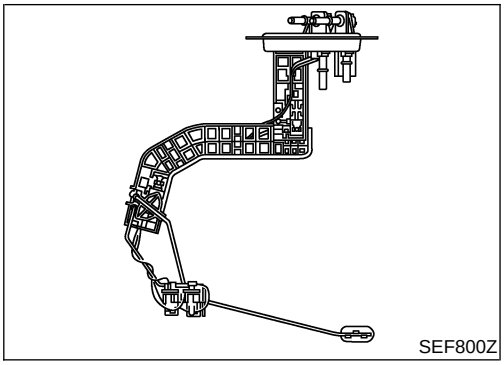
SEF800Z

Component Description

=NEEC0975

The fuel level sensor is mounted in the fuel level sensor unit. The sensor detects a fuel level in the fuel tank and transmits a signal to the ECM.
It consists of two parts, one is mechanical float and the other side is variable resistor. Fuel level sensor output voltage changes depending on the movement of the fuel mechanical float.

On Board Diagnosis Logic

NEEC0976

Driving long distances naturally affect fuel gauge level.
This diagnosis detects the fuel gauge malfunction of the gauge not moving even after a long distance has been driven.
Malfunction is detected when the output signal of the fuel level sensor does not change within the specified range even though the vehicle has been driven a long distance.

POSSIBLE CAUSE

NEEC0976S01

- Harness or connectors
  (The level sensor circuit is open or shorted.)
- Fuel level sensor

Overall Function Check

NEEC0978

Use this procedure to check the overall function of the fuel level sensor function. During this check, a 1st trip DTC might not be confirmed.

WARNING:

When performing following procedure, be sure to observe the handling of the fuel. Refer to *FE-5*, “Fuel Tank”.

TESTING CONDITION:

Before starting overall function check, preparation of draining fuel and refilling fuel is required.

7

DATA MONITOR	
MONITOR	NO DTC
FUEL T/TMP SE	XXX °C
FUEL LEVEL SE	XXX V

SEF195Y

WITH CONSULT-II

NEEC0978S01

NOTE:

Start from step 11, if it is possible to confirm that the fuel cannot be drained by 30ℓ (7-7/8 US gal, 6-5/8 Imp gal) in advance.

1) Prepare a fuel container and a spare hose.
2) Release fuel pressure from fuel line, refer to “Fuel Pressure Release”, EC-658.
3) Remove the fuel feed hose on the fuel level sensor unit.
4) Connect a spare fuel hose where the fuel feed hose was removed.

5) Turn ignition switch "OFF" and wait at least 5 seconds then turn "ON".
6) Select "FUEL LEVEL SE" in "DATA MONITOR" mode with CONSULT-II.
7) Check "FUEL LEVEL SE" output voltage and note it.
8) Select "FUEL PUMP" in "ACTIVE TEST" mode with CONSULT-II.
9) Touch "ON" and drain fuel approximately 30ℓ (7-7/8 US gal, 6-5/8 Imp gal) and stop it.
10) Fill fuel into the fuel tank for 30ℓ (7-7/8 US gal, 6-5/8 Imp gal).
11) Check "FUEL LEVEL SE" output voltage and note it.
12) Check "FUEL LEVEL SE" output voltage and confirm whether the voltage changes more than 0.03V during step 7 to 11.
If NG, check the fuel level sensor, refer to ***EL-82***, "FUEL LEVEL SENSOR UNIT CHECK".

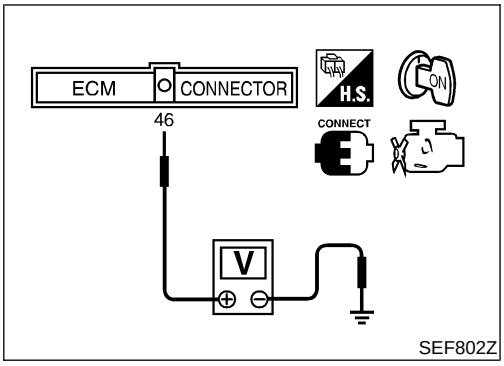

WITH GST

NEEC0978S02

NOTE:
Start from step 11, if it is possible to confirm that the fuel cannot be drained by 30ℓ (7-7/8 US gal, 6-5/8 Imp gal) in advance.

1) Prepare a fuel container and a spare hose.
2) Release fuel pressure from fuel line, refer to "Fuel Pressure Release", EC-658.
3) Remove the fuel feed hose on the fuel level sensor unit.
4) Connect a spare fuel hose where the fuel feed hose was removed.
5) Turn ignition switch "OFF".
6) Set voltmeters probe between ECM terminal 46 (fuel level sensor signal) and ground.
7) Turn ignition switch "ON".
8) Check voltage between ECM terminal 46 and ground and note it.
9) Drain fuel by 30ℓ (7-7/8 US gal, 6-5/8 Imp gal) from the fuel tank using proper equipment.
10) Fill fuel into the fuel tank for 30ℓ (7-7/8 US gal, 6-5/8 Imp gal).
11) Confirm that the voltage between ECM terminal 46 and ground changes more than 0.03V during step 8 - 10.
If NG, check component of fuel level sensor, refer to ***EL-82***, "FUEL LEVEL SENSOR UNIT CHECK".

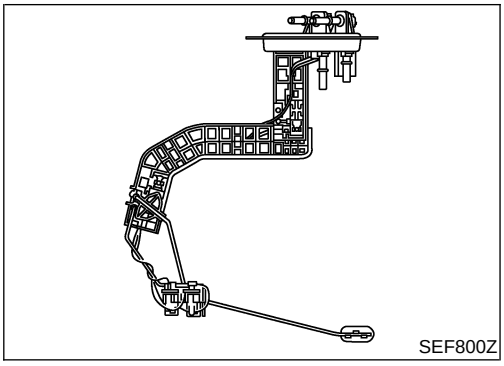
SEF800Z

Component Description

NEEC0979

The fuel level sensor is mounted in the fuel level sensor unit. The sensor detects a fuel level in the fuel tank and transmits a signal to the ECM.
It consists of two parts, one is mechanical float and the other side is variable resistor. Fuel level sensor output voltage changes depending on the movement of the fuel mechanical float.

ECM Terminals and Reference Value

NEEC0985

Specification data are reference values and are measured between each terminal and ground.

CAUTION:

Do not use ECM ground terminals when measuring input/output voltage. Doing so may result in damage to the ECM's transistor. Use a ground other than ECM terminals, such as the ground.

TERMINAL NO.	WIRE COLOR	ITEM	CONDITION	DATA (DC Voltage)
46	P/B	Fuel level sensor	**[Ignition switch "ON"]**	Approximately 0 - 4.8V Output voltage varies with fuel level.
66	B	Fuel level sensor ground	**[Engine is running]** ● Idle speed	Approximately 0V

On Board Diagnosis Logic

NEEC0980

ECM receives two signals from the fuel level sensor circuit.
One is fuel level sensor power supply circuit, and the other is fuel level sensor ground circuit.
This diagnosis indicates the former, to detect open or short circuit malfunction.
Malfunction is detected when an excessively low or high voltage is sent from the sensor is sent to ECM.

POSSIBLE CAUSE

NEEC0980S01

- Fuel level sensor circuit
  (The fuel level sensor circuit is open or shorted.)
- Fuel level sensor

DTC Confirmation Procedure

NEEC0982

NOTE:
If “DTC Confirmation Procedure” has been previously conducted, always turn ignition switch “OFF” and wait at least 5 seconds before conducting the next test.

TESTING CONDITION:
Before performing the following procedure, confirm that battery voltage is more than 11V at ignition switch “ON”.

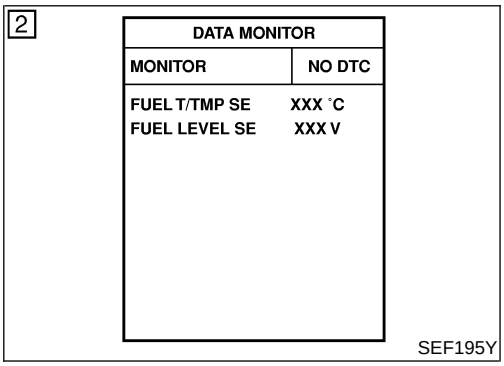

WITH CONSULT-II

NEEC0982S01

1) Turn ignition switch “ON”.
2) Select “DATA MONITOR” mode with CONSULT-II.
3) Wait at least 5 seconds.
4) If 1st trip DTC is detected, go to “Diagnostic Procedure”, EC-1042.

WITH GST

NEEC0982S02

Follow the procedure “WITH CONSULT-II” above.

Wiring Diagram

NEEC0983

EC-FLS2-01

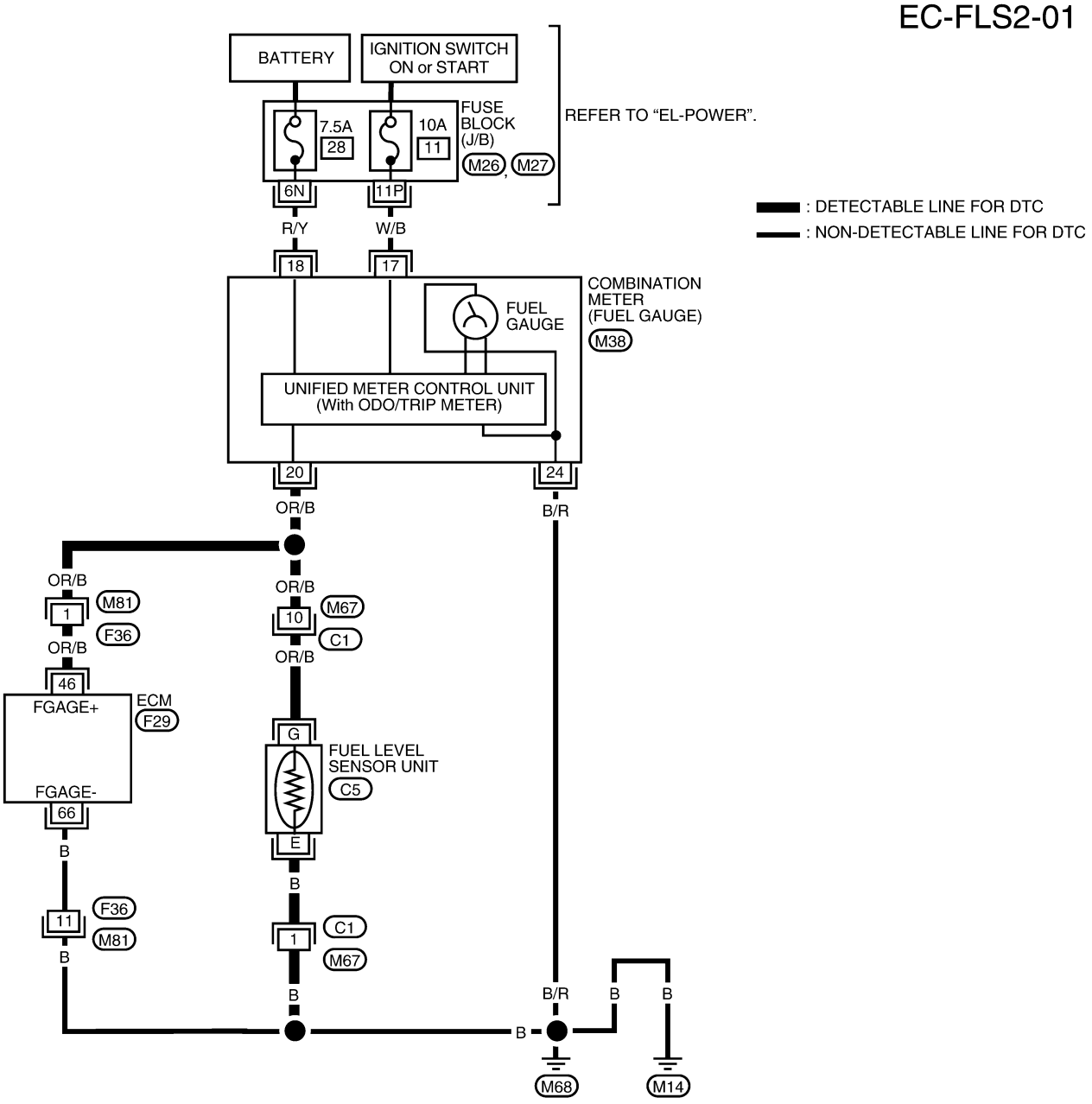

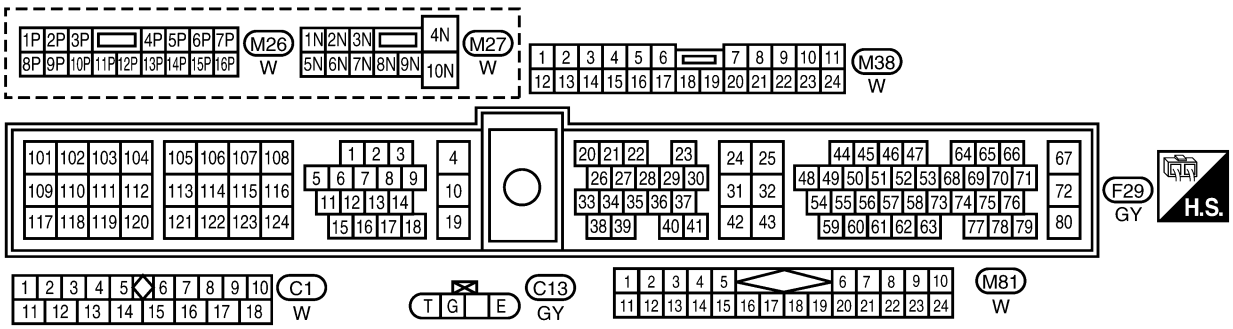

WEC819

Diagnostic Procedure

=NEEC0984

1	CHECK FUEL LEVEL SENSOR POWER SUPPLY CIRCUIT

1. Turn ignition switch “OFF”.
2. Disconnect fuel level sensor until and fuel pump harness connector.
3. Turn ignition switch “ON”.
4. Check voltage between fuel level sensor unit and fuel pump terminal G and ground with CONSULT-II or tester.

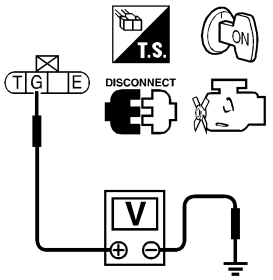

Voltage: Approximately 12V

SEF904Z

OK or NG

OK	▶	GO TO 3.
NG	▶	GO TO 2.

2	DETECT MALFUNCTIONING PART

Check the following.
- Harness connectors M67, C1
- Harness for open or short between combination meter and fuel level sensor until and fuel pump

	▶	Repair or replace harness or connectors.

3	CHECK FUEL LEVEL SENSOR GROUND CIRCUIT FOR OPEN AND SHORT

1. Turn ignition switch “OFF”.
2. Check harness continuity between fuel level sensor unit and fuel pump terminal E and body ground. Refer to Wiring Diagram.
   Continuity should exist.
3. Also check harness for short to power.

OK or NG

OK	▶	GO TO 5.
NG	▶	GO TO 4.

4	DETECT MALFUNCTIONING PART

Check the harness connectors C1, M67.

	▶	Repair or replace harness or connectors.

5	CHECK FUEL LEVEL SENSOR INPUT CIRCUIT FOR OPEN AND SHORT

1. Disconnect ECM harness connector.
2. Check harness continuity between ECM terminal 46 and fuel level sensor unit and fuel pump terminal G. Refer to Wiring Diagram.
   Continuity should exist.
3. Also check harness for short to ground and short to power.

OK or NG

OK	▶	GO TO 7.
NG	▶	GO TO 6.

6	DETECT MALFUNCTIONING PART
Check the following. ● Harness connectors M67, C1 ● Harness connectors M81, F36 ● Harness for open or short between ECM and fuel level sensor	
▶	Repair open circuit or short to ground or short to power in harness on connectors.

7	CHECK FUEL LEVEL SENSOR
Refer to ***EL-82***, "FUEL LEVEL SENSOR UNIT CHECK".	
OK or NG	
OK ▶	GO TO 7.
NG ▶	Replace fuel level sensor unit.

8	CHECK INTERMITTENT INCIDENT
Refer to "TROUBLE DIAGNOSIS FOR INTERMITTENT INCIDENT", EC-753.	
▶	**INSPECTION END**

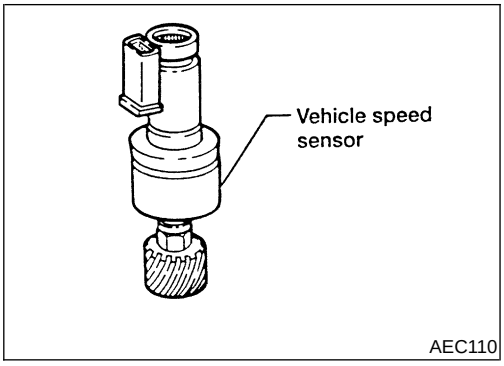

Component Description

NEEC0768

The vehicle speed sensor is installed in the transaxle. It contains a pulse generator which provides a vehicle speed signal to the speedometer. The speedometer then sends a signal to the ECM.

ECM Terminals and Reference Value

NEEC0769

Specification data are reference values and are measured between each terminal and ground.

CAUTION:

Do not use ECM ground terminals when measuring input/output voltage. Doing so may result in damage to the ECM's transistor. Use a ground other than the ECM terminals, such as the ground.

TERMINAL NO.	WIRE COLOR	ITEM	CONDITION	DATA (DC Voltage)
29	G/B	Vehicle speed sensor	**[Engine is running]** ● Lift up the vehicle ● In 1st gear position ● Vehicle speed is 40 km/h (25 MPH)	2 - 3V 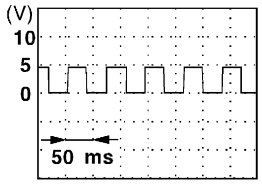 SEF996U

On Board Diagnosis Logic

NEEC0770

Malfunction is detected when the almost 0 km/h (0 MPH) signal from vehicle speed sensor is sent to ECM even when vehicle is being driven.

POSSIBLE CAUSE

NEEC0770S01

- Harness or connector
  (The vehicle speed sensor circuit is open or shorted.)
- Vehicle speed sensor

DTC Confirmation Procedure

NEEC0771

CAUTION:

Always drive vehicle at a safe speed.

NOTE:

If "DTC Confirmation Procedure" has been previously conducted, always turn ignition switch OFF and wait at least 5 seconds before conducting the next test.

TESTING CONDITION:

Steps 1 and 2 may be conducted with the drive wheels lifted in the shop or by driving the vehicle. If a road test is expected to be easier, it is unnecessary to lift the vehicle.

5

DATA MONITOR	
MONITOR	NO DTC
ENG SPEED	XXX rpm
COOLAN TEMP/S	XXX °C
B/FUEL SCHDL	XXX msec
PW/ST SIGNAL	OFF
VHCL SPEED SE	XXX km/h

SEF196Y

With CONSULT-II

1) Start engine
2) Read "VHCL SPEED SE" in "DATA MONITOR" mode with CONSULT-II. The vehicle speed on CONSULT-II should exceed 10 km/h (6 MPH) when rotating wheels with suitable gear position.
   If NG, go to "Diagnostic Procedure", EC-1047.
   If OK, go to following step.
3) Select "DATA MONITOR" mode with CONSULT-II.
4) Warm engine up to normal operating temperature.
5) Maintain the following conditions for at least 10 consecutive seconds.

END SPEED	More than 1,400 rpm (A/T models) More than 2,000 rpm (M/T models)
COOLAN TEMP/S	More than 70°C (158°F)
B/FUEL SCHDL	4.5 - 9.0 msec
Selector lever	Suitable position
PW/ST SIGNAL	OFF

6) If 1st trip DTC is detected, go to "Diagnostic Procedure", EC-1047.

Overall Function Check

NEEC0772

Use this procedure to check the overall function of the vehicle speed sensor circuit. During this check, a 1st trip DTC might not be confirmed.

With GST

1) Lift up drive wheels.
2) Start engine.
3) Read vehicle speed sensor signal in "MODE 1" with GST.
   The vehicle speed sensor on GST should be able to exceed 10 km/h (6 MPH) when rotating wheels with suitable gear position.
4) If NG, go to "Diagnostic Procedure", EC-1047.

Wiring Diagram

NEEC0773

EC-VSS-01

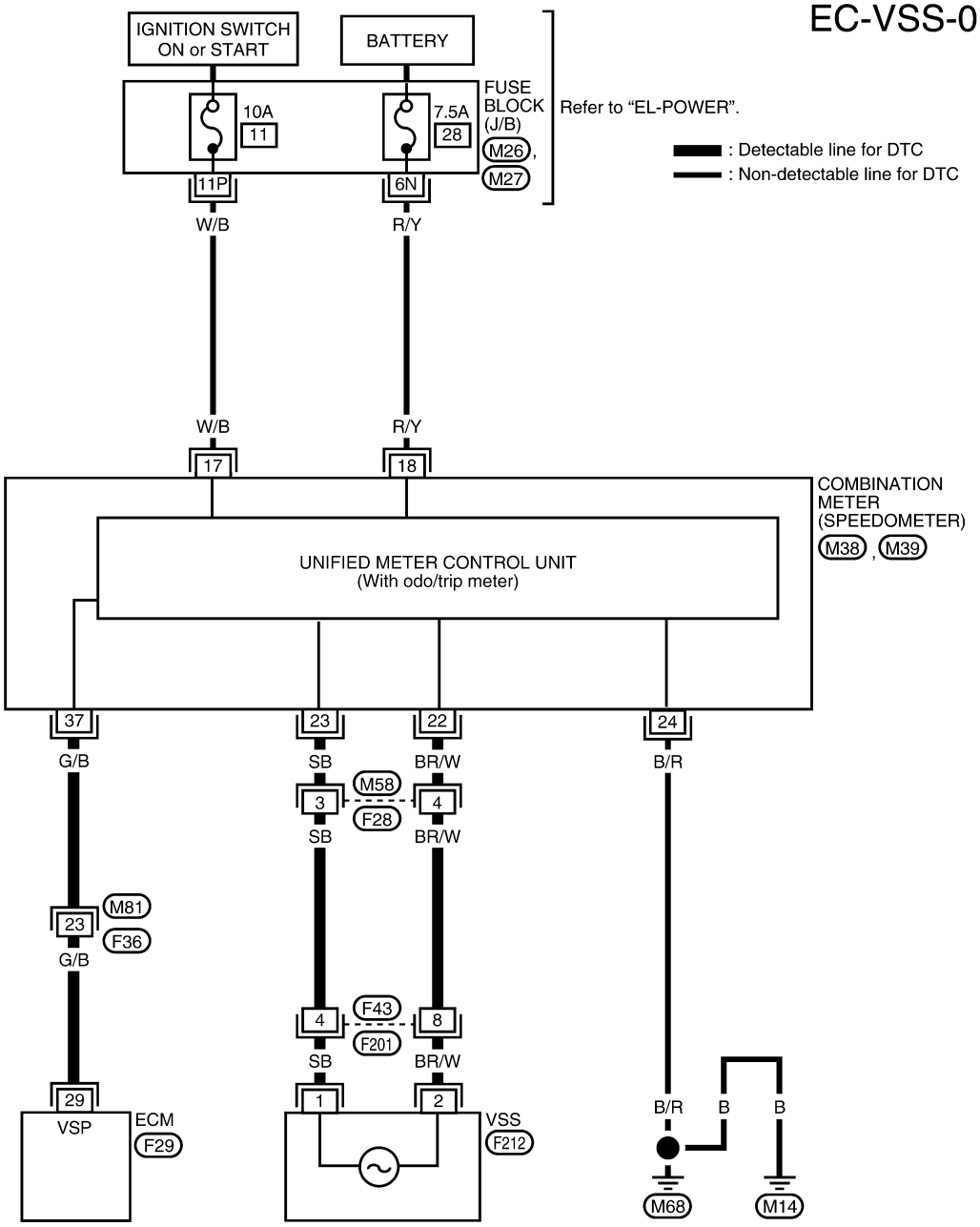

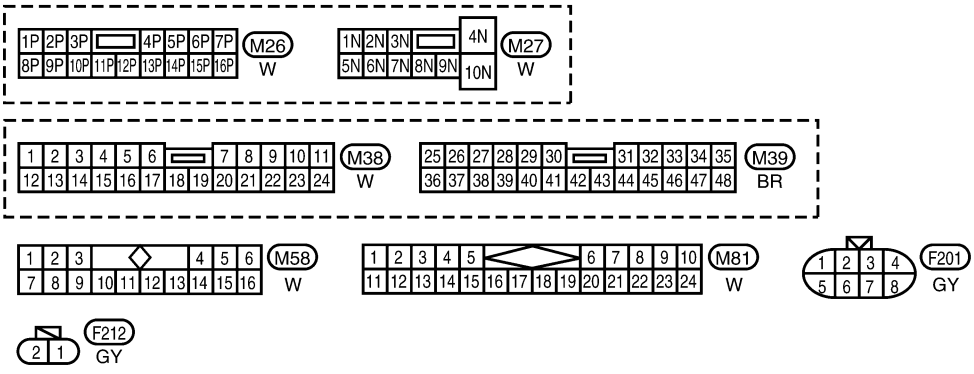

Refer to the following.
F29 - ELECTRICAL UNITS

LEC507

Diagnostic Procedure

NEEC0774

1	CHECK VEHICLE SPEED SENSOR INPUT SIGNAL CIRCUIT FOR OPEN AND SHORT	
1. Turn ignition switch OFF. 2. Disconnect ECM harness connector and combination meter harness connector. 3. Check harness continuity between ECM terminal 29 and meter terminal 37. Refer to Wiring Diagram. **Continuity should exist.** 4. Also check harness for short to ground and short to power.		
OK or NG		
OK	▶	GO TO 3.
NG	▶	GO TO 2.

2	DETECT MALFUNCTIONING PART	
Check the following. ● Harness connectors M81, F36 ● Harness for open or short between ECM and combination meter		
	▶	Repair open circuit or short to ground or short to power in harness or connectors.

3	CHECK SPEEDOMETER FUNCTION	
Make sure that speedometer functions properly.		
OK or NG		
OK	▶	GO TO 5.
NG	▶	GO TO 4.

4	CHECK SPEEDOMETER CIRCUIT FOR OPEN AND SHORT	
Check the following. ● Harness connectors M58, F28 ● Harness connectors F43, F201 ● Harness for open or short between combination meter and vehicle speed sensor		
OK or NG		
OK	▶	Check combination meter and vehicle speed sensor. Refer to ***EL-69***.
NG	▶	Repair open circuit or short to ground or short to power in harness or connectors.

5	CHECK INTERMITTENT INCIDENT	
Refer to “TROUBLE DIAGNOSIS FOR INTERMITTENT INCIDENT”, EC-753.		
	▶	**INSPECTION END**

Description

NEEC0775

SYSTEM DESCRIPTION

NEEC0775S01

Sensor	Input Signal to ECM	ECM function	Actuator
Camshaft position sensor	Engine speed	Idle air control	IACV-AAC valve
Mass air flow sensor	Amount of intake air		
Engine coolant temperature sensor	Engine coolant temperature		
Ignition switch	Start signal		
Throttle position sensor	Throttle position		
Park/neutral position (PNP) switch	Park/neutral position		
Air conditioner switch	Air conditioner operation		
Power steering oil pressure switch	Power steering load signal		
Battery	Battery voltage		
Vehicle speed sensor	Vehicle speed		
Ambient air temperature switch	Ambient air temperature		
Intake air temperature sensor	Intake air temperature		
Absolute pressure sensor	Ambient barometic pressure		

This system automatically controls engine idle speed to a specified level. Idle speed is controlled through fine adjustment of the amount of air which bypasses the throttle valve via IACV-AAC valve. The IACV-AAC valve repeats ON/OFF operation according to the signal sent from the ECM. The camshaft position sensor detects the actual engine speed and sends a signal to the ECM. The ECM then controls the ON/OFF time of the IACV-AAC valve so that engine speed coincides with the target value memorized in ECM. The target engine speed is the lowest speed at which the engine can operate steadily. The optimum value stored in the ECM is determined by taking into consideration various engine conditions, such as during warm up, deceleration, and engine load (air conditioner and power steering).

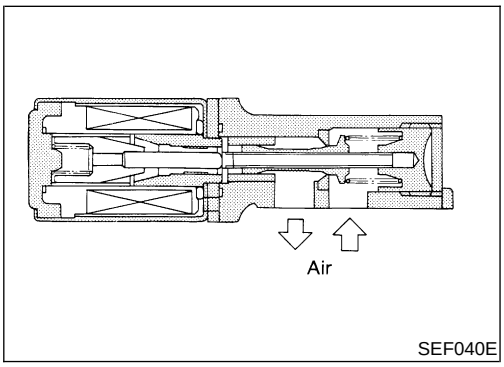

SEF040E

COMPONENT DESCRIPTION

NEEC0775S02

IACV-AAC Valve

NEEC0775S0201

The IACV-AAC valve is moved by ON/OFF pulses from the ECM. The longer the ON pulse, the greater the amount of air that will flow through the valve. The more air that flows through the valve, the higher the idle speed.

CONSULT-II Reference Value in Data Monitor Mode

NEEC0776

Specification data are reference values.

MONITOR ITEM	CONDITION		SPECIFICATION
IACV-AAC/V	• Engine: After warming up • Air conditioner switch: “OFF” • Shift lever: “N” • No-load	Idle	10 - 20%
		2,000 rpm	—

ECM Terminals and Reference Value

NEEC0777

Specification data are reference values and are measured between each terminal and ground.

CAUTION:

Do not use ECM ground terminals when measuring input/output voltage. Doing so may result in damage to the ECM’s transistor. Use a ground other than the ECM terminals, such as the ground.

TERMINAL NO.	WIRE COLOR	ITEM	CONDITION	DATA (DC Voltage)
101	OR/L	IACV-AAC valve	**[Engine is running]** • **Warm-up condition** • Idle speed	8 - 11V 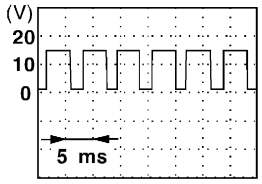 SEF005V
			[Engine is running] • **Warm-up condition** • Engine speed is 3,000 rpm	7 - 10V 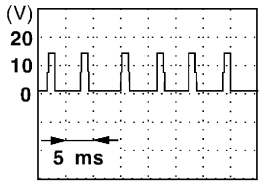 SEF692W

On Board Diagnosis Logic

NEEC0778

Malfunction is detected when
(Malfunction A) the IACV-AAC valve does not operate properly,
(Malfunction B) the IACV-AAC valve does not operate properly.

POSSIBLE CAUSE

NEEC0778S01

- Harness or connectors
  (The IACV-AAC valve circuit is open.)
- Harness or connectors
  (The IACV-AAC valve circuit is shorted.)
- IACV-AAC valve

DTC Confirmation Procedure

NEEC0779

NOTE:

- If “DTC Confirmation Procedure” has been previously conducted, always turn ignition switch OFF and wait at least 5 seconds before conducting the next test.
- **Perform “PROCEDURE FOR MALFUNCTION A” first. If 1st trip DTC cannot be confirmed, perform “PROCEDURE FOR MALFUNCTION B”.**

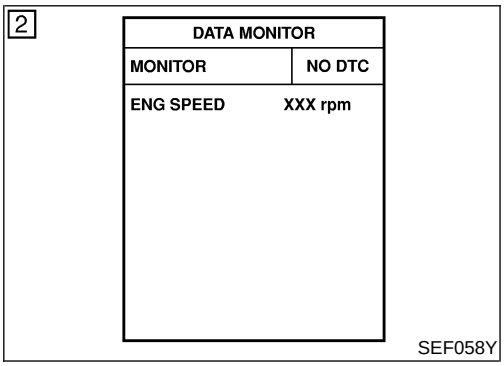

PROCEDURE FOR MALFUNCTION A

NEEC0779S01

TESTING CONDITION:

Before performing the following procedure, confirm that battery voltage is more than 10.5V with ignition switch “ON”.

With CONSULT-II

1) Turn ignition switch ON.
2) Select “DATA MONITOR” mode with CONSULT-II.
3) Wait at least 2 seconds.
4) If 1st trip DTC is detected, go to “Diagnostic Procedure”, EC-1052.

With GST

Follow the procedure “With CONSULT-II”.

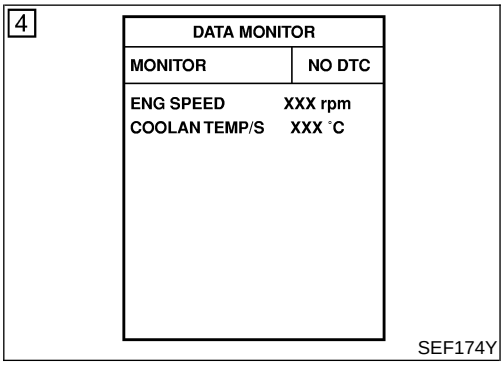

PROCEDURE FOR MALFUNCTION B

NEEC0779S02

TESTING CONDITION:

Before performing the following procedure, confirm that battery voltage is more than 11V at idle.

With CONSULT-II

1) Start engine and warm it up to normal operating temperature.
2) Turn ignition switch OFF and wait at least 5 seconds.
3) Turn ignition switch ON again and select “DATA MONITOR” mode with CONSULT-II.
4) Start engine and run it for at least 1 minute at idle speed.
5) If 1st trip DTC is detected, go to “Diagnostic Procedure”, EC-1052.

With GST

Follow the procedure “With CONSULT-II”.

Wiring Diagram

NEEC0780

EC-AAC/V-01

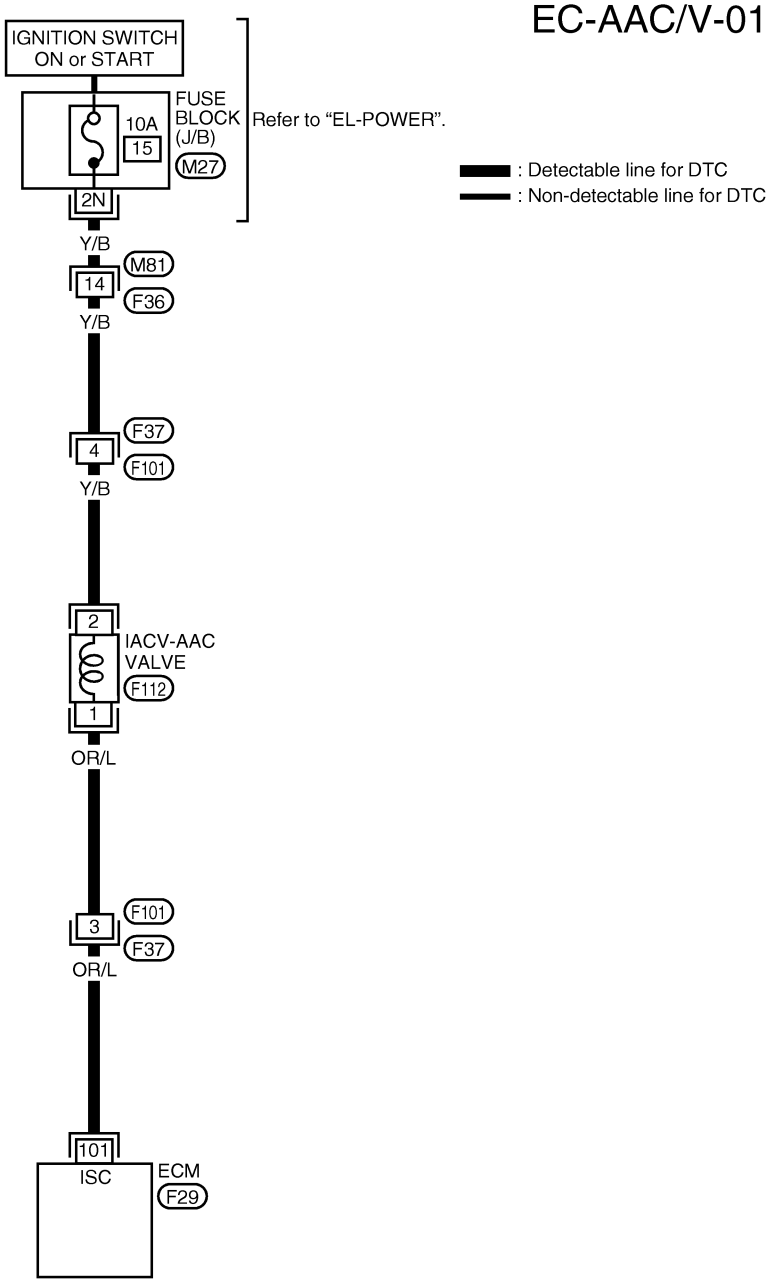

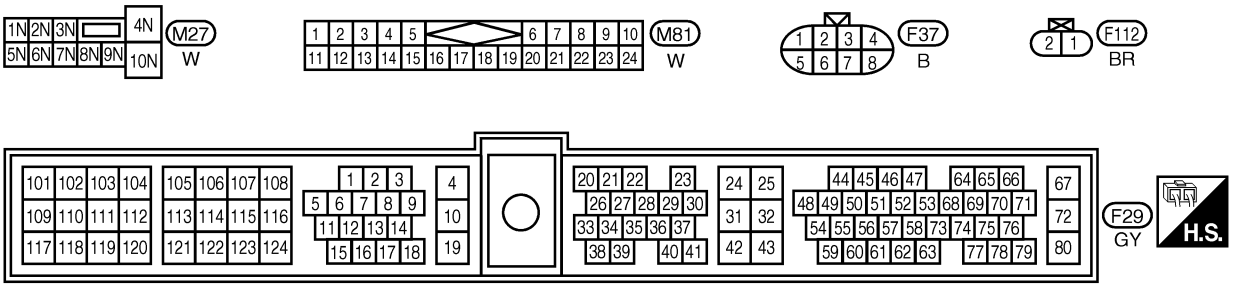

AEC963A

Diagnostic Procedure

NEEC0781

1	CHECK IACV-AAC VALVE POWER SUPPLY CIRCUIT

1. Stop engine.
2. Disconnect IACV-AAC valve harness connector.

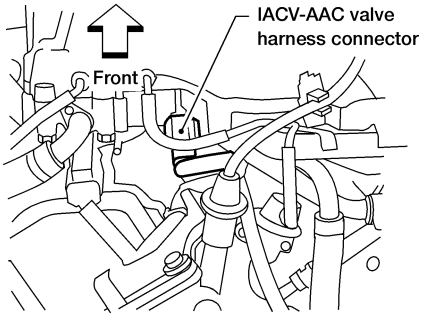

LEC514

3. Turn ignition switch ON.
4. Check voltage between terminal 2 and ground with CONSULT-II or tester.

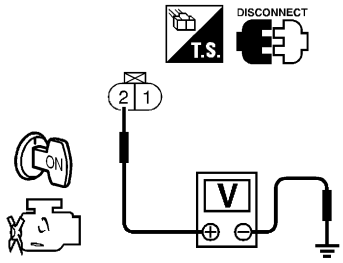

SEF651W

Voltage: Battery voltage

OK or NG

OK	▶	GO TO 3.
NG	▶	GO TO 2.

2	DETECT MALFUNCTIONING PART

Check the following.
- Harness connectors M81, F36
- Harness connectors F37, F101
- Fuse block (J/B) connector M27
- 10A fuse
- Harness for open or short between IACV-AAC valve and fuse

	▶	Repair harness or connectors.

3	CHECK IACV-AAC VALVE OUTPUT SIGNAL CIRCUIT FOR OPEN AND SHORT

1. Turn ignition switch OFF.
2. Disconnect ECM harness connector.
3. Check harness continuity between ECM terminal 101 and IACV-AAC valve terminal 1.
   Refer to Wiring Diagram.
   Continuity should exist.
4. Also check harness for short to ground and short to power.

OK or NG

OK	▶	GO TO 5.
NG	▶	GO TO 4.

4	DETECT MALFUNCTIONING PART
Check the following. ● Harness connectors F101, F37 ● Harness for open or short between IACV-AAC valve and ECM	
▶	Repair open circuit or short to ground or short to power in harness or connectors.

5	CHECK IACV-AAC VALVE
1. Disconnect IACV-AAC valve harness connector. 2. Remove IACV-AAC valve. ● Check IACV-AAC valve resistance.	

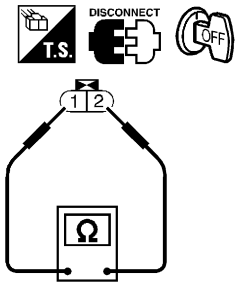

SEF202V

Resistance:
Approximately 10Ω [at 20°C (68°F)]

● Check plunger for seizing or sticking.
● Check for broken spring.

3. Supply battery voltage between IACV-AAC valve connector terminals.
Plunger should move.

OK or NG

OK	▶	GO TO 6.
NG	▶	Replace IACV-AAC valve.

6	CHECK INTERMITTENT INCIDENT
Refer to "TROUBLE DIAGNOSIS FOR INTERMITTENT INCIDENT", EC-753.	
▶	**INSPECTION END**

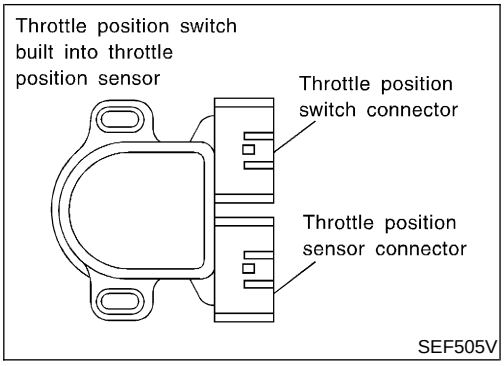

Component Description

NEEC0782

A closed throttle position switch and wide open throttle position switch are built into the throttle position sensor unit. The wide open throttle position switch is used only for A/T control.
When the throttle valve is in the closed position, the closed throttle position switch sends a voltage signal to the ECM. The ECM only uses this signal to open or close the EVAP canister purge volume control solenoid valve when the throttle position sensor is malfunctioning.

CONSULT-II Reference Value in Data Monitor Mode

NEEC0783

Specification data are reference values.

MONITOR ITEM	CONDITION		SPECIFICATION
CLSD THL/P SW	● Engine: After warming up, idle the engine	Throttle valve: Idle position	ON
		Throttle valve: Slightly open	OFF

ECM Terminals and Reference Value

NEEC0784

Specification data are reference values and are measured between each terminal and ground.

CAUTION:

Do not use ECM ground terminals when measuring input/output voltage. Doing so may result in damage to the ECM's transistor. Use a ground other than the ECM terminals, such as the ground.

TERMINAL NO.	WIRE COLOR	ITEM	CONDITION	DATA (DC Voltage)
28	BR/W	Throttle position switch (Closed position)	**[Engine is running]** ● **Warm-up condition** ● Accelerator pedal fully released	BATTERY VOLTAGE (11 - 14V)
			[Ignition switch "ON"] ● Accelerator pedal depressed	Approximately 0V

On Board Diagnosis Logic

NEEC0785

Malfunction is detected when battery voltage from the closed throttle position switch is sent to ECM with the throttle valve opened.

POSSIBLE CAUSE

NEEC0785S01

- Harness or connectors
  (The closed throttle position switch circuit is shorted.)
- Closed throttle position switch
- Throttle position sensor

4

DATA MONITOR	
MONITOR	NO DTC
ENG SPEED	XXX rpm
COOLAN TEMP/S	XXX °C
CLSD THL/P SW	ON

SEF197Y

6

DATA MONITOR	
MONITOR	NO DTC
COOLAN TEMP/S	XXX °C
VHCL SPEED SE	XXX km/h
THRTL POS SEN	XXX V

SEF198Y

DTC Confirmation Procedure

NEEC0786

CAUTION:

Always drive vehicle at a safe speed.

NOTE:

If "DTC Confirmation Procedure" has been previously conducted, always turn ignition switch OFF and wait at least 5 seconds before conducting the next test.

With CONSULT-II

1) Start engine and warm it up to normal operating temperature.
2) Turn ignition switch OFF, wait at least 5 seconds and then start engine.
3) Select "CLSD THL/P SW" in "DATA MONITOR" mode.
4) Check the signal under the following conditions.

Condition	Signal indication
Throttle valve: Idle position	ON
Throttle valve: Slightly open	OFF

If the result is NG, go to "Diagnostic Procedure", EC-1057.
If OK, go to following step.

5) Select "DATA MONITOR" mode with CONSULT-II.
6) Drive the vehicle for at least 5 consecutive seconds under the following condition.

THRTL POS SEN	More than 2.5V
VHCL SPEED SE	More than 5 km/h (3 MPH)
Selector lever	Suitable position
Driving location	Driving vehicle uphill (Increased engine load) will help maintain the driving conditions required for this test.

7) If 1st trip DTC is detected, go to "Diagnostic Procedure", EC-1057.

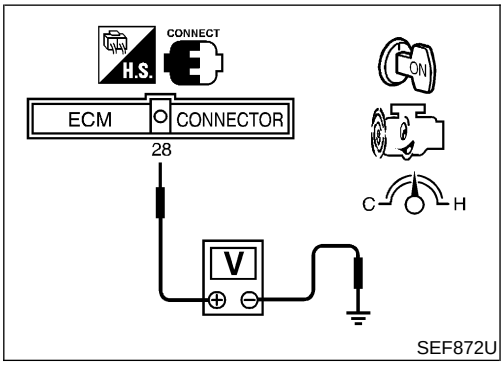

SEF872U

Overall Function Check

NEEC0787

Use this procedure to check the overall function of the closed throttle position switch circuit. During this check, a 1st trip DTC might not be confirmed.

Without CONSULT-II

1) Start engine and warm it up to normal operating temperature.
2) Check the voltage between ECM terminal 28 (Closed throttle position switch signal) and ground under the following conditions.

At idle: Battery voltage

At 2,000 rpm: Approximately 0V

3) If NG, go to "Diagnostic Procedure", EC-1057.

Wiring Diagram

NEEC0788

EC-TP/SW-01

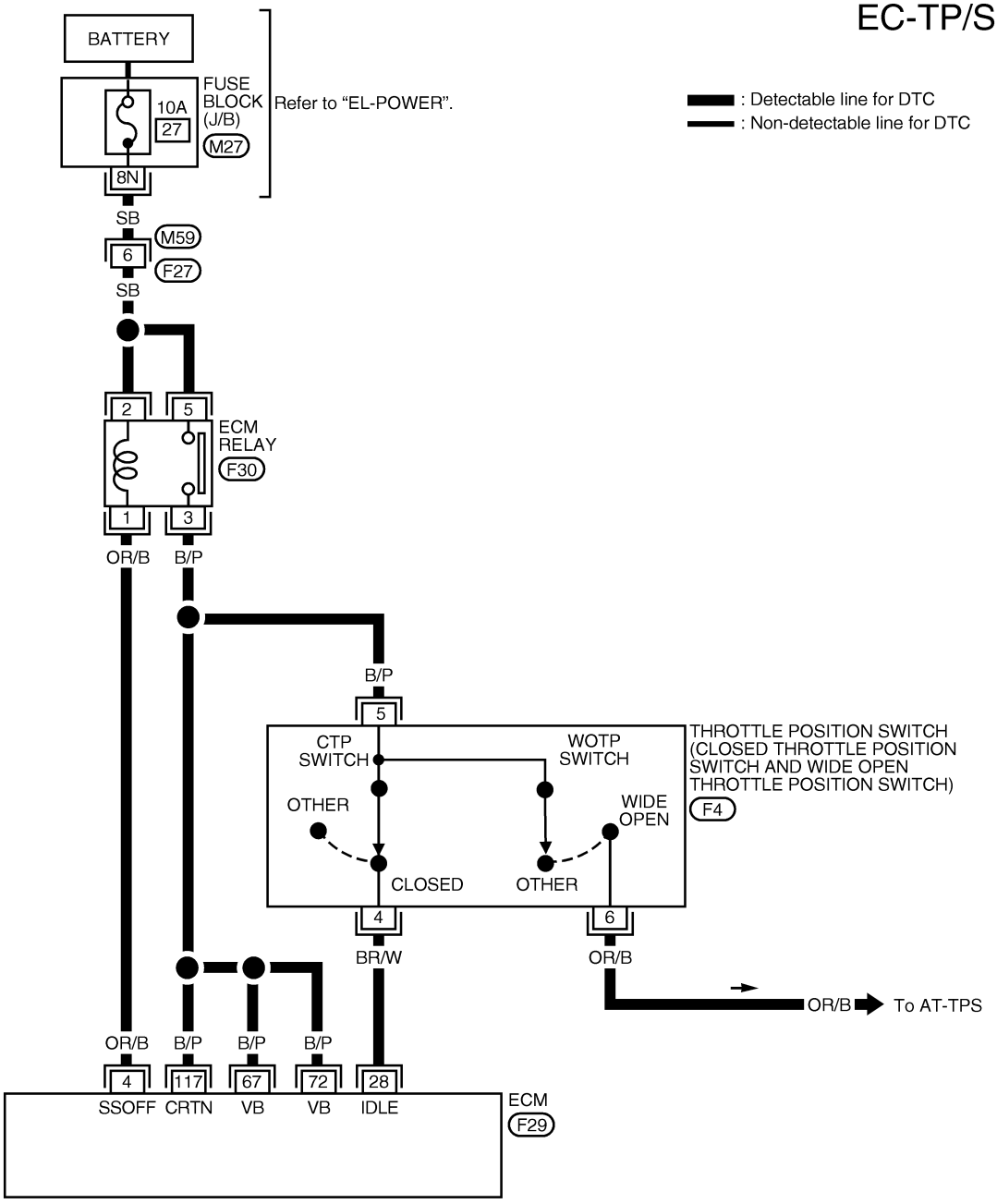

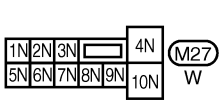

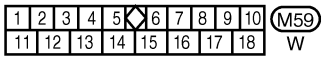

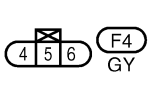

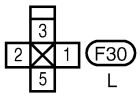

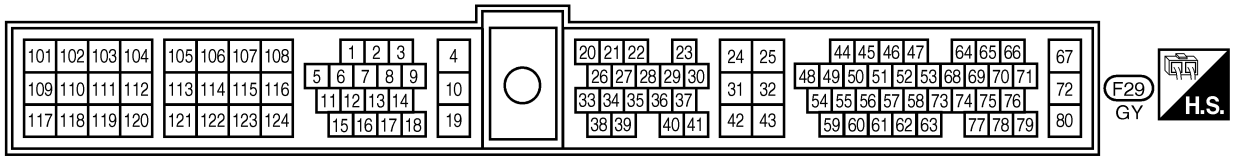

AEC964A

Diagnostic Procedure

NEEC0789

1	CHECK CLOSED THROTTLE POSITION SWITCH POWER SUPPLY CIRCUIT

1. Turn ignition switch OFF.
2. Disconnect throttle position switch harness connector.

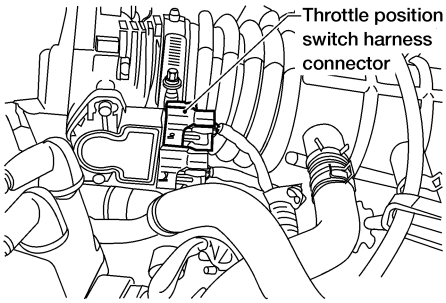

AEC653A

3. Turn ignition switch ON.
4. Check voltage between terminal 5 and engine ground with CONSULT-II or tester.

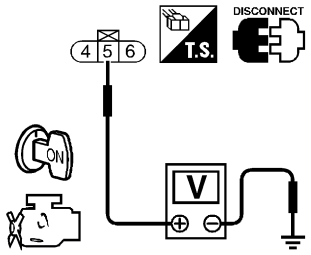

SEF715U

Voltage: Battery voltage

OK or NG

OK	▶	GO TO 3.
NG	▶	GO TO 2.

2	DETECT MALFUNCTIONING PART

Check the following.
- Harness for open or short between throttle position switch and ECM relay
- Harness for open or short between throttle position switch and ECM

	▶	Repair harness or connectors.

3	CHECK CLOSED THROTTLE POSITION SWITCH INPUT SIGNAL CIRCUIT FOR OPEN AND SHORT

1. Turn ignition switch OFF.
2. Disconnect ECM harness connector.
3. Check harness continuity between ECM terminal 28 and switch terminal 4.
   Refer to Wiring Diagram.
   Continuity should exist.
4. Also check harness for short to ground and short to power.

OK or NG

OK	▶	GO TO 4.
NG	▶	Repair open circuit or short to ground or short to power in harness or connectors.

Diagnostic Procedure (Cont'd)

4 ADJUST THROTTLE POSITION SWITCH

Check the following items. Refer to "Basic Inspection", EC-715.

Items	Specifications
Ignition timing	10° ± 2° BTDC
Base idle speed	700 ± 50 rpm (in "P" or "N" position)
Closed throttle position switch idle position adjustment	Feeler gauge thickness and switch condition 0.3 mm (0.012 in): ON 0.4 mm (0.016 in): OFF
Target idle speed	750 ± 50 rpm (in "P" or "N" position)

MTBL0576

with CONSULT-II ▶	GO TO 5.
without CONSULT-II ▶	GO TO 6.

5 CHECK CLOSED THROTTLE POSITION SWITCH

With CONSULT-II

1. Start engine and warm it up to normal operating temperature.
2. Turn ignition switch OFF.
3. Turn ignition switch ON.
4. Select "DATA MONITOR" mode with CONSULT-II.
5. Check indication of "CLSD THL/P SW".
   Measurement must be made with closed throttle position switch installed in vehicle.

Throttle valve conditions	CLSD THL/P SW
Completely closed	ON
Partially open or completely open	OFF

MTBL0355

OK or NG

OK ▶	GO TO 8.
NG ▶	GO TO 7.

6	CHECK CLOSED THROTTLE POSITION SWITCH

Without CONSULT-II

1. Start engine and warm it up to normal operating temperature.
2. Turn ignition switch OFF.
3. Disconnect closed throttle position switch harness connector.
4. Check continuity between closed throttle position switch terminals 4 and 5.
   Resistance measurement must be made with closed throttle position switch installed in vehicle.

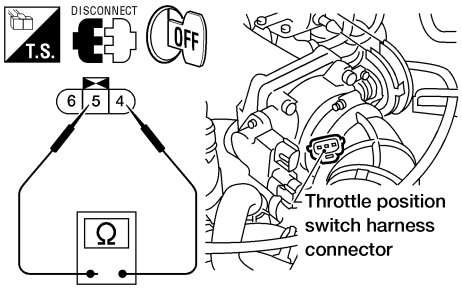

AEC654A

Throttle valve conditions	Continuity
Completely closed	Yes
Partially open or completely open	No

MTBL0247

OK or NG

OK	▶	GO TO 9.
NG	▶	GO TO 7.

7	ADJUST THROTTLE POSITION SWITCH

Check the following items. Refer to "Basic Inspection", EC-715.

Items	Specifications
Ignition timing	10° ± 2° BTDC
Base idle speed	700 ± 50 rpm (in "P" or "N" position)
Closed throttle position switch idle position adjustment	Feeler gauge thickness and switch condition 0.3 mm (0.012 in): ON 0.4 mm (0.016 in): OFF
Target idle speed	750 ± 50 rpm (in "P" or "N" position)

MTBL0576

If it is impossible to adjust closed throttle position switch in "Basic Inspection", replace closed throttle position switch.

OK or NG

OK (with CONSULT-II)	▶	GO TO 8.
OK (without CONSULT-II)	▶	GO TO 9.
NG	▶	Replace throttle position switch.

Diagnostic Procedure (Cont'd)

8	CHECK THROTTLE POSITION SENSOR

With CONSULT-II

1. Start engine and warm it up to normal operating temperature.
2. Stop engine (ignition switch OFF).
3. Turn ignition switch ON.
4. Select "DATA MONITOR" mode with CONSULT-II.
5. Check voltage of "THRTL POS SEN".

Throttle valve conditions	THRTL POS SEN
Completely closed (a)	0.15 - 0.85V
Partially open	Between (a) and (b)
Completely open (b)	3.5 - 4.7V

MTBL0230

Voltage measurement must be made with throttle position sensor installed in vehicle.

If NG, adjust closed throttle position switch. Refer to "Basic Inspection", EC-715.

OK or NG

OK	▶	GO TO 10.
NG	▶	Replace throttle position sensor.

9	CHECK THROTTLE POSITION SENSOR

Without CONSULT-II

1. Start engine and warm it up to normal operating temperature.
2. Stop engine (ignition switch OFF).
3. Turn ignition switch ON.
4. Check voltage between ECM terminal 23 (Throttle position sensor signal) and ground.
   Voltage measurement must be made with throttle position sensor installed in vehicle.

Throttle valve conditions	Voltage
Completely closed (a)	0.15 - 0.85V
Partially open	Between (a) and (b)
Completely open (b)	3.5 - 4.7V

MTBL0231

If NG, adjust closed throttle position switch. Refer to "Basic Inspection", EC-715.

OK or NG

OK	▶	GO TO 10.
NG	▶	Replace throttle position sensor.

10	CHECK INTERMITTENT INCIDENT
Refer to "TROUBLE DIAGNOSIS FOR INTERMITTENT INCIDENT", EC-753.	
▶	**INSPECTION END**

System Description

NEEC0790

These circuit lines are used to control the smooth shifting up and down of A/T during the hard acceleration/deceleration.
Voltage signals are exchanged between ECM and TCM (Transmission Control Module).

ECM Terminals and Reference Value

NEEC0791

Specification data are reference values and are measured between each terminal and ground.

CAUTION:
Do not use ECM ground terminals when measuring input/output voltage. Doing so may result in damage to the ECM's transistor. Use a ground other than the ECM terminals, such as the ground.

TERMINAL NO.	WIRE COLOR	ITEM	CONDITION	DATA (DC Voltage)
26	PU/W	A/T signal No. 1	**[Ignition switch "ON"]** **[Engine is running]** ● Idle speed	6 - 8V
27	P/B	A/T signal No. 2	**[Ignition switch "ON"]** **[Engine is running]** ● Idle speed	6 - 8V
35	G/R	A/T signal No. 3	**[Ignition switch "ON"]**	0V

On Board Diagnosis Logic

NEEC0792

Malfunction is detected when ECM receives incorrect voltage from TCM (Transmission Control Module) continuously.

POSSIBLE CAUSE

NEEC0792S01

- Harness or connectors
  [The circuit between ECM and TCM (Transmission Control Module) is open or shorted.]

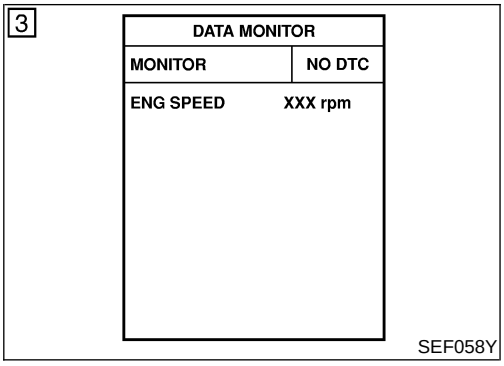

DTC Confirmation Procedure

=NEEC0793

NOTE:

If “DTC Confirmation Procedure” has been previously conducted, always turn ignition switch OFF and wait at least 5 seconds before conducting the next test.

With CONSULT-II

1) Turn ignition switch ON.
2) Select “DATA MONITOR” mode with CONSULT-II.
3) Start engine, and rev engine more than 1,000 rpm once, then let it idle for more than 40 seconds.
4) If DTC is detected, go to “Diagnostic Procedure”, EC-1064.

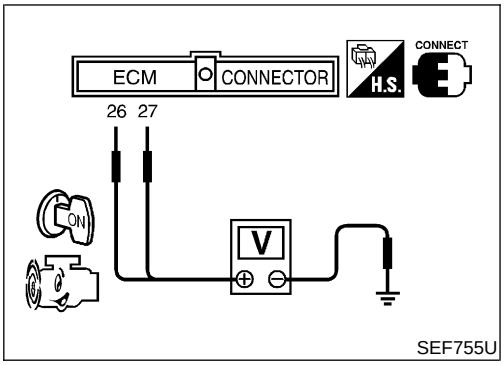

Overall Function Check

NEEC0794

Use this procedure to check the overall function of the A/T control circuit. During this check, a DTC might not be confirmed.

Without CONSULT-II

1) Start engine.
2) Check voltage between
   ECM terminal 26 and ground.
   ECM terminal 27 and ground.
   Voltage: 6 - 8V
3) If NG, go to “Diagnostic Procedure”, EC-1064.

Wiring Diagram

NEEC0795

EC-AT/C-01

: Detectable line for DTC
: Non-detectable line for DTC

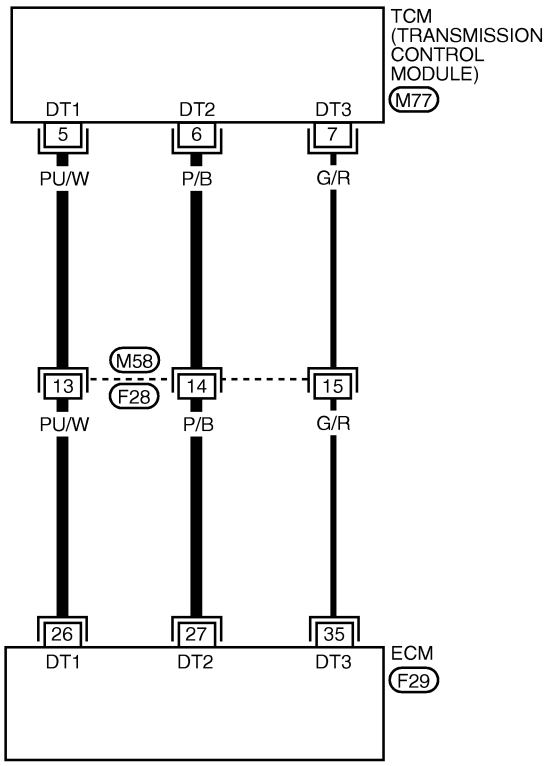

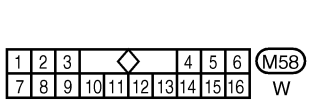

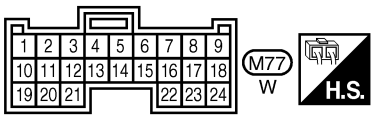

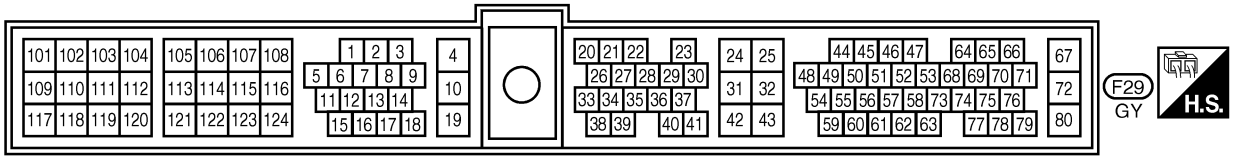

AEC965A

Diagnostic Procedure

NEEC0796

1	CHECK A/T CONTROL INPUT SIGNAL CIRCUIT FOR OPEN

1. Turn ignition switch OFF.
2. Disconnect ECM harness connector and TCM (Transmission Control Module) harness connector.

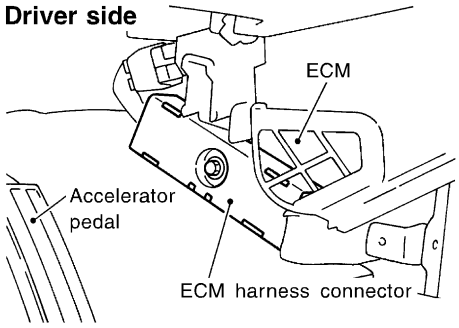

SEF324V

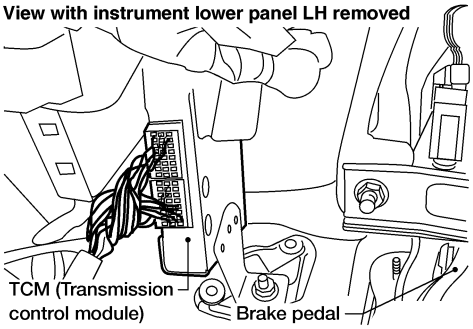

AEC655A

3. Check harness continuity between ECM terminal 26 and terminal 5, ECM terminal 27 and terminal 6, ECM terminal 35 and terminal 7.
   Refer to Wiring Diagram.
   Continuity should exist.

OK or NG

OK	▶	GO TO 3.
NG	▶	GO TO 2.

2	DETECT MALFUNCTIONING PART

Check the following.
- Harness connectors M58, F28
- Harness for open or short between ECM and TCM (Transmission Control Module)

	▶	Repair harness or connectors.

3	CHECK A/T CONTROL INPUT SIGNAL CIRCUIT FOR SHORT

1. Check harness continuity between ECM terminal 26 and ground, ECM terminal 27 and ground, ECM terminal 35 and ground.
   Refer to Wiring Diagram.
   Continuity should not exist.
2. Also check harness for short to power.

OK or NG

OK	▶	GO TO 5.
NG	▶	GO TO 4.

4	DETECT MALFUNCTIONING PART
Check the harness for open or short between ECM and TCM (Transmission Control Module).	
▶	Repair open circuit or short to ground or short to power in harness.

5	CHECK INTERMITTENT INCIDENT
Refer to "TROUBLE DIAGNOSIS FOR INTERMITTENT INCIDENT", EC-753.	
▶	**INSPECTION END**

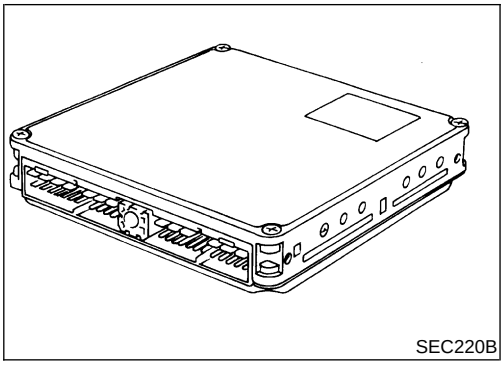

SEC220B

Component Description

NEEC0797

The ECM consists of a microcomputer and connectors for signal input and output and for power supply. The unit controls the engine.

On Board Diagnosis Logic

NEEC0798

Malfunction is detected when ECM calculation function is malfunctioning.

POSSIBLE CAUSE

NEEC0798S01

- ECM

DTC Confirmation Procedure

NEEC0799

NOTE:

If “DTC Confirmation Procedure” has been previously conducted, always turn ignition switch OFF and wait at least 5 seconds before conducting the next test.

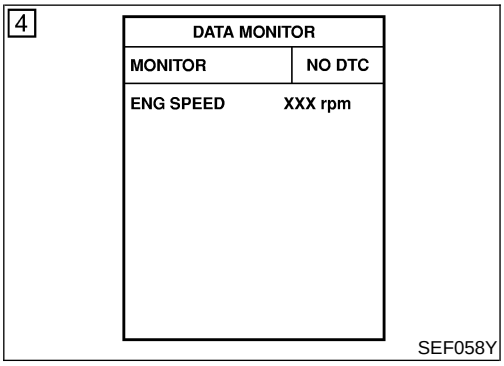

SEF058Y

With CONSULT-II

1) Turn ignition switch ON.
2) Select “DATA MONITOR” mode with CONSULT-II.
3) Start engine.
4) Run engine for at least 2 seconds at idle speed.
5) If 1st trip DTC is detected, go to “Diagnostic Procedure”, EC-1067.

With GST

Follow the procedure “With CONSULT-II”.

Diagnostic Procedure

NEEC0800

1	INSPECTION START	
With CONSULT-II 1. Turn ignition switch ON. 2. Select “SELF DIAG RESULTS” mode with CONSULT-II. 3. Touch “ERASE”. 4. **Perform “DTC Confirmation Procedure”.** See EC-1066. 5. Is the 1st trip DTC P0605 displayed again?		
With GST 1. Turn ignition switch ON. 2. Select MODE 4 with GST. 3. Touch “ERASE”. 4. **Perform “DTC Confirmation Procedure”.** See EC-1066. 5. Is the 1st trip DTC P0605 displayed again?		
Yes or No		
Yes	▶	Replace ECM.
No	▶	**INSPECTION END**

On Board Diagnosis Logic

NEEC0986

Engine coolant temperature has not risen enough to open the thermostat even though the engine has run long enough.
This is due to a leak in the seal or the thermostat open stuck.
Malfunction is detected when the engine coolant temperature does not reach to specified temperature even though the engine has run long enough.

POSSIBLE CAUSE

NEEC0986S01

- Thermostat function
- Leakage from sealing portion of thermostat
- Engine coolant temperature sensor

DTC Confirmation Procedure

NEEC0988

NOTE:
If "DTC Confirmation Procedure" has been previously conducted, always turn ignition switch "OFF" and wait at least 5 seconds before conducting the next test.

TESTING CONDITION:

- **For best results, perform at ambient temperature of –10°C (14°F) or higher.**
- **For best results, perform at engine coolant temperature of –10°C (14°F) to 70°C (158°F).**

WITH CONSULT-II

NEEC0988S01

1) Replace thermostat with new one. Refer to ***LC-31***, "Thermostat". Use only a genuine NISSAN thermostat as a replacement. If an incorrect thermostat is used, the MIL may come on.
2) Turn ignition switch "ON".
3) Select "COOLAN TEMP/S" in "DATA MONITOR" mode with CONSULT-II.
4) Check that the "COOLAN TEMP/S" is above 70°C (158°F).
   If it is below 70°C (158°F), go to following step.
   If it is above 70°C (158°F), stop engine and cool down the engine to less than 70°C (158°F), then retry from step 1.
5) Drive vehicle for 10 consecutive minutes under the following conditions.

VHCL SPEED SE	80 - 120 km/h (50 - 75 MPH)

   If 1st trip DTC is detected, go to "Diagnostic Procedure", EC-618.

WITH GST

NEEC0988S02

1) Follow the prodedure "WITH CONSULT-II" above.

Diagnostic Procedure

NEEC0989

1	CHECK ENGINE COOLANT TEMPERATURE SENSOR

1. Turn ignition switch OFF.
2. Remove engine coolant temperature sensor.
3. Check resistance between engine coolant temperature sensor terminals under the following conditions.

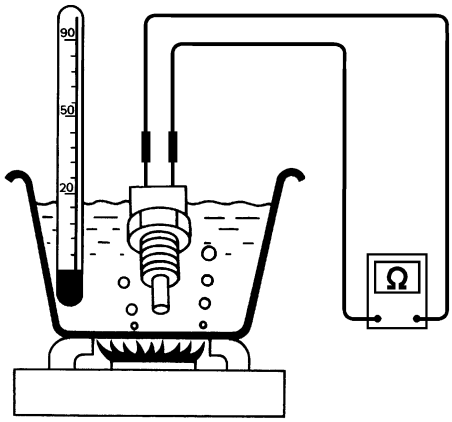

<Reference data>

Temperature °C (°F)	Resistance kΩ
20 (68)	2.1 - 2.9
50 (122)	0.68 - 1.00
90 (194)	0.236 - 0.260

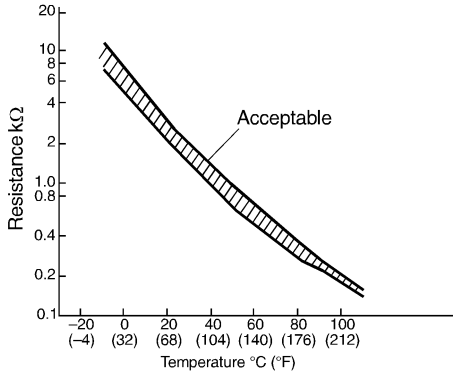

SEF304X

OK or NG

OK	▶	**INSPECTION END**
NG	▶	Replace engine coolant temperature sensor.

On Board Diagnosis Logic

NEEC0808

★ The closed loop control has the one trip detection logic.
Malfunction is detected when the closed loop control function for right bank does not operate even when vehicle is driving in the specified condition, the closed loop control function for left bank does not operate even when vehicle is driving in the specified condition.

POSSIBLE CAUSE

NEEC0808S01

- The heated oxygen sensor 1 (front) circuit is open or shorted.
- Heated oxygen sensor 1 (front)
- Heated oxygen sensor 1 heater (front)

DTC Confirmation Procedure

NEEC0809

CAUTION:
Always drive vehicle at a safe speed.

NOTE:
If “DTC Confirmation Procedure” has been previously conducted, always turn ignition switch OFF and wait at least 5 seconds before conducting the next test.

TESTING CONDITION:

- **Never raise engine speed above 3,200 rpm during the “DTC Confirmation Procedure”. If the engine speed limit is exceeded, retry the procedure from step 2.**
- **Before performing the following procedure, confirm that battery voltage is more than 11V at idle.**

3

DATA MONITOR	
MONITOR	NO DTC
ENG SPEED	XXX rpm
COOLAN TEMP/S	XXX °C
HO2S1 (B1)	XXX V
HO2S2 (B2)	XXX V

SEF967Y

With CONSULT-II

1) Start engine and warm it up to normal operating temperature.
2) Select “DATA MONITOR” mode with CONSULT-II.
3) Hold engine speed at 2,000 rpm and check one of the following.

- “HO2S1 (B1)/(B2)” voltage should go above 0.70V at least once.
- “HO2S1 (B1)/(B2)” voltage should go below 0.21V at least once.

If the check result is NG, perform “Diagnosis Procedure”, EC-1071.

If the check result is OK, perform the following step.

4) Let engine idle at least 5 minutes.
5) Maintain the following condition at least 50 consecutive seconds.

B/FUEL SCHDL	3.3 msec or more
ENG SPEED	1,600 rpm or more
Selector lever	Suitable position
VHCL SPEED SE	More than 71 km/h (44 MPH)

During this test, P0130 and/or P0150 may be displayed on CONSULT-II screen.

6) If DTC is detected, go to "Diagnostic Procedure", EC-1071.

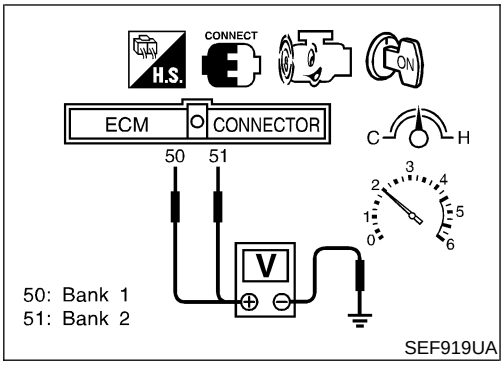

Overall Function Check

NEEC0810

Use this procedure to check the overall function of the closed loop control. During this check, a DTC might not be confirmed.

Without CONSULT-II

1) Start engine and warm it up to normal operating temperature.
2) Set voltmeter probes between ECM terminal 50 [heated oxygen sensor 1 (front) (bank 1) signal] or 51 [heated oxygen sensor 1 (front) (bank 2) signal] and engine ground.
3) Check the following with engine speed held at 2,000 rpm constant under no-load.

- The voltage should go above 0.70V at least once.
- The voltage should go below 0.21V at least once.

4) If NG, go to "Diagnostic Procedure", EC-1071.

Diagnostic Procedure

NEEC0811

Perform trouble diagnosis for "DTC P0133, P0153", EC-828.

System Description

NEEC0901

COOLING FAN CONTROL

NEEC0901S01

Sensor	Input Signal to ECM	ECM function	Actuator
Vehicle speed sensor	Vehicle speed	Cooling fan control	Cooling fan relay(s)
Engine coolant temperature sensor	Engine coolant temperature		
Ignition switch	Start signal		
Camshaft position sensor	Engine speed		

The ECM controls the cooling fan corresponding to the signals sent from the vehicle speed and engine coolant temperature. The control system has 2-step control [ON/OFF].

OPERATION

NEEC0901S02

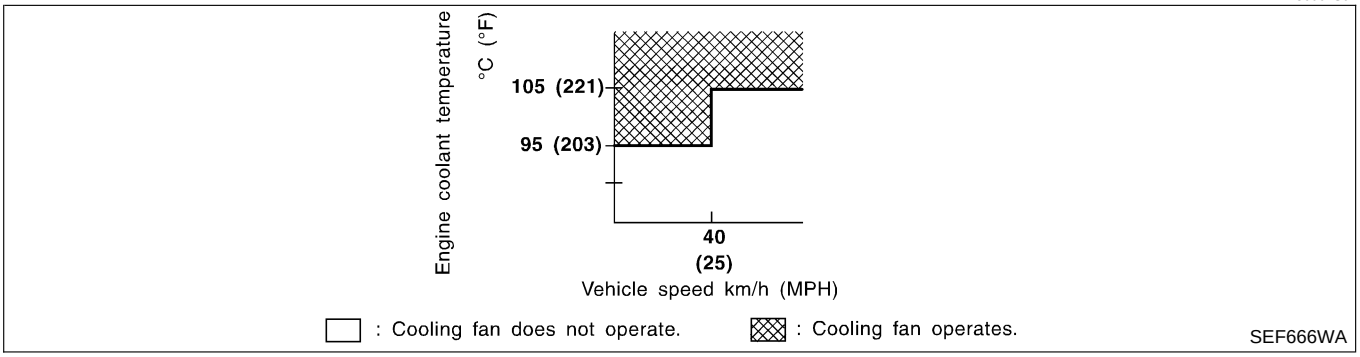

CONSULT-II Reference Value in Data Monitor Mode

NEEC0902

Specification data are reference values.

MONITOR ITEM	CONDITION		SPECIFICATION
COOLING FAN	● Engine: Idling, after warming up ● Air conditioner switch: OFF	Engine coolant temperature is 94°C (201°F) or less.	OFF
		Engine coolant temperature is 95°C (203°F) or more.	ON

ECM Terminals and Reference Value

NEEC0903

Specification data are reference values and are measured between each terminal and ground.

CAUTION:

Do not use ECM ground terminals when measuring input/output voltage. Doing so may result in damage to the ECM's transistor. Use a ground other than the ECM terminals, such as the ground.

TERMINAL NO.	WIRE COLOR	ITEM	CONDITION	DATA (DC Voltage)
36	LG/R	Cooling fan relay	**[Engine is running]** ● Cooling fan is not operating	BATTERY VOLTAGE (11 - 14V)
			[Engine is running] ● Cooling fan is operating	0 - 0.6V

On Board Diagnosis Logic

NEEC0904

If the cooling fan or another component in the cooling system malfunctions, engine coolant temperature will rise. When the engine coolant temperature reaches an abnormally high temperature condition, a malfunction is indicated.
Malfunction is detected when engine coolant temperature reaches an abnormally high temperature.

CAUTION:

When a malfunction is indicated be sure to replace the coolant, follow the procedure in *MA-27*, "Changing Engine Coolant". Also, replace the engine oil.

1) **Fill radiator with coolant up to specified level with a filling speed of 2 liters per minute like pouring coolant by kettle. Be sure to use coolant with the proper mixture ratio. Refer to *MA-15*, "Anti-freeze Coolant Mixture Ratio".**
2) **After refilling coolant, run engine to ensure that no water-flow noise is emitted.**

POSSIBLE CAUSE

NEEC0904S01

- Harness or connectors
  (The cooling fan circuit is open or shorted.)
- Cooling fan
- Radiator hose
- Radiator
- Radiator cap
- Water pump
- Thermostat

For more information, refer to "MAIN 12 CAUSES OF OVERHEATING", EC-1083.

1

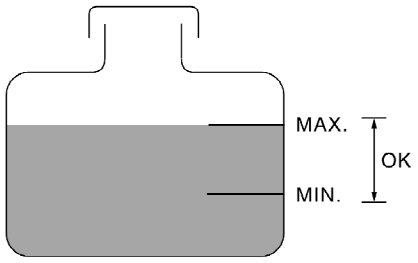

SEF621W

4

ACTIVE TEST	
COOLING FAN	OFF
MONITOR	
COOLAN TEMP/S	XXX °C

SEF376X

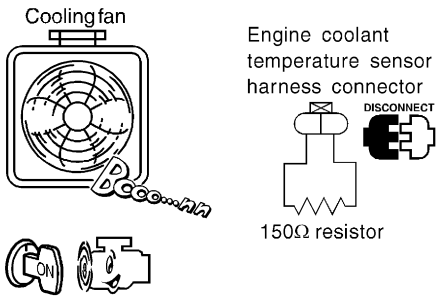

SEF085T

Overall Function Check

NEEC0905

Use this procedure to check the overall function of the cooling fan. During this check, a DTC might not be confirmed.

WARNING:

Never remove the radiator cap when the engine is hot. Serious burns could be caused by high pressure fluid escaping from the radiator.

Wrap a thick cloth around cap. Carefully remove the cap by turning it a quarter turn to allow built-up pressure to escape. Then turn the cap all the way off.

With CONSULT-II

1) Check the coolant level in the reservoir tank and radiator.
Allow engine to cool before checking coolant level.
If the coolant level in the reservoir tank and/or radiator is below the proper range, skip the following steps and go to "Diagnostic Procedure", EC-1076.
2) Confirm whether customer filled the coolant or not. If customer filled the coolant, skip the following steps and go to "Diagnostic Procedure", EC-1076.
3) Turn ignition switch ON.
4) Perform "COOLING FAN" in "ACTIVE TEST" mode with CONSULT-II.
5) Make sure that cooling fan operates.
6) If NG, go to "Diagnostic Procedure", EC-1076.

Without CONSULT-II

1) Check the coolant level in the reservoir tank and radiator.
Allow engine to cool before checking coolant level.
If the coolant level in the reservoir tank and/or radiator is below the proper range, skip the following steps and go to "Diagnostic Procedure", EC-1076.
2) Confirm whether customer filled the coolant or not. If customer filled the coolant, skip the following steps and go to "Diagnostic Procedure", EC-1076.
3) Turn ignition switch OFF.
4) Disconnect engine coolant temperature sensor harness connector.
5) Connect 150Ω resistor to engine coolant temperature sensor harness connector.
6) Start engine and make sure that cooling fan operates.
Be careful not to overheat engine.
7) If NG, go to "Diagnostic Procedure", EC-1076.

Wiring Diagram

NEEC0906

EC-COOL/F-01

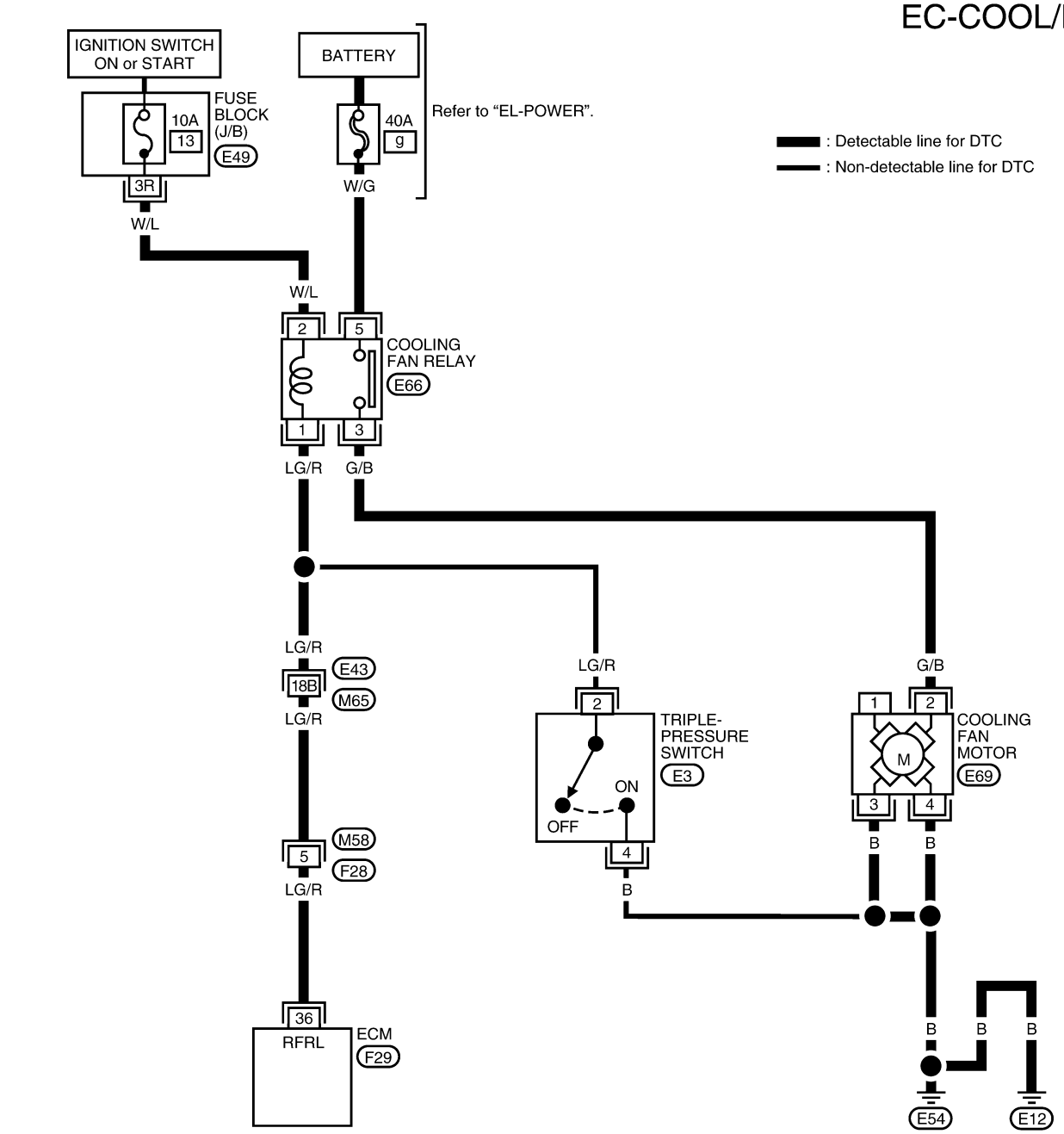

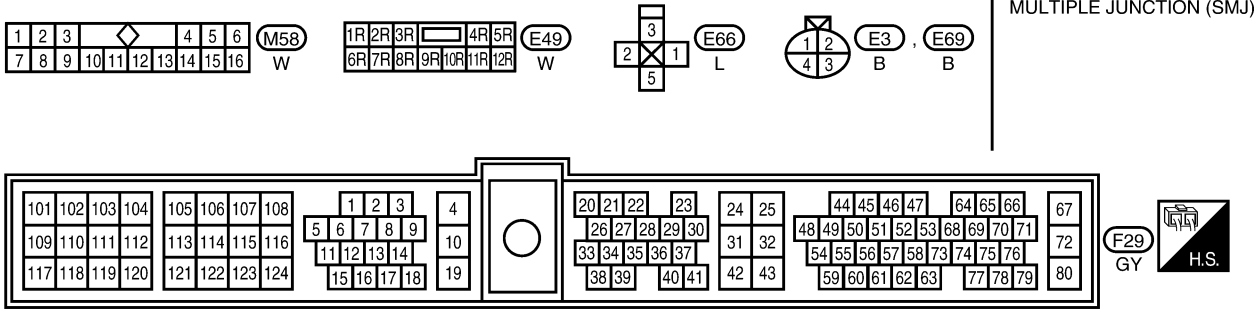

LEC504

Diagnostic Procedure

NEEC0907

1	INSPECTION START
Do you have CONSULT-II?	
Yes or No	
Yes ▶	GO TO 2.
No ▶	GO TO 3.

2	CHECK COOLING FAN OPERATION

With CONSULT-II

1. Turn ignition switch ON.
2. Perform “COOLING FAN” in “ACTIVE TEST” mode with CONSULT-II.

ACTIVE TEST	
COOLING FAN	OFF
MONITOR	
COOLAN TEMP/S	XXX °C

SEF376X

Does cooling fan rotate?

Yes or No

Yes ▶	GO TO 4.
No ▶	GO TO 9.

3	CHECK COOLING FAN OPERATION

Without CONSULT-II

1. Turn ignition switch OFF.
2. Disconnect engine coolant temperature sensor harness connector.
3. Connect 150Ω resistor to engine coolant temperature sensor harness connector.
4. Start engine and make sure that cooling fan operates.

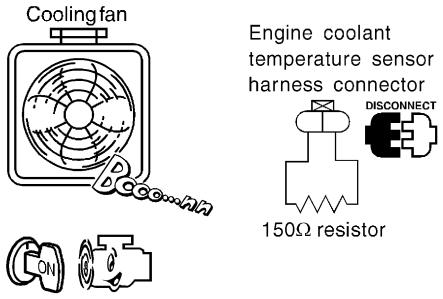

SEF085T

OK or NG

OK ▶	GO TO 4.
NG ▶	GO TO 9.

4	CHECK COOLING SYSTEM FOR LEAK

Apply pressure to the cooling system with a tester, and check if the pressure drops.

CAUTION:

Higher than the specified pressure may cause radiator damage.

Testing pressure: 157 kPa (1.6 kg/cm^2, 23 psi)

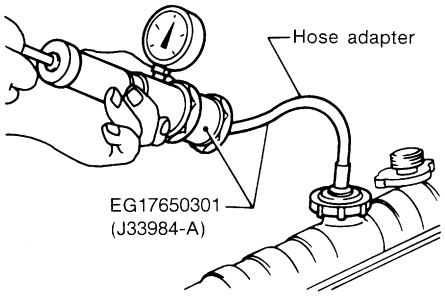

SLC754A

Pressure should not drop.

OK or NG

OK	▶	GO TO 5.
NG	▶	**Check the following for leak** ● Hose ● Radiator ● Water pump Refer to ***LC-29***, "Water Pump".

5	CHECK RADIATOR CAP

Apply pressure to cap with a tester and check radiator cap relief pressure.

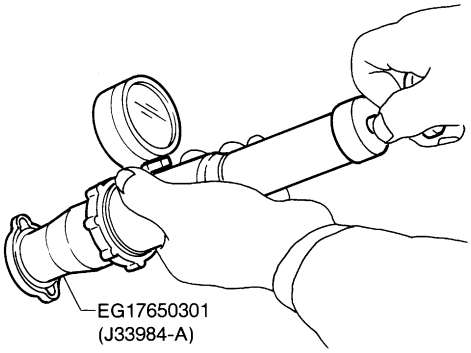

SLC755A

Radiator cap relief pressure:
59 - 98 kPa (0.6 - 1.0 kg/cm^2, 9 - 14 psi)

OK or NG

OK	▶	GO TO 6.
NG	▶	Replace radiator cap.

Diagnostic Procedure (Cont'd)

6	CHECK THERMOSTAT

1. Check valve seating condition at normal room temperatures.
   It should seat tightly.
2. Check valve opening temperature and valve lift.

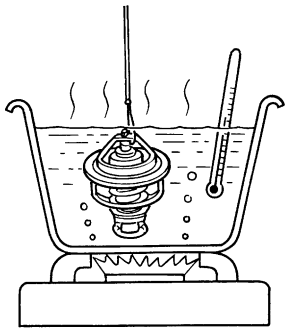

SLC343

Valve opening temperature:
82°C (180°F) [standard]
Valve lift:
More than 10 mm/95°C (0.39 in/203°F)

3. Check if valve is closed at 5°C (9°F) below valve opening temperature.

For details, refer to ***LC-30***, "Thermostat".

OK or NG

OK	▶	GO TO 7.
NG	▶	Replace thermostat

7	CHECK ENGINE COOLANT TEMPERATURE SENSOR

Check resistance as shown in the figure.

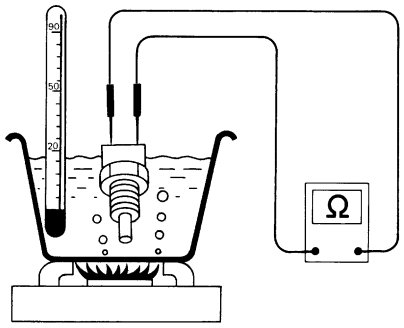

SEF152P

<Reference data>

Temperature °C (°F)	Resistance kΩ
20 (68)	2.1 - 2.9
50 (122)	0.68 - 1.00
90 (194)	0.236 - 0.260

MTBL0229

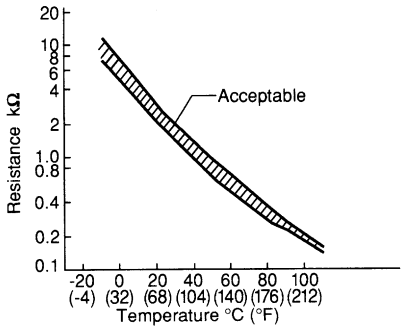

SEF012P

OK or NG

OK	▶	GO TO 8.
NG	▶	Replace engine coolant temperature sensor.

8	CHECK MAIN 12 CAUSES

If the cause cannot be isolated, go to "MAIN 12 CAUSES OF OVERHEATING", EC-1083.

▶ **INSPECTION END**

Diagnostic Procedure (Cont'd)

9	CHECK COOLING FAN RELAY POWER SUPPLY CIRCUIT

1. Turn ignition switch OFF.
2. Disconnect cooling fan relay.

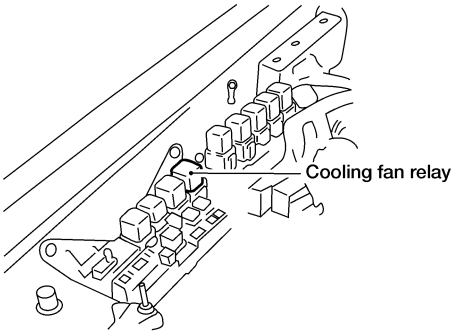

AEC932A

3. Turn ignition switch ON.
4. Check voltage between terminals 2, 5 and ground with CONSULT-II or tester.

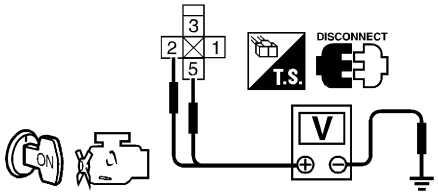

SEF667W

Voltage: Battery voltage

OK or NG

OK	▶	GO TO 11.
NG	▶	GO TO 10.

10	DETECT MALFUNCTIONING PART

Check the following.
- Fuse block (J/B) connector E49
- 10A fuse
- 40A fusible link
- Harness for open or short between cooling fan relay and fuse
- Harness for open or short between cooling fan relay and battery

	▶	Repair open circuit or short to ground or short to power in harness or connectors.

11	CHECK COOLING FAN MOTOR POWER SUPPLY AND GROUND CIRCUIT FOR OPEN AND SHORT

1. Turn ignition switch OFF.
2. Disconnect cooling fan motor harness connector.

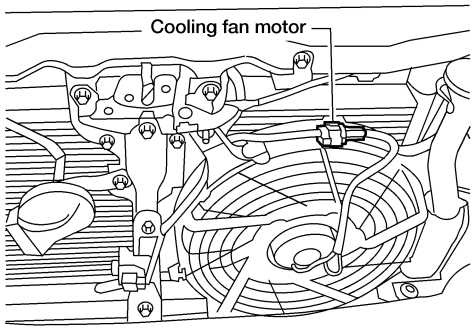

AEC931A

3. Check harness continuity between relay terminal 3 and motor terminal 2, motor terminals 3, 4 and body ground. Refer to Wiring Diagram.
   Continuity should exist.
4. Also check harness for short to ground and short to power.

OK or NG

OK	▶	GO TO 12.
NG	▶	Repair open circuit or short to ground or short to power in harness or connectors.

12	CHECK COOLING FAN RELAY OUTPUT SIGNAL CIRCUIT FOR OPEN AND SHORT

1. Disconnect ECM harness connector.
2. Check harness continuity between ECM terminal 36 and relay terminal 1. Refer to Wiring Diagram.
   Continuity should exist.
3. Also check harness for short to ground and short to power.

OK or NG

OK	▶	GO TO 14.
NG	▶	GO TO 13.

13	DETECT MALFUNCTIONING PART

Check the following.
- Harness connectors E43, M65
- Harness connectors M58, F28
- Harness for open or short between cooling fan relay and ECM

	▶	Repair open circuit or short to ground or short to power in harness or connectors.

Diagnostic Procedure (Cont'd)

14	CHECK COOLING FAN RELAY

Check continuity between terminals 3 and 5.

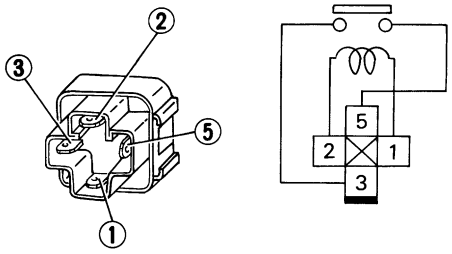

SEF511P

Conditions	Continuity
12V direct current supply between terminals 1 and 2	Yes
No current supply	No

MTBL0252

OK or NG

OK	▶	GO TO 15.
NG	▶	Replace cooling fan relay.

15	CHECK COOLING FAN MOTOR

1. Disconnect cooling fan motor harness connector.
2. Supply cooling fan motor terminals with battery voltage and check operation.

	Terminals	
	(+)	(–)
Cooling fan motor	2	3, 4

MTBL0253

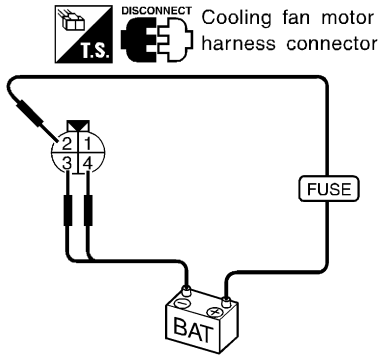

SEF670W

Cooling fan motor should operate.

OK or NG

OK	▶	GO TO 16.
NG	▶	Replace cooling fan motor.

16	CHECK INTERMITTENT INCIDENT

Perform "TROUBLE DIAGNOSIS FOR INTERMITTENT INCIDENT", EC-753.

	▶	**INSPECTION END**

Main 12 Causes of Overheating

NEEC0908

Engine	Step	Inspection item	Equipment	Standard	Reference page
OFF	1	• Blocked radiator • Blocked condenser • Blocked radiator grille • Blocked bumper	• Visual	No blocking	—
	2	• Coolant mixture	• Coolant tester	50 - 50% coolant mixture	See ***MA-13***, “RECOMMENDED FLUIDS AND LUBRICANTS”.
	3	• Coolant level	• Visual	Coolant up to MAX level in reservoir tank and radiator filler neck	See ***MA-27***, “Changing Engine Coolant”.
	4	• Radiator cap	• Pressure tester	59 - 98 kPa (0.6 - 1.0 kg/cm^2, 9 - 14 psi) (Limit)	See ***LC-25***, “System Check”.
ON*2	5	• Coolant leaks	• Visual	No leaks	See ***LC-25***, “System Check”.
ON*2	6	• Thermostat	• Touch the upper and lower radiator hoses	Both hoses should be hot	See ***LC-30***, “Thermostat” and ***LC-32***, “Radiator”.
ON*1	7	• Cooling fan	• CONSULT-II	Operating	See “TROUBLE DIAGNOSIS FOR OVERHEAT” (EC-1072).
OFF	8	• Combustion gas leak	• Color checker chemical tester 4 Gas analyzer	Negative	—
ON*3	9	• Coolant temperature gauge	• Visual	Gauge less than 3/4 when driving	—
		• Coolant overflow to reservoir tank	• Visual	No overflow during driving and idling	See ***MA-27***, “Changing Engine Coolant”.
OFF*4	10	• Coolant return from reservoir tank to radiator	• Visual	Should be initial level in reservoir tank	See ***MA-27***, “ENGINE MAINTENANCE”.
OFF	11	• Cylinder head	• Straight gauge feeler gauge	0.1 mm (0.004 in) Maximum distortion (warping)	See ***EM-96***, “Inspection”.
	12	• Cylinder block and pistons	• Visual	No scuffing on cylinder walls or piston	See ***EM-116***, “Inspection”.

*1: Turn the ignition switch ON.
*2: Engine running at 3,000 rpm for 10 minutes.
*3: Drive at 90 km/h (55 MPH) for 30 minutes and then let idle for 10 minutes.
*4: After 60 minutes of cool down time.
For more information, refer to ***LC-35***, “OVERHEATING CAUSE ANALYSIS”.

On Board Diagnosis Logic

NEEC1521

If the cooling fan or another component in the cooling system malfunctions, engine coolant temperature will rise. When the engine coolant temperature reaches an abnormally high temperature condition, a malfunction is indicated.
Malfunction is detected when engine coolant temperature reaches an abnormally high temperature.

CAUTION:

When a malfunction is indicated be sure to replace the coolant, follow the procedure in *MA-27*, "Changing Engine Coolant". Also, replace the engine oil.

1) **Fill radiator with coolant up to specified level with a filling speed of 2 liters per minute like pouring coolant by kettle. Be sure to use coolant with the proper mixture ratio. Refer to *MA-15*, "Anti-freeze Coolant Mixture Ratio".**
2) **After refilling coolant, run engine to ensure that no water-flow noise is emitted.**

POSSIBLE CAUSE

NEEC1521S01

- Cooling fan (Crankshaft driven)
- Radiator hose
- Radiator
- Radiator cap
- Water pump
- Thermostat

For more information, refer to "MAIN 12 CAUSES OF OVERHEATING", EC-1088.

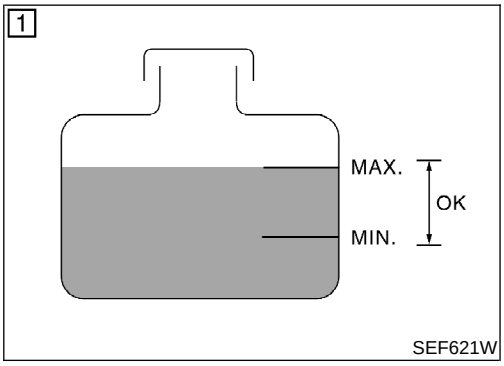

Overall Function Check

NEEC1522

Use this procedure to check the overall function of the cooling fan. During this check, a DTC might not be confirmed.

WARNING:

Never remove the radiator cap when the engine is hot. Serious burns could be caused by high pressure fluid escaping from the radiator.
Wrap a thick cloth around cap. Carefully remove the cap by turning it a quarter turn to allow built-up pressure to escape. Then turn the cap all the way off.

With CONSULT-II

1) Check the coolant level in the reservoir tank and radiator.
Allow engine to cool before checking coolant level.
If the coolant level in the reservoir tank and/or radiator is below the proper range, skip the following steps and go to "Diagnostic Procedure", EC-1085.
2) Confirm whether customer filled the coolant or not. If customer filled the coolant, skip the following steps and go to "Diagnostic Procedure", EC-1085.
3) Start engine.
4) Make sure that cooling fan (crankshaft driven) operates.
5) If NG, go to "Diagnostic Procedure", EC-1085.

Without CONSULT-II

1) Check the coolant level in the reservoir tank and radiator.
Allow engine to cool before checking coolant level.
If the coolant level in the reservoir tank and/or radiator is below the proper range, skip the following steps and go to "Diagnostic Procedure", EC-1085.
2) Confirm whether customer filled the coolant or not. If customer filled the coolant, skip the following steps and go to "Diagnostic Procedure", EC-1085.
3) Start engine and make sure that cooling fan (crankshaft driven) operates.
Be careful not to overheat engine.
4) If NG, go to "Diagnostic Procedure", EC-1085.

Diagnostic Procedure

NEEC1524

1	CHECK COOLING FAN (CRANKSHAFT DRIVEN) OPERATION	
Start engine and make sure that cooling fan (crankshaft driven) operates.		
OK or NG		
OK	▶	GO TO 2.
NG	▶	Check cooling fan (Crankshaft driven). Refer to ***LC-33***, "Cooling Fan".

2	CHECK COOLING SYSTEM FOR LEAK	
Apply pressure to the cooling system with a tester, and check if the pressure drops. **CAUTION:** **Higher than the specified pressure may cause radiator damage.** **Testing pressure: 157 kPa (1.6 kg/cm^2, 23 psi)** 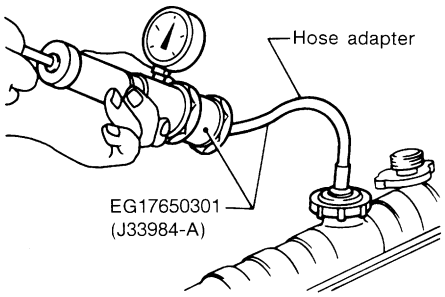 SLC754A **Pressure should not drop.**		
OK or NG		
OK	▶	GO TO 3.
NG	▶	**Check the following for leak** ● Hose ● Radiator ● Water pump Refer to ***LC-29***, "Water Pump".

Diagnostic Procedure (Cont'd)

3	CHECK RADIATOR CAP

Apply pressure to cap with a tester and check radiator cap relief pressure.

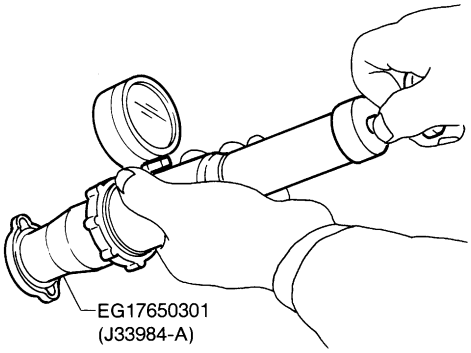

SLC755A

Radiator cap relief pressure:
59 - 98 kPa (0.6 - 1.0 kg/cm^2, 9 - 14 psi)

OK or NG

OK	▶	GO TO 4.
NG	▶	Replace radiator cap.

4	CHECK THERMOSTAT

1. Check valve seating condition at normal room temperatures.
   It should seat tightly.
2. Check valve opening temperature and valve lift.

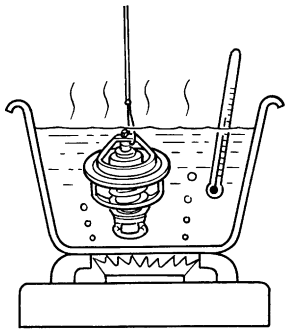

SLC343

Valve opening temperature:
82°C (180°F) [standard]
Valve lift:
More than 10 mm/95°C (0.39 in/203°F)

3. Check if valve is closed at 5°C (9°F) below valve opening temperature.

For details, refer to ***LC-30***, "Thermostat".

OK or NG

OK	▶	GO TO 5.
NG	▶	Replace thermostat

5	CHECK ENGINE COOLANT TEMPERATURE SENSOR

Check resistance as shown in the figure.

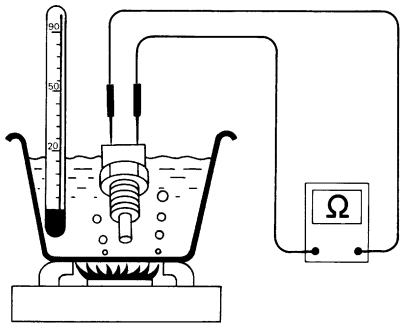

SEF152P

<Reference data>

Temperature °C (°F)	Resistance kΩ
20 (68)	2.1 - 2.9
50 (122)	0.68 - 1.00
90 (194)	0.236 - 0.260

MTBL0229

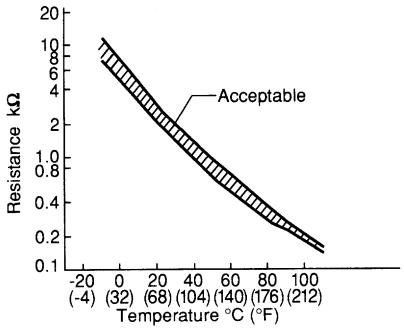

SEF012P

OK or NG

OK	▶	GO TO 6.
NG	▶	Replace engine coolant temperature sensor.

6	CHECK MAIN 12 CAUSES
If the cause cannot be isolated, go to "MAIN 12 CAUSES OF OVERHEATING", EC-1088.	
▶	**INSPECTION END**

Main 12 Causes of Overheating

NEEC1525

Engine	Step	Inspection item	Equipment	Standard	Reference page
OFF	1	• Blocked radiator • Blocked condenser • Blocked radiator grille • Blocked bumper	• Visual	No blocking	—
	2	• Coolant mixture	• Coolant tester	50 - 50% coolant mixture	See ***MA-13***, “RECOMMENDED FLUIDS AND LUBRICANTS”.
	3	• Coolant level	• Visual	Coolant up to MAX level in reservoir tank and radiator filler neck	See ***MA-27***, “Changing Engine Coolant”.
	4	• Radiator cap	• Pressure tester	59 - 98 kPa (0.6 - 1.0 kg/cm^2, 9 - 14 psi) (Limit)	See ***LC-25***, “System Check”.
ON*2	5	• Coolant leaks	• Visual	No leaks	See ***LC-25***, “System Check”.
ON*2	6	• Thermostat	• Touch the upper and lower radiator hoses	Both hoses should be hot	See ***LC-30***, “Thermostat” and ***LC-32***, “Radiator”.
ON*1	7	• Cooling fan (Crankshaft driven)	• Visual	Operating	See ***LC-33***, “Cooling Fan”.
OFF	8	• Combustion gas leak	• Color checker chemical tester 4 Gas analyzer	Negative	—
ON*3	9	• Coolant temperature gauge	• Visual	Gauge less than 3/4 when driving	—
		• Coolant overflow to reservoir tank	• Visual	No overflow during driving and idling	See ***MA-27***, “Changing Engine Coolant”.
OFF*4	10	• Coolant return from reservoir tank to radiator	• Visual	Should be initial level in reservoir tank	See ***MA-27***, “ENGINE MAINTENANCE”.
OFF	11	• Cylinder head	• Straight gauge feeler gauge	0.1 mm (0.004 in) Maximum distortion (warping)	See ***EM-96***, “Inspection”.
	12	• Cylinder block and pistons	• Visual	No scuffing on cylinder walls or piston	See ***EM-116***, “Inspection”.

*1: Turn the ignition switch ON.

*2: Engine running at 3,000 rpm for 10 minutes.

*3: Drive at 90 km/h (55 MPH) for 30 minutes and then let idle for 10 minutes.

*4: After 60 minutes of cool down time.

For more information, refer to ***LC-35***, “OVERHEATING CAUSE ANALYSIS”.

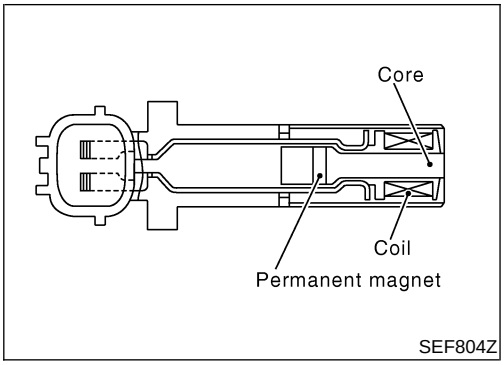

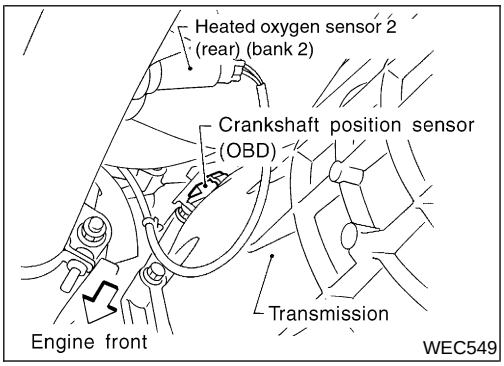

Component Description

NEEC0818

The crankshaft position sensor (OBD) is located on the transmission housing facing the gear teeth (cogs) of the flywheel or drive plate. It detects the fluctuation of the engine revolution.
The sensor consists of a permanent magnet, core and coil.
When the engine is running, the high and low parts of the teeth cause the gap with the sensor to change.
The changing gap causes the magnetic field near the sensor to change.
Due to the changing magnetic field, the voltage from the sensor changes.
The ECM receives the voltage signal and detects the fluctuation of the engine revolution.
This sensor is not used to control the engine system.
It is used only for the on board diagnosis.

ECM Terminals and Reference Value

NEEC0819

Specification data are reference values and are measured between each terminal and ground.

CAUTION:

Do not use ECM ground terminals when measuring input/output voltage. Doing so may result in damage to the ECM's transistor. Use a ground other than the ECM terminals, such as the ground.

TERMINAL NO.	WIRE COLOR	ITEM	CONDITION	DATA (AC Voltage)
47	L	Crankshaft position sensor (OBD)	**[Engine is running]** ● **Warm-up condition** ● Idle speed	1 - 2V (AC range) 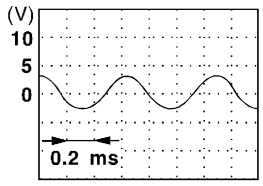 SEF690W
			[Engine is running] ● Engine speed is 2,000 rpm	3 - 4V (AC range) 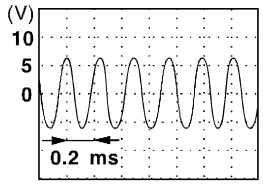 SEF691W

On Board Diagnosis Logic

NEEC0820

Malfunction is detected when a chipping of the flywheel or drive plate gear tooth (cog) is detected by the ECM.

POSSIBLE CAUSE

NEEC0820S01

- Harness or connectors
- Crankshaft position sensor (OBD)
- Drive plate/Flywheel

DTC Confirmation Procedure

NEEC0821

NOTE:

If “DTC Confirmation Procedure” has been previously conducted, always turn ignition switch OFF and wait at least 5 seconds before conducting the next test.

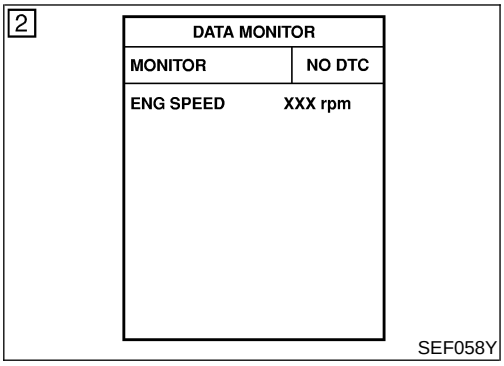

With CONSULT-II

1) Turn ignition switch ON and select “DATA MONITOR” mode with CONSULT-II.
2) Start engine and run it for at least 2 minutes at idle speed.
3) If 1st trip DTC is detected, go to “Diagnostic Procedure”, EC-1092.

With GST

Follow the procedure “With CONSULT-II”.

Wiring Diagram

NEEC0822

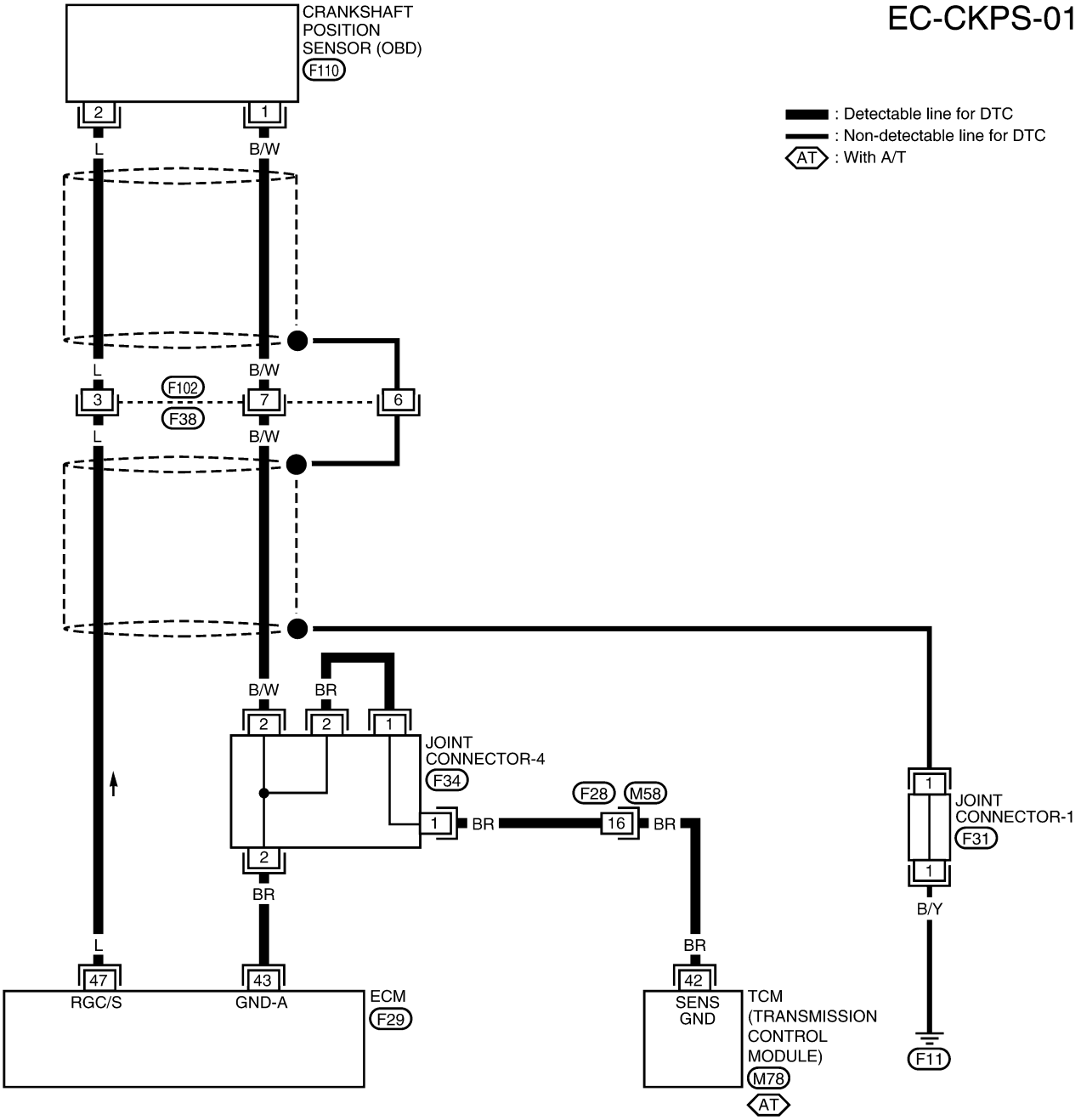

WEC799

Diagnostic Procedure

NEEC0823

1	RETIGHTEN GROUND SCREWS

1. Turn ignition switch OFF.
2. Loosen and retighten engine ground screws.

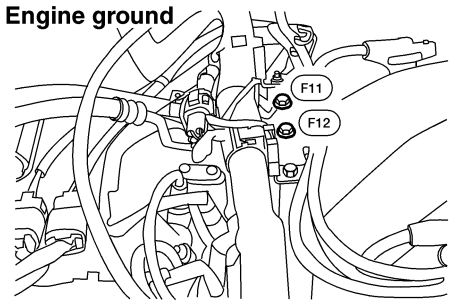

LEC518

▶ GO TO 2.

2	CHECK CKPS (OBD) INPUT SIGNAL CIRCUIT FOR OPEN AND SHORT

1. Disconnect crankshaft position sensor (OBD) and ECM harness connectors.

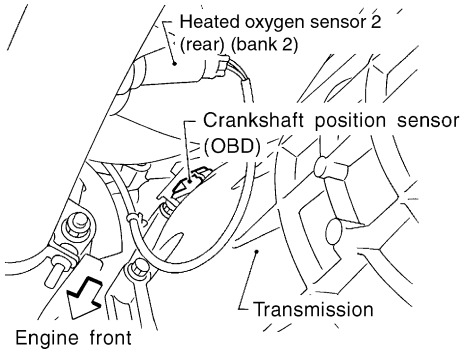

WEC549

2. Check continuity between ECM terminal 47 and sensor terminal 2.
   Continuity should exist.
3. Also check harness for short to ground and short to power.

OK or NG

OK	▶	GO TO 4.
NG	▶	GO TO 3.

3	DETECT MALFUNCTIONING PART

Check the following.
- Harness connectors F38, F102
- Harness for open or short between ECM and crankshaft position sensor (OBD)

▶ Repair open circuit or short to ground or short to power in harness or connectors.

4	CHECK CKPS (OBD) GROUND CIRCUIT FOR OPEN AND SHORT	
1. Reconnect ECM harness connectors. 2. Check harness continuity between CKPS (OBD) terminal 1 and engine ground. Refer to Wiring Diagram. **Continuity should exist.** 3. Also check harness for short to ground and short to power. **OK or NG**		
OK	▶	GO TO 6.
NG	▶	GO TO 5.

5	DETECT MALFUNCTIONING PART	
Check the following. ● Harness connectors F38, F102 ● Harness connectors F28, M58 ● Joint connector-4 ● Harness for open between crankshaft position sensor (OBD) and ECM ● Harness for open between crankshaft position sensor (OBD) and TCM (Transmission Control Module)		
	▶	Repair open circuit or short to ground or short to power in harness or connectors.

6	CHECK IMPROPER INSTALLATION	
1. Loosen and retighten the fixing bolt of the crankshaft position sensor (OBD). 2. Perform "DTC Confirmation Procedure", EC-1090 again. **Is a 1st trip DTC P1336 detected?**		
Yes	▶	GO TO 7.
No	▶	**INSPECTION END**

Diagnostic Procedure (Cont'd)

7	CHECK CRANKSHAFT POSITION SENSOR (OBD)

1. Disconnect crankshaft position sensor (OBD) harness connector.
2. Loosen the fixing bolt of the sensor.
3. Remove the sensor.
4. Visually check the sensor for chipping.

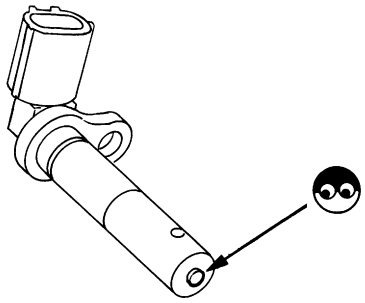

SEF960N

5. Check resistance as shown in the figure.

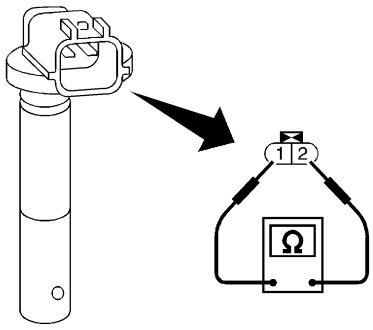

SEF504V

Resistance: Approximately 512 - 632Ω [at 20°C (68°F)]

OK or NG

OK	▶	GO TO 8.
NG	▶	Replace crankshaft position sensor (OBD).

8	CHECK CKPS (OBD) SHIELD CIRCUIT FOR OPEN AND SHORT

1. Disconnect harness connectors F38, F102.
2. Check harness continuity between harness connector F38 terminal 6 and engine ground.
   Continuity should exist.
3. Also check harness for short to power.

OK or NG

OK	▶	GO TO 10.
NG	▶	GO TO 9.

9	DETECT MALFUNCTIONING PART

Check the following.
- Harness connectors F38, F102
- Joint connector-1
- Harness for open between harness connector F38 and engine ground

	▶	Repair open circuit or short to power in harness or connectors.

10	CHECK GEAR TOOTH	
Visually check for chipping flywheel or drive plate gear tooth (cog).		
OK or NG		
OK	▶	GO TO 11.
NG	▶	Replace the flywheel or drive plate.

11	CHECK INTERMITTENT INCIDENT	
Refer to "TROUBLE DIAGNOSIS FOR INTERMITTENT INCIDENT", EC-753.		
	▶	**INSPECTION END**

On Board Diagnosis Logic

NEEC1046

NOTE:
If DTC P1440 is displayed with P1448, perform trouble diagnosis for DTC P1448 first. (See EC-1144.)

This diagnosis detects leaks in the EVAP purge line using of vapor pressure in the fuel tank.
The EVAP canister vent control valve is closed to shut the EVAP purge line. The vacuum cut valve bypass valve will then be opened to clear the line between the fuel tank and the EVAP canister purge volume control solenoid valve. The EVAP control system pressure sensor can now monitor the pressure inside the fuel tank.
If pressure increases, the PCM will check for leaks in the line between the vacuum cut valve and EVAP canister purge volume control solenoid valve.

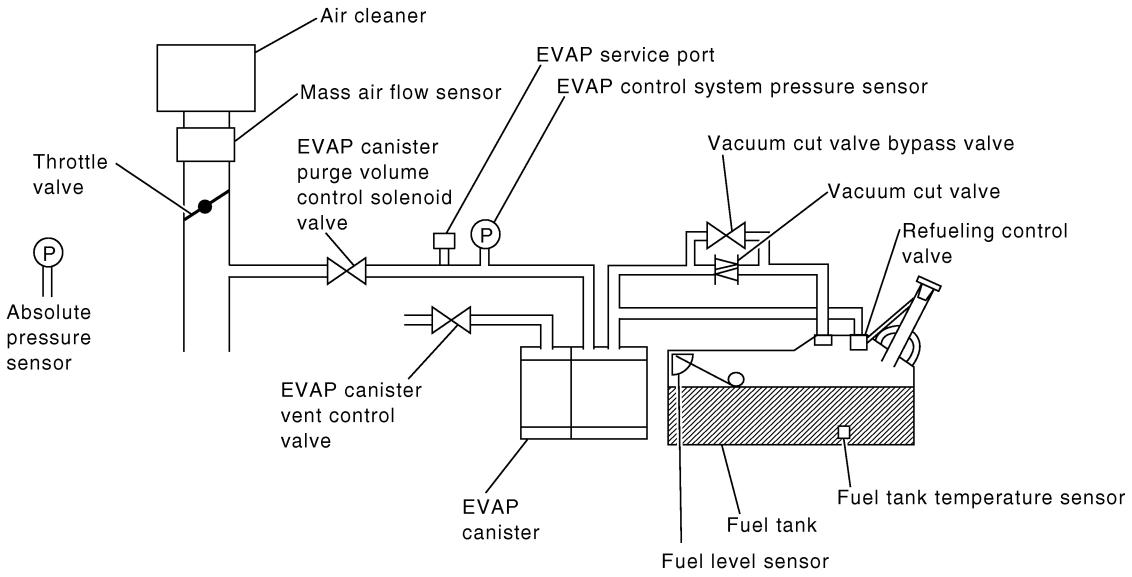

Malfunction is detected when EVAP control system has a leak, EVAP control system does not operate properly.

CAUTION:

- **Use only a genuine NISSAN fuel filler cap as a replacement. If an incorrect fuel filler cap is used, the MIL may come on.**
- **If the fuel filler cap is not tightened properly, the MIL may come on.**
- **Use only a genuine NISSAN rubber tube as a replacement.**

POSSIBLE CAUSE

NEEC1046S02

- Incorrect fuel tank vacuum relief valve
- Incorrect fuel filler cap used
- Fuel filler cap remains open or fails to close
- Foreign matter caught in fuel filler cap
- Leak is in line between intake manifold and EVAP canister purge volume control solenoid valve
- Foreign matter caught in EVAP canister vent control valve
- EVAP canister
- EVAP purge line (pipe and rubber tube) leaks
- EVAP purge line rubber tube bent

- Blocked or bent rubber tube to EVAP control system pressure sensor
- Loose or disconnected rubber tube
- EVAP canister vent control valve and the circuit
- EVAP canister purge volume control solenoid valve
- Absolute pressure sensor
- Fuel tank temperature sensor
- O-ring of EVAP canister vent control valve is missing or damaged
- Water separator
- EVAP canister is saturated with water
- Fuel level sensor and the circuit
- EVAP control system pressure sensor
- Refueling control valve
- ORVR system leaks
- Foreign matter caught in EVAP canister purge volume control solenoid valve

DTC Confirmation Procedure

NEEC1048

Refer to "P1441 EVAP CONTROL SYSTEM (VERY SMALL LEAK) (NEGATIVE PRESSURE)", EC-1098.

Diagnostic Procedure

NEEC1049

Refer to "P1441 EVAP CONTROL SYSTEM (VERY SMALL LEAK) (NEGATIVE PRESSURE)", EC-1098.

On Board Diagnosis Logic

NEEC0990

This diagnosis detects very small leaks in the EVAP line between the fuel tank and the EVAP canister purge volume control solenoid valve using intake manifold vacuum in the same way as conventional EVAP small leak diagnosis.

If the ECM judges a leak equivalent to a very small leak, the very small leak DTC P1441 will be detected. If the ECM judges a leak equivalent to a small leak, the EVAP small leak DTC P0440 will be detected. Correspondingly, if the ECM judges there is no leak, the diagnosis result is OK.

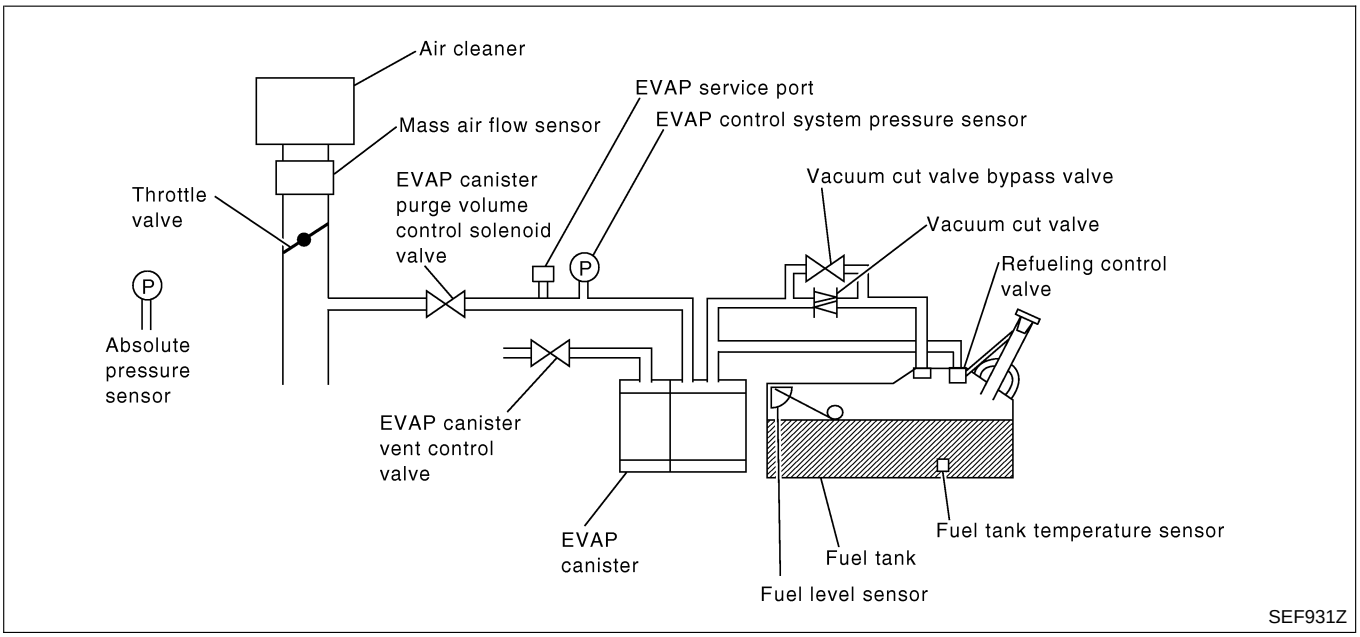

Malfunction is detected when EVAP control system has a very small leak, EVAP control system does not operate properly.

CAUTION:

- **Use only a genuine NISSAN fuel filler cap as a replacement. If an incorrect fuel filler cap is used, the MIL may come on.**
- **If the fuel filler cap is not tightened properly, the MIL may come on.**
- **Use only a genuine NISSAN rubber tube as a replacement.**

POSSIBLE CAUSE

NEEC0990S02

- Incorrect fuel tank vacuum relief valve
- Incorrect fuel filler cap used
- Fuel filler cap remains open or fails to close.
- Foreign matter caught in fuel filler cap.
- Leak is in line between intake manifold and EVAP canister purge volume control solenoid valve.
- Foreign matter caught in EVAP canister vent control valve.
- EVAP canister or fuel tank leaks
- EVAP purge line (pipe and rubber tube) leaks
- EVAP purge line rubber tube bent.
- Blocked or bent rubber tube to EVAP control system pressure sensor
- Loose or disconnected rubber tube
- EVAP canister vent control valve and the circuit
- EVAP canister purge volume control solenoid valve

- Absolute pressure sensor
- Fuel tank temperature sensor
- O-ring of EVAP canister vent control valve is missing or damaged.
- Water separator
- EVAP canister is saturated with water.
- Fuel level sensor and the circuit
- EVAP control system pressure sensor
- Refueling control valve
- ORVR system leaks

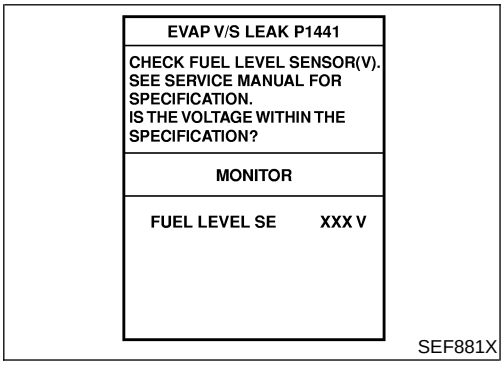

SEF881X

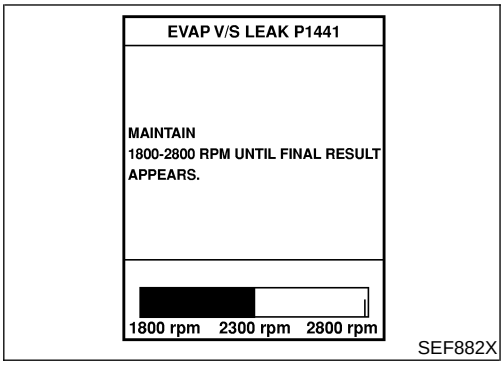

SEF882X

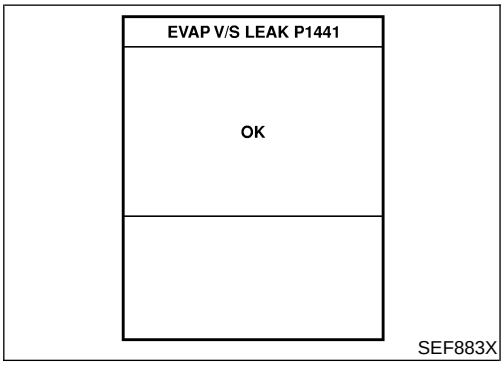

SEF883X

DTC Confirmation Procedure

NEEC0992

CAUTION:

Never remove fuel filler cap during the DTC confirmation procedure.

NOTE:

- **If DTC P1441 is displayed with P0440, perform TROUBLE DIAGNOSIS FOR DTC P1441 first.**
- **If "DIAGNOSTIC TROUBLE CODE CONFIRMATION PROCEDURE" has been previously conducted, always turn ignition switch "OFF" and wait at least 5 seconds before conducting the next test.**
- **After repair, make sure that the hoses and clips are installed properly.**

TESTING CONDITION:

- **Open engine hood before conducting following procedure.**
- **If any of following condition is met just before the DTC confirmation procedure, leave the vehicle for more than 1 hour.**

a) **Fuel filler cap is removed.**
b) **Refilled or drained the fuel.**
c) **EVAP component parts is/are removed.**

- **Before performing the following procedure, confirm that battery voltage is more than 11V at idle.**

With CONSULT-II

1) Turn ignition switch "ON" and select "DATA MONITOR" mode with CONSULT-II.
2) Make sure the following conditions are met.
   FUEL LEVEL SE: 1.08 - 0.2V
   COOLAN TEMP/S: 0 - 32°C (32 - 90°F)
   FUEL T/TMP SE: 0 - 32°C (32 - 90°F)
   INT A/TEMP SE: More than 0°C (32°F)
   If NG, turn ignition switch "OFF" and leave the vehicle in a cool place (soak the vehicle) or refilling/draining fuel until the output voltage condition of the "FUEL LEVEL SE" meets within the range above and leave the vehicle for more than 1 hour. Then start from step 1).
3) Turn ignition switch "OFF" and wait at least 5 seconds.
4) Turn ignition switch "ON".
5) Select "EVAP VERY/SML LEAK P1441" of "EVAPORATIVE SYSTEM" in "DTC WORK SUPPORT" mode with CONSULT-II.
   Follow the instruction displayed.
6) Make sure that "OK" is displayed.
   If "NG" is displayed, refer to "Diagnostic Procedure", EC-846.

NOTE:
- **If the engine speed cannot be maintained within the range displayed on CONSULT-II screen, go to "Basic inspection", EC-715.**
- **Make sure that EVAP hoses are connected to EVAP canister purge volume control solenoid valve properly.**

Overall Function Check

NEEC1001

With GST

Use this procedure to check the overall function of the EVAP very small leak function. During this check, a 1st trip DTC might not be confirmed.

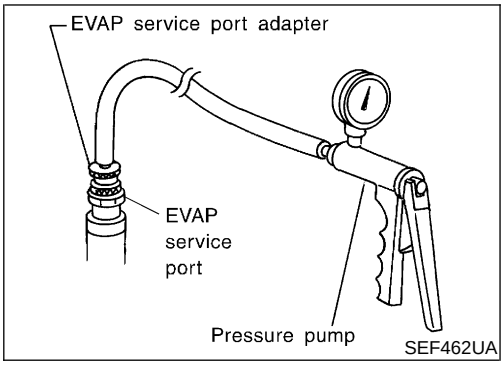

CAUTION:
- **Never use compressed air, doing so may damage the EVAP system.**
- **Do not start engine.**
- **Do not exceeded 4.12 kPa (0.042 kg/cm^2, 0.6 psi).**

1) Attach the EVAP service port adapter securely to the EVAP service port.
2) Set the pressure pump and a hose.
3) Also set a vacuum gauge via 3-way connector and a hose.
4) Turn ignition switch "ON".
5) Connect GST and select mode 8.
6) Using mode 8 control the EVAP canister vent control valve (close) and vacuum cut valve bypass valve (open).
7) Apply pressure and make sure the following conditions are satisfied.
   Pressure to be applied: 2.7 kPa (20 mmHg, 0.79 inHg)
   Time to be waited after the pressure drawn in to the EVAP system and the pressure to be dropped: 60 seconds and the pressure should not be dropped more than 0.4 kPa (3 mmHg, 0.12 inHg)
   If NG, go to diagnostic procedure, EC-846.

NOTE:
For more information, refer to GST instruction manual.

Diagnostic Procedure

NEEC0993

1	CHECK FUEL FILLER CAP DESIGN

1. Turn ignition switch “OFF”.
2. Check for genuine NISSAN fuel filler cap design.

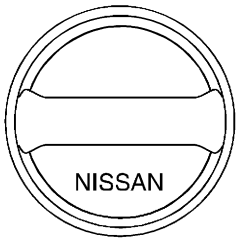

SEF915U

OK or NG

OK	▶	GO TO 2.
NG	▶	Replace with genuine NISSAN fuel filler cap.

2	CHECK FUEL FILLER CAP INSTALLATION

Check that the cap is tightened properly by rotating the cap clockwise.

OK or NG

OK	▶	GO TO 3.
NG	▶	• Open fuel filler cap, then clean cap and fuel filler neck threads using air blower. • Retighten until ratcheting sound is heard.

3	CHECK FUEL FILLER CAP FUNCTION

Check for air releasing sound while opening the fuel filler cap.

OK or NG

OK	▶	GO TO 5.
NG	▶	GO TO 4.

4	CHECK FUEL TANK VACUUM RELIEF VALVE

1. Wipe clean valve housing.
2. Check valve opening pressure and vacuum.

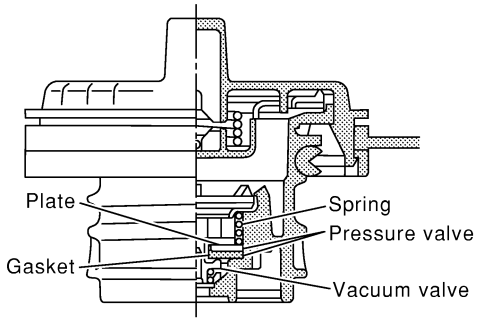

SEF445Y

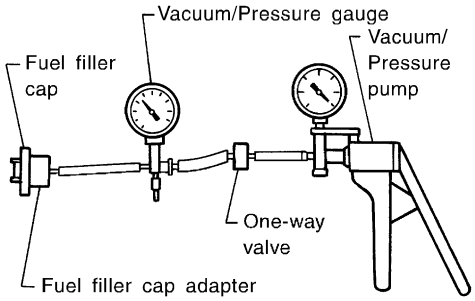

SEF943S

Pressure:
15.3 - 20.0 kPa (0.156 - 0.204 kg/cm^2, 2.22 - 2.90 psi)
Vacuum:
−6.0 to −3.3 kPa (−0.061 to −0.034 kg/cm^2, −0.87 to −0.48 psi)

CAUTION:
Use only a genuine fuel filler cap as a replacement. If an incorrect fuel filler cap is used, the MIL may come on.

OK or NG

OK	▶	GO TO 5.
NG	▶	Replace fuel filler cap with a genuine one.

5	INSTALL THE PRESSURE PUMP

To locate the EVAP leak, install EVAP service port adapter and pressure pump to EVAP service port securely.

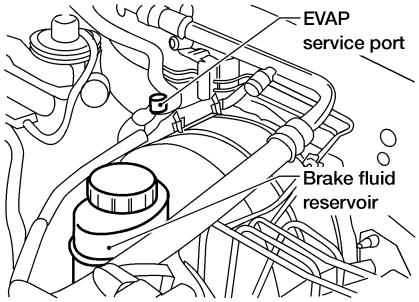

AEC649A

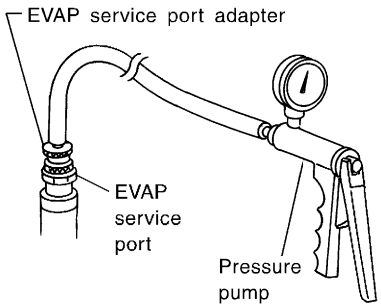

SEF916U

NOTE:
Improper installation of the EVAP service port adapter to the EVAP service port may cause leaking.

Models with CONSULT-II ▶	GO TO 6.
Models without CONSULT-II ▶	GO TO 7.

6	CHECK FOR EVAP LEAK

With CONSULT-II

1. Turn ignition switch "ON".
2. Select "EVAP SYSTEM CLOSE" of "WORK SUPPORT" mode with CONSULT-II.
3. Touch "START" and apply pressure into the EVAP line until the pressure indicator reaches the middle of the bar graph.
   NOTE:
   - **Never use compressed air or a high pressure pump.**
   - **Do not exceed 4.12 kPa (0.042 kg/cm^2, 0.6 psi) of pressure in the system.**

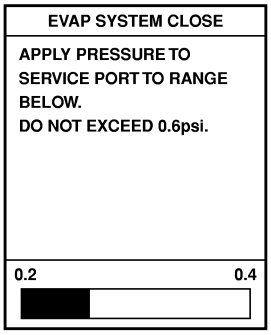

PEF917U

4. Using EVAP leak detector, locate the EVAP leak. For the leak detector, refer to the instruction manual for more details. Refer to "EVAPORATIVE EMISSION LINE DRAWING", EC-644.

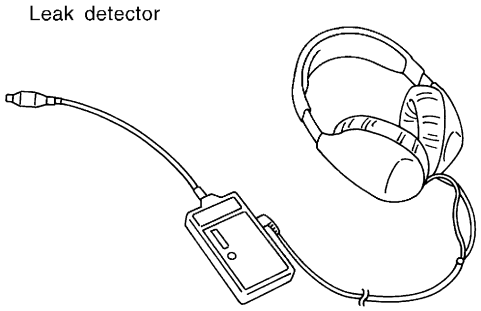

SEF200U

OK or NG

OK	▶	GO TO 8.
NG	▶	Repair or replace.

7	CHECK FOR EVAP LEAK

Without CONSULT-II

1. Turn ignition switch "OFF".
2. Apply 12 volts DC to EVAP canister vent control valve. The valve will close. (Continue to apply 12 volts until the end of test.)
3. Apply 12 volts DC to vacuum cut valve bypass valve. The valve will open. (Continue to apply 12V until the end of test.)

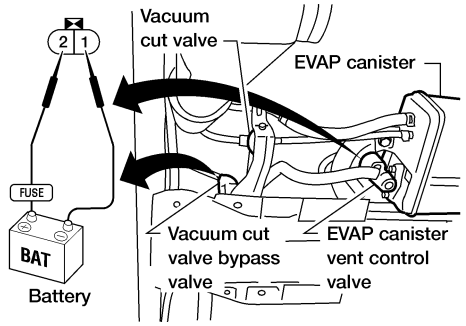

AEC632A

4. Pressurize the EVAP line using pressure pump with 1.3 to 2.7 kPa (10 to 20 mmHg, 0.39 to 0.79 inHg), then remove pump and EVAP service port adapter.
   NOTE:
   - **Never use compressed air or a high pressure pump.**
   - **Do not exceed 4.12 kPa (0.042 kg/cm^2, 0.6 psi) of pressure in the system.**
5. Using EVAP leak detector, locate the EVAP leak. For the leak detector, refer to the instruction manual for more details. Refer to "EVAPORATIVE EMISSION LINE DRAWING", EC-644.

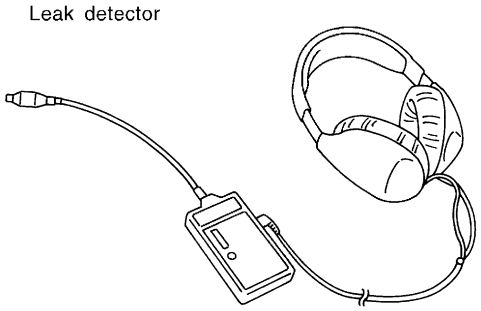

SEF200U

OK or NG

OK	▶	GO TO 8.
NG	▶	Repair or replace.

Diagnostic Procedure (Cont'd)

8	CHECK WATER SEPARATOR

1. Check visually for insect nests in the water separator air inlet.
2. Check visually for cracks or flaws in the appearance.
3. Check visually for cracks or flaws in the hose.
4. Check that **A** and **C** are not clogged by blowing air into **B** with **A**, and then **C** plugged.

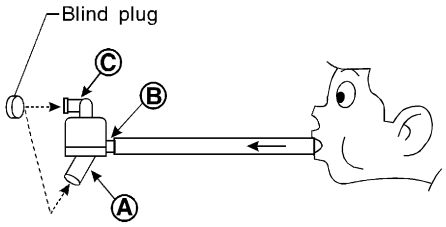

* Ⓐ: Bottom hole (To atmosphere)
Ⓑ: Emergency tube (From EVAP canister)
Ⓒ: Inlet port (To member)

SEF829T

5. In case of NG in items 2 - 4, replace the parts.

NOTE:

- Do not disassemble water separator.

OK or NG

OK	▶	GO TO 9.
NG	▶	Replace water separator.

9	CHECK EVAP CANISTER VENT CONTROL VALVE, O-RING AND CIRCUIT

Refer to "DTC Confirmation Procedure", EC-1002.

OK or NG

OK	▶	GO TO 10.
NG	▶	Repair or replace EVAP canister vent control valve and O-ring or harness/connector.

10	CHECK IF EVAP CANISTER SATURATED WITH WATER

1. Remove EVAP canister with EVAP canister vent control valve attached.
2. Does water drain from the EVAP canister?

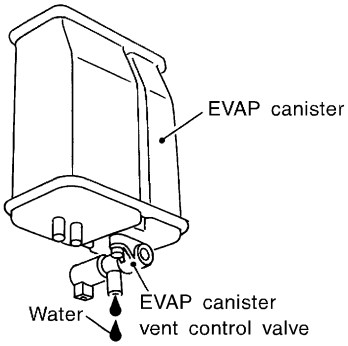

SEF596U

Yes or No

Yes	▶	GO TO 11.
No (With CONSULT-II)	▶	GO TO 13.
No (Without CONSULT-II)	▶	GO TO 14.

11	CHECK EVAP CANISTER
Weigh the EVAP canister with the EVAP canister vent control valve attached. **The weight should be less than 1.8 kg (4.0 lb).** **OK or NG**	
OK (With CONSULT-II) ▶	GO TO 13.
OK (Without CONSULT-II) ▶	GO TO 14.
NG ▶	GO TO 12.

12	DETECT MALFUNCTIONING PART
Check the following. ● EVAP canister for damage ● EVAP hose between EVAP canister and water separator for clogging or poor connection	
▶	Repair hose or replace EVAP canister.

13	CHECK EVAP CANISTER PURGE VOLUME CONTROL SOLENOID VALVE OPERATION

With CONSULT-II
1. Disconnect vacuum hose to EVAP canister purge volume control solenoid valve at EVAP service port.
2. Start engine.
3. Perform "PURG VOL CONT/V" in "ACTIVE TEST" mode.
4. Touch "Qu" on CONSULT-II screen to increase "PURG VOL CONT/V" opening to 100.0%.
5. Check vacuum hose for vacuum when revving engine up to 2,000 rpm.

ACTIVE TEST	
PURG VOL CONT/V	XXX %
MONITOR	
ENG SPEED	XXX rpm
A/F ALPHA-B1	XXX %
A/F ALPHA-B2	XXX %
HO2S1 MNTR (B1)	LEAN
HO2S1 MNTR (B2)	LEAN
THRTL POS SEN	XXX V

Vacuum should exist.

SEF984Y

OK or NG

OK ▶	GO TO 16.
NG ▶	GO TO 15.

14	CHECK EVAP CANISTER PURGE VOLUME CONTROL SOLENOID VALVE OPERATION

Without CONSULT-II
1. Start engine and warm it up to normal operating temperature.
2. Stop engine.
3. Disconnect vacuum hose to EVAP canister purge volume control solenoid valve at EVAP service port.
4. Start engine and let it idle for at least 80 seconds.
5. Check vacuum hose for vacuum when revving engine up to 2,000 rpm.

Vacuum should exist.

OK or NG

OK ▶	GO TO 17.
NG ▶	GO TO 15.

Diagnostic Procedure (Cont'd)

15	CHECK VACUUM HOSE
Check vacuum hoses for clogging or disconnection. Refer to "Vacuum Hose Drawing", EC-634.	
OK or NG	
OK (With CONSULT-II) ▶	GO TO 16.
OK (Without CONSULT-II) ▶	GO TO 17.
NG ▶	Repair or reconnect the hose.

16	CHECK EVAP CANISTER PURGE VOLUME CONTROL SOLENOID VALVE

With CONSULT-II

1. Start engine.
2. Perform "PURG VOL CONT/V" in "ACTIVE TEST" mode with CONSULT-II. Check that engine speed varies according to the valve opening.

ACTIVE TEST	
PURG VOL CONT/V	0.0%
MONITOR	
ENG SPEED	XXX rpm
A/F ALPHA-B1	XXX %
A/F ALPHA-B2	XXX %
HO2S1 MNTR (B1)	RICH
HO2S1 MNTR (B2)	RICH
THRTL POS SEN	XXX V

SEF985Y

OK or NG

OK ▶	GO TO 18.
NG ▶	GO TO 17.

17	CHECK EVAP CANISTER PURGE VOLUME CONTROL SOLENOID VALVE

With CONSULT-II

Check air passage continuity of EVAP canister purge volume control solenoid valve under the following conditions.

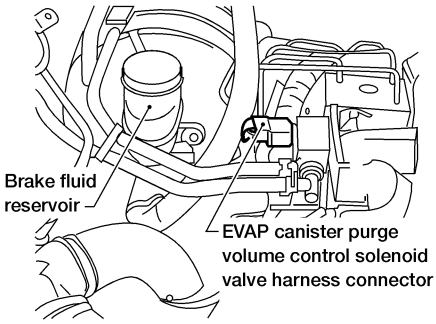

WEC547

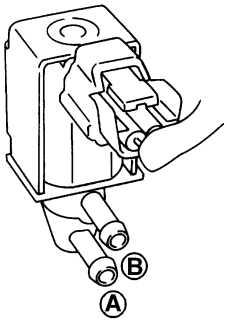

Condition PURG VOL CONT/V value	Air passage continuity between A and B
100.0%	Yes
0.0%	No

SEF334X

Without CONSULT-II

Check air passage continuity of EVAP canister purge volume control solenoid valve under the following conditions.

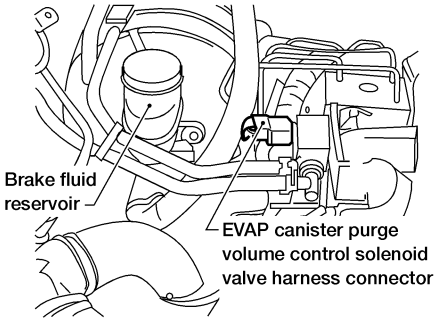

WEC547

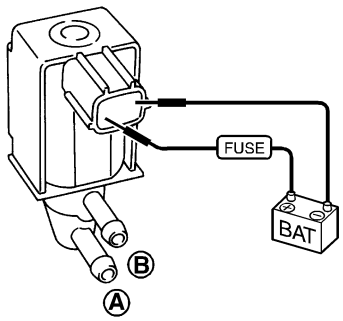

Condition	Air passage continuity between A and B
12V direct current supply between terminals 1 and 2	Yes
No supply	No

SEF335X

OK or NG

OK	▶	GO TO 18.
NG	▶	Replace EVAP canister purge volume control solenoid valve.

Diagnostic Procedure (Cont'd)

18	CHECK ABSOLUTE PRESSURE SENSOR

With CONSULT-II

1. Turn ignition switch ON.
2. Select "SELF DIAG RESULTS" mode with CONSULT-II.
3. Touch "ERASE".
4. **Perform "DTC Confirmation Procedure".**
   See EC-769.
5. Is the 1st trip DTC P0105 displayed again?

OK or NG

OK	▶	GO TO 19.
NG	▶	Replace ECM.

19	CHECK FUEL TANK TEMPERATURE SENSOR

1. Remove fuel level sensor unit.
2. Check resistance between fuel level sensor unit and fuel pump terminals 1 and 2 by heating with hot water or heat gun as shown in the figure.

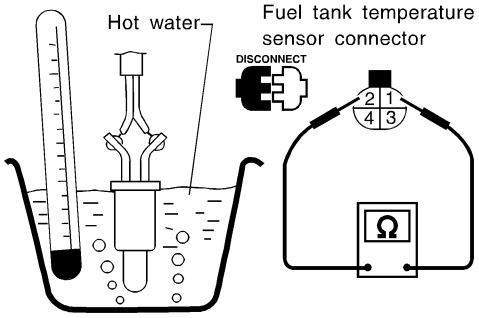

Temperature °C (°F)	Resistance kΩ
20 (68)	2.3 - 2.7
50 (122)	0.79 - 0.90

SEF974Y

OK or NG

OK	▶	GO TO 20.
NG	▶	Replace fuel level sensor unit.

20	CHECK EVAP CONTROL SYSTEM PRESSURE SENSOR

1. Remove EVAP control system pressure sensor with its harness connector connected.
   CAUTION:
   - **Never apply force to the air hole protector of the sensor if equipped.**

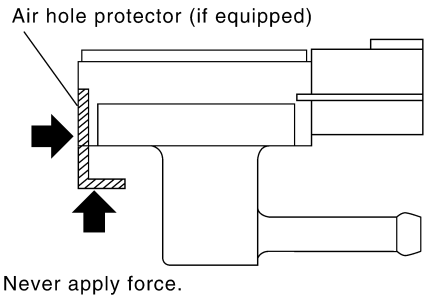

SEF799W

2. Remove hose from EVAP control system pressure sensor.
3. Turn ignition switch "ON".
4. Use pump to apply vacuum and pressure to EVAP control system pressure sensor as shown in figure.
   CAUTION:
   - **Always calibrate the vacuum pump gauge when using it.**
   - **Do not apply below −20 kPa (−150 mmHg, −5.91 inHg) or over 20 kPa (150 mmHg, 5.91 inHg) of pressure.**
5. Check input voltage between ECM terminal 84 and ground.

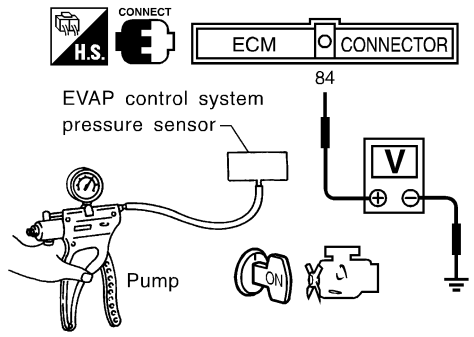

Pressure (Relative to atmospheric pressure)	Voltage V
0 kPa (0 mmHg, 0 inHg)	3.0 - 3.6
–9.3 kPa (–70 mmHg, –2.76 inHg)	0.4 - 0.6

SEF342X

CAUTION:
- **Discard and EVAP control system pressure sensor which has been dropped from a height of more than 0.5 m (19.7 in) onto a hard surface such as a concrete floor; use a new one.**

OK or NG

OK	▶	GO TO 21.
NG	▶	Replace EVAP control system pressure sensor.

21	CHECK EVAP PURGE LINE

Check EVAP purge line (pipe, rubber tube, fuel tank and EVAP canister) for cracks or improper connection.
Refer to "Evaporative Emission System", EC-640.

OK or NG

OK	▶	GO TO 22.
NG	▶	Repair or reconnect the hose.

22	CLEAN EVAP PURGE LINE

Clean EVAP purge line (pipe and rubber tube) using air blower.

	▶	GO TO 23.

Diagnostic Procedure (Cont'd)

23	CHECK FUEL LEVEL SENSOR	
Refer to ***EL-82***, "FUEL LEVEL SENSOR UNIT CHECK".		
OK or NG		
OK	▶	GO TO 24.
NG	▶	Replace fuel level sensor unit.

24	CHECK INTERMITTENT INCIDENT
Refer to "TROUBLE DIAGNOSIS FOR INTERMITTENT INCIDENT", EC-753.	
▶	**INSPECTION END**

Description

NEEC0845

SYSTEM DESCRIPTION

NEEC0845S01

Sensor	Input Signal to ECM	ECM function	Actuator
Camshaft position sensor	Engine speed	EVAP canister purge flow control	EVAP canister purge volume control solenoid valve
Mass air flow sensor	Amount of intake air		
Engine coolant temperature sensor	Engine coolant temperature		
Ignition switch	Start signal		
Throttle position sensor	Throttle position		
Throttle position switch	Closed throttle position		
Heated oxygen sensors 1 (front)	Density of oxygen in exhaust gas (Mixture ratio feedback signal)		
Fuel tank temperature sensor	Fuel temperature in fuel tank		
Vehicle speed sensor	Vehicle speed		

This system controls flow rate of fuel vapor from the EVAP canister. The opening of the vapor by-pass passage in the EVAP canister purge volume control solenoid valve changes to control the flow rate. The EVAP canister purge volume control solenoid valve repeats ON/OFF operation according to the signal sent from the ECM. The opening of the valve varies for optimum engine control. The optimum value stored in the ECM is determined by considering various engine conditions. When the engine is operating, the flow rate of fuel vapor from the EVAP canister is regulated as the air flow changes.

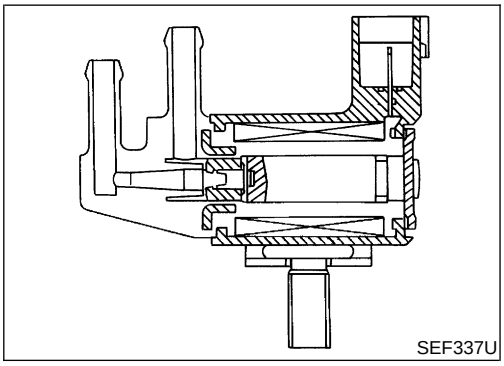
SEF337U

COMPONENT DESCRIPTION

NEEC0845S02

The EVAP canister purge volume control solenoid valve uses a ON/OFF duty to control the flow rate of fuel vapor from the EVAP canister. The EVAP canister purge volume control solenoid valve is moved by ON/OFF pulses from the ECM. The longer the ON pulse, the greater the amount of fuel vapor that will flow through the valve.

CONSULT-II Reference Value in Data Monitor Mode

NEEC0846

Specification data are reference values.

MONITOR ITEM	CONDITION		SPECIFICATION
PURG VOL C/V	• Engine: After warming up • Air conditioner switch OFF • Shift lever: “N” • No-load	Idle (Vehicle stopped)	0%
		2,000 rpm	—

ECM Terminals and Reference Value

NEEC0847

Specification data are reference values and are measured between each terminal and ground.

CAUTION:

Do not use ECM ground terminals when measuring input/output voltage. Doing so may result in damage to the ECM's transistor. Use a ground other than the ECM terminals, such as the ground.

TERMINAL NO.	WIRE COLOR	ITEM	CONDITION	DATA (DC Voltage)
4	OR/B	ECM relay (Self shut-off)	**[Engine is running]** **[Ignition switch OFF]** ● For a few seconds after turning ignition switch OFF	0 - 1.5V
			[Ignition switch OFF] ● A few seconds passed after turning ignition switch OFF	BATTERY VOLTAGE (11 - 14V)
5	R/Y	EVAP canister purge volume control solenoid valve	**[Engine is running]** ● Idle speed	BATTERY VOLTAGE (11 - 14V) 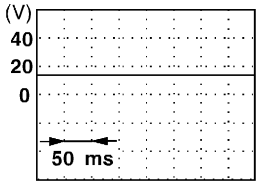 SEF994U
			[Engine is running] ● Engine speed is 2,000 rpm	BATTERY VOLTAGE (11 - 14V) 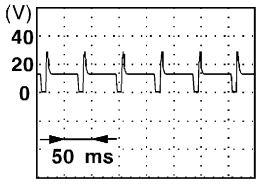 SEF995U
67	B/P	Power supply for ECM	**[Ignition switch ON]**	BATTERY VOLTAGE (11 - 14V)
72	B/P			
117	B/P	Current return	**[Engine is running]** ● Idle speed	BATTERY VOLTAGE (11 - 14V)

On Board Diagnosis Logic

NEEC0848

Malfunction is detected when the canister purge flow is detected during the specified driving conditions, even when EVAP canister purge volume control solenoid valve is completely closed.

POSSIBLE CAUSE

NEEC0848S01

- EVAP control system pressure sensor
- EVAP canister purge volume control solenoid valve (The valve is stuck open.)
- EVAP canister vent control valve
- EVAP canister

- Hoses
  (Hoses are connected incorrectly or clogged.)

DTC Confirmation Procedure

NEEC0849

NOTE:
If "DTC Confirmation Procedure" has been previously conducted, always turn ignition switch OFF and wait at least 5 seconds before conducting the next test.

TESTING CONDITION:
Always perform test at a temperature of 5°C (41°F) or more.

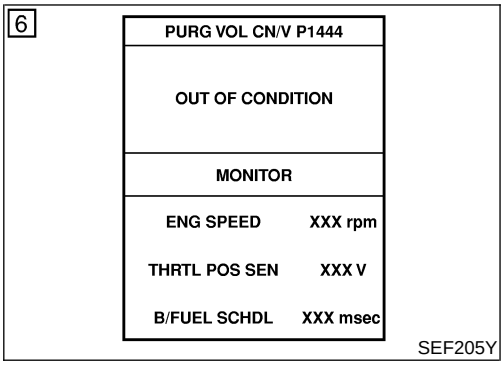

SEF205Y

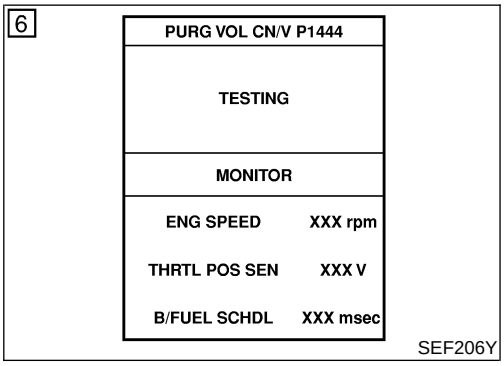

SEF206Y

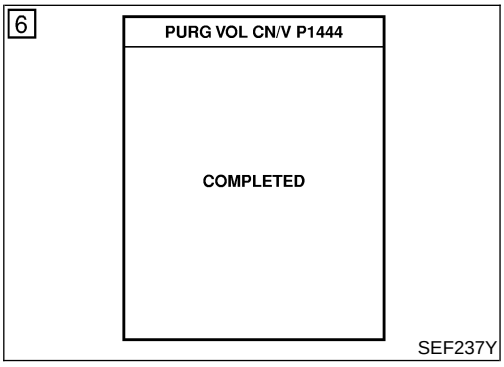

SEF237Y

With CONSULT-II

1) Start engine and warm it up to normal operating temperature.
2) Turn ignition switch OFF and wait at least 5 seconds.
3) Turn ignition switch ON.
4) Select "PURG VOL CN/V P1444" of "EVAPORATIVE SYSTEM" in "DTC WORK SUPPORT" mode with CONSULT-II.
5) Touch "START".
6) Start engine and let it idle until "TESTING" on CONSULT-II changes to "COMPLETED". (It will take for approximately 10 seconds.)
   If "TESTING" is not displayed after 5 minutes, retry from step 2.
7) Make sure that "OK" is displayed after touching "SELF-DIAG RESULTS". If "NG" is displayed, refer to "Diagnostic Procedure", EC-1117.

With GST

1) Start engine and warm it up to normal operating temperature.
2) Turn ignition switch OFF and wait at least 5 seconds.
3) Start engine and let it idle for at least 20 seconds.
4) Select "MODE 7" with GST.
5) If 1st trip DTC is detected, go to "Diagnostic Procedure", EC-1117.

Wiring Diagram

NEEC0850

EC-PGC/V-01

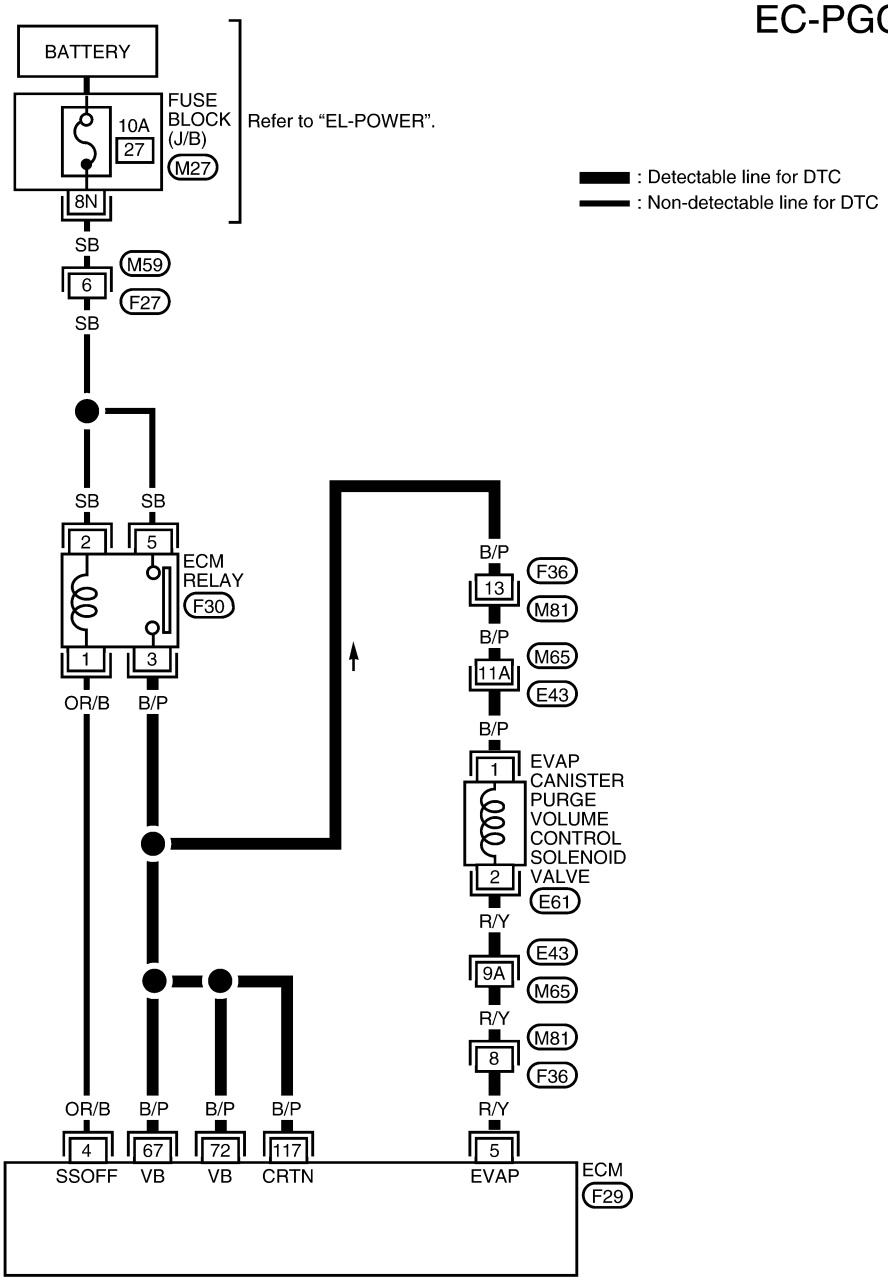

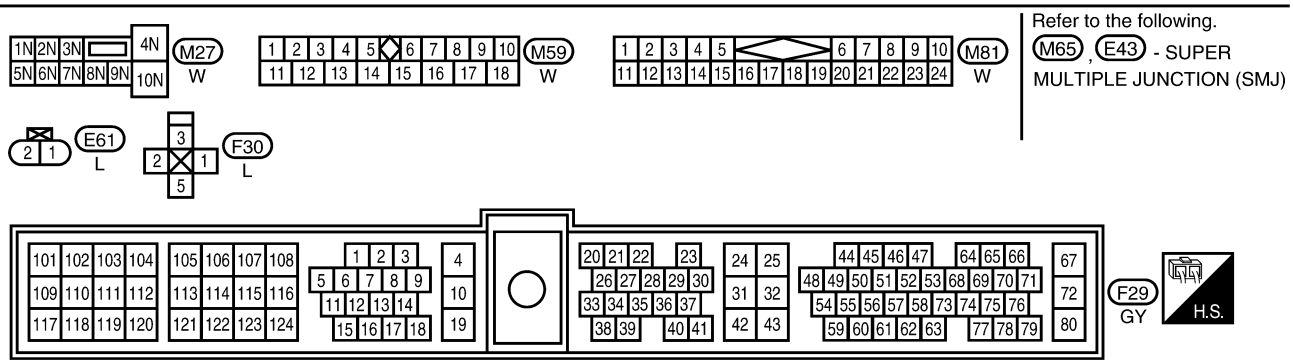

LEC813

Diagnostic Procedure

NEEC0851

1	CHECK EVAP CANISTER PURGE VOLUME CONTROL SOLENOID VALVE POWER SUPPLY CIRCUIT

1. Turn ignition switch OFF.
2. Disconnect EVAP canister purge volume control solenoid valve harness connector.

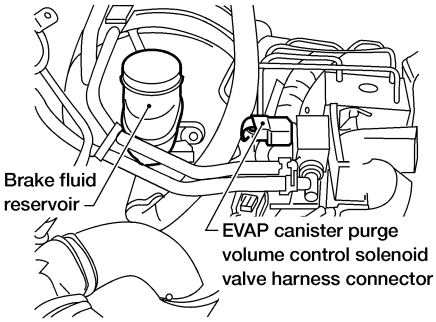

AEC652A

3. Turn ignition switch ON.
4. Check voltage between terminal 1 and engine ground with CONSULT-II or tester.

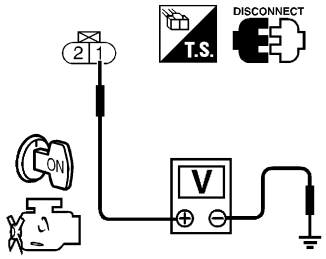

SEF646W

Voltage: Battery voltage

OK or NG

OK	▶	GO TO 3.
NG	▶	GO TO 2.

2	DETECT MALFUNCTIONING PART

Check the following.
- Harness connectors F36, M81
- Harness connectors M82, E74
- Harness for open or short between EVAP canister purge volume control solenoid valve and ECM relay
- Harness for open or short between EVAP canister purge volume control solenoid valve and ECM

	▶	Repair harness or connectors.

3	CHECK EVAP CANISTER PURGE VOLUME CONTROL SOLENOID VALVE OUTPUT SIGNAL CIRCUIT FOR OPEN AND SHORT

1. Turn ignition switch OFF.
2. Disconnect ECM harness connector.
3. Check harness continuity between ECM terminal 5 and solenoid valve terminal 2. Refer to Wiring Diagram.
   Continuity should exist.
4. Also check harness for short to ground and short to power.

OK or NG

OK	▶	GO TO 5.
NG	▶	GO TO 4.

Diagnostic Procedure (Cont'd)

4	DETECT MALFUNCTIONING PART
Check the following. ● Harness connectors E74, M82 ● Harness connectors M81, F36 ● Harness for open or short between EVAP canister purge volume control solenoid valve and ECM	
▶	Repair open circuit or short to ground or short to power in harness or connectors.

5	CHECK EVAP CONTROL SYSTEM PRESSURE SENSOR HOSE
Check disconnection or improper connection of hose connected to EVAP control system pressure sensor.	
OK or NG	
OK ▶	GO TO 6.
NG ▶	Repair it.

6	CHECK EVAP CONTROL SYSTEM PRESSURE SENSOR CONNECTOR
1. Disconnect EVAP control system pressure sensor harness connector.	

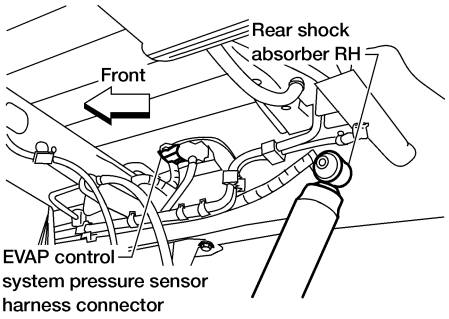

AEC651A

2. Check connectors for water.
Water should not exist.

OK or NG	
OK ▶	GO TO 7.
NG ▶	Replace EVAP control system pressure sensor.

7	CHECK EVAP CONTROL SYSTEM PRESSURE SENSOR

1. Remove EVAP control system pressure sensor with its harness connector connected.
2. Remove hose from EVAP control system pressure sensor.
3. Turn ignition switch ON.
4. Use pump to apply vacuum and pressure to EVAP control system pressure sensor as shown in figure.
5. Check input voltage between ECM terminal 62 and ground.

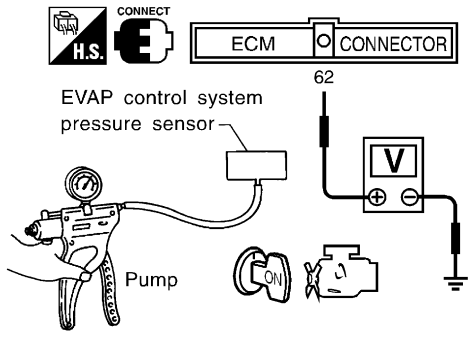

SEF894U

Pressure (Relative to atmosphericpressure)	Voltage (V)
0 kPa (0 mmHg, 0 inHg)	3.0 - 3.6
–9.3 kPa (–70 mmHg, –2.76 inHg)	0.4 - 0.6

MTBL0246

CAUTION:

- **Always calibrate the vacuum pump gauge when using it.**
- **Do not apply below −20 kPa (−150 mmHg, −5.91 inHg) or over 20 kPa (150 mmHg, 5.91 inHg) of pressure.**
- **Never apply force to the air hole protector of the sensor if equipped.**

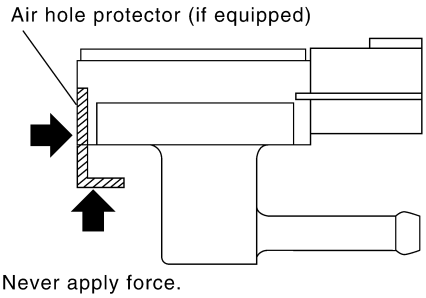

SEF799W

- **Discard and EVAP control system pressure sensor which has been dropped from a height of more than 0.5 m (19.7 in) onto a hard surface such as a concrete floor; use a new one.**

OK or NG

OK (with CONSULT-II)	▶	GO TO 8.
OK (without CONSULT-II)	▶	GO TO 9.
NG	▶	Replace EVAP control system pressure sensor.

Diagnostic Procedure (Cont'd)

8	CHECK EVAP CANISTER PURGE VOLUME CONTROL SOLENOID VALVE

With CONSULT-II

1. Start engine.
2. Perform "PURG VOL CONT/V" in "ACTIVE TEST" mode with CONSULT-II. Check that engine speed varies according to the valve opening.

ACTIVE TEST	
PURG VOL CONT/V	0.0%
MONITOR	
ENG SPEED	XXX rpm
A/F ALPHA-B1	XXX %
A/F ALPHA-B2	XXX %
HO2S1 MNTR (B1)	RICH
HO2S1 MNTR (B2)	RICH
THRTL POS SEN	XXX V

SEF985Y

If OK, inspection end. If NG, go to following step.

3. Check air passage continuity.

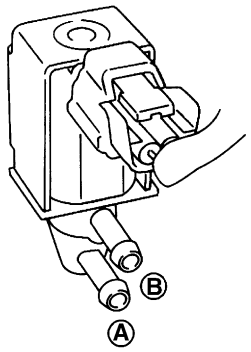

SEF660U

Condition PURG VOL CONT/V value	Air passage continuity between A and B
100.0%	Yes
0.0%	No

MTBL0241

If NG, replace the EVAP canister purge volume control solenoid valve.

OK or NG

OK	▶	GO TO 10.
NG	▶	Replace EVAP canister purge volume control solenoid valve.

9	CHECK EVAP CANISTER PURGE VOLUME CONTROL SOLENOID VALVE

⊗ **Without CONSULT-II**
Check air passage continuity.

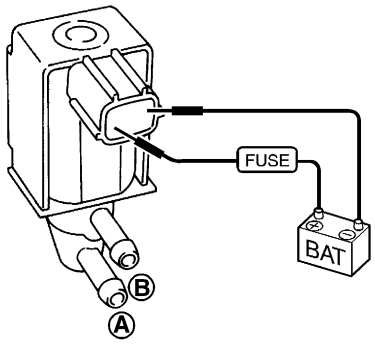

SEF661U

Condition	Air passage continuity between A and B
12V direct current supply between terminals 1 and 2	Yes
No supply	No

MTBL0242

If NG, replace the EVAP canister purge volume control solenoid valve.

OK or NG

OK	▶	GO TO 10.
NG	▶	Replace EVAP canister purge volume control solenoid valve.

Diagnostic Procedure (Cont'd)

10	CHECK EVAP CANISTER VENT CONTROL VALVE

Check air passage continuity.

With CONSULT-II

Perform "VENT CONTROL/V" in "ACTIVE TEST" mode.

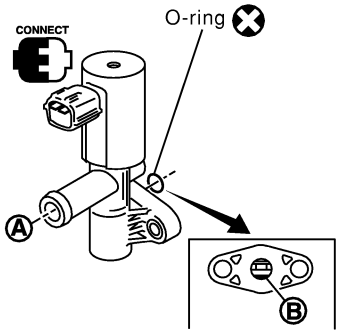

ACTIVE TEST	
VENT CONTROL/V	OFF
MONITOR	
ENG SPEED	XXX rpm
A/F ALPHA-B1	XXX %
A/F ALPHA-B2	XXX %
HO2S1 (B1)	XXX V
HO2S1 (B2)	XXX V
THRTL POS SEN	XXX V

Condition VENT CONTROL/V	Air passage continuity between A and B
ON	No
OFF	Yes

Operation takes less than 1 second.

SEF991Y

Without CONSULT-II

Condition	Air passage continuity between A and B
12V direct current supply between terminals 1 and 2	No
OFF	Yes

MTBL0240

If NG or operation takes more than 1 second, clean valve using air blower or replace as necessary.

If portion **B** is rusted, replace control valve.

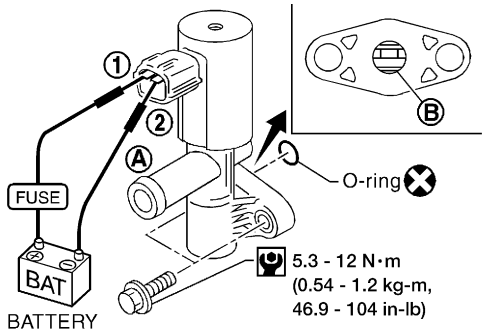

AEC783A

Make sure new O-ring is installed properly.

OK or NG

OK	▶	GO TO 11.
NG	▶	Replace EVAP canister vent control valve.

11	CHECK RUBBER TUBE

Check for obstructed rubber tube connected to EVAP canister vent control valve.

OK or NG

OK	▶	GO TO 12.
NG	▶	Clean, repair or replace rubber tube.

12	CHECK WATER SEPARATOR

1. Check visually for insect nests in the water separator air inlet.
2. Check visually for cracks or flaws in the appearance.
3. Check visually for cracks or flaws in the hose.
4. Check that **A** and **C** are not clogged by blowing air into **B** with **A**, and then **C** plugged.

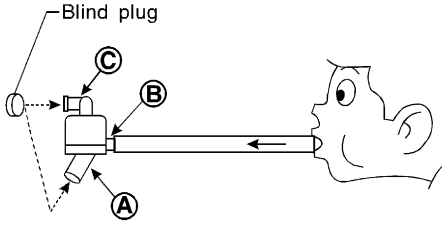

* Ⓐ: Bottom hole (To atmosphere)
Ⓑ: Emergency tube (From EVAP canister)
Ⓒ: Inlet port (To member)

SEF829T

5. In case of NG in items 2 - 4, replace the parts.

NOTE:
- Do not disassemble water separator.

OK or NG

OK	▶	GO TO 13.
NG	▶	Replace water separator.

13	CHECK IF EVAP CANISTER SATURATED WITH WATER

1. Remove EVAP canister with EVAP canister vent control valve attached.
2. Check if water will drain from the EVAP canister.

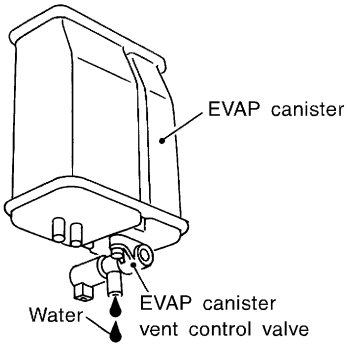

SEF596U

Yes or No

Yes	▶	GO TO 14.
No	▶	GO TO 16.

14	CHECK EVAP CANISTER

Weigh the EVAP canister with the EVAP canister vent control valve attached.
The weight should be less than 1.8 kg (4.0 lb).

OK or NG

OK	▶	GO TO 16.
NG	▶	GO TO 15.

Diagnostic Procedure (Cont'd)

15	DETECT MALFUNCTIONING PART
Check the following. ● EVAP canister for damage ● EVAP hose between EVAP canister and water separator for clogging or poor connection	
▶	Repair hose or replace EVAP canister.

16	CHECK INTERMITTENT INCIDENT
Refer to "TROUBLE DIAGNOSIS FOR INTERMITTENT INCIDENT", EC-753.	
▶	**INSPECTION END**

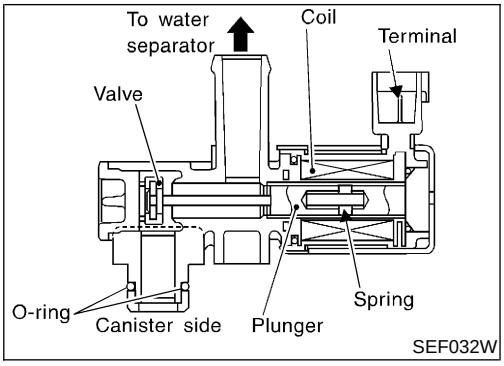

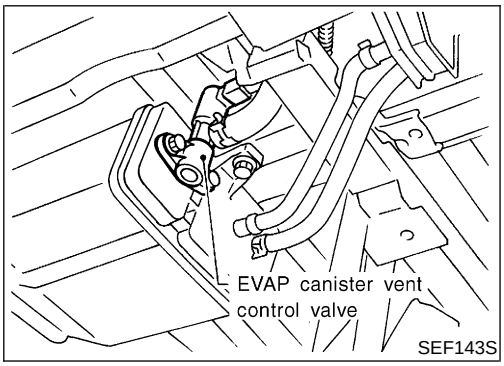

Component Description

NEEC0852

The EVAP canister vent control valve is located on the EVAP canister and is used to seal the canister vent.
This solenoid valve responds to signals from the ECM. When the ECM sends an ON signal, the coil in the solenoid valve is energized. A plunger will then move to seal the canister vent. The ability to seal the vent is necessary for the on board diagnosis of other evaporative emission control system components.
This solenoid valve is used only for diagnosis, and usually remains opened.
When the vent is closed, under normal purge conditions, the evaporative emission control system is depressurized and allows "EVAP Control System (Small Leak)" diagnosis.

CONSULT-II Reference Value in Data Monitor Mode

NEEC0853

Specification data are reference values.

MONITOR ITEM	CONDITION	SPECIFICATION
VENT CONT/V	• Ignition switch: ON	OFF

ECM Terminals and Reference Value

NEEC0854

Specification data are reference values and are measured between each terminal and ground.

CAUTION:

Do not use ECM ground terminals when measuring input/output voltage. Doing so may result in damage to the ECM's transistor. Use a ground other than the ECM terminals, such as the ground.

TERMINAL NO.	WIRE COLOR	ITEM	CONDITION	DATA (DC Voltage)
108	R/G	EVAP canister vent control valve	**[Ignition switch ON]**	BATTERY VOLTAGE (11 - 14V)

On Board Diagnosis Logic

=NEEC0855

Malfunction is detected when EVAP canister vent control valve remains closed under specified driving conditions.

POSSIBLE CAUSE

NEEC0855S01

- EVAP canister vent control valve
- EVAP control system pressure sensor and the circuit
- Blocked rubber tube to EVAP canister vent control valve
- Water separator
- EVAP canister is saturated with water.

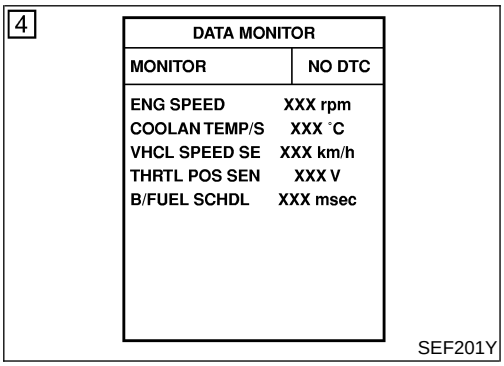

DTC Confirmation Procedure

NEEC0856

CAUTION:

Always drive vehicle at a safe speed.

NOTE:

If “DTC Confirmation Procedure” has been previously conducted, always turn ignition switch OFF and wait at least 5 seconds before conducting the next test.

With CONSULT-II

1) Turn ignition switch ON.
2) Select “DATA MONITOR” mode with CONSULT-II.
3) Start engine.
4) Drive vehicle at a speed of approximately 80 km/h (50 MPH) for a maximum of 15 minutes.

NOTE:

If a malfunction exists, NG result may be displayed quicker.

5) If 1st trip DTC is detected, go to “Diagnostic Procedure”, EC-1128.

With GST

Follow the procedure “With CONSULT-II”.

Wiring Diagram

NEEC0857

EC-VENT/V-01

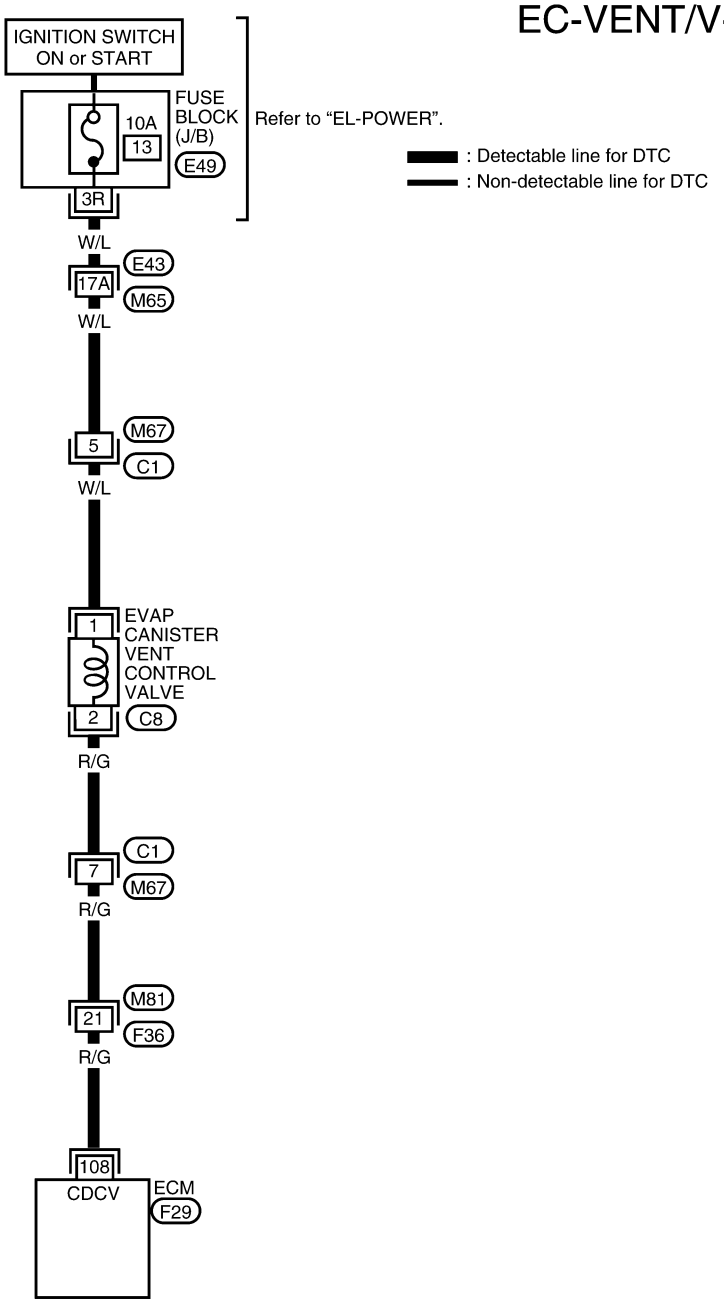

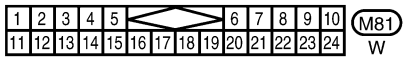



Refer to the following.
M65, E43 - SUPER MULTIPLE JUNCTION (SMJ)

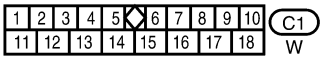

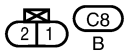

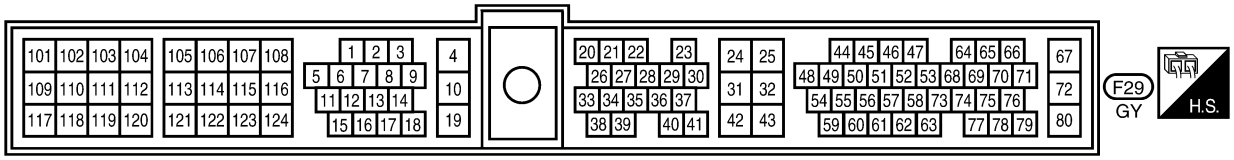

LEC814

Diagnostic Procedure

NEEC0858

1	CHECK RUBBER TUBE

1. Turn ignition switch OFF.
2. Check obstructed rubber tube connected to EVAP canister vent control valve.

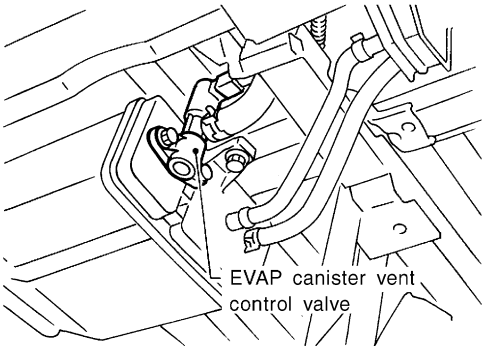

SEF143S

OK or NG

OK	▶	GO TO 2.
NG	▶	Clean, repair or replace rubber tube.

2	CHECK WATER SEPARATOR

1. Check visually for insect nests in the water separator air inlet.
2. Check visually for cracks or flaws in the appearance.
3. Check visually for cracks or flaws in the hose.
4. Check that **A** and **C** are not clogged by blowing air into **B** with **A**, and then **C** plugged.

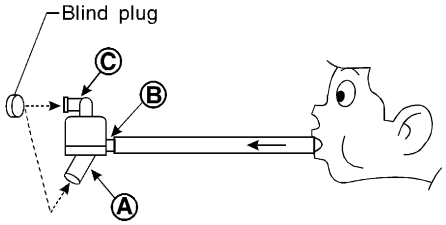

* Ⓐ: Bottom hole (To atmosphere)
Ⓑ: Emergency tube (From EVAP canister)
Ⓒ: Inlet port (To member)

SEF829T

5. In case of NG in items 2 - 4, replace the parts.

NOTE:

- Do not disassemble water separator.

OK or NG

OK	▶	GO TO 3.
NG	▶	Replace water separator.

3	CHECK EVAP CANISTER VENT CONTROL VALVE AND O-RING

Check air passage continuity.

With CONSULT-II

Perform "VENT CONTROL/V" in "ACTIVE TEST" mode.

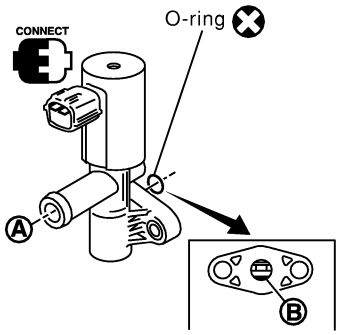

ACTIVE TEST	
VENT CONTROL/V	OFF
MONITOR	
ENG SPEED	XXX rpm
A/F ALPHA-B1	XXX %
A/F ALPHA-B2	XXX %
HO2S1 (B1)	XXX V
HO2S1 (B2)	XXX V
THRTL POS SEN	XXX V

Condition VENT CONTROL/V	Air passage continuity between A and B
ON	No
OFF	Yes

Operation takes less than 1 second.

SEF991Y

Without CONSULT-II

Condition	Air passage continuity between A and B
12V direct current supply between terminals 1 and 2	No
OFF	Yes

MTBL0240

If NG or operation takes more than 1 second, clean valve using air blower or replace as necessary.
If portion **B** is rusted, replace control valve.

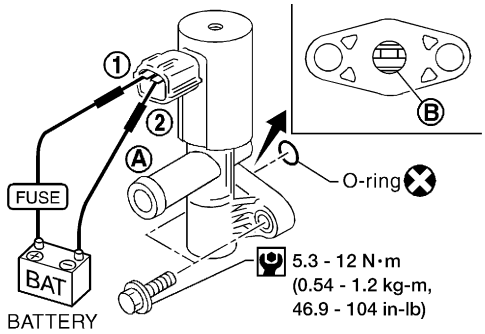

AEC783A

Make sure new O-ring is installed properly.

OK or NG

OK	▶	GO TO 4.
NG	▶	Replace EVAP canister vent control valve and O-ring.

Diagnostic Procedure (Cont'd)

4	CHECK IF EVAP CANISTER SATURATED WITH WATER

1. Remove EVAP canister with EVAP canister vent control valve attached.
2. Check if water will drain from the EVAP canister.

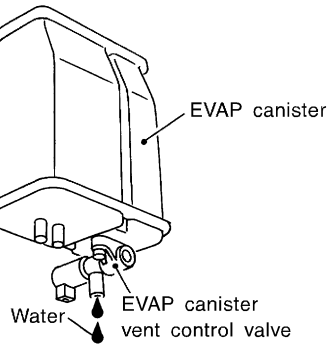

SEF596U

Yes or No

Yes	▶	GO TO 5.
No	▶	GO TO 7.

5	CHECK EVAP CANISTER

Weigh the EVAP canister with the EVAP canister vent control valve attached.
The weight should be less than 1.8 kg (4.0 lb).

OK or NG

OK	▶	GO TO 7.
NG	▶	GO TO 6.

6	DETECT MALFUNCTIONING PART

Check the following.
- EVAP canister for damage
- EVAP hose between EVAP canister and water separator for clogging or poor connection

	▶	Repair hose or replace EVAP canister.

7	CHECK EVAP CONTROL SYSTEM PRESSURE SENSOR HOSE

Check disconnection or improper connection of hose connected to EVAP control system pressure sensor.

OK or NG

OK	▶	GO TO 8.
NG	▶	Repair it.

8	CHECK EVAP CONTROL SYSTEM PRESSURE SENSOR CONNECTOR

1. Disconnect EVAP control system pressure sensor harness connector.

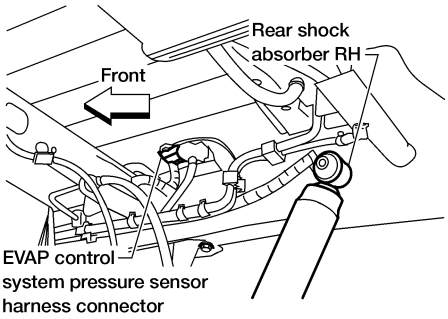

AEC651A

2. Check connectors for water.
   Water should not exist.

OK or NG

OK	▶	GO TO 9.
NG	▶	Replace EVAP control system pressure sensor.

9	CHECK EVAP CONTROL SYSTEM PRESSURE SENSOR FUNCTION

Refer to "DTC Confirmation Procedure" for DTC P0450, EC-1008.

OK or NG

OK	▶	GO TO 10.
NG	▶	Replace EVAP control system pressure sensor.

10	CHECK INTERMITTENT INCIDENT

Refer to "TROUBLE DIAGNOSIS FOR INTERMITTENT INCIDENT", EC-753.

▶ **INSPECTION END**

System Description

NEEC0859

NOTE:
If DTC P1447 is displayed with P0510, perform trouble diagnosis for DTC P0510 first. (See EC-1054.)

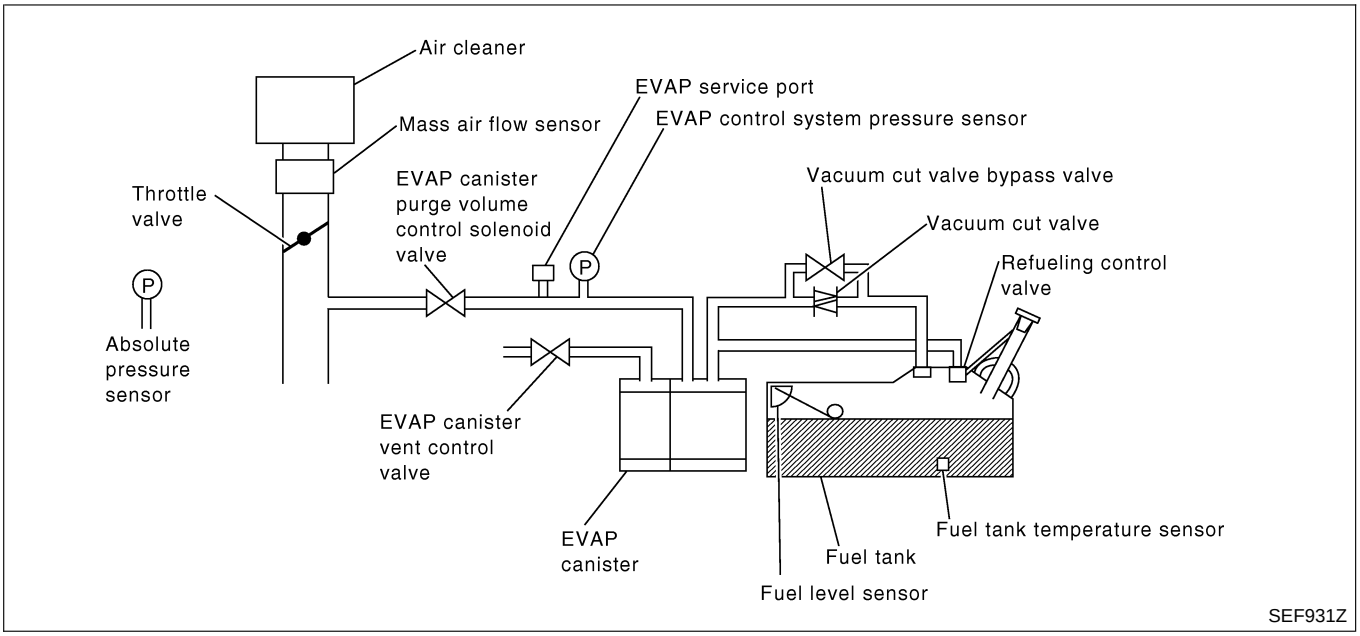

In this evaporative emission (EVAP) control system, purge flow occurs during non-closed throttle conditions. Purge volume is related to air intake volume. Under normal purge conditions (non-closed throttle), the EVAP canister purge volume control solenoid valve is open. Purge flow exposes the EVAP control system pressure sensor to intake manifold vacuum.

On Board Diagnosis Logic

NEEC0860

Under normal conditions (non-closed throttle), sensor output voltage indicates if pressure drop and purge flow are adequate. If not, a fault is determined.
Malfunction is detected when EVAP control system does not operate properly, EVAP control system has a leak between intake manifold and EVAP control system pressure sensor.

POSSIBLE CAUSE

NEEC0860S01

- EVAP canister purge volume control solenoid valve stuck closed
- EVAP control system pressure sensor and the circuit
- Loose, disconnected or improper connection of rubber tube
- Blocked rubber tube
- Blocked or bent rubber tube to MAP/BARO switch solenoid valve
- Cracked EVAP canister
- EVAP canister purge volume control solenoid valve circuit
- Closed throttle position switch
- Blocked purge port
- EVAP canister vent control valve

5

PURG FLOW P1447	
OUT OF CONDITION	
MONITOR	
ENG SPEED	XXX rpm
THRTL POS SEN	XXX V
B/FUEL SCHDL	XXX msec

SEF207Y

6

PURG FLOW P1447	
TESTING	
MONITOR	
ENG SPEED	XXX rpm
THRTL POS SEN	XXX V
B/FUEL SCHDL	XXX msec

SEF208Y

6

PURG FLOW P1447
COMPLETED

SEF238Y

DTC Confirmation Procedure

NEEC0861

CAUTION:

Always drive vehicle at a safe speed.

NOTE:

If "DTC Confirmation Procedure" has been previously conducted, always turn ignition switch OFF and wait at least 5 seconds before conducting the next test.

TESTING CONDITION:

Always perform test at a temperature of 5°C (41°F) or more.

With CONSULT-II

1) Start engine and warm it up to normal operating temperature.
2) Turn ignition switch OFF and wait at least 5 seconds.
3) Start engine and let it idle for at least 70 seconds.
4) Select "PURG FLOW P1447" of "EVAPORATIVE SYSTEM" in "DTC WORK SUPPORT" mode with CONSULT-II.
5) Touch "START".
   If "COMPLETED" is displayed, go to step 7.
6) When the following conditions are met, "TESTING" will be displayed on the CONSULT-II screen. Maintain the conditions continuously until "TESTING" changes to "COMPLETED". (It will take at least 35 seconds.)

Selector lever	Suitable position
Vehicle speed	32 - 120 km/h (20 - 75 MPH)
ENG SPEED	500 - 3,400 rpm
B/FUEL SCHDL	1.0 - 10.0 msec
Engine coolant temperature	70 - 100°C (158 - 212°F)

If "TESTING" is not changed for a long time, retry from step 2.

7) Make sure that "OK" is displayed after touching "SELF-DIAG RESULTS". If "NG" is displayed, refer to "Diagnostic Procedure", EC-1135.

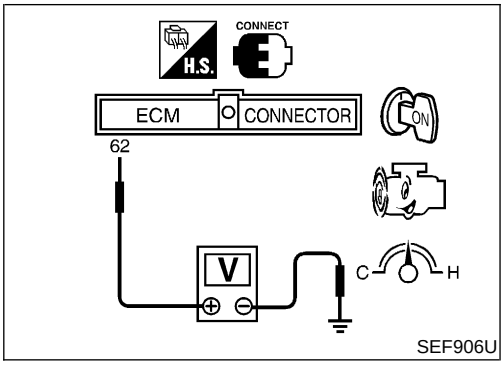

Overall Function Check

=NEEC0862

Use this procedure to check the overall monitoring function of the EVAP control system purge flow monitoring. During this check, a 1st trip DTC might not be confirmed.

Without CONSULT-II

1) Lift up drive wheels.
2) Start engine and warm it up to normal operating temperature.
3) Turn ignition switch OFF, wait at least 5 seconds.
4) Start engine and wait at least 70 seconds.
5) Set voltmeter probes to ECM terminals 62 (EVAP control system pressure sensor signal) and ground.
6) Check EVAP control system pressure sensor value at idle speed and note it.
7) Establish and maintain the following conditions for at least 1 minute.

Air conditioner switch	ON
Steering wheel	Fully turned
Headlamp switch	ON
Rear window defogger switch	ON
Engine speed	Approx. 3,000 rpm
Gear position	Any position other than “P”, “N” or “R”

8) Verify that EVAP control system pressure sensor value stays 0.1V less than the value at idle speed (measured at step 6) for at least 1 second.
9) If NG, go to “Diagnostic Procedure”, EC-1135.

Diagnostic Procedure

=NEEC0863

1	CHECK EVAP CANISTER	
1. Turn ignition switch OFF. 2. Check EVAP canister for cracks.		
OK or NG		
OK (With CONSULT-II)	▶	GO TO 2.
OK (Without CONSULT-II)	▶	GO TO 3.
NG	▶	Replace EVAP canister.

2	CHECK PURGE FLOW	

With CONSULT-II

1. Disconnect vacuum hose connected to EVAP canister purge volume control solenoid valve at EVAP service port and install vacuum gauge.

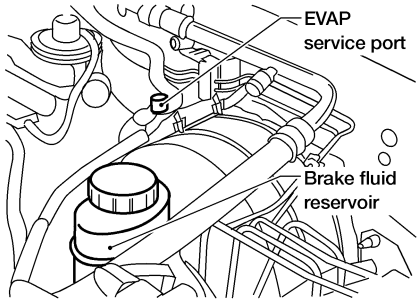

AEC649A

2. Start engine and let it idle.
3. Select “PURG VOL CONT/V” in “ACTIVE TEST” mode with CONSULT-II.
4. Rev engine up to 2,000 rpm.
5. Touch “Qd” and “Qu” on CONSULT-II screen to adjust “PURG VOL CONT/V” opening.

ACTIVE TEST	
PURG VOL CONT/V	XXX %
MONITOR	
ENG SPEED	XXX rpm
A/F ALPHA-B1	XXX %
A/F ALPHA-B2	XXX %
HO2S1 MNTR (B1)	LEAN
HO2S1 MNTR (B2)	LEAN
THRTL POS SEN	XXX V

PURG VOL CONT/V	VACUUM
100.0%	Should exist
0.0%	Should not exist

SEF012Z

OK or NG

OK	▶	GO TO 7.
NG	▶	GO TO 4.

Diagnostic Procedure (Cont'd)

3	CHECK PURGE FLOW

Without CONSULT-II

1. Start engine and warm it up to normal operating temperature.
2. Stop engine.
3. Disconnect vacuum hose connected to EVAP canister purge volume control solenoid valve at EVAP service port and install vacuum gauge.

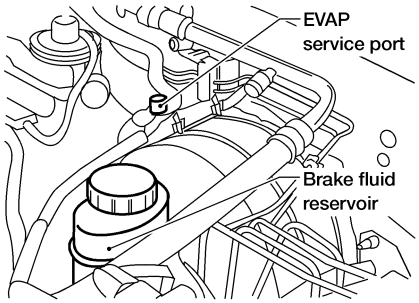

AEC649A

4. Start engine and let it idle for at least 80 seconds.
5. Check vacuum gauge indication when revving engine up to 2,000 rpm.
   Vacuum should exist.
6. Release the accelerator pedal fully and let idle.
   Vacuum should not exist.

OK or NG

OK	▶	GO TO 7.
NG	▶	GO TO 4.

4	CHECK EVAP PURGE LINE

1. Turn ignition switch OFF.
2. Check EVAP purge line for improper connection or disconnection.
   Refer to "EVAPORATIVE EMISSION LINE DRAWING", EC-644.

OK or NG

OK	▶	GO TO 5.
NG	▶	Repair it.

5 **CHECK EVAP PURGE HOSE AND PURGE PORT**

1. Disconnect purge hoses connected to EVAP service port **A** and EVAP canister purge volume control solenoid valve **B**.

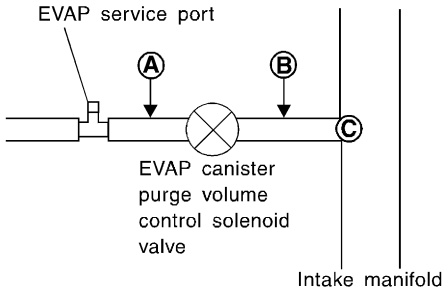

SEF367U

2. Blow air into each hose and EVAP purge port **C**.
3. Check that air flows freely.

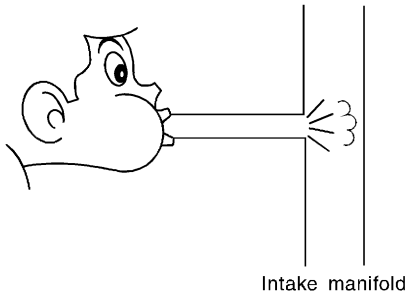

SEF368U

OK or NG

OK (with CONSULT-II)	▶	GO TO 6.
OK (without CONSULT-II)	▶	GO TO 7.
NG	▶	Repair or clean hoses and/or purge port.

Diagnostic Procedure (Cont'd)

6	CHECK EVAP CANISTER PURGE VOLUME CONTROL SOLENOID VALVE

With CONSULT-II

1. Start engine.
2. Perform "PURG VOL CONT/V" in "ACTIVE TEST" mode with CONSULT-II. Check that engine speed varies according to the valve opening.

ACTIVE TEST	
PURG VOL CONT/V	0.0%
MONITOR	
ENG SPEED	XXX rpm
A/F ALPHA-B1	XXX %
A/F ALPHA-B2	XXX %
HO2S1 MNTR (B1)	RICH
HO2S1 MNTR (B2)	RICH
THRTL POS SEN	XXX V

SEF985Y

If OK, inspection end. If NG, go to following step.

3. Check air passage continuity.

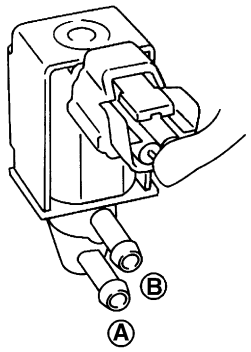

SEF660U

Condition PURG VOL CONT/V value	Air passage continuity between A and B
100.0%	Yes
0.0%	No

MTBL0241

If NG, replace the EVAP canister purge volume control solenoid valve.

OK or NG

OK	▶	GO TO 8.
NG	▶	Replace EVAP canister purge volume control solenoid valve.

7	CHECK EVAP CANISTER PURGE VOLUME CONTROL SOLENOID VALVE

Without CONSULT-II
Check air passage continuity.

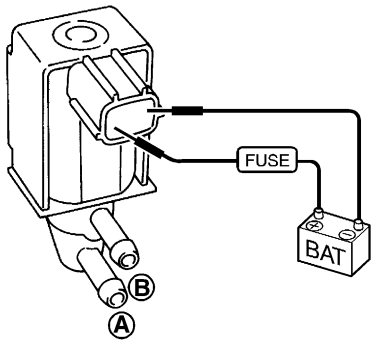

SEF661U

Condition	Air passage continuity between A and B
12V direct current supply between terminals 1 and 2	Yes
No supply	No

MTBL0242

If NG, replace the EVAP canister purge volume control solenoid valve.

OK or NG

OK	▶	GO TO 8.
NG	▶	Replace EVAP canister purge volume control solenoid valve.

8	CHECK EVAP CONTROL SYSTEM PRESSURE SENSOR HOSE

1. Turn ignition switch OFF.
2. Check disconnection or improper connection of hose connected to EVAP control system pressure sensor.

OK or NG

OK	▶	GO TO 9.
NG	▶	Repair it.

9	CHECK EVAP CONTROL SYSTEM PRESSURE SENSOR CONNECTOR

1. Disconnect EVAP control system pressure sensor harness connector.

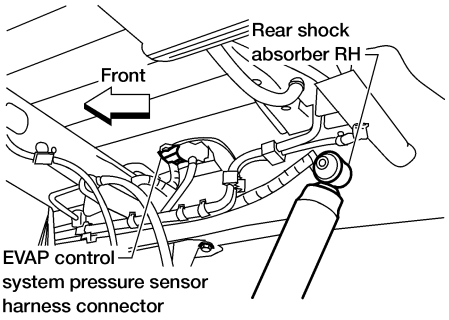

AEC651A

2. Check connectors for water.
   Water should not exist.

OK or NG

OK	▶	GO TO 10.
NG	▶	Replace EVAP control system pressure sensor.

Diagnostic Procedure (Cont'd)

10	CHECK EVAP CONTROL SYSTEM PRESSURE SENSOR FUNCTION	
Refer to "DTC Confirmation Procedure" for DTC P0450, EC-1008.		
OK or NG		
OK	▶	GO TO 11.
NG	▶	Replace EVAP control system pressure sensor.

11	CHECK EVAP CANISTER VENT CONTROL VALVE

Check air passage continuity.

With CONSULT-II

Perform "VENT CONTROL/V" in "ACTIVE TEST" mode.

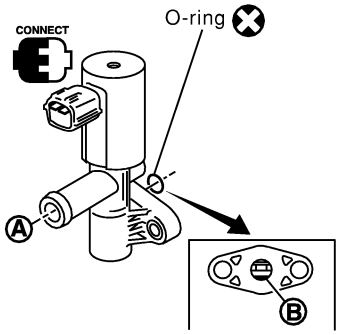

ACTIVE TEST	
VENT CONTROL/V	OFF
MONITOR	
ENG SPEED	XXX rpm
A/F ALPHA-B1	XXX %
A/F ALPHA-B2	XXX %
HO2S1 (B1)	XXX V
HO2S1 (B2)	XXX V
THRTL POS SEN	XXX V

Condition VENT CONTROL/V	Air passage continuity between A and B
ON	No
OFF	Yes

Operation takes less than 1 second.

SEF991Y

Without CONSULT-II

Condition	Air passage continuity between A and B
12V direct current supply between terminals 1 and 2	No
OFF	Yes

MTBL0240

If NG or operation takes more than 1 second, clean valve using air blower or replace as necessary.

If portion **B** is rusted, replace control valve.

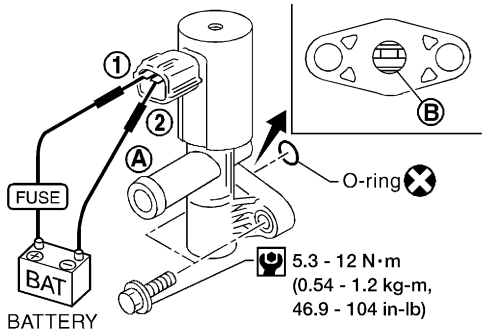

AEC783A

Make sure new O-ring is installed properly.

OK or NG

OK	▶	GO TO 12.
NG	▶	Replace EVAP canister vent control valve.

12 **CHECK CLOSED THROTTLE POSITION SWITCH**

With CONSULT-II

1. Start engine and warm it up to normal operating temperature.
2. Turn ignition switch OFF.
3. Turn ignition switch ON.
4. Select "DATA MONITOR" mode with CONSULT-II.
5. Check indication of "CLSD THL/P SW".
   Measurement must be made with closed throttle position switch installed in vehicle.

Throttle valve conditions	CLSD THL/P SW
Completely closed	ON
Partially open or completely open	OFF

MTBL0355

If NG, adjust closed throttle position switch.
Check the following items. Refer to "Basic Inspection", EC-715.

Items	Specifications
Ignition timing	10° ± 2° BTDC
Base idle speed	700 ± 50 rpm (in "P" or "N" position)
Closed throttle position switch idle position adjustment	Feeler gauge thickness and switch condition 0.3 mm (0.012 in): ON 0.4 mm (0.016 in): OFF
Target idle speed	750 ± 50 rpm (in "P" or "N" position)

MTBL0576

6. If it is impossible to adjust closed throttle position switch in "Basic Inspection", replace closed throttle position switch.

OK or NG

OK	▶	GO TO 14.
NG	▶	Replace throttle position switch with throttle position sensor.

Diagnostic Procedure (Cont'd)

13	CHECK CLOSED THROTTLE POSITION SWITCH

Without CONSULT-II

1. Start engine and warm it up to normal operating temperature.
2. Turn ignition switch OFF.
3. Disconnect closed throttle position switch harness connector.
4. Check continuity between closed throttle position switch terminals 4 and 5.
   Resistance measurement must be made with closed throttle position switch installed in vehicle.

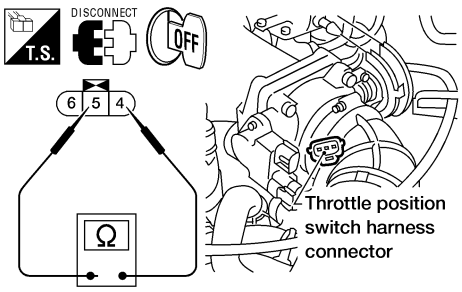

AEC654A

Throttle valve conditions	Continuity
Completely closed	Yes
Partially open or completely open	No

MTBL0247

If NG, adjust closed throttle position switch.
Check the following items. Refer to "Basic Inspection", EC-715.

Items	Specifications
Ignition timing	10° ± 2° BTDC
Base idle speed	700 ± 50 rpm (in "P" or "N" position)
Closed throttle position switch idle position adjustment	Feeler gauge thickness and switch condition 0.3 mm (0.012 in): ON 0.4 mm (0.016 in): OFF
Target idle speed	750 ± 50 rpm (in "P" or "N" position)

MTBL0576

5. If it is impossible to adjust closed throttle position switch in "Basic Inspection", replace closed throttle position switch.

OK or NG

OK	▶	GO TO 14.
NG	▶	Replace throttle position switch with throttle position sensor.

14	CHECK EVAP PURGE LINE

Inspect EVAP purge line (pipe and rubber tube). Check for evidence of leaks.
Refer to "EVAPORATIVE EMISSION LINE DRAWING", EC-644.

OK or NG

OK	▶	GO TO 15.
NG	▶	Replace it.

15	CLEAN EVAP PURGE LINE

Clean EVAP purge line (pipe and rubber tube) using air blower.

	▶	GO TO 16.

16	**CHECK INTERMITTENT INCIDENT**
Refer to "TROUBLE DIAGNOSIS FOR INTERMITTENT INCIDENT", EC-753.	
▶	**INSPECTION END**

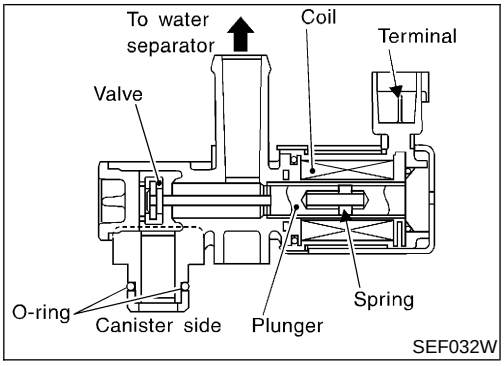

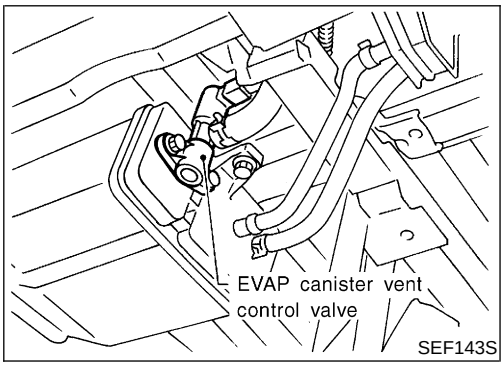

Component Description

NEEC0864

NOTE:
If DTC P1448 is displayed with P0440, perform trouble diagnosis for DTC P1448 first.

The EVAP canister vent control valve is located on the EVAP canister and is used to seal the canister vent.
This solenoid valve responds to signals from the ECM. When the ECM sends an ON signal, the coil in the solenoid valve is energized. A plunger will then move to seal the canister vent. The ability to seal the vent is necessary for the on board diagnosis of other evaporative emission control system components.
This solenoid valve is used only for diagnosis, and usually remains opened.
When the vent is closed, under normal purge conditions, the evaporative emission control system is depressurized and allows "EVAP Control System (Small Leak)" diagnosis.

CONSULT-II Reference Value in Data Monitor Mode

NEEC0865

Specification data are reference values.

MONITOR ITEM	CONDITION	SPECIFICATION
VENT CONT/V	• Ignition switch: ON	OFF

ECM Terminals and Reference Value

NEEC0866

Specification data are reference values and are measured between each terminal and ground.

CAUTION:
Do not use ECM ground terminals when measuring input/output voltage. Doing so may result in damage to the ECM's transistor. Use a ground other than the ECM terminals, such as the ground.

TERMINAL NO.	WIRE COLOR	ITEM	CONDITION	DATA (DC Voltage)
108	R/G	EVAP canister vent control valve	**[Ignition switch ON]**	BATTERY VOLTAGE (11 - 14V)

On Board Diagnosis Logic

NEEC0867

Malfunction is detected when EVAP canister vent control valve remains opened under specified driving conditions.

POSSIBLE CAUSE

NEEC0867S01

- EVAP canister vent control valve
- EVAP control system pressure sensor and circuit
- Blocked rubber tube to EVAP canister vent control valve
- Water separator
- EVAP canister is saturated with water.
- Vacuum cut valve

DTC Confirmation Procedure

NEEC0868

NOTE:

- **If DTC P1448 is displayed with P0440, perform trouble diagnosis for DTC P1448 first.**
- If "DTC Confirmation Procedure" has been previously conducted, always turn ignition switch OFF and wait at least 5 seconds before conducting the next test.

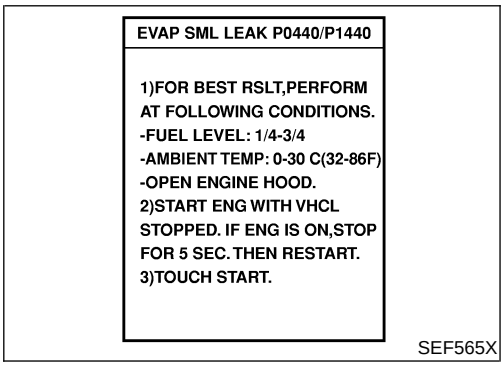

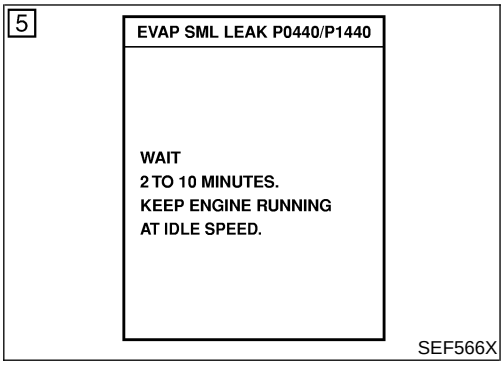

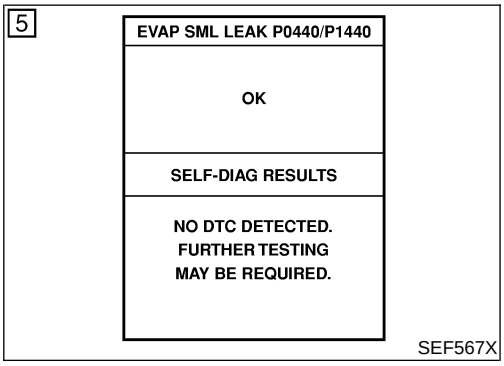

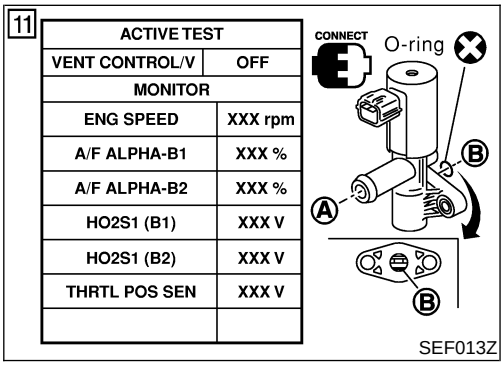

With CONSULT-II

TESTING CONDITION:

- **Perform "DTC WORK SUPPORT" when the fuel level is less than 3/4 full and vehicle is placed on flat level surface.**
- **Always perform test at a temperature of 0 to 30°C (32 to 86°F).**
- **It is better that the fuel level is low.**

1) Turn ignition switch ON.
2) Turn ignition switch OFF and wait at least 5 seconds.
3) Turn ignition switch ON and select "DATA MONITOR" mode with CONSULT-II.
4) Make sure that the following conditions are met.

COOLAN TEMP/S	0 - 32°C (32 - 90°F)
INT/A TEMP SE	More than 0°C (32°F)

5) Select "EVAP SML LEAK P0440" of "EVAPORATIVE SYSTEM" in "DTC WORK SUPPORT" mode with CONSULT-II. Follow the instruction displayed.

NOTE:

If the engine speed cannot be maintained within the range displayed on the CONSULT-II screen, go to "Basic Inspection", EC-715.

6) Make sure that "OK" is displayed.
If "NG" is displayed, go to the following step.

NOTE:

Make sure that EVAP hoses are connected to EVAP canister purge volume control solenoid valve properly.

7) Stop engine and wait at least 5 seconds, then turn ON.
8) Disconnect hose from water separator.
9) Select "VENT CONTROL/V" of "ACTIVE TEST" mode with CONSULT-II.
10) Touch ON and OFF alternately.
11) Make sure the following.

Condition VENT CONTROL/V	Air passage continuity between **A** and **B**
ON	No
OFF	Yes

If the result is NG, go to "Diagnostic Procedure", EC-1148.
If the result is OK, go to "Diagnostic Procedure" for DTC P0440, EC-979.

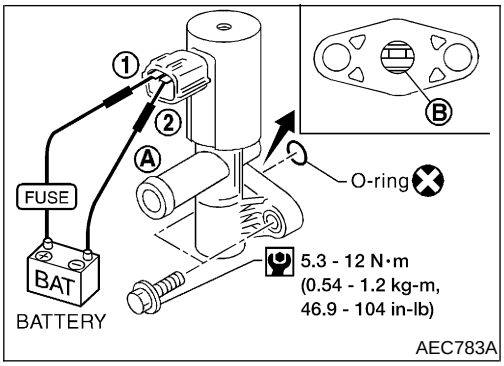

Overall Function Check

NEEC0869

Use this procedure to check the overall function of the EVAP canister vent control valve circuit. During this check, a DTC might not be confirmed.

Without CONSULT-II

1) Disconnect hose from water separator.
2) Disconnect EVAP canister vent control valve harness connector.
3) Verify the following.

Condition	Air passage continuity
12V direct current supply between terminals 1 and 2	No
No supply	Yes

If the result is NG, go to “Diagnostic Procedure”, EC-1148.
If the result is OK, go to “Diagnostic Procedure” for DTC P0440, EC-979.

Wiring Diagram

NEEC0870

EC-VENT/V-01

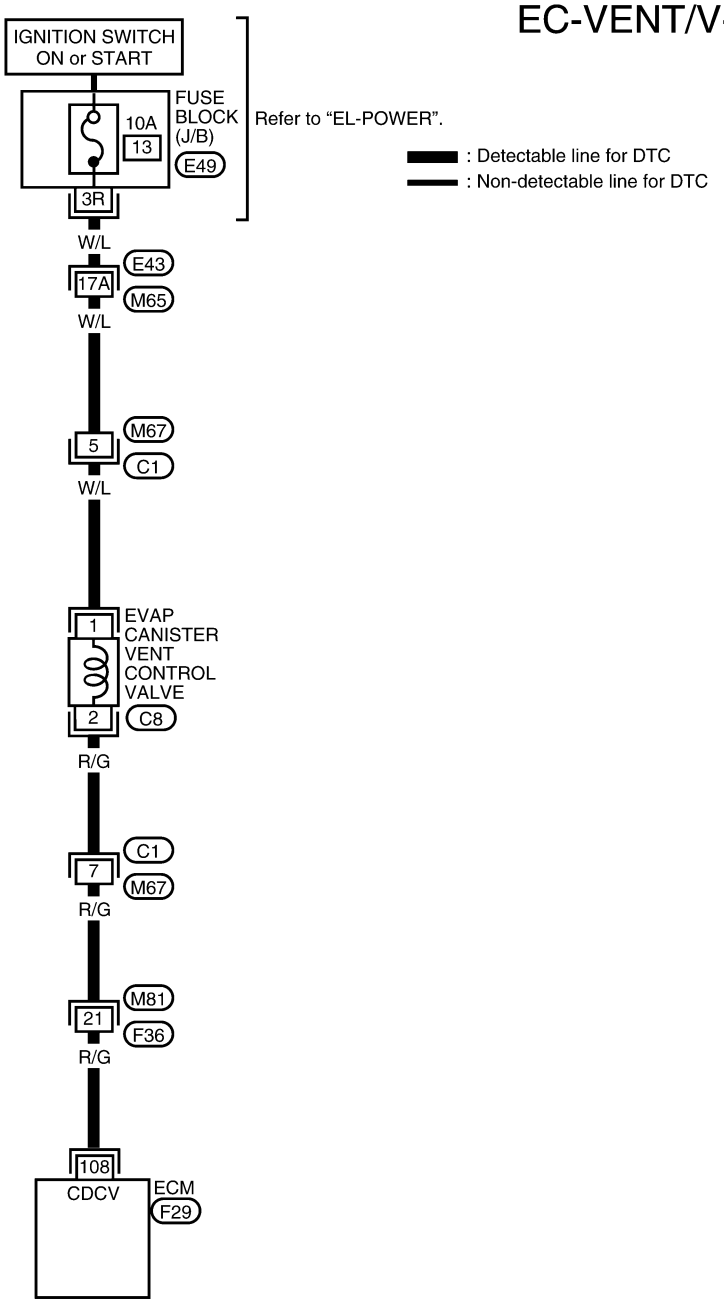





Refer to the following.
M65 , E43 - SUPER MULTIPLE JUNCTION (SMJ)

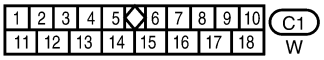



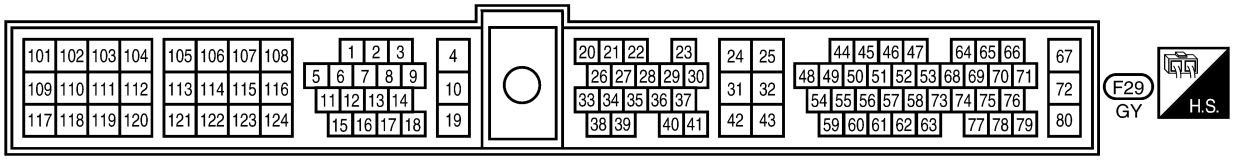

LEC814

Diagnostic Procedure

NEEC0871

1	CHECK RUBBER TUBE

1. Turn ignition switch OFF.
2. Check obstructed rubber tube connected to EVAP canister vent control valve.

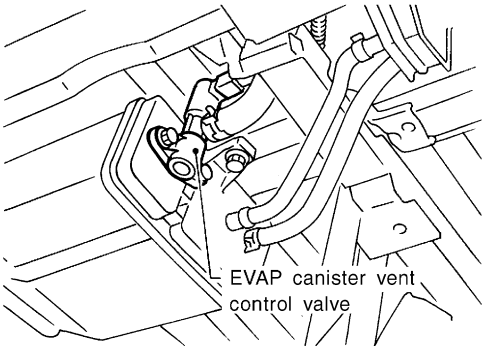

SEF143S

OK or NG

OK	▶	GO TO 2.
NG	▶	Clean, repair or replace rubber tube.

2	CHECK WATER SEPARATOR

1. Check visually for insect nests in the water separator air inlet.
2. Check visually for cracks or flaws in the appearance.
3. Check visually for cracks or flaws in the hose.
4. Check that **A** and **C** are not clogged by blowing air into **B** with **A**, and then **C** plugged.

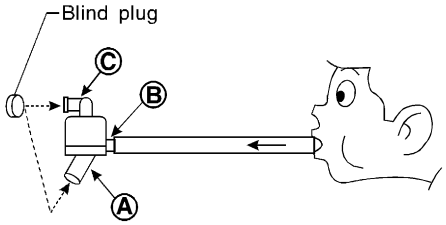

* Ⓐ: Bottom hole (To atmosphere)
Ⓑ: Emergency tube (From EVAP canister)
Ⓒ: Inlet port (To member)

SEF829T

5. In case of NG in items 2 - 4, replace the parts.

NOTE:

- Do not disassemble water separator.

OK or NG

OK	▶	GO TO 3.
NG	▶	Replace water separator.

3	CHECK EVAP CANISTER VENT CONTROL VALVE AND O-RING

Check air passage continuity.

With CONSULT-II

Perform "VENT CONTROL/V" in "ACTIVE TEST" mode.

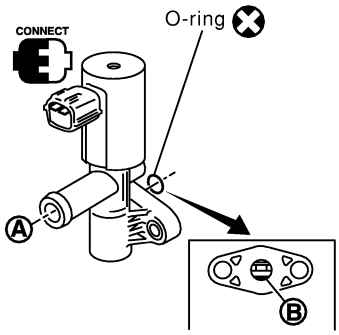

ACTIVE TEST	
VENT CONTROL/V	OFF
MONITOR	
ENG SPEED	XXX rpm
A/F ALPHA-B1	XXX %
A/F ALPHA-B2	XXX %
HO2S1 (B1)	XXX V
HO2S1 (B2)	XXX V
THRTL POS SEN	XXX V

Condition VENT CONTROL/V	Air passage continuity between A and B
ON	No
OFF	Yes

Operation takes less than 1 second.

SEF991Y

Without CONSULT-II

Condition	Air passage continuity between A and B
12V direct current supply between terminals 1 and 2	No
OFF	Yes

MTBL0240

If NG or operation takes more than 1 second, clean valve using air blower or replace as necessary.

If portion **B** is rusted, replace control valve.

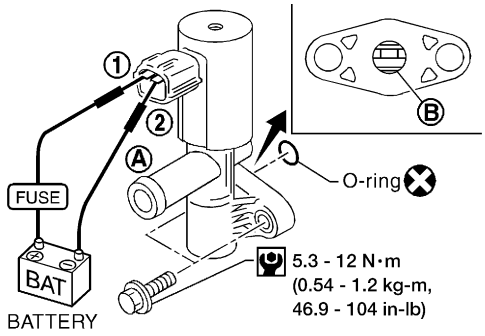

AEC783A

Make sure new O-ring is installed properly.

OK or NG

OK	▶	GO TO 4.
NG	▶	Replace EVAP canister vent control valve and O-ring.

Diagnostic Procedure (Cont'd)

4	CHECK VACUUM CUT VALVE

Check vacuum cut valve as follows:

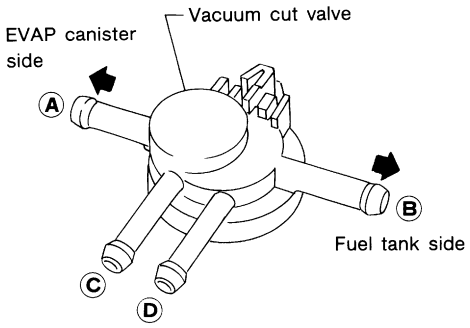

SEF379Q

1. Plug port **C** and **D** with fingers.
2. Apply vacuum to port **A** and check that there is no suction from port **B**.
3. Apply vacuum to port **B** and check that there is suction from port **A**.
4. Blow air in port **B** and check that there is a resistance to flow out of port **A**.
5. Open port **C** and **D**.
6. Blow air in port **A** check that air flows freely out of port **C**.
7. Blow air in port **B** check that air flows freely out of port **D**.

OK or NG

OK	▶	GO TO 5.
NG	▶	Replace vacuum cut valve.

5	CHECK IF EVAP CANISTER SATURATED WITH WATER

1. Remove EVAP canister with EVAP canister vent control valve attached.
2. Check if water will drain from the EVAP canister.

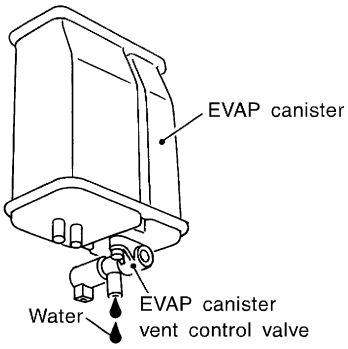

SEF596U

OK or NG

OK	▶	GO TO 6.
NG	▶	GO TO 8.

6	CHECK EVAP CANISTER

Weigh the EVAP canister with the EVAP canister vent control valve attached.
The weight should be less than 1.8 kg (4.0 lb).

OK or NG

OK	▶	GO TO 8.
NG	▶	Replace the EVAP canister.

7	DETECT MALFUNCTIONING PART
Check the following. • EVAP canister for damage • EVAP hose between EVAP canister and water separator for clogging or poor connection	
▶	Repair hose or replace EVAP canister.

8	CHECK EVAP CONTROL SYSTEM PRESSURE SENSOR HOSE	
Check disconnection or improper connection of hose connected to EVAP control system pressure sensor.		
OK or NG		
OK	▶	GO TO 9.
NG	▶	Repair it.

9	CHECK EVAP CONTROL SYSTEM PRESSURE SENSOR CONNECTOR	
1. Disconnect EVAP control system pressure sensor harness connector.		
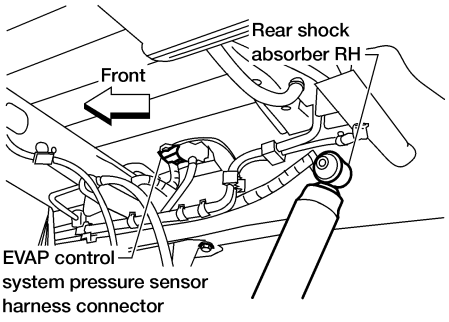 AEC651A		
2. Check connectors for water. **Water should not exist.**		
OK or NG		
OK	▶	GO TO 10.
NG	▶	Replace EVAP control system pressure sensor.

10	CHECK EVAP CONTROL SYSTEM PRESSURE SENSOR FUNCTION	
Refer to "DTC Confirmation Procedure" for DTC P0450, EC-1008.		
OK or NG		
OK	▶	GO TO 11.
NG	▶	Replace EVAP control system pressure sensor.

11	CHECK INTERMITTENT INCIDENT	
Refer to "TROUBLE DIAGNOSIS FOR INTERMITTENT INCIDENT", EC-753.		
	▶	**INSPECTION END**

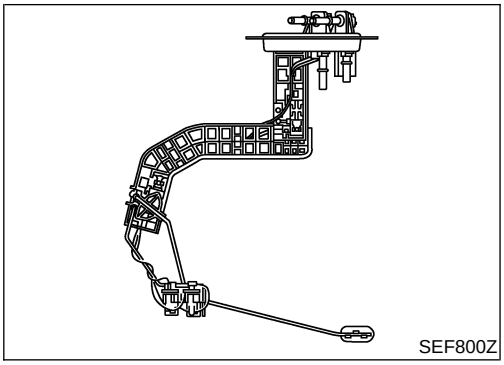
SEF800Z

Component Description

NEEC0994

The fuel level sensor is mounted in the fuel level sensor unit. The sensor detects a fuel level in the fuel tank and transmits a signal to the ECM.
It consists of two parts, one is mechanical float and the other side is variable resistor. Fuel level sensor output voltage changes depending on the movement of the fuel mechanical float.

ECM Terminals and Reference Value

NEEC1000

Specification data are reference values and are measured between each terminal and ground.

CAUTION:
Do not use ECM ground terminals when measuring input/output voltage. Doing so may result in damage to the ECM's transistor. Use a ground other than ECM terminals, such as the ground.

TERMINAL NO.	WIRE COLOR	ITEM	CONDITION	DATA (DC Voltage)
46	P/B	Fuel level sensor	**[Ignition switch "ON"]**	Approximately 0 - 4.8V Output voltage varies with fuel level.
66	B	Fuel level sensor ground	**[Engine is running]** ● Idle speed	Approximately 0V

On Board Diagnosis Logic

NEEC0995

ECM receives two signals from the fuel level sensor.
One is fuel level sensor power supply circuit, and the other is fuel level sensor ground circuit.
This diagnosis indicates the latter to detect open circuit malfunction. Malfunction is detected when a high voltage from the sensor is sent to ECM.

POSSIBLE CAUSE

NEEC0995S01

- Fuel level sensor circuit
  (The fuel level sensor circuit is open or shorted.)

DTC Confirmation Procedure

NEEC0997

NOTE:
If "DTC Confirmation Procedure" has been previously conducted, always turn ignition switch "OFF" and wait at least 5 seconds before conducting the next test.

3

DATA MONITOR	
MONITOR	NO DTC
FUEL T/TMP SE	XXX °C
FUEL LEVEL SE	XXX V

SEF195Y

WITH CONSULT-II

NEEC0997S01

1) Turn ignition switch "ON".
2) Select "DATA MONITOR" mode with CONSULT-II.
3) Wait at least 5 seconds.
4) If 1st trip DTC is detected, go to "Diagnostic Procedure", EC-1155.

WITH GST

NEEC0997S02

Follow the procedure "WITH CONSULT-II" above.

Wiring Diagram

NEEC0998

EC-FLS3-01

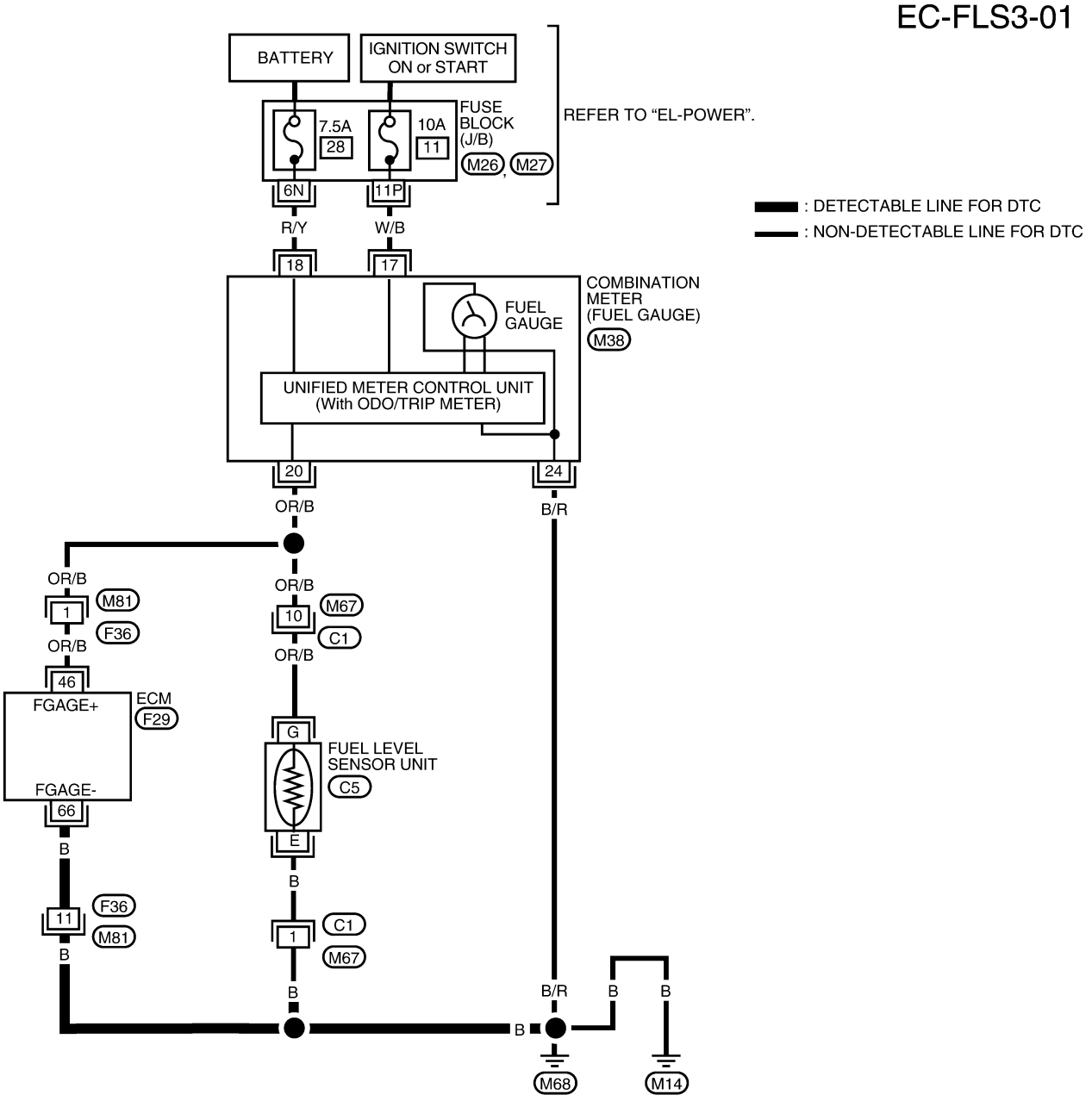

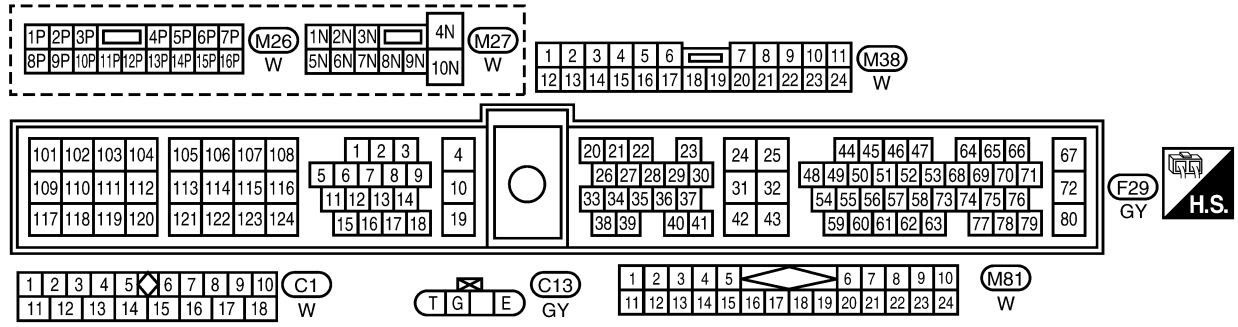

WEC820

Diagnostic Procedure

=NEEC0999

1	CHECK FUEL LEVEL SENSOR GROUND CIRCUIT FOR OPEN AND SHORT	
1. Turn ignition switch “OFF”. 2. Disconnect ECM harness connector. 3. Check harness continuity between ECM terminal 66 and body ground. Refer to Wiring Diagram. **Continuity should exist.** 4. Also check harness for short to power. **OK or NG**		
OK	▶	GO TO 3.
NG	▶	GO TO 2.

2	DETECT MALFUNCTIONING PART	
1. Check the following. ● Harness connectors F36, M81 ● Harness for open and short between ECM and body ground		
	▶	Replace open circuit or short to power in harness or connectors.

3	CHECK FUEL LEVEL SENSOR	
Refer to ***EL-82***, “FUEL LEVEL SENSOR UNIT CHECK”. **OK or NG**		
OK	▶	GO TO 4.
NG	▶	Replace fuel level sensor unit.

4	CHECK INTERMITTENT INCIDENT	
Refer to “TROUBLE DIAGNOSIS FOR INTERMITTENT INCIDENT”, EC-753 **OK or NG**		
	▶	**INSPECTION END**

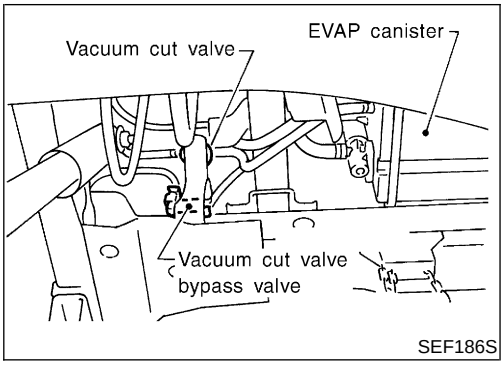

Description

NEEC0872

COMPONENT DESCRIPTION

NEEC0872S01

The vacuum cut valve and vacuum cut valve bypass valve are installed in parallel on the EVAP purge line between the fuel tank and the EVAP canister.

The vacuum cut valve prevents the intake manifold vacuum from being applied to the fuel tank.

The vacuum cut valve bypass valve is a solenoid type valve and generally remains closed. It opens only for on board diagnosis.

The vacuum cut valve bypass valve responds to signals from the ECM. When the ECM sends an ON (ground) signal, the valve is opened. The vacuum cut valve is then bypassed to apply intake manifold vacuum to the fuel tank.

EVAPORATIVE EMISSION SYSTEM DIAGRAM

NEEC0872S02

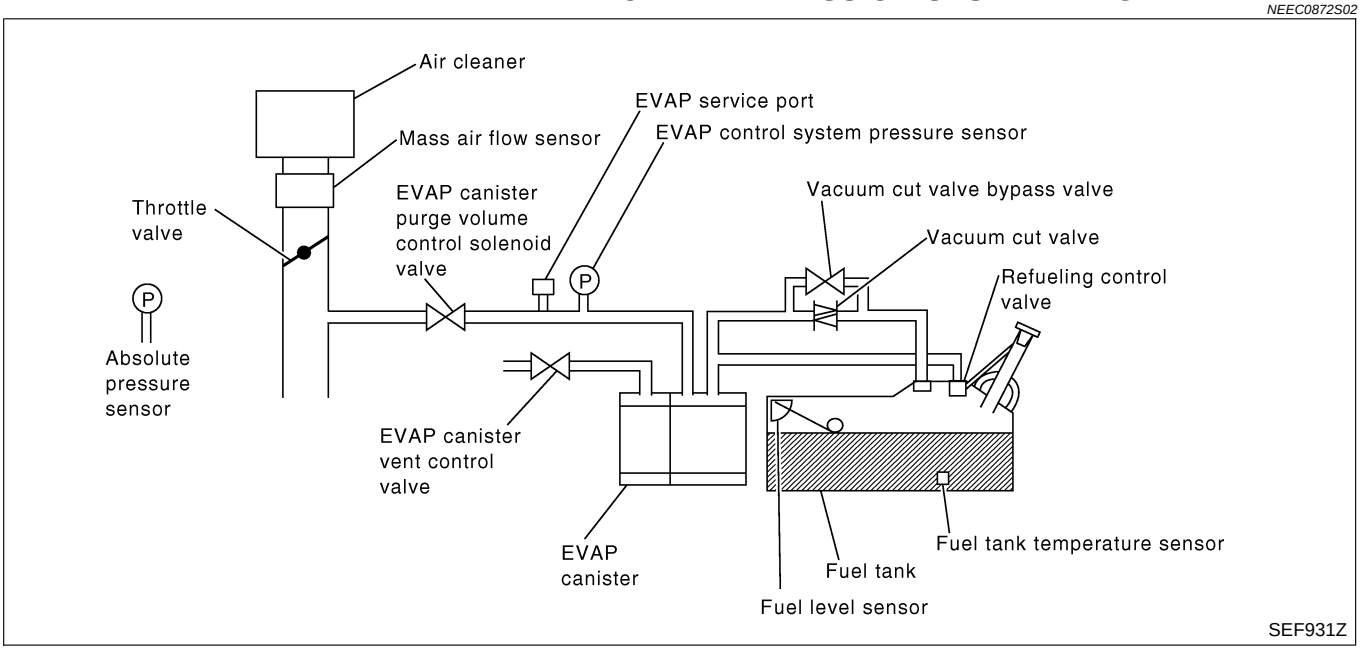

CONSULT-II Reference Value in Data Monitor Mode

NEEC0873

Specification data are reference values.

MONITOR ITEM	CONDITION	SPECIFICATION
VC/V BYPASS/V	• Ignition switch: ON	OFF

ECM Terminals and Reference Value

NEEC0874

Specification data are reference values and are measured between each terminal and ground.

CAUTION:

Do not use ECM ground terminals when measuring input/output voltage. Doing so may result in damage to the ECM's transistor. Use a ground other than the ECM terminals, such as the ground.

TERMINAL NO.	WIRE COLOR	ITEM	CONDITION	DATA (DC Voltage)
120	P/B	Vacuum cut valve bypass valve	**[Ignition switch ON]**	BATTERY VOLTAGE (11 - 14V)

On Board Diagnosis Logic

NEEC0875

Malfunction is detected when an improper voltage signal is sent to ECM through vacuum cut valve bypass valve.

POSSIBLE CAUSE

NEEC0875S01

- Harness or connectors
  (The vacuum cut valve bypass valve circuit is open or shorted.)
- Vacuum cut valve bypass valve

DTC Confirmation Procedure

NEEC0876

NOTE:
If "DTC Confirmation Procedure" has been previously conducted, always turn ignition switch OFF and wait at least 5 seconds before conducting the next test.

TESTING CONDITION:
Before performing the following procedure, confirm that battery voltage is more than 11V at idle speed.

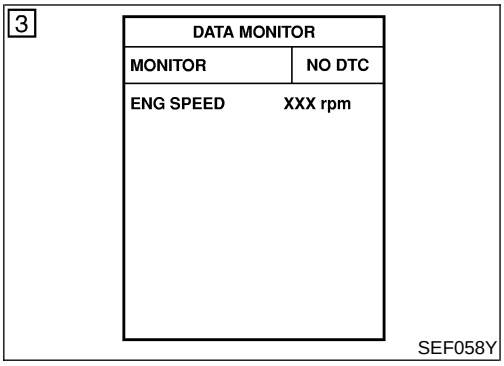

With CONSULT-II

1) Turn ignition switch ON.
2) Select "DATA MONITOR" mode with CONSULT-II.
3) Start engine and wait at least 5 seconds.
4) If 1st trip DTC is detected, go to "Diagnostic Procedure", EC-1159.

With GST

Follow the procedure "With CONSULT-II".

Wiring Diagram

NEEC0877

EC-BYPS/V-01

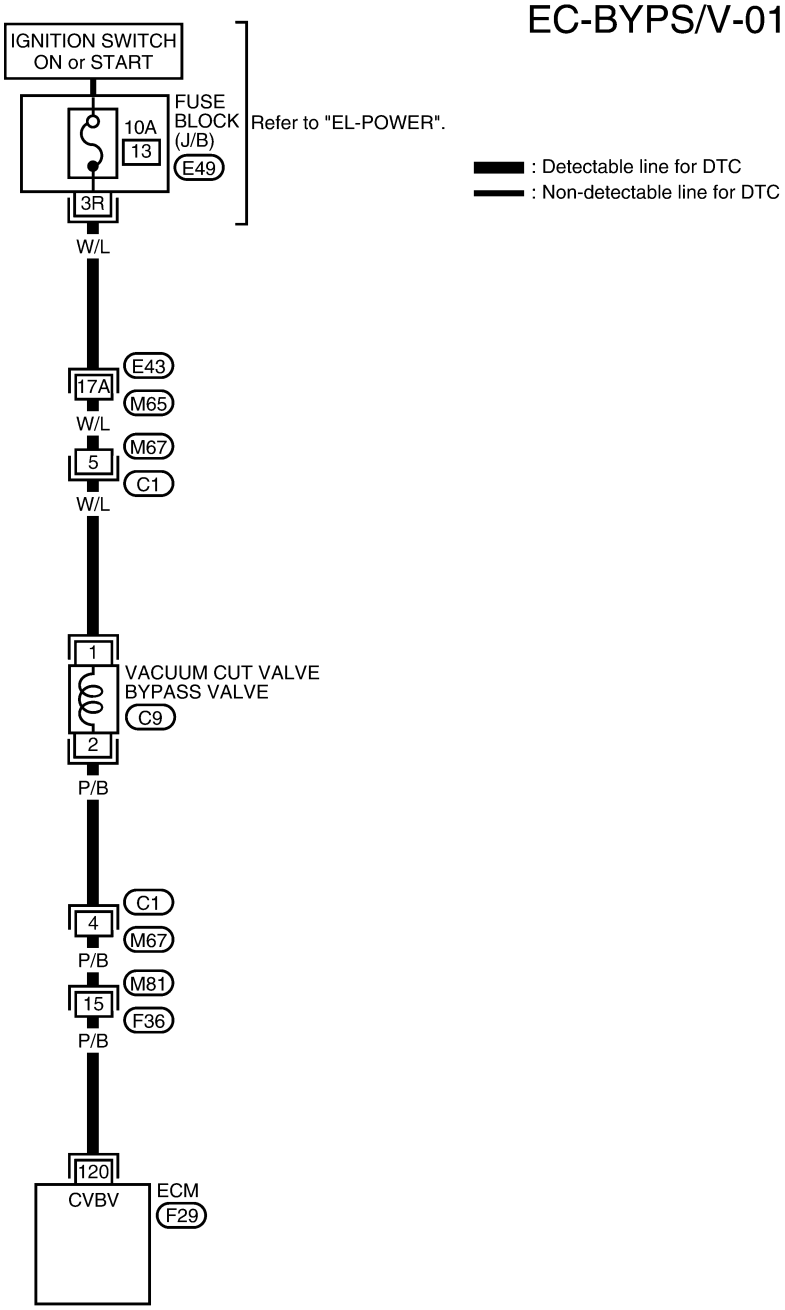

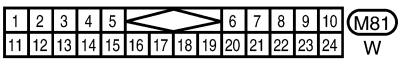



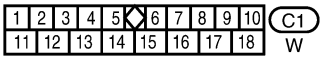



Refer to the following.
M65, E43 - SUPER MULTIPLE JUNCTION (SMJ)

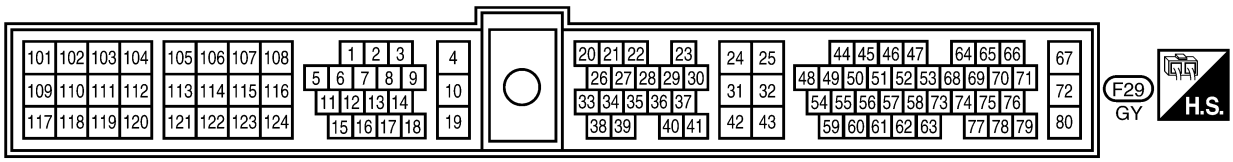

LEC815

Diagnostic Procedure

NEEC1044

1	INSPECTION START
Do you have CONSULT-II?	
Yes or No	
Yes ▶	GO TO 2.
No ▶	GO TO 3.

2	CHECK VACUUM CUT VALVE BYPASS VALVE CIRCUIT

With CONSULT-II

1. Turn ignition switch “OFF” and then “ON”.
2. Select “VC/V BYPASS/V” in “ACTIVE TEST” mode with CONSULT-II.
3. Touch “ON/OFF” on CONSULT-II screen.

ACTIVE TEST	
VC/V BYPASS/V	OFF
MONITOR	
ENG SPEED	XXX rpm
A/F ALPHA-B1	XXX %
A/F ALPHA-B2	XXX %
HO2S1 MNTR (B1)	LEAN
HO2S1 MNTR (B2)	LEAN
THRTL POS SEN	XXX V

SEF014Z

4. Make sure that clicking sound is heard from the vacuum cut valve bypass valve.

OK or NG	
OK ▶	GO TO 7.
NG ▶	GO TO 3.

Diagnostic Procedure (Cont'd)

3	CHECK VACUUM CUT VALVE BYPASS VALUE POWER SUPPLY CIRCUIT

Without CONSULT-II

1. Turn ignition switch "OFF".
2. Disconnect vacuum cut valve bypass valve harness connector.

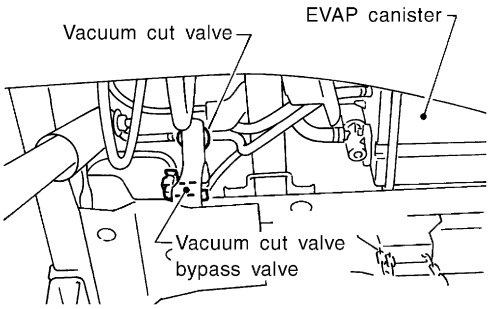

SEF186S

3. Turn ignition switch "ON".
4. Check voltage between terminal 1 and ground with CONSULT-II or tester.

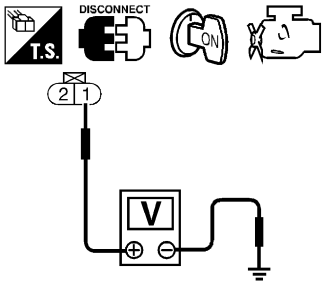

SEF659W

Voltage: Battery voltage

OK or NG

OK	▶	GO TO 5.
NG	▶	GO TO 4.

4	DETECT MALFUNCTIONING PART

Check the following.

- Harness connectors E74, M82
- Harness connectors M67, C1
- Fuse block (J/B) connector E49
- 10A fuse
- Harness for open or short between vacuum cut valve bypass valve and fuse

	▶	Repair harness or connectors.

5	CHECK VACUUM CUT VALVE BYPASS VALVE OUTPUT SIGNAL CIRCUIT FOR OPEN AND SHORT

1. Turn ignition switch "OFF".
2. Disconnect ECM harness connector.
3. Check harness continuity between ECM terminal 120 and valve terminal 2. Refer to Wiring Diagram.
   Continuity should exist.
4. Also check harness for short to ground and short to power.

OK or NG

OK	▶	GO TO 7.
NG	▶	GO TO 6.

6	DETECT MALFUNCTIONING PART
Check the following. ● Harness connectors C1, M67 ● Harness connectors M81, F36 ● Harness for open or short between vacuum cut valve bypass valve and ECM	
▶	Repair open circuit or short to ground or short to power in harness or connectors.

7	CHECK VACUUM CUT VALVE BYPASS VALVE

With CONSULT-II

1. Perform "VC/V BYPASS/V" in "ACTIVE TEST" mode.
2. Check air passage continuity and operation delay time under the following conditions.

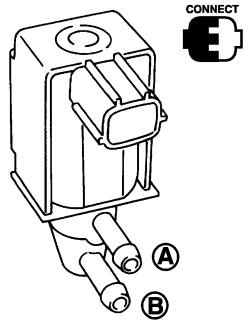

ACTIVE TEST	
VC/V BYPASS/V	OFF
MONITOR	
ENG SPEED	XXX rpm
A/F ALPHA-B1	XXX %
A/F ALPHA-B2	XXX %
HO2S1 MNTR (B1)	LEAN
HO2S1 MNTR (B2)	LEAN
THRTL POS SEN	XXX V

Condition VC/V BYPASS/V	Air passage continuity between A and B
ON	Yes
OFF	No

Operation takes less than 1 second.

SEF016Z

Without CONSULT-II

1. Check air passage continuity and operation delay time under the following conditions.

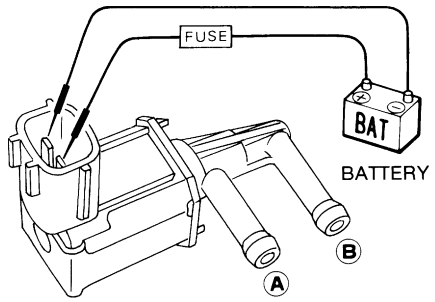

SEF351Q

Condition	Air passage continuity between A and B
12V direct current supply between terminals 1 and 2	Yes
No supply	No

MTBL0242

OK or NG

OK	▶	GO TO 8.
NG	▶	Replace vacuum cut valve bypass valve.

8	CHECK INTERMITTENT INCIDENT
Refer to "TROUBLE DIAGNOSIS FOR INTERMITTENT INCIDENT", EC-148.	
▶	**INSPECTION END**

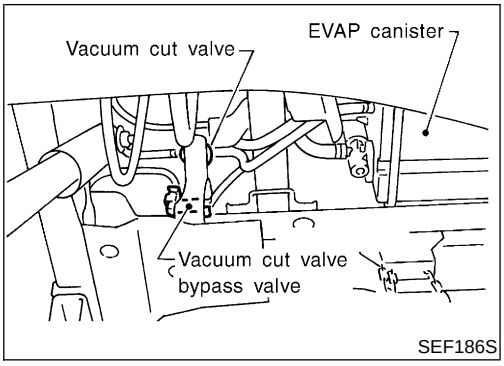

Description

NEEC0879

COMPONENT DESCRIPTION

NEEC0879S01

The vacuum cut valve and vacuum cut valve bypass valve are installed in parallel on the EVAP purge line between the fuel tank and the EVAP canister.

The vacuum cut valve prevents the intake manifold vacuum from being applied to the fuel tank.

The vacuum cut valve bypass valve is a solenoid type valve and generally remains closed. It opens only for on board diagnosis.

The vacuum cut valve bypass valve responds to signals from the ECM. When the ECM sends an ON (ground) signal, the valve is opened. The vacuum cut valve is then bypassed to apply intake manifold vacuum to the fuel tank.

EVAPORATIVE EMISSION SYSTEM DIAGRAM

NEEC0879S02

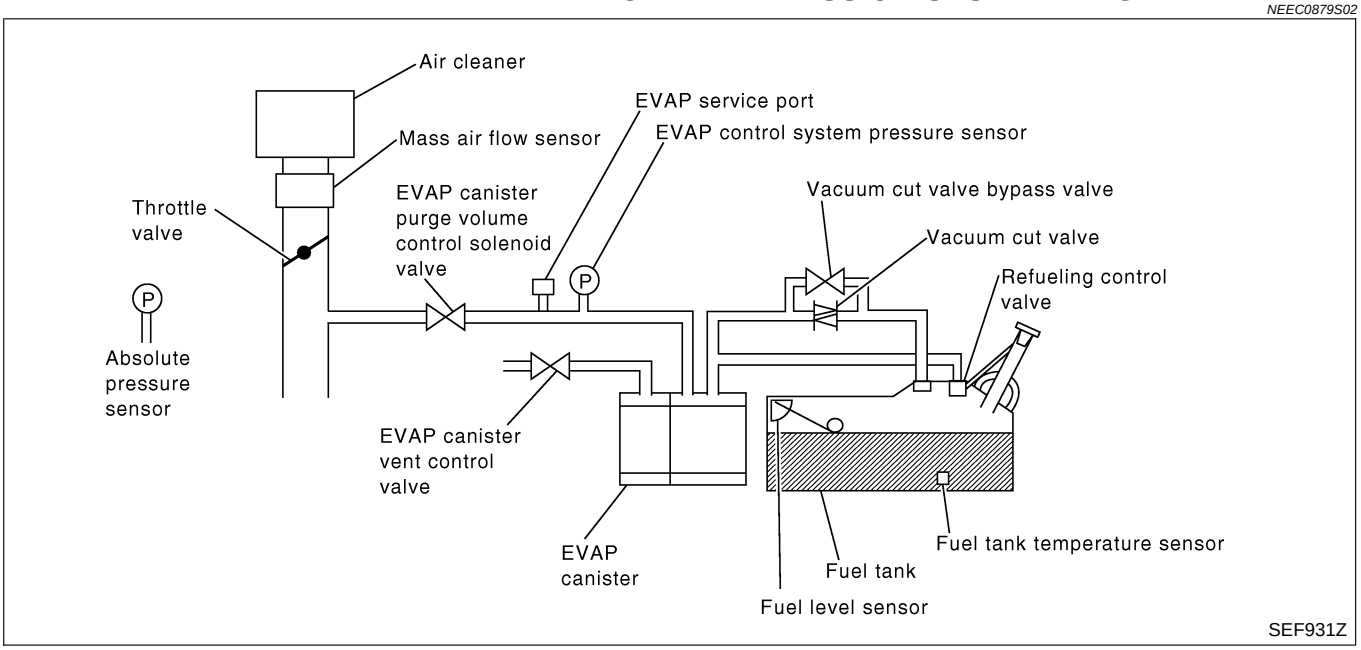

CONSULT-II Reference Value in Data Monitor Mode

NEEC0880

Specification data are reference values.

MONITOR ITEM	CONDITION	SPECIFICATION
VC/V BYPASS/V	• Ignition switch: ON	OFF

ECM Terminals and Reference Value

NEEC0881

Specification data are reference values and are measured between each terminal and ground.

CAUTION:

Do not use ECM ground terminals when measuring input/output voltage. Doing so may result in damage to the ECM's transistor. Use a ground other than the ECM terminals, such as the ground.

TERMINAL NO.	WIRE COLOR	ITEM	CONDITION	DATA (DC Voltage)
120	P/B	Vacuum cut valve bypass valve	**[Ignition switch ON]**	BATTERY VOLTAGE (11 - 14V)

On Board Diagnosis Logic

NEEC0882

Malfunction is detected when vacuum cut valve bypass valve does not operate properly.

POSSIBLE CAUSE

NEEC0882S01

- Vacuum cut valve bypass valve
- Vacuum cut valve
- Bypass hoses for clogging
- EVAP control system pressure sensor and circuit
- EVAP canister vent control valve
- Hose between fuel tank and vacuum cut valve clogged
- Hose between vacuum cut valve and EVAP canister clogged
- EVAP canister
- EVAP purge port of fuel tank for clogging

7

VC CUT/V BP/V P1491	
OUT OF CONDITION	
MONITOR	
ENG SPEED	XXX rpm
VHCL SPEED SE	XXX km/h
B/FUEL SCHDL	XXX msec

SEF210Y

7

VC CUT/V BP/V P1491	
TESTING	
MONITOR	
ENG SPEED	XXX rpm
VHCL SPEED SE	XXX km/h
B/FUEL SCHDL	XXX msec

SEF211Y

7

VC CUT/V BP/V P1491
COMPLETED

SEF239Y

DTC Confirmation Procedure

NEEC0883

CAUTION:

Always drive vehicle at a safe speed.

NOTE:

If “DTC Confirmation Procedure” has been previously conducted, always turn ignition switch OFF and wait at least 5 seconds before conducting the next test.

TESTING CONDITION:

Always perform test at a temperature of 5 to 30°C (41 to 86°F).

With CONSULT-II

1) Turn ignition switch ON.
2) Start engine and warm it up to normal operating temperature.
3) Turn ignition switch OFF and wait at least 5 seconds.
4) Start engine and let it idle for at least 70 seconds.
5) Select “VC CUT/V BP/V P1491” of “EVAPORATIVE SYSTEM” in “DTC WORK SUPPORT” mode with CONSULT-II.
6) Touch “START”.
7) When the following conditions are met, “TESTING” will be displayed on the CONSULT-II screen. Maintain the conditions continuously until “TESTING” changes to “COMPLETED”. (It will take at least 30 seconds.)

CMPS·RPM (POS)	More than 500 rpm
Selector lever	Suitable position
Vehicle speed	More than 37 km/h (23 MPH)
B/FUEL SCHDL	1.0 - 10.0 msec

If “TESTING” is not displayed after 5 minutes, retry from step 3.

8) Make sure that “OK” is displayed after touching “SELF-DIAG RESULTS”. If “NG” is displayed, refer to “Diagnostic Procedure”, EC-1166.

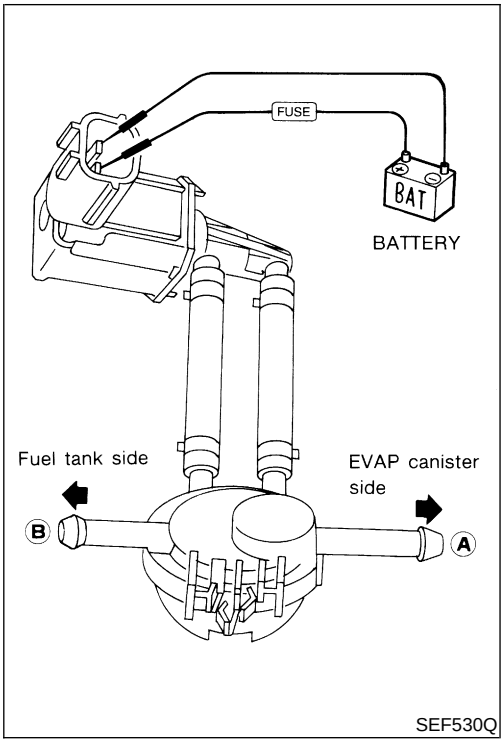

Overall Function Check

NEEC0884

Use this procedure to check the overall function of vacuum cut valve bypass valve. During this check, the 1st trip DTC might not be confirmed.

Without CONSULT-II

1) Remove vacuum cut valve and vacuum cut valve bypass valve as an assembly.
2) Apply vacuum to port **A** and check that there is no suction from port **B**.
3) Apply vacuum to port **B** and check that there is suction from port **A**.
4) Blow air in port **B** and check that there is a resistance to flow out of port **A**.
5) Supply battery voltage to the terminal.
6) Blow air in port **A** and check that air flows freely out of port **B**.
7) Blow air in port **B** and check that air flows freely out of port **A**.
8) If NG, go to “Diagnostic Procedure”, EC-1166.

Wiring Diagram

NEEC0885

EC-BYPS/V-01

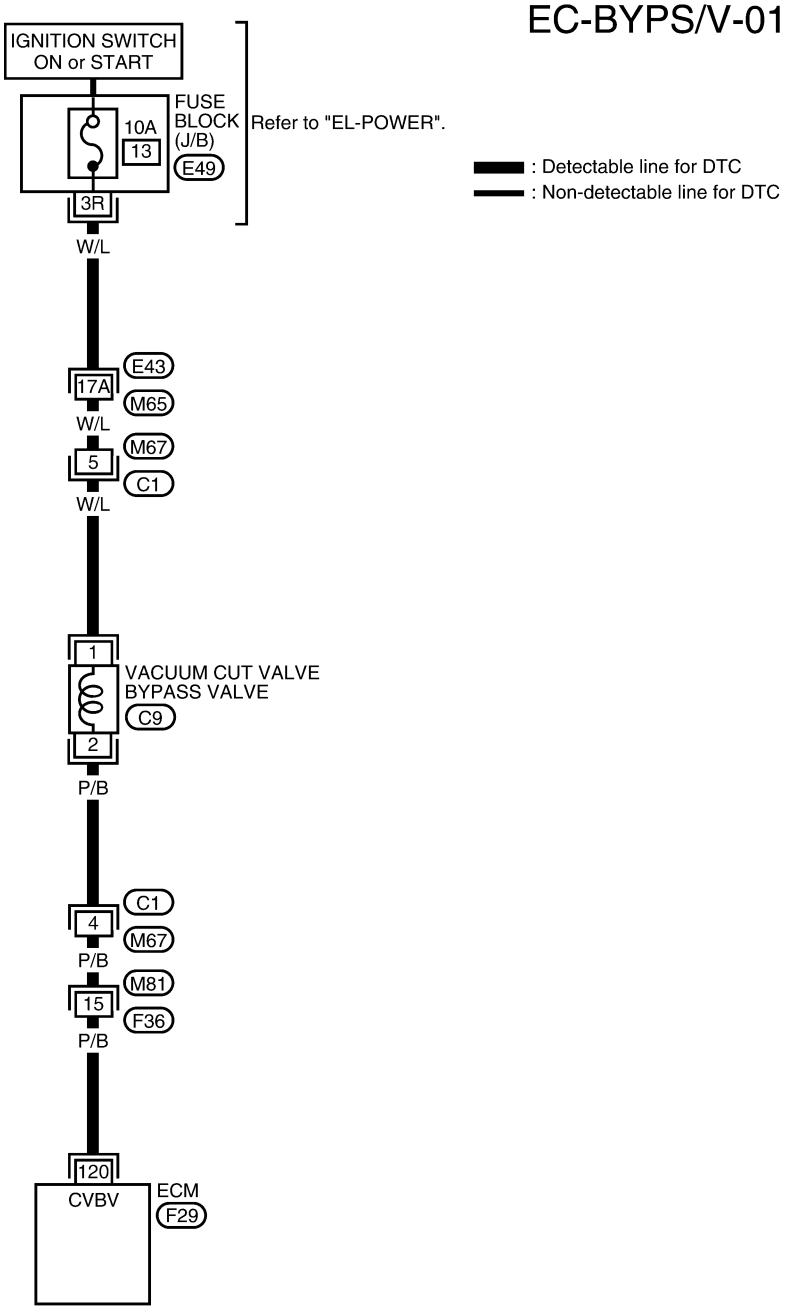

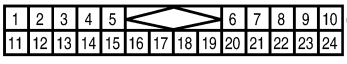



Refer to the following.
M65 , E43 - SUPER MULTIPLE JUNCTION (SMJ)

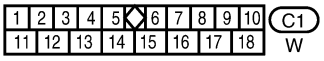



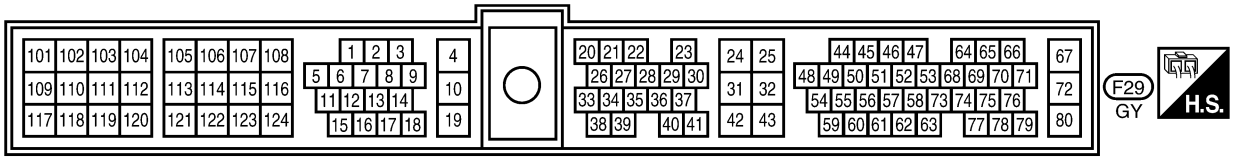

LEC815

Diagnostic Procedure

NEEC0886

1	INSPECTION START	
Do you have CONSULT-II?		
Yes or No		
Yes	▶	GO TO 2.
No	▶	GO TO 3.

2	CHECK VACUUM CUT VALVE BYPASS VALVE OPERATION	

With CONSULT-II

1. Turn ignition switch OFF.
2. Remove vacuum cut valve and vacuum cut valve bypass valve as an assembly.
3. Apply vacuum to port A and check that there is no suction from port B.
4. Apply vacuum to port B and check that there is suction from port A.
5. Blow air in port B and check that there is a resistance to flow out of port A.
6. Turn ignition switch ON.
7. Select “VC/V BYPASS/V” in “ACTIVE TEST” mode with CONSULT-II and touch “ON”.
8. Blow air in port A and check that air flows freely out of port B.
9. Blow air in port B and check that air flows freely out of port A.

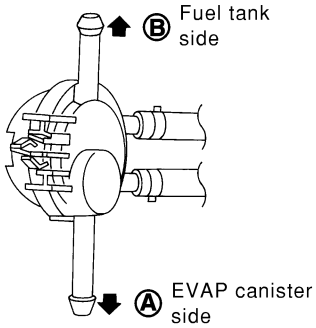

ACTIVE TEST	
VC/V BYPASS/V	OFF
MONITOR	
ENG SPEED	XXX rpm
A/F ALPHA-B1	XXX %
A/F ALPHA-B2	XXX %
HO2S1 MNTR (B1)	LEAN
HO2S1 MNTR (B2)	LEAN
THRTL POS SEN	XXX V

SEF017Z

OK or NG

OK	▶	GO TO 4.
NG	▶	GO TO 5.

3	CHECK VACUUM CUT VALVE BYPASS VALVE OPERATION

Without CONSULT-II

1. Turn ignition switch OFF.
2. Remove vacuum cut valve and vacuum cut valve bypass valve as an assembly.
3. Apply vacuum to port A and check that there is no suction from port B.
4. Apply vacuum to port B and check that there is suction from port A.
5. Blow air in port B and check that there is a resistance to flow out of port A.
6. Disconnect vacuum cut valve bypass valve harness connector.
7. Supply battery voltage to the terminal.
8. Blow air in port A and check that air flows freely out of port B.
9. Blow air in port B and check that air flows freely out of port A.

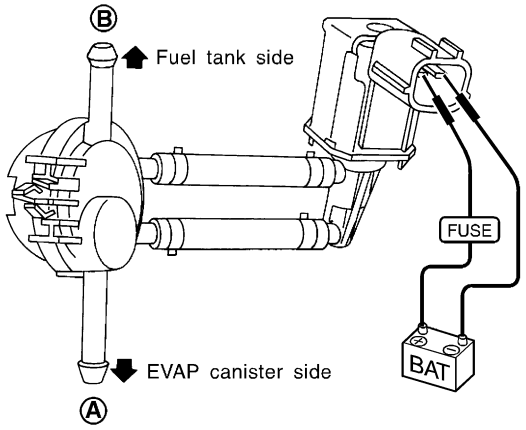

SEF914U

OK or NG

OK	▶	GO TO 4.
NG	▶	GO TO 5.

4	CHECK EVAP PURGE LINE

1. Check EVAP purge line between EVAP canister and fuel tank for clogging or disconnection.
2. Check EVAP purge port of fuel tank for clogging.
3. Check EVAP canister. Refer to EC-641.

OK or NG

OK	▶	GO TO 8.
NG (Step 1)	▶	Repair it.
NG (Step 2)	▶	Clean EVAP purge port.
NG (Step 3)	▶	Replace EVAP canister.

5	CHECK BYPASS HOSE

Check bypass hoses for clogging.

OK or NG

OK	▶	GO TO 6.
NG	▶	Repair or replace hoses.

6	CHECK VACUUM CUT VALVE BYPASS VALVE

With CONSULT-II

1. Perform "VC/V BYPASS/V" in "ACTIVE TEST" mode.
2. Check air passage continuity and operation delay time under the following conditions.

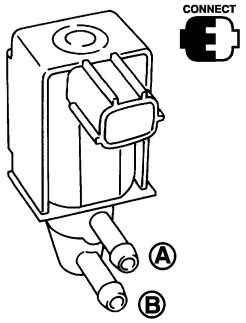

ACTIVE TEST	
VC/V BYPASS/V	OFF
MONITOR	
ENG SPEED	XXX rpm
A/F ALPHA-B1	XXX %
A/F ALPHA-B2	XXX %
HO2S1 MNTR (B1)	LEAN
HO2S1 MNTR (B2)	LEAN
THRTL POS SEN	XXX V

Condition VC/V BYPASS/V	Air passage continuity between A and B
ON	Yes
OFF	No

Operation takes less than 1 second.

SEF016Z

1. Check air passage continuity and operation delay time under the following conditions.

Without CONSULT-II

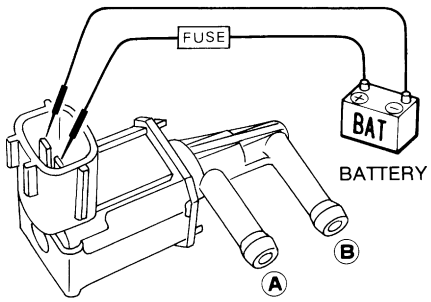

SEF351Q

Condition	Air passage continuity between A and B
12V direct current supply between terminals 1 and 2	Yes
No supply	No

MTBL0242

OK or NG

OK	▶	GO TO 7.
NG	▶	Replace vacuum cut valve bypass valve.

7	CHECK VACUUM CUT VALVE

Check vacuum cut valve as follows:

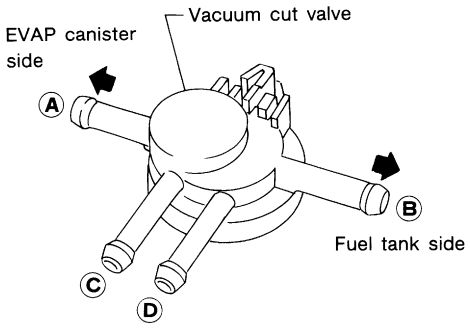

SEF379Q

1. Plug port **C** and **D** with fingers.
2. Apply vacuum to port **A** and check that there is no suction from port **B**.
3. Apply vacuum to port **B** and check that there is suction from port **A**.
4. Blow air in port **B** and check that there is a resistance to flow out of port **A**.
5. Open port **C** and **D**.
6. Blow air in port **A** check that air flows freely out of port **C**.
7. Blow air in port **B** check that air flows freely out of port **D**.

OK or NG

OK	▶	GO TO 8.
NG	▶	Replace vacuum cut valve.

8	CHECK EVAP CONTROL SYSTEM PRESSURE SENSOR HOSE

1. Turn ignition switch OFF.
2. Check disconnection or improper connection of hose connected to EVAP control system pressure sensor.

OK or NG

OK	▶	GO TO 9.
NG	▶	Repair it

9	CHECK EVAP CONTROL SYSTEM PRESSURE SENSOR CONNECTOR

1. Disconnect EVAP control system pressure sensor harness connector.

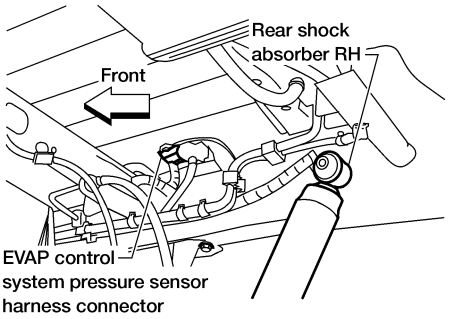

AEC651A

2. Check connectors for water.
   Water should not exist.

OK or NG

OK	▶	GO TO 10.
NG	▶	Replace EVAP control system pressure sensor.

Diagnostic Procedure (Cont'd)

10	CHECK EVAP CONTROL SYSTEM PRESSURE SENSOR FUNCTION	
Refer to "DTC Confirmation Procedure" for DTC P0450, EC-1008.		
OK or NG		
OK	▶	GO TO 11.
NG	▶	Replace EVAP control system pressure sensor.

11	CHECK EVAP CANISTER VENT CONTROL VALVE

Check air passage continuity.

With CONSULT-II

Perform "VENT CONTROL/V" in "ACTIVE TEST" mode.

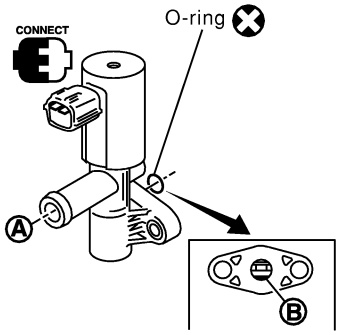

ACTIVE TEST	
VENT CONTROL/V	OFF
MONITOR	
ENG SPEED	XXX rpm
A/F ALPHA-B1	XXX %
A/F ALPHA-B2	XXX %
HO2S1 (B1)	XXX V
HO2S1 (B2)	XXX V
THRTL POS SEN	XXX V

Condition VENT CONTROL/V	Air passage continuity between A and B
ON	No
OFF	Yes

Operation takes less than 1 second.

SEF991Y

Without CONSULT-II

Condition	Air passage continuity between A and B
12V direct current supply between terminals 1 and 2	No
OFF	Yes

MTBL0240

If NG or operation takes more than 1 second, clean valve using air blower or replace as necessary.

If portion **B** is rusted, replace control valve.

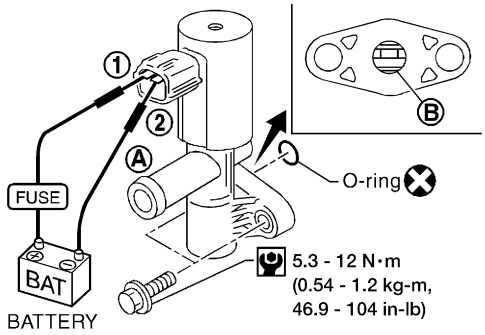

AEC783A

Make sure new O-ring is installed properly.

OK or NG

OK	▶	GO TO 12.
NG	▶	Replace EVAP canister vent control valve.

12	CHECK INTERMITTENT INCIDENT	
Refer to "TROUBLE DIAGNOSIS FOR INTERMITTENT INCIDENT", EC-753.		
	▶	**INSPECTION END**

Component Description

NEEC0887

The malfunction information related to A/T (Automatic Transmission) is transferred through the line (circuit) from TCM (Transmission control module) to ECM. Therefore, be sure to erase the malfunction information such as DTC not only in TCM (Transmission control module) but also ECM after the A/T related repair.

ECM Terminals and Reference Value

NEEC0888

Specification data are reference values and are measured between each terminal and ground.

CAUTION:

Do not use ECM ground terminals when measuring input/output voltage. Doing so may result in damage to the ECM's transistor. Use a ground other than the ECM terminals, such as the ground.

TERMINAL NO.	WIRE COLOR	ITEM	CONDITION	DATA (DC Voltage)
7	G/B	A/T check signal	**[Ignition switch ON] [Engine is running]**	0 - 3.0V

On Board Diagnosis Logic

NEEC0889

Malfunction is detected when an incorrect signal from TCM (Transmission control module) is sent to ECM.

POSSIBLE CAUSE

NEEC0889S01

- Harness or connectors
  [The communication line circuit between ECM and TCM (Transmission control module) is open or shorted.]
- Dead (Weak) battery
- TCM (Transmission control module)

3

ACTIVE TEST	
PURG VOL CONT/V	0.0%
MONITOR	
ENG SPEED	XXX rpm
A/F ALPHA-B1	XXX %
A/F ALPHA-B2	XXX %
HO2S1 MNTR (B1)	RICH
HO2S1 MNTR (B2)	RICH
THRTL POS SEN	XXX V

SEF985Y

DTC Confirmation Procedure

NEEC0890

NOTE:

If "DTC Confirmation Procedure" has been previously conducted, always turn ignition switch OFF and wait at least 5 seconds before conducting the next test.

TESTING CONDITION:

Before performing the following procedure, confirm that battery voltage is more than 10.5V at idle.

With CONSULT-II

1) Turn ignition switch ON.
2) Select "DATA MONITOR" mode with CONSULT-II.
3) Start engine and wait at least 40 seconds.
4) If 1st trip DTC is detected, go to "Diagnostic Procedure", EC-1173.

With GST

Follow the procedure "With CONSULT-II".

Wiring Diagram

NEEC0891

EC-ATDIAG-01

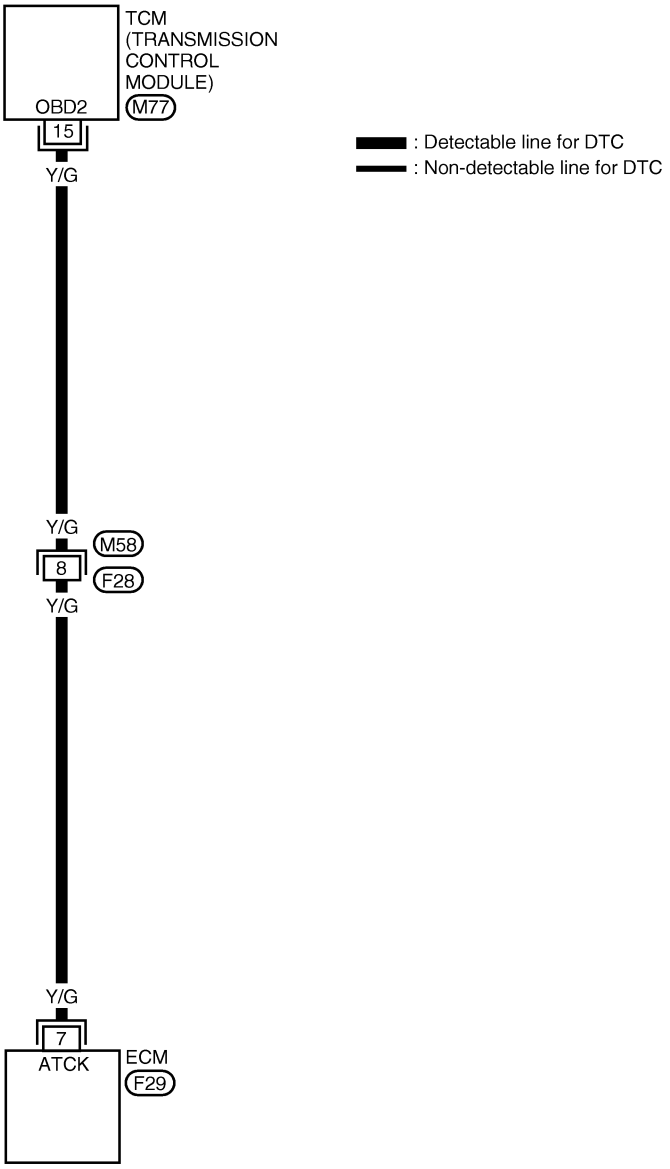

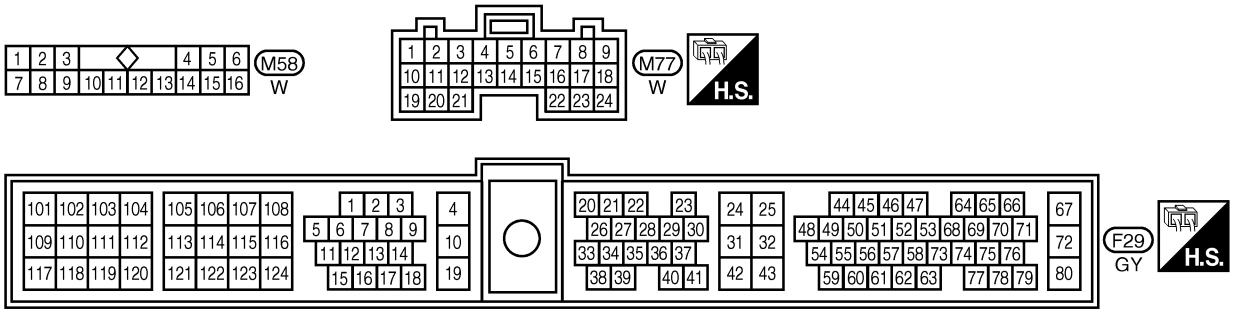

AEC971A

Diagnostic Procedure

NEEC0892

1	CHECK A/T DIAGNOSIS COMMUNICATION LINE INPUT SIGNAL CIRCUIT FOR OPEN AND SHORT

1. Turn ignition switch OFF.
2. Disconnect ECM harness connector and TCM (Transmission Control Module) harness connector.

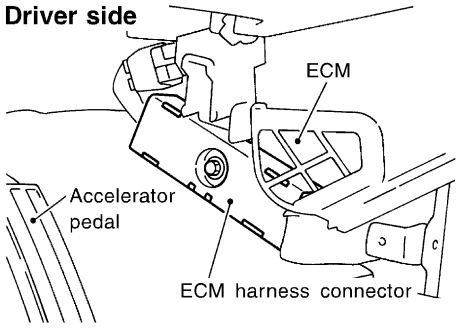

SEF324V

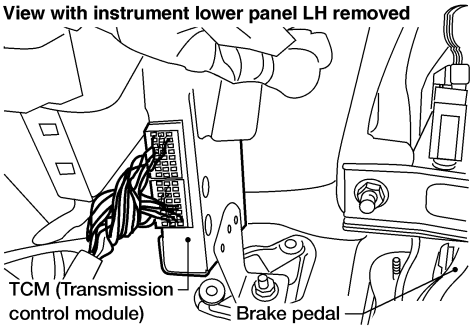

AEC655A

3. Check harness continuity between ECM terminal 7 and TCM (Transmission Control Module) terminal 15. Refer to Wiring Diagram.
   Continuity should exist.
4. Also check harness for short to ground and short to power.

OK or NG

OK	▶	GO TO 3.
NG	▶	GO TO 2.

2	DETECT MALFUNCTIONING PART

Check the following.
- Harness connectors M58, F28
- Harness for open or short between ECM and TCM (Transmission Control Module)

	▶	Repair open circuit or short to ground or short to power in harness or connectors.

3	CHECK INTERMITTENT INCIDENT

Refer to “TROUBLE DIAGNOSIS FOR INTERMITTENT INCIDENT”, EC-753.

	▶	**INSPECTION END**

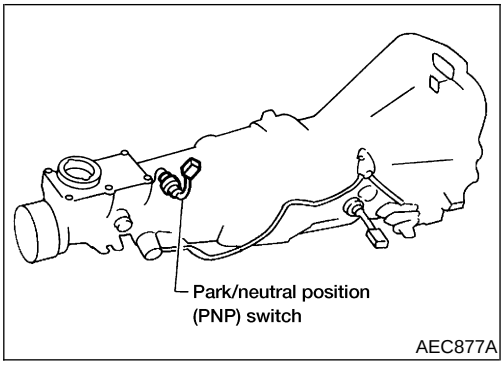

Component Description

NEEC0893

When the gear position is “P” (A/T models only) or “N”, park/neutral position (PNP) switch is “ON”.
ECM detects the position because the continuity of the line (the “ON” signal) exists.
For A/T models, the park/neutral position (PNP) switch assembly also includes a transmission range switch to detect selector lever position.

CONSULT-II Reference Value in Data Monitor Mode

NEEC0894

Specification data are reference values.

MONITOR ITEM	CONDITION		SPECIFICATION
P/N POSI SW	• Ignition switch: ON	Shift lever: “P” or “N”	ON
		Except above	OFF

ECM Terminals and Reference Value

NEEC0895

Specification data are reference values and are measured between each terminal and ground.

CAUTION:
Do not use ECM ground terminals when measuring input/output voltage. Doing so may result in damage to the ECM’s transistor. Use a ground other than the ECM terminals, such as the ground.

TERMINAL NO.	WIRE COLOR	ITEM	CONDITION	DATA (DC Voltage)
22	L/B	Park/neutral position (PNP) switch	**[Ignition switch ON]** • Gear position is “N” or “P” (A/T models) • Gear position is neutral (M/T models)	Approximately 0V
			[Ignition switch ON] • Except the above gear position	Approximately 5V

On Board Diagnosis Logic

NEEC0896

Malfunction is detected when the signal of the park/neutral position (PNP) switch is not changed in the process of engine starting and driving.

POSSIBLE CAUSE

NEEC0896S01

- Harness or connectors
  [The park/neutral position (PNP) switch circuit is open or shorted.]
- Park/neutral position (PNP) switch

DTC Confirmation Procedure

NEEC0897

CAUTION:
Always drive vehicle at a safe speed.

NOTE:
If "DTC Confirmation Procedure" has been previously conducted, always turn ignition switch OFF and wait at least 5 seconds before conducting the next test.

2

DATA MONITOR	
MONITOR	NO DTC
P/N POSI SW	ON

SEF212Y

5

DATA MONITOR	
MONITOR	NO DTC
ENG SPEED	XXX rpm
COOLAN TEMP/S	XXX °C
VHCL SPEED SE	XXX km/h
P/N POSI SW	OFF
B/FUEL SCHDL	XXX msec

SEF213Y

With CONSULT-II

1) Turn ignition switch ON.
2) Select "P/N POSI SW" in "DATA MONITOR" mode with CONSULT-II. Then check the "P/N POSI SW" signal under the following conditions.

Position (Selector lever)	Known good signal
"N" and "P" position	ON
Except the above position	OFF

If NG, go to "Diagnostic Procedure", EC-1178.
If OK, go to following step.

3) Select "DATA MONITOR" mode with CONSULT-II.
4) Start engine and warm it up to normal operating temperature.
5) Maintain the following conditions for at least 60 consecutive seconds.

ENG SPEED	1,600 - 2,700 rpm
COOLAN TEMP/S	More than 70°C (158°F)
B/FUEL SCHDL	3.3 - 13 msec
VHCL SPEED SE	More than 64 km/h (40 MPH)
Selector lever	Suitable position

6) If 1st trip DTC is detected, go to "Diagnostic Procedure", EC-1178.

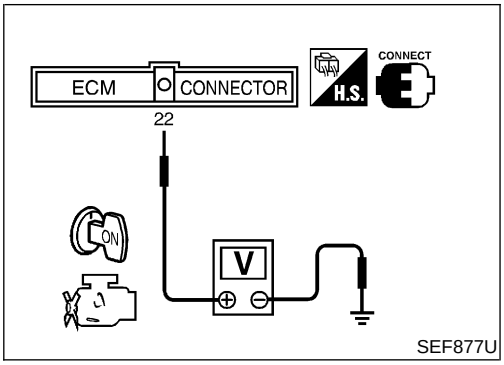

Overall Function Check

=NEEC0898

Use this procedure to check the overall function of the park/neutral position (PNP) switch circuit. During this check, a 1st trip DTC might not be confirmed.

Without CONSULT-II

1) Turn ignition switch ON.
2) Check voltage between ECM terminal 22 and body ground under the following conditions.

Condition (Gear position)	Voltage (V) (Known good data)
“P” and “N” position	Approx. 0
Except the above position	Approx. 5

3) If NG, go to “Diagnostic Procedure”, EC-1178.

Wiring Diagram

NEEC0899

EC-PNP/SW-01

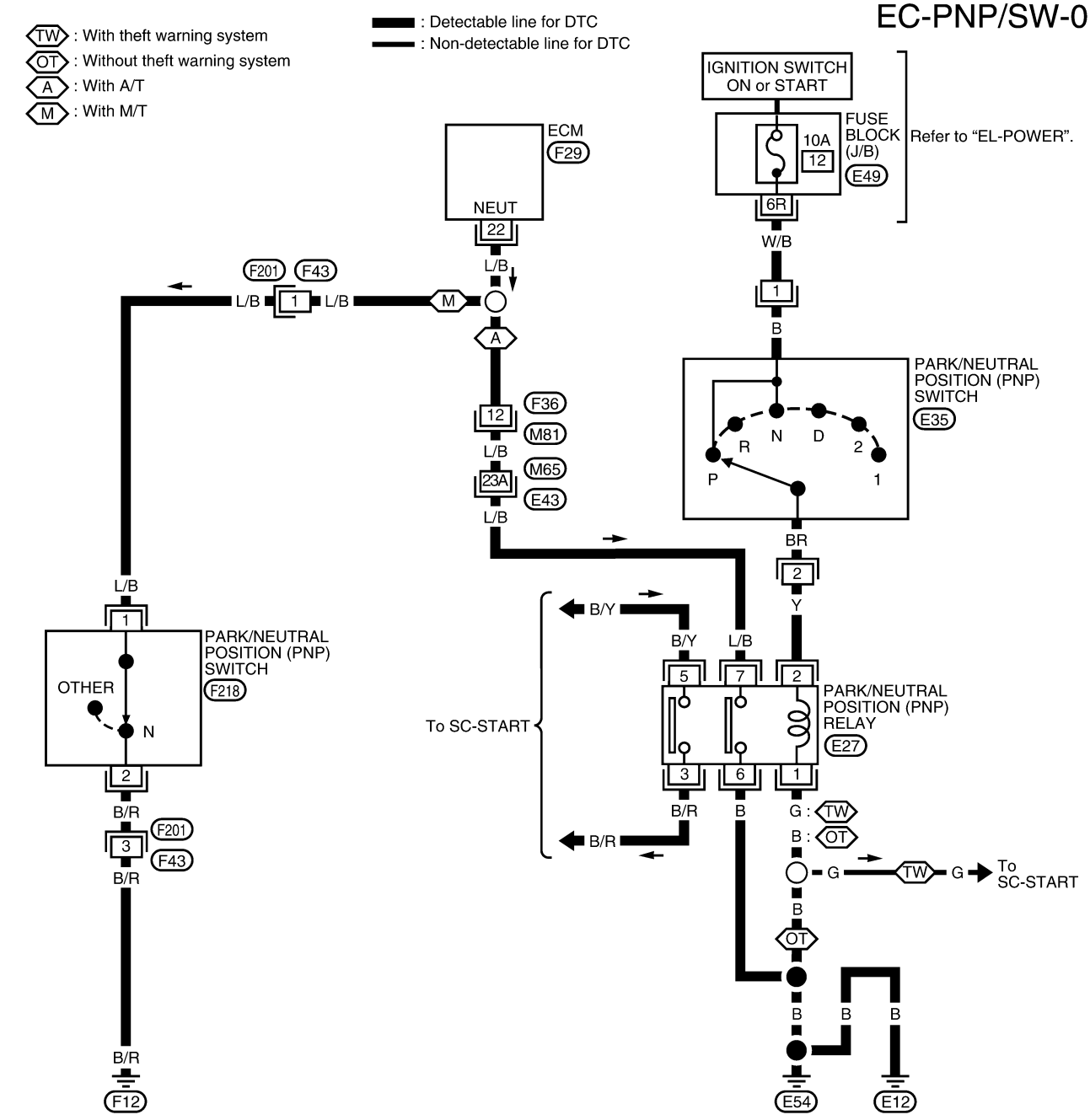

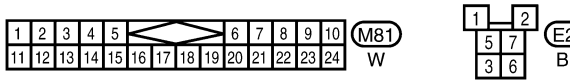



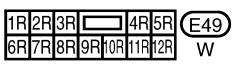

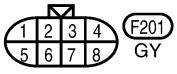



Refer to the following.
M65 , E43 - SUPER MULTIPLE JUNCTION (SMJ)

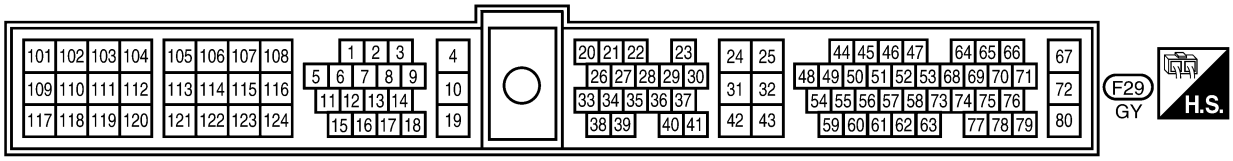

WEC802

Diagnostic Procedure

NEEC0900

FOR M/T MODELS

NEEC0900S01

1	CHECK PNP SWITCH GROUND CIRCUIT FOR OPEN AND SHORT

1. Turn ignition switch OFF.
2. Disconnect park/neutral position (PNP) switch harness connector.

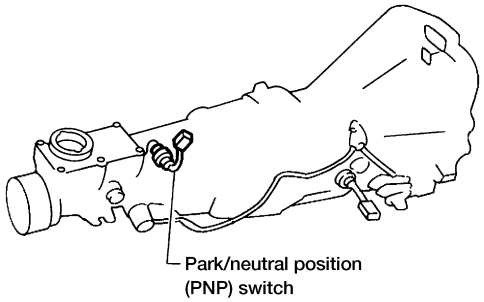

AEC877A

3. Check harness continuity between PNP switch terminal 2 and engine ground. Refer to Wiring Diagram.
   Continuity should exist.
4. Also check harness for short to power.

OK or NG

OK	▶	GO TO 3.
NG	▶	GO TO 2.

2	DETECT MALFUNCTIONING PART

Check the following.
- Harness connectors F201, F43
- Harness for open between park/neutral position (PNP) switch and engine ground

	▶	Repair open circuit or short to power in harness or connectors.

3	CHECK PNP SWITCH INPUT SIGNAL CIRCUIT FOR OPEN AND SHORT

1. Disconnect ECM harness connector.
2. Check harness continuity between ECM terminal 22 and PNP switch terminal 1. Refer to Wiring Diagram.
   Continuity should exist.
3. Also check harness for short to ground and short to power.

OK or NG

OK	▶	GO TO 5.
NG	▶	GO TO 4.

4	DETECT MALFUNCTIONING PART

Check the following.
- Harness connectors F43, F201
- Harness for open or short between ECM and park/neutral position (PNP) switch

	▶	Repair open circuit or short to ground or short to power in harness or connectors.

5	CHECK PARK/NEUTRAL POSITION (PNP) SWITCH

Refer to ***MT-40***, “Position Switch Check”.

OK or NG

OK	▶	GO TO 6.
NG	▶	Replace park/neutral position (PNP) switch.

6	CHECK INTERMITTENT INCIDENT
Refer to "TROUBLE DIAGNOSIS FOR INTERMITTENT INCIDENT", EC-753.	
▶	INSPECTION END

Diagnostic Procedure (Cont'd)

FOR A/T MODELS

=NEEC0900S02

1	CHECK PNP SWITCH POWER SUPPLY CIRCUIT-I

1. Turn ignition switch OFF.
2. Disconnect park/neutral position (PNP) relay.
3. Turn ignition switch ON.
4. Shift selector lever to "P" or "N" position.
5. Check voltage between terminal 2 and ground with CONSULT-II or tester.

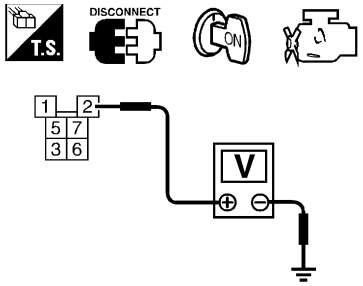

SEF661W

Voltage: Battery voltage

OK or NG

OK	▶	GO TO 6.
NG	▶	GO TO 2.

2	CHECK PNP SWITCH POWER SUPPLY CIRCUIT-II

1. Turn ignition switch OFF.
2. Disconnect park/neutral position (PNP) switch harness connector.

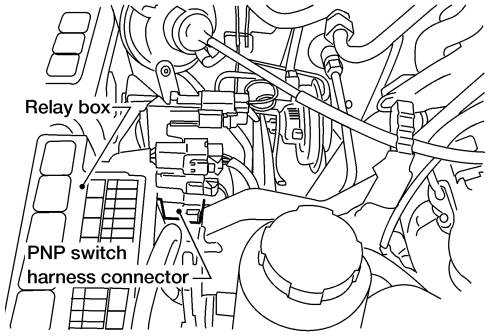

AEC662A

3. Check harness continuity between park/neutral position (PNP) switch terminal 2 and park/neutral position (PNP) relay terminal 2. Refer to Wiring Diagram.
   Continuity should exist.
4. Also check harness for short to ground and short to power.

OK or NG

OK	▶	GO TO 3.
NG	▶	Repair open circuit or short to ground or short to power in harness or connectors.

3	CHECK PNP SWITCH POWER SUPPLY CIRCUIT-III

1. Turn ignition switch ON.
2. Check voltage between park/neutral position (PNP) switch terminal 1 and ground with CONSULT-II or tester. Refer to Wiring Diagram.
   Voltage: Battery voltage

OK or NG

OK	▶	GO TO 5.
NG	▶	GO TO 4.

4	DETECT MALFUNCTIONING PART
Check the following. ● Fuse block (J/B) connector E49 ● 10A fuse ● Harness for open or short between park/neutral position (PNP) switch and fuse	
▶	Repair open circuit or short to ground or short to power in harness or connectors.

5	CHECK PARK/NEUTRAL POSITION (PNP) SWITCH
Refer to "Component Inspection", ***AT-254***.	
OK or NG	
OK ▶	GO TO 11.
NG ▶	Replace park/neutral position (PNP) switch.

6	CHECK PNP RELAY GROUND CIRCUIT FOR OPEN AND SHORT
1. Turn ignition switch OFF. 2. Check harness continuity between relay terminals 1, 6 and body ground. Refer to Wiring Diagram. **Continuity should exist.** 3. Also check harness for short to power.	
OK or NG	
OK ▶	GO TO 8.
NG (With theft warning system) ▶	GO TO 7.
NG (Without theft warning system) ▶	Repair open circuit or short to power in harness or connectors.

7	DETECT MALFUNCTIONING PART
Check the circuit between park/neutral position (PNP) relay and body ground. Refer to "STARTING SYSTEM", ***SC-10***.	
OK or NG	
OK ▶	GO TO 11.
NG ▶	Repair or replace.

8	CHECK PNP RELAY INPUT SIGNAL CIRCUIT FOR OPEN AND SHORT
1. Disconnect ECM harness connector. 2. Check harness continuity between ECM terminal 22 and relay terminal 7. Refer to Wiring Diagram. **Continuity should exist.** 3. Also check harness for short to ground and short to power.	
OK or NG	
OK ▶	GO TO 10.
NG ▶	GO TO 9.

9	DETECT MALFUNCTIONING PART
Check the following. ● Harness connectors F36, M81 ● Harness connectors M65, E43 ● Harness for open or short between ECM and park/neutral position (PNP) relay	
▶	Repair open circuit or short to ground or short to power in harness or connectors.

Diagnostic Procedure (Cont'd)

10	CHECK PARK/NEUTRAL POSITION (PNP) RELAY

1. Apply 12V direct current between park/neutral position (PNP) relay terminals 1 and 2.
2. Check continuity between park/neutral position (PNP) relay terminals 3 and 5, 6 and 7.

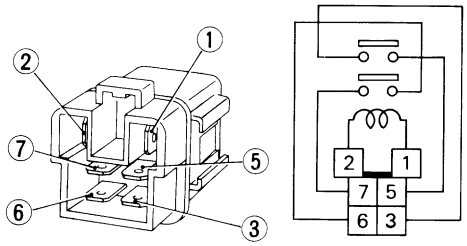

SEC202B

12V (1 and 2) applied: Continuity should exist.
No voltage applied: Continuity should not exist.

OK or NG

OK	▶	GO TO 11.
NG	▶	Replace park/neutral position (PNP) relay.

11	CHECK INTERMITTENT INCIDENT
Refer to "TROUBLE DIAGNOSIS FOR INTERMITTENT INCIDENT", EC-753.	
▶	**INSPECTION END**

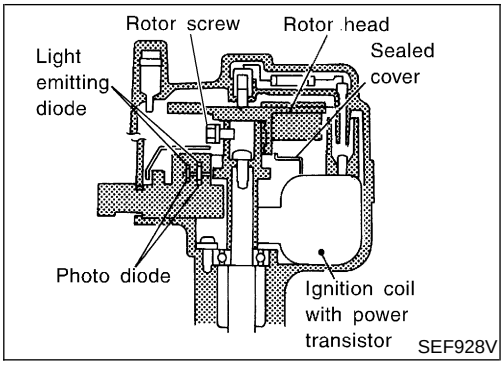

Component Description

NEEC0812

IGNITION COIL & POWER TRANSISTOR

NEEC0812S01

The power transistor switches on and off the ignition coil primary circuit according to the ECM signal. As the primary circuit is turned on and off, the proper high voltage is induced in the secondary circuit. The distributor is not repairable except for the distributor cap and rotor head.

NOTE:
The rotor screw which secures the distributor rotor head to the distributor shaft must be torqued properly.

: 3.6±0.3 N·m (37±3 kg-cm, 32±3 in-lb)

ECM Terminals and Reference Value

NEEC0813

Specification data are reference values and are measured between each terminal and ground.

CAUTION:
Do not use ECM ground terminals when measuring input/output voltage. Doing so may result in damage to the ECM's transistor. Use a ground other than the ECM terminals, such as the ground.

TERMINAL NO.	WIRE COLOR	ITEM	CONDITION	DATA (DC Voltage)
1	PU/W	Ignition signal	**[Engine is running]** ● Idle speed	Approximately 0.7V 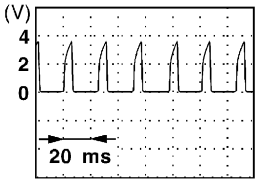 SEF988U
			[Engine is running] ● Engine speed is 2,000 rpm	1.1 - 1.5V 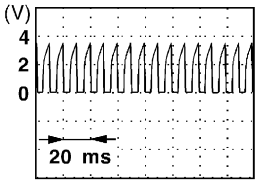 SEF989U

Wiring Diagram

NEEC0816

EC-IGN/SG-01

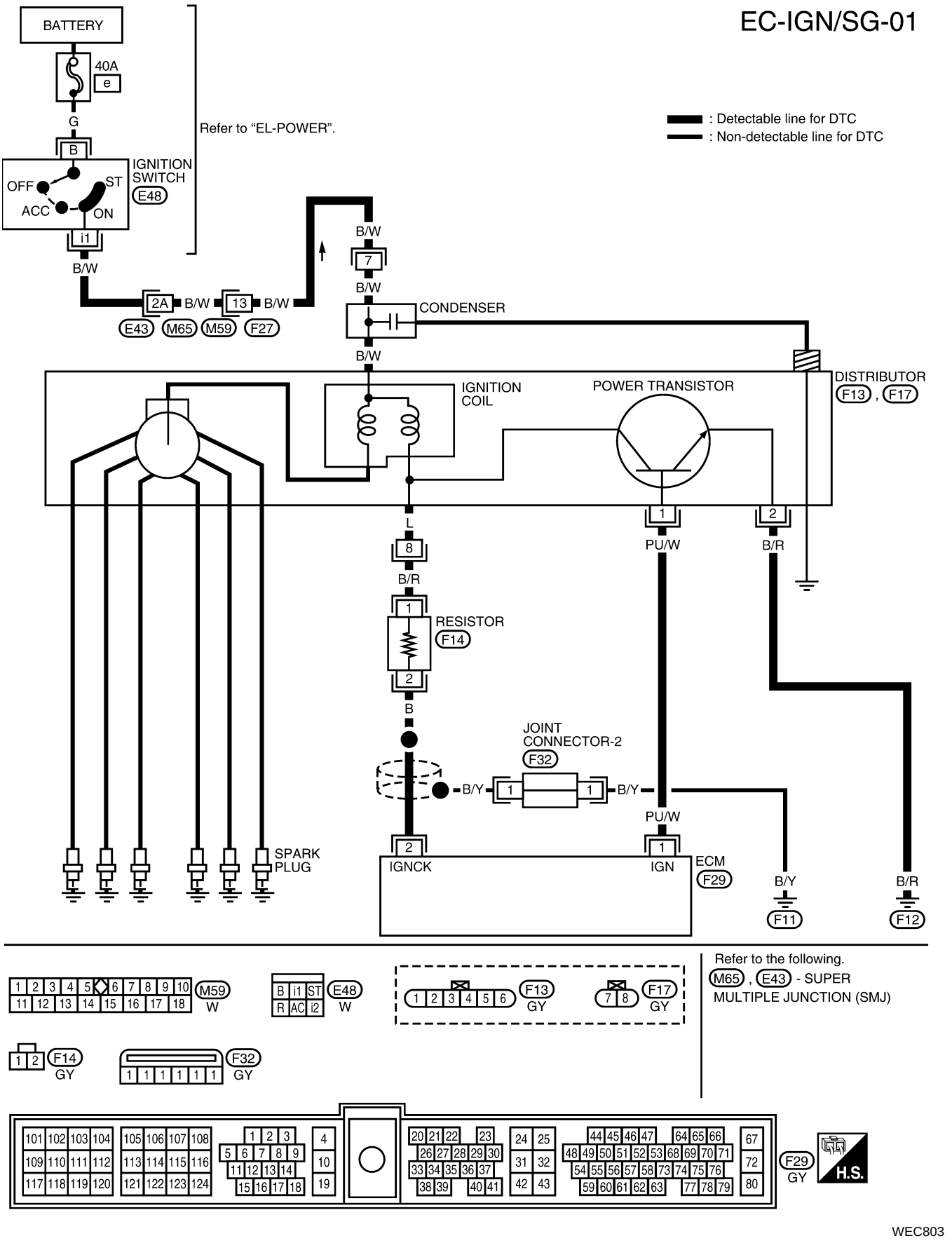

Refer to the following.
M65 , E43 - SUPER MULTIPLE JUNCTION (SMJ)

WEC803

Diagnostic Procedure

NEEC0817

1	INSPECTION START

Turn ignition switch “OFF”, and restart engine.
Is engine running?

Yes or No

Yes (With CONSULT-II)	▶	GO TO 2.
Yes (Without CONSULT-II)	▶	GO TO 3.
No	▶	GO TO 4.

2	CHECK OVERALL FUNCTION

With CONSULT-II
1. Perform “POWER BALANCE” in “ACTIVE TEST” mode with CONSULT-II.
2. Make sure that all circuits do not produce a momentary engine speed drop.

ACTIVE TEST	
POWER BALANCE	
MONITOR	
ENG SPEED	XXX rpm
MAS A/F SE-B1	XXX V
IACV-AAC/V	XXX %

SEF981Z

OK or NG

OK	▶	**INSPECTION END**
NG	▶	GO TO 4.

3	CHECK OVERALL FUNCTION

Without CONSULT-II
1. Let engine idle.
2. Read the voltage signal between ECM terminal 1 and ground with an oscilloscope.
3. Verify that the oscilloscope screen shows the signal wave as shown below.

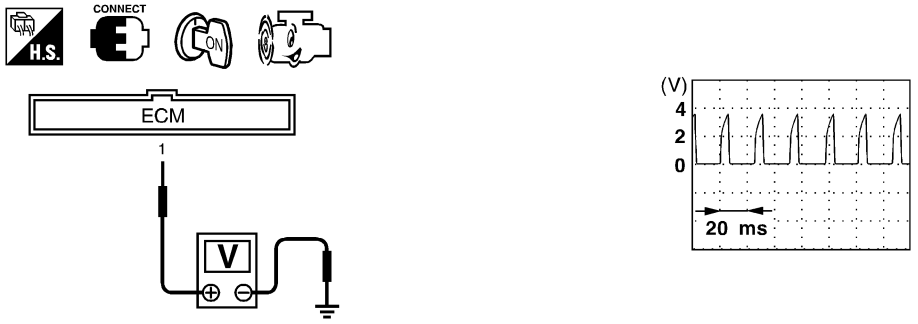

SEC073C

OK or NG

OK	▶	**INSPECTION END**
NG	▶	GO TO 4.

4	CHECK IGNITION COIL POWER SUPPLY CIRCUIT

1. Turn ignition switch OFF.
2. Disconnect ignition coil harness connector.

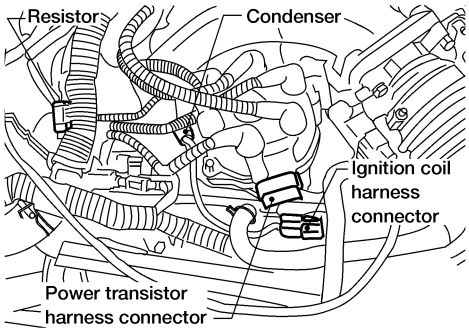

AEC656A

3. Turn ignition switch ON.
4. Check voltage between terminal 7 and ground with CONSULT-II or tester.

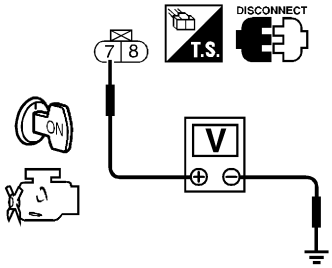

SEF721U

Voltage: Battery voltage

OK or NG

OK	▶	GO TO 6.
NG	▶	GO TO 5.

5	DETECT MALFUNCTIONING PART

Check the following.
- Harness connectors E43, M65
- Harness connectors M59, F27
- Harness for open or short between ignition coil and ignition switch

	▶	Repair harness or connectors.

6	CHECK POWER TRANSISTOR GROUND CIRCUIT FOR OPEN AND SHORT

1. Turn ignition switch OFF.
2. Disconnect power transistor harness connector.
3. Check harness continuity between power transistor terminal 2 and engine ground. Refer to Wiring Diagram.
   Continuity should exist.
4. Also check harness for short to power.

OK or NG

OK	▶	GO TO 7.
NG	▶	Repair open circuit or short to power in harness or connectors.

7	CHECK POWER TRANSISTOR OUTPUT SIGNAL CIRCUIT FOR OPEN AND SHORT

1. Disconnect ECM harness connector.
2. Check harness continuity between ECM terminal 1 and power transistor terminal 1. Refer to Wiring Diagram.
   Continuity should exist.
3. Also check harness for short to ground and short to power.

OK or NG

OK	▶	GO TO 8.
NG	▶	Repair open circuit or short to ground or short to power in harness or connectors.

8	CHECK IGNITION COIL

1. Disconnect ignition coil harness connector.
2. Check resistance as shown in the figure.

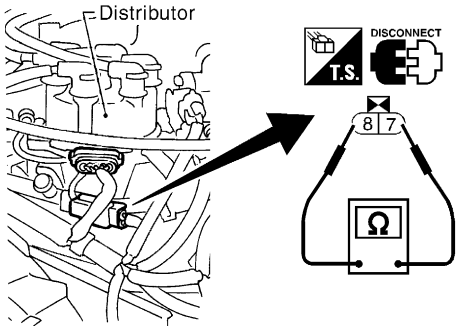

SEF013S

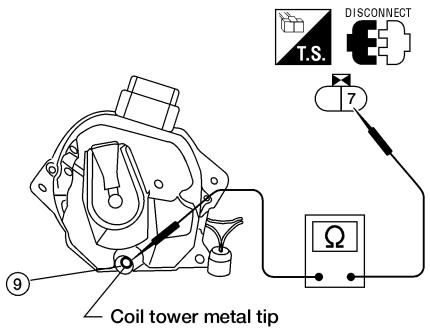

AEC657A

Terminal	Resistance [at 25°C (77°F)]
7 - 8 (Primary coil)	0.5 - 1.0Ω
7 - 9 (Secondary coil)	Approximately 12 kΩ

MTBL0248

For checking secondary coil, remove distributor cap and measure resistance between coil tower metal tip 9 and terminal 7.

OK or NG

OK	▶	GO TO 9.
NG	▶	Replace distributor assembly.

9	CHECK POWER TRANSISTOR

1. Disconnect camshaft position sensor & power transistor harness connector and ignition coil harness connector.
2. Check power transistor resistance between terminals 2 and 8.

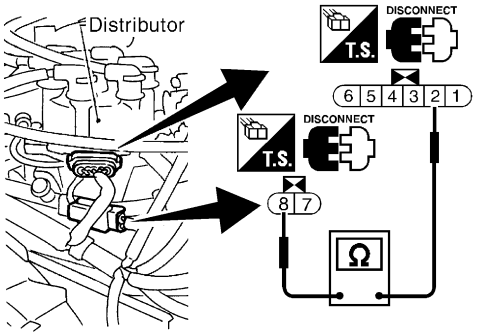

SEF015S

Terminals	Resistance	Result
2 and 8	Except 0Ω	OK
	0Ω	NG

MTBL0249

OK or NG

OK	▶	GO TO 10.
NG	▶	Replace distributor assembly.

10	CHECK INTERMITTENT INCIDENT

Refer to "TROUBLE DIAGNOSIS FOR INTERMITTENT INCIDENT", EC-753.

▶ **INSPECTION END**

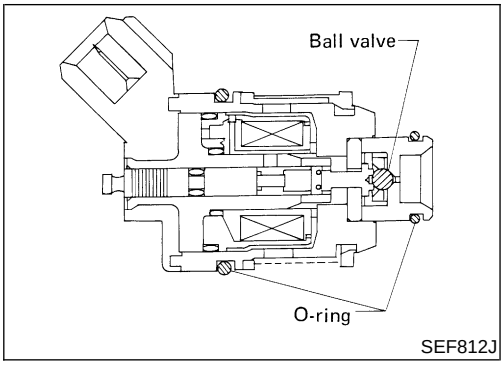

Component Description

NEEC0909

The fuel injector is a small, precise solenoid valve. When the ECM supplies a ground to the injector circuit, the coil in the injector is energized. The energized coil pulls the ball valve back and allows fuel to flow through the injector into the intake manifold. The amount of fuel injected depends upon the injection pulse duration. Pulse duration is the length of time the injector remains open. The ECM controls the injection pulse duration based on engine fuel needs.

CONSULT-II Reference Value in Data Monitor Mode

NEEC0910

Specification data are reference values.

MONITOR ITEM	CONDITION		SPECIFICATION
INJ PULSE-B2 INJ PULSE-B1	• Engine: After warming up • Air conditioner switch: “OFF” • Shift lever: “N” • No-load	Idle	2.4 - 3.7 msec
		2,000 rpm	1.9 - 3.3 msec
B/FUEL SCHDL	ditto	Idle	1.0 - 1.6 msec
		2,000 rpm	0.7 - 1.4 msec

ECM Terminals and Reference Value

NEEC0911

Specification data are reference values and are measured between each terminal and ground.

CAUTION:

Do not use ECM ground terminals when measuring input/output voltage. Doing so may result in damage to the ECM’s transistor. Use a ground other than the ECM terminals, such as the ground.

TERMINAL NO.	WIRE COLOR	ITEM	CONDITION	DATA (DC Voltage)
102 104 106 109 111 113	W/B W/R W/G W/L W/PU W	Injector No. 1 Injector No. 3 Injector No. 5 Injector No. 2 Injector No. 4 Injector No. 6	**[Engine is running]** • **Warm-up condition** • Idle speed	BATTERY VOLTAGE (11 - 14V) 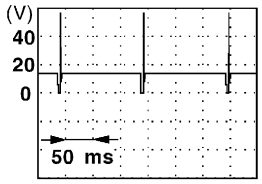 SEF007V
			[Engine is running] • **Warm-up condition** • Engine speed is 2,000 rpm	BATTERY VOLTAGE (11 - 14V) 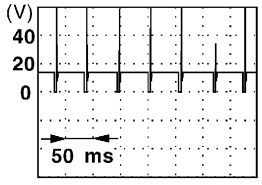 SEF008V

Wiring Diagram

NEEC0912

EC-INJECT-01

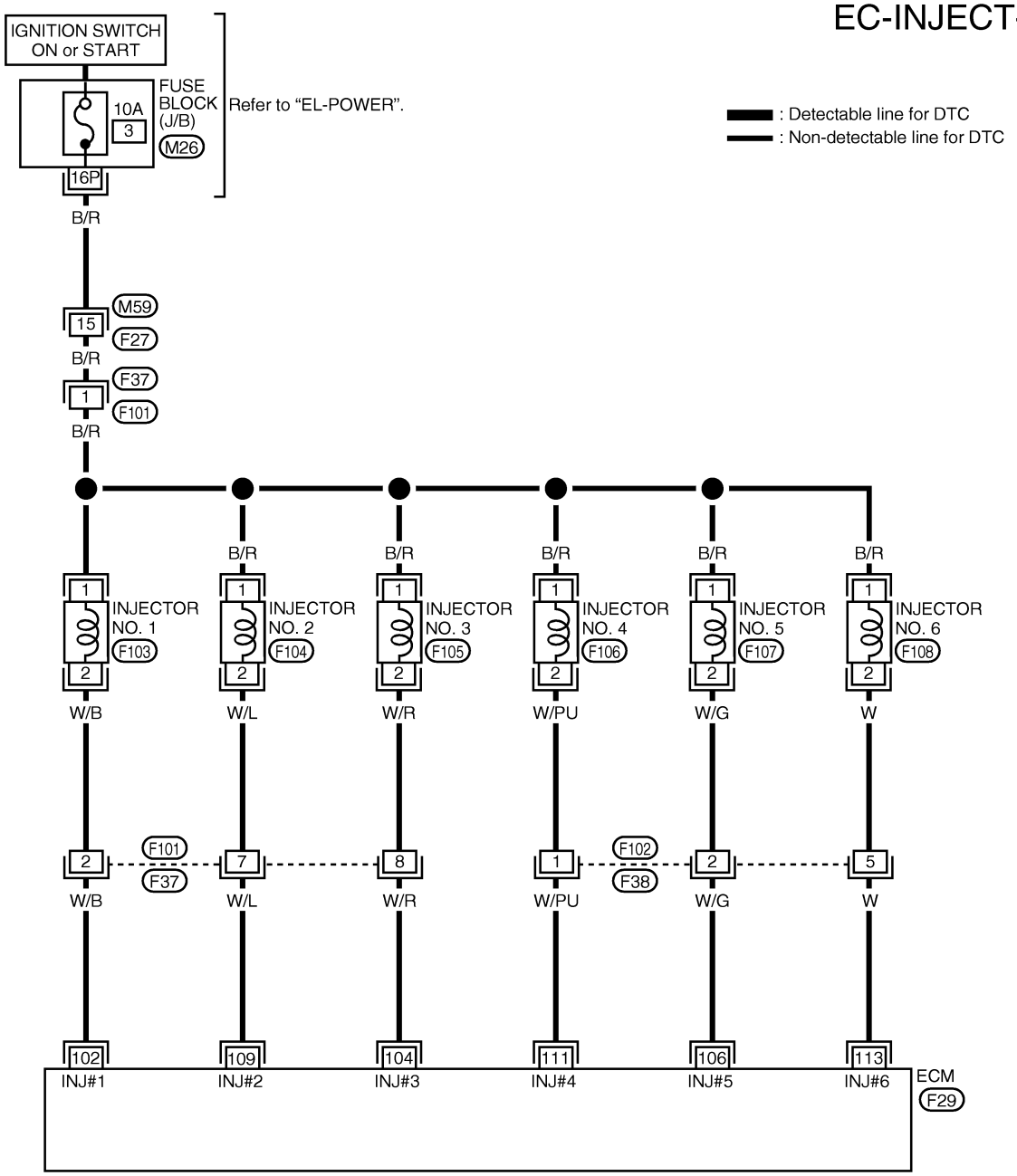

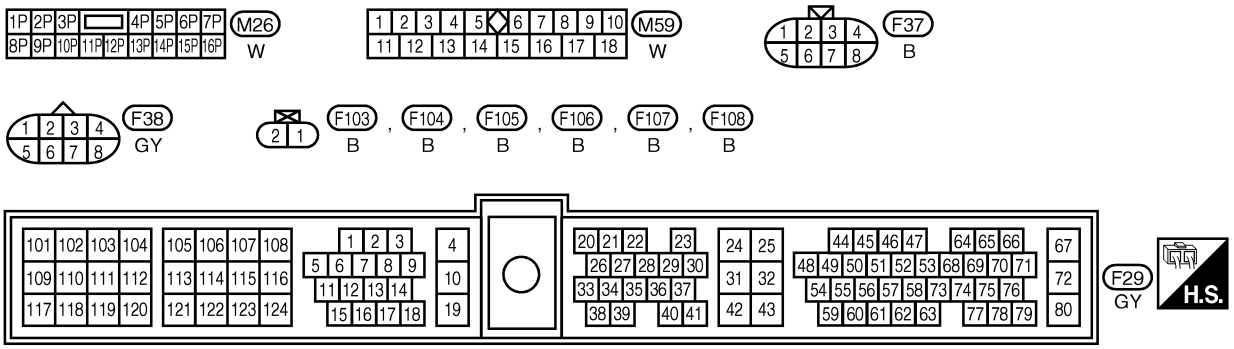

AEC974A

Diagnostic Procedure

NEEC0913

1	INSPECTION START

Turn ignition switch to START.
Is any cylinder ignited?

Yes or No

Yes	▶	GO TO 2.
No	▶	GO TO 3.

2	CHECK OVERALL FUNCTION

With CONSULT-II
1. Start engine.
2. Perform “POWER BALANCE” in “ACTIVE TEST” mode with CONSULT-II.

ACTIVE TEST	
POWER BALANCE	
MONITOR	
ENG SPEED	XXX rpm
MAS A/F SE-B1	XXX V
IACV-AAC/V	XXX %

SEF981Z

3. Make sure that each circuit produces a momentary engine speed drop.

Without CONSULT-II
1. Start engine.
2. Listen to each injector operating sound.

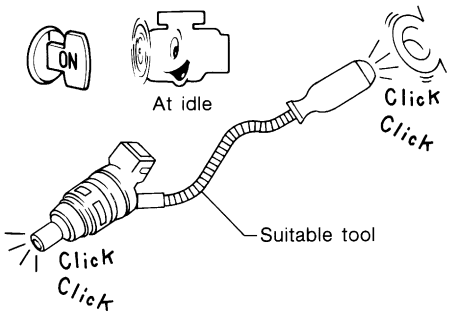

MEC703B

Clicking noise should be heard.

OK or NG

OK	▶	**INSPECTION END**
NG	▶	GO TO 3.

Diagnostic Procedure (Cont'd)

3	CHECK INJECTOR POWER SUPPLY CIRCUIT

1. Turn ignition switch OFF.
2. Disconnect injector harness connector.
3. Check voltage between terminal 1 and ground with CONSULT-II or tester.

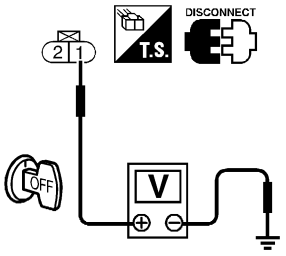

SEF671W

Voltage: Battery voltage

OK or NG

OK	▶	GO TO 5.
NG	▶	GO TO 4.

4	DETECT MALFUNCTIONING PART

Check the following.
- Harness connectors M59, F27
- Harness connectors F37, F101
- Fuse block (J/B) connector M26
- 10A fuse
- Harness for open or short between injector and fuse

	▶	Repair harness or connectors.

5	CHECK INJECTOR OUTPUT SIGNAL CIRCUIT FOR OPEN AND SHORT

1. Disconnect ECM harness connector.
2. Check harness continuity between injector harness connector terminal 2 and ECM terminals 102, 104, 106, 109, 111, 113. Refer to Wiring Diagram.
   Continuity should exist.
3. Also check harness for short to ground and short to power.

OK or NG

OK	▶	GO TO 7.
NG	▶	GO TO 6.

6	DETECT MALFUNCTIONING PART

Check the following.
- Harness connectors F37, F101
- Harness connectors F38, F102
- Harness for open or short between ECM and injector

	▶	Repair open circuit or short to ground or short to power in harness or connectors.

7	CHECK INJECTOR

1. Disconnect injector harness connector.
2. Check resistance between terminals as shown in the figure.

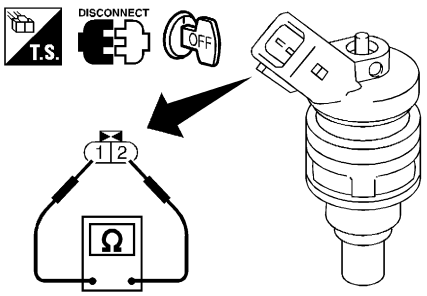

SEF625V

Resistance: 10 - 14Ω [at 25°C (77°F)]

OK or NG

OK	▶	GO TO 8.
NG	▶	Replace injector.

8	CHECK INTERMITTENT INCIDENT
Refer to "TROUBLE DIAGNOSIS FOR INTERMITTENT INCIDENT", EC-753.	
▶	**INSPECTION END**

CONSULT-II Reference Value in Data Monitor Mode

NEEC0914

Specification data are reference values.

MONITOR ITEM	CONDITION	SPECIFICATION
START SIGNAL	● Ignition switch: ON → START → ON	OFF → ON → OFF

ECM Terminals and Reference Value

NEEC0915

Specification data are reference values and are measured between each terminal and ground.

CAUTION:

Do not use ECM ground terminals when measuring input/output voltage. Doing so may result in damage to the ECM's transistor. Use a ground other than the ECM terminals, such as the ground.

TERMINAL NO.	WIRE COLOR	ITEM	CONDITION	DATA (DC Voltage)
20	L/OR	Start signal	**[Ignition switch ON]**	Approximately 0V
			[Ignition switch START]	BATTERY VOLTAGE (11 - 14V)

Wiring Diagram

NEEC0916

EC-S/SIG-01

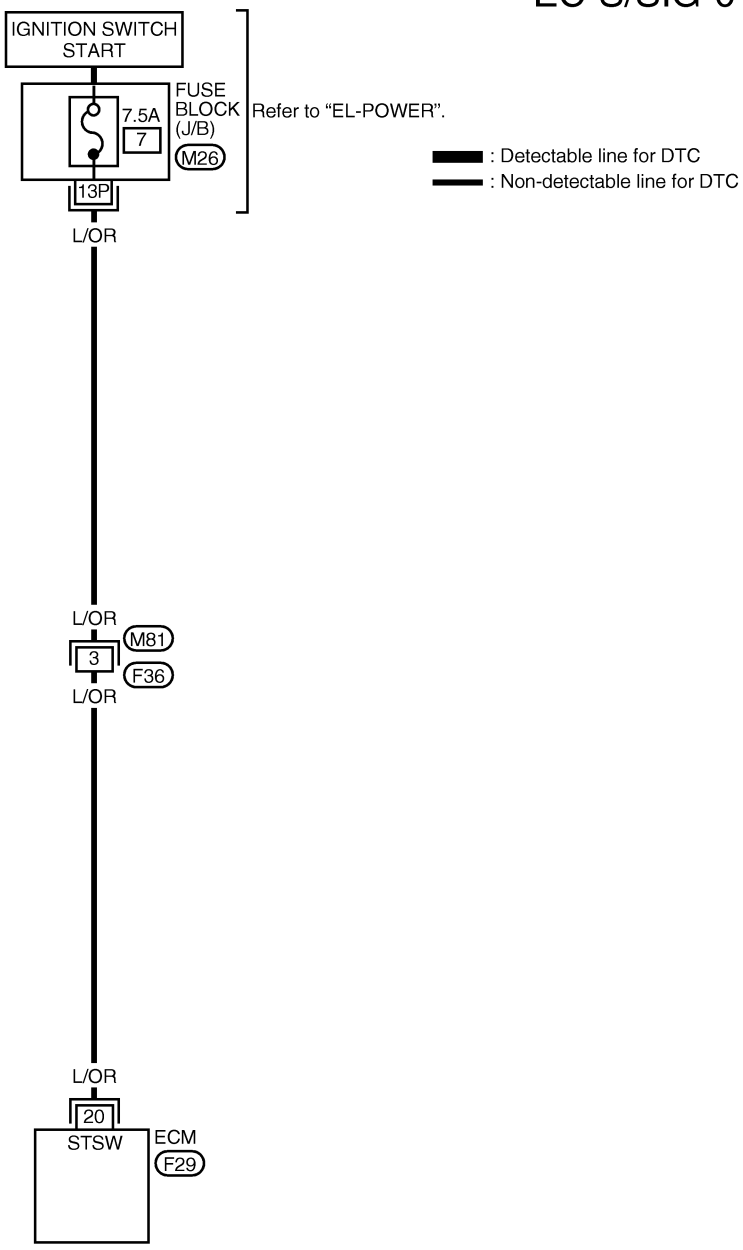



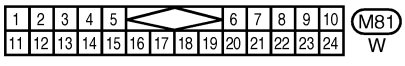

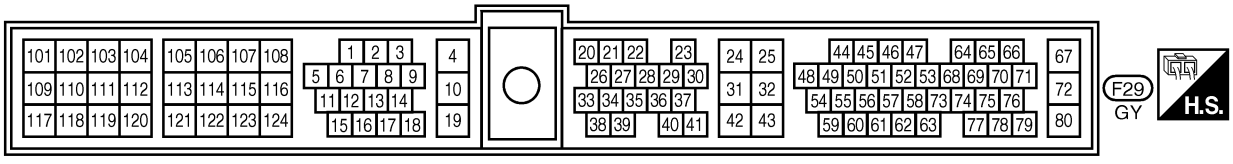

AEC975A

Diagnostic Procedure

NEEC0917

1	INSPECTION START

Do you have CONSULT-II?

Yes or No

Yes	▶	GO TO 2.
No	▶	GO TO 3.

2	CHECK OVERALL FUNCTION

With CONSULT-II

1. Turn ignition switch ON.
2. Check “START SIGNAL” in “DATA MONITOR” mode with CONSULT-II under the following conditions.

DATA MONITOR	
MONITOR	NO DTC
START SIGNAL	OFF
CLSD THL POS	ON
AIR COND SIG	OFF
P/N POSI SW	ON

Condition	“START SIGNAL”
Ignition switch “ON”	OFF
Ignition switch “START”	ON

SEF072Y

OK or NG

OK	▶	**INSPECTION END**
NG	▶	GO TO 4.

3	CHECK OVERALL FUNCTION

Without CONSULT-II

Check voltage between ECM terminal 20 and ground under the following conditions.

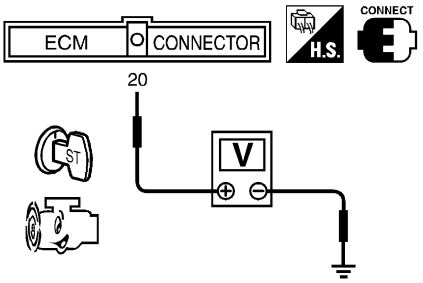

SEF733U

Condition	Voltage
Ignition switch “START”	Battery voltage
Other positions	Approximately 0V

MTBL0148

OK or NG

OK	▶	**INSPECTION END**
NG	▶	GO TO 4.

4	CHECK STARTING SYSTEM	
Turn ignition switch OFF, then turn it to START. **Does starter motor operate?**		
Yes or No		
Yes	▶	GO TO 5.
No	▶	Refer to "STARTING SYSTEM", ***SC-10***.

5	CHECK FUSE	
1. Turn ignition switch OFF. 2. Disconnect 7.5A fuse. 3. Check if 7.5A fuse is OK.		
OK or NG		
OK	▶	GO TO 6.
NG	▶	Replace 7.5A fuse.

6	CHECK START SIGNAL INPUT SIGNAL CIRCUIT FOR OPEN AND SHORT	
1. Disconnect ECM harness connector. 2. Check harness continuity between ECM terminal 20 and fuse block. Refer to Wiring Diagram. **Continuity should exist.** 3. Also check harness for short to ground and short to power.		
OK or NG		
OK	▶	GO TO 8.
NG	▶	GO TO 7.

7	DETECT MALFUNCTIONING PART	
Check the following. ● Harness connectors M81, F36 ● Harness for open or short between ECM and fuse		
	▶	Repair open circuit or short to ground or short to power in harness or connectors.

8	CHECK INTERMITTENT INCIDENT	
Refer to "TROUBLE DIAGNOSIS FOR INTERMITTENT INCIDENT", EC-753.		
	▶	**INSPECTION END**

System Description

NEEC0918

Sensor	Input Signal to ECM	ECM function	Actuator
Camshaft position sensor	Engine speed	Fuel pump control	Fuel pump relay
Ignition switch	Start signal		

The ECM activates the fuel pump for several seconds after the ignition switch is turned on to improve engine startability. If the ECM receives a 120° signal from the camshaft position sensor, it knows that the engine is rotating, and causes the pump to operate. If the 120° signal is not received when the ignition switch is on, the engine stalls. The ECM stops pump operation and prevents battery discharging, thereby improving safety. The ECM does not directly drive the fuel pump. It controls the ON/OFF fuel pump relay, which in turn controls the fuel pump.

Condition	Fuel pump operation
Ignition switch is turned to ON.	Operates for 5 seconds
Engine running and cranking	Operates
When engine is stopped	Stops in 1.5 seconds
Except as shown above	Stops

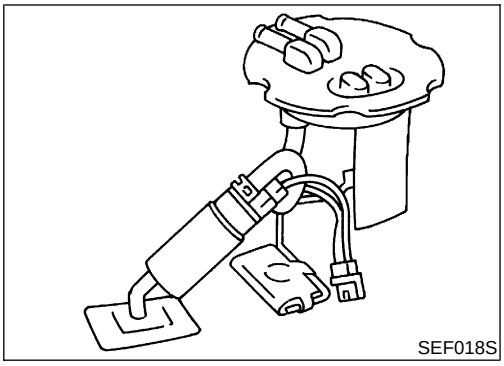
SEF018S

Component Description

NEEC0919

The fuel pump with a fuel damper is an in-tank type (the pump and damper are located in the fuel tank).

CONSULT-II Reference Value in Data Monitor Mode

NEEC0920

Specification data are reference values.

MONITOR ITEM	CONDITION	SPECIFICATION
FUEL PUMP RLY	• Ignition switch is turned to ON. (Operates for 5 seconds.) • Engine running and cranking	ON
	Except as shown above	OFF

ECM Terminals and Reference Value

=NEEC0921

Specification data are reference values and are measured between each terminal and ground.

CAUTION:

Do not use ECM ground terminals when measuring input/output voltage. Doing so may result in damage to the ECM's transistor. Use a ground other than the ECM terminals, such as the ground.

TERMINAL NO.	WIRE COLOR	ITEM	CONDITION	DATA (DC Voltage)
11	W/R	Fuel pump relay	**[Ignition switch ON]** ● For 5 seconds after turning ignition switch "ON" **[Engine is running]**	0 - 1V
			[Ignition switch ON] ● More than 5 seconds after turning ignition switch ON	BATTERY VOLTAGE (11 - 14V)

Wiring Diagram

NEEC0922

EC-F/PUMP-01

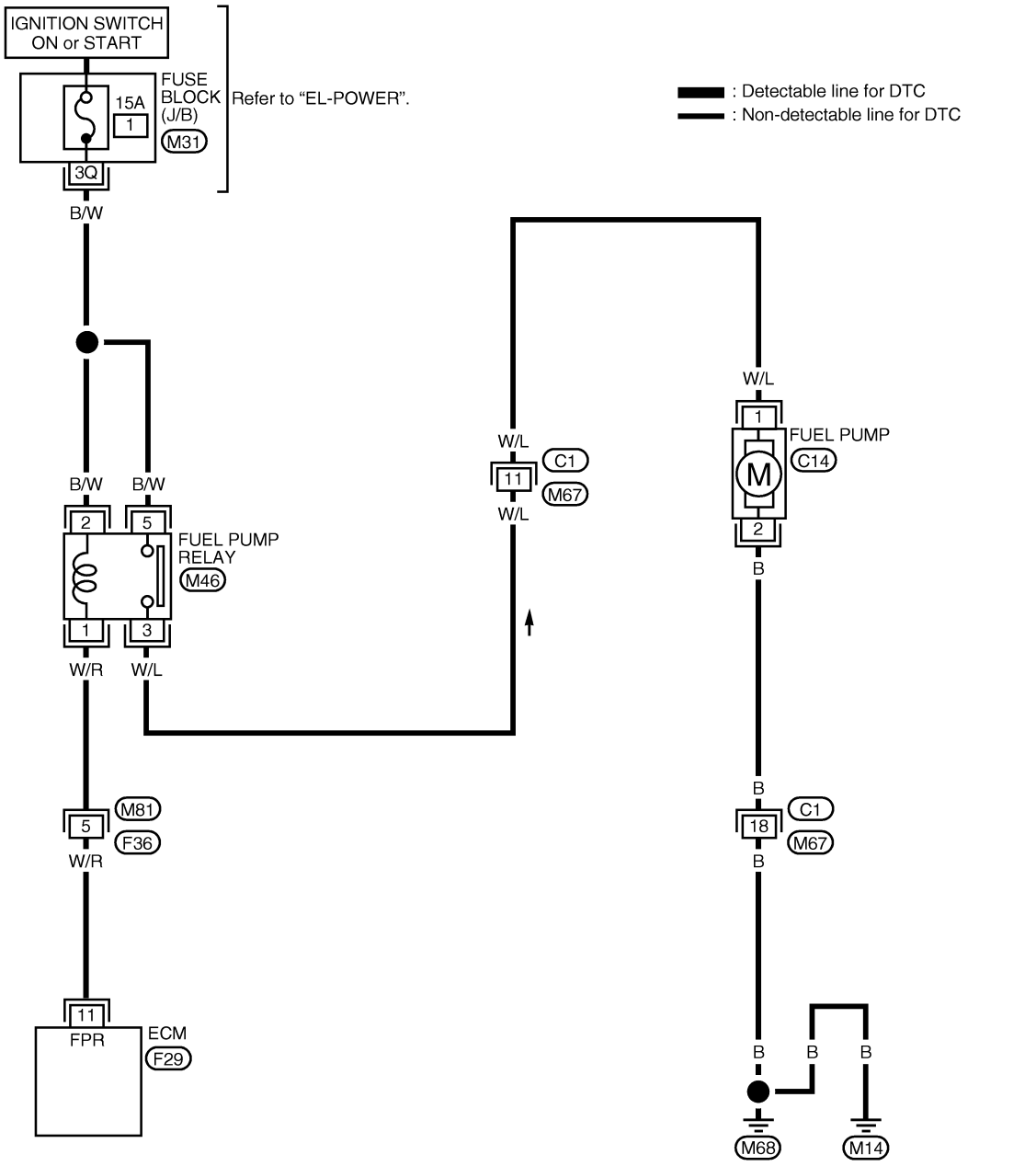

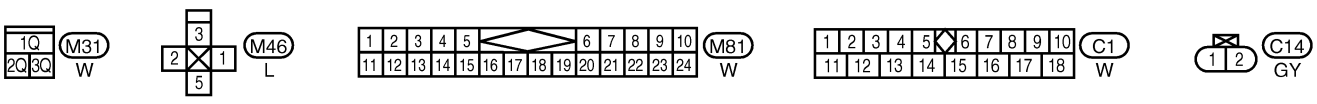

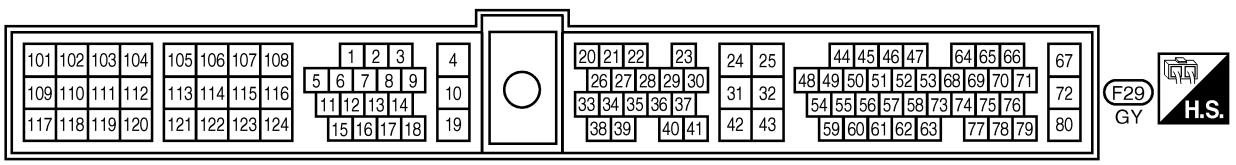

AEC020B

Diagnostic Procedure

NEEC1045

1	CHECK OVERALL FUNCTION

1. Turn ignition switch “ON”.
2. Pinch fuel feed hose with fingers.

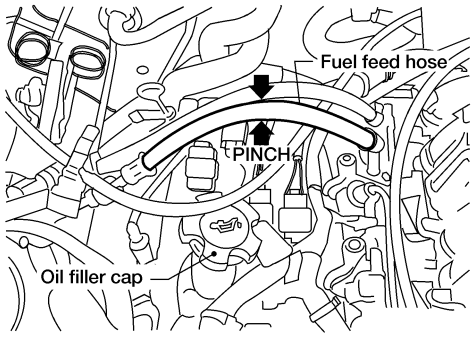

AEC663A

Fuel pressure pulsation should be felt on the fuel feed hose for 5 seconds after ignition switch is turned “ON”.

OK or NG

OK	▶	**INSPECTION END**
NG	▶	GO TO 2.

2	CHECK FUEL PUMP RELAY POWER SUPPLY CIRCUIT

1. Turn ignition switch “OFF”.
2. Disconnect fuel pump relay.

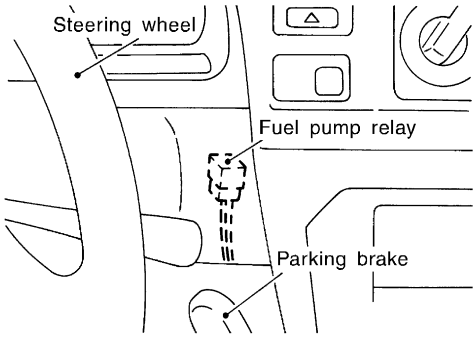

SEF349V

3. Turn ignition switch “ON”.
4. Check voltage between terminals 2, 5 and ground with CONSULT-II or tester.

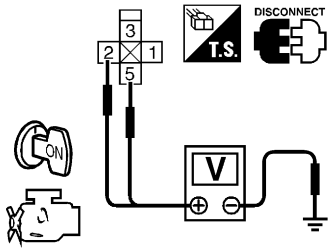

SEF674W

Voltage: Battery voltage

OK or NG

OK	▶	GO TO 4.
NG	▶	GO TO 3.

3	DETECT MALFUNCTIONING PART
Check the following. ● Fuse block (J/B) connector M31 ● 15A fuse ● Harness for open or short between fuse and fuel pump relay	
▶	Repair harness or connectors.

4	CHECK FUEL PUMP POWER SUPPLY AND GROUND CIRCUIT FOR OPEN AND SHORT

1. Turn ignition switch "OFF".
2. Disconnect fuel pump harness connector.

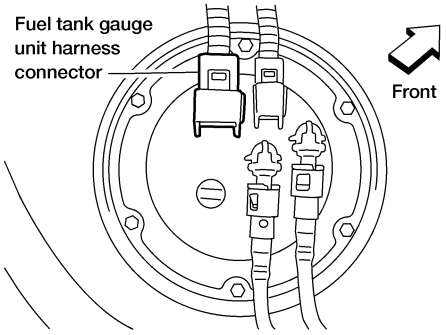

AEC933A

3. Check harness continuity between fuel pump terminal 2 and body ground, fuel pump terminal 1 and fuel pump relay terminal 3. Refer to Wiring Diagram.
   Continuity should exist.
4. Also check harness for short to ground and short to power.

OK or NG

OK	▶	GO TO 6.
NG	▶	GO TO 5.

5	DETECT MALFUNCTIONING PART
Check the following. ● Harness connectors M67, C1 ● Harness for open or short between fuel pump and body ground ● Harness for open or short between fuel pump and fuel pump relay	
▶	Repair open circuit or short to ground or short to power in harness or connectors.

6	CHECK FUEL PUMP RELAY OUTPUT SIGNAL CIRCUIT FOR OPEN AND SHORT

1. Disconnect ECM harness connector.
2. Check harness continuity between ECM terminal 11 and fuel pump relay terminal 1. Refer to Wiring Diagram.
   Continuity should exist.
3. Also check harness for short to ground and short to power.

OK or NG

OK	▶	GO TO 8.
NG	▶	GO TO 7.

7	DETECT MALFUNCTIONING PART
Check the following. ● Harness connectors M81, F36 ● Harness for open or short between ECM and fuel pump relay	
▶	Repair open circuit or short to ground or short to power in harness or connectors.

8 **CHECK FUEL PUMP RELAY**

With CONSULT-II

1. Reconnect fuel pump relay, fuel pump harness connector and ECM harness connector.
2. Turn ignition switch "ON".
3. Turn fuel pump relay "ON" and "OFF" in "ACTIVE TEST" mode with CONSULT-II and check operating sound.

ACTIVE TEST	
FUEL PUMP RELAY	ON
MONITOR	
ENG SPEED	XXX rpm

SEF073Y

Without CONSULT-II

Check continuity between terminals 3 and 5.

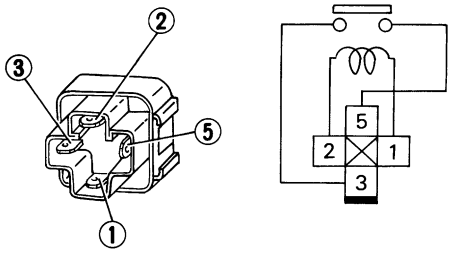

SEF511P

12V direct current supply between terminals 1 and 2
Continuity exists
No current supply
Continuity does not exist

OK or NG

OK	▶	GO TO 9.
NG	▶	Replace fuel pump relay.

Diagnostic Procedure (Cont'd)

9	CHECK FUEL PUMP

1. Disconnect fuel pump harness connector.
2. Check resistance between terminals 1 and 2.

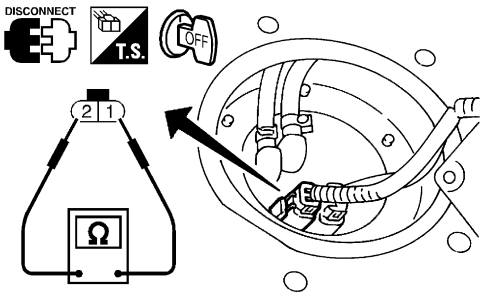

SEF022S

Resistance: 0.2 - 5.0Ω [at 25°C (77°F)]

OK or NG

OK	▶	GO TO 10.
NG	▶	Replace fuel pump.

10	CHECK INTERMITTENT INCIDENT
Refer to "TROUBLE DIAGNOSIS FOR INTERMITTENT INCIDENT", EC-148.	
▶	**INSPECTION END**

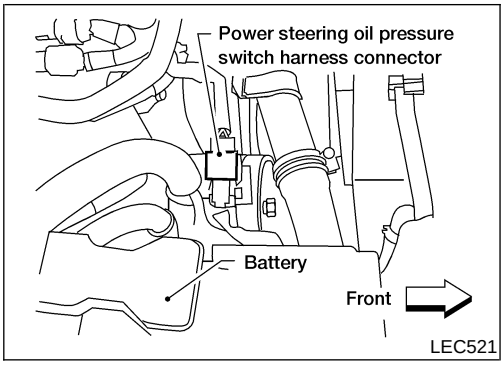

Component Description

NEEC0924

The power steering oil pressure switch is attached to the power steering high-pressure tube and detects a power steering load. When a power steering load is detected, it signals the ECM. The ECM adjusts the IACV-AAC valve to increase the idle speed and adjust for the increased load.

CONSULT-II Reference Value in Data Monitor Mode

NEEC0925

Specification data are reference values.

MONITOR ITEM	CONDITION		SPECIFICATION
PW/ST SIGNAL	● Engine: After warming up, idle the engine	Steering wheel in neutral position (forward direction)	OFF
		The steering wheel is fully turned.	ON

ECM Terminals and Reference Value

NEEC0926

Specification data are reference values and are measured between each terminal and ground.

CAUTION:

Do not use ECM ground terminals when measuring input/output voltage. Doing so may result in damage to the ECM's transistor. Use a ground other than the ECM terminals, such as the ground.

TERMINAL NO.	WIRE COLOR	ITEM	CONDITION	DATA (DC Voltage)
39	GY/R	Power steering oil pressure switch	**[Engine is running]** ● Steering wheel is being fully turned	0V
			[Engine is running] ● Steering wheel is not being turned	Approximately 5V

Wiring Diagram

NEEC0927

EC-PST/SW-01

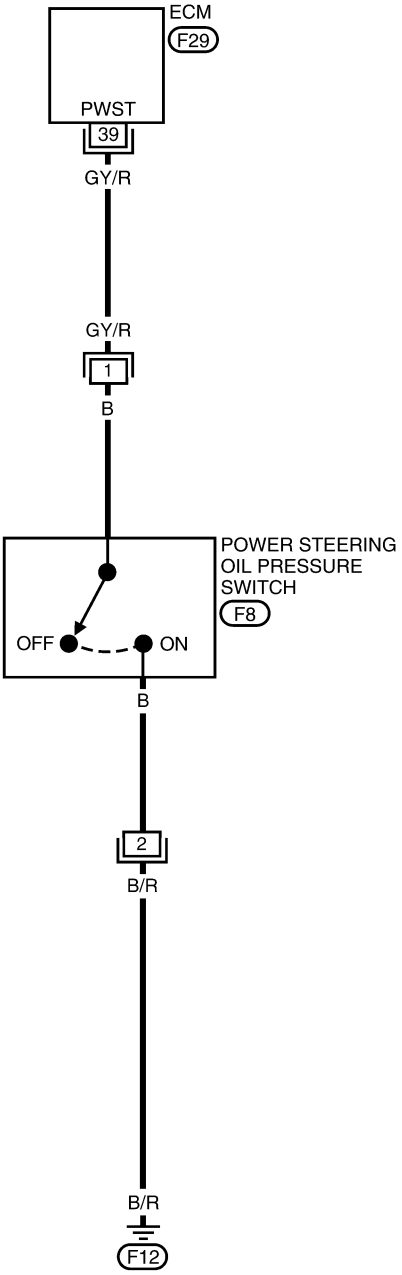

: Detectable line for DTC
: Non-detectable line for DTC

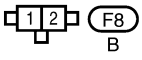

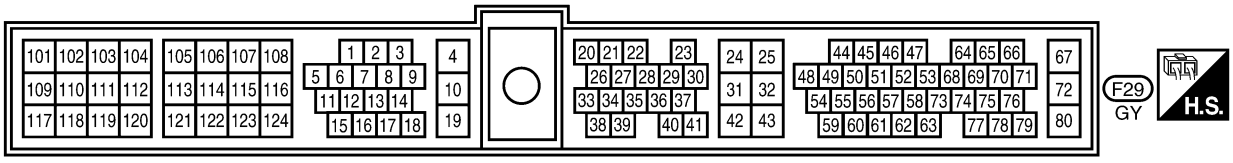

WEC804

Diagnostic Procedure

NEEC0928

1	INSPECTION START

Do you have CONSULT-II?

Yes or No

Yes	▶	GO TO 2.
No	▶	GO TO 3.

2	CHECK OVERALL FUNCTION

With CONSULT-II

1. Start engine.
2. Check “PW/ST SIGNAL” in “DATA MONITOR” mode with CONSULT-II.

DATA MONITOR	
MONITOR	NO DTC
PW/ST SIGNAL	OFF

Steering is in neutral position	OFF
Steering is turned	ON

SEF228Y

OK or NG

OK	▶	**INSPECTION END**
NG	▶	GO TO 4.

3	CHECK OVERALL FUNCTION

Without CONSULT-II

1. Start engine.
2. Check voltage between ECM terminal 39 and ground.

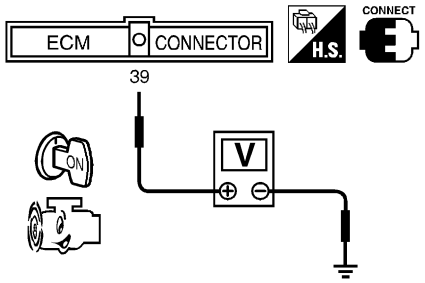

SEF739U

Condition	Voltage
Steering is neutral position	Approximately 5V
Steering is turned to full position	Approximately 0V

MTBL0145

OK or NG

OK	▶	**INSPECTION END**
NG	▶	GO TO 4.

Diagnostic Procedure (Cont'd)

4	CHECK POWER STEERING OIL PRESSURE SWITCH GROUND CIRCUIT FOR OPEN AND SHORT

1. Turn ignition switch OFF.
2. Disconnect power steering oil pressure switch harness connector.

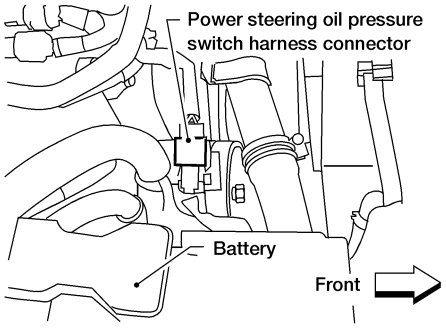

LEC521

3. Check harness continuity between switch terminal 2 and engine ground. Refer to Wiring Diagram.
   Continuity should exist.
4. Also check harness for short to power.

OK or NG

OK	▶	GO TO 5.
NG	▶	Repair open circuit or short to power in harness or connectors.

5	CHECK POWER STEERING OIL PRESSURE SWITCH INPUT SIGNAL CIRCUIT

1. Disconnect ECM harness connector.
2. Check harness continuity between ECM terminal 39 and switch terminal 1. Refer to Wiring Diagram.
   Continuity should exist.
3. Also check harness for short to ground and short to power.

OK or NG

OK	▶	GO TO 6.
NG	▶	Repair open circuit or short to ground or short to power in harness or connectors.

6	CHECK POWER STEERING OIL PRESSURE SWITCH

1. Disconnect power steering oil pressure switch harness connector then start engine.
2. Check continuity between terminals 1 and 2.

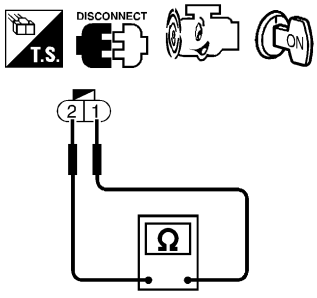

SEF679W

Conditions	Continuity
Steering wheel is being fully turned	Yes
Steering wheel is not being turned	No

MTBL0254

OK or NG

OK	▶	GO TO 7.
NG	▶	Replace power steering oil pressure switch.

7	CHECK INTERMITTENT INCIDENT
Refer to "TROUBLE DIAGNOSIS FOR INTERMITTENT INCIDENT", EC-753.	
▶	INSPECTION END

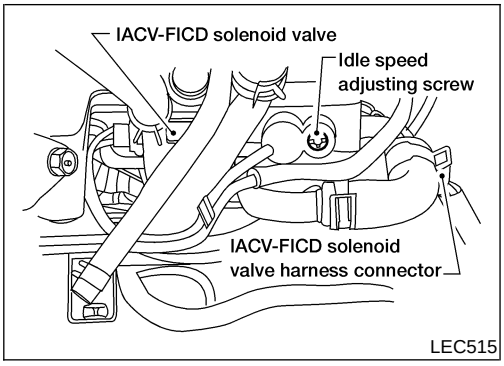

Component Description

NEEC0929

When the air conditioner is on, the IACV-FICD solenoid valve supplies additional air to adjust to the increased load.

ECM Terminals and Reference Value

NEEC0930

Specification data are reference values and are measured between each terminal and ground.

CAUTION:

Do not use ECM ground terminals when measuring input/output voltage. Doing so may result in damage to the ECM's transistor. Use a ground other than the ECM terminals, such as the ground.

TERMINAL NO.	WIRE COLOR	ITEM	CONDITION	DATA (DC Voltage)
9	B/Y	Ambient air temperature switch	**[Engine is running]** ● Idle speed ● Ambient air temperature is above 25°C (77°F) ● Air conditioner is operating	0V
			[Engine is running] ● Idle speed ● Ambient air temperature is below 19°C (66°F) ● Air conditioner is operating	BATTERY VOLTAGE (11 - 14V)
			[Engine is running] ● Idle speed ● Ambient air temperature is below 19°C (66°F) ● Air conditioner is not operating	Approximately 5V
12	P	Air conditioner relay	**[Engine is running]** ● Both A/C switch and blower fan switch are "ON"*	0 - 1V
			[Engine is running] ● A/C switch is "OFF"	BATTERY VOLTAGE (11 - 14V)
21	G/R	Air conditioner switch	**[Engine is running]** ● Both A/C switch and blower fan switch are "ON" (Compressor operates)*	Approximately 0V
			[Engine is running] ● Air conditioner switch is "OFF"	Approximately 5V

*: Any mode except "OFF", ambient air temperature is above 25°C (77°F).

Wiring Diagram

NEEC0931

EC-FICD-01

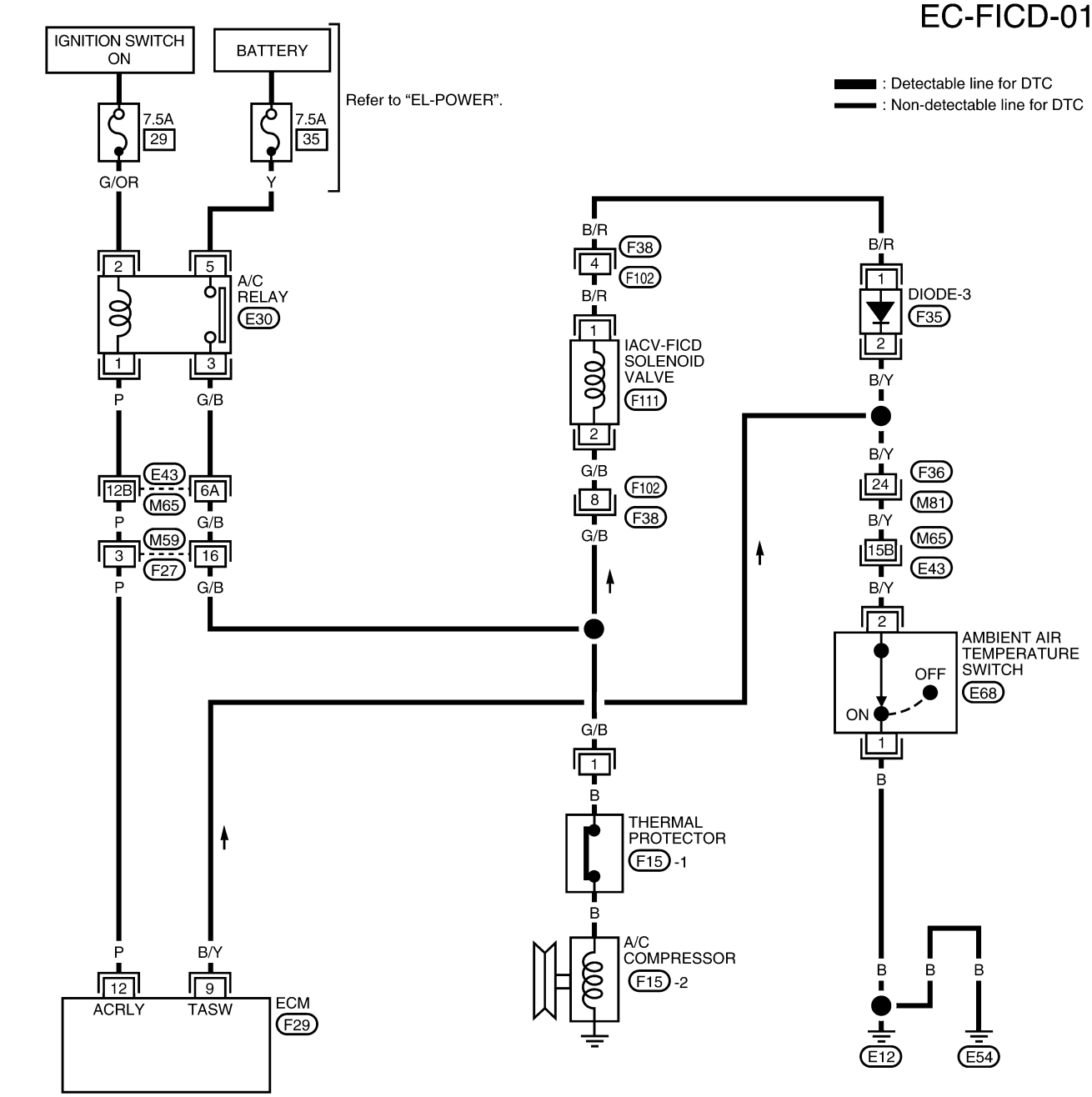

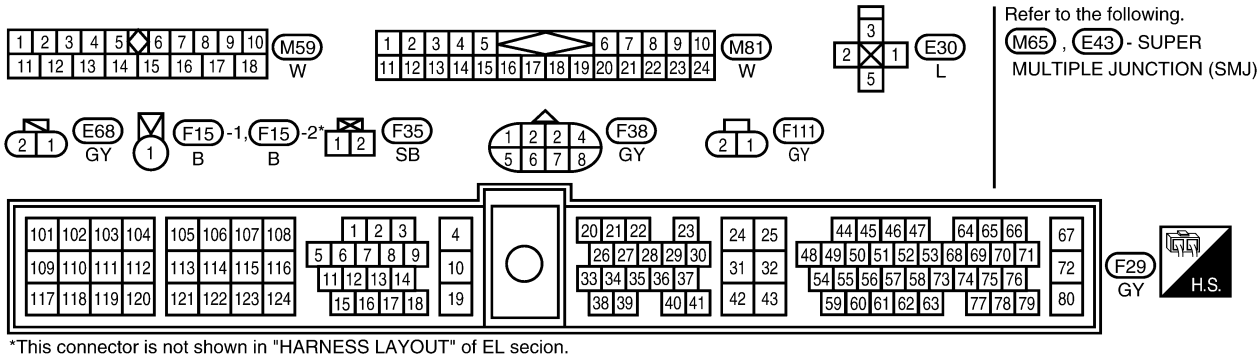

Refer to the following.
M65 , E43 - SUPER MULTIPLE JUNCTION (SMJ)

*This connector is not shown in "HARNESS LAYOUT" of EL secion.

LEC510

Diagnostic Procedure

NEEC0932

1	CHECK OVERALL FUNCTION

1. Start engine and warm it up to normal operating temperature.
2. Check idle speed.
   750±50 rpm (in “N” position)
   If NG, adjust idle speed.
3. Turn air conditioner switch and blower fan switch ON.
4. Recheck idle speed.

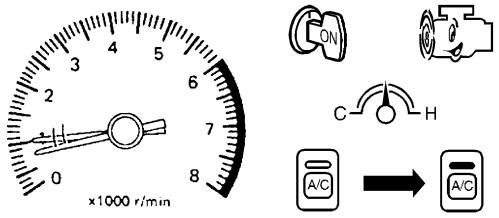

SEF742U

850 rpm or more (in “P” or “N” position)

OK or NG

OK	▶	**INSPECTION END**
NG	▶	GO TO 2.

2	CHECK AIR CONDITIONER FUNCTION

Check if air conditioner compressor functions normally.

OK or NG

OK	▶	GO TO 3.
NG	▶	Refer to “Symptom Table”, “TROUBLE DIAGNOSES”, ***HA-28***.

3	CHECK IACV-FICD SOLENOID VALVE POWER SUPPLY CIRCUIT

1. Turn air conditioner switch and blower fan switch OFF.
2. Stop engine.
3. Disconnect IACV-FICD solenoid valve harness connector.

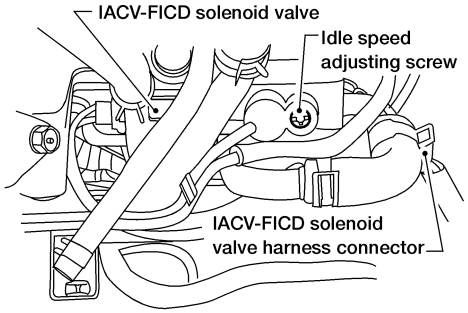

LEC515

4. Start engine, then turn air conditioner switch and blower fan switch ON.
5. Check voltage between terminal 2 and ground with CONSULT-II or tester.

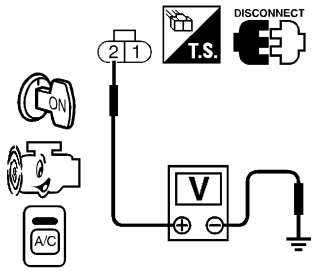

SEF680W

Voltage: Battery voltage

OK or NG

OK	▶	GO TO 5.
NG	▶	GO TO 4.

4	DETECT MALFUNCTIONING PART

Check the following.
- Harness connectors F38, F102
- Harness for open or short between IACV-FICD solenoid valve and harness connector F27

	▶	Repair harness or connectors.

5	CHECK IACV-FICD SOLENOID VALVE GROUND CIRCUIT

1. Turn ignition switch OFF.
2. Disconnect ambient air temperature switch harness connector.
3. Check harness continuity between switch terminal 1 and body ground.
   Refer to Wiring Diagram.
   Continuity should exist.
4. Also check harness for short to power.

OK or NG

OK	▶	GO TO 6.
NG	▶	GO TO 7.

6	CHECK IACV-FICD SOLENOID VALVE GROUND CIRCUIT WITH DIODE

1. Check harness continuity between switch terminal 2 and solenoid valve terminal 1.

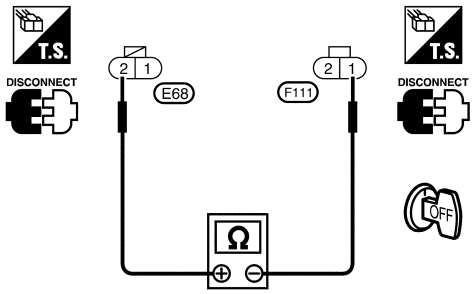

SEF160X

Continuity should exist.

2. Also check harness for short to ground and short to power.

OK or NG

OK	▶	GO TO 8.
NG	▶	GO TO 7.

7	DETECT MALFUNCTIONING PART

Check the following.
- Harness connectors F38, F102
- Harness connectors F36, M81
- Harness connectors M65, E43
- Diode F35
- Harness for open or short between ambient air temperature switch and body ground
- Harness for open or short between IACV-FICD solenoid valve and ambient air temperature switch

	▶	Repair open circuit or short to ground or short to power in harness or connectors.

8	CHECK IACV-FICD SOLENOID VALVE

Disconnect IACV-FICD solenoid valve harness connector.

- Check for clicking sound when applying 12V direct current to terminals.

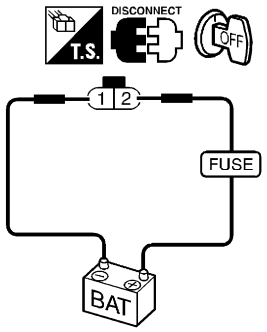

SEF682W

- Check plunger for seizing or sticking.
- Check for broken spring.

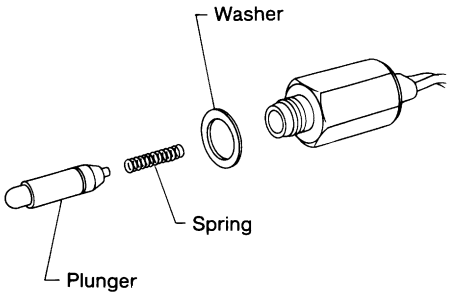

SEF097K

OK or NG

OK	▶	GO TO 9.
NG	▶	Replace IACV-FICD solenoid valve.

9	CHECK INTERMITTENT INCIDENT
Refer to "TROUBLE DIAGNOSIS FOR INTERMITTENT INCIDENT", EC-753.	
▶	**INSPECTION END**

Wiring Diagram

NEEC0933

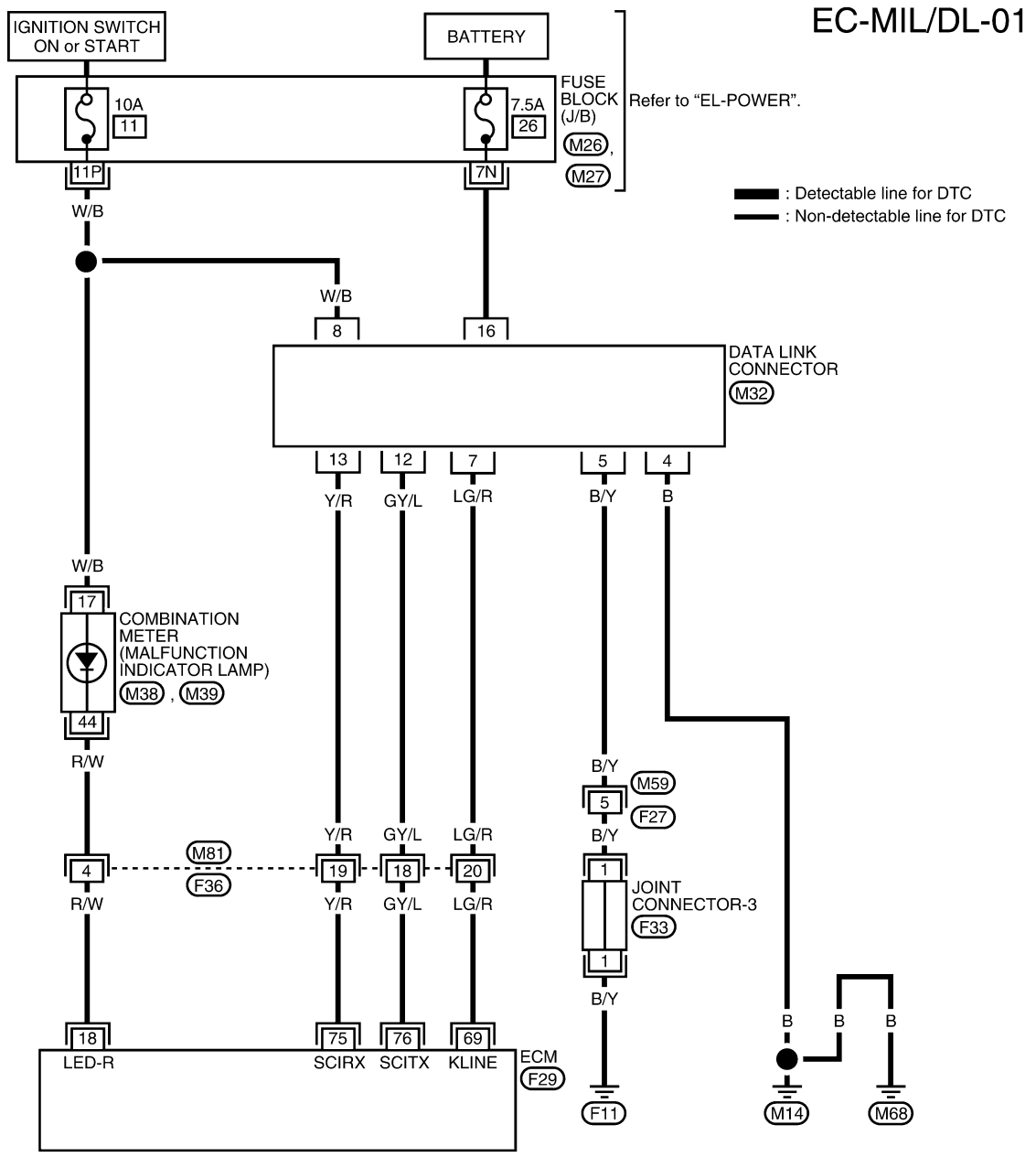

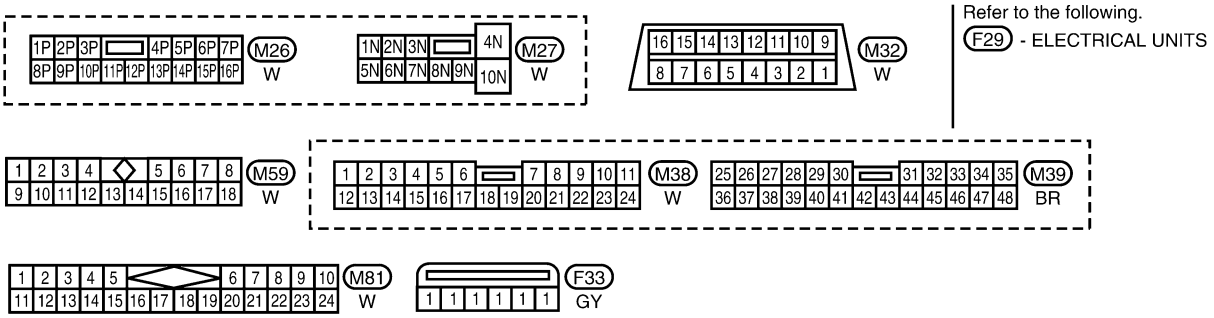

WEC155A

Fuel Pressure Regulator

NEEC0934

Fuel pressure at idling kPa (kg/cm^2, psi)		
	Vacuum hose is connected	Approximately 235 (2.4, 34)
	Vacuum hose is disconnected	Approximately 294 (3.0, 43)

Idle Speed and Ignition Timing

NEEC0935

Base idle speed*1	No-load*4 (in “P” or N” position)	700±50 rpm
Target idle speed*2	No-load*4 (in “P” or N” position)	750±50 rpm
Air conditioner: ON	In “P” or N” position	850 rpm or more
Ignition timing*3	In “P” or N” position	10°±2° BTDC
Throttle position sensor idle position		0.15 - 0.85V

*1: Throttle position sensor harness connector disconnected or using CONSULT-II “WORK SUPPORT” mode
*2: Throttle position sensor harness connector connected
*3: Throttle position sensor harness connector disconnected
*4: Under the following conditions:

- Air conditioner switch: OFF
- Electric load: OFF (Lights, heater fan & rear window defogger)
- Steering wheel: Kept in straight-ahead position

Ignition Coil

NEEC0936

Primary voltage	12V
Primary resistance [at 20°C (68°F)]	Approximately 1.0Ω
Secondary resistance [at 20°C (68°F)]	Approximately 10 kΩ

Mass Air Flow Sensor

NEEC0937

Supply voltage	Battery voltage (11 - 14)V
Output voltage at idle	1.0 - 1.7*V
Mass air flow (Using CONSULT-II or GST)	3.3 - 4.8 g·m/sec at idle* 12.0 - 14.9 g·m/sec at 2,500 rpm*

*: Engine is warmed up to normal operating temperature and running under no-load.

Engine Coolant Temperature Sensor

NEEC0938

Temperature °C (°F)	Resistance kΩ
20 (68)	2.1 - 2.9
50 (122)	0.68 - 1.00
90 (194)	0.236 - 0.260

Heated Oxygen Sensor 1 Heater (Front)

NEEC0940

Resistance [at 25°C (77°F)]	2.3 - 4.3Ω

Fuel Pump

NEEC0941

Resistance [at 25°C (77°F)]	0.2 - 5.0Ω

IACV-AAC Valve

NEEC0942

Resistance [at 20°C (68°F)]	Approximately 10.0Ω

Injector

NEEC0943

Resistance [at 25°C (77°F)]	10 - 14Ω

Throttle Position Sensor

NEEC0945

Throttle valve conditions	Voltage (at normal operating temperature, engine off, ignition switch ON)
Completely closed (a)	0.15 - 0.85V
Partially open	Between (a) and (b)
Completely open (b)	3.5 - 4.7V

Calculated Load Value

NEEC0946

	Calculated load value % (Using CONSULT or GST)
At idle	18.0 - 26.0
At 2,500 rpm	18.0 - 21.0

Intake Air Temperature Sensor

NEEC0947

Temperature °C (°F)	Resistance kΩ
20 (68)	2.1 - 2.9
80 (176)	0.27 - 0.38

Heated Oxygen Sensor 2 Heater (Rear)

NEEC0948

Resistance [at 25°C (77°F)]	2.3 - 4.3Ω

Crankshaft Position Sensor (OBD)

NEEC0949

Resistance [at 20°C (68°F)]	512 - 632Ω

Fuel Tank Temperature Sensor

NEEC0950

Temperature °C (°F)	Resistance kΩ
20 (68)	2.3 - 2.7
50 (122)	0.79 - 0.90

Alphabetical & P No. Index for DTC

NEEC1077

ALPHABETICAL INDEX FOR DTC

NEEC1077S01

Items (CONSULT-II screen terms)	DTC*1	Reference page
Unable to access ECM	—	EC-1330
ABSL PRES SEN/CIRC	P0105	EC-1369
AIR TEMP SEN/CIRC	P0110	EC-1371
A/T 1ST GR FNCTN	P0731	***AT-272***
A/T 2ND GR FNCTN	P0732	***AT-278***
A/T 3RD GR FNCTN	P0733	***AT-284***
A/T 4TH GR FNCTN	P0734	***AT-290***
A/T COMM LINE	P0600*4	EC-1659
A/T DIAG COMM LINE	P1605	EC-1774
A/T TCC S/V FNCTN	P0744	***AT-304***
ATF TEMP SEN/CIRC	P0710	***AT-256***
CKP SENSOR (COG)	P1336	EC-1692
CKP SEN/CIRCUIT	P0335	EC-1559
CLOSED LOOP-B1	P1148	EC-1668
CLOSED LOOP-B2	P1168	EC-1668
CLOSED TP SW/CIRC	P0510	EC-1652
CMP SEN/CIRCUIT	P0340	EC-1565
COOLANT T SEN/CIRC*2	P0115	EC-1376
*COOLAN T SEN/CIRC	P0125	EC-1394
CYL 1 MISFIRE	P0301	EC-1546
CYL 2 MISFIRE	P0302	EC-1546
CYL 3 MISFIRE	P0303	EC-1546
CYL 4 MISFIRE	P0304	EC-1546
CYL 5 MISFIRE	P0305	EC-1546
CYL 6 MISFIRE	P0306	EC-1546
ECM	P0605	EC-1664
ENGINE SPEED SIG	P0725	***AT-267***
ENG OVER TEMP	P0217	EC-1528
ENG OVER TEMP	P1217*4	EC-1670
EVAP GROSS LEAK	P0455	EC-1616
EVAP PURG FLOW/MON	P1447	EC-1735
EVAP SYS PRES SEN	P0450	EC-1605
EVAP SMALL LEAK	P0440	EC-1577
EVAP SMALL LEAK	P1440	EC-1699
EVAP VERY SML LEAK	P1441	EC-1701

Items (CONSULT-II screen terms)	DTC*1	Reference page
FUEL LEVL SEN/CIRC	P0464	EC-1637
FUEL LEVL SEN/CIRC	P1464	EC-1755
FUEL LEVEL SENSOR	P0461	EC-1635
FUEL LEV SEN SLOSH	P0460	EC-1630
FUEL SYS-LEAN/BK1	P0171	EC-1506
FUEL SYS-LEAN/BK2	P0174	EC-1506
FUEL SYS-RICH/BK1	P0172	EC-1515
FUEL SYS-RICH/BK2	P0175	EC-1515
FUEL TEMP SEN/CIRC	P0180	EC-1523
HO2S1 (B1)	P0130	EC-1400
HO2S1 (B1)	P0131	EC-1411
HO2S1 (B1)	P0132	EC-1420
HO2S1 (B1)	P0133	EC-1429
HO2S1 (B1)	P0134	EC-1443
HO2S1 (B2)	P0150	EC-1400
HO2S1 (B2)	P0151	EC-1411
HO2S1 (B2)	P0152	EC-1420
HO2S1 (B2)	P0153	EC-1429
HO2S1 (B2)	P0154	EC-1443
HO2S1 HTR (B1)	P0135	EC-1451
HO2S1 HTR (B2)	P0155	EC-1451
HO2S2 (B1)	P0137	EC-1458
HO2S2 (B1)	P0138	EC-1468
HO2S2 (B1)	P0139	EC-1478
HO2S2 (B1)	P0140	EC-1488
HO2S2 (B2)	P0157	EC-1458
HO2S2 (B2)	P0158	EC-1468
HO2S2 (B2)	P0159	EC-1478
HO2S2 (B2)	P0160	EC-1488
HO2S2 HTR (B1)	P0141	EC-1498
HO2S2 HTR (B2)	P0161	EC-1498
IACV/AAC VLV/CIRC	P0505	EC-1646
KNOCK SEN/CIRC-B1	P0325*4	EC-1555
L/PRES SOL/CIRC	P0745	***AT-313***
MAF SEN/CIRCUIT*2	P0100	EC-1360
MULTI CYL MISFIRE	P0300	EC-1546
NO SELF DIAGNOSTIC FAILURE INDICATED	**P0000**	**—**

Items (CONSULT-II screen terms)	DTC*1	Reference page
O/R CLTCH SOL/CIRC	P1760	***AT-337***
P-N POS SW/CIRCUIT	P1706	EC-1777
PNP SW/CIRC	P0705	***AT-250***
PURG VOLUME CONT/V	P0443	EC-1592
PURG VOLUME CONT/V	P1444	EC-1716
SCB/V CONT SOL/V	P1243	EC-1686
SFT SOL A/CIRC*2	P0750	***AT-318***
SFT SOL B/CIRC*2	P0755	***AT-323***
TCC SOLENOID/CIRC	P0740	***AT-299***
THERMOSTAT FNCTN	P1126	EC-1666
THRTL POS SEN/CIRC*2	P0120	EC-1381
TP SEN/CIRC A/T*2	P1705	***AT-328***
TW CATALYST SYS-B1	P0420	EC-1572
TW CATALYST SYS-B2	P0430	EC-1572
VC CUT/V BYPASS/V	P1491	EC-1765
VC/V BYPASS/V	P1490	EC-1759
VEH SPD SEN/CIR AT*3	P0720	***AT-262***
VEH SPEED SEN/CIRC*3	P0500	EC-1642
VENT CONTROL VALVE	P0446	EC-1599
VENT CONTROL VALVE	P1446	EC-1728
VENT CONTROL VALVE	P1448	EC-1747

*1: 1st trip DTC No. is the same as DTC No.

*2: When the fail-safe operation occurs, the MIL illuminates.

*3: The MIL illuminates when both the "Revolution sensor signal" and the "Vehicle speed sensor signal" meet the fail-safe condition at the same time.

*4: This DTC is displayed with CONSULT-II only.

NOTE:

Regarding D22 models, "-B1" and "BK1" indicate right bank and "-B2" and "BK2" indicate left bank.

P NO. INDEX FOR DTC

=NEEC1077S02

DTC*1	Items (CONSULT-II screen terms)	Reference page
—	Unable to access ECM	EC-1330
P0000	**NO SELF DIAGNOSTIC FAILURE INDICATED**	**—**
P0100	MAF SEN/CIRCUIT*2	EC-1360
P0105	ABSL PRES SEN/CIRC	EC-1369
P0110	AIR TEMP SEN/CIRC	EC-1371
P0115	COOLANT T SEN/CIRC*2	EC-1376
P0120	THRTL POS SEN/CIRC*2	EC-1381
P0125	*COOLAN T SEN/CIRC	EC-1394
P0130	HO2S1 (B1)	EC-1400
P0131	HO2S1 (B1)	EC-1411
P0132	HO2S1 (B1)	EC-1420
P0133	HO2S1 (B1)	EC-1429
P0134	HO2S1 (B1)	EC-1443
P0135	HO2S1 HTR (B1)	EC-1451
P0137	HO2S2 (B1)	EC-1458
P0138	HO2S2 (B1)	EC-1468
P0139	HO2S2 (B1)	EC-1478
P0140	HO2S2 (B1)	EC-1488
P0141	HO2S2 HTR (B1)	EC-1498
P0150	HO2S1 (B2)	EC-1400
P0151	HO2S1 (B2)	EC-1411
P0152	HO2S1 (B2)	EC-1420
P0153	HO2S1 (B2)	EC-1429
P0154	HO2S1 (B2)	EC-1443
P0155	HO2S1 HTR (B2)	EC-1451
P0157	HO2S2 (B2)	EC-1458
P0158	HO2S2 (B2)	EC-1468
P0159	HO2S2 (B2)	EC-1478
P0160	HO2S2 (B2)	EC-1488
P0161	HO2S2 HTR (B2)	EC-1498
P0171	FUEL SYS-LEAN/BK1	EC-1506
P0172	FUEL SYS-RICH/BK1	EC-1515
P0174	FUEL SYS-LEAN/BK2	EC-1506
P0175	FUEL SYS-RICH/BK2	EC-1515
P0180	FUEL TEMP SEN/CIRC	EC-1523
P0217	ENG OVER TEMP	EC-1528

DTC*1	Items (CONSULT-II screen terms)	Reference page
P0300	MULTI CYL MISFIRE	EC-1546
P0301	CYL 1 MISFIRE	EC-1546
P0302	CYL 2 MISFIRE	EC-1546
P0303	CYL 3 MISFIRE	EC-1546
P0304	CYL 4 MISFIRE	EC-1546
P0305	CYL 5 MISFIRE	EC-1546
P0306	CYL 6 MISFIRE	EC-1546
P0325*4	KNOCK SEN/CIRC-B1	EC-1555
P0335	CKP SEN/CIRCUIT	EC-1559
P0340	CMP SEN/CIRCUIT	EC-1565
P0420	TW CATALYST SYS-B1	EC-1572
P0430	TW CATALYST SYS-B2	EC-1572
P0440	EVAP SMALL LEAK	EC-1577
P0443	PURG VOLUME CONT/V	EC-1592
P0446	VENT CONTROL VALVE	EC-1599
P0450	EVAP SYS PRES SEN	EC-1605
P0455	EVAP GROSS LEAK	EC-1616
P0460	FUEL LEV SEN SLOSH	EC-1630
P0461	FUEL LEVEL SENSOR	EC-1635
P0464	FUEL LEVL SEN/CIRC	EC-1637
P0500	VEH SPEED SEN/CIRC*3	EC-1642
P0505	IACV/AAC VLV/CIRC	EC-1646
P0510	CLOSED TP SW/CIRC	EC-1652
P0600*4	A/T COMM LINE	EC-1659
P0605	ECM	EC-1664
P0705	PNP SW/CIRC	***AT-250***
P0710	ATF TEMP SEN/CIRC	***AT-256***
P0720	VEH SPD SEN/CIR A/T*3	***AT-262***
P0725	ENGINE SPEED SIG	***AT-267***
P0731	A/T 1ST GR FNCTN	***AT-272***
P0732	A/T 2ND GR FNCTN	***AT-278***
P0733	A/T 3RD GR FNCTN	***AT-284***
P0734	A/T 4TH GR FNCTN	***AT-290***
P0740	TCC SOLENOID/CIRC	***AT-299***
P0744	A/T TCC S/V FNCTN	***AT-304***
P0745	L/PRESS SOL/CIRC	***AT-313***
P0750	SFT SOL A/CIRC*2	***AT-318***

Alphabetical & P No. Index for DTC (Cont'd)

DTC*1	Items (CONSULT-II screen terms)	Reference page
P0755	SFT SOL B/CIRC*2	***AT-323***
P1126	THERMOSTAT FNCTN	EC-1666
P1148	CLOSED LOOP-B1	EC-1668
P1168	CLOSED LOOP-B2	EC-1668
P1217*4	ENG OVER TEMP	EC-1670
P1243	SCB/V CONT SOL/V	EC-1686
P1336	CKP SENSOR (COG)	EC-1692
P1440	EVAP SMALL LEAK	EC-1699
P1441	EVAP VERY SML LEAK	EC-1701
P1444	PURG VOLUME CONT/V	EC-1716
P1446	VENT CONTROL VALVE	EC-1728
P1447	EVAP PURG FLOW/MON	EC-1735
P1448	VENT CONTROL VALVE	EC-1747
P1464	FUEL LEVL SEN/CIRC	EC-1755
P1490	VC/V BYPASS/V	EC-1759
P1491	VC CUT/V BYPASS/V	EC-1765
P1605	A/T DIAG COMM LINE	EC-1774
P1705	TP SEN/CIRC A/T*2	***AT-328***
P1706	P-N POS SW/CIRCUIT	EC-1777
P1760	O/R CLUTCH SOL/CIRC	***AT-337***

*1: 1st trip DTC No. is the same as DTC No.

*2: When the fail-safe operation occurs, the MIL illuminates.

*3: The MIL illuminates when both the "Revolution sensor signal" and the "Vehicle speed sensor signal" meet the fail-safe condition at the same time.

*4: This DTC is displyed with CONSULT-II only.

NOTE:

Regarding D22 models, "-B1" and "BK1" indicate right bank and "-B2" and "BK2" indicate left bank.

Supplemental Restraint System (SRS) "AIR BAG" and "SEAT BELT PRE-TENSIONER"

NEEC1078

The Supplemental Restraint System such as "AIR BAG" and "SEAT BELT PRE-TENSIONER" used along with a seat belt, help to reduce the risk or severity of injury to the driver and front passenger in a frontal collision. The Supplemental Restraint System consists of air bag modules (located in the center of the steering wheel and in the instrument panel on the passenger side), seat belt pre-tensioners, a diagnosis sensor unit, warning lamp, wiring harness, and spiral cable.

The vehicle (except Crew Cab model) is equipped with a passenger air bag deactivation switch. Because no rear seat exists where a rear-facing child restraint can be placed, the switch is designed to turn off the passenger air bag so that a rear-facing child restraint can be used in the front passenger seat. The switch is located in the center of the instrument panel, near the ashtray. When the switch is turned to the ON position, the passenger air bag is enabled and could inflate in a frontal collision. When the switch is turned to the OFF position, the passenger air bag is disabled and will not inflate in a frontal collision. A passenger air bag OFF indicator on the instrument panel lights up when the passenger air bag is switched OFF. The driver air bag always remains enabled and is not affected by the passenger air bag deactivation switch.

Information necessary to service the system safely is included in the **RS section** of this Service Manual.

WARNING:

- **To avoid rendering the SRS inoperative, which could increase the risk of personal injury or death in the event of a collision which would result in air bag inflation, all maintenance should be performed by an authorized NISSAN dealer.**
- **Improper maintenance, including incorrect removal and installation of the SRS, can lead to personal injury caused by unintentional activation of the system. For removal of Spiral Cable and Air Bag Module, see the RS section.**
- **Do not use electrical test equipment on any circuit related to the SRS unless instructed to in this Service Manual. Spiral cable and wiring harnesses (except "SEAT BELT PRE-TENSIONER") covered with yellow insulation either just before the harness connectors or for the complete harness are related to the SRS.**
- **The vehicle (except Crew Cab model) is equipped with a passenger air bag deactivation switch which can be operated by the customer. When the passenger air bag is switched OFF, the passenger air bag is disabled and will not inflate in a frontal collision. When the passenger air bag is switched ON, the passenger air bag is enabled and could inflate in a frontal collision. After SRS maintenance or repair, make sure the passenger air bag deactivation switch is in the same position (ON or OFF) as when the vehicle arrived for service.**

Precautions for On Board Diagnostic (OBD) System of Engine and A/T

NEEC1079

The ECM has an on board diagnostic system. It will light up the malfunction indicator lamp (MIL) to warn the driver of a malfunction causing emission deterioration.

CAUTION:

- **Be sure to turn the ignition switch OFF and disconnect the negative battery terminal before any repair or inspection work. The open/short circuit of related switches, sensors, solenoid valves, etc. will cause the MIL to light up.**
- **Be sure to connect and lock the connectors securely after work. A loose (unlocked) connector will cause the MIL to light up due to the open circuit. (Be sure the connector is free from water, grease, dirt, bent terminals, etc.)**
- **Certain systems and components, especially those related to OBD, may use a new style slide-locking type harness connector. For description and how to disconnect, refer to *EL-5* "HARNESS CONNECTOR".**
- **Be sure to route and secure the harnesses properly after work. The interference of the harness with a bracket, etc. may cause the MIL to light up due to the short circuit.**
- **Be sure to connect rubber tubes properly after work. A misconnected or disconnected rubber tube may cause the MIL to light up due to the malfunction of the EGR system or fuel injection system, etc.**
- **Be sure to erase the unnecessary malfunction information (repairs completed) from the ECM and TCM (Transmission control module) before returning the vehicle to the customer.**

Engine Fuel & Emission Control System

NEEC1080

ECM

- Do not disassemble ECM.
- Do not turn on board diagnostic test mode selector forcibly.
- If a battery terminal is disconnected, the memory will return to the ECM value.
  The ECM will now start to self-control at its initial value. Engine operation can vary slightly when the terminal is disconnected. However, this is not an indication of a problem. Do not replace parts because of a slight variation.

WIRELESS EQUIPMENT

- When installing CB ham radio or a mobile phone, be sure to observe the following as it may adversely affect electronic control systems depending on its installation location.

1) Keep the antenna as far away as possible from the electronic control units.
2) Keep the antenna feeder line more than 20 cm (7.9 in) away from the harness of electronic controls.
   Do not let them run parallel for a long distance.
3) Adjust the antenna and feeder line so that the standing-wave ratio can be kept smaller.
4) Be sure to ground the radio to vehicle body.

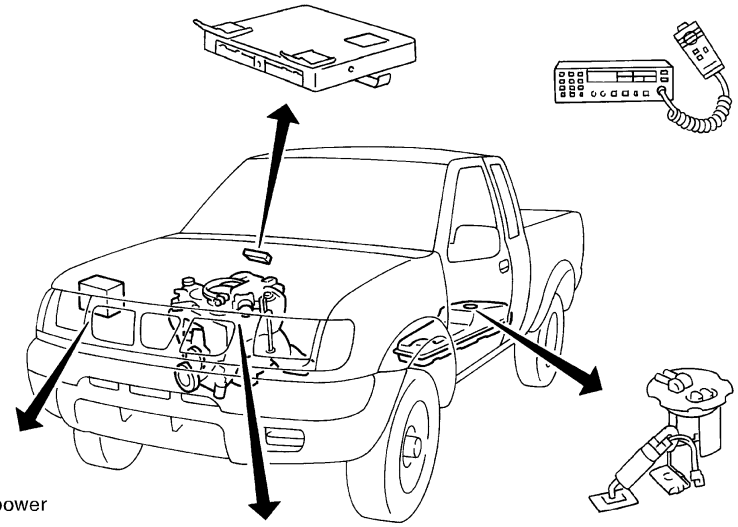

BATTERY

- Always use a 12 volt battery as power source.
- Do not attempt to disconnect battery cables while engine is running.

WHEN STARTING

- Do not depress accelerator pedal when starting.
- Immediately after starting, do not rev up engine unnecessarily.
- Do not rev up engine just prior to shutdown.

ECM PARTS HANDLING

- Handle mass air flow sensor carefully to avoid damage.
- Do not disassemble mass air flow sensor.
- Do not clean mass air flow sensor with any type of detergent.
- Do not disassemble IACV-AAC valve.
- Even a slight leak in the air intake system can cause serious problems.
- Do not shock or jar the camshaft position sensor or crankshaft position sensor (OBD).

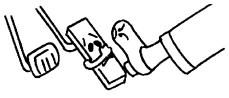

FUEL PUMP

- Do not operate fuel pump when there is no fuel in lines.
- Tighten fuel hose clamps to the specified torque. (Refer to MA section.)

ECM HARNESS HANDLING

- Securely connect ECM harness connectors.
  A poor connection can cause an extremely high (surge) voltage to develop in coil and condenser, thus resulting in damage to ICs.
- Keep ECM harness at least 10 cm (3.9 in.) away from adjacent harnesses to prevent an ECM system malfunction due to receiving external noise, degraded operation of ICs, etc.
- Keep ECM parts and harnesses dry.
- Before removing parts, turn off ignition switch and then disconnect battery ground cable.

SEF236V

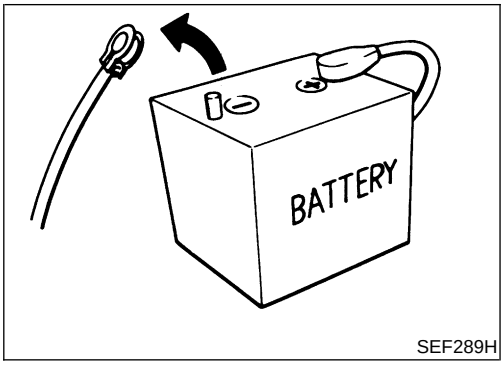

SEF289H

Precautions

NEEC1081

- **Before connecting or disconnecting the ECM harness connector, turn ignition switch OFF and disconnect negative battery terminal. Failure to do so may damage the ECM because battery voltage is applied to ECM even if ignition switch is turned off.**

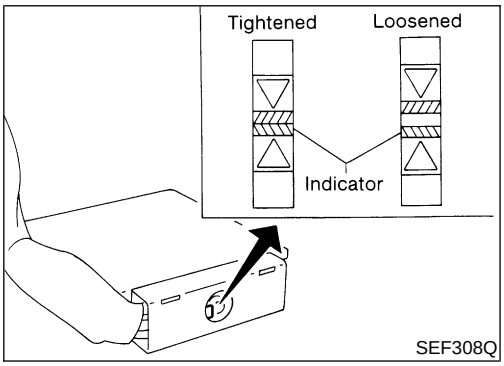

SEF308Q

- **When connecting ECM harness connector, tighten securing bolt until the gap between orange indicators disappears.**
  : 3 - 5 N·m (0.3 - 0.5 kg-m, 26 - 43 in-lb)

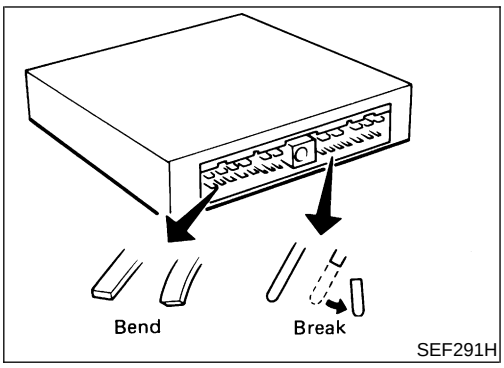

SEF291H

- **When connecting or disconnecting pin connectors into or from ECM, take care not to damage pin terminals (bend or break).**
  Make sure that there are not any bends or breaks on ECM pin terminal, when connecting pin connectors.

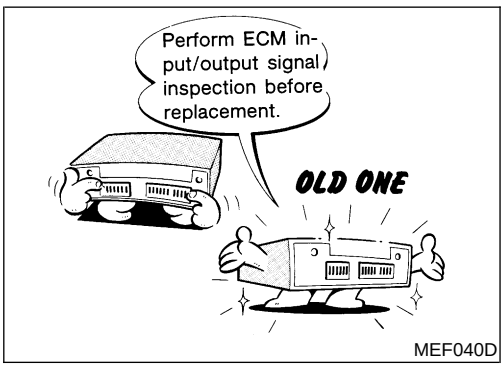

MEF040D

- **Before replacing ECM, perform “ECM Terminals and Reference Value” inspection and make sure ECM functions properly. Refer to EC-1340.**

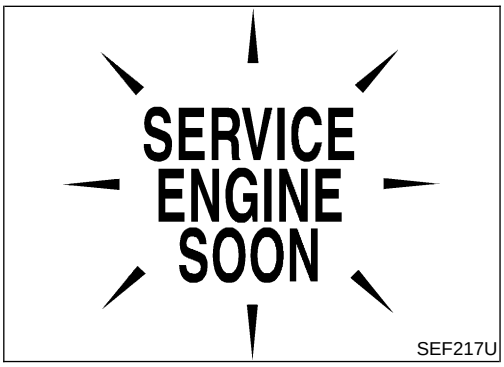

SEF217U

- **After performing each TROUBLE DIAGNOSIS, perform “DTC Confirmation Procedure” or “Overall Function Check”.**
  The DTC should not be displayed in the “DTC Confirmation Procedure” if the repair is completed. The “Overall Function Check” should be a good result if the repair is completed.

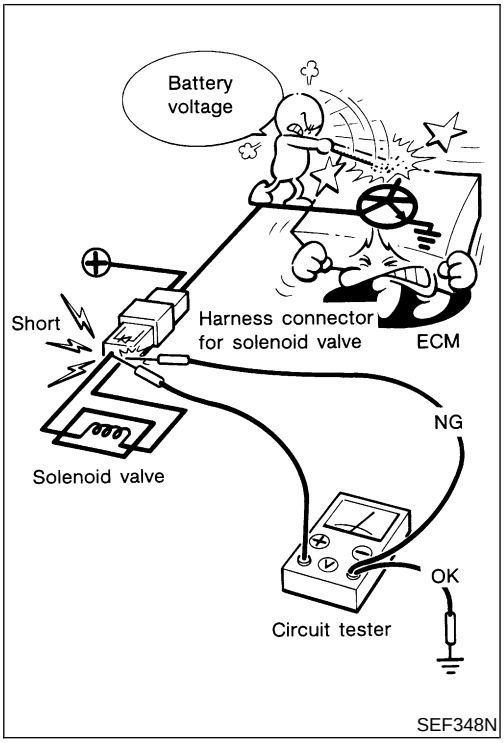

- **When measuring ECM signals with a circuit tester, never allow the two tester probes to contact.**
  Accidental contact of probes will cause a short circuit and damage the ECM power transistor.
- **Do not use ECM ground terminals when measuring input/ output voltage. Doing so may result in damage to the ECM's transistor. Use a ground other than the ECM terminals, such as the ground.**

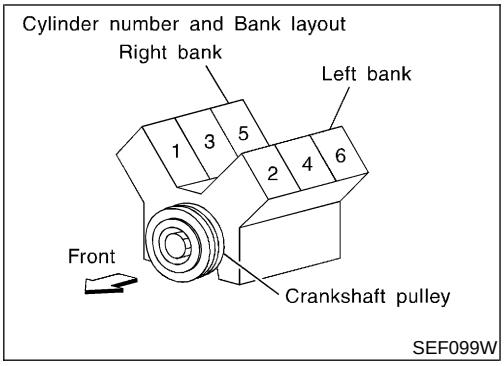

- **Regarding model D22, "-B1" indicates the right bank and "-B2" indicates the left bank as shown in the figure.**

Wiring Diagrams and Trouble Diagnosis

NEEC1082

When you read Wiring diagrams, refer to the following:

- ***GI-11***, "HOW TO READ WIRING DIAGRAMS"
- ***EL-9***, "POWER SUPPLY ROUTING"

When you perform trouble diagnosis, refer to the following:

- ***GI-34***, "How to Follow Test Groups in Trouble Diagnoses"
- ***GI-23***, "HOW TO PERFORM EFFICIENT DIAGNOSIS FOR AN ELECTRICAL INCIDENT"

Special Service Tools

NEEC1083

The actual shapes of Kent-Moore tools may differ from those of special service tools illustrated here.

Tool number (Kent-Moore No.) Tool name	Description	
KV10117100 (J36471-A) Heated oxygen sensor wrench	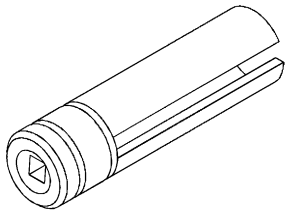 NT379	Loosening or tightening front heated oxygen sensor with 22 mm (0.87 in) hexagon nut
KV10114400 (J-38365) Heated oxygen sensor wrench	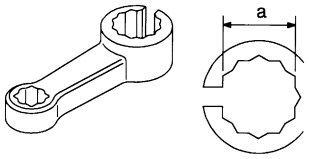 NT636	Loosening or tightening rear heated oxygen sensor **a: 22 mm (0.87 in)**
(J44321) Fuel pressure gauge kit	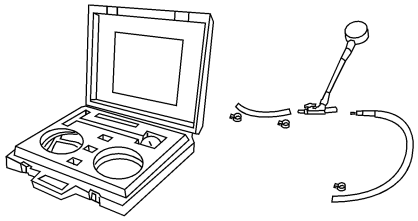 LEC642	Checking fuel pressure

Commercial Service Tools

NEEC1084

Tool name (Kent-Moore No.)	Description	
Leak detector (J41416)	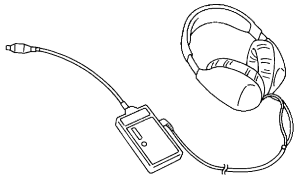 NT703	Locating the EVAP leak
EVAP service port adapter (J41413-OBD)	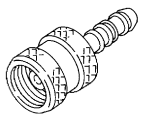 NT704	Applying positive pressure through EVAP service port

Commercial Service Tools (Cont'd)

Tool name (Kent-Moore No.)	Description	
Hose clipper	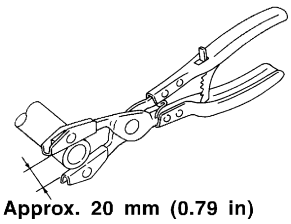 NT720	Clamping the EVAP purge hose between the fuel tank and EVAP canister applied to DTC P1440 [EVAP control system (small leak-positive pressure)]
Fuel filler cap adapter	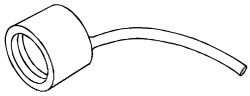 NT653	Checking fuel tank vacuum relief valve opening pressure
Socket wrench	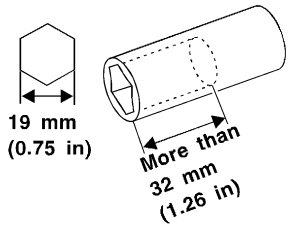 NT705	Removing and installing engine coolant temperature sensor
Oxygen sensor thread cleaner (J-43897-18) (J-43897-12)	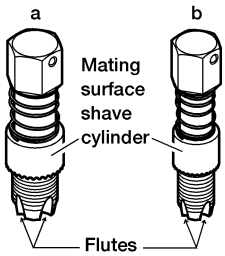 AEM488	Reconditioning the exhaust system threads before installing a new oxygen sensor. Use with anti-seize lubricant shown in "Commercial Service Tools". a: J-43897-18 (18 mm diameter with pitch 1.5 mm) for Zirconia Oxygen Sensor b: J-43897-12 (12 mm diameter with pitch 1.25 mm) for Titania Oxygen Sensor
Anti-seize lubricant (Permatex™ 133AR or equivalent meeting MIL specification MIL-A-907)	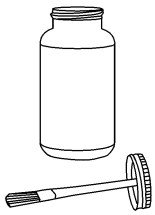 AEM489	Lubricating oxygen sensor thread cleaning tool when reconditioning exhaust system threads.

Engine Control Component Parts Location

NEEC1085

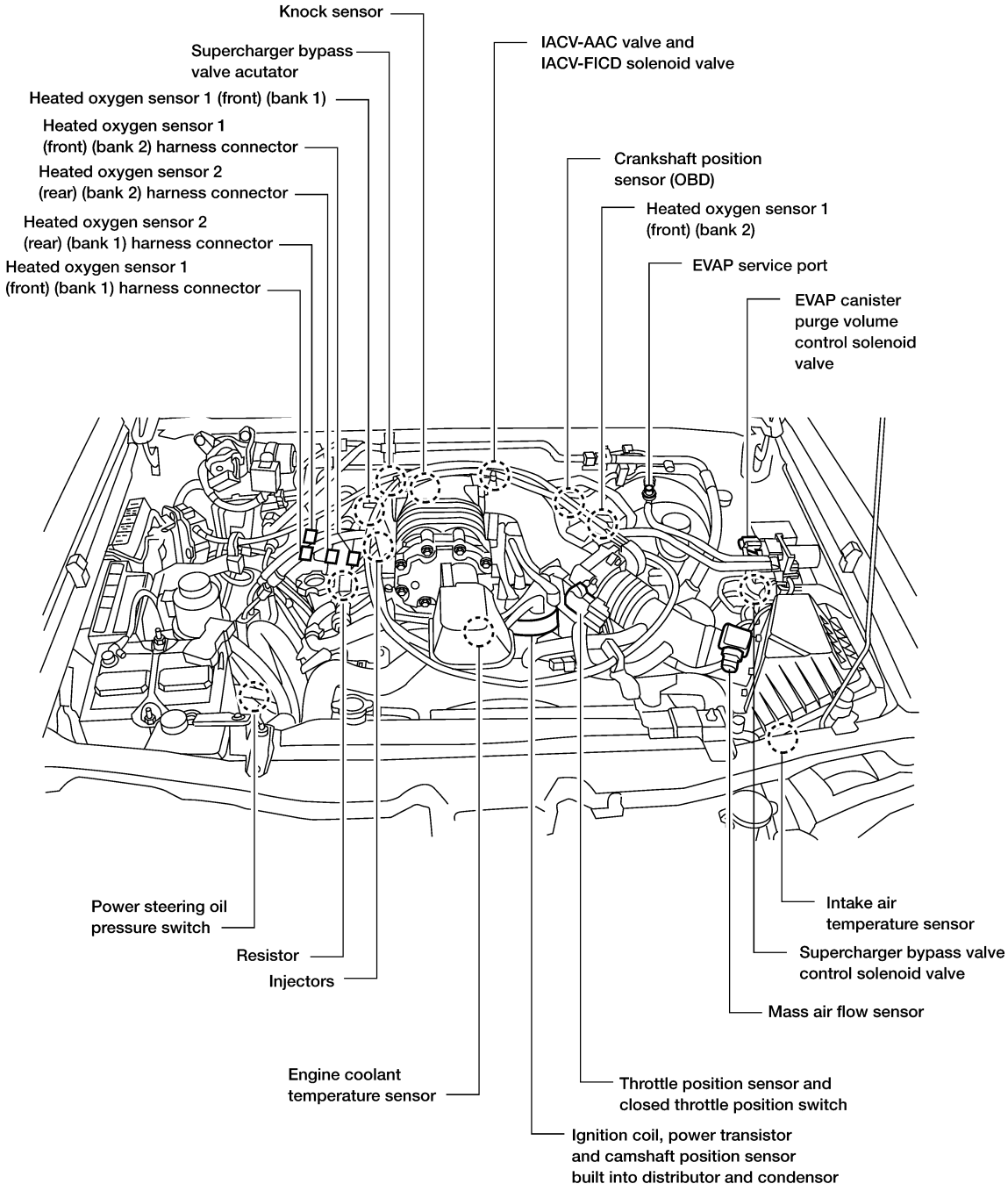

LEC808

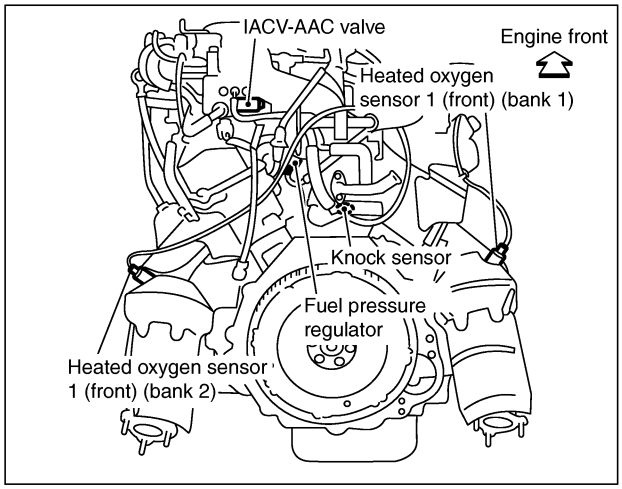
IACV-AAC valve
Engine front
Heated oxygen sensor 1 (front) (bank 1)
Knock sensor
Fuel pressure regulator
Heated oxygen sensor 1 (front) (bank 2)

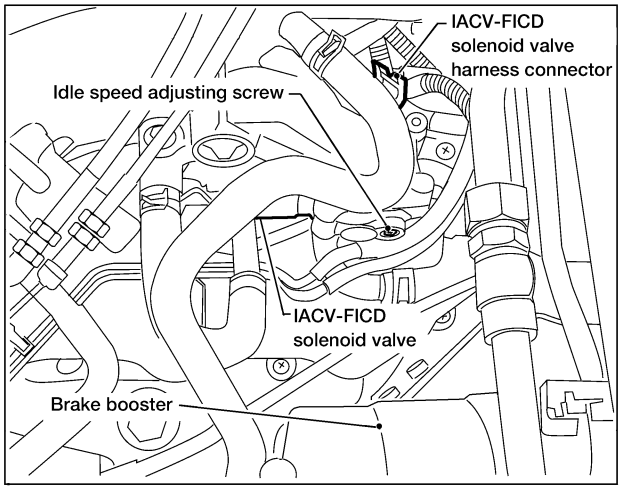
IACV-FICD solenoid valve harness connector
Idle speed adjusting screw
IACV-FICD solenoid valve
Brake booster

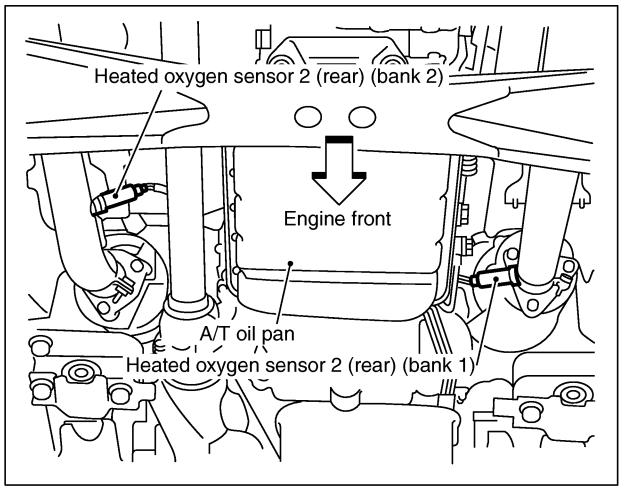
Heated oxygen sensor 2 (rear) (bank 2)
Engine front
A/T oil pan
Heated oxygen sensor 2 (rear) (bank 1)

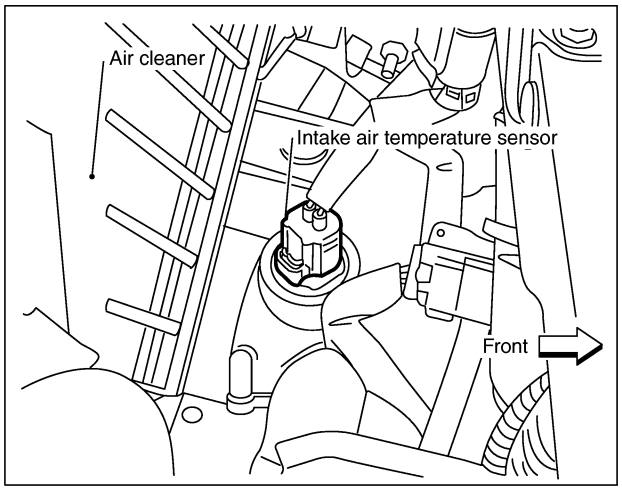
Air cleaner
Intake air temperature sensor
Front

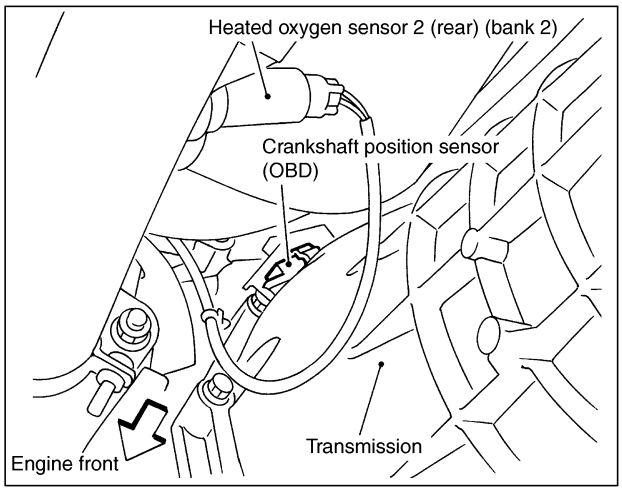
Heated oxygen sensor 2 (rear) (bank 2)
Crankshaft position sensor (OBD)
Transmission
Engine front

LEC762

Circuit Diagram

NEEC1086

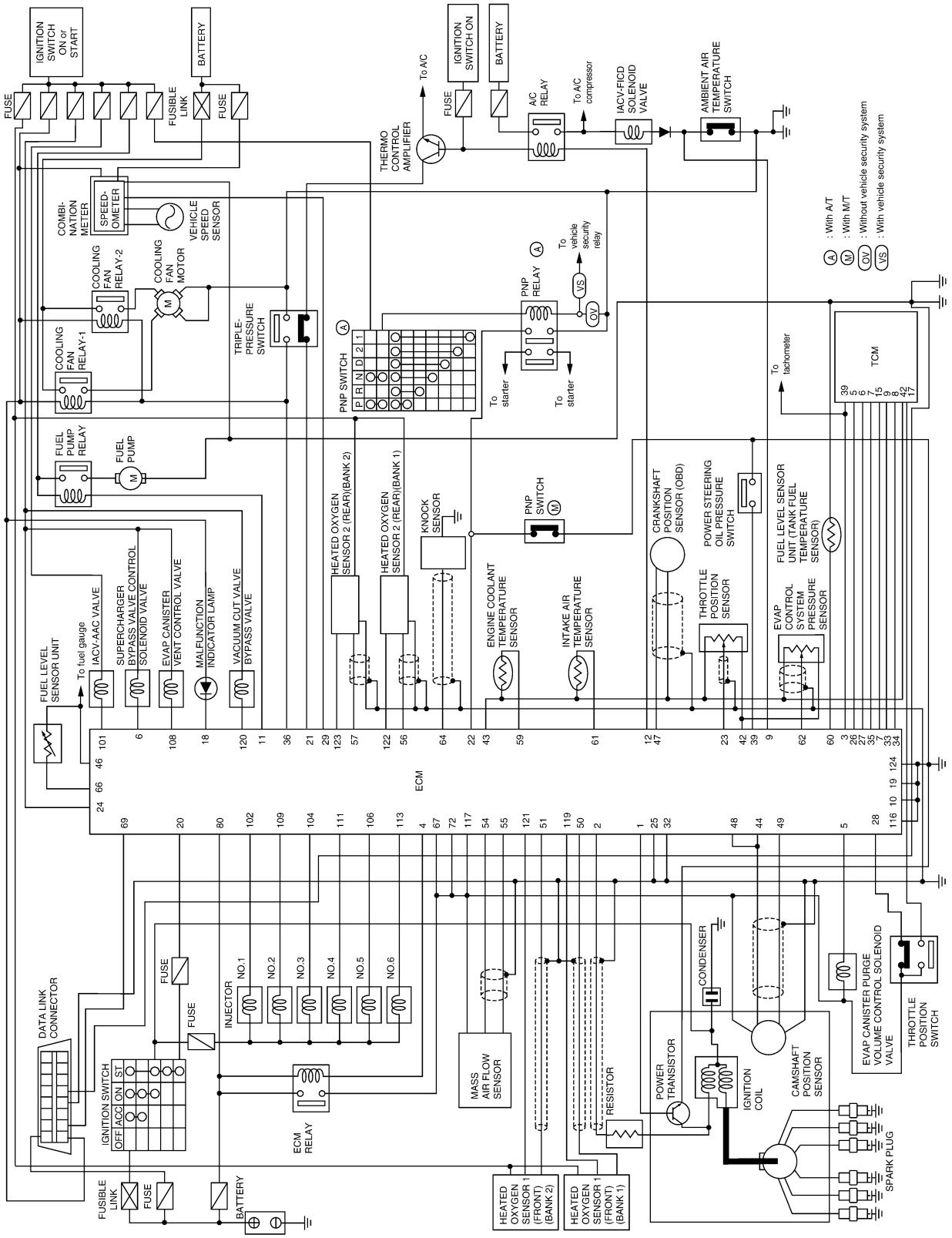

LEC156A

System Diagram

NEEC1087

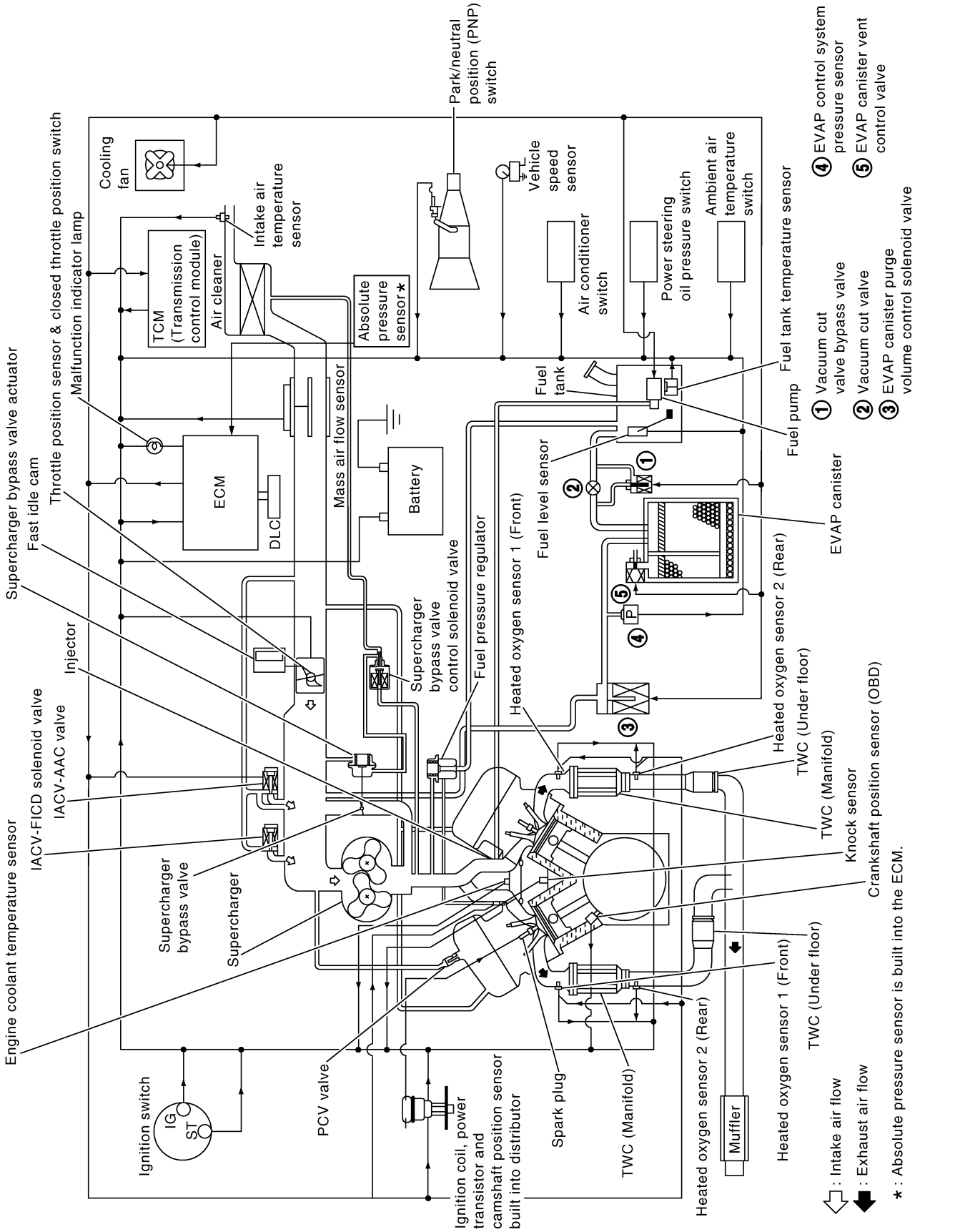

SEC294C

Vacuum Hose Drawing

NEEC1088

Refer to “System Diagram”, EC-1234 for Vacuum Control System.

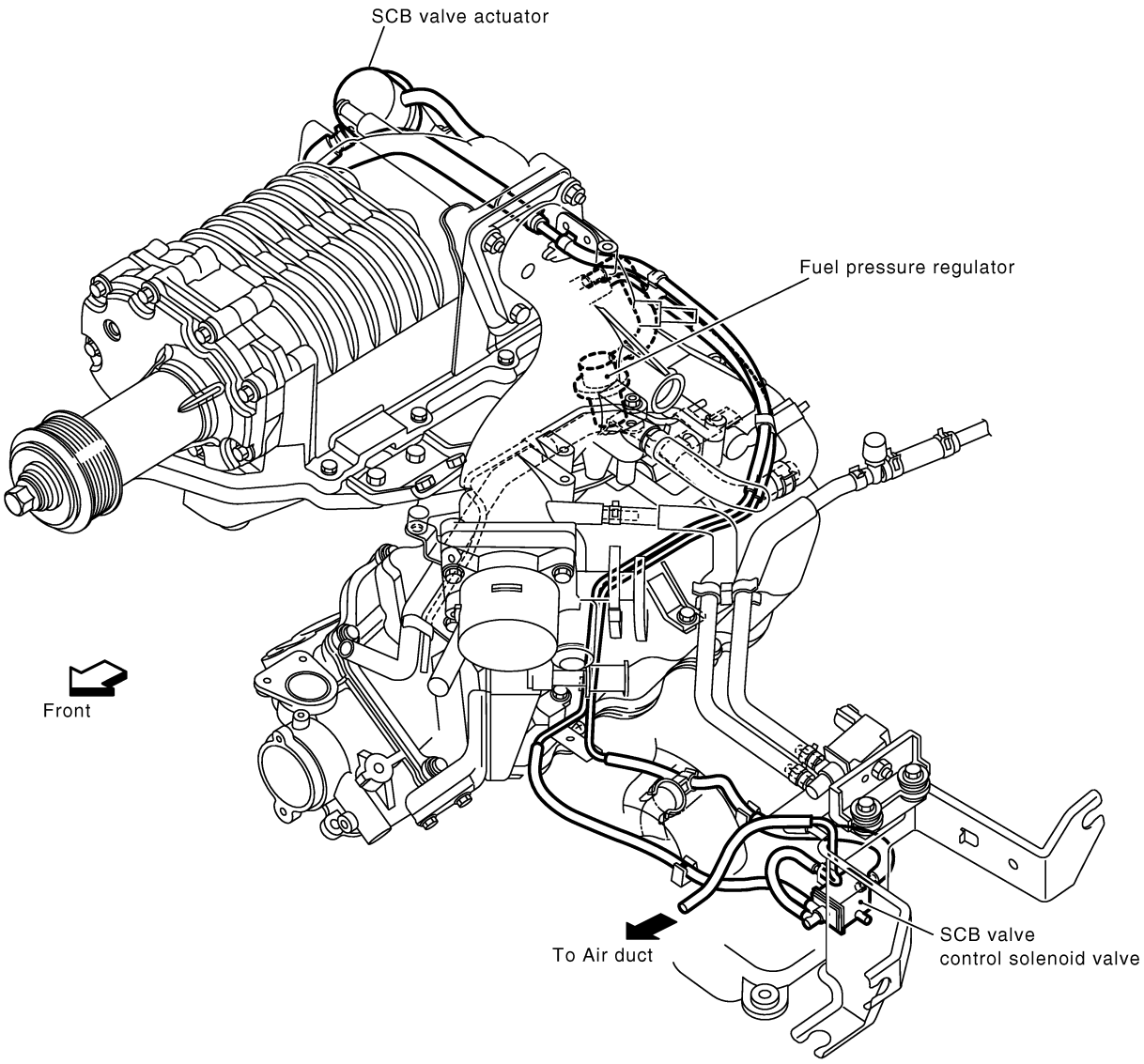

NOTE:
Do not use soapy water or any type of solvent while installing vacuum hoses or purge hoses.

SEC295C

System Chart

NEEC1089

Input (Sensor)	ECM Function	Output (Actuator)
• Camshaft position sensor • Mass air flow sensor • Engine coolant temperature sensor • Heated oxygen sensor 1 (front) • Ignition switch • Throttle position sensor • Closed throttle position switch *4 • Park/neutral position (PNP) switch • Air conditioner switch • Knock sensor • Intake air temperature sensor • Absolute pressure sensor (Built into ECM) • EVAP control system pressure sensor *1 • Battery voltage • Power steering oil pressure switch • Vehicle speed sensor • Fuel tank temperature sensor *1 • Crankshaft position sensor (OBD) *1 • Rear heated oxygen sensor *3 • TCM (Transmission control module) *2 • Ambient air temperature switch	Fuel injection & mixture ratio control	Injectors
	Distributor ignition system	Power transistor
	Idle air control system	IACV-AAC valve and IACV-FICD solenoid valve
	Fuel pump control	Fuel pump relay
	On board diagnostic system	MIL (On the instrument panel)
	Supercharged air control	SCB valve control solenoid valve
	Heated oxygen sensor 1 heater (front) control	Heated oxygen sensor 1 heater (front)
	Heated oxygen sensor 2 heater (rear) control	Heated oxygen sensor 2 heater (rear)
	EVAP canister purge flow control	EVAP canister purge volume control solenoid valve
	Air conditioning cut control	Air conditioner relay
	Cooling fan control	Cooling fan relays
	ON BOARD DIAGNOSIS for EVAP system	• EVAP canister vent control valve • Vacuum cut valve bypass valve

*1: These sensors are not used to control the engine system. They are used only for the on board diagnosis.

*2: The DTC related to A/T will be sent to ECM.

*3: This sensor is not used to control the engine system under normal conditions.

*4: This switch will operate in place of the throttle position sensor to control EVAP parts if the sensor malfunctions.

Multiport Fuel Injection (MFI) System

DESCRIPTION

Input/Output Signal Chart

NEEC1090

NEEC1090S01

Sensor	Input Signal to ECM	ECM function	Actuator
Camshaft position sensor	Engine speed and piston position	Fuel injection & mixture ratio control	Injectors
Mass air flow sensor	Amount of intake air		
Engine coolant temperature sensor	Engine coolant temperature		
Heated oxygen sensor 1 (front)	Density of oxygen in exhaust gas		
Throttle position sensor	Throttle position Throttle valve idle position		
Park/neutral position (PNP) switch	Gear position		
Vehicle speed sensor	Vehicle speed		
Ignition switch	Start signal		
Air conditioner switch	Air conditioner operation		
Knock sensor	Engine knocking condition		
Battery	Battery voltage		
Absolute pressure sensor (Built into ECM)	Ambient air barometric pressure		
Power steering oil pressure switch	Power steering operation		
Heated oxygen sensor 2 (rear)*	Density of oxygen in exhaust gas		

* Under normal conditions, this sensor is not for engine control operation.

Basic Multiport Fuel Injection System

NEEC1090S02

The amount of fuel injected from the fuel injector is determined by the ECM. The ECM controls the length of time the valve remains open (injection pulse duration). The amount of fuel injected is a program value in the ECM memory. The program value is preset by engine operating conditions. These conditions are determined by input signals (for engine speed and intake air) from both the camshaft position sensor and the mass air flow sensor.

Various Fuel Injection Increase/Decrease Compensation

NEEC1090S03

In addition, the amount of fuel injected is compensated to improve engine performance under various operating conditions as listed below.

<Fuel increase>

- During warm-up
- When starting the engine
- During acceleration
- Hot-engine operation
- When selector lever is changed from “N” to “D”
- High-load, high-speed operation

<Fuel decrease>

- During deceleration
- During high engine speed operation

Mixture Ratio Feedback Control (Closed loop control)

NEEC1090S04

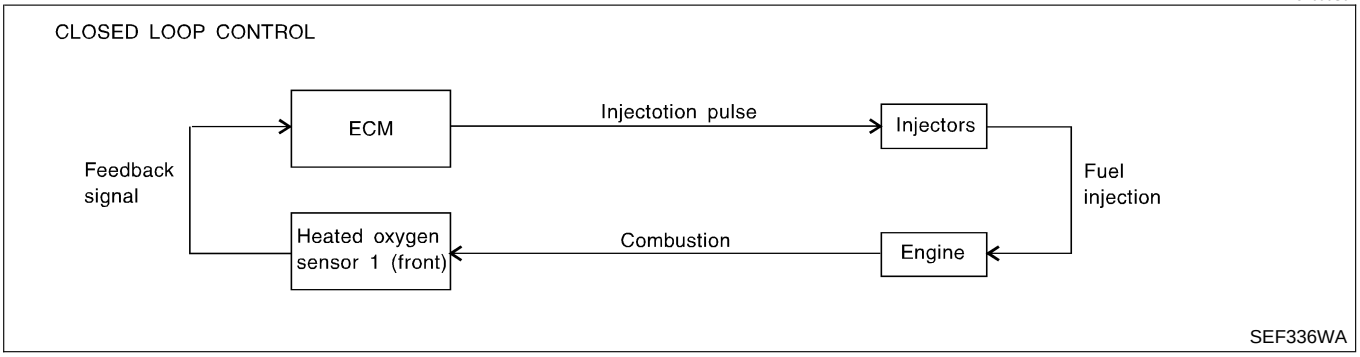

The mixture ratio feedback system provides the best air-fuel mixture ratio for driveability and emission control. The warm-up three way catalyst can then better reduce CO, HC and NOx emissions. This system uses a heated oxygen sensor 1 (front) in the exhaust manifold to monitor if the engine operation is rich or lean. The ECM adjusts the injection pulse width according to the sensor voltage signal. For more information about the heated oxygen sensor 1 (front), refer to EC-1400. This maintains the mixture ratio within the range of stoichiometric (ideal air-fuel mixture).
This stage is referred to as the closed loop control condition.
Heated oxygen sensor 2 (rear) is located downstream of the warm-up three way catalyst. Even if the switching characteristics of the heated oxygen sensor 1 (front) shift, the air-fuel ratio is controlled to stoichiometric by the signal from the heated oxygen sensor 2 (rear).

Open Loop Control

NEEC1090S05

The open loop system condition refers to when the ECM detects any of the following conditions. Feedback control stops in order to maintain stabilized fuel combustion.

- Deceleration and acceleration
- High-load, high-speed operation
- Malfunction of heated oxygen sensor 1 (front) or its circuit
- Insufficient activation of heated oxygen sensor 1 (front) at low engine coolant temperature
- High engine coolant temperature
- During warm-up
- When starting the engine

Mixture Ratio Self-learning Control

NEEC1090S06

The mixture ratio feedback control system monitors the mixture ratio signal transmitted from the heated oxygen sensor 1 (front). This feedback signal is then sent to the ECM. The ECM controls the basic mixture ratio as close to the theoretical mixture ratio as possible. However, the basic mixture ratio is not necessarily controlled as originally designed. Both manufacturing differences (i.e., mass air flow sensor hot wire) and characteristic changes during operation (i.e., injector clogging) directly affect mixture ratio.
Accordingly, the difference between the basic and theoretical mixture ratios is monitored in this system. This is then computed in terms of "injection pulse duration" to automatically compensate for the difference between the two ratios.
"Fuel trim" refers to the feedback compensation value compared against the basic injection duration. Fuel trim includes short term fuel trim and long term fuel trim.
"Short term fuel trim" is the short-term fuel compensation used to maintain the mixture ratio at its theoretical value. The signal from the heated oxygen sensor 1 (front) indicates whether the mixture ratio is RICH or LEAN compared to the theoretical value. The signal then triggers a reduction in fuel volume if the mixture ratio is rich, and an increase in fuel volume if it is lean.
"Long term fuel trim" is overall fuel compensation carried out long-term to compensate for continual deviation of the short term fuel trim from the central value. Such deviation will occur due to individual engine differences, wear over time and changes in the usage environment.

Fuel Injection Timing

NEEC1090S07

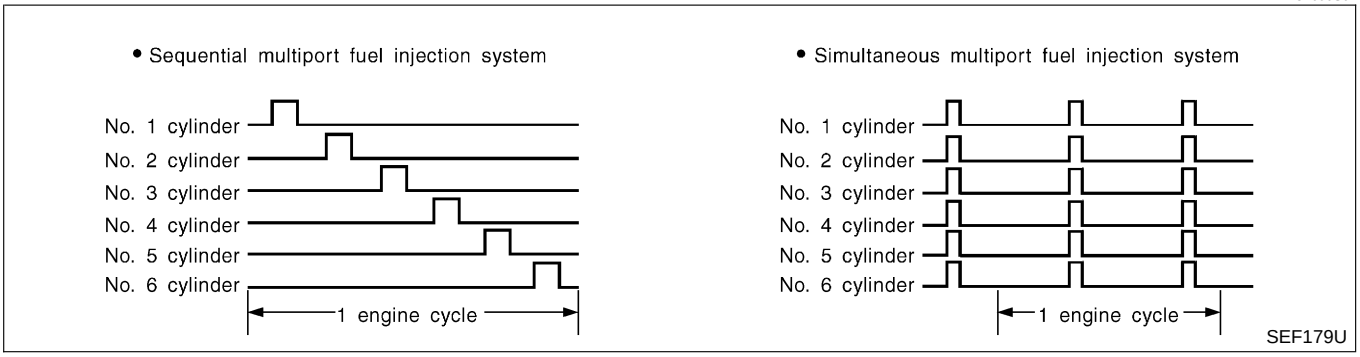

Two types of systems are used.

Sequential Multiport Fuel Injection System

NEEC1090S0701

Fuel is injected into each cylinder during each engine cycle according to the firing order. This system is used when the engine is running.

Simultaneous Multiport Fuel Injection System

NEEC1090S0702

Fuel is injected simultaneously into all six cylinders twice each engine cycle. In other words, pulse signals of the same width are simultaneously transmitted from the ECM.
The six injectors will then receive the signals two times for each engine cycle.
This system is used when the engine is being started and/or if the fail-safe system (CPU) is operating.

Fuel Shut-off

NEEC1090S08

Fuel to each cylinder is cut off during deceleration or operation of the engine at excessively high speeds.

Distributor Ignition (DI) System

DESCRIPTION

NEEC1091

Input/Output Signal Chart

NEEC1091S01

Sensor	Input Signal to ECM	ECM function	Actuator
Camshaft position sensor	Engine speed and piston position	Ignition timing control	Power transistor
Mass air flow sensor	Amount of intake air		
Engine coolant temperature sensor	Engine coolant temperature		
Throttle position sensor	Throttle position Throttle valve idle position		
Vehicle speed sensor	Vehicle speed		
Ignition switch	Start signal		
Knock sensor	Engine knocking		
Park/neutral position (PNP) switch	Gear position		
Battery	Battery voltage		

Distributor Ignition (DI) System (Cont'd)

System Description

NEEC1091S02

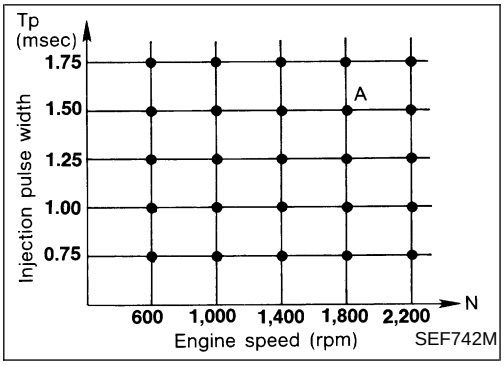

The ignition timing is controlled by the ECM to maintain the best air-fuel ratio for every running condition of the engine. The ignition timing data is stored in the ECM. This data forms the map shown.
The ECM receives information such as the injection pulse width and camshaft position sensor signal. Computing this information, ignition signals are transmitted to the power transistor.
e.g., N: 1,800 rpm, Tp: 1.50 msec
A °BTDC
During the following conditions, the ignition timing is revised by the ECM according to the other data stored in the ECM.

- At starting
- During warm-up
- At idle
- At low battery voltage
- During acceleration

The knock sensor retard system is designed only for emergencies. The basic ignition timing is programmed within the anti-knocking zone, if recommended fuel is used under dry conditions. The retard system does not operate under normal driving conditions. If engine knocking occurs, the knock sensor monitors the condition. The signal is transmitted to the ECM. The ECM retards the ignition timing to eliminate the knocking condition.

Air Conditioning Cut Control

DESCRIPTION

NEEC1092

Input/Output Signal Chart

NEEC1092S01

Sensor	Input Signal to ECM	ECM function	Actuator
Air conditioner switch	Air conditioner "ON" signal	Air conditioner cut control	Air conditioner relay
Throttle position sensor	Throttle valve opening angle		
Camshaft position sensor	Engine speed		
Engine coolant temperature sensor	Engine coolant temperature		
Ignition switch	Start signal		
Vehicle speed sensor	Vehicle speed		
Power steering oil pressure switch	Power steering operation		

System Description

NEEC1092S02

This system improves engine operation when the air conditioner is used.
Under the following conditions, the air conditioner is turned OFF.

- When the accelerator pedal is fully depressed.
- When cranking the engine.
- At high engine speeds.
- When the engine coolant temperature becomes excessively high.
- When operating power steering during low engine speed or low vehicle speed.
- When engine speed is excessively low.

Fuel Cut Control (at no load & high engine speed)

DESCRIPTION

NEEC1093

Input/Output Signal Chart

NEEC1093S01

Sensor	Input Signal to ECM	ECM function	Actuator
Vehicle speed sensor	Vehicle speed	Fuel cut control	Injectors
Park/neutral position (PNP) switch	Neutral position		
Throttle position sensor	Throttle position		
Engine coolant temperature sensor	Engine coolant temperature		
Camshaft position sensor	Engine speed		

If the engine speed is above 2,500 rpm with no load (for example, in neutral and engine speed over 2,500 rpm) fuel will be cut off after some time. The exact time when the fuel is cut off varies based on engine speed. Fuel cut will operate until the engine speed reaches 2,000 rpm, then fuel cut is cancelled.

NOTE:
This function is different from deceleration control listed under “Multiport Fuel Injection (MFI) System”, EC-1237.

Evaporative Emission System

DESCRIPTION

NEEC1094

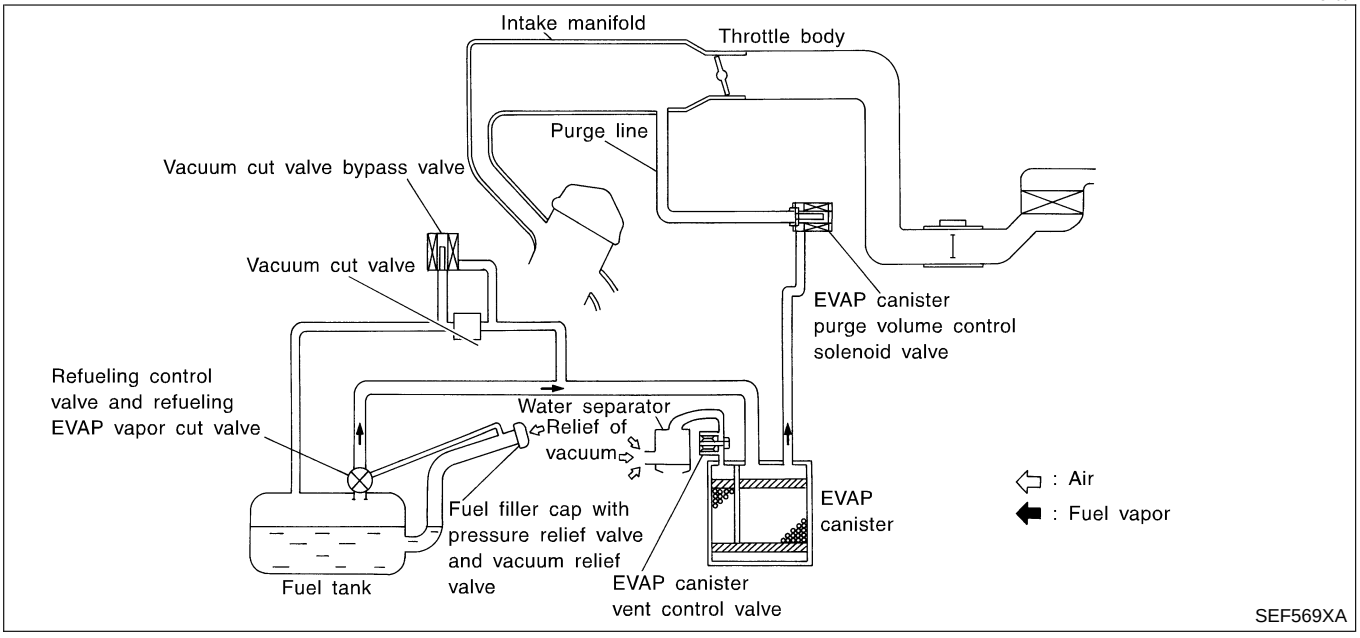

The evaporative emission system is used to reduce hydrocarbons emitted into the atmosphere from the fuel system. This reduction of hydrocarbons is accomplished by activated charcoals in the EVAP canister.
The fuel vapor in the sealed fuel tank is led into the EVAP canister which contains activated carbon and the vapor is stored there when the engine is not operating or when refueling to the fuel tank.
The vapor in the EVAP canister is purged by the air through the purge line to the intake manifold when the engine is operating. EVAP canister purge volume control solenoid valve is controlled by ECM. When the engine operates, the flow rate of vapor controlled by EVAP canister purge volume control solenoid valve is proportionally regulated as the air flow increases.
EVAP canister purge volume control solenoid valve also shuts off the vapor purge line during decelerating and idling.

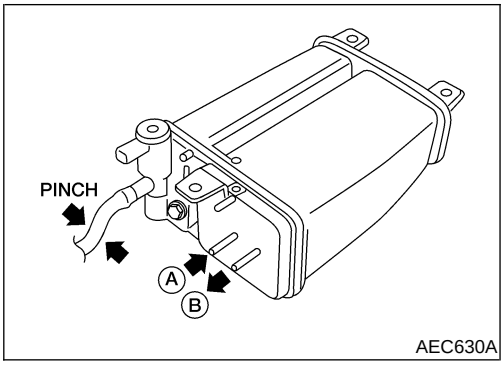

AEC630A

INSPECTION

NEEC1095

EVAP Canister

NEEC1095S01

Check EVAP canister as follows:

1. Pinch the fresh air hose.
2. Blow air into port **A** and check that it flows freely out of port **B**.

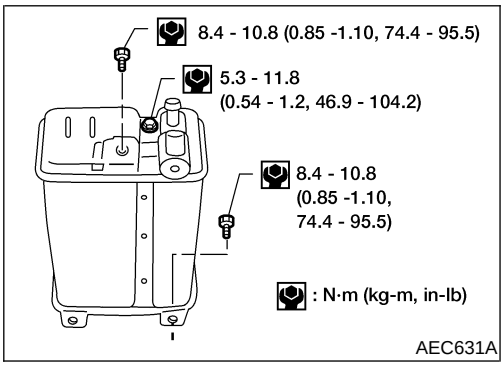

AEC631A

Tightening Torque

NEEC1095S02

Tighten EVAP canister as shown in the figure.

Make sure new O-ring is installed properly between EVAP canister and EVAP canister vent control valve.

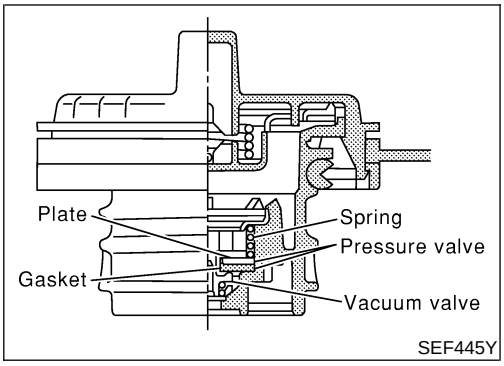

SEF445Y

Fuel Tank Vacuum Relief Valve (Built into fuel filler cap)

NEEC1095S03

1. Wipe clean valve housing.
2. Check valve opening pressure and vacuum.

Pressure:

15.3 - 20.0 kPa (0.156 - 0.204 kg/cm^2, 2.22 - 2.90 psi)

Vacuum:

−6.0 to −3.3 kPa (−0.061 to −0.034 kg/cm^2, −0.87 to −0.48 psi)

3. If out of specification, replace fuel filler cap as an assembly.

CAUTION:

Use only a genuine fuel filler cap as a replacement. If an incorrect fuel filler cap is used, the MIL may come ON

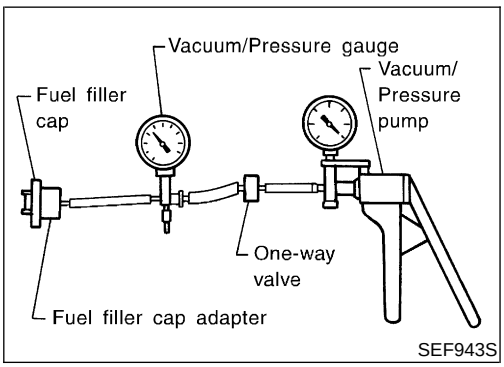

SEF943S

Vacuum Cut Valve and Vacuum Cut Valve Bypass Valve

NEEC1095S04

Refer to EC-1765.

Evaporative Emission (EVAP) Canister Purge Volume Control Solenoid Valve

NEEC1095S05

Refer to EC-1592.

Fuel Tank Temperature Sensor

NEEC1095S06

Refer to EC-1523.

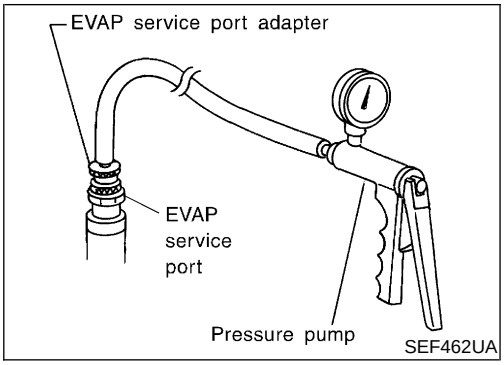

SEF462UA

Evap Service Port

NEEC1095S07

Positive pressure is delivered to the EVAP system through the EVAP service port. If fuel vapor leakage in the EVAP system occurs, use a leak detector to locate the leak.

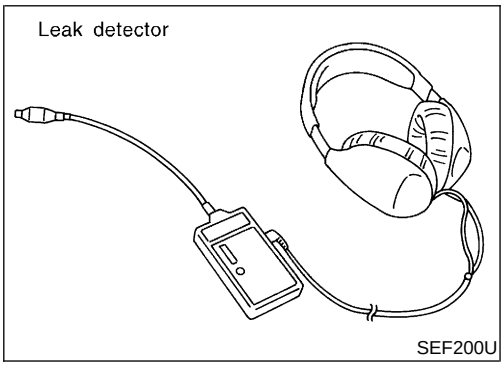

SEF200U

How to Detect Fuel Vapor Leakage

NEEC1095S08

CAUTION:

- **Never use compressed air or a high pressure pump.**
- **Do not exceed 4.12 kPa (0.042 kg/cm^2, 0.6 psi) of pressure in EVAP system.**

NOTE:

- Do not start engine.
- Improper installation of EVAP service port adapter to the EVAP service port may cause a leak.

With CONSULT-II

1) Attach the EVAP service port adapter securely to the EVAP service port.
2) Also attach the pressure pump and hose to the EVAP service port adapter.
3) Turn ignition switch ON.
4) Select the "EVAP SYSTEM CLOSE" of "WORK SUPPORT MODE" with CONSULT-II.
5) Touch "START". A bar graph (Pressure indicating display) will appear on the screen.
6) Apply positive pressure to the EVAP system until the pressure indicator reaches the middle of the bar graph.
7) Remove EVAP service port adapter and hose with pressure pump.
8) Locate the leak using a leak detector. Refer to "EVAPORATIVE EMISSION LINE DRAWING", EC-1245.

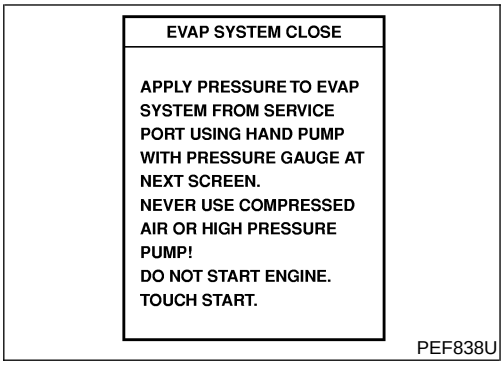

PEF838U

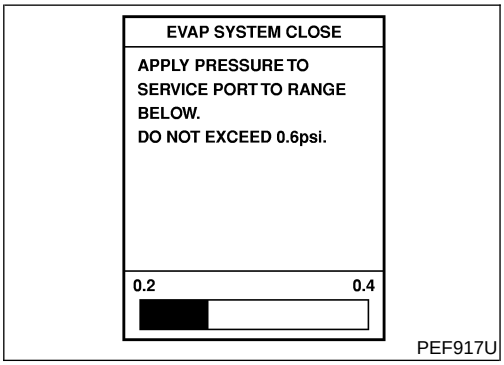

PEF917U

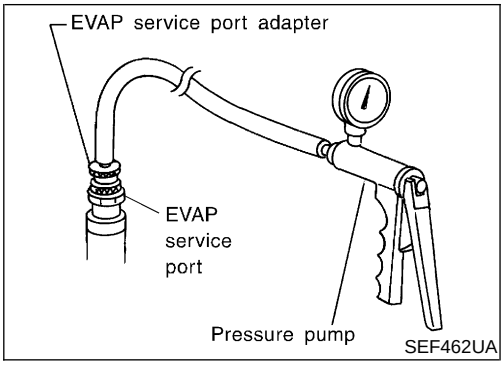

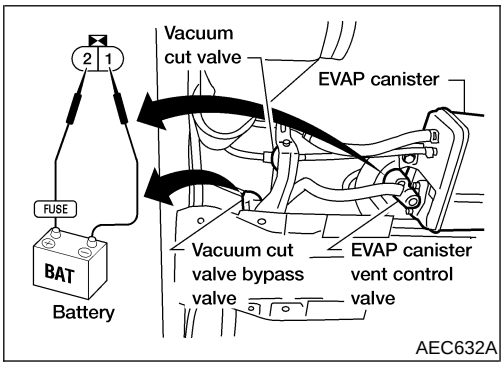

Without CONSULT-II

1) Attach the EVAP service port adapter securely to the EVAP service port.
2) Also attach the pressure pump with pressure gauge to the EVAP service port adapter.
3) Apply battery voltage to between the terminals of both EVAP canister vent control valve and vacuum cut valve bypass valve to make a closed EVAP system.
4) To locate the leak, deliver positive pressure to the EVAP system until pressure gauge points reach 1.38 to 2.76 kPa (0.014 to 0.028 kg/cm^2, 0.2 to 0.4 psi).
5) Remove EVAP service port adapter and hose with pressure pump.
6) Locate the leak using a leak detector. Refer to "EVAPORATIVE EMISSION LINE DRAWING", EC-1245.

EVAPORATIVE EMISSION LINE DRAWING

NEEC1096

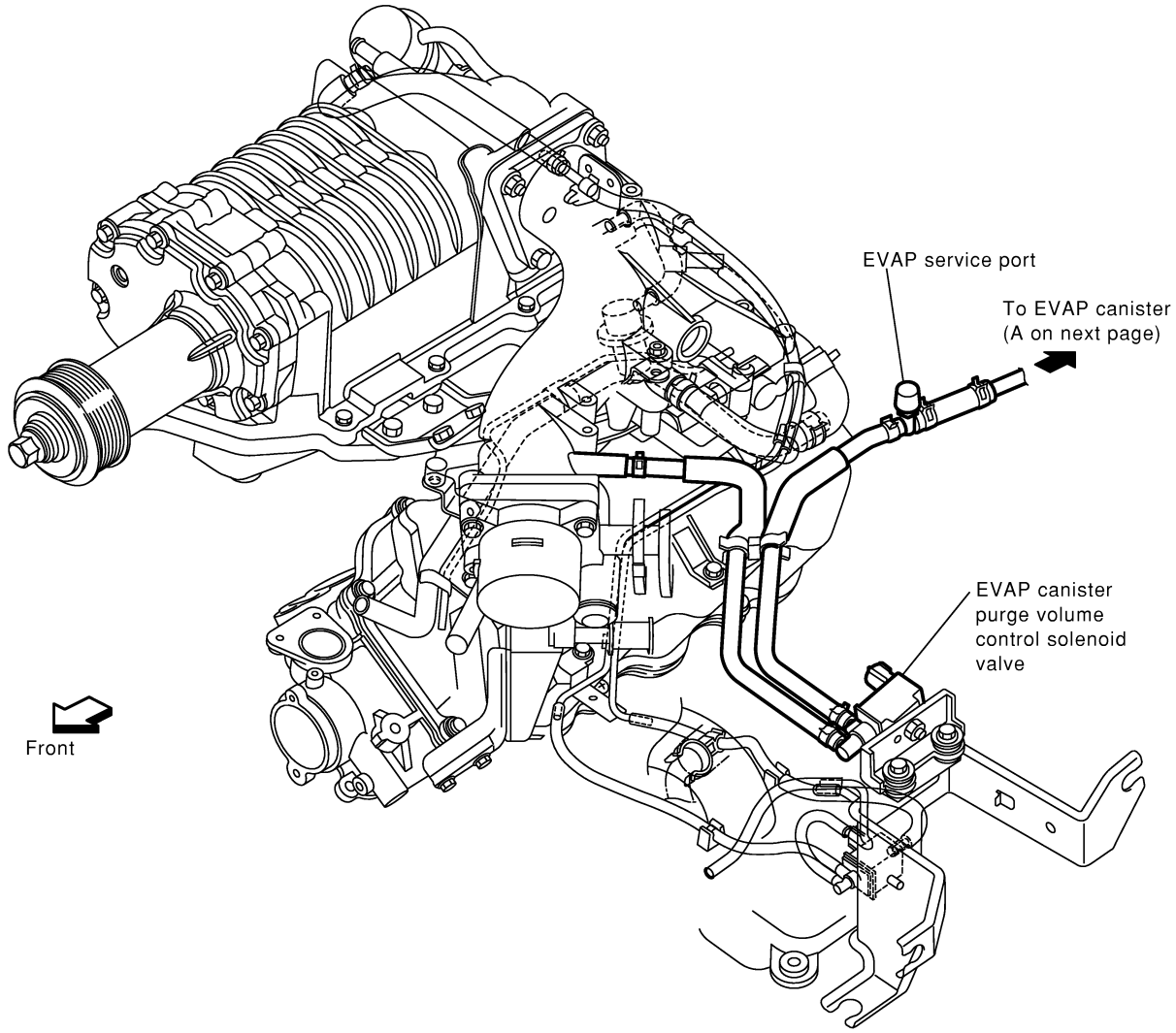

NOTE:
Do not use soapy water or any type of solvent while installing vacuum hoses or purge hoses.

SEC296C

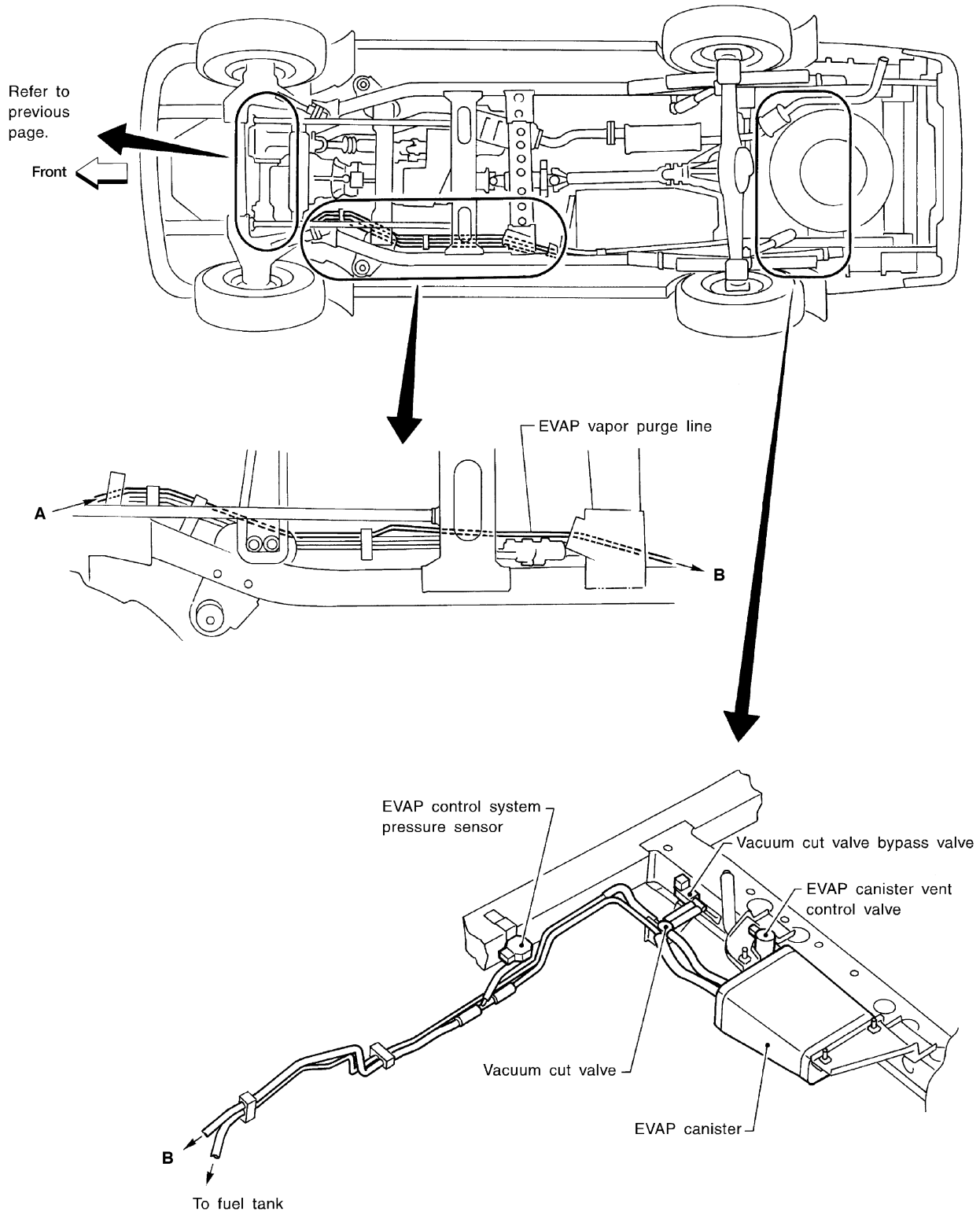
Refer to previous page.
Front
EVAP vapor purge line
A
B
EVAP control system pressure sensor
Vacuum cut valve bypass valve
EVAP canister vent control valve
Vacuum cut valve
EVAP canister
B
To fuel tank

AEC886A

On Board Refueling Vapor Recovery (ORVR)

NEEC1097

SYSTEM DESCRIPTION

NEEC1097S01

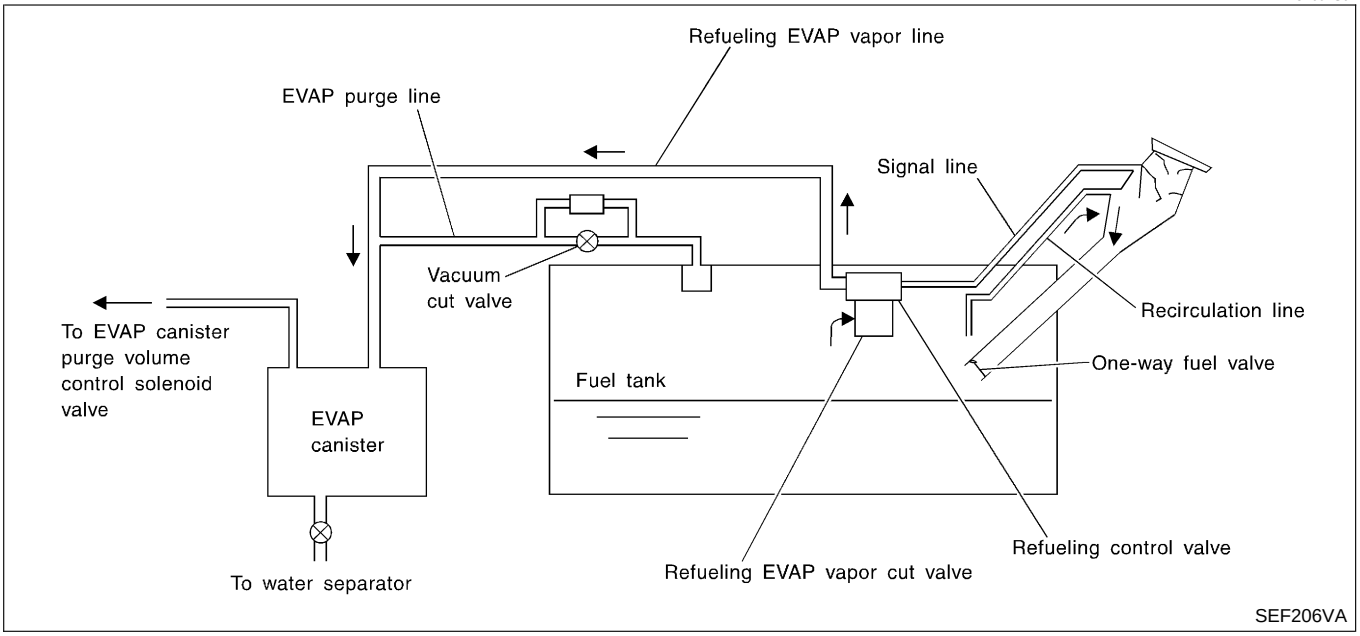

From the beginning of refueling, the fuel tank pressure goes up. When the pressure reaches the setting value of the refueling control valve (RCV) opening pressure, the RCV is opened. After RCV opens, the air and vapor inside the fuel tank go through refueling EVAP vapor cut valve, RCV and refueling vapor line to the EVAP canister. The vapor is absorbed by the EVAP canister and the air is released to the atmosphere.
When the refueling has reached the full level of the fuel tank, the refueling EVAP vapor cut valve is closed and refueling is stopped because of auto shut-off. The vapor which was absorbed by the EVAP canister is purged during driving.
The RCV is always closed during driving and the evaporative emission control system is operated the same as conventional system.

WARNING:

When conducting inspections below, be sure to observe the following:

- **Put a "CAUTION: INFLAMMABLE" sign in workshop.**
- **Do not smoke while servicing fuel system. Keep open flames and sparks away from work area.**
- **Be sure to furnish the workshop with a CO_2 fire extinguisher.**

CAUTION:

- **Before removing fuel line parts, carry out the following procedures:**

a) Put drained fuel in an explosion-proof container and put lid on securely.
b) Release fuel pressure from fuel line. Refer to "Fuel Pressure Release", EC-1259.
c) Disconnect battery ground cable.

- **Always replace O-ring when the fuel gauge retainer is removed.**
- **Do not kink or twist hose and tube when they are installed.**
- **Do not tighten hose and clamps excessively to avoid damaging hoses.**
- **After installation, run engine and check for fuel leaks at connection.**
- **Do not attempt to top off the fuel tank after the fuel pump nozzle shuts off automatically. Continued refueling may cause fuel overflow, resulting in fuel spray and possibly a fire.**

DIAGNOSTIC PROCEDURE

NEEC1097S02

Symptom: Fuel Odor from EVAP Canister Is Strong.

NEEC1097S0201

1	CHECK EVAP CANISTER
1. Remove EVAP canister with EVAP canister vent control valve attached. 2. Weigh the EVAP canister with EVAP canister vent control valve attached. The weight should be less than 1.8 kg (4.0 lb).	
OK or NG	
OK ▶	GO TO 2.
NG ▶	GO TO 3.

2	CHECK IF EVAP CANISTER SATURATED WITH WATER
Does water drain from the EVAP canister?	
Yes or No	
Yes ▶	GO TO 3.
No (With CONSULT-II) ▶	GO TO 6.
No (Without CONSULT-II) ▶	GO TO 7.

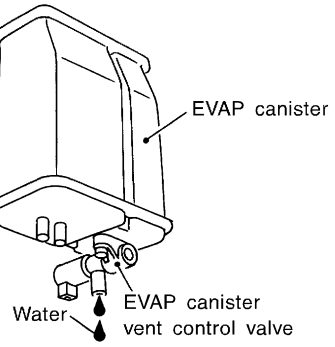

SEF596U

3	REPLACE EVAP CANISTER
Replace EVAP canister with a new one.	
▶	GO TO 4.

4	CHECK WATER SEPARATOR

1. Check visually for insect nests in the water separator air inlet.
2. Check visually for cracks or flaws in the appearance.
3. Check visually for cracks or flaws in the hose.
4. Check that **A** and **C** are not clogged by blowing air into **B** with **A**, and then **C** plugged.

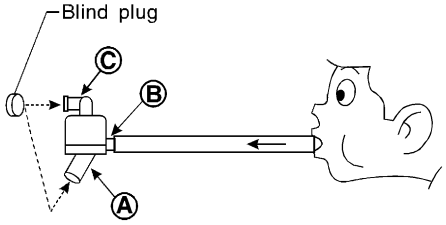

* Ⓐ: Bottom hole (To atmosphere)
Ⓑ: Emergency tube (From EVAP canister)
Ⓒ: Inlet port (To member)

SEF829T

5. In case of NG in items 2 - 4, replace the parts.

NOTE:
- Do not disassemble water separator.

OK or NG

OK	▶	GO TO 5.
NG	▶	Replace water separator.

5	DETECT MALFUNCTIONING PART

Check the EVAP hose between EVAP canister and water separator for clogging or poor connection.

	▶	Repair or replace EVAP hose.

6	CHECK REFUELING EVAP VAPOR CUT VALVE

With CONSULT-II

1. Remove fuel tank. Refer to ***FE-4***, "FUEL SYSTEM.
2. Drain fuel from the tank as follows:

a. Remove fuel feed hose located on the fuel level sensor unit retainer.
b. Connect a spare fuel hose, one side to fuel level sensor unit retainer where the hose was removed and the other side to a fuel container.
c. Drain fuel using "FUEL PUMP RELAY" in "ACTIVE TEST" mode with CONSULT-II.

3. Check refueling EVAP vapor cut valve for being stuck to close as follows.
   Blow air into the refueling EVAP vapor cut valve (from hose end B), and check that the air flows freely into the tank.
4. Check EVAP vapor cut valve for being stuck to open as follows.

a. Connect vacuum pump to hose ends A and B using a suitable 3-way connector.
b. Remove fuel level sensor unit retainer with fuel level sensor unit.
   Always replace O-ring with new one.
c. Put fuel tank upside down.
d. Apply vacuum pressure to both hose ends A and B [−13.3 kPa (−100 mmHg, −3.94 inHg)] with fuel level sensor unit retainer remaining open and check that the pressure is applicable.

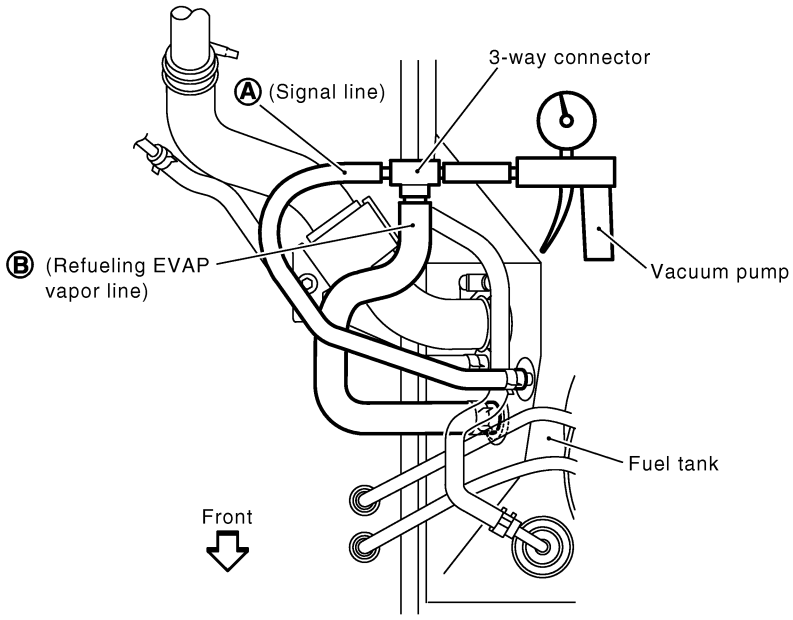

SEF707Z

OK or NG

OK	▶	GO TO 8.
NG	▶	Replace refueling EVAP vapor cut valve with fuel tank.

7	CHECK REFUELING EVAP VAPOR CUT VALVE

Without CONSULT-II

1. Remove fuel tank. Refer to ***FE-4***, "FUEL SYSTEM".
2. Drain fuel from the tank as follows:
a. Remove fuel level sensor unit retainer.
b. Drain fuel from the tank using a hand pump into a fuel container.
3. Check refueling EVAP vapor cut valve for being stuck to close as follows.
   Blow air into the refueling EVAP vapor cut valve (from hose end B), and check that the air flows freely into the tank.
4. Check EVAP vapor cut valve for being stuck to open as follows.
a. Connect vacuum pump to hose ends A and B using a suitable 3-way connector.
b. Remove fuel level sensor unit retainer with fuel level sensor unit.
   Always replace O-ring with new one.
c. Put fuel tank upside down.
d. Apply vacuum pressure to both hose ends A and B [−13.3 kPa (−100 mmHg, −3.94 inHg)] with fuel level sensor unit retainer remaining open and check that the pressure is applicable.

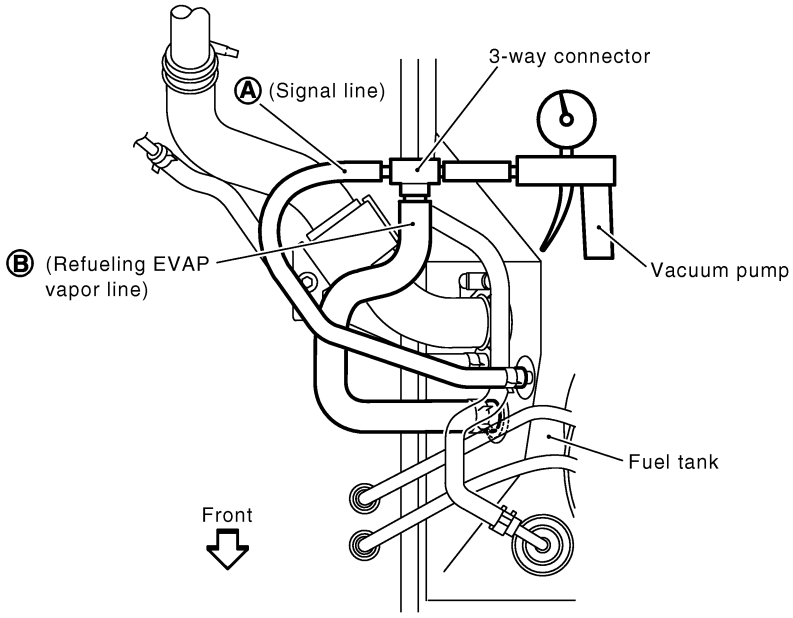

SEF707Z

OK or NG

OK	▶	GO TO 8.
NG	▶	Replace refueling EVAP vapor cut valve with fuel tank.

8	CHECK REFUELING CONTROL VALVE

1. Remove fuel filler cap.
2. Check air continuity between hose ends A and B.
   Blow air into the hose end B. Air should flow freely into the fuel tank.
3. Blow air into hose end A and check there is no leakage.
4. Apply pressure to both hose ends A and B [20 kPa (150 mmHg, 5.91 inHg)] using a pressure pump and a suitable 3-way connector. Check that there is no leakage.

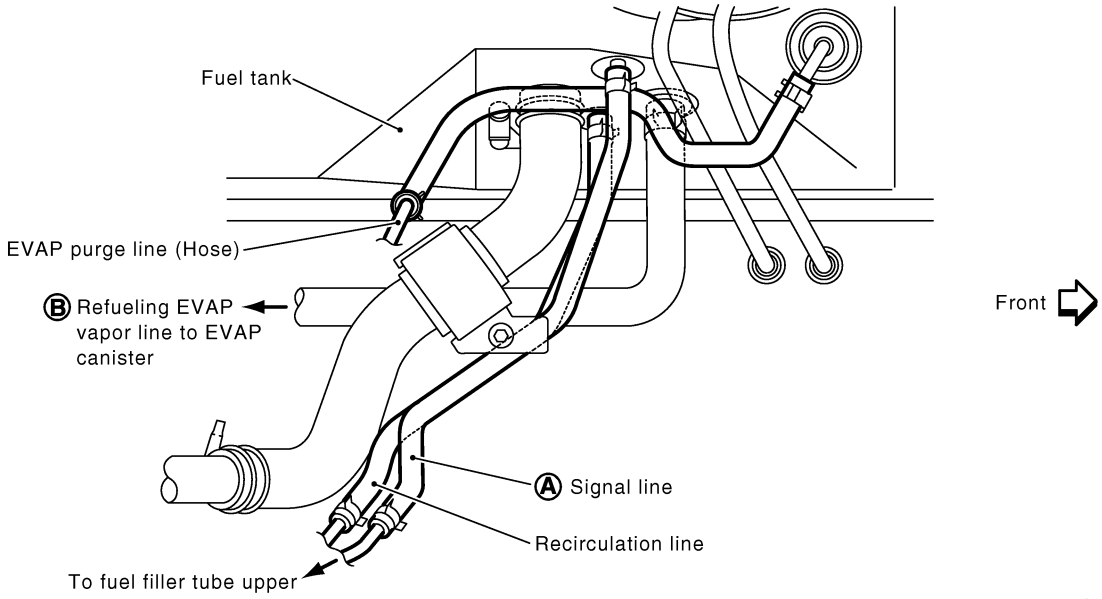

SEF706Z

OK or NG

OK	▶	**INSPECTION END**
NG	▶	Replace refueling control valve with fuel tank.

Symptom: Cannot Refuel/Fuel Odor From The Fuel Filler Opening Is Strong While Refueling.

NEEC1097S0202

1	CHECK EVAP CANISTER

1. Remove EVAP canister with EVAP canister vent control valve attached.
2. Weigh the EVAP canister with EVAP canister vent control valve attached.
   The weight should be less than 1.8 kg (4.0 lb).

OK or NG

OK	▶	GO TO 2.
NG	▶	GO TO 3.

2	CHECK IF EVAP CANISTER SATURATED WITH WATER

Does water drain from the EVAP canister?

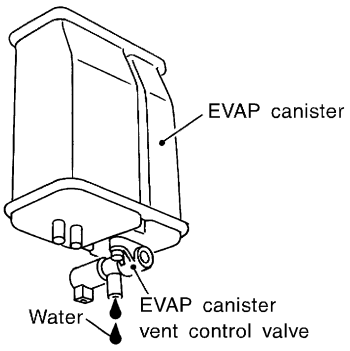

SEF596U

Yes or No

Yes	▶	GO TO 3.
No	▶	GO TO 6.

3	REPLACE EVAP CANISTER

Replace EVAP canister with a new one.

	▶	GO TO 4.

4	CHECK WATER SEPARATOR

1. Check visually for insect nests in the water separator air inlet.
2. Check visually for cracks or flaws in the appearance.
3. Check visually for cracks or flaws in the hose.
4. Check that **A** and **C** are not clogged by blowing air into **B** with **A**, and then **C** plugged.

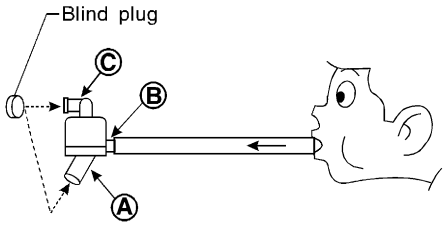

* Ⓐ: Bottom hole (To atmosphere)
Ⓑ: Emergency tube (From EVAP canister)
Ⓒ: Inlet port (To member)

SEF829T

5. In case of NG in items 2 - 4, replace the parts.

NOTE:

- Do not disassemble water separator.

OK or NG

OK	▶	GO TO 5.
NG	▶	Replace water separator.

5	DETECT MALFUNCTIONING PART

Check the EVAP hose between EVAP canister and water separator for clogging or poor connection.

	▶	Repair or replace EVAP hose.

6	CHECK VENT HOSES AND VENT TUBES	
Check hoses and tubes between EVAP canister and refueling control valve for clogging, kink, looseness and improper connection.		
OK or NG		
OK	▶	GO TO 7.
NG	▶	Repair or replace hoses and tubes.

7	CHECK FILLER NECK TUBE	
Check signal line and recirculation line for clogging, dents and cracks.		
OK or NG		
OK	▶	GO TO 8.
NG	▶	Replace filler neck tube.

8 CHECK REFUELING CONTROL VALVE

1. Remove fuel filler cap.
2. Check air continuity between hose ends A and B.
   Blow air into the hose end B. Air should flow freely into the fuel tank.
3. Blow air into hose end A and check there is no leakage.
4. Apply pressure to both hose ends A and B [20 kPa (150 mmHg, 5.91 inHg)] using a pressure pump and a suitable 3-way connector. Check that there is no leakage.

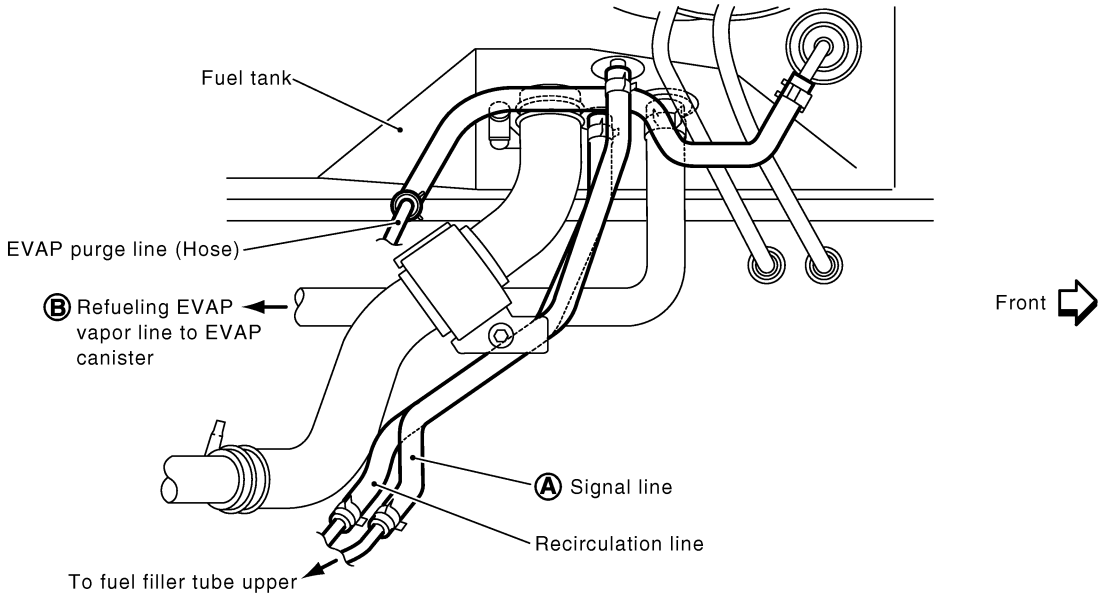

SEF706Z

OK or NG

OK (With CONSULT-II)	▶	GO TO 9.
OK (Without CONSULT-II)	▶	GO TO 10.
NG	▶	Replace refueling control valve with fuel tank.

9	CHECK REFUELING EVAP VAPOR CUT VALVE

With CONSULT-II

1. Remove fuel tank. Refer to ***FE-4***, "FUEL SYSTEM".
2. Drain fuel from the tank as follows:

a. Remove fuel feed hose located on the fuel level sensor unit retainer.
b. Connect a spare fuel hose, one side to fuel level sensor unit retainer where the hose was removed and the other side to a fuel container.
c. Drain fuel using "FUEL PUMP RELAY" in "ACTIVE TEST" mode with CONSULT-II.

3. Check refueling EVAP vapor cut valve for being stuck to close as follows.
   Blow air into the refueling EVAP vapor cut valve (from hose end B), and check that the air flows freely into the tank.
4. Check EVAP vapor cut valve for being stuck to open as follows.

a. Connect vacuum pump to hose ends A and B using a suitable 3-way connector.
b. Remove fuel level sensor unit retainer with fuel level sensor unit.
   Always replace O-ring with new one.
c. Put fuel tank upside down.
d. Apply vacuum pressure to both hose ends A and B [−13.3 kPa (−100 mmHg, −3.94 inHg)] with fuel level sensor unit retainer remaining open and check that the pressure is applicable.

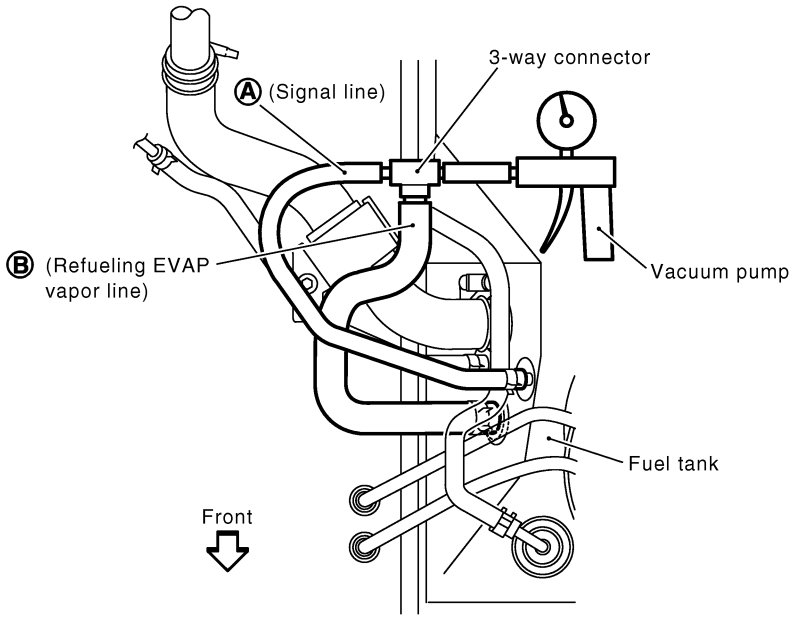

SEF707Z

OK or NG

OK	▶	GO TO 11.
NG	▶	Replace refueling EVAP vapor cut valve with fuel tank.

10	CHECK REFUELING EVAP VAPOR CUT VALVE

Without CONSULT-II

1. Remove fuel tank. Refer to ***FE-4***, "FUEL SYSTEM".
2. Drain fuel from the tank as follows:

a. Remove fuel level sensor unit retainer.
b. Drain fuel from the tank using a hand pump into a fuel container.

3. Check refueling EVAP vapor cut valve for being stuck to close as follows.
   Blow air into the refueling EVAP vapor cut valve (from hose end B), and check that the air flows freely into the tank.
4. Check EVAP vapor cut valve for being stuck to open as follows.

a. Connect vacuum pump to hose ends A and B using a suitable 3-way connector.
b. Remove fuel level sensor unit retainer with fuel level sensor unit.
   Always replace O-ring with new one.
c. Put fuel tank upside down.
d. Apply vacuum pressure to both hose ends A and B [−13.3 kPa (−100 mmHg, −3.94 inHg)] with fuel level sensor unit retainer remaining open and check that the pressure is applicable.

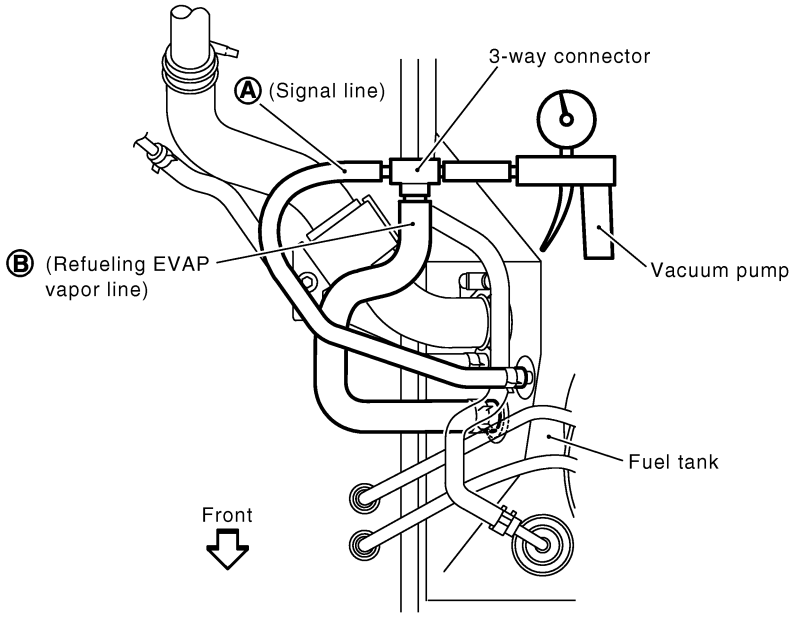

OK or NG

OK	▶	GO TO 11.
NG	▶	Replace refueling EVAP vapor cut valve with fuel tank.

11	CHECK FUEL FILLER TUBE

Check filler neck tube and hose connected to the fuel tank for clogging, dents and cracks.

OK or NG

OK	▶	GO TO 12.
NG	▶	Replace fuel filler tube.

12	CHECK ONE-WAY FUEL VALVE-I

Check one-way valve for clogging.

OK or NG

OK	▶	GO TO 13.
NG	▶	Repair or replace one-way fuel valve with fuel tank.

13	CHECK ONE-WAY FUEL VALVE-II

1. Make sure that fuel is drained from the tank.
2. Remove fuel filler tube and hose.
3. Check one-way fuel valve for operation as follows.
   When a stick is inserted, the valve should open, when removing stick it should close.

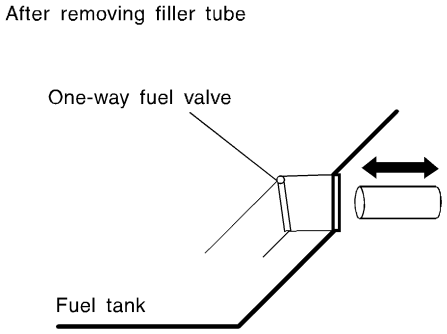

SEF665U

Do not drop any material into the tank.

OK or NG

OK	▶	**INSPECTION END**
NG	▶	Replace fuel filler tube or replace one-way fuel valve with fuel tank.

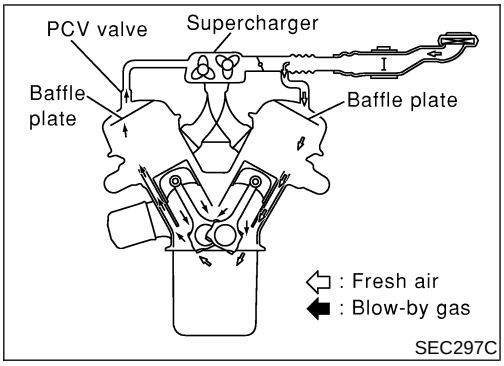

SEC297C

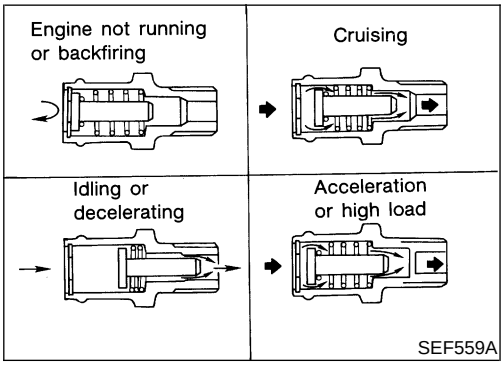

SEF559A

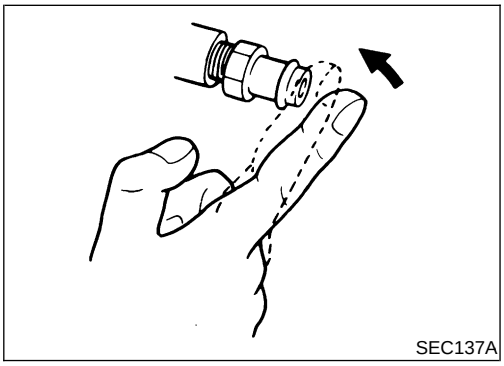

SEC137A

Positive Crankcase Ventilation

DESCRIPTION

NEEC1098

This system returns blow-by gas to the intake manifold.
The positive crankcase ventilation (PCV) valve is provided to conduct crankcase blow-by gas to the intake manifold.
During partial throttle operation of the engine, the intake manifold sucks the blow-by gas through the PCV valve.
Normally, the capacity of the valve is sufficient to handle any blow-by and a small amount of ventilating air.
The ventilating air is then drawn from the air inlet tubes into the crankcase. In this process the air passes through the hose connecting air inlet tubes to rocker cover.
Under full-throttle condition, the manifold vacuum is insufficient to draw the blow-by flow through the valve. The flow goes through the hose connection in the reverse direction.
On vehicles with an excessively high blow-by, the valve does not meet the requirement. This is because some of the flow will go through the hose connection to the air inlet tubes under all conditions.

INSPECTION

NEEC1099

PCV (Positive Crankcase Ventilation) Valve

NEEC1099S01

With engine running at idle, remove PCV valve from rocker cover; if the valve is working properly, a hissing noise will be heard as air passes through it and a strong vacuum should be felt immediately when a finger is placed over valve inlet.

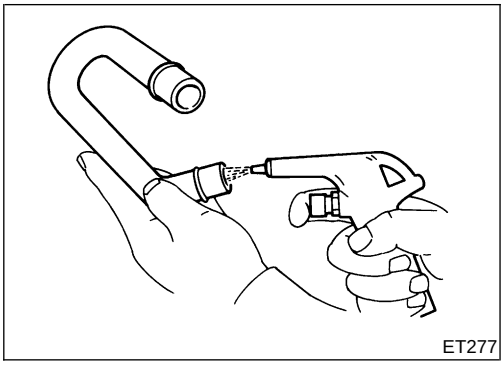
ET277

PCV Valve Ventilation Hose

NEEC1099S02

1. Check hoses and hose connections for leaks.
2. Disconnect all hoses and clean with compressed air. If any hose cannot be freed of obstructions, replace.

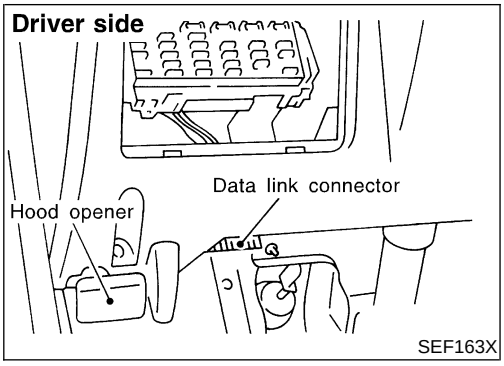

SEF163X

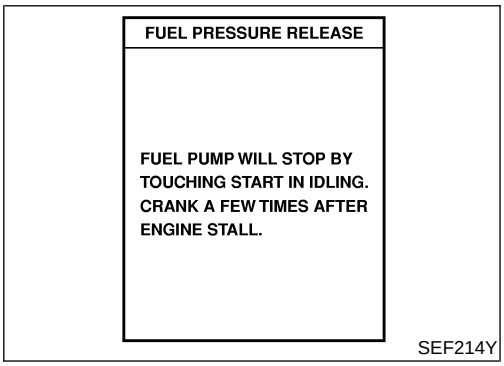

SEF214Y

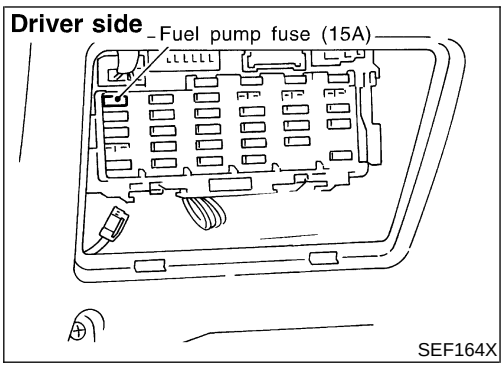

SEF164X

Fuel Pressure Release

NEEC1100

Before disconnecting fuel line, release fuel pressure from fuel line to eliminate danger.

WITH CONSULT-II

NEEC1100S01

1. Turn ignition switch ON.
2. Perform “FUEL PRESSURE RELEASE” in “WORK SUPPORT” mode with CONSULT-II.
3. Start engine.
4. After engine stalls, crank it two or three times to release all fuel pressure.
5. Turn ignition switch OFF.

WITHOUT CONSULT-II

NEEC1100S02

1. Remove fuel pump fuse located in fuse box.
2. Start engine.
3. After engine stalls, crank it two or three times to release all fuel pressure.
4. Turn ignition switch OFF.
5. Reinstall fuel pump fuse after servicing fuel system.

Fuel Pressure Check

NEEC1101

- **Use Fuel Pressure gauge J-44321 to check fuel pressure.**
- **Do not perform fuel pressure check with system operating. Fuel pressure gauge may indicate false readings.**

1. Release fuel pressure to zero.
2. Install the inline fuel quick disconnect fitting between the connection of the fuel feed hose (from tank) and the fuel hose (to engine).

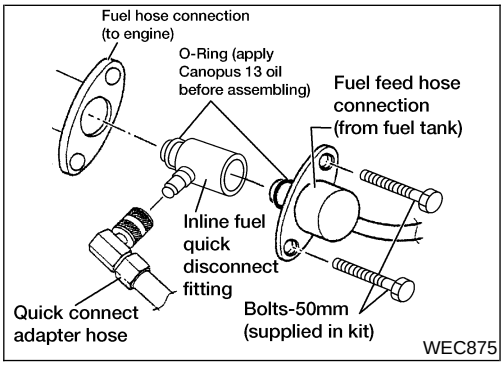

WEC875

3. Connect the fuel pressure test gauge (quick connect adapter hose) to the quick disconnect fitting.
4. Start engine and check for fuel leakage.
5. Read the indication of fuel pressure gauge.

At idling:

With vacuum hose connected

Approximately 235 kPa (2.4 kg/cm^2, 34 psi)

With vacuum hose disconnected

Approximately 294 kPa (3.0 kg/cm^2, 43 psi)

If results are unsatisfactory, perform Fuel Pressure Regulator Check.

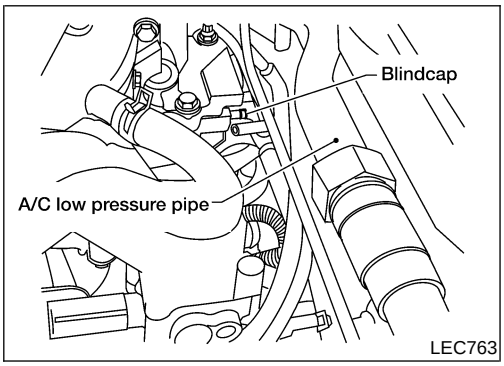

Fuel Pressure Regulator Check

NEEC1102

1. Stop engine and disconnect fuel pressure regulator vacuum hose from intake manifold.
2. Plug intake manifold with a blind cap.
3. Connect variable vacuum source to fuel pressure regulator.

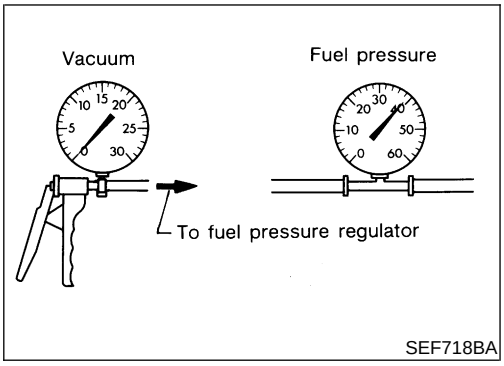

4. Start engine and read indication of fuel pressure gauge as vacuum is changed.

Fuel pressure should decrease as vacuum increases. If results are unsatisfactory, replace fuel pressure regulator.

Injector

REMOVAL AND INSTALLATION

NEEC1103

1. Release fuel pressure to zero. Refer to EC-1259.
2. Remove supercharger. Refer to ***EM-107***, “SUPERCHARGER”.
3. Remove injector fuel tube assembly.
   The following parts should be disconnected or removed.

- Fuel feed and return hose
- All injectors harness connectors
- **Push injector tail piece.**
- **Do not pull on connector.**
- **Do not extract injector by pinching.**

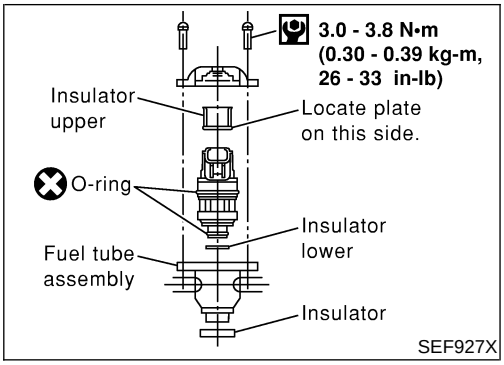

4. Push out any malfunctioning injector from injector fuel tube.
5. Replace or clean injector as necessary.
- **Always replace O-rings with new ones.**
- **Lubricate O-rings with engine oil.**
6. Install injector to injector fuel tube assembly.

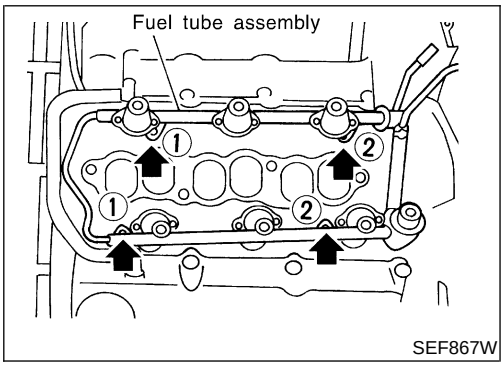

7. Install injectors with fuel tube assembly to intake manifold.
Tighten in numerical order shown in the figure.
a. First, tighten all bolts to 4.9 to 6.0 N·m (0.5 to 0.61 kg-m, 3.6 to 4.4 ft-lb).
b. Then, tighten all bolts to 10.8 to 14.7 N·m (1.1 to 1.5 kg-m, 8 to 11 ft-lb).
8. Reinstall any part removed in reverse order of removal.

CAUTION:
After properly connecting fuel hose to injector and fuel tube, check connection for fuel leakage.

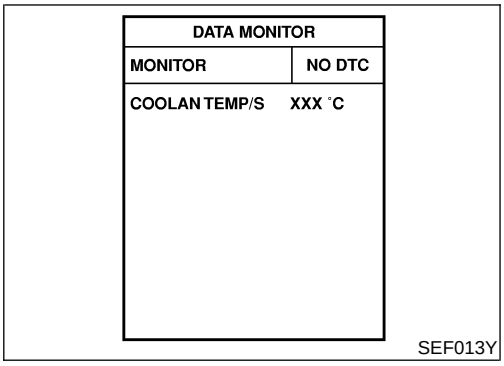

Fast Idle Cam (FIC)

INSPECTION AND ADJUSTMENT

NEEC1104

With CONSULT-II

NEEC1104S01

1. Turn ignition switch ON.
2. See "COOLAN TEMP/S" in "DATA MONITOR" mode with CONSULT-II.
3. When engine coolant temperature is 20 to 30°C (68 to 86°F), make sure that the center of mark **A** is aligned with mark **B** as shown in the figure.

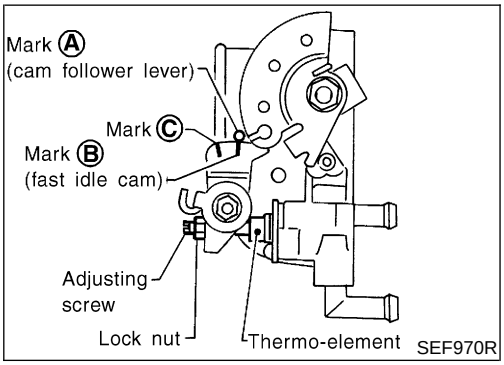

- If NG, adjust by turning adjusting screw.
Lock nut:
: 0.98 - 1.96 N·m (10 - 20 kg-cm, 8.7 - 17.4 in-lb)

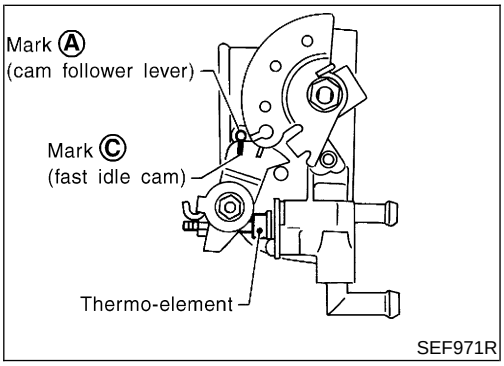

4. Start engine and warm it up.
5. When engine coolant temperature is 75 to 85°C (167 to 185°F), check the following.
- The center of mark **A** is aligned with mark **C**.
- The cam follower lever's roller is not touching the fast idle cam.
- If NG, replace thermo-element and perform the above inspection and adjustment again.

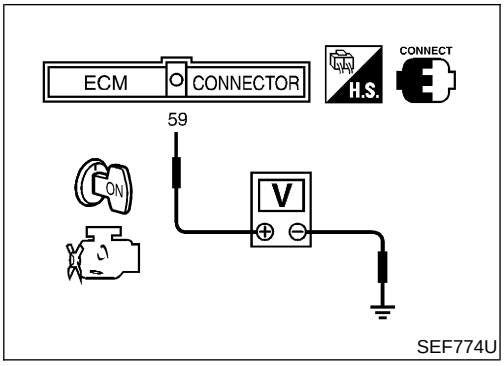

Without CONSULT-II

NEEC1104S02

1. Turn ignition switch ON.
2. Check voltage between ECM terminal 59 (Engine coolant temperature sensor signal) and ground.
3. When the voltage is between 3.12 to 3.52V, make sure that the center of mark **A** is aligned with mark **B** as shown in the figure.

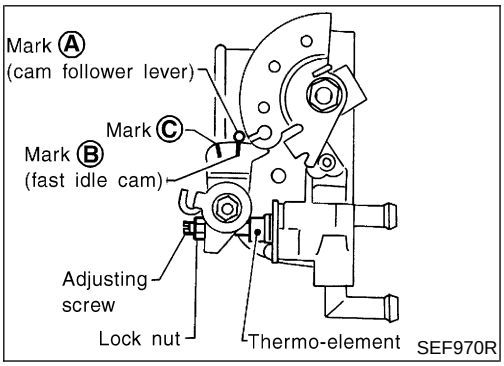

- If NG, adjust by turning adjusting screw.

  Lock nut:

  : 0.98 - 1.96 N·m (10 - 20 kg-cm, 8.7 - 17.4 in-lb)

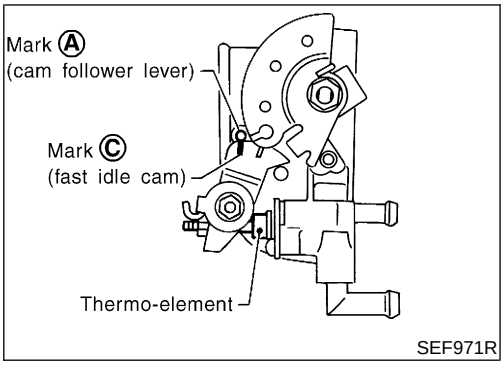

4. Start engine and warm it up.
5. When the voltage is between 1.10 to 1.36V, check the following.

- The center of mark **A** is aligned with mark **C**.
- The cam follower lever's roller is not touching the fast idle cam.
- If NG, replace thermo-element and perform the above inspection and adjustment again.

Idle Speed/Ignition Timing/Idle Mixture Ratio Adjustment

NEEC1105

PREPARATION

NEEC1105S01

1) Make sure that the following parts are in good order.
- Battery
- Ignition system
- Engine oil and coolant levels
- Fuses
- ECM harness connector
- Vacuum hoses
- Air intake system
  (Oil filler cap, oil level gauge, etc.)
- Fuel pressure
- Engine compression
- Throttle valve
- Evaporative emission system

2) On air conditioner equipped models, checks should be carried out while the air conditioner is OFF.
3) On automatic transmission equipped models, when checking idle rpm, ignition timing and mixture ratio, checks should be carried out while shift lever is in "N" position.
4) When measuring "CO" percentage, insert probe more than 40 cm (15.7 in) into tail pipe.
5) Turn off headlamps, heater blower, rear defogger.

6) Keep front wheels pointed straight ahead.
7) Make the check after the cooling fan has stopped.

Overall Inspection Sequence

NEEC1105S0101

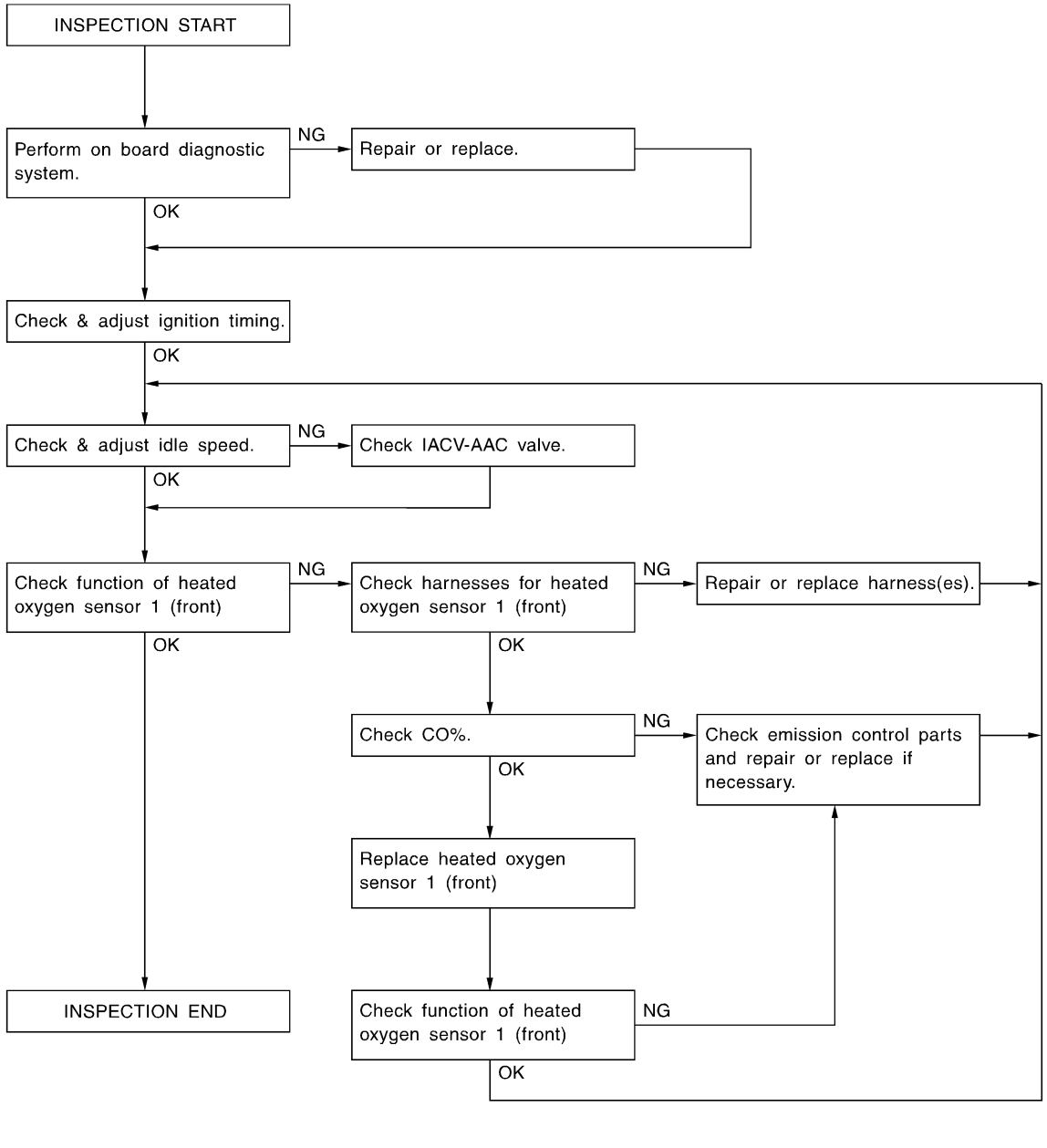

SEF554Y

NOTE:
If a vehicle contains a part which is operating outside of design specifications with no MIL illumination, the part shall not be replaced prior to emission testing unless it is determined that the part has been tampered with or abused in such a way that the diagnostic system cannot reasonably be expected to detect the resulting malfunction.

INSPECTION PROCEDURE

=NEEC1105S02

1	INSPECTION START

1. Visually check the following:
- Air cleaner clogging
- Hoses and ducts for leaks
- Electrical connectors
- Gasket
- Throttle valve and throttle position sensor operation

2. Start engine and warm it up until engine coolant temperature indicator points to the middle of gauge. Ensure engine stays below 1,000 rpm.

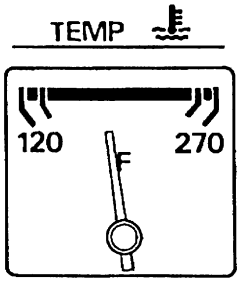

SEF976U

3. Open engine hood and run engine at about 2,000 rpm for about 2 minutes under no-load.

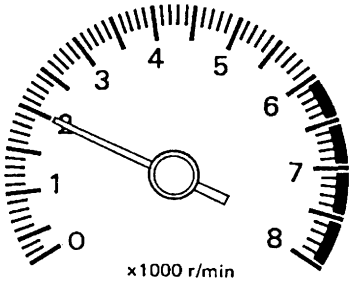

SEF977U

4. Make sure that no DTC is displayed with CONSULT-II or GST.

OK or NG

OK	▶	GO TO 2.
NG	▶	1. Repair or replace components as necessary. 2. GO TO 2.

2 CHECK IGNITION TIMING

1. Run engine at about 2,000 rpm for about 2 minutes under no-load.
2. Rev engine (2,000 to 3,000 rpm) two or three times under no-load, then run engine at idle speed.

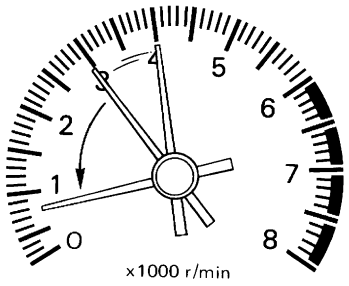

SEF978U

3. Turn off engine and disconnect throttle position sensor harness connector.

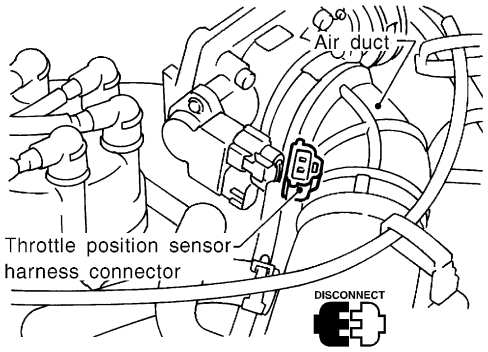

SEF975R

4. Start and rev engine (2,000 to 3,000 rpm) two or three times under no-load, then run at idle speed.
5. Check ignition timing with a timing light.

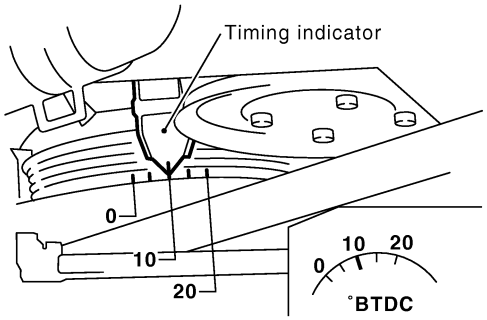

SEF927Z

M/T: 10°±1° BTDC
A/T: 10°±1° BTDC (in "P" or "N" position)

OK or NG

OK	▶	GO TO 4.
NG	▶	GO TO 3.

3	ADJUST IGNITION TIMING

1. Adjust ignition timing by turning distributor after loosening securing bolts.
2. Turn off engine and connect throttle position sensor harness connector to throttle position sensor.

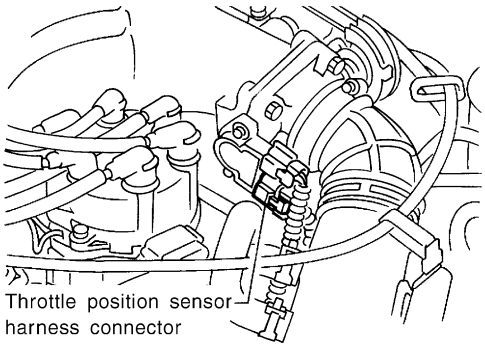

SEF972R

▶ GO TO 2.

4	CHECK BASE IDLE SPEED

With CONSULT-II

1. Read idle speed in "DATA MONITOR" mode with CONSULT-II.

DATA MONITOR	
MONITOR	NO DTC
ENG SPEED	XXX rpm

SEF058Y

M/T: 700±50 rpm
A/T: 700±50 rpm (in "P" or "N" position)

Without CONSULT-II

1. Check idle speed.

M/T: 700±50 rpm
A/T: 700±50 rpm (in "P" or "N" position)

OK or NG

OK	▶	GO TO 6.
NG	▶	GO TO 5.

5	ADJUST BASE IDLE SPEED

1. Rev engine (2,000 to 3,000 rpm) 2 or 3 times under no-load then run engine at idle speed.
2. Adjust idle speed by turning idle speed adjusting screw.

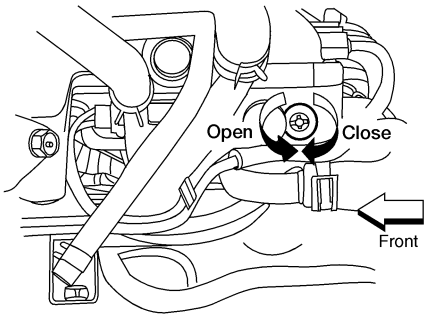

LEC513

M/T: 700±50 rpm
A/T: 700±50 rpm (in "P" or "N" position)

▶	GO TO 6.

6	CHECK TARGET IDLE SPEED

With CONSULT-II

1. Turn off engine and connect throttle position sensor harness connector.
2. Start and rev engine (2,000 to 3,000 rpm) 2 or 3 times under no-load then run at idle speed.
3. Read idle speed in "DATA MONITOR" mode with CONSULT-II.

DATA MONITOR	
MONITOR	NO DTC
ENG SPEED	XXX rpm

SEF058Y

M/T: 750±50 rpm
A/T: 750±50 rpm (in "P" or "N" position)

Without CONSULT-II

1. Turn off engine and connect throttle position sensor harness connector.
2. Start and rev engine (2,000 to 3,000 rpm) 2 or 3 times under no-load then run at idle speed.
3. Check idle speed.

M/T: 750±50 rpm
A/T: 750±50 rpm (in "P" or "N" position)

OK or NG

OK (With CONSULT-II)	▶	GO TO 8.
OK (Without CONSULT-II)	▶	GO TO 9.
NG	▶	GO TO 7.

7	DETECT MALFUNCTIONING PART	
Check the following. 1. Check IACV-AAC valve and replace if necessary. Refer to EC-1646. 2. Check IACV-AAC valve harness and repair if necessary. Refer to EC-1646. 3. Check ECM function by substituting another known-good ECM. (ECM may be the cause of a problem, but this is rarely the case.)		
With CONSULT-II	▶	GO TO 8.
Without CONSULT-II	▶	GO TO 9.

8	CHECK HEATED OXYGEN SENSOR 1 (FRONT) (BANK 2) SIGNAL	
With CONSULT-II 1. Run engine at about 2,000 rpm for about 2 minutes under no-load. 2. See "HO2S1 MNTR (B2)" in "DATA MONITOR" mode. 3. Running engine at 2,000 rpm under no-load (engine is warmed up to normal operating temperature.), check that the monitor fluctuates between "LEAN" and "RICH" more than 5 times during 10 seconds.		
DATA MONITOR MONITOR / NO DTC ENG SPEED XXX rpm HO2S1 MNTR (B1) LEAN HO2S1 MNTR (B2) RICH		**1 time: RICH → LEAN → RICH** **2 times: RICH → LEAN → RICH → LEAN → RICH** SEF999Z
OK or NG		
OK	▶	GO TO 12.
NG (Monitor does not fluctuate.)	▶	GO TO 17.
NG (Monitor fluctuates less than 5 times.)	▶	GO TO 10.

9	CHECK HEATED OXYGEN SENSOR 1 (FRONT) (BANK 2) SIGNAL	
Without CONSULT-II 1. Run engine at about 2,000 rpm for about 2 minutes under no-load. 2. Set voltmeter probe between ECM terminal 62 and ground. 3. Make sure that the voltage fluctuates between 0 - 0.3V and 0.6 - 1.0V more than 5 times during 10 seconds at 2,000 rpm. **1 time: 0 - 0.3V → 0.6 - 1.0V → 0 - 0.3V** **2 times: 0 - 0.3V → 0.6 - 1.0V → 0 - 0.3V → 0.6 - 1.0V → 0 - 0.3V**		
OK or NG		
OK	▶	GO TO 12.
NG (Voltage does not fluctuate.)	▶	GO TO 17.
NG (Voltage fluctuates less than 5 times.)	▶	GO TO 10.

10	CHECK HEATED OXYGEN SENSOR 1 (FRONT) (BANK 2) SIGNAL

With CONSULT-II
1. Stop engine.
2. Replace heated oxygen sensor 1 (front) (bank 2).
3. Start engine and warm it up to normal operating temperature.
4. Run engine at approx. 2,000 rpm for approx. 2 minutes under no-load.
5. See "HO2S1 MNTR (B2)" in "DATA MONITOR" mode.
6. Running engine at 2,000 rpm under no-load (engine is warmed up to normal operating temperature.), check that the monitor fluctuates between "LEAN" and "RICH" more than 5 times during 10 seconds.
   1 time: RICH → LEAN → RICH
   2 times: RICH → LEAN → RICH → LEAN → RICH

Without CONSULT-II
1. Stop engine.
2. Replace heated oxygen sensor 1 (front) (bank 2).
3. Start engine and warm it up to normal operating temperature.
4. Run engine at approx. 2,000 rpm for approx. 2 minutes under no-load.
5. Set voltmeter probe between ECM terminal 62 and ground.
6. Make sure that the voltage fluctuates between 0 - 0.3V and 0.6 - 1.0V more than 5 times during 10 seconds at 2,000 rpm.
   1 time: 0 - 0.3V → 0.6 - 1.0V → 0 - 0.3V
   2 times: 0 - 0.3V → 0.6 - 1.0V → 0 - 0.3V → 0.6 - 1.0V → 0 - 0.3V

OK or NG

OK (With CONSULT-II)	▶	GO TO 12.
OK (Without CONSULT-II)	▶	GO TO 13.
NG	▶	GO TO 11.

11	DETECT MALFUNCTIONING PART

Check the following.
1. Check fuel pressure regulator. Refer to EC-1260.
2. Check mass air flow sensor and its circuit. Refer to EC-1360.
3. Check injector and its circuit. Refer to EC-1793.
   Clean or replace if necessary.
4. Check engine coolant temperature sensor and its circuit. Refer to EC-1394.
5. Check ECM function by substituting another known good ECM.
   (ECM may be the cause of a problem, but this is rarely the case.)

	▶	GO TO 2.

12	CHECK HEATED OXYGEN SENSOR 1 (FRONT) (BANK 1) SIGNAL

With CONSULT-II

1. See "HO2S1 (B1)" in "DATA MONITOR" mode.
2. Maintaining engine at 2,000 rpm under no-load (engine is warmed up to normal operating temperature.), check that the monitor fluctuates between "LEAN" and "RICH" more than 5 times during 10 seconds.

DATA MONITOR	
MONITOR	NO DTC
ENG SPEED	XXX rpm
HO2S1 MNTR (B1)	LEAN
HO2S1 MNTR (B2)	RICH

1 time: RICH → LEAN → RICH
2 times: RICH → LEAN → RICH → LEAN → RICH

SEF999Z

OK or NG

OK	▶	**INSPECTION END**
NG (Monitor does not fluctuate.)	▶	GO TO 16.
NG (Monitor fluctuates less than 5 times.)	▶	GO TO 14.

13	CHECK HEATED OXYGEN SENSOR 1 (FRONT) (BANK 1) SIGNAL

Without CONSULT-II

1. Set voltmeter probe between ECM terminal 63 and ground.
2. Make sure that the voltage fluctuates between 0 - 0.3V and 0.6 - 1.0V more than 5 times during 10 seconds at 2,000 rpm.
   1 time: 0 - 0.3V → 0.6 - 1.0V → 0 - 0.3V
   2 times: 0 - 0.3V → 0.6 - 1.0V → 0 - 0.3V → 0.6 - 1.0V → 0 - 0.3V

OK or NG

OK	▶	**INSPECTION END**
NG (Voltage does not fluctuate.)	▶	GO TO 16.
NG (Voltage fluctuates less than 5 times.)	▶	GO TO 14.

14	CHECK HEATED OXYGEN SENSOR 1 (FRONT) (BANK 1) SIGNAL

With CONSULT-II

1. Stop engine.
2. Replace heated oxygen sensor 1 (front) (bank 1).
3. Start engine and warm it up to normal operating temperature.
4. Run engine at approx. 2,000 rpm for approx. 2 minutes under no-load.
5. See "HO2S1 MNTR (B1)" in "DATA MONITOR" mode.
6. Maintaining engine at 2,000 rpm under no-load (engine is warmed up to normal operating temperature.), check that the monitor fluctuates between "LEAN" and "RICH" more than 5 times during 10 seconds.
   1 time: RICH → LEAN → RICH
   2 times: RICH → LEAN → RICH → LEAN → RICH

Without CONSULT-II

1. Stop engine.
2. Replace heated oxygen sensor 1 (front) (bank 1).
3. Start engine and warm it up to normal operating temperature.
4. Run engine at approx. 2,000 rpm for approx. 2 minutes under no-load.
5. Set voltmeter probe between ECM terminal 63 and ground.
6. Make sure that the voltage fluctuates between 0 - 0.3V and 0.6 - 1.0V more than 5 times during 10 seconds at 2,000 rpm.
   1 time: 0 - 0.3V → 0.6 - 1.0V → 0 - 0.3V
   2 times: 0 - 0.3V → 0.6 - 1.0V → 0 - 0.3V → 0.6 - 1.0V → 0 - 0.3V

OK or NG

OK	▶	**INSPECTION END**
NG	▶	GO TO 15.

15	DETECT MALFUNCTIONING PART

Check the following.

1. Check fuel pressure regulator. Refer to EC-1260.
2. Check mass air flow sensor and its circuit. Refer to EC-1360.
3. Check injector and its circuit. Refer to EC-1793.
   Clean or replace if necessary.
4. Check engine coolant temperature sensor and its circuit. Refer to EC-1394.
5. Check ECM function by substituting another known good ECM.
   (ECM may be the cause of a problem, but this is rarely the case.)

	▶	GO TO 2.

16	CHECK HEATED OXYGEN SENSOR 1 (FRONT) (BANK 1) HARNESS

1. Turn off engine and disconnect battery ground cable.
2. Disconnect ECM harness connector.
3. Disconnect heated oxygen sensor 1 (front) (bank 1) harness connector.
4. Check harness continuity between ECM terminal 50 and heated oxygen sensor 1 (front) (bank 1) harness connector.
   Continuity should exist.

OK or NG

OK	▶	1. Connect ECM harness connector. 2. GO TO 18.
NG	▶	1. Repair or replace harness. 2. GO TO 8. (With CONSULT-II) GO TO 9. (Without CONSULT-II)

17	CHECK HEATED OXYGEN SENSOR 1 (FRONT) (BANK 2) HARNESS

1. Turn off engine and disconnect battery ground cable.
2. Disconnect ECM harness connector.
3. Disconnect heated oxygen sensor 1 (front) (bank 2) harness connector.
4. Check harness continuity between ECM terminal 51 and heated oxygen sensor 1 (front) (bank 2) harness connector.
   Continuity should exist.

OK or NG

OK	▶	1. Connect ECM harness connector. 2. GO TO 18.
NG	▶	1. Repair or replace harness. 2. GO TO 8. (With CONSULT-II) GO TO 9. (Without CONSULT-II)

18	PREPARATION FOR "CO" % CHECK

With CONSULT-II

1. Select "ENG COOLANT TEMP" in "ACTIVE TEST" mode.
2. Set "ENG COOLANT TEMP" to 5°C (41°F) by touching "DWN" and "Qd".

ACTIVE TEST	
ENG COOLANT TEMP	XXX °C
MONITOR	
ENG SPEED	XXX rpm
INJ PULSE-B1	XXX msec
IGN TIMING	XXX BTDC

SEF172Y

Without CONSULT-II

1. Disconnect engine coolant temperature sensor harness connector.
2. Connect a resistor (4.4 kΩ) between terminals of engine coolant temperature sensor harness connector.

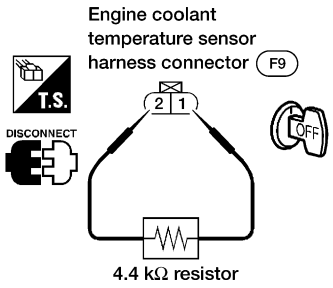

AEC036B

	▶	GO TO 19.

19	CHECK "CO" %

1. Start engine and warm it up until engine coolant temperature indicator points to the middle of gauge.

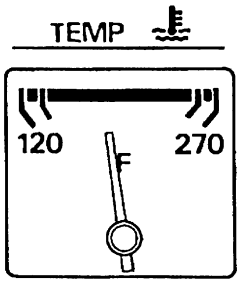

SEF976U

2. Rev engine (2,000 to 3,000 rpm) two or three times under no-load, then run engine at idle speed.

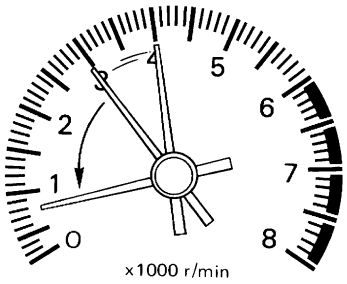

SEF978U

3. Check "CO" %.
   Idle CO: 1.5 - 9.5%
4. ⊗ **Without CONSULT-II**
   After checking CO%,

a. Disconnect the resistor from terminals of engine coolant temperature sensor.
b. Connect engine coolant temperature sensor harness connector to engine coolant temperature sensor.

OK or NG

OK	▶	GO TO 10.
NG	▶	GO TO 20.

20	DETECT MALFUNCTIONING PART

Check the following.
1. Connect heated oxygen sensor 1 (front) harness connectors to heated oxygen sensors 1 (front).
2. Check fuel pressure regulator. Refer to EC-1260.
3. Check mass air flow sensor and its circuit. Refer to EC-1360.
4. Check injector and its circuit. Refer to EC-1793.
   Clean or replace if necessary.
5. Check engine coolant temperature sensor and its circuit. Refer to EC-1394.
6. Check ECM function by substituting another known good ECM.
   (ECM may be the cause of a problem, but this is rarely the case.)

	▶	GO TO 2.

Introduction

NEEC1106

The ECM has an on board diagnostic system, which detects malfunctions related to engine sensors or actuators. The ECM also records various emission-related diagnostic information including:

Emission-related diagnostic information	SAE Mode
Diagnostic Trouble Code (DTC)	Mode 3 of SAE J1979
Freeze Frame data	Mode 2 of SAE J1979
System Readiness Test (SRT) code	Mode 1 of SAE J1979
1st Trip Diagnostic Trouble Code (1st Trip DTC)	Mode 7 of SAE J1979
1st Trip Freeze Frame data	
Test values and Test limits	Mode 6 of SAE J1979

The above information can be checked using procedures listed in the table below.

X: Applicable —: Not applicable

	DTC	1st trip DTC	Freeze Frame data	1st trip Freeze Frame data	SRT code	Test value
CONSULT-II	X	X	X	X	X	—
GST	X	X*1	X	—	X	X

*1: 1st trip DTCs for self-diagnoses concerning SRT items cannot be shown on the GST display.

The malfunction indicator lamp (MIL) on the instrument panel lights up when the same malfunction is detected in two consecutive trips (Two trip detection logic), or when the ECM enters fail-safe mode. (Refer to EC-1330.)

Two Trip Detection Logic

NEEC1107

When a malfunction is detected for the first time, 1st trip DTC and 1st trip Freeze Frame data are stored in the ECM memory. The MIL will not light up at this stage. <1st trip>
If the same malfunction is detected again during the next drive, the DTC and Freeze Frame data are stored in the ECM memory, and the MIL lights up. The MIL lights up at the same time when the DTC is stored. <2nd trip> The “trip” in the “Two Trip Detection Logic” means a driving mode in which self-diagnosis is performed during vehicle operation. Specific on board diagnostic items will cause the ECM to light up or blink the MIL, and store DTC and Freeze Frame data, even in the 1st trip, as shown below.

X: Applicable —: Not applicable

Items	MIL				DTC		1st trip DTC	
	1st trip		2nd trip		1st trip displaying	2nd trip displaying	1st trip displaying	2nd trip displaying
	Blinking	Lighting up	Blinking	Lighting up				
Coolant overtemperature enrichment protection — DTC: P0217	—	X	—	—	X	—	X	—
Misfire (Possible three way catalyst damage) — DTC: P0300 - P0306 is being detected	X	—	—	—	—	—	X	—
Misfire (Possible three way catalyst damage) — DTC: P0300 - P0306 is being detected	—	—	X	—	—	X	—	—
Closed loop control — DTC: P1148, P1168	—	X	—	—	X	—	X	—
Fail-safe items (Refer to EC-1330.)	—	X	—	—	X*1	—	X*1	—
Except above	—	—	—	X	—	X	X	—

*1: Except “ECM”

Emission-related Diagnostic Information

NEEC1108

DTC AND 1ST TRIP DTC

NEEC1108S01

The 1st trip DTC (whose number is the same as the DTC number) is displayed for the latest self-diagnostic result obtained. If the ECM memory was cleared previously, and the 1st trip DTC did not reoccur, the 1st trip DTC will not be displayed.

If a malfunction is detected during the 1st trip, the 1st trip DTC is stored in the ECM memory. The MIL will not light up (two trip detection logic). If the same malfunction is not detected in the 2nd trip (meeting the required driving pattern), the 1st trip DTC is cleared from the ECM memory. If the same malfunction is detected in the 2nd trip, both the 1st trip DTC and DTC are stored in the ECM memory and the MIL lights up. In other words, the DTC is stored in the ECM memory and the MIL lights up when the same malfunction occurs in two consecutive trips. If a 1st trip DTC is stored and a non-diagnostic operation is performed between the 1st and 2nd trips, only the 1st trip DTC will continue to be stored. For malfunctions that blink or light up the MIL during the 1st trip, the DTC and 1st trip DTC are stored in the ECM memory.

Procedures for clearing the DTC and the 1st trip DTC from the ECM memory are described in “HOW TO ERASE EMISSION-RELATED DIAGNOSTIC INFORMATION”, EC-1287.

For malfunctions in which 1st trip DTCs are displayed, refer to EC-1284. These items are required by legal regulations to continuously monitor the system/component. In addition, the items monitored non-continuously are also displayed on CONSULT-II.

1st trip DTC is specified in Mode 7 of SAE J1979. 1st trip DTC detection occurs without lighting up the MIL and therefore does not warn the driver of a problem. However, 1st trip DTC detection will not prevent the vehicle from being tested, for example during Inspection/Maintenance (I/M) tests.

When a 1st trip DTC is detected, check, print out or write down and erase (1st trip) DTC and Freeze Frame data as specified in “Work Flow” procedure Step II, refer to EC-1312. Then perform “DTC Confirmation Procedure” or “Overall Function Check” to try to duplicate the problem. If the malfunction is duplicated, the item requires repair.

How to Read DTC and 1st Trip DTC

NEEC1108S0101

DTC and 1st trip DTC can be read by the following methods.

With CONSULT-II

With GST

CONSULT-II or GST (Generic Scan Tool) Examples: P0340, P1320, P0705, P0750, etc.

These DTCs are prescribed by SAE J2012.

(CONSULT-II also displays the malfunctioning component or system.)

- **1st trip DTC No. is the same as DTC No.**
- **Output of a DTC indicates a malfunction. However, GST do not indicate whether the malfunction is still occurring or has occurred in the past and has returned to normal. CONSULT-II can identify malfunction status as shown below. Therefore, using CONSULT-II (if available) is recommended.**

A sample of CONSULT-II display for DTC and 1st trip DTC is shown below. DTC or 1st trip DTC of a malfunction is displayed in SELF-DIAGNOSTIC RESULTS mode of CONSULT-II. Time data indicates how many times the vehicle was driven after the last detection of a DTC.

If the DTC is being detected currently, the time data will be “0”.

If a 1st trip DTC is stored in the ECM, the time data will be “[1t]”.

DTC display

SELF DIAG RESULTS	
DTC RESULTS	TIME
MAF SEN/CIRCUIT [P0100]	0

1st trip DTC display

SELF DIAG RESULTS	
DTC RESULTS	TIME
MAF SEN/CIRCUIT [P0100]	1t

SEF992X

FREEZE FRAME DATA AND 1ST TRIP FREEZE FRAME DATA

NEEC1108S02

The ECM records the driving conditions such as fuel system status, calculated load value, engine coolant temperature, short term fuel trim, long term fuel trim, engine speed, vehicle speed and absolute pressure at the moment a malfunction is detected.

Data which are stored in the ECM memory, along with the 1st trip DTC, are called 1st trip freeze frame data.

The data, stored together with the DTC data, are called freeze frame data and displayed on CONSULT-II or GST. The 1st trip freeze frame data can only be displayed on the CONSULT-II screen, not on the GST. For details, see EC-1299.
Only one set of freeze frame data (either 1st trip freeze frame data or freeze frame data) can be stored in the ECM. 1st trip freeze frame data is stored in the ECM memory along with the 1st trip DTC. There is no priority for 1st trip freeze frame data and it is updated each time a different 1st trip DTC is detected. However, once freeze frame data (2nd trip detection/MIL on) is stored in the ECM memory, 1st trip freeze frame data is no longer stored. Remember, only one set of freeze frame data can be stored in the ECM. The ECM has the following priorities to update the data.

Priority	Items	
1	Freeze frame data	Misfire — DTC: P0300 - P0306 Fuel Injection System Function — DTC: P0171, P0172, P0174, P0175
2		Except the above items (Includes A/T related items)
3	1st trip freeze frame data	

For example, the EGR malfunction (Priority: 2) was detected and the freeze frame data was stored in the 2nd trip. After that when the misfire (Priority: 1) is detected in another trip, the freeze frame data will be updated from the EGR malfunction to the misfire. The 1st trip freeze frame data is updated each time a different malfunction is detected. There is no priority for 1st trip freeze frame data. However, once freeze frame data is stored in the ECM memory, 1st trip freeze data is no longer stored (because only one freeze frame data or 1st trip freeze frame data can be stored in the ECM). If freeze frame data is stored in the ECM memory and freeze frame data with the same priority occurs later, the first (original) freeze frame data remains unchanged in the ECM memory.
Both 1st trip freeze frame data and freeze frame data (along with the DTCs) are cleared when the ECM memory is erased. Procedures for clearing the ECM memory are described in "HOW TO ERASE EMISSION-RELATED DIAGNOSTIC INFORMATION", EC-1287.

SYSTEM READINESS TEST (SRT) CODE

NEEC1108S03

System Readiness Test (SRT) code is specified in Mode 1 of SAE J1979.
As part of enhanced emissions test for Inspection and Maintenance (I/M), certain states require that the status of srt be used to indicate whether the ECM has completed self-diagnosis of major emission systems and components. Completion must be verified in order for the emissions inspection to proceed.
If a vehicle is rejected for a State emissions inspection due to one or more SRT items indicating "INCMP", use the information in this service manual to set the SRT to "CMPLT".
In most cases, the ECM will automatically complete its self-diagnosis cycle during normal usage and the SRT status will indicate "CMPLT" for each application system. Once set as "CMPLT", the SRT status remains "CMPLT" until the self-diagnosis memory is erased.
Occasionally, certain portions of the self-diagnostic test may not be completed as a result of the customer's normal driving pattern and the SRT will indicate "INCMP" for these items.

NOTE:
The SRT will also indicate "INCMP" if the self-diagnosis memory is erased for any reason or if the ECM memory power supply is interrupted for several hours.

If, during the state emissions inspection, the SRT indicates "CMPLT" for all test items, the inspector will continue with the emissions test. However, if the SRT indicates "INCMP" for one or more of the SRT items, the vehicle is returned to the customer untested.

NOTE:
If MIL is "ON" during the state emissions inspection, the vehicle is also returned to the customer untested even though the SRT indicates "CMPLT" for all test items. Therefore, it is important to check SRT ("CMPLT") and DTC (No DTCs) before the inspection.

SRT Item

=NEEC1108S0301

The following table shows required self-diagnostic items to set the SRT to "CMPLT".

SRT item (CONSULT-II indication)	Performance Priority *	Required self-diagnostic items to set the SRT to "CMPLT"	Corresponding DTC No.
CATALYST	3	Three way catalyst function	P0420, P0430
EVAP SYSTEM	2	EVAP control system (small leak) (negative pressure)	P0440
	3	EVAP control system (very small leak) (negative pressure)/ (positive pressure)	P1441
	3	EVAP control system purge flow monitoring	P1447
O2 SENSOR	3	Heated oxygen sensor 1 (front) (circuit)	P0130, P0150
		Heated oxygen sensor 1 (front) (lean shift monitoring)	P0131, P0151
		Heated oxygen sensor 1 (front) (rich shift monitoring)	P0132, P0152
		Heated oxygen sensor 1 (front) (response monitoring)	P0133, P0153
		Heated oxygen sensor 1 (front) (high voltage)	P0134, P0154
		Heated oxygen sensor 2 (rear) (min. voltage monitoring)	P0137, P0157
		Heated oxygen sensor 2 (rear) (max. voltage monitoring)	P0138, P0158
		Heated oxygen sensor 2 (rear) (response monitoring)	P0139, P0159
		Heated oxygen sensor 2 (rear) (high voltage)	P0140, P0160
O2 SEN HEATER	3	Heated oxygen sensor 1 heater (front)	P0135, P0155
		Heated oxygen sensor 2 heater (rear)	P0141, P0161

*: If completion of several SRTs is required, perform driving patterns (DTC confirmation procedure) one by one based on the priority for models with CONSULT-II.

SRT Set Timing

NEEC1108S0302

SRT is set as "CMPLT" after self-diagnosis has been performed one or more times. Completion of SRT will occur if the result is OK or NG. The set timing is different between them and is shown in the following table.

Self-diagnosis result		Example				
		Diagnosis	Ignition OFF – ON – OFF	Ignition OFF – ON – OFF	Ignition OFF – ON – OFF	Ignition OFF – ON – OFF
All OK	Case 1	P0400	OK (1)	– (1)	OK (2)	– (2)
		P0402	OK (1)	– (1)	– (1)	OK (2)
		P1402	OK (1)	OK (2)	– (2)	– (2)
		SRT of EGR	"CMPLT"	"CMPLT"	"CMPLT"	"CMPLT"
	Case 2	P0400	OK (1)	– (1)	– (1)	– (1)
		P0402	– (0)	– (0)	OK (1)	– (1)
		P1402	OK (1)	OK (2)	– (2)	– (2)
		SRT of EGR	"INCMP"	"INCMP"	"CMPLT"	"CMPLT"
NG exists	Case 3	P0400	OK	OK	–	–
		P0402	–	–	–	–
		P1402	NG	–	NG	NG (Consecutive NG)
		(1st trip) DTC	1st trip DTC	–	1st trip DTC	DTC (=MIL "ON")
		SRT of EGR	"INCMP"	"INCMP"	"INCMP"	"CMPLT"

OK: Self-diagnosis is carried out and the result is OK.

NG: Self-diagnosis is carried out and the result is OK.

–: Self-diagnosis is not carried out.

When all SRT related self-diagnoses showed OK results in a same cycle (Ignition OFF – ON – OFF), the SRT will indicate "CMPLT".

→ Case 1 above

When all SRT related self-diagnoses show OK results through several different cycles, the SRT will indicate "CMPLT" at the time the respective self-diagnoses have at least one OK result.

→ Case 2 above

If one or more SRT related self-diagnoses showed NG results in 2 consecutive cycles, the SRT will also indicate "CMPLT".

→ Case 3 above

The previous table shows that the minimum number of cycles for setting SRT as "INCMP" is one (1) for each self-diagnosis (Case 1 and 2) or two (2) for one self-diagnosis (Case 3). However, in preparation for the State emissions inspection, it is unnecessary of each self-diagnosis to be executed twice (Case 3) because of the following reasons;

- The SRT will indicate "CMPLT" at the time the respective self-diagnoses have one (1) OK result.
- The emissions inspection requires "CMPLT" of the SRT only with OK self-diagnosis result.
- When, during SRT driving pattern, 1st trip DTC (NG) is detected prior to "CMPLT" of SRT, the self-diagnosis memory must be erased from ECM after repair.
- If the 1st trip DTC is erased, all the SRT will indicate "INCMP".

NOTE:

SRT can be set as "CMPLT" together with the DTC(s). Therefore, DTC check must always be carried out prior to the State emission inspection even though the SRT indicates "CMPLT".

SRT Service Procedure

NEEC1108S0303

If a vehicle has been rejected for the State emissions inspection due to one or more SRT items indicating "INCMP", review the following flowchart diagnostic sequence on the next page.

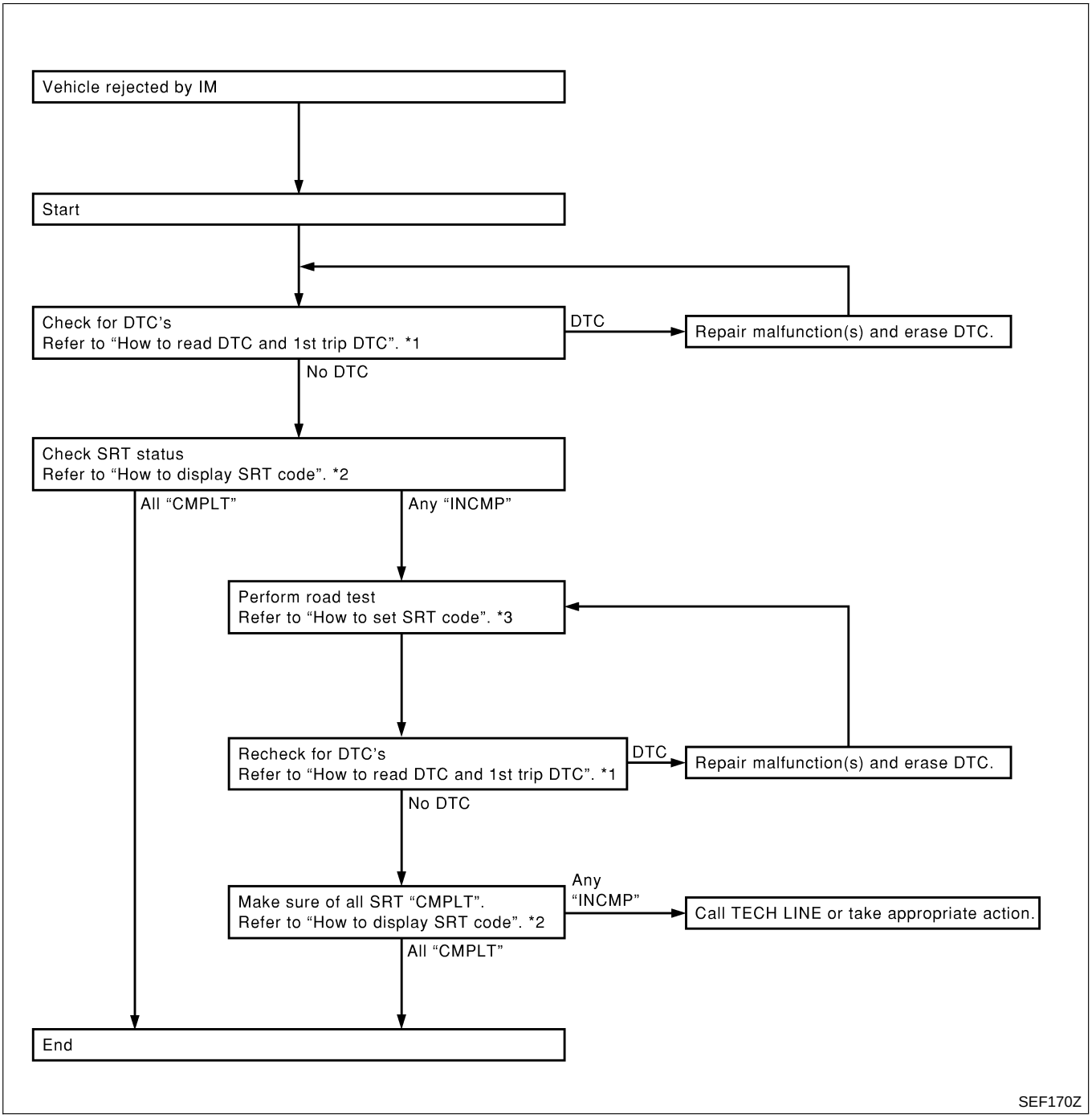

*1 EC-1275 *2 EC-1279 *3 EC-1280

How to Display SRT Code

NEEC1108S0304

1. **With CONSULT-II**
   Selecting "SRT STATUS" in "DTC CONFIRMATION" mode with CONSULT-II.
   For items whose SRT codes are set, a "CMPLT" is displayed on the CONSULT-II screen; for items whose SRT codes are not set, "INCMP" is displayed.
2. **With GST**
   Selecting Mode 1 with GST (Generic Scan Tool)

A sample of CONSULT-II display for SRT code is shown below.
"INCMP" means the self-diagnosis is incomplete and SRT is not set. "CMPLT" means the self-diagnosis is complete and SRT is set.

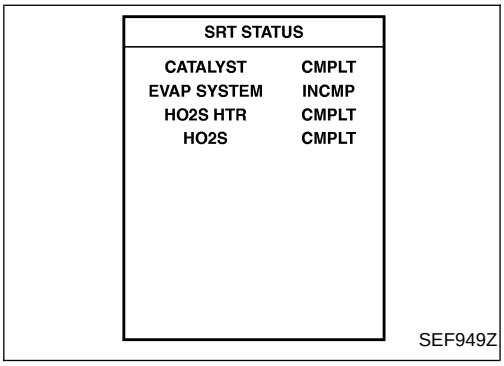

How to Set SRT Code

NEEC1108S0305

To set all SRT codes, self-diagnosis for the items indicated above must be performed one or more times. Each diagnosis may require a long period of actual driving under various conditions.

With CONSULT-II

Perform corresponding DTC confirmation procedure one by one based on "Performance Priority" in the table on EC-1275.

Without CONSULT-II

The most efficient driving pattern in which SRT codes can be properly set is explained on EC-1281. The driving pattern should be performed one or more times to set all SRT codes.

Driving Pattern

NEEC1108S0306

Driving pattern

Note: Always drive vehicle in safe manner according to traffic conditions and obey all traffic laws.
Refer to next page for more information and explanation of chart.

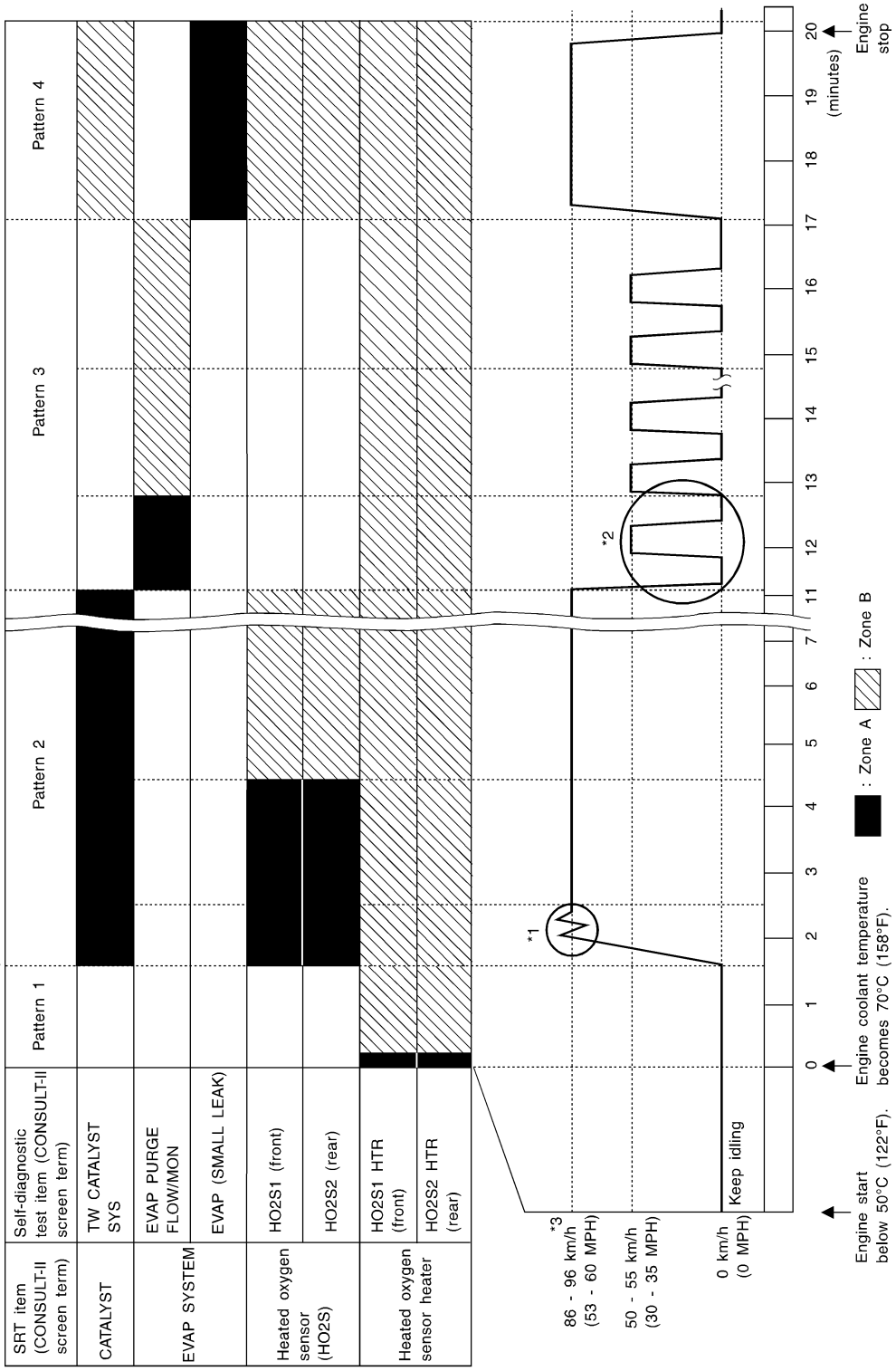

SEF947Y

- The time required for each diagnosis varies with road surface conditions, weather, altitude, individual driving habits, etc.
  Zone A refers to the range where the time required, for the diagnosis under normal conditions*, is the shortest.
  Zone B refers to the range where the diagnosis can still be performed if the diagnosis is not completed within zone A.

*: Normal conditions refer to the following:

− Sea level
− Flat road
− Ambient air temperature: 20 - 30°C (68 - 86°F)
− Diagnosis is performed as quickly as possible under normal conditions.
  Under different conditions [For example: ambient air temperature other than 20 - 30°C (68 - 86°F)], diagnosis may also be performed.

Pattern 1:

- **The engine is started at the engine coolant temperature of −10 to 35°C (14 to 95°F) (where the voltage between the ECM terminal 59 and ground is 3.0 - 4.3V).**
- **The engine must be operated at idle speed until the engine coolant temperature is greater than 70°C (158°F) (where the voltage between the ECM terminal 59 and ground is lower than 1.4V).**
- **The engine is started at the tank fuel temperature of warmer than 0°C (32°F) (where the voltage between the ECM terminal 60 and ground is less than 4.1V).**

Pattern 2:

- When steady-state driving is performed again even after it is interrupted, each diagnosis can be conducted. In this case, the time required for diagnosis may be extended.

Pattern 3:

- The driving pattern outlined in *2 must be repeated at least 3 times.

Pattern 4:

- Tests are performed after the engine has been operated for at least 17 minutes.
- The accelerator pedal must be held very steady during steady-state driving.
- If the accelerator pedal is moved, the test must be conducted all over again.

*1: Depress the accelerator pedal until vehicle speed is 90 km/h (56 MPH), then release the accelerator pedal and keep it released for more than 10 seconds. Depress the accelerator pedal until vehicle speed is 90 km/h (56 MPH) again.

*2: Operate the vehicle in the following driving pattern.

1) Decelerate vehicle to 0 km/h (0 MPH) and let engine idle.
2) Repeat driving pattern shown below at least 10 times.

- **During acceleration, hold the accelerator pedal as steady as possible.**

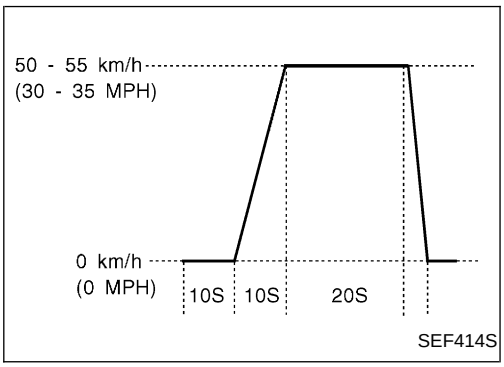

*3: Checking the vehicle speed with CONSULT-II or GST is advised.

Suggested Transmission Gear Position for A/T Models

Set the selector lever in the "D" position with the overdrive switch turned ON.

Suggested upshift speeds for M/T models

Shown below are suggested vehicle speeds for shifting into a higher gear. These suggestions relate to fuel economy and vehicle performance. Actual upshift speeds will vary according to road conditions, the weather and individual driving habits.

	For normal acceleration in low altitude areas [less than 1,219 m (4,000 ft)]:	For quick acceleration in low altitude areas and high altitude areas [over 1,219 m (4,000 ft)]:
Gear change	ACCEL shift point km/h (MPH)	km/h (MPH)
1st to 2nd	24 (15)	24 (15)
2nd to 3rd	40 (25)	40 (25)
3rd to 4th	64 (40)	64 (40)
4th to 5th	72 (45)	72 (45)

Suggested Maximum Speed in Each Gear

Downshift to a lower gear if the engine is not running smoothly, or if you need to accelerate.
Do not exceed the maximum suggested speed (shown below) in any gear. For level road driving, use the highest gear suggested for that speed. Always observe posted speed limits and drive according to the road conditions to ensure safe operation. Do not over-rev the engine when shifting to a lower gear as it may cause engine damage or loss of vehicle control.

Gear	km/h (MPH) 2WD (AUTO mode)
1st	50 (30)
2nd	95 (60)

TEST VALUE AND TEST LIMIT (GST ONLY — NOT APPLICABLE TO CONSULT-II)

NEEC1108S04

The following is the information specified in Mode 6 of SAE J1979.
The test value is a parameter used to determine whether a system/circuit diagnostic test is "OK" or "NG" while being monitored by the ECM during self-diagnosis. The test limit is a reference value which is specified as the maximum or minimum value and is compared with the test value being monitored.
Items for which these data (test value and test limit) are displayed are the same as SRT code items (30 test items).
These data (test value and test limit) are specified by Test ID (TID) and Component ID (CID) and can be displayed on the GST screen.

X: Applicable —: Not applicable

SRT item	Self-diagnostic test item	Test value (GST display)		Test limit	Application
		TID	CID		
CATALYST	Three way catalyst function (Right bank)	01H	01H	Max.	X
	Three way catalyst function (Left bank)	03H	02H	Max.	X
EVAP SYSTEM	EVAP control system (Small leak)	05H	03H	Max.	X
	EVAP control system purge flow monitoring	06H	83H	Min.	X

SRT item	Self-diagnostic test item	Test value (GST display)		Test limit	Application
		TID	CID		
O2 SENSOR	Heated oxygen sensor 1 (front) (bank 1)	09H	04H	Max.	X
		0AH	84H	Min.	X
		0BH	04H	Max.	X
		0CH	04H	Max.	X
		0DH	04H	Max.	X
	Heated oxygen sensor 1 (front) (bank 2)	11H	05H	Max.	X
		12H	85H	Min.	X
		13H	05H	Max.	X
		14H	05H	Max.	X
		15H	05H	Max.	X
	Heated oxygen sensor 2 (rear) (bank 1)	19H	86H	Min.	X
		1AH	86H	Min.	X
		1BH	06H	Max.	X
		1CH	06H	Max.	X
	Heated oxygen sensor 2 (rear) (bank 2)	21H	87H	Min.	X
		22H	87H	Min.	X
		23H	07H	Max.	X
		24H	07H	Max.	X
O2 SENSOR HEATER	Heated oxygen sensor 1 (front) (bank 1)	29H	08H	Max.	X
		2AH	88H	Min.	X
	Heated oxygen sensor 1 (front) (bank 2)	2BH	09H	Max.	X
		2CH	89H	Min.	X
	Heated oxygen sensor 2 (rear) (bank 1)	2DH	0AH	Max.	X
		2EH	8AH	Min.	X
	Heated oxygen sensor 2 (rear) (bank 2)	2FH	0BH	Max.	X
		30H	8BH	Min.	X

EMISSION-RELATED DIAGNOSTIC INFORMATION ITEMS

NEEC1108S05

X: Applicable —: Not applicable

Items (CONSULT-II screen terms)	DTC*1	SRT code	Test value/ Test limit (GST only)	1st trip DTC*1	Reference page
NO SELF DIAGNOSTIC FAILURE INDICATED	**P0000**	—	—	—	—
MAF SEN/CIRCUIT	P0100	—	—	X	EC-1360
ABSL PRES SEN/CIRC	P0105	—	—	X	EC-1369
AIR TEMP SEN/CIRC	P0110	—	—	X	EC-1371
COOLANT T SEN/CIRC	P0115	—	—	X	EC-1376
THRTL POS SEN/CIRC	P0120	—	—	X	EC-1381

Items (CONSULT-II screen terms)	DTC*1	SRT code	Test value/ Test limit (GST only)	1st trip DTC*1	Reference page
*COOLAN T SEN/CIRC	P0125	—	—	X	EC-1394
HO2S1 (B1)	P0130	X	X	X*2	EC-1400
HO2S1 (B1)	P0131	X	X	X*2	EC-1411
HO2S1 (B1)	P0132	X	X	X*2	EC-1420
HO2S1 (B1)	P0133	X	X	X*2	EC-1429
HO2S1 (B1)	P0134	X	X	X*2	EC-1443
HO2S1 HTR (B1)	P0135	X	X	X*2	EC-1451
HO2S2 (B1)	P0137	X	X	X*2	EC-1458
HO2S2 (B1)	P0138	X	X	X*2	EC-1468
HO2S2 (B1)	P0139	X	X	X*2	EC-1478
HO2S2 (B1)	P0140	X	X	X*2	EC-1488
HO2S2 HTR (B1)	P0141	X	X	X*2	EC-1498
HO2S1 (B2)	P0150	X	X	X*2	EC-1400
HO2S1 (B2)	P0151	X	X	X*2	EC-1411
HO2S1 (B2)	P0152	X	X	X*2	EC-1420
HO2S1 (B2)	P0153	X	X	X*2	EC-1429
HO2S1 (B2)	P0154	X	X	X*2	EC-1443
HO2S1 HTR (B2)	P0155	X	X	X*2	EC-1451
HO2S2 (B2)	P0157	X	X	X*2	EC-1458
HO2S2 (B2)	P0158	X	X	X*2	EC-1468
HO2S2 (B2)	P0159	X	X	X*2	EC-1478
HO2S2 (B2)	P0160	X	X	X*2	EC-1488
HO2S2 HTR (B2)	P0161	X	X	X*2	EC-1498
FUEL SYS-LEAN/BK1	P0171	—	—	X	EC-1506
FUEL SYS-RICH/BK1	P0172	—	—	X	EC-1515
FUEL SYS-LEAN/BK2	P0174	—	—	X	EC-1506
FUEL SYS-RICH/BK2	P0175	—	—	X	EC-1515
FUEL TEMP SEN/CIRC	P0180	—	—	X	EC-1523
ENG OVER TEMP	P0217	—	—	X	EC-1528
MULTI CYL MISFIRE	P0300	—	—	X	EC-1546
CYL 1 MISFIRE	P0301	—	—	X	EC-1546
CYL 2 MISFIRE	P0302	—	—	X	EC-1546
CYL 3 MISFIRE	P0303	—	—	X	EC-1546
CYL 4 MISFIRE	P0304	—	—	X	EC-1546
CYL 5 MISFIRE	P0305	—	—	X	EC-1546
CYL 6 MISFIRE	P0306	—	—	X	EC-1546
KNOCK SEN/CIRC-B1	P0325	—	—	—	EC-1555

Items (CONSULT-II screen terms)	DTC*1	SRT code	Test value/ Test limit (GST only)	1st trip DTC*1	Reference page
CKP SEN/CIRCUIT	P0335	—	—	X	EC-1559
CMP SEN/CIRCUIT	P0340	—	—	X	EC-1565
TW CATALYST SYS-B1	P0420	X	X	X*2	EC-1572
TW CATALYST SYS-B2	P0430	X	X	X*2	EC-1572
EVAP SMALL LEAK	P0440	X	X	X*2	EC-1577
PURG VOLUME CONT/V	P0443	—	—	X	EC-1592
VENT CONTROL VALVE	P0446	—	—	X	EC-1599
EVAP SYS PRES SEN	P0450	—	—	X	EC-1605
EVAP GROSS LEAK	P0455	X	X	X	EC-1616
FUEL LEV SEN SLOSH	P0460	—	—	X	EC-1630
FUEL LEVEL SENSOR	P0461	—	—	X	EC-1635
FUEL LEVL SEN/CIRC	P0464	—	—	X	EC-1637
VEH SPEED SEN/CIRC	P0500	—	—	X	EC-1642
IACV/AAC VLV/CIRC	P0505	—	—	X	EC-1646
CLOSED TP SW/CIRC	P0510	—	—	X	EC-1652
A/T COMM LINE	P0600	—	—	—	EC-1659
ECM	P0605	—	—	X	EC-1664
PNP SW/CIRC	P0705	—	—	X	***AT-250***
ATF TEMP SEN/CIRC	P0710	—	—	X	***AT-256***
VEH SPD SEN/CIR AT	P0720	—	—	X	***AT-262***
ENGINE SPEED SIG	P0725	—	—	X	***AT-267***
A/T 1ST GR FNCTN	P0731	—	—	X	***AT-272***
A/T 2ND GR FNCTN	P0732	—	—	X	***AT-278***
A/T 3RD GR FNCTN	P0733	—	—	X	***AT-284***
A/T 4TH GR FNCTN	P0734	—	—	X	***AT-290***
TCC SOLENOID/CIRC	P0740	—	—	X	***AT-299***
A/T TCC S/V FNCTN	P0744	—	—	X	***AT-304***
L/PRESS SOL/CIRC	P0745	—	—	X	***AT-313***
SFT SOL A/CIRC	P0750	—	—	X	***AT-318***
SFT SOL B/CIRC	P0755	—	—	X	***AT-323***
THERMOSTAT FNCTN	P1126	—	—	X	EC-1666
CLOSED LOOP-B1	P1148	—	—	X	EC-1668
CLOSED LOOP-B2	P1168	—	—	X	EC-1668
ENG OVER TEMP	P1217	—	—	X	EC-1670
SCB/V CONT SOL/V	P1243	—	—	X	EC-1686
CKP SENSRO (COG)	P1336	—	—	X	EC-1692
EVAP SMALL LEAK	P1440	X	X	X*2	EC-1699

Items (CONSULT-II screen terms)	DTC*1	SRT code	Test value/ Test limit (GST only)	1st trip DTC*1	Reference page
EVAP VERY SML LEAK	P1441	X	X	X*2	EC-1701
PURG VOLUME CONT/V	P1444	—	—	X	EC-1716
VENT CONTROL VALVE	P1446	—	—	X	EC-1728
EVAP PURG FLOW/MON	P1447	X	X	X*2	EC-1735
VENT CONTROL VALVE	P1448	—	—	X	EC-1747
FUEL LEVL SEN/CIRC	P1464	—	—	X	EC-1755
VC/V BYPASS/V	P1490	—	—	X	EC-1759
VC CUT/V BYPASS/V	P1491	—	—	X	EC-1765
A/T DIAG COMM LINE	P1605	—	—	X	EC-1774
TP SEN/CIRC A/T	P1705	—	—	X	***AT-328***
P-N POS SW/CIRCUIT	P1706	—	—	X	EC-1777
O/R CLTCH SOL/CIRC	P1760	—	—	X	***AT-337***

*1: 1st trip DTC No. is the same as DTC No.

*2: These are not displayed with GST.

NOTE:

Regarding D22 models, "-B1" and "BK1" indicate right bank and "-B2" and "BK2" indicate left bank.

HOW TO ERASE EMISSION-RELATED DIAGNOSTIC INFORMATION

NEEC1108S06

How to Erase DTC (Ⓑ With CONSULT-II)

NEEC1108S0601

NOTE:

If the DTC is not for A/T related items (see EC-1219), skip steps 2 through 4.

1. If the ignition switch stays ON after repair work, be sure to turn ignition switch OFF once. Wait at least 5 seconds and then turn it ON (engine stopped) again.
2. Turn CONSULT-II "ON" and touch "A/T".
3. Touch "SELF-DIAG RESULTS".
4. Touch "ERASE". [The DTC in the TCM (Transmission control module) will be erased.] Then touch "BACK" twice.
5. Touch "ENGINE".
6. Touch "SELF-DIAG RESULTS".
7. Touch "ERASE". (The DTC in the ECM will be erased.)

- If DTCs are displayed for both ECM and TCM (Transmission control module), they need to be erased individually from the ECM and TCM (Transmission control module).

How to erase DTC (With CONSULT-II)

1. If the ignition switch stays "ON" after repair work, be sure to turn ignition switch "OFF" once. Wait at least 5 seconds and then turn it "ON" (engine stopped) again.

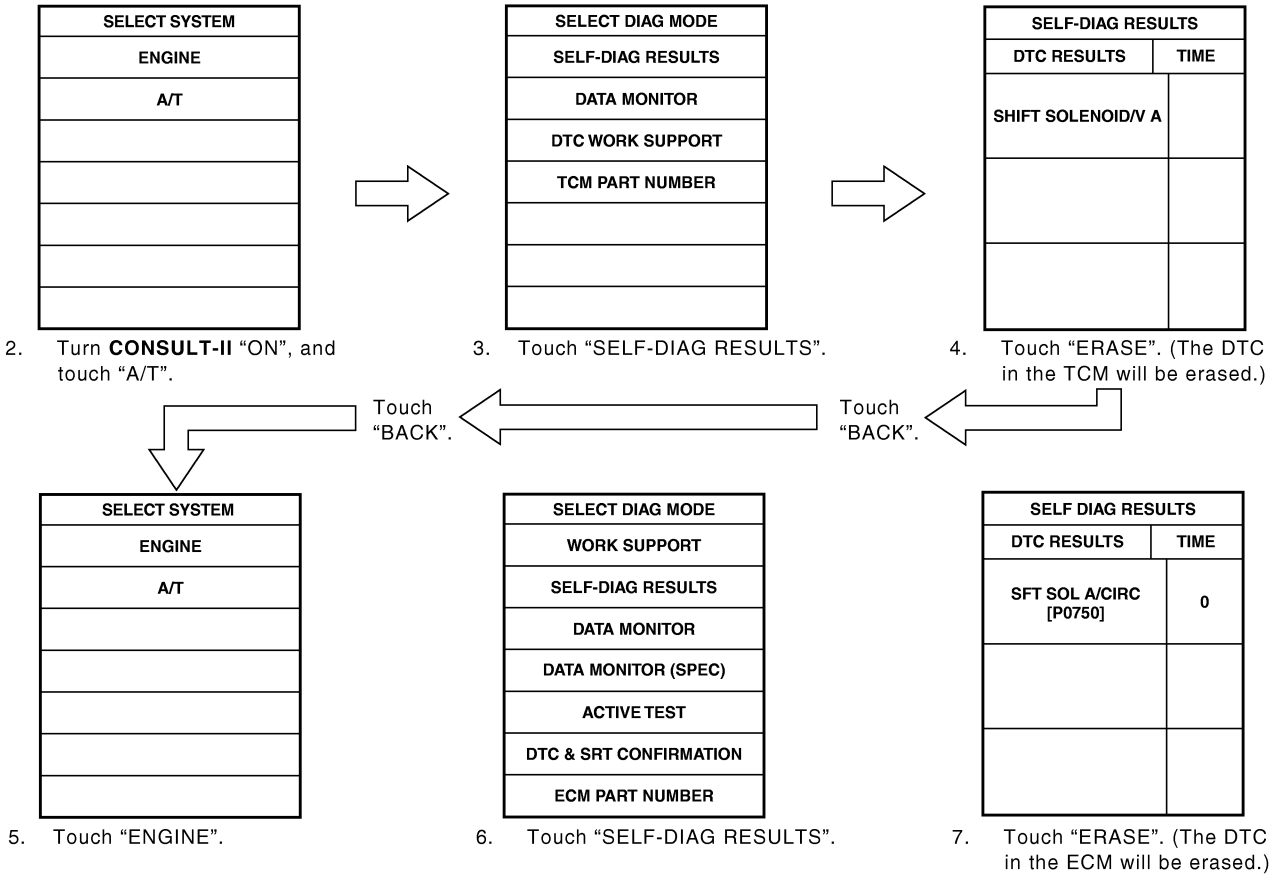

SEF823YD

The emission related diagnostic information in the ECM can be erased by selecting "ERASE" in the "SELF-DIAG RESULTS" mode with CONSULT-II.

How to Erase DTC (GST With GST)

NEEC1108S0602

NOTE:

If the DTC is not for A/T related items (see EC-1219), skip step 2.

1. If the ignition switch stays ON after repair work, be sure to turn ignition switch OFF once. Wait at least 5 seconds and then turn it ON (engine stopped) again.
2. Perform "SELF-DIAGNOSTIC PROCEDURE (Without CONSULT-II)" in AT section titled "TROUBLE DIAGNOSIS", "Self-diagnosis". (The engine warm-up step can be skipped when performing the diagnosis only to erase the DTC.)
3. Select Mode 4 with GST (Generic Scan Tool).

The emission related diagnostic information in the ECM can be erased by selecting Mode 4 with GST.

- **If the battery is disconnected, the emission-related diagnostic information will be lost after approx. 24 hours.**
- **Erasing the emission-related diagnostic information using CONSULT-II or GST is easier and quicker than switching the mode selector on the ECM.**
- **The following data are cleared when the ECM memory is erased.**

1) Diagnostic trouble codes
2) 1st trip diagnostic trouble codes
3) Freeze frame data
4) 1st trip freeze frame data
5) System readiness test (SRT) codes
6) Test values
7) Others

Actual work procedures are explained using a DTC as an example. Be careful so that not only the DTC, but all of the data listed above, are cleared from the ECM memory during work procedures.

Malfunction Indicator Lamp (MIL)

DESCRIPTION

NEEC1109

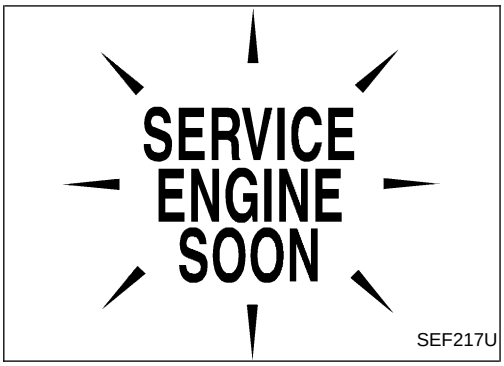

The MIL is located on the instrument panel.

1. The MIL will light up when the ignition switch is turned ON without the engine running. This is a bulb check.
- If the MIL does not light up, refer to EL section (“WARNING LAMPS”) or see EC-1819.
2. When the engine is started, the MIL should go OFF.
   If the MIL remains on, the on board diagnostic system has detected an engine system malfunction.

On Board Diagnostic System Function

NEEC1109S01

The on board diagnostic system has the following two functions.

Diagnostic Test Mode	KEY and ENG. Status	Function	Explanation of Function
Mode I	Ignition switch in ON position  Engine stopped 	BULB CHECK	This function checks the MIL bulb for damage (blown, open circuit, etc.). If the MIL does not come on, check MIL circuit. (See EC-1819.)
	Engine running 	MALFUNCTION WARNING	This is a usual driving condition. When a malfunction is detected twice in two consecutive driving cycles (two trip detection logic), the MIL will light up to inform the driver that a malfunction has been detected. The following malfunctions will light up or blink the MIL in the 1st trip. ● Coolant overtemperature enrichment protection ● “Misfire (Possible three way catalyst damage)” ● “Closed loop control” ● Fail-safe mode

Diagnostic Test Mode I — Bulb Check

NEEC1109S02

In this mode, the MIL on the instrument panel should stay ON. If it remains OFF, check the bulb. Refer to ***EL-84***, “WARNING LAMPS” or see EC-1819.

Diagnostic Test Mode I — Malfunction Warning

NEEC1109S03

MIL	Condition
ON	When the malfunction is detected or the ECM’s CPU is malfunctioning.
OFF	No malfunction.

OBD System Operation Chart

NEEC1110

RELATIONSHIP BETWEEN MIL, 1ST TRIP DTC, DTC, AND DETECTABLE ITEMS

NEEC1110S01

- When a malfunction is detected for the first time, the 1st trip DTC and the 1st trip freeze frame data are stored in the ECM memory.
- When the same malfunction is detected in two consecutive trips, the DTC and the freeze frame data are stored in the ECM memory, and the MIL will come on. For details, refer to “Two Trip Detection Logic” on EC-1274.
- The MIL will go off after the vehicle is driven 3 times with no malfunction. The drive is counted only when the recorded driving pattern is met (as stored in the ECM). If another malfunction occurs while counting, the counter will reset.
- The DTC and the freeze frame data will be stored until the vehicle is driven 40 times (driving pattern A) without the same malfunction recurring (except for Misfire and Fuel Injection System). For Misfire and Fuel Injection System, the DTC and freeze frame data will be stored until the vehicle is driven 80 times (driving pattern C) without the same malfunction recurring. The “TIME” in “SELF-DIAGNOSTIC RESULTS” mode of CONSULT-II will count the number of times the vehicle is driven.
- The 1st trip DTC is not displayed when the self-diagnosis results in “OK” for the 2nd trip.

SUMMARY CHART

NEEC1110S02

Items	Fuel Injection System	Misfire	Other
MIL (goes off)	3 (pattern B)	3 (pattern B)	3 (pattern B)
DTC, Freeze Frame Data (no display)	80 (pattern C)	80 (pattern C)	40 (pattern A)
1st Trip DTC (clear)	1 (pattern C), *1	1 (pattern C), *1	1 (pattern B)
1st Trip Freeze Frame Data (clear)	*1, *2	*1, *2	1 (pattern B)

For details about patterns “B” and “C” under “Fuel Injection System” and “Misfire”, see EC-1292.

For details about patterns “A” and “B” under “Other”, see EC-1294.

*1: Clear timing is at the moment OK is detected.

*2: Clear timing is when the same malfunction is detected in the 2nd trip.

RELATIONSHIP BETWEEN MIL, DTC, 1ST TRIP DTC AND DRIVING PATTERNS FOR "MISFIRE" <EXHAUST QUALITY DETERIORATION>, "FUEL INJECTION SYSTEM"

=NEEC1110S03

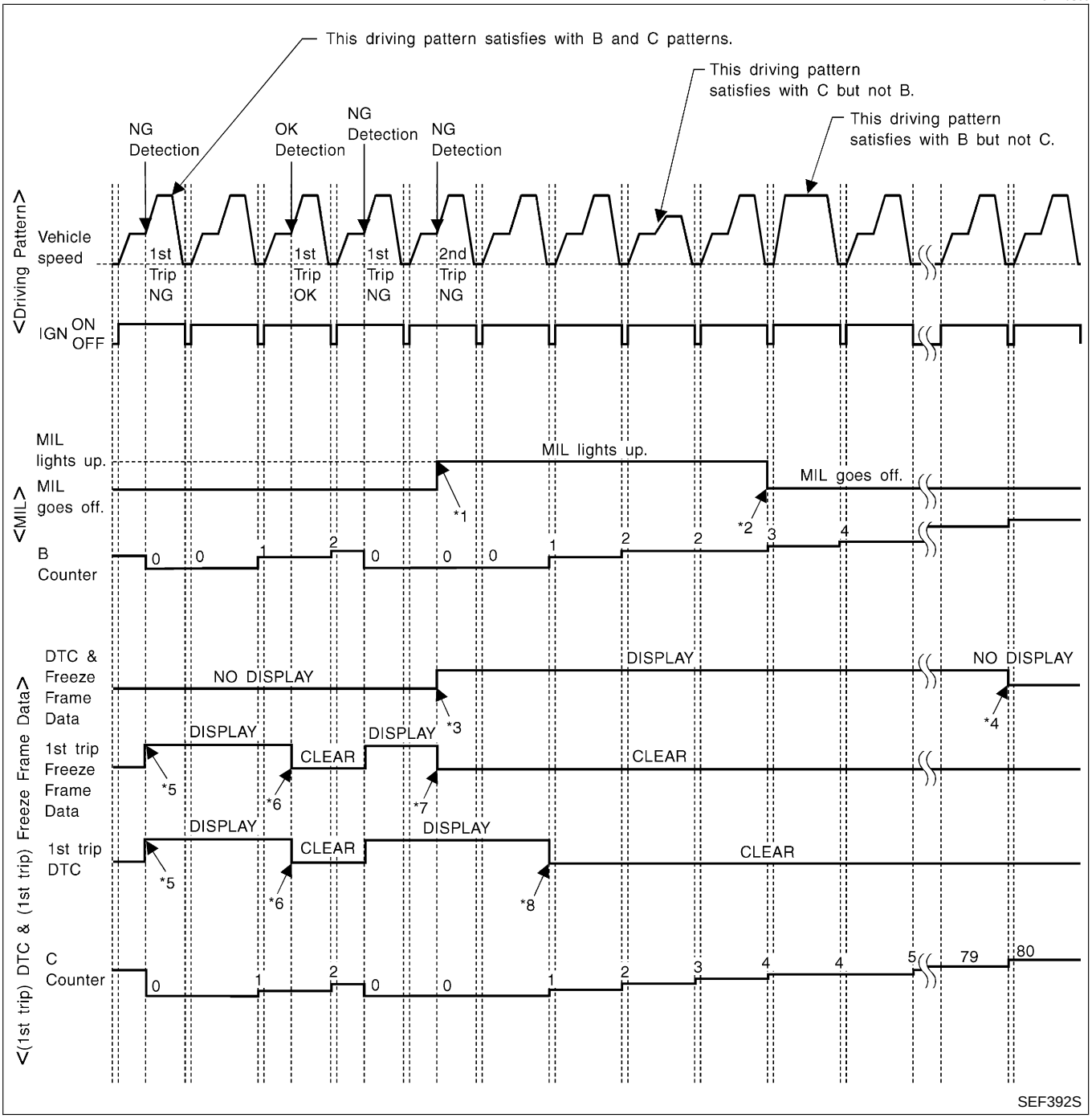

*1: When the same malfunction is detected in two consecutive trips, MIL will light up.

*2: MIL will go off after vehicle is driven 3 times (pattern B) without any malfunctions.

*3: When the same malfunction is detected in two consecutive trips, the DTC and the freeze frame data will be stored in ECM.

*4: The DTC and the freeze frame data will not be displayed any longer after vehicle is driven 80 times (pattern C) without the same malfunction. (The DTC and the freeze frame data still remain in ECM.)

*5: When a malfunction is detected for the first time, the 1st trip DTC and the 1st trip freeze frame data will be stored in ECM.

*6: The 1st trip DTC and the 1st trip freeze frame data will be cleared at the moment OK is detected.

*7: When the same malfunction is detected in the 2nd trip, the 1st trip freeze frame data will be cleared.

*8: 1st trip DTC will be cleared when vehicle is driven once (pattern C) without the same malfunction after DTC is stored in ECM.

EXPLANATION FOR DRIVING PATTERNS FOR "MISFIRE <EXHAUST QUALITY DETERIORATION>", "FUEL INJECTION SYSTEM"

NEEC1110S04

<Driving Pattern B>

NEEC1110S0401

Driving pattern B means the vehicle operation as follows:
All components and systems should be monitored at least once by the OBD system.

- The B counter will be cleared when the malfunction is detected once regardless of the driving pattern.
- The B counter will be counted up when driving pattern B is satisfied without any malfunction.
- The MIL will go off when the B counter reaches 3. (*2 in "OBD SYSTEM OPERATION CHART")

<Driving Pattern C>

NEEC1110S0402

Driving pattern C means the vehicle operation as follows:

1) The following conditions should be satisfied at the same time:
   Engine speed: (Engine speed in the freeze frame data) ±375 rpm
   Calculated load value: (Calculated load value in the freeze frame data) x (1±0.1) [%]
   Engine coolant temperature (T) condition:

- When the freeze frame data shows lower than 70°C (158°F), "T" should be lower than 70°C (158°F).
- When the freeze frame data shows higher than or equal to 70°C (158°F), "T" should be higher than or equal to 70°C (158°F).

Example:
If the stored freeze frame data is as follows:
Engine speed: 850 rpm, Calculated load value: 30%, Engine coolant temperature: 80°C (176°F)
To be satisfied with driving pattern C, the vehicle should run under the following conditions:
Engine speed: 475 - 1,225 rpm, Calculated load value: 27 - 33%, Engine coolant temperature: more than 70°C (158°F)

- The C counter will be cleared when the malfunction is detected regardless of (1).
- The C counter will be counted up when (1) is satisfied without the same malfunction.
- The DTC will not be displayed after C counter reaches 80.
- The 1st trip DTC will be cleared when C counter is counted once without the same malfunction after DTC is stored in ECM.

RELATIONSHIP BETWEEN MIL, DTC, 1ST TRIP DTC AND DRIVING PATTERNS EXCEPT FOR "MISFIRE <EXHAUST QUALITY DETERIORATION>", "FUEL INJECTION SYSTEM"

NEEC1110S05

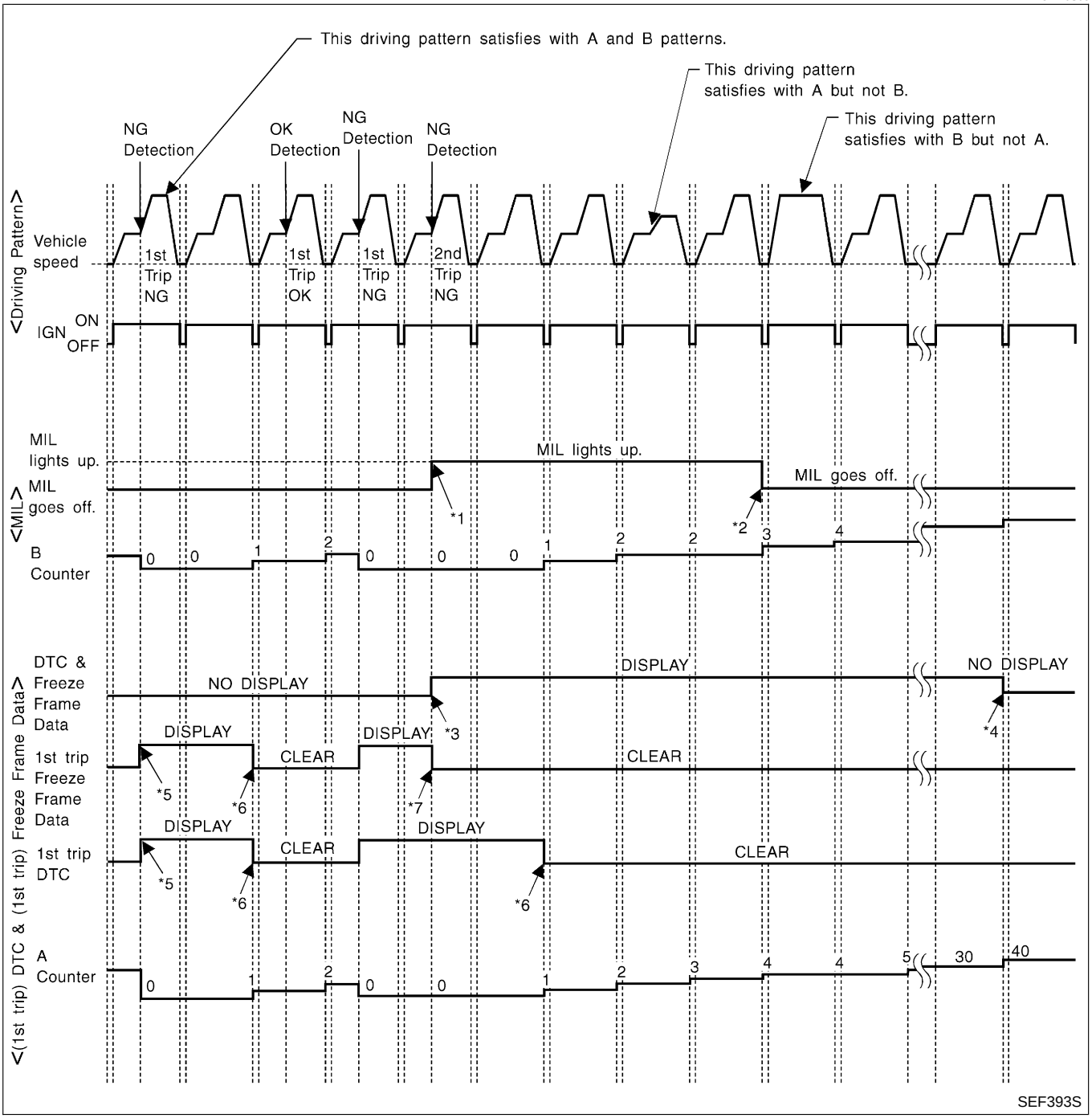

*1: When the same malfunction is detected in two consecutive trips, MIL will light up.

*2: MIL will go off after vehicle is driven 3 times (pattern B) without any malfunctions.

*3: When the same malfunction is detected in two consecutive trips, the DTC and the freeze frame data will be stored in ECM.

*4: The DTC and the freeze frame data will not be displayed any longer after vehicle is driven 40 times (pattern A) without the same malfunction.
(The DTC and the freeze frame data still remain in ECM.)

*5: When a malfunction is detected for the first time, the 1st trip DTC and the 1st trip freeze frame data will be stored in ECM.

*6: 1st trip DTC will be cleared after vehicle is driven once (pattern B) without the same malfunction.

*7: When the same malfunction is detected in the 2nd trip, the 1st trip freeze frame data will be cleared.

EXPLANATION FOR DRIVING PATTERNS EXCEPT FOR "MISFIRE <EXHAUST QUALITY DETERIORATION>", "FUEL INJECTION SYSTEM"

NEEC1110S06

<Driving Pattern A>

NEEC1110S0601

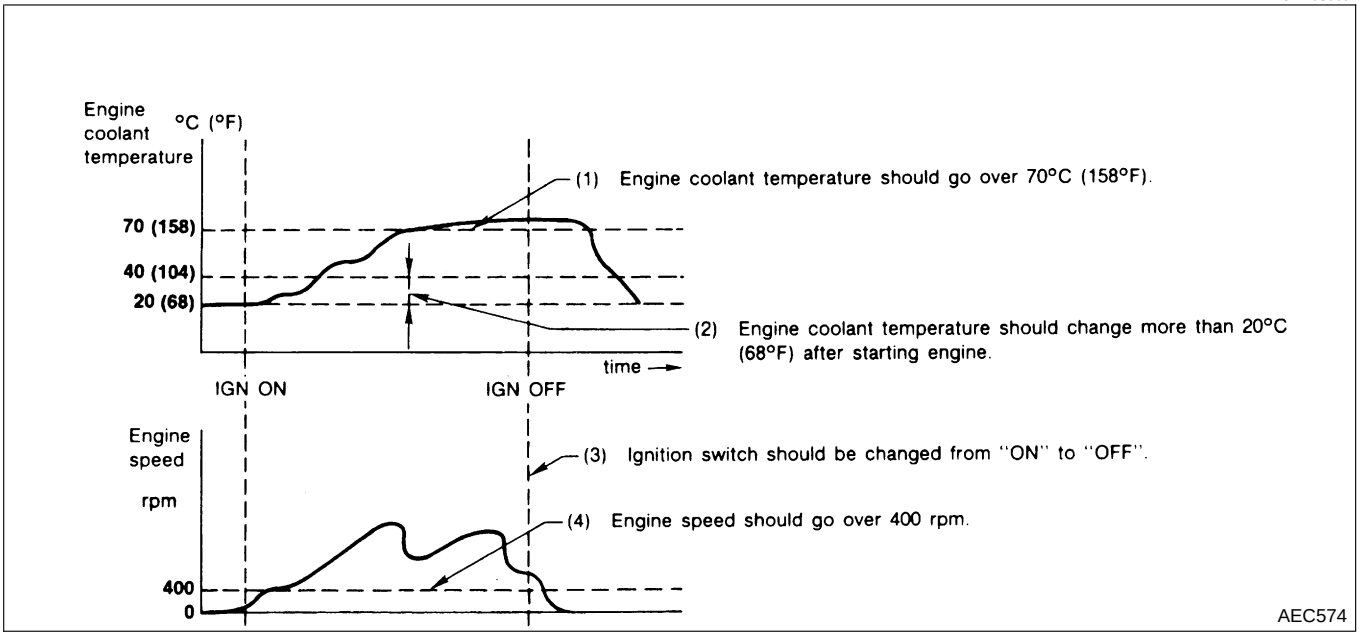

- The A counter will be cleared when the malfunction is detected regardless of (1) - (4).
- The A counter will be counted up when (1) - (4) are satisfied without the same malfunction.
- The DTC will not be displayed after the A counter reaches 40.

<Driving Pattern B>

NEEC1110S0602

Driving pattern B means the vehicle operation as follows:
All components and systems should be monitored at least once by the OBD system.

- The B counter will be cleared when the malfunction is detected once regardless of the driving pattern.
- The B counter will be counted up when driving pattern B is satisfied without any malfunctions.
- The MIL will go off when the B counter reaches 3 (*2 in "OBD SYSTEM OPERATION CHART").

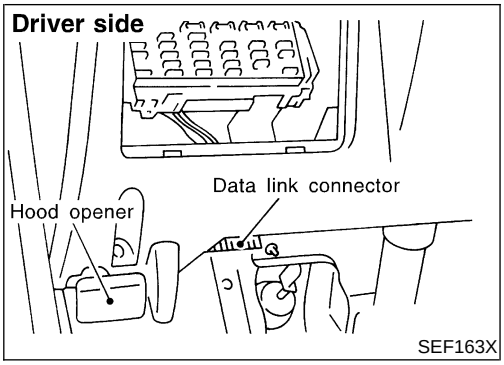

SEF163X

CONSULT-II

=NEEC1111

CONSULT-II INSPECTION PROCEDURE

NEEC1111S01

1. Turn ignition switch OFF.
2. Connect “CONSULT-II” to data link connector which is located under LH dash panel near the fuse box cover.

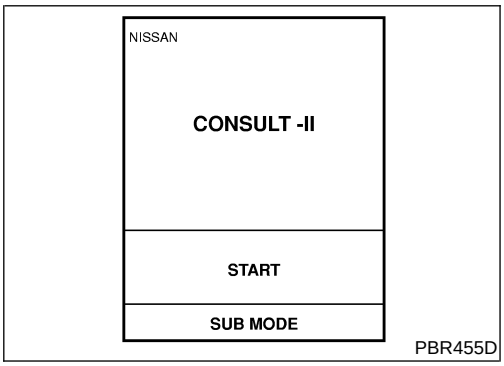

PBR455D

3. Turn ignition switch ON.
4. Touch “START”.

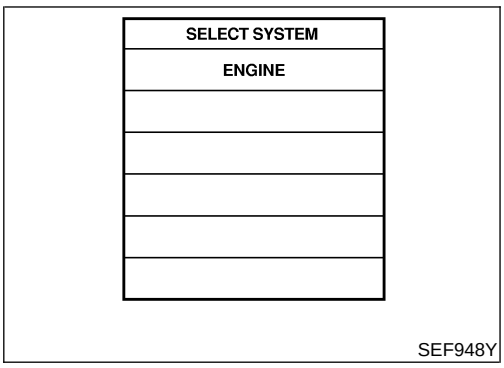

SEF948Y

5. Touch “ENGINE”.

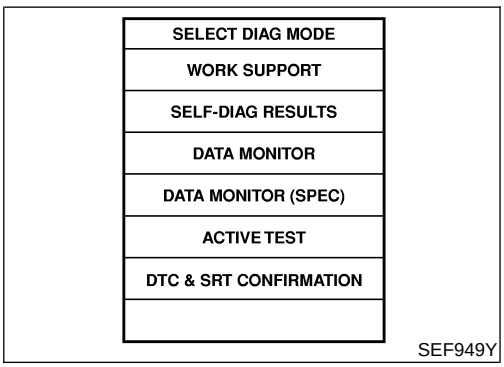

SEF949Y

6. Perform each diagnostic test mode according to each service procedure.

For further information, see the CONSULT-II Operation Manual.

ENGINE CONTROL COMPONENT PARTS/CONTROL SYSTEMS APPLICATION

NEEC1111S02

		Item	DIAGNOSTIC TEST MODE							
			WORK SUP-PORT	SELF-DIAGNOSTIC RESULTS		DATA MONI-TOR	DATA MONI-TOR (SPEC)	ACTIVE TEST	DTC & SRT CONFIRMATION	
				DTC*1	FREEZE FRAME DATA*2				SRT STA-TUS	DTC WORK SUP-PORT
ENGINE CONTROL COMPONENT PARTS	INPUT	Camshaft position sensor		X	X	X	X			
		Mass air flow sensor		X		X	X			
		Engine coolant temperature sen-sor		X	X	X	X	X		
		Heated oxygen sensor 1 (front)		X		X	X		X	X
		Heated oxygen sensor 2 (rear)		X		X	X		X	X
		Vehicle speed sensor		X	X	X	X			
		Throttle position sensor		X		X	X			
		Fuel tank temperature sensor		X		X	X	X		
		EVAP control system pressure sensor		X		X	X			
		Absolute pressure sensor (Built into ECM)		X		X	X			
		Intake air temperature sensor		X		X	X			
		Crankshaft position sensor (OBD)		X						
		Knock sensor		X						
		Ignition switch (start signal)				X	X			
		Closed throttle position switch		X		X	X			
		Closed throttle position switch (throttle position sensor signal)				X	X			
		Air conditioner switch				X	X			
		Park/neutral position (PNP) switch		X		X	X			
		Power steering oil pressure switch				X	X			
		Battery voltage				X	X			
		Ambient air temperature switch				X	X			

Item			DIAGNOSTIC TEST MODE							
			WORK SUPPORT	SELF-DIAGNOSTIC RESULTS		DATA MONITOR	DATA MONITOR (SPEC)	ACTIVE TEST	DTC & SRT CONFIRMATION	
				DTC*1	FREEZE FRAME DATA*2				SRT STATUS	DTC WORK SUPPORT
ENGINE CONTROL COMPONENT PARTS	OUTPUT	Injectors				X	X	X		
		Power transistor (Ignition timing)				X	X	X		
		IACV-AAC valve	X	X		X	X	X		
		EVAP canister purge volume control solenoid valve		X		X	X	X		X
		Air conditioner relay				X	X			
		Fuel pump relay	X			X	X	X		
		Cooling fan		X		X	X	X		
		Heated oxygen sensor 1 heater (front)		X		X	X		X	
		Heated oxygen sensor 2 heater (rear)		X		X	X		X	
		EVAP canister vent control valve		X		X	X	X		
		Vacuum cut valve bypass valve		X		X	X	X		X
		SCB valve control solenoid valve		X		X	X	X		
		Calculated load value			X	X	X			

X: Applicable

*1: This item includes 1st trip DTCs.

*2: This mode includes 1st trip freeze frame data or freeze frame data. The items appear on CONSULT-II screen in freeze frame data mode only if a 1st trip DTC or DTC is detected. For details, refer to EC-1275.

CONSULT-II (Cont'd)

FUNCTION

=NEEC1111S03

Diagnostic test mode	Function
Work support	This mode enables a technician to adjust some devices faster and more accurately by following the indications on the CONSULT-II unit.
Self-diagnostic results	Self-diagnostic results such as 1st trip DTC, DTCs and 1st trip freeze frame data or freeze frame data can be read and erased quickly.*1
Data monitor	Input/Output data in the ECM can be read.
Data monitor (SPEC)	Input/Output specification of the basic fuel schedule, AFM, A/F feedback control value and the other data monitor items can be read.
Active test	Diagnostic Test Mode in which CONSULT-II drives some actuators apart from the ECMs and also shifts some parameters in a specified range.
DTC confirmation	The status of system monitoring tests and the self-diagnosis status/result can be confirmed.
ECM part number	ECM part number can be read.

*1 The following emission-related diagnostic information is cleared when the ECM memory is erased.

1) Diagnostic trouble codes
2) 1st trip diagnostic trouble codes
3) Freeze frame data
4) 1st trip freeze frame data
5) System readiness test (SRT) codes
6) Test values
7) Others

WORK SUPPORT MODE

NEEC1111S04

WORK ITEM	CONDITION	USAGE
TP SW/TP SEN IDLE POSI ADJ	● FOLLOW THE BASIC INSPECTION INSTRUCTION IN THE SERVICE MANUAL.	When adjusting the idle throttle position
IGNITION TIMING ADJ	● IGNITION TIMING FEEDBACK CONTROL WILL BE HELD BY TOUCHING "START". AFTER DOING SO, ADJUST IGNITION TIMING WITH A TIMING LIGHT BY TURNING THE CAMSHAFT POSITION SENSOR.	When adjusting target ignition timing After adjustment, confirm target ignition timing with a timing light by turning the distributor.
FUEL PRESSURE RELEASE	● FUEL PUMP WILL STOP BY TOUCHING "START" DURING IDLING. CRANK A FEW TIMES AFTER ENGINE STALLS.	When releasing fuel pressure from fuel line
SELF-LEARNING CONT	● THE COEFFICIENT OF SELF-LEARNING CONTROL MIXTURE RATIO RETURNS TO THE ORIGINAL COEFFICIENT.	When clean the coefficient of self-learning control valve

WORK ITEM	CONDITION	USAGE
EVAP SYSTEM CLOSE	OPEN THE VACUUM CUT VALVE BYPASS VALVE AND CLOSE THE EVAP CANISTER VENT CONTROL VALVE IN ORDER TO MAKE EVAP SYSTEM CLOSE UNDER THE FOLLOWING CONDITIONS. ● IGN SW ON ● ENGINE NOT RUNNING ● AMBIENT TEMPERATURE IS ABOVE 0°C (32°F). ● NO VACUUM AND NO HIGH PRESSURE IN EVAP SYSTEM ● FUEL TANK TEMP. IS MORE THAN 0°C (32°F). ● WITHIN 10 MINUTES AFTER STARTING "EVAP SYSTEM CLOSE" ● WHEN TRYING TO EXECUTE "EVAP SYSTEM CLOSE" UNDER THE CONDITION EXCEPT ABOVE, CONSULT-II WILL DISCONTINUE IT AND DISPLAY APPROPRIATE INSTRUCTION. **NOTE:** **WHEN STARTING ENGINE, CONSULT-II MAY DISPLAY "BATTERY VOLTAGE IS LOW. CHARGE BATTERY", EVEN IN USING CHARGED BATTERY.**	When detecting EVAP vapor leak point of EVAP system
TARGET IDLE RPM ADJ*	SET ENGINE SPEED AT THE SPECIFIED VALUE UNDER THE FOLLOWING CONDITIONS. ● ENGINE WARMED UP ● NO-LOAD	When adjusting initial ignition timing and idle speed

*: This function is not necessary in the usual service procedure.

SELF-DIAGNOSTIC MODE

NEEC1111S05

DTC and 1st Trip DTC

NEEC1111S0501

Regarding items of "DTC and 1st trip DTC", refer to "TROUBLE DIAGNOSIS — INDEX" (See EC-1219.)

Freeze Frame Data and 1st Trip Freeze Frame Data

NEEC1111S0502

Freeze frame data item *1	Description
DIAG TROUBLE CODE [PXXXX]	● The engine control component part/control system has a trouble code, it is displayed as "PXXXX". (Refer to "TROUBLE DIAGNOSIS — INDEX", EC-1219.)
FUEL SYS-B1 *2	● "Fuel injection system status" at the moment a malfunction is detected is displayed. ● One mode in the following is displayed. "MODE 2": Open loop due to detected system malfunction "MODE 3": Open loop due to driving conditions (power enrichment, deceleration enrichment) "MODE 4": Closed loop - using oxygen sensor(s) as feedback for fuel control "MODE 5": Open loop - has not yet satisfied condition to go to closed loop
FUEL SYS-B2 *2	
CAL/LD VALUE [%]	● The calculated load value at the moment a malfunction is detected is displayed.
COOLANT TEMP [°C] or [°F]	● The engine coolant temperature at the moment a malfunction is detected is displayed.
S-FUEL TRIM-B1 [%]	● "Short-term fuel trim" at the moment a malfunction is detected is displayed. ● The short-term fuel trim indicates dynamic or instantaneous feedback compensation to the base fuel schedule.
S-FUEL TRIM-B2 [%]	
L-FUEL TRIM-B1 [%]	● "Long-term fuel trim" at the moment a malfunction is detected is displayed. ● The long-term fuel trim indicates much more gradual feedback compensation to the base fuel schedule than short-term fuel trim.
L-FUEL TRIM-B2 [%]	
ENGINE SPEED [rpm]	● The engine speed at the moment a malfunction is detected is displayed.

CONSULT-II (Cont'd)

Freeze frame data item *1	Description
VHCL SPEED [km/h] or [mph]	● The vehicle speed at the moment a malfunction is detected is displayed.
ABSOL TH·P/S [%]	● The throttle valve opening angle at the moment a malfunction is detected is displayed.
B/FUEL SCHDL [msec]	● The base fuel schedule at the moment a malfunction is detected is displayed.
INT/A TEMP SE [°C] or [°F]	● The intake air temperature at the moment a malfunction is detected is displayed.

*1: The items are the same as those of 1st trip freeze frame data.

*2: Regarding D22 model, "-B1" indicates right bank and "-B2" indicates left bank.

DATA MONITOR MODE

=NEEC1111S06

Monitored item [Unit]	ECM input signals	Main signals	Description	Remarks
ENG SPEED [rpm]	○	○	• Indicates the engine speed computed from the REF signal (120° signal) of the camshaft position sensor.	
MAS A/F SE-B1 [V]	○	○	• The signal voltage of the mass air flow sensor is displayed.	• When the engine is stopped, a certain value is indicated.
B/FUEL SCHDL [msec]		○	• "Base fuel schedule" indicates the fuel injection pulse width programmed into ECM, prior to any learned on board correction.	
A/F ALPHA-B1 [%]		○	• The mean value of the air-fuel ratio feedback correction factor per cycle is indicated.	• When the engine is stopped, a certain value is indicated. • This data also includes the data for the air-fuel ratio learning control.
A/F ALPHA-B2 [%]		○		
COOLAN TEMP/S [°C] or [°F]	○	○	• The engine coolant temperature (determined by the signal voltage of the engine coolant temperature sensor) is displayed.	• When the engine coolant temperature sensor is open or short-circuited, ECM enters fail-safe mode. The engine coolant temperature determined by the ECM is displayed.
HO2S1 (B1) [V]	○	○	• The signal voltage of the heated oxygen sensor 1 (front) is displayed.	
HO2S1 (B2) [V]	○	○		
HO2S2 (B1) [V]	○	○	• The signal voltage of the heated oxygen sensor 2 (rear) is displayed.	
HO2S2 (B2) [V]	○	○		
HO2S1 MNTR (B1) [RICH/LEAN]	○		• Display of heated oxygen sensor 1 (front) signal during air-fuel ratio feedback control: RICH ... means the mixture became "rich", and control is being affected toward a leaner mixture. LEAN ... means the mixture became "lean", and control is being affected toward a rich mixture.	• After turning ON the ignition switch, "RICH" is displayed until air-fuel mixture ratio feedback control begins. • When the air-fuel ratio feedback is clamped, the value just before the clamping is displayed continuously.
HO2S1 MNTR (B2) [RICH/LEAN]	○			
HO2S2 MNTR (B1) [RICH/LEAN]	○		• Display of heated oxygen sensor 2 (rear) signal: RICH ... means the amount of oxygen after three way catalyst is relatively small. LEAN ... means the amount of oxygen after three way catalyst is relatively large.	• When the engine is stopped, a certain value is indicated.
HO2S2 MNTR (B2) [RICH/LEAN]	○			
VHCL SPEED SE [km/h] or [mph]	○	○	• The vehicle speed computed from the vehicle speed sensor signal is displayed.	
BATTERY VOLT [V]	○	○	• The power supply voltage of ECM is displayed.	
THRTL POS SEN [V]	○	○	• The throttle position sensor signal voltage is displayed.	
FUEL T/TMP SE [°C] or [°F]	○		• The fuel temperature judged from the fuel tank temperature sensor signal voltage is displayed.	

CONSULT-II (Cont'd)

Monitored item [Unit]	ECM input signals	Main signals	Description	Remarks
INT/A TEMP SE [°C] or [°F]	○	○	• The intake air temperature determined by the signal voltage of the intake air temperature sensor is indicated.	
EVAP SYS PRES [V]			• The signal voltage of EVAP control system pressure sensor is displayed.	
ABSOL PRES/SE [V]			• The signal voltage of the absolute pressure sensor is displayed.	
FUEL LEVEL SE [V]	○		• The signal voltage of the fuel level sensor is displayed.	
START SIGNAL [ON/OFF]	○	○	• Indicates [ON/OFF] condition from the starter signal.	• After starting the engine, [OFF] is displayed regardless of the starter signal.
CLSD THL POS [ON/OFF]	○	○	• Indicates idle position [ON/OFF] computed by ECM according to the throttle position sensor signal.	
CLSD THL/P SW [ON/OFF]	○		• Indicates mechanical contact [ON/OFF] condition of the closed throttle position switch.	
AIR COND SIG [ON/OFF]	○	○	• Indicates [ON/OFF] condition of the air conditioner switch as determined by the air conditioner signal.	
P/N POSI SW [ON/OFF]	○	○	• Indicates [ON/OFF] condition from the park/neutral position (PNP) switch signal.	
PW/ST SIGNAL [ON/OFF]	○	○	• [ON/OFF] condition of the power steering oil pressure switch determined by the power steering oil pressure signal is indicated.	
AMB TEMP SW [ON/OFF]	○		• Indicates [ON/OFF] condition from the ambient air temperature switch signal.	
IGNITION SW [ON/OFF]	○		• Indicates [ON/OFF] condition from ignition switch.	
INJ PULSE-B1 [msec]		○	• Indicates the actual fuel injection pulse width compensated by ECM according to the input signals.	• When the engine is stopped, a certain computed value is indicated.
INJ PULSE-B2 [msec]				
IGN TIMING [BTDC]		○	• Indicates the ignition timing computed by ECM according to the input signals.	• When the engine is stopped, a certain value is indicated.
CAL/LD VALUE [%]			• "Calculated load value" indicates the value of the current airflow divided by peak airflow.	
ABSOL TH·P/S [%]			• "Absolute throttle position sensor" indicates the throttle opening computed by ECM according to the signal voltage of the throttle position sensor.	
MASS AIRFLOW [g·m/s]			• Indicates the mass airflow computed by ECM according to the signal voltage of the mass airflow sensor.	
IACV-AAC/V [%]		○	• Indicates the IACV-AAC valve control value computed by ECM according to the input signals.	

Monitored item [Unit]	ECM input signals	Main signals	Description	Remarks
PURG VOL C/V [%]			• Indicates the EVAP canister purge volume control solenoid valve control value computed by the ECM according to the input signals. • The opening becomes larger as the value increases.	
AIR COND RLY [ON/OFF]		○	• The air conditioner relay control condition (determined by ECM according to the input signal) is indicated.	
FUEL PUMP RLY [ON/OFF]		○	• Indicates the fuel pump relay control condition determined by ECM according to the input signals.	
VENT CONT/V [ON/OFF]			• The control condition of the EVAP canister vent control valve (determined by ECM according to the input signal) is indicated. • ON ... Closed OFF ... Open	
VC/V BYPASS/V [ON/OFF]			• The control condition of the vacuum cut valve bypass valve (determined by ECM according to the input signal) is indicated. • ON ... Open OFF ... Closed	
COOLING FAN [ON/OFF]		○	• Indicates the control condition of the cooling fan (determined by ECM according to the input signal). ON ... Operation OFF ... Stop	
HO2S1 HTR (B1) [ON/OFF]			• Indicates [ON/OFF] condition of front heated oxygen sensor heater determined by ECM according to the input signals.	
HO2S1 HTR (B1) [ON/OFF]				
HO2S2 HTR (B1) [ON/OFF]			• Indicates [ON/OFF] condition of rear heated oxygen sensor heater determined by ECM according to the input signals.	
HO2S2 HTR (B2) [ON/OFF]				
SCB/V CON S/V			• The control condition of the SCB valve control solenoid valve (determined by ECM according to the input signals) is indicated. • ON ... SCB valve is closed. OFF ... SCB valve is opened.	
VOLTAGE [V]			• Voltage measured by the voltage probe.	
FREQUENCY [msec] or [Hz] or [%]			• Pulse width, frequency or duty cycle measured by the pulse probe.	• Only "#" is displayed if item is unable to be measured. • Figures with "#"s are temporary ones. They are the same figures as an actual piece of data which was just previously measured.

NOTE:

- Any monitored item that does not match the vehicle being diagnosed is deleted from the display automatically.
- Regarding D22 model, "-B1" indicates right bank and "-B2" indicates left bank.

CONSULT-II (Cont'd)

DATA MONITOR (SPEC) MODE

NEEC1111S07

Monitored item [Unit]	ECM input signals	Main signals	Description	Remarks
MAS A/F SE-B1 [V]	○	○	• The signal voltage of the mass air flow sensor specification is displayed.	• When the engine is running, specification range is indicated.
B/FUEL SCHDL [msec]		○	• "Base fuel schedule" indicates the fuel injection pulse width programmed into ECM, prior to any learned on board correction.	• When the engine is running, specification range is indicated.
A/F ALPHA-B1 [%]		○	• Indicates the mean value of the air-fuel ratio feedback correction factor per cycle.	• When the engine is running, specification range is indicated. • This data also includes the data for the air-fuel ratio learning control.
A/F ALPHA-B2 [%]		○		

NOTE:

- Any monitored item that does not match the vehicle being diagnosed is deleted from the display automatically.
- Regarding D22 model, "B1" indicates bank 1 and "B2" indicates bank 2.

ACTIVE TEST MODE

NEEC1111S08

TEST ITEM	CONDITION	JUDGEMENT	CHECK ITEM (REMEDY)
FUEL INJECTION	• Engine: Return to the original trouble condition • Change the amount of fuel injection using CONSULT-II.	If trouble symptom disappears, see CHECK ITEM.	• Harness and connector • Fuel injectors • Front heated oxygen sensor
IGNITION TIMING	• Engine: Return to the original trouble condition • Timing light: Set • Retard the ignition timing using CONSULT-II.	If trouble symptom disappears, see CHECK ITEM.	• Adjust initial ignition timing
IACV-AAC/V OPENING	• Engine: After warming up, idle the engine. • Change the IACV-AAC valve opening percent using CONSULT-II.	Engine speed changes according to the opening percent.	• Harness and connector • IACV-AAC valve
POWER BALANCE	• Engine: After warming up, idle the engine. • A/C switch "OFF" • Shift lever "N" • Cut off each injector signal one at a time using CONSULT-II.	Engine runs rough or dies.	• Harness and connector • Compression • Injectors • Power transistor • Spark plugs • Ignition coils
COOLING FAN	• Ignition switch: ON • Turn the cooling fan "ON" and "OFF" using CONSULT-II.	Cooling fan moves and stops.	• Harness and connector • Cooling fan motor • Cooling fan relay
ENG COOLANT TEMP	• Engine: Return to the original trouble condition • Change the engine coolant temperature using CONSULT-II.	If trouble symptom disappears, see CHECK ITEM.	• Harness and connector • Engine coolant temperature sensor • Fuel injectors
FUEL PUMP RELAY	• Ignition switch: ON (Engine stopped) • Turn the fuel pump relay "ON" and "OFF" using CONSULT-II and listen to operating sound.	Fuel pump relay makes the operating sound.	• Harness and connector • Fuel pump relay

TEST ITEM	CONDITION	JUDGEMENT	CHECK ITEM (REMEDY)
PURG VOL CONT/V	• Engine: After warming up, run engine at 1,500 rpm. • Change the EVAP canister purge volume control solenoid valve opening percent using CONSULT-II.	Engine speed changes according to the opening percent.	• Harness and connector • Solenoid valve
FUEL/T TEMP SEN	• Change the fuel tank temperature using CONSULT-II.		
VENT CONTROL/V	• Ignition switch: ON (Engine stopped) • Turn solenoid valve "ON" and "OFF" with the CONSULT-II and listen to operating sound.	Solenoid valve makes an operating sound.	• Harness and connector • Solenoid valve
VC/V BYPASS/V	• Ignition switch: ON (Engine stopped) • Turn solenoid valve "ON" and "OFF" with the CONSULT-II and listen to operating sound.	Solenoid valve makes an operating sound.	• Harness and connector • Solenoid valve

DTC CONFIRMATION MODE

NEEC1111S09

SRT STATUS Mode

NEEC1111S0901

For details, refer to "SYSTEM READINESS TEST (SRT) CODE", EC-1276.

SRT WORK SUPPORT Mode

NEEC1111S0902

SRT status and some of the data monitor item can be read.

CONSULT-II (Cont'd)

DTC Work Support Mode

NEEC1111S0903

Test mode	Test item	Condition	Reference page
EVAPORATIVE SYSTEM	EVAP SML LEAK P0440/P1440	Refer to corresponding trouble diagnosis for DTC.	EC-1577
	EVAP V/S LEAK P1441		EC-1701
	PURG VOL CN/V P1444		EC-1716
	PURGE FLOW P1447		EC-1735
	VC CUT/V BP/V P1491		EC-1765
HEATED OXYGEN SENSOR 1 (FRONT)	HO2S1 (B1) P0130		EC-1400
	HO2S1 (B1) P0131		EC-1411
	HO2S1 (B1) P0132		EC-1420
	HO2S1 (B1) P0133		EC-1429
	HO2S1 (B2) P0150		EC-1400
	HO2S1 (B2) P0151		EC-1411
	HO2S1 (B2) P0152		EC-1420
	HO2S1 (B2) P0153		EC-1429
HEATED OXYGEN SENSOR 2 (REAR)	HO2S2 (B1) P0137		EC-1458
	HO2S2 (B1) P0138		EC-1468
	HO2S2 (B1) P0139		EC-1478
	HO2S2 (B2) P0157		EC-1458
	HO2S2 (B2) P0158		EC-1468
	HO2S2 (B2) P0159		EC-1478

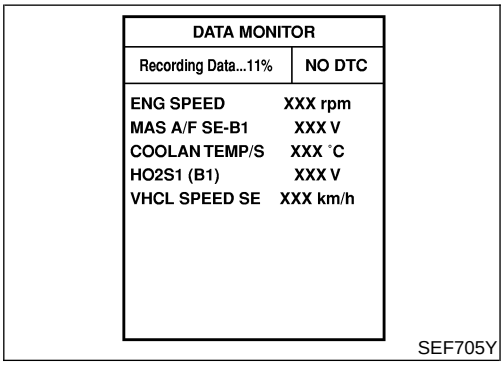

SEF705Y

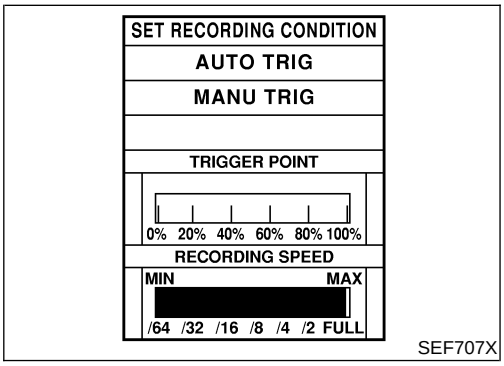

SEF707X

REAL TIME DIAGNOSIS IN DATA MONITOR MODE (RECORDING VEHICLE DATA)

NEEC1111S10

CONSULT-II has two kinds of triggers and they can be selected by touching "SETTING" in "DATA MONITOR" mode.

1) "AUTO TRIG" (Automatic trigger):

- The malfunction will be identified on the CONSULT-II screen in real time.
  In other words, DTC/1st trip DTC and malfunction item will be displayed if the malfunction is detected by ECM.
  At the moment a malfunction is detected by ECM, "MONITOR" in "DATA MONITOR" screen is changed to "Recording Data ... xx%" as shown at left, and the data after the malfunction detection is recorded. Then when the percentage reached 100%, "REAL-TIME DIAG" screen is displayed. If "STOP" is touched on the screen during " Recording Data ... xx%", "REAL-TIME DIAG" screen is also displayed.
  The recording time after the malfunction detection and the recording speed can be changed by "TRIGGER POINT" and "Recording Speed". Refer to CONSULT-II OPERATION MANUAL.

2) "MANU TRIG" (Manual trigger):

- DTC/1st trip DTC and malfunction item will not be displayed

automatically on CONSULT-II screen even though a malfunction is detected by ECM.
DATA MONITOR can be performed continuously even though a malfunction is detected.

Use these triggers as follows:

1) "AUTO TRIG"

- While trying to detect the DTC/1st trip DTC by performing the "DTC Confirmation Procedure", be sure to select to "DATA MONITOR (AUTO TRIG)" mode. You can confirm the malfunction at the moment it is detected.
- While narrowing down the possible causes, CONSULT-II should be set in "DATA MONITOR (AUTO TRIG)" mode, especially in case the incident is intermittent.
  When you are inspecting the circuit by gently shaking (or twisting) the suspicious connectors, components and harness in the "DTC Confirmation Procedure", the moment a malfunction is found the DTC/1st trip DTC will be displayed. (Refer to ***GI-24***, "Incident Simulation Tests".

2) "MANU TRIG"

- If the malfunction is displayed as soon as "DATA MONITOR" is selected, reset CONSULT-II to "MANU TRIG". By selecting "MANU TRIG" you can monitor and store the data. The data can be utilized for further diagnosis, such as a comparison with the value for the normal operating condition.

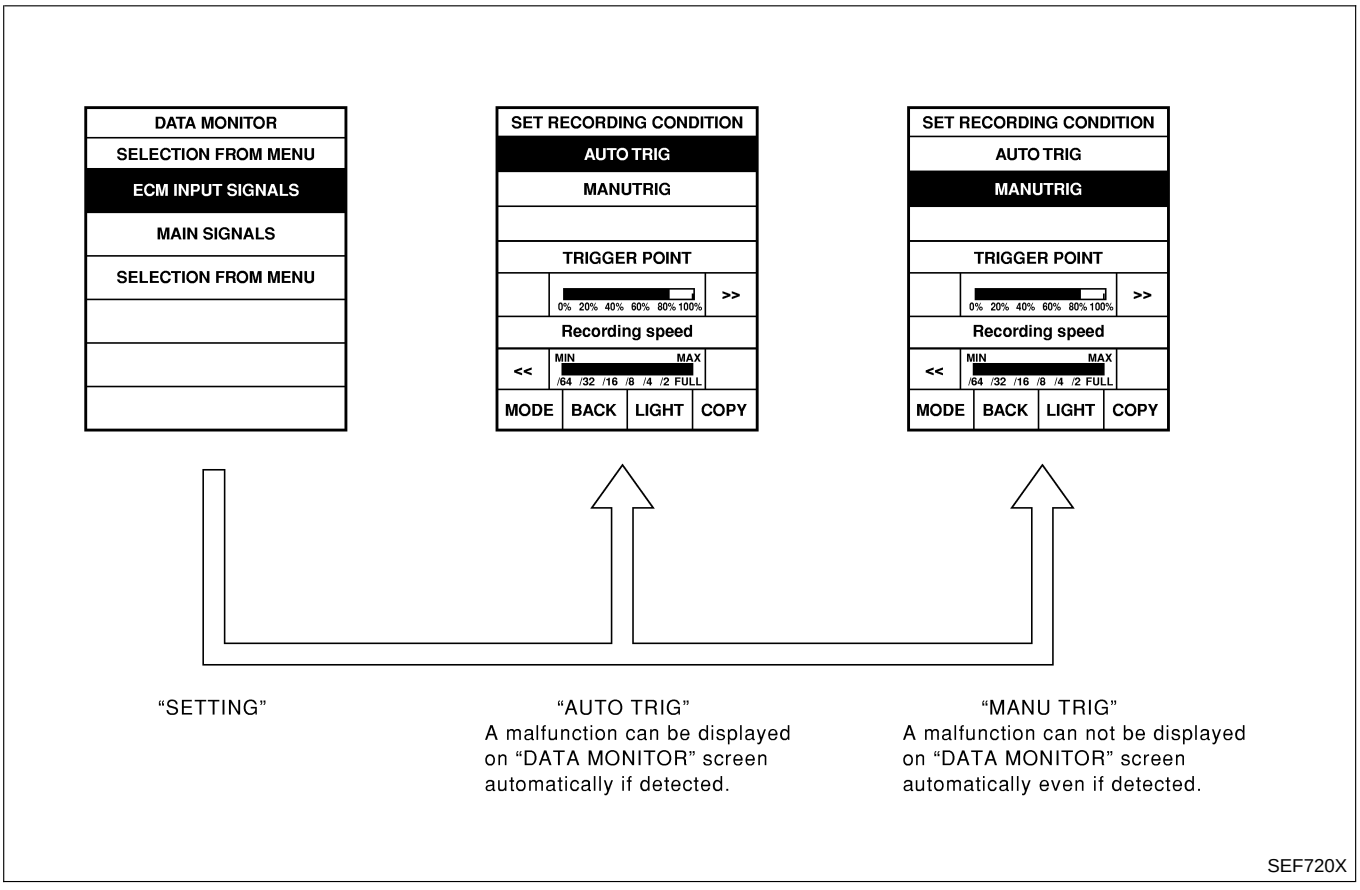

SEF720X

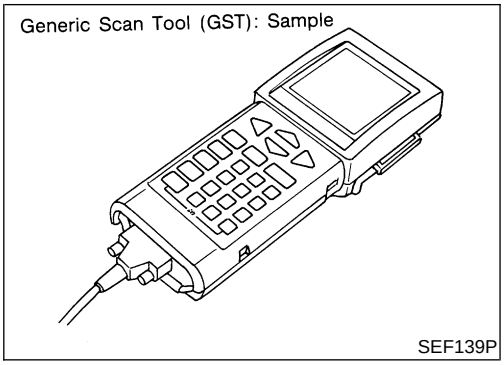

Generic Scan Tool (GST)

=NEEC1112

DESCRIPTION

NEEC1112S01

Generic Scan Tool (OBDII scan tool) complying with SAE J1978 has 7 different functions explained on the next page.
ISO9141 is used as the protocol.
The name “GST” or “Generic Scan Tool” is used in this service manual.

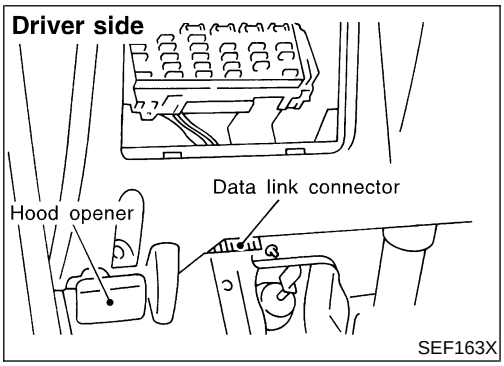

GST INSPECTION PROCEDURE

NEEC1112S02

1. Turn ignition switch OFF.
2. Connect “GST” to data link connector for GST which is located under LH dash panel near the fuse box cover.

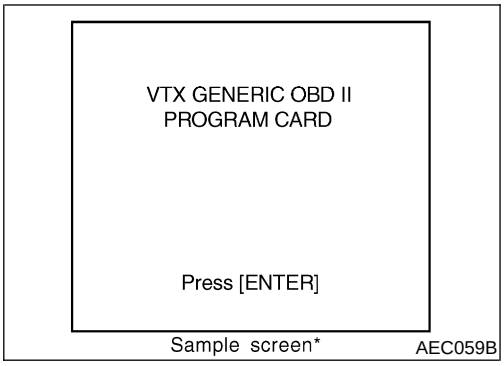

3. Turn ignition switch ON.
4. Enter the program according to instruction on the screen or in the operation manual.

(*: Regarding GST screens in this section, sample screens are shown.)

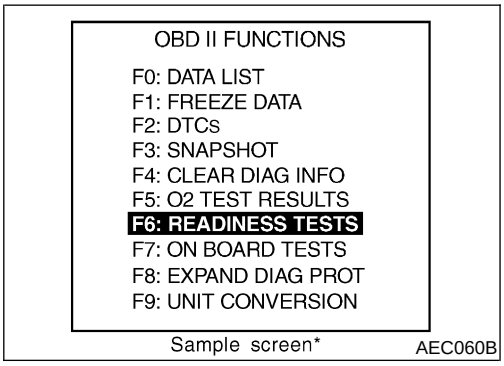

5. Perform each diagnostic mode according to each service procedure.

For further information, see the GST Operation Manual of the tool maker.

FUNCTION

NEEC1112S03

Diagnostic test mode		Function
MODE 1	READINESS TESTS	This mode gains access to current emission-related data values, including analog inputs and outputs, digital inputs and outputs, and system status information.
MODE 2	(FREEZE DATA)	This mode gains access to emission-related data value which were stored by ECM during the freeze frame. [For details, refer to "Freeze Frame Data" (EC-1299).]
MODE 3	DTCs	This mode gains access to emission-related power train trouble codes which were stored by ECM.
MODE 4	CLEAR DIAG INFO	This mode can clear all emission-related diagnostic information. This includes: ● Clear number of diagnostic trouble codes (MODE 1) ● Clear diagnostic trouble codes (MODE 3) ● Clear trouble code for freeze frame data (MODE 1) ● Clear freeze frame data (MODE 2) ● Reset status of system monitoring test (MODE 1) ● Clear on board monitoring test results (MODE 6 and 7)
MODE 6	(ON BOARD TESTS)	This mode accesses the results of on board diagnostic monitoring tests of specific components/systems that are not continuously monitored.
MODE 7	(ON BOARD TESTS)	This mode enables the off board test drive to obtain test results for emission-related powertrain components/systems that are continuously monitored during normal driving conditions.
MODE 8	—	This mode can close EVAP system in ignition switch "ON" position (Engine stopped). When this mode is performed, the following parts can be opened or closed. ● EVAP canister vent control valve open ● Vacuum cut valve bypass valve closed In the following conditions, this mode cannot function. ● Low ambient temperature ● Low battery voltage ● Engine running ● Ignition switch OFF ● Low fuel temperature ● Too much pressure is applied to EVAP system
MODE 9	CALIBRATION ID	This mode is to enable the off-board to request vehicle specific vehicle information such as Vehicle Identification Number (VIN) and calibration IDs.

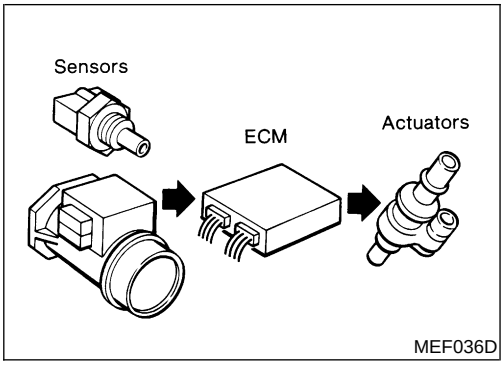

MEF036D

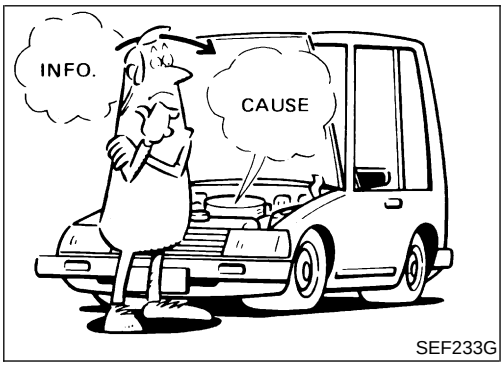

SEF233G

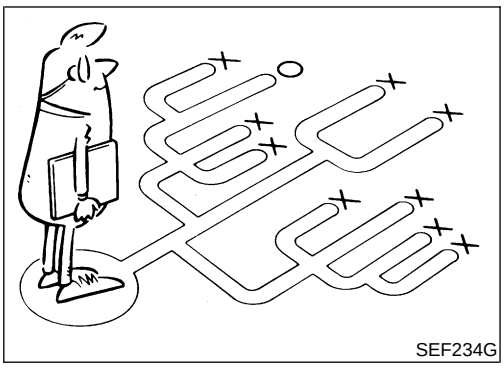
SEF234G

KEY POINTS

WHAT ..... Vehicle & engine model
WHEN ..... Date, Frequencies
WHERE..... Road conditions
HOW ..... Operating conditions, Weather conditions, Symptoms

SEF907L

Introduction

NEEC1113

The engine has an ECM to control major systems such as fuel control, ignition control, idle air control system, etc. The ECM accepts input signals from sensors and instantly drives actuators. It is essential that both input and output signals are proper and stable. At the same time, it is important that there are no problems such as vacuum leaks, fouled spark plugs, or other problems with the engine.

It is much more difficult to diagnose a problem that occurs intermittently rather than continuously. Most intermittent problems are caused by poor electric connections or improper wiring. In this case, careful checking of suspected circuits may help prevent the replacement of good parts.

A visual check only may not find the cause of the problems. A road test with CONSULT-II (or GST) or a circuit tester connected should be performed. Follow the “Work Flow” on EC-1312.

Before undertaking actual checks, take a few minutes to talk with a customer who approaches with a driveability complaint. The customer can supply good information about such problems, especially intermittent ones. Find out what symptoms are present and under what conditions they occur. A “Diagnostic Worksheet” like the example on next page should be used.

Start your diagnosis by looking for “conventional” problems first. This will help troubleshoot driveability problems on an electronically controlled engine vehicle.

DIAGNOSTIC WORKSHEET

NEEC1113S01

There are many operating conditions that lead to the malfunction of engine components. A good grasp of such conditions can make trouble-shooting faster and more accurate.

In general, each customer feels differently about a problem. It is important to fully understand the symptoms or conditions for a customer complaint.

Utilize a diagnostic worksheet like the one on the next page in order to organize all the information for troubleshooting.

Some conditions may cause the MIL to come on steady or blink and DTC to be detected. Examples:

- Vehicle ran out of fuel, which caused the engine to misfire.
- Fuel filler cap was left off or incorrectly screwed on, allowing fuel to evaporate into the atmosphere [for the models with EVAP (SMALL LEAK) diagnosis].

Worksheet Sample

NEEC1113S0101

Customer name MR/MS		Model & Year	VIN
Engine #		Trans.	Mileage
Incident Date		Manuf. Date	In Service Date
Fuel and fuel filler cap		☐ Vehicle ran out of fuel causing misfire ☐ Fuel filler cap was left off or incorrectly screwed on.	
Symptoms	☐ Startability	☐ Inpossible to start ☐ No combustion ☐ Partial combustion ☐ Partial combustion affected by throttle position ☐ Partial combustion NOT affected by throttle position ☐ Possible but hard to start ☐ Others [ ]	
	☐ Idling	☐ No fast idle ☐ Unstable ☐ High idle ☐ Low idle ☐ Others [ ]	
	☐ Driveability	☐ Stumble ☐ Surge ☐ Knock ☐ Lack of power ☐ Intake backfire ☐ Exhaust backfire ☐ Others [ ]	
	☐ Engine stall	☐ At the time of start ☐ While idling ☐ While accelerating ☐ While decelerating ☐ Just after stopping ☐ While loading	
Incident occurrence		☐ Just after delivery ☐ Recently ☐ In the morning ☐ At night ☐ In the daytime	
Frequency		☐ All the time ☐ Under certain conditions ☐ Sometimes	
Weather conditions		☐ Not affected	
	Weather	☐ Fine ☐ Raining ☐ Snowing ☐ Others [ ]	
	Temperature	☐ Hot ☐ Warm ☐ Cool ☐ Cold ☐ Humid ˚F	
Engine conditions		☐ Cold ☐ During warm-up ☐ After warm-up Engine speed 0 2,000 4,000 6,000 8,000 rpm	
Road conditions		☐ In town ☐ In suburbs ☐ Highway ☐ Off road (up/down)	
Driving conditions		☐ Not affected ☐ At starting ☐ While idling ☐ At racing ☐ While accelerating ☐ While cruising ☐ While decelerating ☐ While turning (RH/LH) Vehicle speed 0 10 20 30 40 50 60 MPH	
Malfunction indicator lamp		☐ Turned on ☐ Not turned on	

MTBL0017

Work Flow

NEEC1114

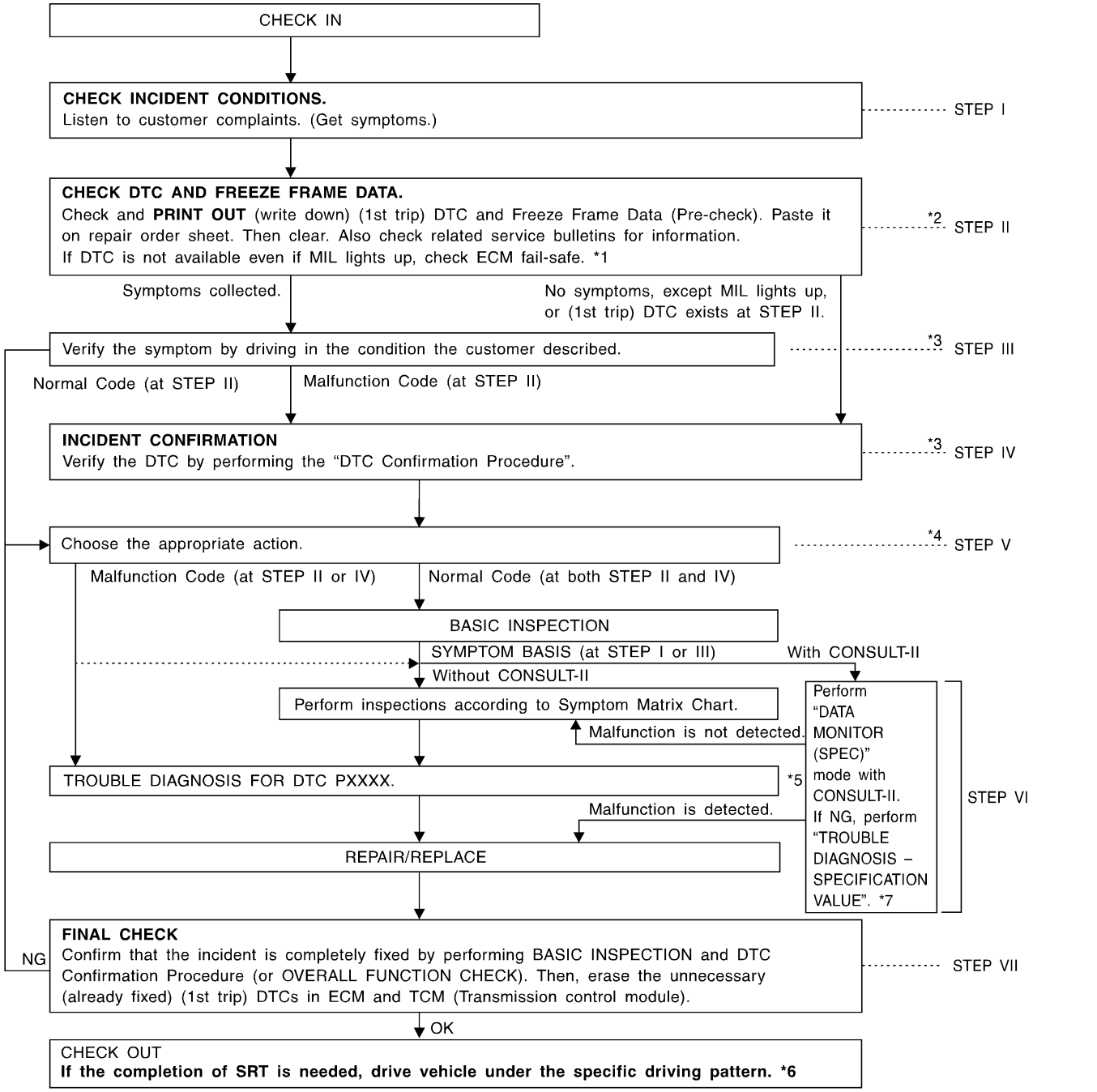

SEF510ZF

*1 EC-1330

*2 If time data of "SELF-DIAG RESULTS" is other than "0" or "[1t]", perform "TROUBLE DIAGNOSIS FOR INTERMITTENT INCIDENT", EC-1353.

*3 If the incident cannot be verified, perform "TROUBLE DIAGNOSIS FOR INTERMITTENT INCIDENT", EC-1353.

*4 If the on board diagnostic system cannot be performed, check main power supply and ground circuit. Refer to "TROUBLE DIAGNOSIS FOR POWER SUPPLY", EC-1354.

*5 If malfunctioning part cannot be detected, perform "TROUBLE DIAGNOSIS FOR INTERMITTENT INCIDENT", EC-1353.

*6 EC-1281

*7 EC-1349

DESCRIPTION FOR WORK FLOW

NEEC1114S01

STEP	DESCRIPTION
STEP I	Get detailed information about the conditions and the environment when the incident/symptom occurred using the "DIAGNOSTIC WORK SHEET", EC-1311.
STEP II	Before confirming the concern, check and write down (print out using CONSULT-II or GST) the (1st trip) DTC and the (1st trip) freeze frame data, then erase the DTC and the data. (Refer to EC-1287.) The (1st trip) DTC and the (1st trip) freeze frame data can be used when duplicating the incident at STEP III & IV. If the incident cannot be verified, perform "TROUBLE DIAGNOSIS FOR INTERMITTENT INCIDENT", EC-1353. Study the relationship between the cause, specified by (1st trip) DTC, and the symptom described by the customer. (The "Symptom Matrix Chart" will be useful. See EC-1331.) Also check related service bulletins for information.
STEP III	Try to confirm the symptom and under what conditions the incident occurs. The "DIAGNOSTIC WORK SHEET" and the freeze frame data are useful to verify the incident. Connect CONSULT-II to the vehicle in DATA MONITOR (AUTO TRIG) mode and check real time diagnosis results. If the incident cannot be verified, perform "TROUBLE DIAGNOSIS FOR INTERMITTENT INCIDENT", EC-1353. If the malfunction code is detected, skip STEP IV and perform STEP V.
STEP IV	Try to detect the (1st trip) DTC by driving in (or performing) the "DTC Confirmation Procedure". Check and read the (1st trip) DTC and (1st trip) freeze frame data by using CONSULT-II or GST. During the (1st trip) DTC verification, be sure to connect CONSULT-II to the vehicle in DATA MONITOR (AUTO TRIG) mode and check real time diagnosis results. If the incident cannot be verified, perform "TROUBLE DIAGNOSIS FOR INTERMITTENT INCIDENT", EC-1353. In case the "DTC Confirmation Procedure" is not available, perform the "Overall Function Check" instead. The (1st trip) DTC cannot be displayed by this check, however, this simplified "check" is an effective alternative. The "NG" result of the "Overall Function Check" is the same as the (1st trip) DTC detection.
STEP V	Take the appropriate action based on the results of STEP I through IV. If the malfunction code is indicated, proceed to TROUBLE DIAGNOSIS FOR DTC PXXXX. If the normal code is indicated, proceed to the BASIC INSPECTION. (Refer to EC-1314.) If CONSULT-II is available, perform "DATA MONITOR (SPEC)" mode with CONSULT-II and proceed to the "TROUBLE DIAGNOSIS — SPECIFICATION VALUE", EC-1349. (If malfunction is detected, proceed to "REPAIR/REPLACE".) Then perform inspections according to the Symptom Matrix Chart. (Refer to EC-1331.)
STEP VI	Identify where to begin diagnosis based on the relationship study between symptom and possible causes. Inspect the system for mechanical binding, loose connectors or wiring damage using (tracing) "Harness Layouts". Gently shake the related connectors, components or wiring harness with CONSULT-II set in "DATA MONITOR (AUTO TRIG)" mode. Check the voltage of the related ECM terminals or monitor the output data from the related sensors with CONSULT-II. Refer to EC-1335, EC-1340. The "Diagnostic Procedure" in EC section contains a description based on open circuit inspection. A short circuit inspection is also required for the circuit check in the Diagnostic Procedure. For details, refer to ***GI-26***, "Circuit Inspection". Repair or replace the malfunction parts. If malfunctioning part cannot be detected, perform "TROUBLE DIAGNOSIS FOR INTERMITTENT INCIDENT", EC-1353.
STEP VII	Once you have repaired the circuit or replaced a component, you need to run the engine in the same conditions and circumstances which resulted in the customer's initial complaint. Perform the "DTC Confirmation Procedure" and confirm the normal code [DTC No. P0000 or 0505] is detected. If the incident is still detected in the final check, perform STEP VI by using a different method from the previous one. Before returning the vehicle to the customer, be sure to erase the unnecessary (already fixed) (1st trip) DTC in ECM and TCM (Transmission control module). (Refer to EC-1287.)

Basic Inspection

NEEC1115

Precaution:
Perform Basic Inspection without electrical or mechanical loads applied;

- Headlamp switch is OFF,
- Air conditioner switch is OFF,
- Rear window defogger switch is OFF,
- Steering wheel is in the straight-ahead position, etc.

1	INSPECTION START	
1. Check service records for any recent repairs that may indicate a related problem, or the current need for scheduled maintenance. 2. Open engine hood and check the following: ● Harness connectors for improper connections ● Vacuum hoses for splits, kinks, or improper connections ● Wiring for improper connections, pinches, or cuts 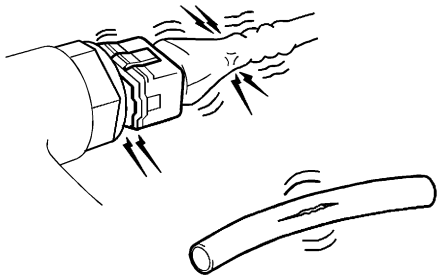 SEF983U		
Models with CONSULT-II	▶	GO TO 2.
Models with GST	▶	GO TO 2.
Models with No Tools	▶	GO TO 15.

2	CONNECT CONSULT-II OR GST TO THE VEHICLE	
With CONSULT-II Connect “CONSULT-II” to the data link connector for CONSULT-II and select “ENGINE” from the menu. Refer to EC-1295.		
With GST Connect “GST” to the data link connector for GST. Refer to EC-1308.		
Models with CONSULT-II	▶	GO TO 3.
Models with GST	▶	GO TO 14.

3	CHECK FI CAM FUNCTION

With CONSULT-II

1. Turn ignition switch ON.
2. Select "COOLAN TEMP/S" in "DATA MONITOR" mode with CONSULT-II.
3. Start engine and warm it up.

DATA MONITOR	
MONITOR	NO DTC
COOLAN TEMP/S	XXX °C

SEF013Y

4. When engine coolant temperature is 75 to 85°C (167 to 185°F), check the following.

- The center of mark **A** is aligned with mark **C**.
- The cam follower lever's roller is not touching the fast idle cam.

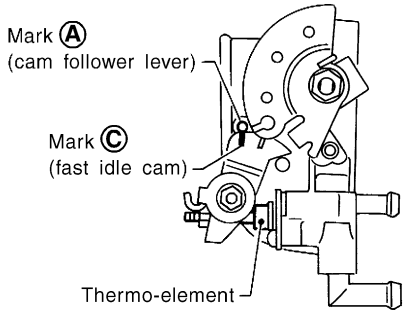

SEF971R

OK or NG

OK	▶	GO TO 4.
NG	▶	1. Check FI cam. Refer to "Fast Idle Cam (FIC)", EC-1261. 2. GO TO 4.

4	CHECK IGNITION TIMING

With CONSULT-II

1. Warm up engine to normal operating temperature.
2. Select "IGNITION TIMING ADJ" in "WORK SUPPORT" mode and touch "START".

IGNITION TIMING ADJ
IGNITION TIMING FEEDBACK CONTROL WILL BE HELD BY TOUCHING START. AFTER DOING SO, ADJUST IGNITION TIMING WITH A TIMING LIGHT BY TURNING THE CAMSHAFT POSITION SENSOR.

PEF546N

3. Check ignition timing at idle using a timing light.

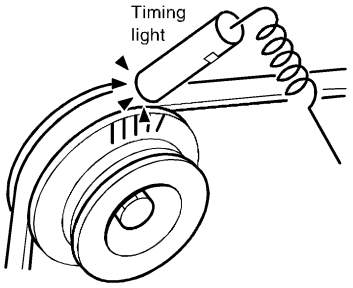

SEF984U

Ignition timing: 10°±2° BTDC

OK or NG

OK	▶	GO TO 5.
NG	▶	1. Adjust ignition timing by turning distributor. Refer to "Idle Speed/Ignition Timing/Idle Mixture Ratio Adjustment", EC-1262. 2. GO TO 5.

5	CHECK BASE IDLE SPEED

With CONSULT-II

1. Select "IGNITION TIMING ADJ" in "WORK SUPPORT" mode and touch "START".

IGNITION TIMING ADJ
IGNITION TIMING FEEDBACK CONTROL WILL BE HELD BY TOUCHING START. AFTER DOING SO, ADJUST IGNITION TIMING WITH A TIMING LIGHT BY TURNING THE CAMSHAFT POSITION SENSOR.

PEF546N

2. Check idle speed.

700±50 rpm (in "P" or "N" position)

OK or NG

OK	▶	GO TO 6.
NG	▶	1. Adjust engine speed by turning idle speed adjusting screw. Refer to "Idle Speed/ Ignition Timing/Idle Mixture Ratio Adjustment", EC-1262. 2. GO TO 6.

6	CHECK CLOSED THROTTLE POSITION SWITCH IDLE POSITION-I

With CONSULT-II

NOTE:

Always check ignition timing and base idle speed before performing the following.

1. Warm up engine to normal operating temperature.
2. Check FI cam, refer to procedure 3.
3. Stop engine.

	▶	GO TO 7.

7	CHECK CLOSED THROTTLE POSITION SWITCH IDLE POSITION-II

1. Turn ignition switch ON.
2. Select "TP SW/TP SEN IDLE POSI ADJ" in "WORK SUPPORT" mode.
3. Read "CLSD THL/P SW" signal under the following conditions.

- Insert a 0.3 mm (0.012 in) and 0.4 mm (0.016 in) feeler gauge alternately between the throttle adjust screw (TAS) and throttle drum as shown in the figure and check the signal.

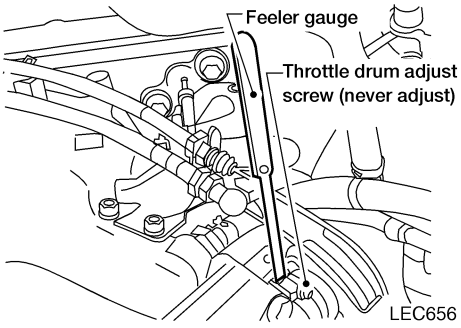

LEC656

TP SW/TP SEN IDLE POSI ADJ	
MONITOR	
COOLAN TEMP/S	91°C
CLSD THL POS	ON
CLSD THL/P SW	ON

SEF715Y

"CLSD THL/P SW" signal should remain "ON" while inserting 0.3 mm (0.012 in) feeler gauge.
"CLSD THL/P SW" signal should remain "OFF" while inserting 0.4 mm (0.016 in) feeler gauge.

OK or NG

OK	▶	GO TO 12.
NG	▶	GO TO 8.

8	ADJUSTMENT THROTTLE POSITION SWITCH IDLE POSITION

With CONSULT-II
NOTE:

- **Never adjust throttle adjust screw (TAS).**
- **Do not touch throttle drum when checking "CLSD THL/P SW" signal, doing so may cause an incorrect adjustment.**

1. Warm up engine to normal operating temperature.
2. Check FI cam. Refer to procedure 3.
3. Stop engine.
4. Loosen throttle position sensor fixing bolts.

	▶	GO TO 9.

9	ADJUSTMENT CLOSED THROTTLE POSITION SWITCH IDLE POSITION-II

1. Turn ignition switch ON.
2. Select "TP SW/TP SEN IDLE POSI ADJ" in "WORK SUPPORT" mode.
3. Insert 0.35 mm (0.0138 in) feeler gauge between throttle adjust screw and throttle drum as shown in the figure.

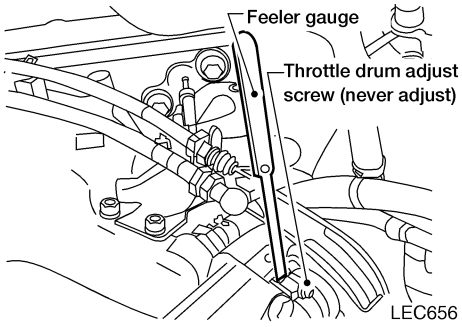

LEC656

4. Open throttle valve and then close.
5. Check "CLSD THL/P SW" signal.

TP SW/TP SEN IDLE POSI ADJ	
MONITOR	
COOLAN TEMP/S	91°C
CLSD THL POS	ON
CLSD THL/P SW	ON

SEF715Y

"CLSD THL/P SW" signal should remain "OFF" when the throttle valve is closed.

OK or NG

OK	▶	GO TO 11.
NG	▶	GO TO 10.

10	ADJUSTMENT THROTTLE POSITION SWITCH IDLE POSITION-III

With CONSULT-II

Turn throttle position sensor body counterclockwise until "CLSD THL/P SW" signal switches to "OFF".

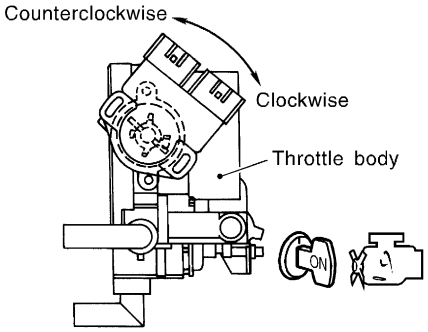

SEF689W

	▶	GO TO 11.

11	ADJUSTMENT THROTTLE POSITION SWITCH IDLE POSITION-IV

With CONSULT-II

1. Remove 0.35 mm (0.0138 in) feeler gauge then insert 0.3 mm (0.012 in) feeler gauge.
2. Temporarily tighten sensor body fixing bolts as follows.

- **Gradually move the sensor body clockwise and stop it when "CLSD THL/P SW" signal switches from "OFF" to "ON", then temporarily tighten sensor body fixing bolts.**

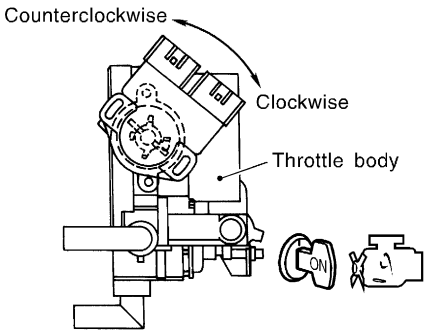

SEF689W

3. Make sure two or three times that the signal is "ON" when the throttle valve is closed and "OFF" when it is opened.
4. Remove 0.3 mm (0.012 in) feeler gauge then insert 0.4 mm (0.016 in) feeler gauge.
5. Make sure two or three times that the signal remains "OFF" when the throttle valve is closed.
6. Tighten throttle position sensor.
7. Check the "CLSD THL/P SW" signal again.
   The signal remains "OFF" while closing throttle valve.

OK or NG

OK	▶	GO TO 12.
NG	▶	GO TO 8.

12	RESET THROTTLE POSITION SENSOR IDLE POSITION MEMORY

With CONSULT-II

NOTE:

Always warm up engine to normal operating temperature. If engine is cool, the throttle position sensor idle position memory will not be reset correctly.

1. Remove feeler gauge.
2. Start engine.
3. Warm up engine to normal operating temperature.
4. Select "TP SW/TP SEN IDLE POSI ADJ" in "WORK SUPPORT" mode.
5. Stop engine. (Turn ignition switch OFF.)
6. Turn ignition switch ON and wait at least 5 seconds.

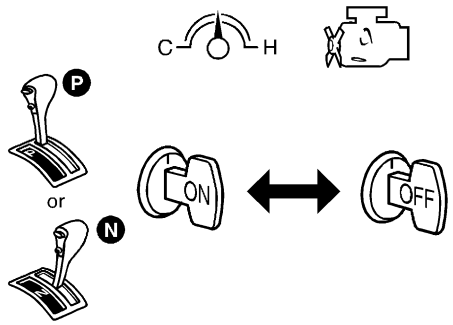

SEF864V

7. Turn ignition switch OFF and wait at least 5 seconds.
8. Repeat steps 5 and 6 until "CLSD THL POS" signal changes to "ON".

TP SW/TP SEN IDLE POSI ADJ	
MONITOR	
COOLAN TEMP/S	91°C
CLSD THL POS	ON
CLSD THL/P SW	ON

SEF715Y

	▶	GO TO 13.

13	CHECK TARGET IDLE SPEED

With CONSULT-II

1. Start engine and warm it up to normal operating temperature.
2. Select "ENG SPEED" in "DATA MONITOR" mode.
3. Check idle speed.

750±50 rpm (in "P" or "N" position)

OK or NG

OK	▶	**INSPECTION END**
NG	▶	1. Adjust idle speed. Refer to "Idle Speed/Ignition Timing/Idle Mixture Ratio Adjustment", EC-1262. 2. GO TO 27.

14	CHECK FI CAM FUNCTION

With GST

1. Turn ignition switch ON.
2. Select "MODE 1" with GST.
3. Start engine and warm it up.
4. When engine coolant temperature is 75 to 85°C (167 to 185°F), check the following.

- The center of mark **A** is aligned with mark **C**.
- The cam follower lever's roller is not touching the fast idle cam.

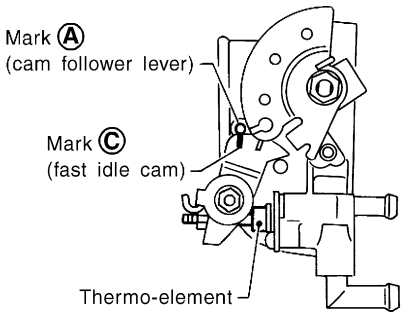

SEF971R

OK or NG

OK	▶	GO TO 16.
NG	▶	1. Check FI cam. Refer to "Fast Idle Cam (FIC)", EC-1261. 2. GO TO 16.

15	CHECK FI CAM FUNCTION

No Tools

1. Set the voltmeter between ECM terminal 59 (Engine coolant temperature sensor signal) and ground.
2. Start engine and warm it up.

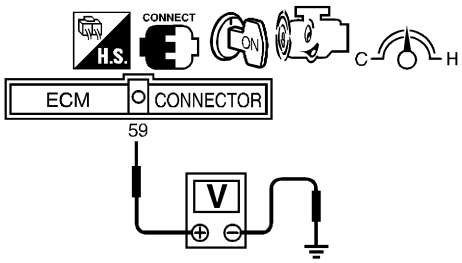

SEF119W

3. When the voltage is between 1.10 to 1.36V, check the following.
- The center of mark **A** is aligned with mark **C**.
- The cam follower lever's roller is not touching the fast idle cam.

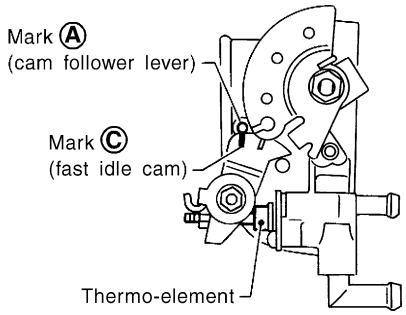

SEF971R

OK or NG

OK	▶	GO TO 16.
NG	▶	1. Check FI cam. Refer to "Fast Idle Cam (FIC)", EC-1261. 2. GO TO 16.

16	CHECK IGNITION TIMING

Without CONSULT-II

1. Warm up engine to normal operating temperature.
2. Stop engine and disconnect throttle position sensor harness connector.

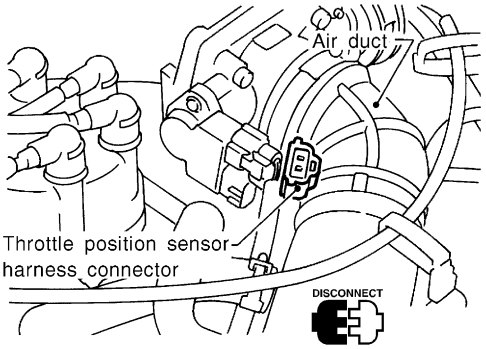

SEF975R

3. Start engine.
4. Check ignition timing at idle using a timing light.

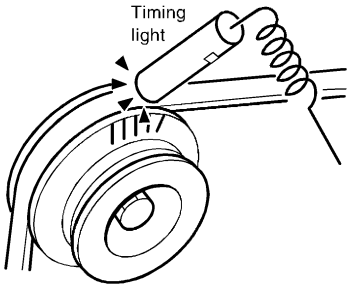

SEF984U

Ignition timing: 10°±2° BTDC

OK or NG

OK	▶	GO TO 17.
NG	▶	1. Adjust ignition timing by turning distributor. Refer to "Idle Speed/Ignition Timing/ Idle Mixture Ratio Adjustment", EC-1262. 2. GO TO 17.

17	CHECK BASE IDLE SPEED

Without CONSULT-II

1. Make sure that throttle position sensor harness connector remain disconnected.
2. Does engine speed fall to the following speed?

700±50 rpm (in "P" or "N" position)

OK or NG

OK	▶	GO TO 18.
NG	▶	1. Adjust engine speed by turning idle speed adjusting screw. Refer to "Idle Speed/ Ignition Timing/ Idle Mixture Ratio Adjustment", EC-1262. 2. GO TO 18.

18	CHECK CLOSED THROTTLE POSITION SWITCH IDLE POSITION

Without CONSULT-II

NOTE:

Always check ignition timing and base idle speed before performing the following.

1. Warm up engine to normal operating temperature.
2. Check FI cam, refer to procedure 14 or 15.
3. Stop engine.

	▶	GO TO 19.

19	CHECK CLOSED THROTTLE POSITION SWITCH IDLE POSITION-I

1. Disconnect closed throttle position switch harness connector.
2. Check continuity between closed throttle position switch terminals **4** and **5** under the following conditions.

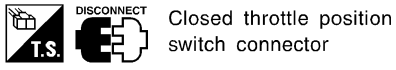

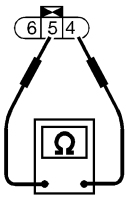

SEC298C

- Insert the 0.3 mm (0.012 in) and 0.4 mm (0.016 in) feeler gauge alternately between the throttle adjust screw (TAS) and throttle drum as shown in the figure.

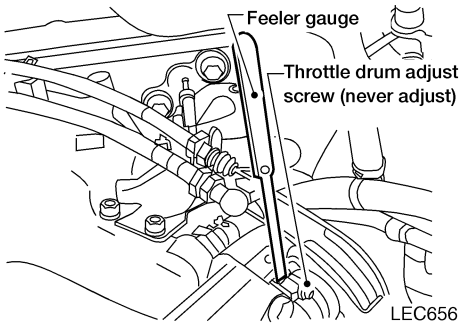

LEC656

"Continuity should exist" while inserting 0.3 mm (0.012 in) feeler gauge.
"Continuity should not exist" while inserting 0.4 mm (0.016 in) feeler gauge.

OK or NG

OK	▶	GO TO 24.
NG	▶	GO TO 20.

20	ADJUSTMENT THROTTLE POSITION SWITCH IDLE POSITION

Without CONSULT-II
NOTE:
- **Never adjust throttle adjust screw (TAS).**
- **Do not touch throttle drum when checking "continuity", doing so may cause an incorrect adjustment.**

1. Warm up engine to normal operating temperature.
2. Check FI cam. Refer to procedure 12 or 13.
3. Stop engine.
4. Loosen throttle position sensor fixing bolts.

	▶	GO TO 21.

21	ADJUSTMENT CLOSED THROTTLE POSITION SWITCH IDLE POSITION-II

1. Disconnect closed throttle position switch harness connector.
2. Insert 0.35 mm (0.0138 in) feeler gauge between the throttle adjust screw and throttle drum as shown in the figure.

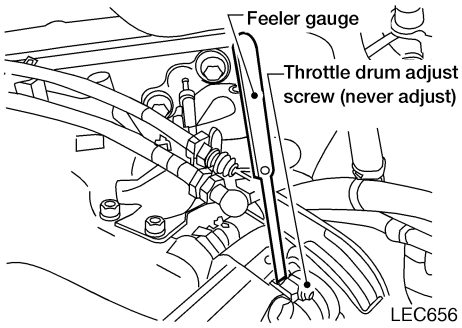

LEC656

3. Open throttle valve then close.
4. Check continuity between closed throttle position switch terminals 4 and 5.



Closed throttle position switch connector

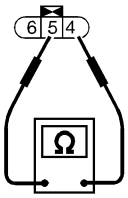

SEC298C

Continuity should not exist while closing the throttle position sensor.

OK or NG

OK	▶	GO TO 23.
NG	▶	GO TO 22.

22	ADJUSTMENT THROTTLE POSITION SWITCH IDLE POSITION-III

Without CONSULT-II

Turn throttle position sensor body counterclockwise until continuity does not exist.

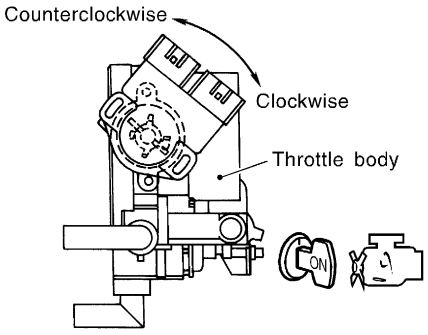

SEF689W

	▶	GO TO 23.

23	ADJUSTMENT THROTTLE POSITION SWITCH IDLE POSITION-IV

Without CONSULT-II

1. Remove 0.35 mm (0.0138 in) feeler gauge then insert 0.3 mm (0.012 in) feeler gauge.
2. Temporarily tighten sensor body fixing bolts as follows.

- **Gradually move the sensor body clockwise and stop it when the continuity comes to exist, then temporarily tighten sensor body fixing bolts.**

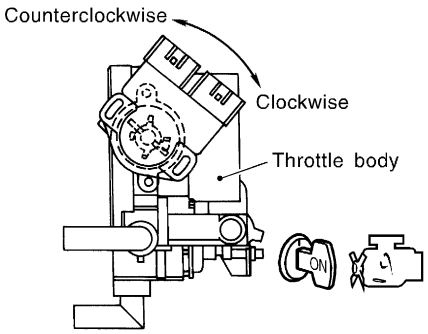

SEF689W

3. Make sure two or three times that the continuity exists when the throttle valve is closed and continuity does not exist when it is opened.
4. Remove 0.3 mm (0.012 in) feeler gauge then insert 0.4 mm (0.016 in) feeler gauge.
5. Make sure two or three times that the continuity does not exist when the throttle valve is closed.
6. Tighten throttle position sensor.
7. Check the continuity again.

Continuity does not exist while closing the throttle valve.

OK or NG

OK	▶	GO TO 24.
NG	▶	GO TO 20.

24	RESET THROTTLE POSITION SENSOR IDLE POSITION MEMORY

Without CONSULT-II

NOTE:

Always warm up engine to normal operating temperature. If engine is cool, the throttle position sensor idle position memory will not be reset correctly.

1. Remove feeler gauge.
2. Start engine.
3. Warm up engine to normal operating temperature.
4. Stop engine. (Turn ignition switch OFF.)
5. Turn ignition switch ON and wait at least 5 seconds.

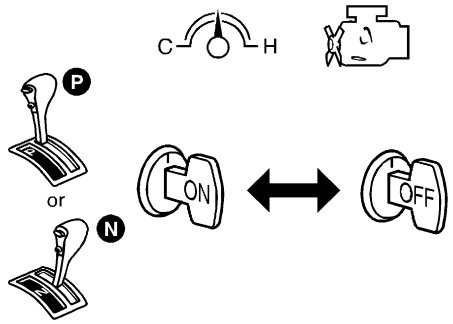

SEF864V

6. Turn ignition switch OFF and wait at least 5 seconds.
7. Repeat steps 4 and 5, 20 times.

	▶	GO TO 25.

25	REINSTALLATION
⊗ **Without CONSULT-II** 1. Reconnect throttle position sensor harness connector and closed throttle position switch harness connector. 2. Start engine and rev it (2,000 to 3,000 rpm) two or three times under no-load and then run engine at idle speed.	
▶	GO TO 26.

26	CHECK TARGET IDLE SPEED	
⊗ **Without CONSULT-II** 1. Start engine and warm it up to normal operating temperature. 2. Check idle speed. **750±50 rpm (in "P" or "N" position)**		
	OK or NG	
OK	▶	GO TO 27.
NG	▶	1. Adjust idle speed. Refer to "Idle Speed/Ignition Timing/Idle Mixture Ratio Adjustment", EC-1262. 2. GO TO 27.

27	ERASE UNNECESSARY DTC
After this inspection, unnecessary DTC No. might be displayed. Erase the stored memory in ECM and TCM (Transmission control module). Refer to "HOW TO ERASE EMISSION-RELATED DIAGNOSTIC INFORMATION", EC-1287 and ***AT-179***, "HOW TO ERASE DTC".	
▶	**INSPECTION END**

DTC Inspection Priority Chart

NEEC1116

If some DTCs are displayed at the same time, perform inspections one by one based on the following priority chart.

Priority	Detected items (DTC)
1	• P0100 Mass air flow sensor • P0110 Intake air temperature sensor • P0115 P0125 Engine coolant temperature sensor • P0120 Throttle position sensor • P0180 Fuel tank temperature sensor • P0325 Knock sensor • P0335 P1336 Crankshaft position sensor (OBD) • P0340 Camshaft position sensor • P0460 P0461 P1464 Fuel level sensor • P0500 Vehicle speed sensor • P0600 A/T communication line • P0605 ECM • P1605 A/T diagnosis communication line • P1706 Park/Neutral position (PNP) switch
2	• P0105 Absolute pressure sensor (0803) • P0130-P0134, P0150-P0154 Heated oxygen sensor 1 (front) • P0135 P0155 Heated oxygen sensor 1 heater (front) • P0137-P0140, P0157-P0160 Heated oxygen sensor 2 (rear) • P0141 P0161 Heated oxygen sensor 2 heater (rear) • P0217 Engine coolant overtemperature enrichment protection • P0443 P1444 EVAP canister purge volume control solenoid valve • P0446 P1446 P1448 EVAP canister vent control valve • P0450 EVAP control system pressure sensor • P0510 Closed throttle position switch • P0705-P0755 P1705 P1760 A/T related sensors, solenoid valves and switches • P1441 EVAP control system (VERY SMALL LEAK) • P1447 EVAP control system purge flow monitoring • P1490 P1491 Vacuum cut valve bypass valve
3	• P0171 P0172 P0174 P0175 Fuel injection system function • P0306 - P0300 Misfire • P0420 P0430 Three way catalyst function • P0440/P1440 EVAP control system (SMALL LEAK) • P0455 EVAP control system (GROSS LEAK) • P0505 IACV-AAC valve • P0731-P0734 P0744 A/T function • P1148 P1168 Closed loop control

Fail-safe Chart

=NEEC1117

The ECM enters fail-safe mode, if any of the following malfunctions is detected due to the open or short circuit. When the ECM enters the fail-safe mode, the MIL illuminates.

<table>
<tr><th>DTC No.
CONSULT-II GST</th><th>Detected items</th><th colspan="2">Engine operating condition in fail-safe mode</th></tr>
<tr><td>P0100</td><td>Mass air flow sensor circuit</td><td colspan="2">Engine speed will not rise more than 2,400 rpm due to the fuel cut.</td></tr>
<tr><td>P0115</td><td>Engine coolant temperature sensor circuit</td><td colspan="2">Engine coolant temperature will be determined by ECM based on the time after turning ignition switch ON or START.
CONSULT-II displays the engine coolant temperature decided by ECM.</td></tr>
<tr><td></td><td></td><td>Condition</td><td>Engine coolant temperature decided (CONSULT-II display)</td></tr>
<tr><td></td><td></td><td>Just as ignition switch is turned ON or Start</td><td>40°C (104°F)</td></tr>
<tr><td></td><td></td><td>More than approx. 4 minutes after ignition ON or Start</td><td>80°C (176°F)</td></tr>
<tr><td></td><td></td><td>Except as shown above</td><td>40 - 80°C (104 - 176°F)
(Depends on the time)</td></tr>
<tr><td>P0120</td><td>Throttle position sensor circuit</td><td colspan="2">Throttle position will be determined based on the injected fuel amount and the engine speed.
Therefore, acceleration will be poor.</td></tr>
<tr><td></td><td></td><td>Condition</td><td>Driving condition</td></tr>
<tr><td></td><td></td><td>When engine is idling</td><td>Normal</td></tr>
<tr><td></td><td></td><td>When accelerating</td><td>Poor acceleration</td></tr>
<tr><td>Unable to access ECM</td><td>ECM</td><td colspan="2">ECM fail-safe activating condition
The computing function of the ECM was judged to be malfunctioning.
When the fail-safe system activates (i.e., if the ECM detects a malfunction condition in the CPU of ECM), the MIL on the instrument panel lights to warn the driver.
However it is not possible to access ECM and DTC cannot be confirmed.
Engine control with fail-safe
When ECM fail-safe is operating, fuel injection, ignition timing, fuel pump operation, and IACV-AAC valve operation are controlled under certain limitations.</td></tr>
<tr><td></td><td></td><td></td><td>ECM fail-safe operation</td></tr>
<tr><td></td><td></td><td>Engine speed</td><td>Engine speed will not rise more than 3,000 rpm</td></tr>
<tr><td></td><td></td><td>Fuel injection</td><td>Simultaneous multiport fuel injection system</td></tr>
<tr><td></td><td></td><td>Ignition timing</td><td>Ignition timing is fixed at the preset value</td></tr>
<tr><td></td><td></td><td>Fuel pump</td><td>Fuel pump relay is “ON” when engine is running and “OFF” when engine stalls</td></tr>
<tr><td></td><td></td><td>IACV-AAC valve</td><td>Full open</td></tr>
<tr><td></td><td></td><td colspan="2">Replace ECM, if ECM fail-safe condition is confirmed.</td></tr>
</table>

Symptom Matrix Chart

NEEC1118

SYSTEM — BASIC ENGINE CONTROL SYSTEM

NEEC1118S01

		SYMPTOM													Reference page
		HARD/NO START/RESTART (EXCP. HA)	ENGINE STALL	HESITATION/SURGING/FLAT SPOT	SPARK KNOCK/DETONATION	LACK OF POWER/POOR ACCELERATION	HIGH IDLE/LOW IDLE	ROUGH IDLE/HUNTING	IDLING VIBRATION	SLOW/NO RETURN TO IDLE	OVERHEATS/WATER TEMPERATURE HIGH	EXCESSIVE FUEL CONSUMPTION	EXCESSIVE OIL CONSUMPTION	BATTERY DEAD (UNDER CHARGE)	
Warranty symptom code		AA	AB	AC	AD	AE	AF	AG	AH	AJ	AK	AL	AM	HA	
Fuel	Fuel pump circuit	1	1	2	3	2		3	2			3		1	EC-1801
	Injector circuit							2							EC-1793
	Fuel pressure regulator system	4	4	4	4	4	4	4	3	3		4			EC-1260
	Evaporative emission system														EC-1241
Air	Positive crankcase ventilation system												1		EC-1257
	Incorrect idle speed adjustment	3	3				1	1	1	1		1			EC-1262
	IACV-AAC valve circuit	2	1	3	3	3	2	2	2	2		3		1	EC-1646
	IACV-FICD solenoid valve circuit		2				3	3							EC-1814
Ignition	Incorrect ignition timing adjustment	3	3	1	1	1		1	1			1			EC-1262
	Ignition circuit	1	1	2	2	2		2	2			2			EC-1786
Main power supply and ground circuit		1	2	3	3	3		3	2		1	3		1	EC-1354
Air conditioner circuit		2					3			2					***HA-11***

1 - 6: The numbers refer to the order of inspection.

(continued on next page)

Symptom Matrix Chart (Cont'd)

	SYMPTOM													Reference page
	HARD/NO START/RESTART (EXCP. HA)	ENGINE STALL	HESITATION/SURGING/FLAT SPOT	SPARK KNOCK/DETONATION	LACK OF POWER/POOR ACCELERATION	HIGH IDLE/LOW IDLE	ROUGH IDLE/HUNTING	IDLING VIBRATION	SLOW/NO RETURN TO IDLE	OVERHEATS/WATER TEMPERATURE HIGH	EXCESSIVE FUEL CONSUMPTION	EXCESSIVE OIL CONSUMPTION	BATTERY DEAD (UNDER CHARGE)	
Warranty symptom code	AA	AB	AC	AD	AE	AF	AG	AH	AJ	AK	AL	AM	HA	
Camshaft position sensor circuit	1	1	2	2	2		2	2			2			EC-1565
Mass air flow sensor circuit				3										EC-1360
Heated oxygen sensor 1 (front) circuit														EC-1400
Engine coolant temperature sensor circuit	1	2	3		3	3			2		3			EC-1376, 1394
Throttle position sensor circuit		1	2		2	2	2				2			EC-1381
Incorrect throttle position sensor adjustment		3	1		1	1	1	1	1		1			EC-1314
Vehicle speed sensor circuit		2	3		3						3			EC-1642
Knock sensor circuit				3										EC-1555
ECM	2	2				3	3	2	2	1				EC-1664, 1330
Start signal circuit	1													EC-1798
Park/neutral position (PNP) switch circuit			3		3		3	2			3			EC-1777
Power steering oil pressure switch circuit		2												EC-1809

1 - 6: The numbers refer to the order of inspection.

(continued on next page)

SYSTEM — ENGINE MECHANICAL & OTHER

NEEC1118S02

		SYMPTOM													Reference section
		HARD/NO START/RESTART (EXCP. HA)	ENGINE STALL	HESITATION/SURGING/FLAT SPOT	SPARK KNOCK/DETONATION	LACK OF POWER/POOR ACCELERATION	HIGH IDLE/LOW IDLE	ROUGH IDLE/HUNTING	IDLING VIBRATION	SLOW/NO RETURN TO IDLE	OVERHEATS/WATER TEMPERATURE HIGH	EXCESSIVE FUEL CONSUMPTION	EXCESSIVE OIL CONSUMPTION	BATTERY DEAD (UNDER CHARGE)	
Warranty symptom code		AA	AB	AC	AD	AE	AF	AG	AH	AJ	AK	AL	AM	HA	
Fuel	Fuel tank	5	5												***FE-4***
	Fuel piping			5	5	5		5	4			5			—
	Vapor lock														
	Valve deposit	5		5	5	5		5	4			5			
	Poor fuel (Heavy weight gasoline, Low octane)														
Air	Air duct	5	5	5	5	5	5	5	4	4		5			***FE-3***
	Air cleaner														
	Air leakage from air duct (Mass air flow sensor — throttle body)														—
	Throttle body, Throttle wire														
	Air leakage from intake manifold/ Collector/Gasket														
Cranking	Battery	1	1	1		1		1	1			1		1	***SC-4***
	Generator circuit														
	Starter circuit														
	Park/neutral position (PNP) switch														***AT-250***
	Drive plate/Flywheel	6													***EM-123***

1 - 6: The numbers refer to the order of inspection.

(continued on next page)

Symptom Matrix Chart (Cont'd)

		SYMPTOM													Reference section
		HARD/NO START/RESTART (EXCP. HA)	ENGINE STALL	HESITATION/SURGING/FLAT SPOT	SPARK KNOCK/DETONATION	LACK OF POWER/POOR ACCELERATION	HIGH IDLE/LOW IDLE	ROUGH IDLE/HUNTING	IDLING VIBRATION	SLOW/NO RETURN TO IDLE	OVERHEATS/WATER TEMPERATURE HIGH	EXCESSIVE FUEL CONSUMPTION	EXCESSIVE OIL CONSUMPTION	BATTERY DEAD (UNDER CHARGE)	
Warranty symptom code		AA	AB	AC	AD	AE	AF	AG	AH	AJ	AK	AL	AM	HA	
Engine	Cylinder head	5	5	5	5	5		5	5			5			***EM-85***, ***EM-96*** and ***EM-116***
	Cylinder head gasket										2		2		
	Cylinder block	6	6	6	6	6		6	6			6	3		
	Piston														
	Piston ring														
	Connecting rod														
	Bearing														
	Crankshaft														
Valve mechanism	Timing chain	6	6	6	6	6		6	6			6			
	Camshaft														
	Intake valve												2		
	Exhaust valve														
	Hydraulic lash adjuster														
Exhaust	Exhaust manifold/Tube/Muffler/ Gasket	6	6	6	6	6		6	6			6			***FE-8***
	Three way catalyst														
Lubrication	Oil pan/Oil strainer/Oil pump/Oil filter/Oil gallery	6	6	6	6	6		6	6			6	2		***MA-30***, ***EM-80*** and ***LC-20***
	Oil level (Low/Filthy) oil														***MA-30***
Cooling	Radiator/Hose/Radiator filler cap	6	6	6	6	6		6	6		2	6			***LC-27***
	Thermostat						5			5					
	Water pump														
	Water gallery														
	Cooling fan						5			5					
	Coolant level (low)/Contaminated coolant														***MA-27***

1 - 6: The numbers refer to the order of inspection.

CONSULT-II Reference Value in Data Monitor Mode

NEEC1119

Remarks:

- Specification data are reference values.
- Specification data are output/input values which are detected or supplied by the ECM at the connector.

  * Specification data may not be directly related to their components signals/values/operations.

  i.e. Adjust ignition timing with a timing light before monitoring IGN TIMING, because the monitor may show the specification data in spite of the ignition timing not being adjusted to the specification data. This IGN TIMING monitors the data calculated by the ECM according to the signals input from the camshaft position sensor and other ignition timing related sensors.
- If the real-time diagnosis results are NG and the on board diagnostic system results are OK when diagnosing the mass air flow sensor, first check to see if the fuel pump control circuit is normal.

MONITOR ITEM	CONDITION		SPECIFICATION
ENG SPEED	• Tachometer: Connect • Run engine and compare tachometer indication with the CONSULT-II value.		Almost the same speed as the CONSULT-II value.
MAS A/F SE-B1	• Engine: After warming up • Air conditioner switch: OFF • Shift lever: “N” • No-load	Idle	1.0 - 1.7V
		2,500 rpm	1.7 - 2.3V
COOLAN TEMP/S	• Engine: After warming up		More than 70°C (158°F)
HO2S1 (B1) HO2S1 (B2)	• Engine: After warming up	Maintaining engine speed at 2,000 rpm	0 - 0.3V ⟷ Approx. 0.6 - 1.0V
HO2S1 MNTR (B1) HO2S1 MNTR (B2)			LEAN ⟷ RICH Changes more than 5 times during 10 seconds.
HO2S2 (B1) HO2S2 (B2)	• Engine: After warming up	Maintaining engine speed at 2,000 rpm	0 - 0.3V ⟷ Approx. 0.6 - 1.0V
HO2S2 MNTR (B1) HO2S2 MNTR (B2)			LEAN ⟷ RICH
VHCL SPEED SE	• Turn drive wheels and compare speedometer indication with the CONSULT-II value		Almost the same speed as the CONSULT-II value
BATTERY VOLT	• Ignition switch: ON (Engine stopped)		11 - 14V
THRTL POS SEN	• Engine: After warming up, idle the engine	Throttle valve: fully closed (a)	0.15 - 0.85V
	• Engine: After warming up • Ignition switch: ON (Engine stopped)	Throttle valve: Partially open	Between (a) and (b)
		Throttle valve: fully opened (b)	3.5 - 4.7V
START SIGNAL	• Ignition switch: ON → START → ON		OFF → ON → OFF
CLSD THL POS CLSD THL/P SW	• Engine: After warming up, idle the engine	Throttle valve: Idle position	ON
		Throttle valve: Slightly open	OFF
AIR COND SIG	• Engine: After warming up, idle the engine	Air conditioner switch: OFF	OFF
		Air conditioner switch: ON (Compressor operates.)	ON
P/N POSI SW	• Ignition switch: ON	Shift lever: “P” or “N”	ON
		Except above	OFF
PW/ST SIGNAL	• Engine: After warming up, idle the engine	Steering wheel in neutral position (forward direction)	OFF
		The steering wheel is turned	ON

CONSULT-II Reference Value in Data Monitor Mode (Cont'd)

MONITOR ITEM	CONDITION		SPECIFICATION
AMB TEMP SW	• Ignition switch: ON • Compare ambient air temperature with the following:	Below 19°C (66°F)	OFF
		Above 25°C (77°F)	ON
IGNITION SW	• Ignition switch: ON → OFF → ON		ON → OFF → ON
INJ PULSE-B1 INJ PULSE-B2	• Engine: After warming up • Air conditioner switch: OFF • Shift lever: "N" • No-load	Idle	2.4 - 3.7 msec
		2,000 rpm	1.9 - 3.3 msec
B/FUEL SCHDL	• Engine: After warming up • Air conditioner switch: OFF • Shift lever: "N" • No-load	Idle	1.0 - 1.6 msec
		2,000 rpm	0.7 - 1.4 msec
IGN TIMING	• Engine: After warming up • Air conditioner switch: OFF • Shift lever: "N" • No-load	Idle	10°±2° BTDC
		2,000 rpm	More than 25° BTDC
IACV-AAC/V	• Engine: After warming up • Air conditioner switch: OFF • Shift lever: "N" • No-load	Idle	10 - 20%
		2,000 rpm	—
PURG VOL C/V	• Engine: After warming up • Air conditioner switch: OFF • Shift lever: "N" • No-load	Idle	0 %
		2,000 rpm	—
A/F ALPHA-B1 A/F ALPHA-B2	• Engine: After warming up	Maintaining engine speed at 2,000 rpm	54 - 155%
EVAP SYS PRES	• Ignition switch: ON		Approx. 3.4V
AIR COND RLY	• Air conditioner switch: OFF → ON		OFF → ON
FUEL PUMP RLY	• Ignition switch is turned to ON (Operates for 5 seconds) • Engine running and cranking		ON
	Except as shown above		OFF
COOLING FAN	• After warming up engine, idle the engine. • Air conditioner switch: OFF	Engine coolant temperature is 94°C (201°F) or less	OFF
		Engine coolant temperature is between 95°C (203°F) and 100°C (212°F)	LOW
		Engine coolant temperature is 100°C (212°F) or more	HIGH
VENT CONT/V	• Ignition switch: ON		OFF
HO2S1 HTR (B1) HO2S1 HTR (B2)	• Engine speed: Below 2,800 rpm		ON
	• Engine speed: Above 2,800 rpm		OFF
HO2S2 HTR (B1) HO2S2 HTR (B2)	• Ignition switch: ON (Engine stopped) • Engine speed: Above 2,800 rpm		OFF
	• Engine speed: Below 2,800 rpm [After driving for 2 minutes at a speed of 70 km/h (43 MPH) or more]		ON
SCB/V CON S/V	• More than 5 seconds after turning ignition switch ON (Engine stopped)		OFF
	• Engine speed: Idle		ON
VC/V BYPASS/V	Ignition switch: ON		OFF

MONITOR ITEM	CONDITION		SPECIFICATION
CAL/LD VALUE	• Engine: After warming up • Air conditioner switch: OFF • Shift lever: "N" • No-load	Idle	18.5 - 26.0%
		2,500 rpm	18.0 - 21.0%
ABSOL TH·P/S	• Engine: After warming up • Ignition switch: ON • More than -40.0 kpa (-300 mmHg, -11.81 inHg) of vacuum is applied to the throttle opener with a hand vacuum pump.	Throttle valve: fully closed	0.0%
	• Engine: After warming up • Ignition switch: ON (Engine stopped)	Throttle valve: fully opened	Approx. 80%
MASS AIRFLOW	• Engine: After warming up • Air conditioner switch: OFF • Shift lever: "N" • No-load	Idle	3.3 - 4.8 g·m/s
		2,500 rpm	12.0 - 14.9 g·m/s
ABSOL PRES/SE	• Ignition switch: ON (Engine stopped)		Approx. 4.4V
	• Engine speed: Idle	For 5 seconds after starting engine	Approx. 4.4V
		More than 5 seconds after starting engine	Approx. 1.3V

Major Sensor Reference Graph in Data Monitor Mode

NEEC1120

The following are the major sensor reference graphs in "DATA MONITOR" mode.
(Select "HI SPEED" in "DATA MONITOR" with CONSULT-II.)

THRTL POS SEN, ABSOL TH·P/S, CLSD THL POS

NEEC1120S01

Below is the data for "THRTL POS SEN", "ABSOL TH·P/S" and "CLSD THL POS" when depressing the accelerator pedal with the ignition switch ON.
The signal of "THRTL POS SEN" and "ABSOL TH·P/S" should rise gradually without any intermittent drop or rise after "CLSD THL POS" is changed from "ON" to "OFF".

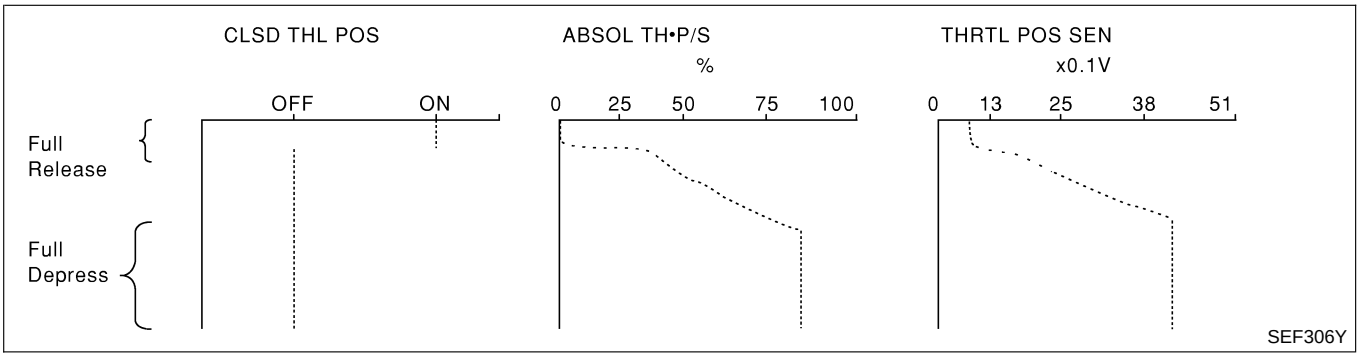

ENG SPEED, MAS A/F SE-B1, THRTL POS SEN, HO2S2 (B1), HO2S1 (B1), INJ PULSE-B1

NEEC1120S02

Below is the data for "ENG SPEED", "MAS A/F SE-B1", "THRTL POS SEN", "HO2S2 (B1)", "HO2S1 (B1)" and "INJ PULSE-B1" when revving engine quickly up to 4,800 rpm under no load after warming up engine sufficiently.
Each value is for reference, the exact value may vary.

Major Sensor Reference Graph in Data Monitor Mode (Cont'd)

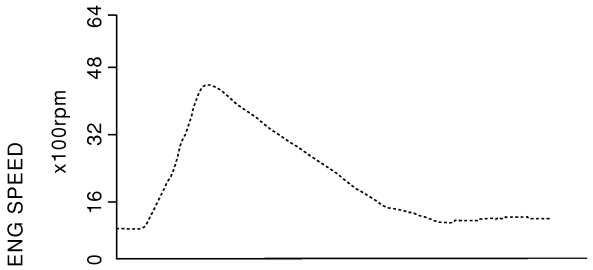

• "ENG SPEED" should increase gradually while depressing the accelerator pedal and should decrease gradually after releasing the pedal without any intemittent drop or rise.

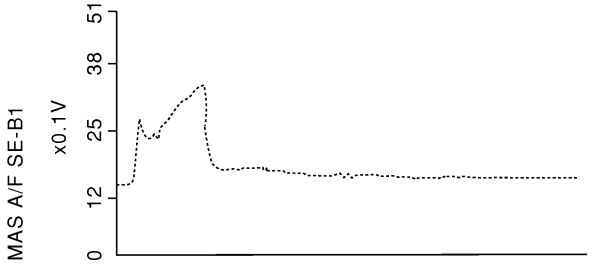

• "MAS A/F SE-B1" should increase when depressing the accelerator pedal and should decrease at the moment "THRTL POS SEN" is closed (accelerator pedal is released).

SEF241Y

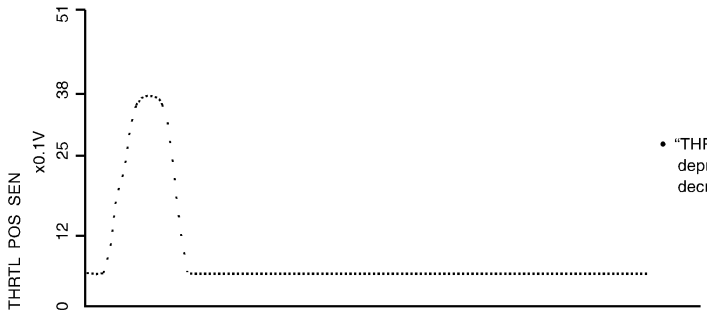

- "THRTL POS SEN" should increase while depressing the accelerator pedal and should decrease while releasing it.

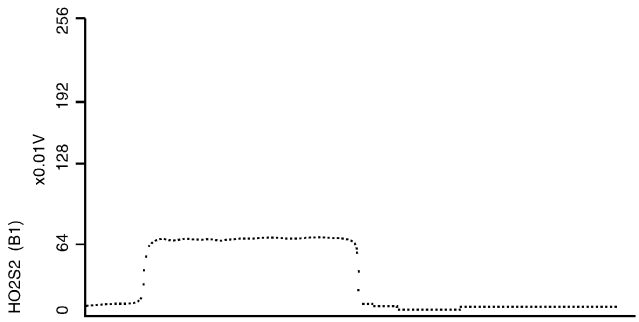

- "HO2S2 (B1)" may increase immediately after depressing the accelerator pedal and may decrease after releasing the pedal.

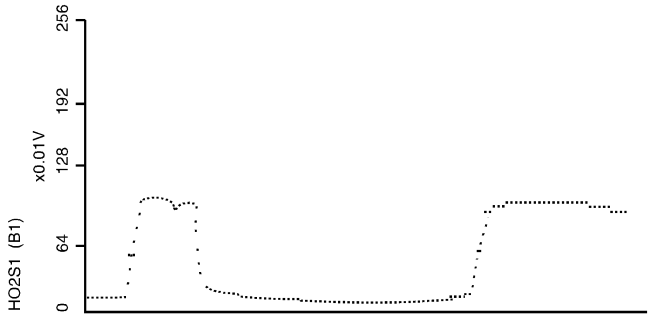

- "HO2S1 (B1)" may increase immediately after depressing the accelerator pedal and may decrease after releasing the pedal.

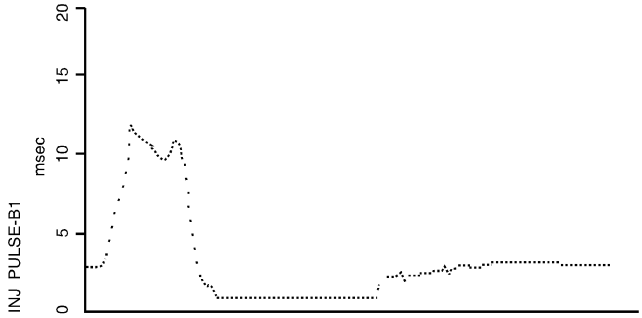

- "INJ PULSE-B1" should increase when depressing the accelerator pedal and should decrease when the pedal is released.

SEF242YD

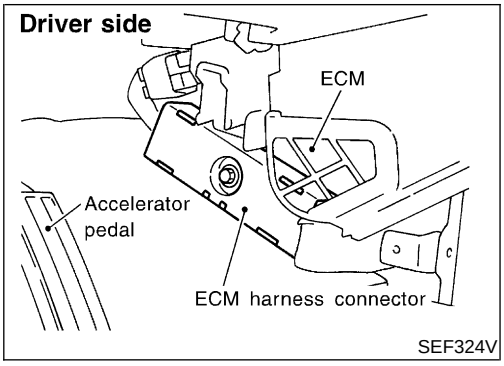

ECM Terminals and Reference Value

NEEC1121

PREPARATION

NEEC1121S01

1. ECM is located behind the instrument lower cover. For this inspection:

- Remove instrument lower cover.

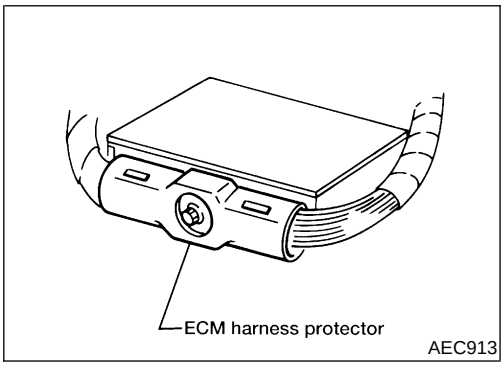

2. Remove ECM harness protector.

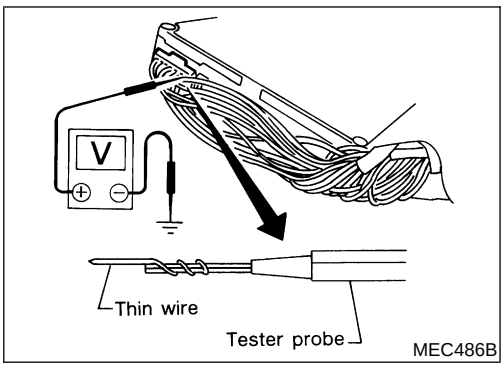

3. Perform all voltage measurements with the connector connected. Extend tester probe as shown to perform tests easily.

- Open harness securing clip to make testing easier.
- Use extreme care not to touch 2 pins at one time.
- Data is for comparison and may not be exact.

ECM HARNESS CONNECTOR TERMINAL LAYOUT

NEEC1121S02

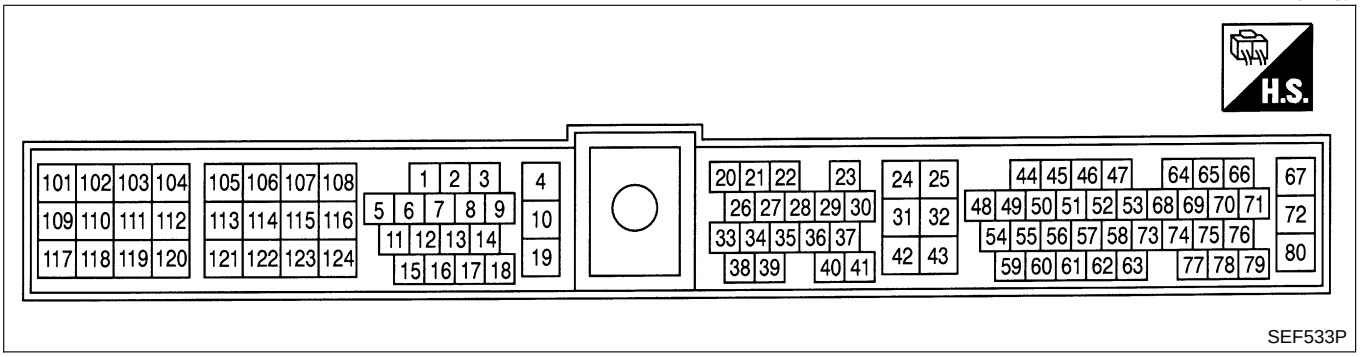

ECM INSPECTION TABLE

NEEC1121S03

Specification data are reference values and are measured between each terminal and ground.

CAUTION:

Do not use ECM ground terminals when measuring input/ output voltage. Doing so may result in damage to the ECM's transistor. Use a ground other than the ECM terminals, such as the ground.

TERMINAL NO.	WIRE COLOR	ITEM	CONDITION	DATA (DC Voltage)
1	PU/W	Ignition signal	**[Engine is running]** ● Idle speed	Approximately 0.7V 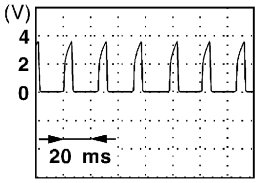 SEF988U
			[Engine is running] ● Engine speed is 2,000 rpm	1.1 - 1.5V 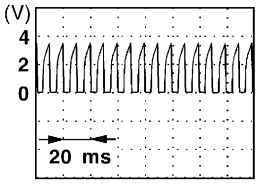 SEF989U
3	P/L	Tachometer	**[Engine is running]** ● **Warm-up condition** ● Idle speed	1 - 2V 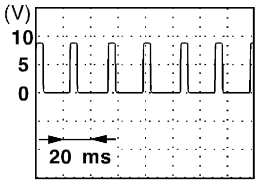 SEF992U
			[Engine is running] ● Engine speed is 2,000 rpm	3 - 5V 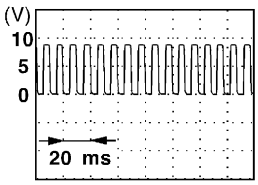 SEF993U
4	OR/B	ECM relay (Self shut-off)	**[Engine is running]** **[Ignition switch OFF]** ● For a few seconds after turning ignition switch OFF	0 - 1.5V
			[Ignition switch OFF] ● A few seconds passed after turning ignition switch OFF	BATTERY VOLTAGE (11 - 14V)

ECM Terminals and Reference Value (Cont'd)

TERMINAL NO.	WIRE COLOR	ITEM	CONDITION	DATA (DC Voltage)
5	R/Y	EVAP canister purge volume control solenoid valve	**[Engine is running]** ● Idle speed	BATTERY VOLTAGE (11 - 14V) 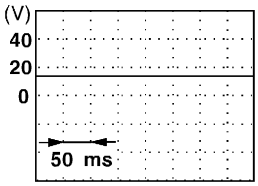 SEF994U
			[Engine is running] ● Engine speed is 2,000 rpm (More than 100 seconds after starting engine)	BATTERY VOLTAGE (11 - 14V) 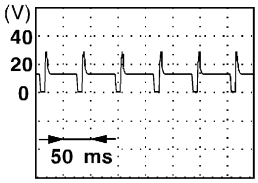 SEF995U
6	G/W	SCB valve control solenoid valve	**[Ignition switch ON]** ● Engine stopped	BATTERY VOLTAGE (11 - 14V)
			[Engine is running] ● Idle speed	Approximately 0V
7	Y/G	A/T check signal	**[Ignition switch ON]** **[Engine is running]**	0 - 3.0V
9	B/Y	Ambient air temperature switch	**[Engine is running]** ● Idle speed ● Ambient air temperature is above 25°C (77°F) ● Air conditioner is operating	0V
			[Engine is running] ● Idle speed ● Ambient air temperature is below 19°C (66°F) ● Air conditioner is operating	BATTERY VOLTAGE (11 - 14V)
			[Engine is running] ● Idle speed ● Ambient air temperature is below 19°C (66°F) ● Air conditioner is not operating	Approximately 5V
10	B/R	ECM ground	**[Engine is running]** ● Idle speed	Engine ground
11	W/R	Fuel pump relay	**[Ignition switch ON]** ● For 5 seconds after turning ignition switch ON **[Engine is running]**	0 - 1V
			[Ignition switch ON] ● More than 5 seconds after turning ignition switch ON	BATTERY VOLTAGE (11 - 14V)
12	P	Air conditioner relay	**[Engine is running]** ● Both A/C switch and blower switch are ON*	0 - 1V
			[Engine is running] ● A/C switch is OFF	BATTERY VOLTAGE (11 - 14V)

TERMINAL NO.	WIRE COLOR	ITEM	CONDITION	DATA (DC Voltage)
18	R/W	Malfunction indicator lamp	**[Ignition switch ON]**	0 - 1V
			[Engine is running] ● Idle speed	BATTERY VOLTAGE (11 - 14V)
19	B/R	ECM ground	**[Engine is running]** ● Idle speed	Engine ground
20	L/OR	Start signal	**[Ignition switch ON]**	Approximately 0V
			[Ignition switch START]	9 - 12V
21	G/R	Air conditioner switch	**[Engine is running]** ● Both A/C switch and blower switch are ON (Compressor operates)*	Approximately 0V
			[Engine is running] ● A/C switch is OFF	BATTERY VOLTAGE (11 - 14V)
22	L/B	Park/neutral position (PNP) switch	**[Ignition switch ON]** ● Gear position is "N" or "P"	Approximately 0V
			[Ignition switch ON] ● Except the above gear position	Approximately 5V
23	L	Throttle position sensor	**[Engine is running]** ● **Warm-up condition** ● More than -40.0 kpa (-300 mmHg, -11.81 inHg) of vacuum is applied to the throttle opener with a hand vacuum pump. ● Accelerator pedal fully released	0.15 - 0.85V
			[Ignition switch ON] ● Accelerator pedal fully depressed	3.5 - 4.7V
24	W/L	Ignition switch	**[Ignition switch OFF]**	0V
			[Ignition switch ON]	BATTERY VOLTAGE (11 - 14V)
25	B/Y	ECM ground	**[Engine is running]** ● Idle speed	Engine ground
26	PU/W	A/T signal No. 1	**[Engine is running]** ● Idle speed	Approximately 0 - 1.0V
27	P/B	A/T signal No. 2	**[Engine is running]** ● Idle speed	Approximately 0 - 1.0V
28	BR/W	Throttle position switch (Closed position)	**[Engine is running]** ● **Warm-up condition** ● More than -40.0 kpa (-300 mmHg, -11.81 inHg) of vacuum is applied to the throttle opener with a hand vacuum pump. ● Accelerator pedal fully released	BATTERY VOLTAGE (11 - 14V)
			[Ignition switch ON] ● Accelerator pedal depressed	Approximately 0V

ECM Terminals and Reference Value (Cont'd)

TERMINAL NO.	WIRE COLOR	ITEM	CONDITION	DATA (DC Voltage)
29	G/B	Vehicle speed sensor	**[Engine is running]** ● Lift up the vehicle. ● In 2nd gear position ● Vehicle speed is 40 km/h (25 MPH)	2 - 3V 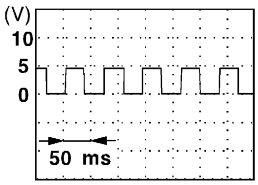 SEF996U
32	B/Y	ECM ground	**[Engine is running]** ● Idle speed	Engine ground
33	W/G	A/T signal No. 4	**[Engine is running]** ● Idle speed	Approximately 0 - 1.0V
34	R/Y	A/T signal No. 5	**[Engine is running]** ● Idle speed	Approximately 8V
35	G/R	A/T signal No. 3	**[Engine is running]** ● Idle speed	Approximately 0 - 1.0V
36	G/R	Cooling fan relay (Low)	**[Engine is running]** ● Cooling fan is not operating	BATTERY VOLTAGE (11 - 14V)
			[Engine is running] ● Cooling fan is operating	0 - 1V
38	LG/R	Cooling fan relay (High)	**[Engine is running]** ● Cooling fan is not operating	BATTERY VOLTAGE (11 - 14V)
			[Engine is running] ● Cooling fan (High) is operating	0 - 1V
39	GY/R	Power steering oil pressure switch	**[Engine is running]** ● Steering wheel is being turned	Approximately 0V
			[Engine is running] ● Steering wheel is not being turned	Approximately 5V
42	B/W	Sensors' power supply	**[Ignition switch ON]**	Approximately 5V
43	BR	Sensors' ground	**[Engine is running]** ● **Warm-up condition** ● Idle speed	Approximately 0V
44	PU	Camshaft position sensor (Reference signal)	**[Engine is running]** ● Idle speed	0.3 - 0.5V 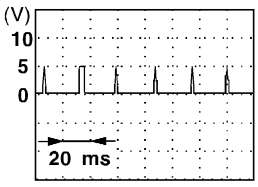 SEF997U
			[Engine is running] ● Engine speed is 2,000 rpm	0.3 - 0.5V 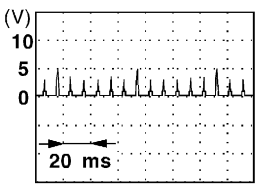 SEF998U

TERMINAL NO.	WIRE COLOR	ITEM	CONDITION	DATA (DC Voltage)
46	G	Fuel level sensor	**[Ignition switch ON]**	Approximately 0 - 4.8V Output voltage varies with fuel level.
47	L	Crankshaft position sensor (OBD)	**[Engine is running]** ● **Warm-up condition** ● Idle speed	1 - 2V (AC range) 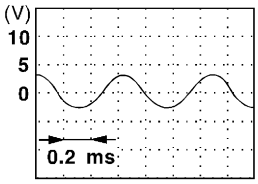 SEF690W
			[Engine is running] ● Engine speed is 2,000 rpm	3 - 4V (AC range) 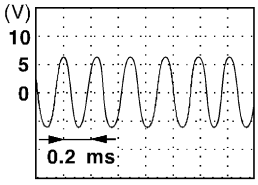 SEF691W
49	LG	Camshaft position sensor (Position signal)	**[Engine is running]** ● **Warm-up condition** ● Idle speed	Approximately 2.5V 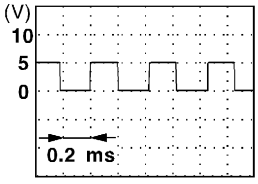 SEF999U
			[Engine is running] ● Engine speed is 2,000 rpm	Approximately 2.5V 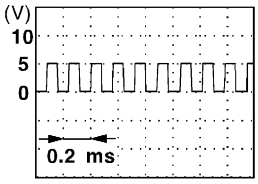 SEF001V
50	B	Heated oxygen sensor 1 (front) (bank 1)	**[Engine is running]** ● **Warm-up condition** ● Engine speed is 2,000 rpm	0 - Approximately 1.0V 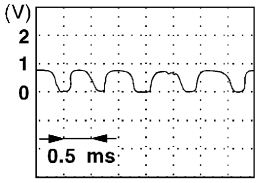 SEF002V

ECM Terminals and Reference Value (Cont'd)

TERMINAL NO.	WIRE COLOR	ITEM	CONDITION	DATA (DC Voltage)
51	G	Heated oxygen sensor 1 (front) (bank 2)	**[Engine is running]** ● **Warm-up condition** ● Engine speed is 2,000 rpm	0 - Approximately 1.0V 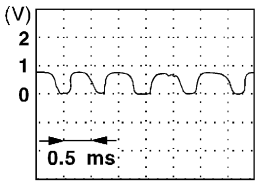 SEF002V
54	R	Mass air flow sensor	**[Engine is running]** ● **Warm-up condition** ● Idle speed	1.0 - 1.7V
			[Engine is running] ● **Warm-up condition** ● Engine speed is 2,500 rpm	1.7 - 2.3V
55	G	Mass air flow sensor ground	**[Engine is running]** ● **Warm-up condition** ● Idle speed	Approximately 0V
56	OR	Heated oxygen sensor 2 (rear) (bank 1)	**[Engine is running]** ● **Warm-up condition** ● Engine speed is 2,000 rpm	0 - Approximately 1.0V
57	Y	Heated oxygen sensor 2 (rear) (bank 2)	**[Engine is running]** ● **Warm-up condition** ● Engine speed is 2,000 rpm	0 - Approximately 1.0V
59	LG/R	Engine coolant temperature sensor	**[Engine is running]**	Approximately 0 - 4.8V Output voltage varies with engine coolant temperature
60	Y/B	Fuel tank temperature sensor	**[Engine is running]**	Approximately 0 - 4.8V Output voltage varies with fuel temperature
61	PU/R	Intake air temperature sensor	**[Engine is running]**	Approximately 0 - 4.8V Output voltage varies with intake air temperature.
62	Y	EVAP control system pressure sensor	**[Ignition switch ON]**	Approximately 3.4V
64	W	Knock sensor	**[Engine is running]** ● Idle speed	Approximately 2.5V
66	B	Fuel level sensor ground	**[Engine is running]** ● Idle speed	Approximately 0V
67	B/P	Power supply for ECM	**[Ignition switch ON]**	BATTERY VOLTAGE (11 - 14V)
69	LG/R	Data link connector	**[Engine is running]** ● Idle speed (CONSULT-II or GST is disconnected)	6 - 10V
72	B/P	Power supply for ECM	**[Ignition switch ON]**	BATTERY VOLTAGE (11 - 14V)
80	SB	Power supply (Back-up)	**[Ignition switch OFF]**	BATTERY VOLTAGE (11 - 14V)

TERMINAL NO.	WIRE COLOR	ITEM	CONDITION	DATA (DC Voltage)
101	OR/L	IACV-AAC valve	**[Engine is running]** ● **Warm-up condition** ● Idle speed	8 - 11V 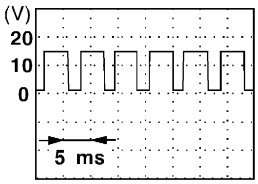 SEF005V
			[Engine is running] ● **Warm-up condition** ● Engine speed is 3,000 rpm	7 - 10V 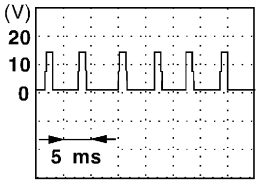 SEF692W
102 104 106 109 111 113	W/B W/R W/G W/L W/PU W	Injector No. 1 Injector No. 3 Injector No. 5 Injector No. 2 Injector No. 4 Injector No. 6	**[Engine is running]** ● **Warm-up condition** ● Idle speed	BATTERY VOLTAGE (11 - 14V) 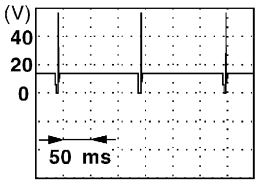 SEF007V
			[Engine is running] ● **Warm-up condition** ● Engine speed is 2,000 rpm	BATTERY VOLTAGE (11 - 14V) 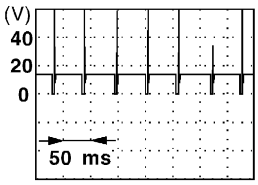 SEF008V
108	R/G	EVAP canister vent control valve	**[Ignition switch ON]**	BATTERY VOLTAGE (11 - 14V)
116	B/R	ECM ground	**[Engine is running]** ● Idle speed	Engine ground
117	B/P	Current return	**[Engine is running]** ● Idle speed	BATTERY VOLTAGE (11 - 14V)
119	BR/Y	Heated oxygen sensor 1 heater (front) (bank 1)	**[Engine is running]** ● Engine speed is below 2,800 rpm	Approximately 0.4V
			[Engine is running] ● Engine speed is above 2,800 rpm	BATTERY VOLTAGE (11 - 14V)
120	P/B	Vacuum cut valve bypass valve	**[Ignition switch ON]**	BATTERY VOLTAGE (11 - 14V)
121	BR	Heated oxygen sensor 1 heater (front) (bank 2)	**[Engine is running]** ● Engine speed is below 2,800 rpm	Approximately 0.4V
			[Engine is running] ● Engine speed is above 2,800 rpm	BATTERY VOLTAGE (11 - 14V)

ECM Terminals and Reference Value (Cont'd)

TERMINAL NO.	WIRE COLOR	ITEM	CONDITION	DATA (DC Voltage)
122	R/B	Heated oxygen sensor 2 heater (rear) (bank 1)	**[Engine is running]** ● Engine speed is below 2,800 rpm ● After driving for 2 minutes at a speed of 70 km/h (43 MPH) or more.	Approximately 0.4V
			[Ignition switch ON] ● Engine stopped **[Engine is running]** ● Engine speed is above 2,800 rpm	BATTERY VOLTAGE (11 - 14V)
123	R/Y	Heated oxygen sensor 2 heater (rear) (bank 2)	**[Engine is running]** ● Engine speed is below 2,800 rpm ● After driving for 2 minutes at a speed of 70 km/h (43 MPH) or more.	Approximately 0.4V
			[Ignition switch ON] ● Engine stopped **[Engine is running]** ● Engine speed is above 2,800 rpm	BATTERY VOLTAGE (11 - 14V)
124	B/R	ECM ground	**[Engine is running]** ● Idle speed	Engine ground

*: Any mode except OFF, ambient air temperature is above 25°C (77°F).

Description

NEEC1122

The specification (SP) value indicates the tolerance of the value that is displayed in “DATA MONITOR (SPEC)” mode of CONSULT-II during normal operation of the Engine Control System. When the value in “DATA MONITOR (SPEC)” mode is within the SP value, the Engine Control System is confirmed OK. When the value in “DATA MONITOR (SPEC)” mode is NOT within the SP value, the Engine Control System may have one or more malfunctions.

The SP value is used to detect malfunctions that may affect the Engine Control System, but will not light the MIL.

The SP value will be displayed for the following three items:

- B/FUEL SCHDL (The fuel injection pulse width programmed into ECM prior to any learned on board correction)
- A/F ALPHA-B1/B2 (The mean value of air-fuel ratio feedback correction factor per cycle)
- MAS A/F SE-B1 (The signal voltage of the mass air flow sensor)

Testing Condition

NEEC1123

- Vehicle driven distance: More than 5,000 km (3,107 miles)
- Barometric pressure: 101.3 kPa (760.0 mmHg, 29.92 inHg)±3 kPa (22.5 mmHg, 0.89 inHg)
- Atmospheric temperature: 20 - 30°C (68 - 86°F)
- Engine coolant temperature: 75 - 95°C (167 - 203°F)
- Transmission: Warmed-up*1
- Electrical load: Not applied*2
- Engine speed: Idle

*1: For A/T models, after the engine is warmed up to normal operating temperature, drive vehicle until “FLUID TEMP SE” (A/T fluid temperature sensor signal) indicates less than 0.9V. For M/T models, drive vehicle for 5 minutes after the engine is warmed up to normal operating temperature.

*2: Rear window defogger switch, air conditioner switch, lighting switch are “OFF”. Cooling fans are not operating. Steering wheel is straight ahead.

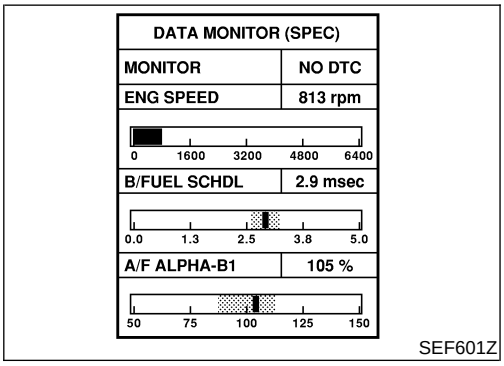

Inspection Procedure

NEEC1124

NOTE:

Perform “DATA MONITOR (SPEC)” mode in maximum scale display.

1. Perform “Basic Inspection”, EC-1314.
2. Confirm that the testing conditions indicated above are met.
3. Select “B/FUEL SCHDL”, “A/F ALPHA-B1”, “A/F ALPHA-B2” and “MAS A/F SE-B1” in “DATA MONITOR (SPEC)” mode with CONSULT-II.
4. Make sure that monitor items are within the SP value.
5. If NG, go to “Diagnostic Procedure”, EC-1350.

Diagnostic Procedure

NEEC1125

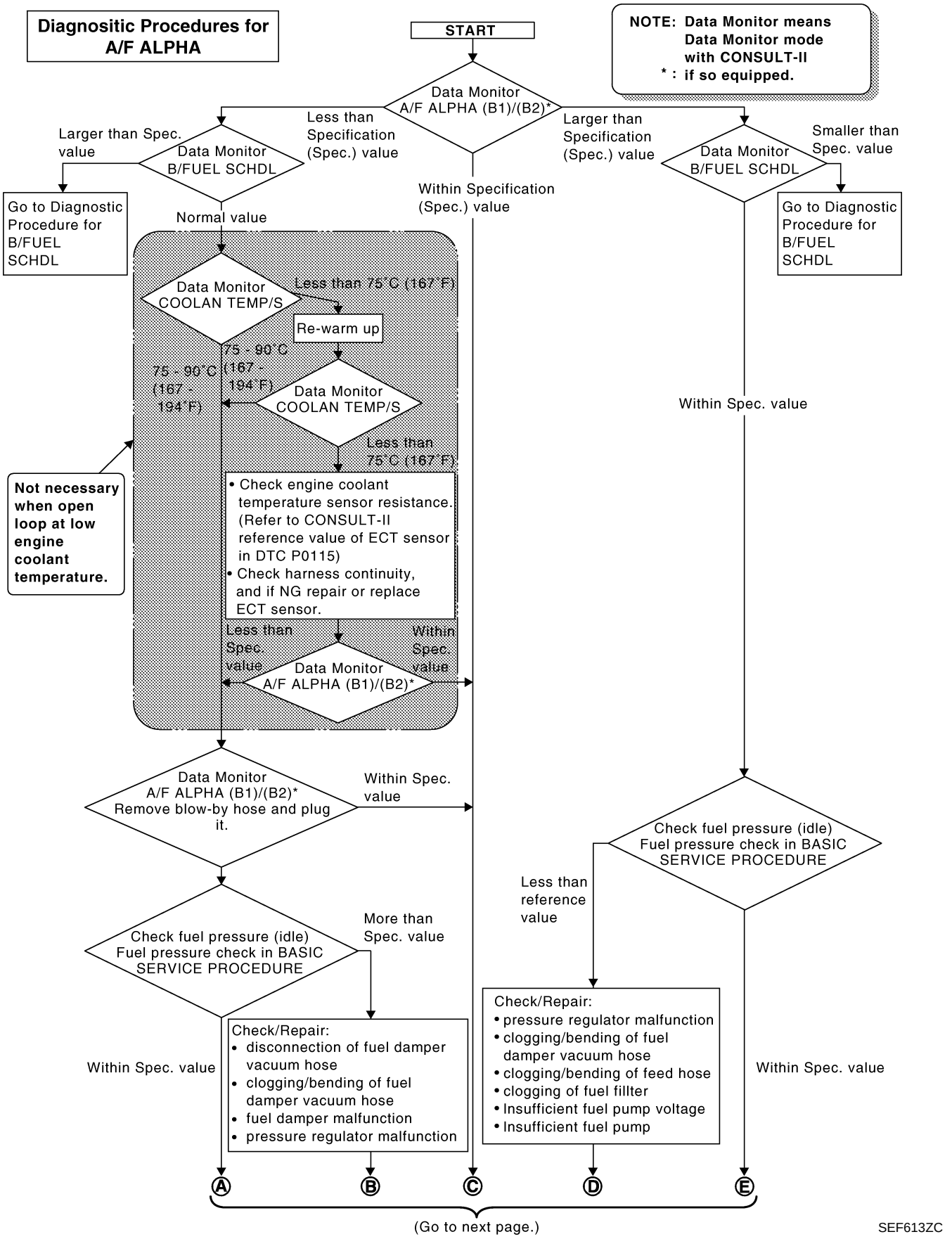

SEF613ZC

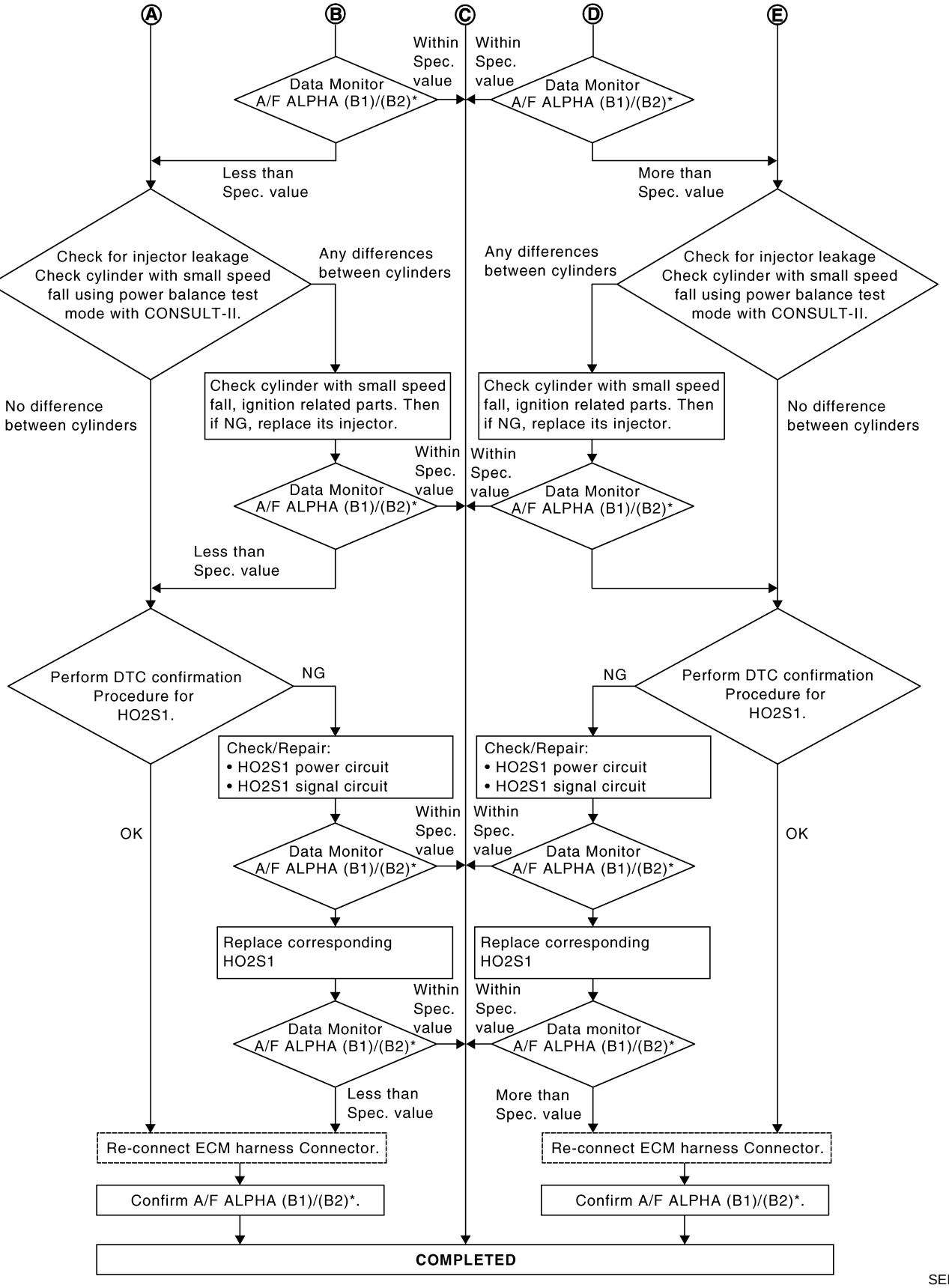
Ⓐ
Ⓑ
Ⓒ
Ⓓ
Ⓔ
Within Spec. value
Within Spec. value
Data Monitor A/F ALPHA (B1)/(B2)*
Data Monitor A/F ALPHA (B1)/(B2)*
Less than Spec. value
More than Spec. value
Check for injector leakage Check cylinder with small speed fall using power balance test mode with CONSULT-II.
Any differences between cylinders
Any differences between cylinders
Check for injector leakage Check cylinder with small speed fall using power balance test mode with CONSULT-II.
No difference between cylinders
Check cylinder with small speed fall, ignition related parts. Then if NG, replace its injector.
Check cylinder with small speed fall, ignition related parts. Then if NG, replace its injector.
No difference between cylinders
Within Spec. value
Within Spec. value
Data Monitor A/F ALPHA (B1)/(B2)*
Data Monitor A/F ALPHA (B1)/(B2)*
Less than Spec. value
Perform DTC confirmation Procedure for HO2S1.
NG
NG
Perform DTC confirmation Procedure for HO2S1.
Check/Repair:
• HO2S1 power circuit
• HO2S1 signal circuit
Check/Repair:
• HO2S1 power circuit
• HO2S1 signal circuit
OK
Within Spec. value
Within Spec. value
OK
Data Monitor A/F ALPHA (B1)/(B2)*
Data Monitor A/F ALPHA (B1)/(B2)*
Replace corresponding HO2S1
Replace corresponding HO2S1
Within Spec. value
Within Spec. value
Data Monitor A/F ALPHA (B1)/(B2)*
Data monitor A/F ALPHA (B1)/(B2)*
Less than Spec. value
More than Spec. value
Re-connect ECM harness Connector.
Re-connect ECM harness Connector.
Confirm A/F ALPHA (B1)/(B2)*.
Confirm A/F ALPHA (B1)/(B2)*.
COMPLETED

SEF768Z

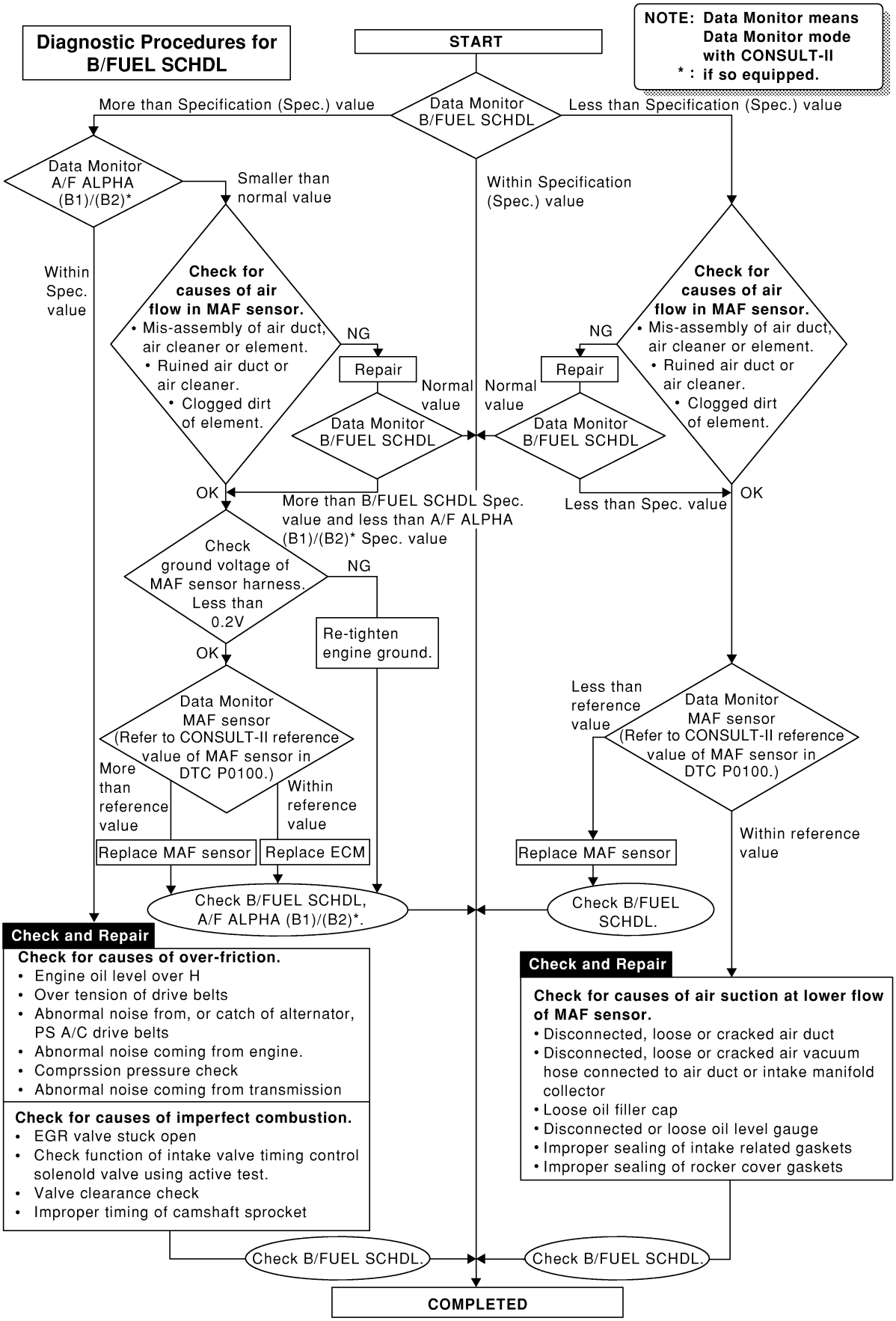
Diagnostic Procedures for B/FUEL SCHDL
START
NOTE: Data Monitor means Data Monitor mode with CONSULT-II
* : if so equipped.
Data Monitor B/FUEL SCHDL
More than Specification (Spec.) value
Less than Specification (Spec.) value
Within Specification (Spec.) value
Data Monitor A/F ALPHA (B1)/(B2)*
Smaller than normal value
Within Spec. value
Check for causes of air flow in MAF sensor.
• Mis-assembly of air duct, air cleaner or element.
• Ruined air duct or air cleaner.
• Clogged dirt of element.
NG
Repair
Normal value
Data Monitor B/FUEL SCHDL
OK
More than B/FUEL SCHDL Spec. value and less than A/F ALPHA (B1)/(B2)* Spec. value
Less than Spec. value
Check ground voltage of MAF sensor harness. Less than 0.2V
Re-tighten engine ground.
Data Monitor MAF sensor (Refer to CONSULT-II reference value of MAF sensor in DTC P0100.)
More than reference value
Within reference value
Less than reference value
Replace MAF sensor
Replace ECM
Check B/FUEL SCHDL, A/F ALPHA (B1)/(B2)*.
Check B/FUEL SCHDL.
Check and Repair
Check for causes of over-friction.
• Engine oil level over H
• Over tension of drive belts
• Abnormal noise from, or catch of alternator, PS A/C drive belts
• Abnormal noise coming from engine.
• Comprssion pressure check
• Abnormal noise coming from transmission
Check for causes of imperfect combustion.
• EGR valve stuck open
• Check function of intake valve timing control solenold valve using active test.
• Valve clearance check
• Improper timing of camshaft sprocket
Check and Repair
Check for causes of air suction at lower flow of MAF sensor.
• Disconnected, loose or cracked air duct
• Disconnected, loose or cracked air vacuum hose connected to air duct or intake manifold collector
• Loose oil filler cap
• Disconnected or loose oil level gauge
• Improper sealing of intake related gaskets
• Improper sealing of rocker cover gaskets
Check B/FUEL SCHDL.
Check B/FUEL SCHDL.
COMPLETED
SEF615Z

Description

NEEC1126

Intermittent incidents (I/I) may occur. In many cases, the problem resolves itself (the part or circuit function returns to normal without intervention). It is important to realize that the symptoms described in the customer's complaint often do not recur on (1st trip) DTC visits. Realize also that the most frequent cause of I/I occurrences is poor electrical connections. Because of this, the conditions under which the incident occurred may not be clear. Therefore, circuit checks made as part of the standard diagnostic procedure may not indicate the specific problem area.

COMMON I/I REPORT SITUATIONS

NEEC1126S01

STEP in Work Flow	Situation
II	The CONSULT-II is used. The SELF-DIAG RESULTS screen shows time data other than "0" or "[1t]".
III	The symptom described by the customer does not recur.
IV	(1st trip) DTC does not appear during the DTC Confirmation Procedure.
VI	The Diagnostic Procedure for PXXXX does not indicate the problem area.

Diagnostic Procedure

NEEC1127

1	INSPECTION START
Erase (1st trip) DTCs. Refer to "HOW TO ERASE EMISSION — RELATED INFORMATION", EC-1287.	
▶	GO TO 2.

2	CHECK GROUND TERMINALS
Check ground terminals for corroding or loose connection. Refer to "Circuit Inspection", "GROUND INSPECTION", ***GI-29***.	
OK or NG	
OK ▶	GO TO 3.
NG ▶	Repair or replace.

3	SEARCH FOR ELECTRICAL INCIDENT
Perform "Incident Simulation Tests", ***GI-24***.	
OK or NG	
OK ▶	GO TO 4.
NG ▶	Repair or replace.

4	CHECK CONNECTOR TERMINALS
Refer to "How to Check Enlarged Contact Spring of Terminal", ***GI-21***.	
OK or NG	
OK ▶	**INSPECTION END**
NG ▶	Repair or replace connector.

Main Power Supply and Ground Circuit

WIRING DIAGRAM

NEEC1128

EC-MAIN-01

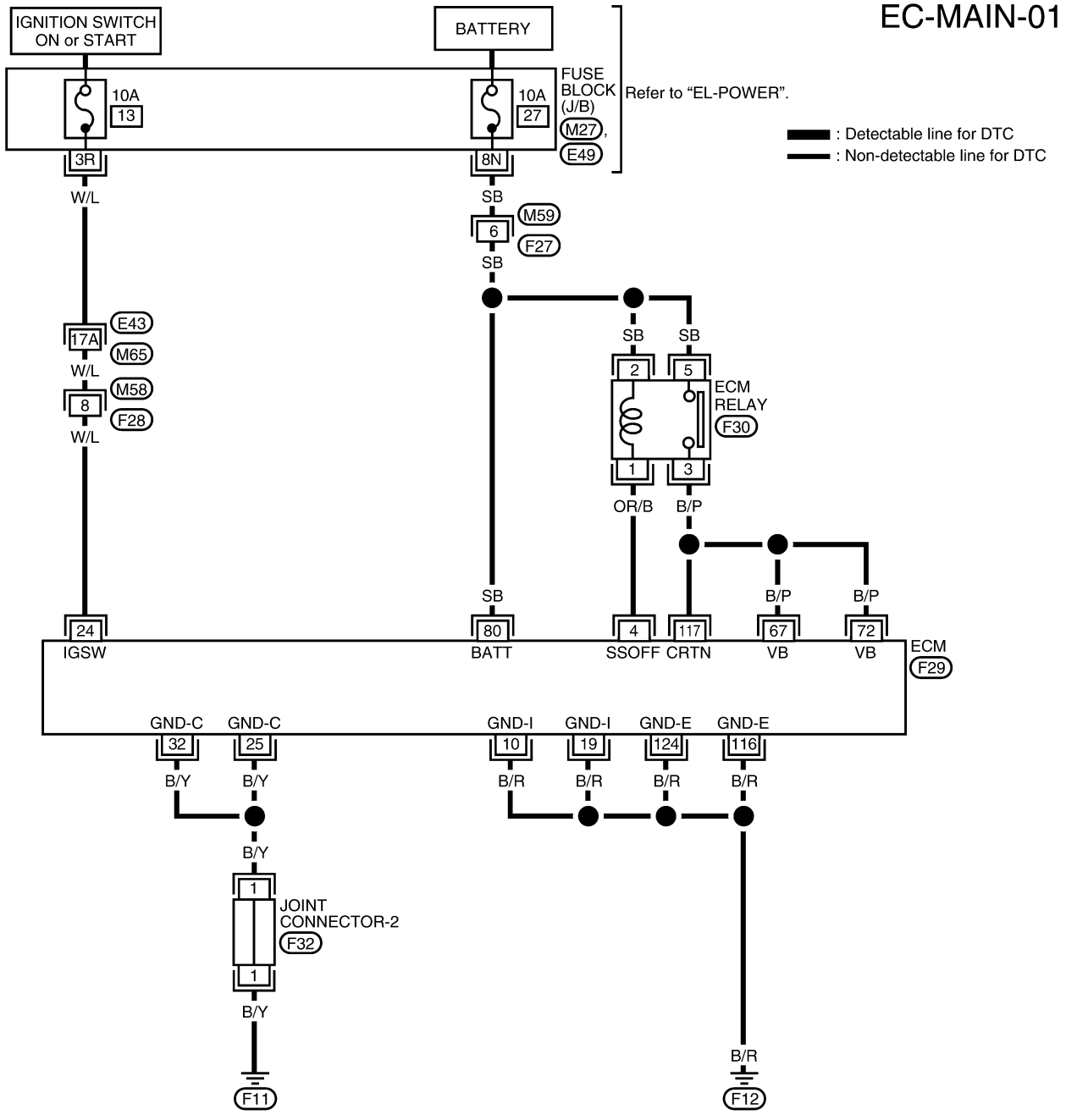

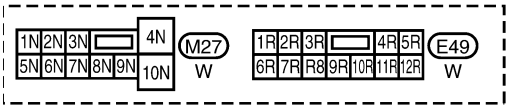

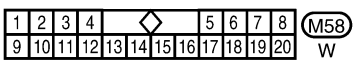

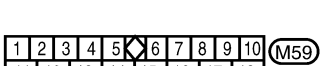

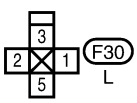



Refer to the following.
M65 , E43 - SUPER MULTIPLE JUNCTION (SMJ)

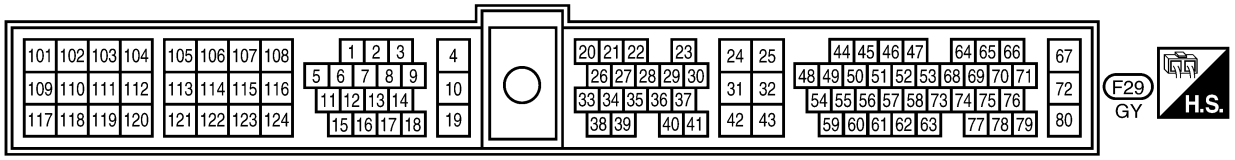

LEC661

ECM TERMINALS AND REFERENCE VALUE

NEEC1129

Specification data are reference values and are measured between each terminal and ground.

CAUTION:

Do not use ECM ground terminals when measuring input/output voltage. Doing so may result in damage to the ECM's transistor. Use a ground other than the ECM terminals, such as the ground.

TERMINAL NO.	WIRE COLOR	ITEM	CONDITION	DATA (DC Voltage)
4	OR/B	ECM relay (Self-shutoff)	**[Engine is running]** **[Ignition switch OFF]** ● For a few seconds after turning ignition switch OFF	0 - 1.5V
			[Ignition switch OFF] ● A few seconds passed after turning ignition switch OFF	BATTERY VOLTAGE (11 - 14V)
10	B/R	ECM ground	**[Engine is running]** ● Idle speed	Engine ground
19	B/R	ECM ground	**[Engine is running]** ● Idle speed	Engine ground
24	W/L	Ignition switch	**[Ignition switch OFF]**	0V
			[Ignition switch ON]	BATTERY VOLTAGE (11 - 14V)
25	B/Y	ECM ground	**[Engine is running]** ● Idle speed	Engine ground
32	B/Y	ECM ground	**[Engine is running]** ● Idle speed	Engine ground
67	B/P	Power supply for ECM	**[Ignition switch ON]**	BATTERY VOLTAGE (11 - 14V)
72	B/P			
80	SB	Power supply (Back-up)	**[Ignition switch OFF]**	BATTERY VOLTAGE (11 - 14V)
116	B/R	ECM ground	**[Engine is running]** ● Idle speed	Engine ground
117	B/P	Current return	**[Engine is running]** ● Idle speed	BATTERY VOLTAGE (11 - 14V)
124	B/R	ECM ground	**[Engine is running]** ● Idle speed	Engine ground

DIAGNOSTIC PROCEDURE

NEEC1130

1	INSPECTION START	
Start engine. **Is engine running?** **Yes or No**		
Yes	▶	GO TO 6.
No	▶	GO TO 2.

2	CHECK ECM POWER SUPPLY CIRCUIT-I

1. Turn ignition switch OFF and then ON.
2. Check voltage between ECM terminal 24 and ground with CONSULT-II or tester.

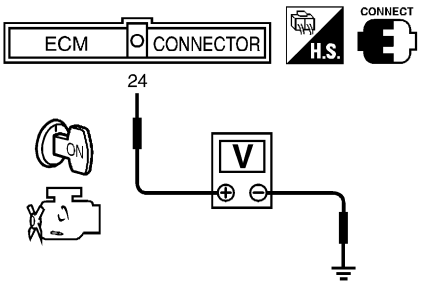

SEF674U

Voltage: Battery voltage

OK or NG

OK	▶	GO TO 4.
NG	▶	GO TO 3.

3	DETECT MALFUNCTIONING PART

Check the following.
- Harness connectors E74, M82
- Harness connectors M58, F28
- Fuse block (J/B) connector E49
- 10A fuse
- Harness for open or short between ECM and fuse

	▶	Repair harness or connectors.

4	CHECK ECM GROUND CIRCUIT-I FOR OPEN AND SHORT

1. Turn ignition switch OFF.
2. Disconnect ECM harness connector.
3. Check harness continuity between ECM terminals 10, 19, 25, 32, 116, 124 and engine ground.
   Refer to WIRING DIAGRAM.
   Continuity should exist.
4. Also check harness for short to power.

OK or NG

OK	▶	GO TO 15.
NG	▶	GO TO 5.

5	DETECT MALFUNCTIONING PART

Check the following.
- Joint connector-2
- Harness for open between ECM and engine ground

	▶	Repair open circuit or short to power in harness or connectors.

6	CHECK ECM POWER SUPPLY CIRCUIT-II

1. Stop engine.
2. Check voltage between ECM terminal 80 and ground with CONSULT-II or tester.

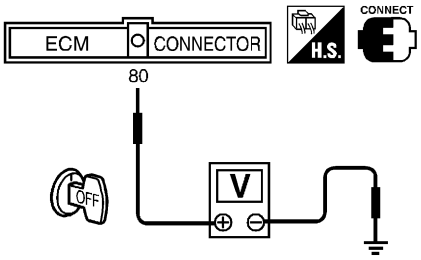

SEF678U

Voltage: Battery voltage

OK or NG

OK	▶	GO TO 8.
NG	▶	GO TO 7.

7	DETECT MALFUNCTIONING PART

Check the following.
- Harness connectors M59, F27
- Fuse block (J/B) connector M27
- 10A fuse
- Harness for open or short between ECM and fuse

	▶	Repair harness or connectors.

8	CHECK ECM POWER SUPPLY CIRCUIT-III

1. Turn ignition switch ON and then OFF.
2. Check voltage between ECM terminals 67, 72, 117 and ground with CONSULT-II or tester.

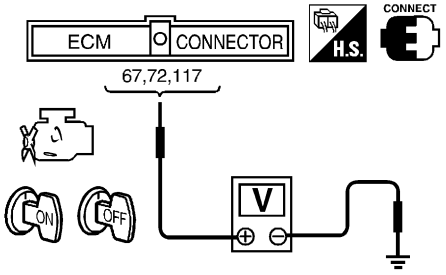

SEF679U

Voltage:
After turning ignition switch OFF, battery voltage will exist for a few seconds, then drop to approximately 0V.

OK or NG

OK	▶	GO TO 14.
NG (Battery voltage does not exist.)	▶	GO TO 9.
NG (Battery voltage exists for more than a few seconds.)	▶	GO TO 13.

9	CHECK ECM POWER SUPPLY CIRCUIT-IV

1. Disconnect ECM relay.

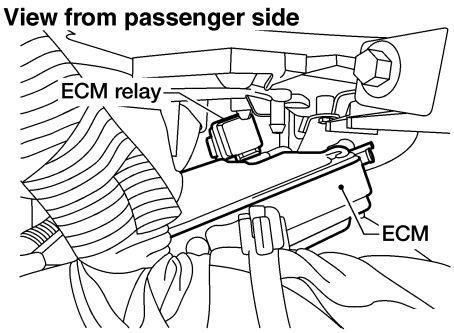

AEC927A

2. Check voltage between terminals 2, 5 and ground with CONSULT-II or tester.

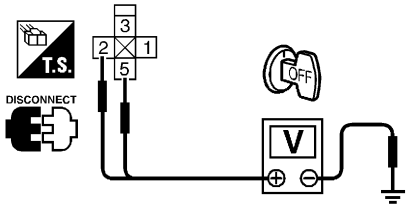

SEF625W

Voltage: Battery voltage

OK or NG

OK	▶	GO TO 11.
NG	▶	GO TO 10.

10	DETECT MALFUNCTIONING PART

Check the following.
- Harness for open or short between ECM relay and harness connectors M59, F27

	▶	Repair open circuit or short to ground or short to power in harness or connectors.

11	CHECK ECM OUTPUT SIGNAL CIRCUIT FOR OPEN AND SHORT

1. Disconnect ECM harness connector.
2. Check harness continuity between ECM terminal 4 and ECM relay terminal 1.
   Refer to WIRING DIAGRAM.
   Continuity should exist.
3. Also check harness for short to ground and short to power.

OK or NG

OK	▶	GO TO 12.
NG	▶	Repair open circuit or short to ground or short to power in harness or connectors.

12	CHECK HARNESS CONTINUITY BETWEEN ECM RELAY AND ECM FOR OPEN AND SHORT

1. Check harness continuity between ECM terminals 67, 72, 117 and ECM relay terminal 3.
   Refer to WIRING DIAGRAM.
   Continuity should exist.
2. Also check harness for short to ground and short to power.

OK or NG

OK	▶	GO TO 13.
NG	▶	Repair open circuit or short to ground or short to power in harness or connectors.

13	CHECK ECM RELAY

1. Apply 12V direct current between relay terminals 1 and 2.
2. Check continuity between relay terminals 3 and 5.

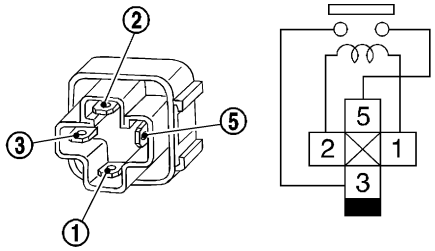

SEF039W

12V (1 - 2) applied: Continuity exists.
No voltage applied: No continuity

OK or NG

OK	▶	GO TO 14.
NG	▶	Replace ECM relay.

14	CHECK ECM GROUND CIRCUIT-II FOR OPEN AND SHORT

1. Turn ignition switch OFF.
2. Disconnect ECM harness connector.
3. Check harness continuity between ECM terminals 10, 19, 25, 32, 116, 124 and engine ground.
   Refer to WIRING DIAGRAM.
   Continuity should exist.
4. Also check harness for short to power.

OK or NG

OK	▶	GO TO 15.
NG	▶	GO TO 5.

15	CHECK INTERMITTENT INCIDENT
Refer to "TROUBLE DIAGNOSIS FOR INTERMITTENT INCIDENT", EC-1353.	
▶	**INSPECTION END**

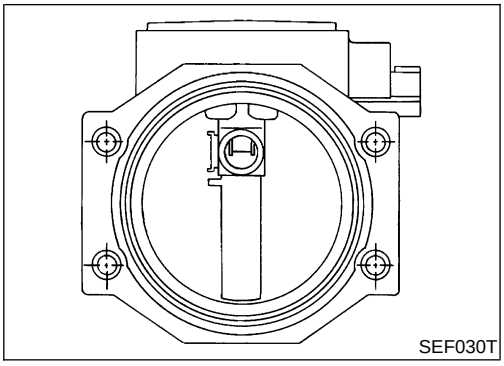
SEF030T

Component Description

NEEC1131

The mass air flow sensor is placed in the stream of intake air. It measures the intake flow rate by measuring a part of the entire intake flow. It consists of a hot wire that is supplied with electric current from the ECM. The temperature of the hot wire is controlled by the ECM a certain amount. The heat generated by the hot wire is reduced as the intake air flows around it. The more air, the greater the heat loss.
Therefore, the ECM must supply more electric current to maintain the temperature of the hot wire as air flow increases. The ECM detects the air flow by means of this current change.

CONSULT-II Reference Value in Data Monitor Mode

NEEC1132

Specification data are reference values.

MONITOR ITEM	CONDITION		SPECIFICATION
MAS A/F SE-B1	• Engine: After warming up • Air conditioner switch: OFF • Shift lever: “N” • No-load	Idle	1.0 - 1.7V
		2,500 rpm	1.7 - 2.3V
CAL/LD VALUE	ditto	Idle	18.5 - 26.0%
		2,500 rpm	18.0 - 21.0%
MASS AIRFLOW	ditto	Idle	3.3 - 4.8 g·m/s
		2,500 rpm	12.0 - 14.9 g·m/s

ECM Terminals and Reference Value

NEEC1133

Specification data are reference values and are measured between each terminal and ground.

CAUTION:
Do not use ECM ground terminals when measuring input/output voltage. Doing so may result in damage to the ECM’s transistor. Use a ground other than the ECM terminals, such as the ground.

TERMINAL NO.	WIRE COLOR	ITEM	CONDITION	DATA (DC Voltage)
54	R	Mass air flow sensor	**[Engine is running]** • **Warm-up condition** • Idle speed	1.0 - 1.7V
			[Engine is running] • **Warm-up condition** • Engine speed is 2,500 rpm	1.7 - 2.3V
55	G	Mass air flow sensor ground	**[Engine is running]** • **Warm-up condition** • Idle speed	Approximately 0V

On Board Diagnosis Logic

NEEC1134

Malfunction is detected when
(Malfunction A) an excessively high voltage from the sensor is sent to ECM when engine is not running,
(Malfunction B) an excessively low voltage from the sensor is sent to ECM when engine is running,
(Malfunction C) a high voltage from the sensor is sent to ECM under light load driving condition,
(Malfunction D) a low voltage from the sensor is sent to ECM under heavy load driving condition.

POSSIBLE CAUSE

NEEC1134S01

Malfunction A or C

NEEC1134S0101

- Harness or connectors
  (The sensor circuit is open or shorted.)
- Mass air flow sensor

Malfunction B or D

NEEC1134S0102

- Harness or connectors
  (The sensor circuit is open or shorted.)
- Intake air leaks
- Mass air flow sensor

FAIL-SAFE MODE

NEEC1134S02

When the malfunction B is detected, the ECM enters fail-safe mode and the MIL lights up.

Detected items	Engine operating condition in fail-safe mode
Mass air flow sensor circuit	Engine speed will not rise more than 2,400 rpm due to the fuel cut.

DTC Confirmation Procedure

NEEC1135

Perform "PROCEDURE FOR MALFUNCTION A" first.
If the 1st trip DTC cannot be confirmed, perform "PROCEDURE FOR MALFUNCTION B".
If there is no problem on "PROCEDURE FOR MALFUNCTION B", perform "PROCEDURE FOR MALFUNCTION C".
If there is no problem on "PROCEDURE FOR MALFUNCTION C", perform "PROCEDURE FOR MALFUNCTION D".

NOTE:
If "DTC Confirmation Procedure" has been previously conducted, always turn ignition switch OFF and wait at least 5 seconds before conducting the next test.

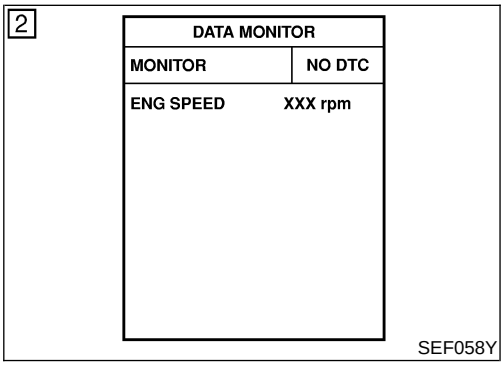

PROCEDURE FOR MALFUNCTION A

NEEC1135S01

With CONSULT-II

1) Turn ignition switch ON.
2) Select "DATA MONITOR" mode with CONSULT-II.
3) Wait at least 6 seconds.
4) If 1st trip DTC is detected, go to "Diagnostic Procedure", EC-1365.

With GST

Follow the procedure "With CONSULT-II".

DTC Confirmation Procedure (Cont'd)

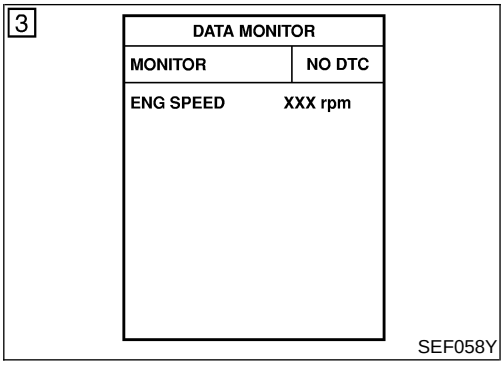

PROCEDURE FOR MALFUNCTION B

NEEC1135S02

With CONSULT-II

1) Turn ignition switch ON.
2) Select "DATA MONITOR" mode with CONSULT-II.
3) Start engine and wait 5 seconds at most.
4) If 1st trip DTC is detected, go to "Diagnostic Procedure", EC-1365.

With GST

Follow the procedure "With CONSULT-II".

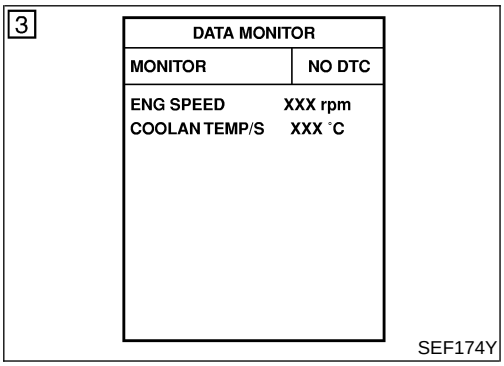

PROCEDURE FOR MALFUNCTION C

NEEC1135S03

NOTE:

If engine will not start or stops soon, wait at least 10 seconds with engine stopped (Ignition switch ON) instead of running engine at idle speed.

With CONSULT-II

1) Turn ignition switch ON.
2) Select "DATA MONITOR" mode with CONSULT-II.
3) Start engine and warm it up to normal operating temperature.
4) Run engine for at least 10 seconds at idle speed.
5) If 1st trip DTC is detected, go to "Diagnostic Procedure", EC-1365.

With GST

Follow the procedure "With CONSULT-II".

6

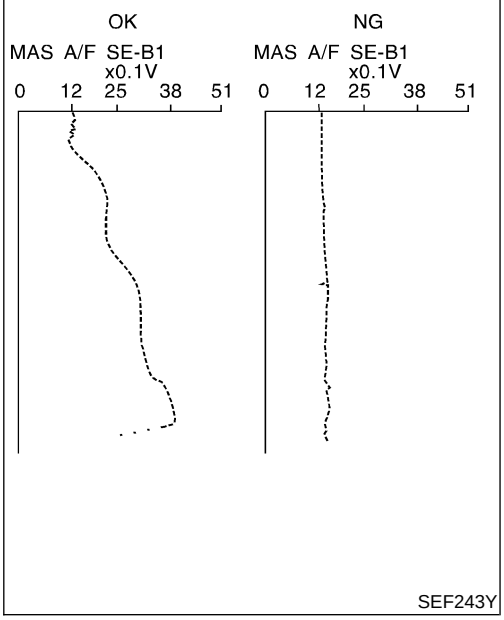

SEF243Y

7

DATA MONITOR	
MONITOR	NO DTC
ENG SPEED	XXX rpm
VHCL SPEED SE	XXX km/h
THRTL POS SEN	XXX V

SEF175Y

CALC LOAD	20%
COOLANT TEMP	95°C
SHORT FT #1	2%
LONG FT #1	0%
SHORT FT #2	4%
LONG FT #2	0%
ENGINE SPD	2637RPM
VEHICLE SPD	0MPH
IGN ADVANCE	41.0°
INTAKE AIR	41°C
MAF	14.1gm/sec
THROTTLE POS	3%

SEF534P

PROCEDURE FOR MALFUNCTION D

NEEC1135S04

CAUTION:

Always drive vehicle at a safe speed.

With CONSULT-II

1) Turn ignition switch "ON".
2) Start engine and warm it up to normal operating temperature. **If engine cannot be started, go to "Diagnostic Procedure", EC-1365.**
3) Select "DATA MONITOR" mode with CONSULT-II.
4) Check the voltage of MAS AIR/FL SE with "DATA MONITOR".
5) Increases engine speed to about 4,000 rpm.
6) Monitor the linear voltage rise in response to engine speed increases.
   If NG, go to "Diagnostic Procedure", EC-1365.
   If OK, go to following step.
7) Maintain the following conditions for at least 10 consecutive seconds.

ENG SPEED	More than 2,000 rpm
THRTL POS SEN	More than 3V
Selector lever	Suitable position
Driving location	Driving vehicle uphill (Increased engine load) will help maintain the driving conditions required for this test.

8) If 1st trip DTC is detected, go to "Diagnostic Procedure", EC-1365.

Overall Function Check

NEEC1136

PROCEDURE FOR MALFUNCTION D

NEEC1136S01

Use this procedure to check the overall function of the mass air flow sensor circuit. During this check, a 1st trip DTC might not be confirmed.

With GST

1) Start engine and warm it up to normal operating temperature.
2) Select "MODE 1" with GST.
3) Check the mass air flow sensor signal with "MODE 1".
4) Check for linear mass air flow sensor signal value rise in response to increases to about 4,000 rpm in engine speed.
5) If NG, go to "Diagnostic Procedure", EC-1365.

Wiring Diagram

NEEC1137

EC-MAFS-01

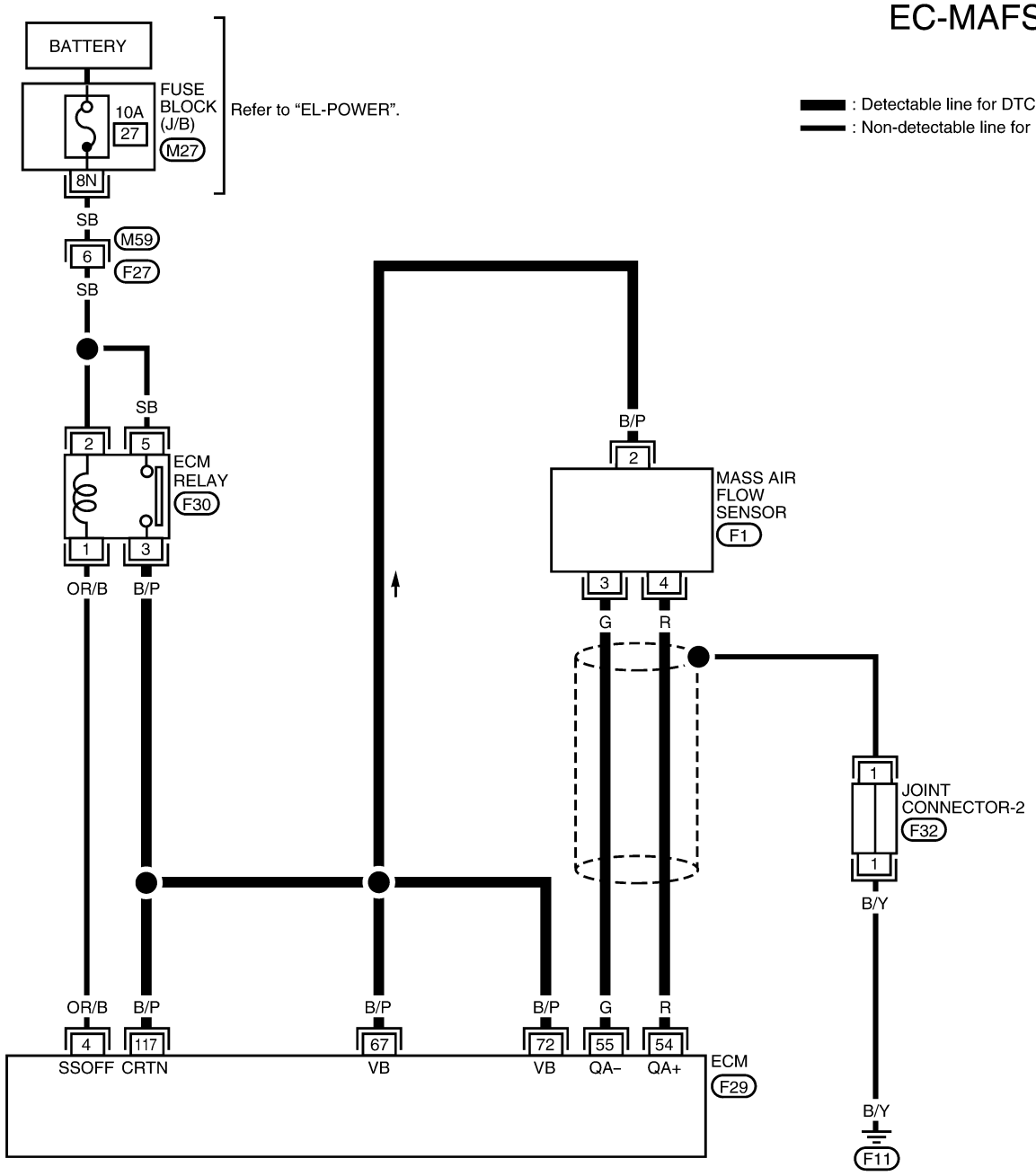

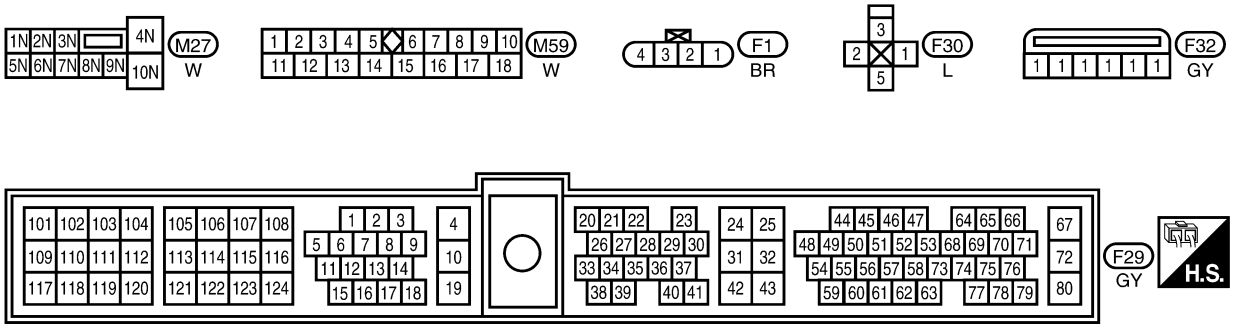

WEC786

Diagnostic Procedure

NEEC1138

1	INSPECTION START

Which malfunction (A, B, C or D) is duplicated?

MALFUNCTION	Type
A and/or C	I
B and/or D	II

MTBL0063

Type I or Type II

Type I	▶	GO TO 3.
Type II	▶	GO TO 2.

2	CHECK INTAKE SYSTEM

Check the following for connection.
- Air duct
- Vacuum hoses
- Intake air passage between air duct to intake manifold collector

OK or NG

OK	▶	GO TO 3.
NG	▶	Reconnect the parts.

3	RETIGHTEN GROUND SCREWS

1. Turn ignition switch OFF.
2. Loosen and retighten engine ground screws.

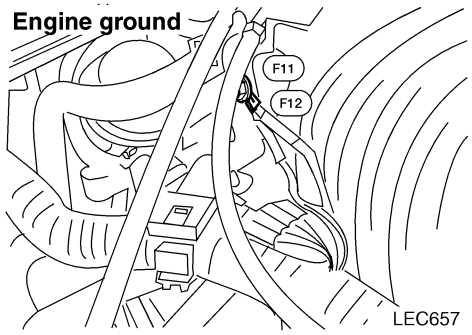

LEC657

	▶	GO TO 4.

4	CHECK MAFS POWER SUPPLY CIRCUIT

1. Disconnect mass air flow sensor harness connector.

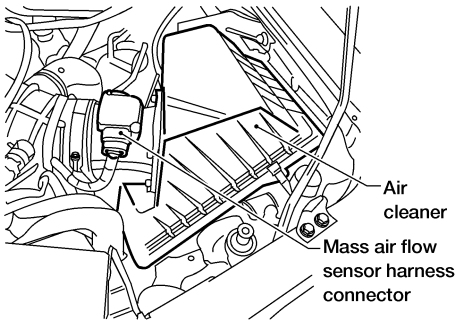

AEC641A

2. Turn ignition switch ON.
3. Check voltage between terminal 2 and ground with CONSULT-II or tester.

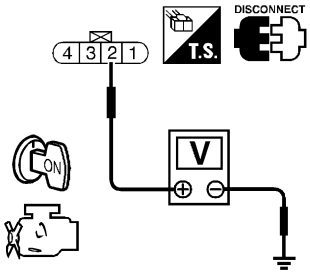

SEF627W

Voltage: Battery voltage

OK or NG

OK	▶	GO TO 6.
NG	▶	GO TO 5.

5	DETECT MALFUNCTIONING PART

Check the following.
- Harness for open or short between ECM relay and mass air flow sensor
- Harness for open or short between mass air flow sensor and ECM

	▶	Repair harness or connectors.

6	CHECK MAFS GROUND CIRCUIT FOR OPEN AND SHORT

1. Turn ignition switch OFF.
2. Disconnect ECM harness connector.
3. Check harness continuity between MAFS terminal 3 and ECM terminal 55.
   Refer to Wiring Diagram.
   Continuity should exist.
4. Also check harness for short to ground and short to power.

OK or NG

OK	▶	GO TO 7.
NG	▶	Repair open circuit or short to ground or short to power in harness or connectors.

7	CHECK MAFS INPUT SIGNAL CIRCUIT FOR OPEN AND SHORT

1. Check harness continuity between MAFS terminal 4 and ECM terminal 54.
   Refer to Wiring Diagram.
   Continuity should exist.
2. Also check harness for short to ground and short to power.

OK or NG

OK	▶	GO TO 8.
NG	▶	Repair open circuit or short to ground or short to power in harness or connectors.

8	CHECK MASS AIR FLOW SENSOR

1. Reconnect harness connectors disconnected.
2. Start engine and warm it up to normal operating temperature.
3. Check voltage between ECM terminal 54 (Mass air flow sensor signal) and ground.

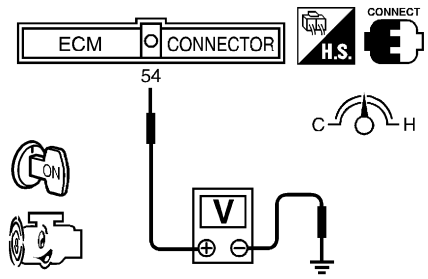

SEF747U

Condition	Voltage V
Ignition switch "ON" (Engine stopped.)	Less than 1.0
Idle (Engine is warmed-up to normal operating temperature.)	1.0 - 1.7
2,500 rpm (Engine is warmed-up to normal operating temperature.)	1.7 - 2.3
Idle to about 4,000 rpm*	1.0 - 1.7 to Approx. 4.0

MTBL0227

4. If the voltage is out of specification, disconnect mass air flow sensor harness connector and connect it again. Then repeat above check.
5. If NG, remove mass air flow sensor from air duct. Check hot wire for damage or dust.

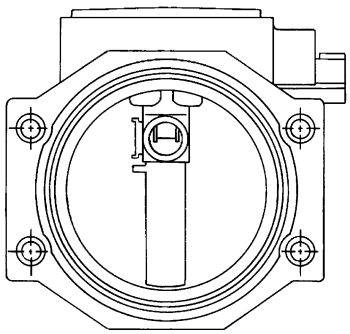

SEF030T

OK or NG

OK	▶	GO TO 9.
NG	▶	Replace mass air flow sensor.

Diagnostic Procedure (Cont'd)

9	CHECK MAFS SHIELD CIRCUIT FOR OPEN AND SHORT	
1. Turn ignition switch OFF. 2. Disconnect joint connector-2. 3. Check the following. ● Continuity between joint connector-2 terminal 1 and ground Refer to Wiring Diagram. ● Joint connector-2 (Refer to ***EL-238***, "HARNESS LAYOUT".) **Continuity should exist.** 4. Also check harness for short to power. 5. Then reconnect joint connector-2. **OK or NG**		
OK	▶	GO TO 10.
NG	▶	Repair open circuit or short to power in harness or connectors.

10	CHECK INTERMITTENT INCIDENT
Refer to "TROUBLE DIAGNOSIS FOR INTERMITTENT INCIDENT", EC-1353.	
▶	**INSPECTION END**

Component Description

NEEC1139

The absolute pressure sensor is built into ECM. The sensor detects ambient barometric pressure and sends the voltage signal to the microcomputer.

On Board Diagnosis Logic

NEEC1140

Malfunction is detected when an excessively low or high voltage from the sensor is sent to the micro computer.

POSSIBLE CAUSE

NEEC1140S01

- ECM

DTC Confirmation Procedure

NEEC1141

NOTE:

If "DTC Confirmation Procedure" has been previously conducted, always turn ignition switch OFF and wait at least 5 seconds before conducting the next test.

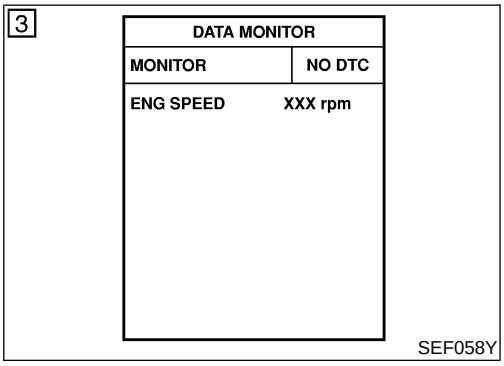

With CONSULT-II

1) Turn ignition switch ON.
2) Select "DATA MONITOR" mode with CONSULT-II.
3) Wait at least 6 seconds.
4) If 1st trip DTC is detected, go to "Diagnostic Procedure", EC-1370.

With GST

Follow the procedure "With CONSULT-II".

Diagnostic Procedure

NEEC1142

1	INSPECTION START	
With CONSULT-II 1. Turn ignition switch ON. 2. Select “SELF DIAG RESULTS” mode with CONSULT-II. 3. Touch “ERASE”. 4. **Perform “DTC Confirmation Procedure”.** See EC-1369. 5. Is the 1st trip DTC P0105 displayed again?		
With GST 1. Turn ignition switch ON. 2. Select MODE 4 with GST. 3. Touch “ERASE”. 4. **Perform “DTC Confirmation Procedure”.** See EC-1369. 5. Is the 1st trip DTC P0105 displayed again?		
Yes or No		
Yes	▶	Replace ECM.
No	▶	**INSPECTION END**

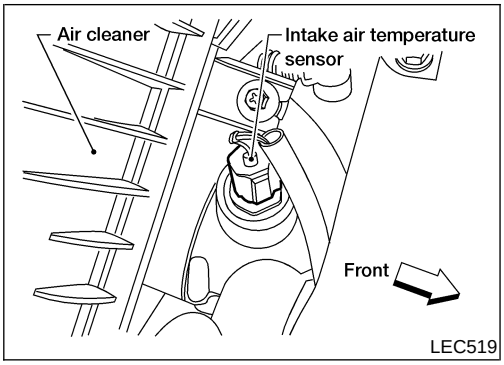

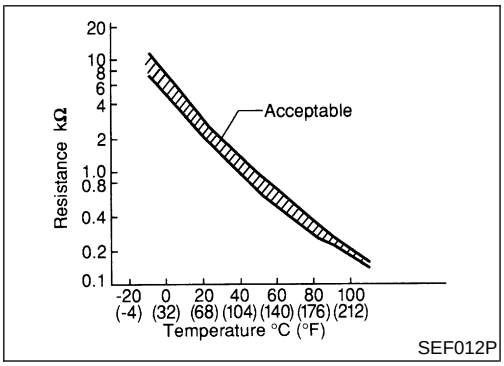

Component Description

NEEC1143

The intake air temperature sensor is mounted to the air duct housing. The sensor detects intake air temperature and transmits a signal to the ECM.

The temperature sensing unit uses a thermistor which is sensitive to the change in temperature. Electrical resistance of the thermistor decreases in response to the temperature rise.

<Reference data>

Intake air temperature °C (°F)	Voltage* (V)	Resistance kΩ
20 (68)	3.5	2.1 - 2.9
80 (176)	1.23	0.27 - 0.38

*: These data are reference values and are measured between ECM terminal 61 (Intake air temperature sensor) and ground.

CAUTION:

Do not use ECM ground terminals when measuring input/ output voltage. Doing so may result in damage to the ECM's transistor. Use a ground other than the ECM terminals, such as the ground.

On Board Diagnosis Logic

NEEC1144

Malfunction is detected when

(Malfunction A) an excessively low or high voltage from the sensor is sent to ECM,

(Malfunction B) rationally incorrect voltage from the sensor is sent to ECM, compared with the voltage signal from engine coolant temperature sensor.

POSSIBLE CAUSE

NEEC1144S01

- Harness or connectors
  (The sensor circuit is open or shorted.)
- Intake air temperature sensor

DTC Confirmation Procedure

NEEC1145

Perform "PROCEDURE FOR MALFUNCTION A" first. If 1st trip DTC cannot be confirmed, perform "PROCEDURE FOR MALFUNCTION B".

NOTE:

If "DTC Confirmation Procedure" has been previously conducted, always turn ignition switch OFF and wait at least 5 seconds before conducting the next test.

DTC Confirmation Procedure (Cont'd)

3

DATA MONITOR	
MONITOR	NO DTC
ENG SPEED	XXX rpm

SEF058Y

5

DATA MONITOR	
MONITOR	NO DTC
COOLAN TEMP/S	XXX °C
VHCL SPEED SE	XXX km/h

SEF176Y

PROCEDURE FOR MALFUNCTION A

NEEC1145S01

With CONSULT-II

1) Turn ignition switch ON.
2) Select "DATA MONITOR" mode with CONSULT-II.
3) Wait at least 5 seconds.
4) If 1st trip DTC is detected, go to "Diagnostic Procedure", EC-1374.

With GST

Follow the procedure "With CONSULT-II".

PROCEDURE FOR MALFUNCTION B

NEEC1145S02

CAUTION:

Always drive vehicle at a safe speed.

TESTING CONDITION:

This test may be conducted with the drive wheels lifted in the shop or by driving the vehicle. If a road test is expected to be easier, it is unnecessary to lift the vehicle.

With CONSULT-II

1) Wait until engine coolant temperature is less than 90°C (194°F).

a) Turn ignition switch ON.
b) Select "DATA MONITOR" mode with CONSULT-II.
c) Check the engine coolant temperature.
d) If the engine coolant temperature is not less than 90°C (194°F), turn ignition switch OFF and cool down engine.

- Perform the following steps before engine coolant temperature is above 90°C (194°F).

2) Turn ignition switch ON.
3) Select "DATA MONITOR" mode with CONSULT-II.
4) Start engine.
5) Hold vehicle speed at more than 70 km/h (43 MPH) for 100 consecutive seconds.
6) If 1st trip DTC is detected, go to "Diagnostic Procedure", EC-1374.

With GST

Follow the procedure "With CONSULT-II".

Wiring Diagram

NEEC1146

EC-IATS-01

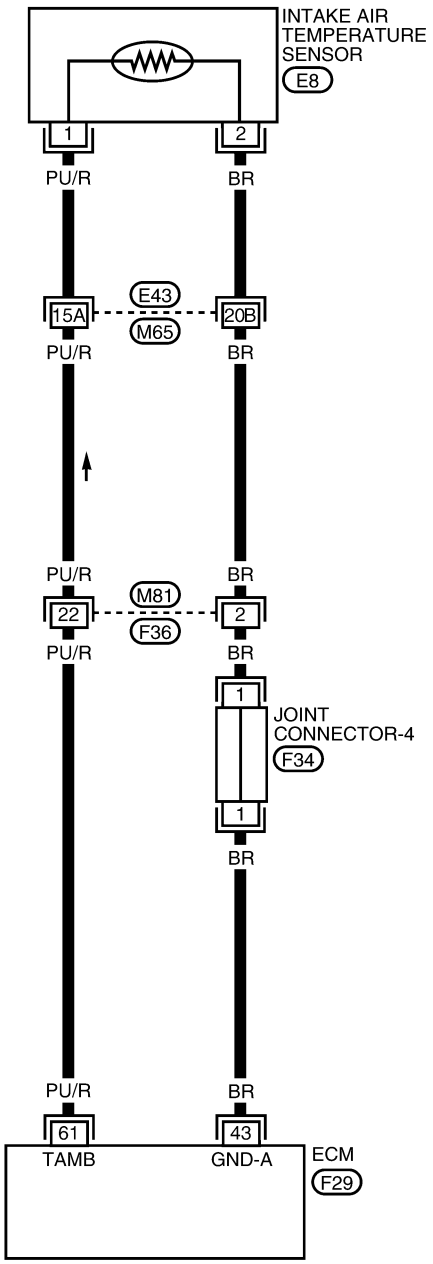

Refer to the following.
M65 , E43 - SUPER MULTIPLE JUNCTION (SMJ)

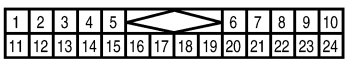



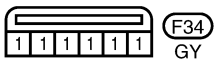

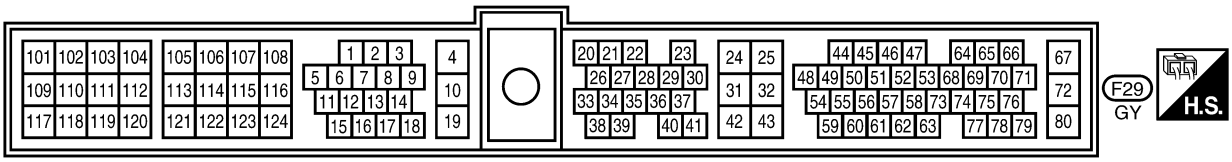

LEC662

Diagnostic Procedure

NEEC1147

1	CHECK INTAKE AIR TEMPERATURE SENSOR POWER SUPPLY CIRCUIT

1. Turn ignition switch OFF.
2. Disconnect intake air temperature sensor harness connector.

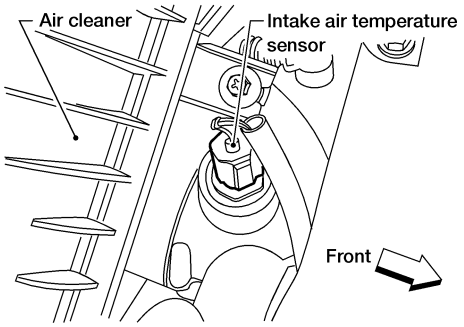

LEC519

3. Turn ignition switch ON.
4. Check voltage between terminal 1 and ground.

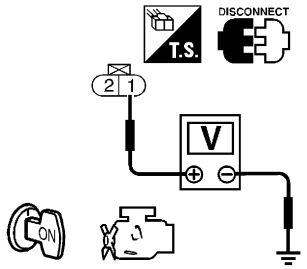

SEF203W

Voltage: Approximately 5V

OK or NG

OK	▶	GO TO 3.
NG	▶	GO TO 2.

2	DETECT MALFUNCTIONING PART

Check the following.
- Harness connectors E43, M65
- Harness connectors M81, F36
- Harness for open or short between ECM and intake air temperature sensor

	▶	Repair harness or connectors.

3	CHECK INTAKE AIR TEMPERATURE SENSOR GROUND CIRCUIT FOR OPEN AND SHORT

1. Turn ignition switch OFF.
2. Check harness continuity between intake air temperature sensor terminal 2 and engine ground.
   Refer to Wiring Diagram.
   Continuity should exist.
3. Also check harness for short to power.

OK or NG

OK	▶	GO TO 5.
NG	▶	GO TO 4.

4	DETECT MALFUNCTIONING PART
Check the following. ● Harness connectors E43, M65 ● Harness connectors M81, F36 ● Joint connector-4 ● Harness for open or short between ECM and intake air temperature sensor	
▶	Repair open circuit or short to power in harness or connectors.

5	CHECK INTAKE AIR TEMPERATURE SENSOR

Check resistance as shown in the figure.

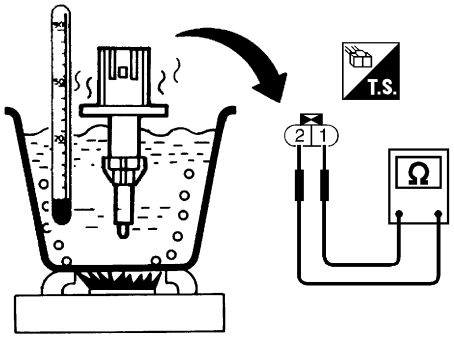

SEF947Q

<Reference data>

Intake air temperature °C (°F)	Resistance kΩ
20 (68)	2.1 - 2.9
80 (176)	0.27 - 0.38

MTBL0228

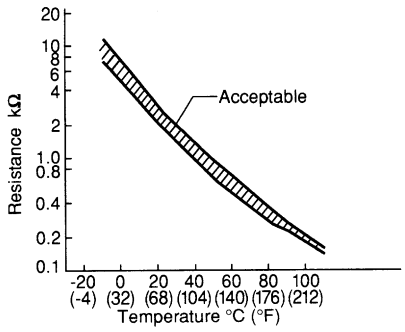

SEF012P

OK or NG

OK	▶	GO TO 6.
NG	▶	Replace intake air temperature sensor.

6	CHECK INTERMITTENT INCIDENT
Refer to "TROUBLE DIAGNOSIS FOR INTERMITTENT INCIDENT", EC-1353.	
▶	**INSPECTION END**

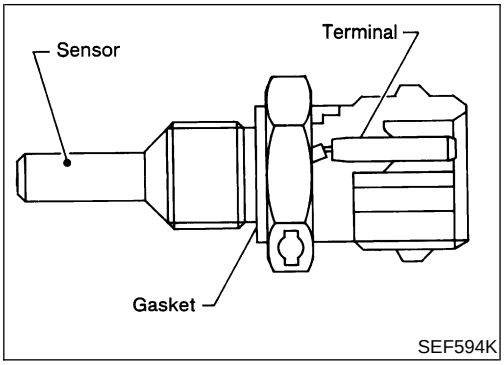

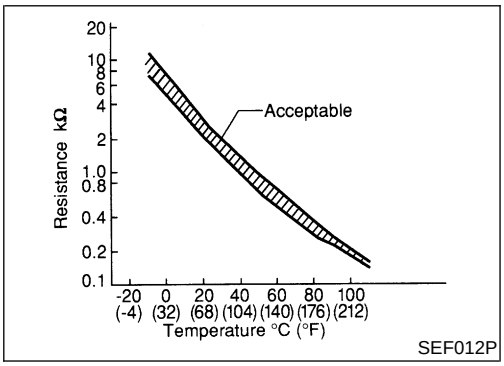

Component Description

NEEC1148

The engine coolant temperature sensor is used to detect the engine coolant temperature. The sensor modifies a voltage signal from the ECM. The modified signal returns to the ECM as the engine coolant temperature input. The sensor uses a thermistor which is sensitive to the change in temperature. The electrical resistance of the thermistor decreases as temperature increases.

<Reference data>

Engine coolant temperature °C (°F)	Voltage* (V)	Resistance (kΩ)
−10 (14)	4.4	7.0 - 11.4
20 (68)	3.5	2.1 - 2.9
50 (122)	2.2	0.68 - 1.00
90 (194)	0.9	0.236 - 0.260

*: These data are reference values and are measured between ECM terminal 59 (Engine coolant temperature sensor) and ground.

CAUTION:

Do not use ECM ground terminals when measuring input/ output voltage. Doing so may result in damage to the ECM's transistor. Use a ground other than the ECM terminals, such as the ground.

On Board Diagnosis Logic

NEEC1149

Malfunction is detected when an excessively high or low voltage from the sensor is sent to ECM.

POSSIBLE CAUSE

NEEC1149S01

- Harness or connectors
  (The sensor circuit is open or shorted.)
- Engine coolant temperature sensor

FAIL-SAFE MODE

NEEC1149S02

When this malfunction is detected, the ECM enters fail-safe mode and the MIL lights up.

Detected items	Engine operating condition in fail-safe mode	
Engine coolant temperature sensor circuit	Engine coolant temperature will be determined by ECM based on the time after turning ignition switch ON or START. CONSULT-II displays the engine coolant temperature decided by ECM.	
	Condition	Engine coolant temperature decided (CONSULT-II display)
	Just as ignition switch is turned ON or Start	40°C (104°F)
	More than approx. 4 minutes after ignition ON or Start	80°C (176°F)
	Except as shown above	40 - 80°C (104 - 176°F) (Depends on the time)

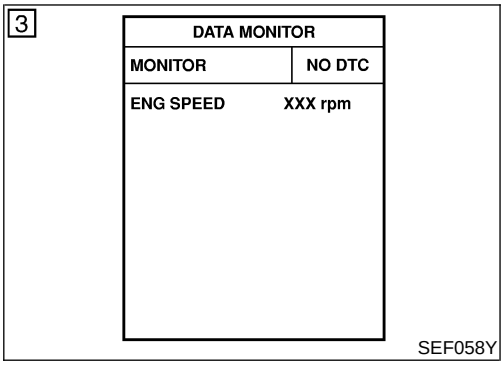

DTC Confirmation Procedure

NEEC1150

NOTE:
If "DTC Confirmation Procedure" has been previously conducted, always turn ignition switch OFF and wait at least 5 seconds before conducting the next test.

With CONSULT-II

1) Turn ignition switch ON.
2) Select "DATA MONITOR" mode with CONSULT-II.
3) Wait at least 5 seconds.
4) If 1st trip DTC is detected, go to "Diagnostic Procedure", EC-1379.

With GST

Follow the procedure "With CONSULT-II".

Wiring Diagram

NEEC1151

EC-ECTS-01

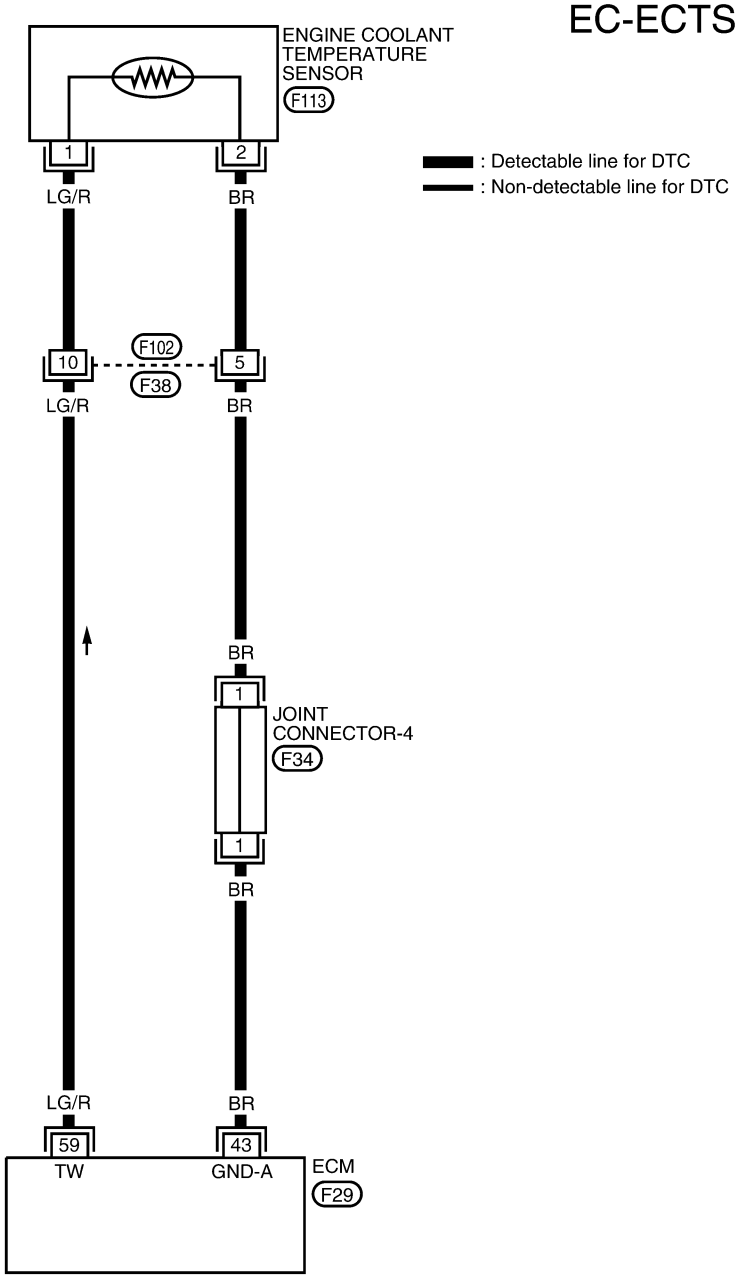

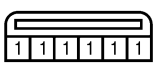

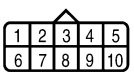

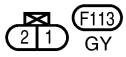

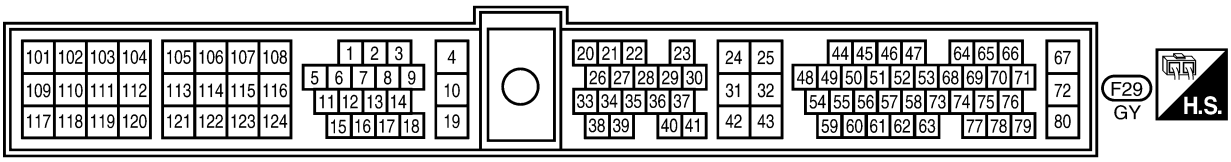

LEC663

Diagnostic Procedure

NEEC1152

1	CHECK ECTS POWER SUPPLY CIRCUIT

1. Turn ignition switch OFF.
2. Disconnect engine coolant temperature sensor harness connector.

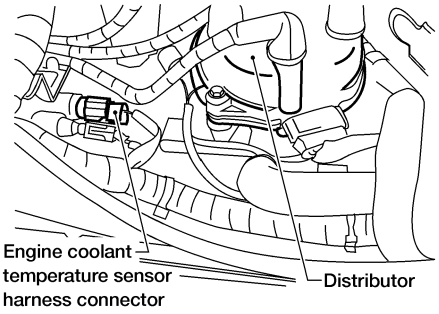

AEC643A

3. Turn ignition switch ON.
4. Check voltage between ECTS terminal 1 and ground with CONSULT-II or tester.

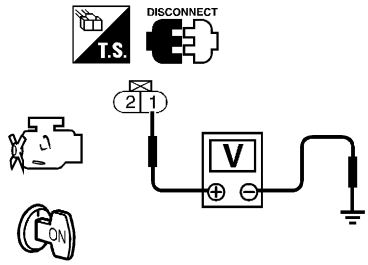

SEF206W

Voltage: Approximately 5V

OK or NG

OK	▶	GO TO 3.
NG	▶	GO TO 2.

2	DETECT MALFUNCTIONING PART

Check the following.
- Harness connectors F38, F102
- Harness for open or short between ECM and engine coolant temperature sensor

	▶	Repair open circuit or short to ground or short to power in harness or connectors.

3	CHECK ECTS GROUND CIRCUIT FOR OPEN AND SHORT

1. Turn ignition switch OFF.
2. Check harness continuity between ECTS terminal 2 and engine ground.
   Refer to Wiring Diagram.
   Continuity should exist.
3. Also check harness for short to power.

OK or NG

OK	▶	GO TO 5.
NG	▶	GO TO 4.

Diagnostic Procedure (Cont'd)

4	DETECT MALFUNCTIONING PART
Check the following. ● Harness connectors F38, F102 ● Joint connector-4 ● Harness for open or short between ECM and engine coolant temperature sensor	
▶	Repair open circuit or short to power in harness or connectors.

5	CHECK ENGINE COOLANT TEMPERATURE SENSOR

Check resistance as shown in the figure.

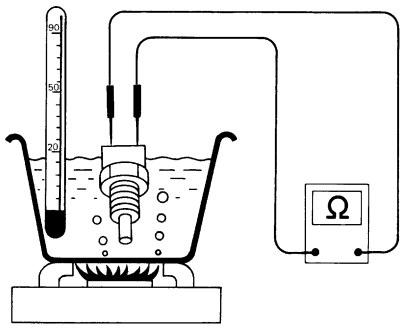

SEF152P

<Reference data>

Temperature °C (°F)	Resistance kΩ
20 (68)	2.1 - 2.9
50 (122)	0.68 - 1.00
90 (194)	0.236 - 0.260

MTBL0229

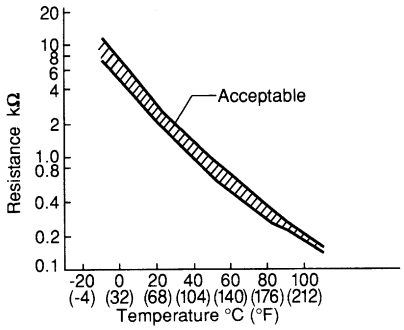

SEF012P

OK or NG

OK	▶	GO TO 6.
NG	▶	Replace engine coolant temperature sensor.

6	CHECK INTERMITTENT INCIDENT
Refer to "TROUBLE DIAGNOSIS FOR INTERMITTENT INCIDENT", EC-1353.	
▶	**INSPECTION END**

Description

NEEC1153

NOTE:
If DTC P0120 is displayed with DTC P0510, first perform the trouble diagnosis for DTC P0510. Refer to EC-1652.

COMPONENT DESCRIPTION

NEEC1153S01

The throttle position sensor responds to the accelerator pedal movement. This sensor is a kind of potentiometer which transforms the throttle position into output voltage, and emits the voltage signal to the ECM. In addition, the sensor detects the opening and closing speed of the throttle valve and feeds the voltage signal to the ECM.
Idle position of the throttle valve is determined by the ECM receiving the signal from the throttle position sensor. This sensor controls engine operation such as fuel cut. On the other hand, the “Wide open and closed throttle position switch”, which is built into the throttle position sensor unit, is not used for engine control.

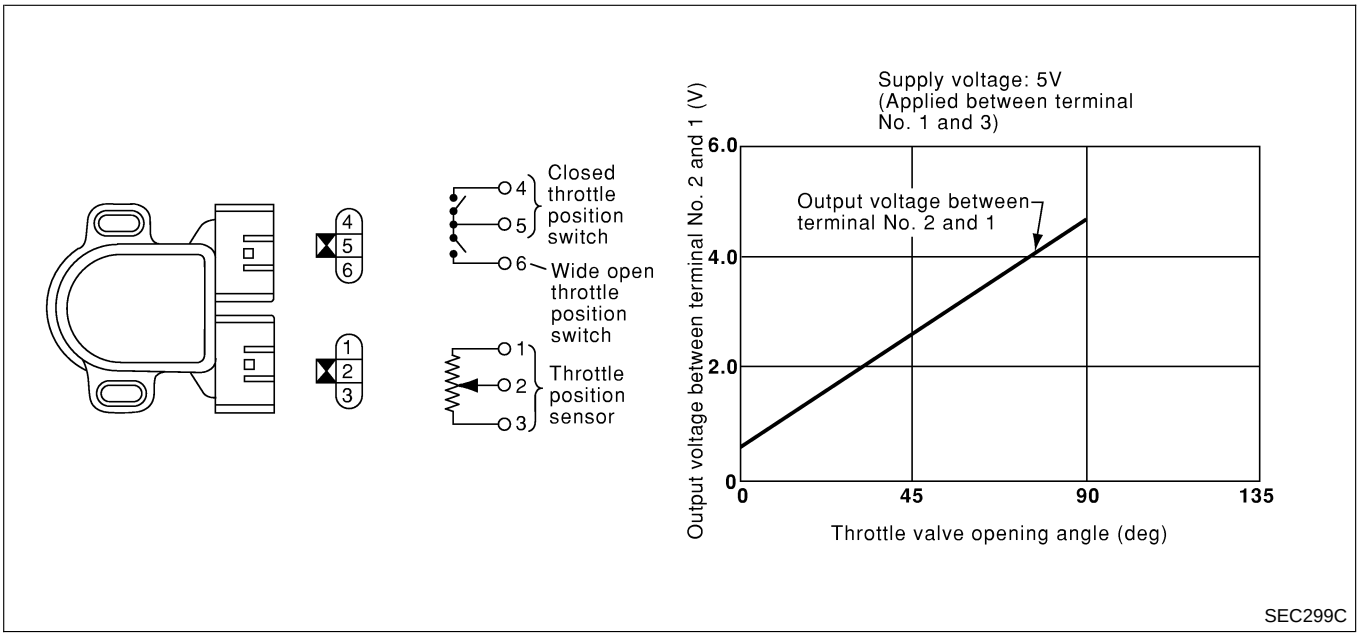

SEC299C

CONSULT-II Reference Value in Data Monitor Mode

NEEC1154

Specification data are reference values.

MONITOR ITEM	CONDITION		SPECIFICATION
THRTL POS SEN	• Engine: After warming up, idle the engine	Throttle valve: fully closed (a)	0.15 - 0.85V
	• Engine: After warming up • Ignition switch: ON (Engine stopped)	Throttle valve: Partially open	Between (a) and (b)
		Throttle valve: fully opened (b)	3.5 - 4.7V
ABSOL TH·P/S	• Engine: After warming up • Ignition switch: ON • More than -40.0 kpa (-300 mmHg, -11.81 inHg) of vacuum is applied to the throttle opener with a hand vacuum pump.	Throttle valve: fully closed	0.0%
	• Engine: After warming up • Ignition switch: ON (Engine stopped)	Throttle valve: fully opened	Approx. 80%

ECM Terminals and Reference Value

=NEEC1155

Specification data are reference values and are measured between each terminal and ground.

CAUTION:

Do not use ECM ground terminals when measuring input/output voltage. Doing so may result in damage to the ECM's transistor. Use a ground other than the ECM terminals, such as the ground.

TERMINAL NO.	WIRE COLOR	ITEM	CONDITION	DATA (DC Voltage)
23	L	Throttle position sensor	**[Engine is running]** ● **Warm-up condition** ● Accelerator pedal fully released	0.15 - 0.85V
			[Ignition switch ON] ● Accelerator pedal fully depressed	3.5 - 4.7V
42	B/W	Sensors' power supply	**[Ignition switch ON]**	Approximately 5V
43	BR	Sensors' ground	**[Engine is running]** ● **Warm-up condition** ● Idle speed	Approximately 0V

On Board Diagnosis Logic

NEEC1156

Malfunction is detected when
(Malfunction A) an excessively low or high voltage from the sensor is sent to ECM,
(Malfunction B) a high voltage from the sensor is sent to ECM under light load driving conditions,
(Malfunction C) a low voltage from the sensor is sent to ECM under heavy load driving conditions.

POSSIBLE CAUSE

NEEC1156S01

Malfunction A

NEEC1156S0101

- Harness or connectors
  (The throttle position sensor circuit is open or shorted.)
- Throttle position sensor

Malfunction B

NEEC1156S0102

- Harness or connectors
  (The throttle position sensor circuit is open or shorted.)
- Throttle position sensor
- Fuel injector
- Camshaft position sensor
- Mass air flow sensor

Malfunction C

NEEC1156S0103

- Harness or connectors
  (The throttle position sensor circuit is open or shorted.)
- Intake air leaks
- Throttle position sensor

FAIL-SAFE MODE

NEEC1156S02

When the malfunction A is detected, the ECM enters fail-safe mode and the MIL lights up.

Detected items	Engine operating condition in fail-safe mode	
Throttle position sensor circuit	Throttle position will be determined based on the injected fuel amount and the engine speed. Therefore, acceleration will be poor.	
	Condition	Driving condition
	When engine is idling	Normal
	When accelerating	Poor acceleration

DTC Confirmation Procedure

NEEC1157

NOTE:

- **Perform "PROCEDURE FOR MALFUNCTION A" first. If the 1st trip DTC cannot be confirmed, perform "PROCEDURE FOR MALFUNCTION B".**
  If there is no problem on "PROCEDURE FOR MALFUNCTION B", perform "PROCEDURE FOR MALFUNCTION C".
- If "DTC Confirmation Procedure" has been previously conducted, always turn ignition switch OFF and wait at least 5 seconds before conducting the next test.

PROCEDURE FOR MALFUNCTION A

NEEC1157S01

CAUTION:

Always drive vehicle at a safe speed.

TESTING CONDITION:

- **Before performing the following procedure, confirm that battery voltage is more than 10V at idle.**
- **This test may be conducted with the drive wheels lifted in the shop or by driving the vehicle. If a road test is expected to be easier, it is unnecessary to lift the vehicle.**

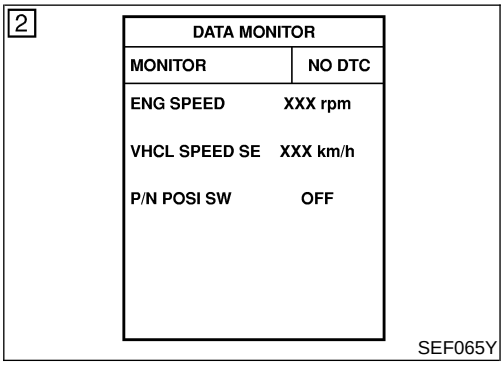

With CONSULT-II

1) Turn ignition switch ON and select "DATA MONITOR" mode with CONSULT-II.
2) Start engine and maintain the following conditions for at least 5 consecutive seconds.

Vehicle speed	More than 5 km/h (3 MPH)
Selector lever	Suitable position except "P" or "N" position

3) If 1st trip DTC is detected, go to "Diagnostic Procedure", EC-1387.

With GST

Follow the procedure "With CONSULT-II".

3

DATA MONITOR	
MONITOR	NO DTC
ENG SPEED	XXX rpm

SEF058Y

PROCEDURE FOR MALFUNCTION B

NEEC1157S02

With CONSULT-II

1) Turn ignition switch ON.
2) Select "DATA MONITOR" mode with CONSULT-II.
3) Start engine and let it idle for at least 10 seconds.
   If idle speed is over 1,000 rpm, maintain the following conditions for at least 10 seconds to keep engine speed below 1,000 rpm.

Selector lever	Suitable position except "P" or "N"
Brake pedal	Depressed
Vehicle speed	0 km/h (0 MPH)

4) If 1st trip DTC is detected, go to "Diagnostic Procedure", EC-1387.

With GST

Follow the procedure "With CONSULT-II".

6

DATA MONITOR	
MONITOR	NO DTC
THRTL POS SEN	XXX V
ABSOL TH-P/S	XXX %

SEF177Y

PROCEDURE FOR MALFUNCTION C

NEEC1157S03

CAUTION:

Always drive vehicle at a safe speed.

With CONSULT-II

1) Start engine and warm it up to normal operating temperature.
2) Turn ignition switch OFF and wait at least 5 seconds.
3) Turn ignition switch ON.
4) Select "MANU TRIG" and "HI SPEED" in "DATA MONITOR" mode with CONSULT-II.
5) Select "THRTL POS SEN" and "ABSOL TH·P/S" in "DATA MONITOR" mode with CONSULT-II.
6) Press RECORD on CONSULT-II SCREEN at the same time accelerator pedal is depressed.
7) Print out the recorded graph and check the following:

- The voltage rise is linear in response to accelerator pedal depression.
- The voltage when accelerator pedal is fully depressed is approximately 4V.
  If NG, go to "Diagnostic Procedure", EC-1387.
  If OK, go to following step.

7

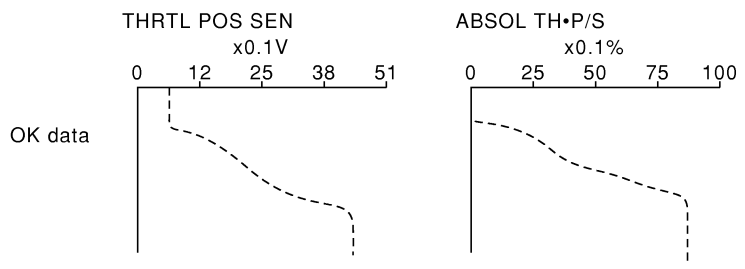

Trigger	THRTL POS SEN	ABSOL TH/PO SEN
	V	%
00"43	2.52	48.8
00"44	2.64	52.0
00"45	2.76	54.9
00"46	2.88	57.4
00"47	3.00	60.5
00"48	3.12	63.3
00"49	3.24	66.1
00"50	3.34	68.9
00"51	3.46	71.4
00"52	3.56	74.2
00"53	3.68	77.0
00"54	3.80	79.8

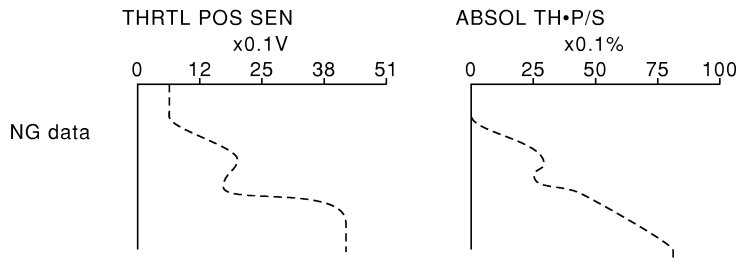

Trigger	THRTL POS SEN	ABSOL TH/PO SEN
	V	%
00"33	1.96	38.7
00"34	2.02	39.1
00"35	2.08	39.5
00"36	2.14	39.9
00"37	2.20	41.3
00"38	2.26	42.7
00"39	2.32	44.4
00"41	2.26	42.7
00"42	2.20	41.3
00"43	2.58	50.4
00"44	2.66	52.5
00"45	2.76	54.9

SEF174Z

9

DATA MONITOR	
MONITORING	NO DTC
ENG SPEED	XXX rpm
MAS AIR/FL SE	XXX V
COOLAN TEMP/S	XXX °C
IACV-AAC/V	XXX %

SEF805Z

8) Select "AUTO TRIG" in "DATA MONITOR" mode with CONSULT-II.
9) Maintain the following conditions for at least 10 consecutive seconds.

CMPS·RPM (REF)	More than 2,000 rpm
MAS AIR/FL SE	More than 3V
COOLAN TEMP/S	More than 70°C (158°F)
IACV-AAC/V	Less than 80%
Selector lever	Suitable position
Driving location	Driving vehicle uphill (Increased engine load) will help maintain the driving conditions required for this test.

10) If 1st trip DTC is detected, go to "Diagnostic Procedure", EC-1387.

With GST
Follow the procedure "With CONSULT-II".

Wiring Diagram

NEEC1158

EC-TPS-01

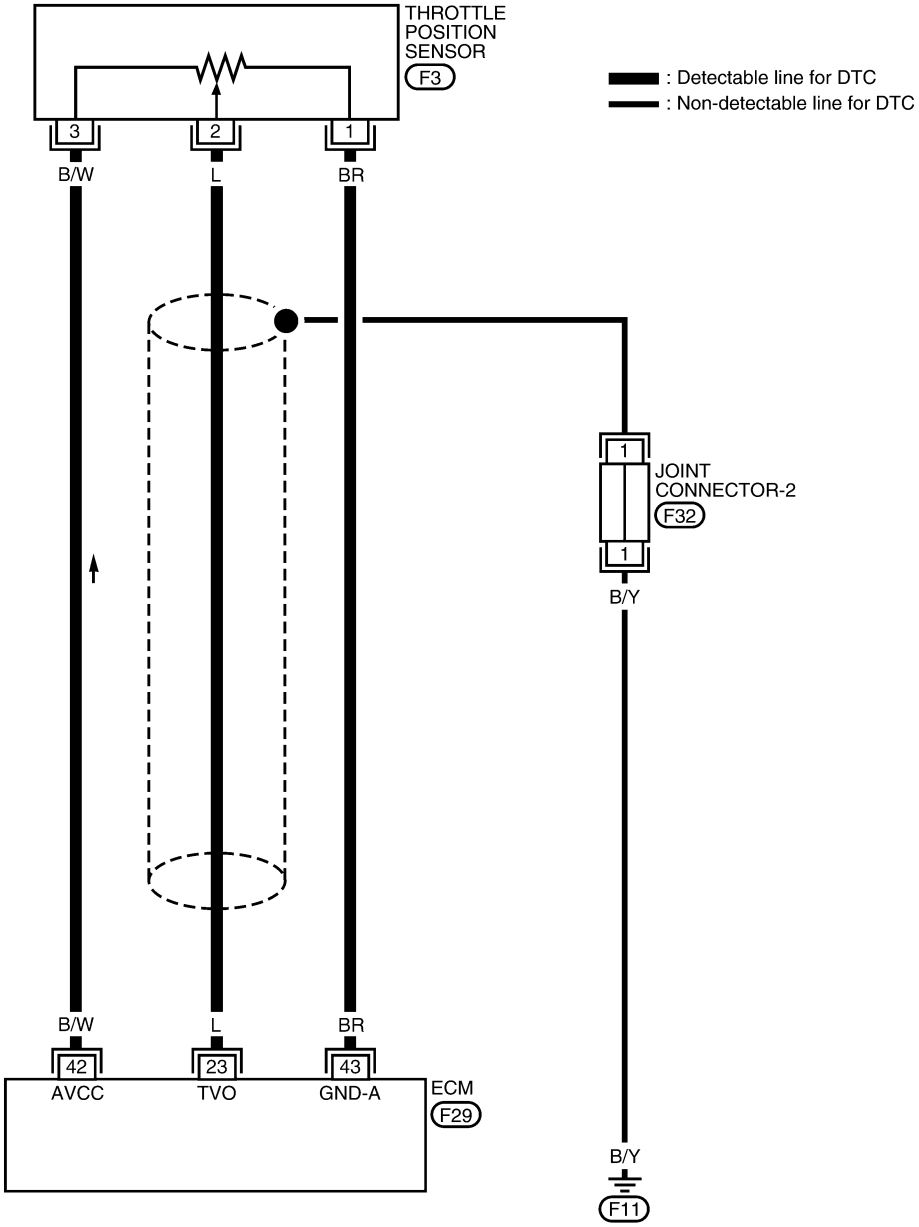



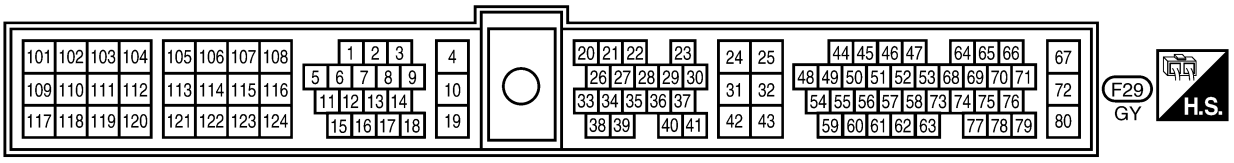

LEC664

Diagnostic Procedure

NEEC1159

1	INSPECTION START

Which malfunction A, B or C is duplicated?

MALFUNCTION	Type
A	A
B	B
C	C

MTBL0066

Type A, B or C

Type A or B	▶	GO TO 4.
Type C	▶	GO TO 2.

2	ADJUST THROTTLE POSITION SENSOR

Check the following items. Refer to “Basic Inspection”, EC-1314.

Items	Specifications
Ignition timing	10° ± 2° BTDC
Base idle speed	700 ± 50 rpm (in “P” or “N” position)
Closed throttle position switch idle position adjustment	Feeler gauge thickness and switch condition 0.3 mm (0.012 in): ON 0.4 mm (0.016 in): OFF
Target idle speed	750 ± 50 rpm (in “P” or “N” position)

MTBL0576

	▶	GO TO 3.

3	CHECK INTAKE SYSTEM.

1. Turn ignition switch OFF.
2. Check the following for connection.
- Air duct
- Vacuum hoses
- Intake air passage between air duct to intake manifold collector

OK or NG

OK	▶	GO TO 4.
NG	▶	Reconnect the parts.

Diagnostic Procedure (Cont'd)

4	RETIGHTEN GROUND SCREWS

1. Turn ignition switch OFF.
2. Loosen and retighten engine ground screws.

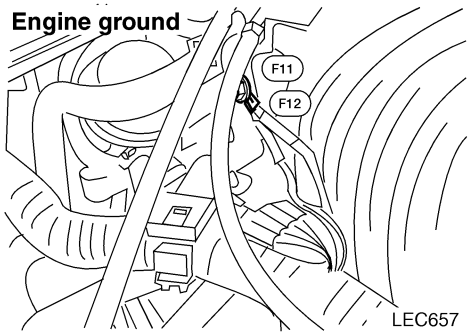

LEC657

▶	GO TO 5.

5	CHECK THROTTLE POSITION SENSOR POWER SUPPLY CIRCUIT

1. Disconnect throttle position sensor harness connector.

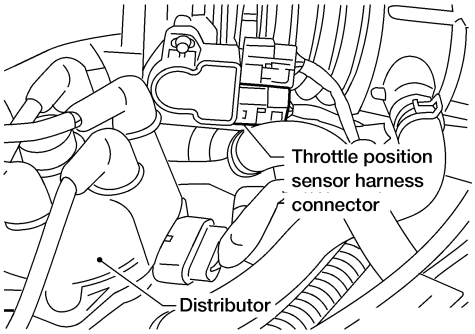

AEC638A

2. Turn ignition switch ON.
3. Check voltage between sensor terminal 3 and ground with CONSULT-II or tester.

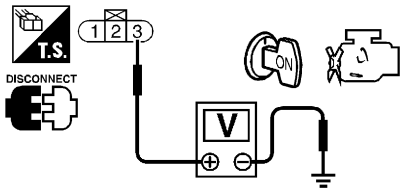

SEF630W

Voltage: Approximately 5V

OK or NG

OK	▶	GO TO 6.
NG	▶	Repair open circuit or short to ground or short to power in harness or connectors.

6	CHECK THROTTLE POSITION SENSOR GROUND CIRCUIT FOR OPEN AND SHORT

1. Turn ignition switch OFF.
2. Check harness continuity between throttle position sensor terminal 1 and engine ground.
   Refer to Wiring Diagram.
   Continuity should exist.
3. Also check harness for short to power.

OK or NG

OK	▶	GO TO 8.
NG	▶	GO TO 7.

7	DETECT MALFUNCTIONING PART

Check the harness for open or short between ECM and throttle position sensor.

	▶	Repair open circuit or short to power in harness or connectors.

8	CHECK THROTTLE POSITION SENSOR INPUT SIGNAL CIRCUIT FOR OPEN AND SHORT

1. Disconnect ECM harness connector.
2. Check harness continuity between ECM terminal 23 and throttle position sensor terminal 2.
   Refer to Wiring Diagram.
   Continuity should exist.
3. Also check harness for short to ground and short to power.

OK or NG

OK (With CONSULT-II)	▶	GO TO 9.
OK (Without CONSULT-II)	▶	GO TO 10.
NG	▶	Repair open circuit or short to ground or short to power in harness or connectors.

9	CHECK THROTTLE POSITION SENSOR

With CONSULT-II
1. Start engine and warm it up to normal operating temperature.
2. Stop engine (ignition switch OFF).
3. Turn ignition switch ON.
4. Select "DATA MONITOR" mode with CONSULT-II.
5. Check voltage of "THRTL POS SEN" under the following conditions.
   Voltage measurement must be made with throttle position sensor installed in vehicle.

DATA MONITOR	
MONITOR	NO DTC
ENG SPEED	XXX rpm
COOLAN TEMP/S	XXX °C
THRTL POS SEN	XXX V

Throttle valve conditions	THRTL POS SEN
Completely closed (a)	0.15 - 0.85V
Partially open	Between (a) and (b)
Completely open (b)	3.5 - 4.7V

SEF062Y

OK or NG

OK	▶	GO TO 12.
NG	▶	GO TO 11.

Diagnostic Procedure (Cont'd)

10	CHECK THROTTLE POSITION SENSOR

Without CONSULT-II

1. Start engine and warm it up to normal operating temperature.
2. Stop engine (ignition switch OFF).
3. Turn ignition switch ON.
4. Check voltage between ECM terminal 23 (Throttle position sensor signal) and ground.
   Voltage measurement must be made with throttle position sensor installed in vehicle.

Throttle valve conditions	Voltage
Completely closed (a)	0.15 - 0.85V
Partially open	Between (a) and (b)
Completely open (b)	3.5 - 4.7V

MTBL0231

OK or NG

OK	▶	GO TO 12.
NG	▶	GO TO 11.

11	ADJUST CLOSED THROTTLE POSITION SWITCH

Adjust closed throttle position switch. Refer to "Basic Inspection", EC-1314.

Items	Specifications
Ignition timing	10° ± 2° BTDC
Base idle speed	700 ± 50 rpm (in "P" or "N" position)
Closed throttle position switch idle position adjustment	Feeler gauge thickness and switch condition 0.3 mm (0.012 in): ON 0.4 mm (0.016 in): OFF
Target idle speed	750 ± 50 rpm (in "P" or "N" position)

MTBL0576

OK or NG

OK	▶	GO TO 12.
NG	▶	Replace throttle position sensor. To adjust it, perform "Basic Inspection", EC-1314.

12 CHECK MASS AIR FLOW SENSOR

1. Reconnect harness connectors disconnected.
2. Start engine and warm it up to normal operating temperature.
3. Check voltage between ECM terminal 54 (Mass air flow sensor signal) and ground.

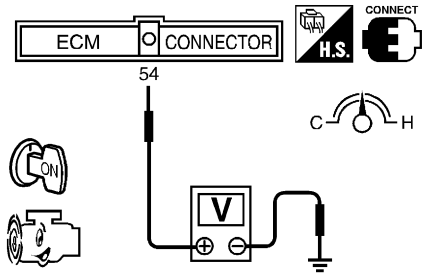

SEF747U

Condition	Voltage V
Ignition switch "ON" (Engine stopped.)	Less than 1.0
Idle (Engine is warmed-up to normal operating temperature.)	1.0 - 1.7
2,500 rpm (Engine is warmed-up to normal operating temperature.)	1.7 - 2.3
Idle to about 4,000 rpm*	1.0 - 1.7 to Approx. 4.0

MTBL0227

4. If the voltage is out of specification, disconnect mass air flow sensor harness connector and connect it again. Then repeat above check.
5. If NG, remove mass air flow sensor from air duct. Check hot wire for damage or dust.

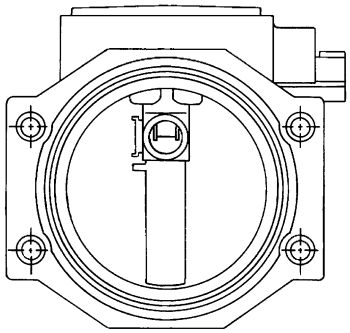

SEF030T

OK or NG

OK	▶	GO TO 13.
NG	▶	Replace mass air flow sensor.

13	CHECK CAMSHAFT POSITION SENSOR

1. Install any parts removed.
2. Start engine.
3. Check voltage between ECM terminals 44, 48 and ground, ECM terminal 49 and ground with DC range.

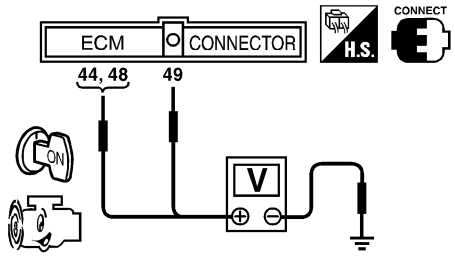

Terminal 44 or 48 and engine ground

Condition	Idle	2,000 rpm
Voltage	0.3 - 0.5V	0.3 - 0.5V
Pulse signal	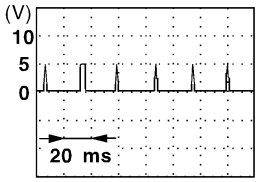	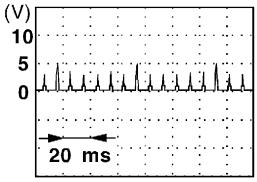

Terminal 49 and engine ground

Condition	Idle	2,000 rpm
Voltage	Approximately 2.5V	Approximately 2.5V
Pulse signal	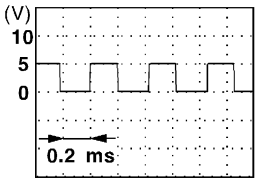	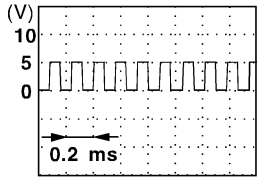

AEC072B

OK or NG

OK	▶	GO TO 14.
NG	▶	Replace distributor assembly with camshaft position sensor.

14	CHECK FUEL INJECTOR

1. Disconnect injector harness connector.
2. Check resistance between terminals as shown in the figure.

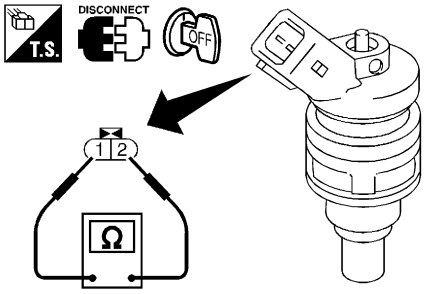

SEF625V

Resistance: 10 - 14Ω [at 25°C (77°F)]

OK or NG

OK	▶	GO TO 15.
NG	▶	Replace fuel injector.

15	CHECK THROTTLE POSITION SENSOR SHIELD CIRCUIT FOR OPEN AND SHORT	
1. Turn ignition switch OFF. 2. Disconnect joint connector-2. 3. Check the following. ● Continuity between joint connector-2 terminal 1 and ground ● Joint connector-2 (Refer to ***EL-238***, "HARNESS LAYOUT".) **Continuity should exist.** 4. Also check harness for short to power. 5. Then reconnect joint connector-2.		
OK or NG		
OK	▶	GO TO 16.
NG	▶	Repair open circuit or short to power in harness or connectors.

16	CHECK INTERMITTENT INCIDENT	
Refer to "TROUBLE DIAGNOSIS FOR INTERMITTENT INCIDENT", EC-1353.		
	▶	**INSPECTION END**

Description

NEEC1160

NOTE:
If DTC P0125 is displayed with P0115, first perform the trouble diagnosis for DTC P0115. Refer to EC-1376.

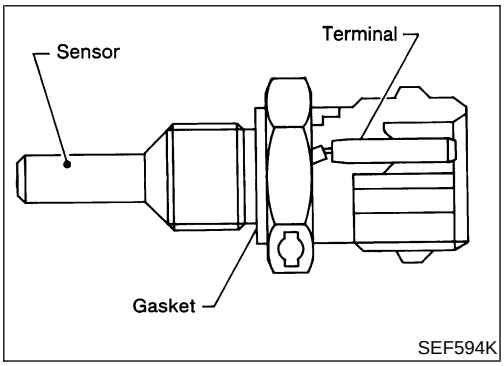

SEF594K

COMPONENT DESCRIPTION

NEEC1160S01

The engine coolant temperature sensor is used to detect the engine coolant temperature. The sensor modifies a voltage signal from the ECM. The modified signal returns to the ECM as the engine coolant temperature input. The sensor uses a thermistor which is sensitive to the change in temperature. The electrical resistance of the thermistor decreases as temperature increases.

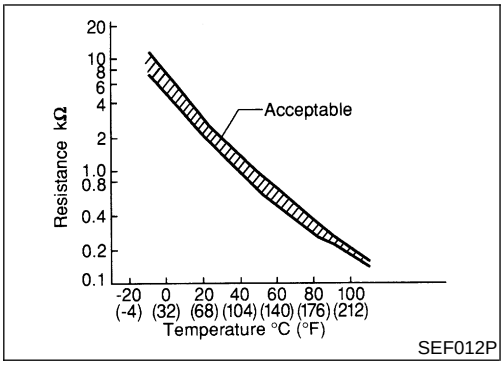

SEF012P

<Reference data>

Engine coolant temperature °C (°F)	Voltage* (V)	Resistance (kΩ)
−10 (14)	4.4	9.2
20 (68)	3.5	2.1 - 2.9
50 (122)	2.2	0.68 - 1.00
90 (194)	0.9	0.236 - 0.260

*: These data are reference values and are measured between ECM terminal 59 (Engine coolant temperature sensor) and ground.

CAUTION:

Do not use ECM ground terminals when measuring input/ output voltage. Doing so may result in damage to the ECM's transistor. Use a ground other than the ECM terminals, such as the ground.

On Board Diagnosis Logic

NEEC1161

Malfunction is detected when voltage sent to ECM from the sensor is not practical, even when some time has passed after starting the engine, or engine coolant temperature is insufficient for closed loop fuel control.

POSSIBLE CAUSE

NEEC1161S01

- Harness or connectors
  (High resistance in the circuit)
- Engine coolant temperature sensor
- Thermostat

4

DATA MONITOR	
MONITOR	NO DTC
ENG SPEED	XXX rpm
COOLAN TEMP/S	XXX °C

SEF174Y

DTC Confirmation Procedure

=NEEC1162

CAUTION:

Be careful not to overheat engine.

NOTE:

If “DTC Confirmation Procedure” has been previously conducted, always turn ignition switch OFF and wait at least 5 seconds before conducting the next test.

With CONSULT-II

1) Turn ignition switch ON.
2) Select “DATA MONITOR” mode with CONSULT-II.
3) Check that “COOLAN TEMP/S” is above 10°C (50°F).
   If it is above 10°C (50°F), the test result will be OK.
   If it is below 10°C (50°F), go to following step.
4) Start engine and run it for 65 minutes at idle speed.
   If “COOLAN TEMP/S” increases to more than 10°C (50°F) within 65 minutes, stop engine because the test result will be OK.
5) If 1st trip DTC is detected, go to “Diagnostic Procedure”, EC-1397.

With GST

Follow the procedure “With CONSULT-II”.

Wiring Diagram

NEEC1163

EC-ECTS-01

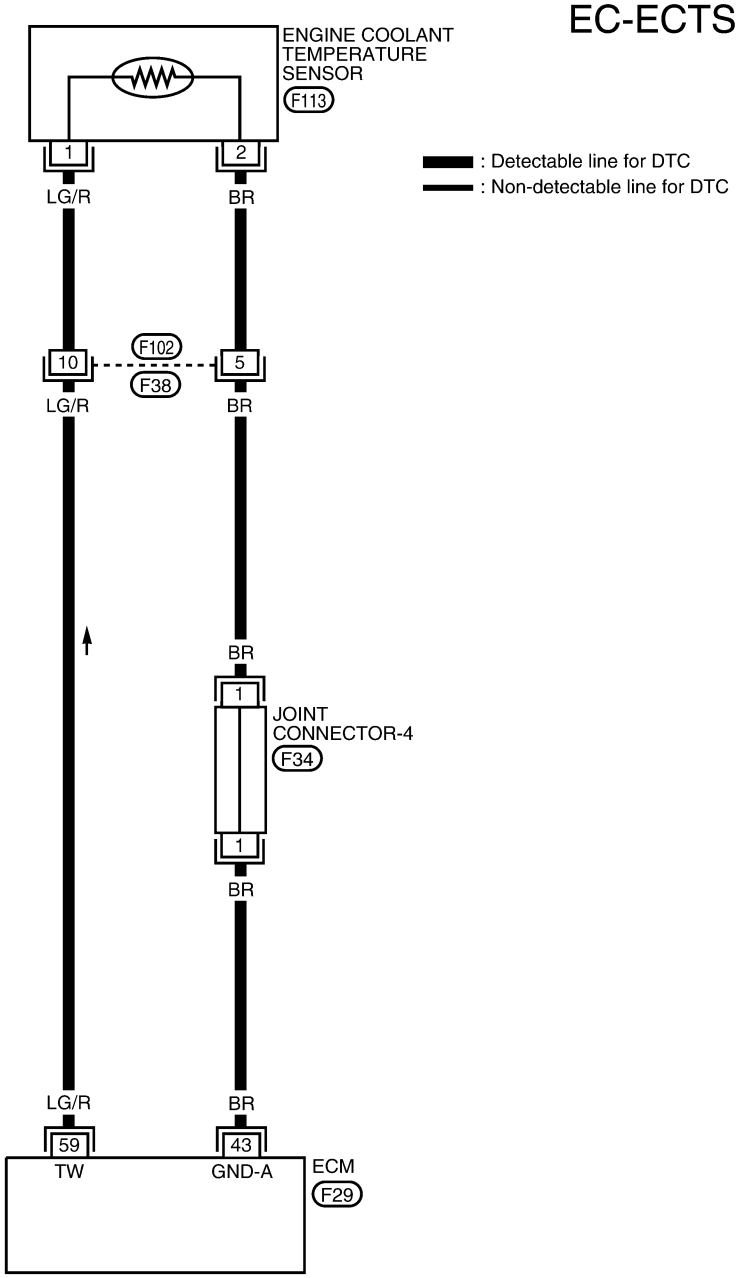

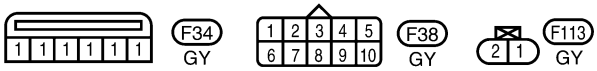

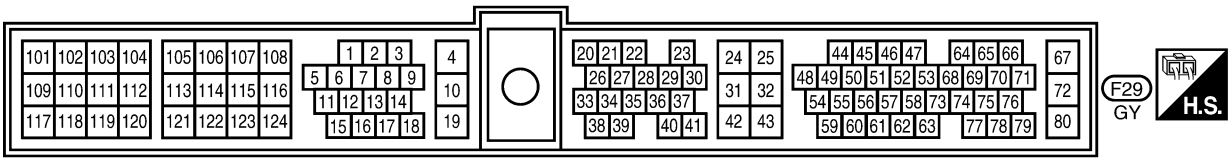

LEC663

Diagnostic Procedure

NEEC1164

1	CHECK ECTS POWER SUPPLY CIRCUIT

1. Turn ignition switch OFF.
2. Disconnect engine coolant temperature sensor harness connector.

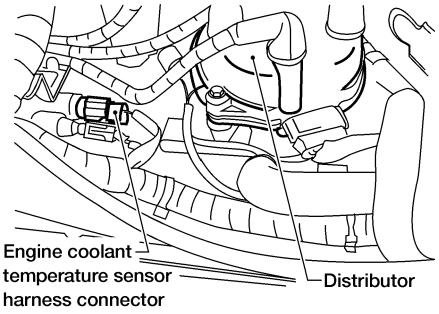

AEC643A

3. Turn ignition switch ON.
4. Check voltage between ECTS terminal 1 and ground with CONSULT-II or tester.

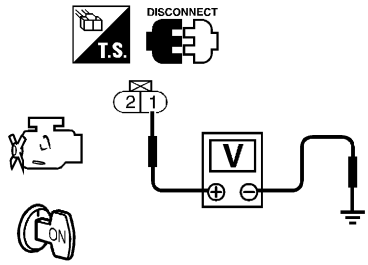

SEF206W

Voltage: Approximately 5V

OK or NG

OK	▶	GO TO 3.
NG	▶	GO TO 2.

2	DETECT MALFUNCTIONING PART

Check the following.
- Harness connectors F38, F102
- Harness for open or short between ECM and engine coolant temperature sensor

	▶	Repair open circuit or short to ground or short to power in harness or connectors.

3	CHECK ECTS GROUND CIRCUIT FOR OPEN AND SHORT

1. Turn ignition switch OFF.
2. Check harness continuity between ECTS terminal 2 and engine ground.
   Refer to Wiring Diagram.
   Continuity should exist.
3. Also check harness for short to power.

OK or NG

OK	▶	GO TO 5.
NG	▶	GO TO 4.

Diagnostic Procedure (Cont'd)

4	DETECT MALFUNCTIONING PART
Check the following. ● Harness connectors F38, F102 ● Joint connector-4 ● Harness for open or short between ECM and engine coolant temperature sensor	
▶	Repair open circuit or short to power in harness or connectors.

5	CHECK ENGINE COOLANT TEMPERATURE SENSOR

Check resistance as shown in the figure.

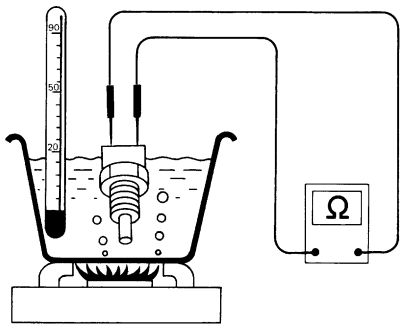

SEF152P

<Reference data>

Temperature °C (°F)	Resistance kΩ
20 (68)	2.1 - 2.9
50 (122)	0.68 - 1.00
90 (194)	0.236 - 0.260

MTBL0229

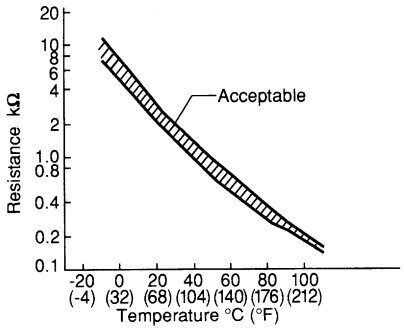

SEF012P

OK or NG

OK	▶	GO TO 6.
NG	▶	Replace engine coolant temperature sensor.

6	CHECK THERMOSTAT OPERATION
When the engine is cold [lower than 70°C (158°F)] condition, grasp lower radiator hose and confirm the engine coolant does not flow.	
OK or NG	
OK ▶	GO TO 7.
NG ▶	Repair or replace thermostat. Refer to ***LC-30***, "Thermostat".

7	CHECK INTERMITTENT INCIDENT
Refer to "TROUBLE DIAGNOSIS FOR INTERMITTENT INCIDENT", EC-1353.	
▶	INSPECTION END

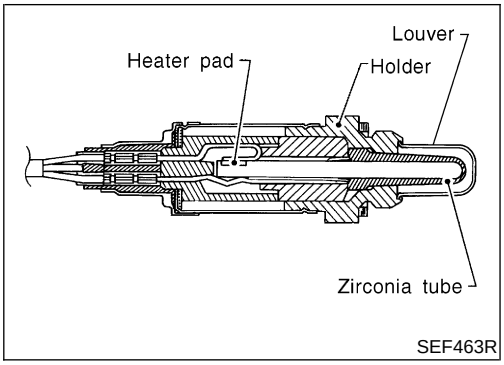

SEF463R

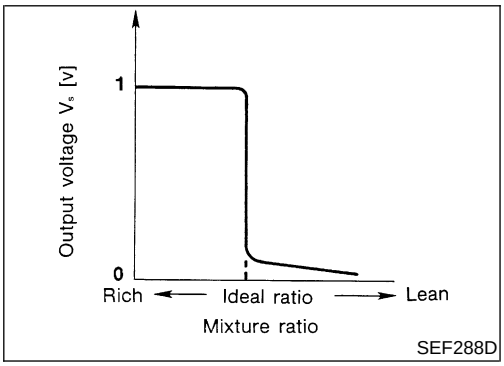

SEF288D

Component Description

NEEC1165

The heated oxygen sensor 1 (front) is placed into the front tube. It detects the amount of oxygen in the exhaust gas compared to the outside air. The heated oxygen sensor 1 (front) has a closed-end tube made of ceramic zirconia. The zirconia generates voltage from approximately 1V in richer conditions to 0V in leaner conditions. The heated oxygen sensor 1 (front) signal is sent to the ECM. The ECM adjusts the injection pulse duration to achieve the ideal air-fuel ratio. The ideal air-fuel ratio occurs near the radical change from 1V to 0V.

CONSULT-II Reference Value in Data Monitor Mode

NEEC1166

Specification data are reference values.

MONITOR ITEM	CONDITION		SPECIFICATION
HO2S1 (B1) HO2S1 (B2)	● Engine: After warming up	Maintaining engine speed at 2,000 rpm	0 - 0.3V ⟷ Approx. 0.6 - 1.0V
HO2S1 MNTR (B1) HO2S1 MNTR (B2)			LEAN ⟷ RICH Changes more than 5 times during 10 seconds.

ECM Terminals and Reference Value

NEEC1167

Specification data are reference values and are measured between each terminal and ground.

CAUTION:

Do not use ECM ground terminals when measuring input/output voltage. Doing so may result in damage to the ECM's transistor. Use a ground other than the ECM terminals, such as the ground.

TERMINAL NO.	WIRE COLOR	ITEM	CONDITION	DATA (DC Voltage)
50	B	Heated oxygen sensor 1 (front) (bank 1)	**[Engine is running]** ● After warming up to normal operating temperature and engine speed is 2,000 rpm	0 - Approximately 1.0V 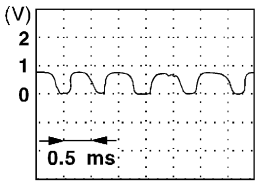 SEF002V
51	G	Heated oxygen sensor 1 (front) (bank 2)		

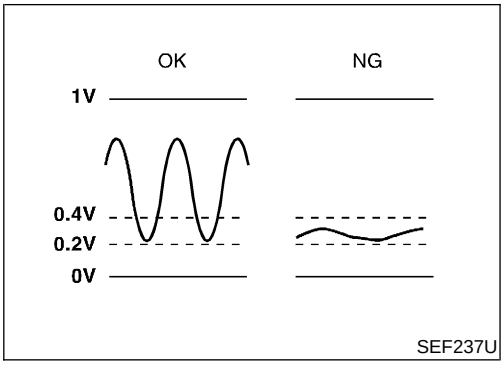

On Board Diagnosis Logic

NEEC1168

Under the condition in which the heated oxygen sensor 1 (front) signal is not input, the ECM circuits will read a continuous approximately 0.3V. Therefore, for this diagnosis, the time that output voltage is within 200 to 400 mV range is monitored, and the diagnosis checks that this time is not inordinately long.
Malfunction is detected when the voltage from the sensor is constantly approx. 0.3V.

POSSIBLE CAUSE

NEEC1168S01

- Harness or connectors
  (The sensor circuit is open or shorted.)
- Heated oxygen sensor 1 (front)

5

HO2S1 (B1) P0130	
OUT OF CONDITION	
MONITOR	
ENG SPEED	XXX rpm
B/FUEL SCHDL	XXX msec
COOLAN TEMP/S	XXX °C
VHCL SPEED SEN	XXX km/h

SEF332Z

5

HO2S1 (B1) P0130	
TESTING	
MONITOR	
ENG SPEED	XXX rpm
B/FUEL SCHDL	XXX msec
COOLAN TEMP/S	XXX °C
VHCL SPEED SEN	XXX km/h

SEF333Z

5

HO2S1 (B1) P0130
COMPLETED

SEF645Y

DTC Confirmation Procedure

=NEEC1169

CAUTION:

Always drive vehicle at a safe speed.

NOTE:

If "DTC Confirmation Procedure" has been previously conducted, always turn ignition switch OFF and wait at least 5 seconds before conducting the next test.

TESTING CONDITION:

Before performing the following procedure, confirm that battery voltage is more than 11V at idle.

With CONSULT-II

1) Start engine and warm it up to normal operating temperature.
2) Select "HO2S1 (B1)/(B2) P0130/P0150" of "HO2S1" in "DTC WORK SUPPORT" mode with CONSULT-II.
3) Touch "START".
4) Let it idle for at least 3.5 minutes.

NOTE:

Never raise engine speed above 2,800 rpm after this step. If the engine speed limit is exceeded, return to step 4.

5) When the following conditions are met, "TESTING" will be displayed on the CONSULT-II screen. Maintain the conditions continuously until "TESTING" changes to "COMPLETED". (It will take approximately 10 to 60 seconds.)

ENG SPEED	1,400 - 2,700 rpm
Vehicle speed	More than 65 km/h (40 MPH)
B/FUEL SCHDL	2.0 - 14.0 msec
Selector lever	Suitable position

If "TESTING" is not displayed after 5 minutes, retry from step 2.

6) Make sure that "OK" is displayed after touching "SELF-DIAG RESULTS". If "NG" is displayed, refer to "Diagnostic Procedure", EC-1406.

During this test, P1148 and P1168 may be stored in ECM.

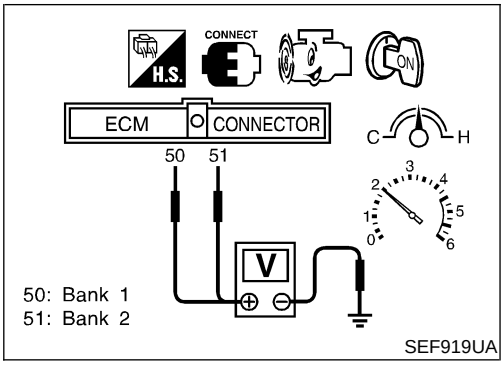

Overall Function Check

=NEEC1170

Use this procedure to check the overall function of the heated oxygen sensor 1 (front) circuit. During this check, a 1st trip DTC might not be confirmed.

Without CONSULT-II

1) Start engine and warm it up to normal operating temperature.
2) Set voltmeter probes between ECM terminal 50 (bank 1 signal) or 51 (bank 2 signal) and engine ground.
3) Check the following with engine speed held at 2,000 rpm constant under no load.

- The voltage does not remain in the range of 0.2 - 0.4V.

4) If NG, go to “Diagnostic Procedure”, EC-1406.

Wiring Diagram

NEEC1171

RIGHT BANK

NEEC1171S01

EC-O2S1B1-01

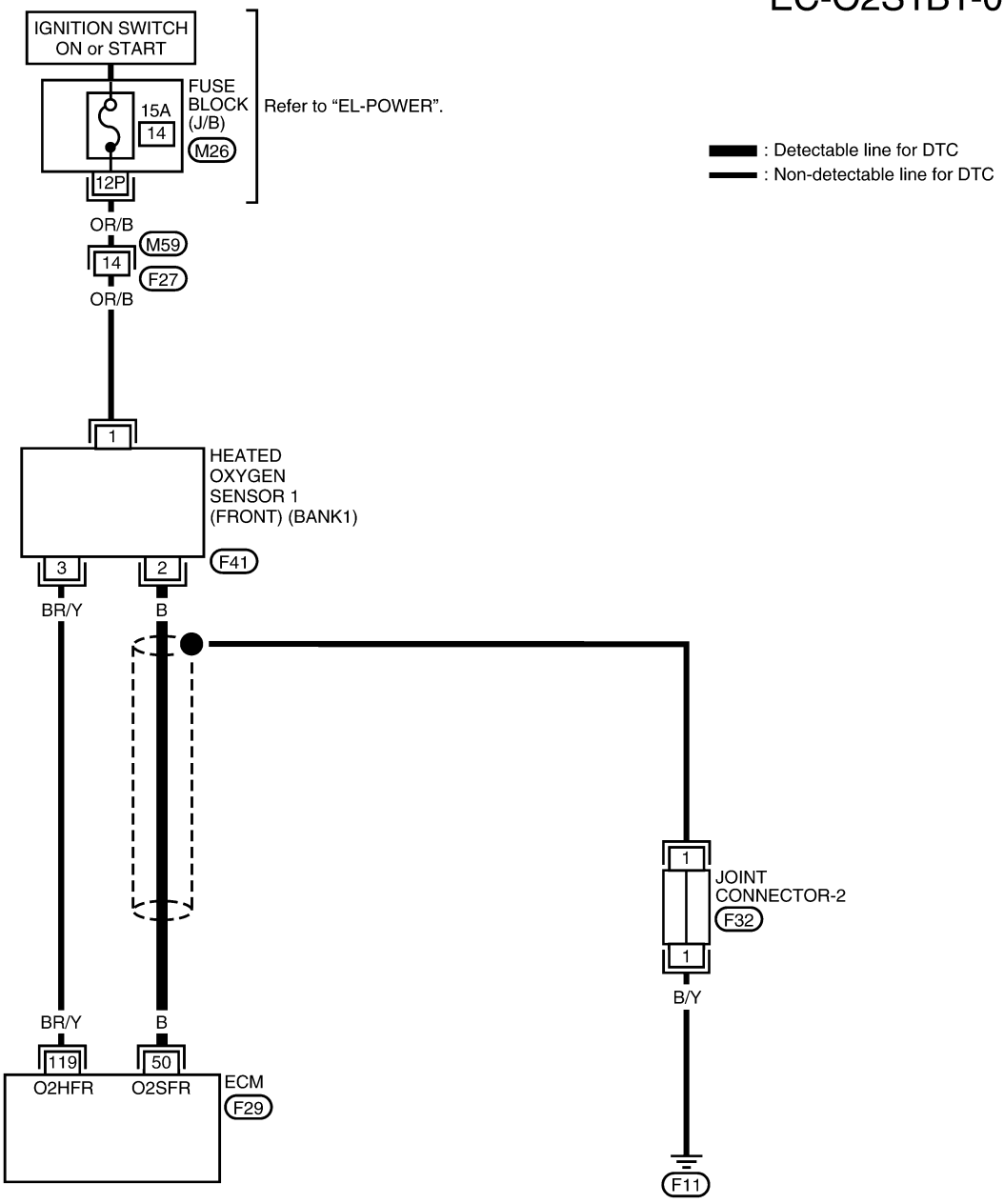

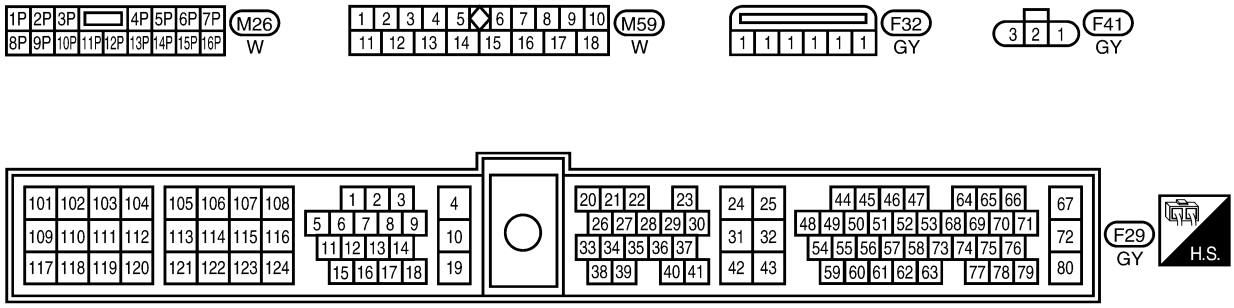

WEC788

LEFT BANK

NEEC1171S02

EC-O2S1B2-01

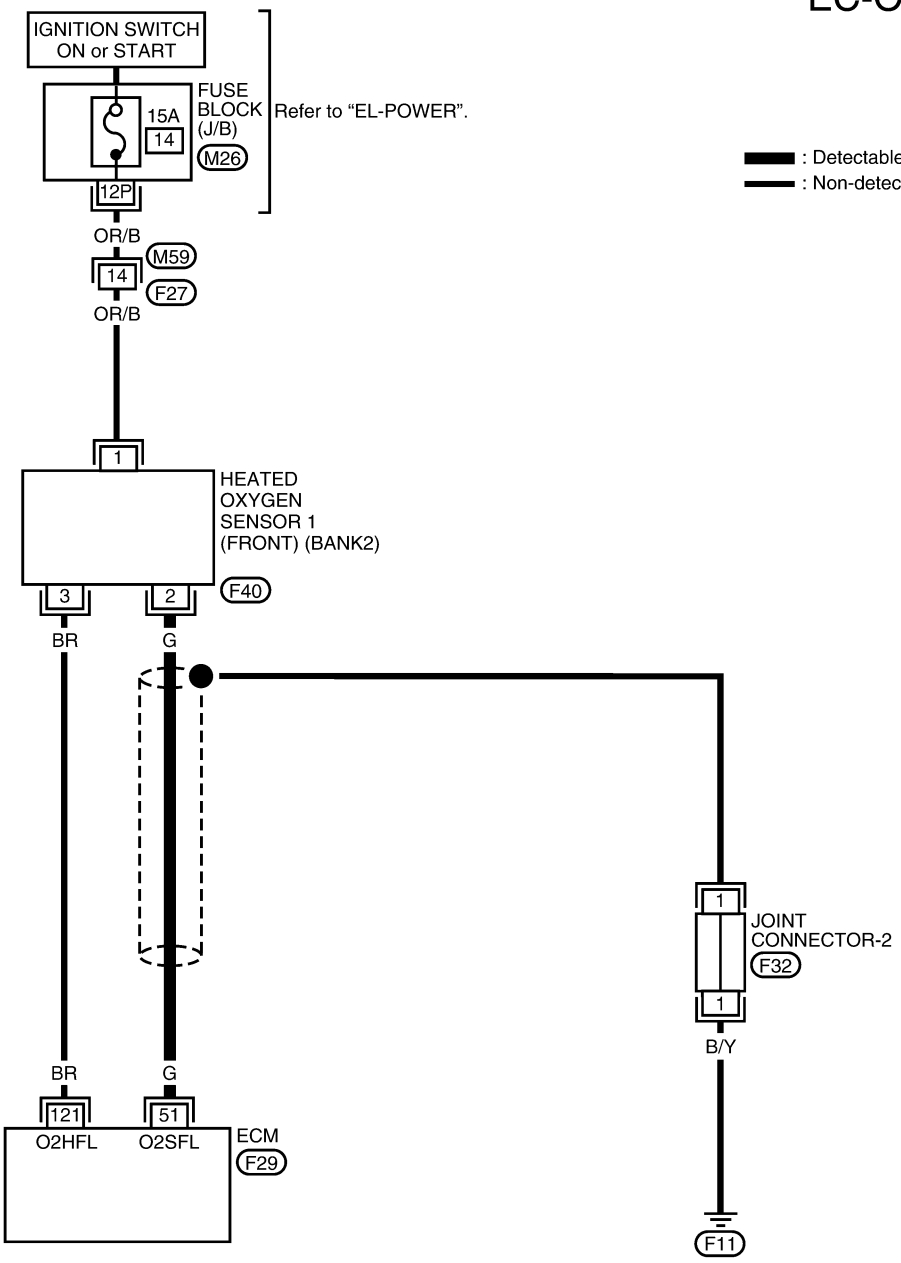



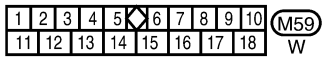

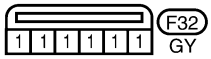

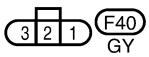

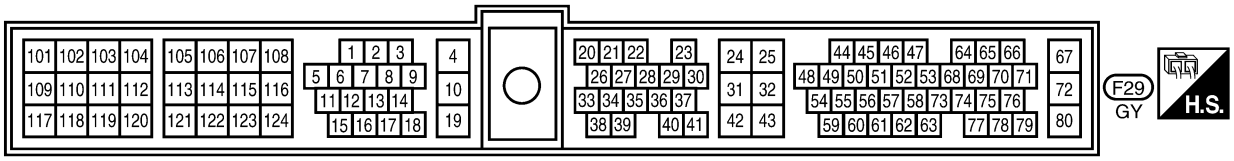

WEC789

Diagnostic Procedure

NEEC1172

1	INSPECTION START

1. Turn ignition switch OFF.
2. Loosen and retighten engine ground screws.

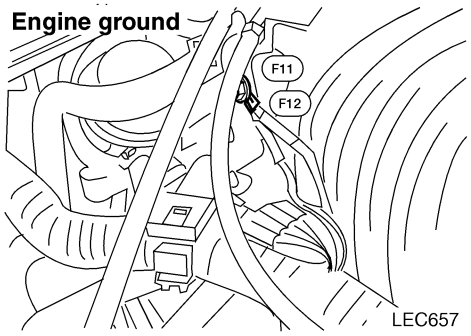

LEC657

3. Make sure HO2S 1 (front) harness protector color, and disconnect corresponding heated oxygen sensor 1 (front) harness connector.

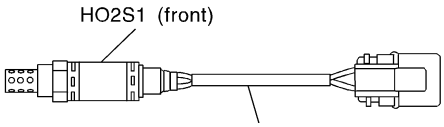

HO2S1 (front) (bank 1): Black
HO2S1 (front) (bank 2): Blue

SEF505Y

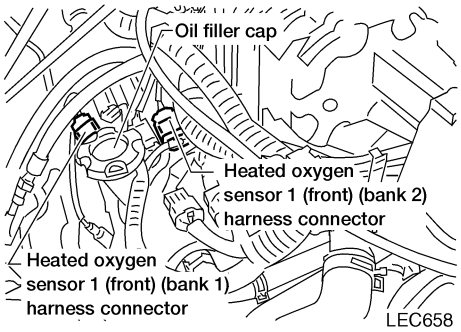

LEC658

▶	GO TO 2.

2	CHECK HO2S 1 (FRONT) INPUT SIGNAL CIRCUIT FOR OPEN AND SHORT

1. Disconnect ECM harness connector.
2. Check harness continuity between ECM terminal and HO2S1 terminal as follows. Refer to Wiring Diagram.

DTC	Terminals		Bank
	ECM	Sensor	
P0130	50	2	Bank 1 (Right)
P0150	51	2	Bank 2 (Left)

SEF803Z

Continuity should exist.

3. Check harness continuity between ECM terminal or HO2S1 terminal and ground as follows. Refer to Wiring Diagram.

DTC	Terminals		Bank
	ECM or sensor	Ground	
P0130	50 or 2	Ground	Bank 1 (Right)
P0150	51 or 2	Ground	Bank 2 (Left)

SEF816Z

Continuity should not exist.

4. Also check harness for short to power.

OK or NG

OK (With CONSULT-II)	▶	GO TO 3.
OK (Without CONSULT-II)	▶	GO TO 4.
NG	▶	Repair open circuit or short to ground or short to power in harness or connectors.

3	CHECK HEATED OXYGEN SENSOR 1 (FRONT)

With CONSULT-II

1. Start engine and warm it up to normal operating temperature.
2. Select "MANU TRIG" in "DATA MONITOR" mode with CONSULT-II, and select "HO2S1 (B1)/(B2)" and "HO2S1 MNTR (B1)/(B2)".
3. Hold engine speed at 2,000 rpm under no load during the following steps.
4. Touch "RECORD" on CONSULT-II screen.

DATA MONITOR	
MONITOR	NO DTC
ENG SPEED	XXX rpm
COOLAN TEMP/S	XXX °C
HO2S1 (B1)	XXX V
HO2S2 (B2)	XXX V

SEF967Y

5. Check the following.

- "HO2S1 MNTR (B1)/(B2)" in "DATA MONITOR" mode changes from "RICH" to "LEAN" to "RICH" 5 times in 10 seconds. 5 times (cycles) are counted as shown below.

Bank 1

cycle	1	2	3	4	5
HO2S1 MNTR (B1)	R-L	R-L	R-L	R-L	R-L

Bank 2

cycle	1	2	3	4	5
HO2S1 MNTR (B2)	R-L	R-L	R-L	R-L	R-L

R means HO2S1 MNTR (B1)/(B2) indicates RICH

L means HO2S1 MNTR (B1)/(B2) indicates LEAN

SEF647Y

- "HO2S1 (B1)/(B2)" voltage goes above 0.6V at least once.
- "HO2S1 (B1)/(B2)" voltage goes below 0.3V at least once.
- "HO2S1 (B1)/(B2)" voltage never exceeds 1.0V.

Trigger	ENG SPEED	HO2S1 (B1)
	rpm	V
XXX	XXX	XXX
XXX	XXX	XXX
XXX	XXX	XXX
XXX	XXX	XXX
XXX	XXX	XXX
XXX	XXX	XXX
XXX	XXX	XXX
XXX	XXX	XXX
XXX	XXX	XXX
XXX	XXX	XXX
XXX	XXX	XXX
XXX	XXX	XXX
XXX	XXX	XXX

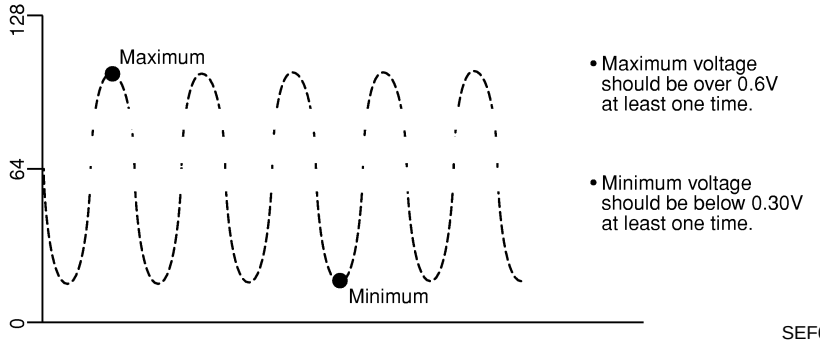

SEF648Y

CAUTION:

- **Discard any heated oxygen sensor which has been dropped from a height of more than 0.5 m (19.7 in) onto a hard surface such as a concrete floor; use a new one.**
- **Before installing new oxygen sensor, clean exhaust system threads using Oxygen Sensor Thread Cleaner tool J-43897-18 or J-43897-12 and approved anti-seize lubricant.**

OK or NG

OK	▶	GO TO 5.
NG	▶	Replace malfunctioning heated oxygen sensor 1 (front).

4	CHECK HEATED OXYGEN SENSOR 1 (FRONT)

Without CONSULT-II

1. Start engine and warm it up to normal operating temperature.
2. Set voltmeter probes between ECM terminal 50 (bank 1 signal) or 51 (bank 2 signal) and engine ground.
3. Check the following with engine speed held at 2,000 rpm constant under no load.

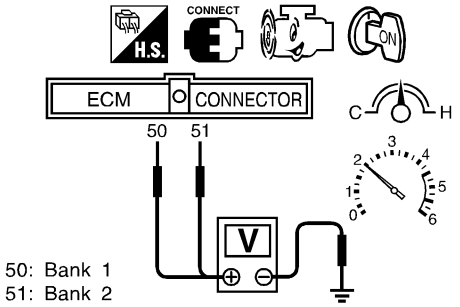

- The voltage fluctuates between 0 to 0.3V and 0.6 to 1.0V more than 5 times within 10 seconds.
- The maximum voltage is over 0.6V at least one time.
- The minimum voltage is below 0.3V at least one time.
- The voltage never exceeds 1.0V.

1 time: 0 - 0.3V → 0.6 - 1.0V → 0 - 0.3V
2 times: 0 - 0.3V → 0.6 - 1.0V → 0 - 0.3V → 0.6 - 1.0V → 0 - 0.3V

SEF796Z

CAUTION:

Discard any heated oxygen sensor which has been dropped from a height of more than 0.5 m (19.7 in) onto a hard surface such as a concrete floor; use a new one.

OK or NG

OK	▶	GO TO 6.
NG	▶	GO TO 5.

5	REPLACE HEATED OXYGEN SENSOR 1 (FRONT)

1. Turn ignition switch "OFF".
2. Check heated oxygen sensor 1 (front) harness protector color.

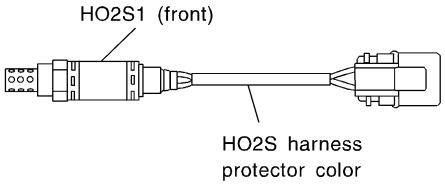

HO2S1 (front) (bank 1): Black
HO2S1 (front) (bank 2): Blue

SEF505Y

CAUTION:

Before installing new oxygen sensor, clean exhaust system threads using Oxygen Sensor Thread Cleaner tool J-43897-18 or J-43897-12 and approved anti-seize lubricant.

	▶	Replace malfunctioning heated oxygen sensor 1 (front).

Diagnostic Procedure (Cont'd)

6	CHECK HO2S 1 (FRONT) SHIELD CIRCUIT FOR OPEN AND SHORT

1. Turn ignition switch OFF.
2. Disconnect joint connector-2.
3. Check the following.

- Continuity between joint connector terminal 1 and ground
- Joint connector

(Refer to ***EL-238***, "HARNESS LAYOUT".)

Continuity should exist.

4. Also check harness for short to power.
5. Then reconnect joint connector-2.

OK or NG

OK	▶	GO TO 7.
NG	▶	Repair open circuit or short to ground or short to power in harness or connectors.

7	CHECK INTERMITTENT INCIDENT
Refer to "TROUBLE DIAGNOSIS FOR INTERMITTENT INCIDENT", EC-1353.	
▶	**INSPECTION END**

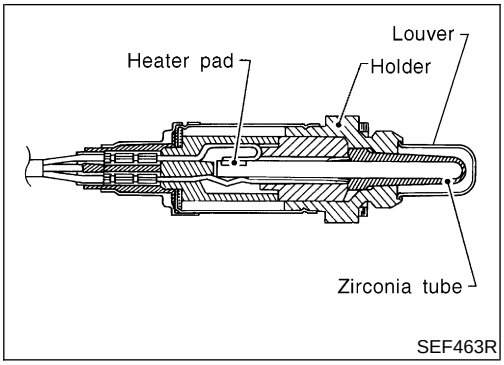

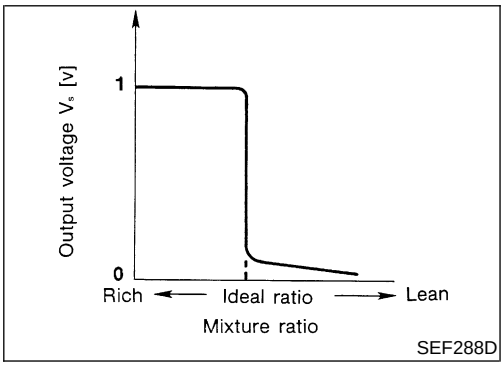

Component Description

NEEC1173

The heated oxygen sensor 1 (front) is placed into the front tube. It detects the amount of oxygen in the exhaust gas compared to the outside air. The heated oxygen sensor 1 (front) has a closed-end tube made of ceramic zirconia. The zirconia generates voltage from approximately 1V in richer conditions to 0V in leaner conditions. The heated oxygen sensor 1 (front) signal is sent to the ECM. The ECM adjusts the injection pulse duration to achieve the ideal air-fuel ratio. The ideal air-fuel ratio occurs near the radical change from 1V to 0V.

CONSULT-II Reference Value in Data Monitor Mode

NEEC1174

Specification data are reference values.

MONITOR ITEM	CONDITION		SPECIFICATION
HO2S1 (B1) HO2S1 (B2)	● Engine: After warming up	Maintaining engine speed at 2,000 rpm	0 - 0.3V ⟷ Approx. 0.6 - 1.0V
HO2S1 MNTR (B1) HO2S1 MNTR (B2)			LEAN ⟷ RICH Changes more than 5 times during 10 seconds.

ECM Terminals and Reference Value

NEEC1175

Specification data are reference values and are measured between each terminal and ground.

CAUTION:

Do not use ECM ground terminals when measuring input/output voltage. Doing so may result in damage to the ECM's transistor. Use a ground other than the ECM terminals, such as the ground.

TERMINAL NO.	WIRE COLOR	ITEM	CONDITION	DATA (DC Voltage)
50	B	Heated oxygen sensor (bank 1)	**[Engine is running]** ● After warming up to normal operating temperature and engine speed is 2,000 rpm	0 - Approximately 1.0V 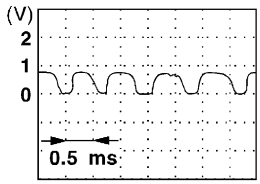 SEF002V
51	G	Heated oxygen sensor (bank 2)		

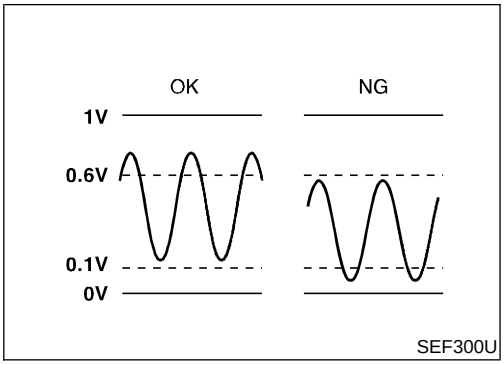

On Board Diagnosis Logic

NEEC1176

To judge the malfunction, the output from the heated oxygen sensor (front) is monitored to determine whether the “rich” output is sufficiently high and whether the “lean” output is sufficiently low. When both the outputs are shifting to the lean side, the malfunction will be detected.
Malfunction is detected when the maximum and minimum voltage from the sensor are not reached to the specified voltages.

POSSIBLE CAUSE

NEEC1176S01

- Heated oxygen sensor 1 (front)
- Heated oxygen sensor 1 heater (front)
- Fuel pressure
- Injectors
- Intake air leaks

DTC Confirmation Procedure

=NEEC1177

CAUTION:

Always drive vehicle at a safe speed.

NOTE:

If "DTC Confirmation Procedure" has been previously conducted, always turn ignition switch OFF and wait at least 5 seconds before conducting the next test.

TESTING CONDITION:

- **Always perform at a temperature above −10°C (14°F).**
- **Before performing following procedure, confirm that battery voltage is more than 11V at idle.**

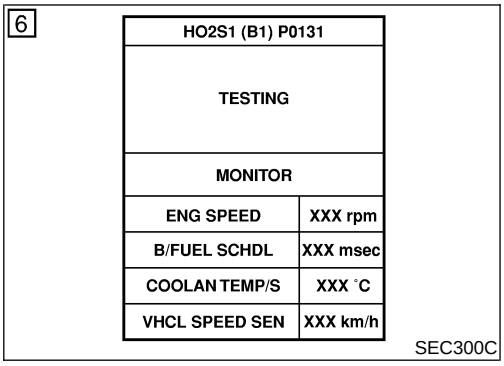

SEC300C

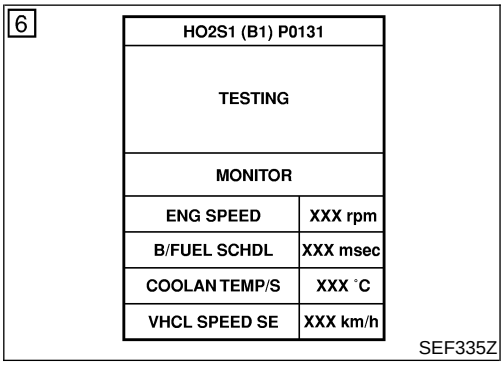

SEF335Z

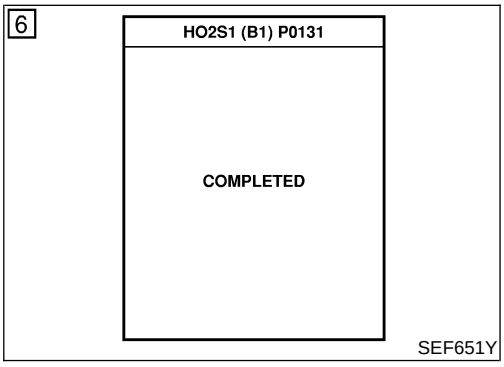

SEF651Y

With CONSULT-II

1) Start engine and warm it up to normal operating temperature.
2) Stop engine and wait at least 5 seconds.
3) Turn ignition switch "ON" and select "HO2S1 (B1)/(B2) P0131/P0151" of "HO2S1" in "DTC WORK SUPPORT" mode with CONSULT-II.
4) Touch "START".
5) Start engine and let it idle for at least 3.5 minutes.

NOTE:

Never raise engine speed above 2,800 rpm after this step. If the engine speed limit is exceeded, return to step 5.

6) When the following conditions are met, "TESTING" will be displayed on the CONSULT-II screen. Maintain the conditions continuously until "TESTING" changes to "COMPLETED". (It will take approximately 50 seconds or more.)

EGN SPEED	1,200 - 2,700 rpm
Vehicle speed	Less than 100 km/h (62 MPH)
B/FUEL SCHDL	2.0 - 14.0 msec
Selector lever	Suitable position

If "TESTING" is not displayed after 5 minutes, retry from step 2.

7) Make sure that "OK" is displayed after touching "SELF-DIAG RESULTS". If "NG" is displayed, refer to "Diagnostic Procedure", EC-1414.

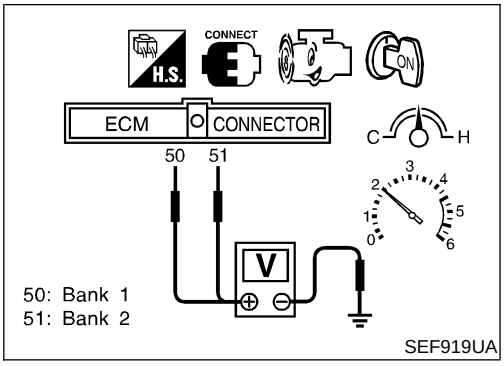

Overall Function Check

NEEC1178

Use this procedure to check the overall function of the heated oxygen sensor 1 (front) circuit. During this check, a 1st trip DTC might not be confirmed.

Without CONSULT-II

1) Start engine and warm it up to normal operating temperature.
2) Set voltmeter probes between ECM terminal 50 (bank 1 signal) or 51 (bank 2 signal) and engine ground.
3) Check one of the following with engine speed held at 2,000 rpm constant under no load.

- The maximum voltage is over 0.6V at least one time.
- The minimum voltage is over 0.1V at least one time.

4) If NG, go to “Diagnostic Procedure”, EC-1414.

Diagnostic Procedure

NEEC1179

1	RETIGHTEN GROUND SCREWS

1. Turn ignition switch OFF.
2. Loosen and retighten engine ground screws.

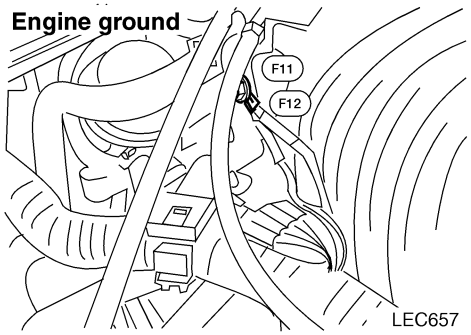

LEC657

▶	GO TO 2.

2	RETIGHTEN HEATED OXYGEN SENSOR 1 (FRONT)

Loosen and retighten corresponding heated oxygen sensor 1 (front).

Tightening torque:
40 - 60 N·m (4.1 - 6.1 kg-m, 30 - 44 ft-lb)

▶	GO TO 3.

3	CLEAR THE SELF-LEARNING DATA

With CONSULT-II

1. Start engine and warm it up to normal operating temperature.
2. Select "SELF-LEARNING CONT" in "WORK SUPPORT" mode with CONSULT-II.
3. Clear the self-learning control coefficient by touching "CLEAR".

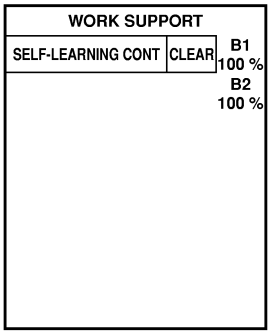

SEF968Y

4. Run engine for at least 10 minutes at idle speed.
   Is the 1st trip DTC P0171 or P0174 detected?
   Is it difficult to start engine?

Without CONSULT-II

1. Start engine and warm it up to normal operating temperature.
2. Turn ignition switch OFF.
3. Disconnect mass air flow sensor harness connector, and restart and run engine for at least 5 seconds at idle speed.
4. Stop engine and reconnect mass air flow sensor harness connector.
5. Make sure 1st trip DTC P0100 is displayed.
6. Erase the 1st trip DTC memory. Refer to "HOW TO ERASE EMISSION-RELATED DIAGNOSTIC INFORMATION", EC-1287.
7. Make sure DTC P0000 is displayed.
8. Run engine for at least 10 minutes at idle speed.
   Is the 1st trip DTC P0171 or P0174 detected?
   Is it difficult to start engine?

Yes or No

Yes	▶	Perform trouble diagnosis for DTC P0171, P0174. Refer to EC-1506.
No	▶	GO TO 4.

Diagnostic Procedure (Cont'd)

4	CHECK HEATED OXYGEN SENSOR 1 HEATER (FRONT)

1. Stop engine.
2. Check heated oxygen sensor 1 (front) harness protector color.

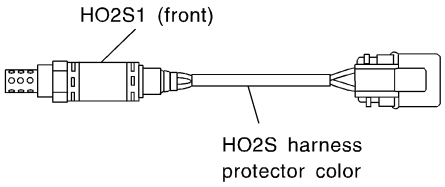

HO2S1 (front) (bank 1): Black
HO2S1 (front) (bank 2): Blue

SEF505Y

3. Check resistance between HO2S1 (front) terminals 3 and 1.

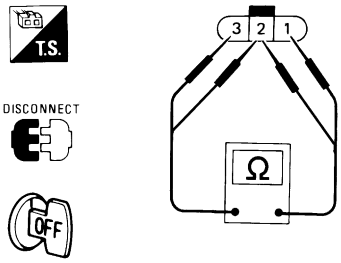

AEC158A

Resistance: 2.3 - 4.3Ω at 25°C (77°F)

4. Check continuity between HO2S1 (front) terminals 2 and 1, 3 and 2.

Continuity should not exist.

CAUTION:

- **Discard any heated oxygen sensor which has been dropped from a height of more than 0.5 m (19.7 in) onto a hard surface such as a concrete floor; use a new one.**
- **Before installing new oxygen sensor, clean exhaust system threads using Oxygen Sensor Thread Cleaner tool J-43897-18 or J-43897-12 and approved anti-seize lubricant.**

OK or NG

OK (With CONSULT-II)	▶	GO TO 5.
OK (Without CONSULT-II)	▶	GO TO 6.
NG	▶	Replace malfunctioning heated oxygen sensor 1 (front).

5 **CHECK HEATED OXYGEN SENSOR 1 (FRONT)**

With CONSULT-II

1. Start engine and warm it up to normal operating temperature.
2. Select "MANU TRIG" in "DATA MONITOR" mode with CONSULT-II, and select "HO2S1 (B1)/(B2)" and "HO2S1 MNTR (B1)/(B2)".
3. Hold engine speed at 2,000 rpm under no load during the following steps.
4. Touch "RECORD" on CONSULT-II screen.

DATA MONITOR	
MONITOR	NO DTC
ENG SPEED	XXX rpm
COOLAN TEMP/S	XXX °C
HO2S1 (B1)	XXX V
HO2S2 (B2)	XXX V

SEF967Y

5. Check the following.

- "HO2S1 MNTR (B1)/(B2)" in "DATA MONITOR" mode changes from "RICH" to "LEAN" to "RICH" 5 times in 10 seconds. 5 times (cycles) are counted as shown below.

Bank 1

cycle	1	2	3	4	5
HO2S1 MNTR (B1)	R-L	R-L	R-L	R-L	R-L

Bank 2

cycle	1	2	3	4	5
HO2S1 MNTR (B2)	R-L	R-L	R-L	R-L	R-L

R means HO2S1 MNTR (B1)/(B2) indicates RICH

L means HO2S1 MNTR (B1)/(B2) indicates LEAN

SEF647Y

- "HO2S1 (B1)/(B2)" voltage goes above 0.6V at least once.
- "HO2S1 (B1)/(B2)" voltage goes below 0.3V at least once.
- "HO2S1 (B1)/(B2)" voltage never exceeds 1.0V.

Trigger	ENG SPEED	HO2S1 (B1)
	rpm	V
XXX	XXX	XXX
XXX	XXX	XXX
XXX	XXX	XXX
XXX	XXX	XXX
XXX	XXX	XXX
XXX	XXX	XXX
XXX	XXX	XXX
XXX	XXX	XXX
XXX	XXX	XXX
XXX	XXX	XXX
XXX	XXX	XXX
XXX	XXX	XXX
XXX	XXX	XXX

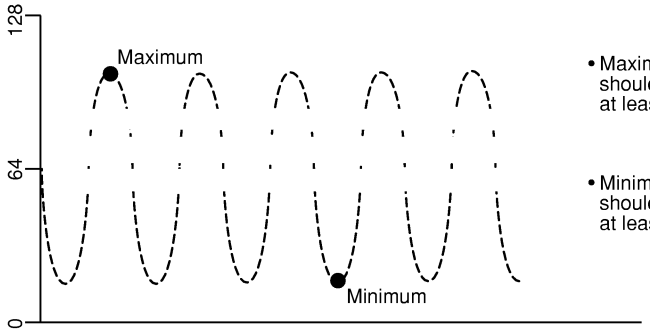

SEF648Y

CAUTION:

- **Discard any heated oxygen sensor which has been dropped from a height of more than 0.5 m (19.7 in) onto a hard surface such as a concrete floor; use a new one.**
- **Before installing new oxygen sensor, clean exhaust system threads using Oxygen Sensor Thread Cleaner tool J-43897-18 or J-43897-12 and approved anti-seize lubricant.**

OK or NG

OK	▶	GO TO 7.
NG	▶	Replace malfunctioning heated oxygen sensor 1 (front).

Diagnostic Procedure (Cont'd)

6	CHECK FRONT HEATED OXYGEN SENSOR 1 (FRONT)

Without CONSULT-II

1. Start engine and warm it up to normal operating temperature.
2. Set voltmeter probes between ECM terminal 50 (bank 1 signal) or 51 (bank 2 signal) and engine ground.
3. Check the following with engine speed held at 2,000 rpm constant under no load.

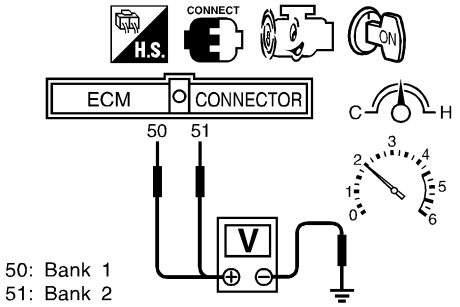

- The voltage fluctuates between 0 to 0.3V and 0.6 to 1.0V more than 5 times within 10 seconds.
- The maximum voltage is over 0.6V at least one time.
- The minimum voltage is below 0.3V at least one time.
- The voltage never exceeds 1.0V.

1 time: 0 - 0.3V → 0.6 - 1.0V → 0 - 0.3V
2 times: 0 - 0.3V → 0.6 - 1.0V → 0 - 0.3V → 0.6 - 1.0V → 0 - 0.3V

SEF796Z

CAUTION:
Discard any heated oxygen sensor which has been dropped from a height of more than 0.5 m (19.7 in) onto a hard surface such as a concrete floor; use a new one.

OK or NG

OK	▶	GO TO 8.
NG	▶	GO TO 7.

7	REPLACE HEATED OXYGEN SENSOR 1 (FRONT)

1. Turn ignition switch "OFF".
2. Check heated oxygen sensor 1 (front) harness protector color.

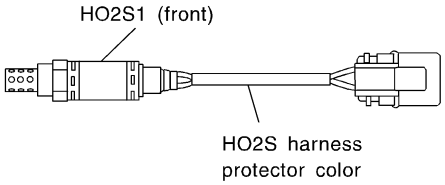

HO2S1 (front) (bank 1): Black
HO2S1 (front) (bank 2): Blue

SEF505Y

CAUTION:
Before installing new oxygen sensor, clean exhaust system threads using Oxygen Sensor Thread Cleaner tool J-43897-18 or J-43897-12 and approved anti-seize lubricant.

	▶	Replace malfunctioning heated oxygen sensor 1 (front).

8	CHECK HO2S1 (FRONT) SHIELD CIRCUIT FOR OPEN AND SHORT	
1. Turn ignition switch OFF. 2. Disconnect joint connector. 3. For circuit, refer to "DTC P0130, P0150 HEATED OXYGEN SENSOR 1 (FRONT) (BANK 1)/(BANK 2) (CIRCUIT)", EC-1400. 4. Check the following. ● Continuity between joint connector terminal 1 and ground ● Joint connector (Refer to ***EL-238***, "HARNESS LAYOUT".) **Continuity should exist.** 5. Also check harness for short to power. 6. Then reconnect joint connector.		
OK or NG		
OK	▶	GO TO 9.
NG	▶	Repair open circuit or short to power in harness or connectors.

9	CHECK INTERMITTENT INCIDENT	
Refer to "TROUBLE DIAGNOSIS FOR INTERMITTENT INCIDENT", EC-1353. For circuit, refer to "DTC P0130, P0150 HEATED OXYGEN SENSOR (FRONT) (BANK 1)/(BANK 2) (CIRCUIT)", EC-1400.		
	▶	**INSPECTION END**

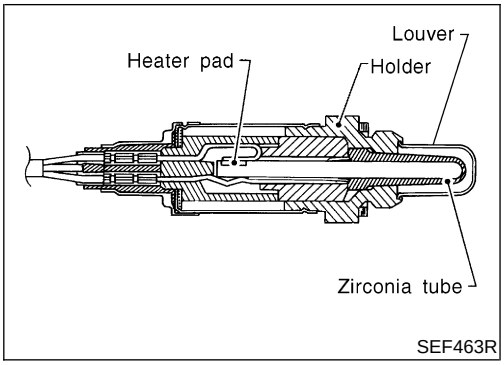

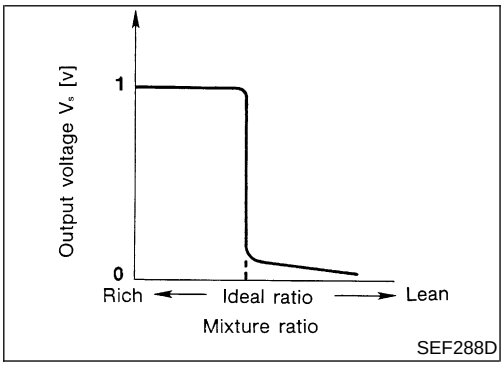

Component Description

NEEC1180

The heated oxygen sensor 1 (front) is placed into the front tube. It detects the amount of oxygen in the exhaust gas compared to the outside air. The heated oxygen sensor 1 (front) has a closed-end tube made of ceramic zirconia. The zirconia generates voltage from approximately 1V in richer conditions to 0V in leaner conditions. The heated oxygen sensor 1 (front) signal is sent to the ECM. The ECM adjusts the injection pulse duration to achieve the ideal air-fuel ratio. The ideal air-fuel ratio occurs near the radical change from 1V to 0V.

CONSULT-II Reference Value in Data Monitor Mode

NEEC1181

Specification data are reference values.

MONITOR ITEM	CONDITION		SPECIFICATION
HO2S1 (B1) HO2S1 (B2)	● Engine: After warming up	Maintaining engine speed at 2,000 rpm	0 - 0.3V ⟷ Approx. 0.6 - 1.0V
HO2S1 MNTR (B1) HO2S1 MNTR (B2)			LEAN ⟷ RICH Changes more than 5 times during 10 seconds.

ECM Terminals and Reference Value

NEEC1182

Specification data are reference values and are measured between each terminal and ground.

CAUTION:

Do not use ECM ground terminals when measuring input/output voltage. Doing so may result in damage to the ECM's transistor. Use a ground other than the ECM terminals, such as the ground.

TERMINAL NO.	WIRE COLOR	ITEM	CONDITION	DATA (DC Voltage)
50	B	Heated oxygen sensor 1 (front) (Bank 1)	**[Engine is running]** ● After warming up to normal operating temperature and engine speed is 2,000 rpm	0 - Approximately 1.0V 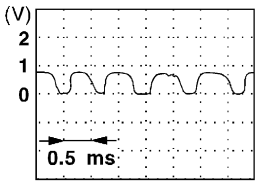 SEF002V
51	G	Heated oxygen sensor 1 (front) (Bank 2)		

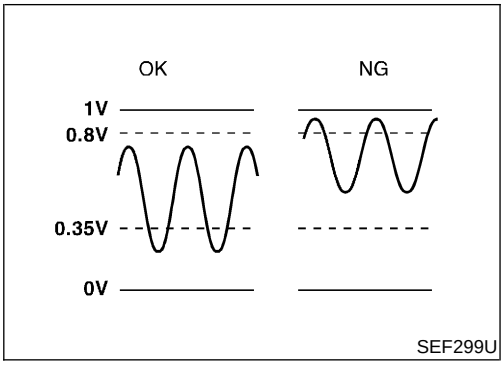

On Board Diagnosis Logic

NEEC1183

To judge the malfunction, the output from the heated oxygen sensor 1 (front) is monitored to determine whether the “rich” output is sufficiently high. The “lean” output is sufficiently low. When both the outputs are shifting to the rich side, the malfunction will be detected.
Malfunction is detected when the maximum and minimum voltages from the sensor are beyond the specified voltages.

POSSIBLE CAUSE

NEEC1183S01

- Heated oxygen sensor 1 (front)
- Fuel pressure
- Injectors
- Heated oxygen sensor 1 heater (front)

DTC Confirmation Procedure

=NEEC1184

CAUTION:

Always drive vehicle at a safe speed.

NOTE:

If “DTC Confirmation Procedure” has been previously conducted, always turn ignition switch OFF and wait at least 5 seconds before conducting the next test.

TESTING CONDITION:

- **Always perform at a temperature above −10°C (14°F).**
- **Before performing the following procedure, confirm that battery voltage is more than 11V at idle.**

6

HO2S1 (B1) P0132	
OUT OF CONDITION	
MONITOR	
ENG SPEED	XXX rpm
B/FUEL SCHDL	XXX msec
COOLAN TEMP/S	XXX °C
VHCL SPEED SE	XXX km/h

SEF336Z

6

HO2S1 (B1) P0132	
TESTING	
MONITOR	
ENG SPEED	XXX rpm
B/FUEL SCHDL	XXX msec
COOLAN TEMP/S	XXX °C
VHCL SPEED SE	XXX km/h

SEF337Z

6

HO2S1 (B1) P0132
COMPLETED

SEF655Y

With CONSULT-II

1) Start engine and warm it up to normal operating temperature.
2) Stop engine and wait at least 5 seconds.
3) Turn ignition switch ON and select “HO2S1 (B1)/(B2) P0132/ P0152” of “HO2S1” in “DTC WORK SUPPORT” mode with CONSULT-II.
4) Touch “START”.
5) Start engine and let it idle for at least 3.5 minutes.

NOTE:

Never raise engine speed above 2,800 rpm after this step. If the engine speed limit is exceeded, return to step 5.

6) When the following conditions are met, “TESTING” will be displayed on the CONSULT-II screen. Maintain the conditions continuously until “TESTING” changes to “COMPLETED”. (It will take approximately 50 seconds or more.)

ENG SPEED	1,200 - 2,700 rpm
Vehicle speed	Less than 100 km/h (62 MPH)
B/FUEL SCHDL	2.0 - 14.0 msec
Selector lever	Suitable position

If “TESTING” is not displayed after 5 minutes, retry from step 2.

7) Make sure that “OK” is displayed after touching “SELF-DIAG RESULTS”. If “NG” is displayed, refer to “Diagnostic Procedure”, EC-1423.

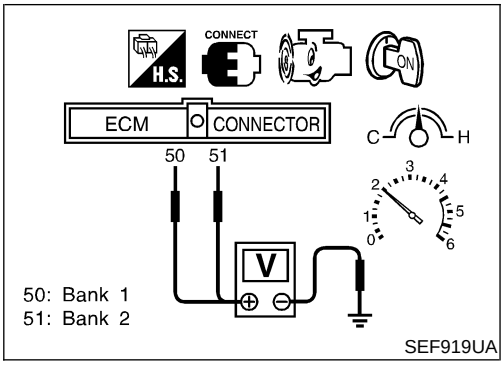

Overall Function Check

NEEC1185

Use this procedure to check the overall function of the heated oxygen sensor 1 (front) circuit. During this check, a 1st trip DTC might not be confirmed.

Without CONSULT-II

1) Start engine and warm it up to normal operating temperature.
2) Set voltmeter probes between ECM terminal 50 (bank 1 signal) or 51 (bank 2 signal) and engine ground.
3) Check one of the following with engine speed held at 2,000 rpm constant under no load.

- The maximum voltage is below 0.8V at least one time.
- The minimum voltage is below 0.35V at least one time.

4) If NG, go to “Diagnostic Procedure”, EC-1423.

Diagnostic Procedure

NEEC1186

1	RETIGHTEN GROUND SCREWS

1. Turn ignition switch OFF.
2. Loosen and retighten engine ground screws.

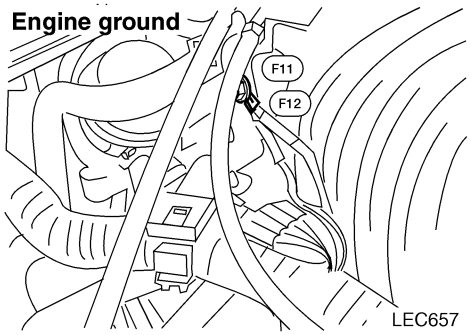

LEC657

▶	GO TO 2.

2	RETIGHTEN HEATED OXYGEN SENSOR 1 (FRONT)

Loosen and retighten corresponding heated oxygen sensor 1 (front).

Tightening torque:
40 - 60 N·m (4.1 - 6.1 kg-m, 30 - 44 ft-lb)

▶	GO TO 3.

Diagnostic Procedure (Cont'd)

3	CLEAR THE SELF-LEARNING DATA

With CONSULT-II

1. Start engine and warm it up to normal operating temperature.
2. Select "SELF-LEARNING CONT" in "WORK SUPPORT" mode with CONSULT-II.
3. Clear the self-learning control coefficient by touching "CLEAR".

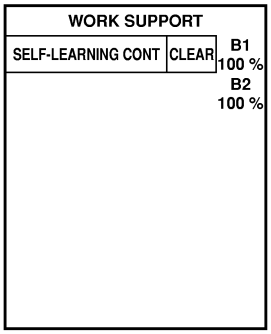

SEF968Y

4. Run engine for at least 10 minutes at idle speed.
   Is the 1st trip DTC P0172 or P0175 detected?
   Is it difficult to start engine?

Without CONSULT-II

1. Start engine and warm it up to normal operating temperature.
2. Turn ignition switch OFF.
3. Disconnect mass air flow sensor harness connector, and restart and run engine for at least 5 seconds at idle speed.
4. Stop engine and reconnect mass air flow sensor harness connector.
5. Make sure 1st trip DTC P0100 is displayed.
6. Erase the 1st trip DTC memory. Refer to "HOW TO ERASE EMISSION-RELATED DIAGNOSTIC INFORMATION", EC-1287.
7. Make sure DTC P0000 is displayed.
8. Run engine for at least 10 minutes at idle speed.
   Is the 1st trip DTC P0172 or P0175 detected?
   Is it difficult to start engine?

Yes or No

Yes	▶	Perform trouble diagnosis for DTC P0172, P0175. Refer to EC-1515.
No	▶	GO TO 4.

4	CHECK HO2S 1 (FRONT) CONNECTOR FOR WATER

1. Turn ignition switch "OFF".
2. Check heated oxygen sensor 1 (front) harness protector color.

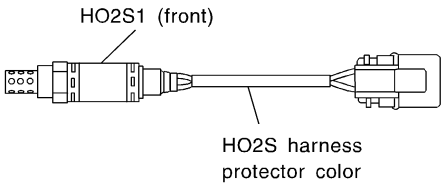

HO2S1 (front) (bank 1): Black
HO2S1 (front) (bank 2): Blue

SEF505Y

3. Disconnect heated oxygen sensor 1 (front) harness connector.
4. Check connectors for water.
   Water should not exist.

OK or NG

OK	▶	GO TO 5.
NG	▶	Repair or replace harness or connectors.

5	CHECK HEATED OXYGEN SENSOR 1 HEATER (FRONT)

Check resistance between HO2S1 (front) terminals 3 and 1.

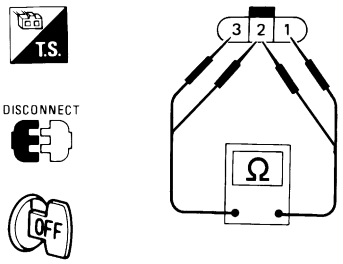

AEC158A

Resistance: 2.3 - 4.3Ω at 25°C (77°F)

Check continuity between HO2S1 (front) terminals 2 and 1, 3 and 2.

Continuity should not exist.

CAUTION:

Discard any heated oxygen sensor which has been dropped from a height of more than 0.5 m (19.7 in) onto a hard surface such as a concrete floor; use a new one.

OK or NG

OK (With CONSULT-II)	▶	GO TO 6.
OK (Without CONSULT-II)	▶	GO TO 7.
NG	▶	GO TO 8.

Diagnostic Procedure (Cont'd)

6	CHECK HEATED OXYGEN SENSOR 1 (FRONT)

With CONSULT-II

1. Start engine and warm it up to normal operating temperature.
2. Select "MANU TRIG" in "DATA MONITOR" mode with CONSULT-II, and select "HO2S1 (B1)/(B2)" and "HO2S1 MNTR (B1)/(B2)".
3. Hold engine speed at 2,000 rpm under no load during the following steps.
4. Touch "RECORD" on CONSULT-II screen.

DATA MONITOR	
MONITOR	NO DTC
ENG SPEED	XXX rpm
COOLAN TEMP/S	XXX °C
HO2S1 (B1)	XXX V
HO2S2 (B2)	XXX V

SEF967Y

5. Check the following.

- "HO2S1 MNTR (B1)/(B2)" in "DATA MONITOR" mode changes from "RICH" to "LEAN" to "RICH" 5 times in 10 seconds. 5 times (cycles) are counted as shown below.

Bank 1

cycle	1	2	3	4	5
HO2S1 MNTR (B1)	R-L	R-L	R-L	R-L	R-L

Bank 2

cycle	1	2	3	4	5
HO2S1 MNTR (B2)	R-L	R-L	R-L	R-L	R-L

R means HO2S1 MNTR (B1)/(B2) indicates RICH

L means HO2S1 MNTR (B1)/(B2) indicates LEAN

SEF647Y

- "HO2S1 (B1)/(B2)" voltage goes above 0.6V at least once.
- "HO2S1 (B1)/(B2)" voltage goes below 0.3V at least once.
- "HO2S1 (B1)/(B2)" voltage never exceeds 1.0V.

Trigger	ENG SPEED	HO2S1 (B1)
	rpm	V
XXX	XXX	XXX
XXX	XXX	XXX
XXX	XXX	XXX
XXX	XXX	XXX
XXX	XXX	XXX
XXX	XXX	XXX
XXX	XXX	XXX
XXX	XXX	XXX
XXX	XXX	XXX
XXX	XXX	XXX
XXX	XXX	XXX
XXX	XXX	XXX
XXX	XXX	XXX

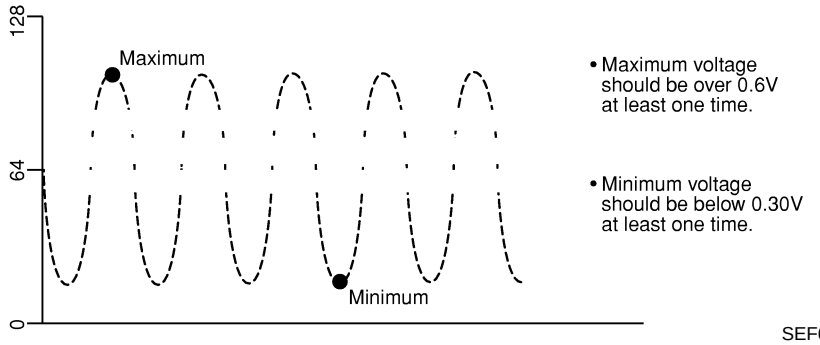

SEF648Y

CAUTION:

- **Discard any heated oxygen sensor which has been dropped from a height of more than 0.5 m (19.7 in) onto a hard surface such as a concrete floor; use a new one.**
- **Before installing new oxygen sensor, clean exhaust system threads using Oxygen Sensor Thread Cleaner tool J-43897-18 or J-43897-12 and approved anti-seize lubricant.**

OK or NG

OK	▶	GO TO 9.
NG	▶	GO TO 8.

7	CHECK HEATED OXYGEN SENSOR 1 (FRONT)

Without CONSULT-II

1. Start engine and warm it up to normal operating temperature.
2. Set voltmeter probes between ECM terminal 50 (bank 1 signal) or 51 (bank 2 signal) and engine ground.
3. Check the following with engine speed held at 2,000 rpm constant under no load.

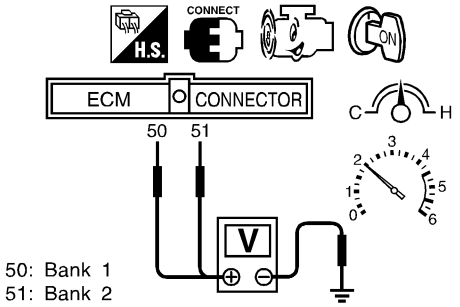

- The voltage fluctuates between 0 to 0.3V and 0.6 to 1.0V more than 5 times within 10 seconds.
- The maximum voltage is over 0.6V at least one time.
- The minimum voltage is below 0.3V at least one time.
- The voltage never exceeds 1.0V.

1 time: 0 - 0.3V → 0.6 - 1.0V → 0 - 0.3V
2 times: 0 - 0.3V → 0.6 - 1.0V → 0 - 0.3V → 0.6 - 1.0V → 0 - 0.3V

SEF796Z

CAUTION:
Discard any heated oxygen sensor which has been dropped from a height of more than 0.5 m (19.7 in) onto a hard surface such as a concrete floor; use a new one.

OK or NG

OK	▶	GO TO 8.
NG	▶	GO TO 8.

8	REPLACE HEATED OXYGEN SENSOR 1 (FRONT)

1. Turn ignition switch "OFF".
2. Check heated oxygen sensor 1 (front) harness protector color.

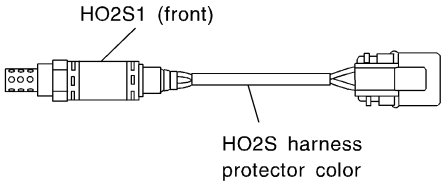

HO2S1 (front) (bank 1): Black
HO2S1 (front) (bank 2): Blue

SEF505Y

CAUTION:
Before installing new oxygen sensor, clean exhaust system threads using Oxygen Sensor Thread Cleaner tool J-43897-18 or J-43897-12 and approved anti-seize lubricant.

	▶	Replace malfunctioning heated oxygen sensor 1 (front).

Diagnostic Procedure (Cont'd)

9	CHECK HO2S1 (FRONT) SHIELD CIRCUIT FOR OPEN AND SHORT

1. Turn ignition switch OFF.
2. Disconnect joint connector.
   For circuit, refer to "DTC P0130, P0150 FRONT HEATED OXYGEN SENSOR (FRONT) (BANK 1)/(BANK 2) (CIRCUIT)", EC-1400.
3. Check the following.

- Continuity between joint connector terminal 1 and ground
- Joint connector

(Refer to ***EL-238***, "HARNESS LAYOUT".)

Continuity should exist.

4. Also check harness for short to power.
5. Then reconnect joint connector.

OK or NG

OK	▶	GO TO 10.
NG	▶	Repair open circuit or short to power in harness or connectors.

10	CHECK INTERMITTENT INCIDENT

Refer to "TROUBLE DIAGNOSIS FOR INTERMITTENT INCIDENT", EC-1353.
For circuit, refer to "DTC P0130, P0150 FRONT HEATED OXYGEN SENSOR (FRONT) (BANK 1)/(BANK 2) (CIRCUIT)", EC-1400.

	▶	**INSPECTION END**

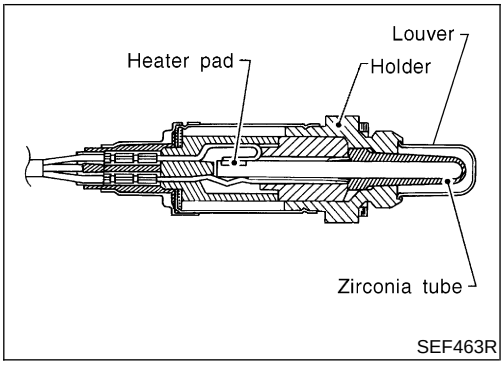

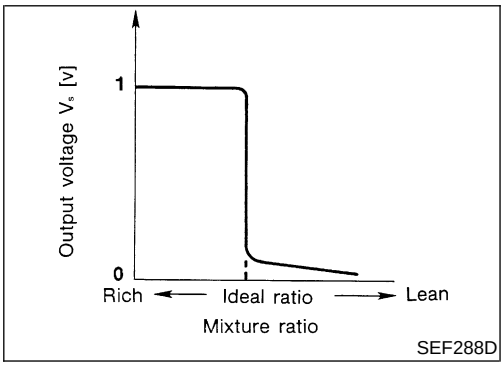

Component Description

NEEC1187

The heated oxygen sensor 1 (front) is placed into the front tube. It detects the amount of oxygen in the exhaust gas compared to the outside air. The heated oxygen sensor 1 (front) has a closed-end tube made of ceramic zirconia. The zirconia generates voltage from approximately 1V in richer conditions to 0V in leaner conditions. The heated oxygen sensor 1 (front) signal is sent to the ECM. The ECM adjusts the injection pulse duration to achieve the ideal air-fuel ratio. The ideal air-fuel ratio occurs near the radical change from 1V to 0V.

CONSULT-II Reference Value in Data Monitor Mode

NEEC1188

Specification data are reference values.

MONITOR ITEM	CONDITION		SPECIFICATION
HO2S1 (B1) HO2S1 (B2)	● Engine: After warming up	Maintaining engine speed at 2,000 rpm	0 - 0.3V ⟷ Approx. 0.6 - 1.0V
HO2S1 MNTR (B1) HO2S1 MNTR (B2)			LEAN ⟷ RICH Changes more than 5 times during 10 seconds.

ECM Terminals and Reference Value

NEEC1189

Specification data are reference values and are measured between each terminal and ground.

CAUTION:

Do not use ECM ground terminals when measuring input/output voltage. Doing so may result in damage to the ECM's transistor. Use a ground other than the ECM terminals, such as the ground.

TERMINAL NO.	WIRE COLOR	ITEM	CONDITION	DATA (DC Voltage)
50	B	Heated oxygen sensor 1 (front) (Bank 1)	**[Engine is running]** ● After warming up to normal operating temperature and engine speed is 2,000 rpm	0 - Approximately 1.0V 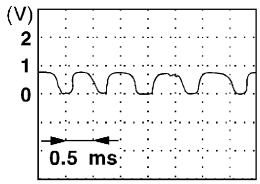 SEF002V
51	G	Heated oxygen sensor 1 (front) (Bank 2)		

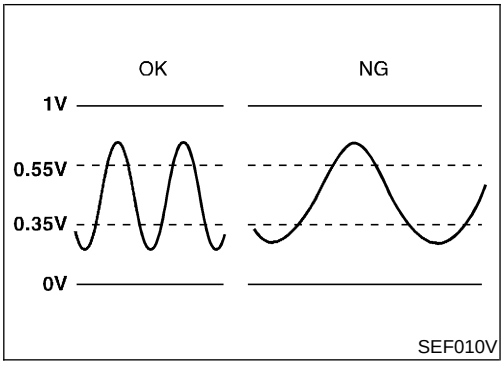

On Board Diagnosis Logic

NEEC1190

To judge the malfunction of heated oxygen sensor 1 (front), this diagnosis measures response time of heated oxygen sensor 1 (front) signal. The time is compensated by engine operating (speed and load), fuel feedback control constant, and heated oxygen sensor 1 (front) temperature index. Judgment is based on whether the compensated time (heated oxygen sensor 1 (front) cycling time index) is inordinately long or not.
Malfunction is detected when the response of the voltage signal from the sensor takes more than the specified time.

POSSIBLE CAUSE

NEEC1190S01

- Harness or connectors
  (The sensor circuit is open or shorted.)
- Heated oxygen sensor 1 (front)
- Heated oxygen sensor 1 heater (front)
- Fuel pressure
- Injectors
- Intake air leaks
- Exhaust gas leaks
- PCV valve
- Mass air flow sensor

DTC Confirmation Procedure

NEEC1191

CAUTION:
Always drive vehicle at a safe speed.

NOTE:
If “DTC Confirmation Procedure” has been previously conducted, always turn ignition switch OFF and wait at least 5 seconds before conducting the next test.

TESTING CONDITION:

- **Always perform at a temperature above −10°C (14°F).**
- **Before performing the following procedure, confirm that battery voltage is more than 11V at idle.**

6

HO2S1 (B1) P0133	
OUT OF CONDITION	
MONITOR	
ENG SPEED	XXX rpm
B/FUEL SCHDL	XXX msec
COOLAN TEMP/S	XXX °C
VHCL SPEED SEN	XXX km/h

SEF338Z

6

HO2S1 (B1) P0133	
TESTING	
MONITOR	
ENG SPEED	XXX rpm
B/FUEL SCHDL	XXX msec
COOLAN TEMP/S	XXX °C
VHCL SPEED SEN	XXX km/h

SEF339Z

6

HO2S1 (B1) P0133
COMPLETED

SEF658Y

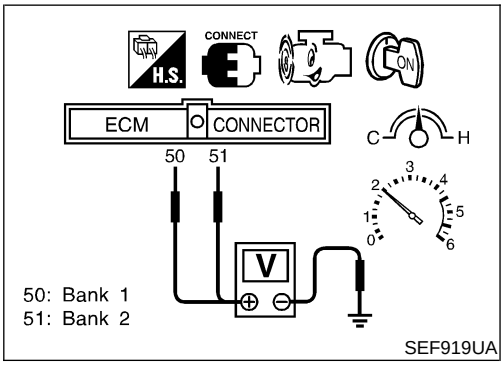

SEF919UA

With CONSULT-II

1) Start engine and warm it up to normal operating temperature.
2) Stop engine and wait at least 5 seconds.
3) Turn ignition switch ON and select "HO2S1 (B1)/(B2) P0133/ P0153" of "HO2S1" in "DTC WORK SUPPORT" mode with CONSULT-II.
4) Touch "START".
5) Start engine and let it idle for at least 3.5 minutes.

NOTE:
Never raise engine speed above 2,800 rpm after this step. If the engine speed limit is exceeded, return to step 5.

6) When the following conditions are met, "TESTING" will be displayed on the CONSULT-II screen. Maintain the conditions continuously until "TESTING" changes to "COMPLETED". (It will take approximately 40 to 50 seconds.)

ENG SPEED	1,700 - 2,800 rpm
Vehicle speed	More than 80 km/h (50 MPH)
B/FUEL SCHDL	2.0 - 14.0 msec
Selector lever	Suitable position

If "TESTING" is not displayed after 5 minutes, retry from step 2.

7) Make sure that "OK" is displayed after touching "SELF-DIAG RESULTS". If "NG" is displayed, refer to "Diagnostic Procedure", EC-1434.

Overall Function Check

NEEC1192

Use this procedure to check the overall function of the heated oxygen sensor 1 (front) circuit. During this check, a 1st trip DTC might not be confirmed.

Without CONSULT-II

1) Start engine and warm it up to normal operating temperature.
2) Set voltmeter probes between ECM terminal 50 (bank 1 signal) or 51 (bank 2 signal) and engine ground.
3) Check the following with engine speed held at 2,000 rpm constant under no load.

- The voltage fluctuates between 0 to 0.3V and 0.6 to 1.0V more than 5 times within 10 seconds.
  1 time: 0 - 0.3V → 0.6 - 1.0V → 0 - 0.3V
  2 times: 0 - 0.3V → 0.6 - 1.0V → 0 - 0.3V → 0.6 - 1.0V → 0 - 0.3V

4) If NG, go to "Diagnostic Procedure", EC-1434.

Wiring Diagram

NEEC1193

RIGHT BANK

NEEC1193S01

EC-O2S1B1-01

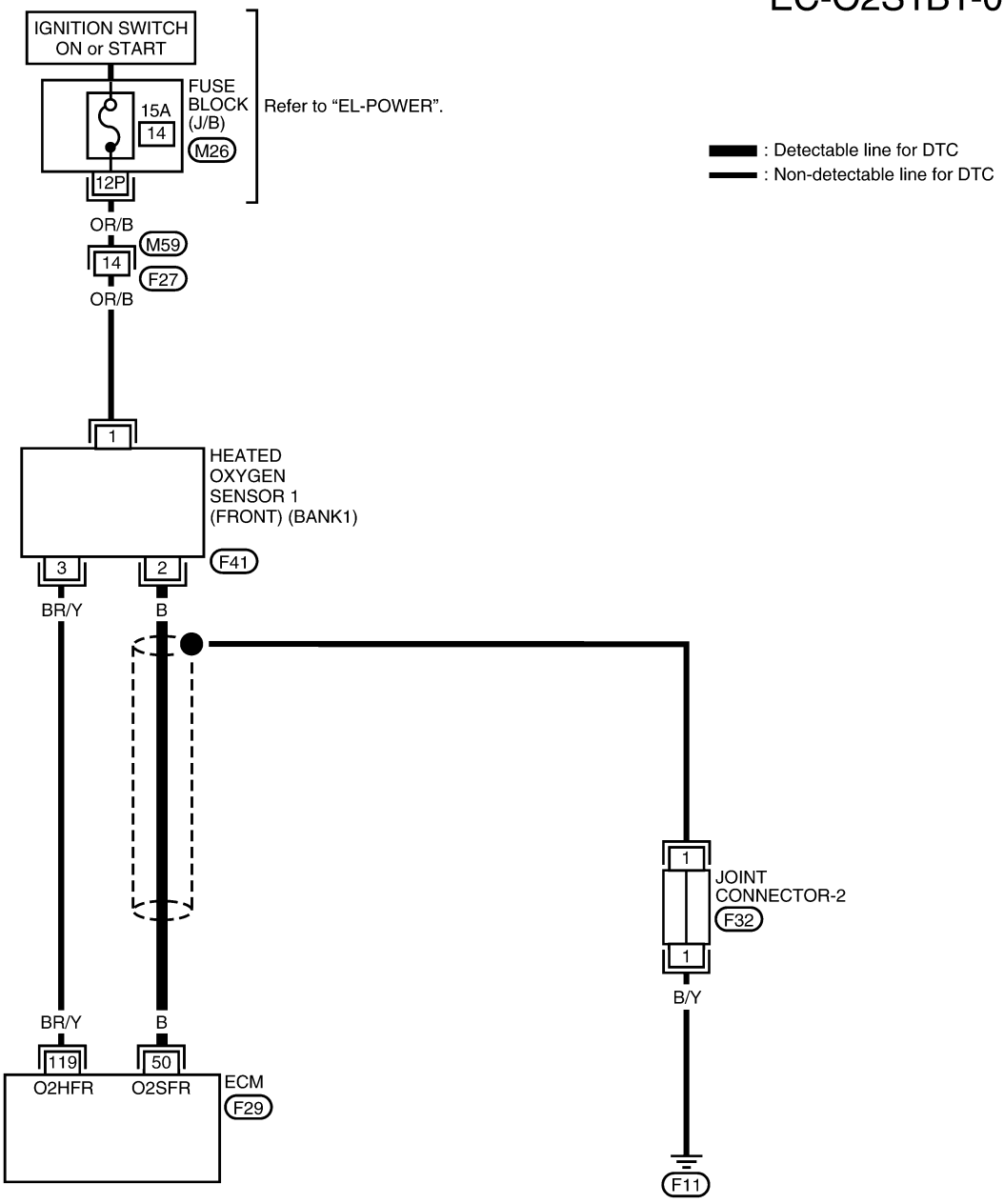

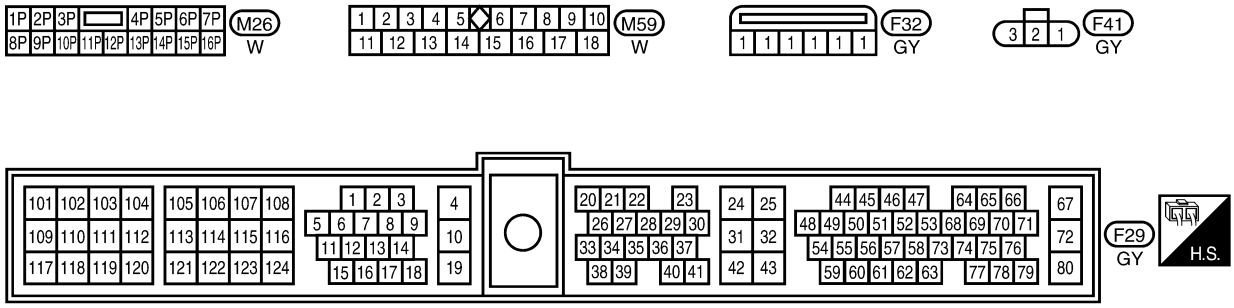

WEC788

LEFT BANK

NEEC1193S02

EC-O2S1B2-01

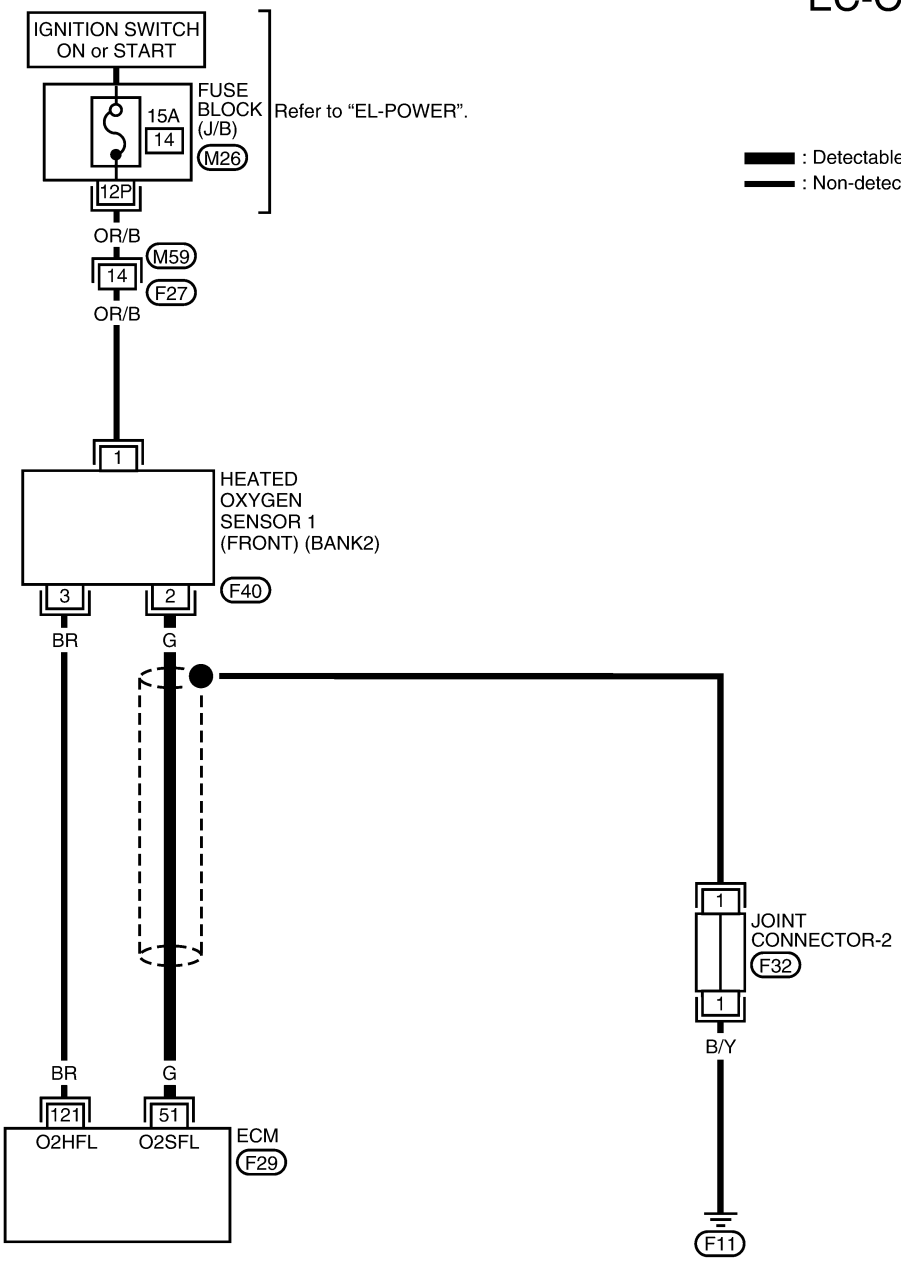



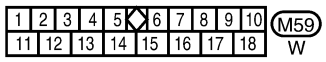

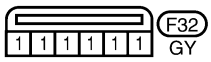

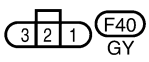

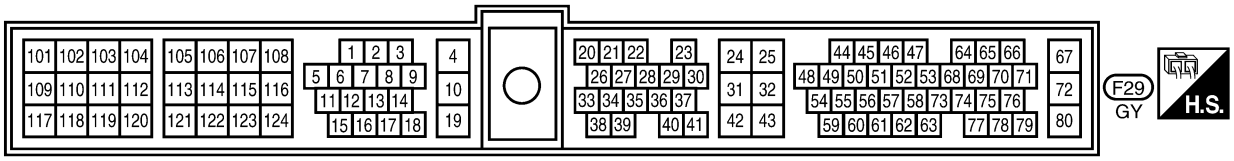

WEC789

Diagnostic Procedure

NEEC1194

1	RETIGHTEN GROUND SCREWS

1. Turn ignition switch OFF.
2. Loosen and retighten engine ground screws.

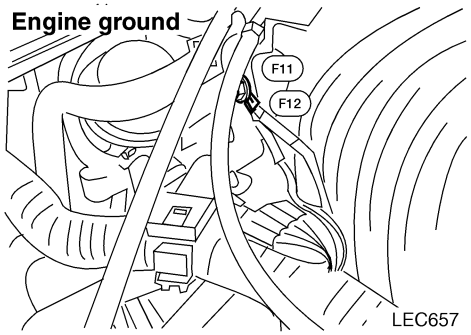

LEC657

	▶	GO TO 2.

2	RETIGHTEN HEATED OXYGEN SENSOR 1 (FRONT)

Loosen and retighten corresponding heated oxygen sensor 1 (front).

Tightening torque:
40 - 60 N·m (4.1 - 6.1 kg-m, 30 - 44 ft-lb)

	▶	GO TO 3.

3	CHECK FOR EXHAUST AIR LEAK

1. Start engine and run it at idle.
2. Listen for an exhaust air leak before three way catalyst.

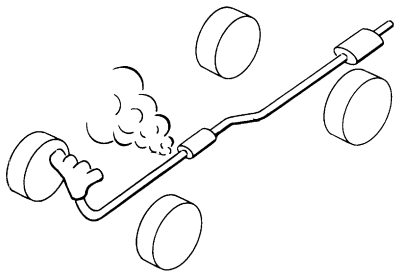

SEF099P

OK or NG

OK	▶	GO TO 4.
NG	▶	Repair or replace.

4	CHECK FOR INTAKE AIR LEAK

Listen for an intake air leak after the mass air flow sensor.

OK or NG

OK	▶	GO TO 5.
NG	▶	Repair or replace.

5	CLEAR THE SELF-LEARNING DATA

With CONSULT-II

1. Start engine and warm it up to normal operating temperature.
2. Select "SELF-LEARNING CONT" in "WORK SUPPORT" mode with CONSULT-II.
3. Clear the self-learning control coefficient by touching "CLEAR".

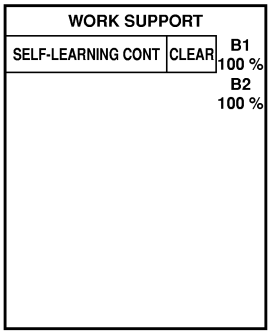

SEF968Y

4. Run engine for at least 10 minutes at idle speed.
   Is the 1st trip DTC P0171, P0172, P0174 or P0175 detected?
   Is it difficult to start engine?

Without CONSULT-II

1. Start engine and warm it up to normal operating temperature.
2. Turn ignition switch OFF.
3. Disconnect mass air flow sensor harness connector, and restart and run engine for at least 5 seconds at idle speed.
4. Stop engine and reconnect mass air flow sensor harness connector.
5. Make sure 1st trip DTC P0100 is displayed.
6. Erase the 1st trip DTC memory. Refer to "HOW TO ERASE EMISSION-RELATED DIAGNOSTIC INFORMATION", EC-1287.
7. Make sure DTC P0000 is displayed.
8. Run engine for at least 10 minutes at idle speed.
   Is the 1st trip DTC P0171, P0172, P0174 or P0175 detected?
   Is it difficult to start engine?

Yes or No

Yes	▶	Perform trouble diagnosis for DTC P0171, P0174 or P0172, P0175. Refer to EC-1506, 1515.
No	▶	GO TO 6.

Diagnostic Procedure (Cont'd)

6 CHECK HO2S1 (FRONT) INPUT SIGNAL CIRCUIT FOR OPEN AND SHORT

1. Turn ignition switch OFF.
2. Check heated oxygen sensor 1 (front) harness protector.

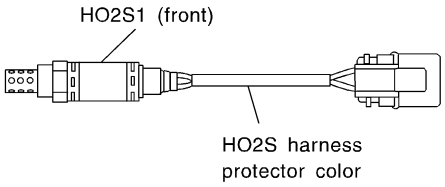

HO2S1 (front) (bank 1): Black
HO2S1 (front) (bank 2): Blue

SEF505Y

3. Disconnect corresponding heated oxygen sensor 1 (front) harness connector.

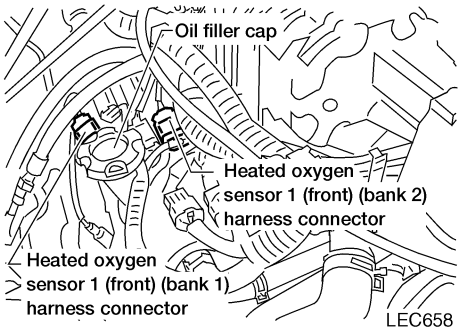

LEC658

4. Disconnect ECM harness connector.
5. Check harness continuity between ECM terminal and HO2S1 terminal as follows.
   Refer to Wiring Diagram.

DTC	Terminals		Bank
	ECM	Sensor	
P0133	50	2	Bank 1 (Right)
P0153	51	2	Bank 2 (Left)

MTBL0587

Continuity should exist.

6. Check harness continuity between ECM terminal or HO2S1 terminal and ground as follows.
   Refer to Wiring Diagram.

DTC	Terminals		Bank
	ECM or sensor	Ground	
P0133	50 or 2	Ground	Bank 1 (Right)
P0153	51 or 2	Ground	Bank 2 (Left)

MTBL0588

Continuity should not exist.

7. Also check harness for short to power.

OK or NG

OK	▶	GO TO 7.
NG	▶	Repair open circuit or short to ground or short to power in harness or connectors.

7	CHECK HEATED OXYGEN SENSOR 1 HEATER (FRONT)

Check resistance between HO2S1 (front) terminals 3 and 1.

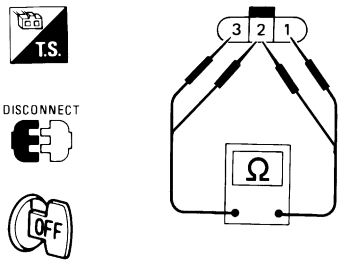

AEC158A

Resistance: 2.3 - 4.3Ω at 25°C (77°F)

Check continuity between HO2S1 (front) terminals 2 and 1, 3 and 2.

Continuity should not exist.

CAUTION:

- **Discard any heated oxygen sensor which has been dropped from a height of more than 0.5 m (19.7 in) onto a hard surface such as a concrete floor; use a new one.**
- **Before installing new oxygen sensor, clean exhaust system threads using Oxygen Sensor Thread Cleaner tool J-43897-18 or J-43897-12 and approved anti-seize lubricant.**

OK or NG

OK	▶	GO TO 8.
NG	▶	GO TO 12.

Diagnostic Procedure (Cont'd)

8	CHECK MASS AIR FLOW SENSOR

1. Reconnect harness connectors disconnected.
2. Start engine and warm it up to normal operating temperature.
3. Check voltage between ECM terminal 54 (Mass air flow sensor signal) and ground.

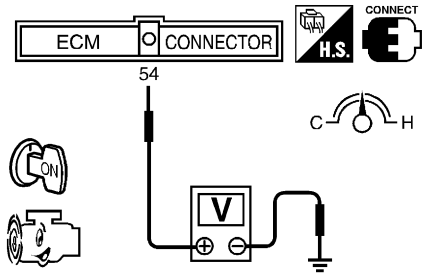

SEF747U

Condition	Voltage V
Ignition switch "ON" (Engine stopped.)	Less than 1.0
Idle (Engine is warmed-up to normal operating temperature.)	1.0 - 1.7
2,500 rpm (Engine is warmed-up to normal operating temperature.)	1.7 - 2.3
Idle to about 4,000 rpm*	1.0 - 1.7 to Approx. 4.0

MTBL0227

4. If the voltage is out of specification, disconnect mass air flow sensor harness connector and connect it again. Then repeat above check.
5. If NG, remove mass air flow sensor from air duct. Check hot wire for damage or dust.

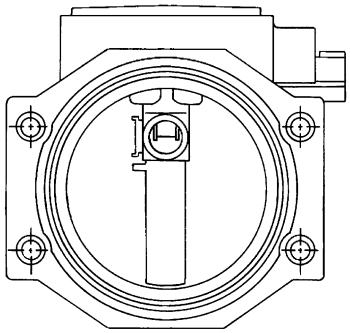

SEF030T

OK or NG

OK	▶	GO TO 9.
NG	▶	Replace mass air flow sensor.

9	CHECK PCV VALVE

With engine running at idle, remove PCV valve from rocker cover; make sure that a hissing noise will be heard as air passes through it and a strong vacuum should be felt immediately when a finger is placed over valve inlet.

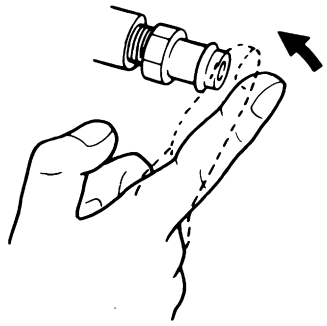

SEC137A

OK or NG

OK (With CONSULT-II)	▶	GO TO 10.
OK (Without CONSULT-II)	▶	GO TO 11.
NG	▶	Replace PCV valve.

Diagnostic Procedure (Cont'd)

10	CHECK FRONT HEATED OXYGEN SENSOR

With CONSULT-II

1. Start engine and warm it up to normal operating temperature.
2. Select "MANU TRIG" in "DATA MONITOR" mode with CONSULT-II, and select "HO2S1 (B1)/(B2)" and "HO2S1 MNTR (B1)/(B2)".
3. Hold engine speed at 2,000 rpm under no load during the following steps.
4. Touch "RECORD" on CONSULT-II screen.

DATA MONITOR	
MONITOR	NO DTC
ENG SPEED	XXX rpm
COOLAN TEMP/S	XXX °C
HO2S1 (B1)	XXX V
HO2S2 (B2)	XXX V

SEF967Y

5. Check the following.

- "HO2S1 MNTR (B1)/(B2)" in "DATA MONITOR" mode changes from "RICH" to "LEAN" to "RICH" 5 times in 10 seconds. 5 times (cycles) are counted as shown below.

Bank 1

cycle	1	2	3	4	5
HO2S1 MNTR (B1)	R-L	R-L	R-L	R-L	R-L

Bank 2

cycle	1	2	3	4	5
HO2S1 MNTR (B2)	R-L	R-L	R-L	R-L	R-L

R means HO2S1 MNTR (B1)/(B2) indicates RICH

L means HO2S1 MNTR (B1)/(B2) indicates LEAN

SEF647Y

- "HO2S1 (B1)/(B2)" voltage goes above 0.6V at least once.
- "HO2S1 (B1)/(B2)" voltage goes below 0.3V at least once.
- "HO2S1 (B1)/(B2)" voltage never exceeds 1.0V.

Trigger	ENG SPEED	HO2S1 (B1)
	rpm	V
XXX	XXX	XXX
XXX	XXX	XXX
XXX	XXX	XXX
XXX	XXX	XXX
XXX	XXX	XXX
XXX	XXX	XXX
XXX	XXX	XXX
XXX	XXX	XXX
XXX	XXX	XXX
XXX	XXX	XXX
XXX	XXX	XXX
XXX	XXX	XXX
XXX	XXX	XXX

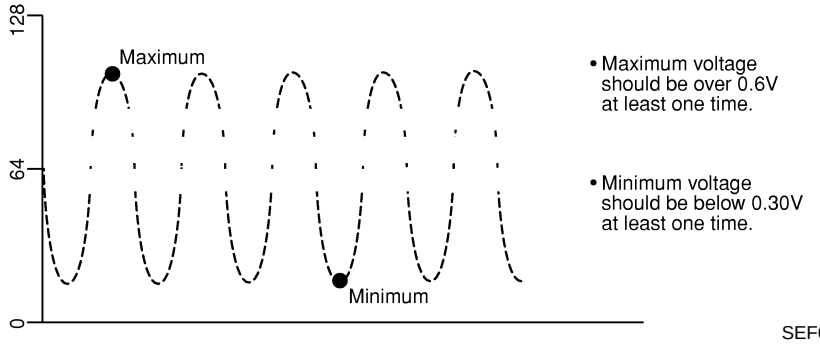

SEF648Y

CAUTION:

- **Discard any heated oxygen sensor which has been dropped from a height of more than 0.5 m (19.7 in) onto a hard surface such as a concrete floor; use a new one.**
- **Before installing new oxygen sensor, clean exhaust system threads using Oxygen Sensor Thread Cleaner tool J-43897-18 or J-43897-12 and approved anti-seize lubricant.**

OK or NG

OK	▶	GO TO 12.
NG	▶	Replace malfunctioning heated oxygen sensor 1 (front).

11	CHECK FRONT HEATED OXYGEN SENSOR 1 (FRONT)

Without CONSULT-II

1. Start engine and warm it up to normal operating temperature.
2. Set voltmeter probes between ECM terminal 50 (bank 1 signal) or 51 (bank 2 signal) and engine ground.
3. Check the following with engine speed held at 2,000 rpm constant under no load.

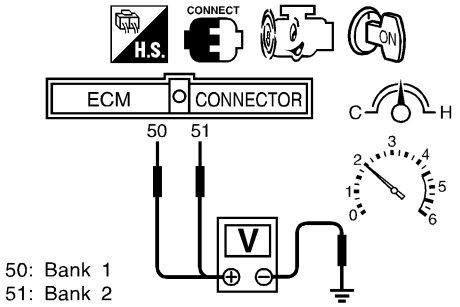

- The voltage fluctuates between 0 to 0.3V and 0.6 to 1.0V more than 5 times within 10 seconds.
- The maximum voltage is over 0.6V at least one time.
- The minimum voltage is below 0.3V at least one time.
- The voltage never exceeds 1.0V.

1 time: 0 - 0.3V → 0.6 - 1.0V → 0 - 0.3V
2 times: 0 - 0.3V → 0.6 - 1.0V → 0 - 0.3V → 0.6 - 1.0V → 0 - 0.3V

SEF796Z

CAUTION:
Discard any heated oxygen sensor which has been dropped from a height of more than 0.5 m (19.7 in) onto a hard surface such as a concrete floor; use a new one.

OK or NG

OK	▶	GO TO 13.
NG	▶	GO TO 12.

12	REPLACE HEATED OXYGEN SENSOR 1 (FRONT)

1. Turn ignition switch "OFF".
2. Check heated oxygen sensor 1 (front) harness protector color.

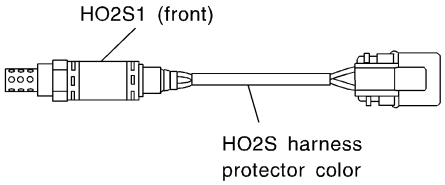

HO2S1 (front) (bank 1): Black
HO2S1 (front) (bank 2): Blue

SEF505Y

CAUTION:
Before installing new oxygen sensor, clean exhaust system threads using Oxygen Sensor Thread Cleaner tool J-43897-18 or J-43897-12 and approved anti-seize lubricant.

	▶	Replace malfunctioning heated oxygen sensor 1 (front).

Diagnostic Procedure (Cont'd)

13	CHECK HO2S1 (FRONT) SHIELD CIRCUIT FOR OPEN AND SHORT	
1. Turn ignition switch OFF. 2. Disconnect joint connector. 3. Check the following. ● Continuity between joint connector terminal 1 and ground ● Joint connector (Refer to ***EL-238***, "HARNESS LAYOUT".) **Continuity should exist.** 4. Also check harness for short to power. 5. Then reconnect joint connector.		
OK or NG		
OK	▶	GO TO 14.
NG	▶	Repair open circuit or short to power in harness or connectors.

14	CHECK INTERMITTENT INCIDENT
Refer to "TROUBLE DIAGNOSIS FOR INTERMITTENT INCIDENT", EC-1353.	
▶	**INSPECTION END**

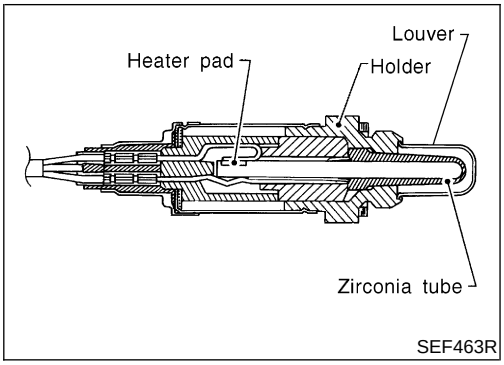

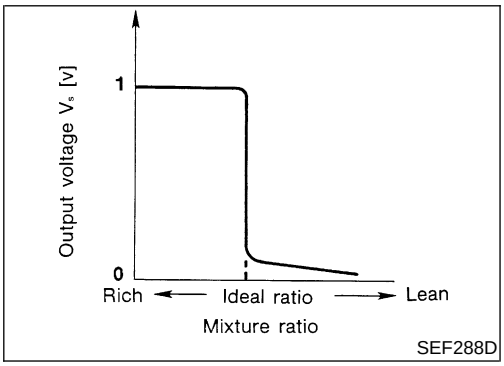

Component Description

NEEC1195

The heated oxygen sensor 1 (front) is placed into the front tube. It detects the amount of oxygen in the exhaust gas compared to the outside air. The heated oxygen sensor 1 (front) has a closed-end tube made of ceramic zirconia. The zirconia generates voltage from approximately 1V in richer conditions to 0V in leaner conditions. The heated oxygen sensor 1 (front) signal is sent to the ECM. The ECM adjusts the injection pulse duration to achieve the ideal air-fuel ratio. The ideal air-fuel ratio occurs near the radical change from 1V to 0V.

CONSULT-II Reference Value in Data Monitor Mode

NEEC1196

Specification data are reference values.

MONITOR ITEM	CONDITION		SPECIFICATION
HO2S1 (B1) HO2S1 (B2)	● Engine: After warming up	Maintaining engine speed at 2,000 rpm	0 - 0.3V ⟷ Approx. 0.6 - 1.0V
HO2S1 MNTR (B1) HO2S1 MNTR (B2)			LEAN ⟷ RICH Changes more than 5 times during 10 seconds.

ECM Terminals and Reference Value

NEEC1197

Specification data are reference values and are measured between each terminal and ground.

CAUTION:

Do not use ECM ground terminals when measuring input/output voltage. Doing so may result in damage to the ECM's transistor. Use a ground other than the ECM terminals, such as the ground.

TERMINAL NO.	WIRE COLOR	ITEM	CONDITION	DATA (DC Voltage)
50	B	Heated oxygen sensor 1 (front) RH	**[Engine is running]** ● After warming up to normal operating temperature and engine speed is 2,000 rpm	0 - Approximately 1.0V 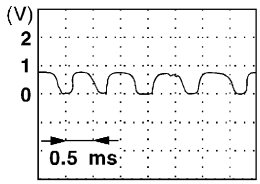 SEF002V
51	G	Heated oxygen sensor 1 (front) LH		

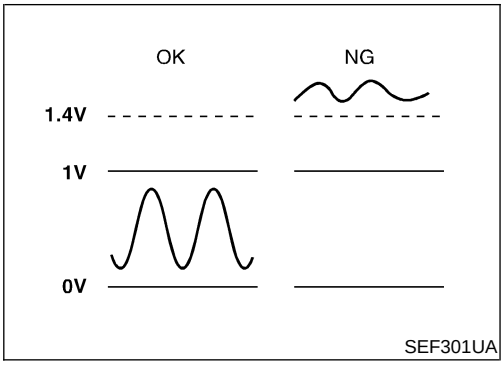

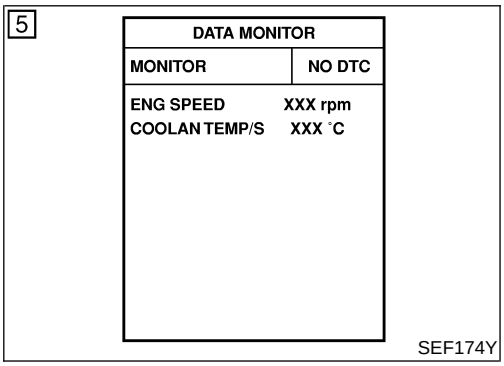

On Board Diagnosis Logic

NEEC1198

To judge the malfunction, the diagnosis checks that the heated oxygen sensor 1 (front) output is not inordinately high.
Malfunction is detected when an excessively high voltage from the sensor is sent to ECM.

POSSIBLE CAUSE

NEEC1198S01

- Harness or connectors
  (The sensor circuit is open or shorted.)
- Heated oxygen sensor 1 (front)

DTC Confirmation Procedure

NEEC1199

NOTE:
If “DTC Confirmation Procedure” has been previously conducted, always turn ignition switch OFF and wait at least 5 seconds before conducting the next test.

With CONSULT-II

1) Start engine and warm it up to normal operating temperature.
2) Turn ignition switch OFF and wait at least 5 seconds.
3) Turn ignition switch ON.
4) Select “DATA MONITOR” mode with CONSULT-II.
5) Restart engine and let it idle for 25 seconds.
6) If 1st trip DTC is detected, go to “Diagnostic Procedure”, EC-1447.

With GST

Follow the procedure “With CONSULT-II”.

- **When using GST, “DTC Confirmation Procedure” should be performed twice as much as when using CONSULT-II because GST cannot display MODE 7 (1st trip DTC) concerning this diagnosis. Therefore, using CONSULT-II is recommended.**

Wiring Diagram

NEEC1200

RIGHT BANK

NEEC1200S01

EC-O2S1B1-01

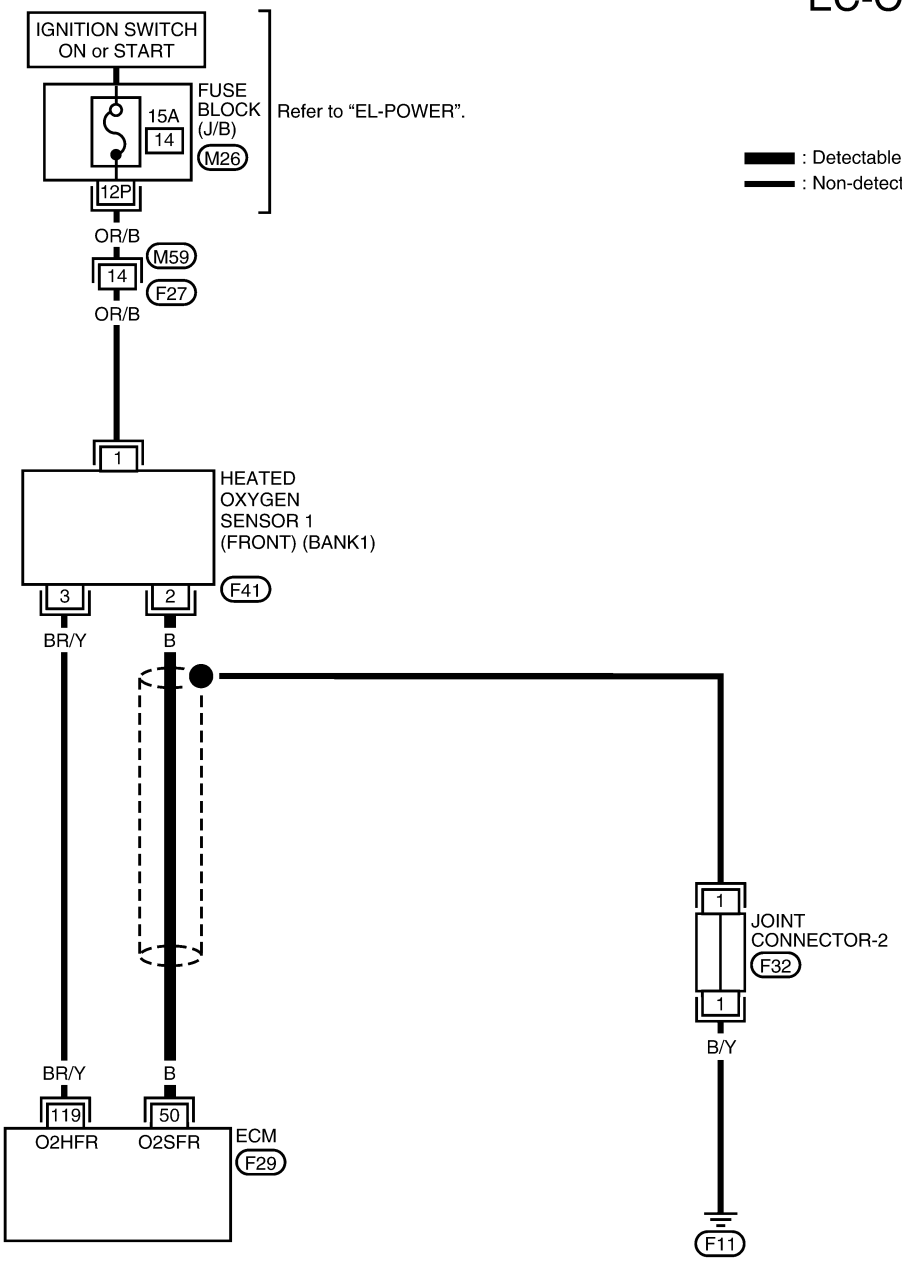

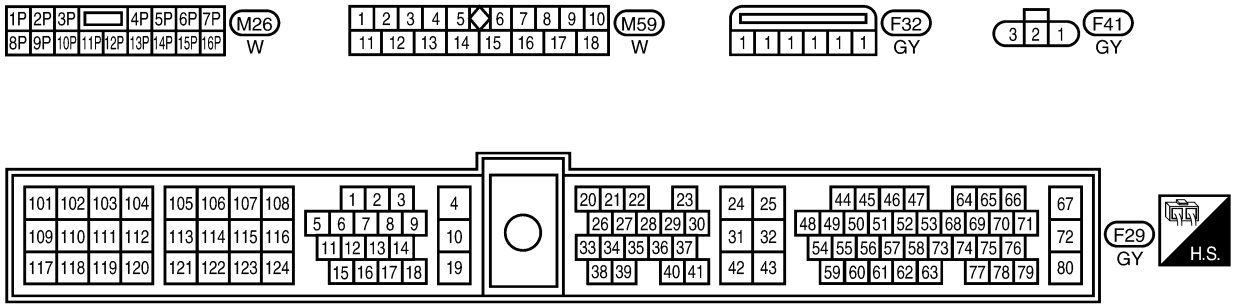

WEC788

Wiring Diagram (Cont'd)

LEFT BANK

NEEC1200S02

EC-O2S1B2-01

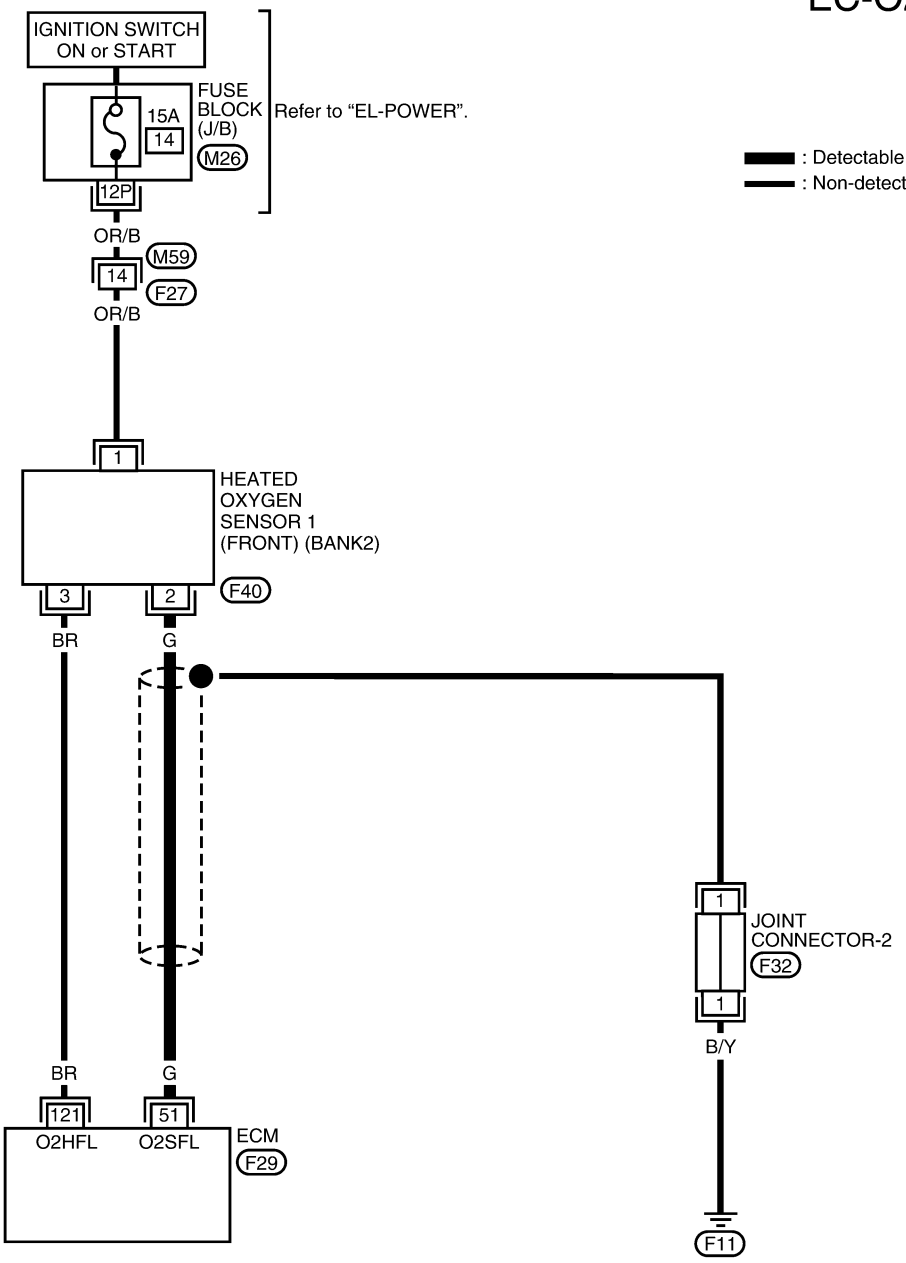



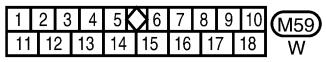

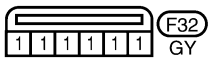

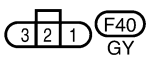

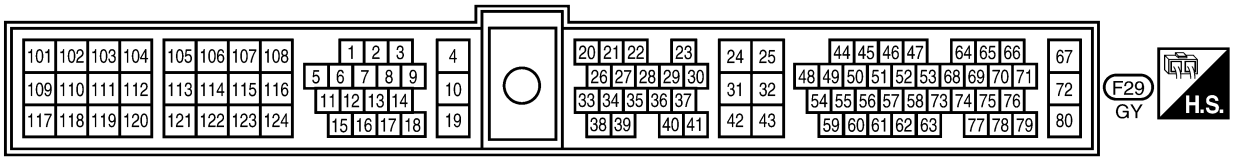

WEC789

Diagnostic Procedure

NEEC1201

1	INSPECTION START

1. Turn ignition switch OFF.
2. Check heated oxygen sensor 1 (front) harness protector.

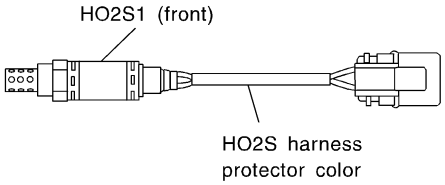

HO2S1 (front) (bank 1): Black
HO2S1 (front) (bank 2): Blue

SEF505Y

3. Disconnect corresponding heated oxygen sensor 1 (front) harness connector.

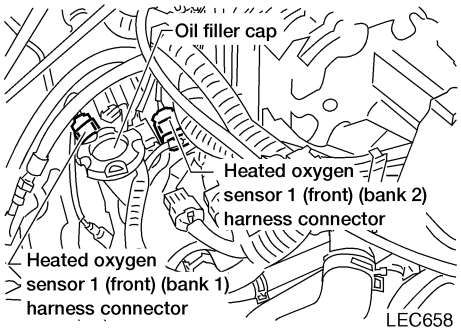

LEC658

▶	GO TO 2.

2	RETIGHTEN HEATED OXYGEN SENSOR 1 (FRONT)

1. Loosen and retighten corresponding heated oxygen sensor 1 (front).
   Tightening torque:
   40 - 60 N·m (4.1 - 6.1 kg-m, 30 - 44 ft-lb)

▶	GO TO 3.

Diagnostic Procedure (Cont'd)

3	CHECK HO2S1 (FRONT) INPUT SIGNAL CIRCUIT FOR OPEN AND SHORT

1. Disconnect ECM harness connector.
2. Check harness continuity between ECM terminal and HO2S1 (front) terminal as follows.
   Refer to Wiring Diagram.

DTC	Terminals		Bank
	ECM	Sensor	
P0134	50	2	Bank 1 (Right)
P0154	51	2	Bank 2 (Left)

SEF819Z

Continuity should exist.

3. Check harness continuity between ECM terminal or HO2S1 (front) terminal and ground as follows.
   Refer to Wiring Diagram.

DTC	Terminals		Bank
	ECM or sensor	Ground	
P0134	50 or 2	Ground	Bank 1 (Right)
P0154	51 or 2	Ground	Bank 2 (Left)

SEF820Z

Continuity should not exist.

4. Also check harness for short to power.

OK or NG

OK	▶	GO TO 4.
NG	▶	Repair open circuit or short to ground or short to power in harness or connectors.

4	CHECK FRONT HO2S1 (FRONT) CONNECTOR FOR WATER

1. Disconnect heated oxygen sensor 1 (front) harness connector.
2. Check connectors for water.

Water should not exist.

OK or NG

OK (With CONSULT-II)	▶	GO TO 5.
OK (Without CONSULT-II)	▶	GO TO 6.
NG	▶	Repair or replace harness or connectors.

5 **CHECK HEATED OXYGEN SENSOR 1 (FRONT)**

With CONSULT-II

1. Start engine and warm it up to normal operating temperature.
2. Select "MANU TRIG" in "DATA MONITOR" mode with CONSULT-II, and select "HO2S1 (B1)/(B2)" and "HO2S1 MNTR (B1)/(B2)".
3. Hold engine speed at 2,000 rpm under no load during the following steps.
4. Touch "RECORD" on CONSULT-II screen.

DATA MONITOR	
MONITOR	NO DTC
ENG SPEED	XXX rpm
COOLAN TEMP/S	XXX °C
HO2S1 (B1)	XXX V
HO2S2 (B2)	XXX V

SEF967Y

5. Check the following.

- "HO2S1 MNTR (B1)/(B2)" in "DATA MONITOR" mode changes from "RICH" to "LEAN" to "RICH" 5 times in 10 seconds. 5 times (cycles) are counted as shown left:

Bank 1

cycle	1	2	3	4	5
HO2S1 MNTR (B1)	R-L	R-L	R-L	R-L	R-L

Bank 2

cycle	1	2	3	4	5
HO2S1 MNTR (B2)	R-L	R-L	R-L	R-L	R-L

R means HO2S1 MNTR (B1)/(B2) indicates RICH

L means HO2S1 MNTR (B1)/(B2) indicates LEAN

SEF647Y

- "HO2S1 (B1)/(B2)" voltage goes above 0.6V at least once.
- "HO2S1 (B1)/(B2)" voltage goes below 0.3V at least once.
- "HO2S1 (B1)/(B2)" voltage never exceeds 1.0V.

Trigger	ENG SPEED	HO2S1 (B1)
	rpm	V
XXX	XXX	XXX
XXX	XXX	XXX
XXX	XXX	XXX
XXX	XXX	XXX
XXX	XXX	XXX
XXX	XXX	XXX
XXX	XXX	XXX
XXX	XXX	XXX
XXX	XXX	XXX
XXX	XXX	XXX
XXX	XXX	XXX
XXX	XXX	XXX
XXX	XXX	XXX

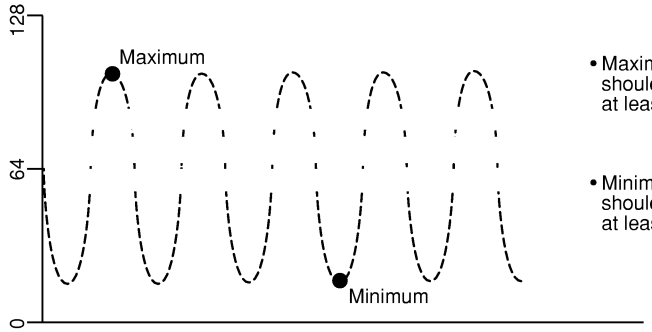

SEF648Y

CAUTION:

- **Discard any heated oxygen sensor which has been dropped from a height of more than 0.5 m (19.7 in) onto a hard surface such as a concrete floor; use a new one.**
- **Before installing new oxygen sensor, clean exhaust system threads using Oxygen Sensor Thread Cleaner tool J-43897-18 or J-43897-12 and approved anti-seize lubricant.**

OK or NG

OK	▶	GO TO 8.
NG	▶	GO TO 7.

Diagnostic Procedure (Cont'd)

6	CHECK HEATED OXYGEN SENSOR 1 (FRONT)

Without CONSULT-II

1. Start engine and warm it up to normal operating temperature.
2. Set voltmeter probes between ECM terminal 50 (bank 1 signal) or 51 (bank 2 signal) and engine ground.
3. Check the following with engine speed held at 2,000 rpm constant under no load.

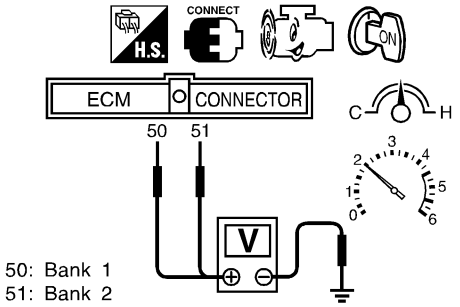

50: Bank 1
51: Bank 2

- The voltage fluctuates between 0 to 0.3V and 0.6 to 1.0V more than 5 times within 10 seconds.
- The maximum voltage is over 0.6V at least one time.
- The minimum voltage is below 0.3V at least one time.
- The voltage never exceeds 1.0V.

1 time: 0 - 0.3V → 0.6 - 1.0V → 0 - 0.3V
2 times: 0 - 0.3V → 0.6 - 1.0V → 0 - 0.3V → 0.6 - 1.0V → 0 - 0.3V

SEF796Z

CAUTION:
Discard any heated oxygen sensor which has been dropped from a height of more than 0.5 m (19.7 in) onto a hard surface such as a concrete floor; use a new one.

OK or NG

OK	▶	GO TO 8.
NG	▶	GO TO 7.

7	REPLACE HEATED OXYGEN SENSOR 1 (FRONT)

1. Turn ignition switch "OFF".
2. Check heated oxygen sensor 1 (front) harness protector color.

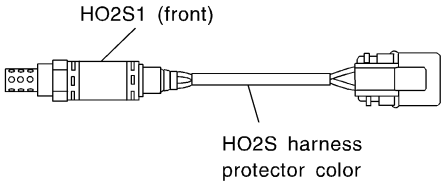

HO2S1 (front) (bank 1): Black
HO2S1 (front) (bank 2): Blue

SEF505Y

CAUTION:
Before installing new oxygen sensor, clean exhaust system threads using Oxygen Sensor Thread Cleaner tool J-43897-18 or J-43897-12 and approved anti-seize lubricant.

	▶	Replace malfunctioning heated oxygen sensor 1 (front).

8	CHECK INTERMITTENT INCIDENT
Refer to "TROUBLE DIAGNOSIS FOR INTERMITTENT INCIDENT", EC-1353.	
	▶ **INSPECTION END**

Description

NEEC1202

SYSTEM DESCRIPTION

NEEC1202S01

Sensor	Input Signal to ECM	ECM function	Actuator
Camshaft position sensor	Engine speed	Heated oxygen sensor 1 heater (front) control	Heated oxygen sensor 1 heaters (front)

The ECM performs ON/OFF control of the heated oxygen sensor 1 heaters (front) corresponding to the engine speed.

OPERATION

NEEC1202S02

Engine speed rpm	Heated oxygen sensor 1 heaters (front)
Above 2,800	OFF
Below 2,800	ON

CONSULT-II Reference Value in Data Monitor Mode

NEEC1203

Specification data are reference values.

MONITOR ITEM	CONDITION	SPECIFICATION
HO2S1 HTR (B1) HO2S1 HTR (B2)	• Engine speed: Below 2,800 rpm	ON
	• Engine speed: Above 2,800 rpm	OFF

ECM Terminals and Reference Value

NEEC1204

Specification data are reference values and are measured between each terminal and ground.

CAUTION:

Do not use ECM ground terminals when measuring input/output voltage. Doing so may result in damage to the ECM's transistor. Use a ground other than the ECM terminals, such as the ground.

TERMINAL NO.	WIRE COLOR	ITEM	CONDITION	DATA (DC Voltage)
119 (Bank 1)	BR/Y	Heated oxygen sensor 1 heater (front)	**[Engine is running]** • Engine speed is below 2,800 rpm	Approximately 0.4V
121 (Bank 2)	BR		**[Engine is running]** • Engine speed is above 2,800 rpm	BATTERY VOLTAGE (11 - 14V)

On Board Diagnosis Logic

NEEC1205

Malfunction is detected when the current amperage in the heated oxygen sensor 1 heater (front) circuit is out of the normal range. [An improper voltage drop signal is sent to ECM through the heated oxygen sensor 1 heater (front).]

POSSIBLE CAUSE

NEEC1205S01

- Harness or connectors
  [The heated oxygen sensor 1 heater (front) circuit is open or shorted.]
- Heated oxygen sensor 1 heater (front)

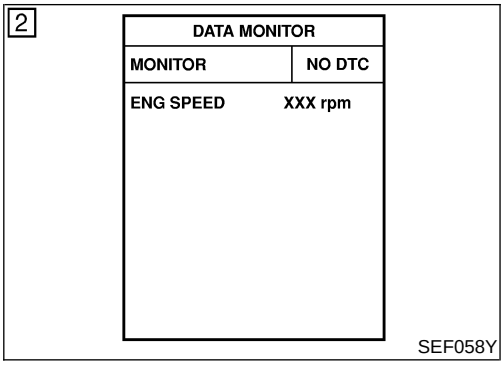

DTC Confirmation Procedure

NEEC1206

NOTE:

If “DTC Confirmation Procedure” has been previously conducted, always turn ignition switch OFF and wait at least 5 seconds before conducting the next test.

TESTING CONDITION:

Before performing the following procedure, confirm that battery voltage is between 10.5V and 16V at idle.

With CONSULT-II

1) Turn ignition switch ON and select “DATA MONITOR” mode with CONSULT-II.
2) Start engine and run it for at least 6 seconds at idle speed.
3) If 1st trip DTC is detected, go to “Diagnostic Procedure”, EC-1455.

With GST

1) Start engine and run it for at least 6 seconds at idle speed.
2) Turn ignition switch OFF, wait at least 5 seconds and then turn ON.
3) Start engine and run it for at 6 seconds at idle speed.
4) Select “MODE 3” with GST.
5) If 1st trip DTC is detected, go to “Diagnostic Procedure”, EC-1455.

- **When using GST, “DTC Confirmation Procedure” should be performed twice as much as when using CONSULT-II because GST cannot display MODE 7 (1st trip DTC) concerning this diagnosis. Therefore, using CONSULT-II is recommended.**

Wiring Diagram

NEEC1207

RIGHT BANK

NEEC1207S01

EC-O2H1B1-01

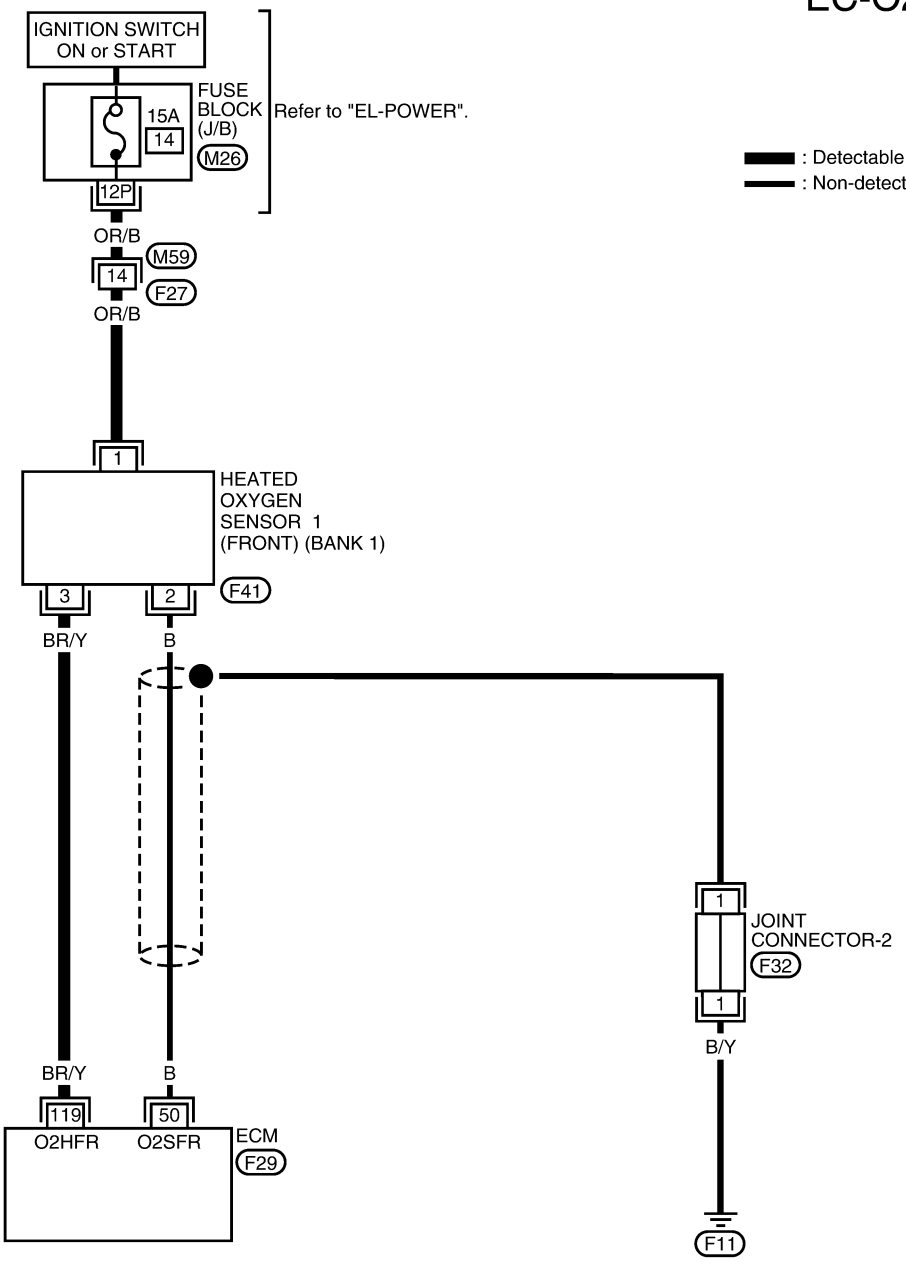

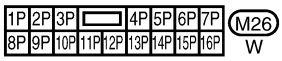

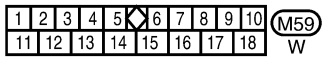

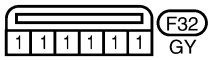

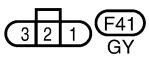

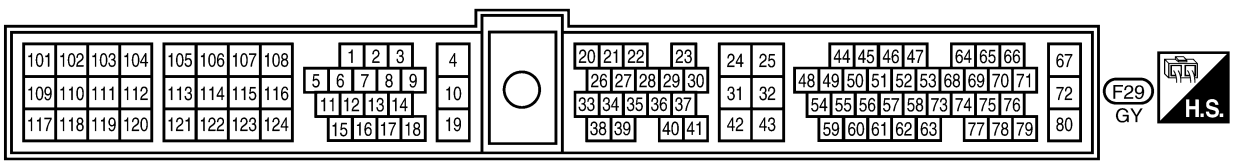

WEC790

Wiring Diagram (Cont'd)

LEFT BANK

NEEC1207S02

EC-O2H1B2-01

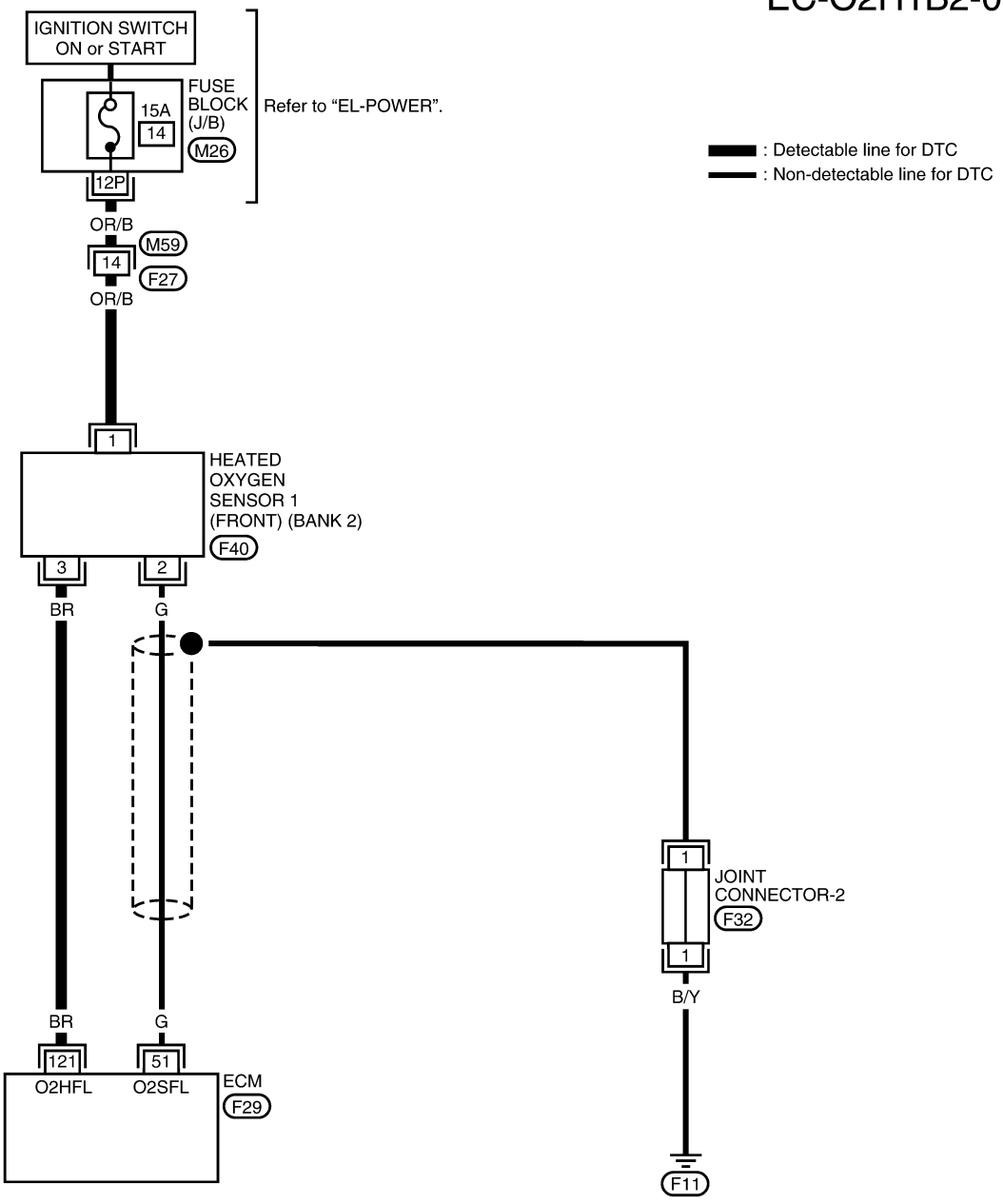

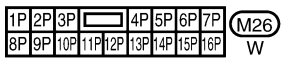

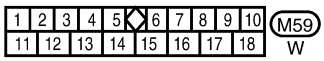

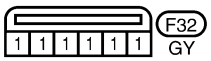

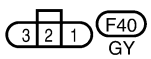

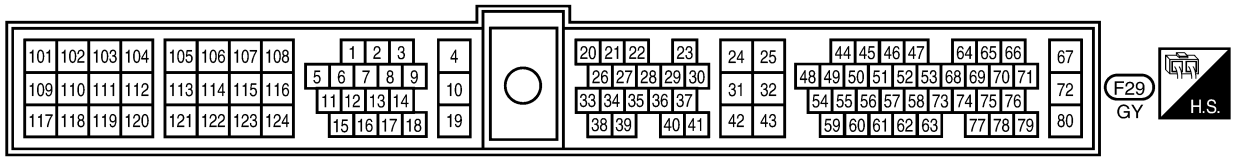

WEC791

Diagnostic Procedure

NEEC1208

1	CHECK HO2S1 (FRONT) POWER SUPPLY CIRCUIT

1. Turn ignition switch OFF.
2. Check heated oxygen sensor 1 (front) harness protector.

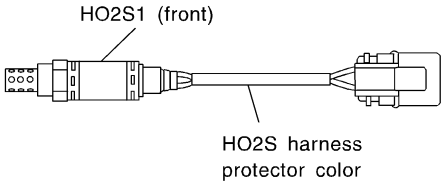

HO2S1 (front) (bank 1): Black
HO2S1 (front) (bank 2): Blue

SEF505Y

3. Disconnect corresponding heated oxygen sensor 1 (front) harness connector.

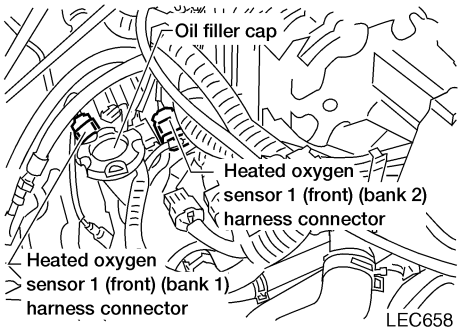

LEC658

4. Turn ignition switch ON.
5. Check voltage between HO2S1 terminal 1 and ground with CONSULT-II or tester.

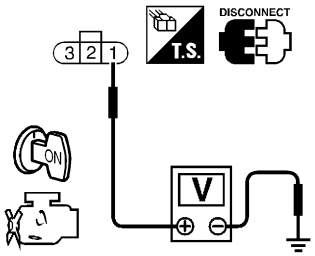

SEF633W

Voltage: Battery voltage

OK or NG

OK	▶	GO TO 3.
NG	▶	GO TO 2.

2	DETECT MALFUNCTIONING PART

Check the following.
- Harness connectors M59, F27
- Fuse block (J/B) connector M26
- 10A fuse
- Harness for open or short between heated oxygen sensor 1 (front) and fuse

	▶	Repair harness or connectors.

Diagnostic Procedure (Cont'd)

3	CHECK HO2S1 HEATER (FRONT) OUTPUT CIRCUIT FOR OPEN AND SHORT

1. Turn ignition switch OFF.
2. Disconnect ECM harness connector.
3. Check harness continuity between ECM terminal and HO2S1 (front) terminal as follows. Refer to Wiring Diagram.

DTC	Terminals		Bank
	ECM	Sensor	
P0135	119	3	Bank 1 (Right)
P0155	121	3	Bank 2 (Left)

SEF821Z

Continuity should exist.

4. Also check harness for short to ground and short to power.

OK or NG

OK	▶	GO TO 4.
NG	▶	Repair open circuit or short to ground or short to power in harness or connectors.

4	CHECK HEATED OXYGEN SENSOR 1 HEATER (FRONT)

Check resistance between HO2S1 (front) terminals 3 and 1.

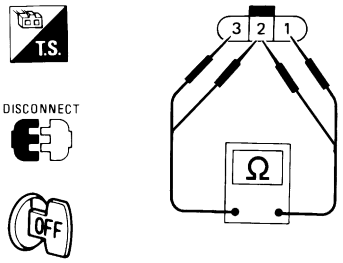

AEC158A

Resistance: 2.3 - 4.3Ω at 25°C (77°F)

Check continuity between HO2S1 (front) terminals 2 and 1, 3 and 2.

Continuity should not exist.

CAUTION:

- **Discard any heated oxygen sensor which has been dropped from a height of more than 0.5 m (19.7 in) onto a hard surface such as a concrete floor; use a new one.**
- **Before installing new oxygen sensor, clean exhaust system threads using Oxygen Sensor Thread Cleaner tool J-43897-18 or J-43897-12 and approved anti-seize lubricant.**

OK or NG

OK	▶	GO TO 6.
NG	▶	GO TO 5.

5	REPLACE HEATED OXYGEN SENSOR 1 (FRONT)

1. Turn ignition switch "OFF".
2. Check heated oxygen sensor 1 (front) harness protector color.

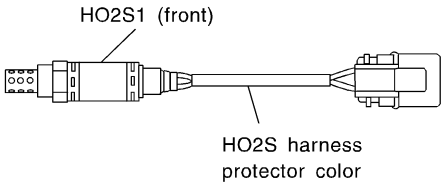

HO2S1 (front) (bank 1): Black
HO2S1 (front) (bank 2): Blue

SEF505Y

CAUTION:
Before installing new oxygen sensor, clean exhaust system threads using Oxygen Sensor Thread Cleaner tool J-43897-18 or J-43897-12 and approved anti-seize lubricant.

▶	Replace malfunctioning heated oxygen sensor 1 (front).

6	CHECK INTERMITTENT INCIDENT
Refer to "TROUBLE DIAGNOSIS FOR INTERMITTENT INCIDENT", EC-1353.	
▶	**INSPECTION END**

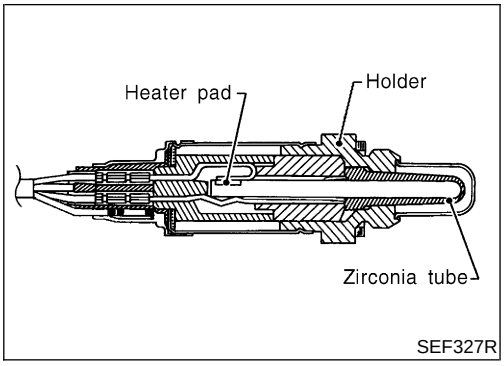

Component Description

NEEC1209

The heated oxygen sensor 2 (rear), after three way catalyst, monitors the oxygen level in the exhaust gas on each bank.
Even if switching characteristics of the heated oxygen sensor 1 (front) are shifted, the air fuel ratio is controlled to stoichiometric, by the signal from the heated oxygen sensor 2 (rear).
This sensor is made of ceramic zirconia. The zirconia generates voltage from approximately 1V in richer conditions to 0V in leaner conditions.
Under normal conditions the heated oxygen sensor 2 (rear) is not used for engine control operation.

CONSULT-II Reference Value in Data Monitor Mode

NEEC1210

Specification data are reference values.

MONITOR ITEM	CONDITION		SPECIFICATION
HO2S2 (B1) HO2S2 (B2)	● Engine: After warming up	Revving engine from idle up to 2,000 rpm	0 - 0.3V ⟷ Approx. 0.6 - 1.0V
HO2S2 MNTR (B1) HO2S2 MNTR (B2)			LEAN ⟷ RICH

ECM Terminals and Reference Value

NEEC1211

Specification data are reference values and are measured between each terminal and ground.

CAUTION:

Do not use ECM ground terminals when measuring input/output voltage. Doing so may result in damage to the ECM's transistor. Use a ground other than the ECM terminals, such as the ground.

TERMINAL NO.	WIRE COLOR	ITEM	CONDITION	DATA (DC Voltage)
56	OR	Heated oxygen sensor 2 (rear) (bank 1)	**[Engine is running]** ● **Warm-up condition** ● Revving engine from idle up to 2,000 rpm	0 - Approximately 1.0V
57	Y	Heated oxygen sensor 2 (rear) (bank 2)		

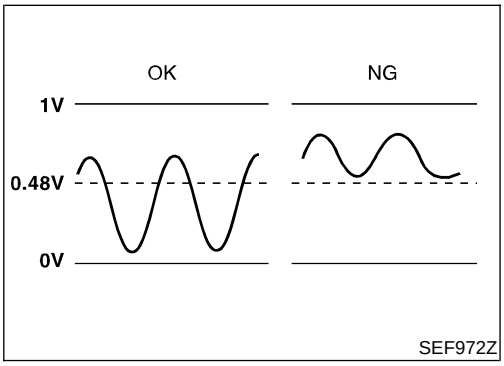

On Board Diagnosis Logic

NEEC1212

The heated oxygen sensor 2 (rear) has a much longer switching time between rich and lean than the heated oxygen sensor 1 (front). The oxygen storage capacity before the three way catalyst causes the longer switching time. To judge the malfunctions of heated oxygen sensor 2 (rear), ECM monitors whether the minimum voltage of sensor is sufficiently low during the various driving condition such as fuel-cut.
Malfunction is detected when the minimum voltage from the sensor is not reached to the specified voltage.

POSSIBLE CAUSE

NEEC1212S01

- Harness or connectors
  (The sensor circuit is open or shorted.)
- Heated oxygen sensor 2 (rear)
- Fuel pressure
- Injectors

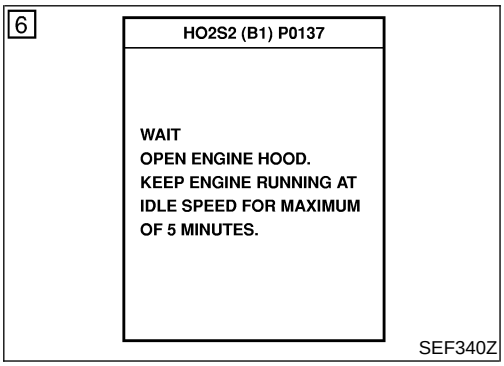

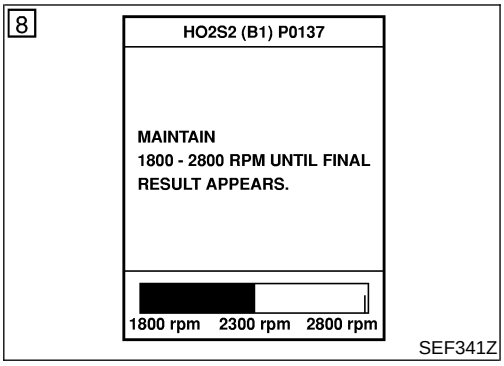

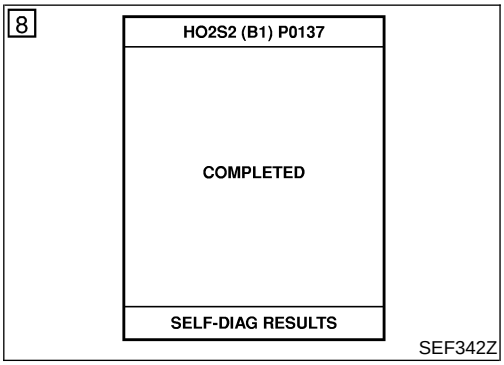

DTC Confirmation Procedure

NEEC1213

NOTE:
If "DIAGNOSTIC TROUBLE CODE CONFIRMATION PROCEDURE" has been previously conducted, always turn ignition switch OFF and wait at least 5 seconds before conducting the next test.

TESTING CONDITION:
Open engine hood before conducting following procedure
With CONSULT-II

1) Start engine and warm it up to normal operating temperature.
2) Turn ignition switch OFF and wait at least 5 seconds.
3) Turn ignition switch ON.
4) Select "DATA MONITOR" mode with CONSULT-II.
5) Make sure that "COOLANT TEMP/S" is more than 70°C (158°F).
6) Select "HO2S2 (B1)/(B2) P0137/P0157" of "HO2S2" in DTC WORK SUPPORT" mode with CONSULT.
7) Start engine and follow the instructions of CONSULT-II.
8) Make sure that "OK" is displayed after touching "SELF_DIAG RESULTS".
   If NG is displayed, refer to "DIAGNOSTIC PROCEDURE", EC-1463.
   If "CAN NOT BE DIAGNOSED" is displayed, perform the following.

a) Stop engine and cool down "COOLANT TEMP/SE" to less than 70°C (158°F).
b) Turn ignition switch ON.
c) Select "DATA MONITOR" mode with CONSULT-II.
d) Start engine.
e) Perform from step 6) again when the "COOLANT TEMP/S" reaches to 70°C (158°F)

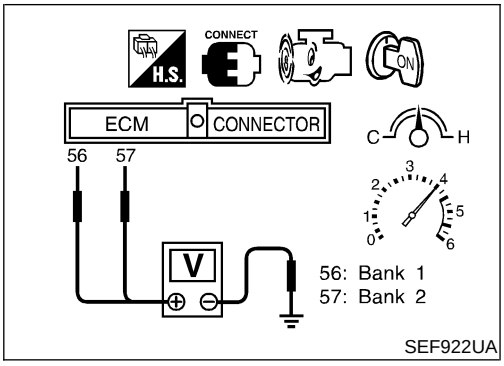

Overall Function Check

=NEEC1214

Use this procedure to check the overall function of the heated oxygen sensor 2 (rear) circuit. During this check, a 1st trip DTC might not be confirmed.

CAUTION:

Always drive vehicle at a safe speed.

Without CONSULT-II

1) Start engine and drive vehicle at a speed of more than 70 km/h (43 MPH) for 2 consecutive minutes.
2) Stop vehicle with engine running.
3) Set voltmeter probes between ECM terminal 56 (bank 1 signal) or 57 (bank 2 signal) and engine ground.
4) Check the voltage when racing up to 4,000 rpm under no load at least 10 times.
   (depress and release accelerator pedal as soon as possible)
   The voltage should be below 0.48V at least once during this procedure.
   If the voltage can be confirmed in step 4, step 5 is not necessary.
5) Keep vehicle at idling for 10 minutes, then check the voltage. Or check the voltage when coasting from 80 km/h (50 MPH) in 3rd gear position (M/T), “D” position with “O/D” OFF (A/T).
   The voltage should be below 0.48V at least once during this procedure.
6) If NG, go to “Diagnostic Procedure”, EC-1463.

Wiring Diagram

NEEC1215

RIGHT BANK

NEEC1215S01

EC-O2S2B1-01

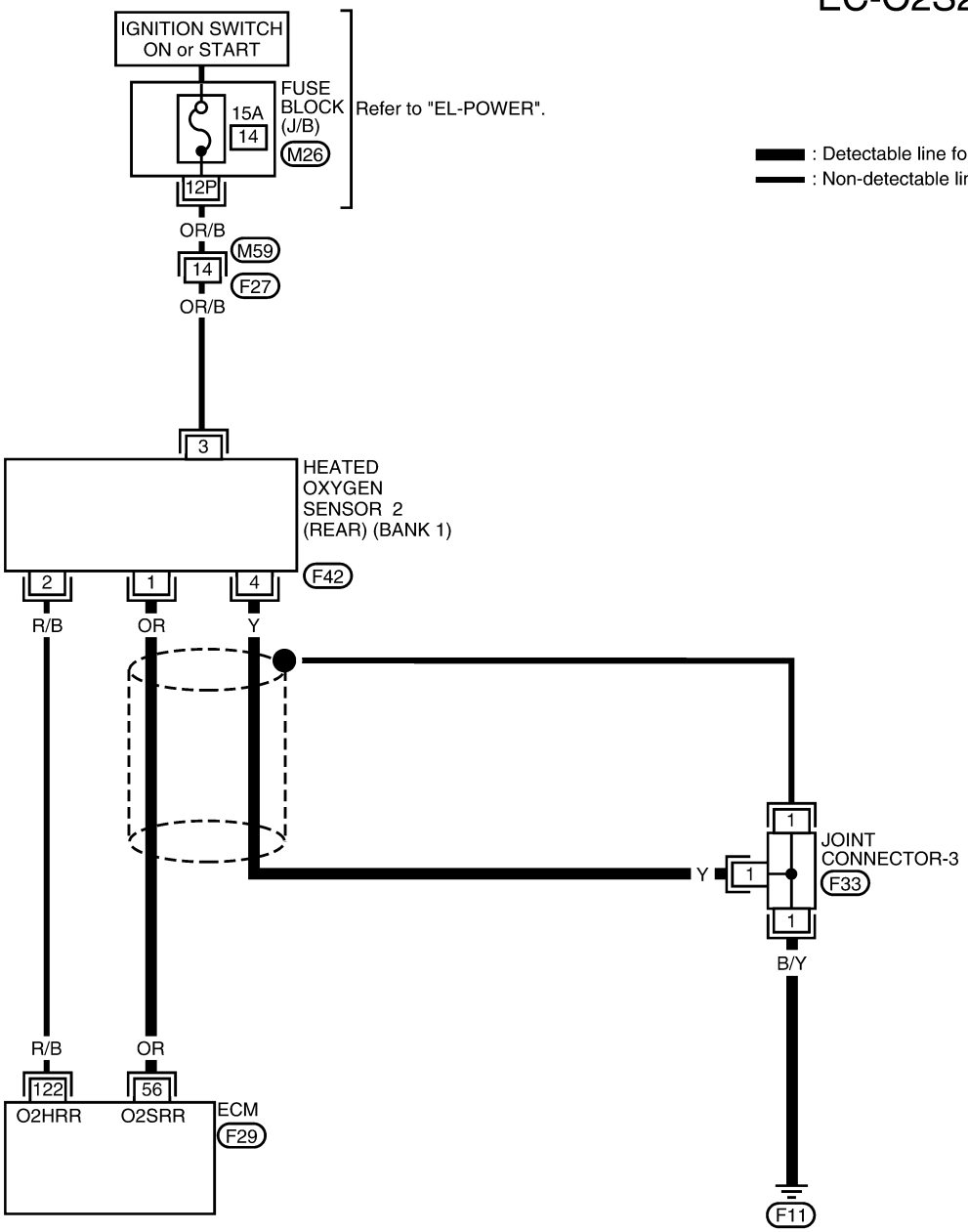

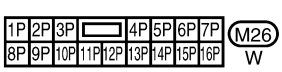

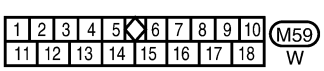

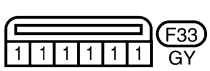

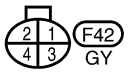

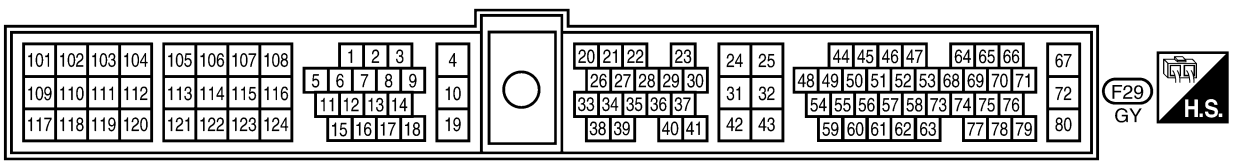

WEC792

Wiring Diagram (Cont'd)

LEFT BANK

NEEC1215S02

EC-O2S2B2-01

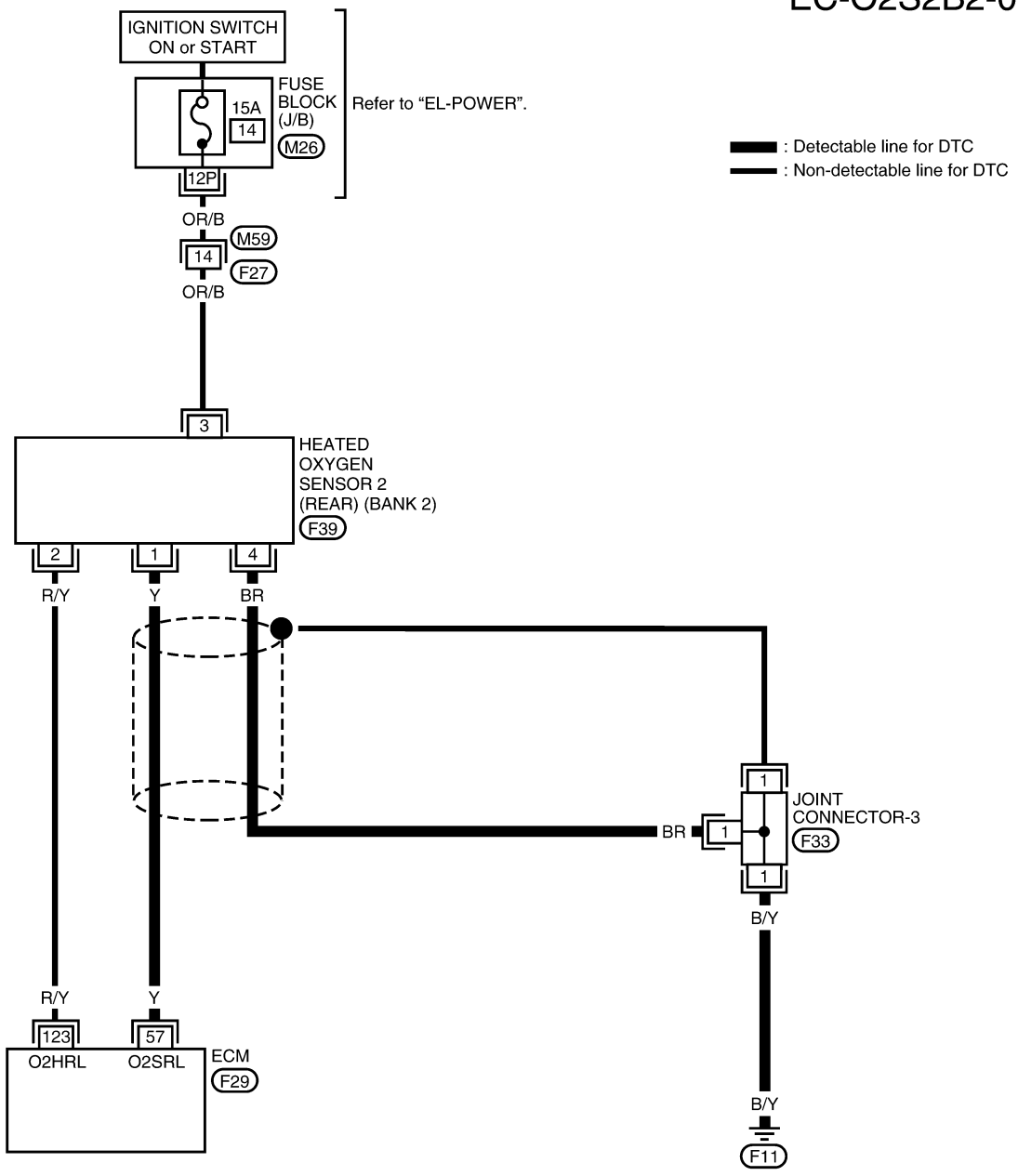

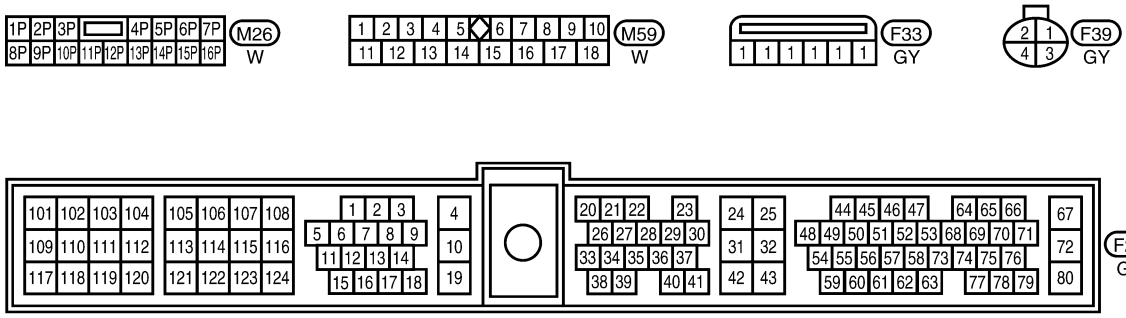

WEC793

Diagnostic Procedure

NEEC1216

1	RETIGHTEN GROUND SCREWS

1. Turn ignition switch OFF.
2. Loosen and retighten engine ground screws.

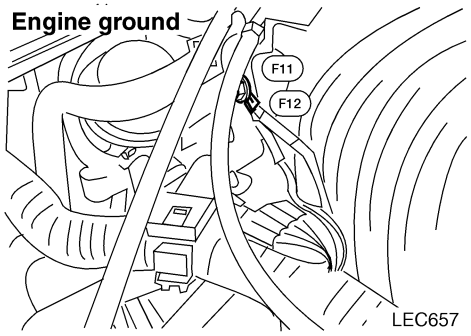

LEC657

▶	GO TO 2.

2	CLEAR THE SELF-LEARNING DATA

With CONSULT-II

1. Start engine and warm it up to normal operating temperature.
2. Select “SELF-LEARNING CONT” in “WORK SUPPORT” mode with CONSULT-II.
3. Clear the self-learning control coefficient by touching “CLEAR”.

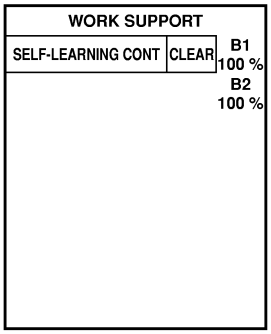

SEF968Y

4. Run engine for at least 10 minutes at idle speed.
   Is the 1st trip DTC P0172 or P0175 detected?
   Is it difficult to start engine?

Without CONSULT-II

1. Start engine and warm it up to normal operating temperature.
2. Turn ignition switch OFF.
3. Disconnect mass air flow sensor harness connector, and restart and run engine for at least 5 seconds at idle speed.
4. Stop engine and reconnect mass air flow sensor harness connector.
5. Make sure 1st trip DTC P0100 is displayed.
6. Erase the 1st trip DTC memory. Refer to “HOW TO ERASE EMISSION-RELATED DIAGNOSTIC INFORMATION”, EC-1287.
7. Make sure DTC P0000 is displayed.
8. Run engine for at least 10 minutes at idle speed.
   Is the 1st trip DTC P0172 or P0175 detected?
   Is it difficult to start engine?

Yes or No

Yes	▶	Perform trouble diagnosis for DTC P0172, P0175. Refer to EC-1516.
No	▶	GO TO 3.

Diagnostic Procedure (Cont'd)

3 **CHECK HO2S2 (REAR) INPUT SIGNAL CIRCUIT FOR OPEN AND SHORT**

1. Turn ignition switch "OFF".
2. Check heated oxygen sensor 2 (rear) harness protector color.

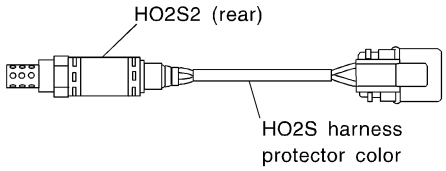

HO2S2 (rear) (bank 1): Gray
HO2S2 (rear) (bank 2): Red Brown

SEC301C

3. Disconnect corresponding heated oxygen sensor 2 (rear) harness connector.

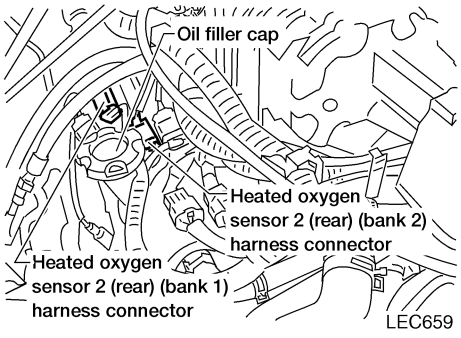

LEC659

4. Disconnect ECM harness connector.
5. Check harness continuity between ECM terminal and HO2S2 (rear) terminal as follows. Refer to Wiring Diagram.

DTC	Terminals		Bank
	ECM	Sensor	
P0137	56	1	Bank 1 (Right)
P0157	57	1	Bank 2 (Left)

MTBL0589

Continuity should exist.

6. Check harness continuity between ECM terminal or HO2S2 (rear) terminal and ground as follows. Refer to Wiring Diagram.

DTC	Terminals		Bank
	ECM or sensor	Ground	
P0137	56 or 1	Ground	Bank 1 (Right)
P0157	57 or 1	Ground	Bank 2 (Left)

MTBL0590

Continuity should not exist.

7. Also check harness for short to power.

OK or NG

OK	▶	GO TO 4.
NG	▶	Repair open circuit or short to ground or short to power in harness or connectors.

4	CHECK HO2S GROUND CIRCUIT FOR OPEN AND SHORT

1. Check harness continuity between HO2S2 (rear) terminal 4 and engine ground.
   Refer to Wiring Diagram.
   Continuity should exist.
2. Also check harness for short to power.

OK or NG

OK (With CONSULT-II)	▶	GO TO 6.
OK (Without CONSULT-II)	▶	GO TO 7.
NG	▶	GO TO 5.

5	DETECT MALFUNCTIONING PART

Check the following.
- Joint connector-3
- Harness for open between heated oxygen sensor 2 (rear) and engine ground.

	▶	Repair open circuit or short to power in harness or connectors.

6	CHECK HEATED OXYGEN SENSOR 2 (REAR)

With CONSULT-II
1. Start engine and drive vehicle at a speed of more than 70 km/h (43 MPH) for 2 consecutive minutes.
2. Stop vehicle with engine running.
3. Select "FUEL INJECTION" in "ACTIVE TEST" mode, and select "HO2S2 (B1)/(B2)" as the monitor item with CONSULT-II.
4. Check "HO2S2 (B1)/(B2)" at idle speed when adjusting "FUEL INJECTION" to ±25%.

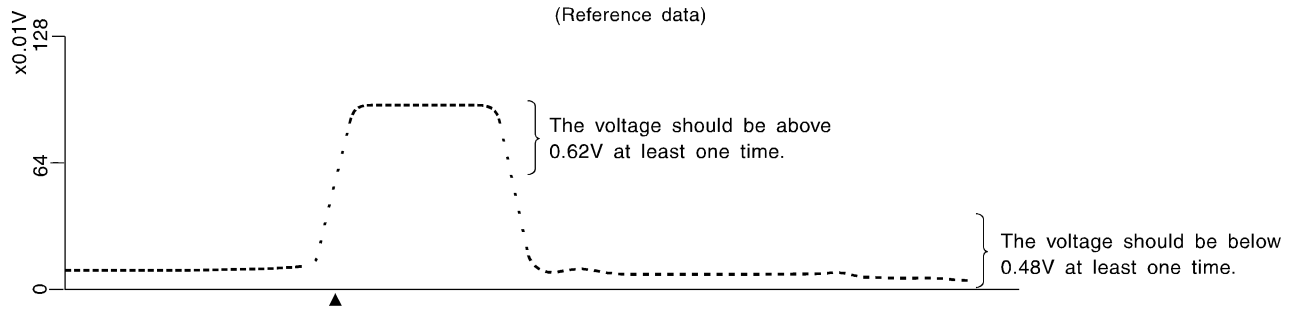

SEF989RD

"HO2S2 (B1)/(B2)" should be above 0.62V at least once when the "FUEL INJECTION" is +25%.
"HO2S2 (B1)/(B2)" should be below 0.48V at least once when the "FUEL INJECTION" is −25%.
CAUTION:
Discard any heated oxygen sensor which has been dropped from a height of more than 0.5 m (19.7 in) onto a hard surface such as a concrete floor; use a new one.

OK or NG

OK	▶	GO TO 9.
NG	▶	GO TO 8.

Diagnostic Procedure (Cont'd)

7	CHECK HEATED OXYGEN SENSOR 2 (REAR)

Without CONSULT-II

1. Start engine and drive vehicle at a speed of more than 70 km/h (43 MPH) for 2 consecutive minutes.
2. Stop vehicle with engine running.
3. Set voltmeter probes between ECM terminal 56 (bank 1 signal) or 57 (bank 2 signal) and engine ground.
4. Check the voltage when racing up to 4,000 rpm under no load at least 10 times.
   (depress and release accelerator pedal as soon as possible)

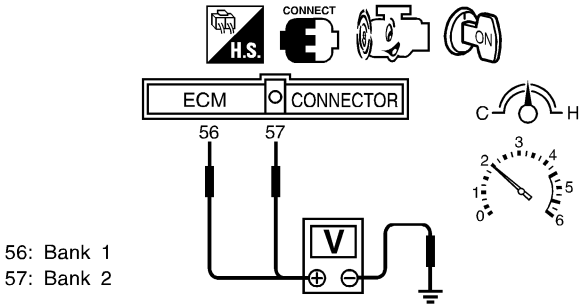

56: Bank 1
57: Bank 2

The voltage should be above 0.62V at least once during this procedure.

SEF797ZB

5. Keep vehicle at idling for 10 minutes, then check the voltage. Or check the voltage when coasting from 80 km/h (50 MPH) in 3rd gear position (M/T), "D" position with "O/D" OFF (A/T).
   The voltage should be below 0.48V at least once during this procedure.

CAUTION:
Discard any heated oxygen sensor which has been dropped from a height of more than 0.5 m (19.7 in) onto a hard surface such as a concrete floor; use a new one.

OK or NG

OK	▶	GO TO 9.
NG	▶	GO TO 8.

8	REPLACE HEATED OXYGEN SENSOR 2 (REAR)

1. Stop vehicle and turn ignitioin switch OFF.
2. Check heated oxygen sensor 2 (rear) harness protector color.

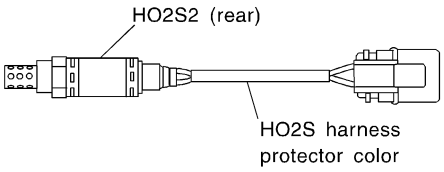

HO2S2 (rear) (bank 1): Gray
HO2S2 (rear) (bank 2): Red Brown

SEC301C

CAUTION:
Before installing new oxygen sensor, clean exhaust system threads using Oxygen Sensor Thread Cleaner tool J-43897-18 or J-43897-12 and approved anti-seize lubricant.

	▶	Replace malfunctioning heated oxygen sensor 2 (rear).

9	CHECK HO2S2 (REAR) SHIELD CIRCUIT FOR OPEN AND SHORT	
1. Turn ignition switch OFF. 2. Disconnect joint connector-3. 3. Check the following. ● Continuity between joint connector terminal 1 and ground ● Joint connector (Refer to ***EL-238***, "HARNESS LAYOUT".) **Continuity should exist.** 4. Also check harness for short to power. 5. Then reconnect joint connector-3.		
OK or NG		
OK	▶	GO TO 10.
NG	▶	Repair open circuit or short to power in harness or connectors.

10	CHECK INTERMITTENT INCIDENT
Refer to "TROUBLE DIAGNOSIS FOR INTERMITTENT INCIDENT", EC-1353.	
▶	**INSPECTION END**

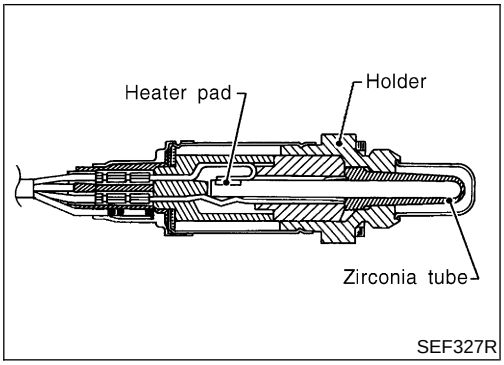

Component Description

NEEC1217

The heated oxygen sensor 2 (rear), after three way catalyst, monitors the oxygen level in the exhaust gas on each bank.
Even if switching characteristics of the heated oxygen sensor 1 (front) are shifted, the air fuel ratio is controlled to stoichiometric, by the signal from the heated oxygen sensor 2 (rear).
This sensor is made of ceramic zirconia. The zirconia generates voltage from approximately 1V in richer conditions to 0V in leaner conditions.
Under normal conditions the heated oxygen sensor 2 (rear) is not used for engine control operation.

CONSULT-II Reference Value in Data Monitor Mode

NEEC1218

Specification data are reference values.

MONITOR ITEM	CONDITION		SPECIFICATION
HO2S2 (B1) HO2S2 (B2)	● Engine: After warming up	Revving engine from idle up to 2,000 rpm	0 - 0.3V ⟷ Approx. 0.6 - 1.0V
HO2S2 MNTR (B1) HO2S2 MNTR (B2)			LEAN ⟷ RICH

ECM Terminals and Reference Value

NEEC1219

Specification data are reference values and are measured between each terminal and ground.

CAUTION:

Do not use ECM ground terminals when measuring input/output voltage. Doing so may result in damage to the ECM's transistor. Use a ground other than the ECM terminals, such as the ground.

TERMINAL NO.	WIRE COLOR	ITEM	CONDITION	DATA (DC Voltage)
56	OR	Heated oxygen sensor 2 (rear) (bank 1)	**[Engine is running]** ● **Warm-up condition** ● Revving engine from idle up to 2,000 rpm	0 - Approximately 1.0V
57	Y	Heated oxygen sensor 2 (rear) (bank 2)		

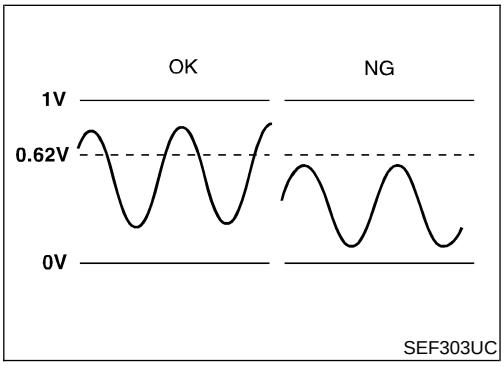

On Board Diagnosis Logic

NEEC1220

The heated oxygen sensor 2 (rear) has a much longer switching time between rich and lean than the heated oxygen sensor 1 (front). The oxygen storage capacity before the three way catalyst causes the longer switching time. To judge the malfunctions of heated oxygen sensor 2 (rear), ECM monitors whether the maximum voltage of the sensor is sufficiently high during the various driving condition such as fuel-cut.
Malfunction is detected when the maximum voltage from the sensor is not reached to the specified voltage.

POSSIBLE CAUSE

NEEC1220S01

- Harness or connectors
  (The sensor circuit is open or shorted.)
- Heated oxygen sensor 2 (rear)
- Fuel pressure
- Injectors
- Intake air leaks

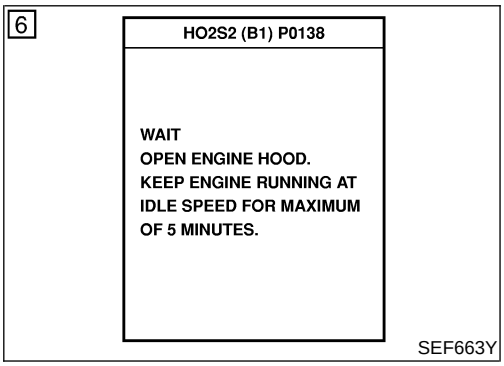

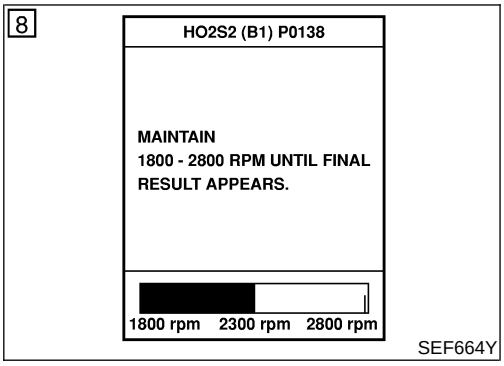

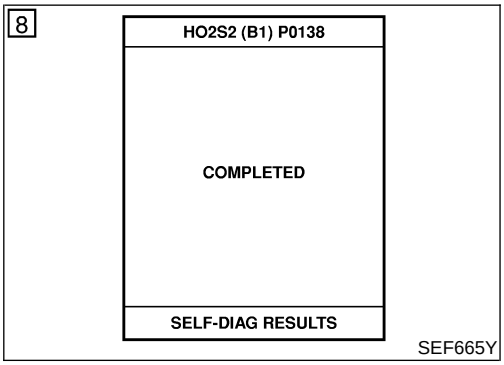

DTC Confirmation Procedure

NEEC1221

NOTE:
If "DIAGNOSTIC TROUBLE CODE CONFIRMATION PROCEDURE" has been previously conducted, always turn ignition switch OFF and wait at least 5 seconds before conducting the next test.

TESTING CONDITION:
Open engine hood before conducting following procedure
With CONSULT-II

1) Start engine and warm it up to normal operating temperature.
2) Turn ignition switch OFF and wait at least 5 seconds.
3) Turn ignition switch ON.
4) Select "DATA MONITOR" mode with CONSULT-II.
5) Make sure that "COOLANT TEMP/S" is more than 70°C (158°F).
6) Select "HO2S2 (B1)/(B2), P0138/P0158" of "HO2S2" in DTC WORK SUPPORT" mode with CONSULT-II.
7) Start engine and follow the instructions of CONSULT-II.
8) Make sure that "OK" is displayed after touching "SELF-DIAG RESULTS".
   If NG is displayed, refer to "DIAGNOSTIC PROCEDURE", EC-1473.
   If "CAN NOT BE DIAGNOSED" is displayed, perform the following.

a) Stop engine and cool down "COOLANT TEMP/SE" to less than 70°C (158°F).
b) Turn ignition switch ON.
c) Select "DATA MONITOR" mode with CONSULT-II.
d) Start engine.
e) Perform from step 6) again when the "COOLANT TEMP/S" reaches to 70°C (158°F)

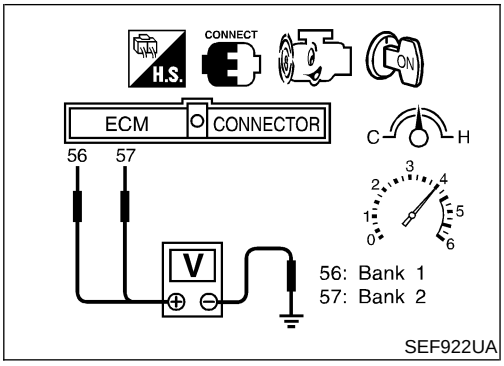

Overall Function Check

=NEEC1222

Use this procedure to check the overall function of the heated oxygen sensor 2 (rear) circuit. During this check, a 1st trip DTC might not be confirmed.

CAUTION:

Always drive vehicle at a safe speed.

Without CONSULT-II

1) Start engine and drive vehicle at a speed of more than 70 km/h (43 MPH) for 2 consecutive minutes.
2) Stop vehicle with engine running.
3) Set voltmeter probes between ECM terminal 56 (bank 1 signal) or 57 (bank 2 signal) and engine ground.
4) Check the voltage when racing up to 4,000 rpm under no load at least 10 times.
   (depress and release accelerator pedal as soon as possible)
   The voltage should be above 0.62V at least once during this procedure.
   If the voltage can be confirmed in step 4, step 5 is not necessary.
5) Keep vehicle at idling for 10 minutes, then check the voltage. Or check the voltage when coasting from 80 km/h (50 MPH) in 3rd gear position (M/T), “D” position with “O/D” OFF (A/T).
   The voltage should be above 0.62V at least once during this procedure.
6) If NG, go to “Diagnostic Procedure”, EC-1473.

Wiring Diagram

NEEC1223

RIGHT BANK

NEEC1223S01

EC-O2S2B1-01

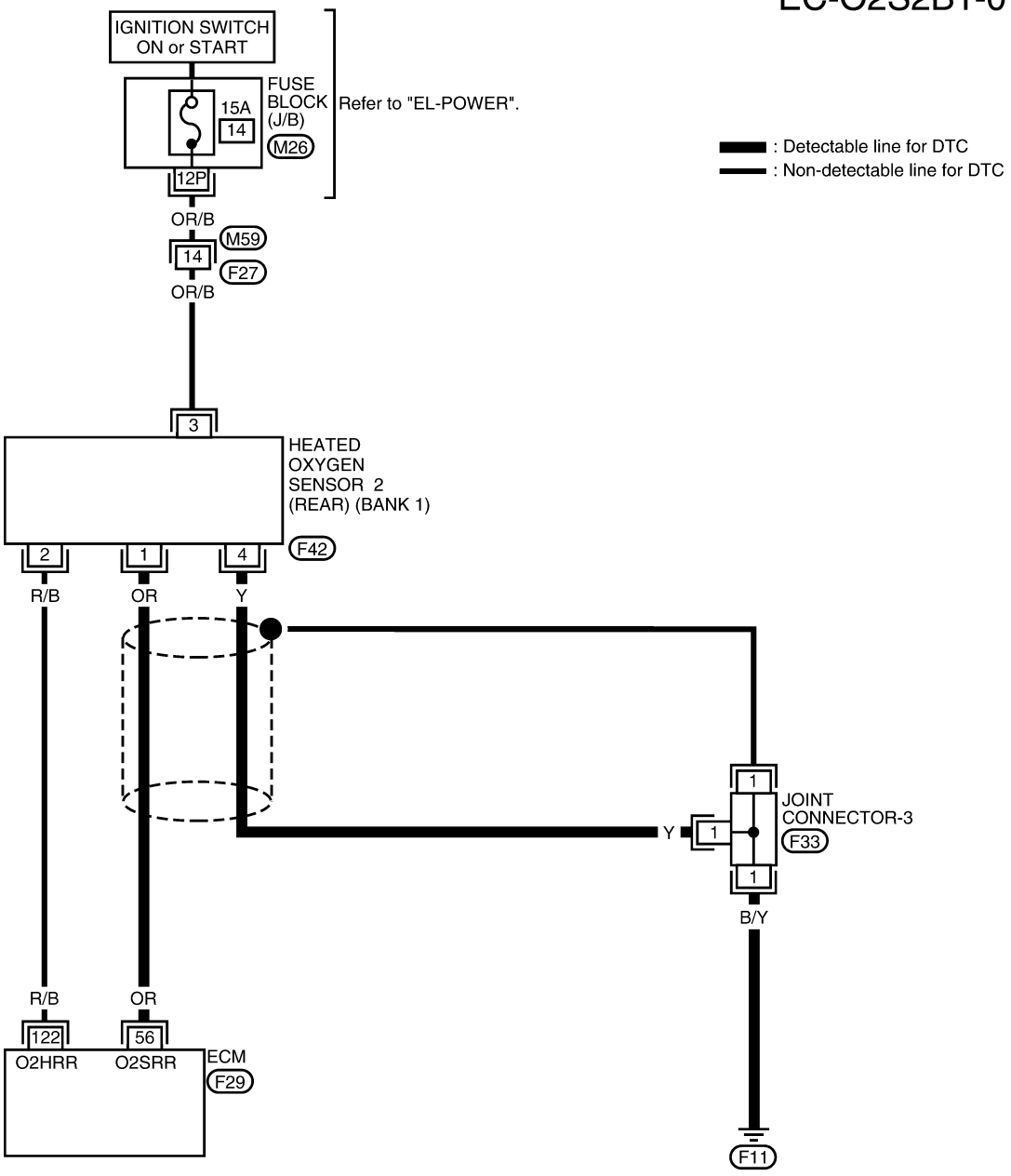

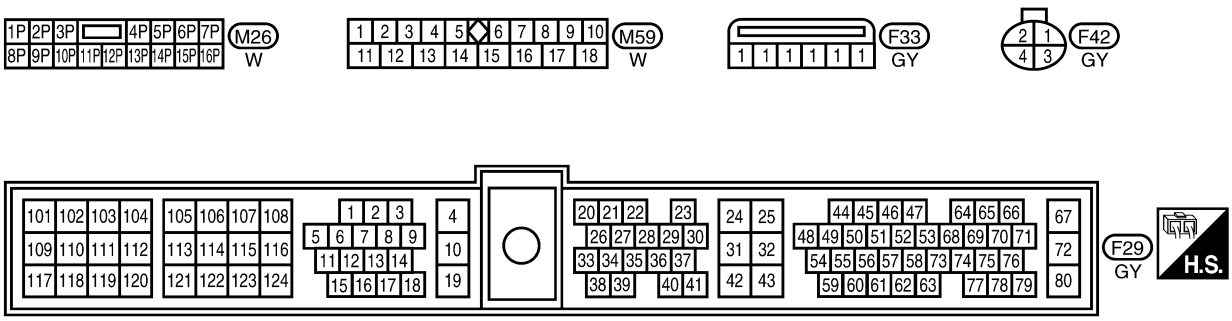

WEC792

Wiring Diagram (Cont'd)

LEFT BANK

NEEC1223S02

EC-O2S2B2-01

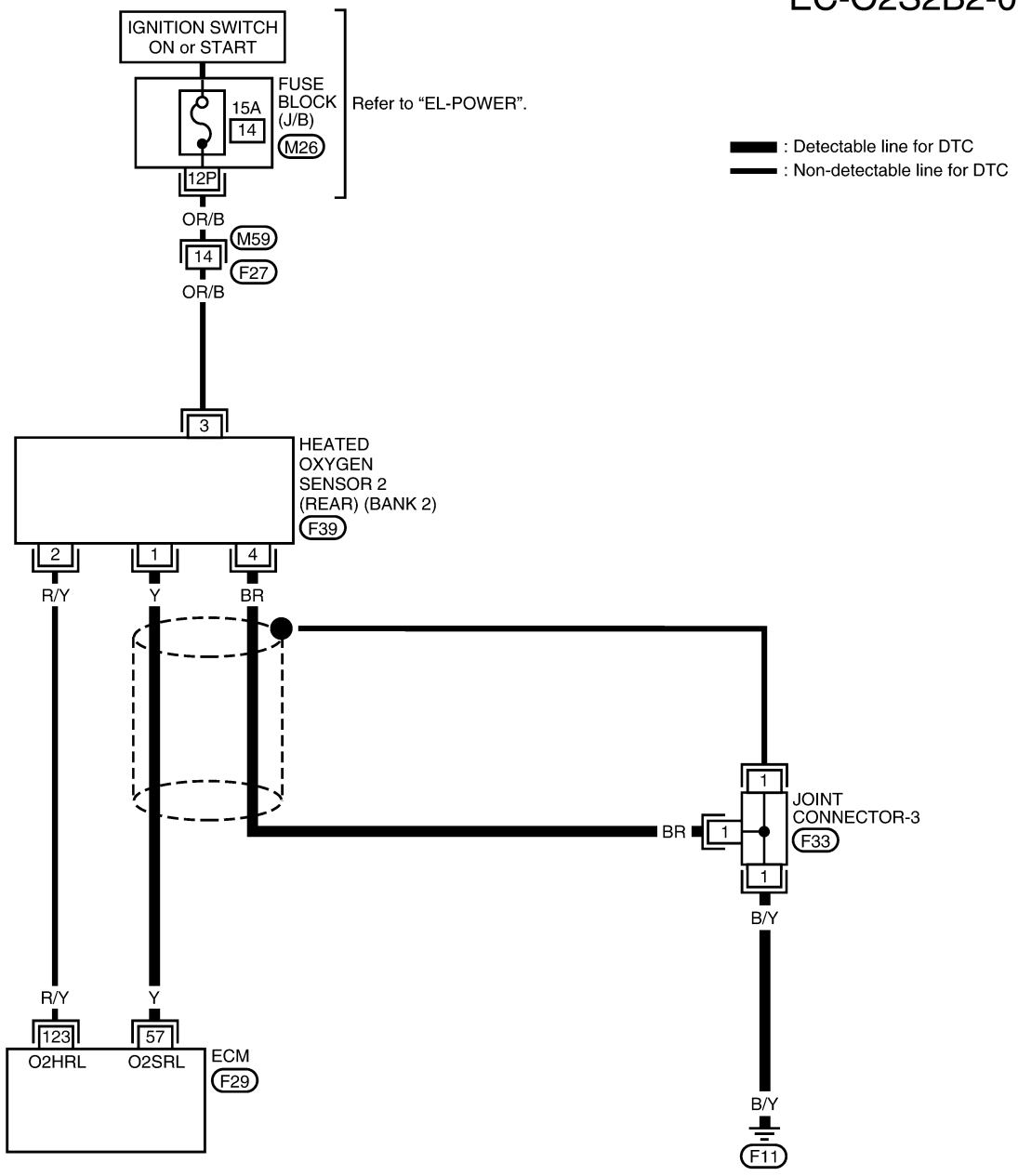

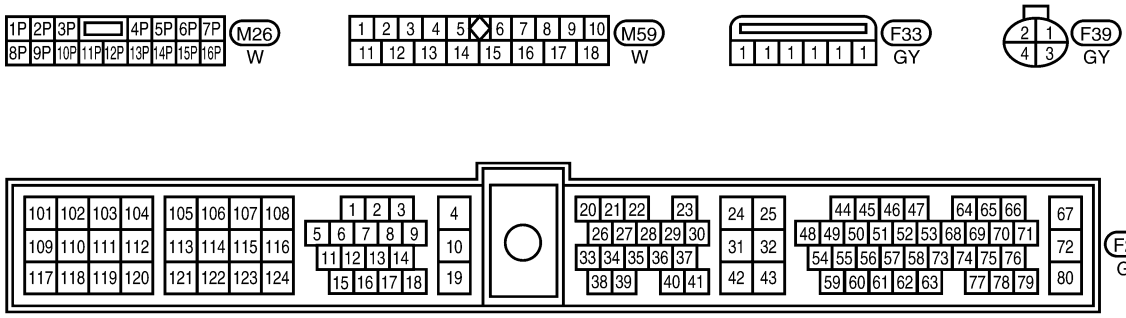

WEC793

Diagnostic Procedure

NEEC1224

1	RETIGHTEN GROUND SCREWS

1. Turn ignition switch OFF.
2. Loosen and retighten engine ground screws.

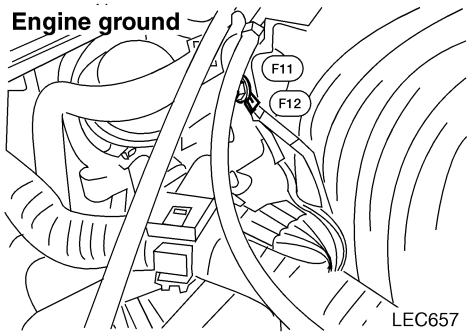

LEC657

▶	GO TO 2.

2	CLEAR THE SELF-LEARNING DATA

With CONSULT-II

1. Start engine and warm it up to normal operating temperature.
2. Select “SELF-LEARNING CONT” in “WORK SUPPORT” mode with CONSULT-II.
3. Clear the self-learning control coefficient by touching “CLEAR”.

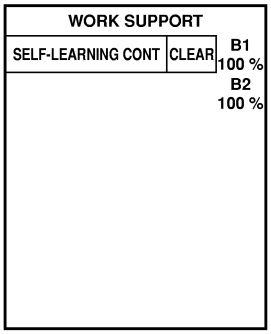

SEF968Y

4. Run engine for at least 10 minutes at idle speed.
   Is the 1st trip DTC P0171 or P0174 detected?
   Is it difficult to start engine?

Without CONSULT-II

1. Start engine and warm it up to normal operating temperature.
2. Turn ignition switch OFF.
3. Disconnect mass air flow sensor harness connector, and restart and run engine for at least 5 seconds at idle speed.
4. Stop engine and reconnect mass air flow sensor harness connector.
5. Make sure 1st trip DTC P0100 is displayed.
6. Erase the 1st trip DTC memory. Refer to “HOW TO ERASE EMISSION-RELATED DIAGNOSTIC INFORMATION”, EC-1287.
7. Make sure DTC P0000 is displayed.
8. Run engine for at least 10 minutes at idle speed.
   Is the 1st trip DTC P0171 or P0174 detected?
   Is it difficult to start engine?

Yes or No

Yes	▶	Perform trouble diagnosis for DTC P0171, P0174. Refer to EC-1507.
No	▶	GO TO 3.

Diagnostic Procedure (Cont'd)

3 **CHECK HO2S2 (REAR) INPUT SIGNAL CIRCUIT FOR OPEN AND SHORT**

1. Turn ignition switch "OFF".
2. Check heated oxygen sensor 2 (rear) harness protector color.

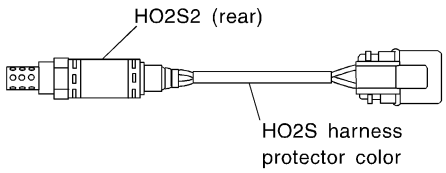

HO2S2 (rear) (bank 1): Gray
HO2S2 (rear) (bank 2): Red Brown

SEC301C

3. Disconnect corresponding heated oxygen sensor 2 (rear) harness connector.
4. Disconnect ECM harness connector.
5. Check harness continuity between ECM terminal and HO2S2 (rear) terminal as follows. Refer to Wiring Diagram.

DTC	Terminals		Bank
	ECM	Sensor	
P0138	56	1	Bank 1 (Right)
P0158	57	1	Bank 2 (Left)

SEF824Z

Continuity should exist.

6. Check harness continuity between ECM terminal or HO2S2 (rear) terminal and ground as follows. Refer to Wiring Diagram.

DTC	Terminals		Bank
	ECM or sensor	Ground	
P0138	56 or 1	Ground	Bank 1 (Right)
P0158	57 or 1	Ground	Bank 2 (Left)

SEF825Z

Continuity should not exist.

7. Also check harness for short to power.

OK or NG

OK	▶	GO TO 4.
NG	▶	Repair open circuit or short to ground or short to power in harness or connectors.

4	CHECK HO2S2 (REAR) GROUND CIRCUIT FOR OPEN AND SHORT

1. Check harness continuity between HO2S2 terminal 4 and engine ground.
   Refer to Wiring Diagram.
   Continuity should exist.
2. Also check harness for short to power.

OK or NG

OK (With CONSULT-II)	▶	GO TO 6.
OK (Without CONSULT-II)	▶	GO TO 7.
NG	▶	GO TO 5.

5	DETECT MALFUNCTIONING PART

Check the following.
- Joint connector-3
- Harness for open between heated oxygen sensor 2 (rear) and engine ground.

	▶	Repair open circuit or short to power in harness or connectors.

6	CHECK HEATED OXYGEN SENSOR 2 (REAR)

With CONSULT-II
1. Start engine and drive vehicle at a speed of more than 70 km/h (43 MPH) for 2 consecutive minutes.
2. Stop vehicle with engine running.
3. Select "FUEL INJECTION" in "ACTIVE TEST" mode, and select "HO2S2 (B1)/(B2)" as the monitor item with CONSULT-II.
4. Check "HO2S2 (B1)/(B2)" at idle speed when adjusting "FUEL INJECTION" to ±25%.

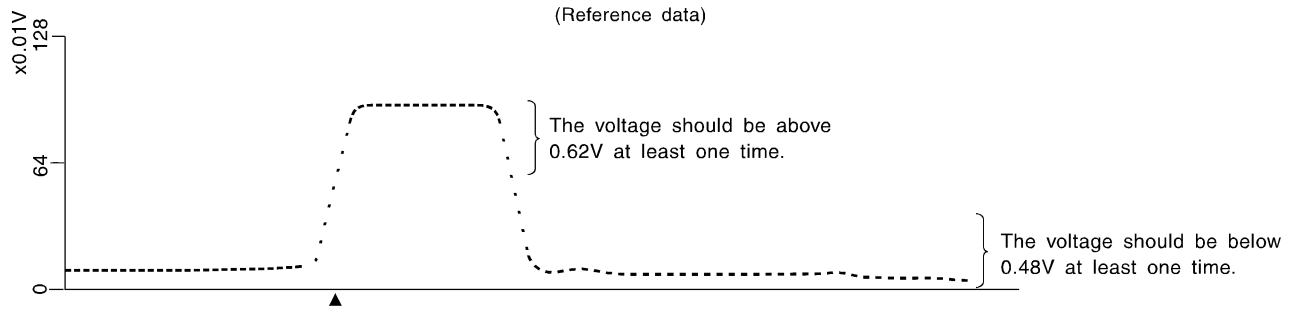

SEF989RD

"HO2S2 (B1)/(B2)" should be above 0.62V at least once when the "FUEL INJECTION" is +25%.
"HO2S2 (B1)/(B2)" should be below 0.48V at least once when the "FUEL INJECTION" is −25%.

CAUTION:
- **Discard any heated oxygen sensor which has been dropped from a height of more than 0.5 m (19.7 in) onto a hard surface such as a concrete floor; use a new one.**
- **Before installing new oxygen sensor, clean exhaust system threads using Oxygen Sensor Thread Cleaner tool J-43897-18 or J-43897-12 and approved anti-seize lubricant.**

OK or NG

OK	▶	GO TO 9.
NG	▶	GO TO 8.

Diagnostic Procedure (Cont'd)

7	CHECK HEATED OXYGEN SENSOR 2 (REAR)

Without CONSULT-II

1. Start engine and drive vehicle at a speed of more than 70 km/h (43 MPH) for 2 consecutive minutes.
2. Stop vehicle with engine running.
3. Set voltmeter probes between ECM terminal 56 (bank 1 signal) or 57 (bank 2 signal) and engine ground.
4. Check the voltage when racing up to 4,000 rpm under no load at least 10 times.
   (depress and release accelerator pedal as soon as possible)

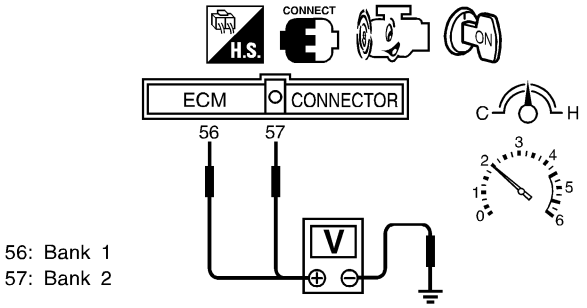

56: Bank 1
57: Bank 2

The voltage should be above 0.62V at least once during this procedure.

SEF797ZB

5. Keep vehicle at idling for 10 minutes, then check the voltage. Or check the voltage when coasting from 80 km/h (50 MPH) in 3rd gear position (M/T), "D" position with "O/D" OFF (A/T).
   The voltage should be below 0.48V at least once during this procedure.

CAUTION:
Discard any heated oxygen sensor which has been dropped from a height of more than 0.5 m (19.7 in) onto a hard surface such as a concrete floor; use a new one.

OK or NG

OK	▶	GO TO 9.
NG	▶	GO TO 8.

8	REPLACE HEATED OXYGEN SENSOR 2 (REAR)

1. Stop vehicle and turn ignitioin switch OFF.
2. Check heated oxygen sensor 2 (rear) harness protector color.

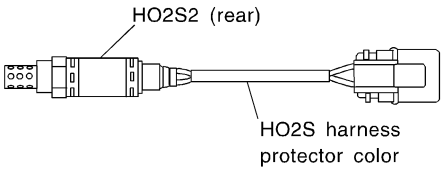

HO2S2 (rear) (bank 1): Gray
HO2S2 (rear) (bank 2): Red Brown

SEC301C

CAUTION:
Before installing new oxygen sensor, clean exhaust system threads using Oxygen Sensor Thread Cleaner tool J-43897-18 or J-43897-12 and approved anti-seize lubricant.

	▶	Replace malfunctioning heated oxygen sensor 2 (rear).

9	CHECK HO2S2 (REAR) SHIELD CIRCUIT FOR OPEN AND SHORT	
1. Turn ignition switch OFF. 2. Disconnect joint connector. 3. Check the following. ● Continuity between joint connector terminal 1 and ground ● Joint connector (Refer to ***EL-238***, "HARNESS LAYOUT".) **Continuity should exist.** 4. Also check harness for short to power. 5. Then reconnect joint connector.		
OK or NG		
OK	▶	GO TO 10.
NG	▶	Repair open circuit or short to power in harness or connectors.

10	CHECK INTERMITTENT INCIDENT
Refer to "TROUBLE DIAGNOSIS FOR INTERMITTENT INCIDENT", EC-1353.	
▶	**INSPECTION END**

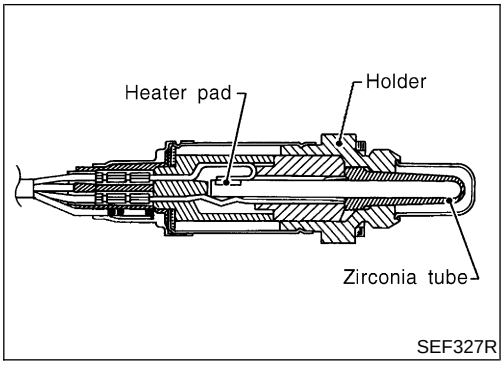

Component Description

NEEC1225

The heated oxygen sensor 2 (rear), after three way catalyst, monitors the oxygen level in the exhaust gas on each bank.
Even if switching characteristics of the heated oxygen sensor 1 (front) are shifted, the air fuel ratio is controlled to stoichiometric, by the signal from the heated oxygen sensor 2 (rear).
This sensor is made of ceramic zirconia. The zirconia generates voltage from approximately 1V in richer conditions to 0V in leaner conditions.
Under normal conditions the heated oxygen sensor 2 (rear) is not used for engine control operation.

CONSULT-II Reference Value in Data Monitor Mode

NEEC1226

Specification data are reference values.

MONITOR ITEM	CONDITION		SPECIFICATION
HO2S2 (B1) HO2S2 (B2)	● Engine: After warming up	Revving engine from idle up to 2,000 rpm	0 - 0.3V ⟷ Approx. 0.6 - 1.0V
HO2S2 MNTR (B1) HO2S2 MNTR (B2)			LEAN ⟷ RICH

ECM Terminals and Reference Value

NEEC1227

Specification data are reference values and are measured between each terminal and ground.

CAUTION:

Do not use ECM ground terminals when measuring input/output voltage. Doing so may result in damage to the ECM's transistor. Use a ground other than the ECM terminals, such as the ground.

TERMINAL NO.	WIRE COLOR	ITEM	CONDITION	DATA (DC Voltage)
56	OR	Heated oxygen sensor 2 (rear) (bank 1)	**[Engine is running]** ● Revving engine from idle up to 2,000 rpm	0 - Approximately 1.0V
57	Y	Heated oxygen sensor 2 (rear) (bank 2)		

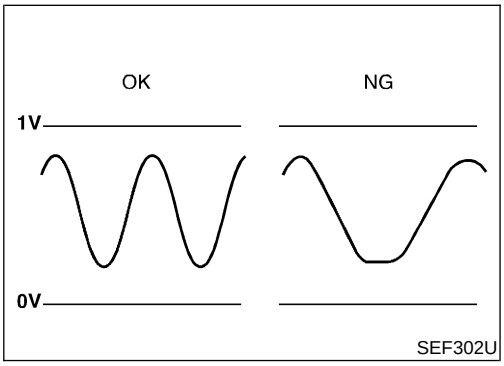

On Board Diagnosis Logic

NEEC1228

The heated oxygen sensor 2 (rear) has a much longer switching time between rich and lean than the heated oxygen sensor 1 (front). The oxygen storage capacity before the three way catalyst causes the longer switching time. To judge the malfunctions of heated oxygen sensor 2 (rear), ECM monitors whether the switching response of the sensor's voltage is faster than specified during the various driving condition such as fuel-cut.
Malfunction is detected when it takes more time for the sensor to respond between rich and lean than the specified time.

POSSIBLE CAUSE

NEEC1228S01

- Harness or connectors
  (The sensor circuit is open or shorted.)
- Heated oxygen sensor 2 (rear)
- Fuel pressure
- Injectors
- Intake air leaks

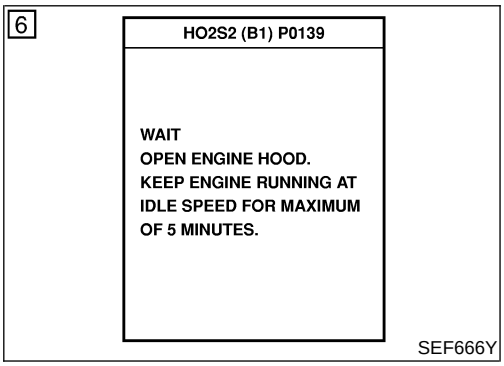

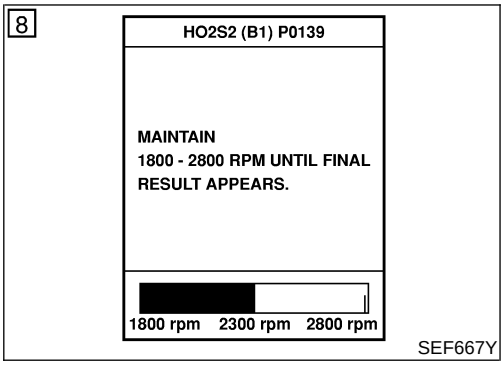

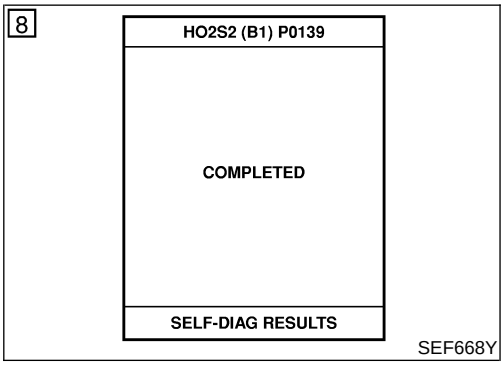

DTC Confirmation Procedure

NEEC1229

NOTE:
If "DIAGNOSTIC TROUBLE CODE CONFIRMATION PROCEDURE" has been previously conducted, always turn ignition switch OFF and wait at least 5 seconds before conducting the next test.

TESTING CONDITION:
Open engine hood before conducting following procedure
With CONSULT-II

1) Start engine and warm it up to normal operating temperature.
2) Turn ignition switch OFF and wait at least 5 seconds.
3) Turn ignition switch ON.
4) Select "DATA MONITOR" mode with CONSULT-II.
5) Make sure that "COOLANT TEMP/S" is more than 70°C (158°F).
6) Select "HO2S2 (B1)/(B2) P0139/P0159" of "HO2S2" in DTC WORK SUPPORT" mode with CONSULT-II.
7) Start engine and follow the instructions of CONSULT-II.
8) Make sure that "OK" is displayed after touching "SELF-DIAG RESULTS".
   If NG is displayed, refer to "DIAGNOSTIC PROCEDURE", EC-1483.
   If "CAN NOT BE DIAGNOSED" is displayed, perform the following.

a) Stop engine and cool down "COOLANT TEMP/SE" to less than 70°C (158°F).
b) Turn ignition switch ON.
c) Select "DATA MONITOR" mode with CONSULT-II.
d) Start engine.
e) Perform from step 6) again when the "COOLANT TEMP/S" reaches to 70°C (158°F)

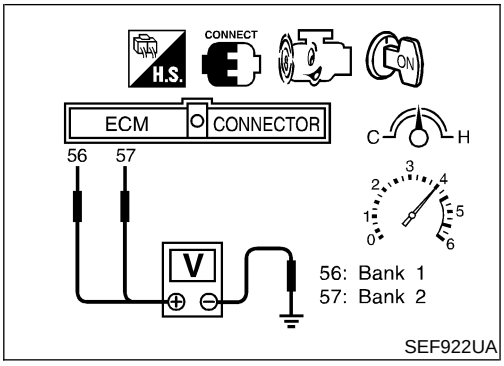

Overall Function Check

=NEEC1230

Use this procedure to check the overall function of the heated oxygen sensor 2 (rear) circuit. During this check, a 1st trip DTC might not be confirmed.

CAUTION:

Always drive vehicle at a safe speed.

Without CONSULT-II

1) Start engine and drive vehicle at a speed of more than 70 km/h (43 MPH) for 2 consecutive minutes.
2) Stop vehicle with engine running.
3) Set voltmeter probes between ECM terminal 56 (bank 1 signal) or 57 (bank 2 signal) and engine ground.
4) Check the voltage when racing up to 4,000 rpm under no load at least 10 times.
   (depress and release accelerator pedal as soon as possible)
   The voltage should change at more than 0.06V for 1 second during this procedure.
   If the voltage can be confirmed in step 4, step 5 is not necessary.
5) Keep vehicle at idling for 10 minutes, then check the voltage. Or check the voltage when coasting from 80 km/h (50 MPH) in 3rd gear position (M/T), “D” position with “O/D” OFF (A/T).
   The voltage should change at more than 0.06V for 1 second during this procedure.
6) If NG, go to “Diagnostic Procedure”, EC-1483.

Wiring Diagram

NEEC1231

RIGHT BANK

NEEC1231S01

EC-O2S2B1-01

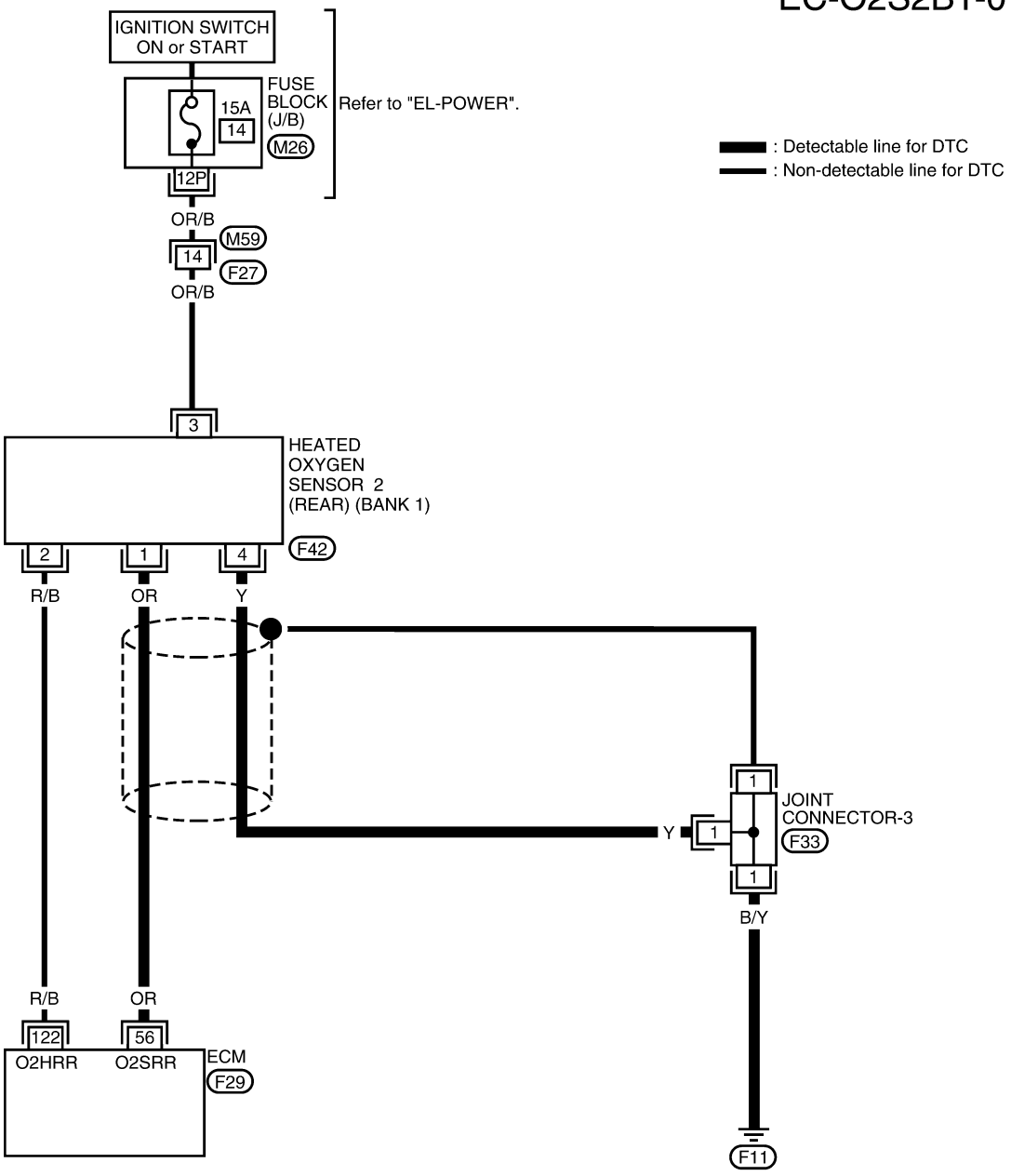

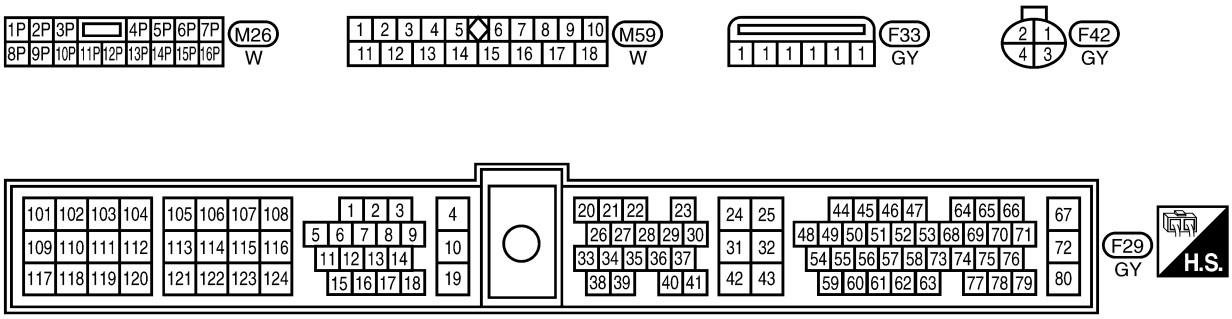

WEC792

Wiring Diagram (Cont'd)

LEFT BANK

NEEC1231S02

EC-O2S2B2-01

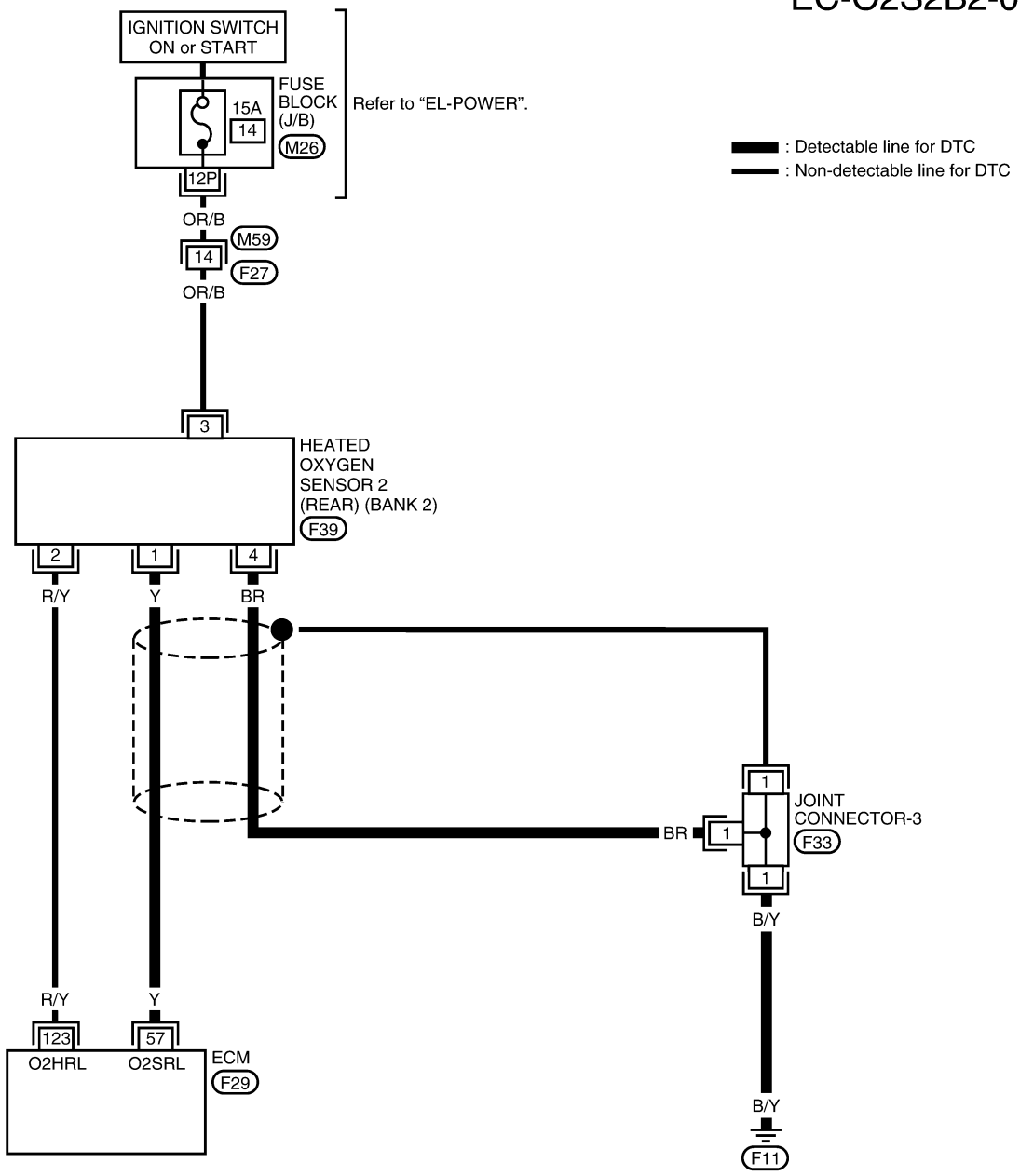

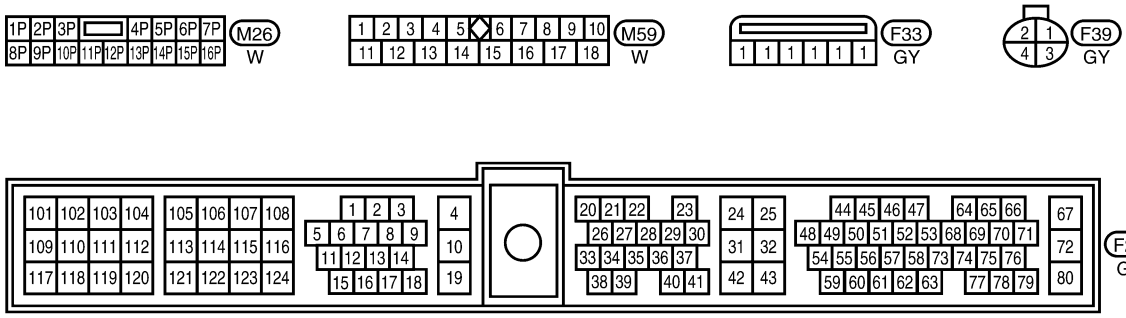

WEC793

Diagnostic Procedure

NEEC1232

1	RETIGHTEN GROUND SCREWS

1. Turn ignition switch OFF.
2. Loosen and retighten engine ground screws.

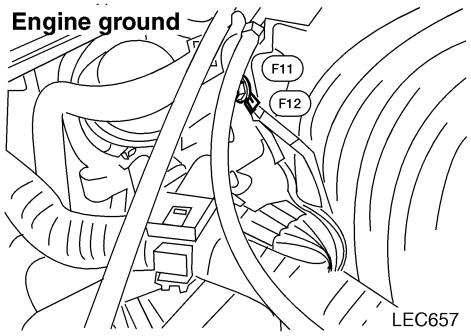

LEC657

	▶	GO TO 2.

2	CLEAR THE SELF-LEARNING DATA

With CONSULT-II

1. Start engine and warm it up to normal operating temperature.
2. Select “SELF-LEARNING CONT” in “WORK SUPPORT” mode with CONSULT-II.
3. Clear the self-learning control coefficient by touching “CLEAR”.

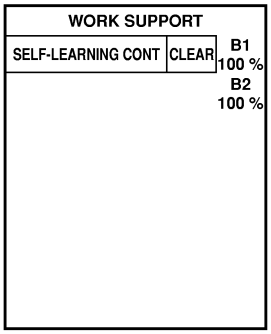

SEF968Y

4. Run engine for at least 10 minutes at idle speed.
   Is the 1st trip DTC P0171, P0172, P0174 or P0175 detected?
   Is it difficult to start engine?

Without CONSULT-II

1. Start engine and warm it up to normal operating temperature.
2. Turn ignition switch OFF.
3. Disconnect mass air flow sensor harness connector, and restart and run engine for at least 5 seconds at idle speed.
4. Stop engine and reconnect mass air flow sensor harness connector.
5. Make sure 1st trip DTC P0100 is displayed.
6. Erase the 1st trip DTC memory. Refer to “HOW TO ERASE EMISSION-RELATED DIAGNOSTIC INFORMATION”, EC-1287.
7. Make sure DTC P0000 is displayed.
8. Run engine for at least 10 minutes at idle speed.
   Is the 1st trip DTC P0171, P0172, P0174 or P0175 detected?
   Is it difficult to start engine?

Yes or No

Yes	▶	Perform trouble diagnosis for DTC P0171, P0174 or P0172, P0175. Refer to EC-1506, 1515.
No	▶	GO TO 3.

Diagnostic Procedure (Cont'd)

3 **CHECK HO2S2 (REAR) INPUT SIGNAL CIRCUIT FOR OPEN AND SHORT**

1. Turn ignition switch "OFF".
2. Check heated oxygen sensor 2 (rear) harness protector color.

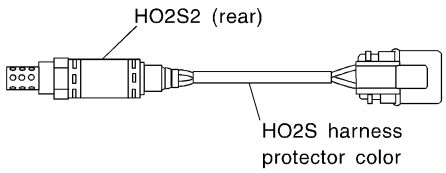

HO2S2 (rear) (bank 1): Gray
HO2S2 (rear) (bank 2): Red Brown

SEC301C

3. Disconnect corresponding heated oxygen sensor 2 (rear) harness connector.

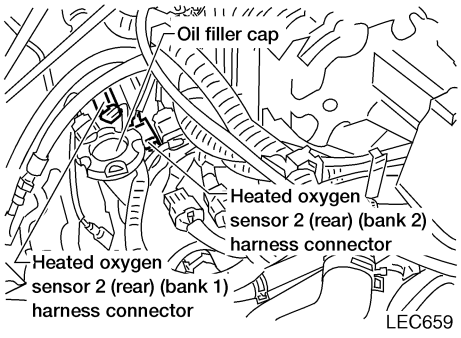

LEC659

4. Disconnect ECM harness connector.
5. Check harness continuity between ECM terminal and HO2S2 (rear) terminal as follows. Refer to Wiring Diagram.

DTC	Terminals		Bank
	ECM	Sensor	
P0139	56	1	Bank 1 (Right)
P0159	57	1	Bank 2 (Left)

MTBL0591

Continuity should exist.

6. Check harness continuity between ECM terminal or HO2S2 (rear) terminal and ground as follows. Refer to Wiring Diagram.

DTC	Terminals		Bank
	ECM or sensor	Ground	
P0139	56 or 1	Ground	Bank 1 (Right)
P0159	57 or 1	Ground	Bank 2 (Left)

MTBL0592

Continuity should not exist.

7. Also check harness for short to power.

OK or NG

OK	▶	GO TO 4.
NG	▶	Repair open circuit or short to ground or short to power in harness or connectors.

4	CHECK HO2S2 (REAR) GROUND CIRCUIT FOR OPEN AND SHORT

1. Check harness continuity between HO2S2 (rear) terminal 4 and engine ground. Refer to Wiring Diagram.
   Continuity should exist.
2. Also check harness for short to power.

OK or NG

OK (With CONSULT-II)	▶	GO TO 6.
OK (Without CONSULT-II)	▶	GO TO 7.
NG	▶	GO TO 5.

5	DETECT MALFUNCTIONING PART

Check the following.
- Joint connector-3
- Harness for open between heated oxygen sensor 2 (rear) and engine ground.

	▶	Repair open circuit or short to power in harness or connectors.

6	CHECK HEATED OXYGEN SENSOR 2 (REAR)

With CONSULT-II
1. Start engine and drive vehicle at a speed of more than 70 km/h (43 MPH) for 2 consecutive minutes.
2. Stop vehicle with engine running.
3. Select "FUEL INJECTION" in "ACTIVE TEST" mode, and select "HO2S2 (B1)/(B2)" as the monitor item with CONSULT-II.
4. Check "HO2S2 (B1)/(B2)" at idle speed when adjusting "FUEL INJECTION" to ±25%.

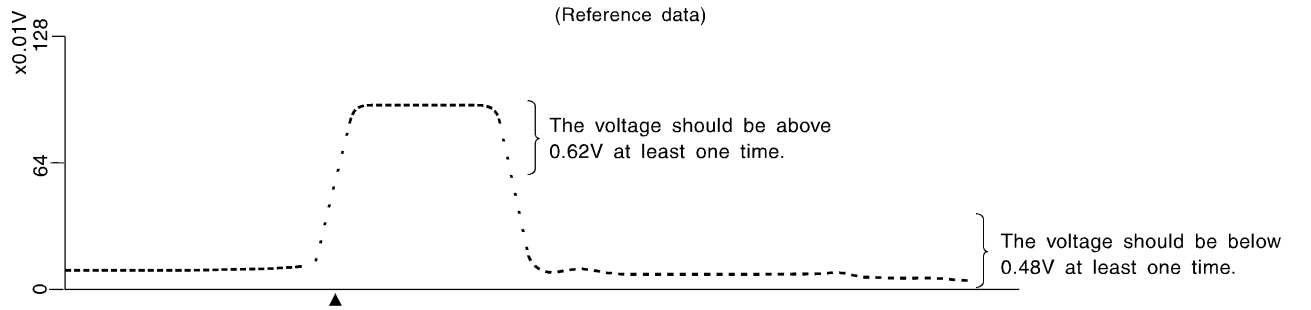

SEF989RD

"HO2S2 (B1)/(B2)" should be above 0.62V at least once when the "FUEL INJECTION" is +25%.
"HO2S2 (B1)/(B2)" should be below 0.48V at least once when the "FUEL INJECTION" is −25%.

CAUTION:
Discard any heated oxygen sensor which has been dropped from a height of more than 0.5 m (19.7 in) onto a hard surface such as a concrete floor; use a new one.

OK or NG

OK	▶	GO TO 9.
NG	▶	GO TO 8.

Diagnostic Procedure (Cont'd)

7	CHECK HEATED OXYGEN SENSOR 2 (REAR)

Without CONSULT-II

1. Start engine and drive vehicle at a speed of more than 70 km/h (43 MPH) for 2 consecutive minutes.
2. Stop vehicle with engine running.
3. Set voltmeter probes between ECM terminal 56 (bank 1 signal) or 57 (bank 2 signal) and engine ground.
4. Check the voltage when racing up to 4,000 rpm under no load at least 10 times.
   (depress and release accelerator pedal as soon as possible)

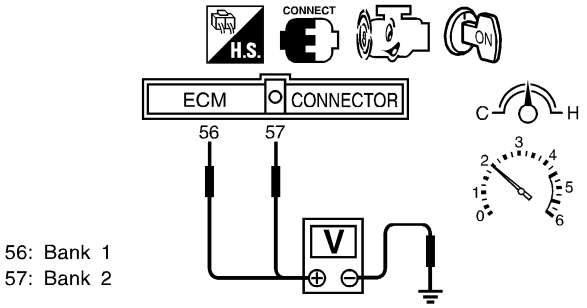

56: Bank 1
57: Bank 2

The voltage should be above 0.62V at least once during this procedure.

SEF797ZB

5. Keep vehicle at idling for 10 minutes, then check the voltage. Or check the voltage when coasting from 80 km/h (50 MPH) in 3rd gear position (M/T), "D" position with "O/D" OFF (A/T).
   The voltage should be below 0.48V at least once during this procedure.

CAUTION:
Discard any heated oxygen sensor which has been dropped from a height of more than 0.5 m (19.7 in) onto a hard surface such as a concrete floor; use a new one.

OK or NG

OK	▶	GO TO 9.
NG	▶	GO TO 8.

8	REPLACE HEATED OXYGEN SENSOR 2 (REAR)

1. Stop vehicle and turn ignitioin switch OFF.
2. Check heated oxygen sensor 2 (rear) harness protector color.

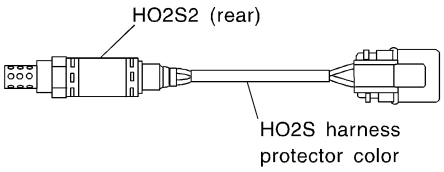

HO2S2 (rear) (bank 1): Gray
HO2S2 (rear) (bank 2): Red Brown

SEC301C

CAUTION:
Before installing new oxygen sensor, clean exhaust system threads using Oxygen Sensor Thread Cleaner tool J-43897-18 or J-43897-12 and approved anti-seize lubricant.

	▶	Replace malfunctioning heated oxygen sensor 2 (rear).

9	CHECK HO2S2 (REAR) SHIELD CIRCUIT FOR OPEN AND SHORT	
1. Turn ignition switch OFF. 2. Disconnect joint connector. 3. Check the following. ● Continuity between joint connector terminal 1 and ground ● Joint connector (Refer to ***EL-238***, "HARNESS LAYOUT".) **Continuity should exist.** 4. Also check harness for short to power. 5. Then reconnect joint connector.		
OK or NG		
OK	▶	GO TO 10.
NG	▶	Repair open circuit or short to power in harness or connectors.

10	CHECK INTERMITTENT INCIDENT	
Refer to "TROUBLE DIAGNOSIS FOR INTERMITTENT INCIDENT", EC-1353.		
	▶	**INSPECTION END**

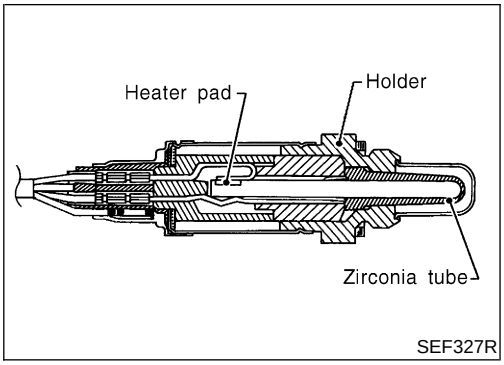

Component Description

NEEC1233

The heated oxygen sensor 2 (rear), after three way catalyst, monitors the oxygen level in the exhaust gas on each bank.
Even if switching characteristics of the heated oxygen sensor 1 (front) are shifted, the air fuel ratio is controlled to stoichiometric, by the signal from the heated oxygen sensor 2 (rear).
This sensor is made of ceramic zirconia. The zirconia generates voltage from approximately 1V in richer conditions to 0V in leaner conditions.
Under normal conditions the heated oxygen sensor 2 (rear) is not used for engine control operation.

CONSULT-II Reference Value in Data Monitor Mode

NEEC1234

Specification data are reference values.

MONITOR ITEM	CONDITION		SPECIFICATION
HO2S2 (B1) HO2S2 (B2)	● Engine: After warming up	Revving engine from idle up to 2,000 rpm	0 - 0.3V ⟷ Approx. 0.6 - 1.0V
HO2S2 MNTR (B1) HO2S2 MNTR (B2)			LEAN ⟷ RICH

ECM Terminals and Reference Value

NEEC1235

Specification data are reference values and are measured between each terminal and ground.

CAUTION:

Do not use ECM ground terminals when measuring input/output voltage. Doing so may result in damage to the ECM's transistor. Use a ground other than the ECM terminals, such as the ground.

TERMINAL NO.	WIRE COLOR	ITEM	CONDITION	DATA (DC Voltage)
56	OR	Heated oxygen sensor 2 (rear) (bank 1)	**[Engine is running]** ● **Warm-up condition** ● Revving engine from idle up to 2,000 rpm	0 - Approximately 1.0V
57	Y	Heated oxygen sensor 2 (rear) (bank 2)		

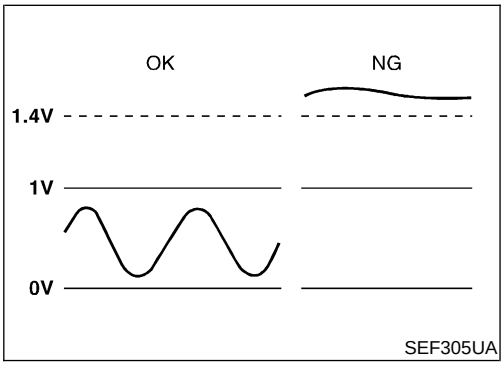

On Board Diagnosis Logic

NEEC1236

The heated oxygen sensor 2 (rear) has a much longer switching time between rich and lean than the heated oxygen sensor 1 (front). The oxygen storage capacity before the three way catalyst causes the longer switching time. To judge the malfunctions of heated oxygen sensor 2 (rear), ECM monitors whether the voltage is unusually high during the various driving condition such as fuel-cut.
Malfunction is detected when an excessively high voltage from the sensor is sent to ECM.

POSSIBLE CAUSE

NEEC1236S01

- Harness or connectors
  (The sensor circuit is open or shorted.)
- Heated oxygen sensor 2 (rear)

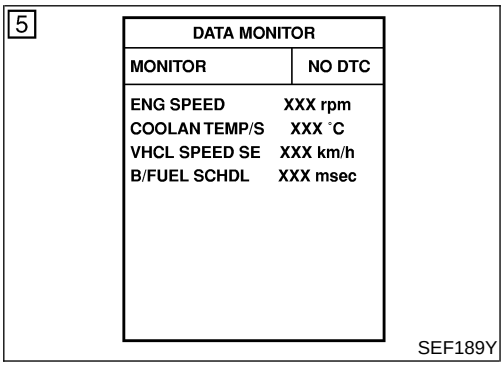

DTC Confirmation Procedure

NEEC1237

CAUTION:

Always drive vehicle at a safe speed.

NOTE:

If "DTC Confirmation Procedure" has been previously conducted, always turn ignition switch OFF and wait at least 5 seconds before conducting the next test.

With CONSULT-II

1) Turn ignition switch ON and select "DATA MONITOR" mode with CONSULT-II.
2) Start engine and drive vehicle at a speed of more than 70 km/h (43 MPH) for 2 consecutive minutes.
3) Stop vehicle with engine running.
4) Let engine idle for 1 minute.
5) Maintain the following conditions for at least 5 consecutive seconds.

END SPEED	Less than 3,600 rpm
COOLAN TEMP/S	More than 70°C (158°F)
Selector lever	Suitable position

6) If 1st trip DTC is detected, go to "Diagnostic Procedure", EC-1493.

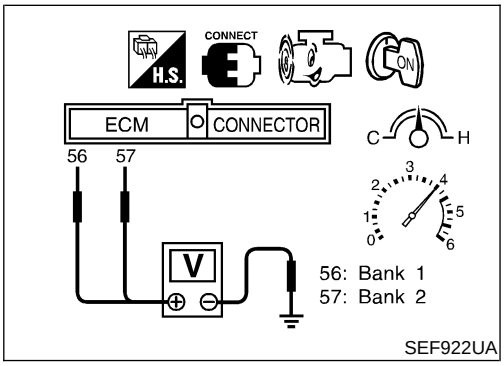

Overall Function Check

NEEC1238

Use this procedure to check the overall function of the heated oxygen sensor 2 (rear) circuit. During this check, a 1st trip DTC might not be confirmed.

Without CONSULT-II

1) Start engine and drive vehicle at a speed of more than 70 km/h (43 MPH) for 2 consecutive minutes.
2) Stop vehicle with engine running.
3) Set voltmeter probes between ECM terminal 56 (bank 1 signal) or 57 (bank 2 signal) and engine ground.
4) Check the voltage when racing up to 4,000 rpm under no load

at least 10 times.
(depress and release accelerator pedal as soon as possible)
The voltage should be below 1.4V during this procedure.

5) If NG, go to "Diagnostic Procedure", EC-1493.

Wiring Diagram

NEEC1239

RIGHT BANK

NEEC1239S01

EC-O2S2B1-01

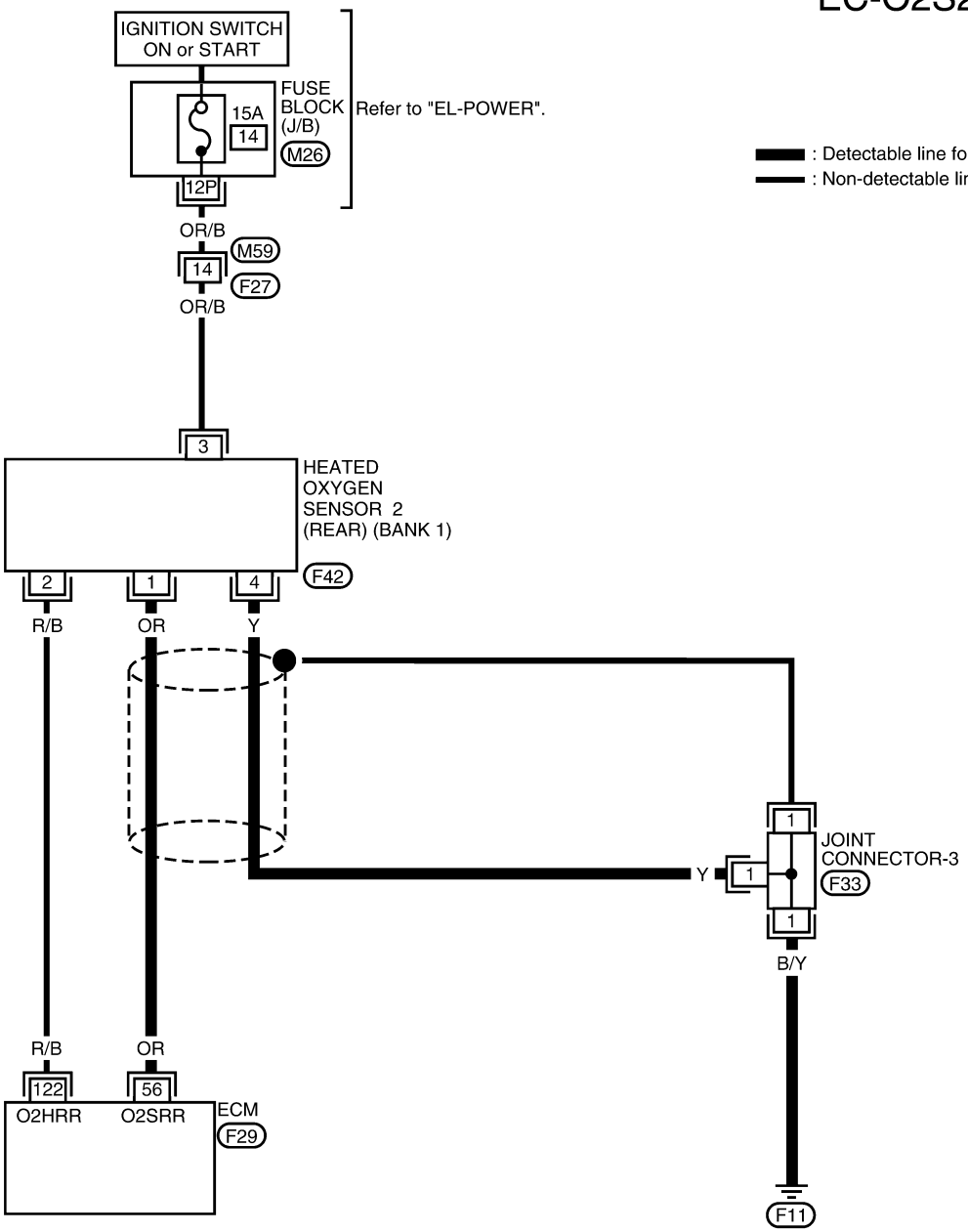

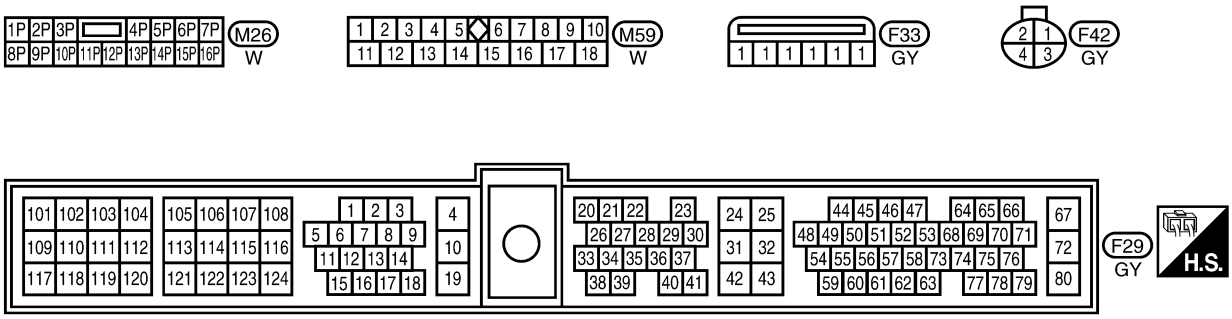

WEC792

Wiring Diagram (Cont'd)

LEFT BANK

NEEC1239S02

EC-O2S2B2-01

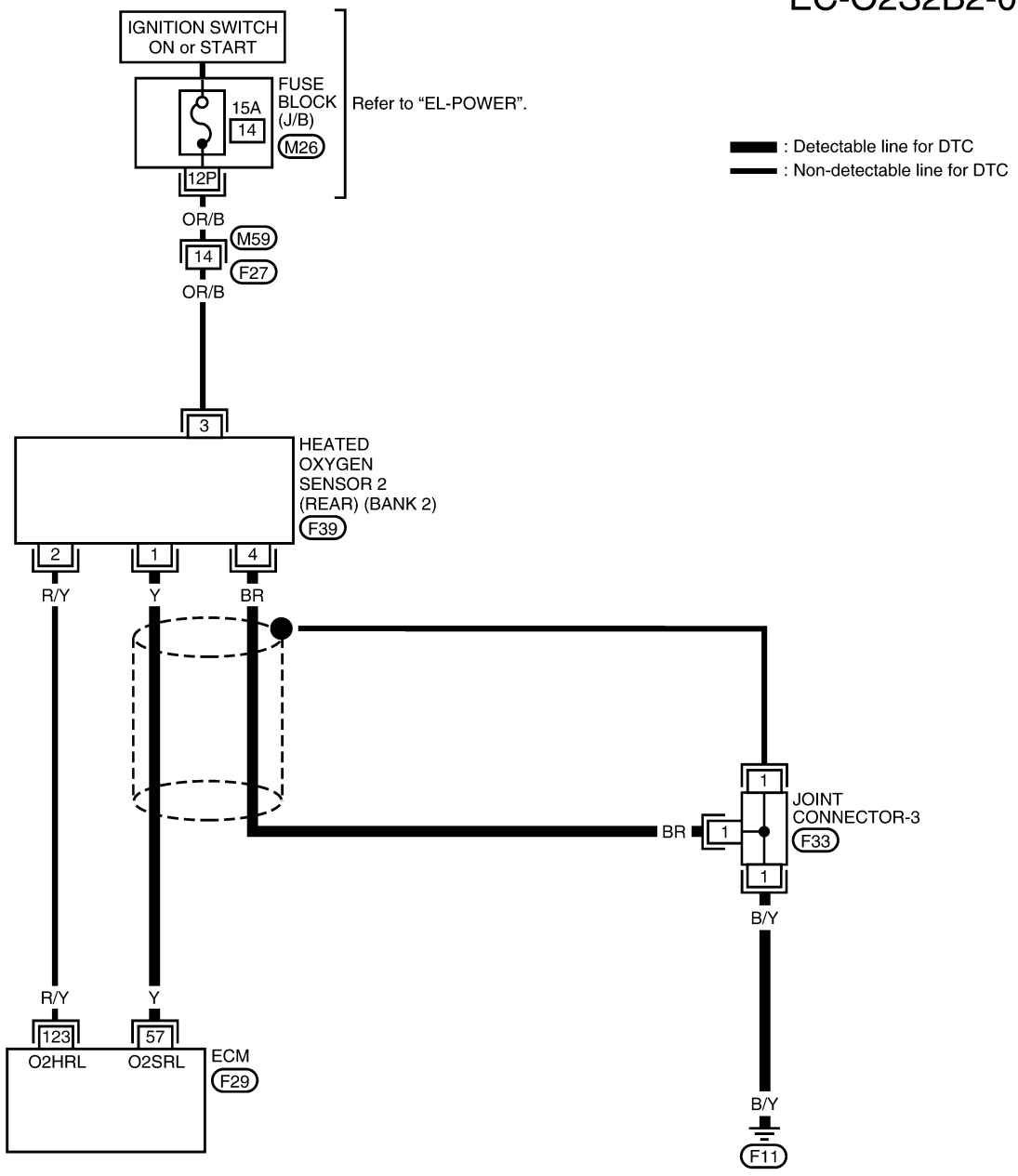

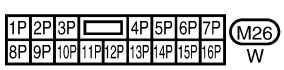

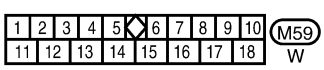

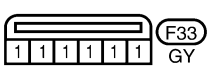

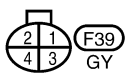

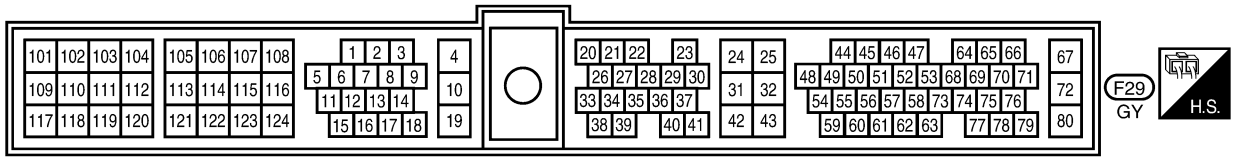

WEC793

Diagnostic Procedure

NEEC1240

1	INSPECTION START

1. Turn ignition switch OFF.
2. Loosen and retighten engine ground screws.

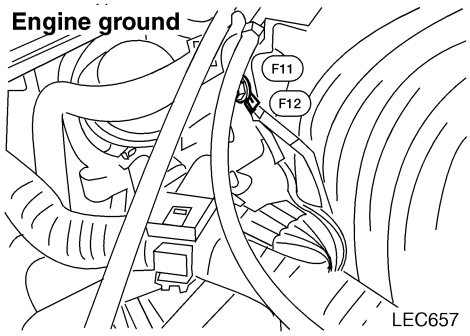

LEC657

3. Check heated oxygen sensor 2 (rear) harness protector color.

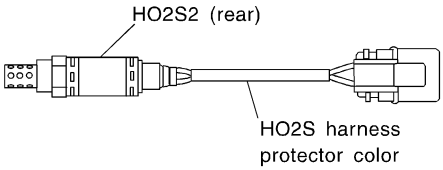

HO2S2 (rear) (bank 1): Gray
HO2S2 (rear) (bank 2): Red Brown

SEC301C

4. Disconnect corresponding heated oxygen sensor 2 (rear) harness connector.
5. Disconnect ECM harness connector.

▶	GO TO 2.

Diagnostic Procedure (Cont'd)

2 CHECK HO2S2 (REAR) INPUT SIGNAL CIRCUIT FOR OPEN AND SHORT

1. Check harness continuity between ECM terminal and HO2S2 terminal as follows.
   Refer to Wiring Diagram.

DTC	Terminals		Bank
	ECM	Sensor	
P0140	56	1	Bank 1 (Right)
P0160	57	1	Bank 2 (Left)

SEF828Z

Continuity should exist.

2. Check harness continuity between ECM terminal or HO2S2 terminal and ground as follows.
   Refer to Wiring Diagram.

DTC	Terminals		Bank
	ECM or sensor	Ground	
P0140	56 or 1	Ground	Bank 1 (Right)
P0160	57 or 1	Ground	Bank 2 (Left)

SEF829Z

Continuity should not exist.

3. Also check harness for short to power.

OK or NG

OK	▶	GO TO 3.
NG	▶	Repair open circuit or short to ground or short to power in harness or connectors.

3 CHECK HO2S2 (REAR) GROUND CIRCUIT FOR OPEN AND SHORT

1. Check harness continuity between HO2S2 terminal 4 and engine ground.
   Refer to Wiring Diagram.
   Continuity should exist.
2. Also check harness for short to power.

OK or NG

OK	▶	GO TO 5.
NG	▶	GO TO 4.

4 DETECT MALFUNCTIONING PART

Check the following.
- Joint connector-3
- Harness for open between heated oxygen sensor 2 (rear) and engine ground.

	▶	Repair open circuit to ground or short to power in harness or connectors.

5	CHECK HO2S2 (REAR) CONNECTORS FOR WATER

Check heated oxygen sensor 2 (rear) connector and harness connector for water.
Water should not exist.

OK or NG

OK (With CONSULT-II)	▶	GO TO 6.
OK (Without CONSULT-II)	▶	GO TO 7.
NG	▶	Repair or replace harness or connectors.

6	CHECK HEATED OXYGEN SENSOR 2 (REAR)

With CONSULT-II

1. Start engine and drive vehicle at a speed of more than 70 km/h (43 MPH) for 2 consecutive minutes.
2. Stop vehicle with engine running.
3. Select "FUEL INJECTION" in "ACTIVE TEST" mode, and select "HO2S2 (B1)/(B2)" as the monitor item with CONSULT-II.
4. Check "HO2S2 (B1)/(B2)" at idle speed when adjusting "FUEL INJECTION" to ±25%.

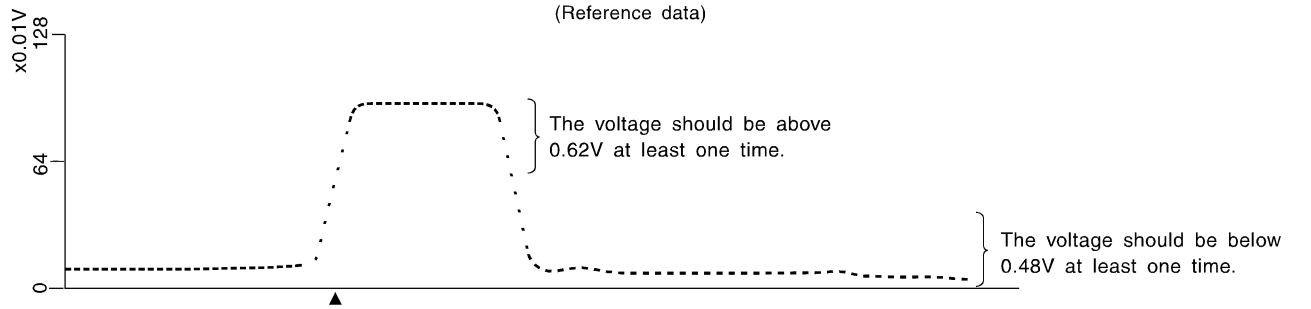

"HO2S2 (B1)/(B2)" should be above 0.62V at least once when the "FUEL INJECTION" is +25%.
"HO2S2 (B1)/(B2)" should be below 0.48V at least once when the "FUEL INJECTION" is −25%.

CAUTION:
Discard any heated oxygen sensor which has been dropped from a height of more than 0.5 m (19.7 in) onto a hard surface such as a concrete floor; use a new one.

OK or NG

OK	▶	GO TO 9.
NG	▶	GO TO 8.

Diagnostic Procedure (Cont'd)

7	CHECK HEATED OXYGEN SENSOR 2 (REAR)

Without CONSULT-II

1. Start engine and drive vehicle at a speed of more than 70 km/h (43 MPH) for 2 consecutive minutes.
2. Stop vehicle with engine running.
3. Set voltmeter probes between ECM terminal 56 (bank 1 signal) or 57 (bank 2 signal) and engine ground.
4. Check the voltage when racing up to 4,000 rpm under no load at least 10 times.
   (depress and release accelerator pedal as soon as possible)

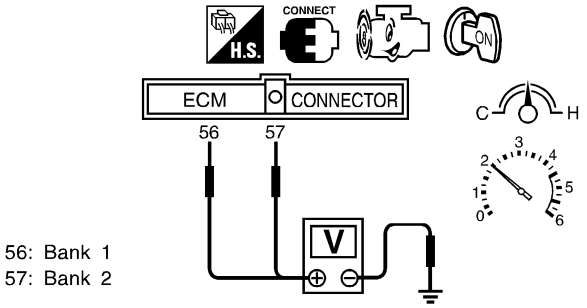

56: Bank 1
57: Bank 2

The voltage should be above 0.62V at least once during this procedure.

SEF797ZB

5. Keep vehicle at idling for 10 minutes, then check the voltage. Or check the voltage when coasting from 80 km/h (50 MPH) in 3rd gear position (M/T), "D" position with "O/D" OFF (A/T).
   The voltage should be below 0.48V at least once during this procedure.

CAUTION:
Discard any heated oxygen sensor which has been dropped from a height of more than 0.5 m (19.7 in) onto a hard surface such as a concrete floor; use a new one.

OK or NG

OK	▶	GO TO 9.
NG	▶	GO TO 8.

8	REPLACE HEATED OXYGEN SENSOR 2 (REAR)

1. Stop vehicle and turn ignitioin switch OFF.
2. Check heated oxygen sensor 2 (rear) harness protector color.

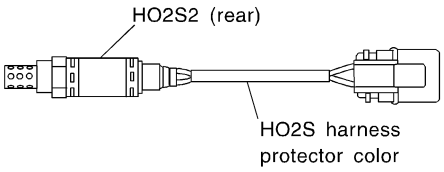

HO2S2 (rear) (bank 1): Gray
HO2S2 (rear) (bank 2): Red Brown

SEC301C

CAUTION:
Before installing new oxygen sensor, clean exhaust system threads using Oxygen Sensor Thread Cleaner tool J-43897-18 or J-43897-12 and approved anti-seize lubricant.

	▶	Replace malfunctioning heated oxygen sensor 2 (rear).

9	CHECK HO2S2 (REAR) SHIELD CIRCUIT FOR OPEN AND SHORT	
1. Turn ignition switch OFF. 2. Disconnect joint connector. 3. Check the following. ● Continuity between joint connector terminal 1 and ground ● Joint connector (Refer to ***EL-238***, "HARNESS LAYOUT".) **Continuity should exist.** 4. Also check harness for short to power. 5. Then reconnect joint connector.		
OK or NG		
OK	▶	GO TO 10.
NG	▶	Repair open circuit or short to power in harness or connectors.

10	CHECK INTERMITTENT INCIDENT
Refer to "TROUBLE DIAGNOSIS FOR INTERMITTENT INCIDENT", EC-1353.	
▶	**INSPECTION END**

Description

NEEC1241

SYSTEM DESCRIPTION

NEEC1241S01

Sensor	Input Signal to ECM	ECM function	Actuator
Camshaft position sensor	Engine speed	Heated oxygen sensor 2 heater (rear) control	Heated oxygen sensor 2 heaters

The ECM performs ON/OFF control of the heated oxygen sensor 2 heaters (rear) corresponding to the engine speed.

OPERATION

NEEC1241S02

Engine speed rpm	Heated oxygen sensor 2 heaters (rear)
Above 2,800	OFF
Below 2,800	ON

CONSULT-II Reference Value in Data Monitor Mode

NEEC1242

Specification data are reference values.

MONITOR ITEM	CONDITION	SPECIFICATION
HO2S2 HTR (B1) HO2S2 HTR (B2)	• Ignition switch: ON (Engine stopped) • Engine is running above 2,800 rpm.	OFF
	• Engine is running below 2,800 rpm after driving for 2 minutes at a speed of 70 km/h (43 MPH) or more.	ON

ECM Terminals and Reference Value

NEEC1243

Specification data are reference values and are measured between each terminal and ground.

CAUTION:

Do not use ECM ground terminals when measuring input/output voltage. Doing so may result in damage to the ECM's transistor. Use a ground other than the ECM terminals, such as the ground.

TERMINAL NO.	WIRE COLOR	ITEM	CONDITION	DATA (DC Voltage)
122	R/B	Heated oxygen sensor 2 heater (rear) (bank 1)	**[Ignition switch "ON"]** • Engine stopped **[Engine is running]** • Engine speed is above 2,800 rpm	BATTERY VOLTAGE (11 - 14V)
			[Engine is running] • Engine speed is below 2,800 rpm • After driving for 2 minutes at a speed of 70 km/h (43 MPH) or more	Approximately 0.4V
123	R/Y	Heated oxygen sensor 2 heater (rear) (bank 2)	**[Ignition switch "ON"]** • Engine stopped **[Engine is running]** • Engine speed is above 2,800 rpm	BATTERY VOLTAGE (11 - 14V)
			[Engine is running] • Engine speed is below 2,800 rpm • After driving for 2 minutes at a speed of 70 km/h (43 MPH) or more	Approximately 0.4V

On Board Diagnosis Logic

NEEC1244

Malfunction is detected when the current amperage in the heated oxygen sensor 2 heater (rear) circuit is out of the normal range. [An improper voltage drop signal is sent to ECM through the heated oxygen sensor 2 heater (rear).]

POSSIBLE CAUSE

NEEC1244S01

- Harness or connectors
  (The heated oxygen sensor 2 heater (rear) circuit is open or shorted.)
- Heated oxygen sensor 2 heater (rear)

4

DATA MONITOR	
MONITOR	NO DTC
ENG SPEED	XXX rpm

SEF058Y

DTC Confirmation Procedure

NEEC1245

NOTE:
If "DTC Confirmation Procedure" has been previously conducted, always turn ignition switch OFF and wait at least 5 seconds before conducting the next test.

TESTING CONDITION:
Before performing the following procedure, confirm that battery voltage is between 10.5V and 16V at idle.

With CONSULT-II

1) Turn ignition switch ON and select "DATA MONITOR" mode with CONSULT-II.
2) Start engine.
3) Drive vehicle at a speed of more than 70 km/h (43 MPH) for 2 consecutive minutes.
4) Stop vehicle and let engine idle for at least 6 seconds.
5) If 1st trip DTC is detected, go to "Diagnostic Procedure", EC-1502.

With GST

Follow the procedure "With CONSULT-II".

Wiring Diagram

NEEC1246

RIGHT BANK

NEEC1246S01

EC-O2H2B1-01

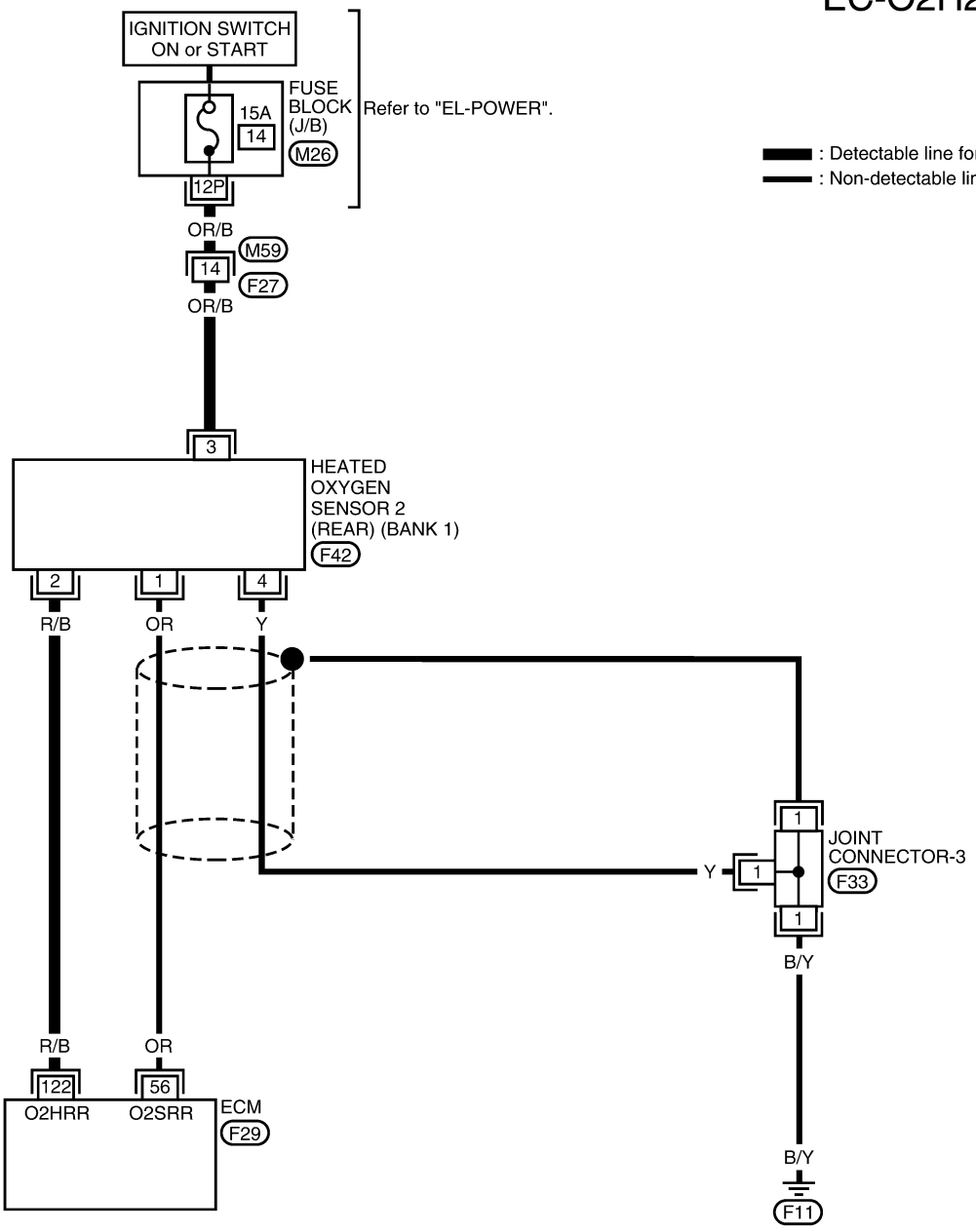

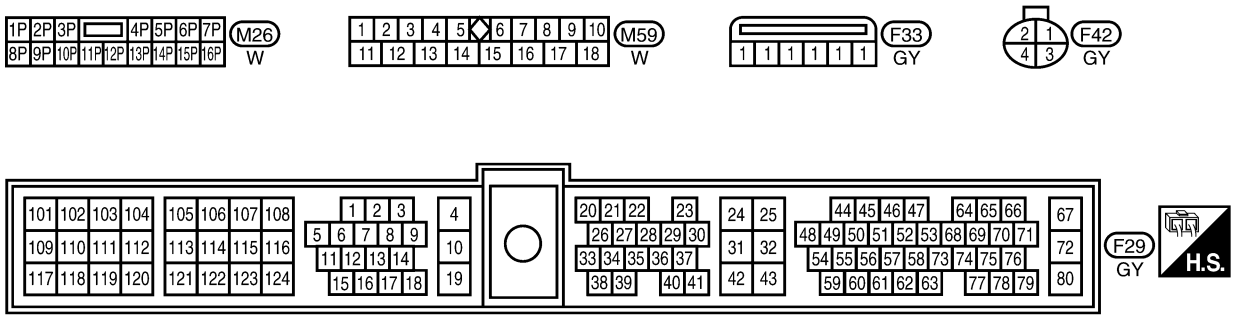

WEC794

LEFT BANK

NEEC1246S02

EC-O2H2B2-01

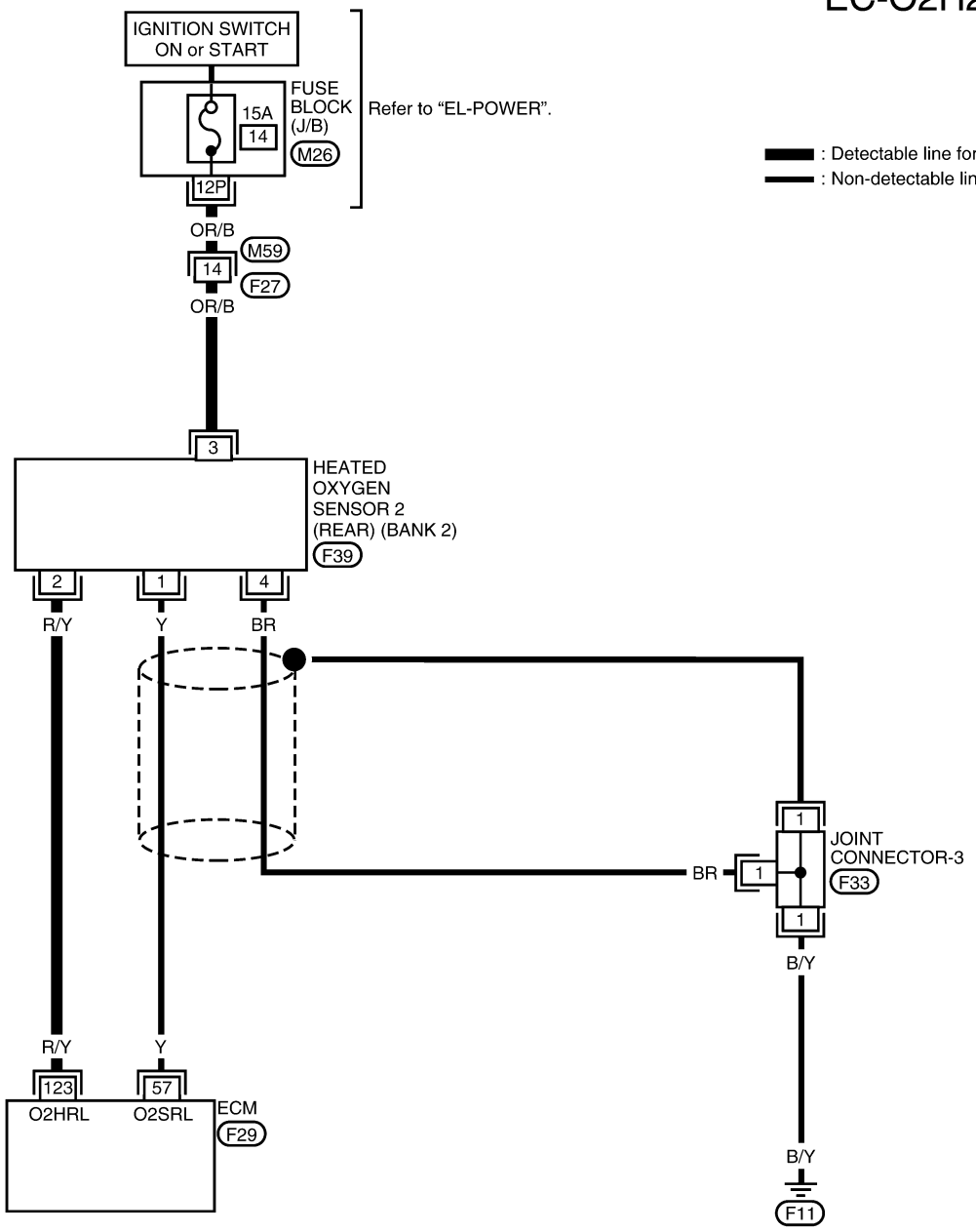

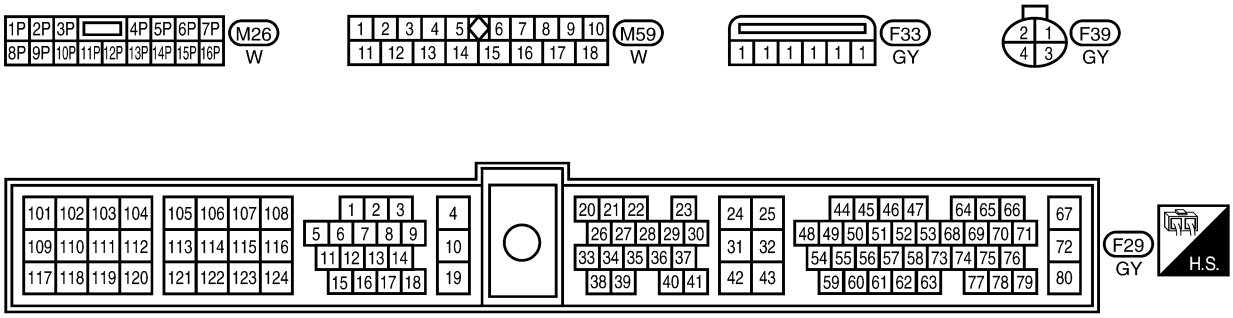

WEC795

Diagnostic Procedure

NEEC1247

1	CHECK HO2S2 (REAR) POWER SUPPLY CIRCUIT

1. Turn ignition switch “OFF”.
2. Check heated oxygen sensor 2 (rear) harness protector color.

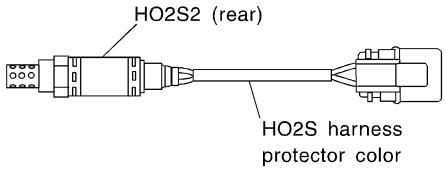

HO2S2 (rear) (bank 1): Gray
HO2S2 (rear) (bank 2): Red Brown

SEC301C

3. Disconnect corresponding heated oxygen sensor 2 (rear) harness connector.

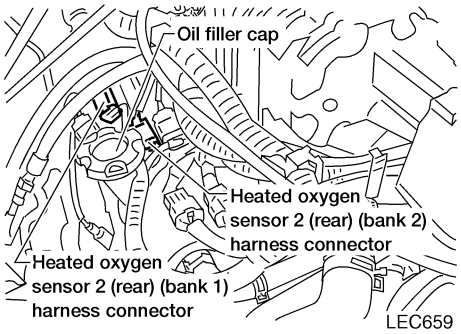

LEC659

4. Turn ignition switch ON.
5. Check voltage between HO2S2 terminal 3 and ground.

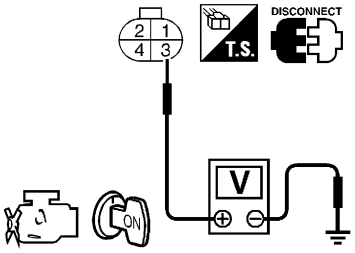

SEF637W

Voltage: Battery voltage

OK or NG

OK	▶	GO TO 3.
NG	▶	GO TO 2.

2	DETECT MALFUNCTIONING PART

Check the following.
- Harness connectors M59, F27
- Fuse block (J/B) connector M26
- 10A fuse
- Harness for open or short between heated oxygen sensor 2 (rear) and fuse

	▶	Repair harness or connectors.

3	CHECK HO2S2 HEATER (REAR) OUTPUT CIRCUIT FOR OPEN AND SHORT

1. Turn ignition switch OFF.
2. Disconnect ECM harness connector.
3. Check harness continuity between ECM terminal and HO2S2 (rear) terminal as follows. Refer to Wiring Diagram.

DTC	Terminals		Bank
	ECM	Sensor	
P0141	122	2	Bank 1 (Right)
P0161	123	2	Bank 2 (Left)

SEF830Z

Continuity should exist.

4. Also check harness for short to ground and short to power.

OK or NG

OK	▶	GO TO 5.
NG	▶	GO TO 4.

4	DETECT MALFUNCTIONING PART

Check the following.
- Joint connector-3
- Harness for open or short between heated oxygen sensor 2 (rear) and engine ground.

	▶	Repair open circuit or short to ground or short to power in harness or connectors.

Diagnostic Procedure (Cont'd)

5	CHECK HEATED OXYGEN SENSOR 2 HEATER (REAR)

Check the following.

1. Check resistance between HO2S2 (rear) terminals 2 and 3.

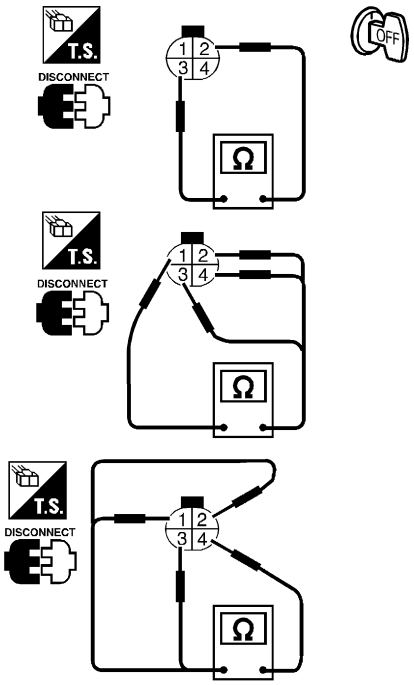

SEF716W

Resistance: 2.3 - 4.3Ω at 25°C (77°F)

2. Check continuity.

Terminal No.	Continuity
1 and 2, 3, 4	No
4 and 1, 2, 3	

MTBL0233

CAUTION:

Discard any heated oxygen sensor which has been dropped from a height of more than 0.5 m (19.7 in) onto a hard surface such as a concrete floor; use a new one.

OK or NG

OK	▶	GO TO 7.
NG	▶	GO TO 6.

6	REPLACE HEATED OXYGEN SENSOR 2 (REAR)

Check heated oxygen sensor 2 (rear) harness protector color.

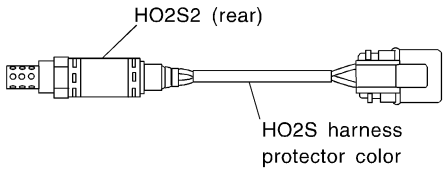

HO2S2 (rear) (bank 1): Gray
HO2S2 (rear) (bank 2): Red Brown

SEC301C

CAUTION:
Before installing new oxygen sensor, clean exhaust system threads using Oxygen Sensor Thread Cleaner tool J-43897-18 or J-43897-12 and approved anti-seize lubricant.

▶	Replace malfunctioning heated oxygen sensor 2 (rear).

7	CHECK INTERMITTENT INCIDENT

Refer to "TROUBLE DIAGNOSIS FOR INTERMITTENT INCIDENT", EC-1353.

▶	INSPECTION END

On Board Diagnosis Logic

NEEC1248

With the Air/Fuel Mixture Ratio Self-Learning Control, the actual mixture ratio can be brought closely to the theoretical mixture ratio based on the mixture ratio feedback signal from the heated oxygen sensors 1 (front). The ECM calculates the necessary compensation to correct the offset between the actual and the theoretical ratios. In case the amount of the compensation value is extremely large (The actual mixture ratio is too lean.), the ECM judges the condition as the fuel injection system malfunction and light up the MIL (2 trip detection logic).

Sensor	Input Signal to ECM	ECM function	Actuator
Heated oxygen sensors 1 (front)	Density of oxygen in exhaust gas (Mixture ratio feedback signal)	Fuel injection control	Injectors

Malfunction is detected when fuel injection system does not operate properly, the amount of mixture ratio compensation is too large. (The mixture ratio is too lean.)

POSSIBLE CAUSE

NEEC1248S01

- Intake air leaks
- Heated oxygen sensor 1 (front)
- Injectors
- Exhaust gas leaks
- Incorrect fuel pressure
- Lack of fuel
- Mass air flow sensor

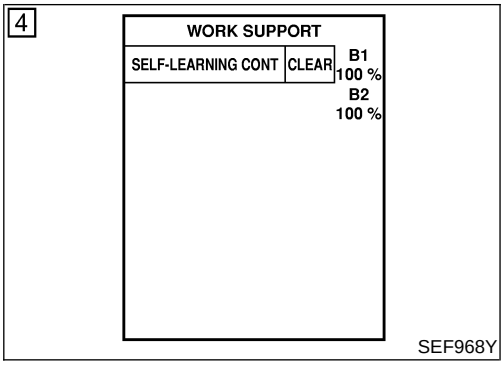

DTC Confirmation Procedure

=NEEC1249

NOTE:
If "DTC Confirmation Procedure" has been previously conducted, always turn ignition switch OFF and wait at least 5 seconds before conducting the next test.

With CONSULT-II

1) Start engine and warm it up to normal operating temperature.
2) Turn ignition switch OFF and wait at least 5 seconds.
3) Turn ignition switch ON and select "SELF-LEARNING CONT" in "WORK SUPPORT" mode with CONSULT-II.
4) Clear the self-learning control coefficient by touching "CLEAR".
5) Select "DATA MONITOR" mode with CONSULT-II.
6) Start engine again and let it idle for at least 10 minutes.
   The 1st trip DTC P0171 or P0174 should be detected at this stage, if a malfunction exists. If so, go to "Diagnostic Procedure", EC-1510.
7) If it is difficult to start engine at step 6, the fuel injection system has a malfunction, too.
8) Crank engine while depressing accelerator pedal. If engine starts, go to "Diagnostic Procedure", EC-1510. If engine does not start, check exhaust and intake air leak visually.

With GST

Follow the procedure "With CONSULT-II".

Wiring Diagram

NEEC1250

RIGHT BANK

NEEC1250S01

EC-FUELB1-01

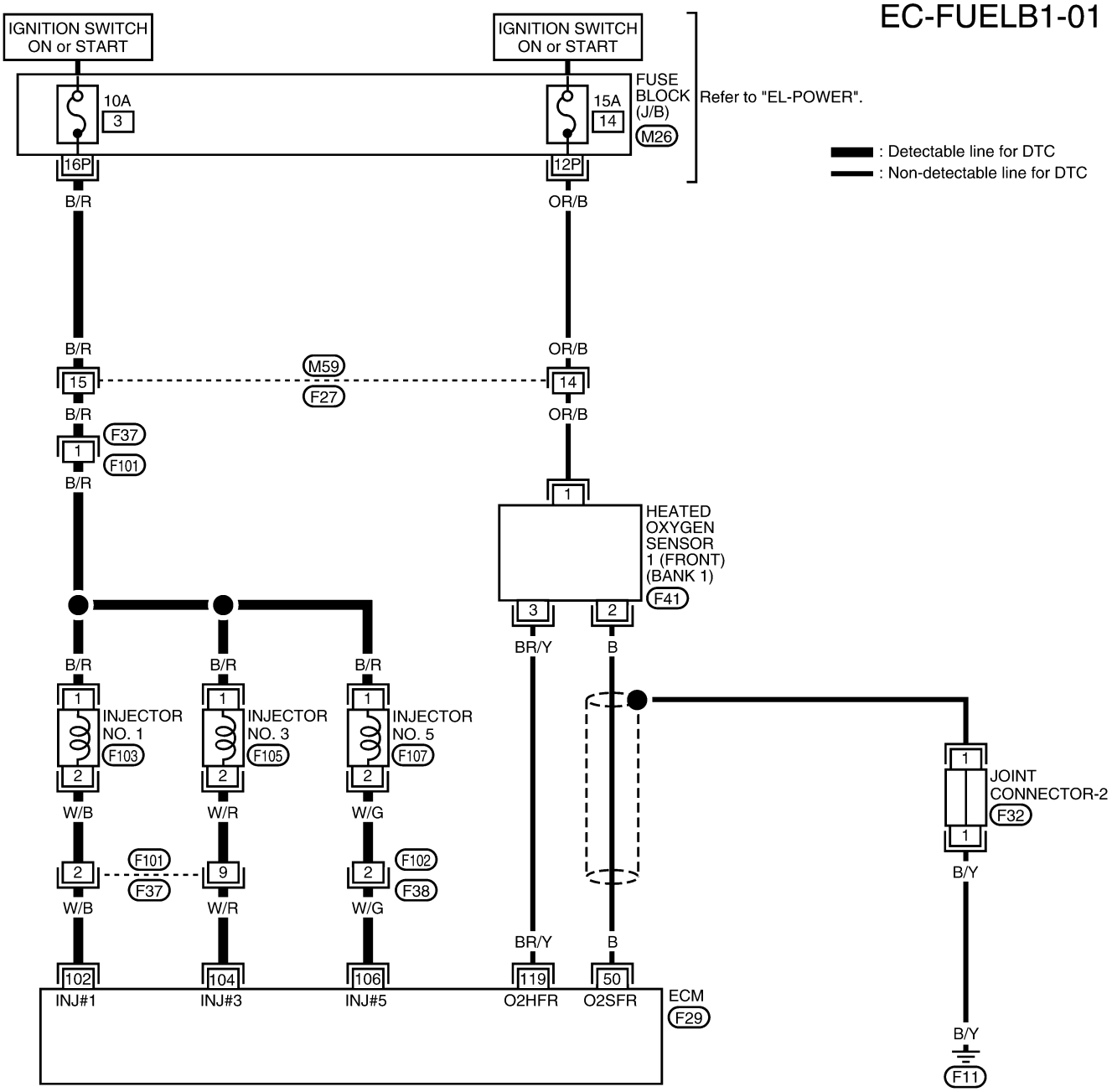

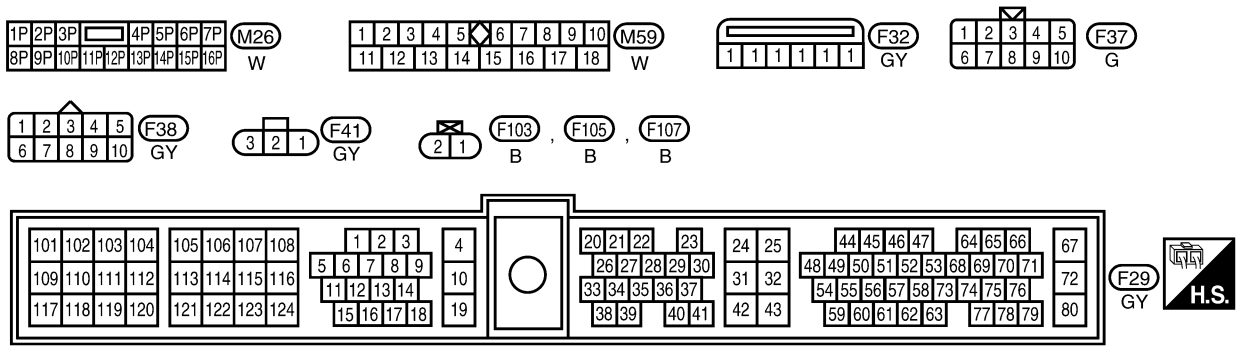

LEC665

LEFT BANK

NEEC1250S02

EC-FUELB2-01

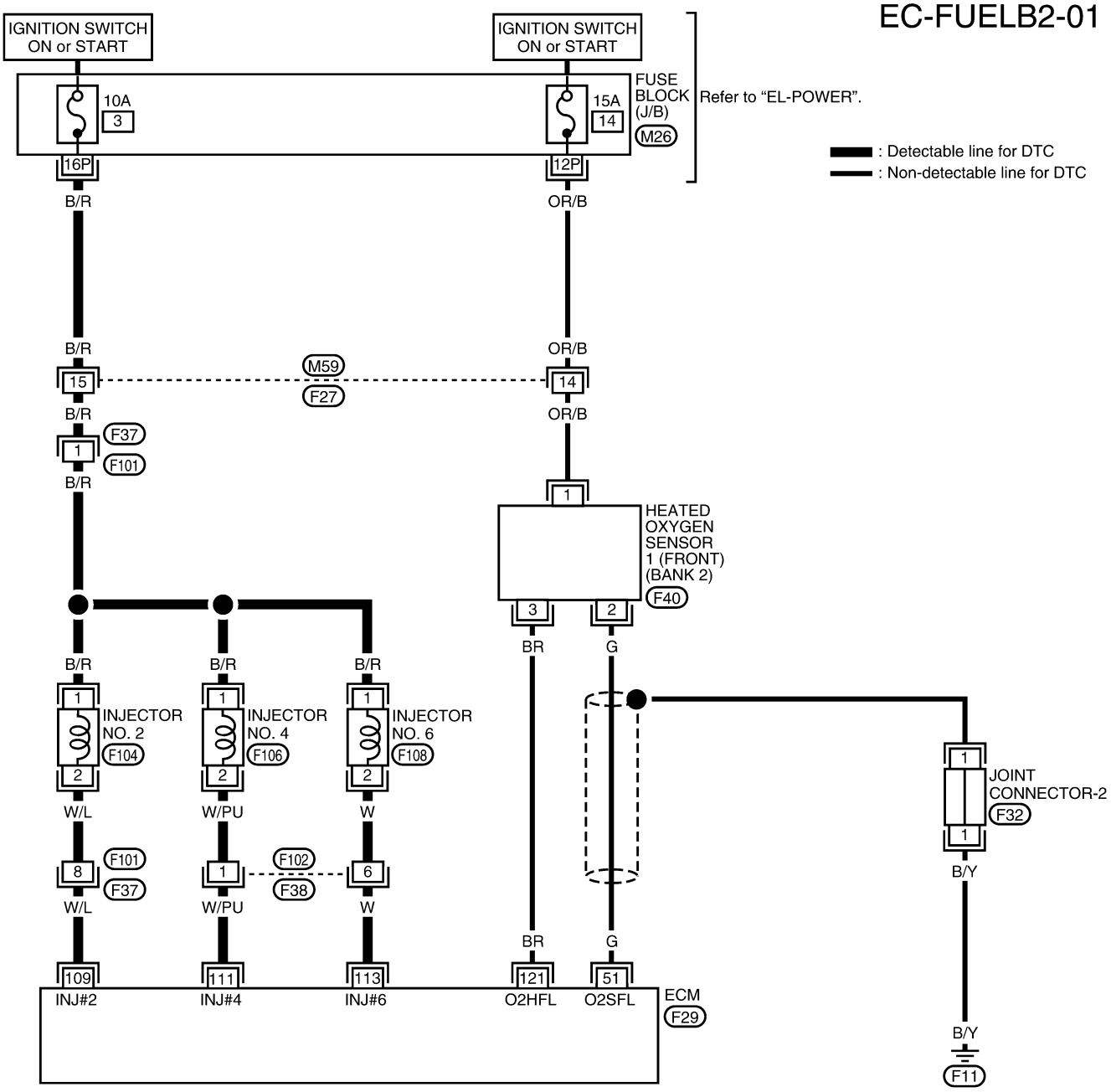

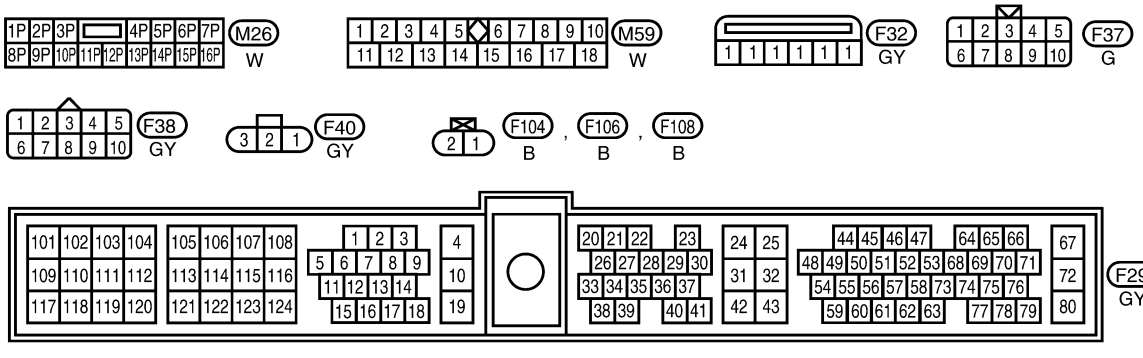

LEC666

Diagnostic Procedure

NEEC1251

1	CHECK EXHAUST AIR LEAK

1. Start engine and run it at idle.
2. Listen for an exhaust air leak before three way catalyst.

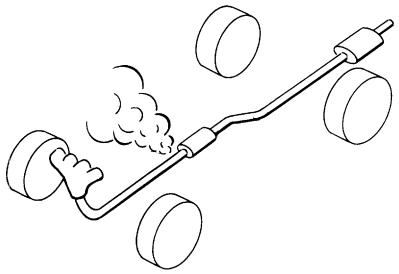

SEF099P

OK or NG

OK	▶	GO TO 2.
NG	▶	Repair or replace.

2	CHECK FOR INTAKE AIR LEAK

Listen for an intake air leak after the mass air flow sensor.

OK or NG

OK	▶	GO TO 3.
NG	▶	Repair or replace.

3	CHECK HEATED OXYGEN SENSOR 1 (FRONT) CIRCUIT FOR OPEN AND SHORT

1. Turn ignition switch OFF.
2. Disconnect corresponding heated oxygen sensor 1 (front) harness connector.
3. Disconnect ECM harness connector.
4. Check harness continuity between ECM terminal and HO2S1 (front) terminal as follows.
   Refer to Wiring Diagram.

DTC	Terminals		Bank
	ECM	Sensor	
P0171	50	2	Bank 1 (Right)
P0174	51	2	Bank 2 (Left)

SEF831Z

Continuity should exist.

5. Check harness continuity between ECM terminal or HO2S1 (front) terminal and ground as follows.
   Refer to Wiring Diagram.

DTC	Terminals		Bank
	ECM or sensor	Ground	
P0171	50 or 2	Ground	Bank 1 (Right)
P0174	51 or 2	Ground	Bank 2 (Left)

SEF832Z

Continuity should not exist.

6. Also check harness for short to power.

OK or NG

OK	▶	GO TO 4.
NG	▶	Repair open circuit or short to ground or short to power in harness or connectors.

4	CHECK FUEL PRESSURE

1. Release fuel pressure to zero.
   Refer to EC-1259.
2. Install fuel pressure gauge and check fuel pressure.

At idling:

When fuel pressure regulator valve vacuum hose is connected.

235 kPa (2.4 kg/cm^2, 34 psi)

When fuel pressure regulator valve vacuum hose is disconnected.

294 kPa (3.0 kg/cm^2, 43 psi)

OK or NG

OK	▶	GO TO 6.
NG	▶	GO TO 5.

Diagnostic Procedure (Cont'd)

5	DETECT MALFUNCTIONING PART	
Check the following. ● Fuel pump and circuit (Refer to EC-1801.) ● Fuel pressure regulator (Refer to EC-1260.) ● Fuel lines (Refer to "ENGINE MAINTENANCE", ***MA-29***.) ● Fuel filter for clogging		
	▶	Repair or replace.

6	CHECK MASS AIR FLOW SENSOR	
With CONSULT-II 1. Install all parts removed. 2. Check "MASS AIR FLOW" in "DATA MONITOR" mode with CONSULT-II. **3.3 - 4.8 g·m/sec: at idling** **12.0 - 14.9 g·m/sec: at 2,500 rpm**		
With GST 1. Install all parts removed. 2. Check mass air flow sensor signal in MODE 1 with GST. **3.3 - 4.8 g·m/sec: at idling** **12.0 - 14.9 g·m/sec: at 2,500 rpm**		
OK or NG		
OK	▶	GO TO 7.
NG	▶	Check connectors for rusted terminals or loose connections in the mass air flow sensor circuit or engine grounds. Refer to EC-1360.

7	CHECK FUNCTION OF INJECTORS

With CONSULT-II

1. Start engine.
2. Perform "POWER BALANCE" in "ACTIVE TEST" mode with CONSULT-II.

ACTIVE TEST	
POWER BALANCE	
MONITOR	
ENG SPEED	XXX rpm
MAS AIF SE-B1	XXX V
IACV-AAC/V	XXX step

SEF070Y

3. Make sure that each circuit produces a momentary engine speed drop.

Without CONSULT-II

1. Start engine.
2. Listen to each injector operating sound.

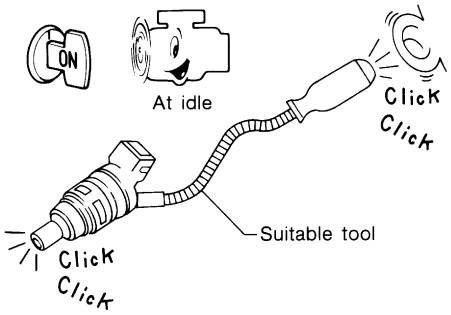

MEC703B

Clicking noise should be heard.

OK or NG

OK	▶	GO TO 8.
NG	▶	Perform trouble diagnosis for "INJECTORS", EC-1793.

Diagnostic Procedure (Cont'd)

8	CHECK INJECTOR

1. Confirm that the engine is cooled down and there are no fire hazards near the vehicle.
2. Turn ignition switch OFF.
3. Disconnect injector harness connectors on left bank (for DTC P0171), right bank (for DTC P0174).
4. Remove injector gallery assembly. Refer to EC-1260.
   Keep fuel hose and all injectors connected to injector gallery.
   The injector harness connectors on right bank (for DTC P0171), left bank (for DTC P0174) should remain connected.
5. Disconnect all ignition coil harness connectors.
6. Prepare pans or saucers under each injector.
7. Crank engine for about 3 seconds. Make sure that fuel sprays out from injectors.

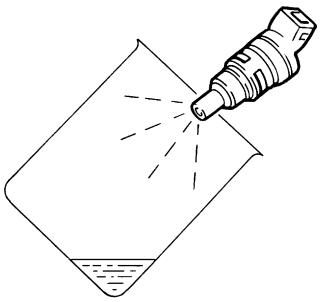

SEF595Q

Fuel should be sprayed evenly for each injector.

OK or NG

OK	▶	GO TO 9.
NG	▶	Replace injectors from which fuel does not spray out. Always replace O-ring with new ones.

9	CHECK INTERMITTENT INCIDENT
Refer to "TROUBLE DIAGNOSIS FOR INTERMITTENT INCIDENT", EC-1353.	
▶	**INSPECTION END**

On Board Diagnosis Logic

NEEC1252

With the Air/Fuel Mixture Ratio Self-Learning Control, the actual mixture ratio can be brought closely to the theoretical mixture ratio based on the mixture ratio feedback signal from the heated oxygen sensors 1 (front). The ECM calculates the necessary compensation to correct the offset between the actual and the theoretical ratios. In case the amount of the compensation value is extremely large (The actual mixture ratio is too rich.), the ECM judges the condition as the fuel injection system malfunction and light up the MIL (2 trip detection logic).

Sensor	Input Signal to ECM	ECM function	Actuator
Heated oxygen sensors 1 (front)	Density of oxygen in exhaust gas (Mixture ratio feedback signal)	Fuel injection control	Injectors

Malfunction is detected when fuel injection system does not operate properly, the amount of mixture ratio compensation is too large. (The mixture ratio is too rich.)

POSSIBLE CAUSE

NEEC1252S01

- Heated oxygen sensor 1 (front)
- Injectors
- Exhaust gas leaks
- Incorrect fuel pressure
- Mass air flow sensor

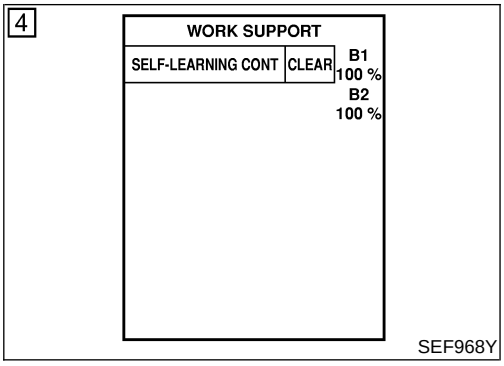

DTC Confirmation Procedure

=NEEC1253

NOTE:

If “DTC Confirmation Procedure” has been previously conducted, always turn ignition switch OFF and wait at least 5 seconds before conducting the next test.

With CONSULT-II

1) Start engine and warm it up to normal operating temperature.
2) Turn ignition switch OFF and wait at least 5 seconds.
3) Turn ignition switch ON and select “SELF-LEARNING CONT” in “WORK SUPPORT” mode with CONSULT-II.
4) Clear the self-learning control coefficient by touching “CLEAR”.
5) Select “DATA MONITOR” mode with CONSULT-II.
6) Start engine again and let it idle for at least 10 minutes.
   The 1st trip DTC P0172, P0175 should be detected at this stage, if a malfunction exists. If so, go to “Diagnostic Procedure”, EC-1519.
7) If it is difficult to start engine at step 6, the fuel injection system has a malfunction, too.
8) Crank engine while depressing accelerator pedal.
   If engine starts, go to “Diagnostic Procedure”, EC-1519. If engine does not start, remove ignition plugs and check for fouling, etc.

With GST

Follow the procedure “With CONSULT-II”.

Wiring Diagram

NEEC1254

RIGHT BANK

NEEC1254S01

EC-FUELB1-01

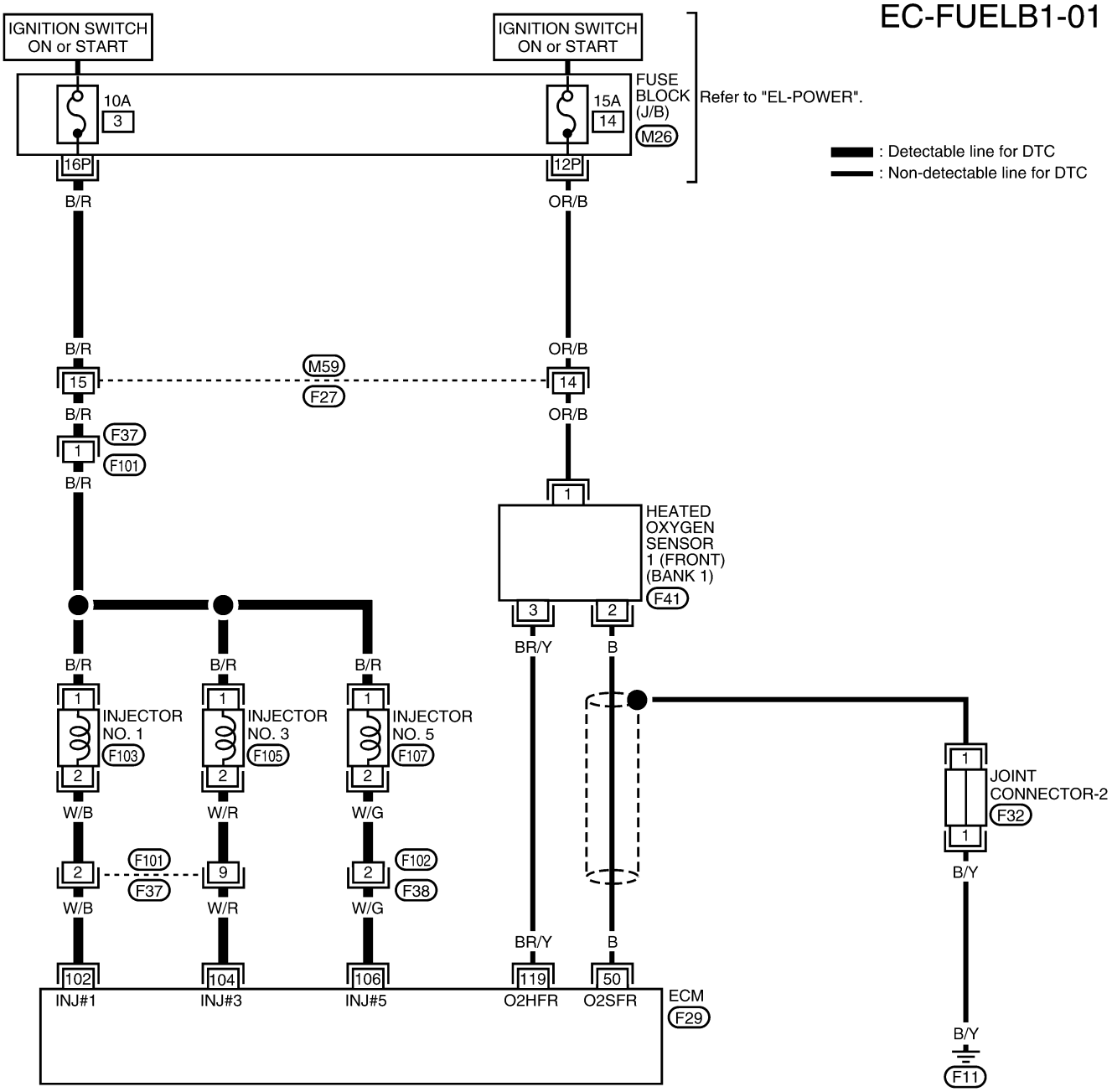

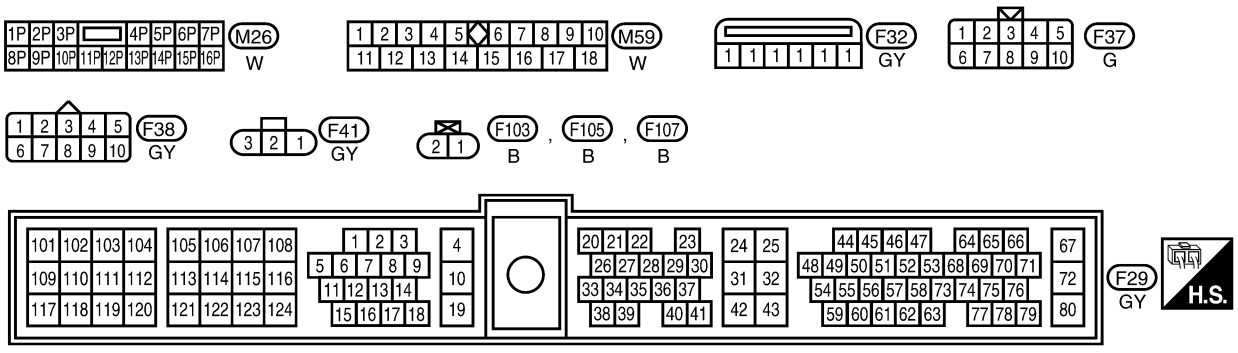

LEC665

Wiring Diagram (Cont'd)

LEFT BANK

NEEC1254S02

EC-FUELB2-01

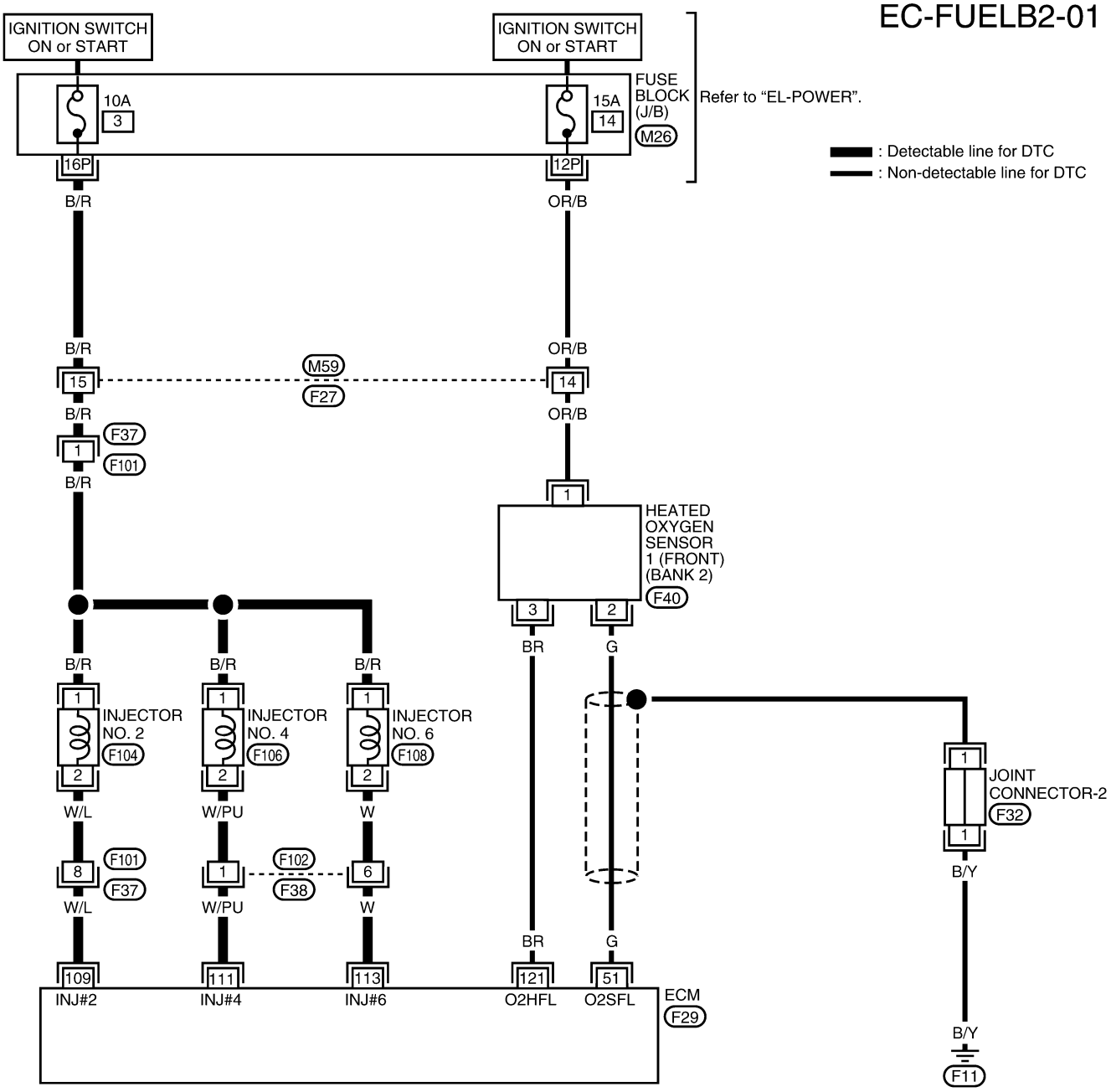

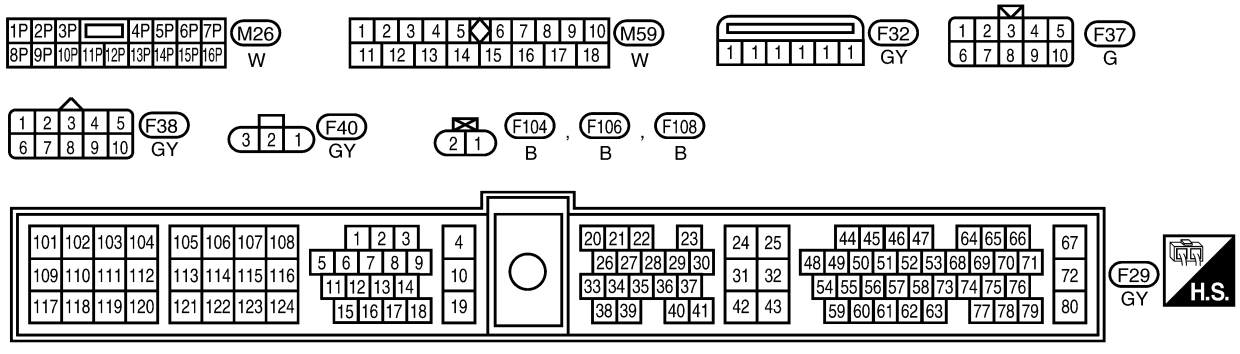

LEC666

Diagnostic Procedure

NEEC1255

1	CHECK EXHAUST AIR LEAK

1. Start engine and run it at idle.
2. Listen for an exhaust air leak before three way catalyst.

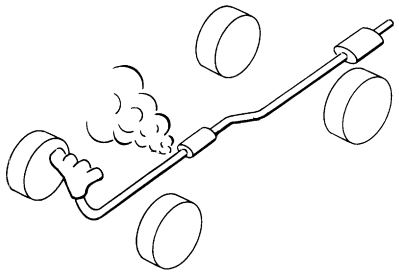

SEF099P

OK or NG

OK	▶	GO TO 2.
NG	▶	Repair or replace.

2	CHECK FOR INTAKE AIR LEAK

Listen for an intake air leak after the mass air flow sensor.

OK or NG

OK	▶	GO TO 3.
NG	▶	Repair or replace.

Diagnostic Procedure (Cont'd)

3	CHECK HEATED OXYGEN SENSOR 1 (FRONT) CIRCUIT FOR OPEN AND SHORT

1. Turn ignition switch OFF.
2. Disconnect corresponding heated oxygen sensor 1 (front) harness connector.
3. Disconnect ECM harness connector.
4. Check harness continuity between ECM terminal and HO2S1 (front) terminal as follows.
   Refer to Wiring Diagram.

DTC	Terminals		Bank
	ECM	Sensor	
P0172	50	2	Bank 1 (Right)
P0175	51	2	Bank 2 (Left)

SEF833Z

Continuity should exist.

5. Check harness continuity between ECM terminal or HO2S1 (front) terminal and ground as follows.
   Refer to Wiring Diagram.

DTC	Terminals		Bank
	ECM or sensor	Ground	
P0172	50 or 2	Ground	Bank 1 (Right)
P0175	51 or 2	Ground	Bank 2 (Left)

SEF834Z

Continuity should not exist.

6. Also check harness for short to power.

OK or NG

OK	▶	GO TO 4.
NG	▶	Repair open circuit or short to ground or short to power in harness or connectors.

4	CHECK FUEL PRESSURE

1. Release fuel pressure to zero.
   Refer to EC-1259.
2. Install fuel pressure gauge and check fuel pressure.

At idling:

When fuel pressure regulator valve vacuum hose is connected.

235 kPa (2.4 kg/cm^2, 34 psi)

When fuel pressure regulator valve vacuum hose is disconnected.

294 kPa (3.0 kg/cm^2, 43 psi)

OK or NG

OK	▶	GO TO 6.
NG	▶	GO TO 5.

5	DETECT MALFUNCTIONING PART	
Check the following. ● Fuel pump and circuit (Refer to EC-1801.) ● Fuel pressure regulator (Refer to EC-1260.)		
	▶	Repair or replace.

6	CHECK MASS AIR FLOW SENSOR	
With CONSULT-II 1. Install all parts removed. 2. Check "MASS AIR FLOW" in "DATA MONITOR" mode with CONSULT-II. **3.3 - 4.8 g·m/sec: at idling** **12.0 - 14.9 g·m/sec: at 2,500 rpm**		
With GST 1. Install all parts removed. 2. Check mass air flow sensor signal in MODE 1 with GST. **3.3 - 4.8 g·m/sec: at idling** **12.0 - 14.9 g·m/sec: at 2,500 rpm**		
OK or NG		
OK	▶	GO TO 7.
NG	▶	Check connectors for rusted terminals or loose connections in the mass air flow sensor circuit or engine grounds. Refer to EC-1360.

Diagnostic Procedure (Cont'd)

7	CHECK FUNCTION OF INJECTORS

With CONSULT-II

1. Start engine.
2. Perform "POWER BALANCE" in "ACTIVE TEST" mode with CONSULT-II.

ACTIVE TEST	
POWER BALANCE	
MONITOR	
ENG SPEED	XXX rpm
MAS AIF SE-B1	XXX V
IACV-AAC/V	XXX step

SEF070Y

3. Make sure that each circuit produces a momentary engine speed drop.

Without CONSULT-II

1. Start engine.
2. Listen to each injector operating sound.

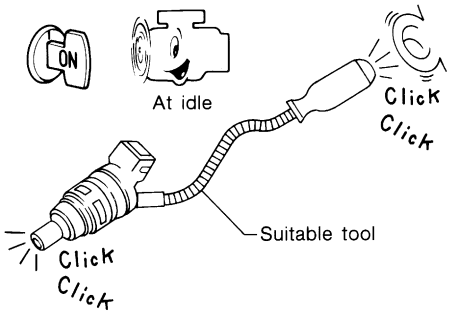

MEC703B

Clicking noise should be heard.

OK or NG

OK	▶	GO TO 8.
NG	▶	Perform trouble diagnosis for "INJECTORS", EC-1793.

8	CHECK INJECTOR

1. Remove injector assembly. Refer to EC-1260.
   Keep fuel hose and all injectors connected to injector gallery.
2. Confirm that the engine is cooled down and there are no fire hazards near the vehicle.
3. Disconnect injector harness connectors left bank (for DTC P0172), right bank (for P0175).
   The injector harness connectors on right bank (for P0172), left bank (for P0175) should remain connected.
4. Disconnect all ignition coil harness connectors.
5. Prepare pans or saucers under each injectors.
6. Crank engine for about 3 seconds.
   Make sure fuel does not drip from injector.

OK or NG

OK (Does not drip)	▶	GO TO 9.
NG (Drips)	▶	Replace the injectors from which fuel is dripping. Always replace O-ring with new one.

9	CHECK INTERMITTENT INCIDENT

Refer to "TROUBLE DIAGNOSIS FOR INTERMITTENT INCIDENT", EC-1353.

▶ **INSPECTION END**

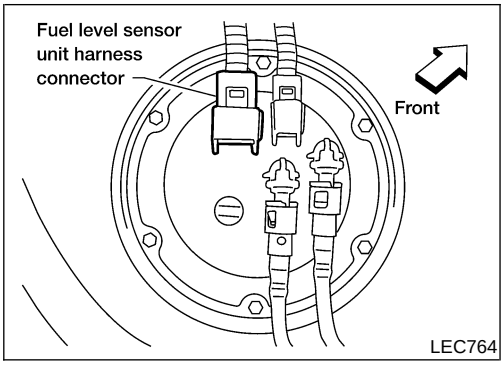

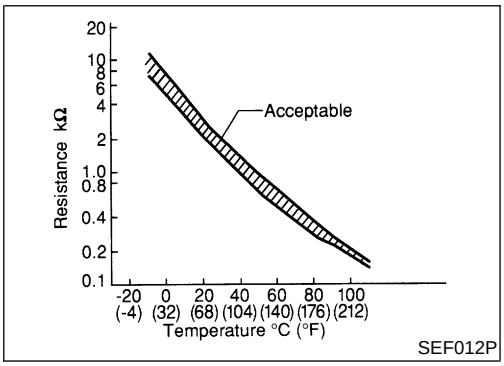

Component Description

NEEC1256

The fuel tank temperature sensor is used to detect the fuel temperature inside the fuel tank. The sensor modifies a voltage signal from the ECM. The modified signal returns to the ECM as the fuel temperature input. The sensor uses a thermistor which is sensitive to the change in temperature. The electrical resistance of the thermistor decreases as temperature increases.

<Reference data>

Fluid temperature °C (°F)	Voltage* (V)	Resistance (kΩ)
20 (68)	3.5	2.3 - 2.7
50 (122)	2.2	0.79 - 0.90

*: These data are reference values and are measured between ECM terminal 60 (Fuel tank temperature sensor) and ground.

CAUTION:

Do not use ECM ground terminals when measuring input/output voltage. Doing so may result in damage to the ECM's transistor. Use a ground other than the ECM terminals, such as the ground.

On Board Diagnosis Logic

NEEC1257

Malfunction is detected when an excessively high or low voltage is sent to ECM, rationally incorrect voltage is sent to ECM, compared with the voltage signals from engine coolant temperature sensor and intake air temperature sensor.

POSSIBLE CAUSE

NEEC1257S01

- Harness or connectors
  (The sensor circuit is open or shorted.)
- Fuel tank temperature sensor

DTC Confirmation Procedure

=NEEC1258

NOTE:
If “DTC Confirmation Procedure” has been previously conducted, always turn ignition switch “OFF” and wait at least 5 seconds before conducting the next test.

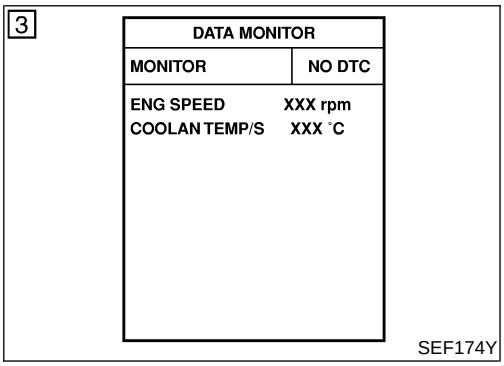

With CONSULT-II

1) Turn ignition switch ON.
2) Select “DATA MONITOR” mode with CONSULT-II.
3) Wait at least 10 seconds.
   If the result is NG, go to “Diagnostic Procedure”, EC-1526.
   If the result is OK, go to following step.
4) Check “COOLAN TEMP/S” value.
   If “COOLAN TEMP/S” is less than 60°C (140°F), the result will be OK.
   If “COOLAN TEMP/S” is above 60°C (140°F), go to the following step.
5) Cool engine down until “COOLAN TEMP/S” is less than 60°C (140°F).
6) Wait at least 10 seconds.
7) If 1st trip DTC is detected, go to “Diagnostic Procedure”, EC-1526.

With GST

Follow the procedure “With CONSULT-II”.

Wiring Diagram

NEEC1259

EC-FTTS-01

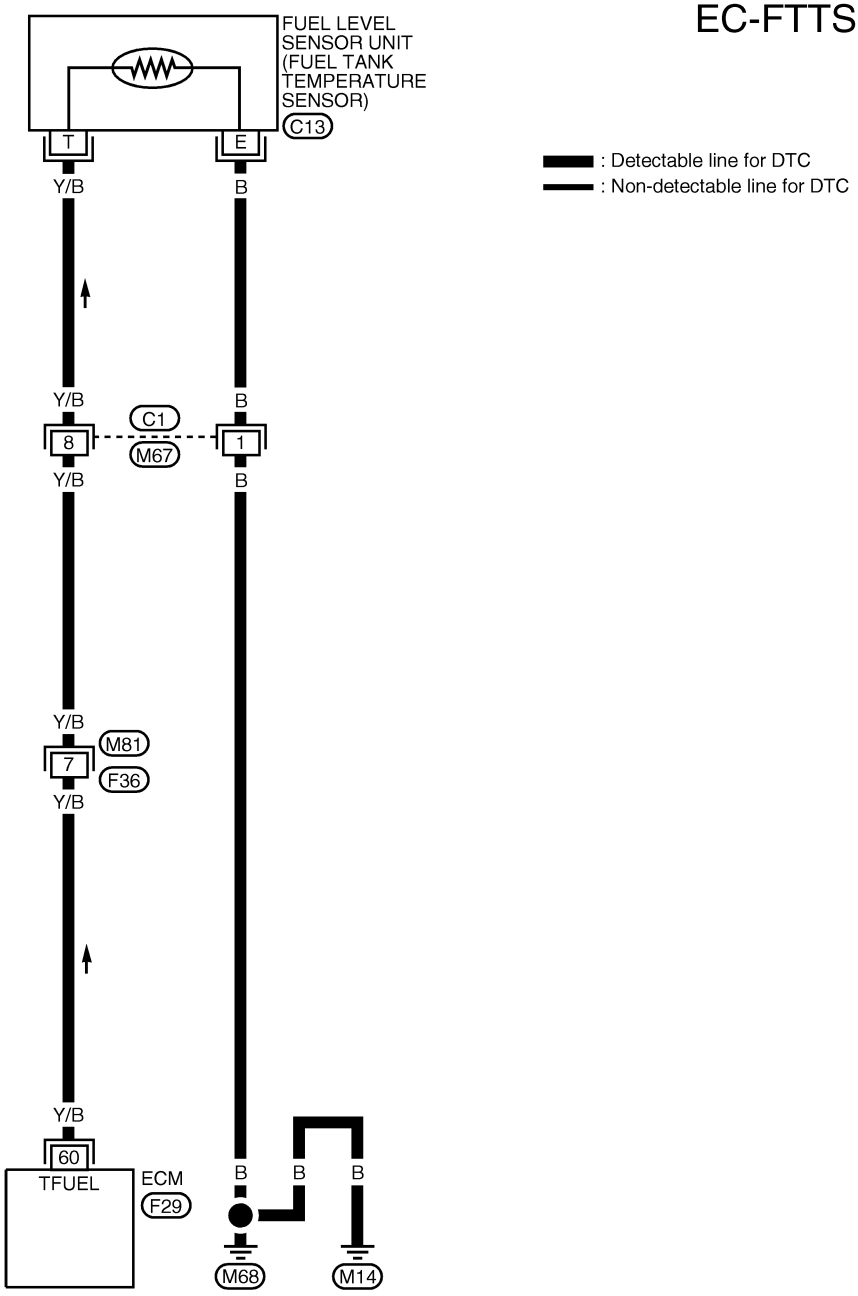

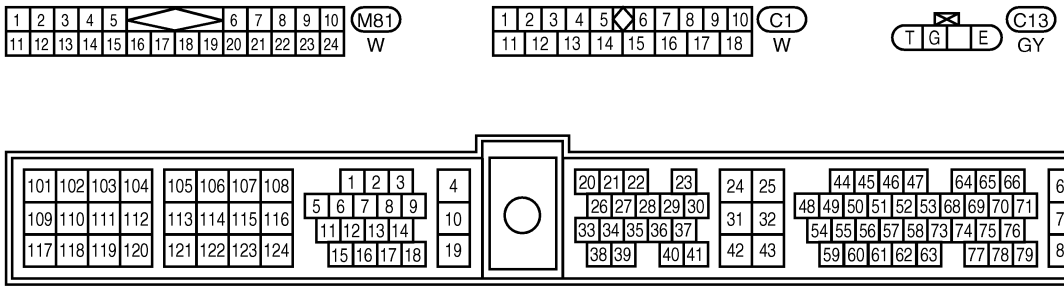

LEC538

Diagnostic Procedure

NEEC1260

1	CHECK FUEL TANK TEMPERATURE SENSOR POWER SUPPLY CIRCUIT

1. Turn ignition switch OFF.
2. Disconnect fuel level sensor unit harness connector.

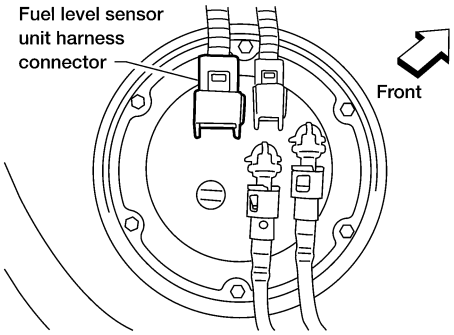

LEC764

3. Turn ignition switch ON.
4. Check voltage between fuel level sensor unit terminal T and ground with CONSULT-II or tester.

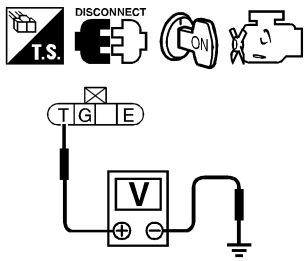

SEC310C

Voltage: Approximately 5V

OK or NG

OK	▶	GO TO 3.
NG	▶	GO TO 2.

2	DETECT MALFUNCTIONING PART

Check the following.
- Harness connectors B101, M67
- Harness connectors M81, F36
- Harness for open or short between ECM and fuel tank temperature sensor

	▶	Repair harness or connector.

3	CHECK FUEL TANK TEMPERATURE SENSOR GROUND CIRCUIT FOR OPEN AND SHORT

1. Turn ignition switch OFF.
2. Check harness continuity between fuel level sensor unit terminal E and body ground. Refer to Wiring Diagram.
   Continuity should exist.
3. Also check harness for short to power.

OK or NG

OK	▶	GO TO 5.
NG	▶	GO TO 4.

4	DETECT MALFUNCTIONING PART
Check harness for open between fuel tank temperature sensor and body ground.	
▶	Repair open circuit or short to power in harness or connectors.

5	CHECK FUEL TANK TEMPERATURE SENSOR

1. Remove fuel level sensor unit.
2. Check resistance fuel level sensor unit terminals T and E by heating with hot water or heat gun as shown in the figure.

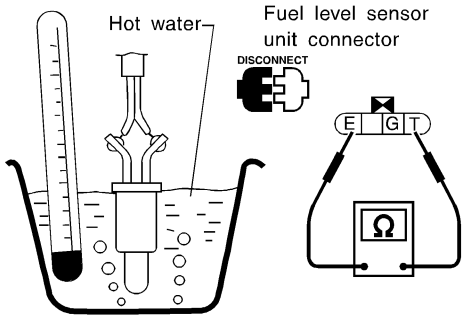

Temperature °C (°F)	Resistance kΩ
20 (68)	2.3 - 2.7
50 (122)	0.79 - 0.90

SEC311C

OK or NG

OK	▶	GO TO 6.
NG	▶	Replace fuel tank temperature sensor.

6	CHECK INTERMITTENT INCIDENT
Refer to "TROUBLE DIAGNOSIS FOR INTERMITTENT INCIDENT", EC-1353.	
▶	**INSPECTION END**

System Description

NEEC1261

COOLING FAN CONTROL

NEEC1261S01

Sensor	Input Signal to ECM	ECM function	Actuator
Vehicle speed sensor	Vehicle speed	Cooling fan control	Cooling fan relay(s)
Engine coolant temperature sensor	Engine coolant temperature		
Ignition switch	Start signal		
Camshaft position sensor	Engine speed		

The ECM controls the cooling fan corresponding to the signals sent from the vehicle speed and engine coolant temperature. The control system has 3-step control [HIGH/LOW/OFF].

OPERATION

NEEC1261S02

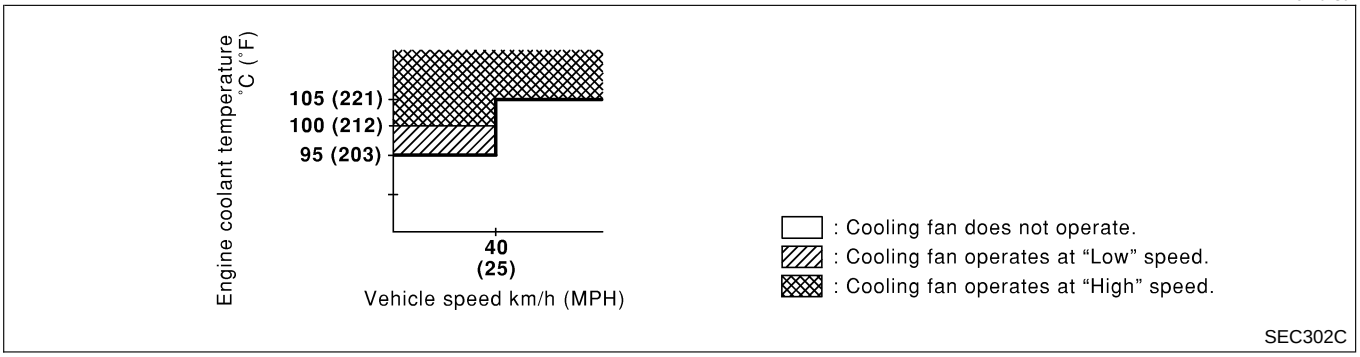

CONSULT-II Reference Value in Data Monitor Mode

NEEC1262

Specification data are reference values.

MONITOR ITEM	CONDITION		SPECIFICATION
COOLING FAN	● Engine: Idling, after warming up ● Air conditioner switch: OFF	Engine coolant temperature is 94°C (201°F) or less.	OFF
		Engine coolant temperature is between 95°C (203°F) and 100°C (212°F).	LOW
		Engine coolant temperature is 100°C (212°F) or more	HIGH

ECM Terminals and Reference Value

NEEC1263

Specification data are reference values and are measured between each terminal and ground.

CAUTION:

Do not use ECM ground terminals when measuring input/output voltage. Doing so may result in damage to the ECM’s transistor. Use a ground other than the ECM terminals, such as the ground.

TERMINAL NO.	WIRE COLOR	ITEM	CONDITION	DATA (DC Voltage)
36	G/R	Cooling fan relay (Low)	**[Engine is running]** ● Cooling fan is not operating	BATTERY VOLTAGE (11 - 14V)
			[Engine is running] ● Cooling fan is operating	0 - 0.6V

TERMINAL NO.	WIRE COLOR	ITEM	CONDITION	DATA (DC Voltage)
38	LG/R	Cooling fan relay (High)	**[Engine is running]** ● Cooling fan is not operating	BATTERY VOLTAGE (11 - 14V)
			[Engine is running] ● Cooling fan (High) is operating	0 - 1V

On Board Diagnosis Logic

NEEC1264

This diagnosis checks whether the engine coolant temperature is extraordinary high, even when the load is not heavy.
When malfunction is detected, the malfunction indicator lamp (MIL) will light up even in the first trip.
Malfunction is detected when engine coolant temperature is excessively high under normal engine speed.

Possible Cause

NEEC1265

- Harness or connectors
  (The cooling fan circuit is open or shorted)
- Cooling fan
- Thermostat
- Improper ignition timing
- Engine coolant temperature sensor
- Blocked radiator
- Blocked front end (Improper fitting of nose mask)
- Crushed vehicle frontal area (Vehicle frontal is collided but not repaired)
- Blocked air passage by improper installation of front fog lamp or fog lamps.
- Improper mixture ratio of coolant
- Damaged bumper

For more information, refer to "MAIN 12 CAUSES OF OVERHEATING", EC-1545.

Overall Function Check

=NEEC1266

Use this procedure to check the overall function of the engine coolant over temperature enrichment protection check, a DTC might not be confirmed.

WARNING:

Never remove the radiator cap when the engine is hot. Serious burns could be caused by high-pressure fluid escaping from the radiator.

Wrap a thick cloth around the cap. Carefully remove the cap by turning it a quarter turn to allow built-up pressure to escape. Then turn the cap all the way off.

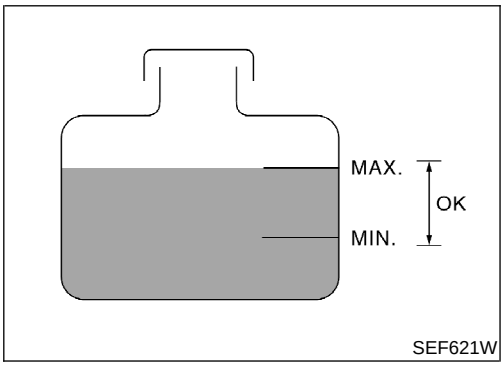

WITH CONSULT-II

NEEC1266S01

1. Check the coolant level and mixture ratio (Using coolant tester) in the reservoir tank and radiator.
   Allow engine to cool before checking coolant level and mixture ratio.

- If the coolant level in the reservoir and/or the radiator is below the proper range, skip following steps and go to “Diagnostic Procedure”, EC-1534.
- If the coolant mixture ratio is out of range between 45 to 55%, replace the coolant. Refer to “Changing Engine Coolant”, ***MA-27***.

a) Fill radiator with coolant up to specified level with a filling speed of 2 liters per minute like pouring coolant by kettle. Be sure to use coolant with the proper mixture ratio. Refer to “Anti-freeze Coolant Mixture Ratio”, ***MA-15***.

b) After refilling coolant, run engine to ensure that no water-flow noise is emitted. After checking or replacing coolant, go to step 3) below.

2. Confirm whether customer filled the engine coolant or not. If customer filled the engine coolant, skip following steps and go to “Diagnostic Procedure”, EC-1534.
3. Turn ignition switch ON.
4. Perform “COOLANT TEMP” in “ACTIVE TEST” mode with CONSULT-II.

- Set “COOLANT TEMP” to 95°C (194°F) and make sure that cooling fan operates. If NG, go to “Diagnostic Procedure”, EC-1534. After repair, go to next step.

5. Check for blocked coolant passage.
   Warm up engine to normal operating temperature, then grasp upper and lower radiator hoses and make sure that coolant flows.
   If NG, go to step 6 of “Diagnostic Procedure”, EC-1534. After repair, go to next step.
   Be extremely careful not to touch any moving or adjacent parts.
6. Check radiator for blocked air passage
   Check for blocked condenser or radiator (condenser or radiator fins damaged, condenser or radiator clogged), after market fog lamps ...etc. Check for condenser or radiator fin damage, shroud damage, vehicle front end for clogging of debris or insects ...etc.
   Check for improper fitting of front end cover, damaged radiator grille or bumper, vehicle frontal area damaged by collision but not repaired.
   If NG, take appropriate action and then go to next step.
7. Check ECT sensor for proper operation. Refer to step 7 of

"Diagnostic Procedure", EC-1534. If NG, replace ECT sensor and go to next step.

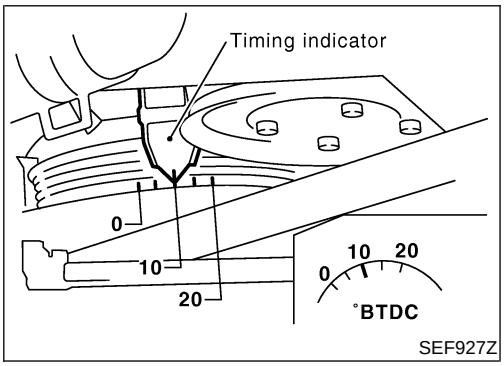

8. Check ignition timing. Refer to "Basic Inspection", EC-1314. Make sure that ignition timing is 10° ± 1° at 700 ± 50 rpm. If NG, adjust ignition timing and then recheck.

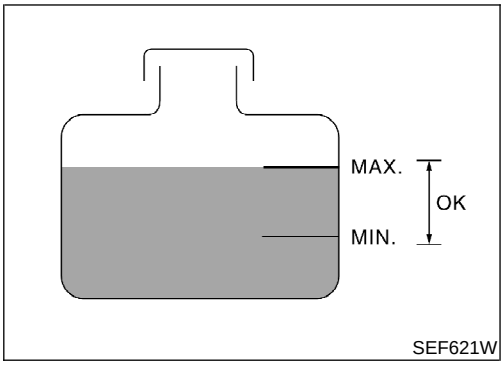

⊗ WITHOUT CONSULT-II

NEEC1266S02

1. Check the coolant level and mixture ratio (Using coolant tester) in the reservoir tank and radiator.
   Allow engine to cool before checking coolant level and mixture ratio.
- If the coolant level in the reservoir and/or radiator is below the proper range, skip the following steps and go to step 3 of "Diagnostic Procedure", EC-1534.
- If the coolant mixture ratio is out of range between 45 to 55%, replace the coolant. Refer to "Changing Engine Coolant", ***MA-27***.

a) Fill radiator with coolant up to specified level with a filling speed of 2 liters per minute like pouring coolant by kettle. Be sure to use coolant with the proper mixture ratio. Refer to "Anti-freeze Coolant Mixture Ratio", ***MA-15***.

b) After refilling coolant, run engine to ensure that no water-flow noise is emitted. After checking or replacing coolant, go to step 3) below.

2. Confirm whether customer filled the engine coolant or not. If customer filled engine coolant, skip following steps and go to "Diagnostic Procedure", EC-1534.
3. Turn ignition switch OFF.
4. Disconnect engine coolant temperature sensor harness connector.

Overall Function Check (Cont'd)

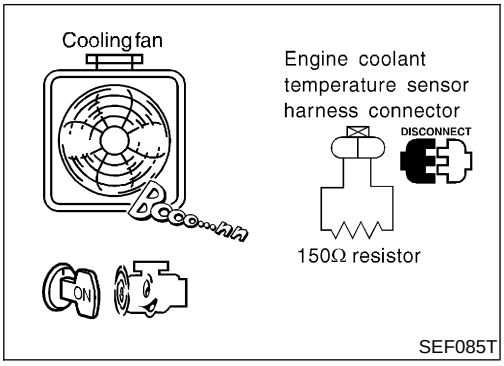

5. Connect 150Ω resistor to engine coolant temperature sensor harness connector.
6. Start engine and make sure that cooling fan operates.
   Be careful not to overheat engine.
   If NG, go to step 9 of "Diagnostic Procedure", EC-1534. After repair, go to next step.
7. Check for blocked coolant passage.
   Warm up engine to normal operating temperature, then grasp upper and lower radiator hoses and make sure that coolant flows.
   If NG, go to step 6 of "Diagnostic Procedure", EC-1534. After repair, go to next step.
   Be extremely careful not to touch any moving or adjacent parts.
8. Check radiator for blocked air passage
   Check for blocked condenser or radiator (condenser or radiator fins damaged, condenser or radiator clogged), after market fog lamps,...etc. Check for condenser or radiator fin damage, shroud damage, vehicle front end for clogging of debris or insects ...etc.
   Check for improper fitting of front end cover, damaged radiator grille or bumper, vehicle frontal area damaged by collision but not repaired.
   If NG, take appropriate action and then go to next step.
9. Check ECT sensor for proper operation. Refer to step 6 of "Diagnostic Procedure", EC-1534. If NG, replace ECT sensor and go to next step.

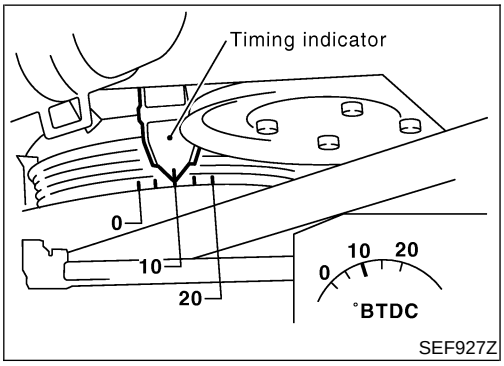

10. Check ignition timing. Refer to "Basic Inspection", EC-1314.
    Make sure that ignition timing is 10° ± 1° at 700 ± 50 rpm.
    If NG, adjust ignition timing and then recheck.

Wiring Diagram

NEEC1267

EC-COOL/F-01

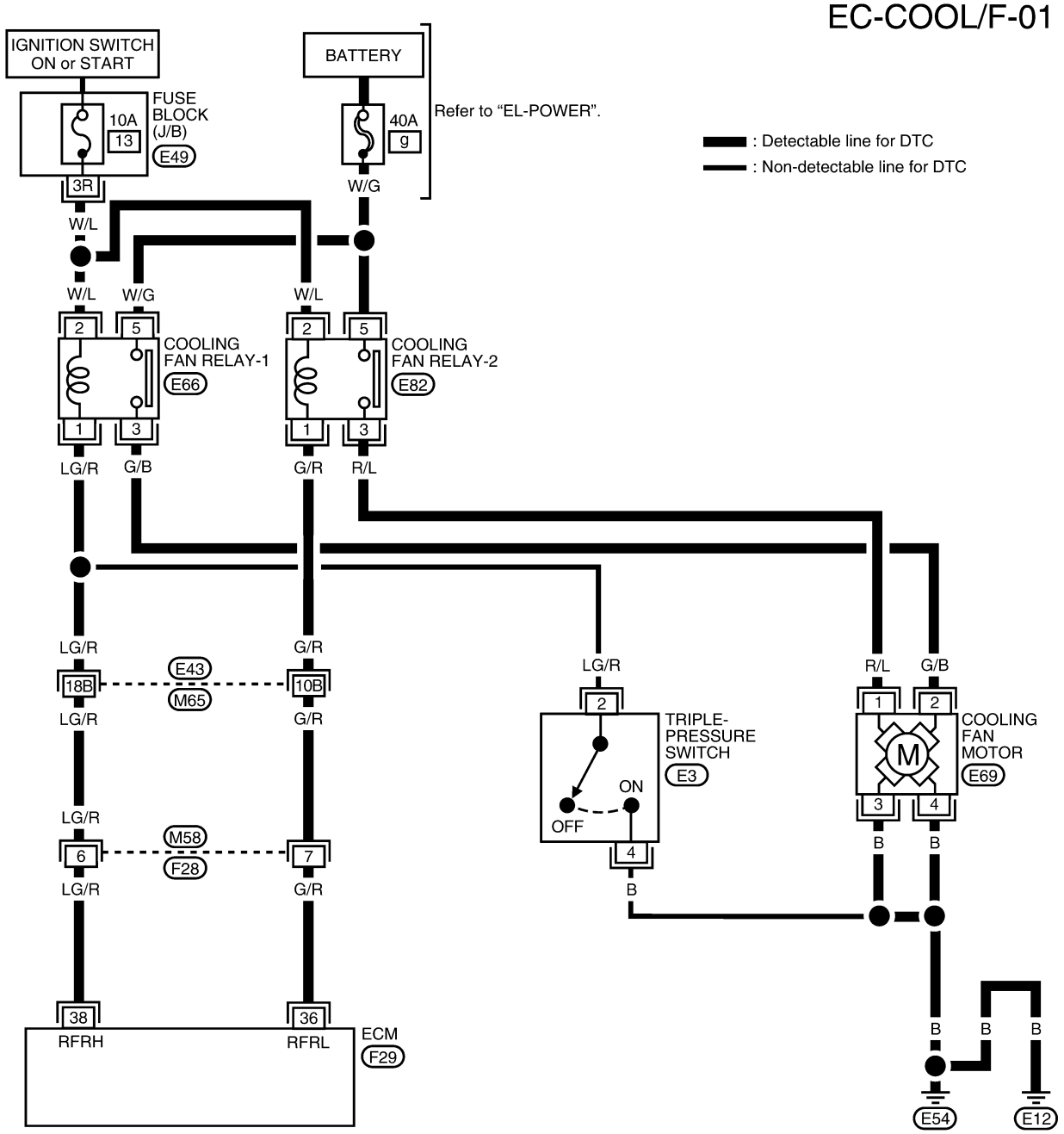

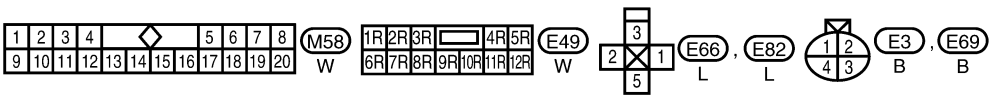

Refer to the following.
M65 , E43 - SUPER MULTIPLE JUNCTION (SMJ)

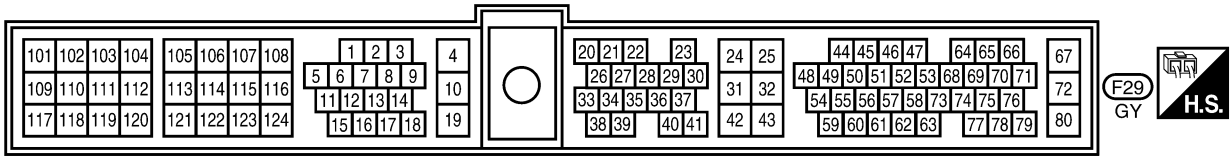

LEC667

Diagnostic Procedure

NEEC1268

1	INSPECTION START
Do you have CONSULT-II?	
Yes or No	
Yes ▶	GO TO 2.
No ▶	GO TO 4.

2	CHECK COOLING FAN LOW SPEED OPERATION

With CONSULT-II

1. Disconnect cooling fan relay-1.

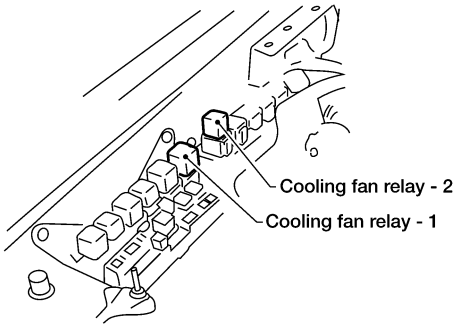

LEC765

2. Turn ignition switch “ON”.
3. Perform “COOLING FAN” in “ACTIVE TEST” mode with CONSULT-II.
4. Touch “LOW”.

ACTIVE TEST	
COOLING FAN	LOW
MONITOR	
COOLAN TEMP/S	XXX °C

SEF784Z

5. Make sure that cooling fan operates at low speed.

OK or NG

OK ▶	GO TO 3.
NG ▶	GO TO 11.

3	CHECK COOLING FAN HIGH SPEED OPERATION

With CONSULT-II

1. Turn ignition switch "OFF".
2. Reconnect cooling fan relay-1.
3. Turn ignition switch "ON".
4. Perform "COOLING FAN" in "ACTIVE TEST" mode with CONSULT-II.
5. Touch "HIGH".

ACTIVE TEST	
COOLING FAN	HIGH
MONITOR	
COOLAN TEMP/S	XXX °C

SEF785Z

6. Make sure that cooling fan operates at higher speed than low speed.

OK or NG

OK	▶	GO TO 6.
NG	▶	GO TO 16.

Diagnostic Procedure (Cont'd)

4	CHECK COOLING FAN LOW SPEED OPERATION

Without CONSULT-II

1. Turn ignition switch OFF.
2. Disconnect cooling fan relay-1.

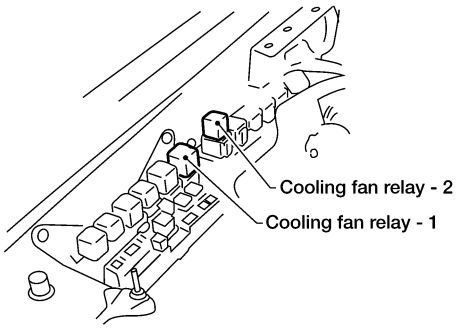

LEC765

3. Disconnect engine coolant temperature sensor harness connector.
4. Connect 150Ω resistor to engine coolant temperature sensor harness connector.
5. Start engine and make sure that cooling fan operate at low speed.

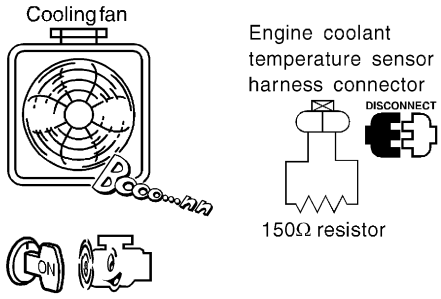

SEF085T

OK or NG

OK	▶	GO TO 5.
NG	▶	GO TO 11.

5	CHECK COOLING FAN HIGH SPEED OPERATION

Without CONSULT-II

1. Turn ignition switch "OFF".
2. Reconnect cooling fan relay-1.
3. Restart engine and make sure that cooling fan operates at higher speed than low speed.

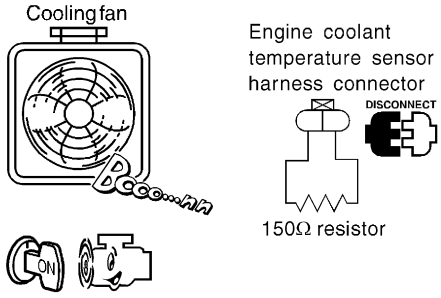

SEF085T

OK or NG

OK	▶	GO TO 6.
NG	▶	GO TO 16.

6	CHECK COOLING SYSTEM FOR LEAK

Apply pressure to the cooling system with a tester, and check if the pressure drops.

CAUTION:

Higher than the specified pressure may cause radiator damage.

Testing pressure: 157 kPa (1.6 kg/cm^2, 23 psi)

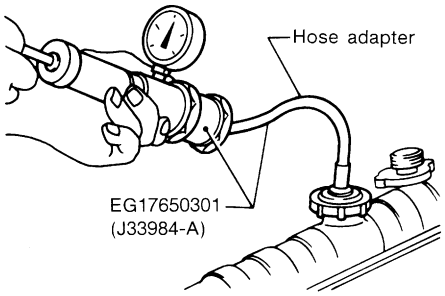

SLC754A

Pressure should not drop.

OK or NG

OK	▶	GO TO 7.
NG	▶	**Check the following for leak:** ● Hose ● Radiator ● Water pump Refer to ***LC-29***, "Water Pump".

7	CHECK RADIATOR CAP

Apply pressure to cap with a tester and check radiator cap relief pressure.

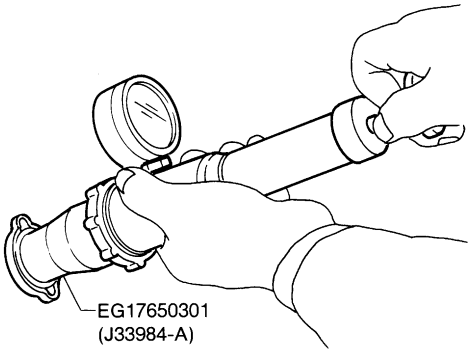

SLC755A

Radiator cap relief pressure:

59 - 98 kPa (0.6 - 1.0 kg/cm^2, 9 - 14 psi)

OK or NG

OK	▶	GO TO 8.
NG	▶	Replace radiator cap.

Diagnostic Procedure (Cont'd)

8	CHECK THERMOSTAT

1. Check valve seating condition at normal room temperatures.
   It should seat tightly.
2. Check valve opening temperature and valve lift.

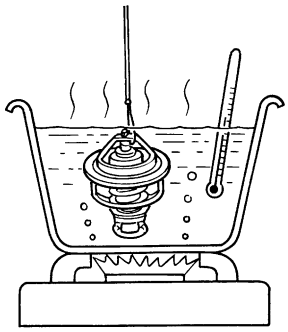

SLC343

Valve opening temperature:
76.5°C (170°F) [standard]
Valve lift:
More than 10 mm/90°C (0.31 in/194°F)

3. Check if valve is closed at 5°C (9°F) below valve opening temperature.

For details, refer to ***LC-30***, "Thermostat".

OK or NG

OK	▶	GO TO 9.
NG	▶	Replace thermostat.

9	CHECK ENGINE COOLANT TEMPERATURE SENSOR

Check resistance as shown in the figure.

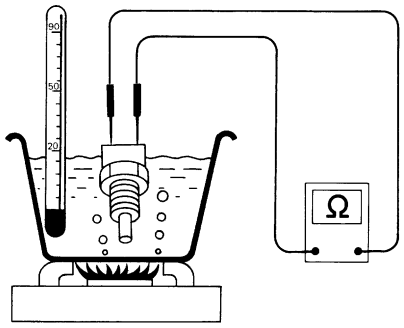

SEF152P

<Reference data>

Temperature °C (°F)	Resistance kΩ
20 (68)	2.1 - 2.9
50 (122)	0.68 - 1.00
90 (194)	0.236 - 0.260

MTBL0229

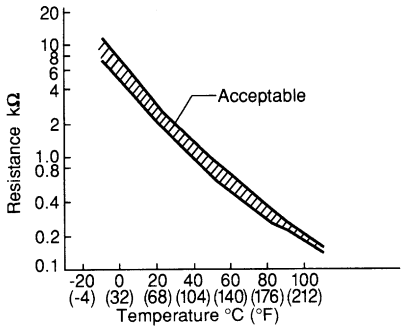

SEF012P

OK or NG

OK	▶	GO TO 10.
NG	▶	Replace engine coolant temperature sensor.

10	CHECK MAIN 12 CAUSES

If the cause cannot be isolated, go to "MAIN 12 CAUSES OF OVERHEATING", EC-1545.

▶ **INSPECTION END**

Diagnostic Procedure (Cont'd)

11	CHECK COOLING FAN RELAY POWER SUPPLY CIRCUIT

1. Turn ignition switch OFF.
2. Disconnect cooling fan relay-2.

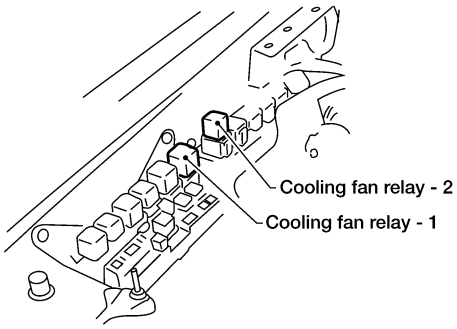

LEC765

3. Turn ignition switch ON.
4. Check voltage between terminals 2, 5 and ground with CONSULT-II or tester.

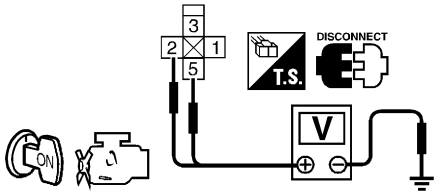

SEF667W

Voltage: Battery voltage

OK or NG

OK	▶	GO TO 13.
NG	▶	GO TO 12.

12	DETECT MALFUNCTIONING PART

Check the following.
- Fuse block (J/B) connector E49
- 10A fuse
- 40A fusible link
- Harness for open or short between cooling fan relay-2 and fuse
- Harness for open or short between cooling fan relay-2 and battery

	▶	Repair open circuit or short to ground or short to power in harness or connectors.

13	CHECK COOLING FAN MOTOR POWER SUPPLY AND GROUND CIRCUIT FOR OPEN AND SHORT

1. Turn ignition switch OFF.
2. Disconnect cooling fan motor harness connector.

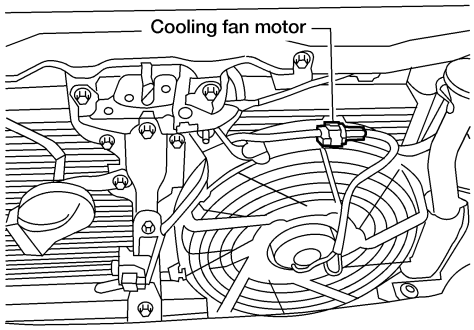

AEC931A

3. Check harness continuity between coolign fan relay-2 terminal 3 and motor terminal 1, motor terminals 3, 4 and body ground. Refer to Wiring Diagram.
   Continuity should exist.
4. Also check harness for short to ground and short to power.

OK or NG

OK	▶	GO TO 14.
NG	▶	Repair open circuit or short to ground or short to power in harness or connectors.

14	CHECK COOLING FAN RELAY OUTPUT SIGNAL CIRCUIT FOR OPEN AND SHORT

1. Disconnect ECM harness connector.
2. Check harness continuity between ECM terminal 36 and cooling fan relay-2 terminal 1. Refer to Wiring Diagram.
   Continuity should exist.
3. Also check harness for short to ground and short to power.

OK or NG

OK	▶	GO TO 21.
NG	▶	GO TO 15.

15	DETECT MALFUNCTIONING PART

Check the following.
- Harness connectors E43, M65
- Harness connectors M58, F28
- Harness for open or short between cooling fan relay-2 and ECM

	▶	Repair open circuit or short to ground or short to power in harness or connectors.

Diagnostic Procedure (Cont'd)

16	CHECK COOLING FAN RELAY POWER SUPPLY CIRCUIT

1. Turn ignition switch "OFF".
2. Disconnect cooling fan relay-1.

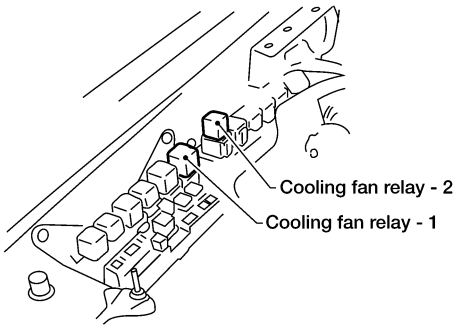

LEC765

3. Turn ignition switch "ON".
4. Check voltage between terminals 2, 5 and ground with CONSULT-II or tester.

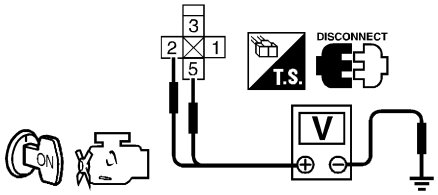

SEF667W

Voltage: Battery voltage

OK or NG

OK	▶	GO TO 18.
NG	▶	GO TO 17.

17	DETECT MALFUNCTIONING PART

Check the following.
- Fuse block (J/B) connector E49
- 10A fuse
- 40A fusible link
- Harness for open or short between cooling fan relay-1 and fuse
- Harness for open or short between cooling fan relay-1 and battery

	▶	Repair open circuit or short to ground or short to power in harness or connectors.

18	CHECK COOLING FAN MOTOR POWER SUPPLY AND GROUND CIRCUIT FOR OPEN AND SHORT

1. Turn ignition switch "OFF".
2. Disconnect cooling fan motor harness connector.

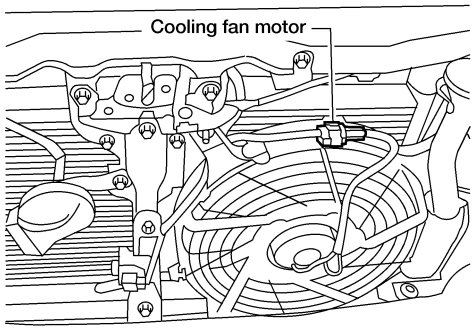

AEC931A

3. Check harness continuity between cooling fan relay-1 terminal 3 and motor terminal 2, motor terminals 3, 4 and body ground. Refer to Wiring Diagram.
   Continuity should exist.
4. Also check harness for short to ground and short to power.

OK or NG

OK	▶	GO TO 19.
NG	▶	Repair open circuit or short to ground or short to power in harness or connectors.

19	CHECK COOLING FAN RELAY OUTPUT SIGNAL CIRCUIT FOR OPEN AND SHORT

1. Disconnect ECM harness connector.
2. Check harness continuity between ECM terminal 38 and cooling fan relay-1 terminal 1. Refer to Wiring Diagram.
   Continuity should exist.
3. Also check harness for short to ground and short to power.

OK or NG

OK	▶	GO TO 21.
NG	▶	GO TO 20.

20	DETECT MALFUNCTIONING PART

Check the following.
- Harness connectors E43, M65
- Harness connectors M58, F28
- Harness for open or short between cooling fan relay-1 and ECM

	▶	Repair open circuit or short to ground or short to power in harness or connectors.

Diagnostic Procedure (Cont'd)

21	CHECK COOLING FAN RELAY

Check continuity between terminals 3 and 5.

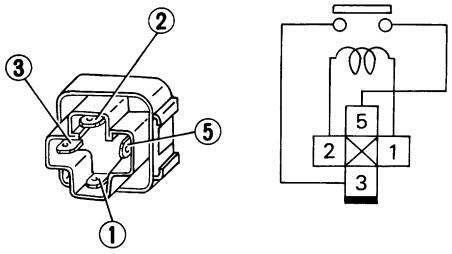

SEF511P

Conditions	Continuity
12V direct current supply between terminals 1 and 2	Yes
No current supply	No

MTBL0252

OK or NG

OK	▶	GO TO 22.
NG	▶	Replace cooling fan relay.

22	CHECK COOLING FAN MOTOR

1. Disconnect cooling fan motor harness connector.
2. Supply cooling fan motor terminals with battery voltage and check operation.

	Speed	Terminals (+)	Terminals (–)
Cooling fan motor	Low	1	3
	High	1, 2	3, 4

MTBL0631

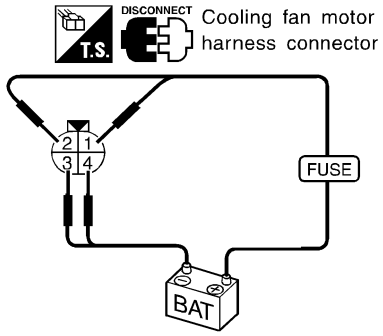

SEC303C

OK or NG

OK	▶	GO TO 23.
NG	▶	Replace cooling fan motor.

23	CHECK INTERMITTENT INCIDENT

Perform "TROUBLE DIAGNOSIS FOR INTERMITTENT INCIDENT", EC-1353.

▶ **INSPECTION END**

Main 12 Causes of Overheating

NEEC1269

Engine	Step	Inspection item	Equipment	Standard	Reference page
OFF	1	• Blocked radiator • Blocked condenser • Blocked radiator grille • Blocked bumper	• Visual	No blocking	—
	2	• Coolant mixture	• Coolant tester	50 - 50% coolant mixture	See “RECOMMENDED FLUIDS AND LUBRICANTS” in ***MA-13***.
	3	• Coolant level	• Visual	Coolant up to MAX level in reservoir tank and radiator filler neck	See “Changing Engine Coolant”, “ENGINE MAINTENANCE” in ***MA-27***.
	4	• Radiator cap	• Pressure tester	59 - 98 kPa (0.6 - 1.0 kg/cm^2, 9 - 14 psi) (Limit)	See “System Check” in ***LC-27***.
ON*2	5	• Coolant leaks	• Visual	No leaks	See “System Check” in ***LC-27***.
ON*2	6	• Thermostat	• Touch the upper and lower radiator hoses	Both hoses should be hot	See “Thermostat” and “Radiator” in ***LC-30***, ***LC-32***.
ON*1	7	• Cooling fan	• CONSULT-II	Operating	See “TROUBLE DIAGNOSIS FOR OVERHEAT” (EC-1670).
OFF	8	• Combustion gas leak	• Color checker chemical tester 4 Gas analyzer	Negative	—
ON*3	9	• Coolant temperature gauge	• Visual	Gauge less than 3/4 when driving	—
		• Coolant overflow to reservoir tank	• Visual	No overflow during driving and idling	See “Changing Engine Coolant”, “ENGINE MAINTENANCE” in ***MA-27***.
OFF*4	10	• Coolant return from reservoir tank to radiator	• Visual	Should be initial level in reservoir tank	See “ENGINE MAINTENANCE” in ***MA-27***.
OFF	11	• Cylinder head	• Straight gauge feeler gauge	0.1 mm (0.004 in) Maximum distortion (warping)	See “Inspection”, “CYLINDER HEAD” in ***EM-96***.
	12	• Cylinder block and pistons	• Visual	No scuffing on cylinder walls or piston	See “Inspection”, “CYLINDER BLOCK” in ***EM-116***.

*1: Turn the ignition switch ON.
*2: Engine running at 3,000 rpm for 10 minutes.
*3: Drive at 90 km/h (55 MPH) for 30 minutes and then let idle for 10 minutes.
*4: After 60 minutes of cool down time.
For more information, refer to “OVERHEATING CAUSE ANALYSIS”, ***LC-35***.

On Board Diagnosis Logic

NEEC1270

When a misfire occurs, engine speed will fluctuate. If the engine speed fluctuates enough to cause the CKP sensor signal to vary, ECM can determine that a misfire is occurring.

Sensor	Input Signal to ECM	ECM function
Crankshaft position sensor (OBD)	Engine speed	On board diagnosis of misfire

The misfire detection logic consists of the following two conditions.

1. One Trip Detection Logic (Three Way Catalyst Damage)
   On the first trip that a misfire condition occurs that can damage the three way catalyst (TWC) due to overheating, the MIL will blink.
   When a misfire condition occurs, the ECM monitors the CKP sensor signal every 200 engine revolutions for a change.
   When the misfire condition decreases to a level that will not damage the TWC, the MIL will turn off. If another misfire condition occurs that can damage the TWC on a second trip, the MIL will blink. When the misfire condition decreases to a level that will not damage the TWC, the MIL will remain on. If another misfire condition occurs that can damage the TWC, the MIL will begin to blink again.
2. Two Trip Detection Logic (Exhaust quality deterioration)
   For misfire conditions that will not damage the TWC (but will affect vehicle emissions), the MIL will only light when the misfire is detected on a second trip. During this condition, the ECM monitors the CKP sensor signal every 1,000 engine revolutions.
   A misfire malfunction can be detected on any one cylinder or on multiple cylinders.

Malfunction is detected when multiple cylinders misfire, No. 1 cylinder misfires, No. 2 cylinder misfires, No. 3 cylinder misfires, No. 4 cylinder misfires, No. 5 cylinder misfires and No. 6 cylinder misfires.

POSSIBLE CAUSE

NEEC1270S01

- Improper spark plug
- Insufficient compression
- Incorrect fuel pressure
- The injector circuit is open or shorted
- Injectors
- Intake air leak
- The ignition secondary circuit is open or shorted
- Lack of fuel
- Drive plate or flywheel
- Heated oxygen sensor 1 (front)
- Incorrect distributor rotor

4

DATA MONITOR	
MONITOR	NO DTC
ENG SPEED	XXX rpm
COOLAN TEMP/S	XXX °C
VHCL SPEED SE	XXX km/h
P/N POSI SW	OFF
B/FUEL SCHDL	XXX msec

SEF213Y

DTC Confirmation Procedure

=NEEC1271

CAUTION:

Always drive vehicle at a safe speed.

NOTE:

If "DTC Confirmation Procedure" has been previously conducted, always turn ignition switch OFF and wait at least 5 seconds before conducting the next test.

With CONSULT-II

1) Turn ignition switch ON, and select "DATA MONITOR" mode with CONSULT-II.
2) Start engine and warm it up to normal operating temperature.
3) Turn ignition switch OFF and wait at least 5 seconds.
4) Start engine again and drive at 1,500 to 3,000 rpm for at least 3 minutes.
   Hold the accelerator pedal as steady as possible.

NOTE:

Refer to the freeze frame data for the test driving conditions.

5) If 1st trip DTC is detected, go to "Diagnostic Procedure", EC-1547.

With GST

Follow the procedure "With CONSULT-II".

Diagnostic Procedure

NEEC1272

1	CHECK FOR INTAKE AIR LEAK	
1. Start engine and run it at idle speed. 2. Listen for the sound of the intake air leak.		
OK or NG		
OK	▶	GO TO 2.
NG	▶	Discover air leak location and repair.

2	CHECK FOR EXHAUST SYSTEM CLOGGING	
Stop engine and visually check exhaust tube, three way catalyst and muffler for dents.		
OK or NG		
OK	▶	GO TO 3.
NG	▶	Repair or replace it.

3	PERFORM POWER BALANCE TEST

With CONSULT-II

1. Perform "POWER BALANCE" in "ACTIVE TEST" mode.

ACTIVE TEST	
POWER BALANCE	
MONITOR	
ENG SPEED	XXX rpm
MAS AIF SE-B1	XXX V
IACV-AAC/V	XXX step

SEF070Y

2. Is there any cylinder which does not produce a momentary engine speed drop?

Without CONSULT-II

When disconnecting each injector harness connector one at a time, is there any cylinder which does not produce a momentary engine speed drop?

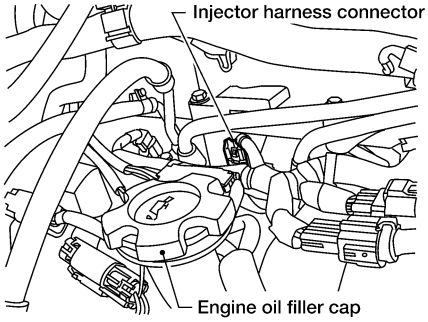

LEC809

Yes or No

Yes	▶	GO TO 4.
No	▶	GO TO 7.

4	CHECK INJECTOR

Does each injector make an operating sound at idle?

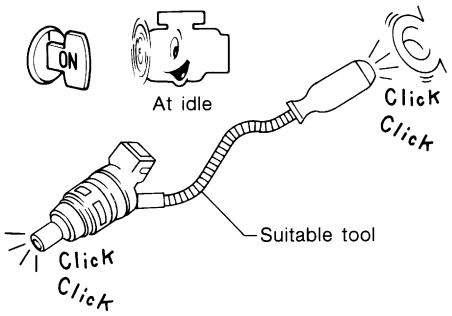

MEC703B

Yes or No

Yes	▶	GO TO 5.
No	▶	Check injector(s) and circuit(s). Refer to EC-1793.

5 **CHECK IGNITION SPARK**

1. Disconnect ignition wire from spark plug.
2. Connect a known good spark plug to the ignition wire.
3. Place end of spark plug against a suitable ground and crank engine.
4. Check for spark.

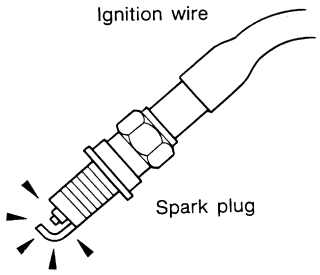

SEF282G

OK or NG

OK	▶	GO TO 7.
NG	▶	GO TO 6.

6 **CHECK IGNITION WIRES**

1. Inspect wires for cracks, damage, burned terminals and for improper fit.
2. Measure the resistance of wires to their distributor cap terminal. Move each wire while testing to check for intermittent breaks.

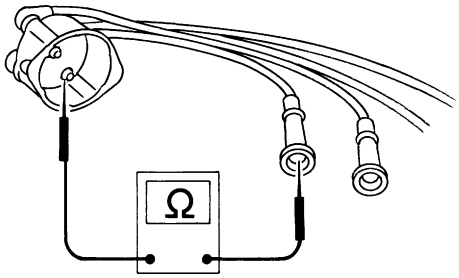

SEF174P

Resistance:

Cylinder No.	Resistance kΩ [at 25°C (77°F)]
1	Approximately 6.5
2	Approximately 10.0
3	Approximately 8.5
4	Approximately 12.5
5	Approximately 8.5
6	Approximately 11.0

MTBL0235

If the resistance exceeds the above specification, inspect ignition wire to distributor cap connection. Clean connection or replace the ignition wire with a new one.

OK or NG

OK	▶	**Check the following:** ● Distributor rotor head for incorrect parts ● Ignition coil, power transistor and their circuits Refer to EC-1786.
NG	▶	Replace.

Diagnostic Procedure (Cont'd)

7	CHECK SPARK PLUGS

Remove the spark plugs and check for fouling, etc.

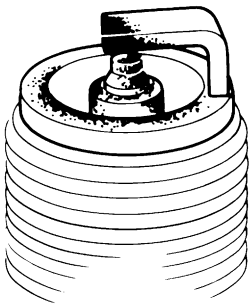

SEF156I

OK or NG

OK	▶	GO TO 8.
NG	▶	Repair or replace spark plug(s) with standard type one(s). For spark plug type, refer to "ENGINE MAINTENANCE", ***MA-32***.

8	CHECK COMPRESSION PRESSURE

Refer to ***EM-78***.

- Check compression pressure.

Standard:
1,196 kPa (12.2 kg/cm^2, 173 psi)/300 rpm
Minimum:
883 kPa (9.0 kg/cm^2, 128 psi)/300 rpm
Difference between each cylinder:
98 kPa (1.0 kg/cm^2, 14 psi)/300 rpm

OK or NG

OK	▶	GO TO 9.
NG	▶	Check pistons, piston rings, valves, valve seats and cylinder head gaskets.

9	CHECK FUEL PRESSURE

1. Install any parts removed.
2. Release fuel pressure to zero.
   Refer to EC-1259.
3. Install fuel pressure gauge and check fuel pressure.

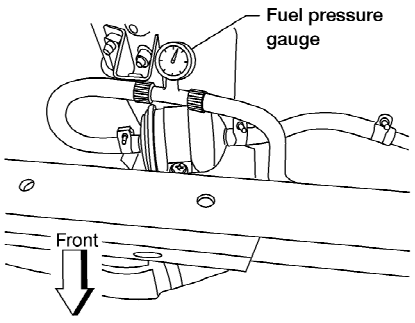

AEC064B

At idle:
Approx. 235 kPa (2.4 kg/cm^2, 34 psi)

OK or NG

OK	▶	GO TO 11.
NG	▶	GO TO 10.

10	DETECT MALFUNCTIONING PART
Check the following. ● Fuel pump and circuit (Refer to EC-1801.) ● Fuel pressure regulator (Refer to EC-1260.) ● Fuel lines (Refer to "ENGINE MAINTENANCE", ***MA-29***.) ● Fuel filter for clogging	
▶	Repair or replace.

11	CHECK IGNITION TIMING

Check the following items. Refer to "Basic Inspection", EC-1314.

Items	Specifications
Ignition timing	10° ± 2° BTDC
Base idle speed	700 ± 50 rpm (in "P" or "N" position)
Closed throttle position switch idle position adjustment	Feeler gauge thickness and switch condition 0.3 mm (0.012 in): ON 0.4 mm (0.016 in): OFF
Target idle speed	750 ± 50 rpm (in "P" or "N" position)

MTBL0576

OK or NG

OK (With CONSULT-II) ▶	GO TO 12.
OK (Without CONSULT-II) ▶	GO TO 13.
NG ▶	Adjust ignition timing.

12	CHECK HEATED OXYGEN SENSOR 1 (FRONT)

With CONSULT-II

1. Start engine and warm it up to normal operating temperature.
2. Select "MANU TRIG" and "HI SPEED" in "DATA MONITOR" mode with CONSULT-II, and select "HO2S1 (B1)/(B2)" and "HO2S1 MNTR (B1)/(B2)".
3. Hold engine speed at 2,000 rpm under no load during the following steps.
4. Touch "RECORD" on CONSULT-II screen.

DATA MONITOR	
MONITOR	NO DTC
ENG SPEED	XXX rpm
COOLAN TEMP/S	XXX °C
HO2S1 (B1)	XXX V
HO2S2 (B2)	XXX V

SEF967Y

5. Check the following.

- "HO2S1 MNTR (B1)/(B2)" in "DATA MONITOR" mode changes from "RICH" to "LEAN" to "RICH" 5 times in 10 seconds. 5 times (cycles) are counted as shown left:

Bank 1

cycle	1	2	3	4	5
HO2S1 MNTR (B1)	R-L	R-L	R-L	R-L	R-L

Bank 2

cycle	1	2	3	4	5
HO2S1 MNTR (B2)	R-L	R-L	R-L	R-L	R-L

R means HO2S1 MNTR (B1)/(B2) indicates RICH

L means HO2S1 MNTR (B1)/(B2) indicates LEAN

SEF647Y

- "HO2S1 (B1)/(B2)" voltage goes above 0.6V at least once.
- "HO2S1 (B1)/(B2)" voltage goes below 0.3V at least once.
- "HO2S1 (B1)/(B2)" voltage never exceeds 1.0V.

Trigger	ENG SPEED	HO2S1 (B1)
	rpm	V
XXX	XXX	XXX
XXX	XXX	XXX
XXX	XXX	XXX
XXX	XXX	XXX
XXX	XXX	XXX
XXX	XXX	XXX
XXX	XXX	XXX
XXX	XXX	XXX
XXX	XXX	XXX
XXX	XXX	XXX
XXX	XXX	XXX
XXX	XXX	XXX
XXX	XXX	XXX

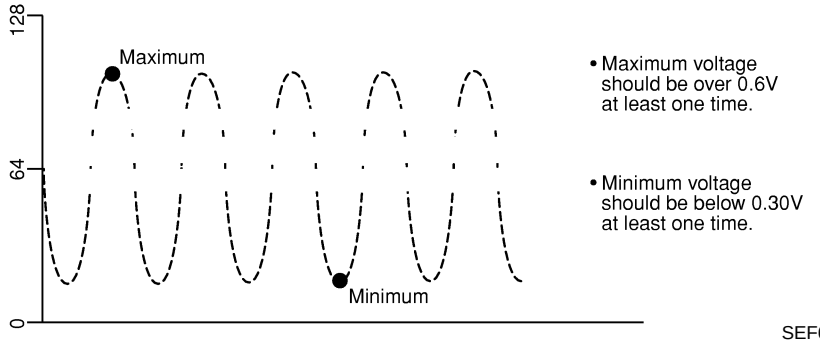

SEF648Y

CAUTION:

- **Discard any heated oxygen sensor which has been dropped from a height of more than 0.5 m (19.7 in) onto a hard surface such as a concrete floor; use a new one.**
- **Before installing new oxygen sensor, clean exhaust system threads using Oxygen Sensor Thread Cleaner tool J-43897-18 or J-43897-12 and approved anti-seize lubricant.**

OK or NG

OK	▶	GO TO 14.
NG	▶	Replace heated oxygen sensor 1 (front).

13	CHECK FRONT HEATED OXYGEN SENSOR LH/RH

Without CONSULT-II

1. Start engine and warm it up to normal operating temperature.
2. Set voltmeter probes between ECM terminal 50 (right bank sensor signal) or 51 (left bank sensor signal) and engine ground.
3. Check the following with engine speed held at 2,000 rpm constant under no load.

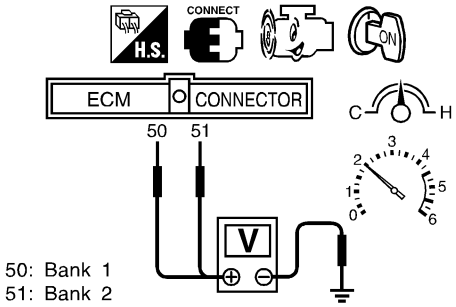

- The voltage fluctuates between 0 to 0.3V and 0.6 to 1.0V more than 5 times within 10 seconds.
- The maximum voltage is over 0.6V at least one time.
- The minimum voltage is below 0.3V at least one time.
- The voltage never exceeds 1.0V.

1 time: 0 - 0.3V → 0.6 - 1.0V → 0 - 0.3V
2 times: 0 - 0.3V → 0.6 - 1.0V → 0 - 0.3V → 0.6 - 1.0V → 0 - 0.3V

SEF796Z

CAUTION:

Discard any heated oxygen sensor which has been dropped from a height of more than 0.5 m (19.7 in) onto a hard surface such as a concrete floor; use a new one.

OK or NG

OK	▶	GO TO 15.
NG	▶	GO TO 14.

14	REPLACE HEATED OXYGEN SENSOR 2 (REAR)

1. Stop vehicle and turn ignitioin switch OFF.
2. Check heated oxygen sensor 2 (rear) harness protector color.

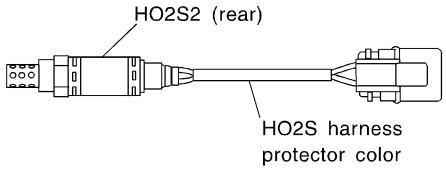

HO2S2 (rear) (bank 1): Gray
HO2S2 (rear) (bank 2): Red Brown

SEC301C

CAUTION:

Before installing new oxygen sensor, clean exhaust system threads using Oxygen Sensor Thread Cleaner tool J-43897-18 or J-43897-12 and approved anti-seize lubricant.

	▶	Replace malfunctioning heated oxygen sensor 2 (rear).

Diagnostic Procedure (Cont'd)

15	CHECK MASS AIR FLOW SENSOR
With CONSULT-II Check mass air flow sensor signal in "DATA MONITOR" mode with CONSULT-II. **3.3 - 4.8 g·m/sec: at idling** **12.0 - 14.9 g·m/sec: at 2,500 rpm**	
With GST Check mass air flow sensor signal in MODE 1 with GST. **3.3 - 4.8 g·m/sec: at idling** **12.0 - 14.9 g·m/sec: at 2,500 rpm**	
OK or NG	
OK ▶	GO TO 16.
NG ▶	Check connectors for rusted terminals or loose connections in the mass air flow sensor circuit or engine grounds. Refer to EC-1360.

16	CHECK SYMPTOM MATRIX CHART
Check items on the rough idle symptom in "Symptom Matrix Chart", EC-1331.	
OK or NG	
OK ▶	GO TO 17.
NG ▶	Repair or replace.

17	ERASE THE 1ST TRIP DTC
Some tests may cause a 1st trip DTC to be set. Erase the 1st trip DTC from the ECM memory after performing the tests. Refer to EC-1287.	
▶	GO TO 18.

18	CHECK INTERMITTENT INCIDENT
Refer to "TROUBLE DIAGNOSIS FOR INTERMITTENT INCIDENT", EC-1353.	
▶	**INSPECTION END**

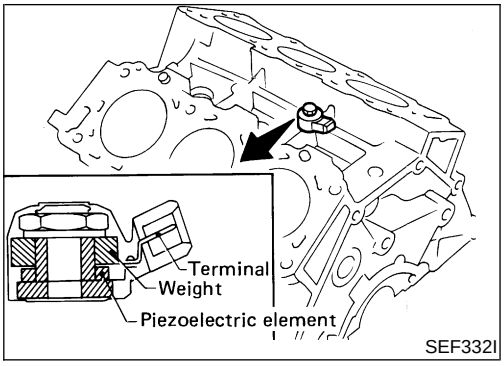

Component Description

NEEC1273

The knock sensor is attached to the cylinder block. It senses engine knocking using a piezoelectric element. A knocking vibration from the cylinder block is sensed as vibrational pressure. This pressure is converted into a voltage signal and sent to the ECM.

Freeze frame data will not be stored in the ECM for the knock sensor. The MIL will not light for knock sensor malfunction. The knock sensor has one trip detection logic.

ECM Terminals and Reference Value

NEEC1274

Specification data are reference values and are measured between each terminal and ground.

CAUTION:

Do not use ECM ground terminals when measuring input/output voltage. Doing so may result in damage to the ECM's transistor. Use a ground other than the ECM terminals, such as the ground.

TERMINAL NO.	WIRE COLOR	ITEM	CONDITION	DATA (DC Voltage)
64	W	Knock sensor	**[Engine is running]** ● Idle speed	Approximately 2.5V

On Board Diagnosis Logic

NEEC1275

Malfunction is detected when an excessively low or high voltage from the knock sensor is sent to ECM.

POSSIBLE CAUSE

NEEC1275S01

- Harness or connectors
  (The knock sensor circuit is open or shorted.)
- Knock sensor

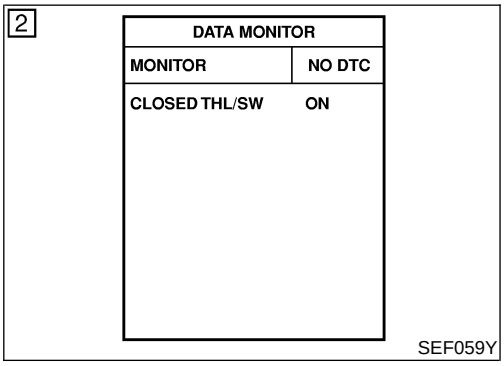

DTC Confirmation Procedure

NEEC1276

NOTE:

If "DTC Confirmation Procedure" has been previously conducted, always turn ignition switch OFF and wait at least 5 seconds before conducting the next test.

TESTING CONDITION:

Before performing the following procedure, confirm that battery voltage is more than 10V at idle.

With CONSULT-II

1) Turn ignition switch ON and select "DATA MONITOR" mode with CONSULT-II.
2) Start engine and run it for at least 5 seconds at idle speed.
3) If DTC is detected, go to "Diagnostic Procedure", EC-1557.

With GST

Follow the procedure "With CONSULT-II".

Wiring Diagram

NEEC1277

EC-KS-01

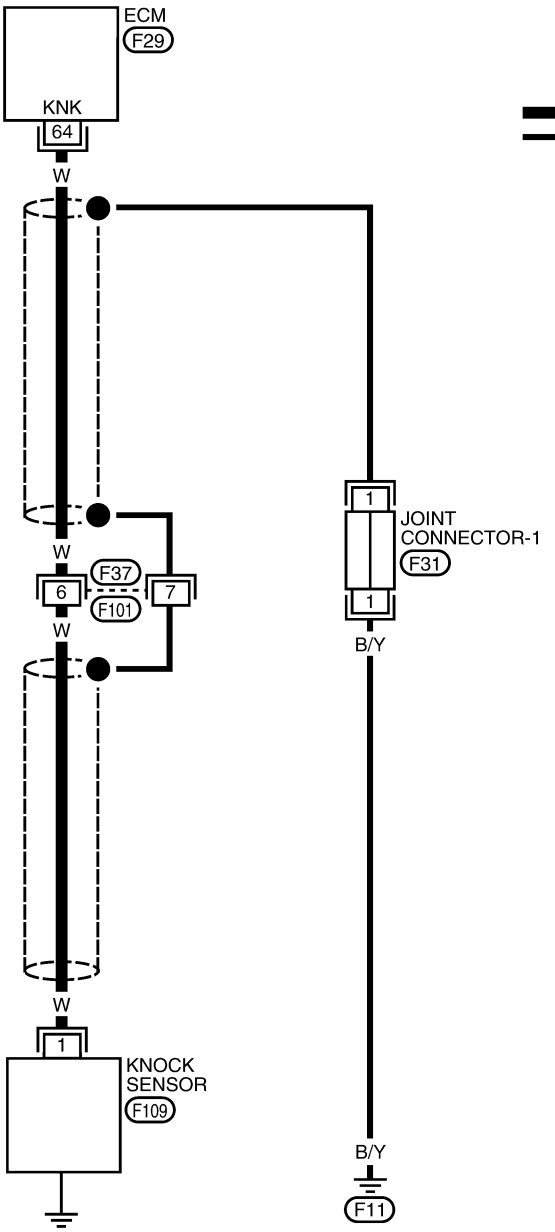

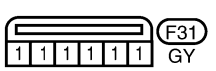

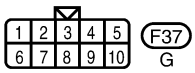

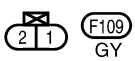

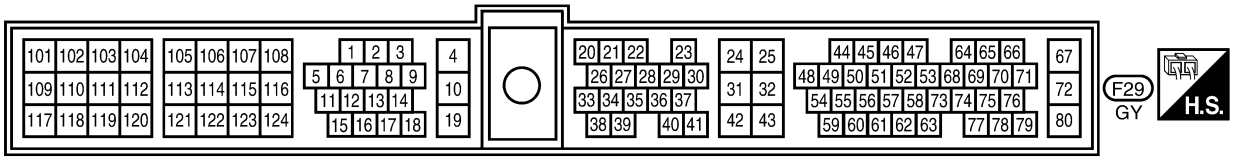

LEC668

Diagnostic Procedure

NEEC1278

1	CHECK KNOCK SENSOR INPUT SIGNAL CIRCUIT FOR OPEN AND SHORT-I

1. Turn ignition switch OFF.
2. Disconnect ECM harness connector.
3. Check resistance between ECM terminal 64 and engine ground.
   NOTE:
   It is necessary to use an ohmmeter which can measure more than 10 MΩ.
   Resistance:
   Approximately 500 - 620 kΩ [at 25°C (77°F)]
4. Also check harness for short to ground and short to power.

OK or NG

OK	▶	GO TO 5.
NG	▶	GO TO 2.

2	CHECK INPUT SIGNAL CIRCUIT-II

1. Disconnect knock sensor harness connector.
2. Check harness continuity between ECM terminal 64 and knock sensor terminal 1. Refer to Wiring Diagram.
   Continuity should exist.
3. Also check harness for short to ground and short to power.

OK or NG

OK	▶	GO TO 4.
NG	▶	GO TO 3.

3	DETECT MALFUNCTIONING PART

Check the following.
- Harness connector F37, F101
- Harness for open or short between ECM and knock sensor

	▶	Repair open circuit or short to ground or short to power in harness or connectors.

4	CHECK KNOCK SENSOR

- Use an ohmmeter which can measure more than 10 MΩ.

1. Disconnect knock sensor harness connector.
2. Check resistance between terminal 1 and ground.

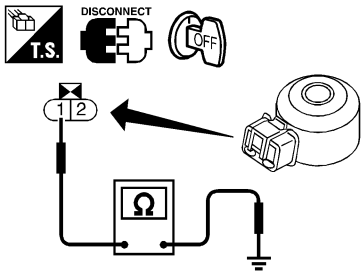

Resistance: 500 - 620 kΩ [at 25°C (77°F)]

SEF799Z

CAUTION:
Do not use any knock sensors that have been dropped or physically damaged. Use only new ones.

OK or NG

OK	▶	GO TO 8.
NG	▶	Replace knock sensor.

Diagnostic Procedure (Cont'd)

5	RETIGHTEN GROUND SCREWS

Loose and retighten engine ground screws.

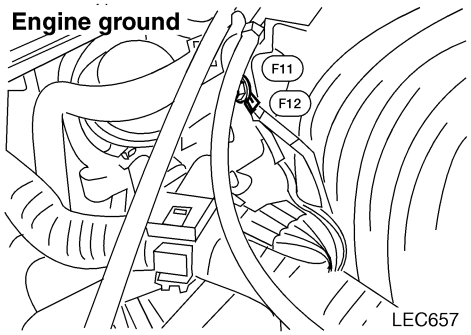

LEC657

	▶	GO TO 6.

6	CHECK KNOCK SENSOR SHIELD CIRCUIT FOR OPEN AND SHORT

1. Disconnect harness connectors F37, F101.
2. Check harness continuity between harness connector F37 terminal 7 and engine ground. Refer to Wiring Diagram.
   Continuity should exist.
3. Also check harness for short to power.

OK or NG

OK	▶	GO TO 8.
NG	▶	GO TO 7.

7	DETECT MALFUNCTIONING PART

Check the following.
- Harness connectors F37, F101
- Joint connectors-1
- Harness for open between harness connector F37 and engine ground

	▶	Repair open circuit or short to power in harness or connectors.

8	CHECK INTERMITTENT INCIDENT

Refer to "TROUBLE DIAGNOSIS FOR INTERMITTENT INCIDENT", EC-1353.

	▶	**INSPECTION END**

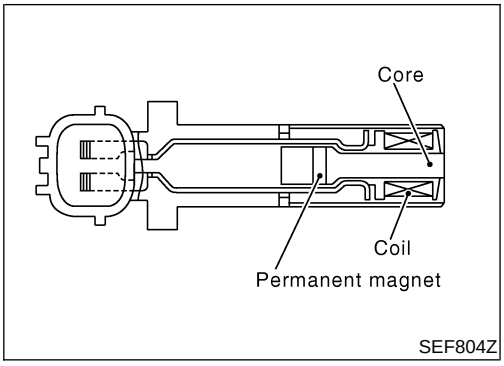

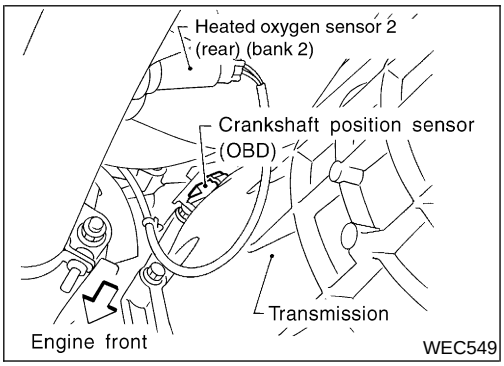

Component Description

NEEC1279

The crankshaft position sensor (OBD) is located on the transaxle housing facing the gear teeth (cogs) of the flywheel or drive plate. It detects the fluctuation of the engine revolution.
The sensor consists of a permanent magnet, core and coil.
When the engine is running, the high and low parts of the teeth cause the gap with the sensor to change.
The changing gap causes the magnetic field near the sensor to change.
Due to the changing magnetic field, the voltage from the sensor changes.
The ECM receives the voltage signal and detects the fluctuation of the engine revolution.
This sensor is not used to control the engine system. It is used only for the on board diagnosis.

ECM Terminals and Reference Value

NEEC1280

Specification data are reference values and are measured between each terminal and ground.

CAUTION:

Do not use ECM ground terminals when measuring input/output voltage. Doing so may result in damage to the ECM's transistor. Use a ground other than the ECM terminals, such as the ground.

TERMINAL NO.	WIRE COLOR	ITEM	CONDITION	DATA (AC Voltage)
47	L	Crankshaft position sensor (OBD)	**[Engine is running]** ● **Warm-up condition** ● Idle speed	1 - 2V (AC range) 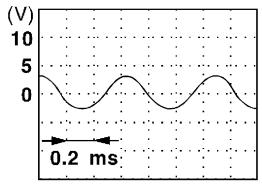 SEF690W
			[Engine is running] ● Engine speed is 2,000 rpm	3 - 4V (AC range) 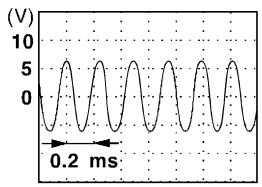 SEF691W

On Board Diagnosis Logic

NEEC1281

Malfunction is detected when the proper pulse signal from the crankshaft position sensor (OBD) is not sent to ECM while the engine is running at the specified engine speed.

POSSIBLE CAUSE

NEEC1281S01

- Harness or connectors
  [The crankshaft position sensor (OBD) circuit is open.]
- Crankshaft position sensor (OBD)

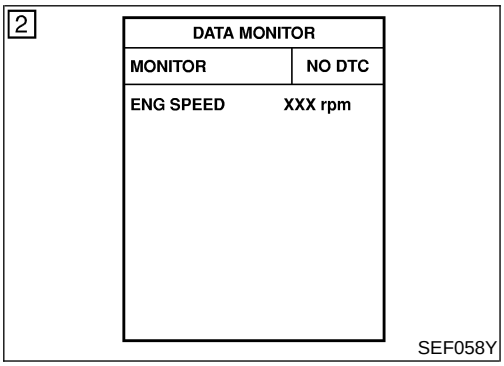

DTC Confirmation Procedure

NEEC1282

NOTE:

If “DTC Confirmation Procedure” has been previously conducted, always turn ignition switch OFF and wait at least 5 seconds before conducting the next test.

With CONSULT-II

1) Turn ignition switch ON and select “DATA MONITOR” mode with CONSULT-II.
2) Start engine and run it for at least 15 seconds at idle speed.
3) If 1st trip DTC is detected, go to “Diagnostic Procedure”, EC-1562.

With GST

Follow the procedure “With CONSULT-II”.

Wiring Diagram

NEEC1283

EC-CKPS-01

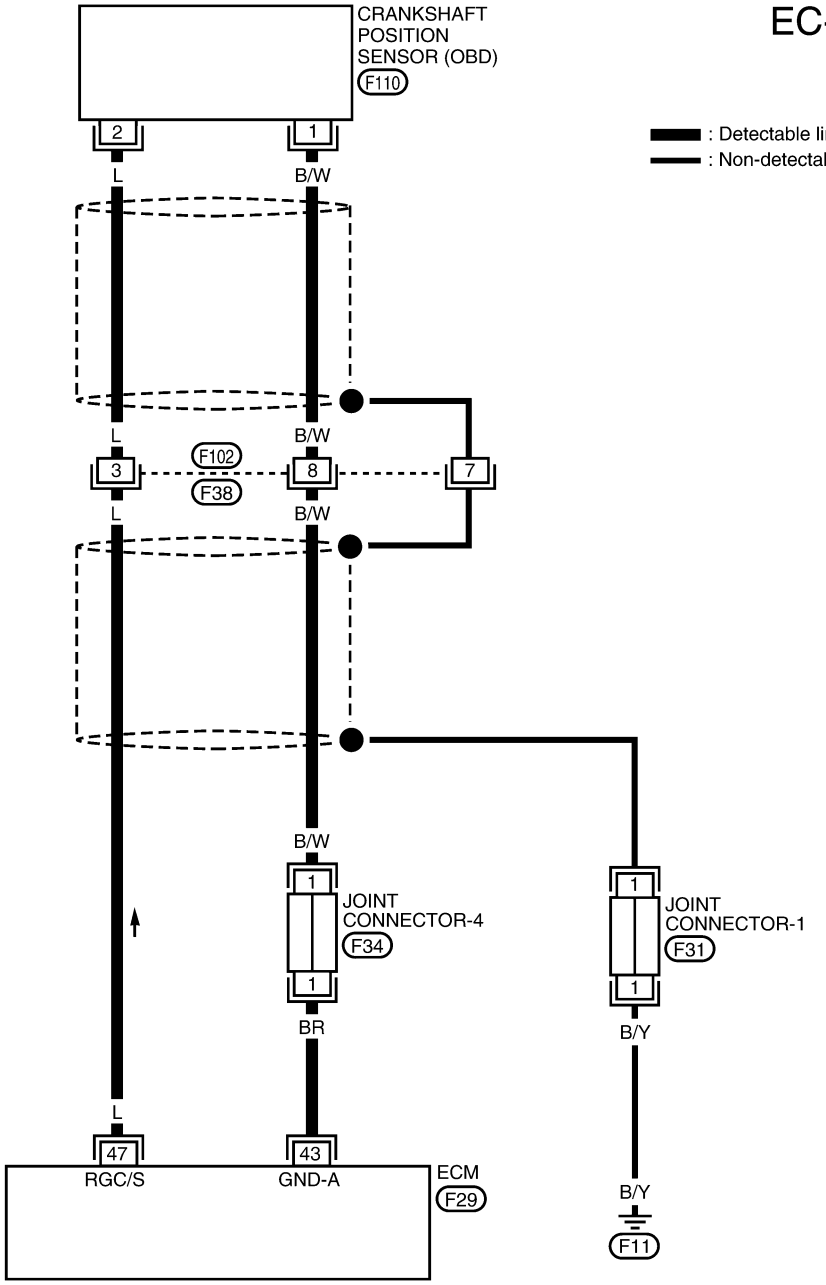

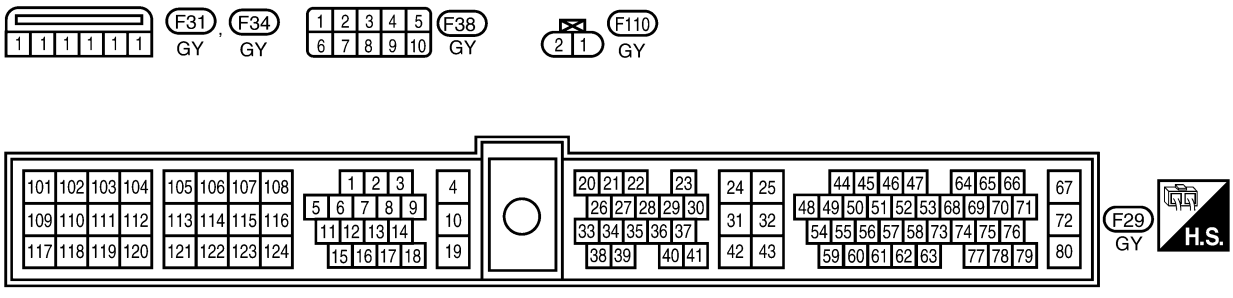

LEC669

Diagnostic Procedure

NEEC1284

1	RETIGHTEN GROUND SCREWS

1. Turn ignition switch OFF.
2. Loosen and retighten engine ground screws.

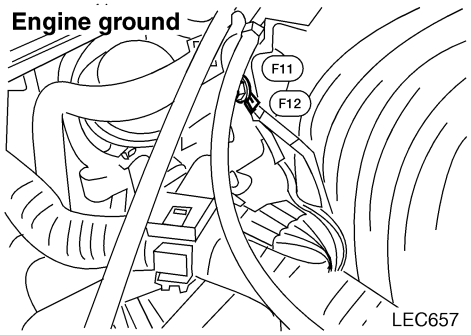

LEC657

▶	GO TO 2.

2	CHECK CKPS (OBD) INPUT SIGNAL CIRCUIT FOR OPEN AND SHORT

1. Disconnect crankshaft position sensor (OBD) and ECM harness connectors.

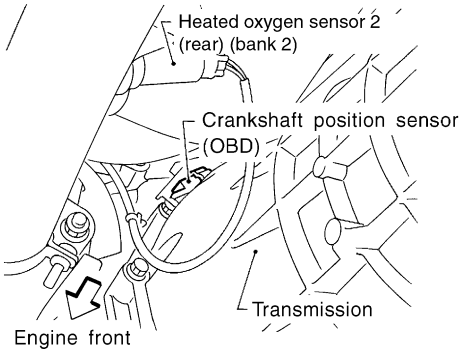

WEC549

2. Check continuity between ECM terminal 47 and sensor terminal 2. Refer to Wiring Diagram.
   Continuity should exist.
3. Also check harness for short to ground and short to power.

OK or NG

OK	▶	GO TO 4.
NG	▶	GO TO 3.

3	DETECT MALFUNCTIONING PART

Check the following.
- Harness connectors F38, F102
- Harness for open or short between ECM and crankshaft position sensor (OBD)

▶	Repair open circuit or short to ground or short to power in harness or connectors.

4	CHECK CKPS (OBD) GROUND CIRCUIT FOR OPEN AND SHORT

1. Reconnect ECM harness connector.
2. Check harness continuity between sensor terminal 1 and engine ground. Refer to Wiring Diagram.
   Continuity should exist.
3. Also check harness for short to power.

OK or NG

OK	▶	GO TO 6.
NG	▶	GO TO 5.

5	DETECT MALFUNCTIONING PART

Check the following.
- Harness connectors F38, F102
- Joint connector-4
- Harness for open or short between crankshaft position sensor (OBD) and ECM

	▶	Repair open circuit or short to power in harness or connectors.

6	CHECK CRANKSHAFT POSITION SENSOR (OBD)

1. Disconnect crankshaft position sensor (OBD) harness connector.
2. Loosen the fixing bolt of the sensor.
3. Remove the sensor.
4. Visually check the sensor for chipping.

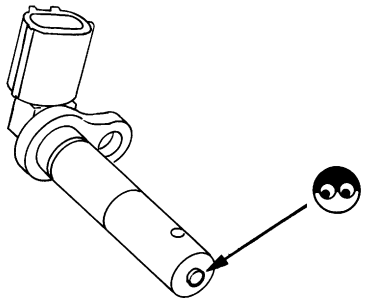

SEF960N

5. Check resistance as shown in the figure.

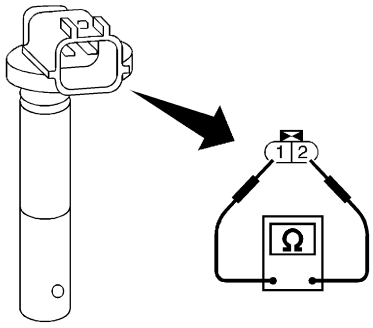

SEF504V

Resistance: Approximately 512 - 632Ω [at 20°C (68°F)]

OK or NG

OK	▶	GO TO 7.
NG	▶	Replace crankshaft position sensor (OBD).

Diagnostic Procedure (Cont'd)

7	CHECK CKPS (OBD) SHIELD CIRCUIT FOR OPEN AND SHORT
1. Disconnect harness connectors F38, F102. 2. Check harness continuity between harness connector F38 terminal 7 and engine ground. Refer to Wiring Diagram. **Continuity should exist.** 3. Also check harness for short to power.	
OK or NG	
OK ▶	GO TO 9.
NG ▶	GO TO 8.

8	DETECT MALFUNCTIONING PART
Check the following. ● Harness connectors F38, F102 ● Joint connector-1 ● Harness for open between harness connector F38 and engine ground	
▶	Repair open circuit or short to power in harness or connectors.

9	CHECK INTERMITTENT INCIDENT
Refer to "TROUBLE DIAGNOSIS FOR INTERMITTENT INCIDENT", EC-1353.	
▶	**INSPECTION END**

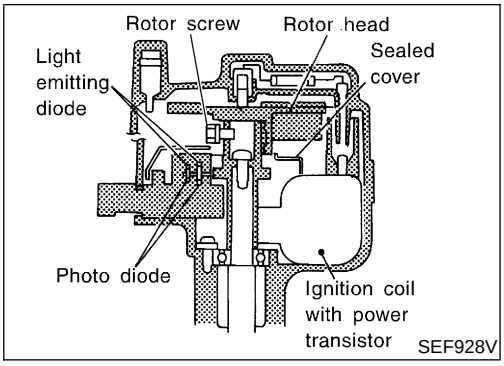

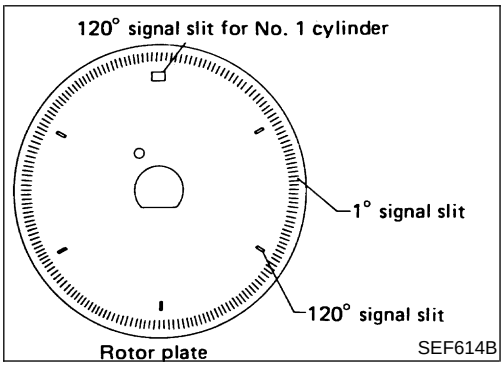

Component Description

NEEC1285

The camshaft position sensor is a basic component of the engine control system. It monitors engine speed and piston position. These input signals to the ECM are used to control fuel injection, ignition timing and other functions.

The camshaft position sensor has a rotor plate and a wave-forming circuit. The rotor plate has 360 slits for a 1° (POS) signal and 6 slits for a 120° (REF) signal. The wave-forming circuit consists of Light Emitting Diodes (LED) and photo diodes.

The rotor plate is positioned between the LED and the photo diode. The LED transmits light to the photo diode. As the rotor plate turns, the slits cut the light to generate rough-shaped pulses. These pulses are converted into on-off signals by the wave-forming circuit and sent to the ECM.

The distributor is not repairable and must be replaced as an assembly except distributor cap and rotor head.

NOTE:

The rotor screw which secures the distributor rotor head to the distributor shaft must be torqued properly.

: 3.6±0.3 N·m (37±3 kg-cm, 32±3 in-lb)

ECM Terminals and Reference Value

NEEC1286

Specification data are reference values and are measured between each terminal and ground.

CAUTION:

Do not use ECM ground terminals when measuring input/output voltage. Doing so may result in damage to the ECM's transistor. Use a ground other than the ECM terminals, such as the ground.

TERMINAL NO.	WIRE COLOR	ITEM	CONDITION	DATA (DC Voltage)
4	OR/B	ECM relay (Self shut-off)	**[Engine is running]** **[Ignition switch OFF]** ● For a few seconds after turning ignition switch OFF	0 - 1.5V
			[Ignition switch OFF] ● A few seconds passed after turning ignition switch OFF	BATTERY VOLTAGE (11 - 14V)
44	PU	Camshaft position sensor (Reference signal)	**[Engine is running]** ● Idle speed	0.3 - 0.5V 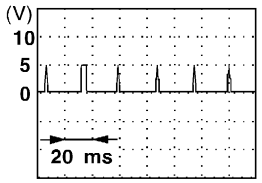 SEF997U
48	PU		**[Engine is running]** ● Engine speed is 2,000 rpm	0.3 - 0.5V 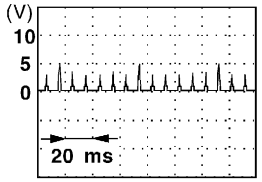 SEF998U

ECM Terminals and Reference Value (Cont'd)

TERMINAL NO.	WIRE COLOR	ITEM	CONDITION	DATA (DC Voltage)
49	LG	Camshaft position sensor (Position signal)	**[Engine is running]** ● **Warm-up condition** ● Idle speed	Approximately 2.5V 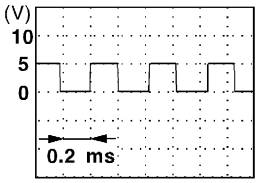 SEF999U
			[Engine is running] ● Engine speed is 2,000 rpm	Approximately 2.5V 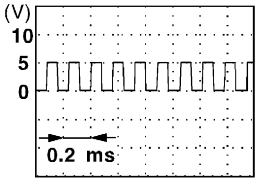 SEF001V
67	B/P	Power supply for ECM	**[Ignition switch ON]**	BATTERY VOLTAGE (11 - 14V)
72	B/P			
117	B/P	Current return	**[Engine is running]** ● Idle speed	BATTERY VOLTAGE (11 - 14V)

On Board Diagnosis Logic

NEEC1287

Malfunction is detected when
(Malfunction A) either 1° or 120° signal is not sent to ECM for the first few seconds during engine cranking,
(Malfunction B) either 1° or 120° signal is not sent to ECM often enough while the engine speed is higher than the specified engine speed,
(Malfunction C) the relation between 1° and 120° signal is not in the normal range during the specified engine speed.

POSSIBLE CAUSE

NEEC1287S01

- Harness or connectors
  (The camshaft position sensor circuit is open or shorted.)
- Camshaft position sensor
- Starter motor (Refer to ***SC-10***.)
- Starting system circuit (Refer to ***SC-10***.)
- Dead (Weak) battery

DTC Confirmation Procedure

NEEC1288

NOTE:

- **Perform "PROCEDURE FOR MALFUNCTION A" first. If DTC cannot be confirmed, perform "PROCEDURE FOR MALFUNCTION B AND C".**
- If "DTC Confirmation Procedure" has been previously conducted, always turn ignition switch OFF and wait at least 5 seconds before conducting the next test.

TESTING CONDITION:

Before performing the following procedure, confirm that battery voltage is more than 10.5V at idle.

2

DATA MONITOR	
MONITOR	NO DTC
COOLAN TEMP/S	XXX °C

SEF013Y

PROCEDURE FOR MALFUNCTION A

NEEC1288S01

With CONSULT-II

1) Turn ignition switch ON.
2) Select "DATA MONITOR" mode with CONSULT-II.
3) Crank engine for at least 2 seconds.
4) If 1st trip DTC is detected, go to "Diagnostic Procedure", EC-1569.

With GST

Follow the procedure "With CONSULT-II".

3

DATA MONITOR	
MONITOR	NO DTC
ENG SPEED	XXX rpm

SEF058Y

PROCEDURE FOR MALFUNCTION B AND C

NEEC1288S02

With CONSULT-II

1) Turn ignition switch ON.
2) Select "DATA MONITOR" mode with CONSULT-II.
3) Start engine and run it for at least 2 seconds at idle speed.
4) If 1st trip DTC is detected, go to "Diagnostic Procedure", EC-1569.

With GST

Follow the procedure "With CONSULT-II".

Wiring Diagram

NEEC1289

EC-CMPS-01

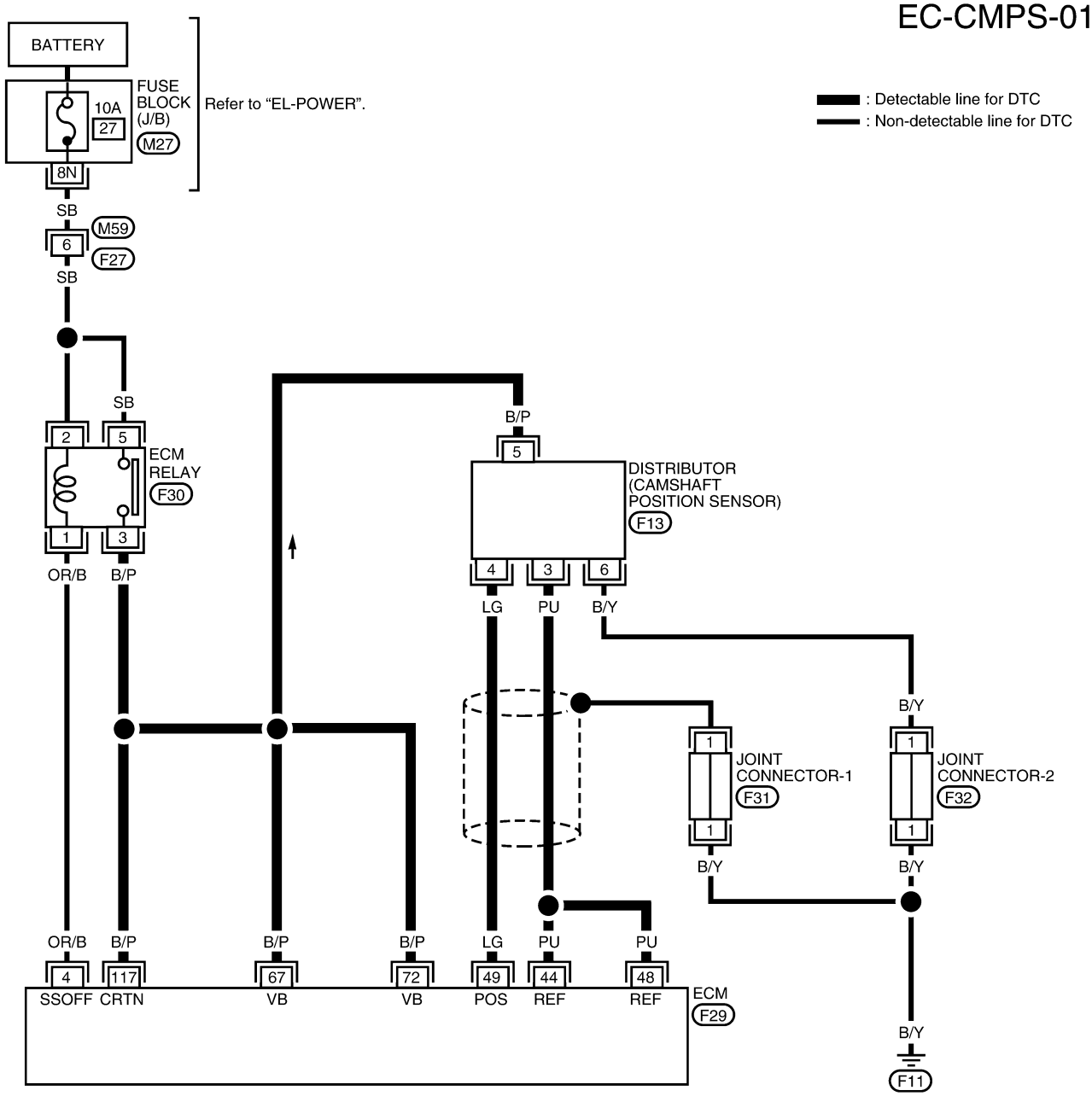

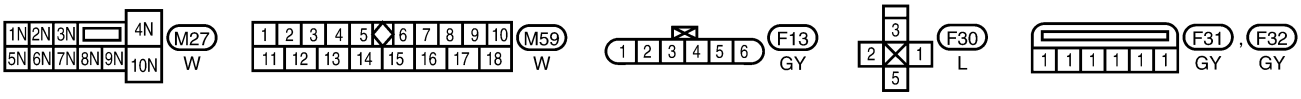

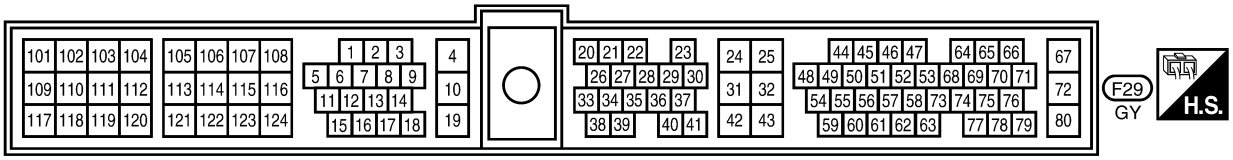

WEC800

Diagnostic Procedure

NEEC1290

1	RETIGHTEN GROUND SCREWS

1. Turn ignition switch OFF.
2. Loosen and retighten engine ground screws.

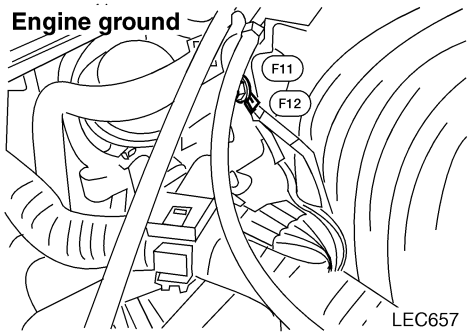

LEC657

▶	GO TO 2.

2	CHECK CMPS POWER SUPPLY CIRCUIT

1. Disconnect camshaft position sensor harness connector.

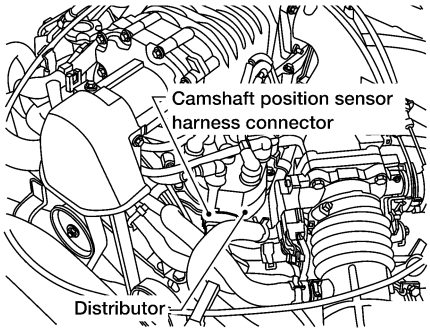

LEC810

2. Turn ignition switch ON.
3. Check voltage between CMPS terminal 5 and ground with CONSULT-II or tester.

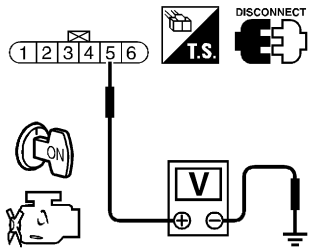

SEF708U

Voltage: Battery voltage

OK or NG

OK	▶	GO TO 4.
NG	▶	GO TO 3.

Diagnostic Procedure (Cont'd)

3	DETECT MALFUNCTIONING PART
Check the following. ● Harness for open or short between camshaft position sensor and ECM relay ● Harness for open or short between camshaft position sensor and ECM	
▶	Repair harness or connectors.

4	CHECK CMPS INPUT SIGNAL CIRCUIT FOR OPEN AND SHORT
1. Turn ignition switch OFF. 2. Disconnect ECM harness connector. 3. Check harness continuity between CMPS terminal 4 and ECM terminal 49, CMPS terminal 3 and ECM terminals 44, 48. Refer to Wiring Diagram. **Continuity should exist.** 4. Also check harness for short to ground and short to power. **OK or NG**	
OK ▶	GO TO 5.
NG ▶	Repair open circuit or short to ground or short to power in harness or connectors.

5	CHECK CMPS GROUND CIRCUIT FOR OPEN AND SHORT
1. Turn ignition switch OFF. 2. Check harness continuity between CMPS terminal 6 and engine ground. **Continuity should exist.** 3. Also check harness for short to power. **OK or NG**	
OK ▶	GO TO 7.
NG ▶	GO TO 6.

6	DETECT MALFUNCTIONING PART
Check the following. ● Joint connector-2 ● Harness for open between camshaft position sensor and engine ground	
▶	Repair open circuit or short to power in harness or connector.

7	CHECK CAMSHAFT POSITION SENSOR

1. Install any parts removed.
2. Start engine.
3. Check voltage between ECM terminals 44, 48 and ground, ECM terminal 49 and ground with DC range.

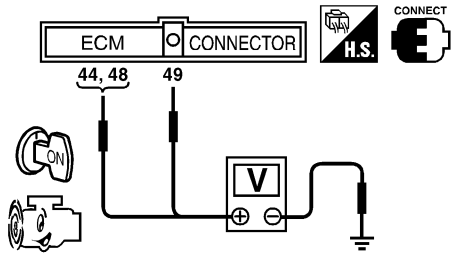

Terminal 44 or 48 and engine ground

Condition	Idle	2,000 rpm
Voltage	0.3 - 0.5V	0.3 - 0.5V
Pulse signal	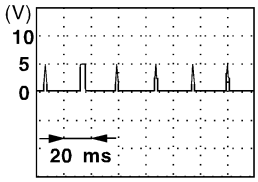	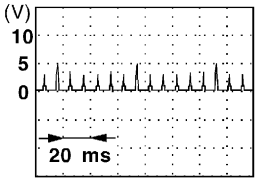

Terminal 49 and engine ground

Condition	Idle	2,000 rpm
Voltage	Approximately 2.5V	Approximately 2.5V
Pulse signal	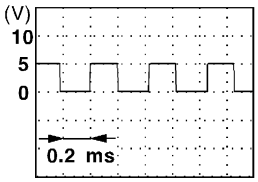	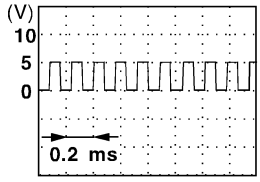

AEC072B

OK or NG

OK	▶	GO TO 8.
NG	▶	Replace distributor assembly with camshaft position sensor.

8	CHECK CMPS SHIELD CIRCUIT FOR OPEN AND SHORT

1. Turn ignition switch OFF.
2. Disconnect joint connector-1.
3. Check the following.

- Continuity between joint connector terminal 1 and ground
- Joint connector-1
  (Refer to ***EL-238***, "HARNESS LAYOUT".)

Continuity should exist.

4. Also check harness for short to power.
5. Then reconnect joint connector-1.

OK or NG

OK	▶	GO TO 9.
NG	▶	Repair open circuit or short to power in harness or connectors.

9	CHECK INTERMITTENT INCIDENT

Refer to "TROUBLE DIAGNOSIS FOR INTERMITTENT INCIDENT", EC-1353.

▶ **INSPECTION END**

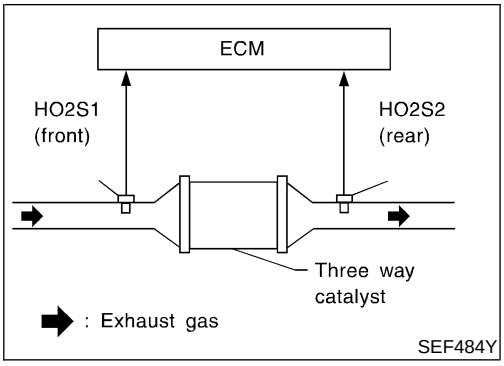

SEF484Y

On Board Diagnosis Logic

NEEC1291

The ECM monitors the switching frequency ratio of heated oxygen sensors 1 (front) and 2 (rear).
A warm-up three way catalyst with high oxygen storage capacity will indicate a low switching frequency of heated oxygen sensor 2 (rear). As oxygen storage capacity decreases, the heated oxygen sensor 2 (rear) switching frequency will increase.
When the frequency ratio of heated oxygen sensors 1 (front) and 2 (rear) approaches a specified limit value, the warm-up three way catalyst malfunction is diagnosed.
Malfunction is detected when warm-up three way catalyst does not operate properly, warm-up three way catalyst does not have enough oxygen storage capacity.

POSSIBLE CAUSE

NEEC1291S01

- Warm-up three way catalyst
- Exhaust tube
- Intake air leaks
- Injectors
- Injector leaks
- Spark plug
- Improper ignition timing

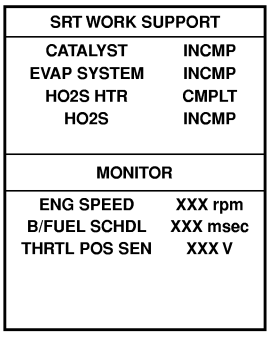

SEF344Z

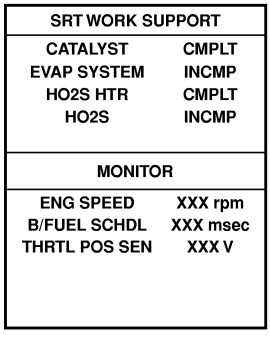

SEF345Z

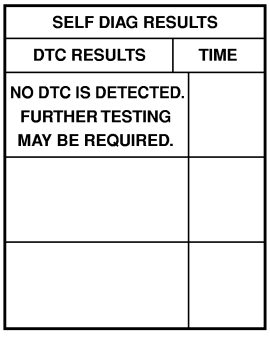

SEF560X

DTC Confirmation Procedure

NEEC1292

NOTE:
If “DTC Confirmation Procedure” has been previously conducted, always turn ignition switch OFF and wait at least 5 seconds before conducting the next test.

With CONSULT-II

TESTING CONDITION

- **Open engine hood before conducting the following procedure.**
- **Do not hold engine speed for more than the specified minutes below.**

1) Turn ignition switch ON.
2) Select “DTC & SRT CONFIRMATION” the SRT WORK SUPPORT” mode with CONSULT-II.
3) Start engine.
4) Rev engine up to 2,500 to 3,500 rpm and hold it for 3 consecutive minutes then release the accelerator pedal completely.
5) Wait 5 seconds at idle.
6) Rev engine up to 2,000 to 3,000 rpm and maintain it until “INCMP” of “CATALYST” changes to “CMPLT” (It will take maximum of approximately 5 minute.).
7) Select “SELF-DIAG RESULTS” mode with CONSULT-II.
   If the 1st trip DTC is detected, go to “DIAGNOSTIC PROCEDURE”, EC-1574. If not “CMPLT”, stop engine and cool down “COOLANT TEMP/SE” to less than 70°C (158°F) and retest from step 1).

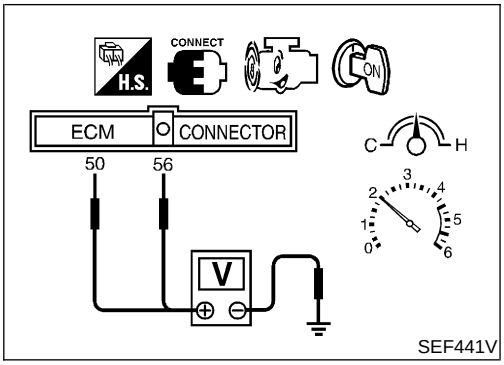

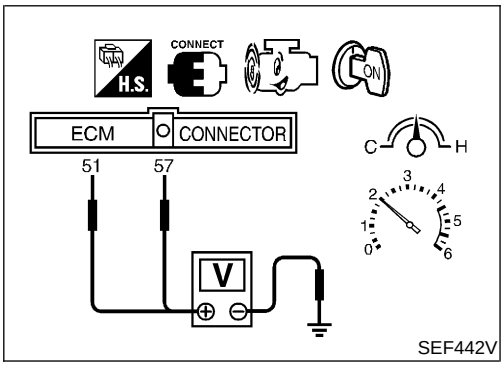

Overall Function Check

NEEC1293

Use this procedure to check the overall function of the warm-up three way catalyst. During this check, a 1st trip DTC might not be confirmed.

CAUTION:

Always drive vehicle at a safe speed.

Without CONSULT-II

1) Start engine and drive vehicle at a speed of more than 70 km/h (43 MPH) for 2 consecutive minutes.
2) Stop vehicle with engine running.
3) Set voltmeters probes between ECM terminals 50 [heated oxygen sensor 1 (front) (bank 1) signal], 51 [heated oxygen sensor 1 (front) (bank 2) signal] and engine ground, and ECM terminals 56 [heated oxygen sensor 2 (rear) (bank 1) signal], 57 [heated oxygen sensor 2 (rear) (bank 2) signal] and engine ground.
4) Keep engine speed at 2,000 rpm constant under no load.
5) Make sure that the voltage switching frequency (high & low) between ECM terminals 56 and engine ground, or 57 and engine ground is very less than that of ECM terminals 50 and engine ground, or 51 and engine ground.
   Switching frequency ratio = A/B
   A: Heated oxygen sensor 2 (rear) voltage switching frequency
   B: Heated oxygen sensor 1 (front) voltage switching frequency
   This ratio should be less than 0.75.
   If the ratio is greater than above, it means warm-up three way catalyst does not operate properly. Go to “Diagnostic Procedure”, EC-1574.

NOTE:

If the voltage at terminal 50 or 51 does not switch periodically more than 5 times within 10 seconds at step 5, perform trouble diagnosis for “DTC P0133, P0153” first. (See EC-1429.)

Diagnostic Procedure

=NEEC1294

1	CHECK EXHAUST SYSTEM	
Visually check exhaust tubes and muffler for dent.		
OK or NG		
OK	▶	GO TO 2.
NG	▶	Repair or replace it.

2	CHECK EXHAUST AIR LEAK	
1. Start engine and run it at idle. 2. Listen for an exhaust air leak before the warm-up three way catalyst.		
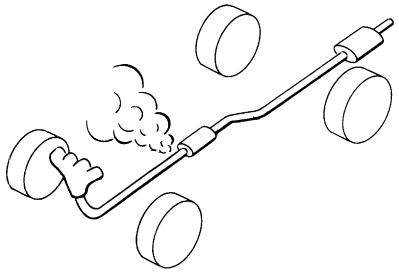 SEF099P		
OK or NG		
OK	▶	GO TO 3.
NG	▶	Repair or replace.

3	CHECK INTAKE AIR LEAK	
Listen for an intake air leak after the mass air flow sensor.		
OK or NG		
OK	▶	GO TO 4.
NG	▶	Repair or replace.

4	CHECK IGNITION TIMING	
Check the following items. Refer to “Basic Inspection”, EC-1314.		

Items	Specifications
Ignition timing	10° ± 2° BTDC
Base idle speed	700 ± 50 rpm (in “P” or “N” position)
Closed throttle position switch idle position adjustment	Feeler gauge thickness and switch condition 0.3 mm (0.012 in): ON 0.4 mm (0.016 in): OFF
Target idle speed	750 ± 50 rpm (in “P” or “N” position)

MTBL0576

OK or NG		
OK	▶	GO TO 5.
NG	▶	Adjust ignition timing.

5	CHECK INJECTOR CIRCUITS

1. Refer to WIRING DIAGRAM for Injectors, EC-1793.
2. Stop engine and then turn ignition switch ON.
3. Check voltage between ECM terminals 102, 104, 106, 109, 111 and 113 and ground with CONSULT-II or tester.

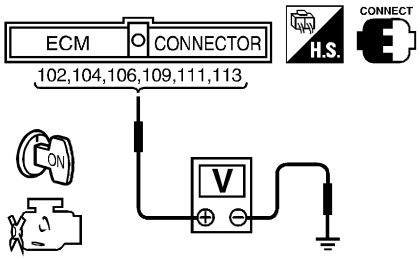

SEF711U

Battery voltage should exist.

OK or NG

OK	▶	GO TO 6.
NG	▶	Perform "Diagnostic Procedure", "INJECTOR", EC-1794.

6	CHECK IGNITION SPARK

1. Turn ignition switch OFF.
2. Disconnect ignition wire from spark plug.
3. Connect a known good spark plug to the ignition wire.
4. Place end of spark plug against a suitable ground and crank engine.
5. Check for spark.

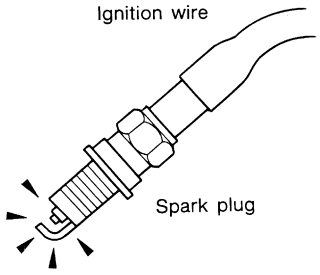

SEF282G

OK or NG

OK	▶	GO TO 8.
NG	▶	GO TO 7.

Diagnostic Procedure (Cont'd)

7	CHECK IGNITION WIRES

1. Inspect wires for cracks, damage, burned terminals and for improper fit.
2. Measure the resistance of wires to their distributor cap terminal. Move each wire while testing to check for intermittent breaks.

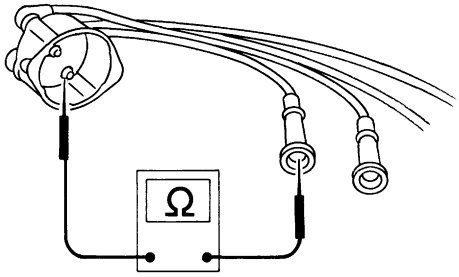

SEF174P

Resistance:

Cylinder No.	Resistance kΩ [at 25°C (77°F)]
1	Approximately 6.5
2	Approximately 10.0
3	Approximately 8.5
4	Approximately 12.5
5	Approximately 8.5
6	Approximately 11.0

MTBL0235

If the resistance exceeds the above specification, inspect ignition wire to distributor cap connection. Clean connection or replace the ignition wire with a new one.

OK or NG

OK	▶	Check ignition coil, power transistor and their circuits. Refer to EC-1786.
NG	▶	Replace.

8	CHECK INJECTOR

1. Turn ignition switch OFF.
2. Remove injector assembly.
   Refer to EC-1260.
   Keep fuel hose and all injectors connected to injector gallery.
3. Disconnect all ignition coil harness connectors.
4. Turn ignition switch ON.
   Make sure fuel does not drip from injector.

OK or NG

OK (Does not drip)	▶	GO TO 9.
NG (Drips)	▶	Replace the injector(s) from which fuel is dripping.

9	CHECK INTERMITTENT INCIDENT

Refer to "TROUBLE DIAGNOSIS FOR INTERMITTENT INCIDENT", EC-1353.

Trouble is fixed	▶	**INSPECTION END**
Trouble is not fixed	▶	Replace warm-up three way catalyst.

On Board Diagnosis Logic

NEEC1295

NOTE:
If DTC P0440 is displayed with P1448, perform trouble diagnosis for DTC P1448 first. (See EC-1747.)

This diagnosis detects leaks in the EVAP purge line using engine intake manifold vacuum.
If pressure does not increase, the ECM will check for leaks in the line between the fuel tank and EVAP canister purge volume control solenoid valve, under the following “Vacuum test” conditions.
The vacuum cut valve bypass valve is opened to clear the line between the fuel tank and the EVAP canister purge volume control solenoid valve. The EVAP canister vent control valve will then be closed to shut the EVAP purge line off. The EVAP canister purge volume control solenoid valve is opened to depressurize the EVAP purge line using intake manifold vacuum. After this occurs, the EVAP canister purge volume control solenoid valve will be closed.

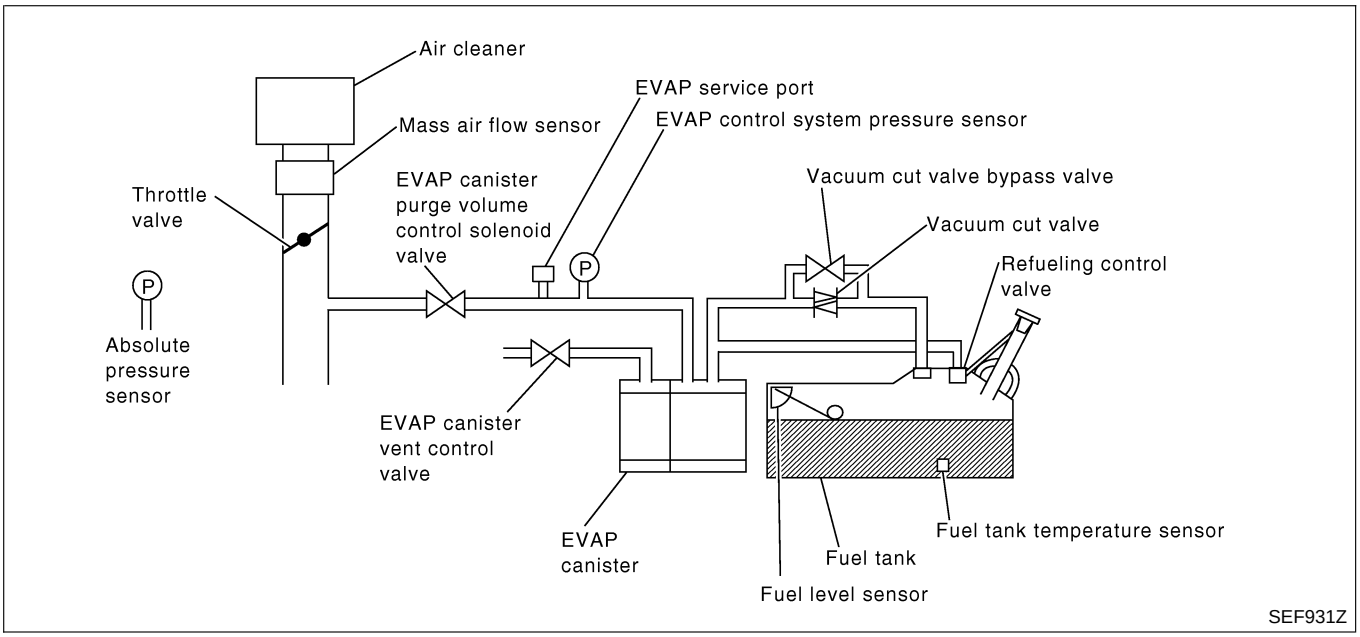

Malfunction is detected when EVAP control system has a leak, EVAP control system does not operate properly.

CAUTION:

- **Use only a genuine NISSAN fuel filler cap as a replacement. If an incorrect fuel filler cap is used, the MIL may come on.**
- **If the fuel filler cap is not tightened properly, the MIL may come on.**
- **Use only a genuine NISSAN rubber tube as a replacement.**

POSSIBLE CAUSE

NEEC1295S01

- Incorrect fuel tank vacuum relief valve
- Incorrect fuel filler cap used
- Fuel filler cap remains open or fails to close.
- Foreign matter caught in fuel filler cap.
- Leak is in line between intake manifold and EVAP canister purge volume control solenoid valve.
- Foreign matter caught in EVAP canister vent control valve.
- EVAP canister or fuel tank leaks
- EVAP purge line (pipe and rubber tube) leaks
- EVAP purge line rubber tube bent.

- Blocked or bent rubber tube to EVAP control system pressure sensor
- Loose or disconnected rubber tube
- EVAP canister vent control valve and the circuit
- EVAP canister purge volume control solenoid valve and the circuit
- Fuel tank temperature sensor
- O-ring of EVAP canister vent control valve is missing or damaged.
- Water separator
- EVAP canister is saturated with water.
- EVAP control system pressure sensor
- Fuel level sensor and the circuit.
- Refueling EVAP vapor cut
- ORVR system leaks

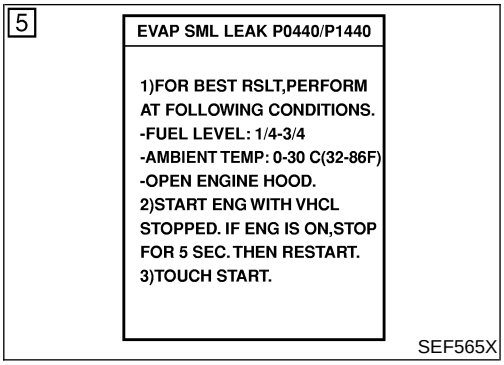

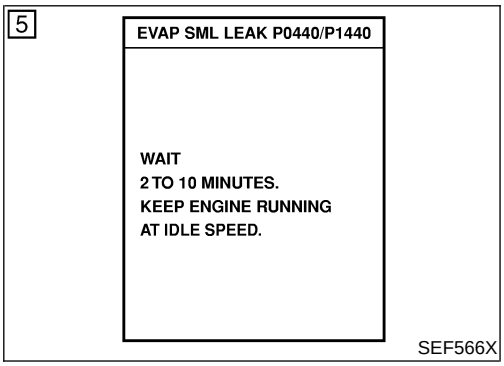

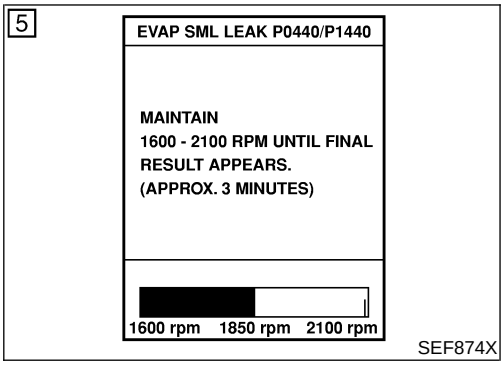

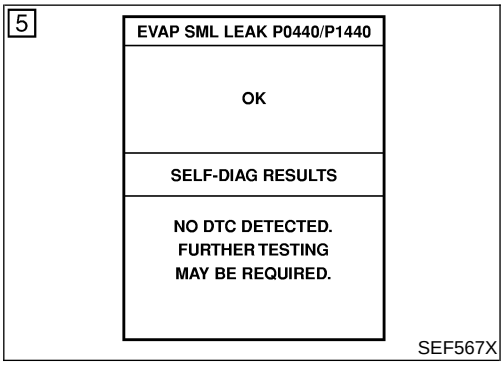

DTC Confirmation Procedure

NEEC1296

NOTE:

- **If DTC P0440 is displayed with P1448, perform trouble diagnosis for DTC P1448 first. (See EC-1747.)**
- If "DTC Confirmation Procedure" has been previously conducted, always turn ignition switch OFF and wait at least 5 seconds before conducting the next test.

TESTING CONDITION:

- **Perform "DTC WORK SUPPORT" when the fuel level is between 1/4 to 3/4 full and vehicle is placed on flat level surface.**
- **Open engine hood before conducting the following procedure.**

With CONSULT-II

1) Turn ignition switch ON.
2) Turn ignition switch OFF and wait at least 5 seconds.
3) Turn ignition switch ON and select "DATA MONITOR" mode with CONSULT-II.
4) Make sure that the following conditions are met.
   COOLAN TEMP/S: 0 - 32°C (32 - 90°F)
   INT/A TEMP SE: More than 0°C (32°F)
5) Select "EVAP SML LEAK P0440" of "EVAPORATIVE SYSTEM" in "DTC WORK SUPPORT" mode with CONSULT-II. Follow the instruction displayed.

NOTE:

If the engine speed cannot be maintained within the range displayed on the CONSULT-II screen, go to "Basic Inspection", EC-1314.

6) Make sure that "OK" is displayed.
   If "NG" is displayed, refer to "Diagnostic Procedure", EC-1580.

NOTE:

Make sure that EVAP hoses are connected to EVAP canister purge volume control solenoid valve properly.

With GST

NOTE:

Be sure to read the explanation of "Driving Pattern" on EC-1281 before driving vehicle.

1) Start engine.
2) Drive vehicle according to "Driving Pattern", EC-1281.
3) Stop vehicle.
4) Select "MODE 1" with GST.
   - If SRT of EVAP system is not set yet, go to the following step.
   - If SRT of EVAP system is set, the result will be OK.
5) Turn ignition switch OFF and wait at least 5 seconds.
6) Start engine.
   It is not necessary to cool engine down before driving.
7) Drive vehicle again according to the "Driving Pattern", EC-1281.
8) Stop vehicle.
9) Select "MODE 3" with GST.
   - If P0440 is displayed on the screen, go to "Diagnostic Procedure", EC-1580.
   - If P1447 is displayed on the screen, go to "Diagnostic Procedure" for "DTC P1447", EC-1738.

- If P0440 and P1447 are not displayed on the screen, go to the following step.

10) Select "MODE 1" with GST.

- If SRT of EVAP system is set, the result will be OK.
- If SRT of EVAP system is not set, go to step 6.

Diagnostic Procedure

NEEC1297

1	CHECK FUEL FILLER CAP DESIGN

1. Turn ignition switch "OFF".
2. Check for genuine NISSAN fuel filler cap design.

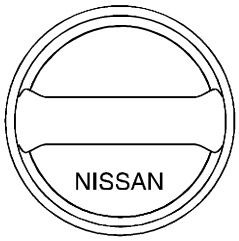

SEF915U

OK or NG

OK	▶	GO TO 2.
NG	▶	Replace with genuine NISSAN fuel filler cap.

2	CHECK FUEL FILLER CAP INSTALLATION

Check that the cap is tightened properly by rotating the cap clockwise.

OK or NG

OK	▶	GO TO 3.
NG	▶	• Open fuel filler cap, then clean cap and fuel filler neck threads using air blower. • Retighten until ratcheting sound is heard.

3	CHECK FUEL FILLER CAP FUNCTION

Check for air releasing sound while opening the fuel filler cap.

OK or NG

OK	▶	GO TO 6.
NG	▶	GO TO 4.

4	CHECK FUEL TANK VACUUM RELIEF VALVE

Refer to "Evaporative Emission System", EC-1241.

OK or NG

OK	▶	GO TO 5.
NG	▶	Replace fuel filler cap with a genuine one.

5	INSTALL THE PRESSURE PUMP

To locate the EVAP leak, install EVAP service port adapter and pressure pump to EVAP service port securely.

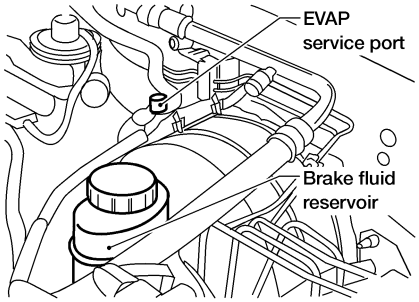

AEC649A

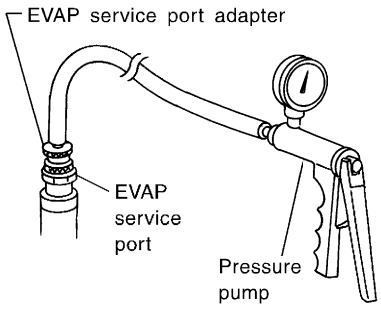

SEF916U

NOTE:
Improper installation of the EVAP service port adapter to the EVAP service port may cause leaking.

Models with CONSULT-II ▶	GO TO 6.
Models without CONSULT-II ▶	GO TO 7.

Diagnostic Procedure (Cont'd)

6	CHECK FOR EVAP LEAK

With CONSULT-II

1. Turn ignition switch "ON".
2. Select "EVAP SYSTEM CLOSE" of "WORK SUPPORT" mode with CONSULT-II.
3. Touch "START" and apply pressure into the EVAP line until the pressure indicator reaches the middle of the bar graph.
   NOTE:
   - **Never use compressed air or a high pressure pump.**
   - **Do not exceed 4.12 kPa (0.042 kg/cm^2, 0.6 psi) of pressure in the system.**

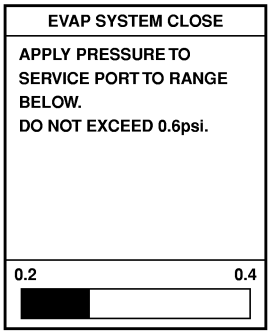

PEF917U

4. Using EVAP leak detector, locate the EVAP leak. For the leak detector, refer to the instruction manual for more details. Refer to "EVAPORATIVE EMISSION LINE DRAWING", EC-1245.

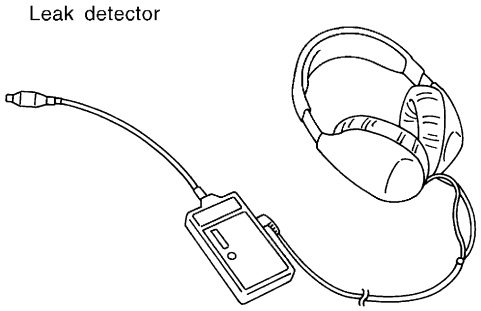

SEF200U

OK or NG

OK	▶	GO TO 8.
NG	▶	Repair or replace.

7	CHECK FOR EVAP LEAK

Without CONSULT-II

1. Turn ignition switch "OFF".
2. Apply 12 volts DC to EVAP canister vent control valve. The valve will close. (Continue to apply 12 volts until the end of test.)
3. Apply 12 volts DC to vacuum cut valve bypass valve. The valve will open. (Continue to apply 12V until the end of test.)

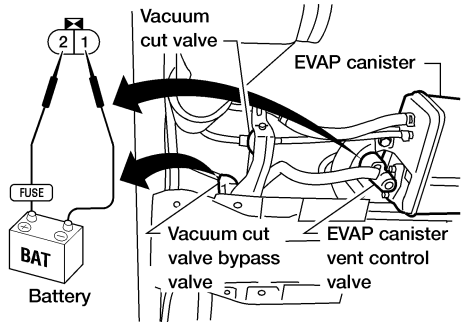

AEC632A

4. Pressurize the EVAP line using pressure pump with 1.3 to 2.7 kPa (10 to 20 mmHg, 0.39 to 0.79 inHg), then remove pump and EVAP service port adapter.
   NOTE:
   - **Never use compressed air or a high pressure pump.**
   - **Do not exceed 4.12 kPa (0.042 kg/cm^2, 0.6 psi) of pressure in the system.**
5. Using EVAP leak detector, locate the EVAP leak. For the leak detector, refer to the instruction manual for more details. Refer to "EVAPORATIVE EMISSION LINE DRAWING", EC-1245.

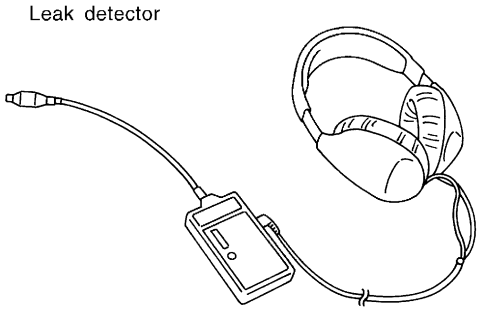

SEF200U

OK or NG

OK	▶	GO TO 8.
NG	▶	Repair or replace.

Diagnostic Procedure (Cont'd)

8	CHECK WATER SEPARATOR

1. Check visually for insect nests in the water separator air inlet.
2. Check visually for cracks or flaws in the appearance.
3. Check visually for cracks or flaws in the hose.
4. Check that **A** and **C** are not clogged by blowing air into **B** with **A**, and then **C** plugged.

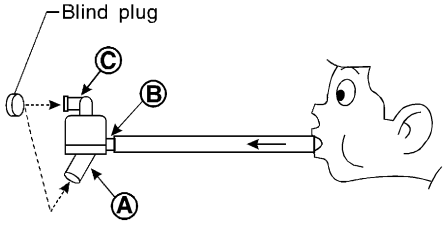

* Ⓐ: Bottom hole (To atmosphere)
Ⓑ: Emergency tube (From EVAP canister)
Ⓒ: Inlet port (To member)

SEF829T

5. In case of NG in items 2 - 4, replace the parts.

NOTE:

- Do not disassemble water separator.

OK or NG

OK	▶	GO TO 9.
NG	▶	Replace water separator.

9	CHECK EVAP CANISTER VENT CONTROL VALVE, O-RING AND CIRCUIT

Refer to "DTC Confirmation Procedure", EC-1600.

OK or NG

OK	▶	GO TO 10.
NG	▶	Repair or replace EVAP canister vent control valve and O-ring or harness/connector.

10	CHECK IF EVAP CANISTER SATURATED WITH WATER

1. Remove EVAP canister with EVAP canister vent control valve attached.
2. Check if water will drain from the EVAP canister.

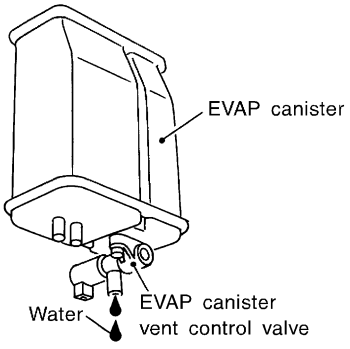

SEF596U

Yes or No

Yes	▶	GO TO 11.
No (With CONSULT-II)	▶	GO TO 13.
No (Without CONSULT-II)	▶	GO TO 14.

11	CHECK EVAP CANISTER
Weigh the EVAP canister with the EVAP canister vent control valve attached. **The weight should be less than 1.8 kg (4.0 lb).** **OK or NG**	
OK (With CONSULT-II) ▶	GO TO 13.
OK (Without CONSULT-II) ▶	GO TO 14.
NG ▶	GO TO 12.

12	DETECT MALFUNCTIONING PART
Check the following. ● EVAP canister for damage ● EVAP hose between EVAP canister and water separator for clogging or poor connection	
▶	Repair hose or replace EVAP canister.

13	CHECK EVAP CANISTER PURGE VOLUME CONTROL SOLENOID VALVE OPERATION

With CONSULT-II

1. Disconnect vacuum hose to EVAP canister purge volume control solenoid valve at EVAP service port.
2. Start engine.
3. Perform "PURG VOL CONT/V" in "ACTIVE TEST" mode.
4. Touch "Qu" on CONSULT-II screen to increase "PURG VOL CONT/V" opening to 100.0%.
5. Check vacuum hose for vacuum when revving engine up to 2,000 rpm.

ACTIVE TEST	
PURG VOL CONT/V	XXX %
MONITOR	
ENG SPEED	XXX rpm
A/F ALPHA-B1	XXX %
A/F ALPHA-B2	XXX %
HO2S1 MNTR (B1)	LEAN
HO2S1 MNTR (B2)	LEAN
THRTL POS SEN	XXX V

Vacuum should exist.

SEF984Y

OK or NG

OK ▶	GO TO 17.
NG ▶	GO TO 15.

14	CHECK EVAP CANISTER PURGE VOLUME CONTROL SOLENOID VALVE OPERATION

Without CONSULT-II

1. Start engine and warm it up to normal operating temperature.
2. Stop engine.
3. Disconnect vacuum hose to EVAP canister purge volume control solenoid valve at EVAP service port.
4. Start engine and let it idle for at least 80 seconds.
5. Check vacuum hose for vacuum when revving engine up to 2,000 rpm.
   Vacuum should exist.

OK or NG

OK ▶	GO TO 17.
NG ▶	GO TO 15.

Diagnostic Procedure (Cont'd)

15	CHECK VACUUM HOSE	
Check vacuum hoses for clogging or disconnection. Refer to "Vacuum Hose Drawing", EC-1235.		
OK or NG		
OK	▶	GO TO 16.
NG	▶	Repair or reconnect the hose.

16	CHECK EVAP CANISTER PURGE VOLUME CONTROL SOLENOID VALVE	

With CONSULT-II

1. Start engine.
2. Perform "PURG VOL CONT/V" in "ACTIVE TEST" mode with CONSULT-II. Check that engine speed varies according to the valve opening.

ACTIVE TEST	
PURG VOL CONT/V	0.0%
MONITOR	
ENG SPEED	XXX rpm
A/F ALPHA-B1	XXX %
A/F ALPHA-B2	XXX %
HO2S1 MNTR (B1)	RICH
HO2S1 MNTR (B2)	RICH
THRTL POS SEN	XXX V

SEF985Y

OK or NG

OK	▶	GO TO 18.
NG	▶	GO TO 17.

17	CHECK EVAP CANISTER PURGE VOLUME CONTROL SOLENOID VALVE

With CONSULT-II

Check air passage continuity of EVAP canister purge volume control solenoid valve under the following conditions.

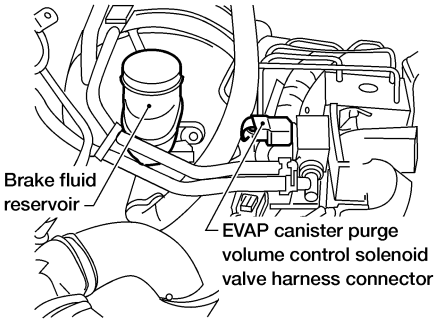

AEC652A

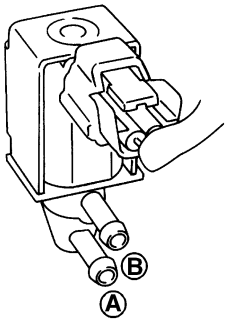

Condition PURG VOL CONT/V value	Air passage continuity between A and B
100.0%	Yes
0.0%	No

SEF334X

Without CONSULT-II

Check air passage continuity of EVAP canister purge volume control solenoid valve under the following conditions.

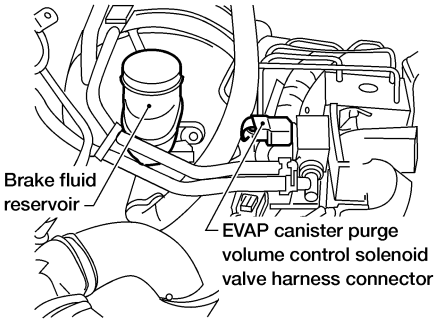

AEC652A

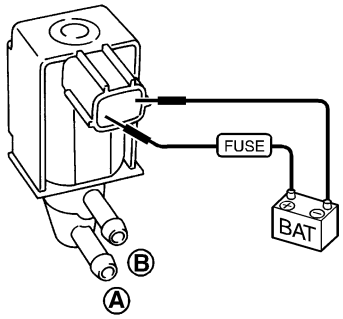

Condition	Air passage continuity between A and B
12V direct current supply between terminals 1 and 2	Yes
No supply	No

SEF335X

OK or NG

OK	▶	GO TO 18.
NG	▶	Replace EVAP canister purge volume control solenoid valve.

Diagnostic Procedure (Cont'd)

18	CHECK FUEL TANK TEMPERATURE SENSOR

1. Remove fuel level sensor unit.
2. Check resistance between fuel level sensor unit and fuel pump terminals 1 and 2 by heating with hot water or heat gun as shown in the figure.

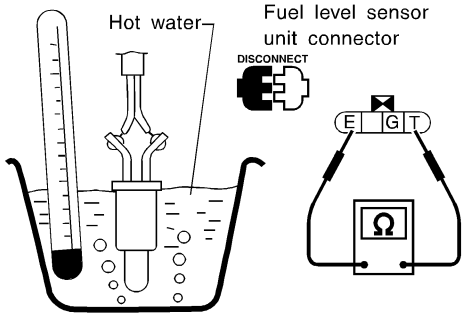

Temperature °C (°F)	Resistance kΩ
20 (68)	2.3 - 2.7
50 (122)	0.79 - 0.90

SEC311C

OK or NG

OK	▶	GO TO 19.
NG	▶	Replace fuel tank temperature sensor.

19	CHECK EVAP CONTROL SYSTEM PRESSURE SENSOR

1. Remove EVAP control system pressure sensor with its harness connector connected.
   CAUTION:
   - **Never apply force to the air hole protector of the sensor if equipped.**

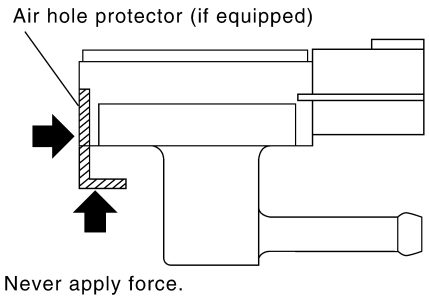

SEF799W

2. Remove hose from EVAP control system pressure sensor.
3. Turn ignition switch "ON".
4. Use pump to apply vacuum and pressure to EVAP control system pressure sensor as shown in figure.
   CAUTION:
   - **Always calibrate the vacuum pump gauge when using it.**
   - **Do not apply below −20 kPa (−150 mmHg, −5.91 inHg) or over 20 kPa (150 mmHg, 5.91 inHg) of pressure.**
5. Check input voltage between ECM terminal 84 and ground.

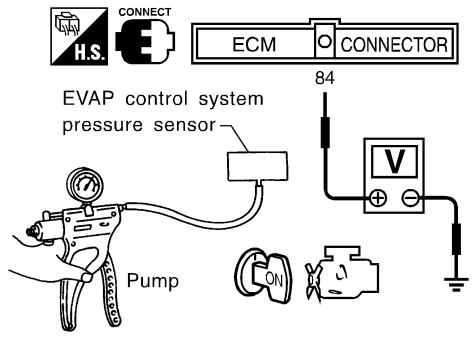

Pressure (Relative to atmospheric pressure)	Voltage V
0 kPa (0 mmHg, 0 inHg)	3.0 - 3.6
–9.3 kPa (–70 mmHg, –2.76 inHg)	0.4 - 0.6

SEF342X

CAUTION:
- **Discard and EVAP control system pressure sensor which has been dropped from a height of more than 0.5 m (19.7 in) onto a hard surface such as a concrete floor; use a new one.**

OK or NG

OK	▶	GO TO 20.
NG	▶	Replace EVAP control system pressure sensor.

20	CHECK EVAP PURGE LINE

Check EVAP purge line (pipe, rubber tube, fuel tank and EVAP canister) for cracks or improper connection.
Refer to "Evaporative Emission System", EC-1241.

OK or NG

OK	▶	GO TO 21.
NG	▶	Repair or reconnect the hose.

21	CLEAN EVAP PURGE LINE

Clean EVAP purge line (pipe and rubber tube) using air blower.

▶ GO TO 22.

Diagnostic Procedure (Cont'd)

22	CHECK REFUELING EVAP VAPOR LINE	
Check refueling EVAP vapor line between EVAP canister and fuel tank for clogging, kink, looseness and improper connection. For location, refer to "ON BOARD REFUELING VAPOR RECOVERY (ORVR)", EC-1247.		
OK or NG		
OK	▶	GO TO 23.
NG	▶	Repair or replace hoses and tubes.

23	CHECK SIGNAL LINE AND RECIRCULATION LINE	
Check signal line and recirculation line between filler neck tube and fuel tank for clogging, kink, cracks, looseness and improper connection.		
OK or NG		
OK	▶	GO TO 24.
NG	▶	Repair or replace hoses, tubes or filler neck tube.

24	CHECK REFUELING CONTROL VALVE	

1. Remove fuel filler cap.
2. Check air continuity between hose ends A and B.
   Blow air into the hose end B. Air should flow freely into the fuel tank.
3. Blow air into hose end A and check there is no leakage.
4. Apply pressure to both hose ends A and B [20 kPa (150 mmHg, 5.91 inHg)] using a pressure pump and a suitable 3-way connector. Check that there is no leakage.

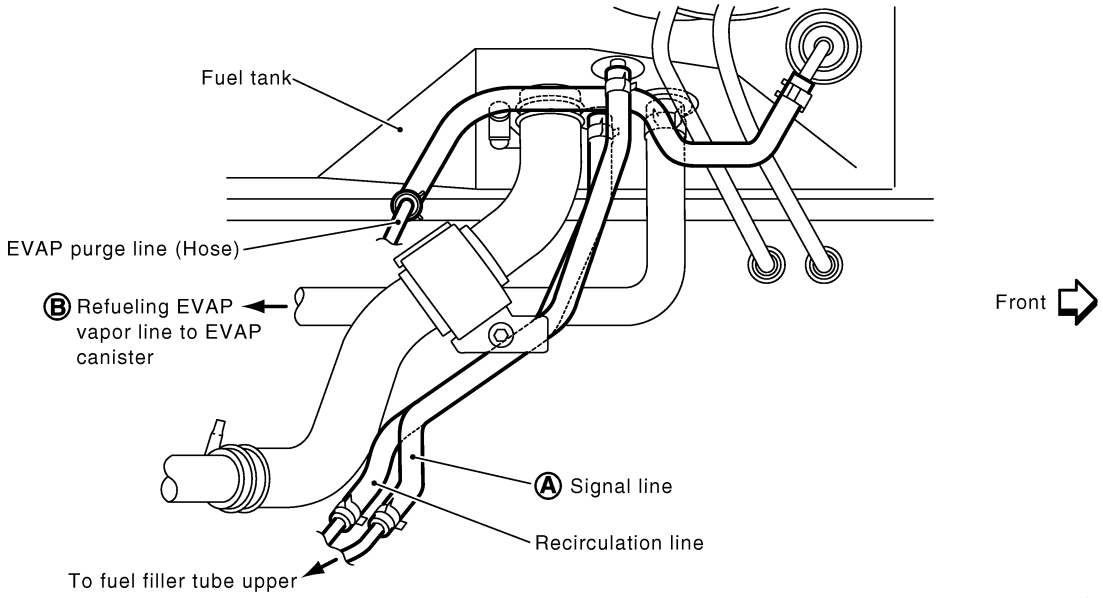

SEF706Z

OK or NG		
OK	▶	GO TO 25.
NG	▶	Replace refueling control valve with fuel tank.

25	CHECK FUEL LEVEL SENSOR	
Refer to ***EL-82***, "FUEL LEVEL SENSOR UNIT CHECK".		
OK or NG		
OK	▶	GO TO 26.
NG	▶	Replace fuel level sensor unit.

26	CHECK INTERMITTENT INCIDENT
Refer to "TROUBLE DIAGNOSIS FOR INTERMITTENT INCIDENT", EC-1353.	
▶	INSPECTION END

Description

NEEC1298

SYSTEM DESCRIPTION

NEEC1298S01

Sensor	Input Signal to ECM	ECM function	Actuator
Camshaft position sensor	Engine speed	EVAP canister purge flow control	EVAP canister purge volume control solenoid valve
Mass air flow sensor	Amount of intake air		
Engine coolant temperature sensor	Engine coolant temperature		
Ignition switch	Start signal		
Throttle position sensor	Throttle position		
Throttle position switch	Closed throttle position		
Heated oxygen sensors 1 (front)	Density of oxygen in exhaust gas (Mixture ratio feedback signal)		
Fuel tank temperature sensor	Fuel temperature in fuel tank		
Vehicle speed sensor	Vehicle speed		

This system controls flow rate of fuel vapor from the EVAP canister. The opening of the vapor by-pass passage in the EVAP canister purge volume control solenoid valve changes to control the flow rate. The EVAP canister purge volume control solenoid valve repeats ON/OFF operation according to the signal sent from the ECM. The opening of the valve varies for optimum engine control. The optimum value stored in the ECM is determined by considering various engine conditions. When the engine is operating, the flow rate of fuel vapor from the EVAP canister is regulated as the air flow changes.

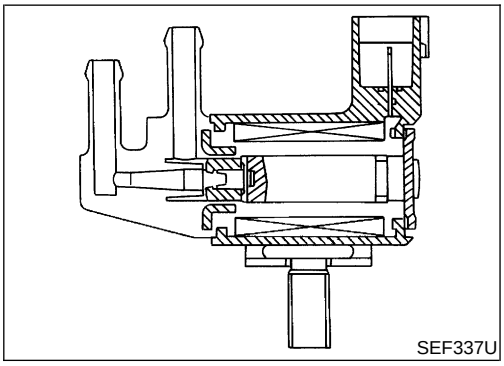
SEF337U

COMPONENT DESCRIPTION

NEEC1298S02

The EVAP canister purge volume control solenoid valve uses a ON/OFF duty to control the flow rate of fuel vapor from the EVAP canister. The EVAP canister purge volume control solenoid valve is moved by ON/OFF pulses from the ECM. The longer the ON pulse, the greater the amount of fuel vapor that will flow through the valve.

CONSULT-II Reference Value in Data Monitor Mode

NEEC1299

Specification data are reference values.

MONITOR ITEM	CONDITION		SPECIFICATION
PURG VOL C/V	• Engine: After warming up • Air conditioner switch OFF • Shift lever: “N” • No-load	Idle (Vehicle stopped)	0%
		2,000 rpm	—

ECM Terminals and Reference Value

NEEC1300

Specification data are reference values and are measured between each terminal and ground.

CAUTION:

Do not use ECM ground terminals when measuring input/output voltage. Doing so may result in damage to the ECM's transistor. Use a ground other than the ECM terminals, such as the ground.

TERMINAL NO.	WIRE COLOR	ITEM	CONDITION	DATA (DC Voltage)
4	OR/B	ECM relay (Self shut-off)	**[Engine is running]** **[Ignition switch OFF]** ● For a few seconds after turning ignition switch OFF	0 - 1.5V
			[Ignition switch OFF] ● A few seconds passed after turning ignition switch OFF	BATTERY VOLTAGE (11 - 14V)
5	R/Y	EVAP canister purge volume control solenoid valve	**[Engine is running]** ● Idle speed	BATTERY VOLTAGE (11 - 14V) 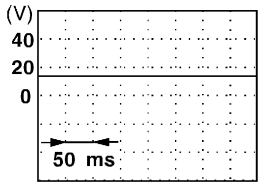 SEF994U
			[Engine is running] ● Engine speed is 2,000 rpm (More than 100 seconds after starting engine)	BATTERY VOLTAGE (11 - 14V) 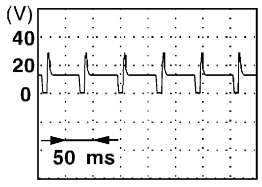 SEF995U
67	B/P	Power supply for ECM	**[Ignition switch ON]**	BATTERY VOLTAGE (11 - 14V)
72	B/P			
117	B/P	Current return	**[Engine is running]** ● Idle speed	BATTERY VOLTAGE (11 - 14V)

On Board Diagnosis Logic

=NEEC1301

Malfunction is detected when an improper voltage signal is sent to ECM through the valve.

POSSIBLE CAUSE

NEEC1301S01

- Harness or connectors
  (The valve circuit is open or shorted.)
- EVAP canister purge volume control solenoid valve

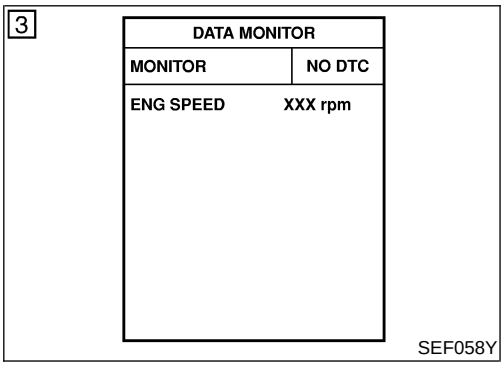

DTC Confirmation Procedure

NEEC1302

NOTE:

If “DTC Confirmation Procedure” has been previously conducted, always turn ignition switch OFF and wait at least 5 seconds before conducting the next test.

TESTING CONDITION:

Before performing the following procedure, confirm battery voltage is more than 11V at idle.

With CONSULT-II

1) Turn ignition switch ON.
2) Select “DATA MONITOR” mode with CONSULT-II.
3) Start engine and let it idle for at least 13 seconds.
4) If 1st trip DTC is detected, go to “Diagnostic Procedure”, EC-1596.

With GST

Follow the procedure “With CONSULT-II”.

Wiring Diagram

NEEC1303

EC-PGC/V-01

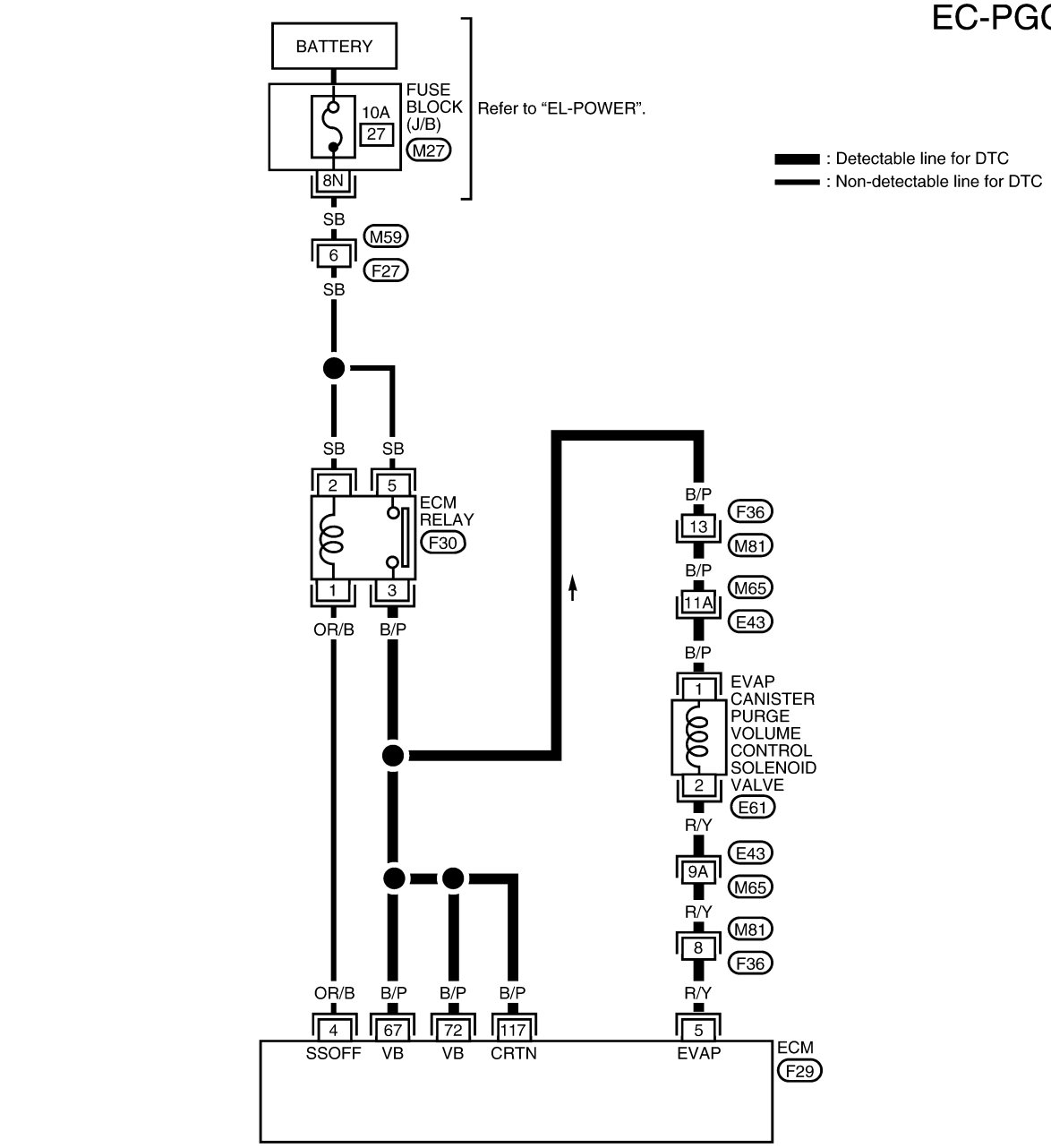

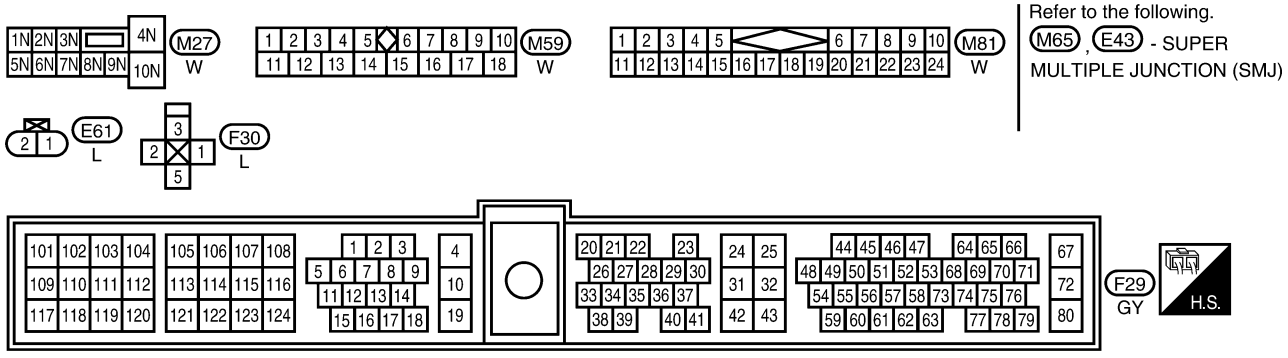

LEC813

Diagnostic Procedure

NEEC1304

1	CHECK EVAP CANISTER PURGE VOLUME CONTROL SOLENOID VALVE POWER SUPPLY CIRCUIT

1. Turn ignition switch OFF.
2. Disconnect EVAP canister purge volume control solenoid valve harness connector.

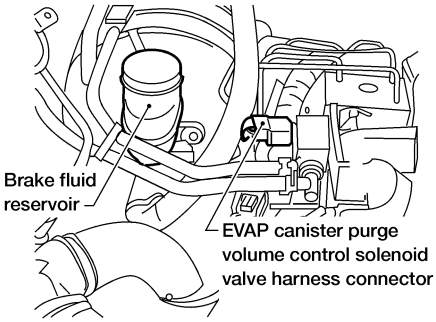

AEC652A

3. Turn ignition switch ON.
4. Check voltage between terminal 1 and ground with CONSULT-II or tester.

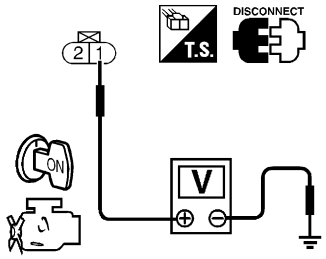

SEF646W

Voltage: Battery voltage

OK or NG

OK	▶	GO TO 3.
NG	▶	GO TO 2.

2	DETECT MALFUNCTIONING PART

Check the following.
- Harness connectors F36, M81
- Harness connectors M82, E74
- Harness for open or short between EVAP canister purge volume control solenoid valve and ECM relay

	▶	Repair harness or connectors.

3	CHECK EVAP CANISTER PURGE VOLUME CONTROL SOLENOID VALVE OUTPUT SIGNAL CIRCUIT FOR OPEN AND SHORT

1. Turn ignition switch OFF.
2. Disconnect ECM harness connector.
3. Check harness continuity between ECM terminal 5 and solenoid terminal 2.
   Refer to Wiring Diagram.
   Continuity should exist.
4. Also check harness for short to ground and short to power.

OK or NG

OK (With CONSULT-II)	▶	GO TO 5.
OK (Without CONSULT-II)	▶	GO TO 6.
NG	▶	GO TO 4.

4	DETECT MALFUNCTIONING PART
Check the following. ● Harness connectors E74, M82 ● Harness connectors M81, F36 ● Harness for open or short between EVAP canister purge volume control solenoid valve and ECM	
▶	Repair open circuit or short to ground or short to power in harness or connectors.

5	CHECK EVAP CANISTER PURGE VOLUME CONTROL SOLENOID VALVE OPERATION

With CONSULT-II

1. Start engine.
2. Perform "PURG VOL CONT/V" in "ACTIVE TEST" mode with CONSULT-II. Check that engine speed varies according to the valve opening.

ACTIVE TEST	
PURG VOL CONT/V	0.0%
MONITOR	
ENG SPEED	XXX rpm
A/F ALPHA-B1	XXX %
A/F ALPHA-B2	XXX %
HO2S1 MNTR (B1)	RICH
HO2S1 MNTR (B2)	RICH
THRTL POS SEN	XXX V

SEF985Y

OK or NG

OK	▶	GO TO 7.
NG	▶	GO TO 6.

Diagnostic Procedure (Cont'd)

6	CHECK EVAP CANISTER PURGE VOLUME CONTROL SOLENOID VALVE

With CONSULT-II

1. Check air passage continuity under the following conditions.

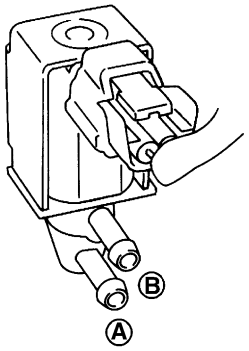

SEF660U

Condition PURG VOL CONT/V value	Air passage continuity between A and B
100.0%	Yes
0.0%	No

MTBL0241

Without CONSULT-II

1. Check air passage continuity under the following conditions.

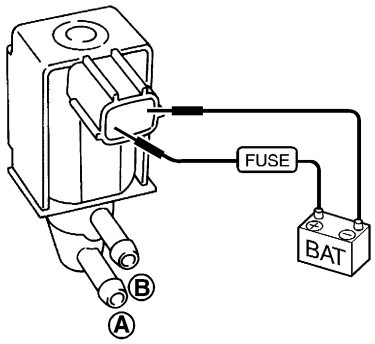

SEF661U

Condition	Air passage continuity between A and B
12V direct current supply between terminals 1 and 2	Yes
No supply	No

MTBL0242

OK or NG

OK	▶	GO TO 7.
NG	▶	Replace EVAP canister purge volume control solenoid valve.

7	CHECK INTERMITTENT INCIDENT
Refer to "TROUBLE DIAGNOSIS FOR INTERMITTENT INCIDENT", EC-1353.	
▶	**INSPECTION END**

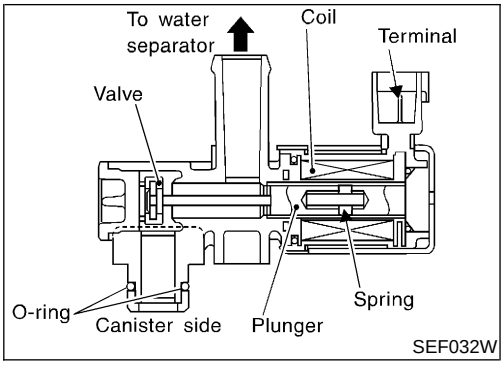

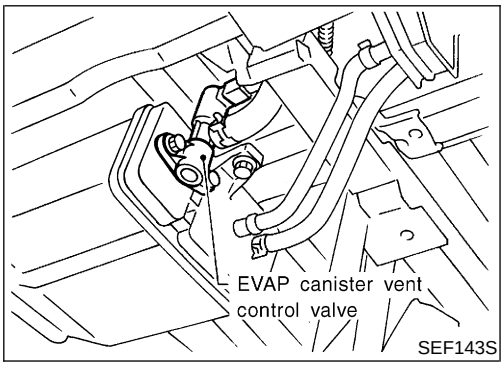

Component Description

NEEC1305

The EVAP canister vent control valve is located on the EVAP canister and is used to seal the canister vent.
This solenoid valve responds to signals from the ECM. When the ECM sends an ON signal, the coil in the solenoid valve is energized. A plunger will then move to seal the canister vent. The ability to seal the vent is necessary for the on board diagnosis of other evaporative emission control system components.
This solenoid valve is used only for diagnosis, and usually remains opened.
When the vent is closed, under normal purge conditions, the evaporative emission control system is depressurized and allows "EVAP Control System (Small Leak)" diagnosis.

CONSULT-II Reference Value in Data Monitor Mode

NEEC1306

Specification data are reference values.

MONITOR ITEM	CONDITION	SPECIFICATION
VENT CONT/V	• Ignition switch: ON	OFF

ECM Terminals and Reference Value

NEEC1307

Specification data are reference values and are measured between each terminal and ground.

CAUTION:

Do not use ECM ground terminals when measuring input/output voltage. Doing so may result in damage to the ECM's transistor. Use a ground other than the ECM terminals, such as the ground.

TERMINAL NO.	WIRE COLOR	ITEM	CONDITION	DATA (DC Voltage)
108	R/G	EVAP canister vent control valve	**[Ignition switch ON]**	BATTERY VOLTAGE (11 - 14V)

On Board Diagnosis Logic

=NEEC1308

Malfunction is detected when an improper voltage signal is sent to ECM through EVAP canister vent control valve.

POSSIBLE CAUSE

NEEC1308S01

- Harness or connectors
  (The valve circuit is open or shorted.)
- EVAP canister vent control valve

DTC Confirmation Procedure

NEEC1309

NOTE:

If “DTC Confirmation Procedure” has been previously conducted, always turn ignition switch OFF and wait at least 5 seconds before conducting the next test.

TESTING CONDITION:

Before performing the following procedure, confirm battery voltage is more than 11V at idle.

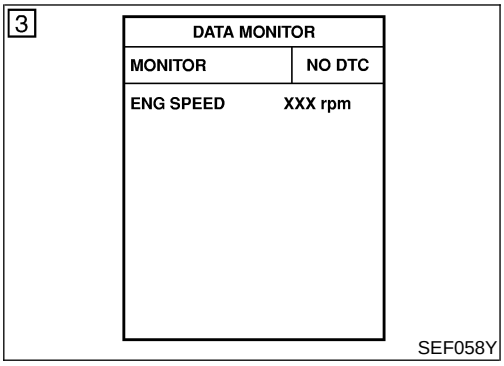

With CONSULT-II

1) Turn ignition switch ON.
2) Select “DATA MONITOR” mode with CONSULT-II.
3) Start engine and wait at least 8 seconds.
4) If 1st trip DTC is detected, go to “Diagnostic Procedure”, EC-1602.

With GST

Follow the procedure “With CONSULT-II”.

Wiring Diagram

NEEC1310

EC-VENT/V-01

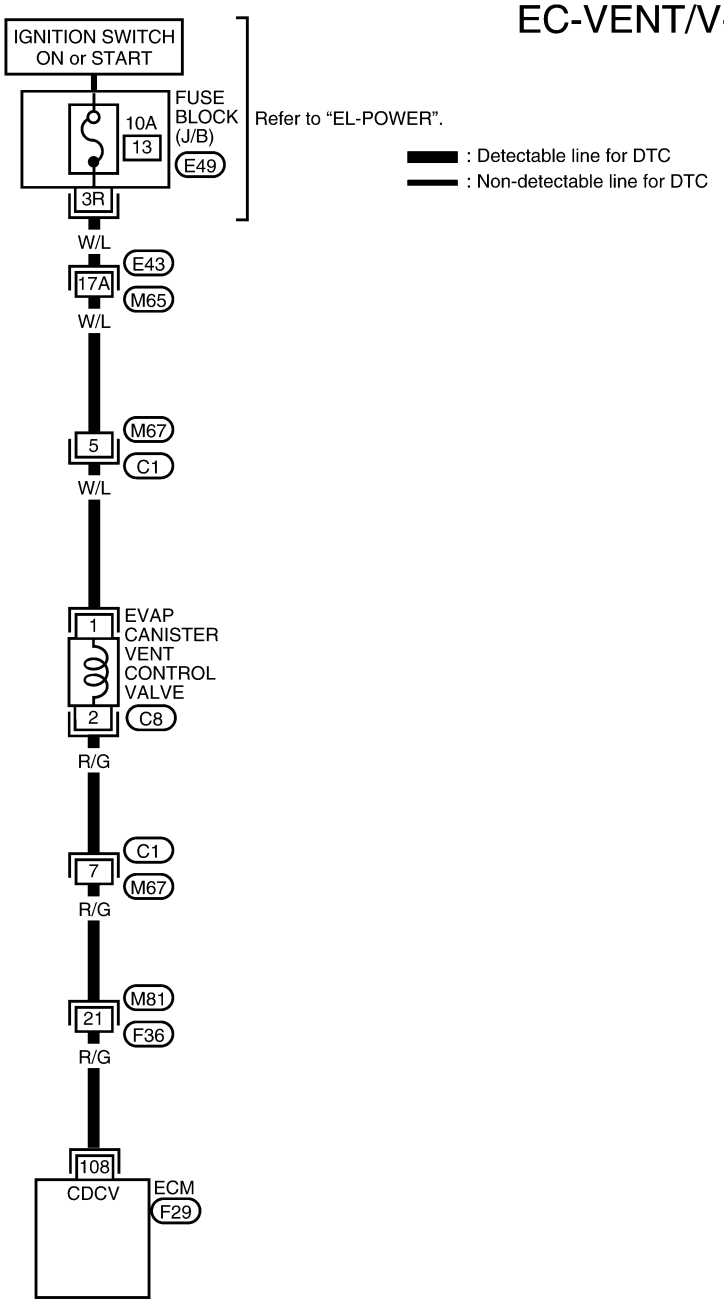





Refer to the following.
M65 , E43 - SUPER MULTIPLE JUNCTION (SMJ)

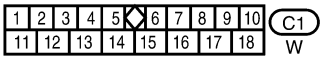



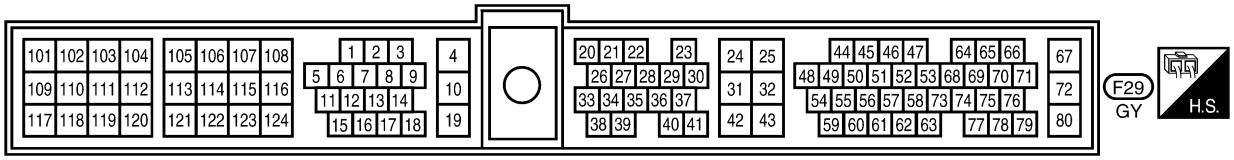

LEC814

Diagnostic Procedure

NEEC1311

1	INSPECTION START	
Do you have CONSULT-II?		
Yes or No		
Yes	▶	GO TO 2.
No	▶	GO TO 3.

2	CHECK EVAP CANISTER VENT CONTROL VALVE CIRCUIT	

1. Turn ignition switch “OFF” and then turn “ON”.
2. Select “VENT CONTROL/V” in “ACTIVE TEST” mode with CONSULT-II.
3. Touch “ON/OFF” on CONSULT-II screen.

ACTIVE TEST	
VENT CONTROL/V	OFF
MONITOR	
ENG SPEED	XXX rpm
A/F ALPHA-B1	XXX %
A/F ALPHA-B2	XXX %
HO2S1 (B1)	XXX V
HO2S1 (B2)	XXX V
THRTL POS SEN	XXX V

SEF989Y

4. Check for operating sound of the valve.
   Clicking noise should be heard.

OK or NG

OK	▶	GO TO 7.
NG	▶	GO TO 3.

3	CHECK EVAP CANISTER VENT CONTROL VALVE POWER SUPPLY CIRCUIT

1. Turn ignition switch "OFF".
2. Disconnect EVAP canister vent control valve harness connector.

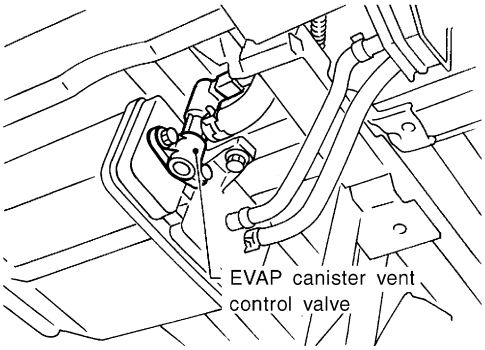

SEF143S

3. Turn ignition switch "ON".
4. Check voltage between terminal 1 and ground with CONSULT-II or tester.

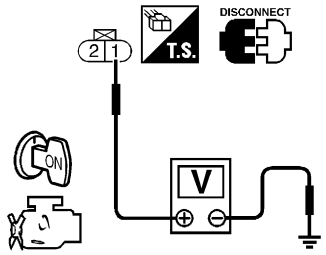

SEF648W

Voltage: Battery voltage

OK or NG

OK	▶	GO TO 5.
NG	▶	GO TO 4.

4	DETECT MALFUNCTIONING PART

Check the following.
- Harness connectors E74, M82
- Harness connectors M67, C1
- Fuse block (J/B) connector E49
- 10A fuse
- Harness for open or short between EVAP canister vent control valve and fuse

	▶	Repair harness or connectors.

5	CHECK EVAP CANISTER VENT CONTROL VALVE OUTPUT SIGNAL CIRCUIT FOR OPEN AND SHORT

1. Turn ignition switch "OFF".
2. Disconnect ECM harness connector.
3. Check harness continuity between ECM terminal 108 and EVAP canister vent control valve terminal 2. Refer to Wiring Diagram.
   Continuity should exist.
4. Also check harness for short to ground and short to power.

OK or NG

OK	▶	GO TO 7.
NG	▶	GO TO 6.

Diagnostic Procedure (Cont'd)

6	DETECT MALFUNCTIONING PART
Check the following. ● Harness connectors C1, M67 ● Harness connectors M81, F36 ● Harness for open or short between EVAP canister vent control valve and ECM	
▶	Repair open circuit or short to ground or short to power in harness or connectors.

7	CHECK EVAP CANISTER VENT CONTROL VALVE

With CONSULT-II

1. Perform "VENT CONTROL/V" in "ACTIVE TEST" mode.
2. Check air passage continuity and operation delay time.

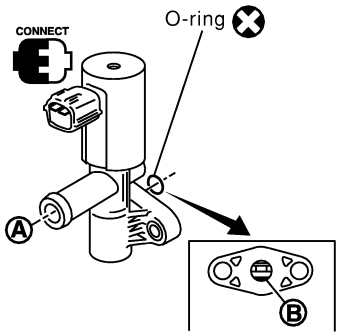

ACTIVE TEST	
VENT CONTROL/V	OFF
MONITOR	
ENG SPEED	XXX rpm
A/F ALPHA-B1	XXX %
A/F ALPHA-B2	XXX %
HO2S1 (B1)	XXX V
HO2S1 (B2)	XXX V
THRTL POS SEN	XXX V

Condition VENT CONTROL/V	Air passage continuity between A and B
ON	No
OFF	Yes

Operation takes less than 1 second.

SEF991Y

Without CONSULT-II

1. Check air passage continuity and operation delay time under the following conditions.

Condition	Air passage continuity between A and B
12V direct current supply between terminals 1 and 2	No
OFF	Yes

MTBL0240

If NG or operation takes more than 1 second, clean valve using air blower or replace as necessary.
If portion **B** is rusted, replace control valve.

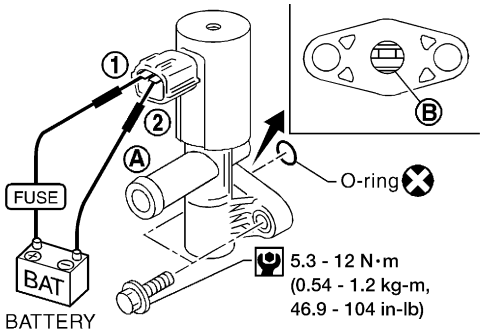

AEC783A

Make sure new O-ring is installed properly.

OK or NG

OK	▶	GO TO 8.
NG	▶	Replace EVAP canister vent control valve.

8	CHECK INTERMITTENT INCIDENT
Refer to "TROUBLE DIAGNOSIS FOR INTERMITTENT INCIDENT", EC-1353.	
▶	**INSPECTION END**

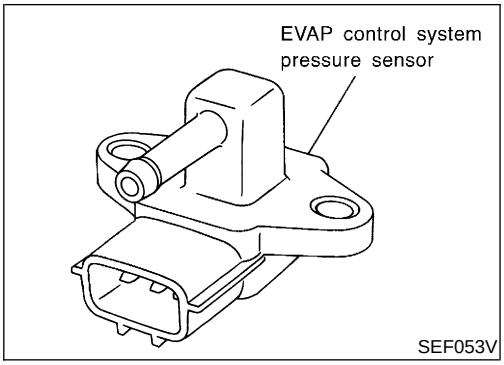

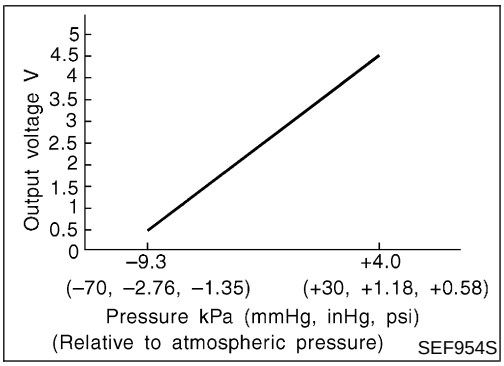

Component Description

NEEC1312

The EVAP control system pressure sensor detects pressure in the purge line. The sensor output voltage to the ECM increases as pressure increases. The EVAP control system pressure sensor is not used to control the engine system. It is used only for on board diagnosis.

CONSULT-II Reference Value in Data Monitor Mode

NEEC1313

Specification data are reference values.

MONITOR ITEM	CONDITION	SPECIFICATION
EVAP SYS PRES	• Ignition switch: ON	Approx. 3.4V

ECM Terminals and Reference Value

NEEC1314

Specification data are reference values and are measured between each terminal and ground.

CAUTION:

Do not use ECM ground terminals when measuring input/output voltage. Doing so may result in damage to the ECM's transistor. Use a ground other than the ECM terminals, such as the ground.

TERMINAL NO.	WIRE COLOR	ITEM	CONDITION	DATA (DC Voltage)
42	B/W	Sensors' power supply	**[Ignition switch ON]**	Approximately 5V
43	BR	Sensors' ground	**[Engine is running]** • **Warm-up condition** • Idle speed	Approximately 0V
62	Y	EVAP control system pressure sensor	**[Ignition switch ON]**	Approximately 3.4V

On Board Diagnosis Logic

=NEEC1315

Malfunction is detected when an improper voltage signal from EVAP control system pressure sensor is sent to ECM.

POSSIBLE CAUSE

NEEC1315S01

- Harness or connectors
  (The EVAP control system pressure sensor circuit is open or shorted.)
- Rubber hose to EVAP control system pressure sensor is clogged, vent, kinked, disconnected or improper connection.
- EVAP control system pressure sensor
- EVAP canister vent control valve
- EVAP canister purge volume control solenoid valve
- EVAP canister
- Rubber hose from EVAP canister vent control valve to water separator

DTC Confirmation Procedure

NEEC1316

NOTE:
If “DTC Confirmation Procedure” has been previously conducted, always turn ignition switch OFF and wait at least 5 seconds before conducting the next test.

TESTING CONDITION:
Always perform test at a temperature of 5°C (41°F) or more.

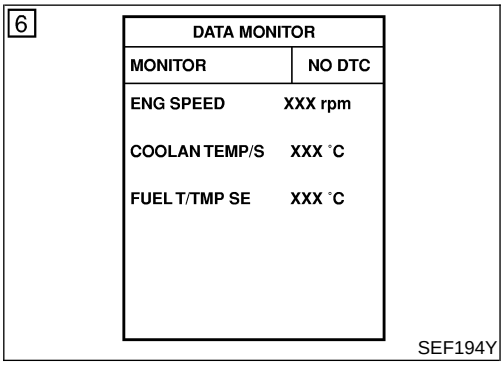

With CONSULT-II

1) Start engine and warm it up to normal operating temperature.
2) Turn ignition switch OFF and wait at least 5 seconds.
3) Turn ignition switch ON.
4) Select “DATA MONITOR” mode with CONSULT-II.
5) Make sure that “FUEL T/TMP SE” is more than 0°C (32°F).
6) Start engine and wait at least 20 seconds.
7) If 1st trip DTC is detected, go to “Diagnostic Procedure”, EC-1608.

With GST

Follow the procedure “With CONSULT-II”.

Wiring Diagram

NEEC1317

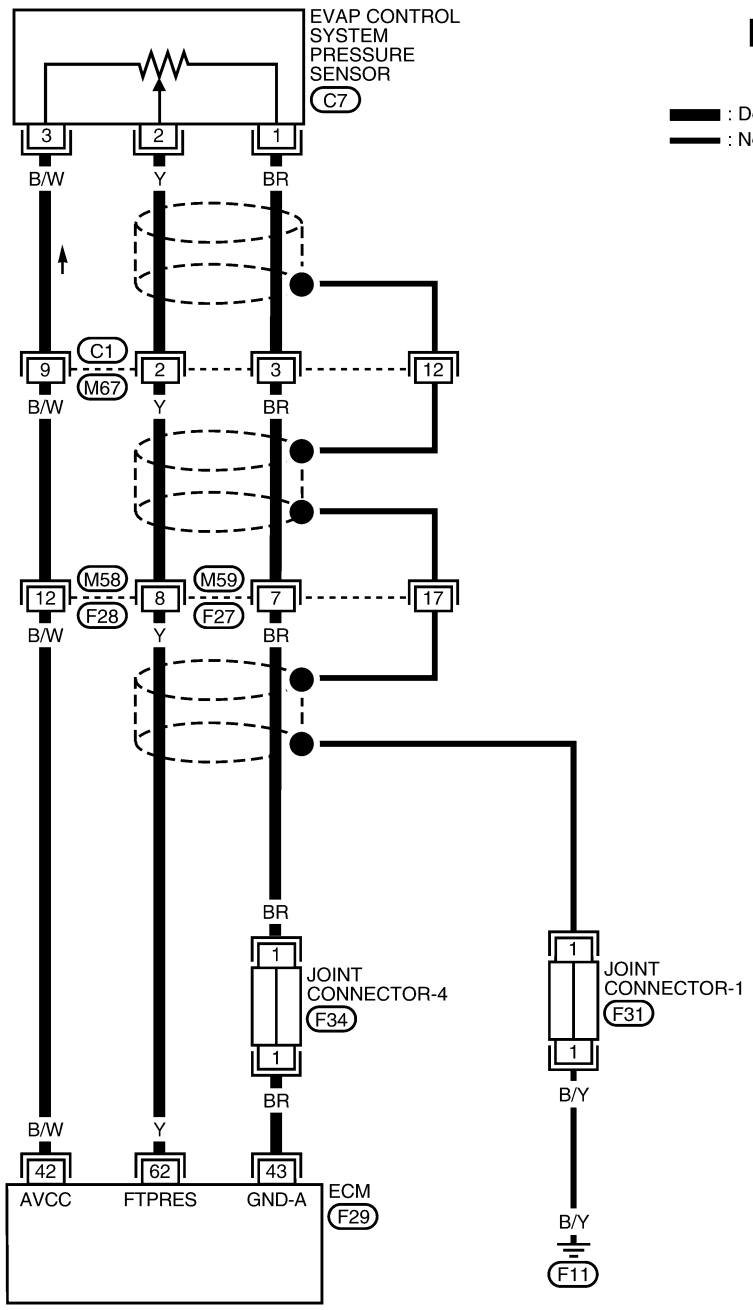

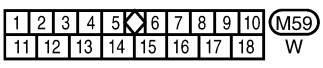



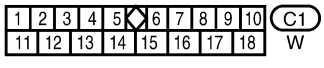

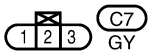

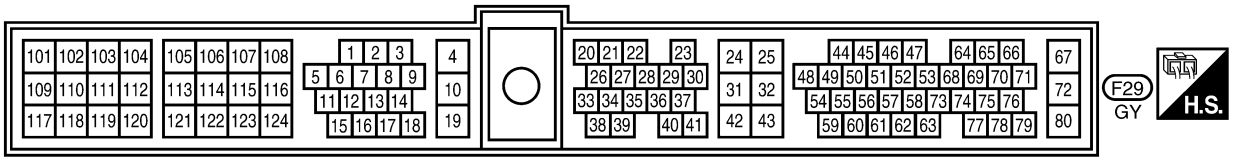

LEC670

Diagnostic Procedure

NEEC1318

1	CHECK RUBBER TUBE

1. Turn ignition switch “OFF”.
2. Check rubber tube connected to the sensor for clogging, vent, kink, disconnection or improper connection.

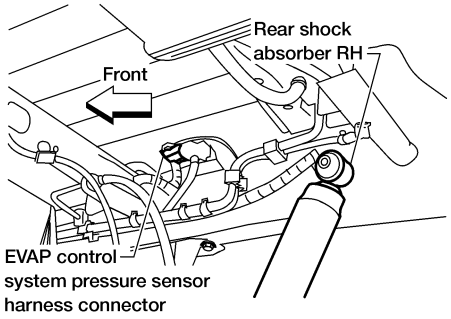

AEC651A

OK or NG

OK	▶	GO TO 2.
NG	▶	Reconnect, repair or replace.

2	RETIGHTEN GROUND SCREWS

1. Loosen and retighten engine ground screws.

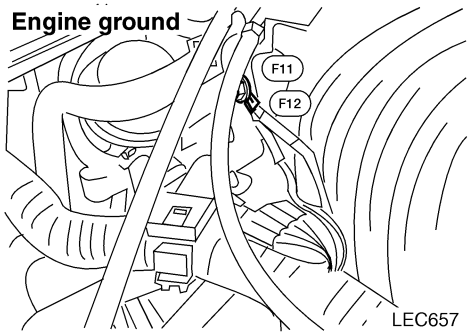

LEC657

	▶	GO TO 3.

3	CHECK CONNECTOR

1. Disconnect EVAP control system pressure sensor harness connector.
2. Check sensor harness connector for water.
   Water should not exist.

OK or NG

OK	▶	GO TO 4.
NG	▶	Repair or replace harness connector.

4	CHECK EVAP CONTROL SYSTEM PRESSURE SENSOR POWER SUPPLY CIRCUIT

1. Turn ignition switch "ON".
2. Check voltage between terminal 3 and ground with CONSULT-II or tester.

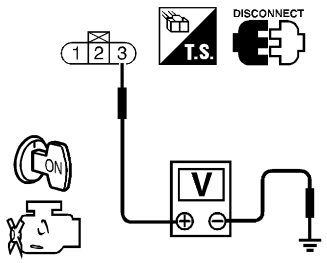

SEF889U

Voltage: Approximately 5V

OK or NG

OK	▶	GO TO 6.
NG	▶	GO TO 5.

5	DETECT MALFUNCTIONING PART

Check the following.
- Harness connectors C1, M67
- Harness connectors M58, F28
- Harness for open or short between EVAP control system pressure sensor and ECM

	▶	Repair harness or connectors.

6	CHECK EVAP CONTROL SYSTEM PRESSURE SENSOR GROUND CIRCUIT FOR OPEN AND SHORT

1. Turn ignition switch "OFF".
2. Check harness continuity between EVAP control system pressure sensor terminal 1 and engine ground. Refer to Wiring Diagram.
   Continuity should exist.
3. Also check harness for short to power.

OK or NG

OK	▶	GO TO 8.
NG	▶	GO TO 7.

7	DETECT MALFUNCTIONING PART

Check the following.
- Harness connectors C1, M67
- Harness connectors M59, F27
- Joint connector-4
- Harness for open or short between EVAP control system pressure sensor and ECM

	▶	Repair open circuit or short to power in harness or connectors.

Diagnostic Procedure (Cont'd)

8	CHECK EVAP CONTROL SYSTEM PRESSURE SENSOR INPUT SIGNAL CIRCUIT FOR OPEN AND SHORT

1. Disconnect ECM harness connector.
2. Check harness continuity between ECM terminal 62 and EVAP control system pressure sensor terminal 2. Refer to Wiring Diagram.
   Continuity should exist.
3. Also check harness for short to ground and short to power.

OK or NG

OK (With CONSULT-II)	▶	GO TO 10.
OK (Without CONSULT-II)	▶	GO TO 11.
NG	▶	GO TO 9.

9	DETECT MALFUNCTIONING PART

Check the following.
- Harness connectors C1, M67
- Harness connectors M59, F27
- Harness for open or short between ECM and EVAP control system pressure sensor

	▶	Repair open circuit or short to ground or short to power in harness or connectors.

10	CHECK EVAP CANISTER PURGE VOLUME CONTROL SOLENOID VALVE

With CONSULT-II
1. Start engine.
2. Perform "PURG VOL CONT/V" in "ACTIVE TEST" mode with CONSULT-II. Check that engine speed varies according to the valve opening.

ACTIVE TEST	
PURG VOL CONT/V	0.0%
MONITOR	
ENG SPEED	XXX rpm
FR O2 MNTR-B1	RICH
FR O2 MNTR-B2	RICH
THRTL POS SEN	XXX V
A/F ALPHA-B1	XXX %
A/F ALPHA-B2	XXX %

SEF068Y

OK or NG

OK	▶	GO TO 12.
NG	▶	GO TO 11.

11	CHECK EVAP CANISTER PURGE VOLUME CONTROL SOLENOID VALVE

With CONSULT-II

1. Check air passage continuity under the following conditions.

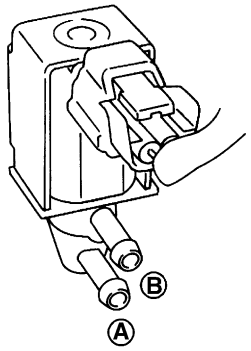

SEF660U

Condition PURG VOL CONT/V value	Air passage continuity between A and B
100.0%	Yes
0.0%	No

MTBL0241

Without CONSULT-II

1. Check air passage continuity under the following conditions.

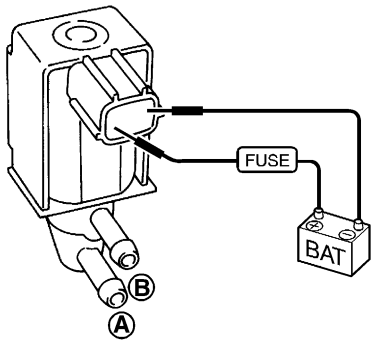

SEF661U

Condition	Air passage continuity between A and B
12V direct current supply between terminals 1 and 2	Yes
No supply	No

MTBL0242

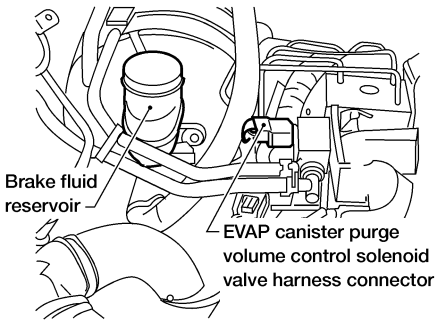

AEC652A

OK or NG

OK	▶	GO TO 12.
NG	▶	Replace EVAP canister purge volume control solenoid valve.

Diagnostic Procedure (Cont'd)

12 **CHECK EVAP CANISTER VENT CONTROL VALVE**

With CONSULT-II

1. Perform "VENT CONTROL/V" in "ACTIVE TEST" mode.
2. Check air passage continuity and operation delay time under the following conditions.

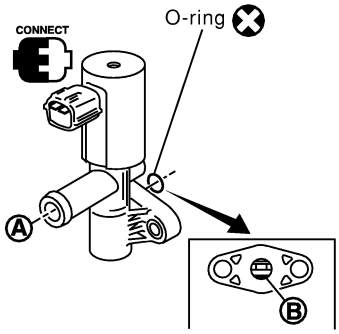

ACTIVE TEST	
VENT CONTROL/V	OFF
MONITOR	
ENG SPEED	XXX rpm
A/F ALPHA-B1	XXX %
A/F ALPHA-B2	XXX %
HO2S1 (B1)	XXX V
HO2S1 (B2)	XXX V
THRTL POS SEN	XXX V

Condition VENT CONTROL/V	Air passage continuity between A and B
ON	No
OFF	Yes

Operation takes less than 1 second.

SEF991Y

Without CONSULT-II

1. Check air passage continuity and operation delay time under the following conditions.

Condition	Air passage continuity between A and B
12V direct current supply between terminals 1 and 2	No
OFF	Yes

MTBL0240

If NG or operation takes more than 1 second, clean valve using air blower or replace as necessary.
If portion **B** is rusted, replace control valve.

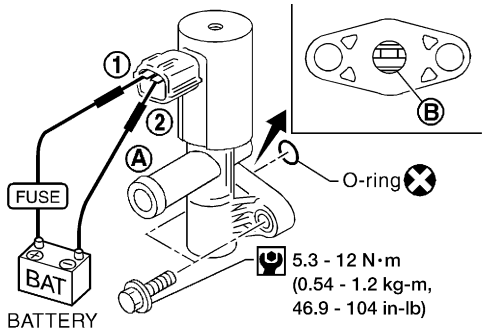

AEC783A

Make sure new O-ring is installed properly.

OK or NG

OK	▶	GO TO 13.
NG	▶	Replace EVAP canister vent control valve.

13	CHECK EVAP CONTROL SYSTEM PRESSURE SENSOR

1. Remove EVAP control system pressure sensor with its harness connector connected.
2. Remove hose from EVAP control system pressure sensor.
3. Turn ignition switch "ON".
4. Use pump to apply vacuum and pressure to EVAP control system pressure sensor as shown in figure.
5. Check input voltage between ECM terminal 62 and ground.

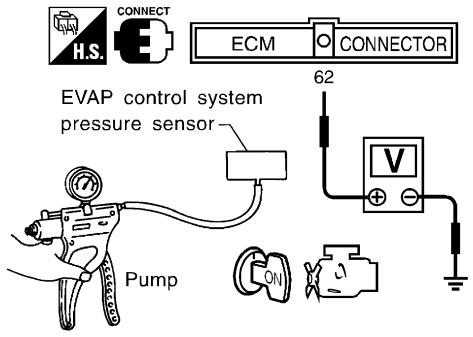

SEF894U

Pressure (Relative to atmosphericpressure)	Voltage (V)
0 kPa (0 mmHg, 0 inHg)	3.0 - 3.6
–9.3 kPa (–70 mmHg, –2.76 inHg)	0.4 - 0.6

MTBL0246

CAUTION:

- **Always calibrate the vacuum pump gauge when using it.**
- **Do not apply below −20 kPa (−150 mmHg, −5.91 inHg) or over 20 kPa (150 mmHg, 5.91 inHg) of pressure.**
- **Never apply force to the air hole protector of the sensor if equipped.**

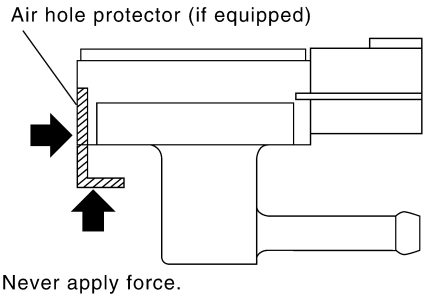

SEF799W

- **Discard and EVAP control system pressure sensor which has been dropped from a height of more than 0.5 m (19.7 in) onto a hard surface such as a concrete floor; use a new one.**

OK or NG

OK	▶	GO TO 14.
NG	▶	Replace EVAP control system pressure sensor.

14	CHECK RUBBER TUBE

Check obstructed rubber tube connected to EVAP canister vent control valve.

OK or NG

OK	▶	GO TO 15.
NG	▶	Clean, repair or replace rubber tube.

Diagnostic Procedure (Cont'd)

15	CHECK WATER SEPARATOR

1. Check visually for insect nests in the water separator air inlet.
2. Check visually for cracks or flaws in the appearance.
3. Check visually for cracks or flaws in the hose.
4. Check that **A** and **C** are not clogged by blowing air into **B** with **A**, and then **C** plugged.

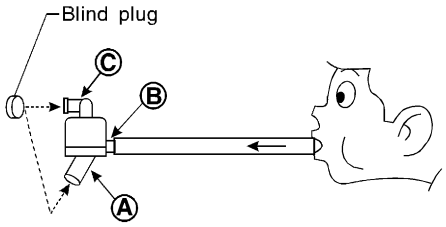

* Ⓐ: Bottom hole (To atmosphere)
Ⓑ: Emergency tube (From EVAP canister)
Ⓒ: Inlet port (To member)

SEF829T

5. In case of NG in items 2 - 4, replace the parts.

NOTE:
- Do not disassemble water separator.

OK or NG

OK	▶	GO TO 16.
NG	▶	Replace water separator.

16	CHECK IF EVAP CANISTER SATURATED WITH WATER

1. Remove EVAP canister with EVAP canister vent control valve attached.
2. Check if water will drain from the EVAP canister.

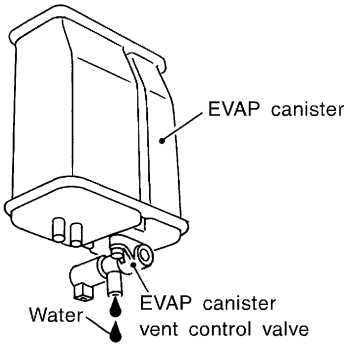

SEF596U

Yes or No

Yes	▶	GO TO 17.
No	▶	GO TO 19.

17	CHECK EVAP CANISTER

Weigh the EVAP canister with the EVAP canister vent control valve attached.
The weight should be less than 1.8 kg (4.0 lb).

OK or NG

OK	▶	GO TO 19.
NG	▶	GO TO 18.

18	DETECT MALFUNCTIONING PART
Check the following. ● EVAP canister for damage ● EVAP hose between EVAP canister and water separator for clogging or poor connection	
▶	Repair hose or replace EVAP canister.

19	CHECK EVAP CONTROL SYSTEM PRESSURE SENSOR SHIELD CIRCUIT FOR OPEN AND SHORT
1. Reconnect harness connectors disconnected. 2. Disconnect harness connectors C1, M67. 3. Check harness continuity between harness connector M67 terminal 12 and engine ground. **Continuity should exist.** 4. Also check harness for short to power. **OK or NG**	
OK ▶	GO TO 21.
NG ▶	GO TO 20.

20	DETECT MALFUNCTIONING PART
Check the following. ● Harness connector M67 ● Harness connectors M59, F27 ● Joint connector-1 ● Harness for open between harness connector M67 and engine ground	
▶	Repair open circuit or short to power in harness or connectors.

21	CHECK INTERMITTENT INCIDENT
Refer to "TROUBLE DIAGNOSIS FOR INTERMITTENT INCIDENT", EC-1353.	
▶	**INSPECTION END**

On Board Diagnosis Logic

NEEC1319

NOTE:
If DTC P0455 is displayed with P1448, perform trouble diagnosis for DTC P1448 first. (See EC-1751.)

This diagnosis detects a very large leak (fuel filler cap fell off etc.) in the EVAP system between the fuel tank and the EVAP canister purge volume control solenoid valve.

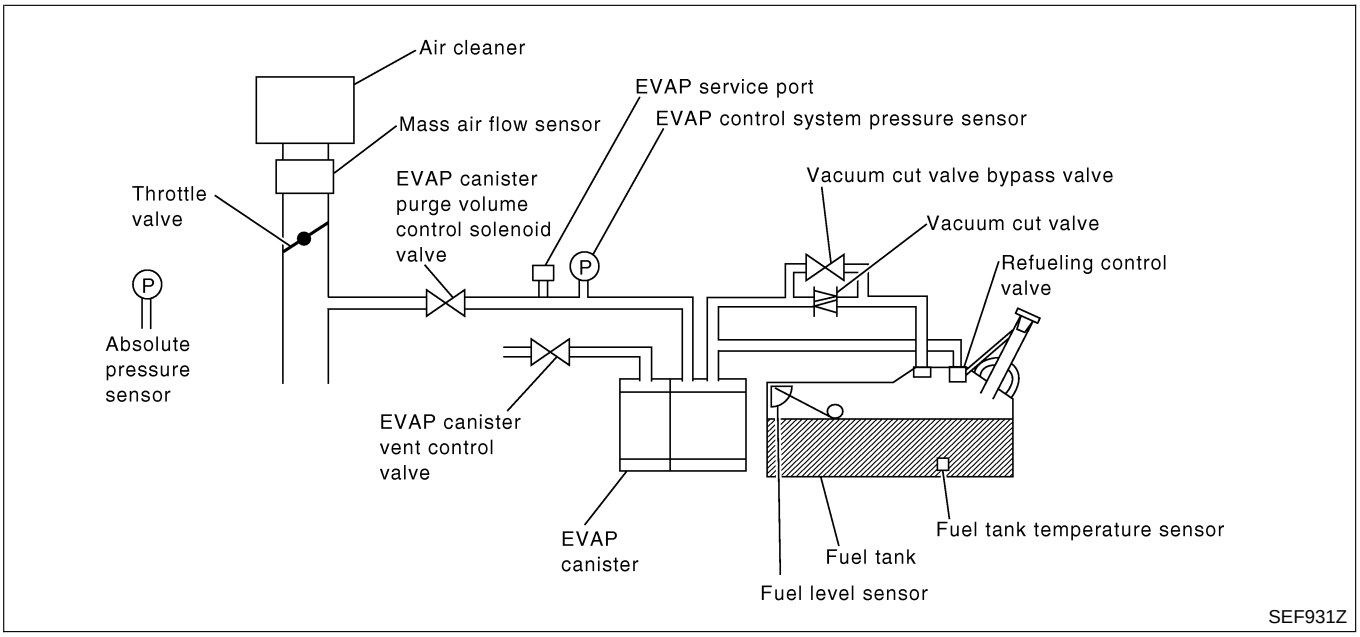

Malfunction is detected when EVAP control system has a very large leak, such as fuel filler cap fell off, EVAP control system does not operate properly.

CAUTION:

- **Fuel filler cap remains open or fails to close.**
- **Use only a genuine NISSAN fuel filler cap as a replacement. If an incorrect fuel filler cap is used, the MIL may come on.**
- **Use only a genuine NISSAN rubber tube as a replacement.**

POSSIBLE CAUSE

NEEC1319S01

- Fuel filler cap remains open or fails to close.
- Incorrect fuel tank vacuum relief valve
- Incorrect fuel filler cap used
- Foreign matter caught in fuel filler cap.
- Leak is in line between intake manifold and EVAP canister purge volume control solenoid valve.
- Foreign matter caught in EVAP canister vent control valve.
- EVAP canister or fuel tank leaks
- EVAP purge line (pipe and rubber tube) leaks
- EVAP purge line rubber tube bent.
- Blocked or bent rubber tube to EVAP control system pressure sensor
- Loose or disconnected rubber tube
- EVAP canister vent control valve and the circuit
- EVAP canister purge volume control solenoid valve and the circuit
- Fuel tank temperature sensor

- O-ring of EVAP canister vent control valve is missing or damaged.
- EVAP control system pressure sensor
- Refueling control valve
- ORVR system leaks

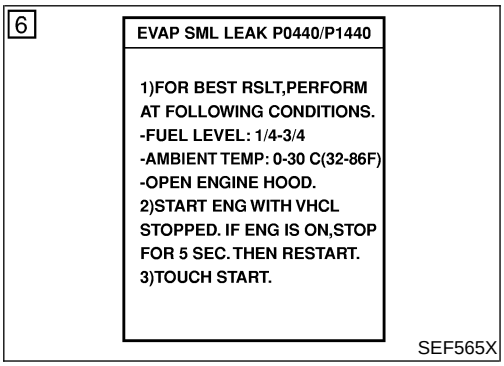

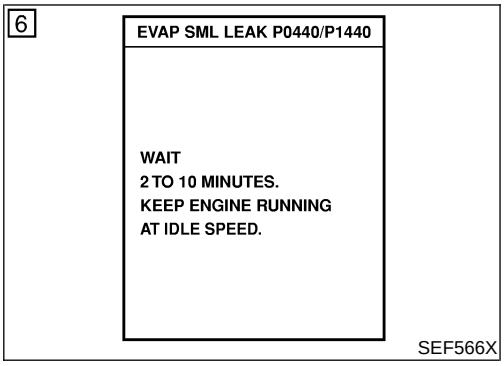

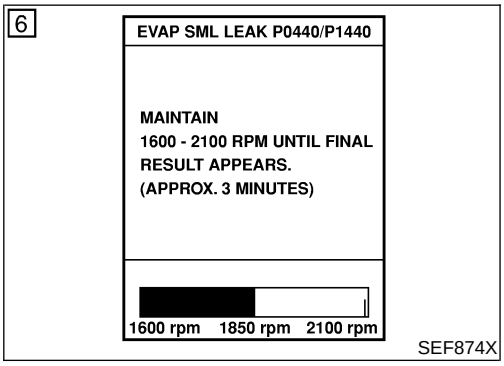

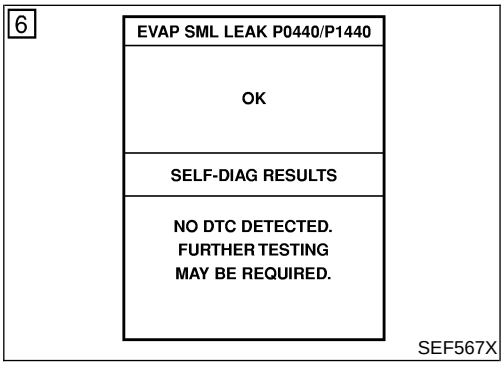

DTC Confirmation Procedure

NEEC1320

CAUTION:

Never remove fuel filter cap during the DTC confirmation procedure.

NOTE:

- **If DTC P0455 is displayed with P1448, perform trouble diagnosis for DTC P1448 first. (See EC-1751.)**
- **Make sure that EVAP hoses are connected to EVAP canister purge volume control solenoid valve properly.**
- If "DTC Confirmation Procedure" has been previously conducted, always turn ignition switch OFF and wait at least 5 seconds before conducting the next test.

TESTING CONDITION:

- **Perform "DTC WORK SUPPORT" when the fuel level is between 1/4 to 3/4 full and vehicle is placed on flat level surface.**
- **Open engine hood before conducting the following procedure.**

With CONSULT-II

1) Tighten fuel filter cap securely until ratcheting sound is heard.
2) Turn ignition switch ON.
3) Turn ignition switch OFF and wait at least 5 seconds.
4) Turn ignition switch ON and select "DATA MONITOR" mode with CONSULT-II.
5) Make sure that the following conditions are met.
   COOLAN TEMP/S: 0 - 32°C (32 - 90°F)
   INT/A TEMP SE: More than 0°C (32°F)
6) Select "EVAP SML LEAK P0440" of "EVAPORATIVE SYSTEM" in "DTC WORK SUPPORT" mode with CONSULT-II. Follow the instruction displayed.

NOTE:

If the engine speed cannot be maintained within the range displayed on the CONSULT-II screen, go to "Basic Inspection", EC-1314.

7) Make sure that "OK" is displayed.
   If "NG" is displayed, select "SELF-DIAG RESULTS" mode with CONSULT-II and make sure that "EVAP GROSS LEAK [P0455] is displayed, refer to "Diagnostic Procedure", EC-1619.
   If P0440 is displayed, perform "Diagnostic Procedure" for DTC P0440.

With GST

NOTE:

Be sure to read the explanation of "Driving Pattern" on EC-1281 before driving vehicle.

1) Start engine.
2) Drive vehicle according to "Driving Pattern", EC-1281.
3) Stop vehicle.
4) Select "MODE 1" with GST.

- If SRT of EVAP system is not set yet, go to the following step.
- If SRT of EVAP system is set, the result will be OK.

5) Turn ignition switch "OFF" and wait at least 5 seconds.
6) Start engine.
   It is not necessary to cool engine down before driving.
7) Drive vehicle again according to the "Driving Pattern", EC-1281.
8) Stop vehicle.
9) Select "MODE 3" with GST.

- If P0455 is displayed on the screen, go to "Diagnostic Procedure", EC-1619.
- If P0440 is displayed on the screen, go to "Diagnostic Procedure", EC-1580.
- If P1447 is displayed on the screen, go to "Diagnostic Procedure" for "DTC P1447", EC-1738.
- If P0440, P0455 and P1447 are not displayed on the screen, go to the following step.

10) Select "MODE 1" with GST.

- If SRT of EVAP system is set, the result will be OK.
- If SRT of EVAP system is not set, go to step 6.

Diagnostic Procedure

=NEEC1321

1	CHECK FUEL FILLER CAP DESIGN

1. Turn ignition switch OFF.
2. Check for genuine NISSAN fuel filler cap design.

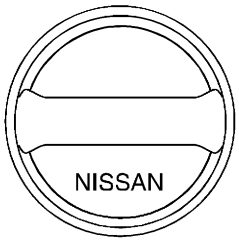

SEF915U

OK or NG

OK	▶	GO TO 2.
NG	▶	Replace with genuine NISSAN fuel filler cap.

2	CHECK FUEL FILLER CAP INSTALLATION

Check that the cap is tightened properly by rotating the cap clockwise.

OK or NG

OK	▶	GO TO 3.
NG	▶	• Open fuel filler cap, then clean cap and fuel filler neck threads using air blower. • Retighten until ratcheting sound is heard.

3	CHECK FUEL FILLER CAP FUNCTION

Check for air releasing sound while opening the fuel filler cap.

OK or NG

OK	▶	GO TO 5.
NG	▶	GO TO 4.

4	CHECK FUEL TANK VACUUM RELIEF VALVE (BUILT INTO FUEL FILLER CAP)

1. Wipe clean valve housing.
2. Check valve opening pressure and vacuum.

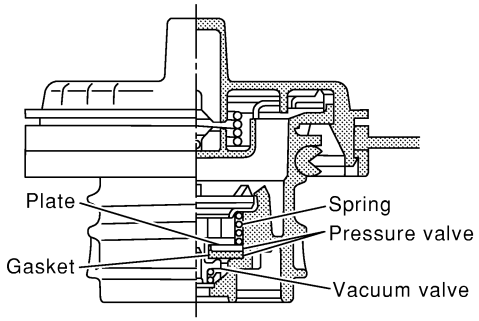

SEF445Y

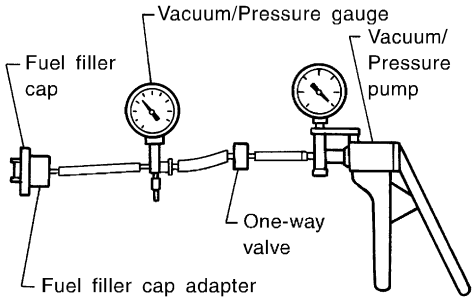

SEF943S

Pressure:
15.3 - 20.0 kPa (0.156 - 0.204 kg/cm^2, 2.22 - 2.90 psi)
Vacuum:
−6.0 to −3.3 kPa (−0.061 to −0.034 kg/cm^2, −0.87 to −0.48 psi)

CAUTION:
Use only a genuine fuel filler cap as a replacement. If an incorrect fuel filler cap is used, the MIL may come on.

OK or NG

OK	▶	GO TO 5.
NG	▶	Replace fuel filler cap with a genuine one.

5	CHECK EVAP PURGE LINE

Check EVAP purge line (pipe, rubber tube, fuel tank and EVAP canister) for cracks, improper connection or disconnection. Refer to "Evaporative Emission System", EC-1242.

OK or NG

OK	▶	GO TO 6.
NG	▶	Repair or reconnect the hose.

6	CLEAN EVAP PURGE LINE

Clean EVAP purge line (pipe and rubber tube) using air blower.

	▶	GO TO 7.

7	CHECK EVAP CANISTER VENT CONTROL VALVE, O-RING AND CIRCUIT

Refer to "DTC Confirmation Procedure", EC-1600.

OK or NG

OK	▶	GO TO 8.
NG	▶	Repair or replace EVAP canister vent control valve and O-ring or harness/connector.

8	INSTALL THE PRESSURE PUMP

To locate the EVAP leak, install EVAP service port adapter and pressure pump to EVAP service port securely.

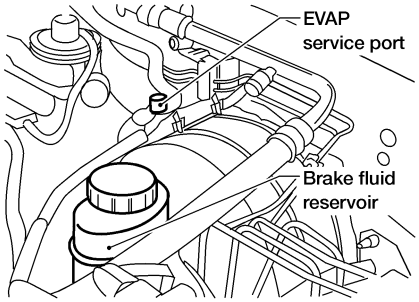

AEC649A

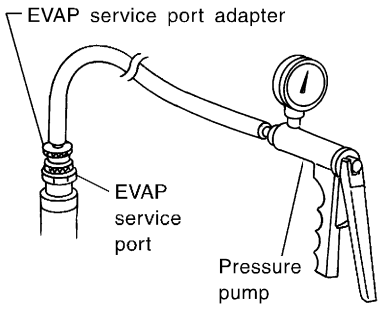

SEF916U

NOTE:
Improper installation of the EVAP service port adapter to the EVAP service port may cause leaking.

Models with CONSULT-II ▶	GO TO 9.
Models without CONSULT-II ▶	GO TO 10.

9	CHECK FOR EVAP LEAK

With CONSULT-II

1. Turn ignition switch ON.
2. Select "EVAP SYSTEM CLOSE" of "WORK SUPPORT" mode with CONSULT-II.
3. Touch "START" and apply pressure into the EVAP line until the pressure indicator reaches the middle of the bar graph.
   NOTE:
   - **Never use compressed air or a high pressure pump.**
   - **Do not exceed 4.12 kPa (0.042 kg/cm^2, 0.6 psi) of pressure in the system.**

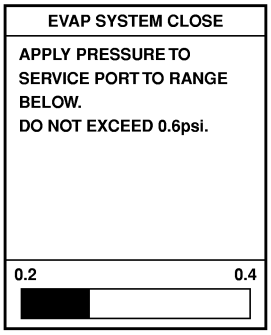

PEF917U

4. Using EVAP leak detector, locate the EVAP leak. For the leak detector, refer to the instruction manual for more details. Refer to "EVAPORATIVE EMISSION LINE DRAWING", EC-1245.

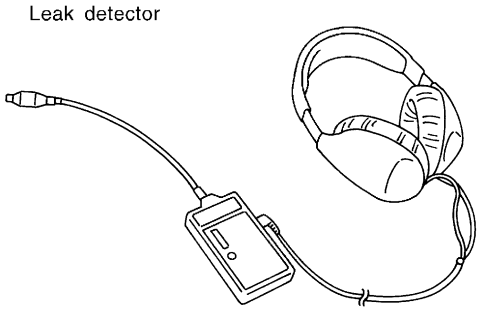

SEF200U

OK or NG

OK	▶	GO TO 11.
NG	▶	Repair or replace.

10	CHECK FOR EVAP LEAK

Without CONSULT-II

1. Turn ignition switch OFF.
2. Apply 12 volts DC to EVAP canister vent control valve. The valve will close. (Continue to apply 12 volts until the end of test.)
3. Apply 12 volts DC to vacuum cut valve bypass valve. The valve will open. (Continue to apply 12V until the end of test.)

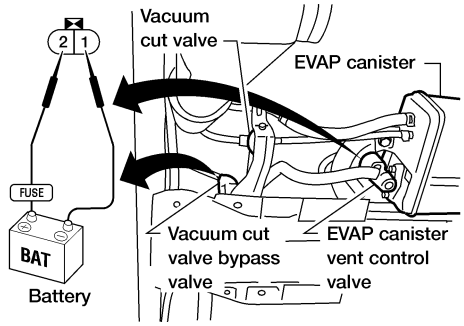

AEC632A

4. Pressurize the EVAP line using pressure pump with 1.3 to 2.7 kPa (10 to 20 mmHg, 0.39 to 0.79 inHg), then remove pump and EVAP service port adapter.
   NOTE:
   - **Never use compressed air or a high pressure pump.**
   - **Do not exceed 4.12 kPa (0.042 kg/cm^2, 0.6 psi) of pressure in the system.**
5. Using EVAP leak detector, locate the EVAP leak. For the leak detector, refer to the instruction manual for more details. Refer to "EVAPORATIVE EMISSION LINE DRAWING", EC-1245.

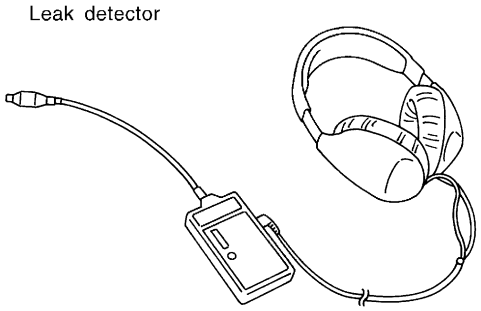

SEF200U

OK or NG

OK	▶	GO TO 12.
NG	▶	Repair or replace.

Diagnostic Procedure (Cont'd)

11	CHECK EVAP CANISTER PURGE VOLUME CONTROL SOLENOID VALVE OPERATION

With CONSULT-II

1. Disconnect vacuum hose to EVAP canister purge volume control solenoid valve at EVAP service port.
2. Start engine.
3. Perform "PURG VOL CONT/V" in "ACTIVE TEST" mode.
4. Touch "Qu" on CONSULT-II screen to increase "PURG VOL CONT/V" opening to 100.0%.
5. Check vacuum hose for vacuum when revving engine up to 2,000 rpm.

ACTIVE TEST	
PURG VOL CONT/V	XXX %
MONITOR	
ENG SPEED	XXX rpm
A/F ALPHA-B1	XXX %
A/F ALPHA-B2	XXX %
HO2S1 MNTR (B1)	LEAN
HO2S1 MNTR (B2)	LEAN
THRTL POS SEN	XXX V

Vacuum should exist.

SEF984Y

Vacuum should exist.

OK or NG

OK	▶	GO TO 14.
NG	▶	GO TO 13.

12	CHECK EVAP CANISTER PURGE VOLUME CONTROL SOLENOID VALVE OPERATION

Without CONSULT-II

1. Start engine and warm it up to normal operating temperature.
2. Stop engine.
3. Disconnect vacuum hose to EVAP canister purge volume control solenoid valve at EVAP service port.
4. Start engine and let it idle for at least 80 seconds.
5. Check vacuum hose for vacuum when revving engine up to 2,000 rpm.
   Vacuum should exist.

OK or NG

OK	▶	GO TO 15.
NG	▶	GO TO 13.

13	CHECK VACUUM HOSE

Check vacuum hoses for clogging or disconnection. Refer to "Vacuum Hose Drawing", EC-1235.

OK or NG

OK (With CONSULT-II)	▶	GO TO 14.
OK (Without CONSULT-II)	▶	GO TO 15.
NG	▶	Repair or reconnect the hose.

14	CHECK EVAP CANISTER PURGE VOLUME CONTROL SOLENOID VALVE

With CONSULT-II

1. Start engine.
2. Perform "PURG VOL CONT/V" in "ACTIVE TEST" mode with CONSULT-II. Check that engine speed varies according to the valve opening.

ACTIVE TEST	
PURG VOL CONT/V	0.0%
MONITOR	
ENG SPEED	XXX rpm
A/F ALPHA-B1	XXX %
A/F ALPHA-B2	XXX %
HO2S1 MNTR (B1)	RICH
HO2S1 MNTR (B2)	RICH
THRTL POS SEN	XXX V

SEF985Y

If OK, inspection end. If NG, go to following step.

3. Check air passage continuity.

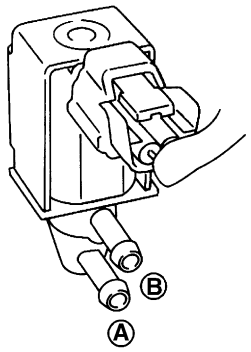

SEF660U

Condition PURG VOL CONT/V value	Air passage continuity between A and B
100.0%	Yes
0.0%	No

MTBL0241

OK or NG

OK	▶	GO TO 16.
NG	▶	Replace EVAP canister purge volume control solenoid valve.

15	CHECK EVAP CANISTER PURGE VOLUME CONTROL SOLENOID VALVE

Without CONSULT-II

Check air passage continuity.

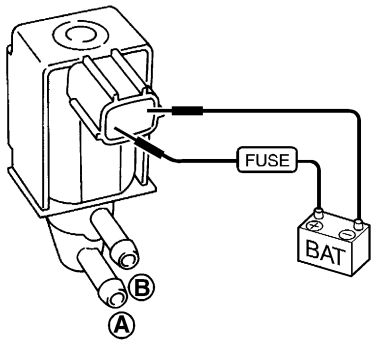

SEF661U

Condition	Air passage continuity between A and B
12V direct current supply between terminals 1 and 2	Yes
No supply	No

MTBL0242

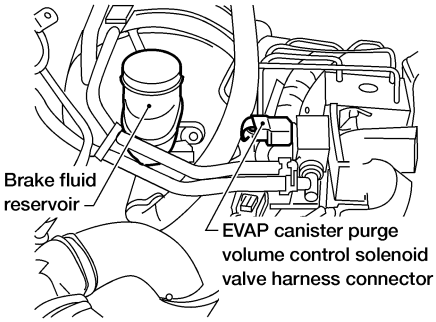

AEC652A

OK or NG

OK	▶	GO TO 16.
NG	▶	Replace EVAP canister purge volume control solenoid valve.

16	CHECK FUEL TANK TEMPERATURE SENSOR

1. Remove fuel level sensor unit.
2. Check resistance between fuel level sensor unit terminals T and E by heating with hot water or heat gun as shown in the figure.

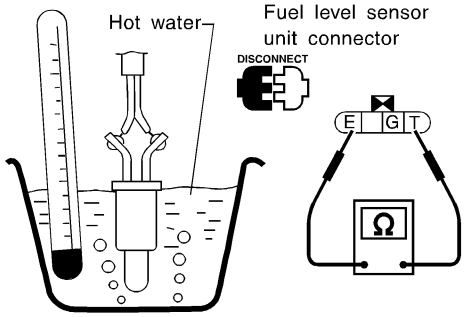

Temperature °C (°F)	Resistance kΩ
20 (68)	2.3 - 2.7
50 (122)	0.79 - 0.90

SEC311C

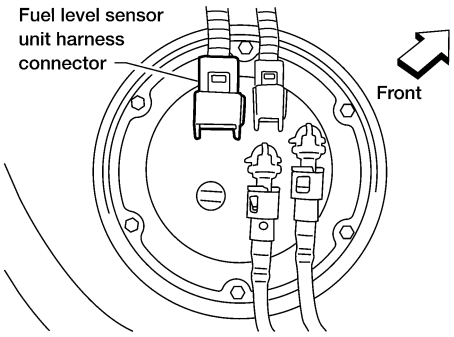

LEC764

OK or NG

OK	▶	GO TO 17.
NG	▶	Replace fuel tank temperature sensor.

17	CHECK EVAP CONTROL SYSTEM PRESSURE SENSOR

1. Remove EVAP control system pressure sensor with its harness connector connected.
2. Remove hose from EVAP control system pressure sensor.
3. Turn ignition switch ON.
4. Use pump to apply vacuum and pressure to EVAP control system pressure sensor as shown in figure.
5. Check input voltage between ECM terminal 62 and ground.

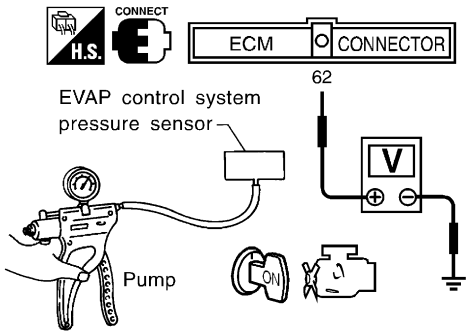

SEF894U

Pressure (Relative to atmosphericpressure)	Voltage (V)
0 kPa (0 mmHg, 0 inHg)	3.0 - 3.6
–9.3 kPa (–70 mmHg, –2.76 inHg)	0.4 - 0.6

MTBL0246

CAUTION:

- **Always calibrate the vacuum pump gauge when using it.**
- **Do not apply below −20 kPa (−150 mmHg, −5.91 inHg) or over 20 kPa (150 mmHg, 5.91 inHg) of pressure.**
- **Never apply force to the air hole protector of the sensor if equipped.**

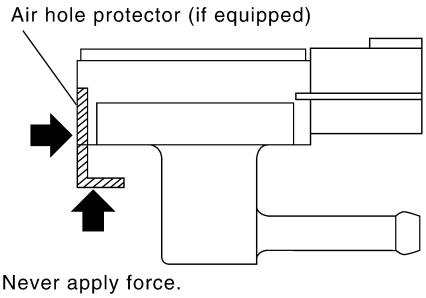

SEF799W

- **Discard and EVAP control system pressure sensor which has been dropped from a height of more than 0.5 m (19.7 in) onto a hard surface such as a concrete floor; use a new one.**

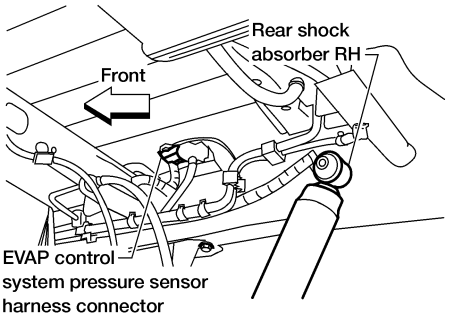

AEC651A

OK or NG

OK	▶	GO TO 18.
NG	▶	Replace EVAP control system pressure sensor.

18	**CHECK INTERMITTENT INCIDENT**
Refer to "TROUBLE DIAGNOSIS FOR INTERMITTENT INCIDENT", EC-1353.	
▶	**INSPECTION END**

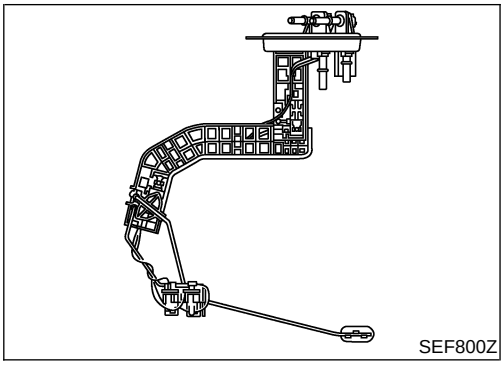
SEF800Z

Component Description

NEEC1322

The fuel level sensor is mounted in the fuel level sensor unit. The sensor detects a fuel level in the fuel tank and transmits a signal to the ECM.
It consists of two parts, one is mechanical float and the other side is variable resistor. Fuel level sensor output voltage changes depending on the movement of the fuel mechanical float.

ECM Terminals and Reference Value

NEEC1323

Specification data are reference values and are measured between each terminal and ground.

CAUTION:
Do not use ECM ground terminals when measuring input/output voltage. Doing so may result in damage to the ECM's transistor. Use a ground other than ECM terminals, such as the ground.

TERMINAL NO.	WIRE COLOR	ITEM	CONDITION	DATA (DC Voltage)
46	G	Fuel level sensor	**[Ignition switch "ON"]**	Approximately 0 - 4.8V Output voltage varies with fuel level.
66	B	Fuel level sensor ground	**[Engine is running]** ● Idle speed	Approximately 0V

On Board Diagnosis Logic

NEEC1324

When the vehicle is parked, naturally the fuel level in the fuel tank is stable. It means that output signal of the fuel level sensor does not change. If ECM senses sloshing signal from the sensor, fuel level sensor malfunction is detected.
Malfunction is detected when even though the vehicle is parked, a signal being varied is sent from the fuel level sensor to ECM.

POSSIBLE CAUSE

NEEC1324S01

- Fuel level sensor circuit
  (The fuel level sensor circuit is open or shorted.)
- Fuel level sensor

3

DATA MONITOR	
MONITOR	NO DTC
FUEL T/TMP SE	XXX °C
FUEL LEVEL SE	XXX V

SEF195Y

DTC Confirmation Procedure

NEEC1325

NOTE:
If "DTC Confirmation Procedure" has been previously conducted, always turn ignition switch "OFF" and wait at least 5 seconds before conducting the next test.

WITH CONSULT-II

NEEC1325S01

1) Turn ignition switch "ON".
2) Select "DATA MONITOR" mode with CONSULT-II.
3) Start engine and wait maximum of 2 consecutive minutes.
4) If 1st trip DTC is detected, go to "Diagnostic Procedure", EC-1633.

WITH GST

NEEC1325S02

Follow the procedure "WITH CONSULT-II" above.

Wiring Diagram

NEEC1326

EC-FLS1-01

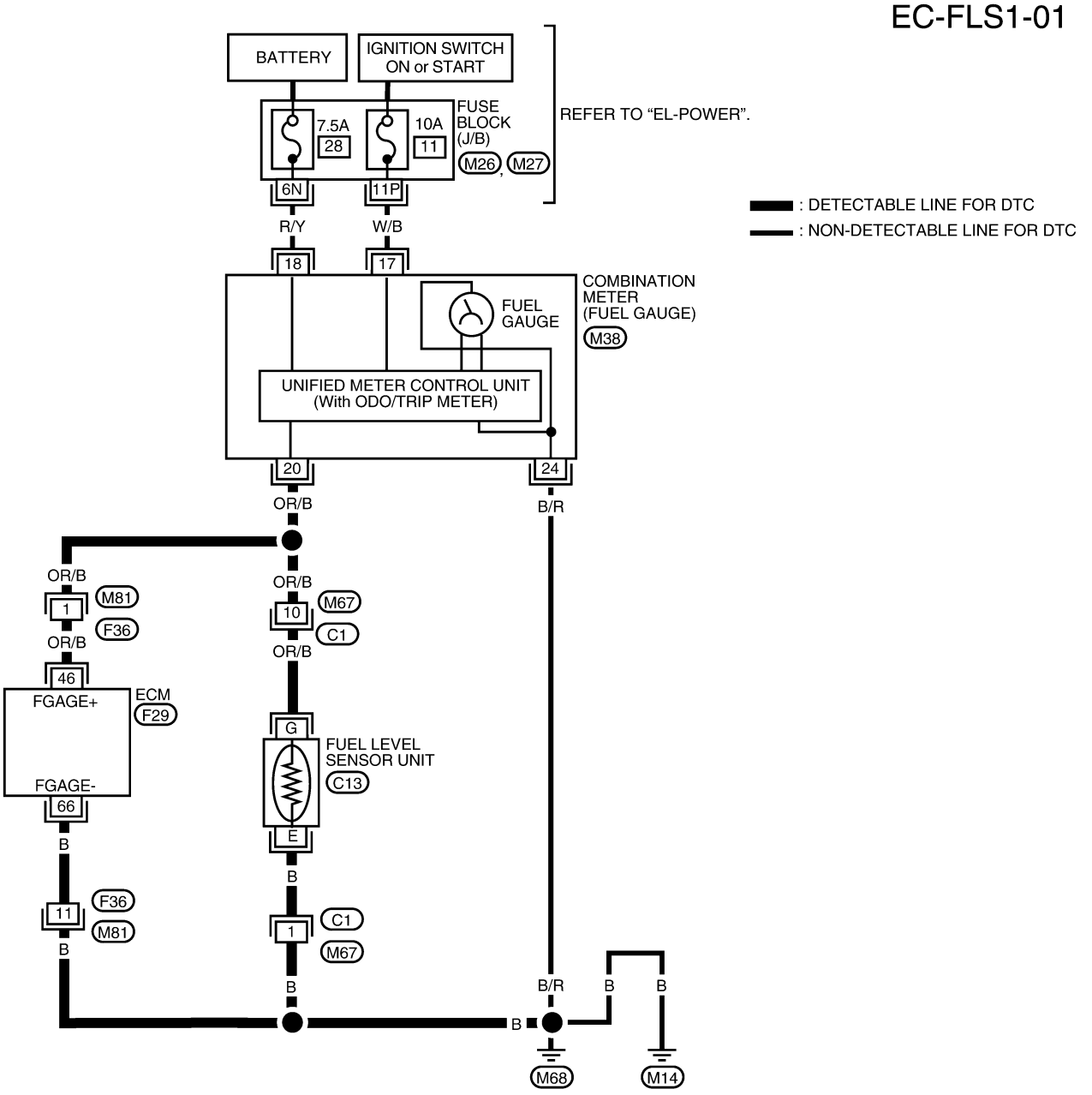

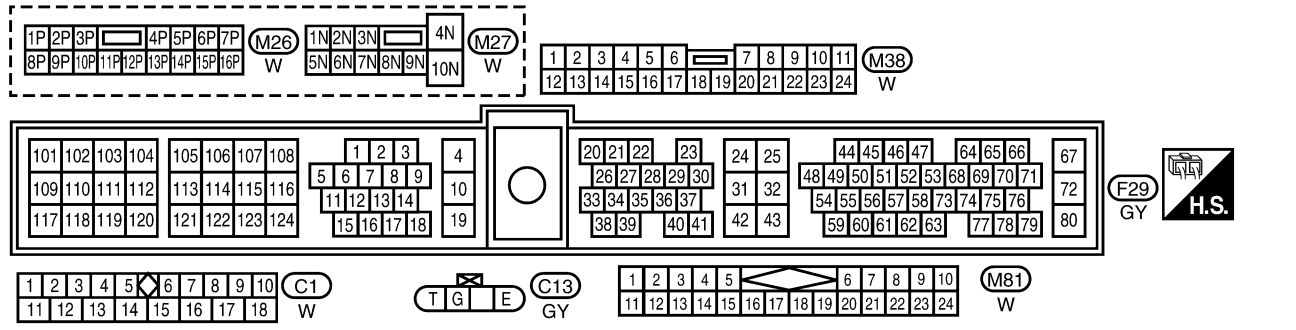

WEC818

Diagnostic Procedure

=NEEC1327

1	CHECK FUEL LEVEL SENSOR POWER SUPPLY CIRCUIT

1. Turn ignition switch “OFF”.
2. Disconnect fuel level sensor unit harness connector.
3. Turn ignition switch “ON”.
4. Check voltage between fuel level sensor unit terminal G and ground with CONSULT-II or a tester.

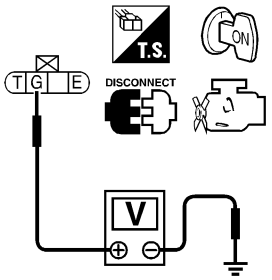

Voltage: Approximately 12V

SEF904Z

OK or NG

OK	▶	GO TO 3.
NG	▶	GO TO 2.

2	DETECT MALFUNCTIONING PART

Check the following.
- Harness connectors M67, C1
- Harness for open or short between combination meter and fuel level sensor unit

	▶	Repair or replace harness or connectors.

3	CHECK FUEL LEVEL SENSOR GROUND CIRCUIT FOR OPEN AND SHORT

1. Turn ignition switch “OFF”.
2. Check harness continuity between fuel level sensor unit terminal E and body ground. Refer to Wiring Diagram.
   Continuity should exist.
3. Also check harness for short to power.

OK or NG

OK	▶	GO TO 5.
NG	▶	GO TO 4.

4	DETECT MALFUNCTIONING PART

Check the harness connectors C1, M67.

	▶	Repair or replace harness or connectors.

5	CHECK FUEL LEVEL SENSOR INPUT SIGNAL CIRCUIT FOR OPEN AND SHORT

1. Disconnect ECM harness connector.
2. Check harness continuity between ECM terminal 46 and fuel level sensor unit terminal G, ECM terminal 66 and fuel level sensor unit terminal E. Refer to Wiring Diagram.
   Continuity should exist.
3. Also check harness for short to ground and short to power.

OK or NG

OK	▶	GO TO 7.
NG	▶	GO TO 6.

Diagnostic Procedure (Cont'd)

6	DETECT MALFUNCTIONING PART
Check the following. ● Harness connectors M67, C1 ● Harness connectors M81, F36 ● Harness for open or short between ECM and fuel level sensor	
▶	Repair open circuit or short to ground or short to power in harness or connectors.

7	CHECK FUEL LEVEL SENSOR
Refer to ***EL-82***, "FUEL LEVEL SENSOR UNIT CHECK".	
OK or NG	
OK ▶	GO TO 7.
NG ▶	Replace fuel level sensor unit.

8	CHECK INTERMITTENT INCIDENT
Refer to "TROUBLE DIAGNOSIS FOR INTERMITTENT INCIDENT", EC-1353.	
▶	**INSPECTION END**

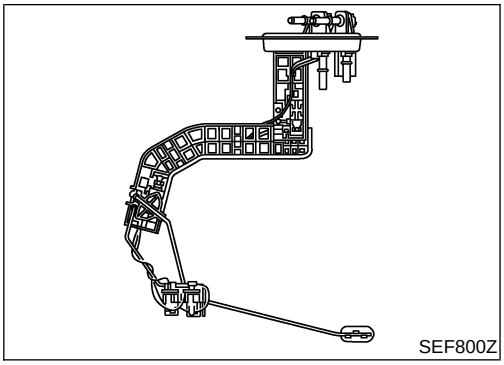
SEF800Z

Component Description

=NEEC1328

The fuel level sensor is mounted in the fuel level sensor unit. The sensor detects a fuel level in the fuel tank and transmits a signal to the ECM.
It consists of two parts, one is mechanical float and the other side is variable resistor. Fuel level sensor output voltage changes depending on the movement of the fuel mechanical float.

On Board Diagnosis Logic

NEEC1329

Driving long distances naturally affect fuel gauge level.
This diagnosis detects the fuel gauge malfunction of the gauge not moving even after a long distance has been driven.
Malfunction is detected when the output signal of the fuel level sensor does not change within the specified range even though the vehicle has been driven a long distance.

POSSIBLE CAUSE

NEEC1329S01

- Harness or connectors
  (The level sensor circuit is open or shorted.)
- Fuel level sensor

Overall Function Check

NEEC1330

Use this procedure to check the overall function of the fuel level sensor function. During this check, a 1st trip DTC might not be confirmed.

WARNING:

When performing following procedure, be sure to observe the handling of the fuel. Refer to *FE-5*, “FUEL TANK”.

TESTING CONDITION:

Before starting overall function check, preparation of draining fuel and refilling fuel is required.

7

DATA MONITOR	
MONITOR	NO DTC
FUEL T/TMP SE	XXX °C
FUEL LEVEL SE	XXX V

SEF195Y

Ⓗ WITH CONSULT-II

NEEC1330S01

NOTE:

Start from step 11, if it is possible to confirm that the fuel cannot be drained by 30ℓ (7-7/8 US gal, 6-5/8 Imp gal) in advance.

1) Prepare a fuel container and a spare hose.
2) Release fuel pressure from fuel line, refer to “Fuel Pressure Release”, EC-1259.
3) Remove the fuel feed hose on the fuel level sensor unit.
4) Connect a spare fuel hose where the fuel feed hose was removed.

5) Turn ignition switch "OFF" and wait at least 5 seconds then turn "ON".
6) Select "FUEL LEVEL SE" in "DATA MONITOR" mode with CONSULT-II.
7) Check "FUEL LEVEL SE" output voltage and note it.
8) Select "FUEL PUMP" in "ACTIVE TEST" mode with CONSULT-II.
9) Touch "ON" and drain fuel approximately 30ℓ (7-7/8 US gal, 6-5/8 Imp gal) and stop it.
10) Fill fuel into the fuel tank for 30ℓ (7-7/8 US gal, 6-5/8 Imp gal).
11) Check "FUEL LEVEL SE" output voltage and note it.
12) Check "FUEL LEVEL SE" output voltage and confirm whether the voltage changes more than 0.03V during step 7 to 11.
If NG, check the fuel level sensor, refer to ***EL-82***, "FUEL LEVEL SENSOR UNIT CHECK".

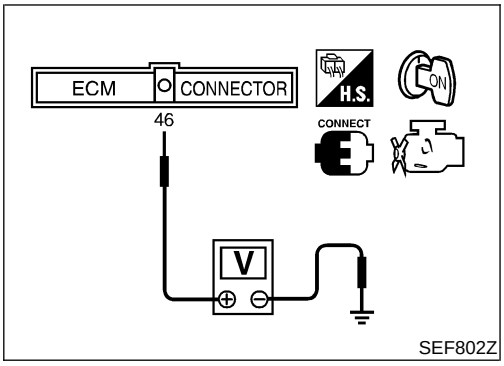

WITH GST

NEEC1330S02

NOTE:
Start from step 11, if it is possible to confirm that the fuel cannot be drained by 30ℓ (7-7/8 US gal, 6-5/8 Imp gal) in advance.

1) Prepare a fuel container and a spare hose.
2) Release fuel pressure from fuel line, refer to "Fuel Pressure Release", EC-1259.
3) Remove the fuel feed hose on the fuel level sensor unit.
4) Connect a spare fuel hose where the fuel feed hose was removed.
5) Turn ignition switch "OFF".
6) Set voltmeters probe between ECM terminal 46 (fuel level sensor signal) and ground.
7) Turn ignition switch "ON".
8) Check voltage between ECM terminal 46 and ground and note it.
9) Drain fuel by 30ℓ (7-7/8 US gal, 6-5/8 Imp gal) from the fuel tank using proper equipment.
10) Fill fuel into the fuel tank for 30ℓ (7-7/8 US gal, 6-5/8 Imp gal).
11) Confirm that the voltage between ECM terminal 46 and ground changes more than 0.03V during step 8 - 10.
If NG, check component of fuel level sensor, refer to ***EL-82***, "FUEL LEVEL SENSOR UNIT CHECK".

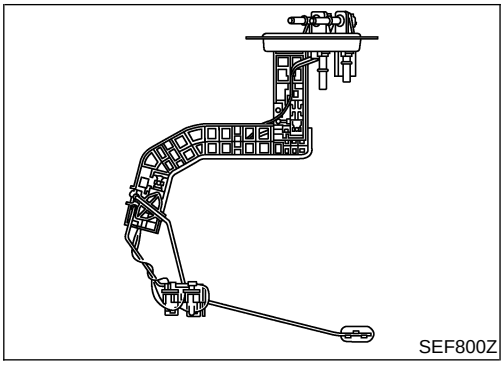
SEF800Z

Component Description

NEEC1331

The fuel level sensor is mounted in the fuel level sensor unit. The sensor detects a fuel level in the fuel tank and transmits a signal to the ECM.
It consists of two parts, one is mechanical float and the other side is variable resistor. Fuel level sensor output voltage changes depending on the movement of the fuel mechanical float.

ECM Terminals and Reference Value

NEEC1332

Specification data are reference values and are measured between each terminal and ground.

CAUTION:

Do not use ECM ground terminals when measuring input/output voltage. Doing so may result in damage to the ECM's transistor. Use a ground other than ECM terminals, such as the ground.

TERMINAL NO.	WIRE COLOR	ITEM	CONDITION	DATA (DC Voltage)
46	G	Fuel level sensor	**[Ignition switch "ON"]**	Approximately 0 - 4.8V Output voltage varies with fuel level.
66	B	Fuel level sensor ground	**[Engine is running]** ● Idle speed	Approximately 0V

On Board Diagnosis Logic

NEEC1333

ECM receives two signals from the fuel level sensor circuit.
One is fuel level sensor power supply circuit, and the other is fuel level sensor ground circuit.
This diagnosis indicates the former, to detect open or short circuit malfunction.
Malfunction is detected when an excessively low or high voltage is sent from the sensor is sent to ECM.

POSSIBLE CAUSE

NEEC1333S01

- Fuel level sensor circuit
  (The fuel level sensor circuit is open or shorted.)
- Fuel level sensor

DTC Confirmation Procedure

NEEC1334

NOTE:
If “DTC Confirmation Procedure” has been previously conducted, always turn ignition switch “OFF” and wait at least 5 seconds before conducting the next test.

TESTING CONDITION:
Before performing the following procedure, confirm that battery voltage is more than 11V at ignition switch “ON”.

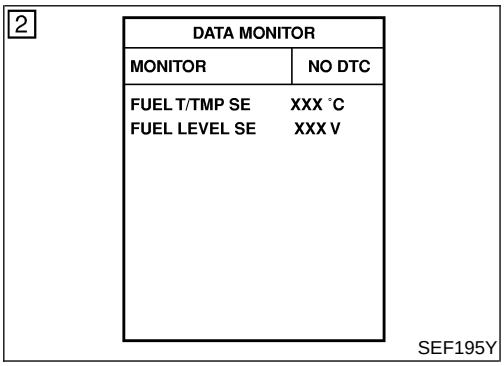

WITH CONSULT-II

NEEC1334S01

1) Turn ignition switch “ON”.
2) Select “DATA MONITOR” mode with CONSULT-II.
3) Wait at least 5 seconds.
4) If 1st trip DTC is detected, go to “Diagnostic Procedure”, EC-1640.

WITH GST

NEEC1334S02

Follow the procedure “WITH CONSULT-II” above.

Wiring Diagram

NEEC1335

EC-FLS2-01

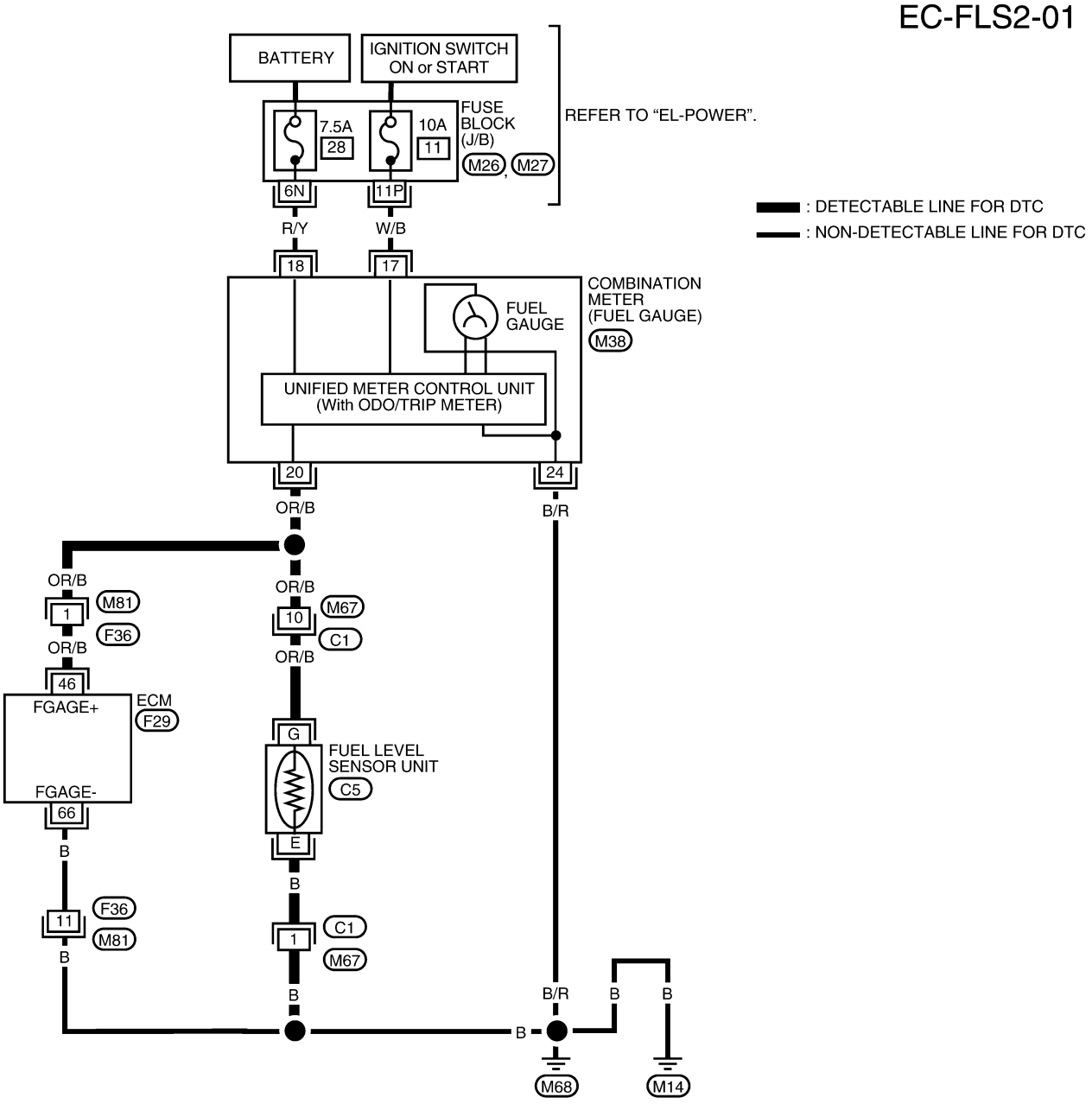

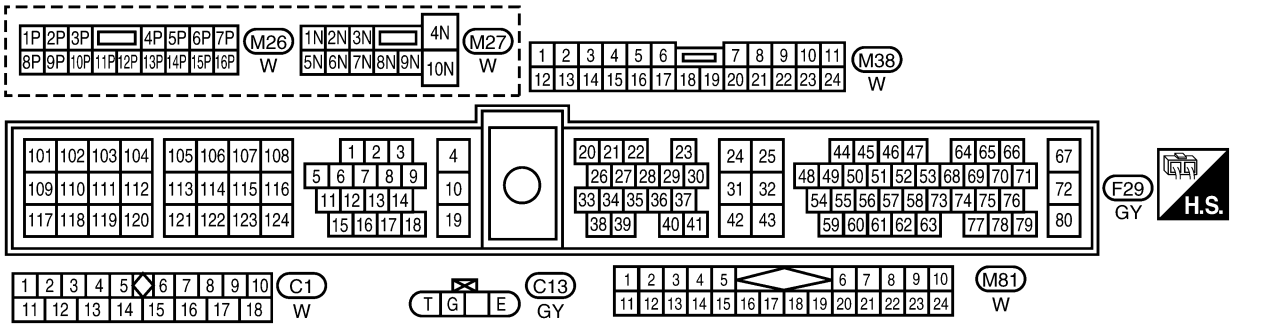

WEC819

Diagnostic Procedure

=NEEC1336

1	CHECK FUEL LEVEL SENSOR POWER SUPPLY CIRCUIT

1. Turn ignition switch “OFF”.
2. Disconnect fuel level sensor unit harness connector.
3. Turn ignition switch “ON”.
4. Check voltage between fuel level sensor unit terminal G and ground with CONSULT-II or tester.

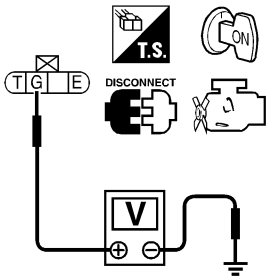

Voltage: Approximately 12V

SEF904Z

OK or NG

OK	▶	GO TO 3.
NG	▶	GO TO 2.

2	DETECT MALFUNCTIONING PART

Check the following.
- Harness connectors M67, C1
- Harness for open or short between combination meter and fuel level sensor unit

	▶	Repair or replace harness or connectors.

3	CHECK FUEL LEVEL SENSOR GROUND CIRCUIT FOR OPEN AND SHORT

1. Turn ignition switch “OFF”.
2. Check harness continuity between fuel level sensor unit terminal E and body ground. Refer to Wiring Diagram.
   Continuity should exist.
3. Also check harness for short to power.

OK or NG

OK	▶	GO TO 5.
NG	▶	GO TO 4.

4	DETECT MALFUNCTIONING PART

Check the harness connectors C1, M67.

	▶	Repair or replace harness or connectors.

5	CHECK FUEL LEVEL SENSOR INPUT CIRCUIT FOR OPEN AND SHORT

1. Disconnect ECM harness connector.
2. Check harness continuity between ECM terminal 46 and fuel level sensor unit terminal G. Refer to Wiring Diagram.
   Continuity should exist.
3. Also check harness for short to ground and short to power.

OK or NG

OK	▶	GO TO 7.
NG	▶	GO TO 6.

6	DETECT MALFUNCTIONING PART
Check the following. ● Harness connectors M67, C1 ● Harness connectors M81, F36 ● Harness for open or short between ECM and fuel level sensor	
▶	Repair open circuit or short to ground or short to power in harness on connectors.

7	CHECK FUEL LEVEL SENSOR	
Refer to ***EL-82***, "Fuel Level Sensor Unit Check".		
OK or NG		
OK	▶	GO TO 7.
NG	▶	Replace fuel level sensor unit.

8	CHECK INTERMITTENT INCIDENT	
Refer to "TROUBLE DIAGNOSIS FOR INTERMITTENT INCIDENT", EC-1353.		
▶	**INSPECTION END**	

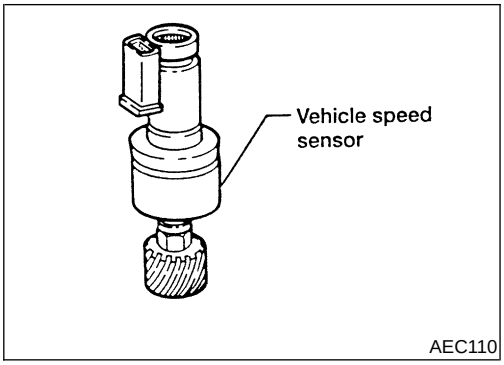

Component Description

NEEC1337

The vehicle speed sensor is installed in the transaxle. It contains a pulse generator which provides a vehicle speed signal to the speedometer. The speedometer then sends a signal to the ECM.

ECM Terminals and Reference Value

NEEC1338

Specification data are reference values and are measured between each terminal and ground.

CAUTION:

Do not use ECM ground terminals when measuring input/output voltage. Doing so may result in damage to the ECM's transistor. Use a ground other than the ECM terminals, such as the ground.

TERMINAL NO.	WIRE COLOR	ITEM	CONDITION	DATA (DC Voltage)
29	G/B	Vehicle speed sensor	**[Engine is running]** ● Lift up the vehicle ● In 1st gear position ● Vehicle speed is 40 km/h (25 MPH)	2 - 3V 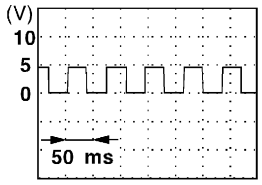 SEF996U

On Board Diagnosis Logic

NEEC1339

Malfunction is detected when the almost 0 km/h (0 MPH) signal from vehicle speed sensor is sent to ECM even when vehicle is being driven.

POSSIBLE CAUSE

NEEC1339S01

- Harness or connector
  (The vehicle speed sensor circuit is open or shorted.)
- Vehicle speed sensor

DTC Confirmation Procedure

NEEC1340

CAUTION:

Always drive vehicle at a safe speed.

NOTE:

If "DTC Confirmation Procedure" has been previously conducted, always turn ignition switch OFF and wait at least 5 seconds before conducting the next test.

TESTING CONDITION:

Steps 1 and 2 may be conducted with the drive wheels lifted in the shop or by driving the vehicle. If a road test is expected to be easier, it is unnecessary to lift the vehicle.

5

DATA MONITOR	
MONITOR	NO DTC
ENG SPEED	XXX rpm
COOLAN TEMP/S	XXX °C
B/FUEL SCHDL	XXX msec
PW/ST SIGNAL	OFF
VHCL SPEED SE	XXX km/h

SEF196Y

With CONSULT-II

1) Start engine
2) Read "VHCL SPEED SE" in "DATA MONITOR" mode with CONSULT-II. The vehicle speed on CONSULT-II should exceed 10 km/h (6 MPH) when rotating wheels with suitable gear position.
   If NG, go to "Diagnostic Procedure", EC-1645.
   If OK, go to following step.
3) Select "DATA MONITOR" mode with CONSULT-II.
4) Warm engine up to normal operating temperature.
5) Maintain the following conditions for at least 10 consecutive seconds.

END SPEED	More than 1,800 rpm (A/T models) More than 1,900 rpm (M/T models)
COOLAN TEMP/S	More than 70°C (158°F)
B/FUEL SCHDL	5.5 - 16.0 msec
Selector lever	Suitable position
PW/ST SIGNAL	OFF

6) If 1st trip DTC is detected, go to "Diagnostic Procedure", EC-1645.

Overall Function Check

NEEC1341

Use this procedure to check the overall function of the vehicle speed sensor circuit. During this check, a 1st trip DTC might not be confirmed.

With GST

1) Lift up drive wheels.
2) Start engine.
3) Read vehicle speed sensor signal in "MODE 1" with GST.
   The vehicle speed sensor on GST should be able to exceed 10 km/h (6 MPH) when rotating wheels with suitable gear position.
4) If NG, go to "Diagnostic Procedure", EC-1645.

Wiring Diagram

NEEC1342

EC-VSS-01

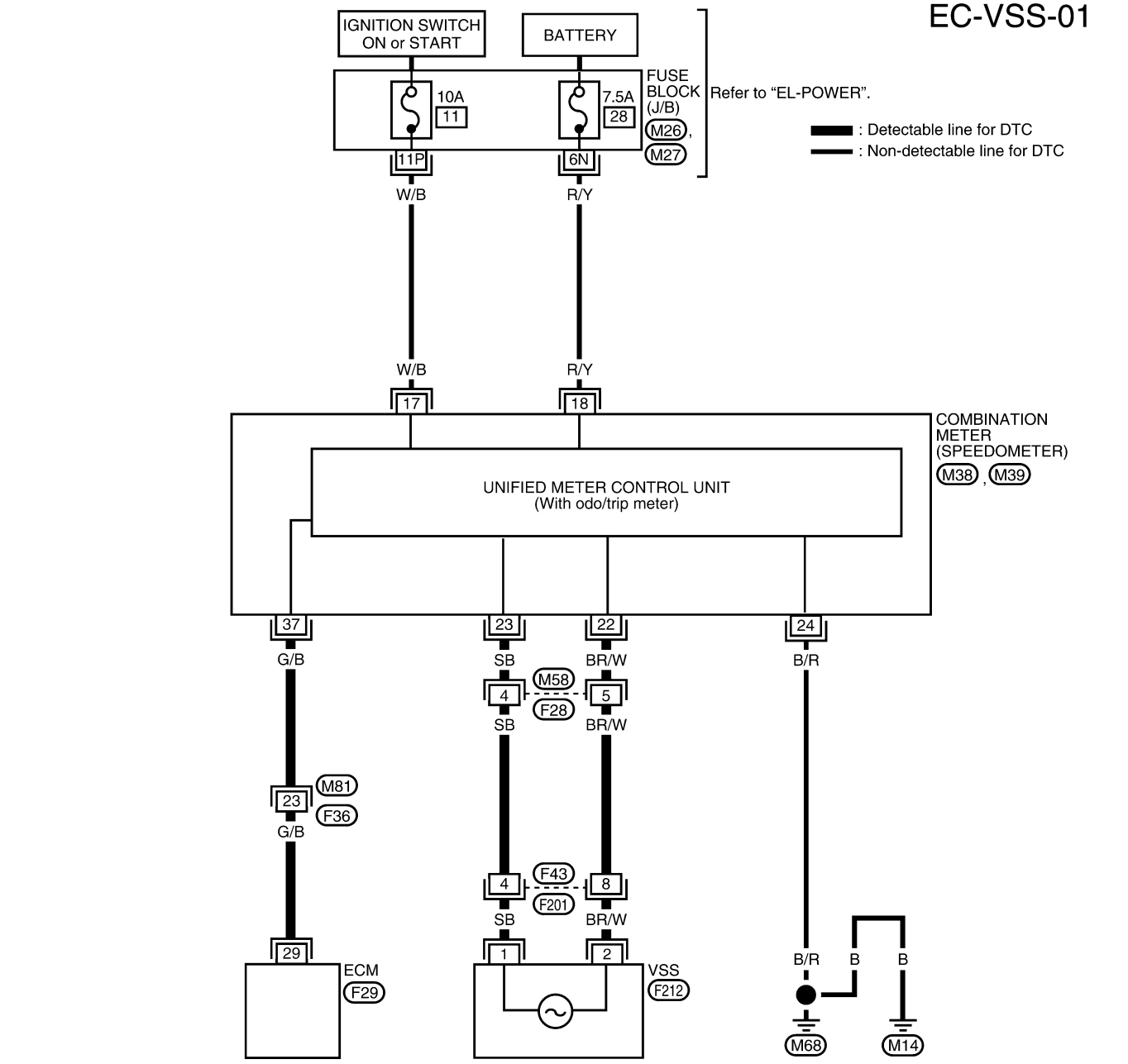

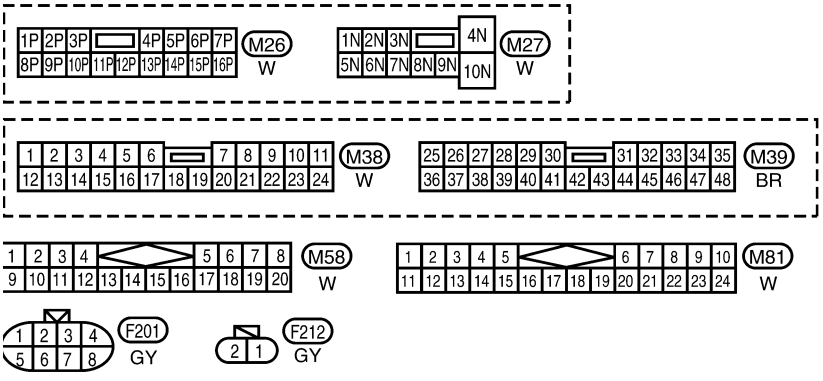

Refer to the following.
F29 - ELECTRICAL UNITS

LEC671

Diagnostic Procedure

NEEC1343

1	CHECK VEHICLE SPEED SENSOR INPUT SIGNAL CIRCUIT FOR OPEN AND SHORT	
1. Turn ignition switch OFF. 2. Disconnect ECM harness connector and combination meter harness connector. 3. Check harness continuity between ECM terminal 29 and combination meter terminal 37. Refer to Wiring Diagram. **Continuity should exist.** 4. Also check harness for short to ground and short to power.		
OK or NG		
OK	▶	GO TO 3.
NG	▶	GO TO 2.

2	DETECT MALFUNCTIONING PART	
Check the following. ● Harness connectors M81, F36 ● Harness for open or short between ECM and combination meter		
	▶	Repair open circuit or short to ground or short to power in harness or connectors.

3	CHECK SPEEDOMETER FUNCTION	
Make sure that speedometer functions properly.		
OK or NG		
OK	▶	GO TO 5.
NG	▶	GO TO 4.

4	CHECK SPEEDOMETER CIRCUIT FOR OPEN AND SHORT	
Check the following. ● Harness connectors M58, F28 ● Harness connectors F43, F201 ● Harness for open or short between combination meter and vehicle speed sensor		
OK or NG		
OK	▶	Check combination meter and vehicle speed sensor. Refer to ***EL-69***, “METERS AND GAUGES”.
NG	▶	Repair open circuit or short to ground or short to power in harness or connectors.

5	CHECK INTERMITTENT INCIDENT	
Refer to “TROUBLE DIAGNOSIS FOR INTERMITTENT INCIDENT”, EC-1353.		
	▶	**INSPECTION END**

Description

NEEC1344

SYSTEM DESCRIPTION

NEEC1344S01

Sensor	Input Signal to ECM	ECM function	Actuator
Camshaft position sensor	Engine speed	Idle air control	IACV-AAC valve
Mass air flow sensor	Amount of intake air		
Engine coolant temperature sensor	Engine coolant temperature		
Ignition switch	Start signal		
Throttle position sensor	Throttle position		
Park/neutral position (PNP) switch	Park/neutral position		
Air conditioner switch	Air conditioner operation		
Power steering oil pressure switch	Power steering load signal		
Battery	Battery voltage		
Vehicle speed sensor	Vehicle speed		
Ambient air temperature switch	Ambient air temperature		
Intake air temperature sensor	Intake air temperature		

This system automatically controls engine idle speed to a specified level. Idle speed is controlled through fine adjustment of the amount of air which bypasses the throttle valve via IACV-AAC valve. The IACV-AAC valve repeats ON/OFF operation according to the signal sent from the ECM. The camshaft position sensor detects the actual engine speed and sends a signal to the ECM. The ECM then controls the ON/OFF time of the IACV-AAC valve so that engine speed coincides with the target value memorized in ECM. The target engine speed is the lowest speed at which the engine can operate steadily. The optimum value stored in the ECM is determined by taking into consideration various engine conditions, such as during warm up, deceleration, and engine load (air conditioner and power steering).

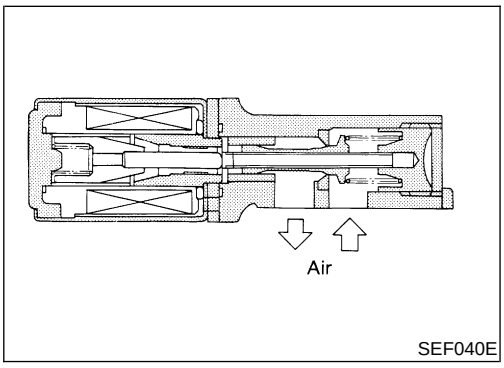

SEF040E

COMPONENT DESCRIPTION

NEEC1344S02

IACV-AAC Valve

NEEC1344S0201

The IACV-AAC valve is moved by ON/OFF pulses from the ECM. The longer the ON pulse, the greater the amount of air that will flow through the valve. The more air that flows through the valve, the higher the idle speed.

CONSULT-II Reference Value in Data Monitor Mode

NEEC1345

Specification data are reference values.

MONITOR ITEM	CONDITION		SPECIFICATION
IACV-AAC/V	• Engine: After warming up • Air conditioner switch: “OFF” • Shift lever: “N” • No-load	Idle	10 - 20%
		2,000 rpm	—

ECM Terminals and Reference Value

NEEC1346

Specification data are reference values and are measured between each terminal and ground.

CAUTION:

Do not use ECM ground terminals when measuring input/output voltage. Doing so may result in damage to the ECM’s transistor. Use a ground other than the ECM terminals, such as the ground.

TERMINAL NO.	WIRE COLOR	ITEM	CONDITION	DATA (DC Voltage)
101	OR/L	IACV-AAC valve	**[Engine is running]** • **Warm-up condition** • Idle speed	8 - 11V 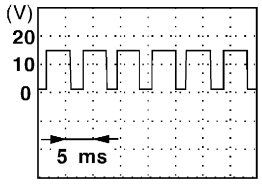 SEF005V
			[Engine is running] • **Warm-up condition** • Engine speed is 3,000 rpm	7 - 10V 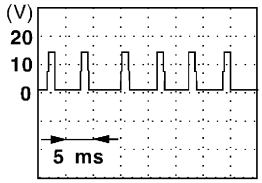 SEF692W

On Board Diagnosis Logic

NEEC1347

Malfunction is detected when
(Malfunction A) the IACV-AAC valve does not operate properly,
(Malfunction B) the IACV-AAC valve does not operate properly.

POSSIBLE CAUSE

NEEC1347S01

- Harness or connectors
  (The IACV-AAC valve circuit is open.)
- Harness or connectors
  (The IACV-AAC valve circuit is shorted.)
- IACV-AAC valve

DTC Confirmation Procedure

NEEC1348

NOTE:

- If “DTC Confirmation Procedure” has been previously conducted, always turn ignition switch OFF and wait at least 5 seconds before conducting the next test.
- **Perform “PROCEDURE FOR MALFUNCTION A” first. If 1st trip DTC cannot be confirmed, perform “PROCEDURE FOR MALFUNCTION B”.**

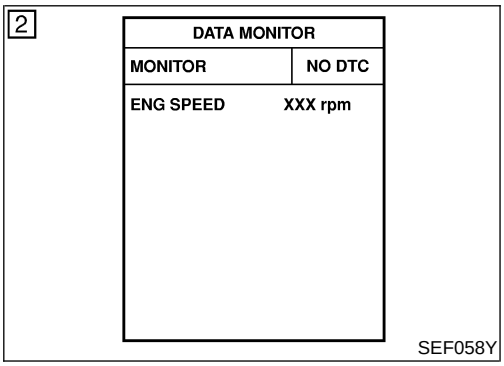

PROCEDURE FOR MALFUNCTION A

NEEC1348S01

TESTING CONDITION:

Before performing the following procedure, confirm that battery voltage is more than 10.5V with ignition switch “ON”.

With CONSULT-II

1) Turn ignition switch ON.
2) Select “DATA MONITOR” mode with CONSULT-II.
3) Wait at least 2 seconds.
4) If 1st trip DTC is detected, go to “Diagnostic Procedure”, EC-1650.

With GST

Follow the procedure “With CONSULT-II”.

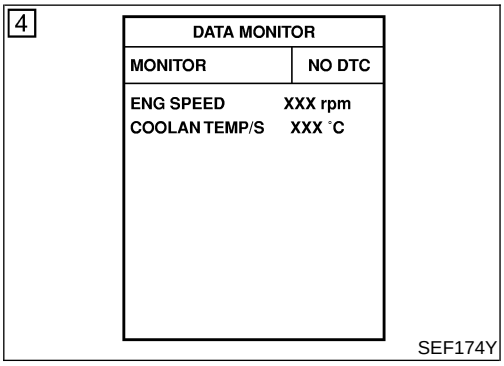

PROCEDURE FOR MALFUNCTION B

NEEC1348S02

TESTING CONDITION:

Before performing the following procedure, confirm that battery voltage is more than 11V at idle.

With CONSULT-II

1) Start engine and warm it up to normal operating temperature.
2) Turn ignition switch OFF and wait at least 5 seconds.
3) Turn ignition switch ON again and select “DATA MONITOR” mode with CONSULT-II.
4) Start engine and run it for at least 1 minute at idle speed.
5) If 1st trip DTC is detected, go to “Diagnostic Procedure”, EC-1650.

With GST

Follow the procedure “With CONSULT-II”.

Wiring Diagram

NEEC1349

EC-AAC/V-01

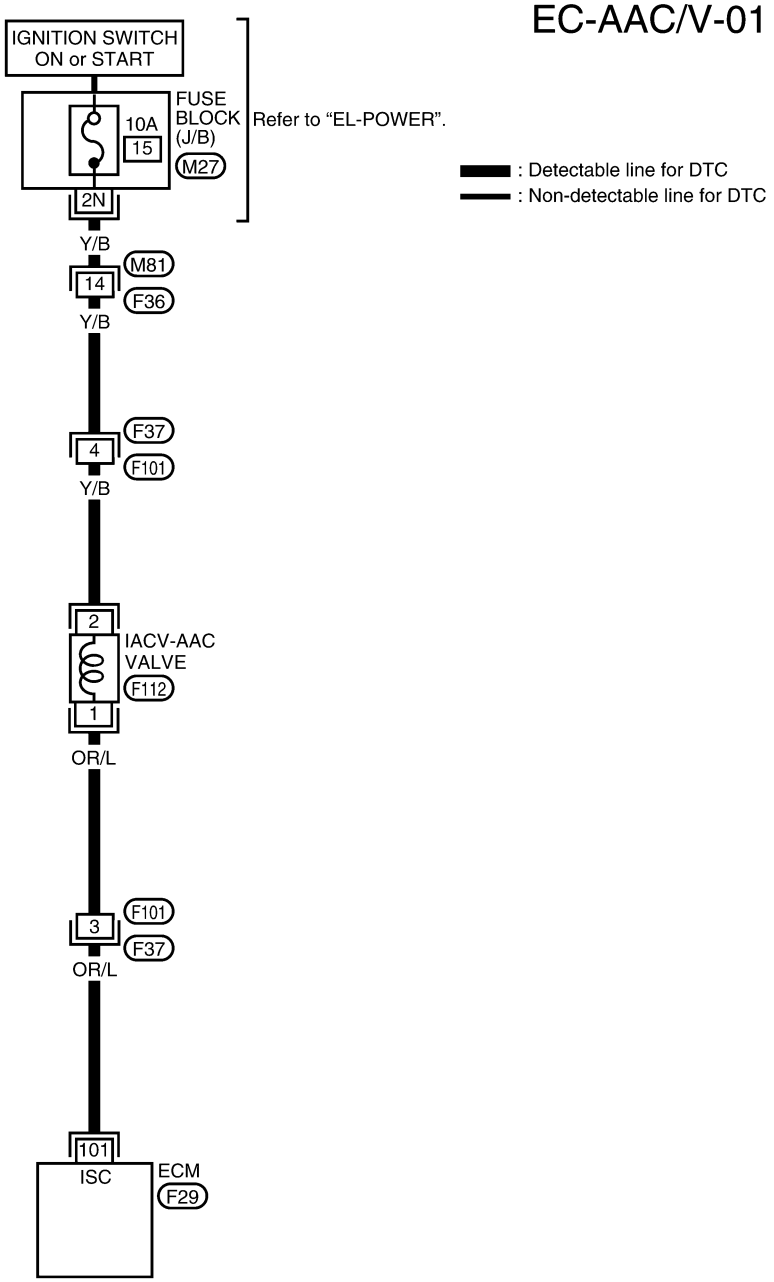

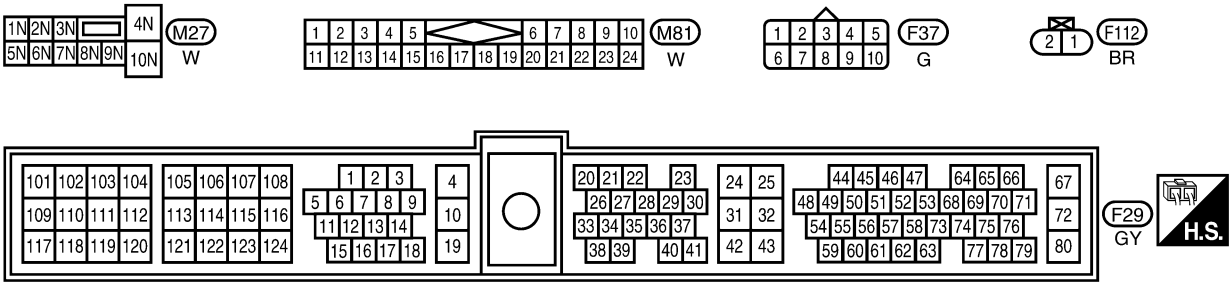

LEC672

Diagnostic Procedure

NEEC1350

1	CHECK IACV-AAC VALVE POWER SUPPLY CIRCUIT

1. Stop engine.
2. Disconnect IACV-AAC valve harness connector.

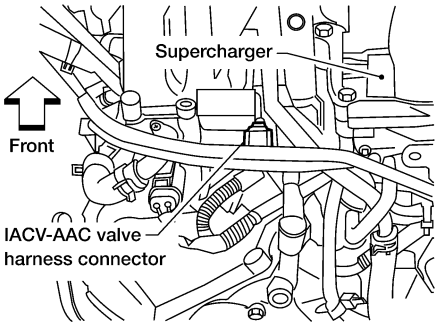

LEC766

3. Turn ignition switch ON.
4. Check voltage between terminal 2 and ground with CONSULT-II or tester.

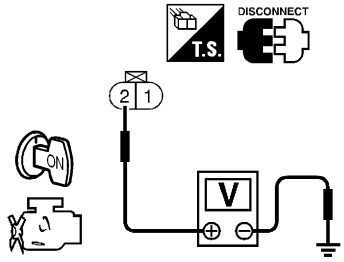

SEF651W

Voltage: Battery voltage

OK or NG

OK	▶	GO TO 3.
NG	▶	GO TO 2.

2	DETECT MALFUNCTIONING PART

Check the following.
- Harness connectors M81, F36
- Harness connectors F37, F101
- Fuse block (J/B) connector M27
- 10A fuse
- Harness for open or short between IACV-AAC valve and fuse

	▶	Repair harness or connectors.

3	CHECK IACV-AAC VALVE OUTPUT SIGNAL CIRCUIT FOR OPEN AND SHORT

1. Turn ignition switch OFF.
2. Disconnect ECM harness connector.
3. Check harness continuity between ECM terminal 101 and IACV-AAC valve terminal 1.
   Refer to Wiring Diagram.
   Continuity should exist.
4. Also check harness for short to ground and short to power.

OK or NG

OK	▶	GO TO 5.
NG	▶	GO TO 4.

4	DETECT MALFUNCTIONING PART
Check the following. ● Harness connectors F101, F37 ● Harness for open or short between IACV-AAC valve and ECM	
▶	Repair open circuit or short to ground or short to power in harness or connectors.

5	CHECK IACV-AAC VALVE
1. Disconnect IACV-AAC valve harness connector. 2. Remove IACV-AAC valve. ● Check IACV-AAC valve resistance.	

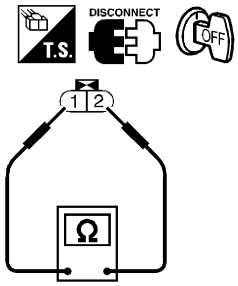

SEF202V

Resistance:
Approximately 10Ω [at 20°C (68°F)]

● Check plunger for seizing or sticking.
● Check for broken spring.

3. Supply battery voltage between IACV-AAC valve connector terminals.
Plunger should move.

OK or NG

OK	▶	GO TO 6.
NG	▶	Replace IACV-AAC valve.

6	CHECK INTERMITTENT INCIDENT
Refer to "TROUBLE DIAGNOSIS FOR INTERMITTENT INCIDENT", EC-1353.	
▶	**INSPECTION END**

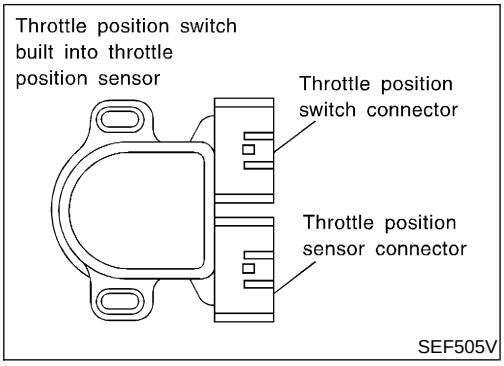

Component Description

NEEC1351

A closed throttle position switch and wide open throttle position switch are built into the throttle position sensor unit. The wide open throttle position switch is used only for A/T control.
When the throttle valve is in the closed position, the closed throttle position switch sends a voltage signal to the ECM. The ECM only uses this signal to open or close the EVAP canister purge volume control solenoid valve when the throttle position sensor is malfunctioning.

CONSULT-II Reference Value in Data Monitor Mode

NEEC1352

Specification data are reference values.

MONITOR ITEM	CONDITION		SPECIFICATION
CLSD THL/P SW	● Engine: After warming up, idle the engine	Throttle valve: Idle position	ON
		Throttle valve: Slightly open	OFF

ECM Terminals and Reference Value

NEEC1353

Specification data are reference values and are measured between each terminal and ground.

CAUTION:

Do not use ECM ground terminals when measuring input/output voltage. Doing so may result in damage to the ECM's transistor. Use a ground other than the ECM terminals, such as the ground.

TERMINAL NO.	WIRE COLOR	ITEM	CONDITION	DATA (DC Voltage)
28	BR/W	Throttle position switch (Closed position)	**[Engine is running]** ● **Warm-up condition** ● Accelerator pedal fully released	BATTERY VOLTAGE (11 - 14V)
			[Ignition switch "ON"] ● Accelerator pedal depressed	Approximately 0V

On Board Diagnosis Logic

NEEC1354

Malfunction is detected when battery voltage from the closed throttle position switch is sent to ECM with the throttle valve opened.

POSSIBLE CAUSE

NEEC1354S01

- Harness or connectors
  (The closed throttle position switch circuit is shorted.)
- Closed throttle position switch
- Throttle position sensor

4

DATA MONITOR	
MONITOR	NO DTC
ENG SPEED	XXX rpm
COOLAN TEMP/S	XXX °C
CLSD THL/P SW	ON

SEF197Y

6

DATA MONITOR	
MONITOR	NO DTC
COOLAN TEMP/S	XXX °C
VHCL SPEED SE	XXX km/h
THRTL POS SEN	XXX V

SEF198Y

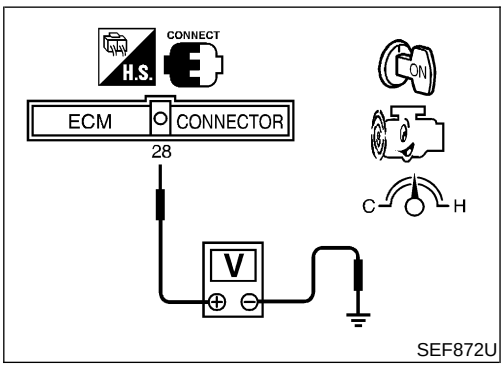

SEF872U

DTC Confirmation Procedure

NEEC1355

CAUTION:

Always drive vehicle at a safe speed.

NOTE:

If "DTC Confirmation Procedure" has been previously conducted, always turn ignition switch OFF and wait at least 5 seconds before conducting the next test.

With CONSULT-II

1) Start engine and warm it up to normal operating temperature.
2) Turn ignition switch OFF, wait at least 5 seconds and then start engine.
3) Select "CLSD THL/P SW" in "DATA MONITOR" mode.
4) Check the signal under the following conditions.

Condition	Signal indication
Throttle valve: Idle position	ON
Throttle valve: Slightly open	OFF

If the result is NG, go to "Diagnostic Procedure", EC-1655.
If OK, go to following step.

5) Select "DATA MONITOR" mode with CONSULT-II.
6) Drive the vehicle for at least 5 consecutive seconds under the following condition.

THRTL POS SEN	More than 2.5V
VHCL SPEED SE	More than 5 km/h (3 MPH)
Selector lever	Suitable position
Driving location	Driving vehicle uphill (Increased engine load) will help maintain the driving conditions required for this test.

7) If 1st trip DTC is detected, go to "Diagnostic Procedure", EC-1655.

Overall Function Check

NEEC1356

Use this procedure to check the overall function of the closed throttle position switch circuit. During this check, a 1st trip DTC might not be confirmed.

Without CONSULT-II

1) Start engine and warm it up to normal operating temperature.
2) Check the voltage between ECM terminal 28 (Closed throttle position switch signal) and ground under the following conditions.

At idle: Battery voltage

At 2,000 rpm: Approximately 0V

3) If NG, go to "Diagnostic Procedure", EC-1655.

Wiring Diagram

NEEC1357

EC-TP/SW-01

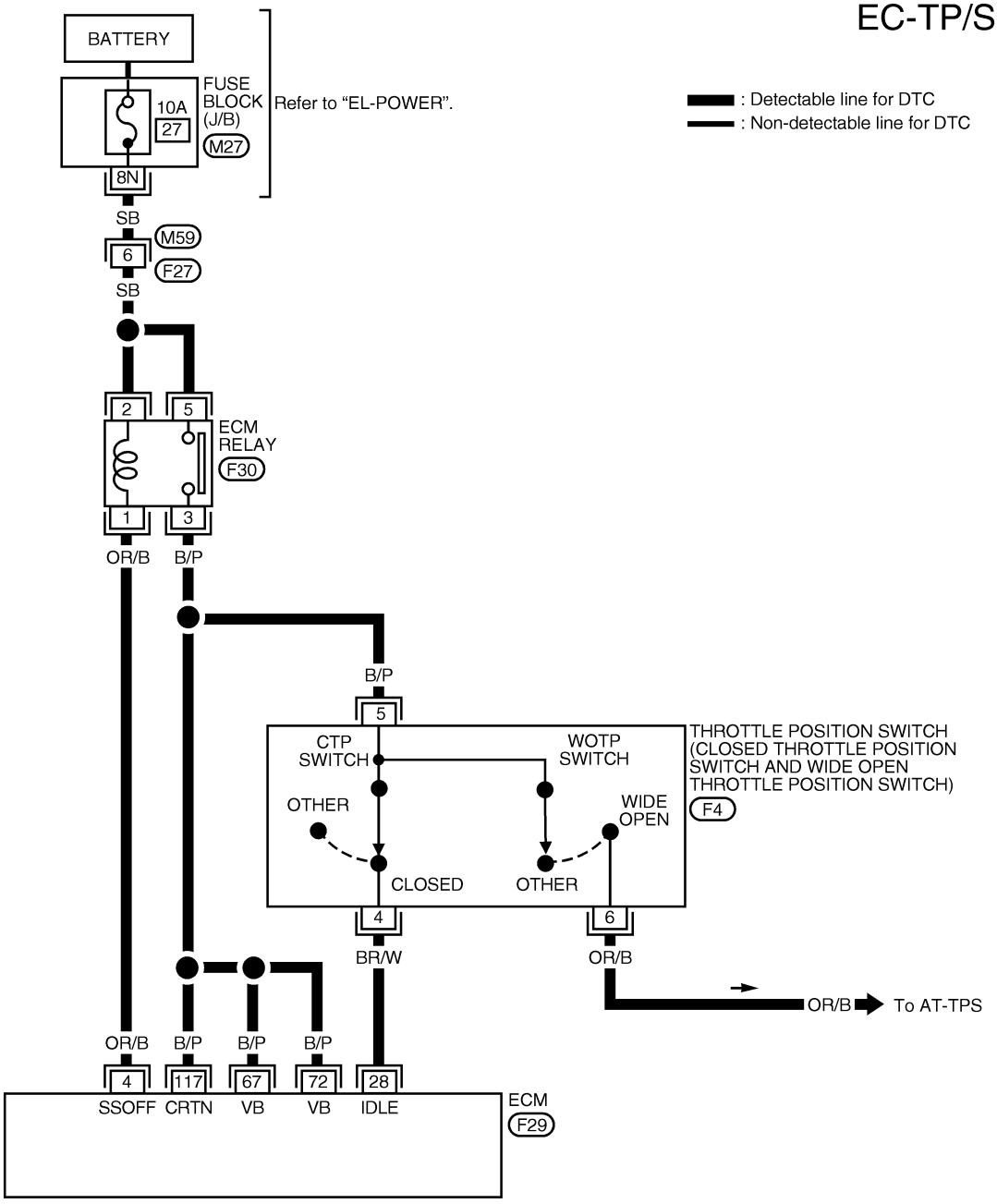

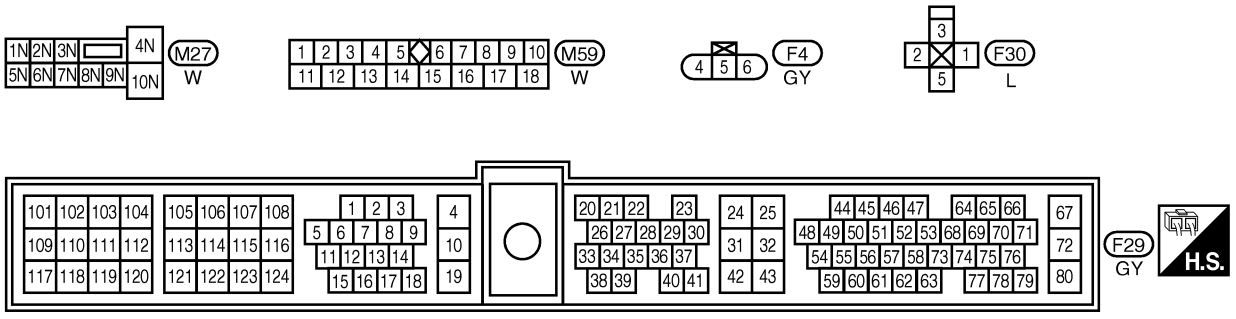

AEC964A

Diagnostic Procedure

NEEC1358

1	CHECK CLOSED THROTTLE POSITION SWITCH POWER SUPPLY CIRCUIT

1. Turn ignition switch OFF.
2. Disconnect throttle position switch harness connector.

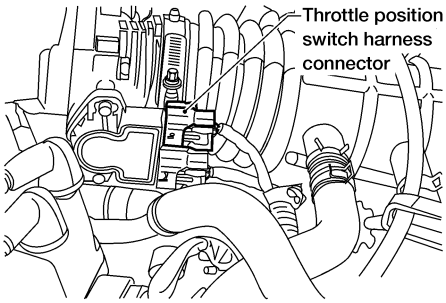

AEC653A

3. Turn ignition switch ON.
4. Check voltage between terminal 5 and engine ground with CONSULT-II or tester.

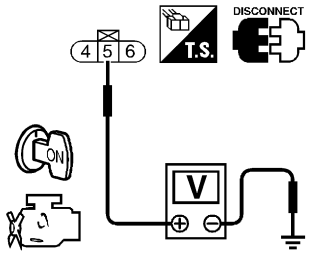

SEF715U

Voltage: Battery voltage

OK or NG

OK	▶	GO TO 3.
NG	▶	GO TO 2.

2	DETECT MALFUNCTIONING PART

Check the following.
- Harness for open or short between throttle position switch and ECM relay
- Harness for open or short between throttle position switch and ECM

	▶	Repair harness or connectors.

3	CHECK CLOSED THROTTLE POSITION SWITCH INPUT SIGNAL CIRCUIT FOR OPEN AND SHORT

1. Turn ignition switch OFF.
2. Disconnect ECM harness connector.
3. Check harness continuity between ECM terminal 28 and throttle position switch terminal 4.
   Refer to Wiring Diagram.
   Continuity should exist.
4. Also check harness for short to ground and short to power.

OK or NG

OK	▶	GO TO 4.
NG	▶	Repair open circuit or short to ground or short to power in harness or connectors.

Diagnostic Procedure (Cont'd)

4	CHECK IGNITION TIMING AND ENGINE IDLE SPEED

Check the following items. Refer to "Basic Inspection", EC-1314.

Items	Specifications
Ignition timing	10° ± 2° BTDC
Base idle speed	700 ± 50 rpm (in "P" or "N" position)
Target idle speed	750 ± 50 rpm (in "P" or "N" position)

MTBL0632

with CONSULT-II	▶	GO TO 5.
without CONSULT-II	▶	GO TO 6.

5	CHECK CLOSED THROTTLE POSITION SWITCH

With CONSULT-II

1. Start engine and warm it up to normal operating temperature.
2. Turn ignition switch OFF.
3. Turn ignition switch ON.
4. Select "DATA MONITOR" mode with CONSULT-II.
5. Check indication of "CLSD THL/P SW".
   Measurement must be made with closed throttle position switch installed in vehicle.

Throttle valve conditions	CLSD THL/P SW
Completely closed	ON
Partially open or completely open	OFF

MTBL0355

OK or NG

OK	▶	GO TO 8.
NG	▶	GO TO 7.

6	CHECK CLOSED THROTTLE POSITION SWITCH

Without CONSULT-II

1. Start engine and warm it up to normal operating temperature.
2. Turn ignition switch OFF.
3. Disconnect closed throttle position switch harness connector.
4. Check continuity between closed throttle position switch terminals 4 and 5.
   Resistance measurement must be made with closed throttle position switch installed in vehicle.

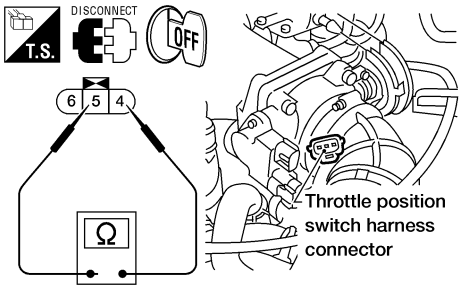

AEC654A

Throttle valve conditions	Continuity
Completely closed	Yes
Partially open or completely open	No

MTBL0247

OK or NG

OK	▶	GO TO 9.
NG	▶	GO TO 7.

7	ADJUST THROTTLE POSITION SWITCH

Check the following items. Refer to "Basic Inspection", EC-1314.

Items	Specifications
Ignition timing	10° ± 2° BTDC
Base idle speed	700 ± 50 rpm (in "P" or "N" position)
Closed throttle position switch idle position adjustment	Feeler gauge thickness and switch condition 0.3 mm (0.012 in): ON 0.4 mm (0.016 in): OFF
Target idle speed	750 ± 50 rpm (in "P" or "N" position)

MTBL0576

If it is impossible to adjust closed throttle position switch in "Basic Inspection", replace closed throttle position switch.

OK or NG

OK (with CONSULT-II)	▶	GO TO 8.
OK (without CONSULT-II)	▶	GO TO 9.
NG	▶	Replace throttle position switch.

Diagnostic Procedure (Cont'd)

8	CHECK THROTTLE POSITION SENSOR

With CONSULT-II

1. Start engine and warm it up to normal operating temperature.
2. Stop engine (ignition switch OFF).
3. Turn ignition switch ON.
4. Select "DATA MONITOR" mode with CONSULT-II.
5. Check voltage of "THRTL POS SEN".

Throttle valve conditions	THRTL POS SEN
Completely closed (a)	0.15 - 0.85V
Partially open	Between (a) and (b)
Completely open (b)	3.5 - 4.7V

MTBL0230

Voltage measurement must be made with throttle position sensor installed in vehicle.

If NG, adjust closed throttle position switch. Refer to "Basic Inspection", EC-1314.

OK or NG

OK	▶	GO TO 10.
NG	▶	Replace throttle position sensor.

9	CHECK THROTTLE POSITION SENSOR

Without CONSULT-II

1. Start engine and warm it up to normal operating temperature.
2. Stop engine (ignition switch OFF).
3. Turn ignition switch ON.
4. Check voltage between ECM terminal 23 (Throttle position sensor signal) and ground.
   Voltage measurement must be made with throttle position sensor installed in vehicle.

Throttle valve conditions	Voltage
Completely closed (a)	0.15 - 0.85V
Partially open	Between (a) and (b)
Completely open (b)	3.5 - 4.7V

MTBL0231

If NG, adjust closed throttle position switch. Refer to "Basic Inspection", EC-1314.

OK or NG

OK	▶	GO TO 10.
NG	▶	Replace throttle position sensor.

10	CHECK INTERMITTENT INCIDENT
Refer to "TROUBLE DIAGNOSIS FOR INTERMITTENT INCIDENT", EC-1353.	
▶	**INSPECTION END**

System Description

NEEC1359

These circuit lines are used to control the smooth shifting up and down of A/T during the hard acceleration/deceleration.
Voltage signals are exchanged between ECM and TCM (Transmission Control Module).

ECM Terminals and Reference Value

NEEC1360

Specification data are reference values and are measured between each terminal and ground.

CAUTION:
Do not use ECM ground terminals when measuring input/output voltage. Doing so may result in damage to the ECM's transistor. Use a ground other than the ECM terminals, such as the ground.

TERMINAL NO.	WIRE COLOR	ITEM	CONDITION	DATA (DC Voltage)
26	PU/W	A/T signal No. 1	**[Engine is running]** ● Idle speed	Approximately 0 - 1.0V
27	P/B	A/T signal No. 2	**[Engine is running]** ● Idle speed	Approximately 0 - 1.0V
33	W/G	A/T signal No. 4	**[Engine is running]** ● Idle speed	Approximately 0 - 1.0V
34	R/Y	A/T signal No. 5	**[Engine is running]** ● Idle speed	Approximately 8V
35	G/R	A/T signal No. 3	**[Engine is running]** ● Idle speed	Approximately 0 - 1.0V

On Board Diagnosis Logic

NEEC1361

Malfunction is detected when ECM receives incorrect voltage from TCM (Transmission Control Module) continuously.

POSSIBLE CAUSE

NEEC1361S01

- Harness or connectors
  [The circuit between ECM and TCM (Transmission Control Module) is open or shorted.]

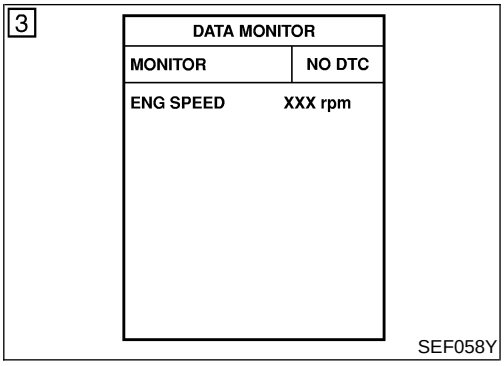

DTC Confirmation Procedure

=NEEC1362

NOTE:

If “DTC Confirmation Procedure” has been previously conducted, always turn ignition switch OFF and wait at least 5 seconds before conducting the next test.

With CONSULT-II

1) Turn ignition switch ON.
2) Select “DATA MONITOR” mode with CONSULT-II.
3) Start engine, and rev engine more than 1,000 rpm once, then let it idle for more than 40 seconds.
4) If DTC is detected, go to “Diagnostic Procedure”, EC-1662.

Wiring Diagram

NEEC1363

EC-AT/C-01

: Detectable line for DTC
: Non-detectable line for DTC

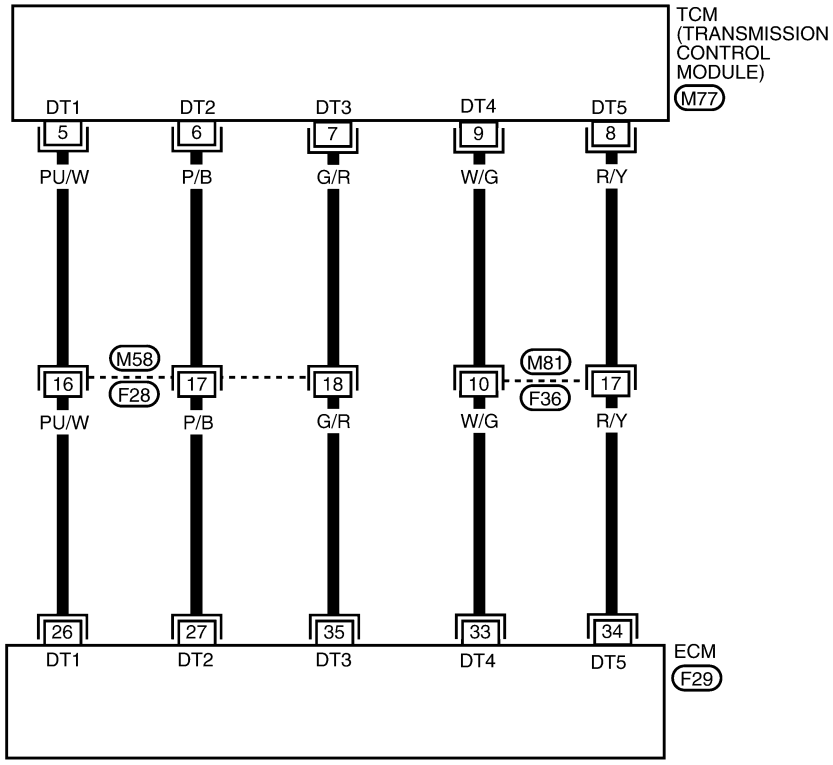

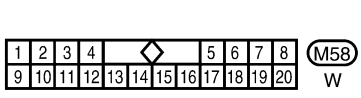

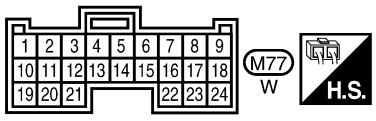

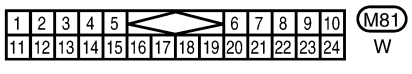

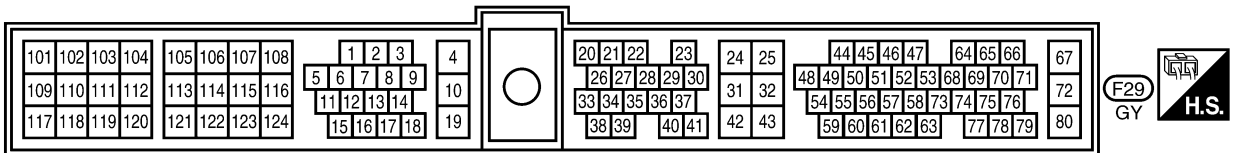

LEC673

Diagnostic Procedure

NEEC1364

1	CHECK A/T CONTROL INPUT SIGNAL CIRCUIT FOR OPEN

1. Turn ignition switch OFF.
2. Disconnect ECM harness connector and TCM (Transmission Control Module) harness connector.

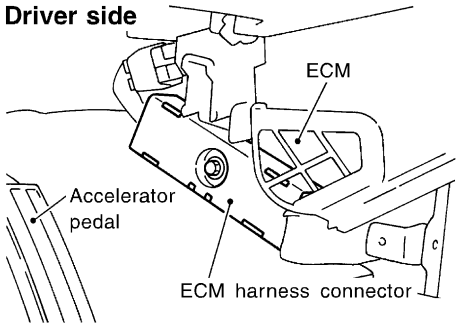

SEF324V

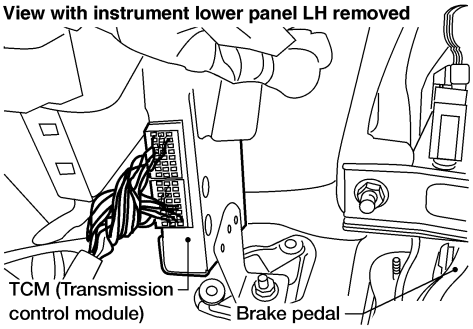

AEC655A

3. Check harness continuity between ECM terminal 26 and TCM terminal 5, ECM terminal 27 and TCM terminal 6, ECM terminal 33 and TCM terminal 9, ECM terminal 34 and TCM terminal 8, ECM terminal 35 and TCM terminal 7.
   Refer to Wiring Diagram.
   Continuity should exist.

OK or NG

OK	▶	GO TO 3.
NG	▶	GO TO 2.

2	DETECT MALFUNCTIONING PART

Check the following.
- Harness connectors M58, F28
- Harness connectors M81, F36
- Harness for open or short between ECM and TCM (Transmission Control Module)

	▶	Repair harness or connectors.

3	CHECK A/T CONTROL INPUT SIGNAL CIRCUIT FOR SHORT

1. Check harness continuity between ECM terminal 26 and ground, ECM terminal 27 and ground, ECM terminal 33 and ground, ECM terminal 34 and ground, ECM terminal 35 and ground.
   Refer to Wiring Diagram.
   Continuity should not exist.
2. Also check harness for short to power.

OK or NG

OK	▶	GO TO 5.
NG	▶	GO TO 4.

4	DETECT MALFUNCTIONING PART
Check the harness for open or short between ECM and TCM (Transmission Control Module).	
▶	Repair open circuit or short to ground or short to power in harness.

5	CHECK INTERMITTENT INCIDENT
Refer to "TROUBLE DIAGNOSIS FOR INTERMITTENT INCIDENT", EC-1353.	
▶	**INSPECTION END**

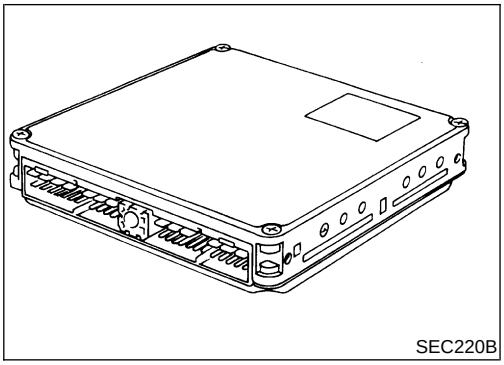
SEC220B

Component Description

NEEC1365

The ECM consists of a microcomputer and connectors for signal input and output and for power supply. The unit controls the engine.

On Board Diagnosis Logic

NEEC1366

Malfunction is detected when ECM calculation function is malfunctioning.

POSSIBLE CAUSE

NEEC1366S01

- ECM

DTC Confirmation Procedure

NEEC1367

NOTE:

If “DTC Confirmation Procedure” has been previously conducted, always turn ignition switch OFF and wait at least 5 seconds before conducting the next test.

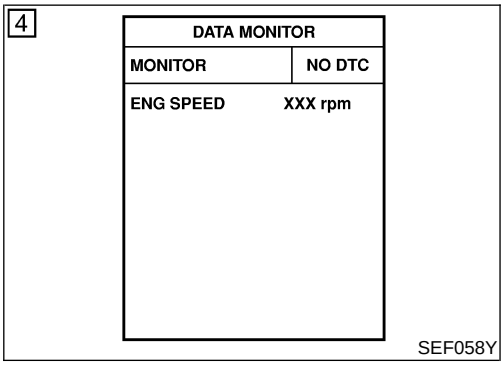

SEF058Y

With CONSULT-II

1) Turn ignition switch ON.
2) Select “DATA MONITOR” mode with CONSULT-II.
3) Start engine.
4) Run engine for at least 2 seconds at idle speed.
5) If 1st trip DTC is detected, go to “Diagnostic Procedure”, EC-1665.

With GST

Follow the procedure “With CONSULT-II”.

Diagnostic Procedure

NEEC1368

1	INSPECTION START	
With CONSULT-II 1. Turn ignition switch ON. 2. Select “SELF DIAG RESULTS” mode with CONSULT-II. 3. Touch “ERASE”. 4. **Perform “DTC Confirmation Procedure”.** See EC-1664. 5. Is the 1st trip DTC P0605 displayed again?		
With GST 1. Turn ignition switch ON. 2. Select MODE 4 with GST. 3. Touch “ERASE”. 4. **Perform “DTC Confirmation Procedure”.** See EC-1664. 5. Is the 1st trip DTC P0605 displayed again?		
Yes or No		
Yes	▶	Replace ECM.
No	▶	**INSPECTION END**

On Board Diagnosis Logic

NEEC1369

Engine coolant temperature has not risen enough to open the thermostat even though the engine has run long enough.
This is due to a leak in the seal or the thermostat open stuck.
Malfunction is detected when the engine coolant temperature does not reach to specified temperature even though the engine has run long enough.

POSSIBLE CAUSE

NEEC1369S01

- Thermostat function
- Leakage from sealing portion of thermostat
- Engine coolant temperature sensor

DTC Confirmation Procedure

NEEC1370

NOTE:
If "DTC Confirmation Procedure" has been previously conducted, always turn ignition switch "OFF" and wait at least 5 seconds before conducting the next test.

TESTING CONDITION:

- **For best results, perform at ambient temperature of –10°C (14°F) or higher.**
- **For best results, perform at engine coolant temperature of –10°C (14°F) to 70°C (158°F).**

WITH CONSULT-II

NEEC1370S01

1) Replace thermostat with new one. Refer to ***LC-30***, "Thermostat". Use only a genuine NISSAN thermostat as a replacement. If an incorrect thermostat is used, the MIL may come on.
2) Turn ignition switch "ON".
3) Select "COOLAN TEMP/S" in "DATA MONITOR" mode with CONSULT-II.
4) Check that the "COOLAN TEMP/S" is above 70°C (158°F).
   If it is below 70°C (158°F), go to following step.
   If it is above 70°C (158°F), stop engine and cool down the engine to less than 70°C (158°F), then retry from step 1.
5) Drive vehicle for 10 consecutive minutes under the following conditions.

VHCL SPEED SE	80 - 120 km/h (50 - 75 MPH)

   If 1st trip DTC is detected, go to "Diagnostic Procedure", EC-1667.

WITH GST

NEEC1370S02

1) Follow the prodedure "WITH CONSULT-II" above.

Diagnostic Procedure

NEEC1371

1	CHECK ENGINE COOLANT TEMPERATURE SENSOR

1. Turn ignition switch OFF.
2. Remove engine coolant temperature sensor.
3. Check resistance between engine coolant temperature sensor terminals under the following conditions.

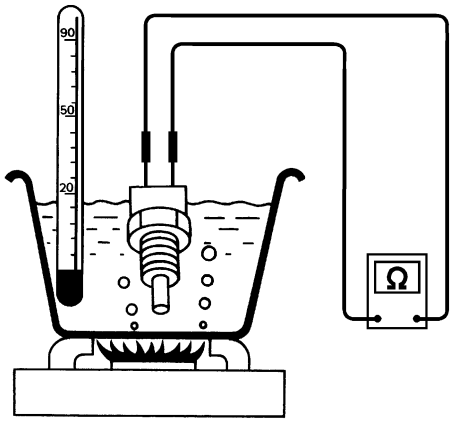

<Reference data>

Temperature °C (°F)	Resistance kΩ
20 (68)	2.1 - 2.9
50 (122)	0.68 - 1.00
90 (194)	0.236 - 0.260

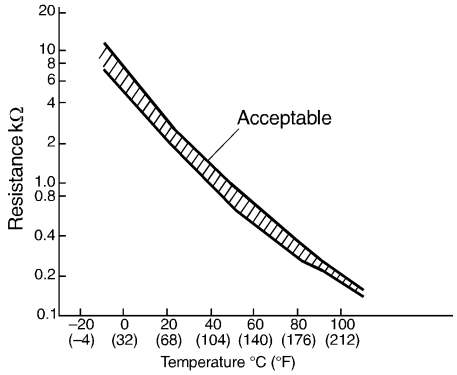

SEF304X

OK or NG

OK	▶	**INSPECTION END**
NG	▶	Replace engine coolant temperature sensor.

On Board Diagnosis Logic

NEEC1372

★ The closed loop control has the one trip detection logic.
Malfunction is detected when the closed loop control function for right bank does not operate even when vehicle is driving in the specified condition, the closed loop control function for left bank does not operate even when vehicle is driving in the specified condition.

POSSIBLE CAUSE

NEEC1372S01

- The heated oxygen sensor 1 (front) circuit is open or shorted.
- Heated oxygen sensor 1 (front)
- Heated oxygen sensor 1 heater (front)

DTC Confirmation Procedure

NEEC1373

CAUTION:
Always drive vehicle at a safe speed.

NOTE:
If “DTC Confirmation Procedure” has been previously conducted, always turn ignition switch OFF and wait at least 5 seconds before conducting the next test.

TESTING CONDITION:

- **Never raise engine speed above 2,800 rpm during the “DTC Confirmation Procedure”. If the engine speed limit is exceeded, retry the procedure from step 2.**
- **Before performing the following procedure, confirm that battery voltage is more than 11V at idle.**

3

DATA MONITOR	
MONITOR	NO DTC
ENG SPEED	XXX rpm
COOLAN TEMP/S	XXX °C
HO2S1 (B1)	XXX V
HO2S2 (B2)	XXX V

SEF967Y

With CONSULT-II

1) Start engine and warm it up to normal operating temperature.
2) Select “DATA MONITOR” mode with CONSULT-II.
3) Hold engine speed at 2,000 rpm and check one of the following.

- “HO2S1 (B1)/(B2)” voltage should go above 0.70V at least once.
- “HO2S1 (B1)/(B2)” voltage should go below 0.21V at least once.

If the check result is NG, perform “Diagnosis Procedure”, EC-1669.

If the check result is OK, perform the following step.

4) Let engine idle at least 5 minutes.
5) Maintain the following condition at least 50 consecutive seconds.

B/FUEL SCHDL	2.0 msec or more
ENG SPEED	1,500 rpm or more
Selector lever	Suitable position
VHCL SPEED SE	More than 71 km/h (44 MPH)

During this test, P0130 and/or P0150 may be displayed on CONSULT-II screen.

6) If DTC is detected, go to "Diagnostic Procedure", EC-1669.

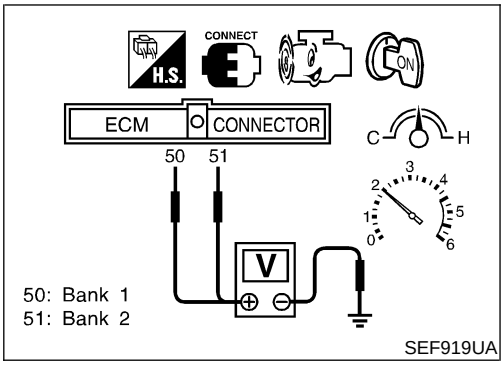

Overall Function Check

NEEC1374

Use this procedure to check the overall function of the closed loop control. During this check, a DTC might not be confirmed.

Without CONSULT-II

1) Start engine and warm it up to normal operating temperature.
2) Set voltmeter probes between ECM terminal 50 [heated oxygen sensor 1 (front) (bank 1) signal] or 51 [heated oxygen sensor 1 (front) (bank 2) signal] and engine ground.
3) Check the following with engine speed held at 2,000 rpm constant under no-load.

- The voltage should go above 0.70V at least once.
- The voltage should go below 0.21V at least once.

4) If NG, go to "Diagnostic Procedure", EC-1669.

Diagnostic Procedure

NEEC1375

Perform trouble diagnosis for "DTC P0133, P0153", EC-1429.

System Description

NEEC1376

COOLING FAN CONTROL

NEEC1376S01

Sensor	Input Signal to ECM	ECM function	Actuator
Vehicle speed sensor	Vehicle speed	Cooling fan control	Cooling fan relay(s)
Engine coolant temperature sensor	Engine coolant temperature		
Ignition switch	Start signal		
Camshaft position sensor	Engine speed		

The ECM controls the cooling fan corresponding to the signals sent from the vehicle speed and engine coolant temperature. The control system has 3-step control [HIGH/LOW/OFF].

OPERATION

NEEC1376S02

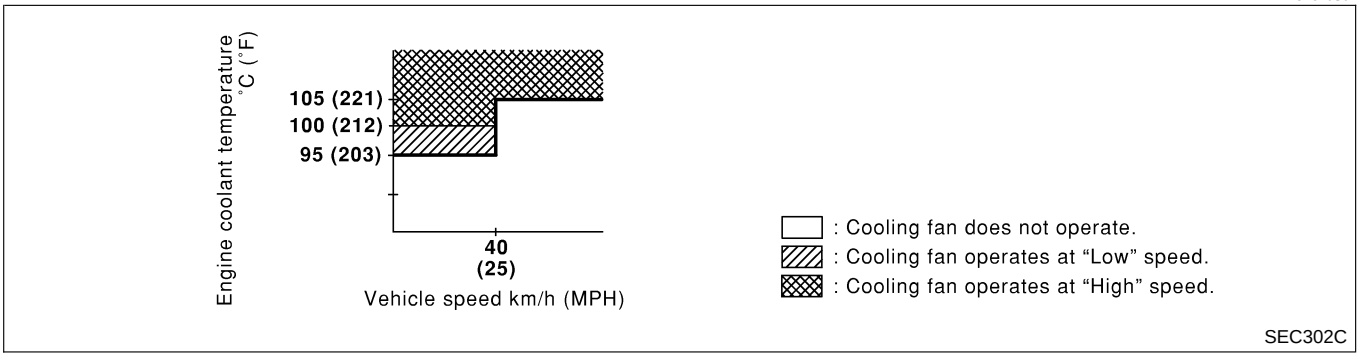

CONSULT-II Reference Value in Data Monitor Mode

NEEC1377

Specification data are reference values.

MONITOR ITEM	CONDITION		SPECIFICATION
COOLING FAN	● Engine: Idling, after warming up ● Air conditioner switch: OFF	Engine coolant temperature is 94°C (201°F) or less.	OFF
		Engine coolant temperature is between 95°C (203°F) and 100°C (212°F)	LOW
		Engine coolant temperature is 100°C (212°F) or more.	HIGH

ECM Terminals and Reference Value

NEEC1378

Specification data are reference values and are measured between each terminal and ground.

CAUTION:

Do not use ECM ground terminals when measuring input/output voltage. Doing so may result in damage to the ECM’s transistor. Use a ground other than the ECM terminals, such as the ground.

TERMINAL NO.	WIRE COLOR	ITEM	CONDITION	DATA (DC Voltage)
36	G/R	Cooling fan relay (Low)	**[Engine is running]** ● Cooling fan is not operating	BATTERY VOLTAGE (11 - 14V)
			[Engine is running] ● Cooling fan is operating	0 - 0.6V

TERMINAL NO.	WIRE COLOR	ITEM	CONDITION	DATA (DC Voltage)
38	LG/R	Cooling fan relay (High)	**[Engine is running]** ● Cooling fan is not operating	BATTERY VOLTAGE (11 - 14V)
			[Engine is running] ● Cooling fan (High) is operating	0 - 1V

On Board Diagnosis Logic

NEEC1379

If the cooling fan or another component in the cooling system malfunctions, engine coolant temperature will rise. When the engine coolant temperature reaches an abnormally high temperature condition, a malfunction is indicated.
Malfunction is detected when engine coolant temperature reaches an abnormally high temperature.

CAUTION:

When a malfunction is indicated be sure to replace the coolant, follow the procedure in "Changing Engine Coolant", "ENGINE MAINTENANCE", *MA-27*. Also, replace the engine oil.

1) **Fill radiator with coolant up to specified level with a filling speed of 2 liters per minute like pouring coolant by kettle. Be sure to use coolant with the proper mixture ratio. Refer to "Anti-freeze Coolant Mixture Ratio", "RECOMMENDED FLUIDS AND LUBRICANTS", *MA-15*.**
2) **After refilling coolant, run engine to ensure that no water-flow noise is emitted.**

POSSIBLE CAUSE

NEEC1379S01

- Harness or connectors
  (The cooling fan circuit is open or shorted.)
- Cooling fan
- Radiator hose
- Radiator
- Radiator cap
- Water pump
- Thermostat

For more information, refer to "MAIN 12 CAUSES OF OVERHEATING", EC-1685.

1

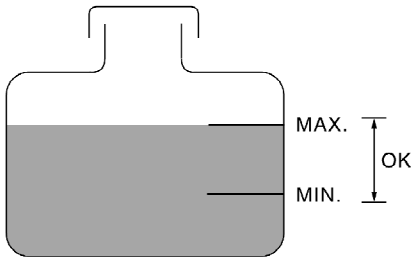

SEF621W

4

ACTIVE TEST	
COOLING FAN	OFF
MONITOR	
COOLAN TEMP/S	XXX °C

SEF376X

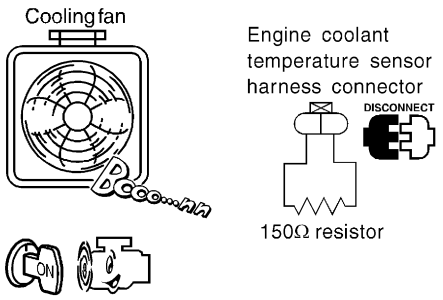

SEF085T

Overall Function Check

NEEC1380

Use this procedure to check the overall function of the cooling fan. During this check, a DTC might not be confirmed.

WARNING:

Never remove the radiator cap when the engine is hot. Serious burns could be caused by high pressure fluid escaping from the radiator.
Wrap a thick cloth around cap. Carefully remove the cap by turning it a quarter turn to allow built-up pressure to escape. Then turn the cap all the way off.

With CONSULT-II

1) Check the coolant level in the reservoir tank and radiator.
Allow engine to cool before checking coolant level.
If the coolant level in the reservoir tank and/or radiator is below the proper range, skip the following steps and go to "Diagnostic Procedure", EC-1674.
2) Confirm whether customer filled the coolant or not. If customer filled the coolant, skip the following steps and go to "Diagnostic Procedure", EC-1674.
3) Turn ignition switch ON.
4) Perform "COOLING FAN" in "ACTIVE TEST" mode with CONSULT-II.
5) Make sure that cooling fan operates.
6) If NG, go to "Diagnostic Procedure", EC-1674.

Without CONSULT-II

1) Check the coolant level in the reservoir tank and radiator.
Allow engine to cool before checking coolant level.
If the coolant level in the reservoir tank and/or radiator is below the proper range, skip the following steps and go to "Diagnostic Procedure", EC-1674.
2) Confirm whether customer filled the coolant or not. If customer filled the coolant, skip the following steps and go to "Diagnostic Procedure", EC-1674.
3) Turn ignition switch OFF.
4) Disconnect engine coolant temperature sensor harness connector.
5) Connect 150Ω resistor to engine coolant temperature sensor harness connector.
6) Start engine and make sure that cooling fan operates.
Be careful not to overheat engine.
7) If NG, go to "Diagnostic Procedure", EC-1674.

Wiring Diagram

NEEC1381

EC-COOL/F-01

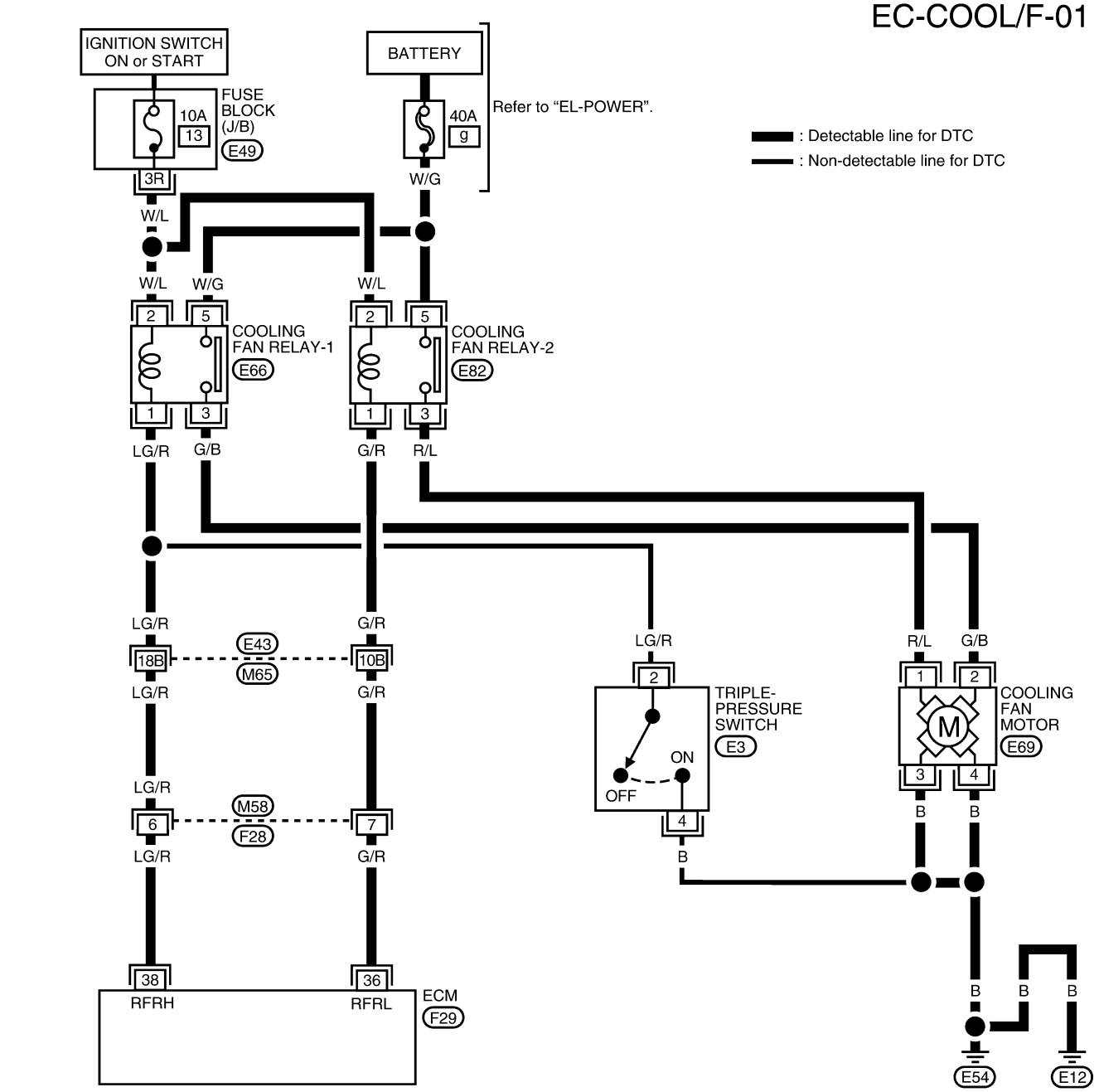

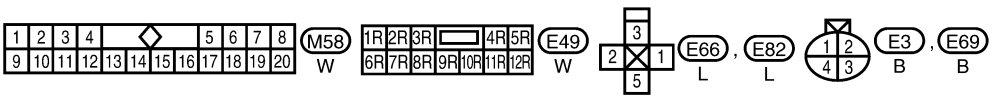

Refer to the following.
M65 , E43 - SUPER MULTIPLE JUNCTION (SMJ)

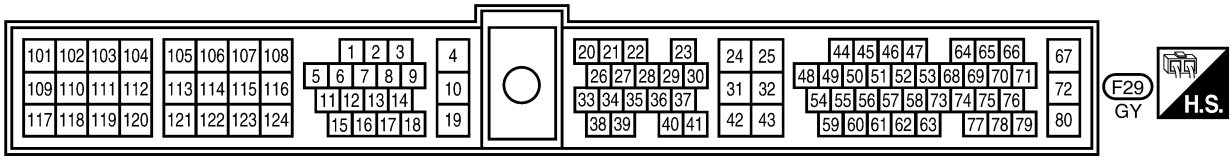

LEC667

Diagnostic Procedure

NEEC1382

1	INSPECTION START
Do you have CONSULT-II?	
Yes or No	
Yes ▶	GO TO 2.
No ▶	GO TO 4.

2	CHECK COOLING FAN LOW SPEED OPERATION

With CONSULT-II

1. Disconnect cooling fan relay-1.

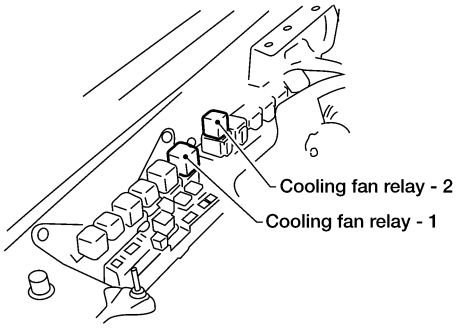

LEC765

2. Turn ignition switch “ON”.
3. Perform “COOLING FAN” in “ACTIVE TEST” mode with CONSULT-II.
4. Touch “LOW”.

ACTIVE TEST	
COOLING FAN	LOW
MONITOR	
COOLAN TEMP/S	XXX °C

SEF784Z

5. Make sure that cooling fan operates at low speed.

OK or NG

OK ▶	GO TO 3.
NG ▶	GO TO 11.

3	CHECK COOLING FAN HIGH SPEED OPERATION

With CONSULT-II

1. Turn ignition switch "OFF".
2. Reconnect cooling fan relay-1.
3. Turn ignition switch "ON".
4. Perform "COOLING FAN" in "ACTIVE TEST" mode with CONSULT-II.
5. Touch "HIGH".

ACTIVE TEST	
COOLING FAN	HIGH
MONITOR	
COOLAN TEMP/S	XXX °C

SEF785Z

6. Make sure that cooling fan operates at higher speed than low speed.

OK or NG

OK	▶	GO TO 6.
NG	▶	GO TO 16.

4	CHECK COOLING FAN LOW SPEED OPERATION

Without CONSULT-II
1. Turn ignition switch OFF.
2. Disconnect cooling fan relay-1.

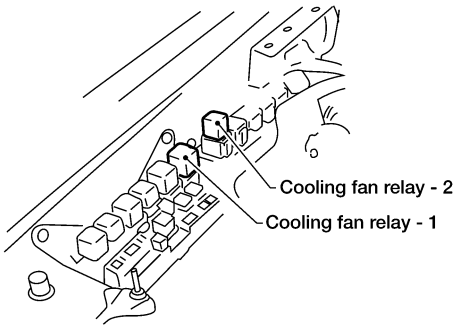

LEC765

3. Disconnect engine coolant temperature sensor harness connector.
4. Connect 150Ω resistor to engine coolant temperature sensor harness connector.
5. Start engine and make sure that cooling fan operates at low speed.

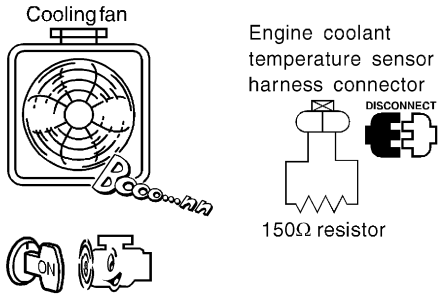

SEF085T

OK or NG

OK	▶	GO TO 5.
NG	▶	GO TO 11.

5	CHECK COOLING FAN HIGH SPEED OPERATION

Without CONSULT-II
1. Turn ignition switch "OFF".
2. Reconnect cooling fan relay-1.
3. Restart engine and make sure that cooling fan operates at higher speed than low speed.

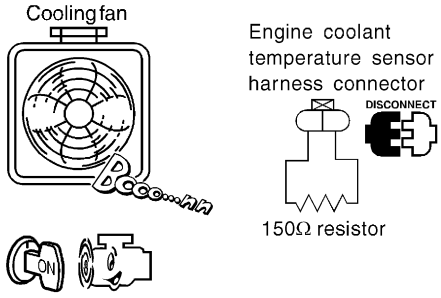

SEF085T

OK or NG

OK	▶	GO TO 6.
NG	▶	GO TO 16.

6	CHECK COOLING SYSTEM FOR LEAK

Apply pressure to the cooling system with a tester, and check if the pressure drops.

CAUTION:

Higher than the specified pressure may cause radiator damage.

Testing pressure: 157 kPa (1.6 kg/cm^2, 23 psi)

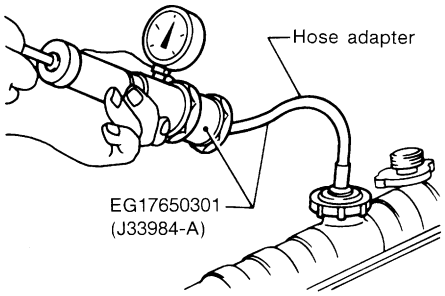

SLC754A

Pressure should not drop.

OK or NG

OK	▶	GO TO 7.
NG	▶	**Check the following for leak** ● Hose ● Radiator ● Water pump Refer to "Water Pump", ***LC-29***.

7	CHECK RADIATOR CAP

Apply pressure to cap with a tester and check radiator cap relief pressure.

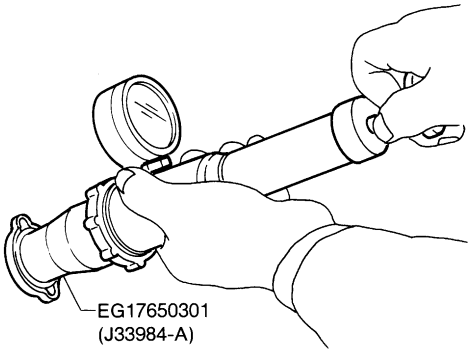

SLC755A

Radiator cap relief pressure:
59 - 98 kPa (0.6 - 1.0 kg/cm^2, 9 - 14 psi)

OK or NG

OK	▶	GO TO 8.
NG	▶	Replace radiator cap.

Diagnostic Procedure (Cont'd)

8	CHECK THERMOSTAT

1. Check valve seating condition at normal room temperatures.
   It should seat tightly.
2. Check valve opening temperature and valve lift.

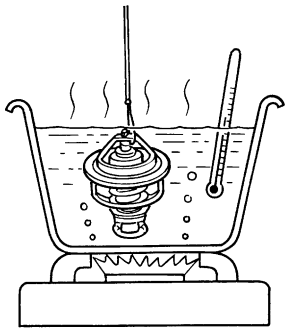

SLC343

Valve opening temperature:
76.5°C (170°F) [standard]
Valve lift:
More than 10 mm/90°C (0.39 in/194°F)

3. Check if valve is closed at 5°C (9°F) below valve opening temperature.

For details, refer to "Thermostat", ***LC-30***.

OK or NG

OK	▶	GO TO 9.
NG	▶	Replace thermostat

9	CHECK ENGINE COOLANT TEMPERATURE SENSOR

Check resistance as shown in the figure.

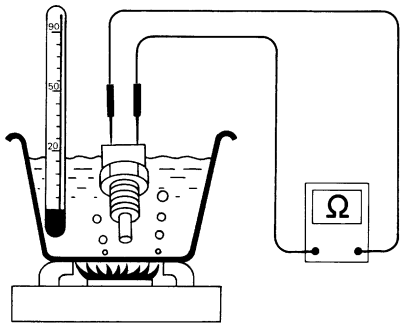

SEF152P

<Reference data>

Temperature °C (°F)	Resistance kΩ
20 (68)	2.1 - 2.9
50 (122)	0.68 - 1.00
90 (194)	0.236 - 0.260

MTBL0229

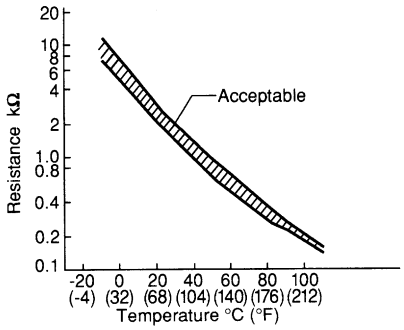

SEF012P

OK or NG

OK	▶	GO TO 10.
NG	▶	Replace engine coolant temperature sensor.

10	CHECK MAIN 12 CAUSES

If the cause cannot be isolated, go to "MAIN 12 CAUSES OF OVERHEATING", EC-1685.

▶ **INSPECTION END**

Diagnostic Procedure (Cont'd)

11	CHECK COOLING FAN RELAY POWER SUPPLY CIRCUIT

1. Turn ignition switch OFF.
2. Disconnect cooling fan relay-2.

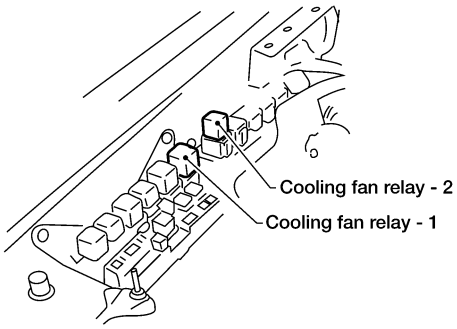

LEC765

3. Turn ignition switch ON.
4. Check voltage between terminals 2, 5 and ground with CONSULT-II or tester.

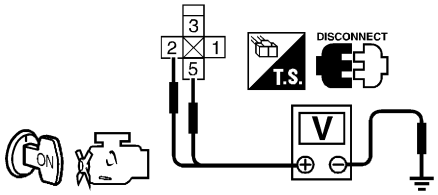

SEF667W

Voltage: Battery voltage

OK or NG

OK	▶	GO TO 13.
NG	▶	GO TO 12.

12	DETECT MALFUNCTIONING PART

Check the following.
- Fuse block (J/B) connector E49
- 10A fuse
- 40A fusible link
- Harness for open or short between cooling fan relay-2 and fuse
- Harness for open or short between cooling fan relay-2 and battery

	▶	Repair open circuit or short to ground or short to power in harness or connectors.

13	CHECK COOLING FAN MOTOR POWER SUPPLY AND GROUND CIRCUIT FOR OPEN AND SHORT

1. Turn ignition switch OFF.
2. Disconnect cooling fan motor harness connector.

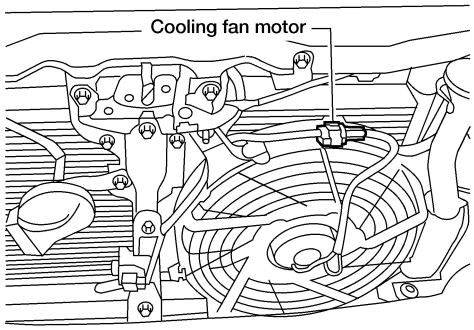

AEC931A

3. Check harness continuity between cooling fan relay-2 terminal 3 and motor terminal 1, motor terminals 3, 4 and body ground. Refer to Wiring Diagram.
   Continuity should exist.
4. Also check harness for short to ground and short to power.

OK or NG

OK	▶	GO TO 14.
NG	▶	Repair open circuit or short to ground or short to power in harness or connectors.

14	CHECK COOLING FAN RELAY OUTPUT SIGNAL CIRCUIT FOR OPEN AND SHORT

1. Disconnect ECM harness connector.
2. Check harness continuity between ECM terminal 36 and cooling fan relay-2 terminal 1. Refer to Wiring Diagram.
   Continuity should exist.
3. Also check harness for short to ground and short to power.

OK or NG

OK	▶	GO TO 21.
NG	▶	GO TO 15.

15	DETECT MALFUNCTIONING PART

Check the following.
- Harness connectors E43, M65
- Harness connectors M58, F28
- Harness for open or short between cooling fan relay-2 and ECM

	▶	Repair open circuit or short to ground or short to power in harness or connectors.

Diagnostic Procedure (Cont'd)

16	CHECK COOLING FAN RELAY POWER SUPPLY CIRCUIT

1. Turn ignition switch "OFF".
2. Disconnect cooling fan relay-1.

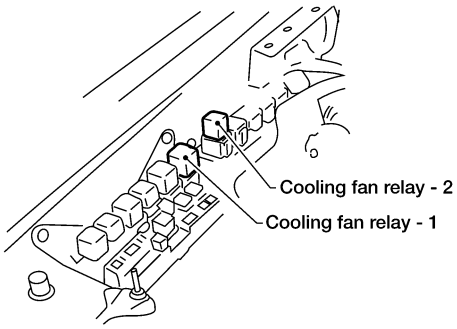

LEC765

3. Turn ignition switch "ON".
4. Check voltage between terminals 2, 5 and ground with CONSULT-II or tester.

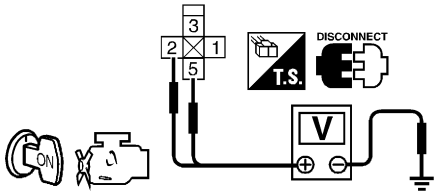

SEF667W

Voltage: Battery voltage

OK or NG

OK	▶	GO TO 18.
NG	▶	GO TO 17.

17	DETECT MALFUNCTIONING PART

Check the following.
- Fuse block (J/B) connector E49
- 10A fuse
- 40A fusible link
- Harness for open or short between cooling fan relay-1 and fuse
- Harness for open or short between cooling fan relay-1 and battery

	▶	Repair open circuit or short to ground or short to power in harness or connectors.

18	CHECK COOLING FAN MOTOR POWER SUPPLY AND GROUND CIRCUIT FOR OPEN AND SHORT

1. Turn ignition switch "OFF".
2. Disconnect cooling fan motor harness connector.

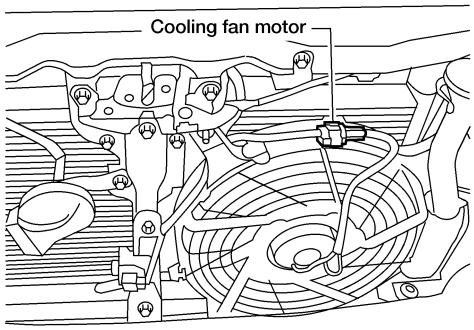

AEC931A

3. Check harness continuity between cooling fan relay-1 terminal 3 and motor terminal 2, motor terminals 3, 4 and body ground. Refer to Wiring Diagram.
   Continuity should exist.
4. Also check harness for short to ground and short to power.

OK or NG

OK	▶	GO TO 19.
NG	▶	Repair open circuit or short to ground or short to power in harness or connectors.

19	CHECK COOLING FAN RELAY OUTPUT SIGNAL CIRCUIT FOR OPEN AND SHORT

1. Disconnect ECM harness connector.
2. Check harness continuity between ECM terminal 38 and cooling fan relay-1 terminal 1. Refer to Wiring Diagram.
   Continuity should exist.
3. Also check harness for short to ground and short to power.

OK or NG

OK	▶	GO TO 21.
NG	▶	GO TO 20.

20	DETECT MALFUNCTIONING PART

Check the following.
- Harness connectors E43, M65
- Harness connectors M58, F28
- Harness for open or short between cooling fan relay-1 and ECM

	▶	Repair open circuit or short to ground or short to power in harness or connectors.

Diagnostic Procedure (Cont'd)

21	CHECK COOLING FAN RELAY

Check continuity between terminals 3 and 5.

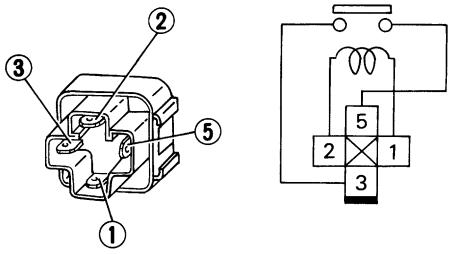

SEF511P

Conditions	Continuity
12V direct current supply between terminals 1 and 2	Yes
No current supply	No

MTBL0252

OK or NG

OK	▶	GO TO 22.
NG	▶	Replace cooling fan relay.

22	CHECK COOLING FAN MOTOR

1. Disconnect cooling fan motor harness connector.
2. Supply cooling fan motor terminals with battery voltage and check operation.

	Speed	Terminals (+)	Terminals (–)
Cooling fan motor	Low	1	3
	High	1, 2	3, 4

MTBL0631

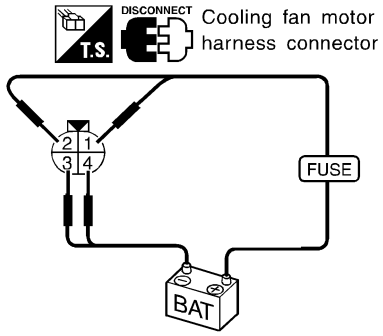

SEC303C

OK or NG

OK	▶	GO TO 23.
NG	▶	Replace cooling fan motor.

23	CHECK INTERMITTENT INCIDENT

Perform "TROUBLE DIAGNOSIS FOR INTERMITTENT INCIDENT", EC-1353.

▶ **INSPECTION END**

Main 12 Causes of Overheating

NEEC1383

Engine	Step	Inspection item	Equipment	Standard	Reference page
OFF	1	• Blocked radiator • Blocked condenser • Blocked radiator grille • Blocked bumper	• Visual	No blocking	—
	2	• Coolant mixture	• Coolant tester	50 - 50% coolant mixture	See “RECOMMENDED FLUIDS AND LUBRICANTS”,***MA-13***.
	3	• Coolant level	• Visual	Coolant up to MAX level in reservoir tank and radiator filler neck	See “Changing Engine Coolant”, “ENGINE MAINTENANCE”, ***MA-27***.
	4	• Radiator cap	• Pressure tester	59 - 98 kPa (0.6 - 1.0 kg/cm^2, 9 - 14 psi) (Limit)	See “System Check”, “ENGINE COOLING SYSTEM”, ***LC-27***.
ON*2	5	• Coolant leaks	• Visual	No leaks	See “System Check”, “ENGINE COOLING SYSTEM”, ***LC-27***.
ON*2	6	• Thermostat	• Touch the upper and lower radiator hoses	Both hoses should be hot	See “Thermostat” and “Radiator”, “ENGINE COOLING SYSTEM”, ***LC-30***, ***LC-32***.
ON*1	7	• Cooling fan	• CONSULT-II	Operating	See “TROUBLE DIAGNOSIS FOR OVERHEAT” EC-1670.
OFF	8	• Combustion gas leak	• Color checker chemical tester 4 Gas analyzer	Negative	—
ON*3	9	• Coolant temperature gauge	• Visual	Gauge less than 3/4 when driving	—
		• Coolant overflow to reservoir tank	• Visual	No overflow during driving and idling	See “Changing Engine Coolant”, “ENGINE MAINTENANCE”, ***MA-27***.
OFF*4	10	• Coolant return from reservoir tank to radiator	• Visual	Should be initial level in reservoir tank	See “ENGINE MAINTENANCE”, ***MA-25***.
OFF	11	• Cylinder head	• Straight gauge feeler gauge	0.1 mm (0.004 in) Maximum distortion (warping)	See “Inspection”, “CYLINDER HEAD DISTORTION”, ***EM-96***.
	12	• Cylinder block and pistons	• Visual	No scuffing on cylinder walls or piston	See “Inspection”, “CYLINDER BLOCK DISTORTION AND WEAR”, ***EM-117***.

*1: Turn the ignition switch ON.
*2: Engine running at 3,000 rpm for 10 minutes.
*3: Drive at 90 km/h (55 MPH) for 30 minutes and then let idle for 10 minutes.
*4: After 60 minutes of cool down time.
For more information, refer to “Engine Cooling System”, “OVERHEATING CAUSE ANALYSIS”, ***LC-35***.

Description

NEEC1384

SYSTEM DESCRIPTION

NEEC1384S01

Sensor	Input Signal to ECM	ECM function	Actuator
Camshaft position sensor	Engine speed	Supercharged air control	SCB valve control solenoid valve
Mass air flow sensor	Amount of intake air		
Engine coolant temperature sensor	Engine coolant temperature		
Ignition switch	Start signal		
Throttle position sensor	Throttle position		

This system controls supercharged air according to the engine operating conditions.
This control operation is accomplished through the ECM and the SCB valve control solenoid valve.
When the solenoid valve is ON, the SCB valve shuts. Then intake air is lead to supercharger, and supercharged air is sent to the cylinder.
When the solenoid valve is OFF, the SCB valve opens. Then intake air is sent to the cylinder directly.
When the ECM detects any of the following conditions, current does not flow through the solenoid valve.

- Engine stopped
- Engine starting
- High-load, high-speed engine operation
- Excessively low engine coolant temperature
- Mass air flow sensor malfunction
- Engine coolant temperature sensor malfunction
- Throttle position sensor malfunction

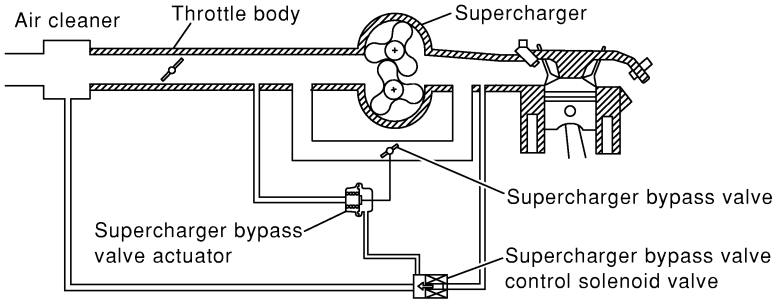

SEC313C

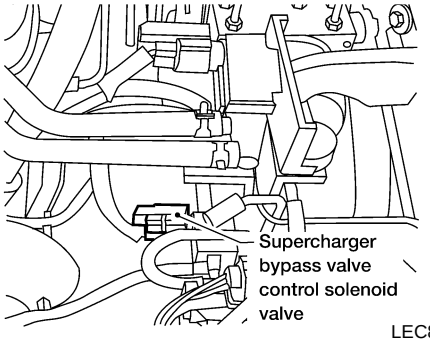

LEC806

COMPONENT DESCRIPTION

NEEC1384S02

SCB Valve Control Solenoid Valve

NEEC1384S0201

The SCB valve control solenoid valve responds to signals from the ECM. When the ECM sends an ON (ground) signal, the solenoid valve is bypassed to apply intake manifold vacuum to the SCB valve actuator. This operation closes the SCB valve. When the ECM sends an OFF signal, the vacuum signal is cut and the SCB valve opens.

CONSULT-II Reference Value in Data Monitor Mode

NEEC1385

Specification data are reference values.

MONITOR ITEM	CONDITION	SPECIFICATION
SCB/V CON S/V	More than 5 seconds after turning ignition switch ON (Engine stopped)	OFF
	Engine speed: Idle	ON

ECM Terminals and Reference Value

NEEC1386

Specification data are reference values, and are measured between each terminal and ground.

CAUTION:

Do not use ECM ground terminals when measuring input/output voltage. Doing so may result in damage to the ECM's transistor. Use a ground other than the ECM terminals, such as the ground.

TERMINAL NO.	WIRE COLOR	ITEM	CONDITION	DATA (DC Voltage)
6	G/W	SCB valve control solenoid valve	**[Ignition switch ON]** ● Engine stopped	BATTERY VOLTAGE (11 - 14V)
			[Engine is running] ● Idle speed	Approximately 0V

On Board Diagnosis Logic

NEEC1387

Malfunction is detected when the improper voltage signal is sent to ECM through SCB valve control solenoid valve.

Freeze frame data will not be stored in the ECM for the SCB valve control solenoid. The MIL will not light for SCB valve control solenoid malfunction.

POSSIBLE CAUSE

NEEC1387S01

- Harness or connectors
  (The SCB valve control solenoid valve circuit is open or shorted.)
- SCB valve control solenoid valve

3

DATA MONITOR	
MONITOR	NO DTC
ENG SPEED	XXX rpm

SEF058Y

DTC Confirmation Procedure

NEEC1388

With CONSULT-II

1) Turn ignition switch “ON”.
2) Select “DATA MONITOR” mode with CONSULT-II.
3) Wait at least 10 seconds.
4) If 1st trip DTC is detected, go to “Diagnostic Procedure”, EC-1690.

With GST

Follow the procedure “WITH CONSULT-II” above.

Wiring Diagram

NEEC1389

EC-S/CHGR-01

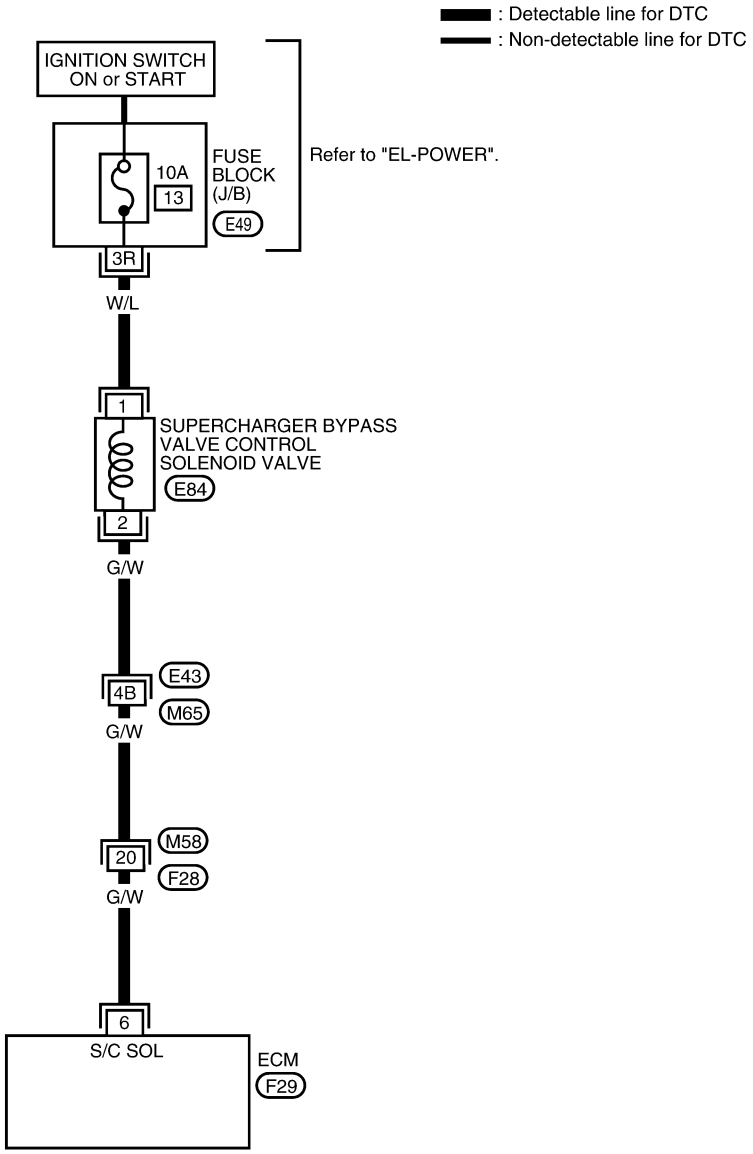

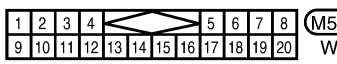

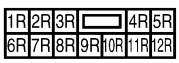



Refer to the following.
M65 , E43 - SUPER MULTIPLE JUNCTION (SMJ)

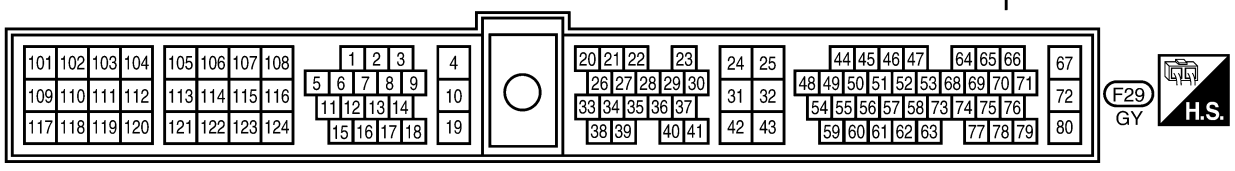

LEC683

Diagnostic Procedure

NEEC1390

1	CHECK SCB VALVE CONTROL SOLENOID VALVE POWER SUPPLY CIRCUIT

1. Turn ignition switch “OFF”.
2. Disconnect SCB valve control solenoid valve harness connector.

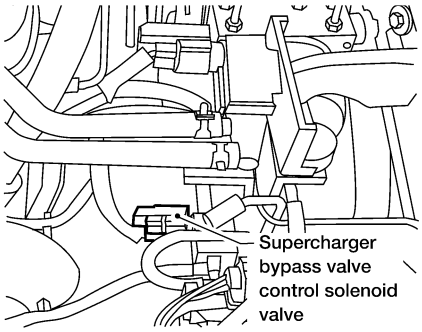

LEC806

3. Turn ignition switch “ON”.
4. Check voltage between SCB valve control solenoid valve terminal 1 and ground with CONSULT-II or tester.

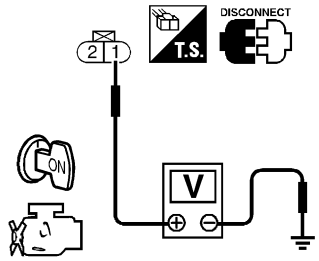

SEF657W

Voltage: Battery voltage

OK or NG

OK	▶	GO TO 3.
NG	▶	GO TO 2.

2	DETECT MALFUNCTIONING PART

Check the following.
- Fuse block (J/B) connector E49
- 10A fuse
- Harness for open or short between SCB valve control solenoid valve and fuse

	▶	Repair harness or connectors.

3	CHECK SCB VALVE CONTROL SOLENOID VALVE OUTPUT SIGNAL CIRCUIT FOR OPEN AND SHORT

1. Turn ignition switch “OFF”.
2. Disconnect ECM harness connector.
3. Check harness continuity between ECM terminal 6 and SCB valve control solenoid valve terminal 2. Refer to Wiring Diagram.
   Continuity should exist.
4. Also check harness for short to ground and short to power.

OK or NG

OK	▶	GO TO 5.
NG	▶	Repair open circuit or short to ground or short to power in harness or connectors.

4	DETECT MALFUNCTIONING PART
Check the following. ● Harness connectors E74, M82 ● Harness connectors M58, F28 ● Harness for open or short between SCB valve control solenoid valve and ECM	
▶	Repair open circuit or short to ground or short to power in harness or connectors.

5	CHECK SCB VALVE CONTROL SOLENOID VALVE

With CONSULT-II

1. Perform "SCB/V CONT SOL/V" in "ACTIVE TEST" mode.
2. Check air passage continuity and operation delay time under the following conditions.

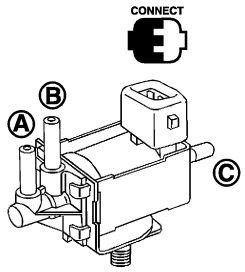

ACTIVE TEST	
SCB/V CONT SOL/V	ON
MONITOR	
ENG SPEED	XXXrpm
IACV-AAC/V	XXX%

Conditions	Air passage continuity between A and B	Air passage continuity between A and C
ON	No	Yes
OFF	Yes	No

SEC314C

Without CONSULT-II

Check air passage continuity and operation delay time under the following conditions.

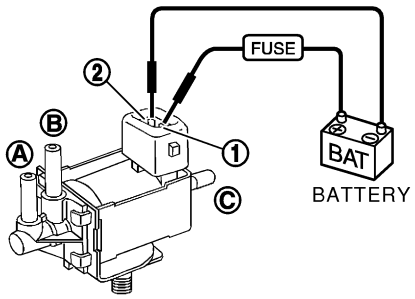

Conditions	Air passage continuity between A and B	Air passage continuity between A and C
12V direct current supply between terminals 1 and 2	No	Yes
No supply	Yes	No

SEC315C

OK or NG

OK	▶	GO TO 6.
NG	▶	Replace SCB valve control solenoid valve.

6	CHECK INTERMITTENT INCIDENT
Refer to "TROUBLE DIAGNOSIS FOR INTERMITTENT INCIDENT", EC-1353.	
▶	**INSPECTION END**

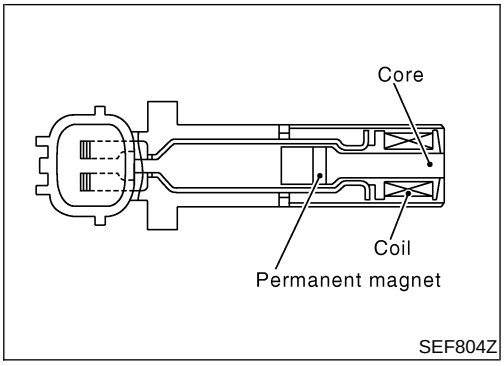

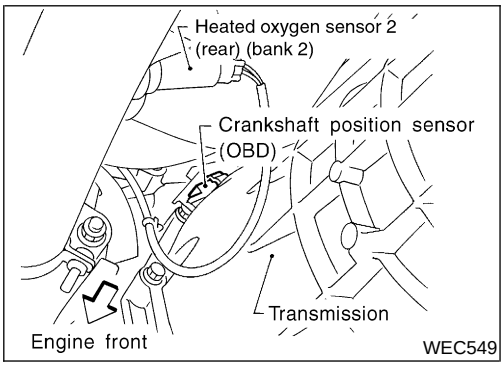

Component Description

NEEC1391

The crankshaft position sensor (OBD) is located on the transmission housing facing the gear teeth (cogs) of the flywheel or drive plate. It detects the fluctuation of the engine revolution.

The sensor consists of a permanent magnet, core and coil.

When the engine is running, the high and low parts of the teeth cause the gap with the sensor to change.

The changing gap causes the magnetic field near the sensor to change.

Due to the changing magnetic field, the voltage from the sensor changes.

The ECM receives the voltage signal and detects the fluctuation of the engine revolution.

This sensor is not used to control the engine system.

It is used only for the on board diagnosis.

ECM Terminals and Reference Value

NEEC1392

Specification data are reference values and are measured between each terminal and ground.

CAUTION:

Do not use ECM ground terminals when measuring input/output voltage. Doing so may result in damage to the ECM's transistor. Use a ground other than the ECM terminals, such as the ground.

TERMINAL NO.	WIRE COLOR	ITEM	CONDITION	DATA (AC Voltage)
47	L	Crankshaft position sensor (OBD)	**[Engine is running]** ● **Warm-up condition** ● Idle speed	1 - 2V (AC range) 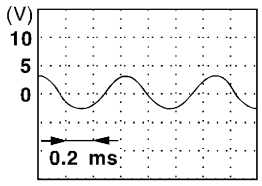 SEF690W
			[Engine is running] ● Engine speed is 2,000 rpm	3 - 4V (AC range) 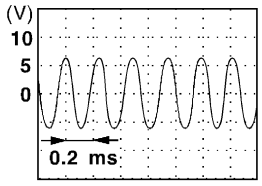 SEF691W

On Board Diagnosis Logic

NEEC1393

Malfunction is detected when a chipping of the flywheel or drive plate gear tooth (cog) is detected by the ECM.

POSSIBLE CAUSE

NEEC1393S01

- Harness or connectors
- Crankshaft position sensor (OBD)
- Drive plate/Flywheel

DTC Confirmation Procedure

NEEC1394

NOTE:

If "DTC Confirmation Procedure" has been previously conducted, always turn ignition switch OFF and wait at least 5 seconds before conducting the next test.

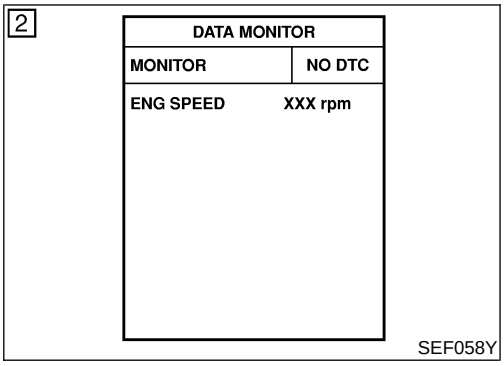

With CONSULT-II

1) Turn ignition switch ON and select "DATA MONITOR" mode with CONSULT-II.
2) Start engine and run it for at least 2 minutes at idle speed.
3) If 1st trip DTC is detected, go to "Diagnostic Procedure", EC-1695.

With GST

Follow the procedure "With CONSULT-II".

Wiring Diagram

NEEC1395

EC-CKPS-01

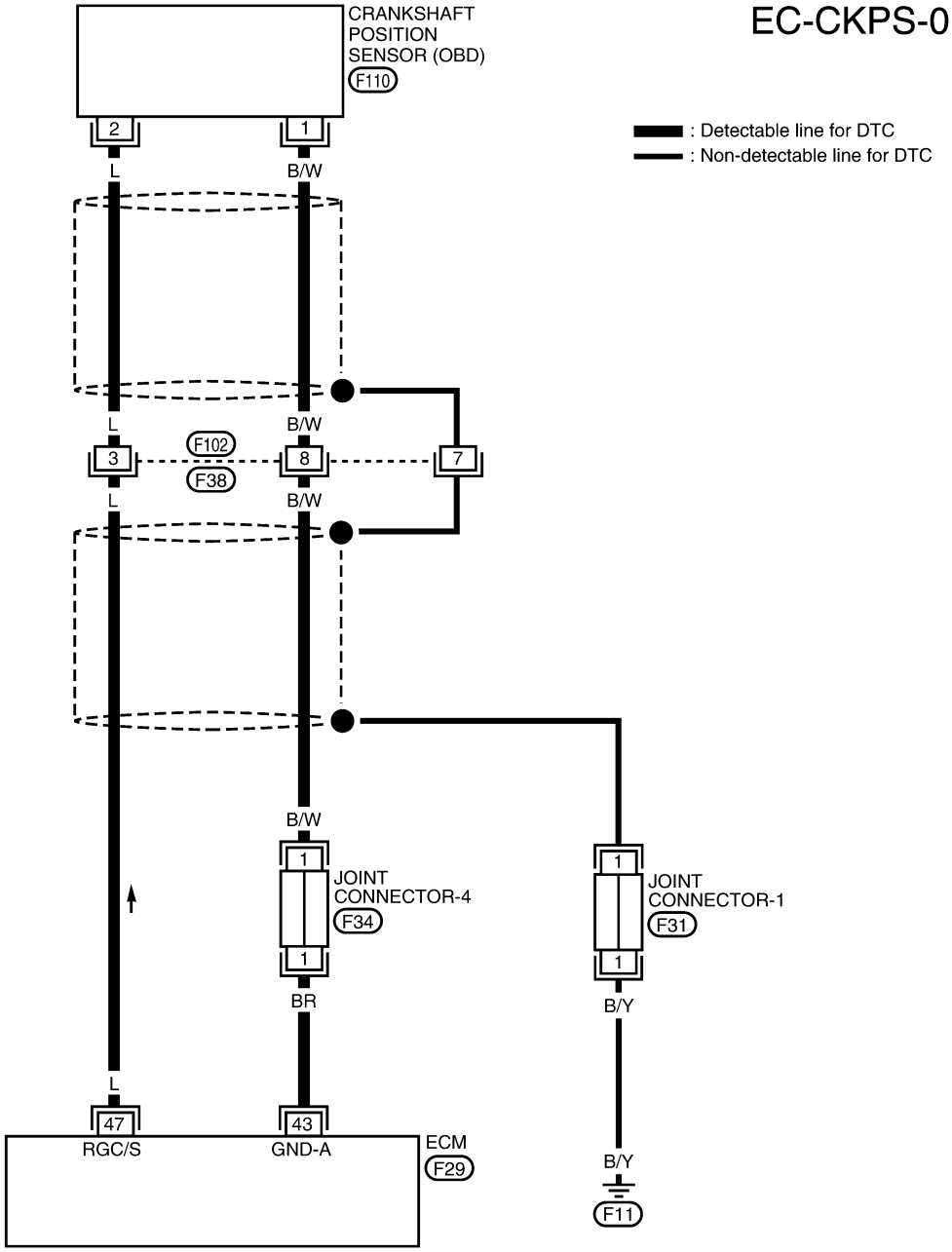

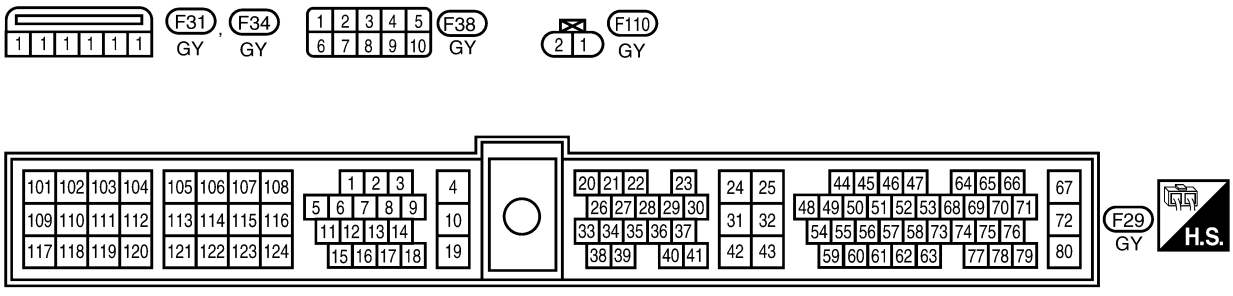

LEC669

Diagnostic Procedure

NEEC1396

1	RETIGHTEN GROUND SCREWS

1. Turn ignition switch OFF.
2. Loosen and retighten engine ground screws.

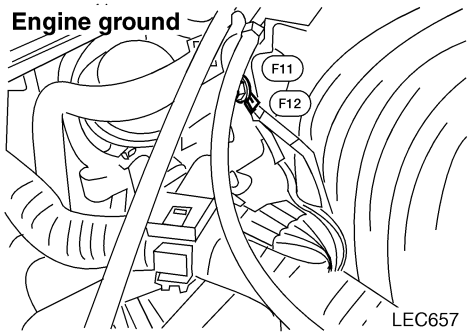

LEC657

▶	GO TO 2.

2	CHECK CKPS (OBD) INPUT SIGNAL CIRCUIT FOR OPEN AND SHORT

1. Disconnect crankshaft position sensor (OBD) and ECM harness connectors.

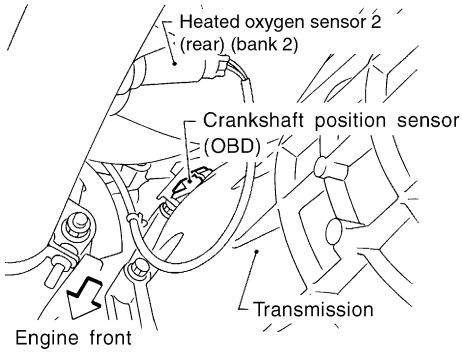

WEC549

2. Check continuity between ECM terminal 47 and CKPS (OBD) terminal 2.
   Continuity should exist.
3. Also check harness for short to ground and short to power.

OK or NG

OK	▶	GO TO 4.
NG	▶	GO TO 3.

3	DETECT MALFUNCTIONING PART

Check the following.
- Harness connectors F38, F102
- Harness for open or short between ECM and crankshaft position sensor (OBD)

▶	Repair open circuit or short to ground or short to power in harness or connectors.

Diagnostic Procedure (Cont'd)

4	CHECK CKPS (OBD) GROUND CIRCUIT FOR OPEN AND SHORT
1. Reconnect ECM harness connectors. 2. Check harness continuity between CKPS (OBD) terminal 1 and engine ground. Refer to Wiring Diagram. **Continuity should exist.** 3. Also check harness for short to ground and short to power. **OK or NG**	
OK ▶	GO TO 6.
NG ▶	GO TO 5.

5	DETECT MALFUNCTIONING PART
Check the following. ● Harness connectors F38, F102 ● Joint connector-4 ● Harness for open between crankshaft position sensor (OBD) and ECM	
▶	Repair open circuit or short to ground or short to power in harness or connectors.

6	CHECK IMPROPER INSTALLATION
1. Loosen and retighten the fixing bolt of the crankshaft position sensor (OBD). 2. Perform "DTC Confirmation Procedure", EC-1693 again. **Is a 1st trip DTC P1336 detected?**	
Yes ▶	GO TO 7.
No ▶	**INSPECTION END**

7	CHECK CRANKSHAFT POSITION SENSOR (OBD)

1. Disconnect crankshaft position sensor (OBD) harness connector.
2. Loosen the fixing bolt of the sensor.
3. Remove the sensor.
4. Visually check the sensor for chipping.

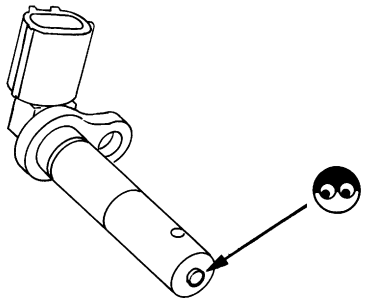

SEF960N

5. Check resistance as shown in the figure.

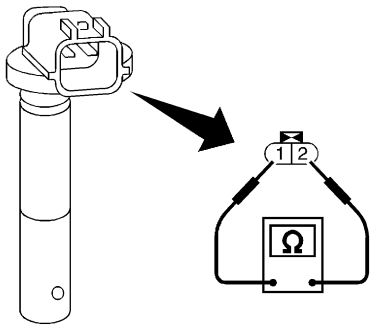

SEF504V

Resistance: Approximately 512 - 632Ω [at 20°C (68°F)]

OK or NG

OK	▶	GO TO 8.
NG	▶	Replace crankshaft position sensor (OBD).

8	CHECK CKPS (OBD) SHIELD CIRCUIT FOR OPEN AND SHORT

1. Disconnect harness connectors F38, F102.
2. Check harness continuity between harness connector F38 terminal 7 and engine ground.
   Continuity should exist.
3. Also check harness for short to power.

OK or NG

OK	▶	GO TO 10.
NG	▶	GO TO 9.

9	DETECT MALFUNCTIONING PART

Check the following.
- Harness connectors F38, F102
- Joint connector-1
- Harness for open between harness connector F38 and engine ground

	▶	Repair open circuit or short to power in harness or connectors.

Diagnostic Procedure (Cont'd)

10	CHECK GEAR TOOTH	
Visually check for chipping flywheel or drive plate gear tooth (cog).		
OK or NG		
OK	▶	GO TO 11.
NG	▶	Replace the flywheel or drive plate.

11	CHECK INTERMITTENT INCIDENT	
Refer to "TROUBLE DIAGNOSIS FOR INTERMITTENT INCIDENT", EC-1353.		
	▶	**INSPECTION END**

On Board Diagnosis Logic

NEEC1397

NOTE:
If DTC P1440 is displayed with P1448, perform trouble diagnosis for DTC P1448 first. (See EC-1747.)

This diagnosis detects leaks in the EVAP purge line using of vapor pressure in the fuel tank.
The EVAP canister vent control valve is closed to shut the EVAP purge line. The vacuum cut valve bypass valve will then be opened to clear the line between the fuel tank and the EVAP canister purge volume control solenoid valve. The EVAP control system pressure sensor can now monitor the pressure inside the fuel tank.
If pressure increases, the PCM will check for leaks in the line between the vacuum cut valve and EVAP canister purge volume control solenoid valve.

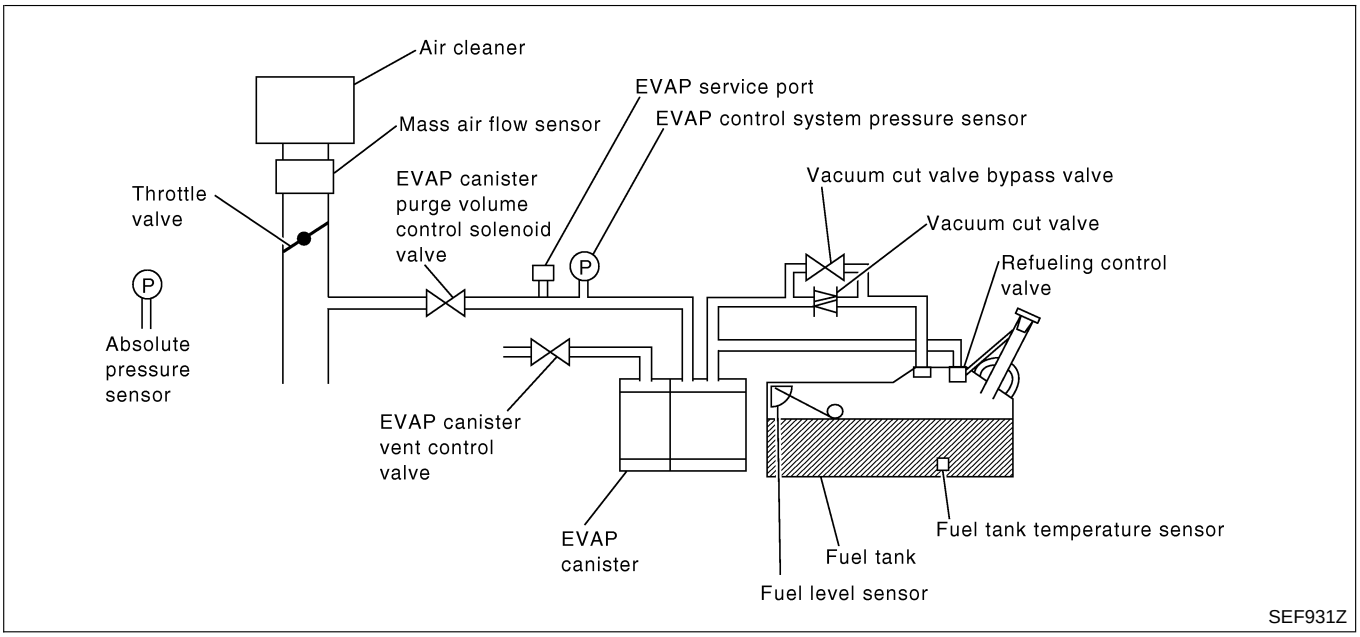

Malfunction is detected when EVAP control system has a leak, EVAP control system does not operate properly.

CAUTION:

- **Use only a genuine NISSAN fuel filler cap as a replacement. If an incorrect fuel filler cap is used, the MIL may come on.**
- **If the fuel filler cap is not tightened properly, the MIL may come on.**
- **Use only a genuine NISSAN rubber tube as a replacement.**

POSSIBLE CAUSE

NEEC1397S01

- Incorrect fuel tank vacuum relief valve
- Incorrect fuel filler cap used
- Fuel filler cap remains open or fails to close
- Foreign matter caught in fuel filler cap
- Leak is in line between intake manifold and EVAP canister purge volume control solenoid valve
- Foreign matter caught in EVAP canister vent control valve
- EVAP canister
- EVAP purge line (pipe and rubber tube) leaks
- EVAP purge line rubber tube bent

- Blocked or bent rubber tube to EVAP control system pressure sensor
- Loose or disconnected rubber tube
- EVAP canister vent control valve and the circuit
- EVAP canister purge volume control solenoid valve
- Absolute pressure sensor
- Fuel tank temperature sensor
- O-ring of EVAP canister vent control valve is missing or damaged
- Water separator
- EVAP canister is saturated with water
- Fuel level sensor and the circuit
- EVAP control system pressure sensor
- Refueling control valve
- ORVR system leaks
- Foreign matter caught in EVAP canister purge volume control solenoid valve

DTC Confirmation Procedure

NEEC1398

Refer to "P1441 EVAP CONTROL SYSTEM (VERY SMALL LEAK) (NEGATIVE PRESSURE)", EC-1701.

Diagnostic Procedure

NEEC1399

Refer to "P1441 EVAP CONTROL SYSTEM (VERY SMALL LEAK) (NEGATIVE PRESSURE)", EC-1701.

On Board Diagnosis Logic

NEEC1400

This diagnosis detects very small leaks in the EVAP line between the fuel tank and the EVAP canister purge volume control solenoid valve using intake manifold vacuum in the same way as conventional EVAP small leak diagnosis.
If the ECM judges a leak equivalent to a very small leak, the very small leak DTC P1441 will be detected. If the ECM judges a leak equivalent to a small leak, the EVAP small leak DTC P0440 will be detected. Correspondingly, if the ECM judges there is no leak, the diagnosis result is OK.

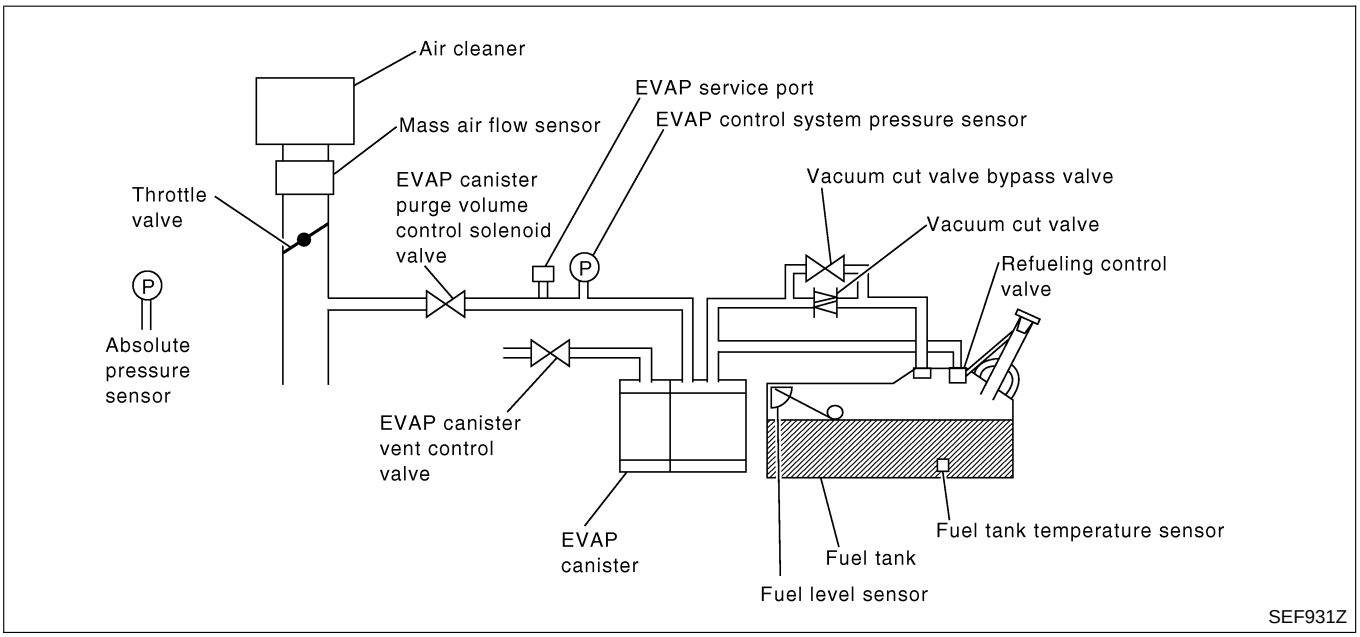

Malfunction is detected when EVAP control system has a very small leak, EVAP control system does not operate properly.

CAUTION:

- **Use only a genuine NISSAN fuel filler cap as a replacement. If an incorrect fuel filler cap is used, the MIL may come on.**
- **If the fuel filler cap is not tightened properly, the MIL may come on.**
- **Use only a genuine NISSAN rubber tube as a replacement.**

POSSIBLE CAUSE

NEEC1400S01

- Incorrect fuel tank vacuum relief valve
- Incorrect fuel filler cap used
- Fuel filler cap remains open or fails to close.
- Foreign matter caught in fuel filler cap.
- Leak is in line between intake manifold and EVAP canister purge volume control solenoid valve.
- Foreign matter caught in EVAP canister vent control valve.
- EVAP canister or fuel tank leaks
- EVAP purge line (pipe and rubber tube) leaks
- EVAP purge line rubber tube bent.
- Blocked or bent rubber tube to EVAP control system pressure sensor
- Loose or disconnected rubber tube
- EVAP canister vent control valve and the circuit
- EVAP canister purge volume control solenoid valve

- Fuel tank temperature sensor
- O-ring of EVAP canister vent control valve is missing or damaged.
- Water separator
- EVAP canister is saturated with water.
- Fuel level sensor and the circuit
- EVAP control system pressure sensor
- Refueling control valve
- ORVR system leaks

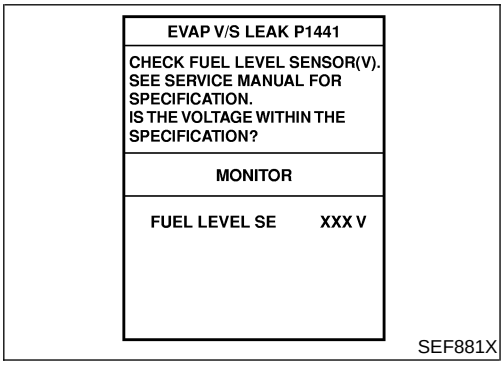

SEF881X

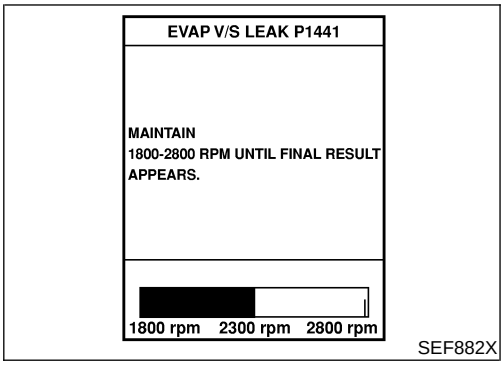

SEF882X

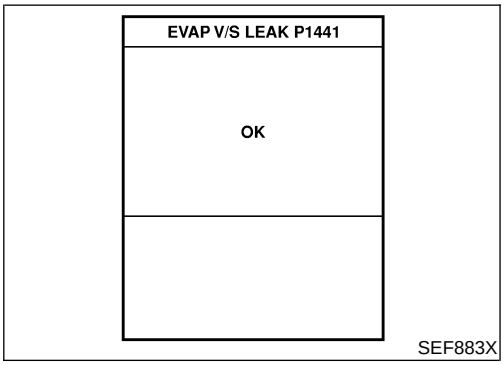

SEF883X

DTC Confirmation Procedure

NEEC1401

CAUTION:

Never remove fuel filler cap during the DTC confirmation procedure.

NOTE:

- **If DTC P1441 is displayed with P0440, perform TROUBLE DIAGNOSIS FOR DTC P1441 first.**
- **If "DIAGNOSTIC TROUBLE CODE CONFIRMATION PROCEDURE" has been previously conducted, always turn ignition switch "OFF" and wait at least 5 seconds before conducting the next test.**
- **After repair, make sure that the hoses and clips are installed properly.**

TESTING CONDITION:

- **Open engine hood before conducting following procedure.**
- **If any of following condition is met just before the DTC confirmation procedure, leave the vehicle for more than 1 hour.**

a) **Fuel filler cap is removed.**
b) **Refilled or drained the fuel.**
c) **EVAP component parts is/are removed.**

- **Before performing the following procedure, confirm that battery voltage is more than 11V at idle.**

With CONSULT-II

1) Turn ignition switch "ON" and select "DATA MONITOR" mode with CONSULT-II.
2) Make sure the following conditions are met.
   FUEL LEVEL SE: 1.08 - 0.2V
   COOLAN TEMP/S: 0 - 32°C (32 - 90°F)
   FUEL T/TMP SE: 0 - 32°C (32 - 90°F)
   INT A/TEMP SE: More than 0°C (32°F)
   If NG, turn ignition switch "OFF" and leave the vehicle in a cool place (soak the vehicle) or refilling/draining fuel until the output voltage condition of the "FUEL LEVEL SE" meets within the range above and leave the vehicle for more than 1 hour. Then start from step 1).
3) Turn ignition switch "OFF" and wait at least 5 seconds.
4) Turn ignition switch "ON".
5) Select "EVAP VERY/SML LEAK P1441" of "EVAPORATIVE SYSTEM" in "DTC WORK SUPPORT" mode with CONSULT-II.
   Follow the instruction displayed.
6) Make sure that "OK" is displayed.
   If "NG" is displayed, refer to "Diagnostic Procedure", EC-1447.

NOTE:
- **If the engine speed cannot be maintained within the range displayed on CONSULT-II screen, go to "Basic inspection", EC-1314.**
- **Make sure that EVAP hoses are connected to EVAP canister purge volume control solenoid valve properly.**

Overall Function Check

NEEC1402

With GST

Use this procedure to check the overall function of the EVAP very small leak function. During this check, a 1st trip DTC might not be confirmed.

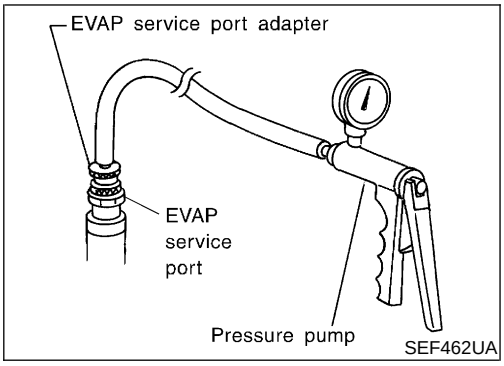

CAUTION:
- **Never use compressed air, doing so may damage the EVAP system.**
- **Do not start engine.**
- **Do not exceeded 4.12 kPa (0.042 kg/cm^2, 0.6 psi).**

1) Attach the EVAP service port adapter securely to the EVAP service port.
2) Set the pressure pump and a hose.
3) Also set a vacuum gauge via 3-way connector and a hose.
4) Turn ignition switch "ON".
5) Connect GST and select mode 8.
6) Using mode 8 control the EVAP canister vent control valve (close) and vacuum cut valve bypass valve (open).
7) Apply pressure and make sure the following conditions are satisfied.
   Pressure to be applied: 2.7 kPa (20 mmHg, 0.79 inHg)
   Time to be waited after the pressure drawn in to the EVAP system and the pressure to be dropped: 60 seconds and the pressure should not be dropped more than 0.4 kPa (3 mmHg, 0.12 inHg)
   If NG, go to diagnostic procedure, EC-1447.

NOTE:
For more information, refer to GST instruction manual.

Diagnostic Procedure

NEEC1403

1	CHECK FUEL FILLER CAP DESIGN

1. Turn ignition switch “OFF”.
2. Check for genuine NISSAN fuel filler cap design.

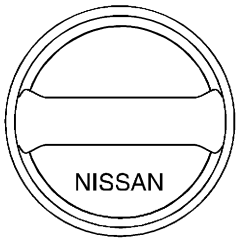

SEF915U

OK or NG

OK	▶	GO TO 2.
NG	▶	Replace with genuine NISSAN fuel filler cap.

2	CHECK FUEL FILLER CAP INSTALLATION

Check that the cap is tightened properly by rotating the cap clockwise.

OK or NG

OK	▶	GO TO 3.
NG	▶	• Open fuel filler cap, then clean cap and fuel filler neck threads using air blower. • Retighten until ratcheting sound is heard.

3	CHECK FUEL FILLER CAP FUNCTION

Check for air releasing sound while opening the fuel filler cap.

OK or NG

OK	▶	GO TO 5.
NG	▶	GO TO 4.

4	CHECK FUEL TANK VACUUM RELIEF VALVE

1. Wipe clean valve housing.
2. Check valve opening pressure and vacuum.

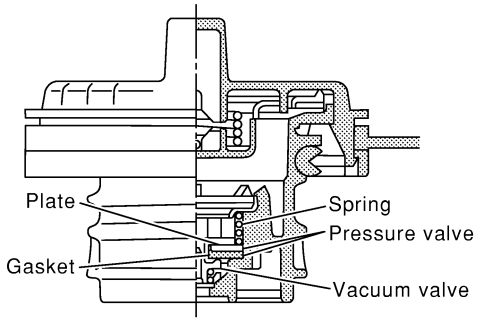

SEF445Y

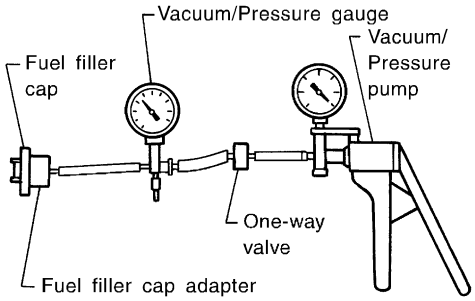

SEF943S

Pressure:
15.3 - 20.0 kPa (0.156 - 0.204 kg/cm^2, 2.22 - 2.90 psi)
Vacuum:
−6.0 to −3.3 kPa (−0.061 to −0.034 kg/cm^2, −0.87 to −0.48 psi)

CAUTION:
Use only a genuine fuel filler cap as a replacement. If an incorrect fuel filler cap is used, the MIL may come on.

OK or NG

OK	▶	GO TO 5.
NG	▶	Replace fuel filler cap with a genuine one.

5	INSTALL THE PRESSURE PUMP

To locate the EVAP leak, install EVAP service port adapter and pressure pump to EVAP service port securely.

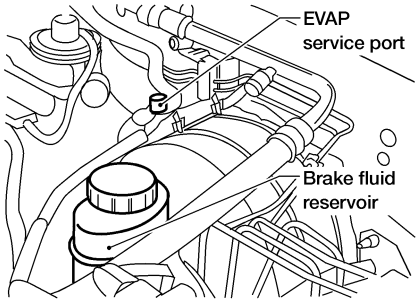

AEC649A

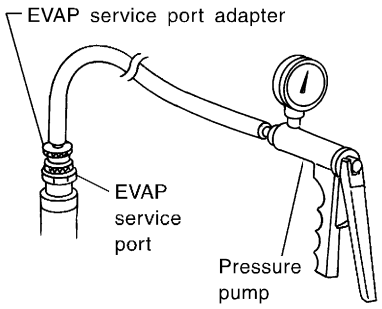

SEF916U

NOTE:
Improper installation of the EVAP service port adapter to the EVAP service port may cause leaking.

Models with CONSULT-II ▶	GO TO 6.
Models without CONSULT-II ▶	GO TO 7.

6	CHECK FOR EVAP LEAK

With CONSULT-II

1. Turn ignition switch "ON".
2. Select "EVAP SYSTEM CLOSE" of "WORK SUPPORT" mode with CONSULT-II.
3. Touch "START" and apply pressure into the EVAP line until the pressure indicator reaches the middle of the bar graph.
   NOTE:
   - **Never use compressed air or a high pressure pump.**
   - **Do not exceed 4.12 kPa (0.042 kg/cm^2, 0.6 psi) of pressure in the system.**

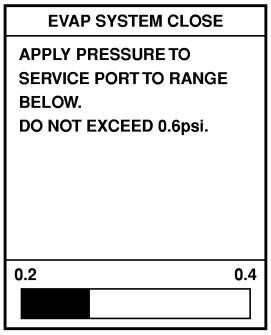

PEF917U

4. Using EVAP leak detector, locate the EVAP leak. For the leak detector, refer to the instruction manual for more details. Refer to "EVAPORATIVE EMISSION LINE DRAWING", EC-1245.

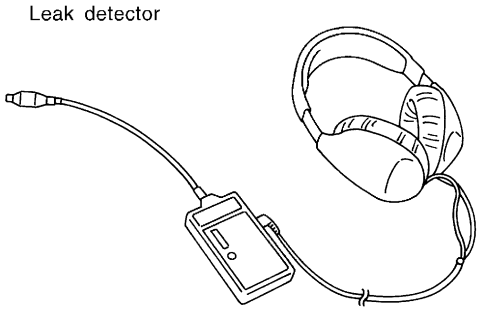

SEF200U

OK or NG

OK	▶	GO TO 8.
NG	▶	Repair or replace.

Diagnostic Procedure (Cont'd)

7	CHECK FOR EVAP LEAK

Without CONSULT-II

1. Turn ignition switch "OFF".
2. Apply 12 volts DC to EVAP canister vent control valve. The valve will close. (Continue to apply 12 volts until the end of test.)
3. Apply 12 volts DC to vacuum cut valve bypass valve. The valve will open. (Continue to apply 12V until the end of test.)

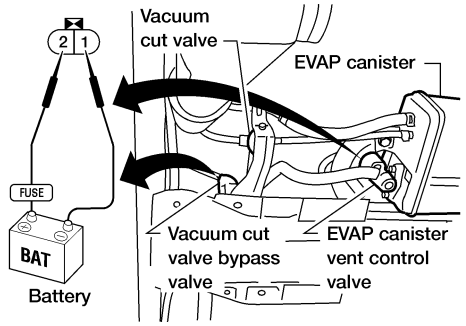

AEC632A

4. Pressurize the EVAP line using pressure pump with 1.3 to 2.7 kPa (10 to 20 mmHg, 0.39 to 0.79 inHg), then remove pump and EVAP service port adapter.
   NOTE:
   - **Never use compressed air or a high pressure pump.**
   - **Do not exceed 4.12 kPa (0.042 kg/cm^2, 0.6 psi) of pressure in the system.**
5. Using EVAP leak detector, locate the EVAP leak. For the leak detector, refer to the instruction manual for more details. Refer to "EVAPORATIVE EMISSION LINE DRAWING", EC-1245.

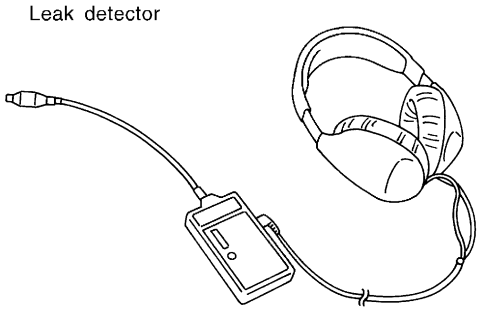

SEF200U

OK or NG

OK	▶	GO TO 8.
NG	▶	Repair or replace.

8	CHECK WATER SEPARATOR

1. Check visually for insect nests in the water separator air inlet.
2. Check visually for cracks or flaws in the appearance.
3. Check visually for cracks or flaws in the hose.
4. Check that **A** and **C** are not clogged by blowing air into **B** with **A**, and then **C** plugged.

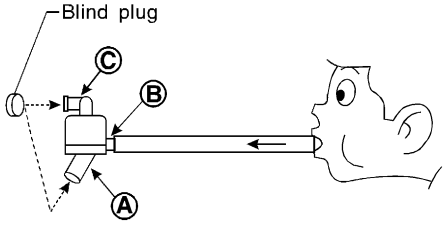

* Ⓐ: Bottom hole (To atmosphere)
Ⓑ: Emergency tube (From EVAP canister)
Ⓒ: Inlet port (To member)

SEF829T

5. In case of NG in items 2 - 4, replace the parts.

NOTE:
- Do not disassemble water separator.

OK or NG

OK	▶	GO TO 9.
NG	▶	Replace water separator.

9	CHECK EVAP CANISTER VENT CONTROL VALVE, O-RING AND CIRCUIT

Refer to "DTC Confirmation Procedure", EC-1600.

OK or NG

OK	▶	GO TO 10.
NG	▶	Repair or replace EVAP canister vent control valve and O-ring or harness/connector.

10	CHECK IF EVAP CANISTER SATURATED WITH WATER

1. Remove EVAP canister with EVAP canister vent control valve attached.
2. Does water drain from the EVAP canister?

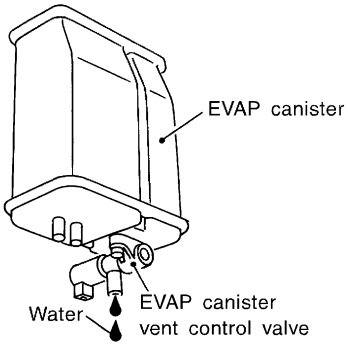

SEF596U

Yes or No

Yes	▶	GO TO 11.
No (With CONSULT-II)	▶	GO TO 13.
No (Without CONSULT-II)	▶	GO TO 14.

11	CHECK EVAP CANISTER
Weigh the EVAP canister with the EVAP canister vent control valve attached. **The weight should be less than 1.8 kg (4.0 lb).**	
OK or NG	
OK (With CONSULT-II) ▶	GO TO 13.
OK (Without CONSULT-II) ▶	GO TO 14.
NG ▶	GO TO 12.

12	DETECT MALFUNCTIONING PART
Check the following. ● EVAP canister for damage ● EVAP hose between EVAP canister and water separator for clogging or poor connection	
▶	Repair hose or replace EVAP canister.

13	CHECK EVAP CANISTER PURGE VOLUME CONTROL SOLENOID VALVE OPERATION

With CONSULT-II
1. Disconnect vacuum hose to EVAP canister purge volume control solenoid valve at EVAP service port.
2. Start engine.
3. Perform "PURG VOL CONT/V" in "ACTIVE TEST" mode.
4. Touch "Qu" on CONSULT-II screen to increase "PURG VOL CONT/V" opening to 100.0%.
5. Check vacuum hose for vacuum when revving engine up to 2,000 rpm.

ACTIVE TEST	
PURG VOL CONT/V	XXX %
MONITOR	
ENG SPEED	XXX rpm
A/F ALPHA-B1	XXX %
A/F ALPHA-B2	XXX %
HO2S1 MNTR (B1)	LEAN
HO2S1 MNTR (B2)	LEAN
THRTL POS SEN	XXX V

Vacuum should exist.

SEF984Y

OK or NG

OK ▶	GO TO 16.
NG ▶	GO TO 15.

14	CHECK EVAP CANISTER PURGE VOLUME CONTROL SOLENOID VALVE OPERATION

Without CONSULT-II
1. Start engine and warm it up to normal operating temperature.
2. Stop engine.
3. Disconnect vacuum hose to EVAP canister purge volume control solenoid valve at EVAP service port.
4. Start engine and let it idle for at least 80 seconds.
5. Check vacuum hose for vacuum when revving engine up to 2,000 rpm.

Vacuum should exist.

OK or NG

OK ▶	GO TO 17.
NG ▶	GO TO 15.

15	CHECK VACUUM HOSE	
Check vacuum hoses for clogging or disconnection. Refer to "Vacuum Hose Drawing", EC-1235.		
OK or NG		
OK (With CONSULT-II)	▶	GO TO 16.
OK (Without CONSULT-II)	▶	GO TO 17.
NG	▶	Repair or reconnect the hose.

16	CHECK EVAP CANISTER PURGE VOLUME CONTROL SOLENOID VALVE	
With CONSULT-II 1. Start engine. 2. Perform "PURG VOL CONT/V" in "ACTIVE TEST" mode with CONSULT-II. Check that engine speed varies according to the valve opening.		

ACTIVE TEST	
PURG VOL CONT/V	0.0%
MONITOR	
ENG SPEED	XXX rpm
A/F ALPHA-B1	XXX %
A/F ALPHA-B2	XXX %
HO2S1 MNTR (B1)	RICH
HO2S1 MNTR (B2)	RICH
THRTL POS SEN	XXX V

SEF985Y

OK or NG		
OK	▶	GO TO 18.
NG	▶	GO TO 17.

17	CHECK EVAP CANISTER PURGE VOLUME CONTROL SOLENOID VALVE

With CONSULT-II

Check air passage continuity of EVAP canister purge volume control solenoid valve under the following conditions.

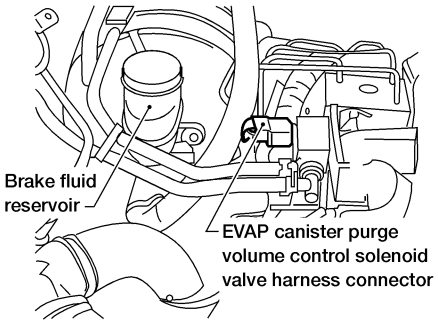

WEC547

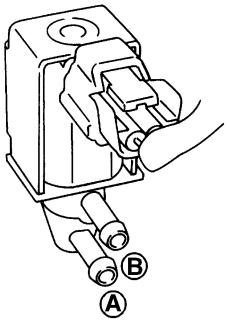

Condition PURG VOL CONT/V value	Air passage continuity between A and B
100.0%	Yes
0.0%	No

SEF334X

Without CONSULT-II

Check air passage continuity of EVAP canister purge volume control solenoid valve under the following conditions.

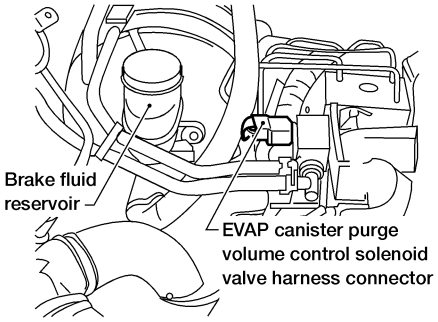

WEC547

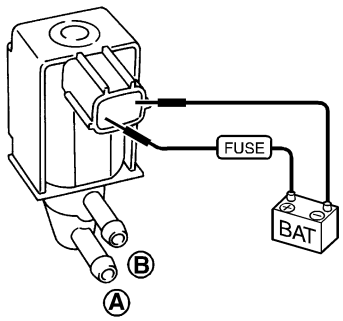

Condition	Air passage continuity between A and B
12V direct current supply between terminals 1 and 2	Yes
No supply	No

SEF335X

OK or NG

OK	▶	GO TO 18.
NG	▶	Replace EVAP canister purge volume control solenoid valve.

18	CHECK FUEL TANK TEMPERATURE SENSOR

1. Remove fuel level sensor unit.
2. Check resistance between fuel level sensor unit terminals T and E by heating with hot water or heat gun as shown in the figure.

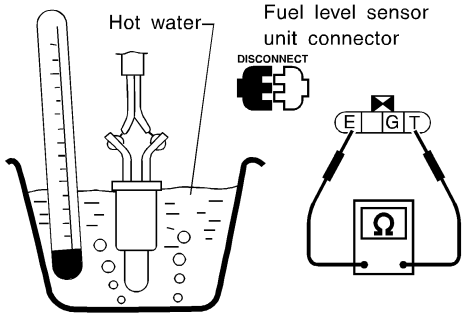

Temperature °C (°F)	Resistance kΩ
20 (68)	2.3 - 2.7
50 (122)	0.79 - 0.90

SEC311C

OK or NG

OK	▶	GO TO 19.
NG	▶	Replace fuel level sensor unit.

Diagnostic Procedure (Cont'd)

19	CHECK EVAP CONTROL SYSTEM PRESSURE SENSOR

1. Remove EVAP control system pressure sensor with its harness connector connected.
   CAUTION:
   - **Never apply force to the air hole protector of the sensor if equipped.**

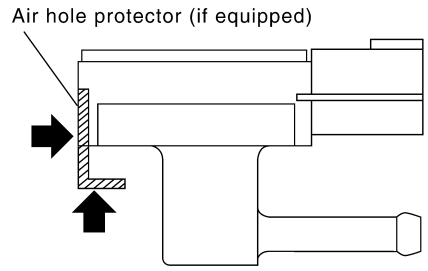

SEF799W

2. Remove hose from EVAP control system pressure sensor.
3. Turn ignition switch "ON".
4. Use pump to apply vacuum and pressure to EVAP control system pressure sensor as shown in figure.
   CAUTION:
   - **Always calibrate the vacuum pump gauge when using it.**
   - **Do not apply below −20 kPa (−150 mmHg, −5.91 inHg) or over 20 kPa (150 mmHg, 5.91 inHg) of pressure.**
5. Check input voltage between ECM terminal 84 and ground.

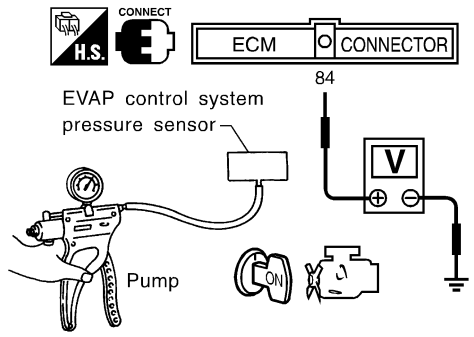

Pressure (Relative to atmospheric pressure)	Voltage V
0 kPa (0 mmHg, 0 inHg)	3.0 - 3.6
–9.3 kPa (–70 mmHg, –2.76 inHg)	0.4 - 0.6

SEF342X

CAUTION:
- **Discard and EVAP control system pressure sensor which has been dropped from a height of more than 0.5 m (19.7 in) onto a hard surface such as a concrete floor; use a new one.**

OK or NG

OK	▶	GO TO 20.
NG	▶	Replace EVAP control system pressure sensor.

20	CHECK EVAP PURGE LINE

Check EVAP purge line (pipe, rubber tube, fuel tank and EVAP canister) for cracks or improper connection.
Refer to "Evaporative Emission System", EC-1241.

OK or NG

OK	▶	GO TO 21.
NG	▶	Repair or reconnect the hose.

21	CLEAN EVAP PURGE LINE

Clean EVAP purge line (pipe and rubber tube) using air blower.

	▶	GO TO 22.

22	CHECK FUEL LEVEL SENSOR	
Refer to ***EL-82***, "FUEL LEVEL SENSOR UNIT CHECK".		
OK or NG		
OK	▶	GO TO 23.
NG	▶	Replace fuel level sensor unit.

23	CHECK INTERMITTENT INCIDENT
Refer to "TROUBLE DIAGNOSIS FOR INTERMITTENT INCIDENT", EC-1353.	
▶	**INSPECTION END**

Description

NEEC1404

SYSTEM DESCRIPTION

NEEC1404S01

Sensor	Input Signal to ECM	ECM function	Actuator
Camshaft position sensor	Engine speed	EVAP canister purge flow control	EVAP canister purge volume control solenoid valve
Mass air flow sensor	Amount of intake air		
Engine coolant temperature sensor	Engine coolant temperature		
Ignition switch	Start signal		
Throttle position sensor	Throttle position		
Throttle position switch	Closed throttle position		
Heated oxygen sensors 1 (front)	Density of oxygen in exhaust gas (Mixture ratio feedback signal)		
Fuel tank temperature sensor	Fuel temperature in fuel tank		
Vehicle speed sensor	Vehicle speed		

This system controls flow rate of fuel vapor from the EVAP canister. The opening of the vapor by-pass passage in the EVAP canister purge volume control solenoid valve changes to control the flow rate. The EVAP canister purge volume control solenoid valve repeats ON/OFF operation according to the signal sent from the ECM. The opening of the valve varies for optimum engine control. The optimum value stored in the ECM is determined by considering various engine conditions. When the engine is operating, the flow rate of fuel vapor from the EVAP canister is regulated as the air flow changes.

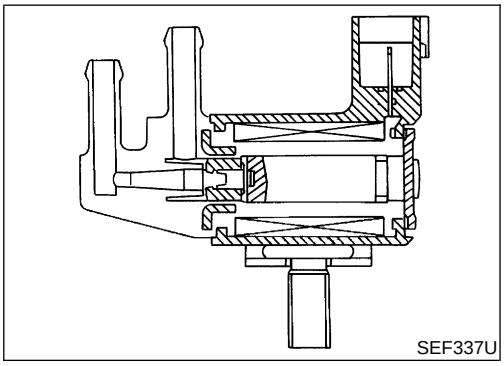
SEF337U

COMPONENT DESCRIPTION

NEEC1404S02

The EVAP canister purge volume control solenoid valve uses a ON/OFF duty to control the flow rate of fuel vapor from the EVAP canister. The EVAP canister purge volume control solenoid valve is moved by ON/OFF pulses from the ECM. The longer the ON pulse, the greater the amount of fuel vapor that will flow through the valve.

CONSULT-II Reference Value in Data Monitor Mode

NEEC1405

Specification data are reference values.

MONITOR ITEM	CONDITION		SPECIFICATION
PURG VOL C/V	• Engine: After warming up • Air conditioner switch OFF • Shift lever: “N” • No-load	Idle (Vehicle stopped)	0%
		2,000 rpm	—

ECM Terminals and Reference Value

NEEC1406

Specification data are reference values and are measured between each terminal and ground.

CAUTION:

Do not use ECM ground terminals when measuring input/output voltage. Doing so may result in damage to the ECM's transistor. Use a ground other than the ECM terminals, such as the ground.

TERMINAL NO.	WIRE COLOR	ITEM	CONDITION	DATA (DC Voltage)
4	OR/B	ECM relay (Self shut-off)	**[Engine is running]** **[Ignition switch OFF]** ● For a few seconds after turning ignition switch OFF	0 - 1.5V
			[Ignition switch OFF] ● A few seconds passed after turning ignition switch OFF	BATTERY VOLTAGE (11 - 14V)
5	R/Y	EVAP canister purge volume control solenoid valve	**[Engine is running]** ● Idle speed	BATTERY VOLTAGE (11 - 14V) 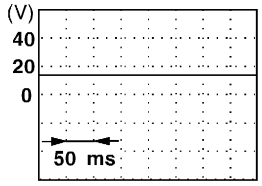 SEF994U
			[Engine is running] ● Engine speed is 2,000 rpm	BATTERY VOLTAGE (11 - 14V) 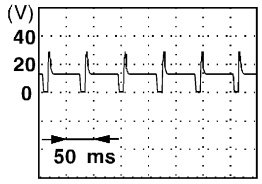 SEF995U
67	B/P	Power supply for ECM	**[Ignition switch ON]**	BATTERY VOLTAGE (11 - 14V)
72	B/P			
117	B/P	Current return	**[Engine is running]** ● Idle speed	BATTERY VOLTAGE (11 - 14V)

On Board Diagnosis Logic

NEEC1407

Malfunction is detected when the canister purge flow is detected during the specified driving conditions, even when EVAP canister purge volume control solenoid valve is completely closed.

POSSIBLE CAUSE

NEEC1407S01

- EVAP control system pressure sensor
- EVAP canister purge volume control solenoid valve (The valve is stuck open.)
- EVAP canister vent control valve
- EVAP canister

- Hoses
  (Hoses are connected incorrectly or clogged.)

DTC Confirmation Procedure

NEEC1408

NOTE:
If “DTC Confirmation Procedure” has been previously conducted, always turn ignition switch OFF and wait at least 5 seconds before conducting the next test.

TESTING CONDITION:
Always perform test at a temperature of 5°C (41°F) or more.

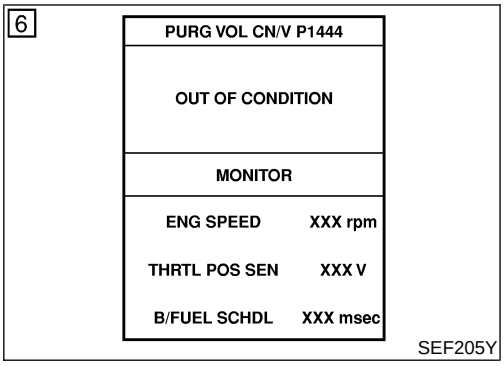

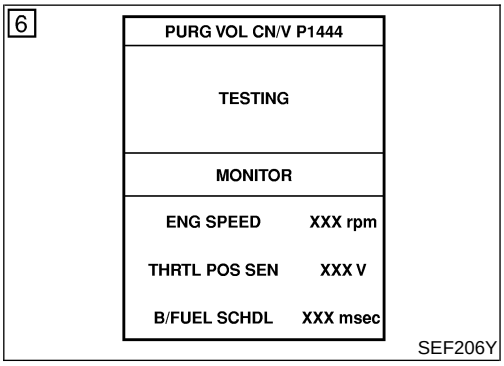

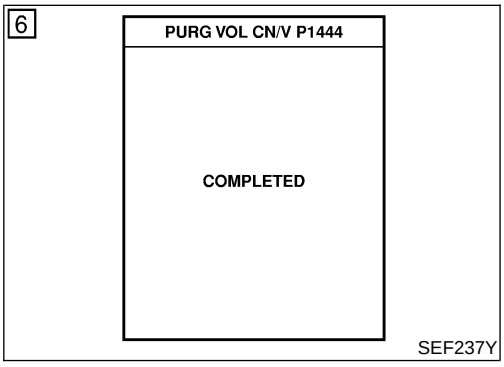

With CONSULT-II

1) Start engine and warm it up to normal operating temperature.
2) Turn ignition switch OFF and wait at least 5 seconds.
3) Turn ignition switch ON.
4) Select “PURG VOL CN/V P1444” of “EVAPORATIVE SYSTEM” in “DTC WORK SUPPORT” mode with CONSULT-II.
5) Touch “START”.
6) Start engine and let it idle until “TESTING” on CONSULT-II changes to “COMPLETED”. (It will take for approximately 10 seconds.)
   If “TESTING” is not displayed after 5 minutes, retry from step 2.
7) Make sure that “OK” is displayed after touching “SELF-DIAG RESULTS”. If “NG” is displayed, refer to “Diagnostic Procedure”, EC-1720.

With GST

1) Start engine and warm it up to normal operating temperature.
2) Turn ignition switch OFF and wait at least 5 seconds.
3) Start engine and let it idle for at least 20 seconds.
4) Select “MODE 7” with GST.
5) If 1st trip DTC is detected, go to “Diagnostic Procedure”, EC-1720.

Wiring Diagram

NEEC1409

EC-PGC/V-01

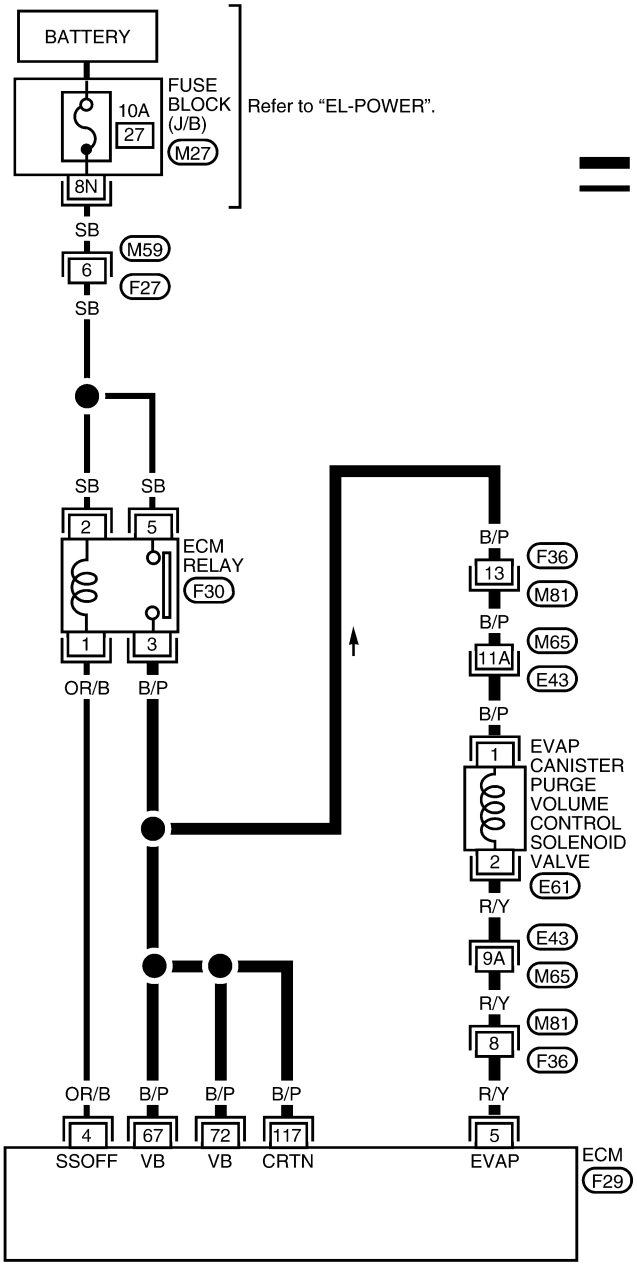

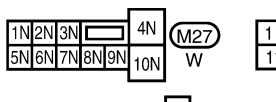

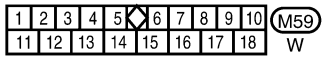

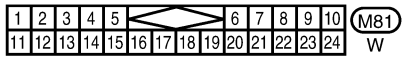

Refer to the following.
M65, E43 - SUPER MULTIPLE JUNCTION (SMJ)

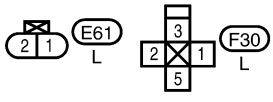

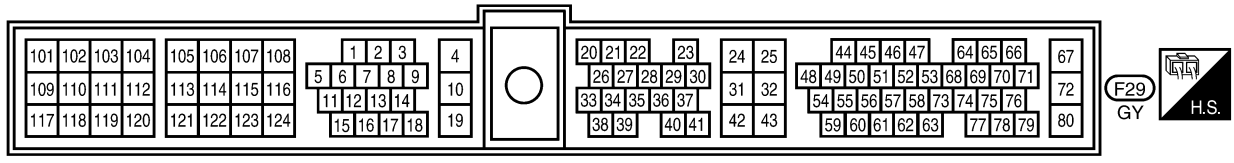

LEC813

Diagnostic Procedure

NEEC1410

1	CHECK EVAP CANISTER PURGE VOLUME CONTROL SOLENOID VALVE POWER SUPPLY CIRCUIT

1. Turn ignition switch OFF.
2. Disconnect EVAP canister purge volume control solenoid valve harness connector.

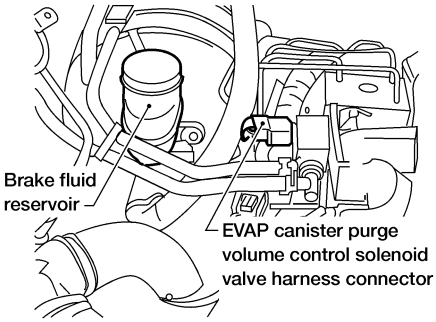

AEC652A

3. Turn ignition switch ON.
4. Check voltage between terminal 1 and engine ground with CONSULT-II or tester.

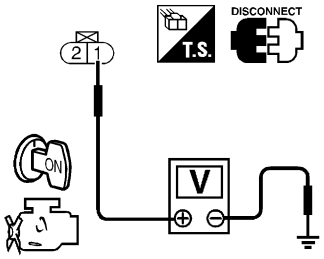

SEF646W

Voltage: Battery voltage

OK or NG

OK	▶	GO TO 3.
NG	▶	GO TO 2.

2	DETECT MALFUNCTIONING PART

Check the following.
- Harness connectors F36, M81
- Harness connectors M82, E74
- Harness for open or short between EVAP canister purge volume control solenoid valve and ECM relay
- Harness for open or short between EVAP canister purge volume control solenoid valve and ECM

	▶	Repair harness or connectors.

3	CHECK EVAP CANISTER PURGE VOLUME CONTROL SOLENOID VALVE OUTPUT SIGNAL CIRCUIT FOR OPEN AND SHORT

1. Turn ignition switch OFF.
2. Disconnect ECM harness connector.
3. Check harness continuity between ECM terminal 5 and EVAP canister purge volume ocntrol solenoid valve terminal 2. Refer to Wiring Diagram.
   Continuity should exist.
4. Also check harness for short to ground and short to power.

OK or NG

OK	▶	GO TO 5.
NG	▶	GO TO 4.

4	DETECT MALFUNCTIONING PART
Check the following. ● Harness connectors E74, M82 ● Harness connectors M81, F36 ● Harness for open or short between EVAP canister purge volume control solenoid valve and ECM	
▶	Repair open circuit or short to ground or short to power in harness or connectors.

5	CHECK EVAP CONTROL SYSTEM PRESSURE SENSOR HOSE	
Check disconnection or improper connection of hose connected to EVAP control system pressure sensor.		
OK or NG		
OK	▶	GO TO 6.
NG	▶	Repair it.

6	CHECK EVAP CONTROL SYSTEM PRESSURE SENSOR CONNECTOR	
1. Disconnect EVAP control system pressure sensor harness connector.		
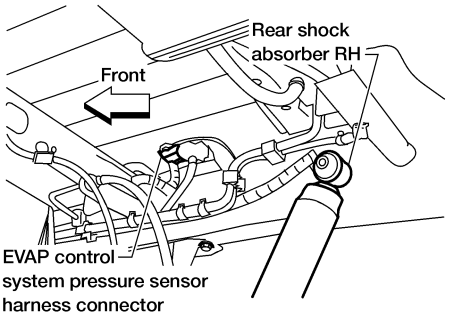 AEC651A		
2. Check connectors for water. **Water should not exist.**		
OK or NG		
OK	▶	GO TO 7.
NG	▶	Replace EVAP control system pressure sensor.

Diagnostic Procedure (Cont'd)

7	CHECK EVAP CONTROL SYSTEM PRESSURE SENSOR

1. Remove EVAP control system pressure sensor with its harness connector connected.
2. Remove hose from EVAP control system pressure sensor.
3. Turn ignition switch ON.
4. Use pump to apply vacuum and pressure to EVAP control system pressure sensor as shown in figure.
5. Check input voltage between ECM terminal 62 and ground.

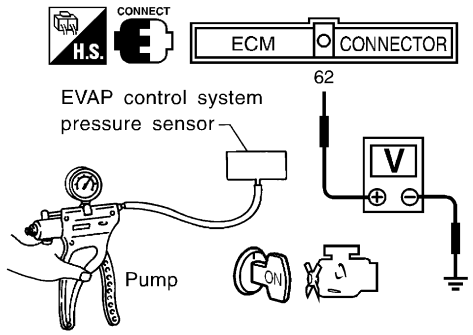

SEF894U

Pressure (Relative to atmosphericpressure)	Voltage (V)
0 kPa (0 mmHg, 0 inHg)	3.0 - 3.6
–9.3 kPa (–70 mmHg, –2.76 inHg)	0.4 - 0.6

MTBL0246

CAUTION:

- **Always calibrate the vacuum pump gauge when using it.**
- **Do not apply below −20 kPa (−150 mmHg, −5.91 inHg) or over 20 kPa (150 mmHg, 5.91 inHg) of pressure.**
- **Never apply force to the air hole protector of the sensor if equipped.**

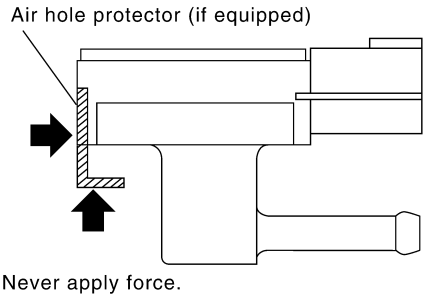

SEF799W

- **Discard and EVAP control system pressure sensor which has been dropped from a height of more than 0.5 m (19.7 in) onto a hard surface such as a concrete floor; use a new one.**

OK or NG

OK (with CONSULT-II)	▶	GO TO 8.
OK (without CONSULT-II)	▶	GO TO 9.
NG	▶	Replace EVAP control system pressure sensor.

8	CHECK EVAP CANISTER PURGE VOLUME CONTROL SOLENOID VALVE

With CONSULT-II

1. Start engine.
2. Perform "PURG VOL CONT/V" in "ACTIVE TEST" mode with CONSULT-II. Check that engine speed varies according to the valve opening.

ACTIVE TEST	
PURG VOL CONT/V	0.0%
MONITOR	
ENG SPEED	XXX rpm
A/F ALPHA-B1	XXX %
A/F ALPHA-B2	XXX %
HO2S1 MNTR (B1)	RICH
HO2S1 MNTR (B2)	RICH
THRTL POS SEN	XXX V

SEF985Y

If OK, inspection end. If NG, go to following step.

3. Check air passage continuity.

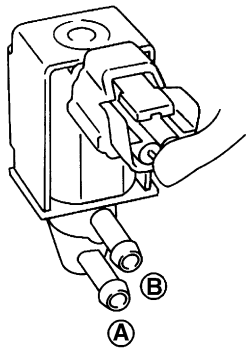

SEF660U

Condition PURG VOL CONT/V value	Air passage continuity between A and B
100.0%	Yes
0.0%	No

MTBL0241

If NG, replace the EVAP canister purge volume control solenoid valve.

OK or NG

OK	▶	GO TO 10.
NG	▶	Replace EVAP canister purge volume control solenoid valve.

Diagnostic Procedure (Cont'd)

9	CHECK EVAP CANISTER PURGE VOLUME CONTROL SOLENOID VALVE

Without CONSULT-II

Check air passage continuity.

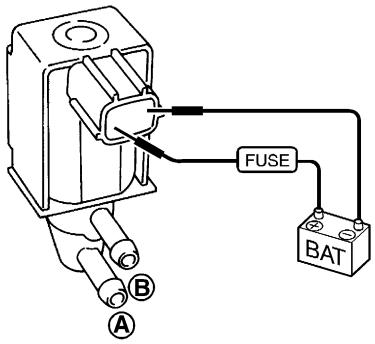

SEF661U

Condition	Air passage continuity between A and B
12V direct current supply between terminals 1 and 2	Yes
No supply	No

MTBL0242

If NG, replace the EVAP canister purge volume control solenoid valve.

OK or NG

OK	▶	GO TO 10.
NG	▶	Replace EVAP canister purge volume control solenoid valve.

10	CHECK EVAP CANISTER VENT CONTROL VALVE

Check air passage continuity.

With CONSULT-II

Perform "VENT CONTROL/V" in "ACTIVE TEST" mode.

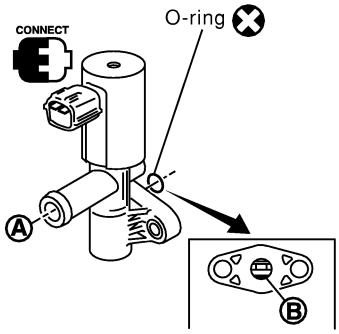

ACTIVE TEST	
VENT CONTROL/V	OFF
MONITOR	
ENG SPEED	XXX rpm
A/F ALPHA-B1	XXX %
A/F ALPHA-B2	XXX %
HO2S1 (B1)	XXX V
HO2S1 (B2)	XXX V
THRTL POS SEN	XXX V

Condition VENT CONTROL/V	Air passage continuity between A and B
ON	No
OFF	Yes

Operation takes less than 1 second.

SEF991Y

Without CONSULT-II

Condition	Air passage continuity between A and B
12V direct current supply between terminals 1 and 2	No
OFF	Yes

MTBL0240

If NG or operation takes more than 1 second, clean valve using air blower or replace as necessary.

If portion **B** is rusted, replace control valve.

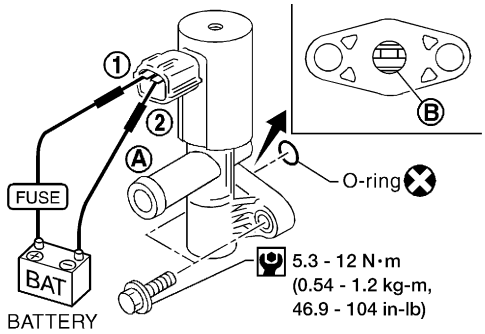

AEC783A

Make sure new O-ring is installed properly.

OK or NG

OK	▶	GO TO 11.
NG	▶	Replace EVAP canister vent control valve.

11	CHECK RUBBER TUBE

Check for obstructed rubber tube connected to EVAP canister vent control valve.

OK or NG

OK	▶	GO TO 12.
NG	▶	Clean, repair or replace rubber tube.

Diagnostic Procedure (Cont'd)

12	CHECK WATER SEPARATOR

1. Check visually for insect nests in the water separator air inlet.
2. Check visually for cracks or flaws in the appearance.
3. Check visually for cracks or flaws in the hose.
4. Check that **A** and **C** are not clogged by blowing air into **B** with **A**, and then **C** plugged.

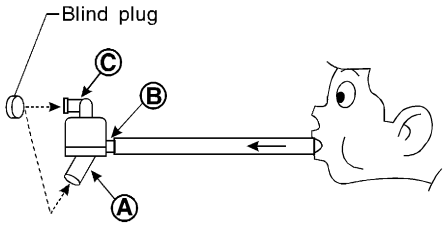

* Ⓐ : Bottom hole (To atmosphere)
Ⓑ : Emergency tube (From EVAP canister)
Ⓒ : Inlet port (To member)

SEF829T

5. In case of NG in items 2 - 4, replace the parts.

NOTE:

- Do not disassemble water separator.

OK or NG

OK	▶	GO TO 13.
NG	▶	Replace water separator.

13	CHECK IF EVAP CANISTER SATURATED WITH WATER

1. Remove EVAP canister with EVAP canister vent control valve attached.
2. Check if water will drain from the EVAP canister.

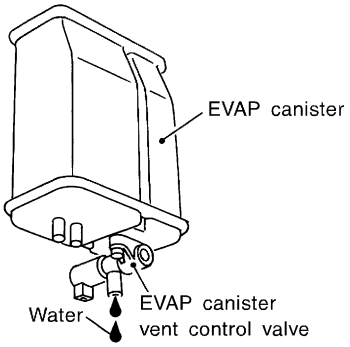

SEF596U

Yes or No

Yes	▶	GO TO 14.
No	▶	GO TO 16.

14	CHECK EVAP CANISTER

Weigh the EVAP canister with the EVAP canister vent control valve attached.
The weight should be less than 1.8 kg (4.0 lb).

OK or NG

OK	▶	GO TO 16.
NG	▶	GO TO 15.

15	DETECT MALFUNCTIONING PART
Check the following. • EVAP canister for damage • EVAP hose between EVAP canister and water separator for clogging or poor connection	
▶	Repair hose or replace EVAP canister.

16	CHECK INTERMITTENT INCIDENT
Refer to "TROUBLE DIAGNOSIS FOR INTERMITTENT INCIDENT", EC-1353.	
▶	**INSPECTION END**

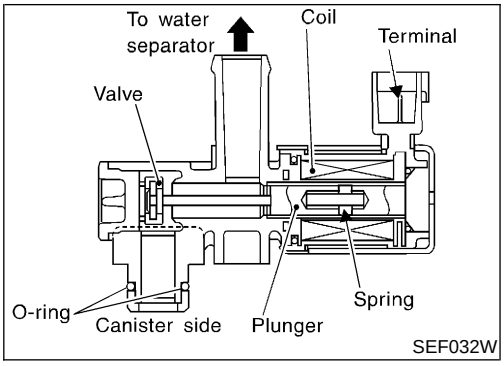

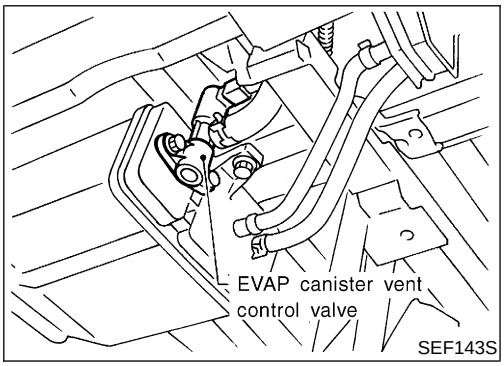

Component Description

NEEC1411

The EVAP canister vent control valve is located on the EVAP canister and is used to seal the canister vent.
This solenoid valve responds to signals from the ECM. When the ECM sends an ON signal, the coil in the solenoid valve is energized. A plunger will then move to seal the canister vent. The ability to seal the vent is necessary for the on board diagnosis of other evaporative emission control system components.
This solenoid valve is used only for diagnosis, and usually remains opened.
When the vent is closed, under normal purge conditions, the evaporative emission control system is depressurized and allows "EVAP Control System (Small Leak)" diagnosis.

CONSULT-II Reference Value in Data Monitor Mode

NEEC1412

Specification data are reference values.

MONITOR ITEM	CONDITION	SPECIFICATION
VENT CONT/V	• Ignition switch: ON	OFF

ECM Terminals and Reference Value

NEEC1413

Specification data are reference values and are measured between each terminal and ground.

CAUTION:

Do not use ECM ground terminals when measuring input/output voltage. Doing so may result in damage to the ECM's transistor. Use a ground other than the ECM terminals, such as the ground.

TERMINAL NO.	WIRE COLOR	ITEM	CONDITION	DATA (DC Voltage)
108	R/G	EVAP canister vent control valve	**[Ignition switch ON]**	BATTERY VOLTAGE (11 - 14V)

On Board Diagnosis Logic

=NEEC1414

Malfunction is detected when EVAP canister vent control valve remains closed under specified driving conditions.

POSSIBLE CAUSE

NEEC1414S01

- EVAP canister vent control valve
- EVAP control system pressure sensor and the circuit
- Blocked rubber tube to EVAP canister vent control valve
- Water separator
- EVAP canister is saturated with water.

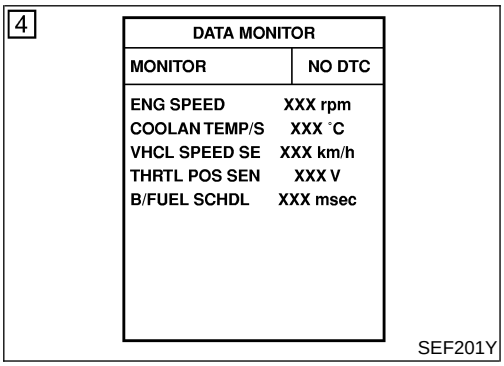

DTC Confirmation Procedure

NEEC1415

CAUTION:

Always drive vehicle at a safe speed.

NOTE:

If "DTC Confirmation Procedure" has been previously conducted, always turn ignition switch OFF and wait at least 5 seconds before conducting the next test.

With CONSULT-II

1) Turn ignition switch ON.
2) Select "DATA MONITOR" mode with CONSULT-II.
3) Start engine.
4) Drive vehicle at a speed of approximately 80 km/h (50 MPH) for a maximum of 15 minutes.

NOTE:

If a malfunction exists, NG result may be displayed quicker.

5) If 1st trip DTC is detected, go to "Diagnostic Procedure", EC-1731.

With GST

Follow the procedure "With CONSULT-II".

Wiring Diagram

NEEC1416

EC-VENT/V-01

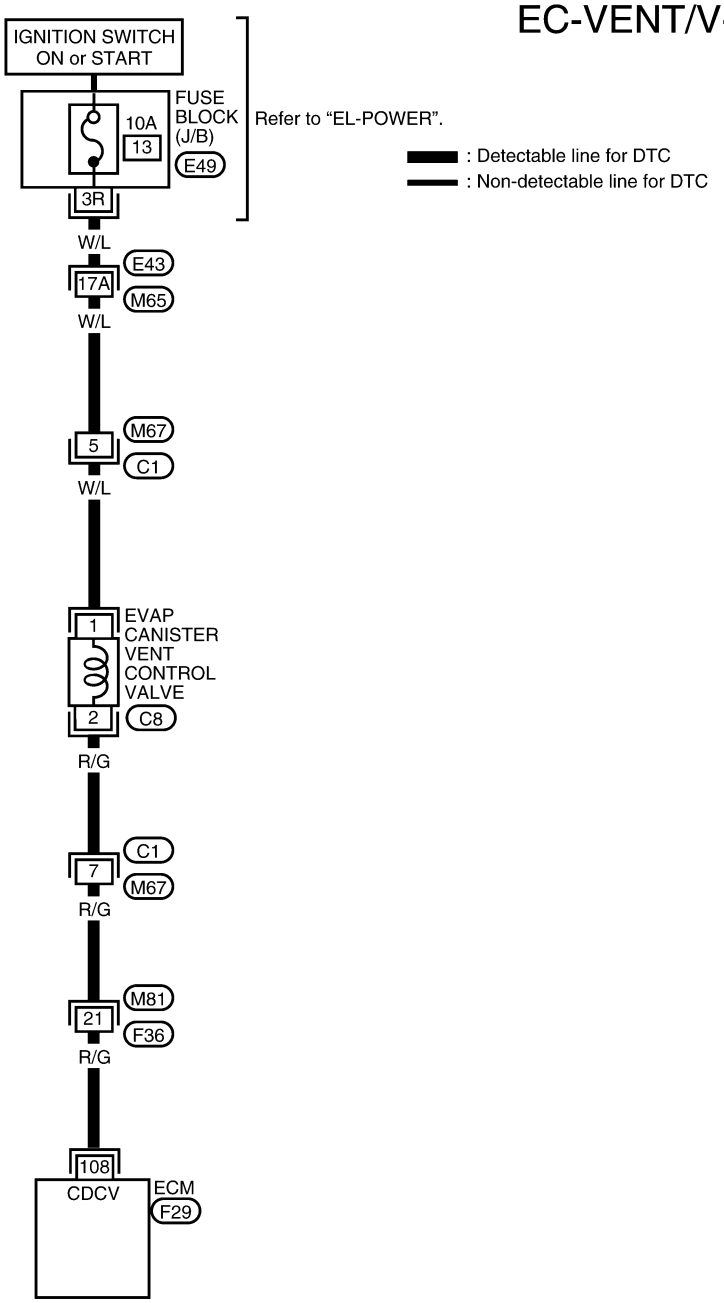

Refer to the following.
M65, E43 - SUPER MULTIPLE JUNCTION (SMJ)

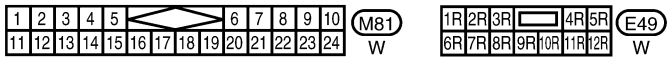

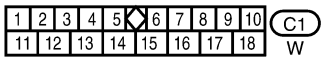



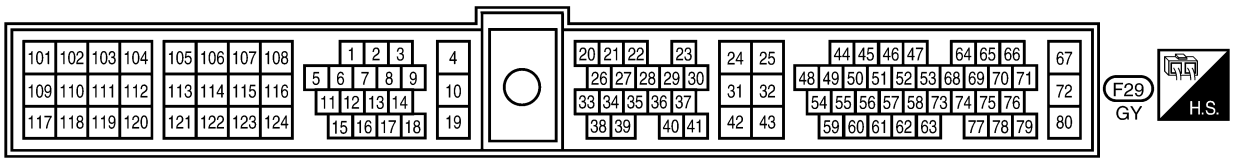

LEC814

Diagnostic Procedure

NEEC1417

1	CHECK RUBBER TUBE

1. Turn ignition switch OFF.
2. Check obstructed rubber tube connected to EVAP canister vent control valve.

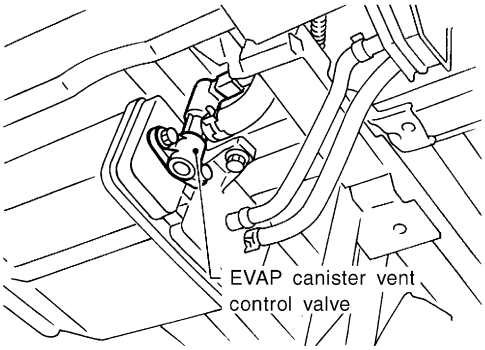

SEF143S

OK or NG

OK	▶	GO TO 2.
NG	▶	Clean, repair or replace rubber tube.

2	CHECK WATER SEPARATOR

1. Check visually for insect nests in the water separator air inlet.
2. Check visually for cracks or flaws in the appearance.
3. Check visually for cracks or flaws in the hose.
4. Check that **A** and **C** are not clogged by blowing air into **B** with **A**, and then **C** plugged.

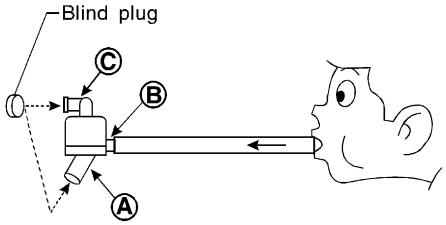

* Ⓐ: Bottom hole (To atmosphere)
Ⓑ: Emergency tube (From EVAP canister)
Ⓒ: Inlet port (To member)

SEF829T

5. In case of NG in items 2 - 4, replace the parts.

NOTE:
- Do not disassemble water separator.

OK or NG

OK	▶	GO TO 3.
NG	▶	Replace water separator.

Diagnostic Procedure (Cont'd)

3 CHECK EVAP CANISTER VENT CONTROL VALVE AND O-RING

Check air passage continuity.

With CONSULT-II

Perform "VENT CONTROL/V" in "ACTIVE TEST" mode.

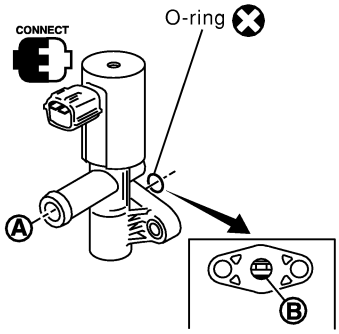

ACTIVE TEST	
VENT CONTROL/V	OFF
MONITOR	
ENG SPEED	XXX rpm
A/F ALPHA-B1	XXX %
A/F ALPHA-B2	XXX %
HO2S1 (B1)	XXX V
HO2S1 (B2)	XXX V
THRTL POS SEN	XXX V

Condition VENT CONTROL/V	Air passage continuity between A and B
ON	No
OFF	Yes

Operation takes less than 1 second.

SEF991Y

Without CONSULT-II

Condition	Air passage continuity between A and B
12V direct current supply between terminals 1 and 2	No
OFF	Yes

MTBL0240

If NG or operation takes more than 1 second, clean valve using air blower or replace as necessary.

If portion **B** is rusted, replace control valve.

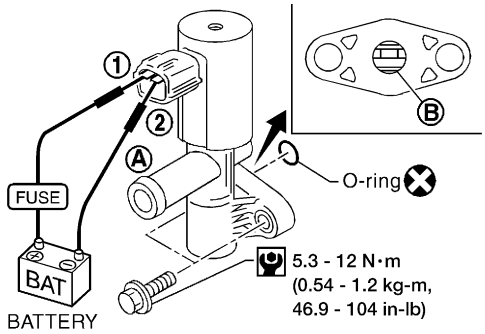

AEC783A

Make sure new O-ring is installed properly.

OK or NG

OK	▶	GO TO 4.
NG	▶	Replace EVAP canister vent control valve and O-ring.

4	CHECK IF EVAP CANISTER SATURATED WITH WATER

1. Remove EVAP canister with EVAP canister vent control valve attached.
2. Check if water will drain from the EVAP canister.

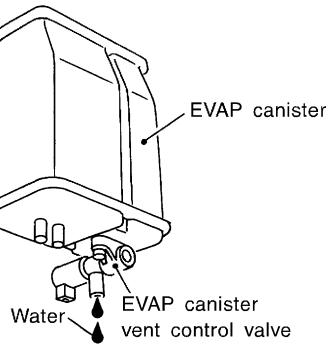

SEF596U

Yes or No

Yes	▶	GO TO 5.
No	▶	GO TO 7.

5	CHECK EVAP CANISTER

Weigh the EVAP canister with the EVAP canister vent control valve attached.
The weight should be less than 1.8 kg (4.0 lb).

OK or NG

OK	▶	GO TO 7.
NG	▶	GO TO 6.

6	DETECT MALFUNCTIONING PART

Check the following.
- EVAP canister for damage
- EVAP hose between EVAP canister and water separator for clogging or poor connection

	▶	Repair hose or replace EVAP canister.

7	CHECK EVAP CONTROL SYSTEM PRESSURE SENSOR HOSE

Check disconnection or improper connection of hose connected to EVAP control system pressure sensor.

OK or NG

OK	▶	GO TO 8.
NG	▶	Repair it.

Diagnostic Procedure (Cont'd)

8	CHECK EVAP CONTROL SYSTEM PRESSURE SENSOR CONNECTOR

1. Disconnect EVAP control system pressure sensor harness connector.

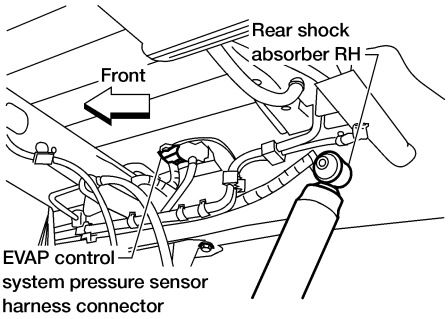

AEC651A

2. Check connectors for water.
   Water should not exist.

OK or NG

OK	▶	GO TO 9.
NG	▶	Replace EVAP control system pressure sensor.

9	CHECK EVAP CONTROL SYSTEM PRESSURE SENSOR FUNCTION

Refer to "DTC Confirmation Procedure" for DTC P0450, EC-1606.

OK or NG

OK	▶	GO TO 10.
NG	▶	Replace EVAP control system pressure sensor.

10	CHECK INTERMITTENT INCIDENT

Refer to "TROUBLE DIAGNOSIS FOR INTERMITTENT INCIDENT", EC-1353.

	▶	**INSPECTION END**

System Description

NEEC1418

NOTE:
If DTC P1447 is displayed with P0510, perform trouble diagnosis for DTC P0510 first. (See EC-1652.)

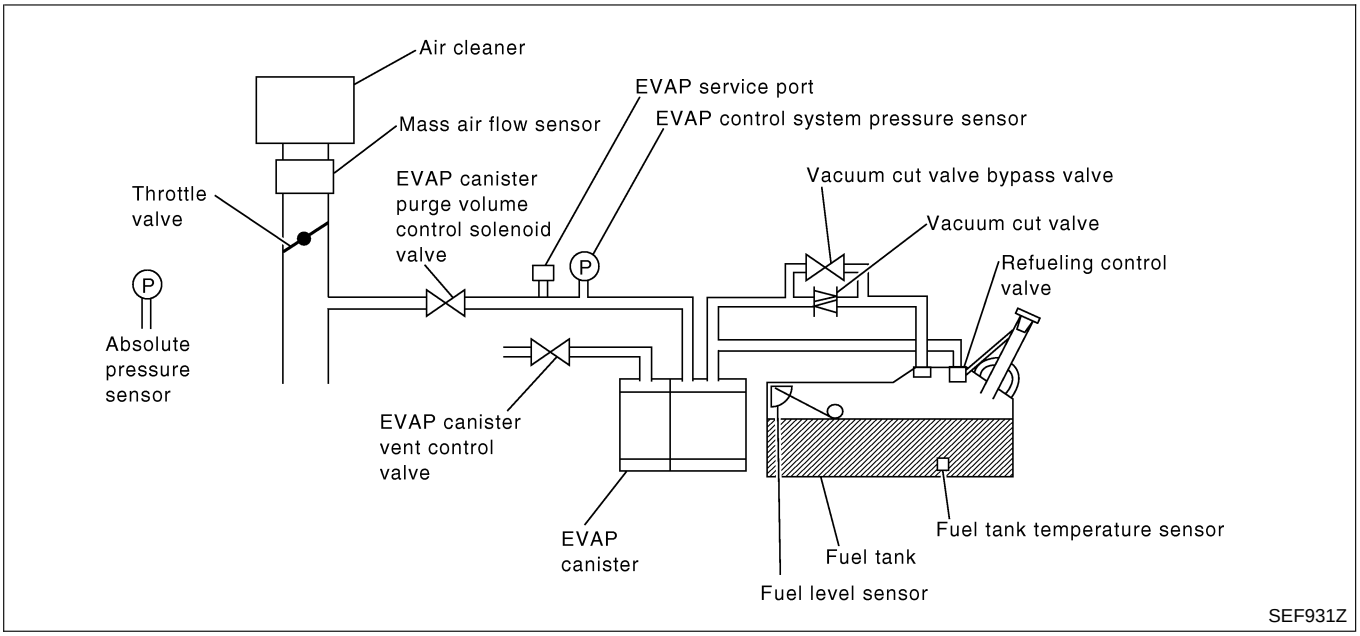

In this evaporative emission (EVAP) control system, purge flow occurs during non-closed throttle conditions. Purge volume is related to air intake volume. Under normal purge conditions (non-closed throttle), the EVAP canister purge volume control solenoid valve is open. Purge flow exposes the EVAP control system pressure sensor to intake manifold vacuum.

On Board Diagnosis Logic

NEEC1419

Under normal conditions (non-closed throttle), sensor output voltage indicates if pressure drop and purge flow are adequate. If not, a fault is determined.
Malfunction is detected when EVAP control system does not operate properly, EVAP control system has a leak between intake manifold and EVAP control system pressure sensor.

POSSIBLE CAUSE

NEEC1419S01

- EVAP canister purge volume control solenoid valve stuck closed
- EVAP control system pressure sensor and the circuit
- Loose, disconnected or improper connection of rubber tube
- Blocked rubber tube
- Blocked or bent rubber tube to MAP/BARO switch solenoid valve
- Cracked EVAP canister
- EVAP canister purge volume control solenoid valve circuit
- Closed throttle position switch
- Blocked purge port
- EVAP canister vent control valve

5

PURG FLOW P1447	
OUT OF CONDITION	
MONITOR	
ENG SPEED	XXX rpm
THRTL POS SEN	XXX V
B/FUEL SCHDL	XXX msec

SEF207Y

6

PURG FLOW P1447	
TESTING	
MONITOR	
ENG SPEED	XXX rpm
THRTL POS SEN	XXX V
B/FUEL SCHDL	XXX msec

SEF208Y

6

PURG FLOW P1447
COMPLETED

SEF238Y

DTC Confirmation Procedure

NEEC1420

CAUTION:

Always drive vehicle at a safe speed.

NOTE:

If "DTC Confirmation Procedure" has been previously conducted, always turn ignition switch OFF and wait at least 5 seconds before conducting the next test.

TESTING CONDITION:

Always perform test at a temperature of 5°C (41°F) or more.

With CONSULT-II

1) Start engine and warm it up to normal operating temperature.
2) Turn ignition switch OFF and wait at least 5 seconds.
3) Start engine and let it idle for at least 70 seconds.
4) Select "PURG FLOW P1447" of "EVAPORATIVE SYSTEM" in "DTC WORK SUPPORT" mode with CONSULT-II.
5) Touch "START".
   If "COMPLETED" is displayed, go to step 7.
6) When the following conditions are met, "TESTING" will be displayed on the CONSULT-II screen. Maintain the conditions continuously until "TESTING" changes to "COMPLETED". (It will take at least 35 seconds.)

Selector lever	Suitable position
Vehicle speed	32 - 120 km/h (20 - 75 MPH)
ENG SPEED	500 - 3,400 rpm
B/FUEL SCHDL	1.0 - 11.0 msec
Engine coolant temperature	70 - 100°C (158 - 212°F)

If "TESTING" is not changed for a long time, retry from step 2.

7) Make sure that "OK" is displayed after touching "SELF-DIAG RESULTS". If "NG" is displayed, refer to "Diagnostic Procedure", EC-1738.

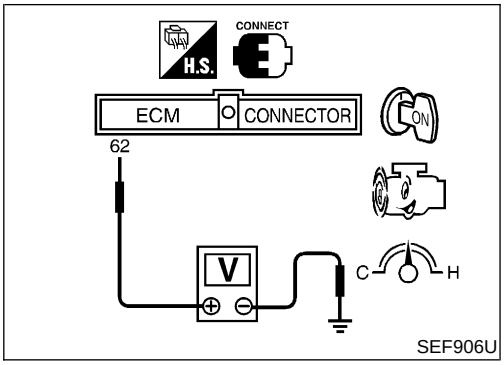

Overall Function Check

=NEEC1421

Use this procedure to check the overall monitoring function of the EVAP control system purge flow monitoring. During this check, a 1st trip DTC might not be confirmed.

Without CONSULT-II

1) Lift up drive wheels.
2) Start engine and warm it up to normal operating temperature.
3) Turn ignition switch OFF, wait at least 5 seconds.
4) Start engine and wait at least 70 seconds.
5) Set voltmeter probes to ECM terminals 62 (EVAP control system pressure sensor signal) and ground.
6) Check EVAP control system pressure sensor value at idle speed and note it.
7) Establish and maintain the following conditions for at least 1 minute.

Air conditioner switch	ON
Steering wheel	Fully turned
Headlamp switch	ON
Rear window defogger switch	ON
Engine speed	Approx. 3,000 rpm
Gear position	Any position other than “P”, “N” or “R”

8) Verify that EVAP control system pressure sensor value stays 0.1V less than the value at idle speed (measured at step 6) for at least 1 second.
9) If NG, go to “Diagnostic Procedure”, EC-1738.

Diagnostic Procedure

=NEEC1422

1	CHECK EVAP CANISTER	
1. Turn ignition switch OFF. 2. Check EVAP canister for cracks.		
OK or NG		
OK (With CONSULT-II)	▶	GO TO 2.
OK (Without CONSULT-II)	▶	GO TO 3.
NG	▶	Replace EVAP canister.

2	CHECK PURGE FLOW

With CONSULT-II

1. Disconnect vacuum hose connected to EVAP canister purge volume control solenoid valve at EVAP service port and install vacuum gauge.

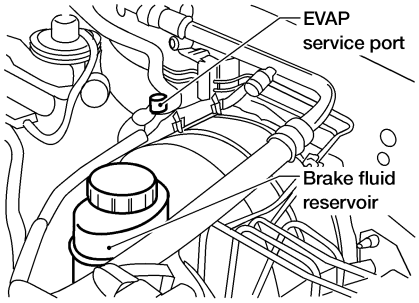

AEC649A

2. Start engine and let it idle.
3. Select “PURG VOL CONT/V” in “ACTIVE TEST” mode with CONSULT-II.
4. Rev engine up to 2,000 rpm.
5. Touch “Qd” and “Qu” on CONSULT-II screen to adjust “PURG VOL CONT/V” opening.

ACTIVE TEST	
PURG VOL CONT/V	XXX %
MONITOR	
ENG SPEED	XXX rpm
A/F ALPHA-B1	XXX %
A/F ALPHA-B2	XXX %
HO2S1 MNTR (B1)	LEAN
HO2S1 MNTR (B2)	LEAN
THRTL POS SEN	XXX V

PURG VOL CONT/V	VACUUM
100.0%	Should exist
0.0%	Should not exist

SEF012Z

OK or NG

OK	▶	GO TO 7.
NG	▶	GO TO 4.

3	CHECK PURGE FLOW

Without CONSULT-II

1. Start engine and warm it up to normal operating temperature.
2. Stop engine.
3. Disconnect vacuum hose connected to EVAP canister purge volume control solenoid valve at EVAP service port and install vacuum gauge.

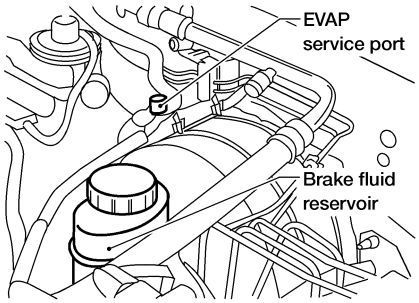

AEC649A

4. Start engine and let it idle for at least 80 seconds.
5. Check vacuum gauge indication when revving engine up to 2,000 rpm.
   Vacuum should exist.
6. Release the accelerator pedal fully and let idle.
   Vacuum should not exist.

OK or NG

OK	▶	GO TO 7.
NG	▶	GO TO 4.

4	CHECK EVAP PURGE LINE

1. Turn ignition switch OFF.
2. Check EVAP purge line for improper connection or disconnection.
   Refer to "EVAPORATIVE EMISSION LINE DRAWING", EC-1245.

OK or NG

OK	▶	GO TO 5.
NG	▶	Repair it.

Diagnostic Procedure (Cont'd)

5	CHECK EVAP PURGE HOSE AND PURGE PORT

1. Disconnect purge hoses connected to EVAP service port **A** and EVAP canister purge volume control solenoid valve **B**.

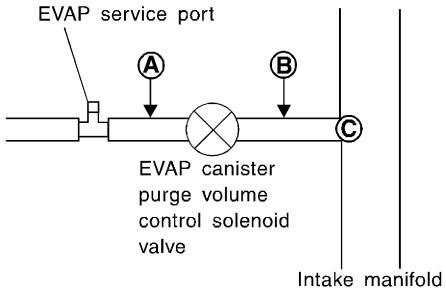

SEF367U

2. Blow air into each hose and EVAP purge port **C**.
3. Check that air flows freely.

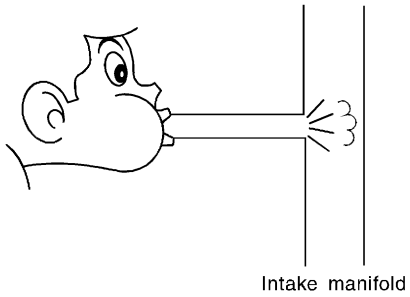

SEF368U

OK or NG

OK (with CONSULT-II)	▶	GO TO 6.
OK (without CONSULT-II)	▶	GO TO 7.
NG	▶	Repair or clean hoses and/or purge port.

6	CHECK EVAP CANISTER PURGE VOLUME CONTROL SOLENOID VALVE

With CONSULT-II

1. Start engine.
2. Perform "PURG VOL CONT/V" in "ACTIVE TEST" mode with CONSULT-II. Check that engine speed varies according to the valve opening.

ACTIVE TEST	
PURG VOL CONT/V	0.0%
MONITOR	
ENG SPEED	XXX rpm
A/F ALPHA-B1	XXX %
A/F ALPHA-B2	XXX %
HO2S1 MNTR (B1)	RICH
HO2S1 MNTR (B2)	RICH
THRTL POS SEN	XXX V

SEF985Y

If OK, inspection end. If NG, go to following step.

3. Check air passage continuity.

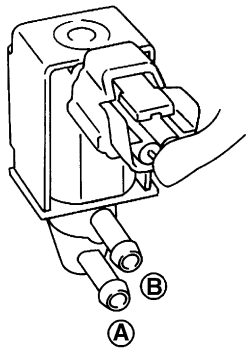

SEF660U

Condition PURG VOL CONT/V value	Air passage continuity between A and B
100.0%	Yes
0.0%	No

MTBL0241

If NG, replace the EVAP canister purge volume control solenoid valve.

OK or NG

OK	▶	GO TO 8.
NG	▶	Replace EVAP canister purge volume control solenoid valve.

Diagnostic Procedure (Cont'd)

7	CHECK EVAP CANISTER PURGE VOLUME CONTROL SOLENOID VALVE

Without CONSULT-II

Check air passage continuity.

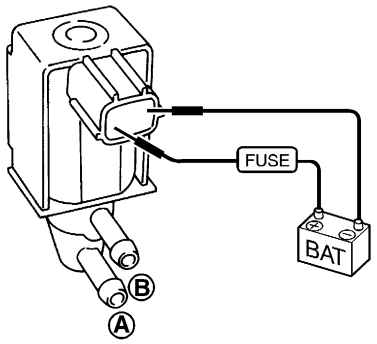

SEF661U

Condition	Air passage continuity between A and B
12V direct current supply between terminals 1 and 2	Yes
No supply	No

MTBL0242

If NG, replace the EVAP canister purge volume control solenoid valve.

OK or NG

OK	▶	GO TO 8.
NG	▶	Replace EVAP canister purge volume control solenoid valve.

8	CHECK EVAP CONTROL SYSTEM PRESSURE SENSOR HOSE

1. Turn ignition switch OFF.
2. Check disconnection or improper connection of hose connected to EVAP control system pressure sensor.

OK or NG

OK	▶	GO TO 9.
NG	▶	Repair it.

9	CHECK EVAP CONTROL SYSTEM PRESSURE SENSOR CONNECTOR

1. Disconnect EVAP control system pressure sensor harness connector.

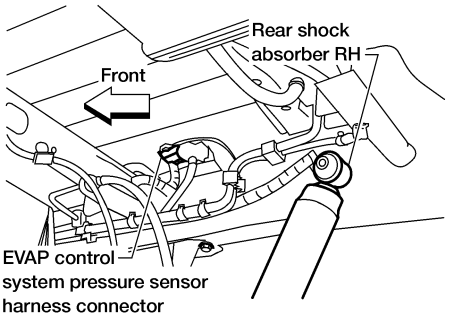

AEC651A

2. Check connectors for water.
   Water should not exist.

OK or NG

OK	▶	GO TO 10.
NG	▶	Replace EVAP control system pressure sensor.

10	CHECK EVAP CONTROL SYSTEM PRESSURE SENSOR FUNCTION

Refer to "DTC Confirmation Procedure" for DTC P0450, EC-1606.

OK or NG

OK	▶	GO TO 11.
NG	▶	Replace EVAP control system pressure sensor.

11	CHECK EVAP CANISTER VENT CONTROL VALVE

Check air passage continuity.

With CONSULT-II

Perform "VENT CONTROL/V" in "ACTIVE TEST" mode.

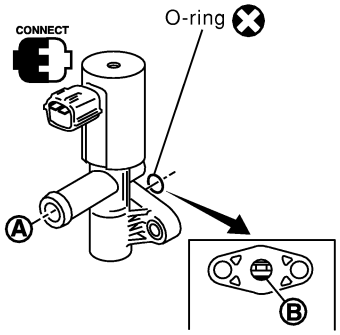

ACTIVE TEST	
VENT CONTROL/V	OFF
MONITOR	
ENG SPEED	XXX rpm
A/F ALPHA-B1	XXX %
A/F ALPHA-B2	XXX %
HO2S1 (B1)	XXX V
HO2S1 (B2)	XXX V
THRTL POS SEN	XXX V

Condition VENT CONTROL/V	Air passage continuity between A and B
ON	No
OFF	Yes

Operation takes less than 1 second.

SEF991Y

Without CONSULT-II

Condition	Air passage continuity between A and B
12V direct current supply between terminals 1 and 2	No
OFF	Yes

MTBL0240

If NG or operation takes more than 1 second, clean valve using air blower or replace as necessary.

If portion **B** is rusted, replace control valve.

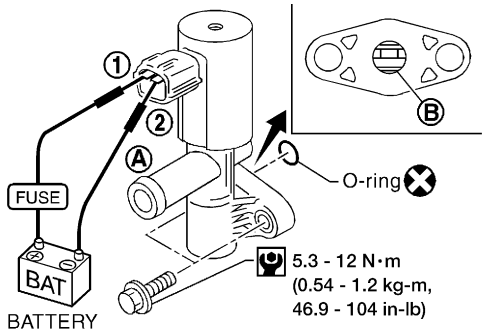

AEC783A

Make sure new O-ring is installed properly.

OK or NG

OK (With CONSULT-II)	▶	GO TO 12.
OK (Without CONSULT-II)	▶	GO TO 13.
NG	▶	Replace EVAP canister vent control valve.

Diagnostic Procedure (Cont'd)

12 CHECK CLOSED THROTTLE POSITION SWITCH

With CONSULT-II

1. Start engine and warm it up to normal operating temperature.
2. Turn ignition switch OFF.
3. Turn ignition switch ON.
4. Select "DATA MONITOR" mode with CONSULT-II.
5. Check indication of "CLSD THL/P SW".
   Measurement must be made with closed throttle position switch installed in vehicle.

Throttle valve conditions	CLSD THL/P SW
Completely closed	ON
Partially open or completely open	OFF

MTBL0355

If NG, adjust closed throttle position switch.
Check the following items. Refer to "Basic Inspection", EC-1314.

Items	Specifications
Ignition timing	10° ± 2° BTDC
Base idle speed	700 ± 50 rpm (in "P" or "N" position)
Closed throttle position switch idle position adjustment	Feeler gauge thickness and switch condition 0.3 mm (0.012 in): ON 0.4 mm (0.016 in): OFF
Target idle speed	750 ± 50 rpm (in "P" or "N" position)

MTBL0576

6. If it is impossible to adjust closed throttle position switch in "Basic Inspection", replace closed throttle position switch.

OK or NG

OK	▶	GO TO 14.
NG	▶	Replace throttle position switch with throttle position sensor.

13	CHECK CLOSED THROTTLE POSITION SWITCH

Without CONSULT-II

1. Start engine and warm it up to normal operating temperature.
2. Turn ignition switch OFF.
3. Disconnect closed throttle position switch harness connector.
4. Check continuity between closed throttle position switch terminals 4 and 5.
   Resistance measurement must be made with closed throttle position switch installed in vehicle.

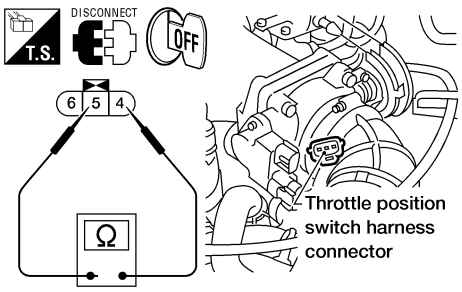

AEC654A

Throttle valve conditions	Continuity
Completely closed	Yes
Partially open or completely open	No

MTBL0247

If NG, adjust closed throttle position switch.
Check the following items. Refer to "Basic Inspection", EC-1314.

Items	Specifications
Ignition timing	10° ± 2° BTDC
Base idle speed	700 ± 50 rpm (in "P" or "N" position)
Closed throttle position switch idle position adjustment	Feeler gauge thickness and switch condition 0.3 mm (0.012 in): ON 0.4 mm (0.016 in): OFF
Target idle speed	750 ± 50 rpm (in "P" or "N" position)

MTBL0576

5. If it is impossible to adjust closed throttle position switch in "Basic Inspection", replace closed throttle position switch.

OK or NG

OK	▶	GO TO 14.
NG	▶	Replace throttle position switch with throttle position sensor.

14	CHECK EVAP PURGE LINE

Inspect EVAP purge line (pipe and rubber tube). Check for evidence of leaks.
Refer to "EVAPORATIVE EMISSION LINE DRAWING", EC-1245.

OK or NG

OK	▶	GO TO 15.
NG	▶	Replace it.

15	CLEAN EVAP PURGE LINE

Clean EVAP purge line (pipe and rubber tube) using air blower.

	▶	GO TO 16.

Diagnostic Procedure (Cont'd)

16	**CHECK INTERMITTENT INCIDENT**
Refer to "TROUBLE DIAGNOSIS FOR INTERMITTENT INCIDENT", EC-1353.	
▶	**INSPECTION END**

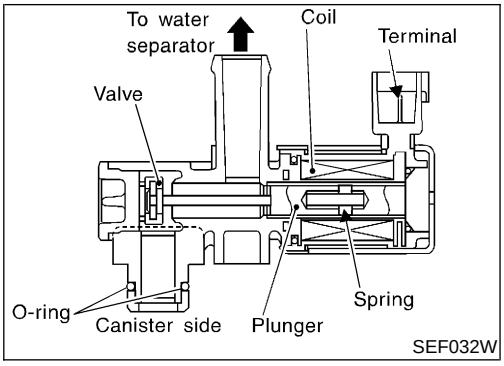

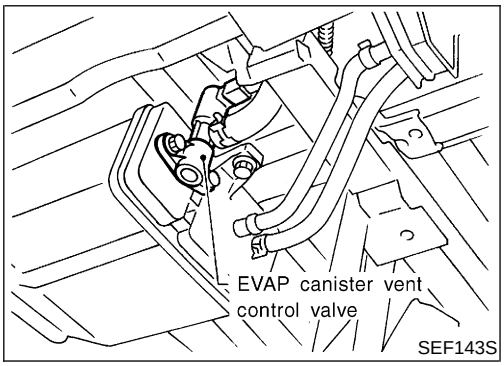

Component Description

NEEC1423

NOTE:
If DTC P1448 is displayed with P0440, perform trouble diagnosis for DTC P1448 first.

The EVAP canister vent control valve is located on the EVAP canister and is used to seal the canister vent.
This solenoid valve responds to signals from the ECM. When the ECM sends an ON signal, the coil in the solenoid valve is energized. A plunger will then move to seal the canister vent. The ability to seal the vent is necessary for the on board diagnosis of other evaporative emission control system components.
This solenoid valve is used only for diagnosis, and usually remains opened.
When the vent is closed, under normal purge conditions, the evaporative emission control system is depressurized and allows "EVAP Control System (Small Leak)" diagnosis.

CONSULT-II Reference Value in Data Monitor Mode

NEEC1424

Specification data are reference values.

MONITOR ITEM	CONDITION	SPECIFICATION
VENT CONT/V	• Ignition switch: ON	OFF

ECM Terminals and Reference Value

NEEC1425

Specification data are reference values and are measured between each terminal and ground.

CAUTION:
Do not use ECM ground terminals when measuring input/output voltage. Doing so may result in damage to the ECM's transistor. Use a ground other than the ECM terminals, such as the ground.

TERMINAL NO.	WIRE COLOR	ITEM	CONDITION	DATA (DC Voltage)
108	R/G	EVAP canister vent control valve	**[Ignition switch ON]**	BATTERY VOLTAGE (11 - 14V)

On Board Diagnosis Logic

NEEC1426

Malfunction is detected when EVAP canister vent control valve remains opened under specified driving conditions.

POSSIBLE CAUSE

NEEC1426S01

- EVAP canister vent control valve
- EVAP control system pressure sensor and circuit
- Blocked rubber tube to EVAP canister vent control valve
- Water separator
- EVAP canister is saturated with water.
- Vacuum cut valve

DTC Confirmation Procedure

NEEC1427

NOTE:

- **If DTC P1448 is displayed with P0440, perform trouble diagnosis for DTC P1448 first.**
- If "DTC Confirmation Procedure" has been previously conducted, always turn ignition switch OFF and wait at least 5 seconds before conducting the next test.

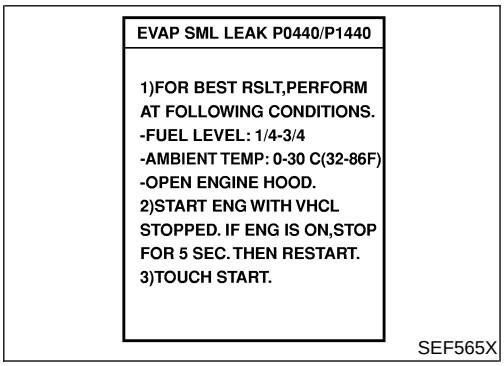

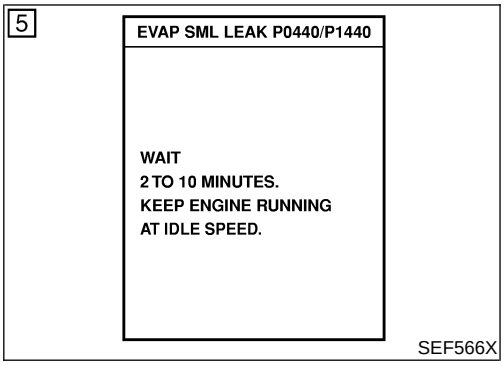

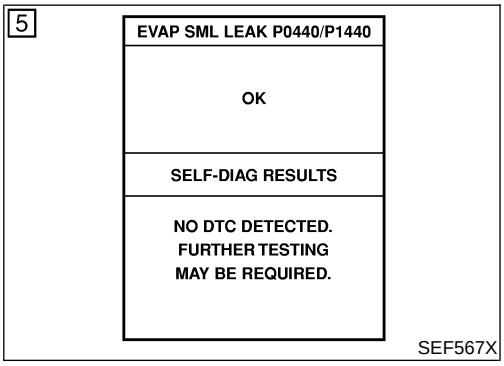

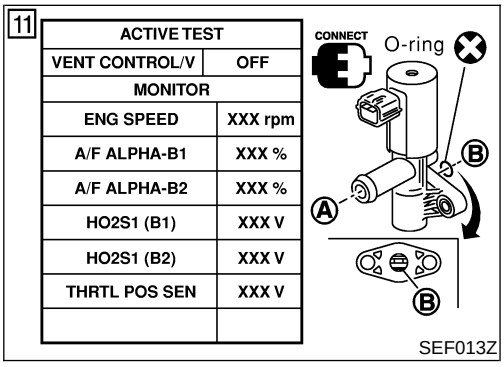

With CONSULT-II

TESTING CONDITION:

- **Perform "DTC WORK SUPPORT" when the fuel level is less than 3/4 full and vehicle is placed on flat level surface.**
- **Always perform test at a temperature of 0 to 30°C (32 to 86°F).**
- **It is better that the fuel level is low.**

1) Turn ignition switch ON.
2) Turn ignition switch OFF and wait at least 5 seconds.
3) Turn ignition switch ON and select "DATA MONITOR" mode with CONSULT-II.
4) Make sure that the following conditions are met.

COOLAN TEMP/S	0 - 32°C (32 - 90°F)
INT/A TEMP SE	More than 0°C (32°F)

5) Select "EVAP SML LEAK P0440" of "EVAPORATIVE SYSTEM" in "DTC WORK SUPPORT" mode with CONSULT-II. Follow the instruction displayed.

NOTE:

If the engine speed cannot be maintained within the range displayed on the CONSULT-II screen, go to "Basic Inspection", EC-1314.

6) Make sure that "OK" is displayed.
If "NG" is displayed, go to the following step.

NOTE:

Make sure that EVAP hoses are connected to EVAP canister purge volume control solenoid valve properly.

7) Stop engine and wait at least 5 seconds, then turn ON.
8) Disconnect hose from water separator.
9) Select "VENT CONTROL/V" of "ACTIVE TEST" mode with CONSULT-II.
10) Touch ON and OFF alternately.
11) Make sure the following.

Condition VENT CONTROL/V	Air passage continuity between **A** and **B**
ON	No
OFF	Yes

If the result is NG, go to "Diagnostic Procedure", EC-1751.
If the result is OK, go to "Diagnostic Procedure" for DTC P0440, EC-1577.

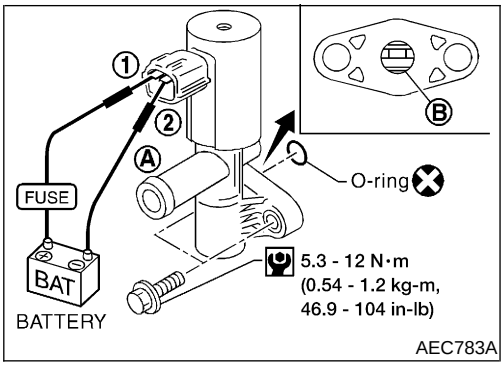

Overall Function Check

NEEC1428

Use this procedure to check the overall function of the EVAP canister vent control valve circuit. During this check, a DTC might not be confirmed.

Without CONSULT-II

1) Disconnect hose from water separator.
2) Disconnect EVAP canister vent control valve harness connector.
3) Verify the following.

Condition	Air passage continuity
12V direct current supply between terminals 1 and 2	No
No supply	Yes

If the result is NG, go to “Diagnostic Procedure”, EC-1751.
If the result is OK, go to “Diagnostic Procedure” for DTC P0440, EC-1577.

Wiring Diagram

NEEC1429

EC-VENT/V-01

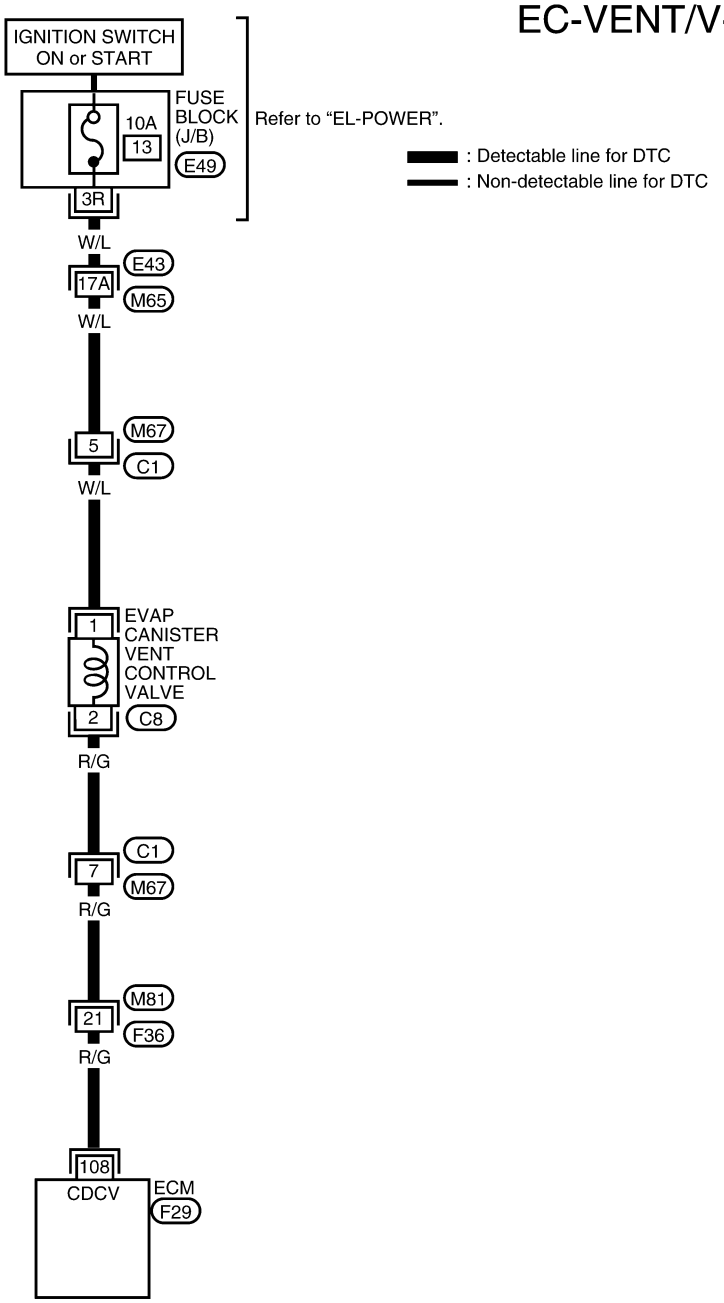

Refer to the following.
M65, E43 - SUPER MULTIPLE JUNCTION (SMJ)

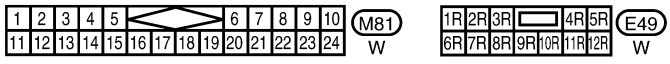

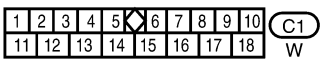



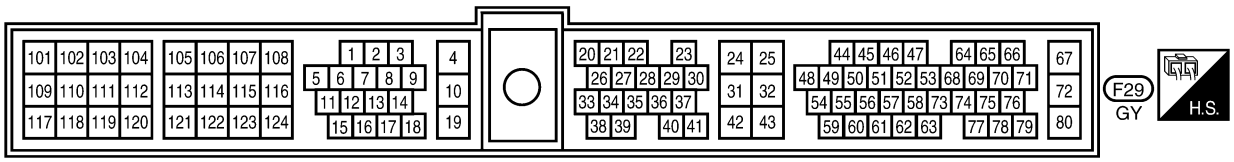

LEC814

Diagnostic Procedure

NEEC1430

1	CHECK RUBBER TUBE

1. Turn ignition switch OFF.
2. Check obstructed rubber tube connected to EVAP canister vent control valve.

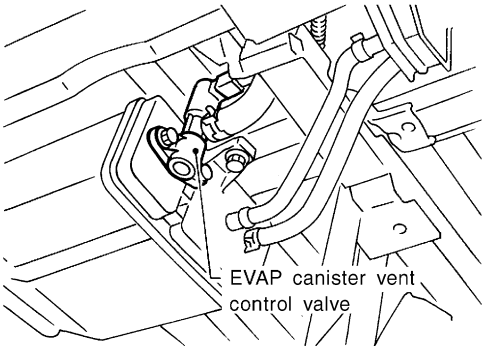

SEF143S

OK or NG

OK	▶	GO TO 2.
NG	▶	Clean, repair or replace rubber tube.

2	CHECK WATER SEPARATOR

1. Check visually for insect nests in the water separator air inlet.
2. Check visually for cracks or flaws in the appearance.
3. Check visually for cracks or flaws in the hose.
4. Check that **A** and **C** are not clogged by blowing air into **B** with **A**, and then **C** plugged.

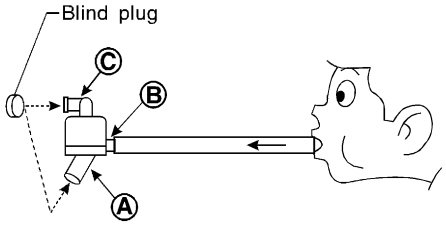

* Ⓐ: Bottom hole (To atmosphere)
Ⓑ: Emergency tube (From EVAP canister)
Ⓒ: Inlet port (To member)

SEF829T

5. In case of NG in items 2 - 4, replace the parts.

NOTE:
- Do not disassemble water separator.

OK or NG

OK	▶	GO TO 3.
NG	▶	Replace water separator.

Diagnostic Procedure (Cont'd)

3	CHECK EVAP CANISTER VENT CONTROL VALVE AND O-RING

Check air passage continuity.

With CONSULT-II

Perform "VENT CONTROL/V" in "ACTIVE TEST" mode.

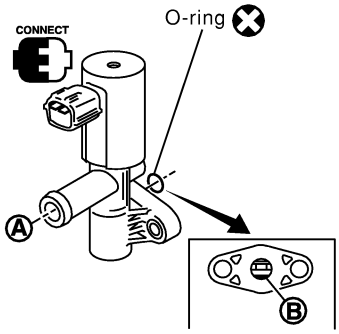

ACTIVE TEST	
VENT CONTROL/V	OFF
MONITOR	
ENG SPEED	XXX rpm
A/F ALPHA-B1	XXX %
A/F ALPHA-B2	XXX %
HO2S1 (B1)	XXX V
HO2S1 (B2)	XXX V
THRTL POS SEN	XXX V

Condition VENT CONTROL/V	Air passage continuity between A and B
ON	No
OFF	Yes

Operation takes less than 1 second.

SEF991Y

Without CONSULT-II

Condition	Air passage continuity between A and B
12V direct current supply between terminals 1 and 2	No
OFF	Yes

MTBL0240

If NG or operation takes more than 1 second, clean valve using air blower or replace as necessary.

If portion **B** is rusted, replace control valve.

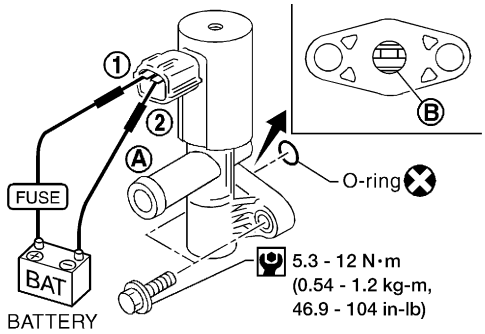

AEC783A

Make sure new O-ring is installed properly.

OK or NG

OK	▶	GO TO 4.
NG	▶	Replace EVAP canister vent control valve and O-ring.

4	CHECK VACUUM CUT VALVE

Check vacuum cut valve as follows:

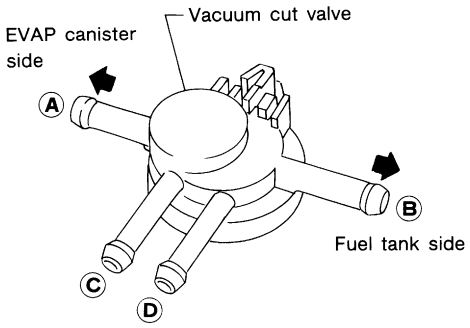

SEF379Q

1. Plug port **C** and **D** with fingers.
2. Apply vacuum to port **A** and check that there is no suction from port **B**.
3. Apply vacuum to port **B** and check that there is suction from port **A**.
4. Blow air in port **B** and check that there is a resistance to flow out of port **A**.
5. Open port **C** and **D**.
6. Blow air in port **A** check that air flows freely out of port **C**.
7. Blow air in port **B** check that air flows freely out of port **D**.

OK or NG

OK	▶	GO TO 5.
NG	▶	Replace vacuum cut valve.

5	CHECK IF EVAP CANISTER SATURATED WITH WATER

1. Remove EVAP canister with EVAP canister vent control valve attached.
2. Check if water will drain from the EVAP canister.

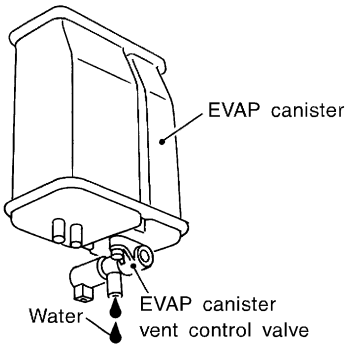

SEF596U

OK or NG

OK	▶	GO TO 6.
NG	▶	GO TO 8.

6	CHECK EVAP CANISTER

Weigh the EVAP canister with the EVAP canister vent control valve attached.
The weight should be less than 1.8 kg (4.0 lb).

OK or NG

OK	▶	GO TO 8.
NG	▶	Replace the EVAP canister.

Diagnostic Procedure (Cont'd)

7	DETECT MALFUNCTIONING PART
Check the following. • EVAP canister for damage • EVAP hose between EVAP canister and water separator for clogging or poor connection	
▶	Repair hose or replace EVAP canister.

8	CHECK EVAP CONTROL SYSTEM PRESSURE SENSOR HOSE
Check disconnection or improper connection of hose connected to EVAP control system pressure sensor.	
OK or NG	
OK ▶	GO TO 9.
NG ▶	Repair it.

9	CHECK EVAP CONTROL SYSTEM PRESSURE SENSOR CONNECTOR

1. Disconnect EVAP control system pressure sensor harness connector.

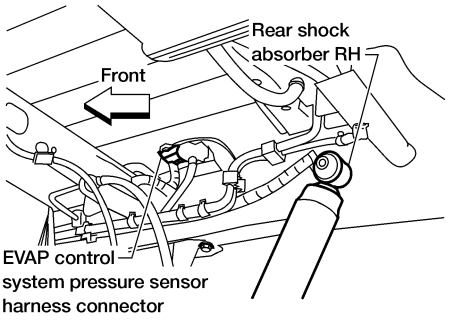

AEC651A

2. Check connectors for water.
   Water should not exist.

OK or NG	
OK ▶	GO TO 10.
NG ▶	Replace EVAP control system pressure sensor.

10	CHECK EVAP CONTROL SYSTEM PRESSURE SENSOR FUNCTION
Refer to "DTC Confirmation Procedure" for DTC P0450, EC-1606.	
OK or NG	
OK ▶	GO TO 11.
NG ▶	Replace EVAP control system pressure sensor.

11	CHECK INTERMITTENT INCIDENT
Refer to "TROUBLE DIAGNOSIS FOR INTERMITTENT INCIDENT", EC-1353.	
▶	**INSPECTION END**

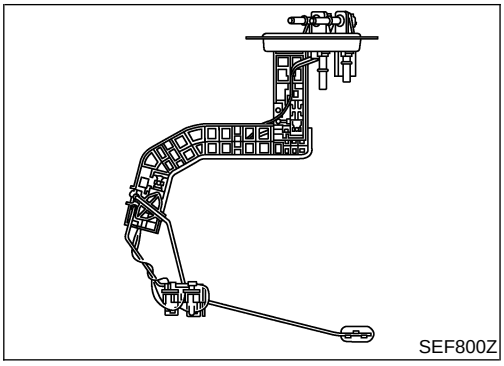

Component Description

NEEC1431

The fuel level sensor is mounted in the fuel level sensor unit. The sensor detects a fuel level in the fuel tank and transmits a signal to the ECM.

It consists of two parts, one is mechanical float and the other side is variable resistor. Fuel level sensor output voltage changes depending on the movement of the fuel mechanical float.

ECM Terminals and Reference Value

NEEC1432

Specification data are reference values and are measured between each terminal and ground.

CAUTION:

Do not use ECM ground terminals when measuring input/output voltage. Doing so may result in damage to the ECM's transistor. Use a ground other than ECM terminals, such as the ground.

TERMINAL NO.	WIRE COLOR	ITEM	CONDITION	DATA (DC Voltage)
46	G	Fuel level sensor	**[Ignition switch "ON"]**	Approximately 0 - 4.8V Output voltage varies with fuel level.
66	B	Fuel level sensor ground	**[Engine is running]** ● Idle speed	Approximately 0V

On Board Diagnosis Logic

NEEC1433

ECM receives two signals from the fuel level sensor.

One is fuel level sensor power supply circuit, and the other is fuel level sensor ground circuit.

This diagnosis indicates the latter to detect open circuit malfunction. Malfunction is detected when a high voltage from the sensor is sent to ECM.

POSSIBLE CAUSE

NEEC1433S01

- Fuel level sensor circuit
  (The fuel level sensor circuit is open or shorted.)

DTC Confirmation Procedure

NEEC1434

NOTE:

If "DTC Confirmation Procedure" has been previously conducted, always turn ignition switch "OFF" and wait at least 5 seconds before conducting the next test.

3

DATA MONITOR	
MONITOR	NO DTC
FUEL T/TMP SE	XXX °C
FUEL LEVEL SE	XXX V

SEF195Y

WITH CONSULT-II

NEEC1434S01

1) Turn ignition switch "ON".
2) Select "DATA MONITOR" mode with CONSULT-II.
3) Wait at least 5 seconds.
4) If 1st trip DTC is detected, go to "Diagnostic Procedure", EC-1758.

WITH GST

NEEC1434S02

Follow the procedure "WITH CONSULT-II" above.

Wiring Diagram

NEEC1435

EC-FLS3-01

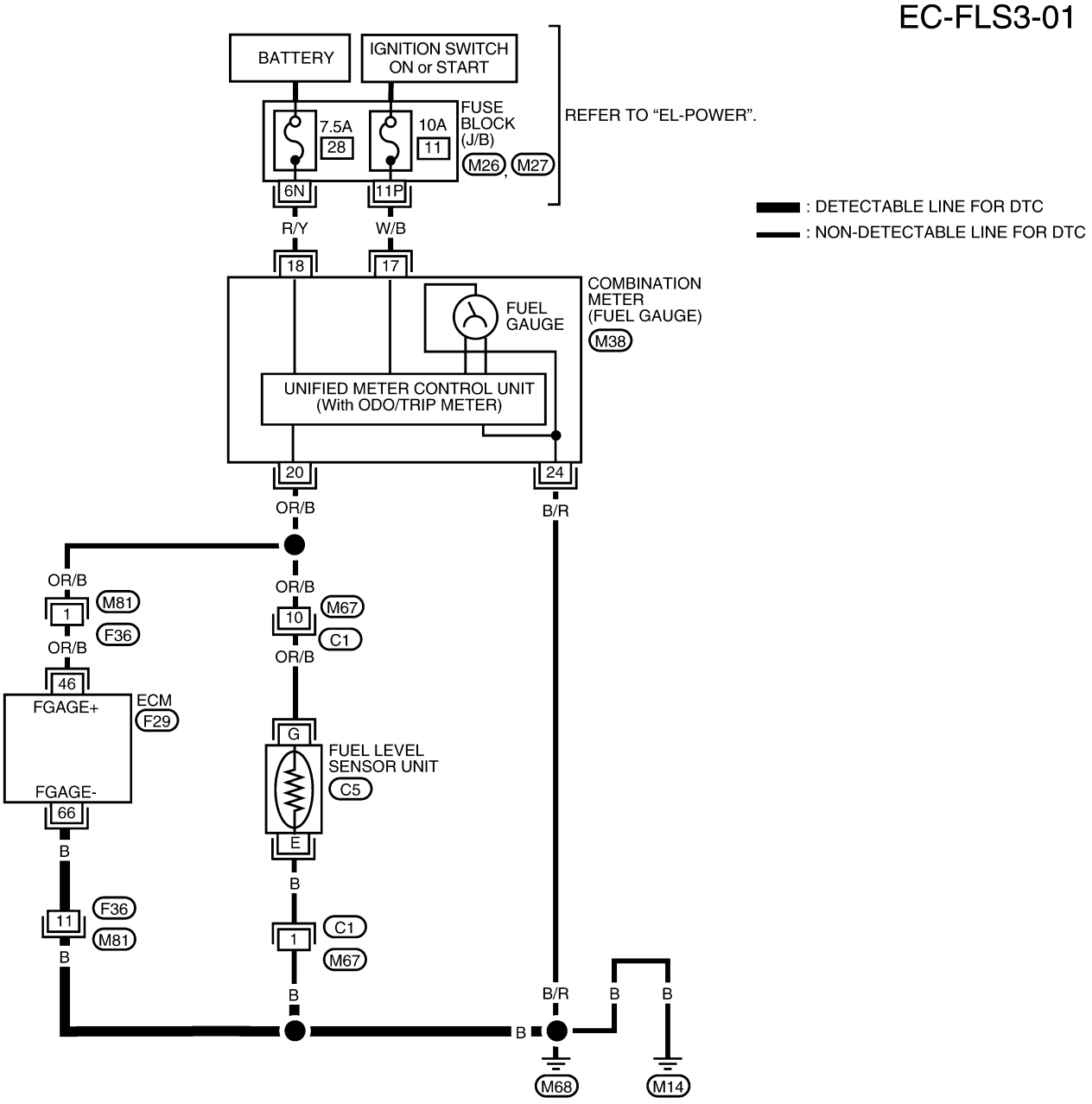

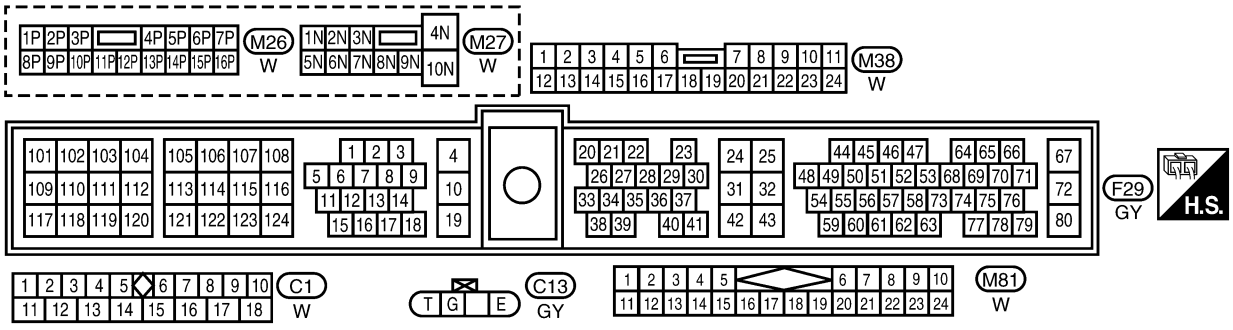

WEC820

Diagnostic Procedure

=NEEC1436

1	CHECK FUEL LEVEL SENSOR GROUND CIRCUIT FOR OPEN AND SHORT
1. Turn ignition switch “OFF”. 2. Disconnect ECM harness connector. 3. Check harness continuity between ECM terminal 66 and body ground. Refer to Wiring Diagram. **Continuity should exist.** 4. Also check harness for short to power.	
OK or NG	
OK ▶	GO TO 3.
NG ▶	GO TO 2.

2	DETECT MALFUNCTIONING PART
1. Check the following. ● Harness connectors F36, M81 ● Harness for open and short between ECM and body ground	
▶	Replace open circuit or short to power in harness or connectors.

3	CHECK FUEL LEVEL SENSOR
Refer to ***EL-82***, “FUEL LEVEL SENSOR UNIT CHECK”.	
OK or NG	
OK ▶	GO TO 4.
NG ▶	Replace fuel level sensor unit.

4	CHECK INTERMITTENT INCIDENT
Refer to “TROUBLE DIAGNOSIS FOR INTERMITTENT INCIDENT”, EC-1353	
OK or NG	
▶	**INSPECTION END**

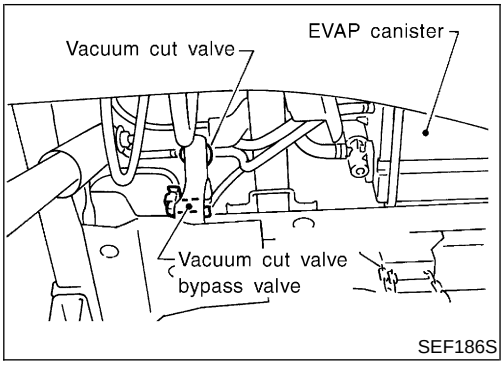

Description

NEEC1437

COMPONENT DESCRIPTION

NEEC1437S01

The vacuum cut valve and vacuum cut valve bypass valve are installed in parallel on the EVAP purge line between the fuel tank and the EVAP canister.

The vacuum cut valve prevents the intake manifold vacuum from being applied to the fuel tank.

The vacuum cut valve bypass valve is a solenoid type valve and generally remains closed. It opens only for on board diagnosis.

The vacuum cut valve bypass valve responds to signals from the ECM. When the ECM sends an ON (ground) signal, the valve is opened. The vacuum cut valve is then bypassed to apply intake manifold vacuum to the fuel tank.

EVAPORATIVE EMISSION SYSTEM DIAGRAM

NEEC1437S02

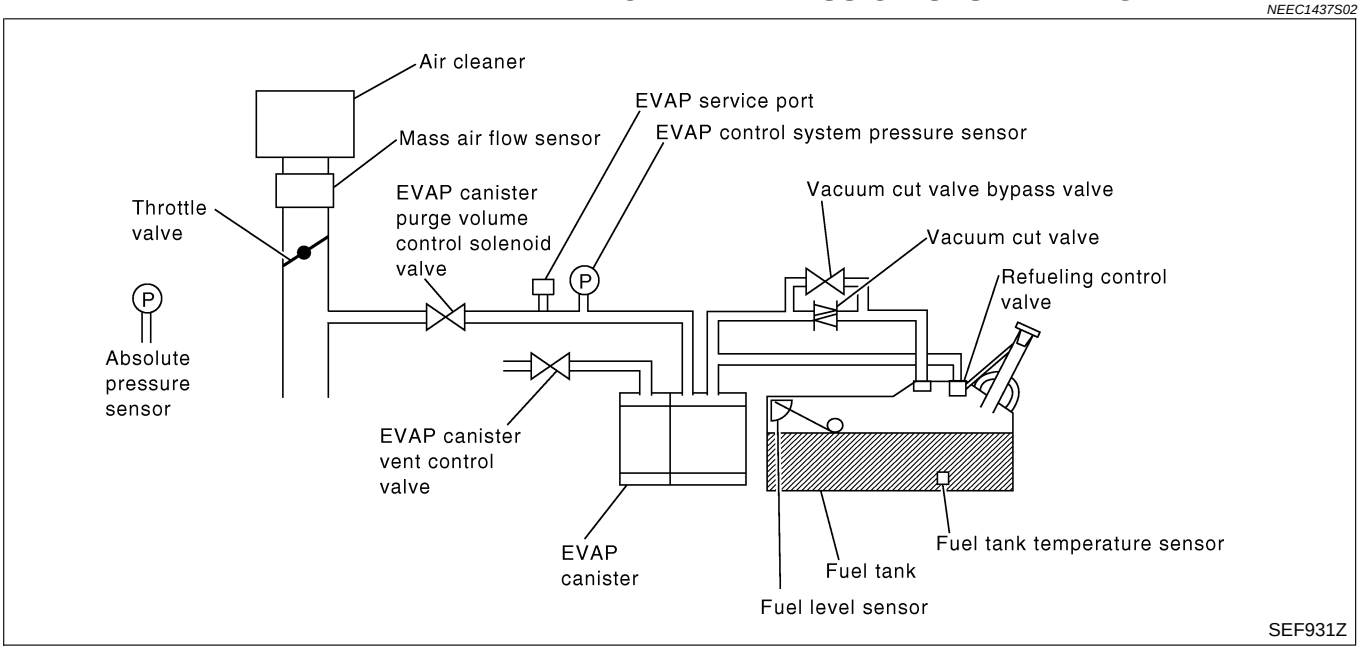

CONSULT-II Reference Value in Data Monitor Mode

NEEC1438

Specification data are reference values.

MONITOR ITEM	CONDITION	SPECIFICATION
VC/V BYPASS/V	• Ignition switch: ON	OFF

ECM Terminals and Reference Value

NEEC1439

Specification data are reference values and are measured between each terminal and ground.

CAUTION:

Do not use ECM ground terminals when measuring input/output voltage. Doing so may result in damage to the ECM's transistor. Use a ground other than the ECM terminals, such as the ground.

TERMINAL NO.	WIRE COLOR	ITEM	CONDITION	DATA (DC Voltage)
120	P/B	Vacuum cut valve bypass valve	**[Ignition switch ON]**	BATTERY VOLTAGE (11 - 14V)

On Board Diagnosis Logic

NEEC1440

Malfunction is detected when an improper voltage signal is sent to ECM through vacuum cut valve bypass valve.

POSSIBLE CAUSE

NEEC1440S01

- Harness or connectors
  (The vacuum cut valve bypass valve circuit is open or shorted.)
- Vacuum cut valve bypass valve

DTC Confirmation Procedure

NEEC1441

NOTE:
If “DTC Confirmation Procedure” has been previously conducted, always turn ignition switch OFF and wait at least 5 seconds before conducting the next test.

TESTING CONDITION:
Before performing the following procedure, confirm that battery voltage is more than 11V at idle speed.

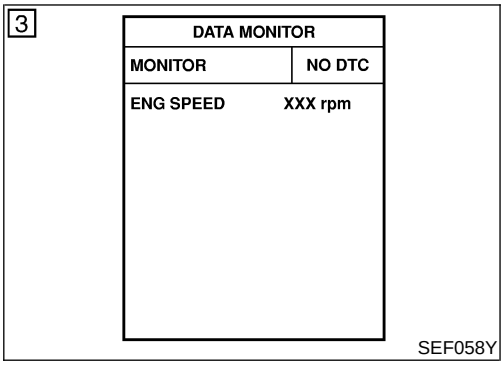

With CONSULT-II

1) Turn ignition switch ON.
2) Select “DATA MONITOR” mode with CONSULT-II.
3) Start engine and wait at least 5 seconds.
4) If 1st trip DTC is detected, go to “Diagnostic Procedure”, EC-1762.

With GST

Follow the procedure “With CONSULT-II”.

Wiring Diagram

NEEC1442

EC-BYPS/V-01

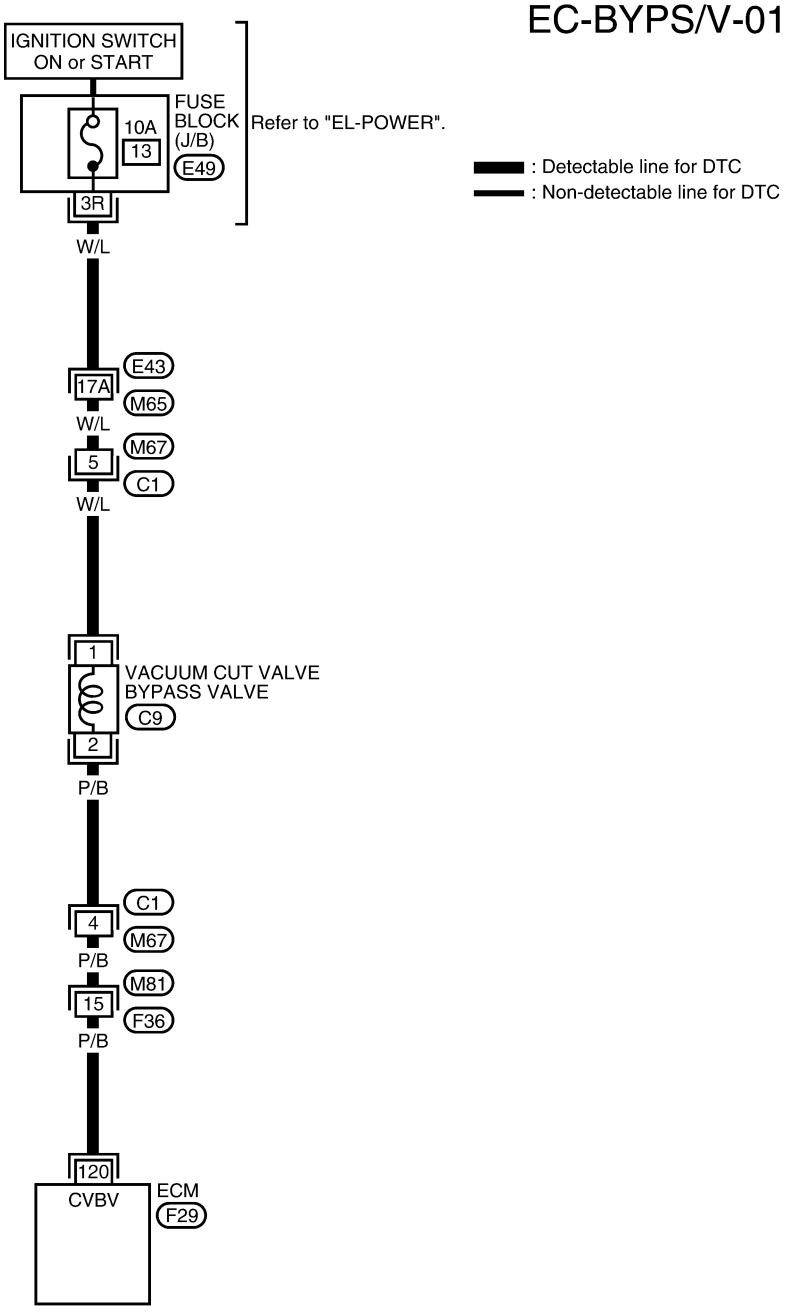

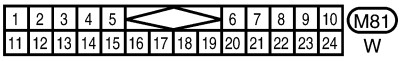



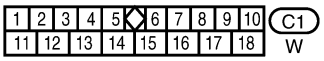



Refer to the following.
M65, E43 - SUPER MULTIPLE JUNCTION (SMJ)

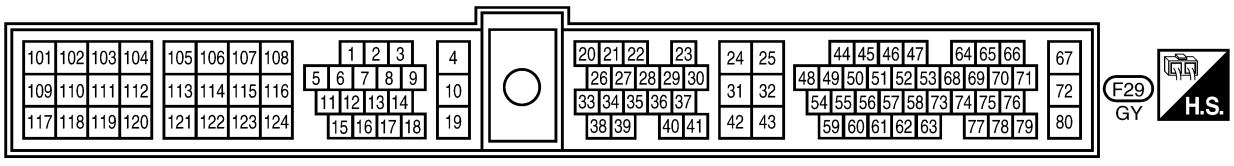

LEC815

Diagnostic Procedure

NEEC1443

1	INSPECTION START	
Do you have CONSULT-II?		
Yes or No		
Yes	▶	GO TO 2.
No	▶	GO TO 3.

2	CHECK VACUUM CUT VALVE BYPASS VALVE CIRCUIT	

With CONSULT-II

1. Turn ignition switch “OFF” and then “ON”.
2. Select “VC/V BYPASS/V” in “ACTIVE TEST” mode with CONSULT-II.
3. Touch “ON/OFF” on CONSULT-II screen.

ACTIVE TEST	
VC/V BYPASS/V	OFF
MONITOR	
ENG SPEED	XXX rpm
A/F ALPHA-B1	XXX %
A/F ALPHA-B2	XXX %
HO2S1 MNTR (B1)	LEAN
HO2S1 MNTR (B2)	LEAN
THRTL POS SEN	XXX V

SEF014Z

4. Make sure that clicking sound is heard from the vacuum cut valve bypass valve.

OK or NG		
OK	▶	GO TO 7.
NG	▶	GO TO 3.

3	CHECK VACUUM CUT VALVE BYPASS VALUE POWER SUPPLY CIRCUIT

Without CONSULT-II

1. Turn ignition switch "OFF".
2. Disconnect vacuum cut valve bypass valve harness connector.

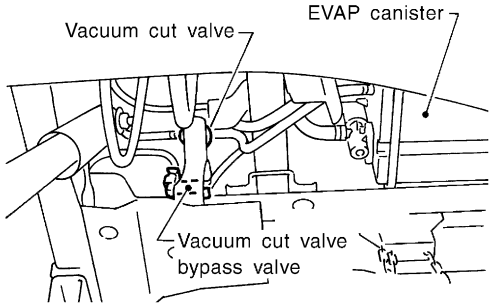

SEF186S

3. Turn ignition switch "ON".
4. Check voltage between terminal 1 and ground with CONSULT-II or tester.

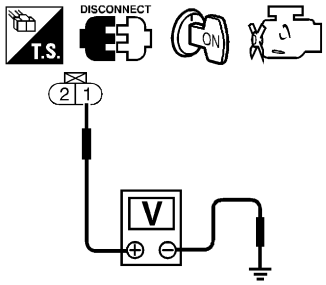

SEF659W

Voltage: Battery voltage

OK or NG

OK	▶	GO TO 5.
NG	▶	GO TO 4.

4	DETECT MALFUNCTIONING PART

Check the following.

- Harness connectors E74, M82
- Harness connectors M67, C1
- Fuse block (J/B) connector E49
- 10A fuse
- Harness for open or short between vacuum cut valve bypass valve and fuse

	▶	Repair harness or connectors.

5	CHECK VACUUM CUT VALVE BYPASS VALVE OUTPUT SIGNAL CIRCUIT FOR OPEN AND SHORT

1. Turn ignition switch "OFF".
2. Disconnect ECM harness connector.
3. Check harness continuity between ECM terminal 120 and vacuum cut valve bypass valve terminal 2. Refer to Wiring Diagram.
   Continuity should exist.
4. Also check harness for short to ground and short to power.

OK or NG

OK	▶	GO TO 7.
NG	▶	GO TO 6.

Diagnostic Procedure (Cont'd)

6	DETECT MALFUNCTIONING PART
Check the following. ● Harness connectors C1, M67 ● Harness connectors M81, F36 ● Harness for open or short between vacuum cut valve bypass valve and ECM	
▶	Repair open circuit or short to ground or short to power in harness or connectors.

7	CHECK VACUUM CUT VALVE BYPASS VALVE

With CONSULT-II

1. Perform "VC/V BYPASS/V" in "ACTIVE TEST" mode.
2. Check air passage continuity and operation delay time under the following conditions.

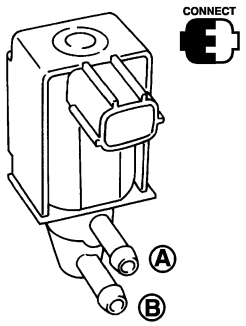

ACTIVE TEST	
VC/V BYPASS/V	OFF
MONITOR	
ENG SPEED	XXX rpm
A/F ALPHA-B1	XXX %
A/F ALPHA-B2	XXX %
HO2S1 MNTR (B1)	LEAN
HO2S1 MNTR (B2)	LEAN
THRTL POS SEN	XXX V

Condition VC/V BYPASS/V	Air passage continuity between A and B
ON	Yes
OFF	No

Operation takes less than 1 second.

SEF016Z

Without CONSULT-II

1. Check air passage continuity and operation delay time under the following conditions.

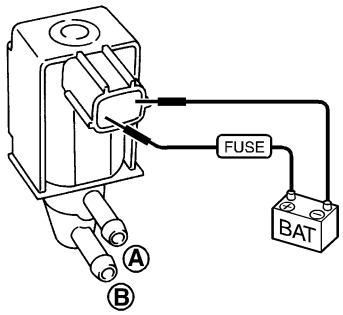

Condition	Air passage continuity between A and B
12V direct current supply between terminals 1 and 2	Yes
No supply	No

Operation takes less than 1 second.

SEF557Y

OK or NG

OK	▶	GO TO 8.
NG	▶	Replace vacuum cut valve bypass valve.

8	CHECK INTERMITTENT INCIDENT
Refer to "TROUBLE DIAGNOSIS FOR INTERMITTENT INCIDENT", EC-1353.	
▶	**INSPECTION END**

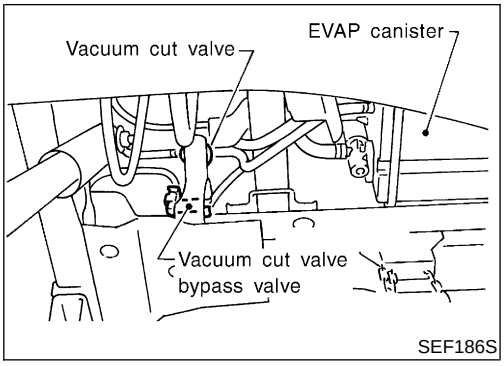

Description

NEEC1444

COMPONENT DESCRIPTION

NEEC1444S01

The vacuum cut valve and vacuum cut valve bypass valve are installed in parallel on the EVAP purge line between the fuel tank and the EVAP canister.

The vacuum cut valve prevents the intake manifold vacuum from being applied to the fuel tank.

The vacuum cut valve bypass valve is a solenoid type valve and generally remains closed. It opens only for on board diagnosis.

The vacuum cut valve bypass valve responds to signals from the ECM. When the ECM sends an ON (ground) signal, the valve is opened. The vacuum cut valve is then bypassed to apply intake manifold vacuum to the fuel tank.

EVAPORATIVE EMISSION SYSTEM DIAGRAM

NEEC1444S02

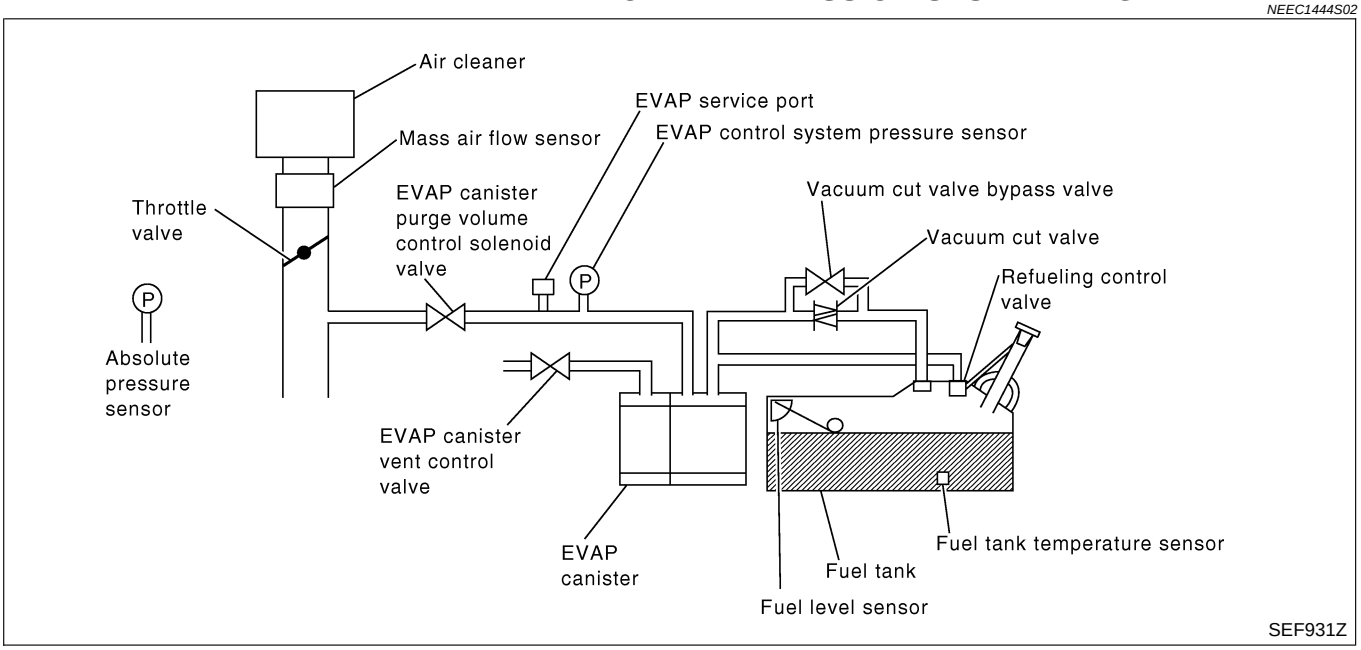

CONSULT-II Reference Value in Data Monitor Mode

NEEC1445

Specification data are reference values.

MONITOR ITEM	CONDITION	SPECIFICATION
VC/V BYPASS/V	• Ignition switch: ON	OFF

ECM Terminals and Reference Value

NEEC1446

Specification data are reference values and are measured between each terminal and ground.

CAUTION:

Do not use ECM ground terminals when measuring input/output voltage. Doing so may result in damage to the ECM's transistor. Use a ground other than the ECM terminals, such as the ground.

TERMINAL NO.	WIRE COLOR	ITEM	CONDITION	DATA (DC Voltage)
120	P/B	Vacuum cut valve bypass valve	**[Ignition switch ON]**	BATTERY VOLTAGE (11 - 14V)

On Board Diagnosis Logic

NEEC1447

Malfunction is detected when vacuum cut valve bypass valve does not operate properly.

POSSIBLE CAUSE

NEEC1447S01

- Vacuum cut valve bypass valve
- Vacuum cut valve
- Bypass hoses for clogging
- EVAP control system pressure sensor and circuit
- EVAP canister vent control valve
- Hose between fuel tank and vacuum cut valve clogged
- Hose between vacuum cut valve and EVAP canister clogged
- EVAP canister
- EVAP purge port of fuel tank for clogging

7

VC CUT/V BP/V P1491	
OUT OF CONDITION	
MONITOR	
ENG SPEED	XXX rpm
VHCL SPEED SE	XXX km/h
B/FUEL SCHDL	XXX msec

SEF210Y

7

VC CUT/V BP/V P1491	
TESTING	
MONITOR	
ENG SPEED	XXX rpm
VHCL SPEED SE	XXX km/h
B/FUEL SCHDL	XXX msec

SEF211Y

7

VC CUT/V BP/V P1491
COMPLETED

SEF239Y

DTC Confirmation Procedure

NEEC1448

CAUTION:

Always drive vehicle at a safe speed.

NOTE:

If “DTC Confirmation Procedure” has been previously conducted, always turn ignition switch OFF and wait at least 5 seconds before conducting the next test.

TESTING CONDITION:

Always perform test at a temperature of 5 to 30°C (41 to 86°F).

With CONSULT-II

1) Turn ignition switch ON.
2) Start engine and warm it up to normal operating temperature.
3) Turn ignition switch OFF and wait at least 5 seconds.
4) Start engine and let it idle for at least 70 seconds.
5) Select “VC CUT/V BP/V P1491” of “EVAPORATIVE SYSTEM” in “DTC WORK SUPPORT” mode with CONSULT-II.
6) Touch “START”.
7) When the following conditions are met, “TESTING” will be displayed on the CONSULT-II screen. Maintain the conditions continuously until “TESTING” changes to “COMPLETED”. (It will take at least 30 seconds.)

CMPS·RPM (POS)	More than 500 rpm
Selector lever	Suitable position
Vehicle speed	More than 37 km/h (23 MPH)
B/FUEL SCHDL	1.0 - 11.0 msec

If “TESTING” is not displayed after 5 minutes, retry from step 3.

8) Make sure that “OK” is displayed after touching “SELF-DIAG RESULTS”. If “NG” is displayed, refer to “Diagnostic Procedure”, EC-1769.

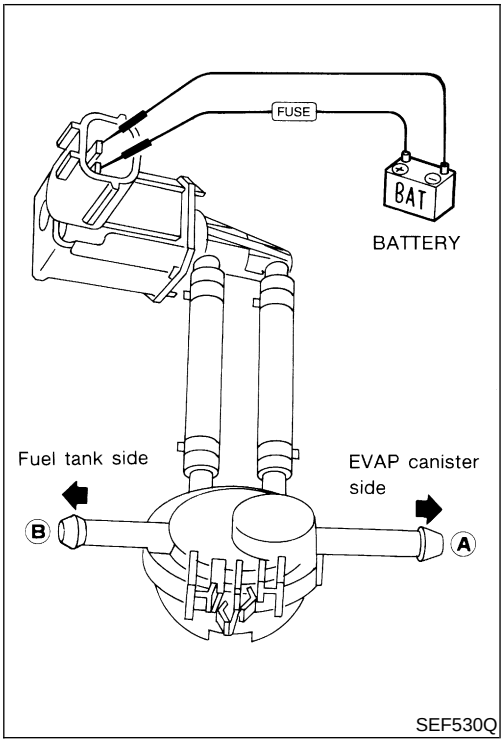

Overall Function Check

NEEC1449

Use this procedure to check the overall function of vacuum cut valve bypass valve. During this check, the 1st trip DTC might not be confirmed.

Without CONSULT-II

1) Remove vacuum cut valve and vacuum cut valve bypass valve as an assembly.
2) Apply vacuum to port **A** and check that there is no suction from port **B**.
3) Apply vacuum to port **B** and check that there is suction from port **A**.
4) Blow air in port **B** and check that there is a resistance to flow out of port **A**.
5) Supply battery voltage to the terminal.
6) Blow air in port **A** and check that air flows freely out of port **B**.
7) Blow air in port **B** and check that air flows freely out of port **A**.
8) If NG, go to “Diagnostic Procedure”, EC-1769.

Wiring Diagram

NEEC1450

EC-BYPS/V-01

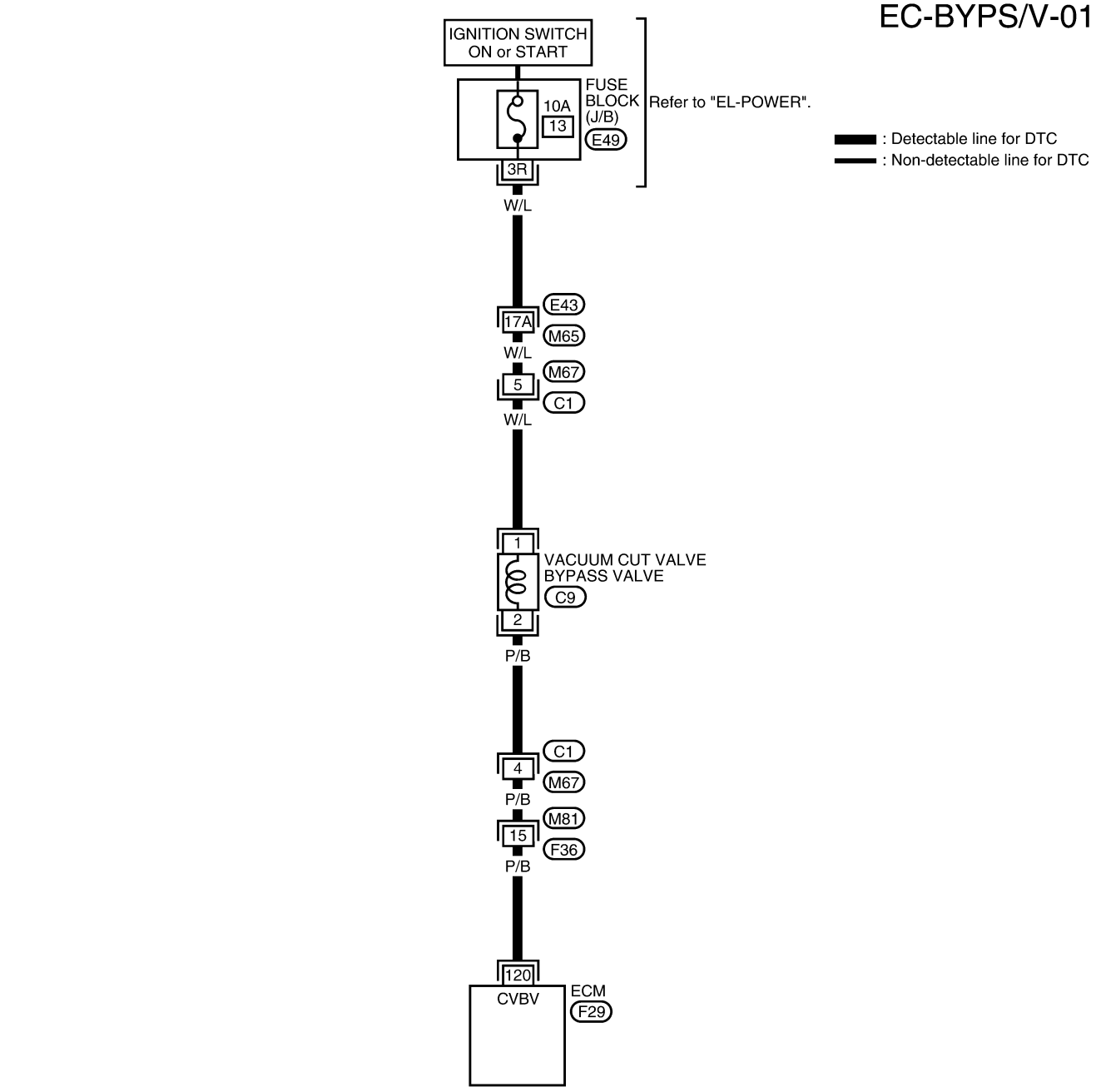

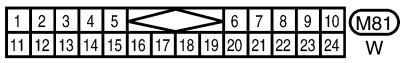



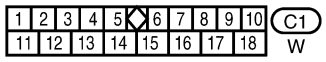



Refer to the following.
M65 , E43 - SUPER MULTIPLE JUNCTION (SMJ)

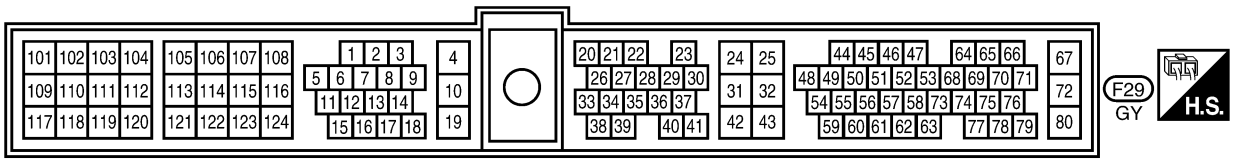

LEC815

Diagnostic Procedure

NEEC1451

1	INSPECTION START

Do you have CONSULT-II?

Yes or No

Yes	▶	GO TO 2.
No	▶	GO TO 3.

2	CHECK VACUUM CUT VALVE BYPASS VALVE OPERATION

With CONSULT-II

1. Turn ignition switch OFF.
2. Remove vacuum cut valve and vacuum cut valve bypass valve as an assembly.
3. Apply vacuum to port A and check that there is no suction from port B.
4. Apply vacuum to port B and check that there is suction from port A.
5. Blow air in port B and check that there is a resistance to flow out of port A.
6. Turn ignition switch ON.
7. Select “VC/V BYPASS/V” in “ACTIVE TEST” mode with CONSULT-II and touch “ON”.
8. Blow air in port A and check that air flows freely out of port B.
9. Blow air in port B and check that air flows freely out of port A.

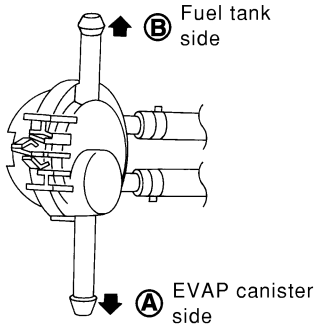

ACTIVE TEST	
VC/V BYPASS/V	OFF
MONITOR	
ENG SPEED	XXX rpm
A/F ALPHA-B1	XXX %
A/F ALPHA-B2	XXX %
HO2S1 MNTR (B1)	LEAN
HO2S1 MNTR (B2)	LEAN
THRTL POS SEN	XXX V

SEF017Z

OK or NG

OK	▶	GO TO 4.
NG	▶	GO TO 5.

Diagnostic Procedure (Cont'd)

3	CHECK VACUUM CUT VALVE BYPASS VALVE OPERATION

Without CONSULT-II

1. Turn ignition switch OFF.
2. Remove vacuum cut valve and vacuum cut valve bypass valve as an assembly.
3. Apply vacuum to port A and check that there is no suction from port B.
4. Apply vacuum to port B and check that there is suction from port A.
5. Blow air in port B and check that there is a resistance to flow out of port A.
6. Disconnect vacuum cut valve bypass valve harness connector.
7. Supply battery voltage to the terminal.
8. Blow air in port A and check that air flows freely out of port B.
9. Blow air in port B and check that air flows freely out of port A.

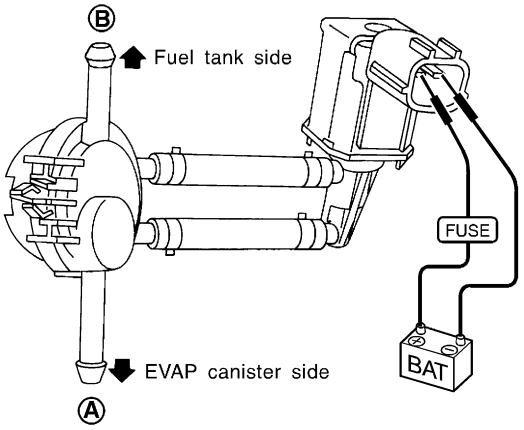

SEF914U

OK or NG

OK	▶	GO TO 4.
NG	▶	GO TO 5.

4	CHECK EVAP PURGE LINE

1. Check EVAP purge line between EVAP canister and fuel tank for clogging or disconnection.
2. Check EVAP purge port of fuel tank for clogging.
3. Check EVAP canister. Refer to EC-1242.

OK or NG

OK	▶	GO TO 8.
NG (Step 1)	▶	Repair it.
NG (Step 2)	▶	Clean EVAP purge port.
NG (Step 3)	▶	Replace EVAP canister.

5	CHECK BYPASS HOSE

Check bypass hoses for clogging.

OK or NG

OK	▶	GO TO 6.
NG	▶	Repair or replace hoses.

6	CHECK VACUUM CUT VALVE BYPASS VALVE

With CONSULT-II

1. Perform "VC/V BYPASS/V" in "ACTIVE TEST" mode.
2. Check air passage continuity and operation delay time under the following conditions.

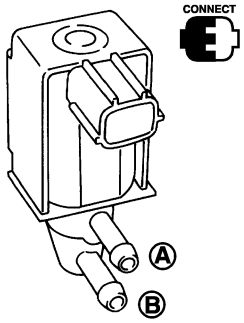

ACTIVE TEST	
VC/V BYPASS/V	OFF
MONITOR	
ENG SPEED	XXX rpm
A/F ALPHA-B1	XXX %
A/F ALPHA-B2	XXX %
HO2S1 MNTR (B1)	LEAN
HO2S1 MNTR (B2)	LEAN
THRTL POS SEN	XXX V

Condition VC/V BYPASS/V	Air passage continuity between A and B
ON	Yes
OFF	No

Operation takes less than 1 second.

SEF016Z

1. Check air passage continuity and operation delay time under the following conditions.

Without CONSULT-II

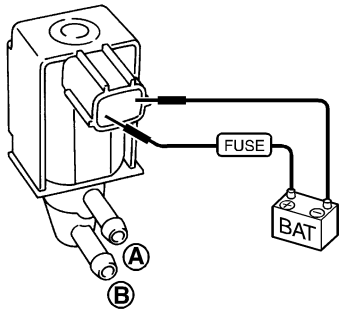

Condition	Air passage continuity between A and B
12V direct current supply between terminals 1 and 2	Yes
No supply	No

Operation takes less than 1 second.

SEF557Y

OK or NG

OK	▶	GO TO 7.
NG	▶	Replace vacuum cut valve bypass valve.

Diagnostic Procedure (Cont'd)

7	CHECK VACUUM CUT VALVE

Check vacuum cut valve as follows:

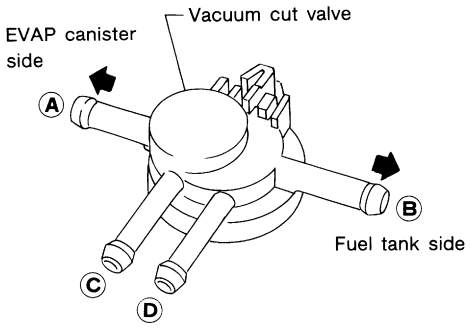

SEF379Q

1. Plug port **C** and **D** with fingers.
2. Apply vacuum to port **A** and check that there is no suction from port **B**.
3. Apply vacuum to port **B** and check that there is suction from port **A**.
4. Blow air in port **B** and check that there is a resistance to flow out of port **A**.
5. Open port **C** and **D**.
6. Blow air in port **A** check that air flows freely out of port **C**.
7. Blow air in port **B** check that air flows freely out of port **D**.

OK or NG

OK	▶	GO TO 8.
NG	▶	Replace vacuum cut valve.

8	CHECK EVAP CONTROL SYSTEM PRESSURE SENSOR HOSE

1. Turn ignition switch OFF.
2. Check disconnection or improper connection of hose connected to EVAP control system pressure sensor.

OK or NG

OK	▶	GO TO 9.
NG	▶	Repair it

9	CHECK EVAP CONTROL SYSTEM PRESSURE SENSOR CONNECTOR

1. Disconnect EVAP control system pressure sensor harness connector.

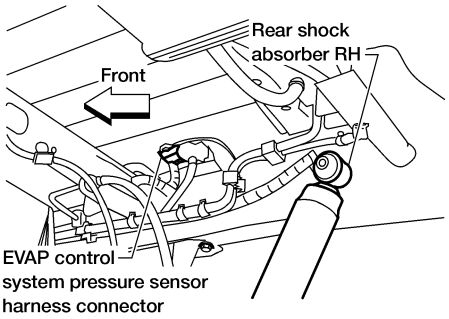

AEC651A

2. Check connectors for water.
   Water should not exist.

OK or NG

OK	▶	GO TO 10.
NG	▶	Replace EVAP control system pressure sensor.

10	CHECK EVAP CONTROL SYSTEM PRESSURE SENSOR FUNCTION

Refer to "DTC Confirmation Procedure" for DTC P0450, EC-1606.

OK or NG

OK	▶	GO TO 11.
NG	▶	Replace EVAP control system pressure sensor.

11	CHECK EVAP CANISTER VENT CONTROL VALVE

Check air passage continuity.

With CONSULT-II

Perform "VENT CONTROL/V" in "ACTIVE TEST" mode.

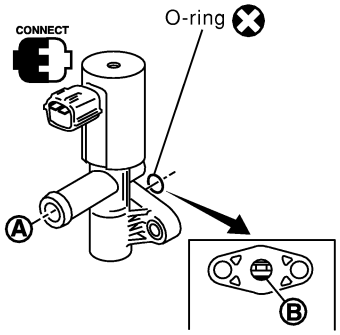

ACTIVE TEST	
VENT CONTROL/V	OFF
MONITOR	
ENG SPEED	XXX rpm
A/F ALPHA-B1	XXX %
A/F ALPHA-B2	XXX %
HO2S1 (B1)	XXX V
HO2S1 (B2)	XXX V
THRTL POS SEN	XXX V

Condition VENT CONTROL/V	Air passage continuity between A and B
ON	No
OFF	Yes

Operation takes less than 1 second.

SEF991Y

Without CONSULT-II

Condition	Air passage continuity between A and B
12V direct current supply between terminals 1 and 2	No
OFF	Yes

MTBL0240

If NG or operation takes more than 1 second, clean valve using air blower or replace as necessary.

If portion **B** is rusted, replace control valve.

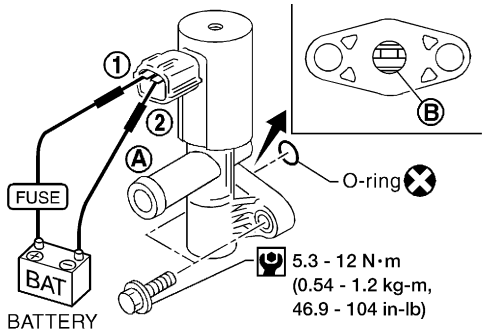

AEC783A

Make sure new O-ring is installed properly.

OK or NG

OK	▶	GO TO 12.
NG	▶	Replace EVAP canister vent control valve.

12	CHECK INTERMITTENT INCIDENT

Refer to "TROUBLE DIAGNOSIS FOR INTERMITTENT INCIDENT", EC-1353.

	▶	**INSPECTION END**

Component Description

NEEC1452

The malfunction information related to A/T (Automatic Transmission) is transferred through the line (circuit) from TCM (Transmission control module) to ECM. Therefore, be sure to erase the malfunction information such as DTC not only in TCM (Transmission control module) but also ECM after the A/T related repair.

ECM Terminals and Reference Value

NEEC1453

Specification data are reference values and are measured between each terminal and ground.

CAUTION:

Do not use ECM ground terminals when measuring input/output voltage. Doing so may result in damage to the ECM's transistor. Use a ground other than the ECM terminals, such as the ground.

TERMINAL NO.	WIRE COLOR	ITEM	CONDITION	DATA (DC Voltage)
7	G/B	A/T check signal	**[Ignition switch ON]** **[Engine is running]**	0 - 3.0V

On Board Diagnosis Logic

NEEC1454

Malfunction is detected when an incorrect signal from TCM (Transmission control module) is sent to ECM.

POSSIBLE CAUSE

NEEC1454S01

- Harness or connectors
  [The communication line circuit between ECM and TCM (Transmission control module) is open or shorted.]
- Dead (Weak) battery
- TCM (Transmission control module)

3

ACTIVE TEST	
PURG VOL CONT/V	0.0%
MONITOR	
ENG SPEED	XXX rpm
A/F ALPHA-B1	XXX %
A/F ALPHA-B2	XXX %
HO2S1 MNTR (B1)	RICH
HO2S1 MNTR (B2)	RICH
THRTL POS SEN	XXX V

SEF985Y

DTC Confirmation Procedure

NEEC1455

NOTE:

If "DTC Confirmation Procedure" has been previously conducted, always turn ignition switch OFF and wait at least 5 seconds before conducting the next test.

TESTING CONDITION:

Before performing the following procedure, confirm that battery voltage is more than 10.5V at idle.

With CONSULT-II

1) Turn ignition switch ON.
2) Select "DATA MONITOR" mode with CONSULT-II.
3) Start engine and wait at least 40 seconds.
4) If 1st trip DTC is detected, go to "Diagnostic Procedure", EC-1776.

With GST

Follow the procedure "With CONSULT-II".

Wiring Diagram

NEEC1456

EC-ATDIAG-01

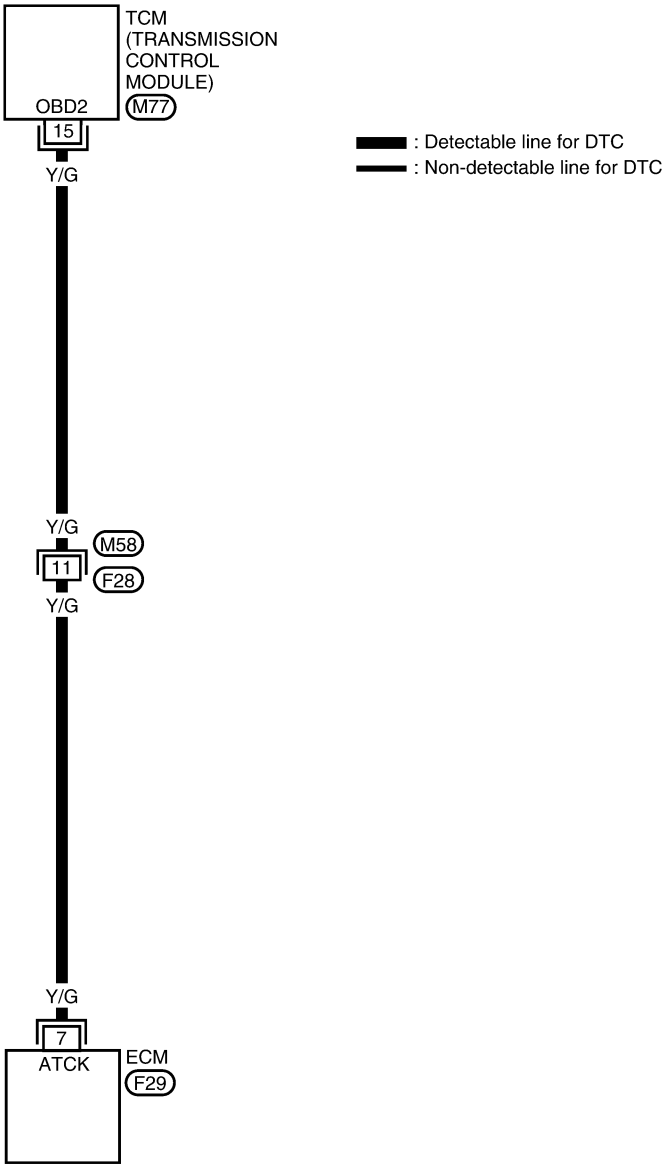

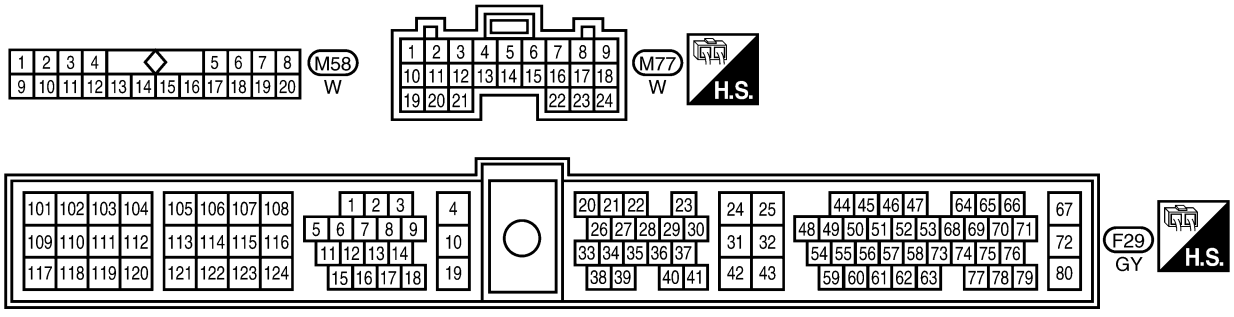

LEC674

Diagnostic Procedure

NEEC1457

1	CHECK A/T DIAGNOSIS COMMUNICATION LINE INPUT SIGNAL CIRCUIT FOR OPEN AND SHORT

1. Turn ignition switch OFF.
2. Disconnect ECM harness connector and TCM (Transmission Control Module) harness connector.

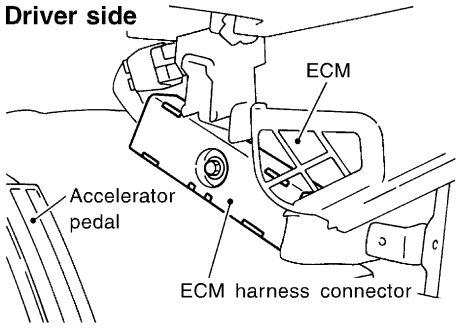

SEF324V

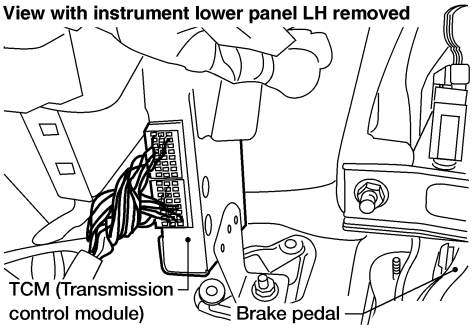

AEC655A

3. Check harness continuity between ECM terminal 7 and TCM terminal 15. Refer to Wiring Diagram.
   Continuity should exist.
4. Also check harness for short to ground and short to power.

OK or NG

OK	▶	GO TO 3.
NG	▶	GO TO 2.

2	DETECT MALFUNCTIONING PART

Check the following.
- Harness connectors M58, F28
- Harness for open or short between ECM and TCM (Transmission Control Module)

	▶	Repair open circuit or short to ground or short to power in harness or connectors.

3	CHECK INTERMITTENT INCIDENT

Refer to “TROUBLE DIAGNOSIS FOR INTERMITTENT INCIDENT”, EC-1353.

	▶	**INSPECTION END**

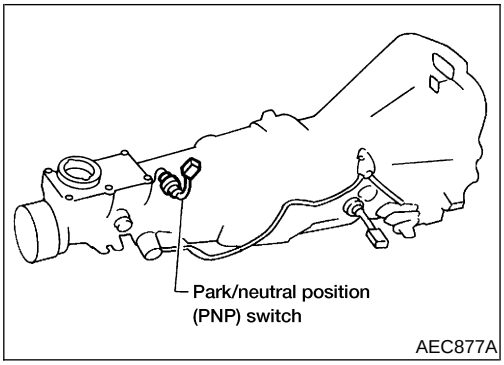

Component Description

NEEC1458

When the gear position is “P” (A/T models only) or “N”, park/neutral position (PNP) switch is “ON”.
ECM detects the position because the continuity of the line (the “ON” signal) exists.
For A/T models, the park/neutral position (PNP) switch assembly also includes a transmission range switch to detect selector lever position.

CONSULT-II Reference Value in Data Monitor Mode

NEEC1459

Specification data are reference values.

MONITOR ITEM	CONDITION		SPECIFICATION
P/N POSI SW	• Ignition switch: ON	Shift lever: “P” or “N”	ON
		Except above	OFF

ECM Terminals and Reference Value

NEEC1460

Specification data are reference values and are measured between each terminal and ground.

CAUTION:
Do not use ECM ground terminals when measuring input/output voltage. Doing so may result in damage to the ECM’s transistor. Use a ground other than the ECM terminals, such as the ground.

TERMINAL NO.	WIRE COLOR	ITEM	CONDITION	DATA (DC Voltage)
22	L/B	Park/neutral position (PNP) switch	**[Ignition switch ON]** • Gear position is “N” or “P” (A/T models) • Gear position is neutral (M/T models)	Approximately 0V
			[Ignition switch ON] • Except the above gear position	Approximately 5V

On Board Diagnosis Logic

NEEC1461

Malfunction is detected when the signal of the park/neutral position (PNP) switch is not changed in the process of engine starting and driving.

POSSIBLE CAUSE

NEEC1461S01

- Harness or connectors
  [The park/neutral position (PNP) switch circuit is open or shorted.]
- Park/neutral position (PNP) switch

DTC Confirmation Procedure

NEEC1462

CAUTION:
Always drive vehicle at a safe speed.

NOTE:
If "DTC Confirmation Procedure" has been previously conducted, always turn ignition switch OFF and wait at least 5 seconds before conducting the next test.

2

DATA MONITOR	
MONITOR	NO DTC
P/N POSI SW	ON

SEF212Y

5

DATA MONITOR	
MONITOR	NO DTC
ENG SPEED	XXX rpm
COOLAN TEMP/S	XXX °C
VHCL SPEED SE	XXX km/h
P/N POSI SW	OFF
B/FUEL SCHDL	XXX msec

SEF213Y

With CONSULT-II

1) Turn ignition switch ON.
2) Select "P/N POSI SW" in "DATA MONITOR" mode with CONSULT-II. Then check the "P/N POSI SW" signal under the following conditions.

Position (Selector lever)	Known good signal
"N" and "P" position	ON
Except the above position	OFF

If NG, go to "Diagnostic Procedure", EC-1781.
If OK, go to following step.

3) Select "DATA MONITOR" mode with CONSULT-II.
4) Start engine and warm it up to normal operating temperature.
5) Maintain the following conditions for at least 60 consecutive seconds.

ENG SPEED	1,400 - 2,700 rpm
COOLAN TEMP/S	More than 70°C (158°F)
B/FUEL SCHDL	2.0 - 14.0 msec
VHCL SPEED SE	More than 64 km/h (40 MPH)
Selector lever	Suitable position

6) If 1st trip DTC is detected, go to "Diagnostic Procedure", EC-1781.

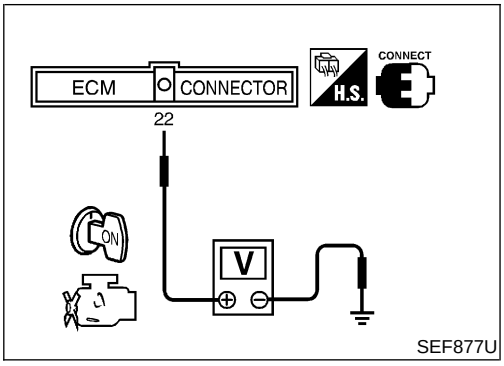

Overall Function Check

=NEEC1463

Use this procedure to check the overall function of the park/neutral position (PNP) switch circuit. During this check, a 1st trip DTC might not be confirmed.

Without CONSULT-II

1) Turn ignition switch ON.
2) Check voltage between ECM terminal 22 and body ground under the following conditions.

Condition (Gear position)	Voltage (V) (Known good data)
"P" and "N" position	Approx. 0
Except the above position	Approx. 5

3) If NG, go to "Diagnostic Procedure", EC-1781.

Wiring Diagram

NEEC1464

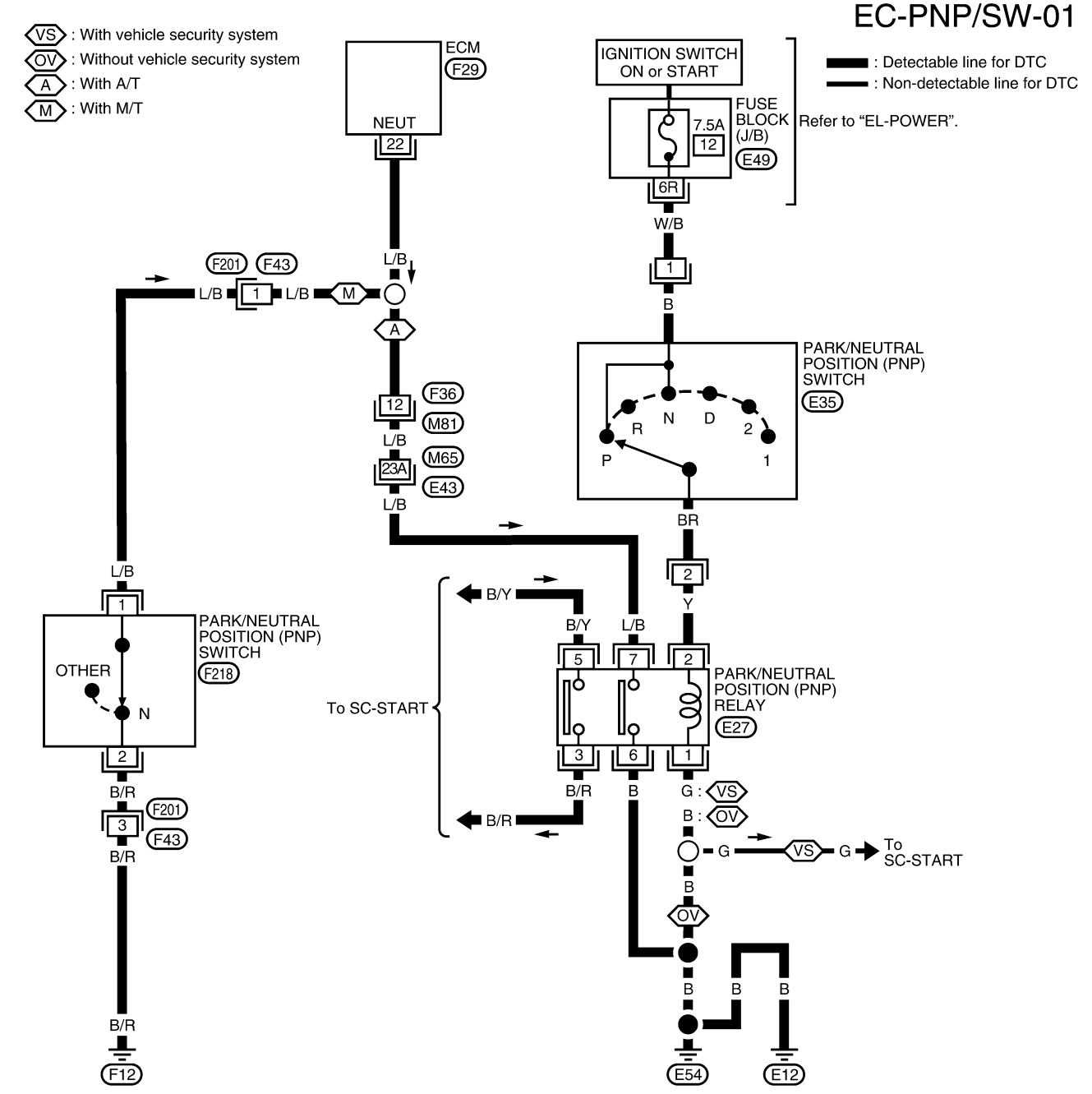

LEC675

Diagnostic Procedure

NEEC1465

FOR M/T MODELS

NEEC1465S01

1	CHECK PNP SWITCH GROUND CIRCUIT FOR OPEN AND SHORT

1. Turn ignition switch OFF.
2. Disconnect park/neutral position (PNP) switch harness connector.

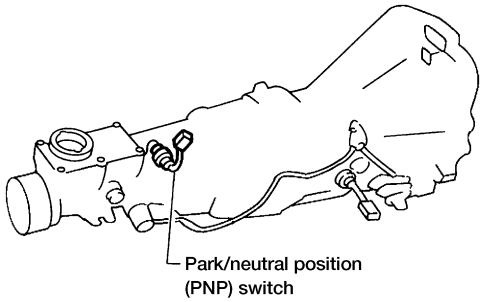

AEC877A

3. Check harness continuity between PNP switch terminal 2 and engine ground. Refer to Wiring Diagram.
   Continuity should exist.
4. Also check harness for short to power.

OK or NG

OK	▶	GO TO 3.
NG	▶	GO TO 2.

2	DETECT MALFUNCTIONING PART

Check the following.
- Harness connectors F201, F43
- Harness for open between park/neutral position (PNP) switch and engine ground

	▶	Repair open circuit or short to power in harness or connectors.

3	CHECK PNP SWITCH INPUT SIGNAL CIRCUIT FOR OPEN AND SHORT

1. Disconnect ECM harness connector.
2. Check harness continuity between ECM terminal 22 and PNP switch terminal 1. Refer to Wiring Diagram.
   Continuity should exist.
3. Also check harness for short to ground and short to power.

OK or NG

OK	▶	GO TO 5.
NG	▶	GO TO 4.

4	DETECT MALFUNCTIONING PART

Check the following.
- Harness connectors F43, F201
- Harness for open or short between ECM and park/neutral position (PNP) switch

	▶	Repair open circuit or short to ground or short to power in harness or connectors.

5	CHECK PARK/NEUTRAL POSITION (PNP) SWITCH

Refer to ***MT-40***, “Position Switch Check”.

OK or NG

OK	▶	GO TO 6.
NG	▶	Replace park/neutral position (PNP) switch.

Diagnostic Procedure (Cont'd)

6	**CHECK INTERMITTENT INCIDENT**
Refer to "TROUBLE DIAGNOSIS FOR INTERMITTENT INCIDENT", EC-1353.	
▶	**INSPECTION END**

FOR A/T MODELS

=NEEC1465S02

1	CHECK PNP SWITCH POWER SUPPLY CIRCUIT-I

1. Turn ignition switch OFF.
2. Disconnect park/neutral position (PNP) relay.
3. Turn ignition switch ON.
4. Shift selector lever to "P" or "N" position.
5. Check voltage between PNP relay terminal 2 and ground with CONSULT-II or tester.

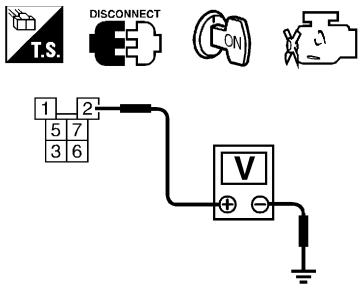

SEF661W

Voltage: Battery voltage

OK or NG

OK	▶	GO TO 6.
NG	▶	GO TO 2.

2	CHECK PNP SWITCH POWER SUPPLY CIRCUIT-II

1. Turn ignition switch OFF.
2. Disconnect park/neutral position (PNP) switch harness connector.

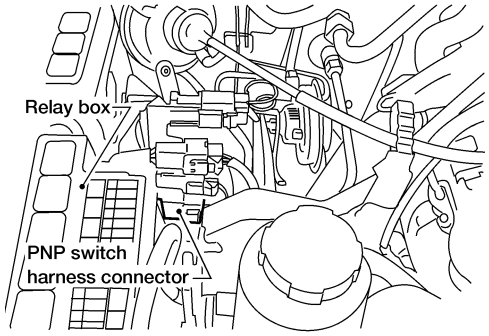

AEC662A

3. Check harness continuity between PNP switch terminal 2 and PNP relay terminal 2. Refer to Wiring Diagram.
   Continuity should exist.
4. Also check harness for short to ground and short to power.

OK or NG

OK	▶	GO TO 3.
NG	▶	Repair open circuit or short to ground or short to power in harness or connectors.

3	CHECK PNP SWITCH POWER SUPPLY CIRCUIT-III

1. Turn ignition switch ON.
2. Check voltage between PNP switch terminal 1 and ground with CONSULT-II or tester. Refer to Wiring Diagram.
   Voltage: Battery voltage

OK or NG

OK	▶	GO TO 5.
NG	▶	GO TO 4.

Diagnostic Procedure (Cont'd)

4	DETECT MALFUNCTIONING PART
Check the following. ● Fuse block (J/B) connector E49 ● 7.5A fuse ● Harness for open or short between PNP switch and fuse	
▶	Repair open circuit or short to ground or short to power in harness or connectors.

5	CHECK PARK/NEUTRAL POSITION (PNP) SWITCH
Refer to ***AT-254***, "Component Inspection".	
OK or NG	
OK ▶	GO TO 11.
NG ▶	Replace park/neutral position (PNP) switch.

6	CHECK PNP RELAY GROUND CIRCUIT FOR OPEN AND SHORT
1. Turn ignition switch OFF. 2. Check harness continuity between PNP relay terminals 1, 6 and body ground. Refer to Wiring Diagram. **Continuity should exist.** 3. Also check harness for short to power.	
OK or NG	
OK ▶	GO TO 8.
NG (With theft warning system) ▶	GO TO 7.
NG (Without theft warning system) ▶	Repair open circuit or short to power in harness or connectors.

7	DETECT MALFUNCTIONING PART
Check the circuit between PNP relay and body ground. Refer to "STARTING SYSTEM", ***SC-10***.	
OK or NG	
OK ▶	GO TO 11.
NG ▶	Repair or replace.

8	CHECK PNP RELAY INPUT SIGNAL CIRCUIT FOR OPEN AND SHORT
1. Disconnect ECM harness connector. 2. Check harness continuity between ECM terminal 22 and PNP relay terminal 7. Refer to Wiring Diagram. **Continuity should exist.** 3. Also check harness for short to ground and short to power.	
OK or NG	
OK ▶	GO TO 10.
NG ▶	GO TO 9.

9	DETECT MALFUNCTIONING PART
Check the following. ● Harness connectors F36, M81 ● Harness connectors M65, E43 ● Harness for open or short between ECM and park/neutral position (PNP) relay	
▶	Repair open circuit or short to ground or short to power in harness or connectors.

10	CHECK PARK/NEUTRAL POSITION (PNP) RELAY

1. Apply 12V direct current between park/neutral position (PNP) relay terminals 1 and 2.
2. Check continuity between park/neutral position (PNP) relay terminals 3 and 5, 6 and 7.

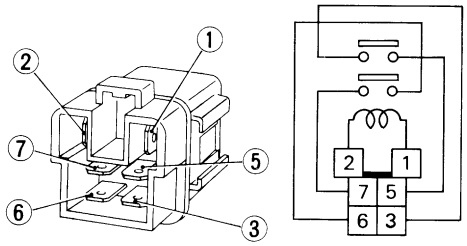

SEC202B

12V (1 and 2) applied: Continuity should exist.
No voltage applied: Continuity should not exist.

OK or NG

OK	▶	GO TO 11.
NG	▶	Replace park/neutral position (PNP) relay.

11	CHECK INTERMITTENT INCIDENT
Refer to "TROUBLE DIAGNOSIS FOR INTERMITTENT INCIDENT", EC-1353.	
▶	**INSPECTION END**

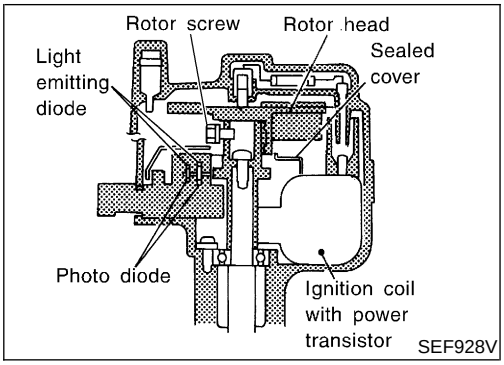

Component Description

NEEC1466

IGNITION COIL & POWER TRANSISTOR

NEEC1466S01

The power transistor switches on and off the ignition coil primary circuit according to the ECM signal. As the primary circuit is turned on and off, the proper high voltage is induced in the secondary circuit. The distributor is not repairable except for the distributor cap and rotor head.

NOTE:

The rotor screw which secures the distributor rotor head to the distributor shaft must be torqued properly.

: 3.6±0.3 N·m (37±3 kg-cm, 32±3 in-lb)

ECM Terminals and Reference Value

NEEC1467

Specification data are reference values and are measured between each terminal and ground.

CAUTION:

Do not use ECM ground terminals when measuring input/output voltage. Doing so may result in damage to the ECM's transistor. Use a ground other than the ECM terminals, such as the ground.

TERMINAL NO.	WIRE COLOR	ITEM	CONDITION	DATA (DC Voltage)
1	PU/W	Ignition signal	**[Engine is running]** ● Idle speed	Approximately 0.7V 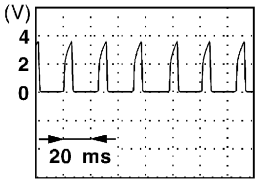 SEF988U
			[Engine is running] ● Engine speed is 2,000 rpm	1.1 - 1.5V 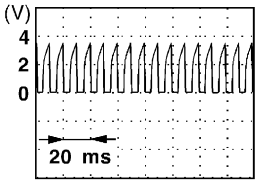 SEF989U

Wiring Diagram

NEEC1468

EC-IGNSYS-01

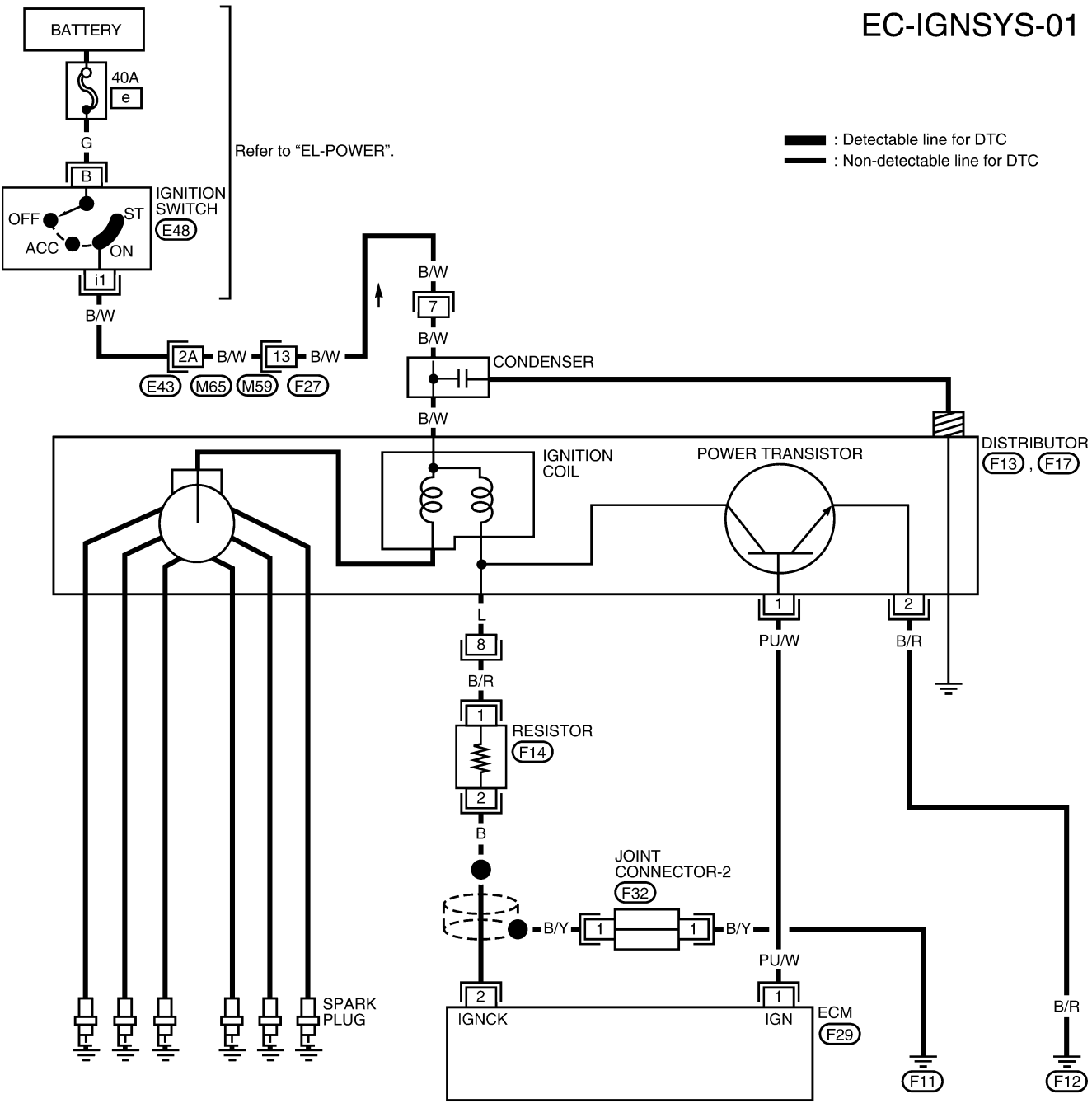

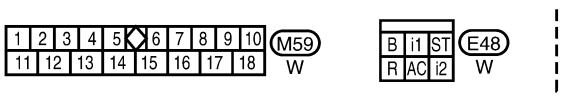

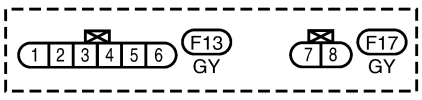

Refer to the following.
M65 , E43 - SUPER MULTIPLE JUNCTION (SMJ)

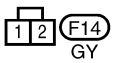

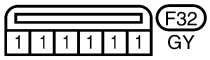

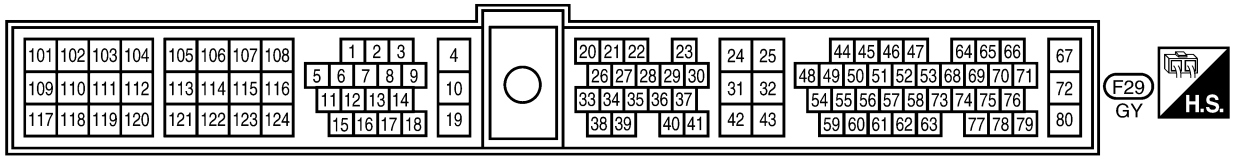

LEC816

Diagnostic Procedure

NEEC1469

1	INSPECTION START

Turn ignition switch “OFF”, and restart engine.
Is engine running?

Yes or No

Yes (With CONSULT-II)	▶	GO TO 2.
Yes (Without CONSULT-II)	▶	GO TO 3.
No	▶	GO TO 4.

2	CHECK OVERALL FUNCTION

With CONSULT-II
1. Perform “POWER BALANCE” in “ACTIVE TEST” mode with CONSULT-II.
2. Make sure that all circuits do not produce a momentary engine speed drop.

ACTIVE TEST	
POWER BALANCE	
MONITOR	
ENG SPEED	XXX rpm
MAS AIF SE-B1	XXX V
IACV-AAC/V	XXX step

SEF070Y

OK or NG

OK	▶	**INSPECTION END**
NG	▶	GO TO 4.

3	CHECK OVERALL FUNCTION

Without CONSULT-II
1. Let engine idle.
2. Read the voltage signal between ECM terminal 1 and ground with an oscilloscope.
3. Verify that the oscilloscope screen shows the signal wave as shown below.

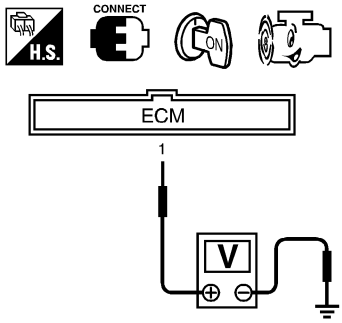

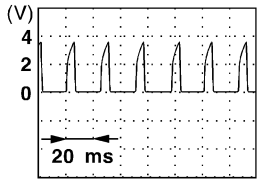

SEC073C

OK or NG

OK	▶	**INSPECTION END**
NG	▶	GO TO 4.

4	CHECK IGNITION COIL POWER SUPPLY CIRCUIT

1. Turn ignition switch OFF.
2. Disconnect ignition coil harness connector.

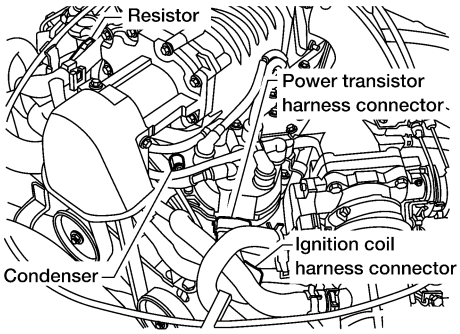

LEC811

3. Turn ignition switch ON.
4. Check voltage between terminal 7 and ground with CONSULT-II or tester.

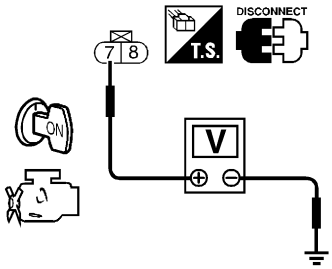

SEF721U

Voltage: Battery voltage

OK or NG

OK	▶	GO TO 6.
NG	▶	GO TO 5.

5	DETECT MALFUNCTIONING PART

Check the following.
- Harness connectors E43, M65
- Harness connectors M59, F27
- Harness for open or short between ignition coil and ignition switch

	▶	Repair harness or connectors.

6	CHECK POWER TRANSISTOR GROUND CIRCUIT FOR OPEN AND SHORT

1. Turn ignition switch OFF.
2. Disconnect power transistor harness connector.
3. Check harness continuity between power transistor terminal 2 and engine ground. Refer to Wiring Diagram.
   Continuity should exist.
4. Also check harness for short to power.

OK or NG

OK	▶	GO TO 7.
NG	▶	Repair open circuit or short to power in harness or connectors.

7	CHECK POWER TRANSISTOR OUTPUT SIGNAL CIRCUIT FOR OPEN AND SHORT

1. Disconnect ECM harness connector.
2. Check harness continuity between ECM terminal 1 and power transistor terminal 1. Refer to Wiring Diagram.
   Continuity should exist.
3. Also check harness for short to ground and short to power.

OK or NG

OK	▶	GO TO 8.
NG	▶	Repair open circuit or short to ground or short to power in harness or connectors.

8	CHECK IGNITION COIL

1. Disconnect ignition coil harness connector.
2. Check resistance as shown in the figure.

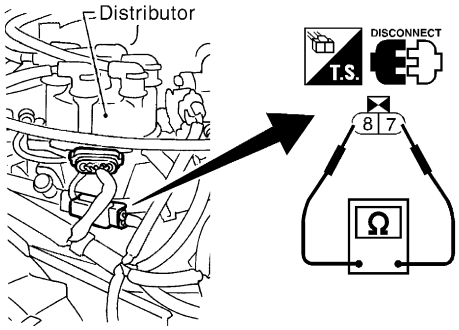

SEF013S

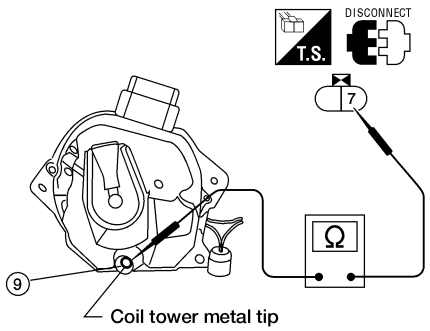

AEC657A

Terminal	Resistance [at 20°C (68°F)]
7 - 8 (Primary coil)	Approximately 1.0Ω
7 - 9 (Secondary coil)	Approximately 10 kΩ

MTBL0638

For checking secondary coil, remove distributor cap and measure resistance between coil tower metal tip 9 and terminal 7.

OK or NG

OK	▶	GO TO 9.
NG	▶	Replace distributor assembly.

9	CHECK POWER TRANSISTOR

1. Disconnect camshaft position sensor & power transistor harness connector and ignition coil harness connector.
2. Check power transistor resistance between terminals 2 and 8.

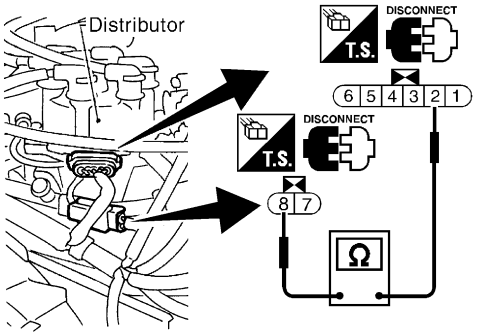

SEF015S

Terminals	Resistance	Result
2 and 8	Except 0Ω	OK
	0Ω	NG

MTBL0249

OK or NG

OK	▶	GO TO 10.
NG	▶	Replace distributor assembly.

10	CHECK INTERMITTENT INCIDENT

Refer to "TROUBLE DIAGNOSIS FOR INTERMITTENT INCIDENT", EC-1353.

▶ **INSPECTION END**

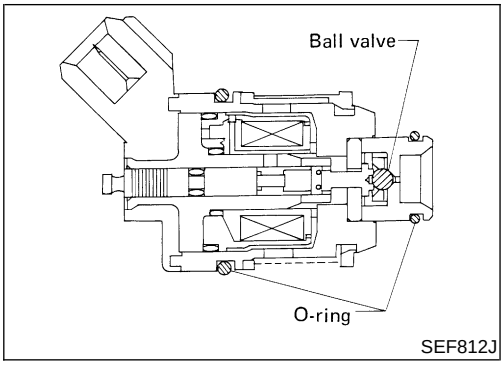

Component Description

NEEC1470

The fuel injector is a small, precise solenoid valve. When the ECM supplies a ground to the injector circuit, the coil in the injector is energized. The energized coil pulls the ball valve back and allows fuel to flow through the injector into the intake manifold. The amount of fuel injected depends upon the injection pulse duration. Pulse duration is the length of time the injector remains open. The ECM controls the injection pulse duration based on engine fuel needs.

CONSULT-II Reference Value in Data Monitor Mode

NEEC1471

Specification data are reference values.

MONITOR ITEM	CONDITION		SPECIFICATION
INJ PULSE-B1 INJ PULSE-B2	• Engine: After warming up • Air conditioner switch: “OFF” • Shift lever: “N” • No-load	Idle	2.4 - 3.7 msec
		2,000 rpm	1.9 - 3.3 msec
B/FUEL SCHDL	ditto	Idle	1.0 - 1.6 msec
		2,000 rpm	0.7 - 1.4 msec

ECM Terminals and Reference Value

NEEC1472

Specification data are reference values and are measured between each terminal and ground.

CAUTION:

Do not use ECM ground terminals when measuring input/output voltage. Doing so may result in damage to the ECM’s transistor. Use a ground other than the ECM terminals, such as the ground.

TERMINAL NO.	WIRE COLOR	ITEM	CONDITION	DATA (DC Voltage)
102 104 106 109 111 113	W/B W/R W/G W/L W/PU W	Injector No. 1 Injector No. 3 Injector No. 5 Injector No. 2 Injector No. 4 Injector No. 6	**[Engine is running]** • **Warm-up condition** • Idle speed	BATTERY VOLTAGE (11 - 14V) 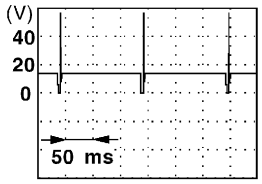 SEF007V
			[Engine is running] • **Warm-up condition** • Engine speed is 2,000 rpm	BATTERY VOLTAGE (11 - 14V) 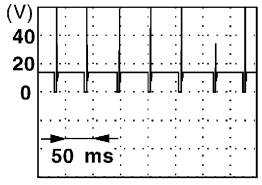 SEF008V

Wiring Diagram

NEEC1473

EC-INJECT-01

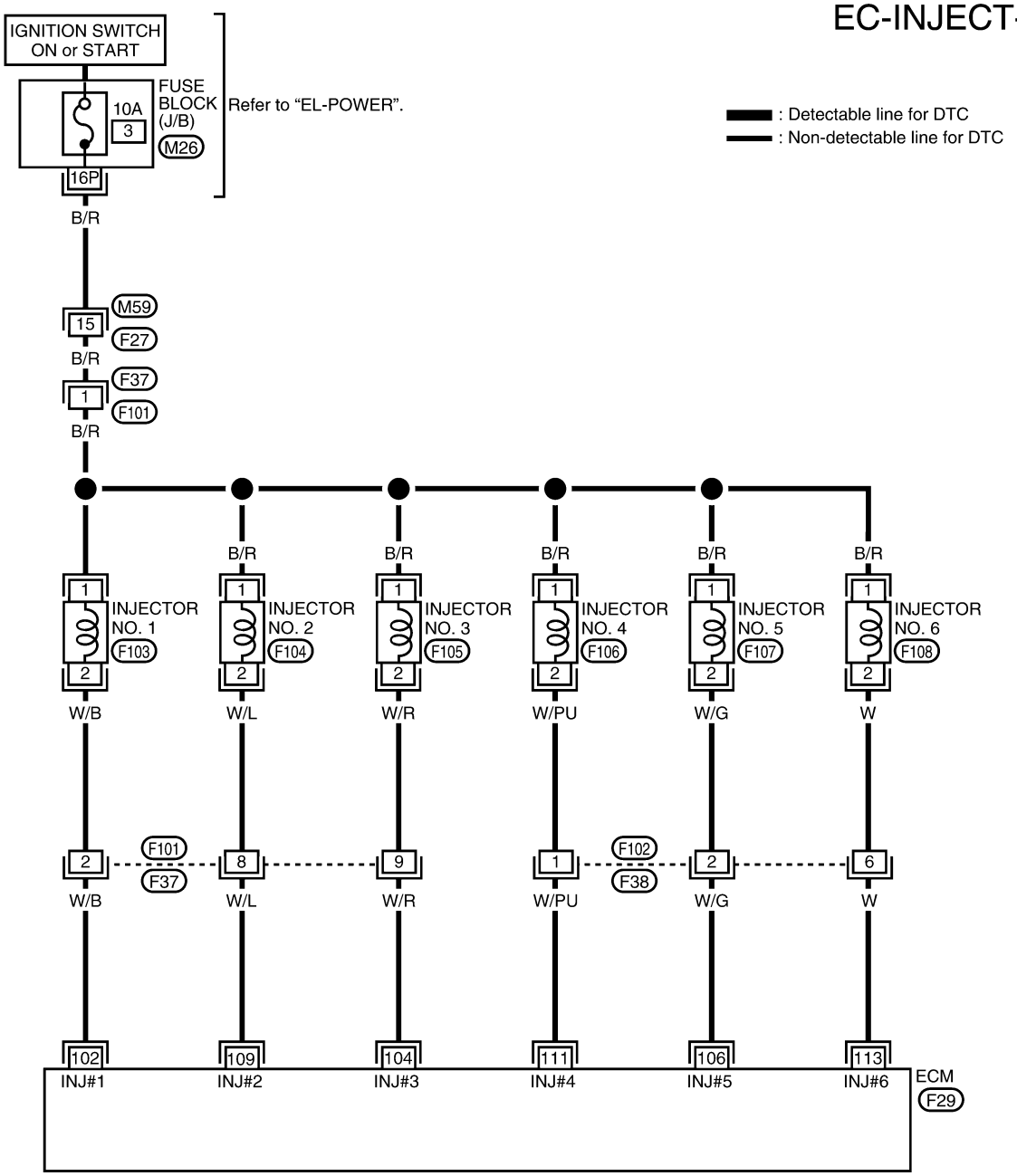

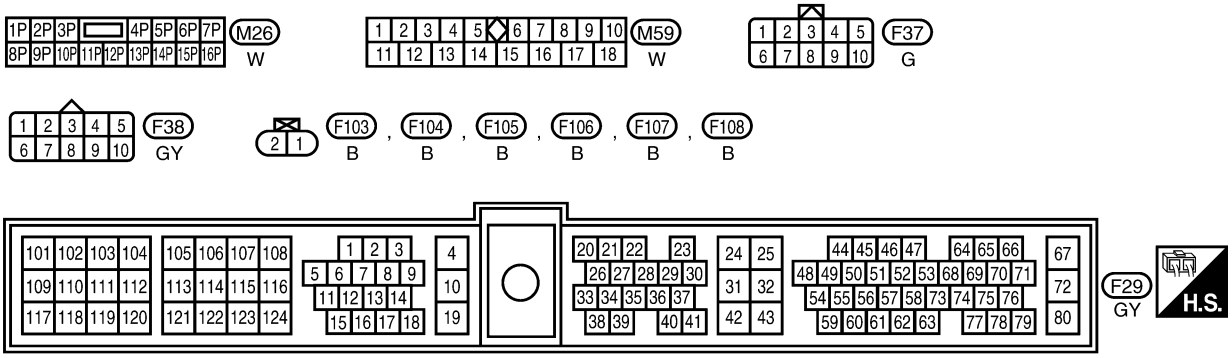

LEC676

Diagnostic Procedure

NEEC1474

1	INSPECTION START

Turn ignition switch to START.
Is any cylinder ignited?

Yes or No

Yes	▶	GO TO 2.
No	▶	GO TO 3.

2	CHECK OVERALL FUNCTION

With CONSULT-II
1. Start engine.
2. Perform “POWER BALANCE” in “ACTIVE TEST” mode with CONSULT-II.

ACTIVE TEST	
POWER BALANCE	
MONITOR	
ENG SPEED	XXX rpm
MAS AIF SE-B1	XXX V
IACV-AAC/V	XXX step

SEF070Y

3. Make sure that each circuit produces a momentary engine speed drop.

Without CONSULT-II
1. Start engine.
2. Listen to each injector operating sound.

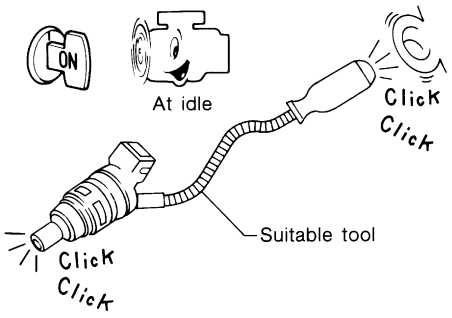

MEC703B

Clicking noise should be heard.

OK or NG

OK	▶	**INSPECTION END**
NG	▶	GO TO 3.

3	CHECK INJECTOR POWER SUPPLY CIRCUIT

1. Turn ignition switch OFF.
2. Disconnect injector harness connector.
3. Check voltage between terminal 1 and ground with CONSULT-II or tester.

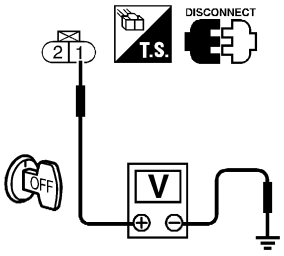

SEF671W

Voltage: Battery voltage

OK or NG

OK	▶	GO TO 5.
NG	▶	GO TO 4.

4	DETECT MALFUNCTIONING PART

Check the following.
- Harness connectors M59, F27
- Harness connectors F37, F101
- Fuse block (J/B) connector M26
- 10A fuse
- Harness for open or short between injector and fuse

	▶	Repair harness or connectors.

5	CHECK INJECTOR OUTPUT SIGNAL CIRCUIT FOR OPEN AND SHORT

1. Disconnect ECM harness connector.
2. Check harness continuity between injector terminal 2 and ECM terminals 102, 104, 106, 109, 111, 113. Refer to Wiring Diagram.
   Continuity should exist.
3. Also check harness for short to ground and short to power.

OK or NG

OK	▶	GO TO 7.
NG	▶	GO TO 6.

6	DETECT MALFUNCTIONING PART

Check the following.
- Harness connectors F37, F101
- Harness connectors F38, F102
- Harness for open or short between ECM and injector

	▶	Repair open circuit or short to ground or short to power in harness or connectors.

Diagnostic Procedure (Cont'd)

7	CHECK INJECTOR

1. Disconnect injector harness connector.
2. Check resistance between terminals as shown in the figure.

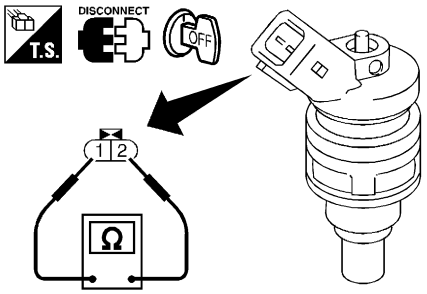

SEF625V

Resistance: 10 - 14Ω [at 25°C (77°F)]

OK or NG

OK	▶	GO TO 8.
NG	▶	Replace injector.

8	CHECK INTERMITTENT INCIDENT
Refer to "TROUBLE DIAGNOSIS FOR INTERMITTENT INCIDENT", EC-1353.	
▶	**INSPECTION END**

CONSULT-II Reference Value in Data Monitor Mode

NEEC1475

Specification data are reference values.

MONITOR ITEM	CONDITION	SPECIFICATION
START SIGNAL	● Ignition switch: ON → START → ON	OFF → ON → OFF

ECM Terminals and Reference Value

NEEC1476

Specification data are reference values and are measured between each terminal and ground.

CAUTION:

Do not use ECM ground terminals when measuring input/output voltage. Doing so may result in damage to the ECM's transistor. Use a ground other than the ECM terminals, such as the ground.

TERMINAL NO.	WIRE COLOR	ITEM	CONDITION	DATA (DC Voltage)
20	L/OR	Start signal	**[Ignition switch ON]**	Approximately 0V
			[Ignition switch START]	BATTERY VOLTAGE (11 - 14V)

Wiring Diagram

NEEC1477

EC-S/SIG-01

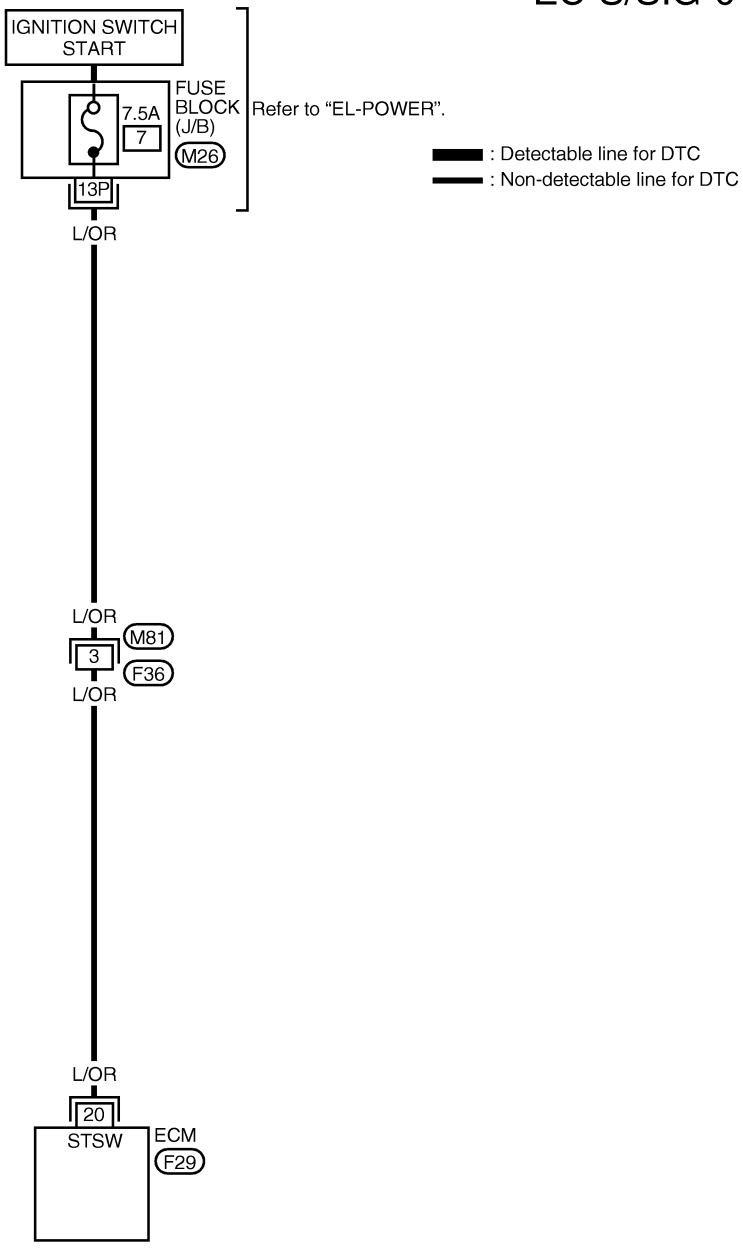



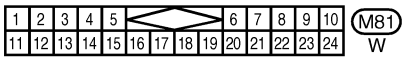

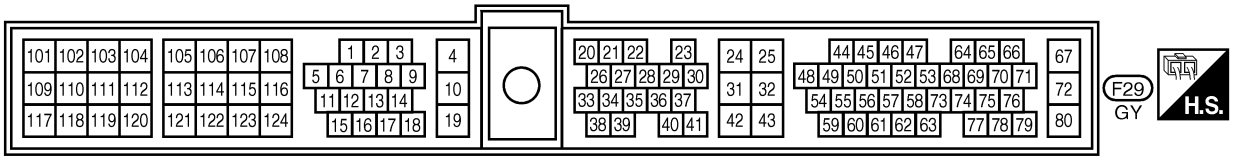

AEC975A

Diagnostic Procedure

NEEC1478

1	INSPECTION START

Do you have CONSULT-II?

Yes or No

Yes	▶	GO TO 2.
No	▶	GO TO 3.

2	CHECK OVERALL FUNCTION

With CONSULT-II

1. Turn ignition switch ON.
2. Check “START SIGNAL” in “DATA MONITOR” mode with CONSULT-II under the following conditions.

DATA MONITOR	
MONITOR	NO DTC
START SIGNAL	OFF
CLSD THL POS	ON
AIR COND SIG	OFF
P/N POSI SW	ON

Condition	“START SIGNAL”
Ignition switch “ON”	OFF
Ignition switch “START”	ON

SEF072Y

OK or NG

OK	▶	**INSPECTION END**
NG	▶	GO TO 4.

3	CHECK OVERALL FUNCTION

Without CONSULT-II

Check voltage between ECM terminal 20 and ground under the following conditions.

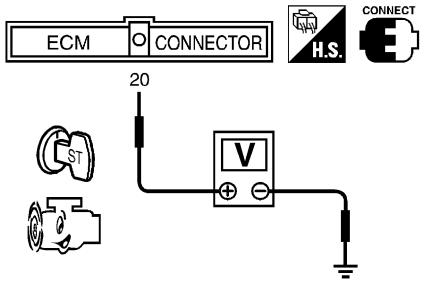

SEF733U

Condition	Voltage
Ignition switch “START”	Battery voltage
Other positions	Approximately 0V

MTBL0148

OK or NG

OK	▶	**INSPECTION END**
NG	▶	GO TO 4.

Diagnostic Procedure (Cont'd)

4	CHECK STARTING SYSTEM	
Turn ignition switch OFF, then turn it to START. **Does starter motor operate?**		
	Yes or No	
Yes	▶	GO TO 5.
No	▶	Refer to "STARTING SYSTEM", ***SC-10***.

5	CHECK FUSE	
1. Turn ignition switch OFF. 2. Disconnect 7.5A fuse. 3. Check if 7.5A fuse is OK.		
	OK or NG	
OK	▶	GO TO 6.
NG	▶	Replace 7.5A fuse.

6	CHECK START SIGNAL INPUT SIGNAL CIRCUIT FOR OPEN AND SHORT	
1. Disconnect ECM harness connector. 2. Check harness continuity between ECM terminal 20 and fuse block. Refer to Wiring Diagram. **Continuity should exist.** 3. Also check harness for short to ground and short to power.		
	OK or NG	
OK	▶	GO TO 8.
NG	▶	GO TO 7.

7	DETECT MALFUNCTIONING PART	
Check the following. ● Harness connectors M81, F36 ● Harness for open or short between ECM and fuse		
	▶	Repair open circuit or short to ground or short to power in harness or connectors.

8	CHECK INTERMITTENT INCIDENT	
Refer to "TROUBLE DIAGNOSIS FOR INTERMITTENT INCIDENT", EC-1353.		
	▶	**INSPECTION END**

System Description

NEEC1479

Sensor	Input Signal to ECM	ECM function	Actuator
Camshaft position sensor	Engine speed	Fuel pump control	Fuel pump relay
Ignition switch	Start signal		

The ECM activates the fuel pump for several seconds after the ignition switch is turned on to improve engine startability. If the ECM receives a 120° signal from the camshaft position sensor, it knows that the engine is rotating, and causes the pump to operate. If the 120° signal is not received when the ignition switch is on, the engine stalls. The ECM stops pump operation and prevents battery discharging, thereby improving safety. The ECM does not directly drive the fuel pump. It controls the ON/OFF fuel pump relay, which in turn controls the fuel pump.

Condition	Fuel pump operation
Ignition switch is turned to ON.	Operates for 5 seconds
Engine running and cranking	Operates
When engine is stopped	Stops in 1.5 seconds
Except as shown above	Stops

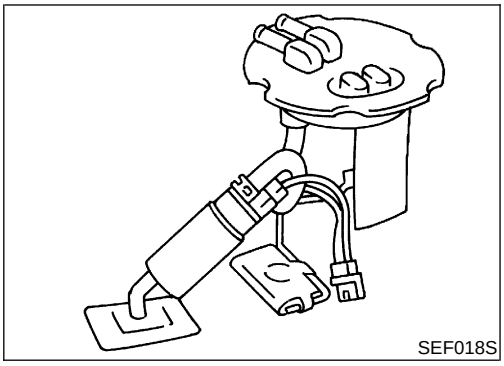
SEF018S

Component Description

NEEC1480

The fuel pump with a fuel damper is an in-tank type (the pump and damper are located in the fuel tank).

CONSULT-II Reference Value in Data Monitor Mode

NEEC1481

Specification data are reference values.

MONITOR ITEM	CONDITION	SPECIFICATION
FUEL PUMP RLY	• Ignition switch is turned to ON. (Operates for 5 seconds.) • Engine running and cranking	ON
	Except as shown above	OFF

ECM Terminals and Reference Value

=NEEC1482

Specification data are reference values and are measured between each terminal and ground.

CAUTION:

Do not use ECM ground terminals when measuring input/output voltage. Doing so may result in damage to the ECM's transistor. Use a ground other than the ECM terminals, such as the ground.

TERMINAL NO.	WIRE COLOR	ITEM	CONDITION	DATA (DC Voltage)
11	W/R	Fuel pump relay	**[Ignition switch ON]** ● For 5 seconds after turning ignition switch "ON" **[Engine is running]**	0 - 1V
			[Ignition switch ON] ● More than 5 seconds after turning ignition switch ON	BATTERY VOLTAGE (11 - 14V)

Wiring Diagram

NEEC1483

EC-F/PUMP-01

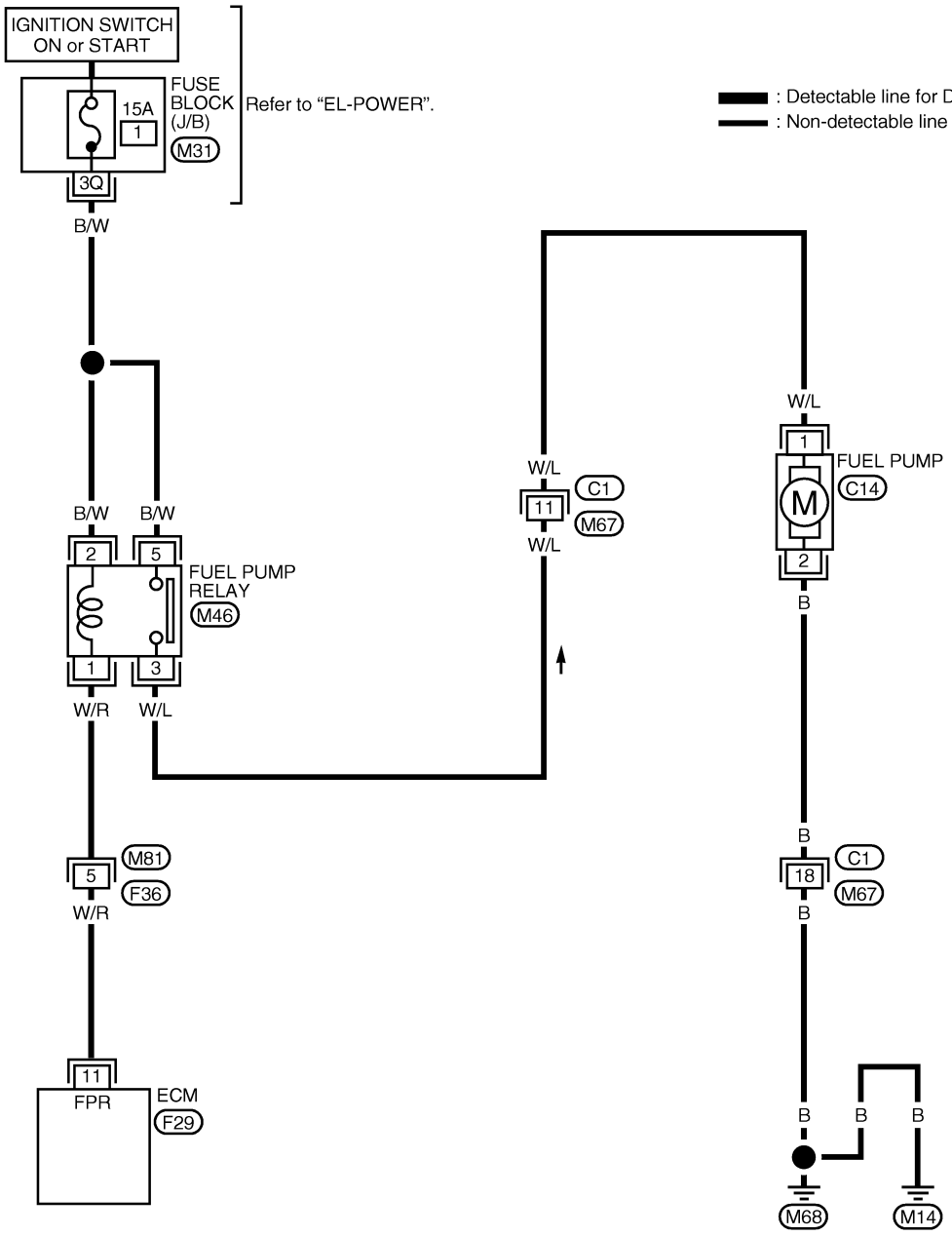

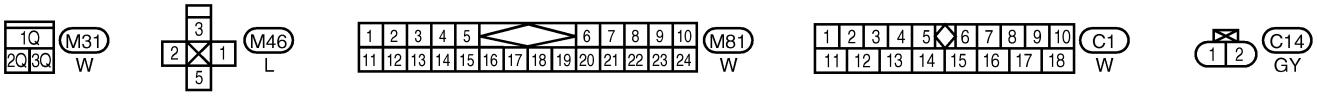

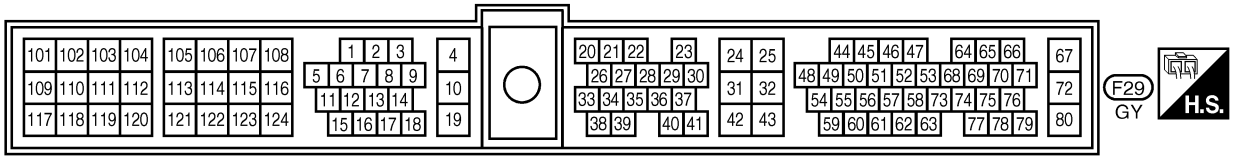

AEC020B

Diagnostic Procedure

NEEC1484

1	CHECK OVERALL FUNCTION

1. Turn ignition switch “ON”.
2. Pinch fuel feed hose with fingers.

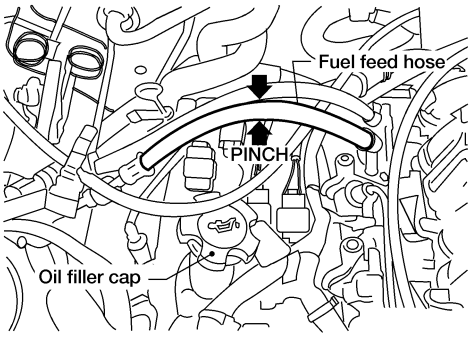

AEC663A

Fuel pressure pulsation should be felt on the fuel feed hose for 5 seconds after ignition switch is turned “ON”.

OK or NG

OK	▶	**INSPECTION END**
NG	▶	GO TO 2.

2	CHECK FUEL PUMP RELAY POWER SUPPLY CIRCUIT

1. Turn ignition switch “OFF”.
2. Disconnect fuel pump relay.

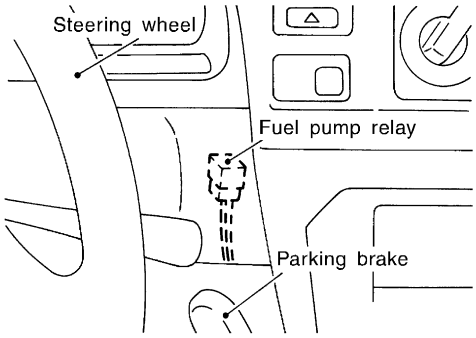

SEF349V

3. Turn ignition switch “ON”.
4. Check voltage between terminals 2, 5 and ground with CONSULT-II or tester.

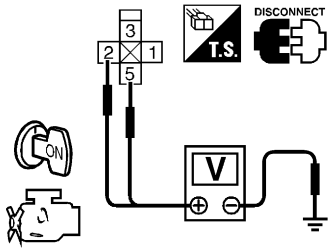

SEF674W

Voltage: Battery voltage

OK or NG

OK	▶	GO TO 4.
NG	▶	GO TO 3.

3	DETECT MALFUNCTIONING PART
Check the following. ● Fuse block (J/B) connector M31 ● 15A fuse ● Harness for open or short between fuse and fuel pump relay	
▶	Repair harness or connectors.

4	CHECK FUEL PUMP POWER SUPPLY AND GROUND CIRCUIT FOR OPEN AND SHORT

1. Turn ignition switch "OFF".
2. Disconnect fuel pump harness connector.

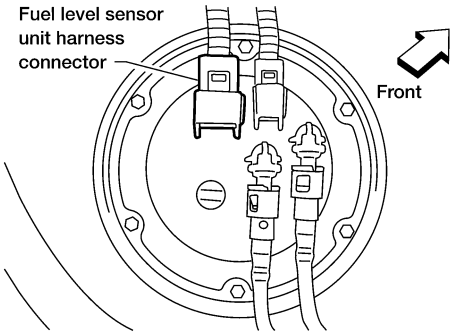

LEC764

3. Check harness continuity between fuel pump terminal 2 and body ground, fuel pump terminal 1 and fuel pump relay terminal 3. Refer to Wiring Diagram.
   Continuity should exist.
4. Also check harness for short to ground and short to power.

OK or NG

OK	▶	GO TO 6.
NG	▶	GO TO 5.

5	DETECT MALFUNCTIONING PART
Check the following. ● Harness connectors M67, C1 ● Harness for open or short between fuel pump and body ground ● Harness for open or short between fuel pump and fuel pump relay	
▶	Repair open circuit or short to ground or short to power in harness or connectors.

6	CHECK FUEL PUMP RELAY OUTPUT SIGNAL CIRCUIT FOR OPEN AND SHORT

1. Disconnect ECM harness connector.
2. Check harness continuity between ECM terminal 11 and fuel pump relay terminal 1. Refer to Wiring Diagram.
   Continuity should exist.
3. Also check harness for short to ground and short to power.

OK or NG

OK	▶	GO TO 8.
NG	▶	GO TO 7.

7	DETECT MALFUNCTIONING PART
Check the following. ● Harness connectors M81, F36 ● Harness for open or short between ECM and fuel pump relay	
▶	Repair open circuit or short to ground or short to power in harness or connectors.

Diagnostic Procedure (Cont'd)

8	CHECK FUEL PUMP RELAY

With CONSULT-II

1. Reconnect fuel pump relay, fuel pump harness connector and ECM harness connector.
2. Turn ignition switch "ON".
3. Turn fuel pump relay "ON" and "OFF" in "ACTIVE TEST" mode with CONSULT-II and check operating sound.

ACTIVE TEST	
FUEL PUMP RELAY	ON
MONITOR	
ENG SPEED	XXX rpm

SEF073Y

Without CONSULT-II

Check continuity between terminals 3 and 5.

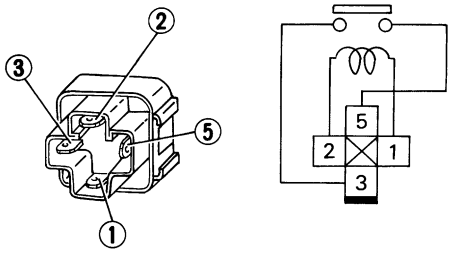

SEF511P

12V direct current supply between terminals 1 and 2
Continuity exists
No current supply
Continuity does not exist

OK or NG

OK	▶	GO TO 9.
NG	▶	Replace fuel pump relay.

9	CHECK FUEL PUMP

1. Disconnect fuel pump harness connector.
2. Check resistance between terminals 1 and 2.

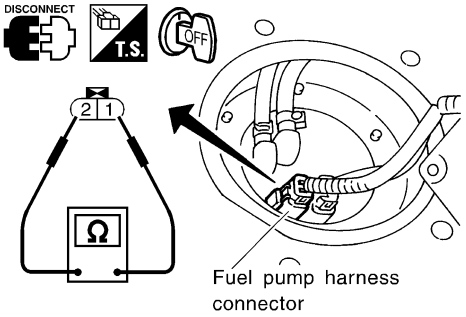

SEC316C

Resistance: 0.2 - 5.0Ω [at 25°C (77°F)]

OK or NG

OK	▶	GO TO 10.
NG	▶	Replace fuel pump.

10	CHECK INTERMITTENT INCIDENT
Refer to "TROUBLE DIAGNOSIS FOR INTERMITTENT INCIDENT", EC-1353.	
▶	**INSPECTION END**

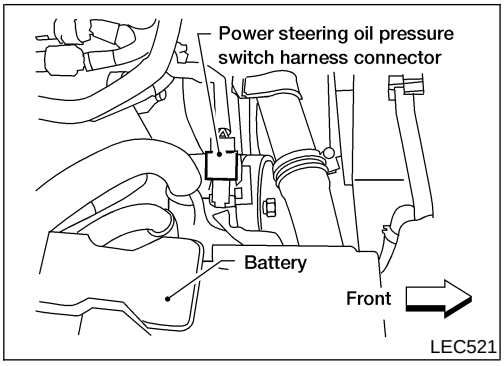

Component Description

NEEC1485

The power steering oil pressure switch is attached to the power steering high-pressure tube and detects a power steering load. When a power steering load is detected, it signals the ECM. The ECM adjusts the IACV-AAC valve to increase the idle speed and adjust for the increased load.

CONSULT-II Reference Value in Data Monitor Mode

NEEC1486

Specification data are reference values.

MONITOR ITEM	CONDITION		SPECIFICATION
PW/ST SIGNAL	● Engine: After warming up, idle the engine	Steering wheel in neutral position (forward direction)	OFF
		The steering wheel is fully turned.	ON

ECM Terminals and Reference Value

NEEC1487

Specification data are reference values and are measured between each terminal and ground.

CAUTION:

Do not use ECM ground terminals when measuring input/output voltage. Doing so may result in damage to the ECM's transistor. Use a ground other than the ECM terminals, such as the ground.

TERMINAL NO.	WIRE COLOR	ITEM	CONDITION	DATA (DC Voltage)
39	GY/R	Power steering oil pressure switch	**[Engine is running]** ● Steering wheel is being fully turned	0V
			[Engine is running] ● Steering wheel is not being turned	Approximately 5V

Wiring Diagram

NEEC1488

EC-PST/SW-01

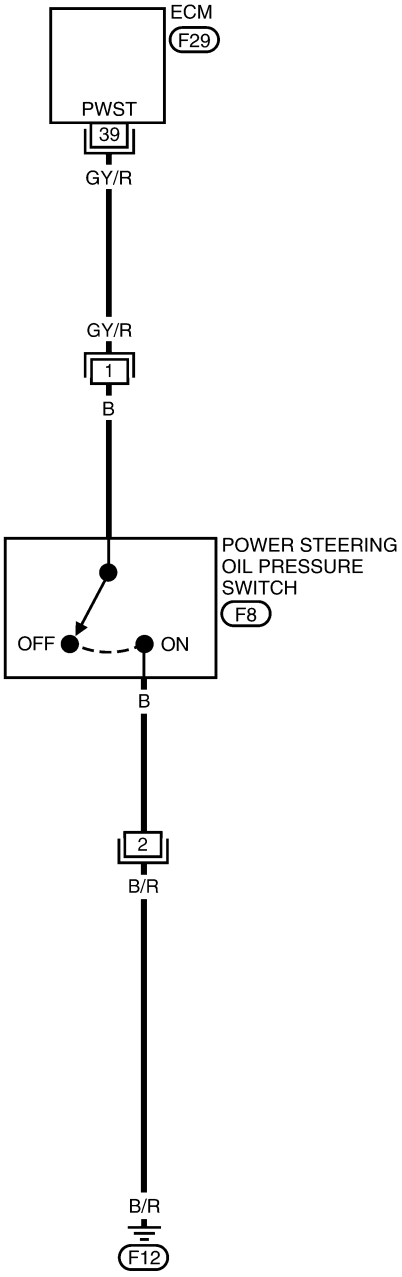

: Detectable line for DTC
: Non-detectable line for DTC

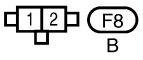

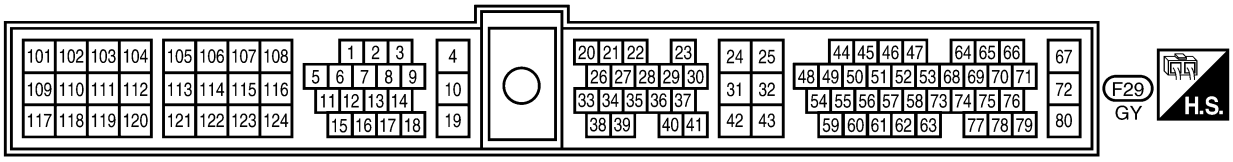

LEC677

Diagnostic Procedure

NEEC1489

1	INSPECTION START

Do you have CONSULT-II?

Yes or No

Yes	▶	GO TO 2.
No	▶	GO TO 3.

2	CHECK OVERALL FUNCTION

With CONSULT-II

1. Start engine.
2. Check “PW/ST SIGNAL” in “DATA MONITOR” mode with CONSULT-II.

DATA MONITOR	
MONITOR	NO DTC
PW/ST SIGNAL	OFF

Steering is in neutral position	OFF
Steering is turned	ON

SEF228Y

OK or NG

OK	▶	**INSPECTION END**
NG	▶	GO TO 4.

3	CHECK OVERALL FUNCTION

Without CONSULT-II

1. Start engine.
2. Check voltage between ECM terminal 39 and ground.

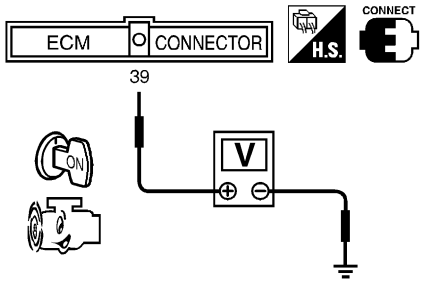

SEF739U

Condition	Voltage
Steering is neutral position	Approximately 5V
Steering is turned to full position	Approximately 0V

MTBL0145

OK or NG

OK	▶	**INSPECTION END**
NG	▶	GO TO 4.

4	CHECK POWER STEERING OIL PRESSURE SWITCH GROUND CIRCUIT FOR OPEN AND SHORT

1. Turn ignition switch OFF.
2. Disconnect power steering oil pressure switch harness connector.

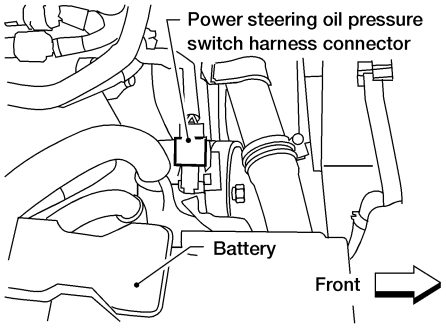

LEC521

3. Check harness continuity between switch terminal 2 and engine ground. Refer to Wiring Diagram.
   Continuity should exist.
4. Also check harness for short to power.

OK or NG

OK	▶	GO TO 5.
NG	▶	Repair open circuit or short to power in harness or connectors.

5	CHECK POWER STEERING OIL PRESSURE SWITCH INPUT SIGNAL CIRCUIT

1. Disconnect ECM harness connector.
2. Check harness continuity between ECM terminal 39 and switch terminal 1. Refer to Wiring Diagram.
   Continuity should exist.
3. Also check harness for short to ground and short to power.

OK or NG

OK	▶	GO TO 6.
NG	▶	Repair open circuit or short to ground or short to power in harness or connectors.

6	CHECK POWER STEERING OIL PRESSURE SWITCH

1. Disconnect power steering oil pressure switch harness connector then start engine.
2. Check continuity between terminals 1 and 2.

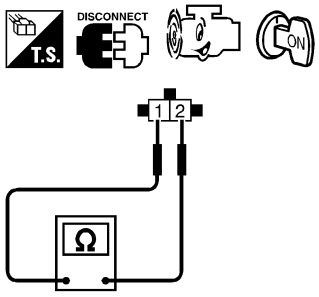

SEC312C

Conditions	Continuity
Steering wheel is being fully turned	Yes
Steering wheel is not being turned	No

MTBL0254

OK or NG

OK	▶	GO TO 7.
NG	▶	Replace power steering oil pressure switch.

Diagnostic Procedure (Cont'd)

7	**CHECK INTERMITTENT INCIDENT**
Refer to "TROUBLE DIAGNOSIS FOR INTERMITTENT INCIDENT", EC-1353.	
▶	**INSPECTION END**

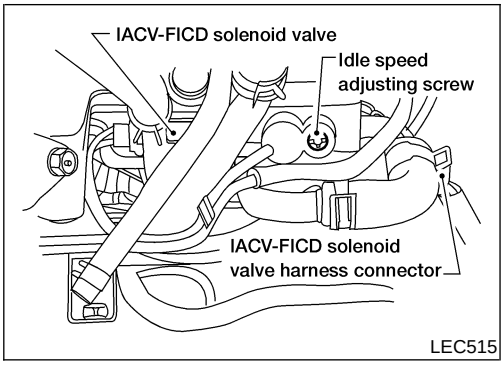

Component Description

NEEC1490

When the air conditioner is on, the IACV-FICD solenoid valve supplies additional air to adjust to the increased load.

ECM Terminals and Reference Value

NEEC1491

Specification data are reference values and are measured between each terminal and ground.

CAUTION:

Do not use ECM ground terminals when measuring input/output voltage. Doing so may result in damage to the ECM's transistor. Use a ground other than the ECM terminals, such as the ground.

TERMINAL NO.	WIRE COLOR	ITEM	CONDITION	DATA (DC Voltage)
9	B/Y	Ambient air temperature switch	**[Engine is running]** ● Idle speed ● Ambient air temperature is above 25°C (77°F) ● Air conditioner is operating	0V
			[Engine is running] ● Idle speed ● Ambient air temperature is below 19°C (66°F) ● Air conditioner is operating	BATTERY VOLTAGE (11 - 14V)
			[Engine is running] ● Idle speed ● Ambient air temperature is below 19°C (66°F) ● Air conditioner is not operating	Approximately 5V
12	P	Air conditioner relay	**[Engine is running]** ● Both A/C switch and blower fan switch are "ON"*	0 - 1V
			[Engine is running] ● A/C switch is "OFF"	BATTERY VOLTAGE (11 - 14V)
21	G/R	Air conditioner switch	**[Engine is running]** ● Both A/C switch and blower fan switch are "ON" (Compressor operates)*	Approximately 0V
			[Engine is running] ● Air conditioner switch is "OFF"	Approximately 5V

*: Any mode except "OFF", ambient air temperature is above 25°C (77°F).

Wiring Diagram

NEEC1492

EC-FICD-01

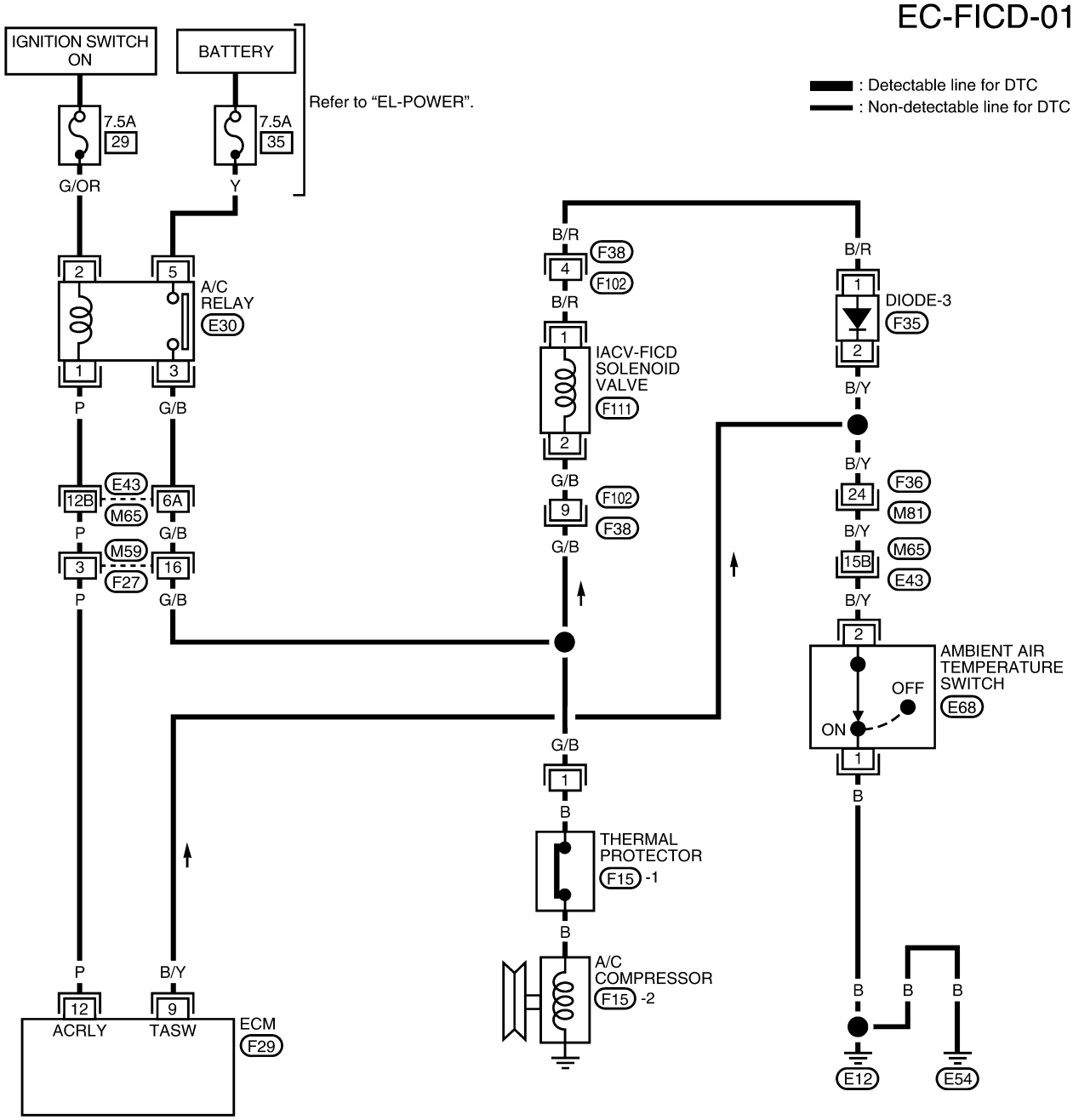

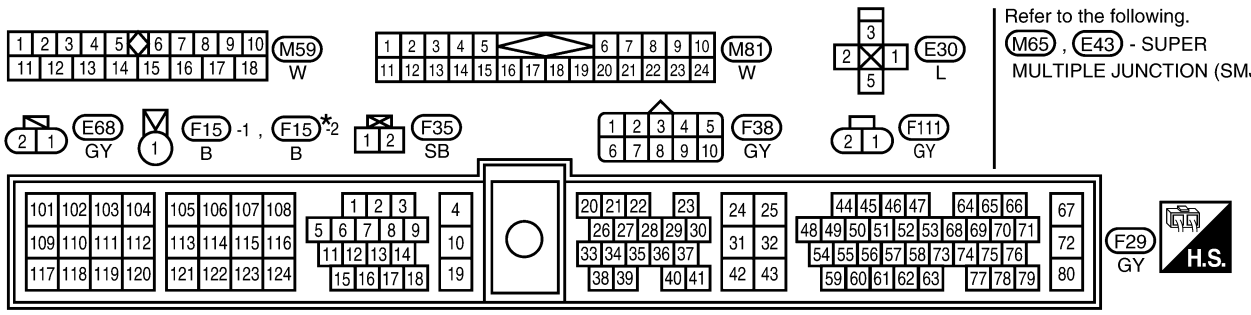

Refer to the following.
M65 , E43 - SUPER MULTIPLE JUNCTION (SMJ)

*: This connector is not shown in "HARNESS LAYOUT" of EL section.

LEC678

Diagnostic Procedure

NEEC1493

1	CHECK OVERALL FUNCTION

1. Start engine and warm it up to normal operating temperature.
2. Check idle speed.
   750±50 rpm (in "P" or "N" position)
   If NG, adjust idle speed.
3. Turn air conditioner switch and blower fan switch ON.
4. Recheck idle speed.

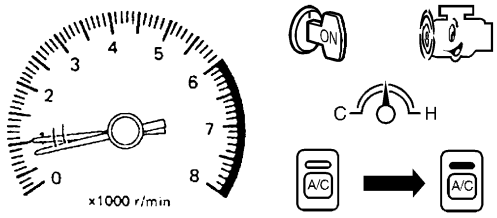

SEF742U

850 rpm or more (in "P" or "N" position)

OK or NG

OK	▶	**INSPECTION END**
NG	▶	GO TO 2.

2	CHECK AIR CONDITIONER FUNCTION

Check if air conditioner compressor functions normally.

OK or NG

OK	▶	GO TO 3.
NG	▶	Refer to "Symptom Table", "TROUBLE DIAGNOSES", ***HA-28***.

Diagnostic Procedure (Cont'd)

3	CHECK IACV-FICD SOLENOID VALVE POWER SUPPLY CIRCUIT

1. Turn air conditioner switch and blower fan switch OFF.
2. Stop engine.
3. Disconnect IACV-FICD solenoid valve harness connector.

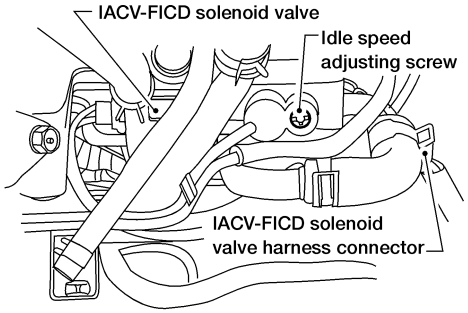

LEC515

4. Start engine, then turn air conditioner switch and blower fan switch ON.
5. Check voltage between terminal 2 and ground with CONSULT-II or tester.

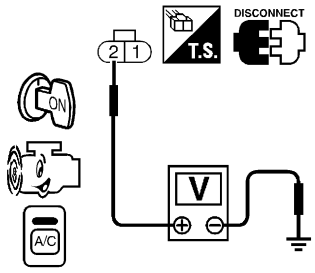

SEF680W

Voltage: Battery voltage

OK or NG

OK	▶	GO TO 5.
NG	▶	GO TO 4.

4	DETECT MALFUNCTIONING PART

Check the following.
- Harness connectors F38, F102
- Harness for open or short between IACV-FICD solenoid valve and harness connector F27

	▶	Repair harness or connectors.

5	CHECK IACV-FICD SOLENOID VALVE GROUND CIRCUIT-I

1. Turn ignition switch OFF.
2. Disconnect ambient air temperature switch harness connector.
3. Check harness continuity between ambient air temperature switch terminal 1 and body ground.
   Refer to Wiring Diagram.
   Continuity should exist.
4. Also check harness for short to power.

OK or NG

OK	▶	GO TO 6.
NG	▶	Repair open circuit or short to power in harness or connectors.

6	CHECK IACV-FICD SOLENOID VALVE GROUND CIRCUIT-II

1. Check harness continuity between ambient air temperature switch terminal 2 and IACV-FICD solenoid valve terminal 1.

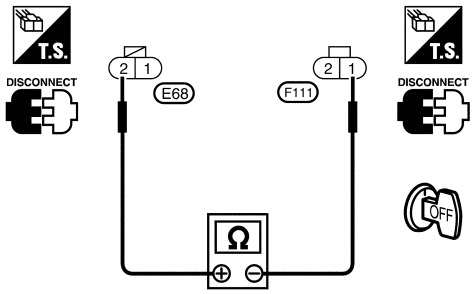

SEF160X

Continuity should exist.

2. Also check harness for short to ground and short to power.

OK or NG

OK	▶	GO TO 8.
NG	▶	GO TO 7.

7	DETECT MALFUNCTIONING PART

Check the following.
- Harness connectors F38, F102
- Harness connectors F36, M81
- Harness connectors M65, E43
- Diode-3
- Harness for open or short between IACV-FICD solenoid valve and ambient air temperature switch

	▶	Repair open circuit or short to ground or short to power in harness or connectors.

8	CHECK IACV-FICD SOLENOID VALVE

Disconnect IACV-FICD solenoid valve harness connector.
- Check for clicking sound when applying 12V direct current to terminals.

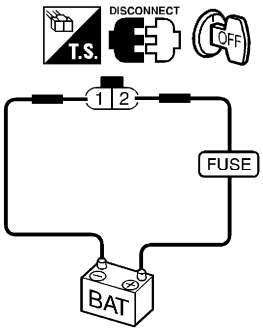

SEF682W

- Check plunger for seizing or sticking.
- Check for broken spring.

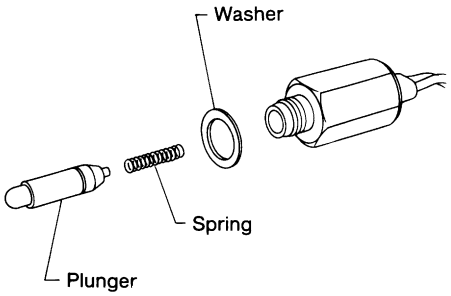

SEF097K

OK or NG

OK	▶	GO TO 9.
NG	▶	Replace IACV-FICD solenoid valve.

9	CHECK INTERMITTENT INCIDENT
Refer to "TROUBLE DIAGNOSIS FOR INTERMITTENT INCIDENT", EC-1353.	
▶	**INSPECTION END**

Wiring Diagram

NEEC1494

EC-MIL/DL-01

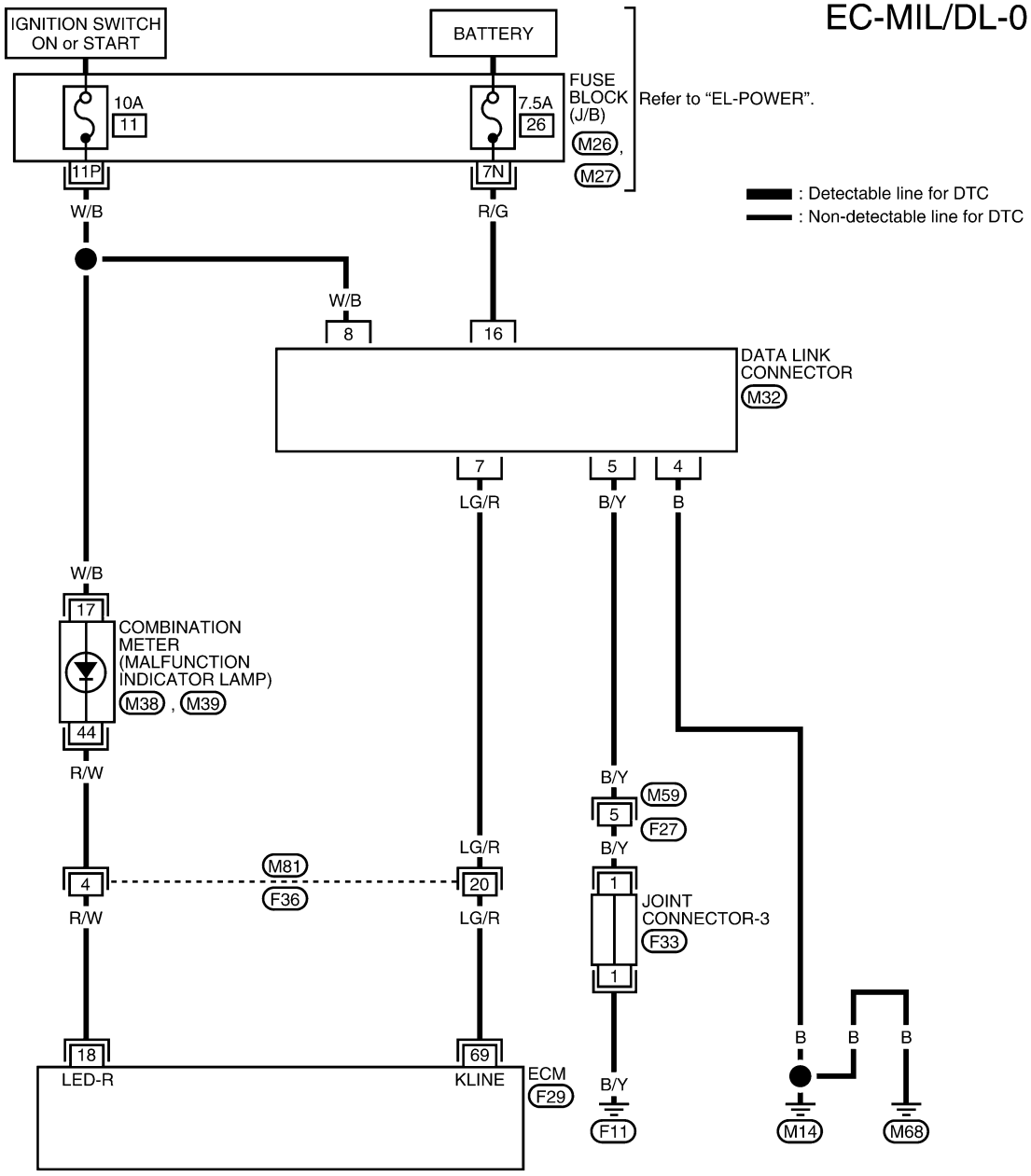

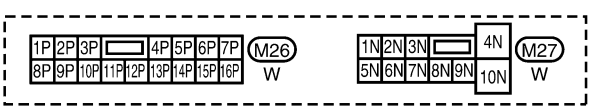

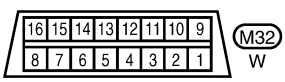

Refer to the following.
F29 - ELECTRICAL UNITS

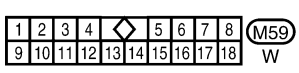

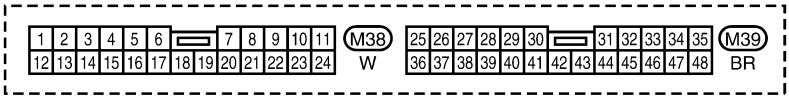

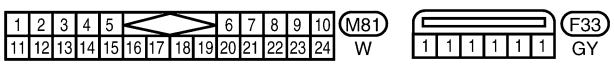

WEC157A

Fuel Pressure Regulator

NEEC1495

Fuel pressure at idling kPa (kg/cm^2, psi)		
	Vacuum hose is connected	Approximately 235 (2.4, 34)
	Vacuum hose is disconnected	Approximately 294 (3.0, 43)

Idle Speed and Ignition Timing

NEEC1496

Base idle speed*1	No-load*4 (in “P” or N” position)	700±50 rpm
Target idle speed*2	No-load*4 (in “P” or N” position)	750±50 rpm
Air conditioner: ON	In “P” or N” position	850 rpm or more
Ignition timing*3	In “P” or N” position	10°±2° BTDC
Throttle position sensor idle position		0.15 - 0.85V

*1: Throttle position sensor harness connector disconnected or using CONSULT-II “WORK SUPPORT” mode
*2: Throttle position sensor harness connector connected
*3: Throttle position sensor harness connector disconnected
*4: Under the following conditions:

- Air conditioner switch: OFF
- Electric load: OFF (Lights, heater fan & rear window defogger)
- Steering wheel: Kept in straight-ahead position

Ignition Coil

NEEC1497

Primary voltage	12V
Primary resistance [at 20°C (68°F)]	Approximately 1.0Ω
Secondary resistance [at 20°C (68°F)]	Approximately 10 kΩ

Mass Air Flow Sensor

NEEC1498

Supply voltage	Battery voltage (11 - 14)V
Output voltage at idle	1.0 - 1.7*V
Mass air flow (Using CONSULT-II or GST)	3.3 - 4.8 g·m/sec at idle* 12.0 - 14.9 g·m/sec at 2,500 rpm*

*: Engine is warmed up to normal operating temperature and running under no-load.

Engine Coolant Temperature Sensor

NEEC1499

Temperature °C (°F)	Resistance kΩ
20 (68)	2.1 - 2.9
50 (122)	0.68 - 1.00
90 (194)	0.236 - 0.260

Heated Oxygen Sensor 1 Heater (Front)

NEEC1500

Resistance [at 25°C (77°F)]	2.3 - 4.3Ω

Fuel Pump

NEEC1501

Resistance [at 25°C (77°F)]	0.2 - 5.0Ω

IACV-AAC Valve

NEEC1502

Resistance [at 20°C (68°F)]	Approximately 10.0Ω

Injector

NEEC1503

Resistance [at 25°C (77°F)]	10 - 14Ω

Throttle Position Sensor

NEEC1504

Throttle valve conditions	Voltage [at normal operating temperature, engine off, ignition switch ON, (throttle opener disengaged, if so equipped)]
Completely closed (a)	0.15 - 0.85V
Partially open	Between (a) and (b)
Completely open (b)	3.5 - 4.7V

Calculated Load Value

NEEC1505

	Calculated load value % (Using CONSULT or GST)
At idle	18.0 - 26.0
At 2,500 rpm	18.0 - 21.0

Intake Air Temperature Sensor

NEEC1506

Temperature °C (°F)	Resistance kΩ
20 (68)	2.1 - 2.9
80 (176)	0.27 - 0.38

Heated Oxygen Sensor 2 Heater (Rear)

NEEC1507

Resistance [at 25°C (77°F)]	2.3 - 4.3Ω

Crankshaft Position Sensor (OBD)

NEEC1508

Resistance [at 20°C (68°F)]	512 - 632Ω

Fuel Tank Temperature Sensor

NEEC1509

Temperature °C (°F)	Resistance kΩ
20 (68)	2.3 - 2.7
50 (122)	0.79 - 0.90

NOTES

ACCELERATOR CONTROL, FUEL & EXHAUST SYSTEMS

SECTION FE

CONTENTS

PREPARATION 2
Special Service Tool 2
Commercial Service Tool 2
ACCELERATOR CONTROL SYSTEM 3
Removal and Installation 3
Adjusting Accelerator Wire 3
FUEL SYSTEM 4
Removal and Installation 4
FUEL TANK 5
FUEL PUMP AND FUEL LEVEL SENSOR 7
EXHAUST SYSTEM 8
Removal and Installation 8

Special Service Tool

NEFE0001

The actual shapes of Kent-Moore tools may differ from those of special service tools illustrated here.

Tool number (Kent-Moore No.) Tool name	Description	
KV10114400 (J38365) Heated oxygen sensor wrench	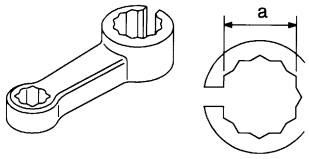 NT636	Loosening or tightening rear heated oxygen sensor **a: 22 mm (0.87 in)**

Commercial Service Tool

NEFE0007

Tool name (Kent-Moore No.)	Description	
Oxygen sensor thread cleaner (J-43897-18) (J-43897-12)	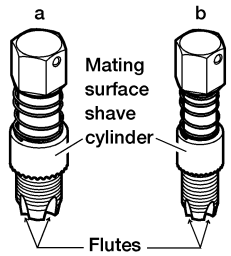 AEM488	Reconditioning the exhaust system threads before installing a new oxygen sensor. Use with anti-seize lubricant shown in Commercial Service Tools. **a: J-43897-18 18 mm diameter, for Zirconia Oxygen Sensor** **b: J-43897-12 12 mm diameter, for Titania Oxygen Sensor**
Anti-seize lubricant (Permatex™ 133AR or equivalent meeting MIL specification MIL-A-907)	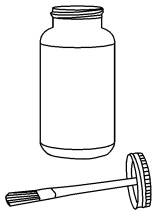 AEM489	Lubricating oxygen sensor thread cleaning tool when reconditioning exhaust system threads.

Removal and Installation

NEFE0002

CAUTION:

- **When removing accelerator wire, make a mark to indicate lock nut's initial position.**
- **Check that throttle valve opens fully when accelerator pedal is fully depressed. Also check that it returns to idle position when pedal is released.**
- **Check accelerator control parts for improper contact with any adjacent parts.**
- **When connecting accelerator wire, be careful not to twist or scratch its inner wire.**
- **Refer to *EL-165*, "ASCD Wire Adjustment".**

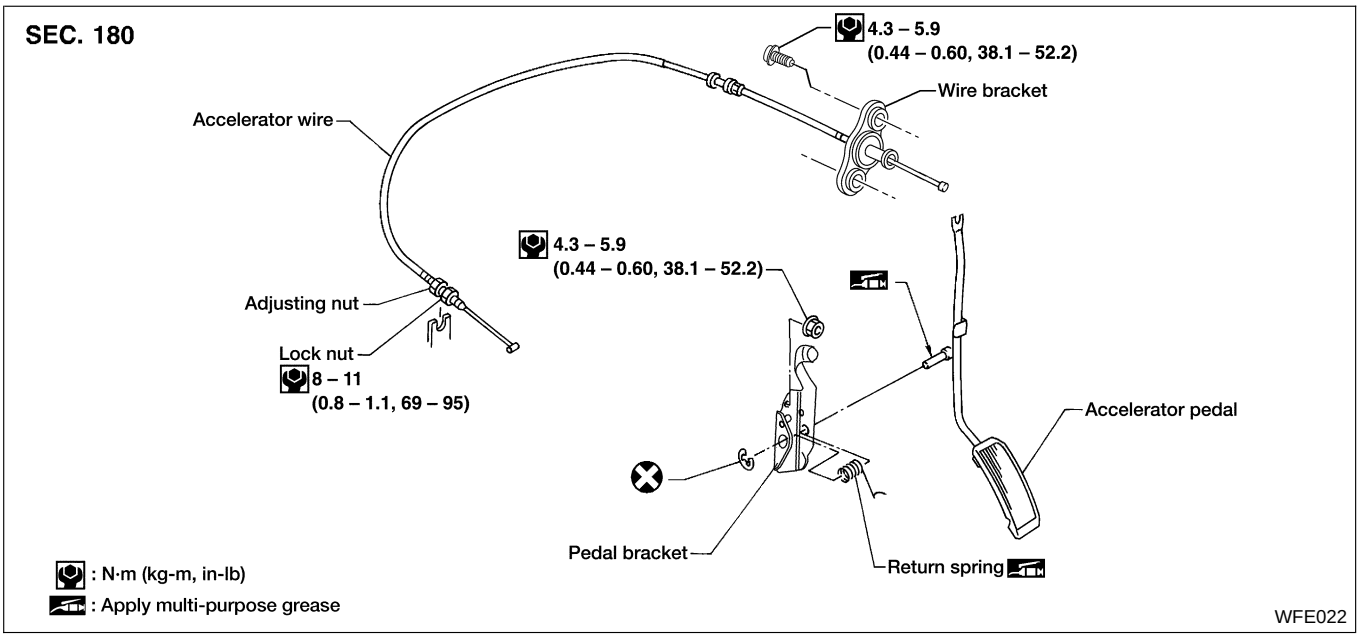

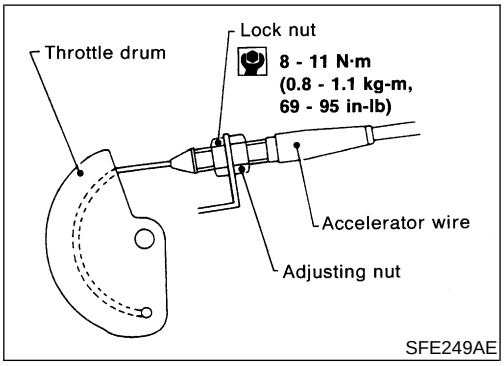

Adjusting Accelerator Wire

NEFE0003

NOTE:

Adjust accelerator wire with the engine warmed up to normal operating temperature and ignition switch turned to OFF.

1. Loosen lock nut and tighten accelerator adjusting nut until throttle drum starts to move.
2. From that position, turn back adjusting nut 1.5 to 2 turns, and secure lock nut.

Removal and Installation

NEFE0004

WARNING:

When replacing fuel line parts, be sure to observe the following:

- **Put a "CAUTION: INFLAMMABLE" sign in workshop.**
- **Do not smoke while servicing fuel system. Keep open flames and sparks away from work area.**
- **Be sure to furnish the workshop with a CO_2 fire extinguisher.**

CAUTION:

- **Before removing fuel line parts, carry out the following procedures:**

a) Put drained fuel in an explosion-proof container and put lid on securely.

b) Release fuel pressure from fuel line. Refer to *EC-57* (KA24DE), *EC-658* (VG33E), *EC-1259* (VG33ER), "Fuel Pressure Release".

c) Disconnect battery ground cable.

- **Remove quick connectors with commercial service tool.**
- **Always replace O-ring with a new one.**
- **Do not kink or twist hoses and tubes when installed.**
- **Do not tighten hose clamps excessively to avoid damaging hoses.**
- **Perform an inspection and installation of EVAP system parts as necessary. Refer to *EC-40* (KA24DE), *EC-640* (VG33E), *EC-1241* (VG33ER), "Evaporative Emission System".**
- **For inspection and installation of ORVR system parts, refer to *EC-45* (KA24DE), *EC-646* (VG33E), *EC-1247* (VG33ER), "On-Board Refueling Vapor Recovery (ORVR)".**
- **After installation, run engine and check for fuel leaks at connections.**
- **Use only a genuine NISSAN fuel filler cap as a replacement. If an incorrect fuel filler cap is used, the MIL may come on.**

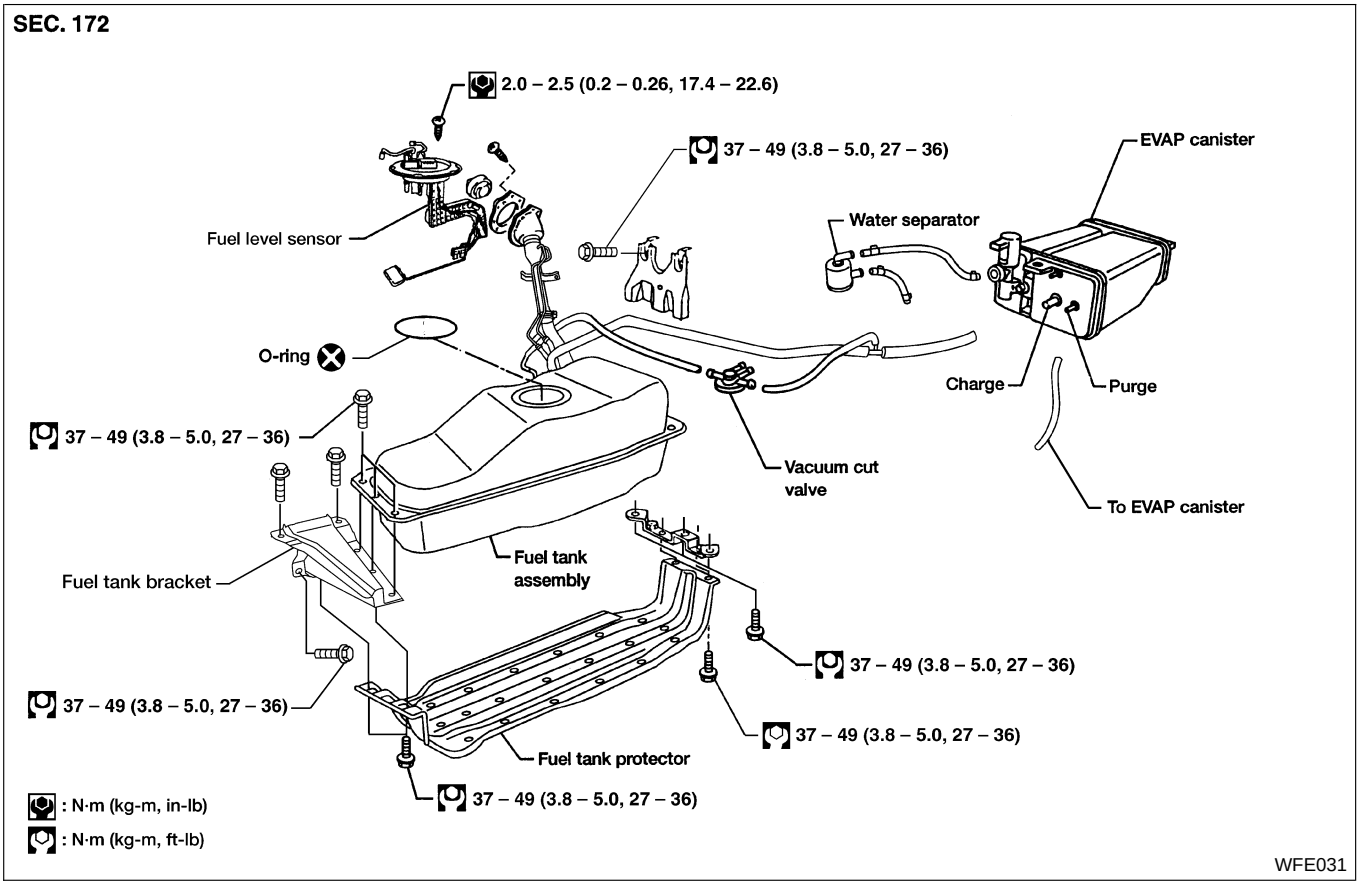

FUEL TANK

NEFE0004S01

1. Release fuel pressure from fuel line. Refer to ***EC-57*** (KA24DE), ***EC-658*** (VG33E), ***EC-1259*** (VG33ER), "Fuel Pressure Release".
2. Disconnect battery ground cable.
3. Drain fuel from fuel tank.
4. Disconnect electrical connectors.
5. Remove filler protector.

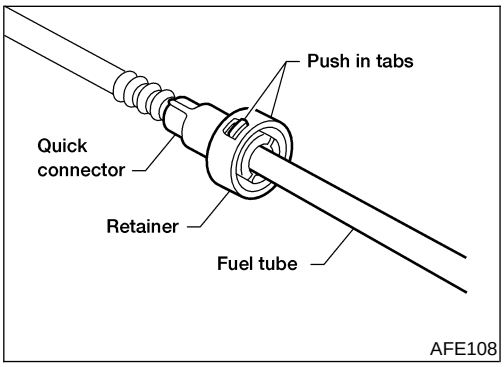

6. Remove the quick connectors as follows:

1) Put mating marks on the connectors for correct installation.
2) Hold the sides of the connector, push in tabs, and pull out the tube inserted in the retainer.

CAUTION:

- **The tube can be removed when the push in tabs are completely depressed.**
- **Do not use any tools to remove the quick connector.**
- **Keep the connecting portion of the tubes and quick connector clean.**

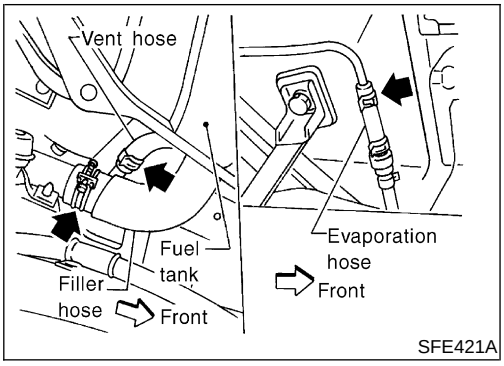

7. Disconnect filler hose, vent and evaporation hose at fuel tank side.

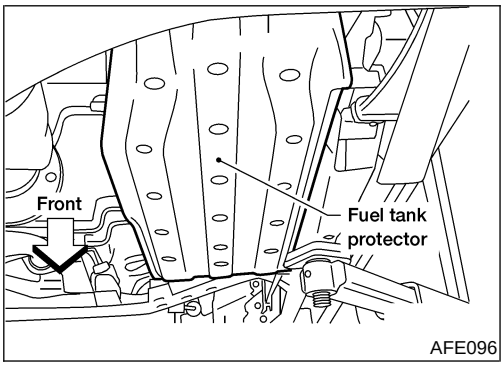

8. Remove fuel tank protector.

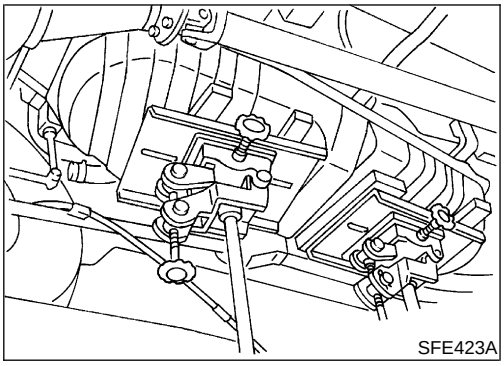

9. Remove fuel tank mounting bolts while supporting fuel tank.
10. Remove fuel tank.

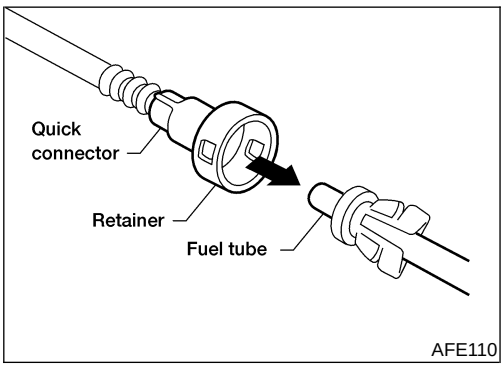

To install, reverse the removal procedure. Connect the quick connectors as follows.

- Make sure the connectors are clean and undamaged.
- Align push in tabs with retainer openings.
- Insert tube into the center of the connector until you hear a click.

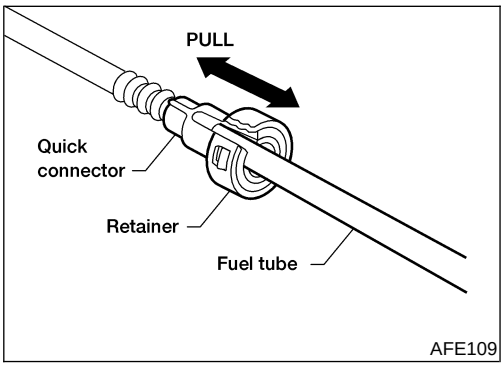

After connecting quick connectors, make sure the connection is fully seated and locked in place as follows:

- Pull on the fuel tube and connector to make sure they are properly connected.
- Start the engine, increase engine speed and verify that there are no leaks.

FUEL PUMP AND FUEL LEVEL SENSOR

NEFE0004S02

SEC. 172

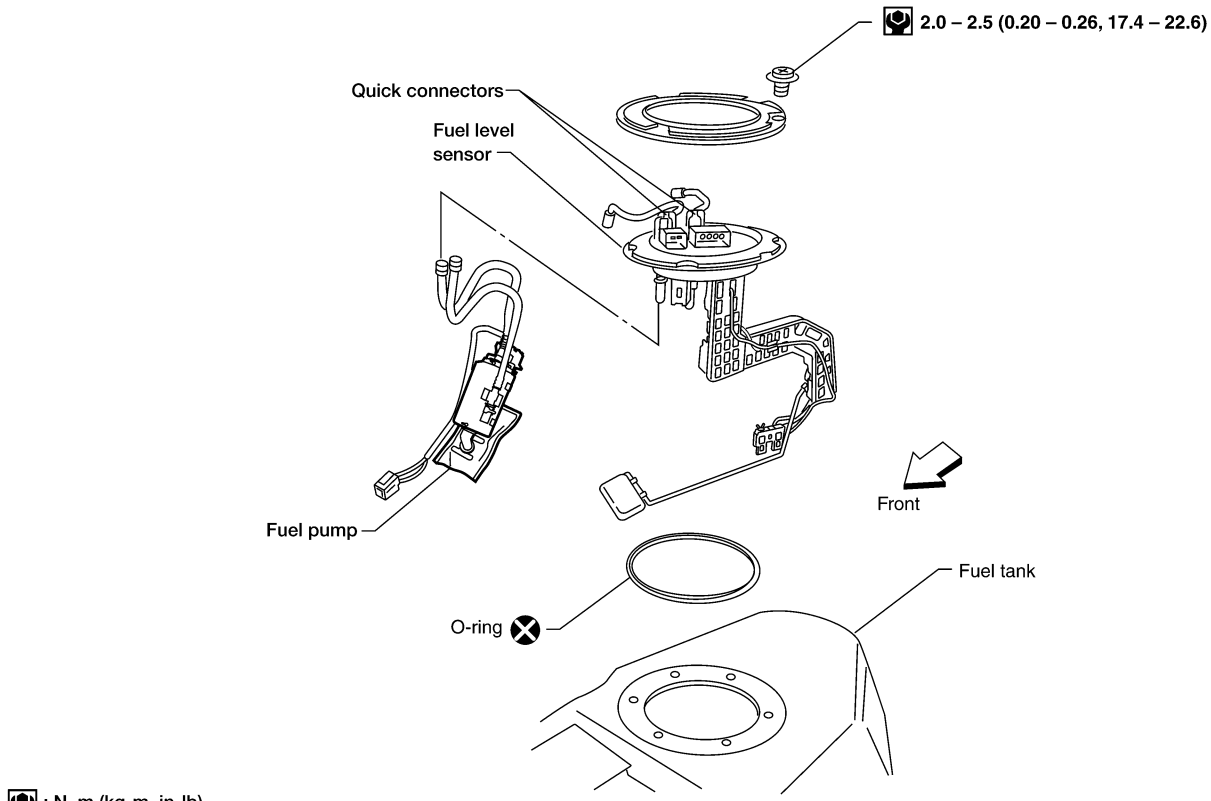

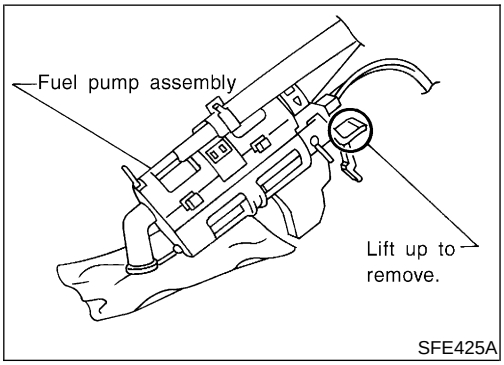

1. Remove fuel tank. Refer to "FUEL TANK", FE-5.
- For removal of quick connectors, refer to step 6 of "FUEL TANK", FE-5.
2. Remove the six screws.
3. Remove fuel level sensor retainer and fuel level sensor.
4. Remove fuel pump with bracket while lifting the pawl of the fuel pump bracket upward.

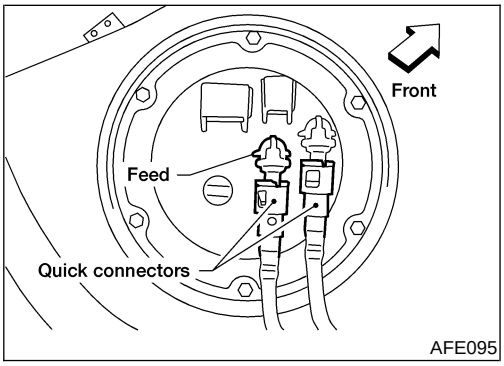

5. Remove fuel level sensor assembly.

Installation procedure is the reverse order of removal.

- Install fuel level sensor as shown.

CAUTION:

- **Tighten bolts to specified torque.**
  : 2.0 - 2.5 N·m (0.20 - 0.26 kg-m, 17.4 - 22.6 in-lb)
- Always replace O-ring with a new one.
- Make sure the connectors are clean and undamaged.
- After installation, run engine and check for leaks at connections.

Removal and Installation

NEFE0005

CAUTION:

- **Always replace exhaust gaskets with new ones when reassembling.**
- **With engine running, check all tube connections for exhaust gas leaks, and entire system for unusual noises.**
- **Check to ensure that mounting brackets and mounting insulators are installed properly and free from undue stress. Improper installation could result in excessive noise or vibration.**
- **Discard any heated oxygen sensor which has been dropped from a height of more than 0.5 m (19.7 in) onto a hard surface such as a concrete floor; use a new one.**
- **Before installing new oxygen sensor, clean exhaust system threads using Oxygen Sensor Thread Cleaner tool J-43897-18 or J-43897-12 and approved anti-seize lubricant.**
- **Do not over-torque the oxygen sensor. Doing so may cause damage to the oxygen sensor, resulting in the MIL coming on.**

KA24DE Models

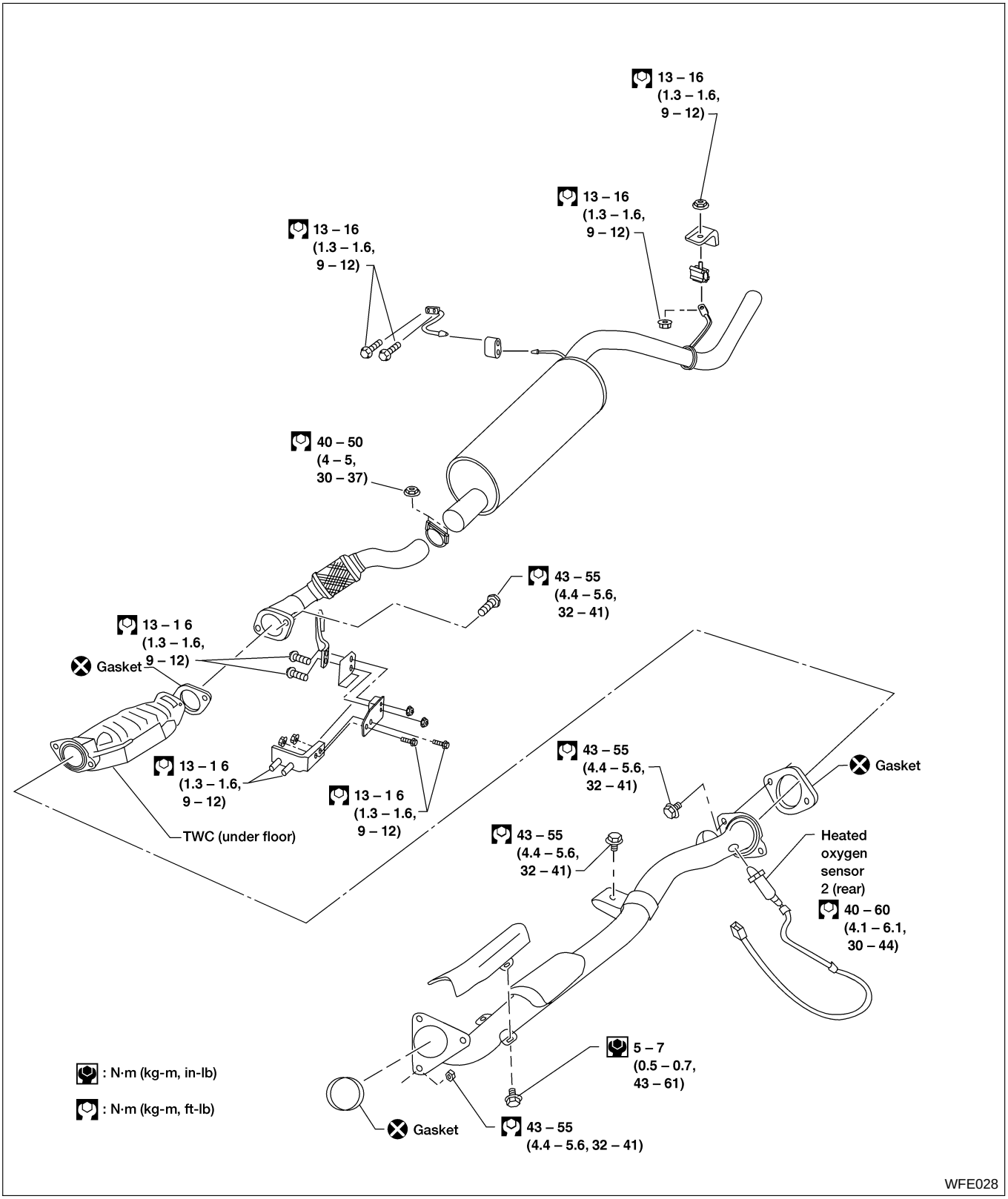

VG33E Models

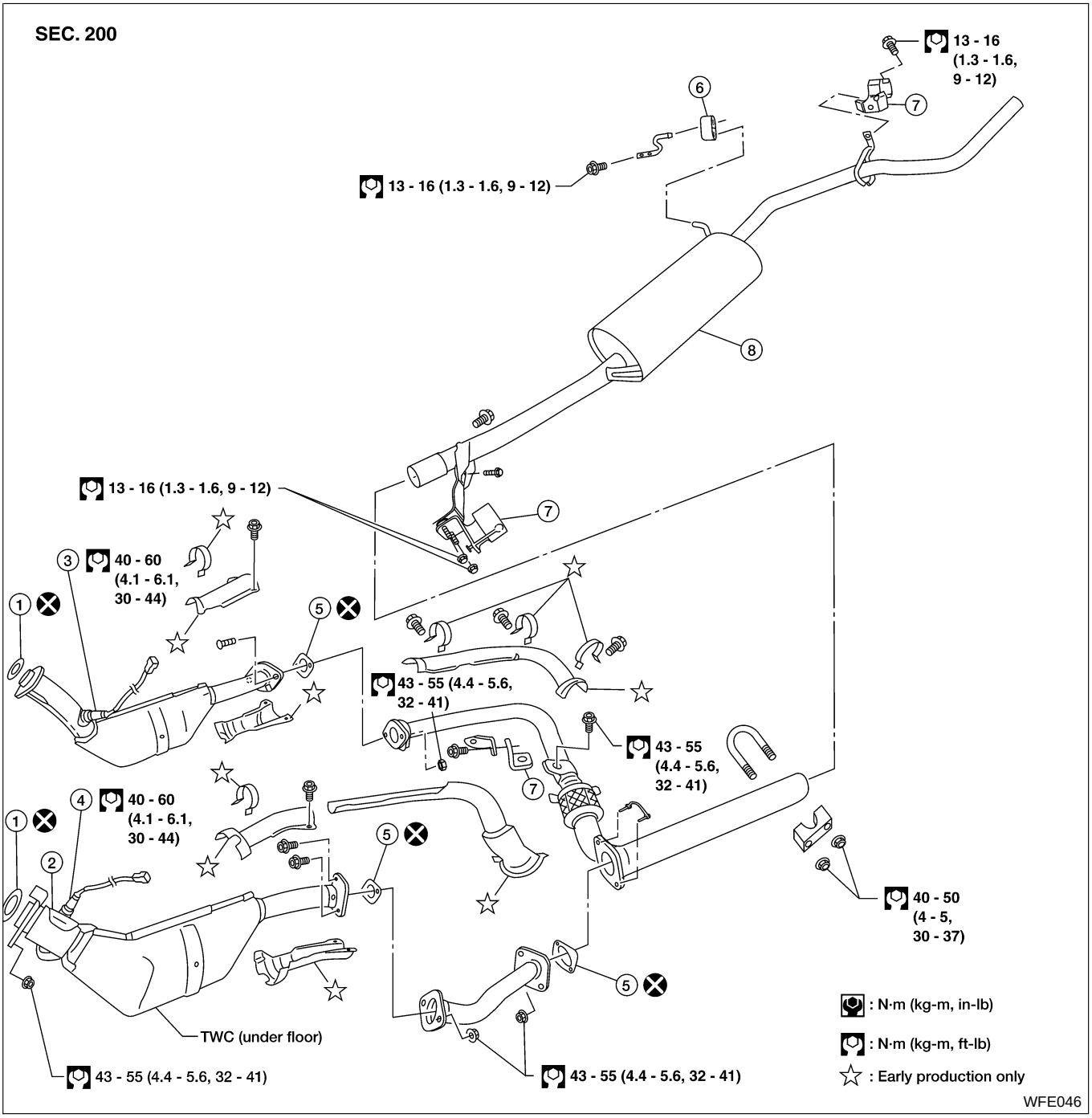

1. Gasket
2. Front tube
3. Heated oxygen sensor 2 (rear) (bank 1)
4. Heated oxygen sensor 2 (rear) (bank 2)
5. Gasket
6. Mounting rubber
7. Mounting bracket
8. Muffler

VG33ER Models

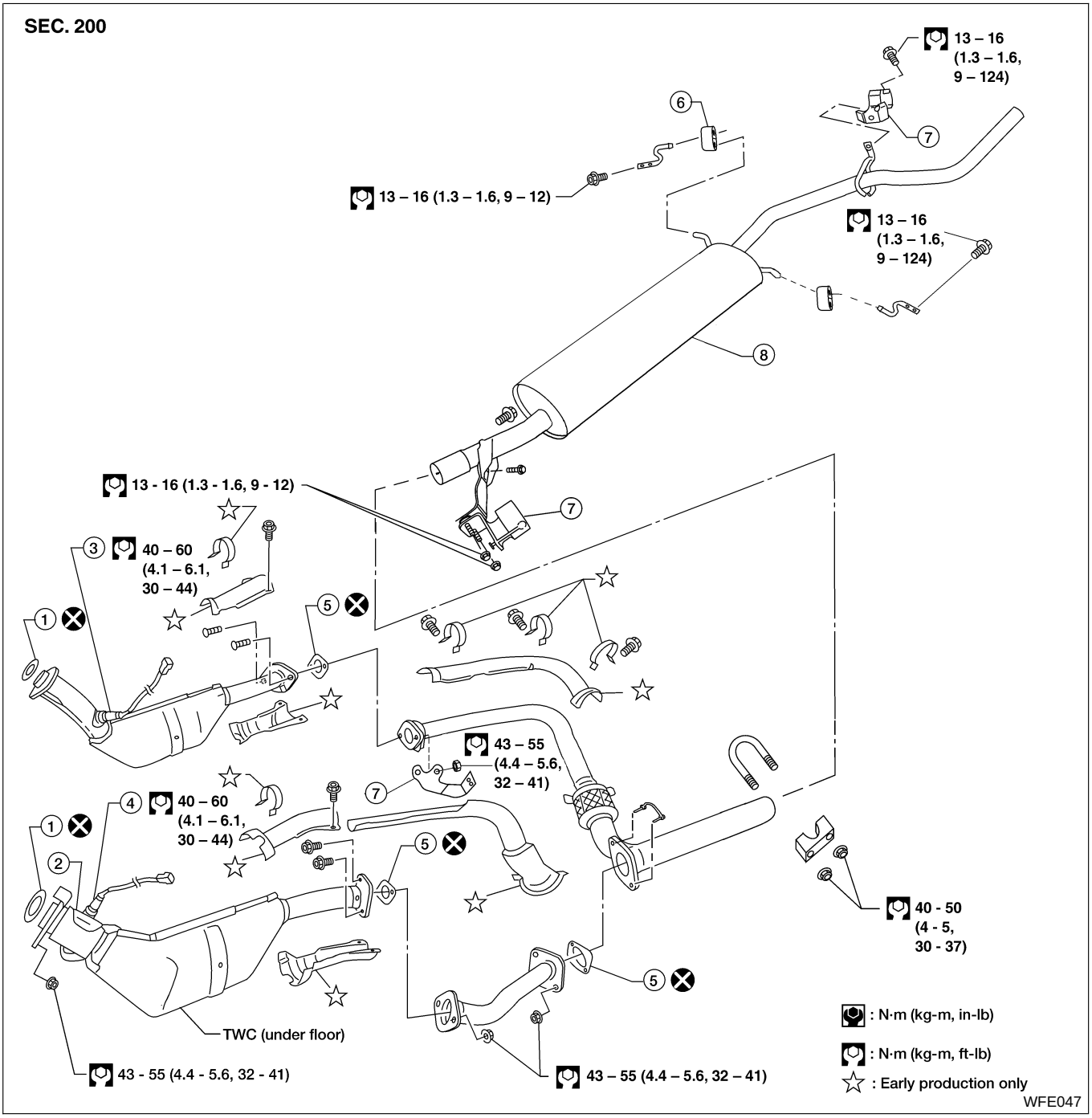

1. Gasket
2. Front tube
3. Heated oxygen sensor 2 (rear) (bank 1)
4. Heated oxygen sensor 2 (rear) (bank 2)
5. Gasket
6. Mounting rubber
7. Mounting bracket
8. Muffler

NOTES

CLUTCH

SECTION CL

CONTENTS

PRECAUTIONS 2
Precautions 2
PREPARATION 3
Special Service Tools 3
Commercial Service Tools 3
NOISE, VIBRATION AND HARSHNESS (NVH) TROUBLESHOOTING 4
NVH Troubleshooting Chart 4
CLUTCH SYSTEM - HYDRAULIC TYPE 5
Components 5
Inspection and Adjustment 6
ADJUSTING CLUTCH PEDAL 6
AIR BLEEDING PROCEDURE 7
CLUTCH MASTER CYLINDER 8
Components 8
Disassembly and Assembly 8
Inspection 8
OPERATING CYLINDER 9
Components 9
Inspection 9
CLUTCH RELEASE MECHANISM 10
Components 10
Removal and Installation 10
Inspection 11
Lubrication 11
CLUTCH DISC, CLUTCH COVER AND FLYWHEEL 12
Components 12
Inspection and Adjustment 12
CLUTCH DISC 12
CLUTCH COVER AND FLYWHEEL 13
FLYWHEEL INSPECTION 13
Installation 13
SERVICE DATA AND SPECIFICATIONS (SDS) 15
Clutch Control System 15
Clutch Master Cylinder (with clutch damper) 15
Clutch Operating Cylinder 15
Clutch Disc 15
Clutch Cover 15
Clutch Pedal 15

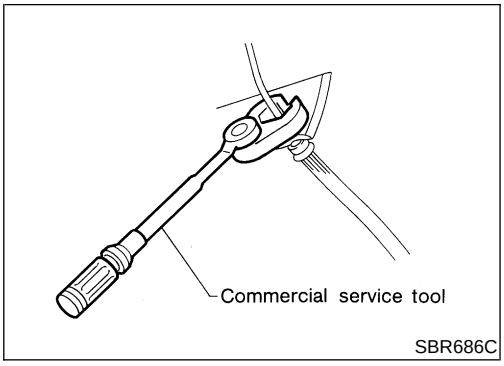

Precautions

NECL0001

- **Recommended fluid is brake fluid “DOT 3”.**
- **Never reuse drained brake fluid.**
- **Be careful not to splash brake fluid on painted areas.**
- **When removing and installing clutch piping, use Tool.**
- **Use new brake fluid to clean or wash all parts of master cylinder, operating cylinder and clutch damper.**
- **Never use mineral oils such as gasoline or kerosene. It will ruin the rubber parts of the hydraulic system.**

WARNING:

After cleaning the clutch disc, wipe it with a dust collector. Do not use compressed air.

Special Service Tools

NECL0002

The actual shapes of Kent-Moore tools may differ from those of special service tools illustrated here.

Tool number (Kent-Moore No.) Tool name	Description	
ST20630000 (J26366) Clutch aligning bar	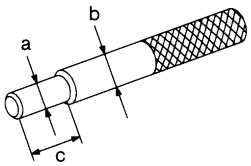 NT405	Installing clutch cover and clutch disc **a: 15.9 mm (0.626 in) dia.** **b: 22.8 mm (0.898 in) dia.** **c: 55 mm (2.17 in)**
ST20050240 (—) Diaphragm spring adjusting wrench	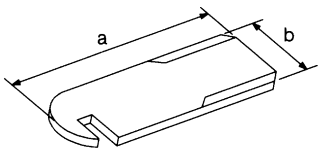 NT404	Adjusting unevenness of diaphragm spring of clutch cover **a: 150 mm (5.91 in)** **b: 25 mm (0.98 in)**

Commercial Service Tools

NECL0003

Tool name	Description	
1 Flare nut crowfoot 2 Torque wrench	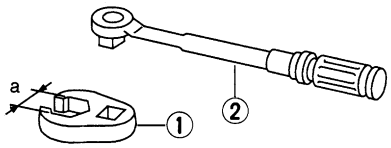 NT360	Removing and installing clutch piping **a: 10 mm (0.39 in)**
Bearing puller	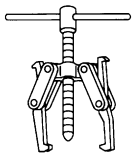 NT077	Removing release bearing
Bearing drift	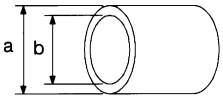 NT474	Installing release bearing **a: 52 mm (2.05 in) dia.** **b: 45 mm (1.77 in) dia.**

NVH Troubleshooting Chart

NECL0027S01

Use the chart below to help you find the cause of the problem. The numbers indicate the priority of the likely cause of the problem. Check each part in order. If necessary, repair or replace these parts.

Reference page		CL-6	CL-7	CL-8	CL-9	***EM-41*** (KA24DE), ***EM-112*** (VG33E & VG33ER)	CL-10	CL-12	CL-12	CL-12	CL-12	CL-12	CL-12	CL-12	CL-12	CL-13	CL-13	CL-13	CL-13
SUSPECTED PARTS (Possible cause)		CLUTCH PEDAL (Free play out of adjustment)	CLUTCH LINE (Air in line)	MASTER CYLINDER PISTON CUP (Damaged)	OPERATING CYLINDER PISTON CUP (Damaged)	ENGINE MOUNTING (Loose)	RELEASE BEARING (Worn, dirty or damaged)	CLUTCH DISC (Out of true)	CLUTCH DISC (Runout is excessive)	CLUTCH DISC (Lining broken)	CLUTCH DISC (Dirty or burned)	CLUTCH DISC (Oily)	CLUTCH DISC (Worn out)	CLUTCH DISC (Hardened)	CLUTCH DISC (Lack of spline grease)	DIAPHRAGM SPRING (Damaged)	DIAPHRAGM SPRING (Out of tip alignment)	PRESSURE PLATE (Distortion)	FLYWHEEL (Distortion)
Symptom	Clutch grabs/chatters					1			2			2	2	2			2		
	Clutch pedal spongy		1	2	2														
	Clutch noisy						1												
	Clutch slips	1										2	2			3		4	5
	Clutch does not disengage	1	2	3	4			5	5	5	5	5			5	6	6	7	

Components

NECL0004

SEC. 300 • 305 • 306 • 465

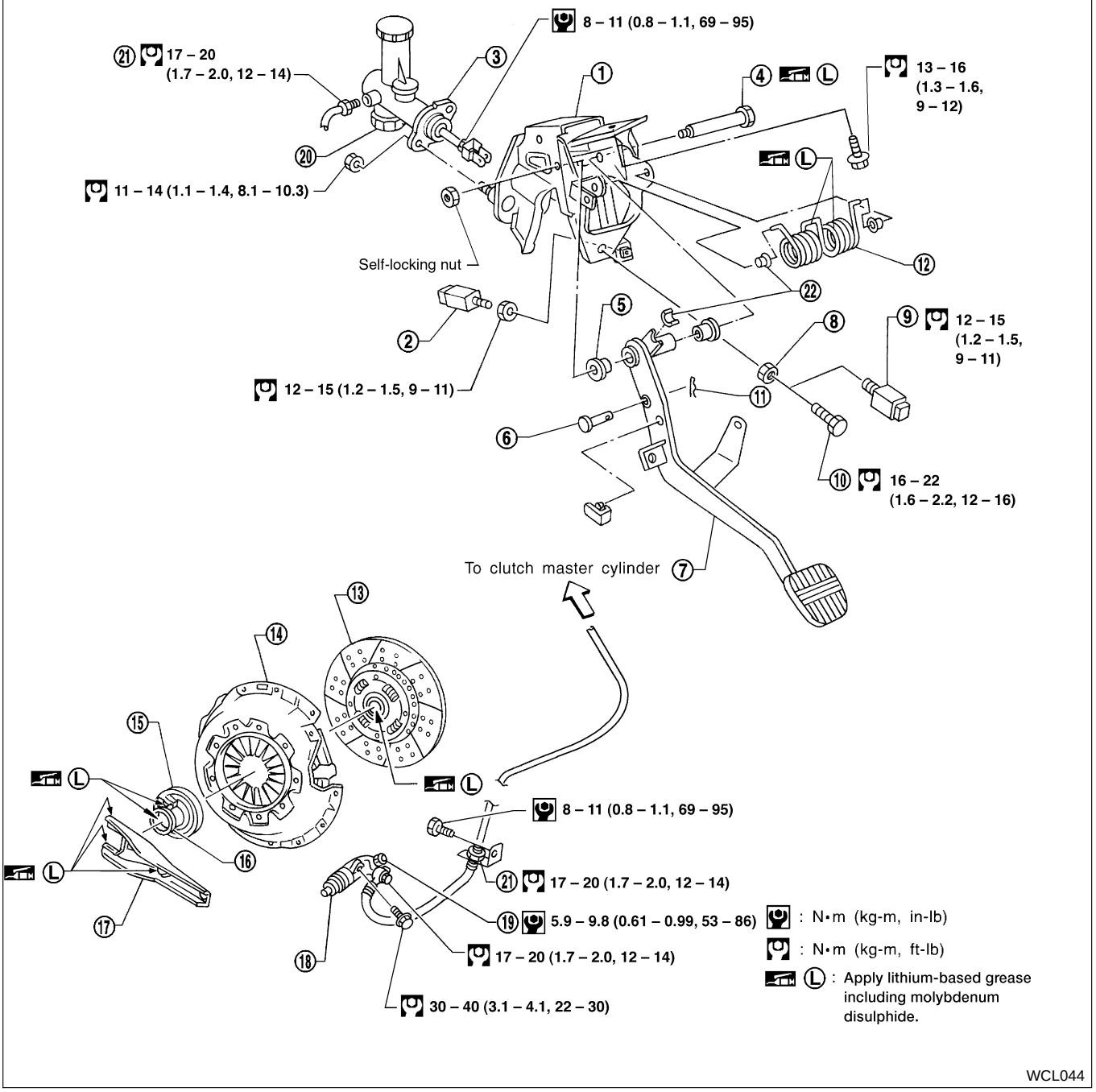

1. Clutch pedal bracket
2. Clutch interlock switch
3. Clutch master cylinder
4. Fulcrum pin
5. Bushing
6. Clevis pin
7. Clutch pedal
8. Lock nut
9. ASCD cancel switch
10. Pedal stopper bolt (without ASCD)
11. Snap pin
12. Assist spring
13. Clutch disc
14. Clutch cover
15. Release bearing
16. Release bearing sleeve
17. Withdrawal lever
18. Operating cylinder
19. Air bleeder
20. Clutch damper (not serviceable)
21. Flare nut
22. Bushing

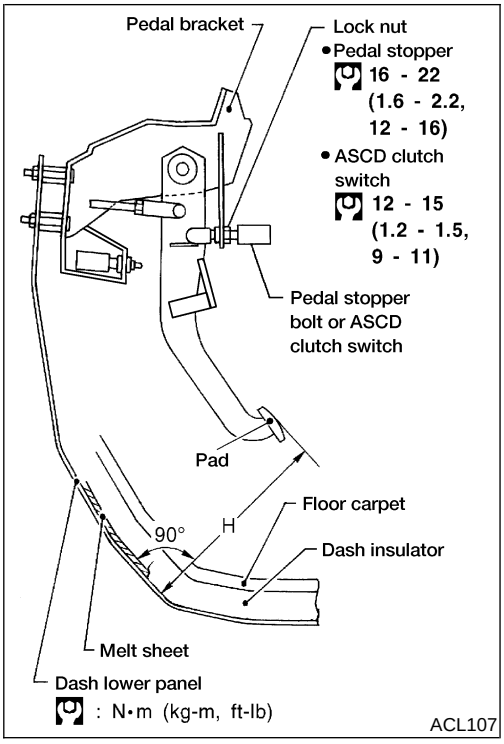

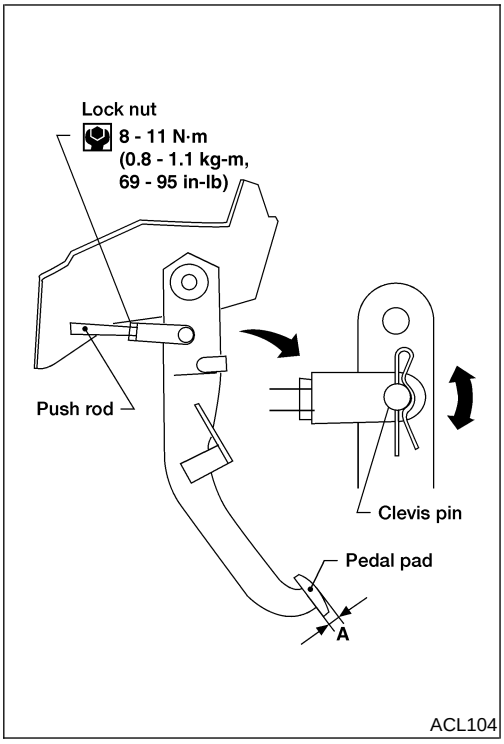

Inspection and Adjustment

NECL0005

ADJUSTING CLUTCH PEDAL

NECL0005S01

1. Adjust pedal height with pedal stopper bolt or ASCD cancel switch.

Pedal height “H”:

KA24DE: 221 – 231 mm (8.70 – 9.09 in)

VG33E, VG33ER: 227 – 237 mm (8.94 – 9.33 in)

2. Adjust pedal free play with master cylinder push rod. Then tighten lock nut.

Pedal free play (measured at pedal pad) “A”:

9 - 16 mm (0.35 - 0.63 in)

Pedal free play means the following total measured at position of pedal pad:

- **Play due to clevis pin, clevis pin hole in clutch pedal and master cylinder.**

3. Make sure that clevis pin can rotate smoothly. If not, readjust pedal free play with master cylinder push rod.

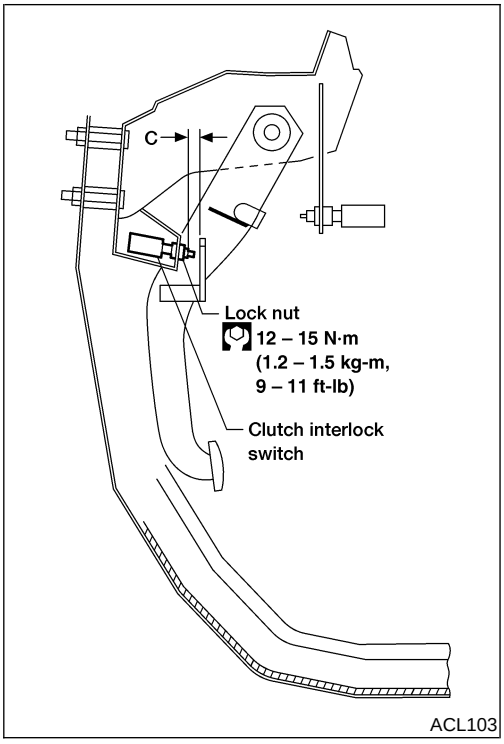

— Models with Clutch Interlock System —

NECL0005S0101

1. Adjust clearance "C" shown in the figure while fully depressing clutch pedal.

Clearance C:

0.1 - 1.0 mm (0.004 - 0.039 in)

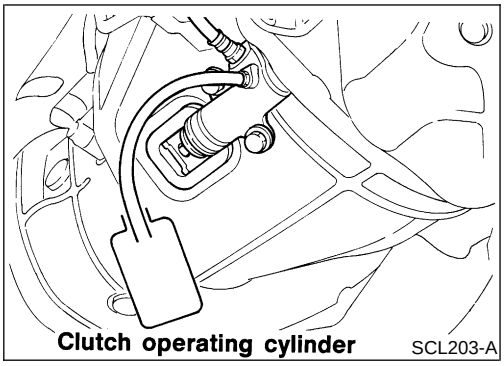

AIR BLEEDING PROCEDURE

NECL0005S02

Bleed air according to the following procedure.

Bleed air from operating cylinder.

1. Fill the master cylinder reservoir tank with new brake fluid.
2. Connect a transparent vinyl hose to the air bleeder.
3. Slowly depress the clutch pedal to its full stroke length and release it completely. Repeat this operation several times at 2 to 3 second intervals.
4. Open the air bleeder with the clutch pedal fully depressed.
5. Close the air bleeder.
6. Release the clutch pedal and wait at least 5 seconds.
7. Repeat steps 3 through 6 above until air bubbles no longer appear in the brake fluid.

Components

NECL0006

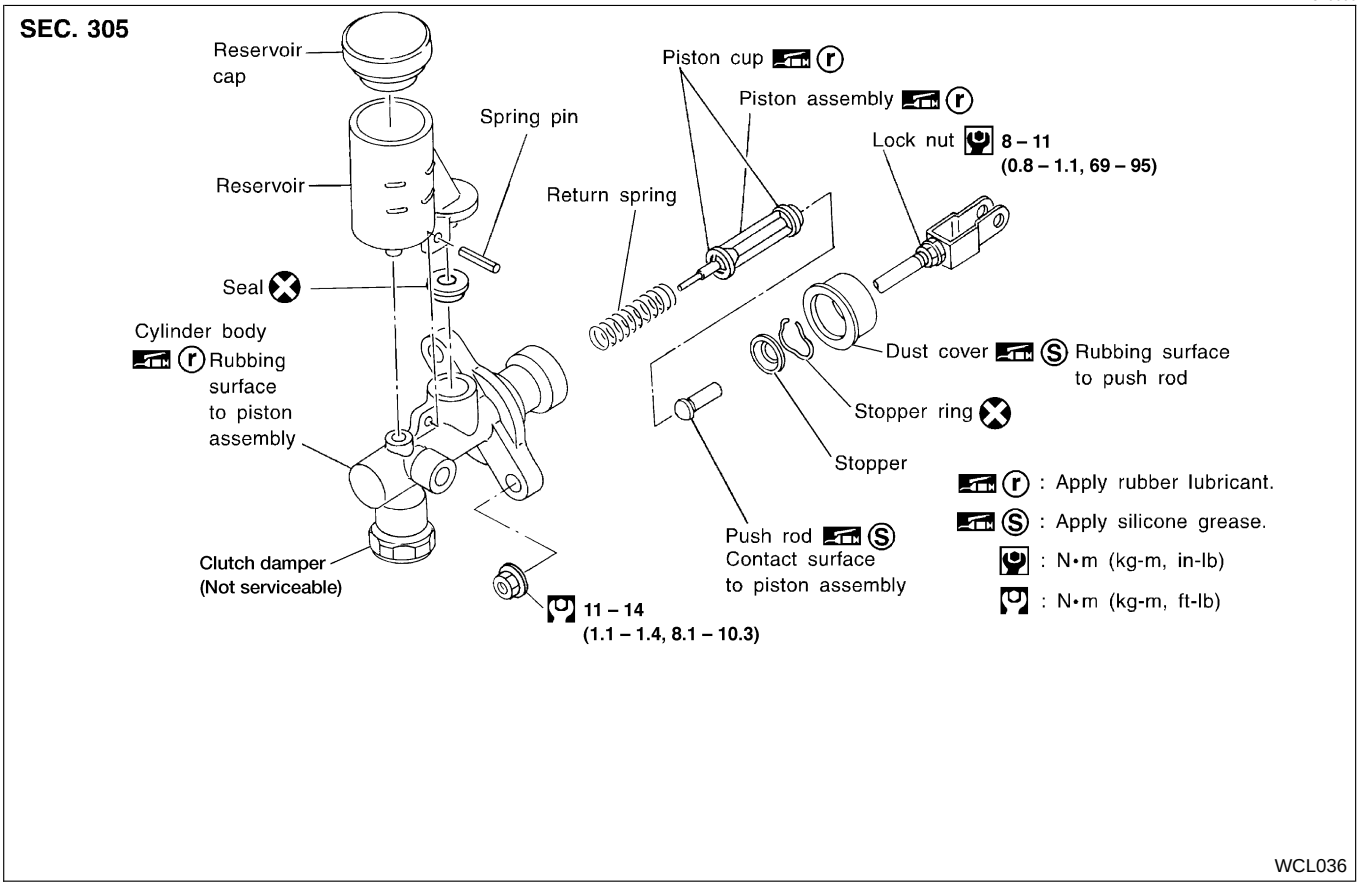

Disassembly and Assembly

NECL0007

- Use a screwdriver to remove stopper ring while pushing push rod into cylinder.
- When installing stopper ring, tap in lightly while pushing push rod into cylinder.

Inspection

NECL0008

Check the following items, and replace if necessary.

- Rubbing surface of cylinder and piston, for uneven wear, rust or damage
- Piston with piston cup, for wear or damage
- Return spring, for wear or damage
- Dust cover, for cracks, deformation or damage
- Reservoir, for deformation or damage

Components

NECL0009

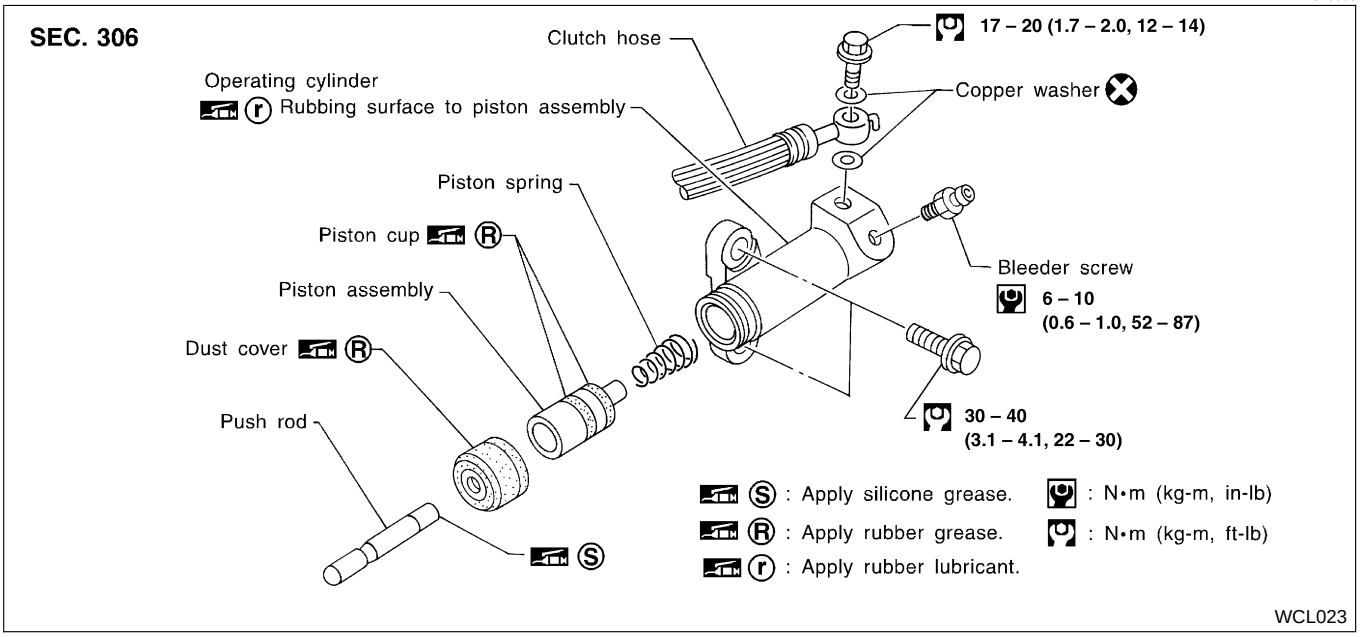

Inspection

NECL0010

Check the following items, and replace if necessary.

- Rubbing surface of cylinder and piston, for uneven wear, rust or damage
- Piston with piston cup, for wear or damage
- Piston spring, for wear or damage
- Dust cover, for cracks, deformation or damage

Components

NECL0013

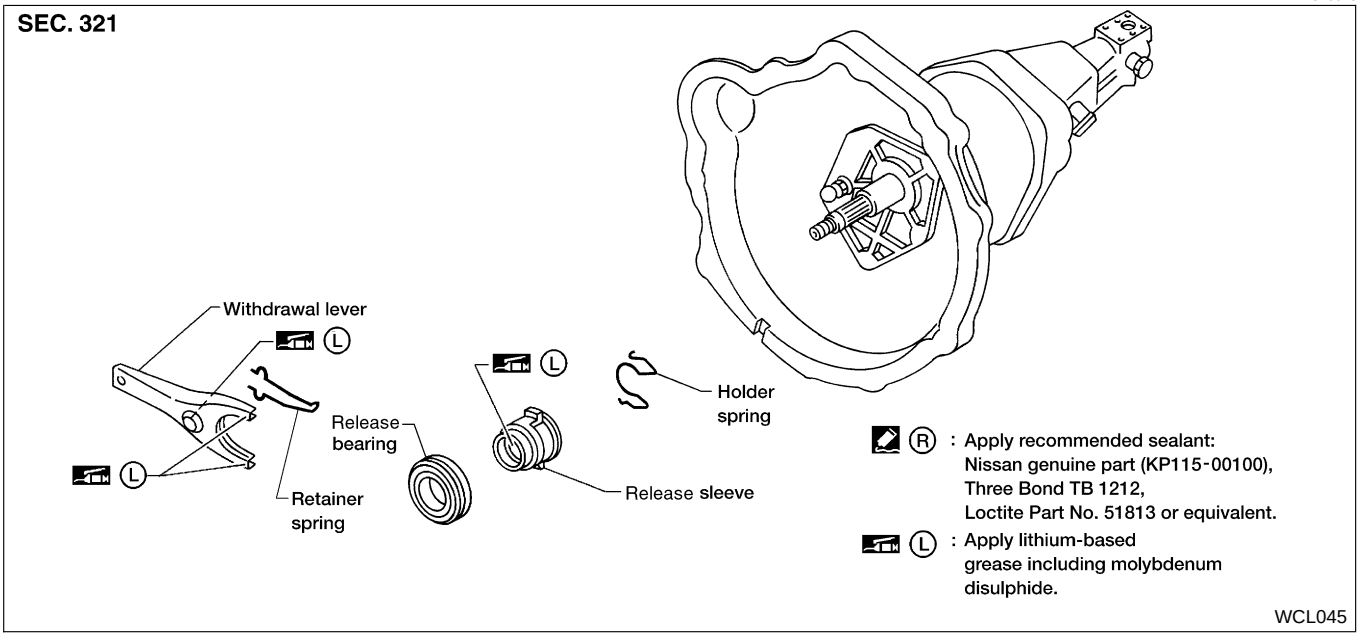

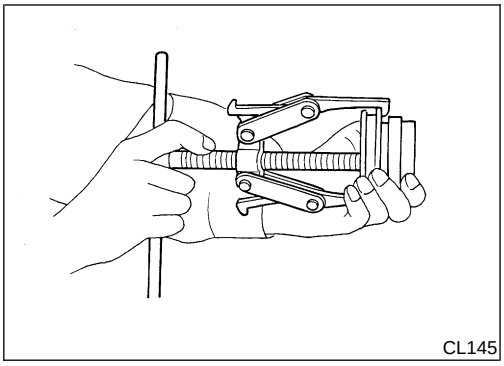

Removal and Installation

NECL0014

- Remove release bearing.

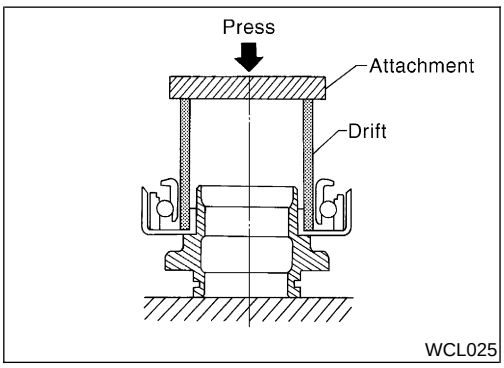

- Install release bearing with suitable drift.

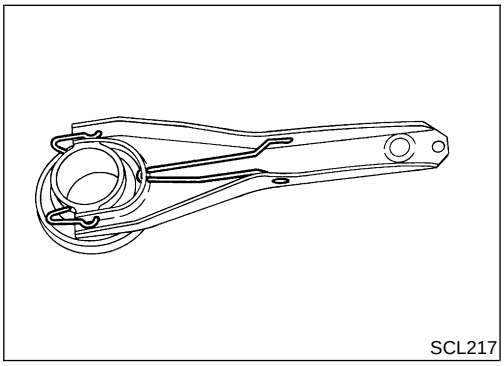

- Install retainer spring and holder spring.

Inspection

NECL0015

Check the following items, and replace if necessary.

- Release bearing, to see that it rolls freely and is free from noise, cracks, pitting or wear
- Release sleeve and withdrawal lever rubbing surface, for wear, rust or damage

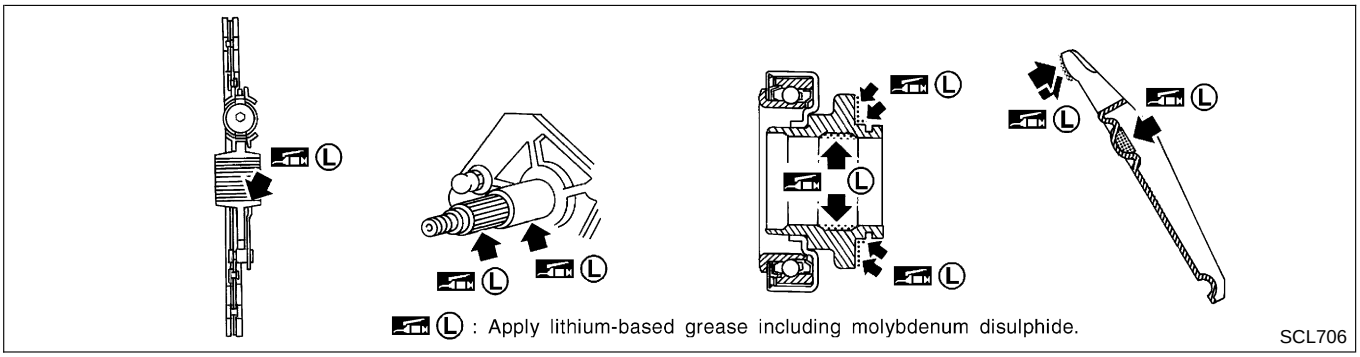

Lubrication

NECL0016

- Apply recommended grease to contact surface and rubbing surface.
- **Too much lubricant might damage clutch disc facing.**

Components

NECL0018

SEC. 300

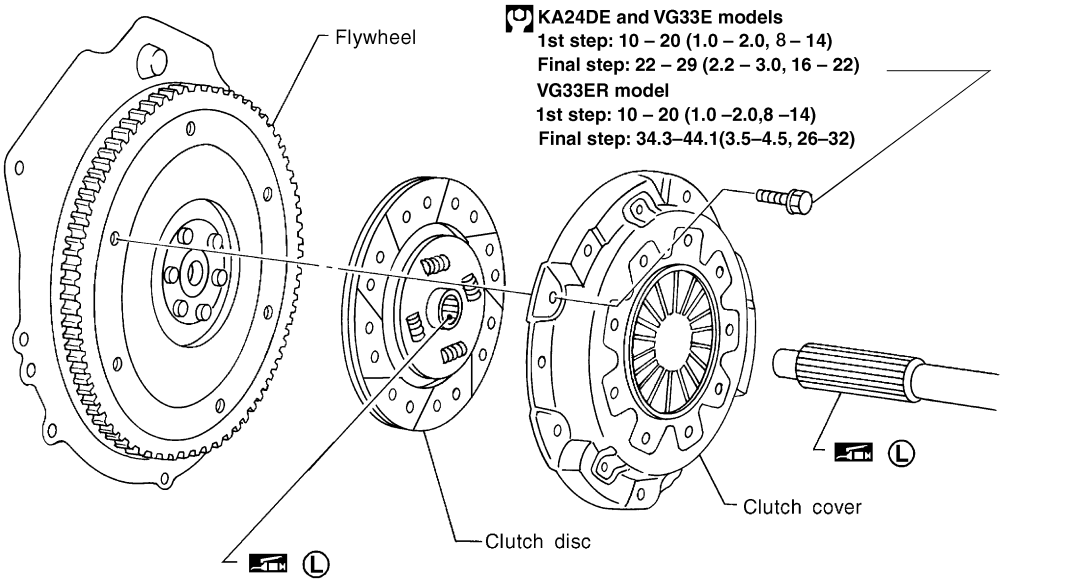

- Do not clean clutch disc surface with solvent.
- When installing, be careful that grease from main drive shaft does not adhere to clutch disc.

: Apply lithium-based grease including molybdenum disulphide.
: N•m (kg-m, ft-lb)

WCL034

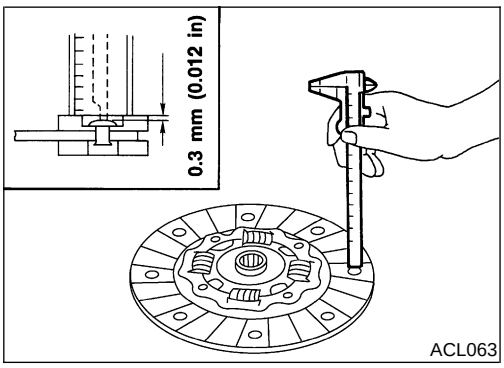

ACL063

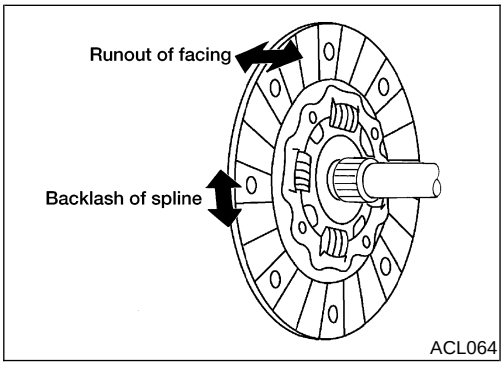

ACL064

Inspection and Adjustment

NECL0019

CLUTCH DISC

NECL0019S01

Check the following items, and replace if necessary.

- Clutch disc, for burns, discoloration, oil or grease leakage
- Clutch disc, for wear of facing

  Wear limit of facing surface to rivet head:
  0.3 mm (0.012 in)

- Clutch disc, for backlash of spline and runout of facing

  Maximum backlash of spline (at outer edge of disc) :
  1.0 mm (0.039 in)
  Runout of facing limit (at outer edge of disc) :
  1.0 mm (0.039 in)
  Distance of runout check point (from hub center) :
  Model 240: 115 mm (4.53 in)
  Model 250: 120 mm (4.72 in)

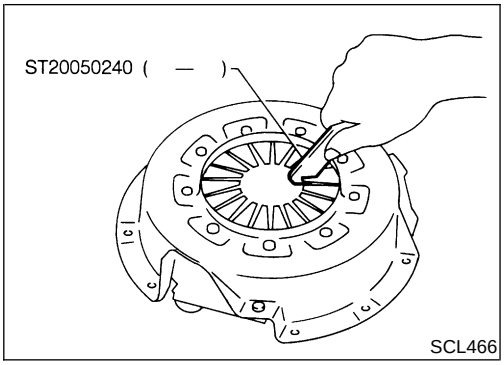

CLUTCH COVER AND FLYWHEEL

NECL0019S02

- Check clutch cover, installed on vehicle, for uneven diaphragm spring toe height.

  Uneven limit:

  KA24DE: 0.7 mm (0.028 in)

  VG33E, VG33ER: 0.5 mm (0.0020 in)

- If out of limit, adjust the height with Tool.

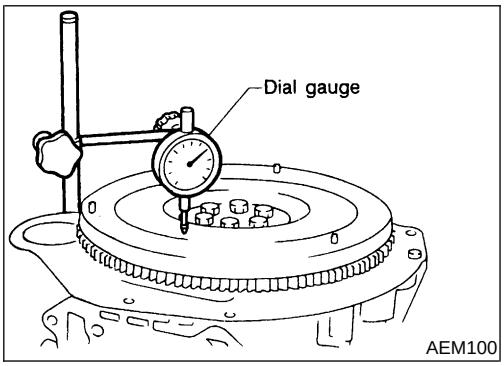

FLYWHEEL INSPECTION

NECL0019S03

CAUTION:

Do not allow any magnetic materials to contact the ring gear teeth.

- Inspect contact surface of flywheel for slight burns or discoloration. Clean flywheel with emery paper.
- Check flywheel runout.

  Maximum allowable runout:

  Refer to *EM-52* (KA24DE), or *EM-123* (VG33E, VG33ER), "Flywheel/Drive Plate Runout".

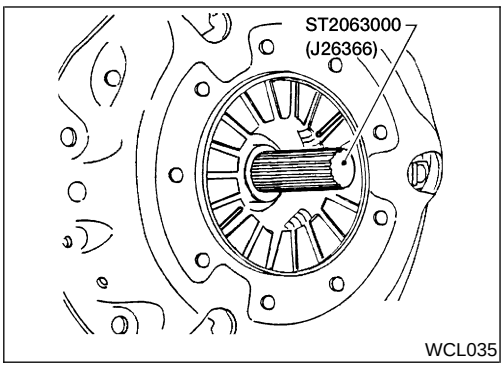

Installation

NECL0020

- Apply recommended grease to contact surface of splines.
- **Too much lubricant may damage clutch disc facing.**
- Insert Tool into clutch disc hub when installing clutch cover and disc.
- Be careful not to allow grease to contaminate clutch facing.

Installation (Cont'd)

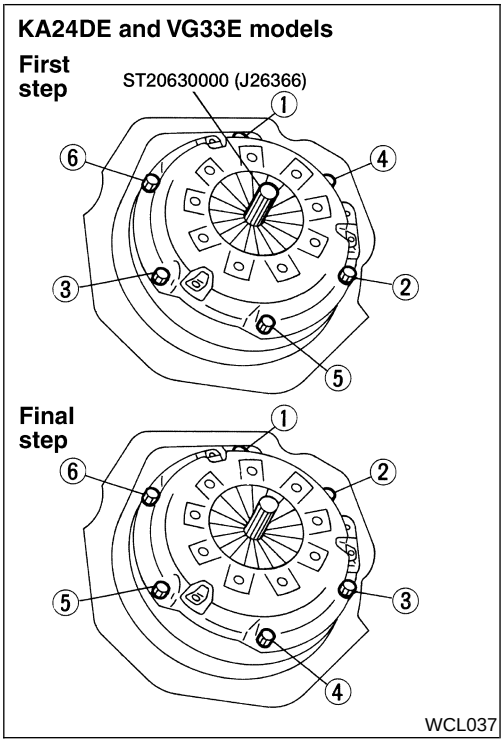

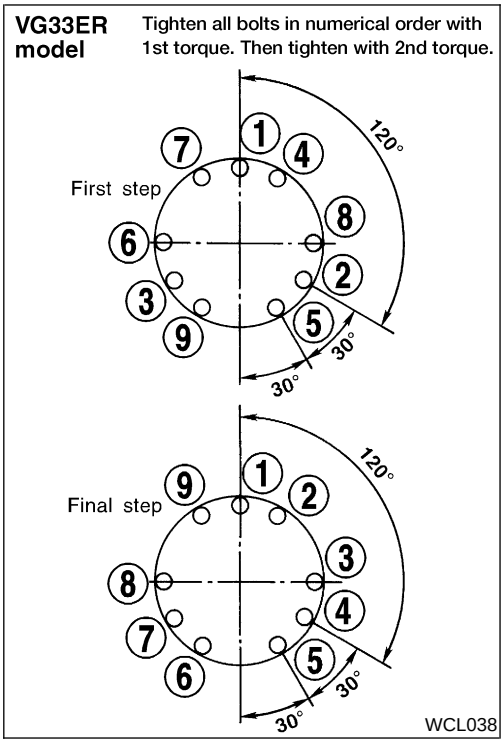

- Tighten bolts in numerical order, in two steps.

KA24DE, VG33E models

First step:

: 10 - 20 N·m (1.0 - 2.0 kg-m, 8 - 14 ft-lb)

Final step:

: 22 - 29 N·m (2.2 - 3.0 kg-m, 16 - 22 ft-lb)

VG33ER model

First step:

: 10 - 20 N·m (1.0 - 2.0 kg-m, 8 - 14 ft-lb)

Final step:

: 34.3 - 44.1 N·m (3.5 - 4.5 kg-m, 26 - 32 ft-lb)

Clutch Control System

NECL0028

Type of clutch control	Hydraulic

Clutch Master Cylinder (with clutch damper)

NECL0021

Inner diameter	15.87 mm (5/8 in)

Clutch Operating Cylinder

NECL0022

Inner diameter	19.05 mm (3/4 in)

Clutch Disc

NECL0029

Unit: mm (in)

Model	240	250
Engine	KA24DE	VG33E & VG33ER
Facing size (Outer dia. x inner dia. x thickness)	240 x 150 x 3.5 (9.45 x 5.90 x 0.138)	250 x 160 x 3.5 (9.84 x 6.30 x 0.138)
Thickness of disc assembly with load	7.75 - 8.25 (0.305 - 0.3248) with 4,903 N (500 kg, 1,103 lb)	8.1 - 8.5 (0.3189 - 0.3346) with 6,473 N (660 kg, 1,455 lb)
Wear limit of facing surface to rivet head	0.3 (0.012)	0.3 (0.012)
Runout limit of facing	1.0 (0.039)	1.0 (0.039)
Distance of runout check point (from hub center)	115 (4.53)	120 (4.72)
Maximum backlash of spline (at outer edge of disc)	1.0 (0.039)	1.0 (0.039)

Clutch Cover

NECL0030

Unit: mm (in)

Engine		KA24DE	VG33E	VG33ER
Model		240	250	250
Set-load	2WD	4,903 N (500 kg, 1,103 lb)	6,473 N (660 kg, 1,455 lb)	7,355 N (750 kg, 1,653 lb)
	4WD	—	6,473 N (660 kg, 1,455 lb)	7,355 N (750 kg, 1,653 lb)
Diaphragm spring height		37.5 - 39.5 (1.476 - 1.555)	36.5 - 38.5 (1.437 - 1.516)	39.5 - 41.5 (1.555 - 1.634)
Uneven limit of diaphragm spring toe height		0.7 (0.028)	0.5 (0.020)	0.5 (0.020)

Clutch Pedal

NECL0031

Unit: mm (in)

Engine	KA24DE	VG33E, VG33ER
Pedal height “H”*	221 - 231 (8.70 - 9.09)	227 - 237 (8.94 - 9.33)
Pedal free play “A” (at pedal pad)	9 - 16 (0.35 - 0.63)	9 - 16 (0.35 - 0.63)
Clearance “C” between pedal stopper bracket and clutch pedal position switch (with clutch pedal fully depressed.)	0.1 - 1.0 (0.004 - 0.039)	0.1 - 1.0 (0.004 - 0.039)

*: Measured from surface of dash lower panel to pedal pad.

NOTES

MANUAL TRANSMISSION

SECTION MT

CONTENTS

FS5W71C

PREPARATION 3
Special Service Tools 3
Commercial Service Tools 5
NOISE, VIBRATION AND HARSHNESS (NVH) TROUBLESHOOTING 6
NVH Troubleshooting Chart 6
MANUAL TRANSMISSION 6
DESCRIPTION 7
Cross-sectional View 7
ON-VEHICLE SERVICE 8
Replacing Rear Oil Seal 8
REMOVAL 8
INSTALLATION 8
Position Switch Check 8
REMOVAL AND INSTALLATION 9
Removal 9
Installation 10
OVERHAUL 11
Case Components 11
Gear Components 12
Shift Control Components 13
DISASSEMBLY 14
Case Components 14
DISASSEMBLY 14
Shift Control Components 14
DISASSEMBLY 14
Gear Components 15
DISASSEMBLY 15
INSPECTION 18
Shift Control Components 18
INSPECTION 18
Gear Components 18
INSPECTION 18
ASSEMBLY 20
Gear Components 20
ASSEMBLY 20
Shift Control Components 26
ASSEMBLY 26
Case Components 27
ASSEMBLY 27
SERVICE DATA AND SPECIFICATIONS (SDS) 30
General Specifications 30
Gear End Play 30
Clearance Between Baulk Ring and Gear 31
Available Snap Rings 31
MAIN DRIVE GEAR BEARING 31
MAINSHAFT FRONT 31
COUNTER DRIVE GEAR 31
OD MAINSHAFT BEARING 32
Available Shims 32
COUNTERSHAFT FRONT BEARING 32

FS5R30A

PREPARATION 33
Special Service Tools 33
Commercial Service Tool 35
NOISE, VIBRATION AND HARSHNESS (NVH) TROUBLESHOOTING 36
NVH Troubleshooting Chart 36
MANUAL TRANSMISSION 36
DESCRIPTION 37
Cross-sectional View - 2WD Model 37
Cross-sectional View - 4WD Model 38
ON-VEHICLE SERVICE 39
Replacing Rear Oil Seal - 2WD Model 39
REMOVAL 39
INSTALLATION 39
Position Switch Check 40
REMOVAL AND INSTALLATION 41
Removal 41
2WD MODEL 41
4WD MODEL 42
Installation 43
OVERHAUL 44
Case Components 44
Gear Components 45
Shift Control Components (2/4WD models) 47

CONTENTS (Cont'd)

DISASSEMBLY....48
Case Components....48
DISASSEMBLY....48
Shift Control Components....49
DISASSEMBLY....49
Gear Components....50
DISASSEMBLY....50
INSPECTION....54
Shift Control Components....54
INSPECTION....54
Gear Components....54
INSPECTION....54
ASSEMBLY....56
Gear Components....56
ASSEMBLY....56
Shift Control Components....64
ASSEMBLY....64
Case Components....65
ASSEMBLY....65
SERVICE DATA AND SPECIFICATIONS (SDS)....67
General Specifications....67
Gear End Play....67
Clearance Between Single Baulk Ring and Gear....67
DOUBLE BAULK RING....68
Distance Between Rear Surface of Reverse Cone and Reverse Baulk Ring....68
Available Snap Ring....68
MAIN DRIVE GEAR SNAP RING....68
MAINSHAFT FRONT SNAP RING....68
COUNTER GEAR REAR SNAP RING....69
Available C-ring....69
MAINSHAFT C-RING....69
Available Shim and Washer....69
TABLE FOR SELECTING PROPER COUNTER GEAR FRONT BEARING THRUST WASHER....69
REVERSE IDLER REAR THRUST WASHER....70

Special Service Tools

NEMT0050

The actual shapes of Kent-Moore tools may differ from those of special service tools illustrated here.

Tool number (Kent-Moore No.) Tool name	Description	
ST23810001 (—) Adapter setting plate	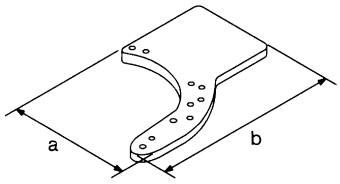 NT407	Fixing adapter plate with gear assembly **a: 166 mm (6.54 in)** **b: 270 mm (10.63 in)**
KV32101330 (See J34286) Puller	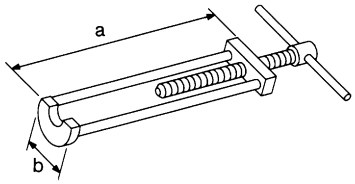 NT408	Removing overdrive mainshaft bearing **a: 447 mm (17.60 in)** **b: 100 mm (3.94 in)**
KV31100401 (—) Transmission press stand	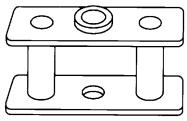 NT068	Pressing counter gear and mainshaft
ST22520000 (J26348) Wrench	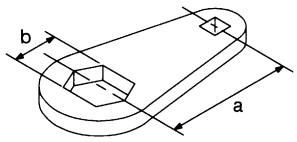 NT409	Tightening mainshaft lock nut **a: 100 mm (3.94 in)** **b: 41 mm (1.61 in)**
ST23540000 (J25689-A) Pin punch	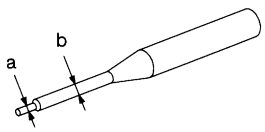 NT442	Removing and installing fork rod retaining pin **a: 2.3 mm (0.091 in) dia.** **b: 4 mm (0.16 in) dia.**
ST30031000 (J22912-01) Puller	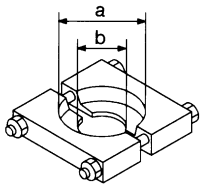 NT411	Removing and installing 1st gear bushing Removing main drive gear bearing **a: 90 mm (3.54 in) dia.** **b: 50 mm (1.97 in) dia.**
ST23860000 (—) Drift	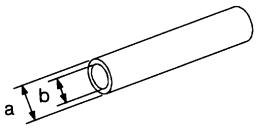 NT065	Installing counter drive gear **a: 38 mm (1.50 in) dia.** **b: 33 mm (1.30 in) dia.**
ST22360002 (J25679-01) Drift	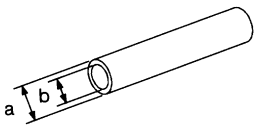 NT065	Installing counter gear front and rear end bearings **a: 29 mm (1.14 in) dia.** **b: 23 mm (0.91 in) dia.**

Special Service Tools (Cont'd)

Tool number (Kent-Moore No.) Tool name	Description	
ST22350000 (J25678-01) Drift	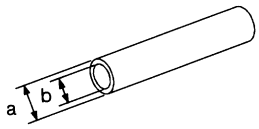 NT065	Installing OD gear bushing **a: 34 mm (1.34 in) dia.** **b: 28 mm (1.10 in) dia.**
ST23800000 (J25691-01) Drift	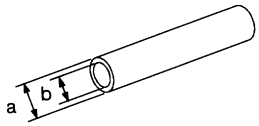 NT065	Installing front cover oil seal **a: 44 mm (1.73 in) dia.** **b: 31 mm (1.22 in) dia.**
ST33400001 (J26082) Drift	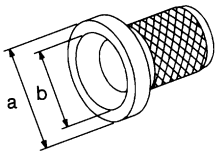 NT086	Installing rear oil seal **a: 60 mm (2.36 in) dia.** **b: 47 mm (1.85 in) dia.**
ST33290001 (J34286) Puller	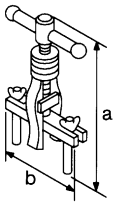 NT414	Removing rear oil seal **a: 250 mm (9.84 in)** **b: 160 mm (6.30 in)**
ST30720000 (J25405) Drift	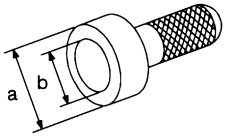 NT115	Installing mainshaft ball bearing **a: 77 mm (3.03 in) dia.** **b: 55.5 mm (2.185 in) dia.**
ST30613000 (J25742-3) Drift	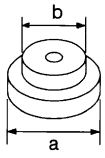 NT073	Installing main drive gear bearing **a: 71.5 mm (2.815 in) dia.** **b: 47.5 mm (1.870 in) dia.**
ST33200000 (J26082) Drift	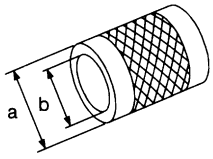 NT091	Installing counter rear bearing **a: 60 mm (2.36 in) dia.** **b: 44.5 mm (1.752 in) dia.**

Commercial Service Tools

NEMT0051

Tool name	Description	
Puller	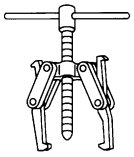 NT077	Removing counter bearings, counter drive and OD gears
Drift	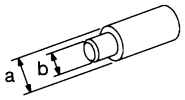 NT074	Installing countershaft rear end bearing **a: 40 mm (1.57 in) dia.** **b: 30 mm (1.18 in) dia.**

NVH Troubleshooting Chart

NEMT0052S01

Use the chart below to help you find the cause of the symptom. The numbers indicate the order of the inspection. If necessary, repair or replace these parts.

MANUAL TRANSMISSION

NEMT0052S0101

Reference page		Refer to ***MA-37***, "Checking M/T Oil".			MT-11	MT-11	MT-13	MT-13	MT-12	MT-12	MT-12	MT-12
SUSPECTED PARTS (Possible cause)		OIL (Oil level is low.)	OIL (Wrong oil.)	OIL (Oil level is high.)	GASKET (Damaged)	OIL SEAL (Worn or damaged)	CHECK PLUG RETURN SPRING AND CHECK BALL (Worn or damaged)	SHIFT FORK (Worn)	GEAR (Worn or damaged)	BEARING (Worn or damaged)	BAULK RING (Worn or damaged)	INSERT SPRING (Damaged)
Symptom	Noise	1	2						3	3		
	Oil leakage		3	1	2	2						
	Hard to shift or will not shift		1	1							2	2
	Jumps out of gear						1	2	2			

Cross-sectional View

NEMT0053S01

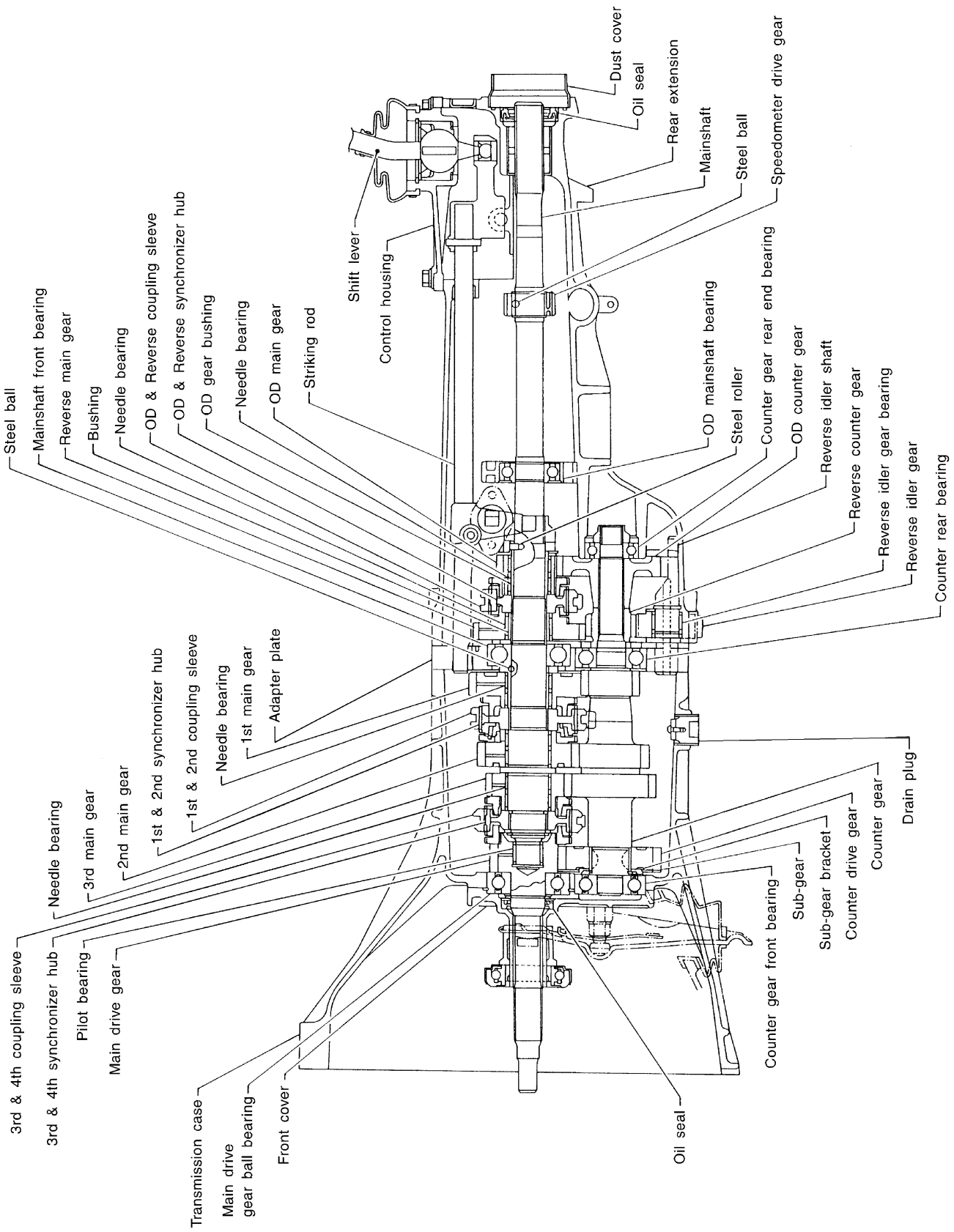

SMT153D

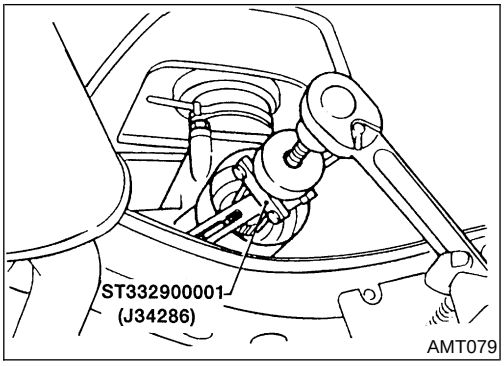

Replacing Rear Oil Seal

NEMT0054

REMOVAL

NEMT0054S01

1. Remove the propeller shaft. Refer to ***PD-9***, " Removal and Installation".
2. Remove rear oil seal using Tool.

- **Always replace with a new seal once it has been removed.**

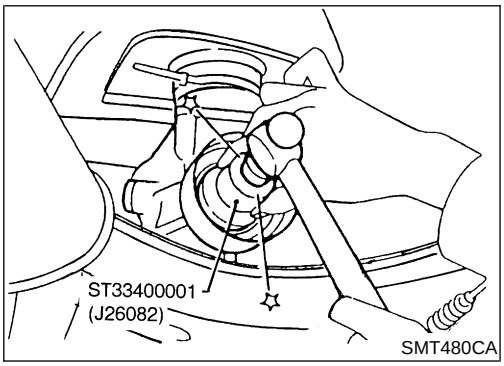

INSTALLATION

NEMT0054S02

1. Install new oil seal until it stops.

- **Apply multi-purpose grease to seal lip of oil seal before installing.**

2. Install any part removed.

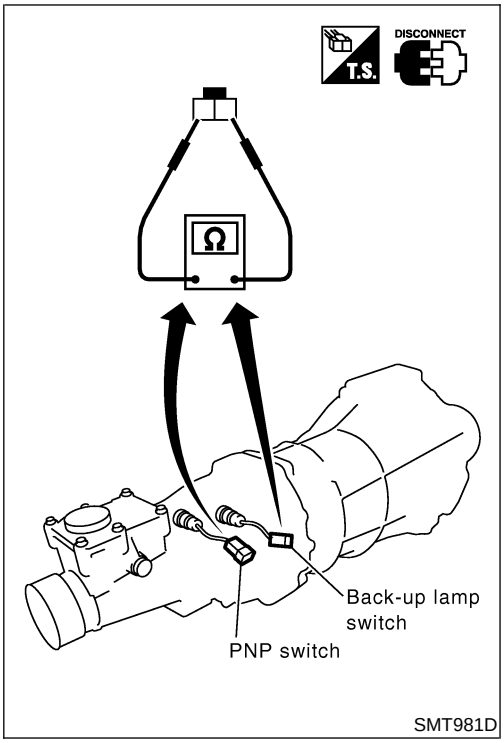

Position Switch Check

NEMT0055

- Check continuity.

Switch	Gear position	Continuity
Back-up lamp switch	Reverse	Yes
	Except reverse	No
Park/neutral position (PNP) switch	Neutral	Yes
	Except neutral	No

Removal

NEMT0056S01

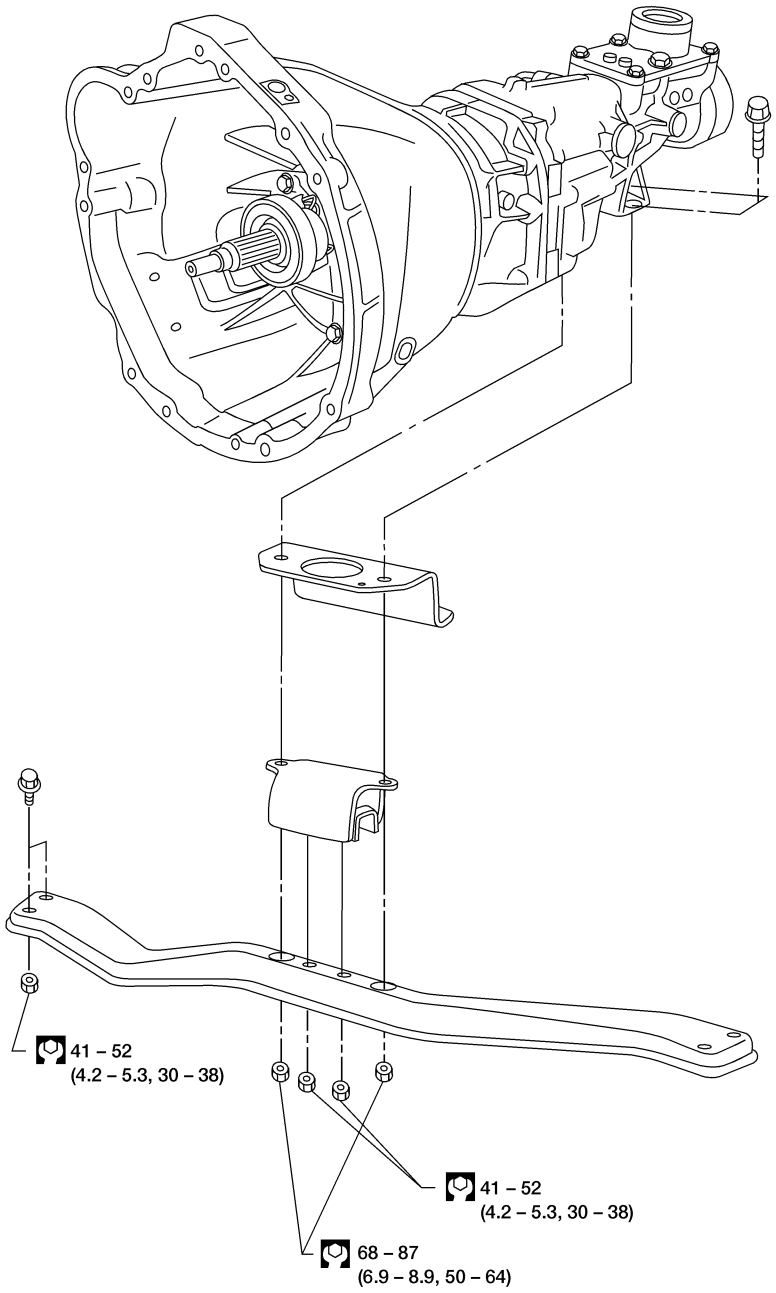

: N·m (kg-m, ft-lb)

WMT030

CAUTION:
Before separating the transmission from the engine, remove the crankshaft position sensor (OBD) from the transmission. Be careful not to damage sensor edge or ring gear teeth.

NOTE:
To prevent oil spills, drain transmission oil before removing transmission or insert plug into rear oil seal after removing propeller shaft.

- **Be careful not to damage spline, sleeve yoke, and rear oil seal when removing propeller shaft.**

1. Remove battery negative terminal.
2. Remove the crankshaft position sensor (OBD) from transmission upper side.
3. Remove the clutch operating cylinder from transmission.
4. Disconnect the vehicle speed sensor, back-up switch, and park/neutral position (PNP) switch harness connectors.
5. Remove the starter motor from transmission.
6. Disconnect the exhaust hanger.
7. Remove the propeller shaft. Refer to ***PD-9***, "Removal and Installation".

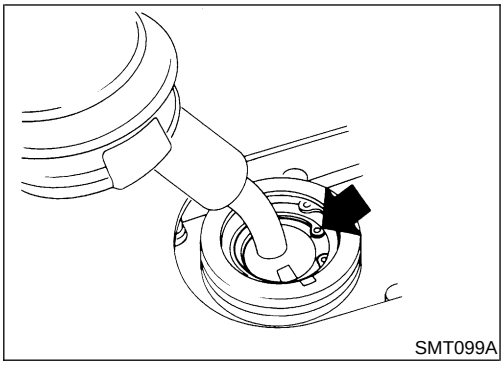
SMT099A

8. Remove the shift lever.
9. Support the engine by placing a jack under the oil pan.

- **Do not place jack under oil pan drain plug.**

10. Remove the transmission crossmember.
11. Separate the transmission from the engine.

WARNING:
Support manual transmission while removing it.

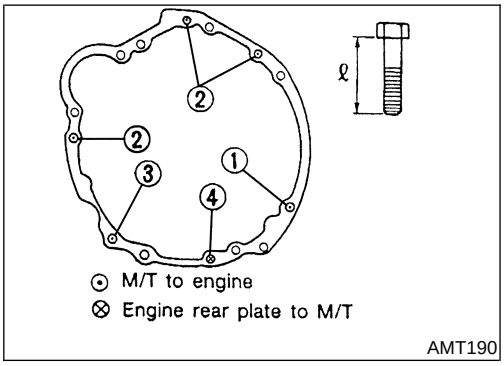

AMT190

Installation

NEMT0056S02

1. Tighten bolts securing transmission.

Bolt No.	Tightening torque N·m (kg-m, ft-lb)	ℓ mm (in)
1	39 - 49 (4.0 - 5.0, 29 - 36)	65 (2.56)
2	39 - 49 (4.0 - 5.0, 29 - 36)	58 (2.28)
3*	16 - 22 (1.6 - 2.2, 12 - 16)	25 (0.98)
4	16 - 22 (1.6 - 2.2, 12 - 16)	16 (0.63)

*: With nut

2. Tighten clutch operating cylinder to the specified torque. Refer to ***CL-5***, "CLUTCH SYSTEM".

Case Components

NEMT0057S01

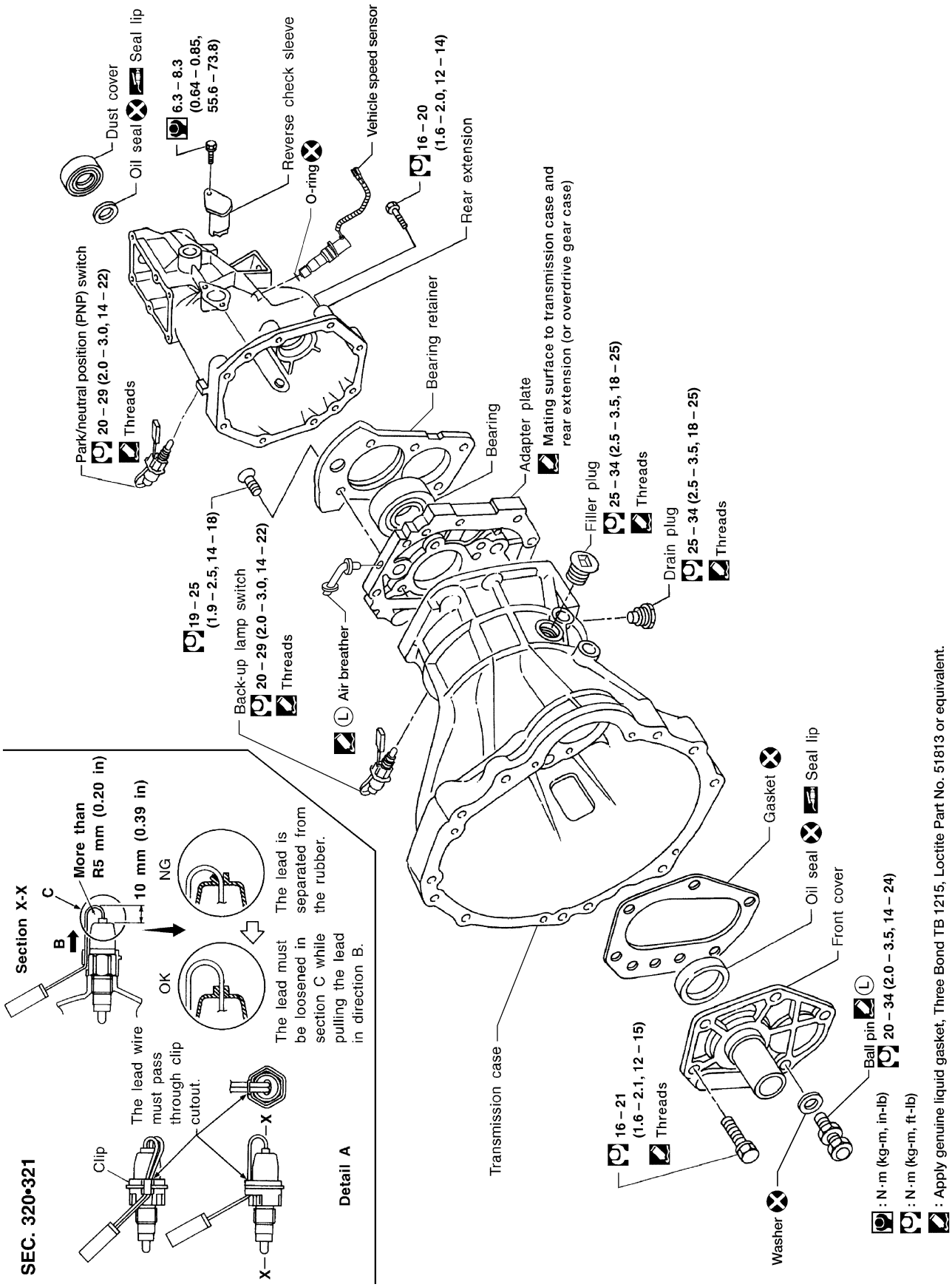

WMT055

Gear Components

NEMT0057S02

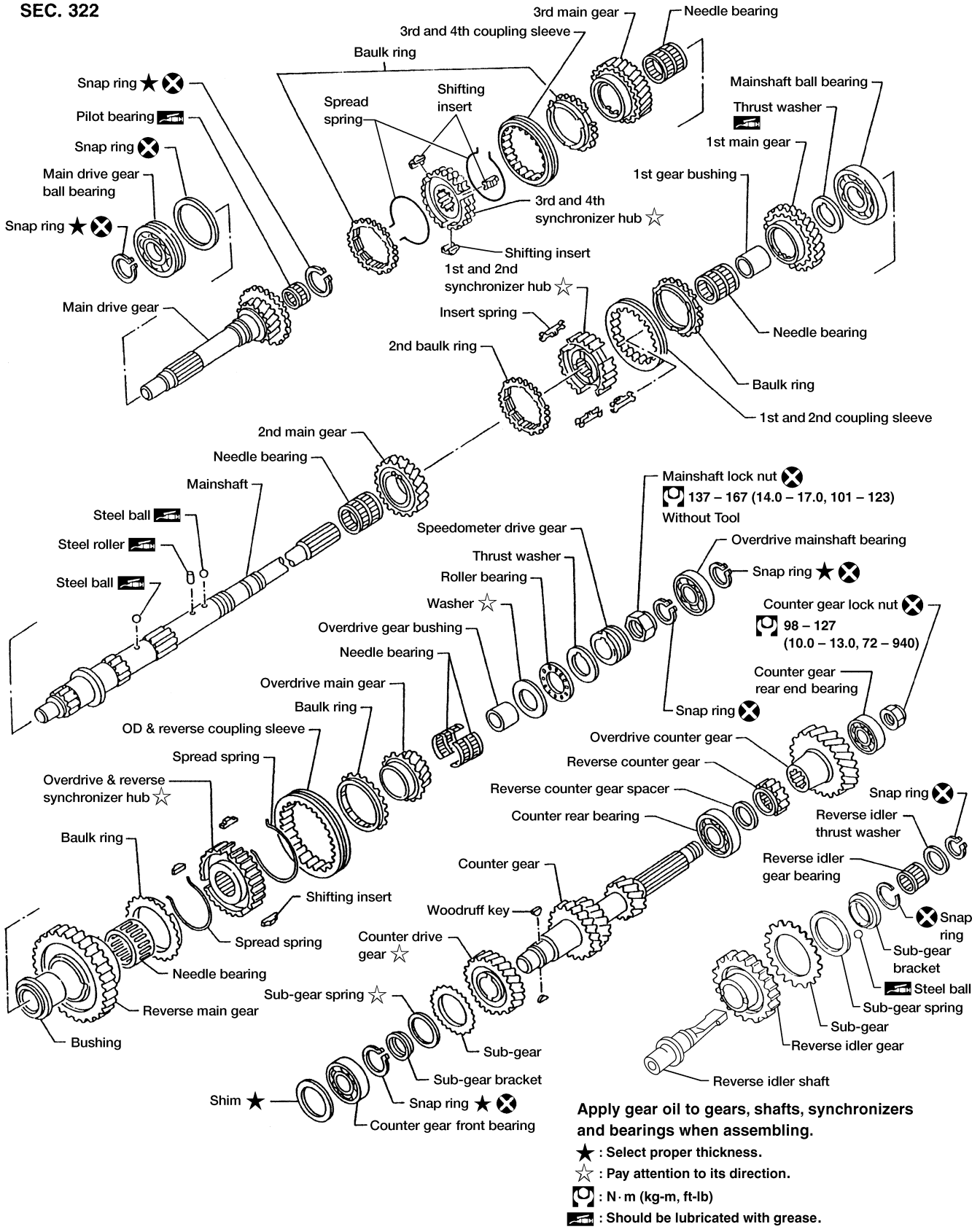

AMT156

Shift Control Components

NEMT0057S03

CAUTION:
To avoid damage when replacing shift knob, remove shift lever with knob, as assembled.

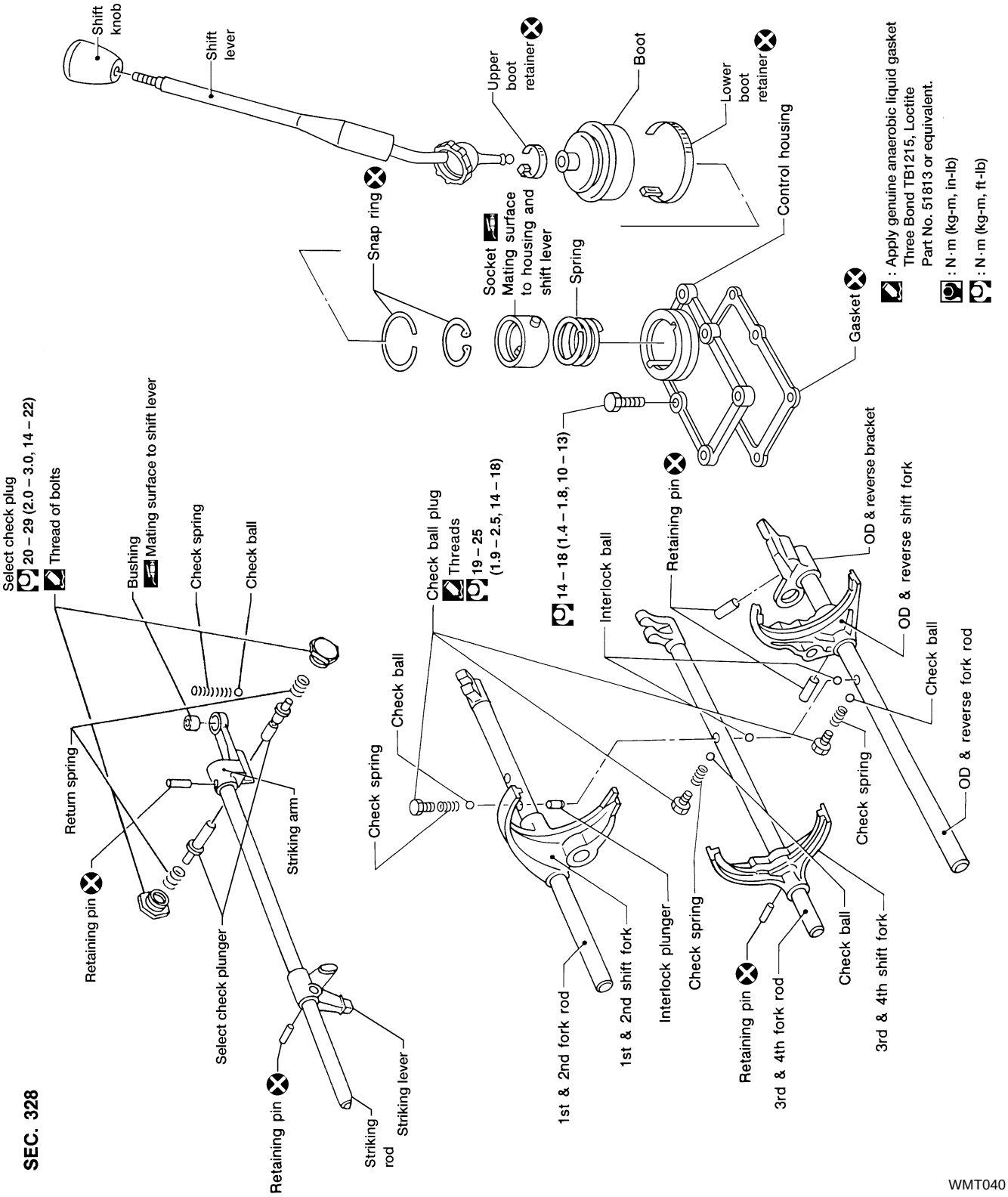

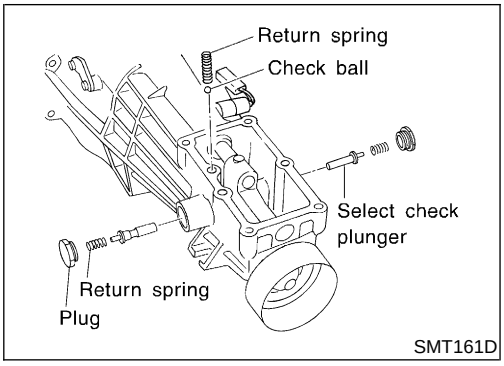

Case Components

DISASSEMBLY

NEMT0058

1. Remove rear extension.

a. Remove control housing, check ball, return spring plugs, select check plungers and return springs. Also remove reverse check plug, check spring and check ball.

- **Be careful not to lose check balls.**

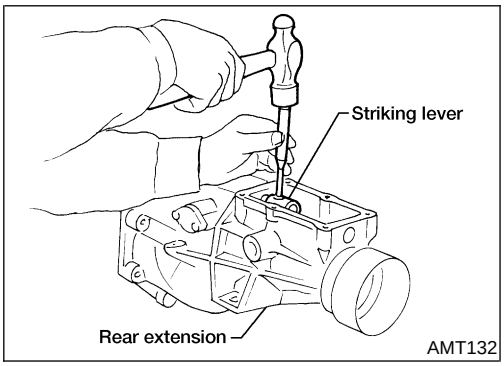

b. Drive out striking lever retaining pin.
c. Remove striking lever from striking rod.
d. Remove rear extension by lightly tapping on it.

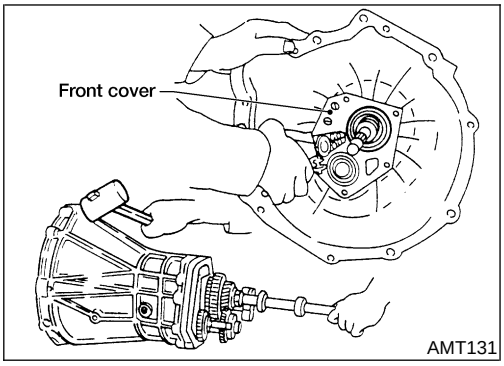

2. Remove front cover, gasket, counter gear front bearing shim and main drive gear ball bearing snap ring.
3. Separate transmission case from adapter plate by lightly tapping on it.

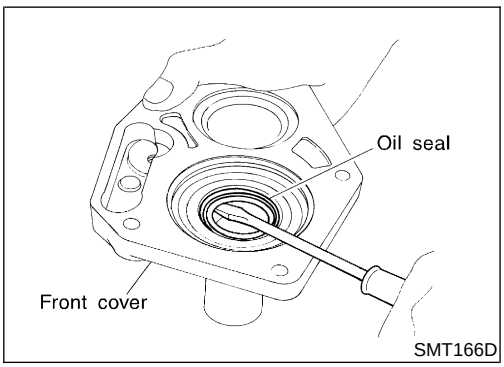

4. Remove oil seal from front cover.

- **Be careful not to damage mating surface of front cover.**

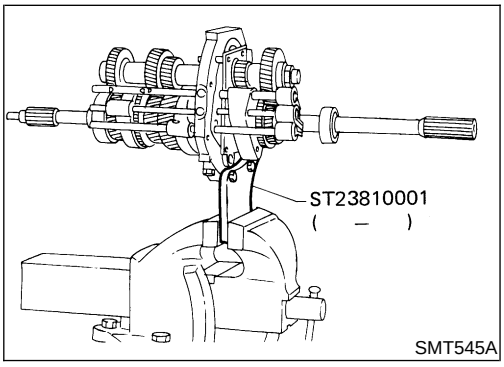

Shift Control Components

DISASSEMBLY

NEMT0059

1. Set up Tool on adapter plate.
2. Remove striking rod from adapter plate.
3. Remove check ball plugs, check springs, and check balls.

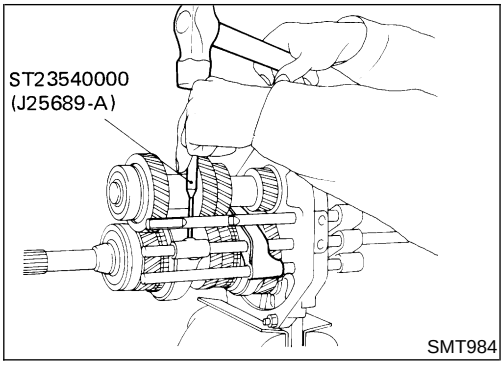

SMT984

4. Drive out retaining pins. Then drive out fork rods and remove interlock balls.

Gear Components

DISASSEMBLY

NEMT0060

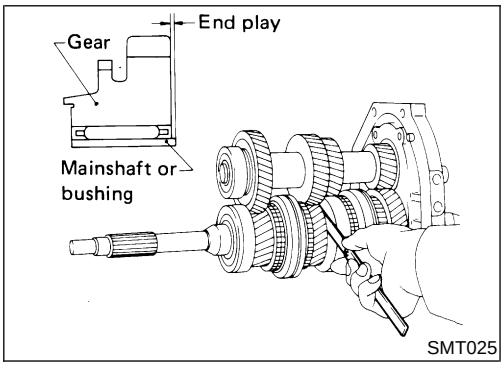

SMT025

1. Before disassembly, measure the end play of each gear.
- If end play is not within the specified limit, disassemble and inspect the parts.
- Replace any part which is worn or damaged. Refer to "Gear End Play", MT-30.

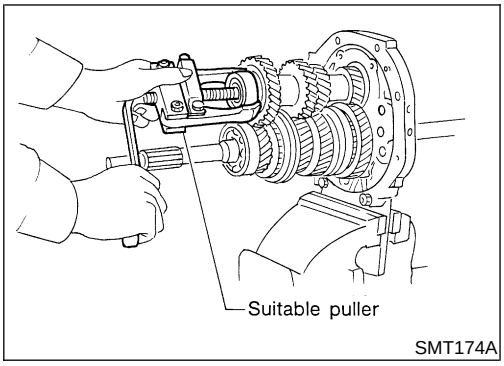

SMT174A

2. Mesh 2nd and reverse gear, then remove counter gear front bearing using a suitable puller.
3. Remove snap ring, then remove sub-gear bracket, sub-gear spring and sub-gear.

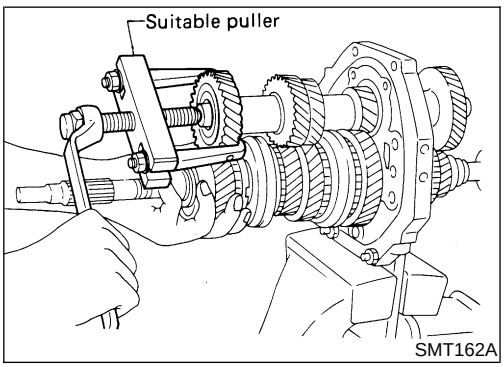

SMT162A

4. Remove counter drive gear together with main drive gear assembly using a suitable puller.
- **When removing main drive gear assembly, be careful not to drop pilot bearing or baulk ring.**
5. Remove snap ring, then remove 3rd and 4th synchronizer assembly and 3rd main gear.

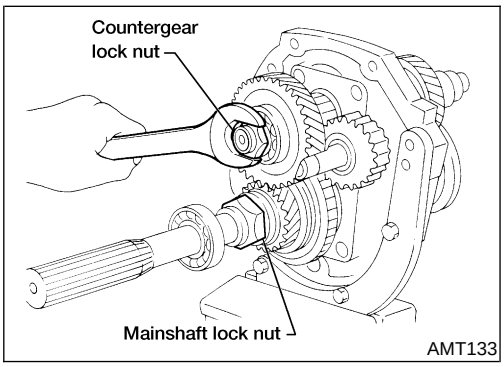

AMT133

6. Disassemble parts at rear of adapter plate as follows:
a. Release staking on both countergear and mainshaft lock nuts, then loosen both nuts.

Mainshaft lock nut: Left-hand thread

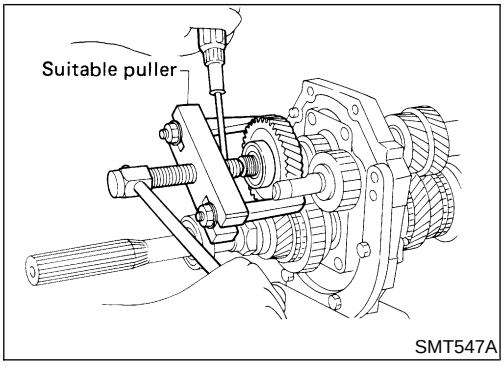

b. Remove overdrive counter gear together with counter gear rear end bearing using a suitable puller.
c. Remove reverse counter gear and spacer.
d. Remove snap rings from reverse idler shaft, then remove reverse idler gear, thrust washers and reverse idler gear bearing.

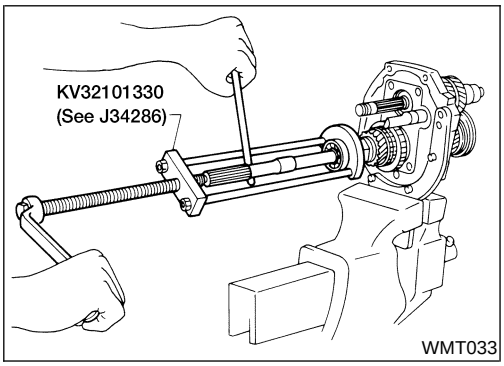

e. Remove snap ring and pull out overdrive mainshaft bearing, then remove snap ring. (2WD model)
f. Remove mainshaft lock nut.
g. Remove speedometer drive gear and steel ball. (2WD model)
h. Remove thrust washer, steel roller, roller bearing and washer.
i. Remove overdrive main gear, needle bearing and baulk ring (overdrive).
j. Remove counter gear by tapping on rear end of counter gear.
k. Press out overdrive gear bushing and overdrive & reverse synchronizer assembly.
l. Remove reverse main gear and needle bearing.
m. Press out reverse gear bushing.

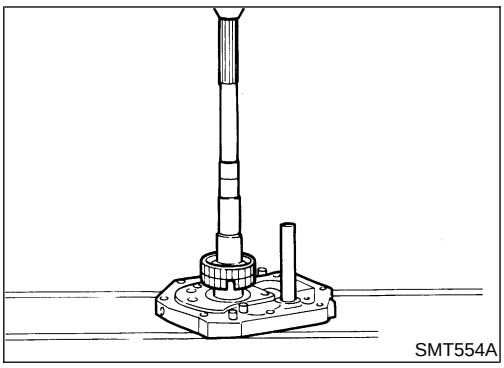

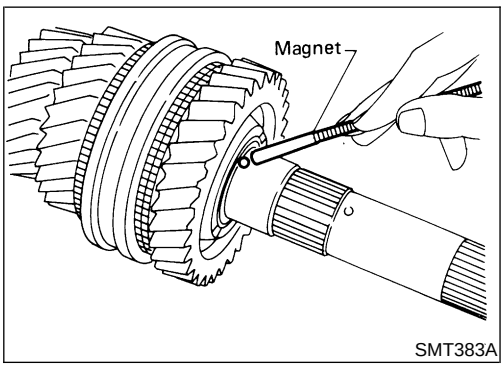

7. Remove thrust washer, steel ball, 1st main gear and needle bearing.

- **Be careful not to lose steel ball.**

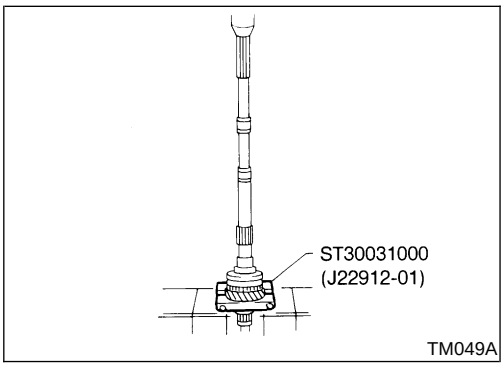

8. Press out 1st gear bushing together with 2nd main gear using Tool.
Remove 2nd gear needle bearing.

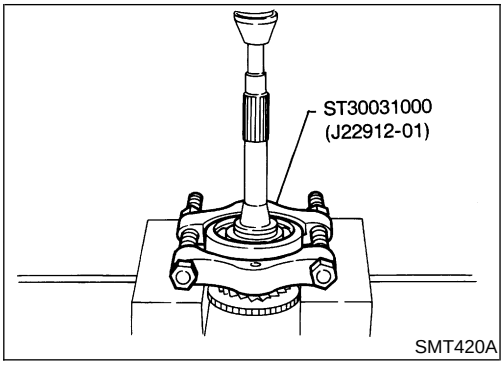

9. Remove main drive gear ball bearing.
a. Remove snap ring.
b. Remove main drive gear ball bearing.

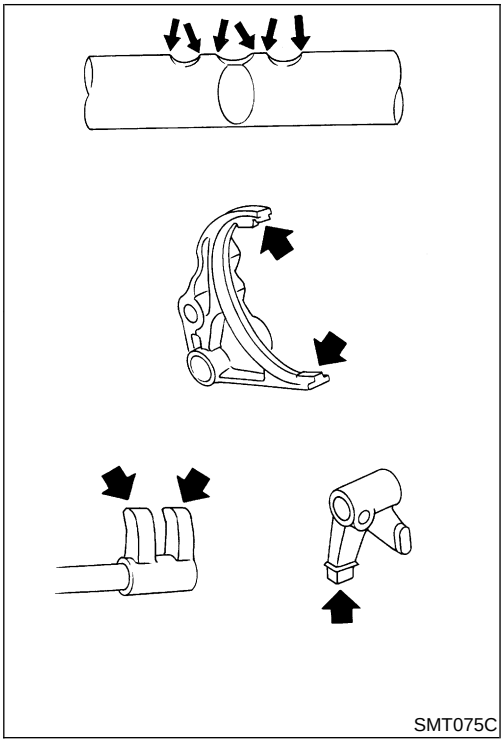
SMT075C

Shift Control Components

INSPECTION

NEMT0061

- Check contact and sliding surfaces of fork rods for wear, scratches, projections and other damage.

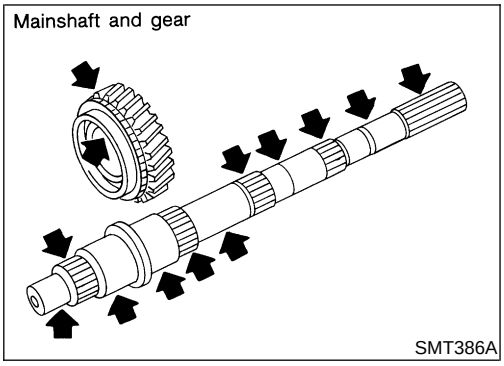

SMT386A

Gear Components

INSPECTION

NEMT0062

Gears and Shafts

NEMT0062S01

- Check shafts for cracks, wear and bending.
- Check gears for excessive wear, chips and cracks.

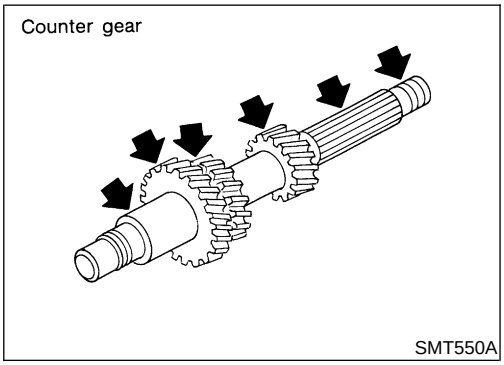

SMT550A

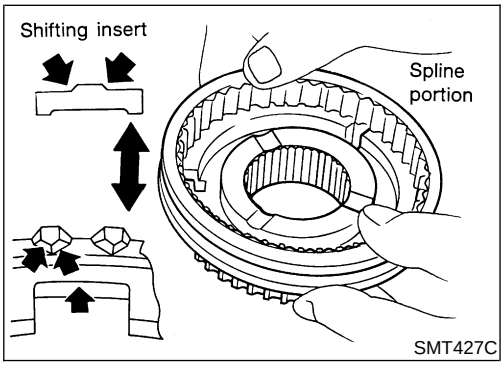

SMT427C

Synchronizers

NEMT0062S02

- Check spline portion of coupling sleeves, synchronizer hubs, and gears for wear, chips, and cracks.
- Check baulk rings for cracks and deformation.
- Check shifting inserts for wear and deformation.
- Check insert spread springs for deformation.

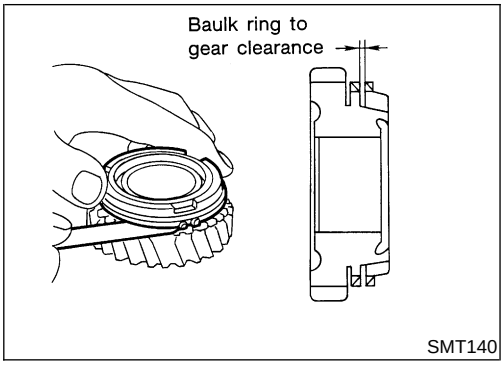

SMT140

- Measure baulk ring wear.

1) Measure clearance between baulk ring and gear.

Clearance between baulk ring and gear:

Refer to "Clearance Between Baulk Ring and Gear", MT-31.

- If the clearance is less than the wear limit, replace baulk ring.

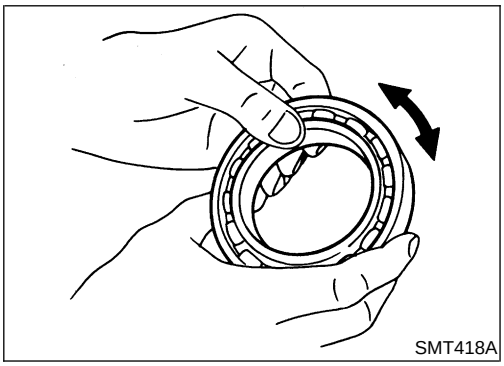
SMT418A

Bearings

NEMT0062S03

- Make sure all bearings roll freely and are free from noise, cracks, pitting or wear.

Gear Components

ASSEMBLY

NEMT0063

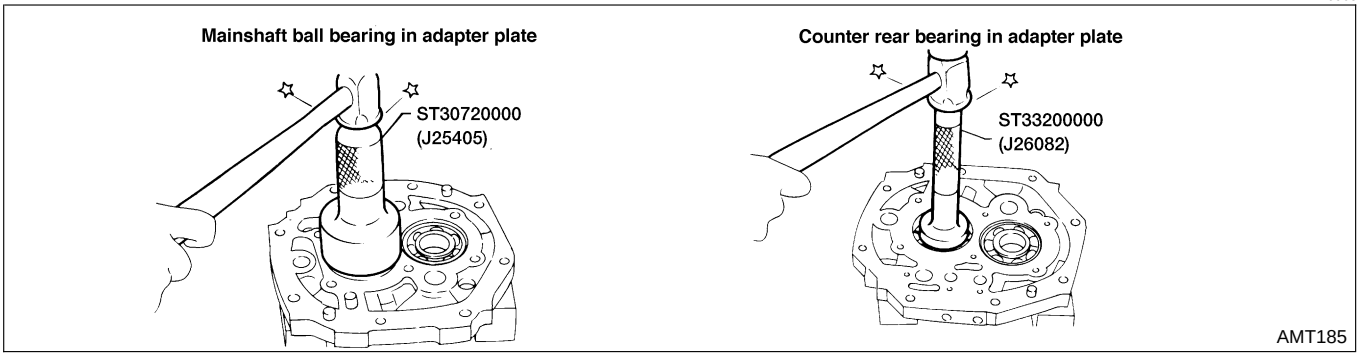

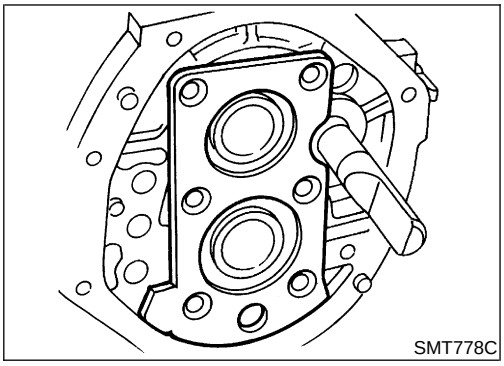

1. Install bearings into case components.
2. Assemble adapter plate parts.

- Install oil gutter on adapter plate and expand on rear side.
- Install bearing retainer.

a. Insert reverse idler shaft, then install bearing retainer.

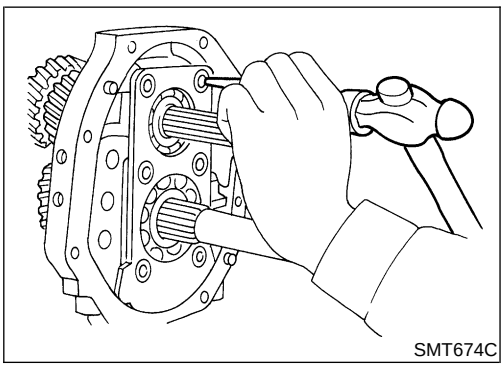

b. Tighten each screw, then stake each one at two points.

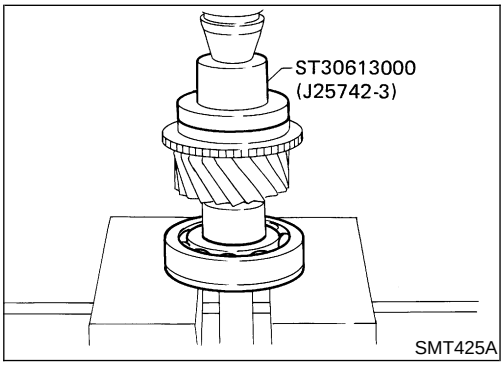

3. Install main drive gear ball bearing.

a. Press main drive gear ball bearing.

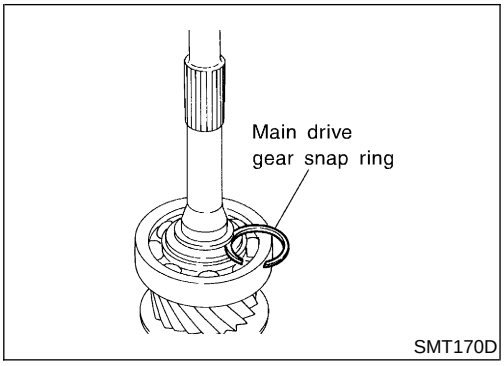

b. Select and install proper main drive gear snap ring to achieve proper clearance of groove.

Allowable clearance of groove:
0 - 0.13 mm (0 - 0.0051 in)
Main drive gear bearing snap ring:
Refer to "MAIN DRIVE GEAR BEARING", MT-31.

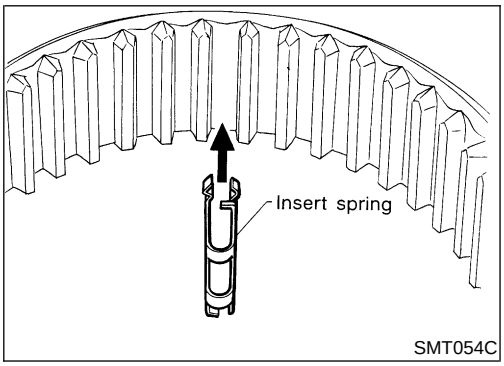

4. Assemble synchronizers.

- Assemble the 1st and 2nd synchronizer.

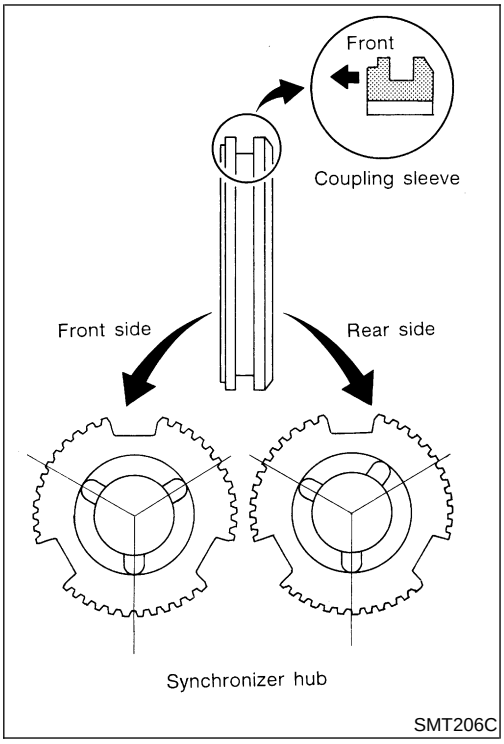

- Check coupling sleeve and synchronizer hub orientation.

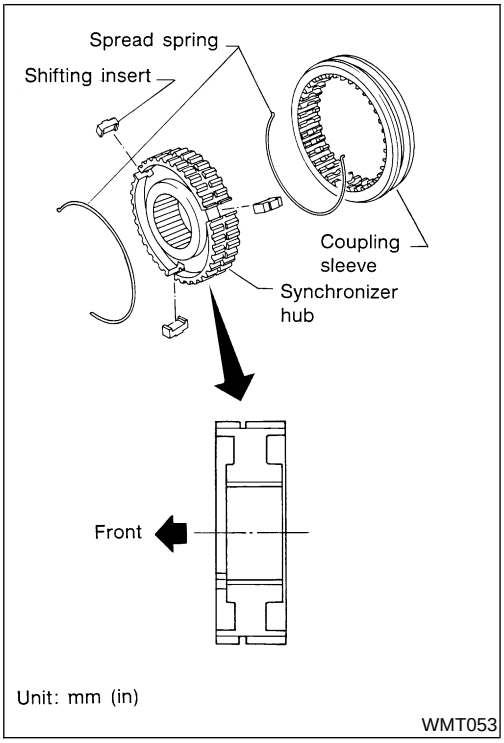

- Assemble the 3rd and 4th synchronizer.

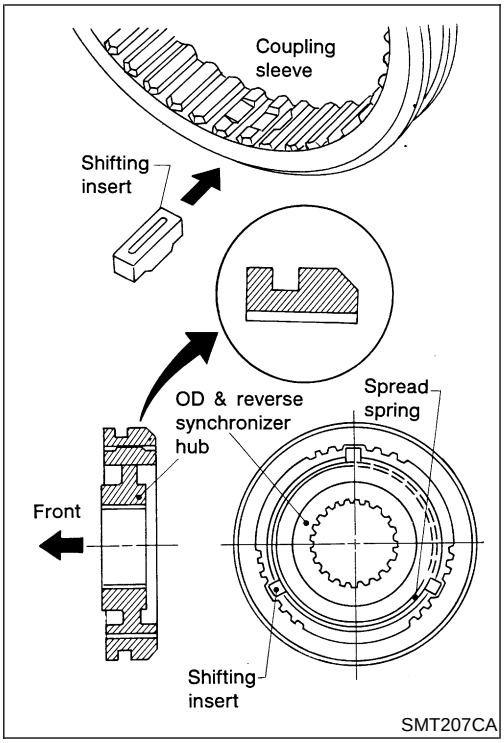

- Assemble the overdrive and reverse synchronizer.

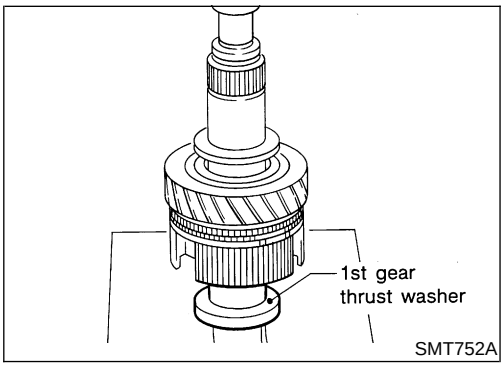

5. Assemble front side components to mainshaft.

a. Install 2nd main gear, needle bearing and 1st and 2nd synchronizer assembly; then press 1st gear bushing onto the mainshaft.

b. Install 1st main gear.

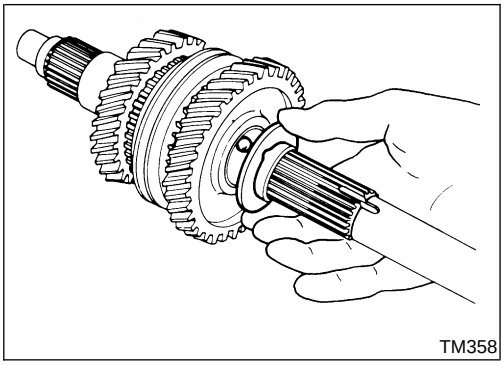
TM358

c. Install steel ball and 1st gear washer.

- **Before installation, apply multi-purpose grease to steel ball and to both sides of the 1st gear washer.**

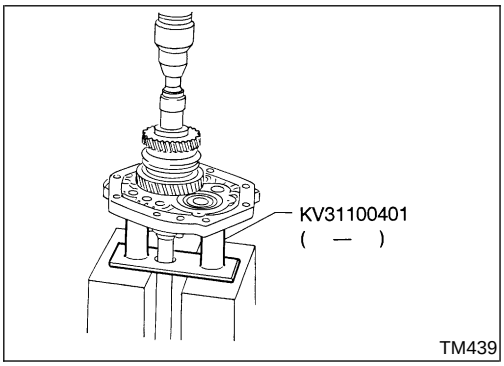

TM439

6. Install mainshaft and counter gear on adapter plate and main drive gear on mainshaft as follows:

a. Press mainshaft assembly into adapter plate using Tool.

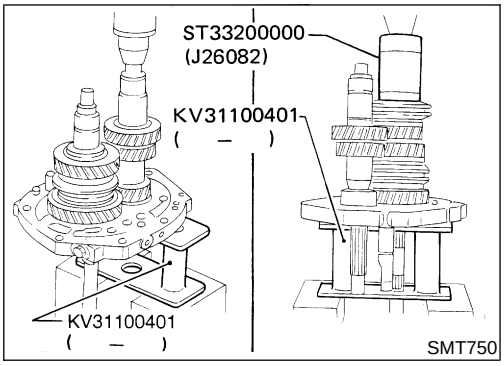

SMT750

b. Press counter gear into adapter plate using Tool.

c. Install 3rd main gear and needle bearing, then press 3rd and 4th synchronizer assembly onto mainshaft.

- **Pay attention to the direction of 3rd and 4th synchronizer.**

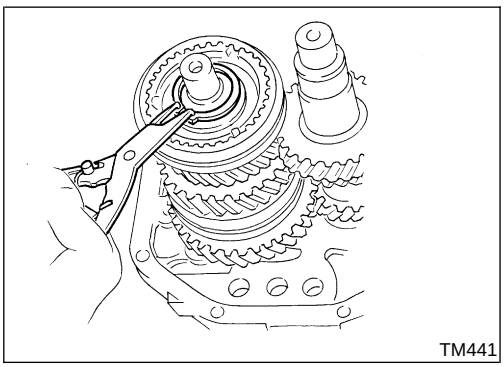
TM441

d. Install front mainshaft snap ring.
Select proper front mainshaft snap ring to achieve proper clearance of groove.

Allowable clearance of groove:
0 - 0.18 mm (0 - 0.0071 in)
Mainshaft front snap ring:
Refer to "MAINSHAFT FRONT", MT-31.

e. Apply gear oil to mainshaft pilot bearing and install it on mainshaft.

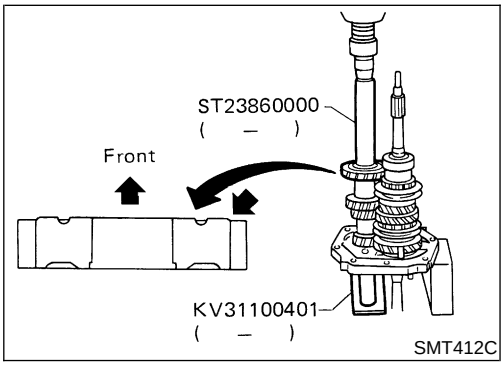

SMT412C

f. Press counter drive gear together with main drive gear using Tool.

- **Pay attention to the direction of counter drive gear.**

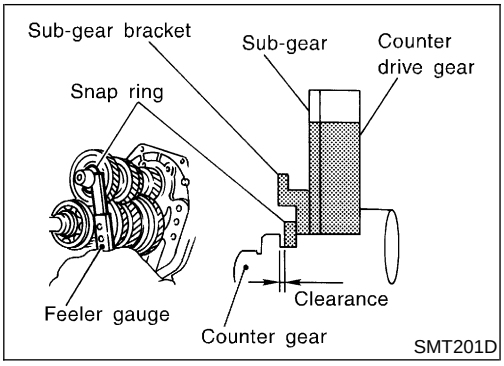

g. Install sub-gear components.

i. Install sub-gear and sub-gear bracket on counter drive gear and then select proper snap ring that will minimize clearance of groove in counter gear.

- **Do not install sub-gear spring at this time.**

Allowable clearance of groove:
0 - 0.13 mm (0 - 0.0051 in)
Counter drive gear snap ring:
Refer to "COUNTER DRIVE GEAR", MT-31.

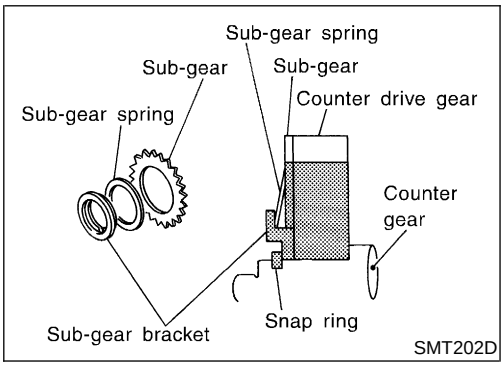

ii. Remove snap ring, sub-gear bracket and sub-gear from counter gear.

iii. Reinstall sub-gear, sub-gear spring, sub-gear bracket and snap ring.

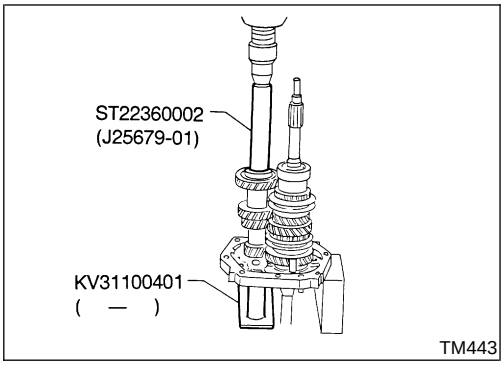

h. Press counter/gear front bearing onto counter gear using Tool.

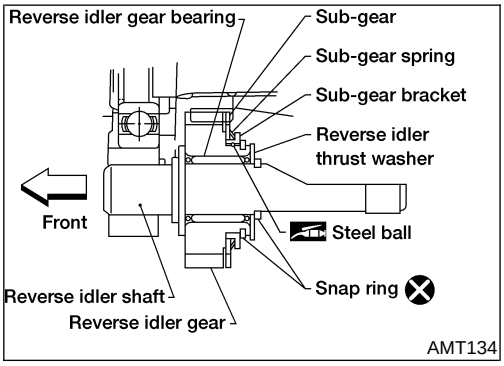

7. Install rear side components on mainshaft and counter gear as follows:

a. Install sub-gear parts (sub-gear, sub-gear spring, sub-gear bracket, steel ball and snap ring) on the reverse idler gear.

b. Install reverse idler gear to reverse idler shaft along with reverse idler thrust washer, snap rings and reverse idler gear bearing.

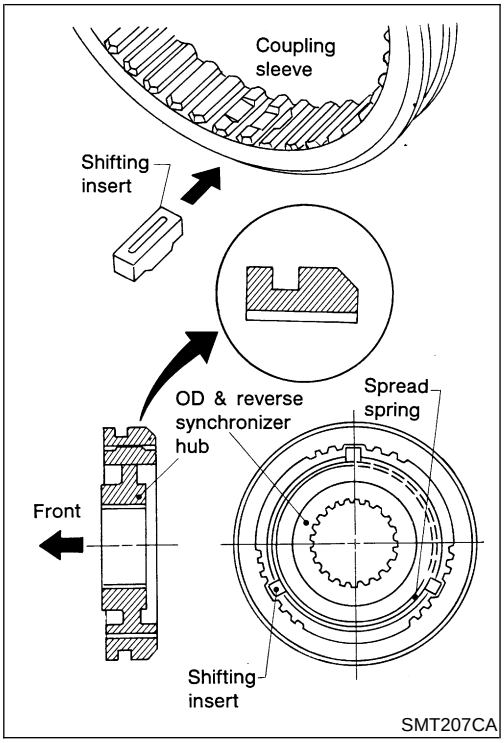

c. Install bushing, reverse main gear and overdrive and reverse synchronizer to mainshaft.

- **Pay attention to the direction of synchronizer hub.**

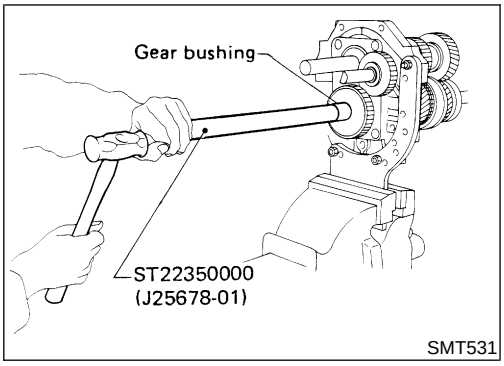

d. Install overdrive gear bushing to mainshaft using Tool.
e. Install overdrive main gear and needle bearing to mainshaft.
f. Install spacer, reverse counter gear and overdrive counter gear to counter/gear.

- **OD main gear and OD counter gear should be handled as a matched set.**

g. Install washer, roller bearing, steel roller and thrust washer.
h. Tighten mainshaft lock nut temporarily.

- **Always use new lock nut.**

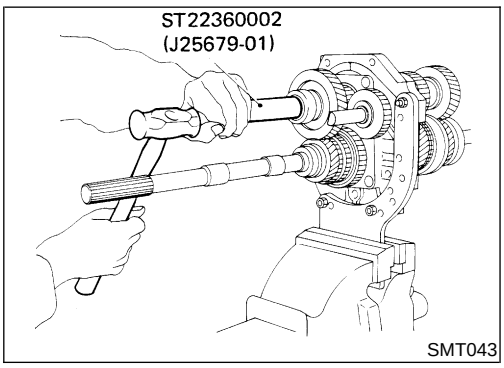

i. Install counter/gear rear end bearing using Tool.

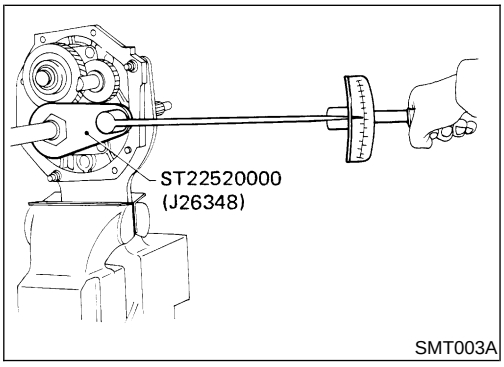

8. Mesh 2nd and reverse gears, then tighten mainshaft lock nut using Tool.

- **Always use new lock nut.**

Mainshaft lock nut:

: 137 - 167 N·m (14.0 - 17.0 kg-m, 101 - 123 ft-lb)

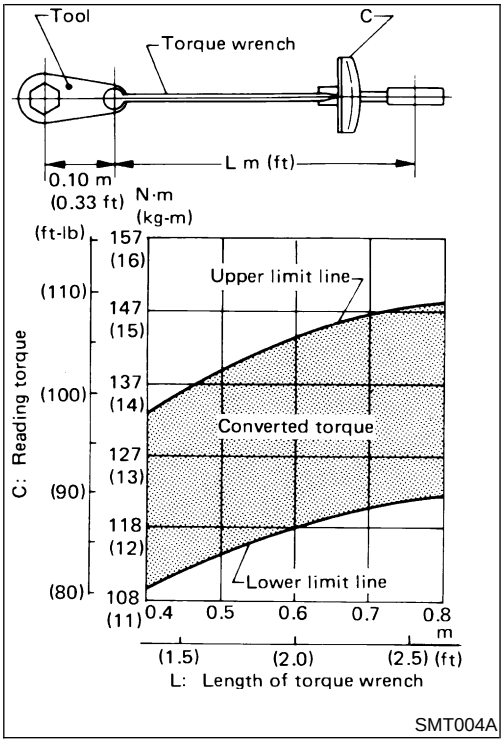

- Use the chart shown at left to determine the proper reading torque.
  (Length of torque wrench vs. setting or reading torque)
  Reference: Formula to convert torque wrench indication to the true torque value:
  $T = (0.1\ m\ (0.33\ ft) + L) / L \times C$
  If the specified torque is T kg-m (ft-lb), the torque wrench scale indication C is determined using the following formula.
  $C = (T \times L) / (0.1\ m\ (0.33\ ft) + L)$

9. Tighten counter gear lock nut.

- **Always use new lock nut.**

Counter gear lock nut:
: 98 - 127 N·m (10.0 - 13.0 kg-m, 72 - 94 ft-lb)

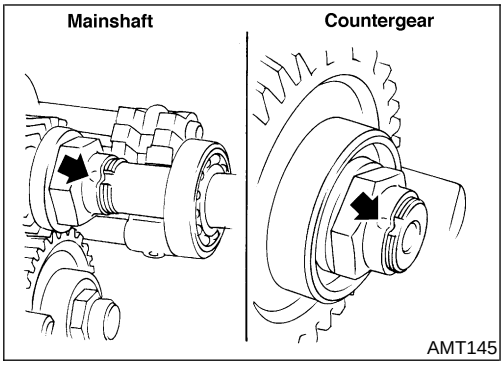

10. Stake mainshaft lock nut and counter gear lock nut using a punch.
11. Measure gear end play. Refer to "DISASSEMBLY", MT-15.
12. Install snap ring and OD mainshaft bearing, then snap ring.

Allowable clearance:
0 - 0.14 mm (0 - 0.0055 in)
OD mainshaft bearing snap ring:
Refer to "OD MAINSHAFT BEARING", MT-32.

Shift Control Components

ASSEMBLY

NEMT0064

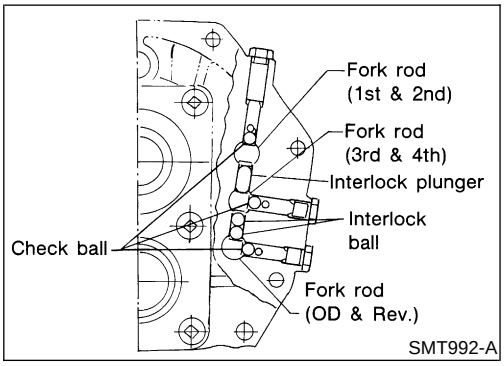

1. Install fork rods, interlock plunger, interlock balls and check balls.

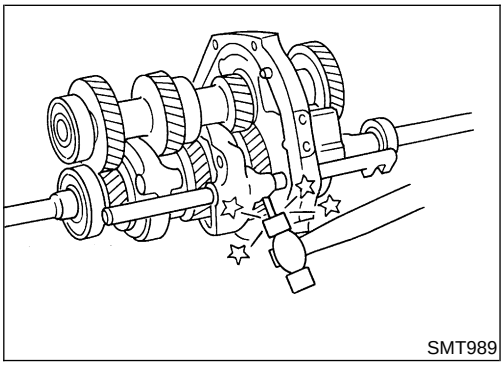

2. Install 1st and 2nd shift fork, then drive in retaining pin.

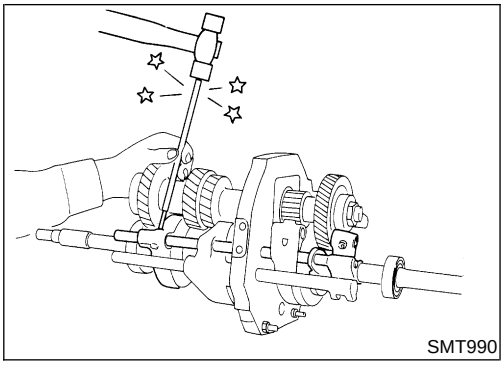
SMT990

3. Install 3rd and 4th shift fork, then drive in retaining pin.

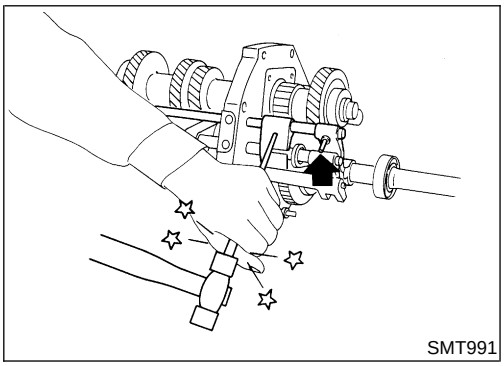
SMT991

4. Install overdrive and reverse shift fork, then drive in retaining pin.

Case Components

ASSEMBLY

NEMT0065

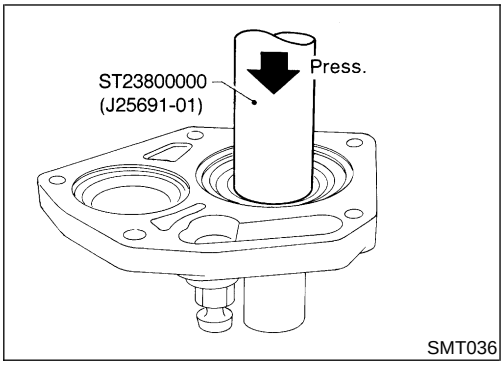

SMT036

1. Install front cover oil seal using Tool.
- **Apply multi-purpose grease to seal lip.**

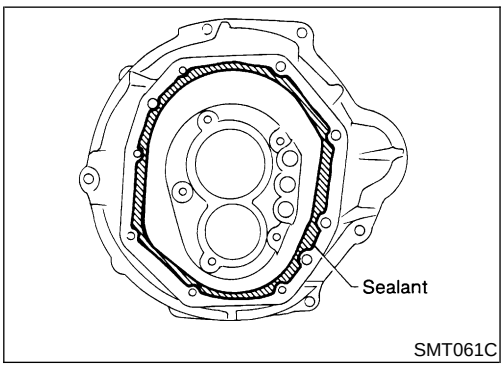

SMT061C

2. Apply sealant to mating surface of transmission case as shown in the figure at left.
- **Use genuine anaerobic liquid gasket, Three Bond TB1215, Loctite Part No. 51813 or equivalent.**

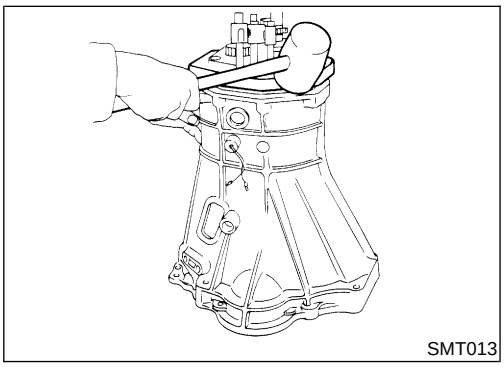
SMT013

3. Slide gear assembly onto adapter plate by lightly tapping it using a soft hammer.

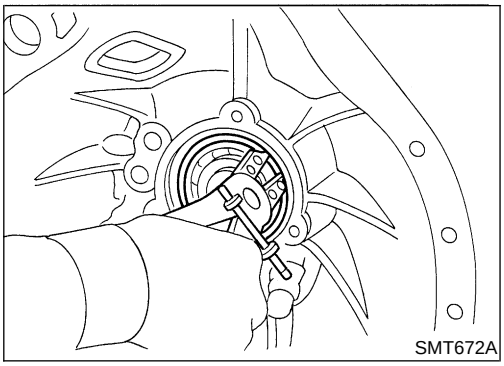
SMT672A

4. Install main drive gear ball bearing snap ring.

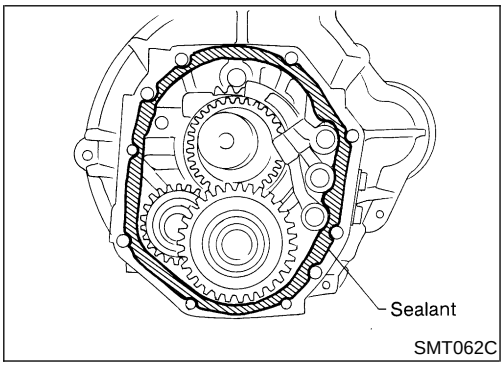

SMT062C

5. Apply sealant to mating surface of adapter plate as shown at left.
- **Use genuine anaerobic liquid gasket Three Bond TB1215, Loctite Part No. 51813 or equivalent.**

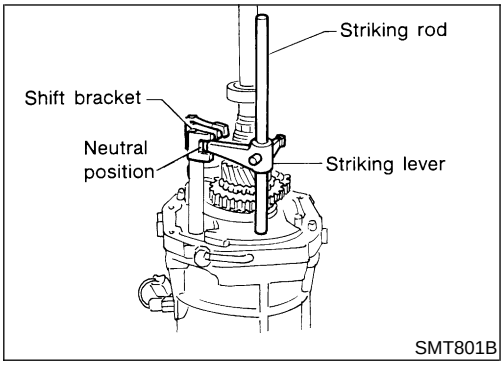

SMT801B

6. Place shift forks in neutral position.
7. Install striking lever and rod onto adapter plate and align striking lever with shift brackets.

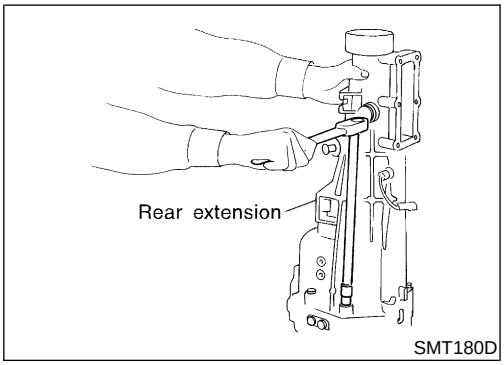

SMT180D

8. Install rear extension.
- Tighten mounting bolts equally in a criss-cross pattern.

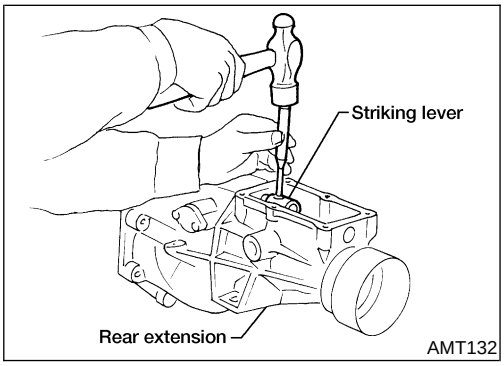

AMT132

9. Install striking lever retaining pin.

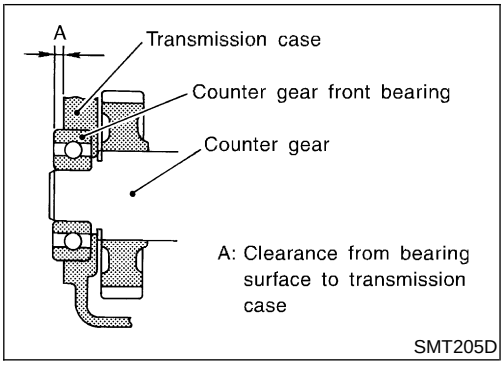

10. Select counter gear front bearing shim.
    Allowable clearance (A) from bearing surface to transmission case:
    0 - 0.16 mm (0 - 0.0063 in)
    Countershaft front bearing shim:
    Refer to "COUNTERSHAFT FRONT BEARING", MT-32.
11. Install gasket and front cover.

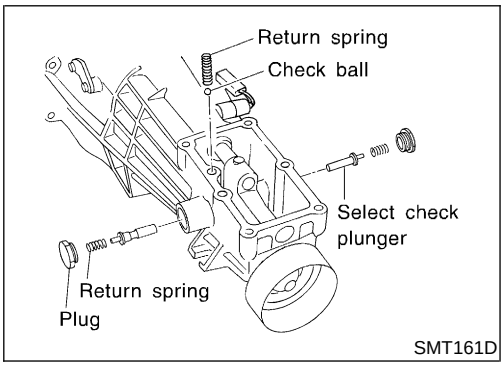

12. Install check ball, return springs, select check plungers and plugs.
13. Install control housing and gasket.

General Specifications

NEMT0066

Applied model		KA24DE
		2WD
Transmission		FS5W71C
Number of speed		5
Shift pattern		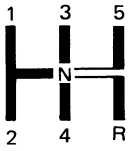 MT-SDS-2
Synchromesh type		Warner
Gear ratio	1st	3.321
	2nd	1.902
	3rd	1.308
	4th	1.000
	OD	0.838
	Reverse	3.382
Mainshaft (Number of teeth)	Drive	22
	1st	33
	2nd	27
	3rd	26
	OD	22
	Reverse	36
Countershaft gear (Number of teeth)	Drive	31
	1st	14
	2nd	20
	3rd	28
	OD	37
	Reverse	15
Reverse idler gear (Number of teeth)		21
Oil capacity ℓ (US pt, Imp pt)		2.0 (4-1/4, 3-1/2)
Remarks	Reverse synchronizer	Installed
	Sub gear	Counter drive gear and reverse idler gear

Gear End Play

NEMT0067

Unit: mm (in)

1st gear	0.31 - 0.41 (0.0122 - 0.0161)
2nd gear	0.11 - 0.21 (0.0043 - 0.0083)
3rd gear	0.11 - 0.21 (0.0043 - 0.0083)
Overdrive gear	0.24 - 0.41 (0.0094 - 0.0161)

Clearance Between Baulk Ring and Gear

NEMT0068

Unit: mm (in)

Standard	1st & 2nd	1.20 - 1.60 (0.0472 - 0.0630)
	3rd & main drive	1.20 - 1.60 (0.0472 - 0.0630)
	Overdrive	1.20 - 1.60 (0.0472 - 0.0630)
	Reverse	1.10 - 1.55 (0.0433 - 0.0610)
Wear limit	1st & 2nd	0.80 (0.0315)
	3rd & main drive	0.80 (0.0315)
	Overdrive	0.80 (0.0315)
	Reverse	0.70 (0.0276)

Available Snap Rings

NEMT0069

MAIN DRIVE GEAR BEARING

NEMT0069S01

Unit: mm (in)

Allowable clearance 0 - 0.13 (0 - 0.0051)	
Thickness	Part number*
1.87 (0.0736)	32204-78001
1.94 (0.0764)	32204-78002
2.01 (0.0791)	32204-78003

*Always check with the Parts Department for the latest parts information.

MAINSHAFT FRONT

NEMT0069S02

Unit: mm (in)

Allowable clearance 0 - 0.18 (0 - 0.0071)	
Thickness	Part number*
2.4 (0.094)	32263-V5200
2.5 (0.098)	32263-V5201

*Always check with the Parts Department for the latest parts information.

COUNTER DRIVE GEAR

NEMT0069S03

Unit: mm (in)

Allowable clearance 0 - 0.13 (0 - 0.0051)	
Thickness	Part number*
1.4 (0.055)	32215-E9000
1.5 (0.059)	32215-E9001
1.6 (0.063)	32215-E9002

*Always check with the Parts Department for the latest parts information.

Available Snap Rings (Cont'd)

OD MAINSHAFT BEARING

NEMT0069S04

Unit: mm (in)

Allowable clearance 0 - 0.14 (0 - 0.0055)

Thickness	Part number*
1.1 (0.043)	32228-20100
1.2 (0.047)	32228-20101
1.3 (0.051)	32228-20102
1.4 (0.055)	32228-20103

*Always check with the Parts Department for the latest parts information.

Available Shims

NEMT0070

COUNTERSHAFT FRONT BEARING

NEMT0070S01

Unit: mm (in)

Allowable clearance "A" 0 - 0.16 (0 - 0.0063)

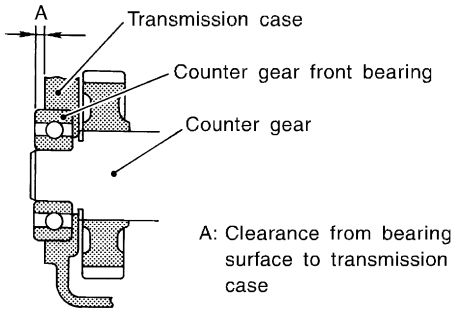

SMT205D

"A"	Thickness of shim	Part number*
4.52 - 4.71 (0.1780 - 0.1854)	Not necessary	
4.42 - 4.51 (0.1740 - 0.1776)	0.1 (0.004)	32218-V5000
4.32 - 4.41 (0.1701 - 0.1736)	0.2 (0.008)	32218-V5001
4.22 - 4.31 (0.1661 - 0.1697)	0.3 (0.012)	32218-V5002
4.12 - 4.21 (0.1622 - 0.1657)	0.4 (0.016)	32218-V5003
4.02 - 4.11 (0.1583 - 0.1618)	0.5 (0.020)	32218-V5004
3.92 - 4.01 (0.1543 - 0.1579)	0.6 (0.024)	32218-V5005

*Always check with the Parts Department for the latest parts information.

Special Service Tools

NEMT0001

The actual shapes of Kent-Moore tools may differ from those of special service tools illustrated here.

Tool number (Kent-Moore No.) Tool name	Description	
ST23540000 (J25689-A) Pin punch	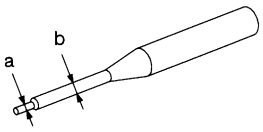 NT442	Removing and installing retaining pin **a: 2.3 mm (0.091 in) dia.** **b: 4 mm (0.16 in) dia.**
ST30031000 (J22912-01) Puller	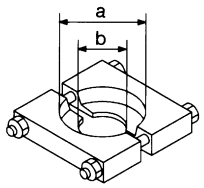 NT411	Removing 1st & 2nd synchronizer assembly Removing counter gear rear thrust bearing Removing main drive bearing **a: 90 mm (3.54 in) dia.** **b: 50 mm (1.97 in) dia.**
ST33290001 (J34286) Puller	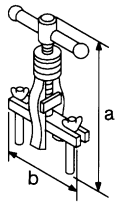 NT414	Removing rear oil seal **a: 250 mm (9.84 in)** **b: 160 mm (6.30 in)**
ST33230000 (—) Drift	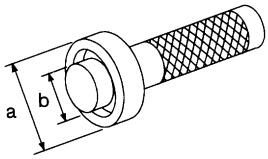 NT084	Removing mainshaft and counter gear **a: 51 mm (2.01 in) dia.** **b: 28.5 mm (1.122 in) dia.**
ST22350000 (J25678-01) Drift	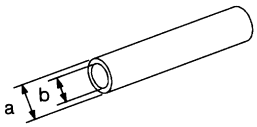 NT065	Removing counter gear front bearing (Use with KV38100300) **a: 34 mm (1.34 in) dia.** **b: 28 mm (1.10 in) dia.**
KV38100300 (J25523) Drift	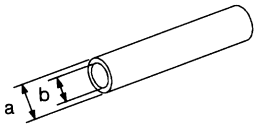 NT065	Removing counter gear front bearing (Use with ST22350000) Installing counter gear rear bearing **a: 54 mm (2.13 in) dia.** **b: 32 mm (1.26 in) dia.**
ST30720000 1 (J34286) 2 (J34331) Drift	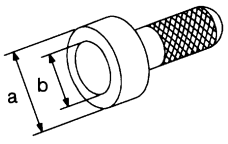 NT115	1 Removing mainshaft front bearing 2 Installing mainshaft front bearing **a: 77 mm (3.03 in) dia.** **b: 55.5 mm (2.185 in) dia.**
ST33210000 1 (J25523) 2 (J25803-01) Drift	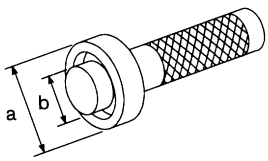 NT084	1 Installing counter gear front bearing 2 Installing front cover oil seal **a: 44 mm (1.73 in) dia.** **b: 24.5 mm (0.965 in) dia.**

Special Service Tools (Cont'd)

Tool number (Kent-Moore No.) Tool name	Description	
ST30613000 (J25742-3) Drift	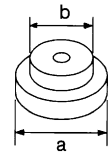 NT073	Installing main drive gear bearing **a: 72 mm (2.83 in) dia.** **b: 48 mm (1.89 in) dia.**
ST37750000 1 (J34286) 2 (J34332) 3 (J34334) 4 (J25679-01) Drift	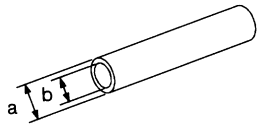 NT065	1 Removing counter gear rear bearing 2 Installing OD gear bushing 2 Removing and installing mainshaft rear bearing (4WD model) 2 Installing reverse cone 3 Installing reverse counter gear 4 Installing counter gear rear end bearing **a: 40 mm (1.57 in) dia.** **b: 31 mm (1.22 in) dia.**
ST22452000 (J34337) Drift	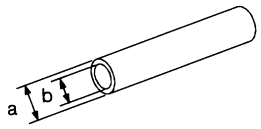 NT065	Installing reverse hub Installing mainshaft rear bearing (2WD model) **a: 45 mm (1.77 in) dia.** **b: 36 mm (1.42 in) dia.**
ST33400001 (J26082) Drift	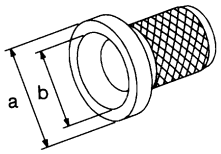 NT086	Installing rear oil seal **a: 60 mm (2.36 in) dia.** **b: 47 mm (1.85 in) dia.**
(J26349-3) Puller leg	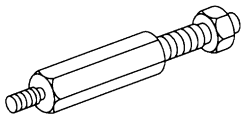 NT078	Installing mainshaft and counter gear (Use with J34328)
(J34328) Puller	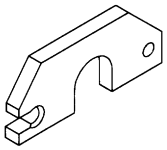 NT079	Installing mainshaft and counter gear (Use with J26349-3)
(J26092) Drift	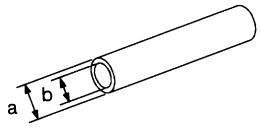 NT065	Installing sub-gear snap ring **a: 44.5 mm (1.752 in) dia.** **b: 38.5 mm (1.516 in) dia.**
(J34342) Drift	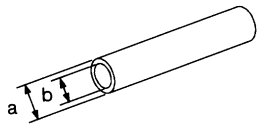 NT065	Installing OD main gear Installing reverse gear bushing **a: 44.5 mm (1.752 in) dia.** **b: 40.5 mm (1.594 in) dia.**

Tool number (Kent-Moore No.) Tool name	Description	
ST33220000 (J25804-01) Drift	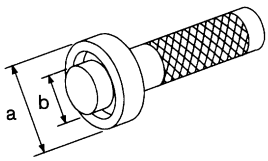 NT084	Installing mainshaft rear bearing **a: 37 mm (1.46 in) dia.** **b: 22 mm (0.87 in) dia.**

Commercial Service Tool

NEMT0002

Tool name	Description	
Puller	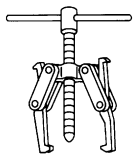 NT077	Removing counter gear rear end bearing Removing mainshaft rear bearing (2WD model) Removing reverse synchronizer hub Removing reverse counter gear

NVH Troubleshooting Chart

NEMT0023S01

Use the chart below to help you find the cause of the problem. The numbers indicate the order of the inspection. If necessary, repair or replace these parts.

MANUAL TRANSMISSION

NEMT0023S0101

Reference page		***MA-37*** "Checking M/T Oil".			MT-44	MT-44	MT-47	MT-47	MT-47	MT-45	MT-45	MT-45	MT-45
SUSPECTED PARTS (Possible cause)		OIL (Level low)	OIL (Wrong)	OIL (Level too high)	GASKET (Damaged)	OIL SEAL (Worn or damaged)	O-RING (Worn or damaged)	CHECK PLUG RETURN SPRING AND CHECK BALL (Worn or damaged)	SHIFT FORK (Worn)	GEAR (Worn or damaged)	BEARING (Worn or damaged)	BAULK RING (Worn or damaged)	INSERT SPRING (Damaged)
Symptom	Noise	1	2							3	3		
	Oil leakage		3	1	2	2	2						
	Hard to shift or will not shift		1	1								2	2
	Jumps out of gear							1	2	2			

Cross-sectional View — 2WD Model

NEMT0005S01

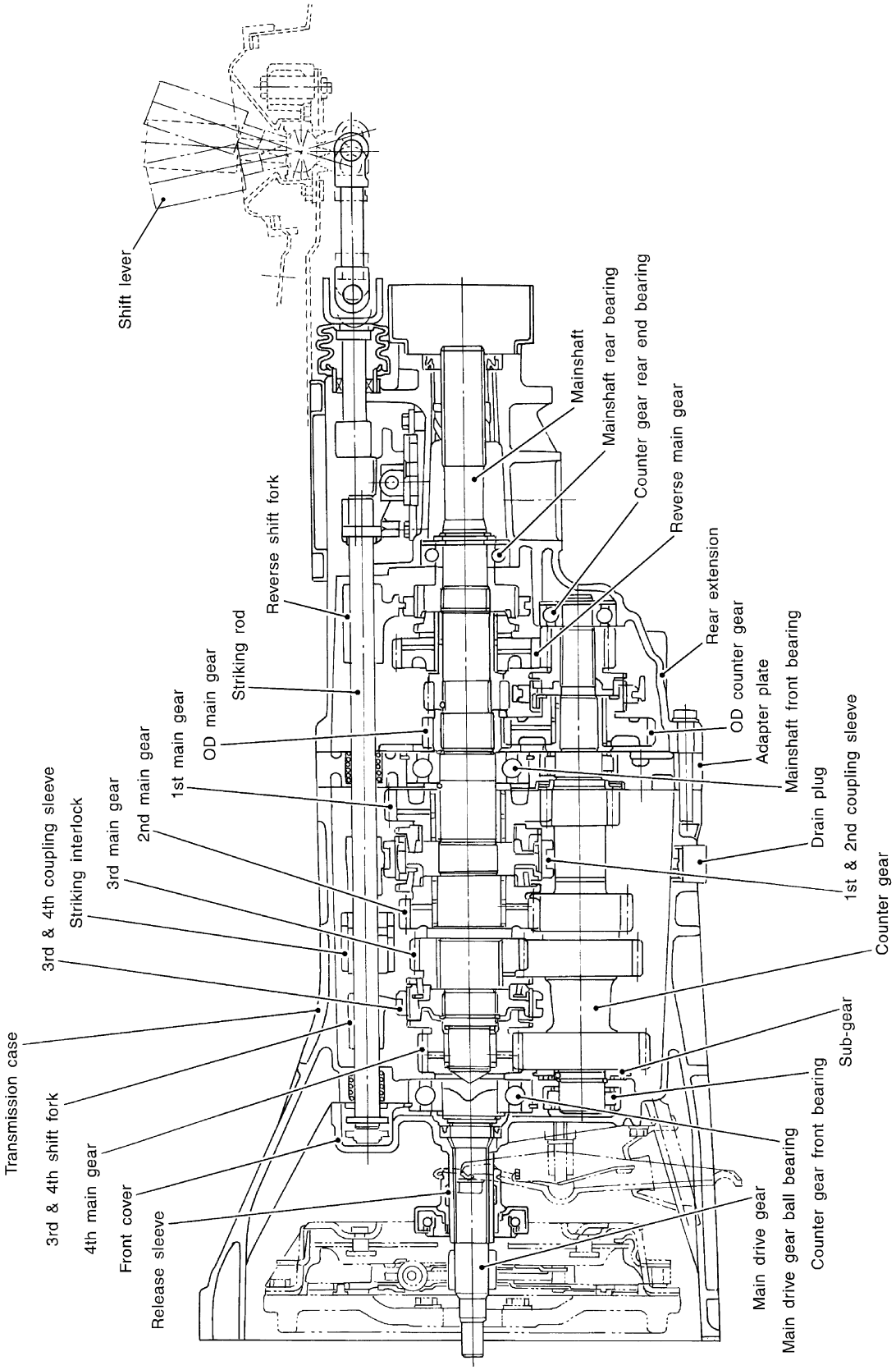

WMT041

Cross-sectional View — 4WD Model

NEMT0005S02

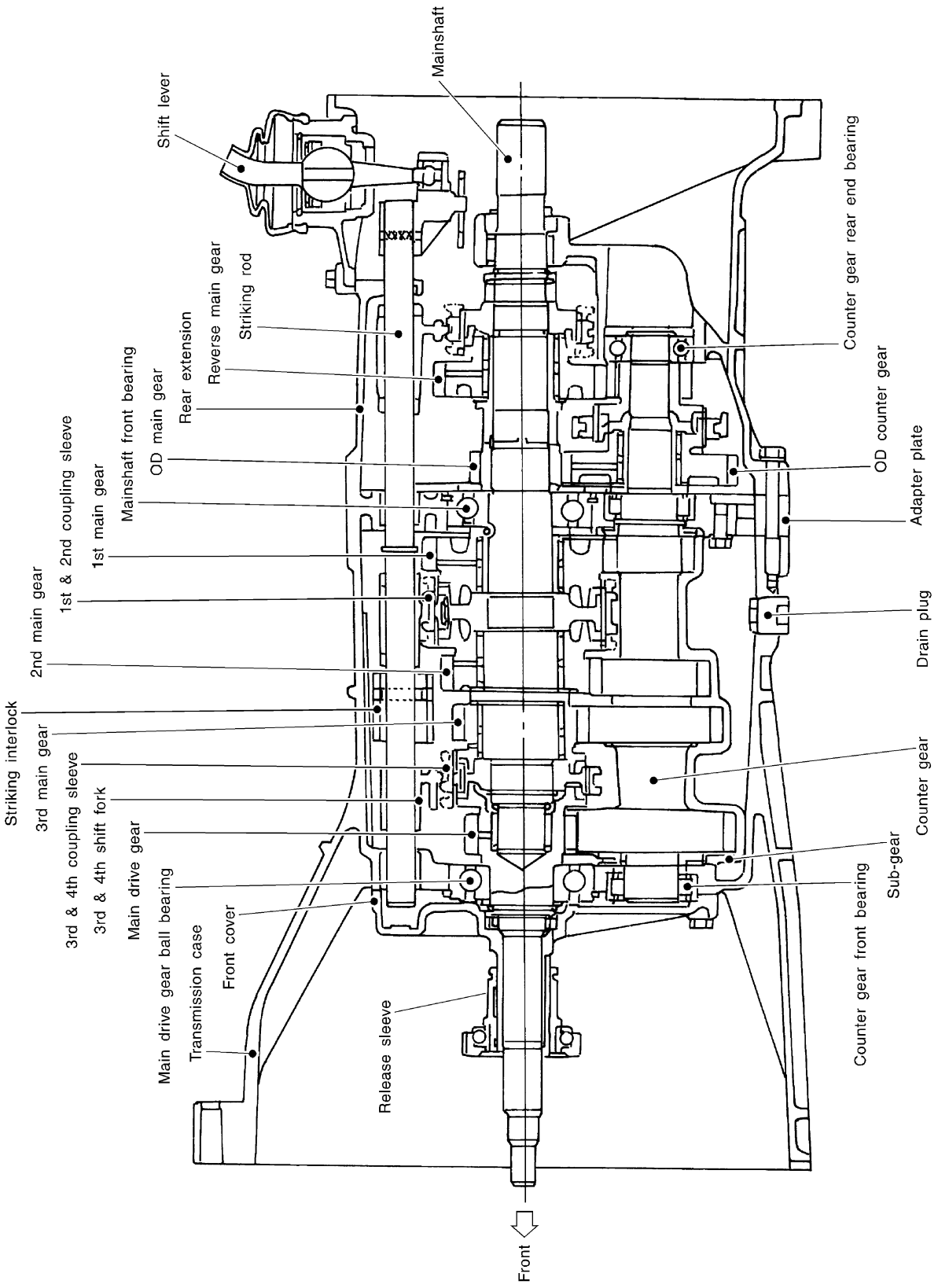

SMT320D

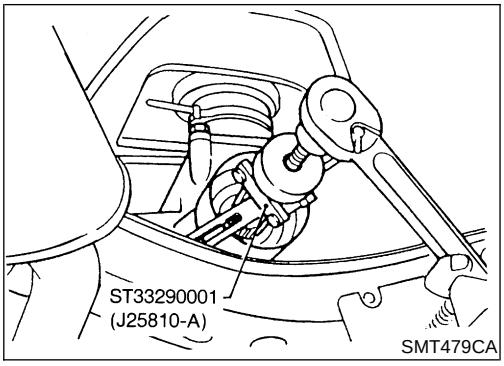

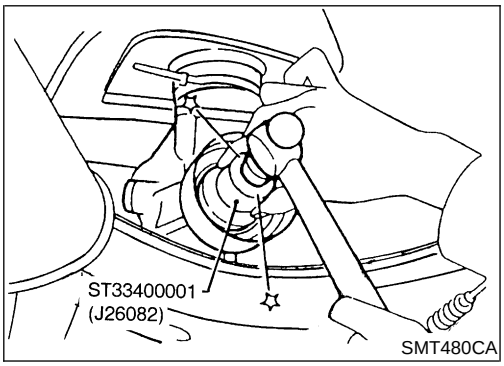

Replacing Rear Oil Seal — 2WD Model

NEMT0003

REMOVAL

NEMT0003S01

1. Remove the propeller shaft. Refer to ***PD-9***, “Removal and Installation”.
2. Remove rear oil seal using Tool.

- **Always replace with a new seal once it has been removed.**

INSTALLATION

NEMT0003S02

1. Install new oil seal until it stops.

- **Apply multi-purpose grease to seal lip of oil seal before installing.**

2. Install any part removed.

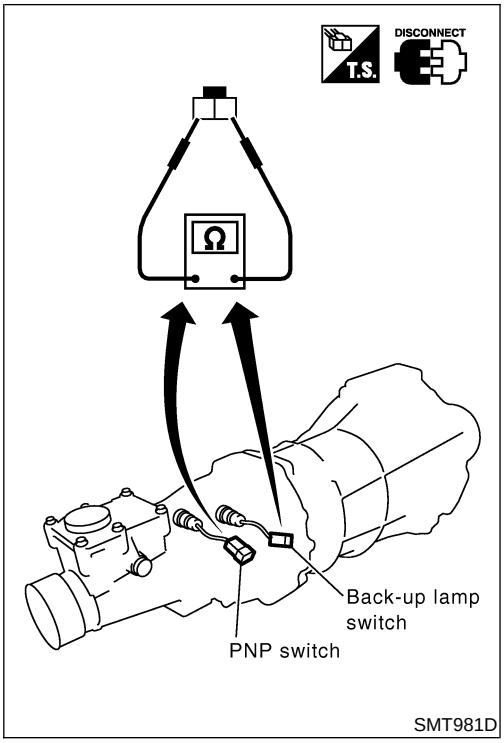

SMT981D

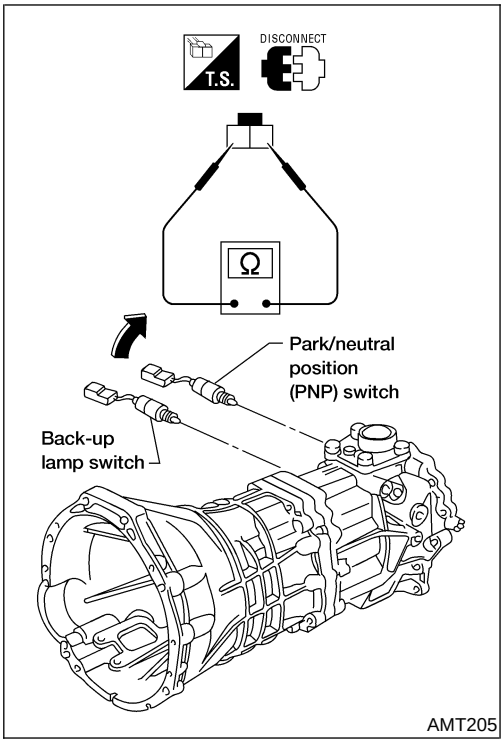

AMT205

Position Switch Check

NEMT0004

Switch	Gear position	Continuity
Back-up lamp switch	Reverse	Yes
	Except reverse	No
Park/neutral position (PNP) switch	Neutral	Yes
	Except neutral	No

Removal

NEMT0006S01

CAUTION:
When removing the M/T assembly from engine, first remove the crankshaft position sensor (OBD) from the M/T assembly. Be careful not to damage sensor edge.

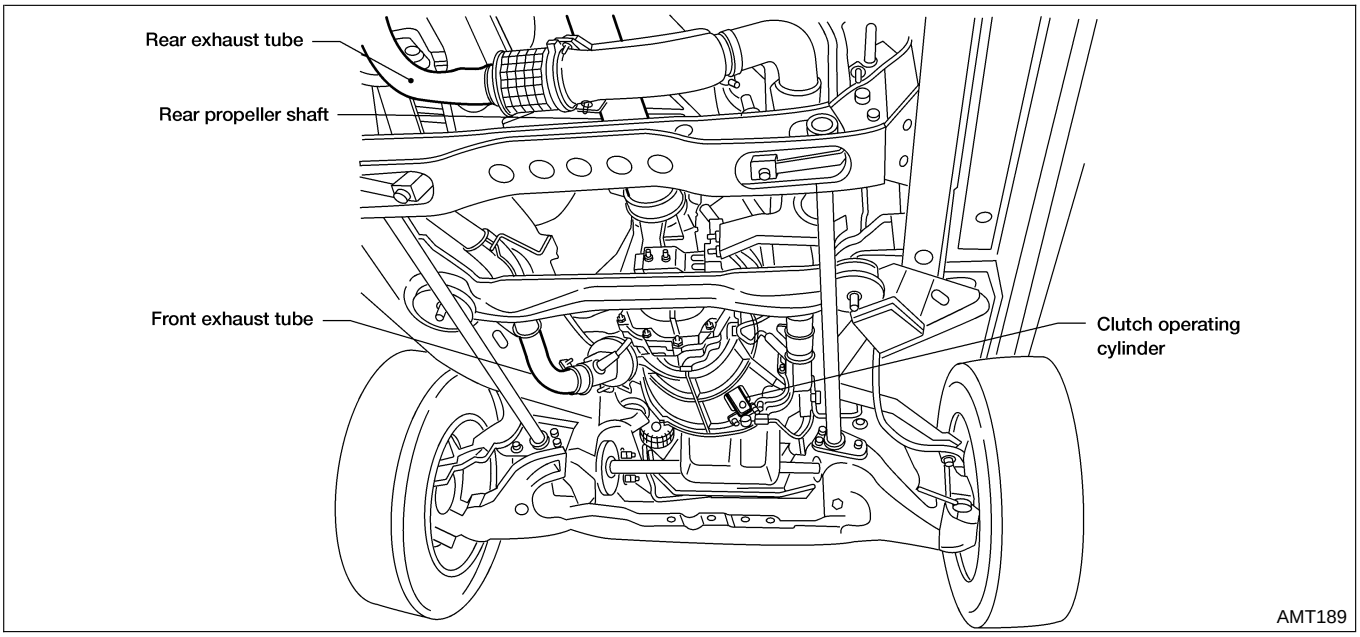

2WD MODEL

NEMT0006S0101

1. Remove battery negative terminal.
2. Remove shift lever with control housing from transmission.
3. Remove crankshaft position sensor (OBD) from upper side of transmission case.
4. Remove clutch operating cylinder from transmission. Tighten clutch operating cylinder to the specified torque. Refer to ***CL-5***, “CLUTCH SYSTEM”.
5. Disconnect vehicle speed sensor, back-up lamp switch, heated oxygen sensor (rear) and park/neutral position (PNP) switch harness connectors.
6. Remove starter motor from transmission.
   : 41 - 52 N·m (4.2 - 5.3 kg-m, 30 - 38 ft-lb)
7. Remove propeller shaft. Refer to ***PD-9***, “Removal and Installation”.

- **Insert plug into rear oil seal after removing propeller shaft.**
- **Be careful not to damage spline, sleeve yoke and rear oil seal when removing propeller shaft.**

8. Remove gussets from transmission or engine.

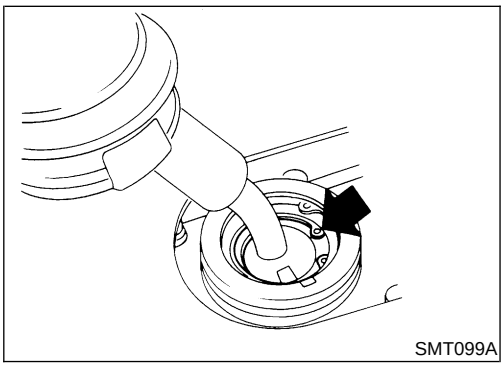

9. Remove exhaust tube mounting bracket from transmission. Refer to ***FE-8***, “EXHAUST SYSTEM”.
10. Support manual transmission with a jack.
11. Remove rear mounting member. Tighten rear mounting member to the specified torque. Refer to ***EM-112***, “Removal and Installation”.
12. Lower manual transmission as much as possible.

WARNING:
Support manual transmission together with transfer, while removing it.

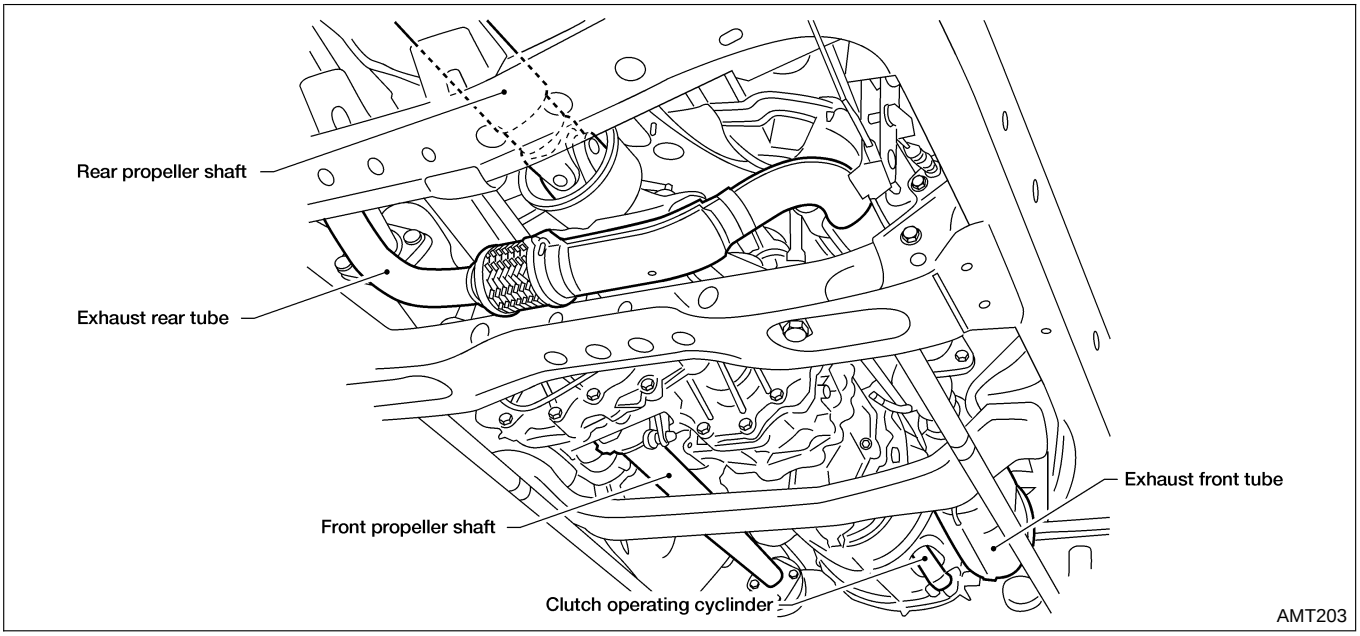

4WD MODEL

NEMT0006S0102

1. Disconnect the battery negative terminal.
2. Remove shift lever from transmission and control lever from transfer.
3. Remove clutch operating cylinder from transmission. Tighten clutch operating cylinder to the specified torque. Refer to ***CL-5***, "CLUTCH SYSTEM".
4. Disconnect the vehicle speed sensor, back-up lamp switch, heated oxygen sensor (rear) and Park/neutral position (PNP) switch harness connectors.
5. Remove the starter motor from transmission.

   : 41 - 52 N·m (4.2 - 5.3 kg-m, 30 - 38 ft-lb)
6. Remove front and rear propeller shafts. Refer to ***PD-9***, "PROPELLER SHAFT".

- **Insert plug into rear oil seal after removing propeller shaft.**
- **Be careful not to damage spline, sleeve yoke and rear oil seal when removing propeller shaft.**

7. Remove exhaust tube mounting bracket from transmission. Refer to ***FE-8***, "EXHAUST SYSTEM".
8. Remove front exhaust tubes and center pipe.
9. Remove the torsion bars and mounts. Refer to ***SU-14***, "Removal".
10. Remove the rear torsion bar cross member.
11. Remove the gussets from the transmission or engine.
12. Support the manual transmission with a jack.
13. Remove rear mounting member. Tighten rear mounting member to the specified torque. Refer to ***EM-112***, "Engine Mounting".
14. Lower manual transmission as much as possible.

WARNING:
Support manual transmission together with transfer while removing it.

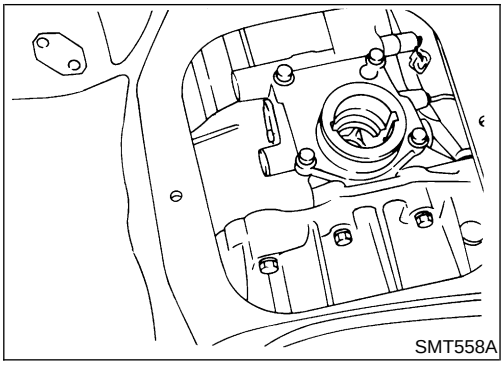
SMT558A

15. Remove crankshaft position sensor (OBD) from upper side of transmission case.
16. Remove transmission bolts.

WARNING:
Support manual transmission together with transfer while removing it.

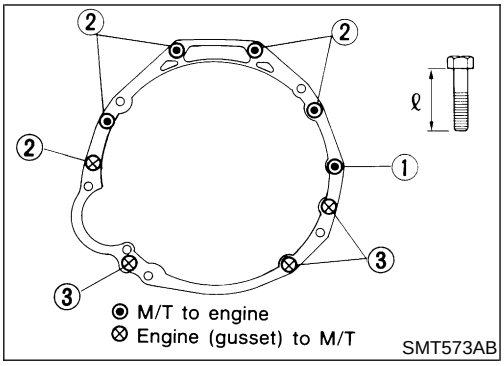

SMT573AB

Installation

NEMT0006S02

- Tighten the bolts securing the transmission to the specified torques in the chart below.

Bolt No.	Tightening torque N·m (kg-m, ft-lb)	ℓ mm (in)
1	39 - 49 (4.0 - 5.0, 29 - 36)	65 (2.56)
2	39 - 49 (4.0 - 5.0, 29 - 36)	58 (2.28)
3	29 - 39 (3.0 - 4.0, 22 - 29)	25 (0.98)
4 (Gusset to engine)	29 - 39 (3.0 - 4.0, 22 - 29)	20 (0.79)

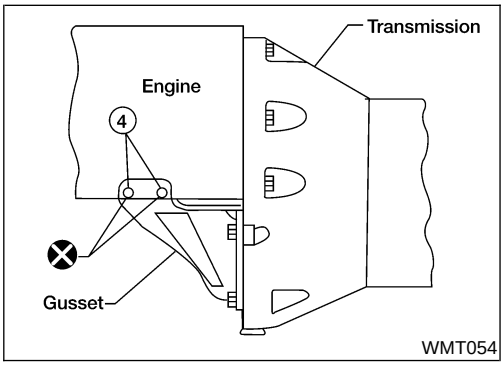

WMT054

- Adjust the torsion bars for the correct vehicle height. Refer to ***SU-15***, "INSTALLATION AND ADJUSTMENT".

Case Components

NEMT0007S01

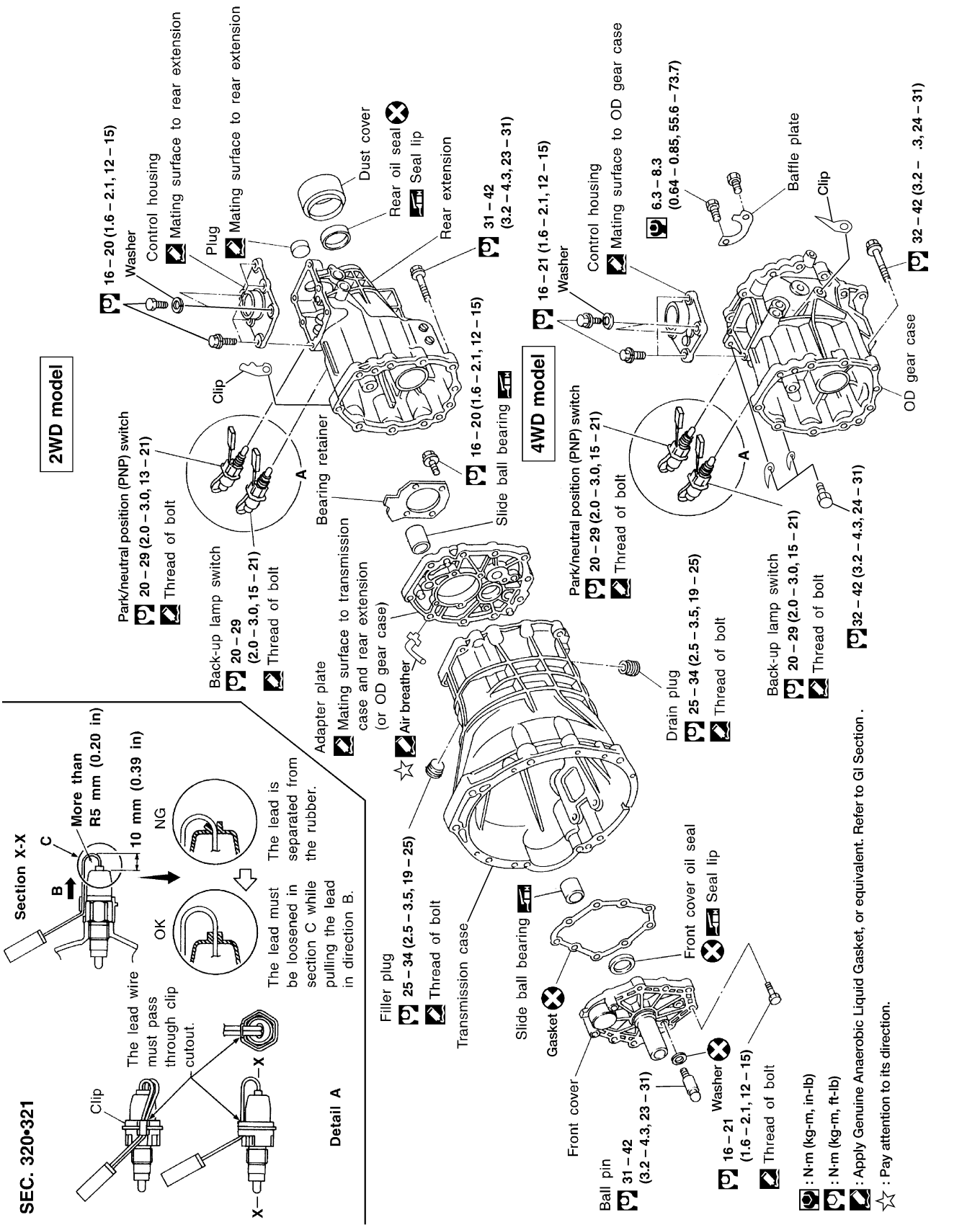

WMT060

SEC. 320•321

Gear Components

NEMT0007S02

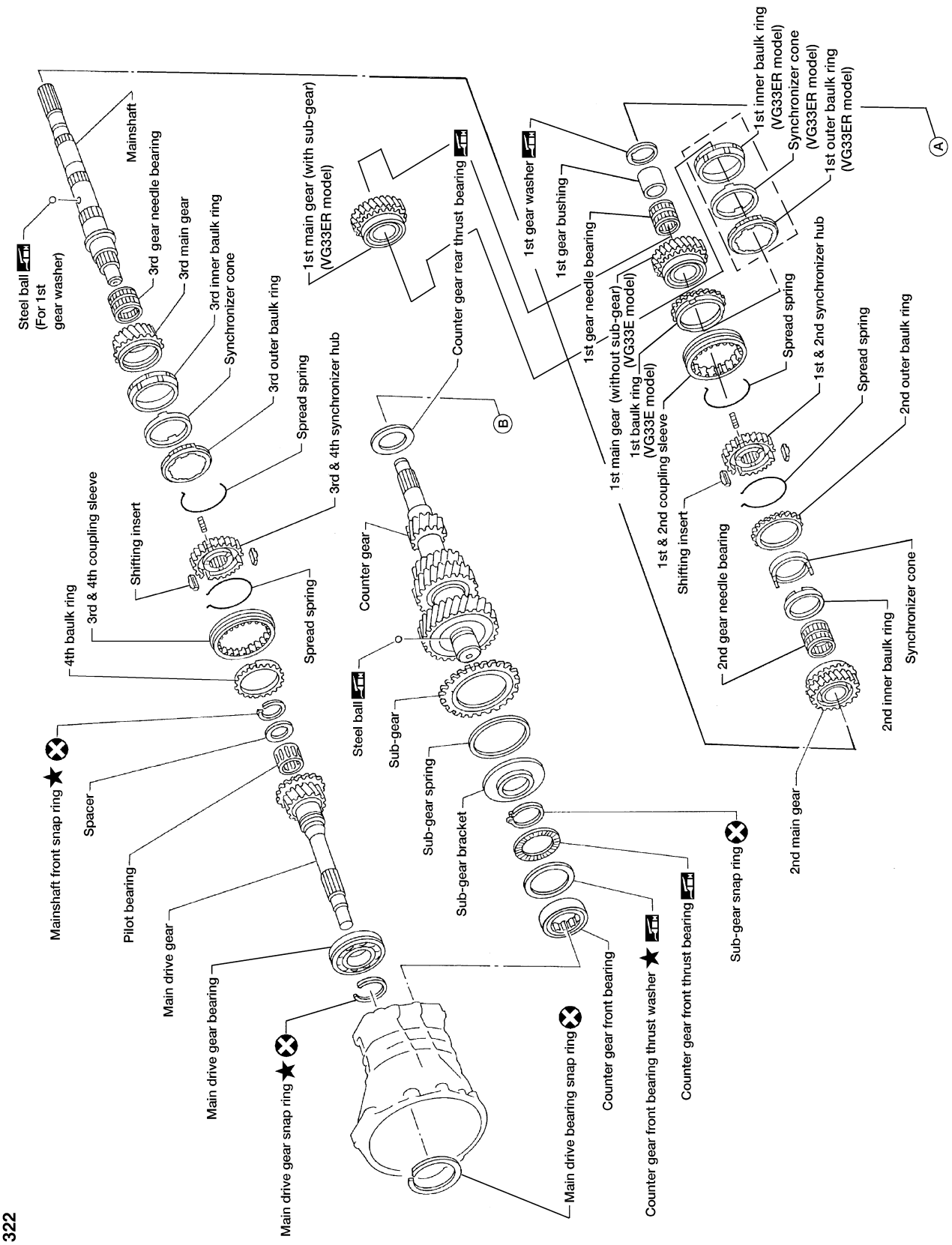

SEC. 322

WMT047

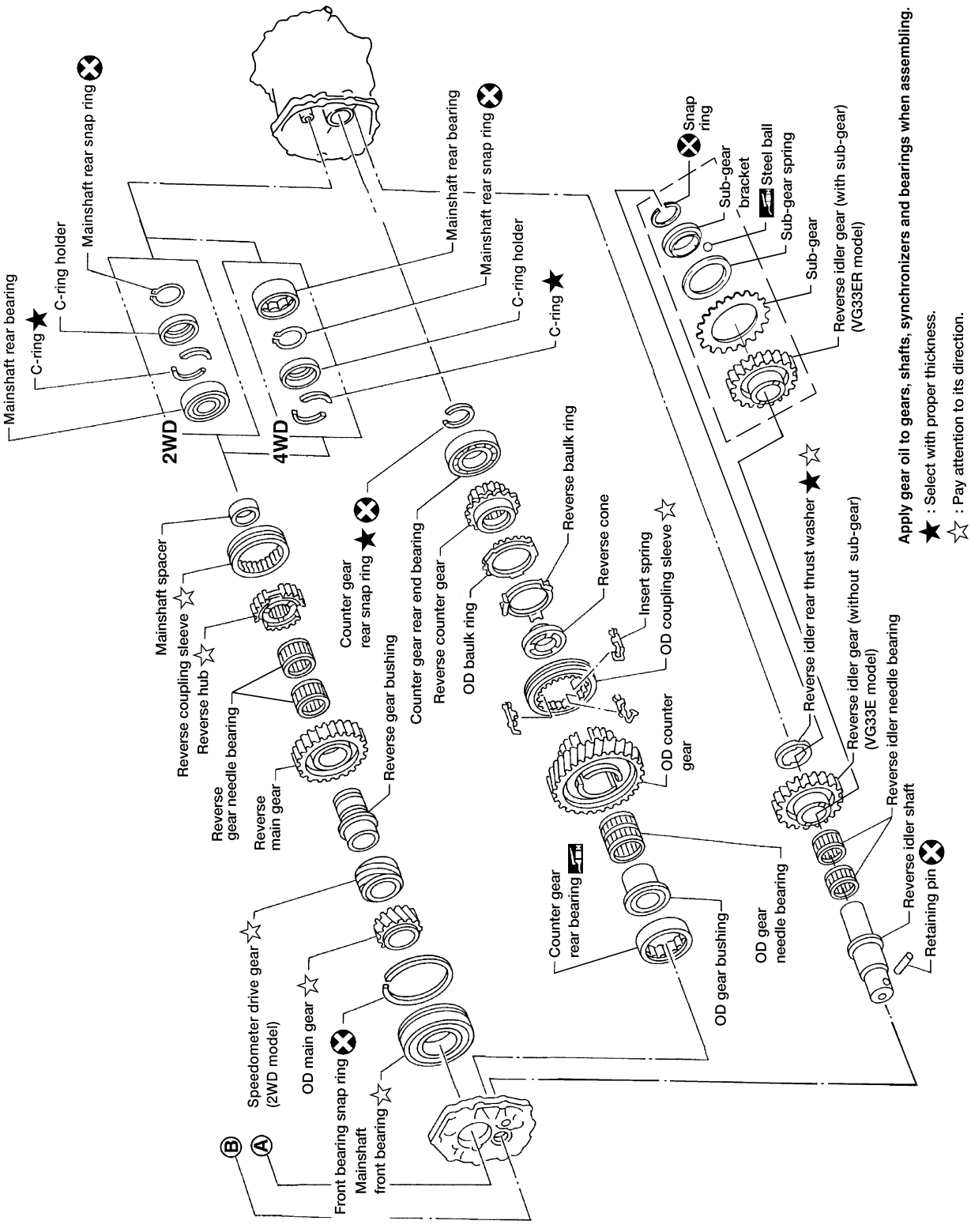

SEC. 322

WMT048

Shift Control Components (2/4WD models)

NEMT0007S03

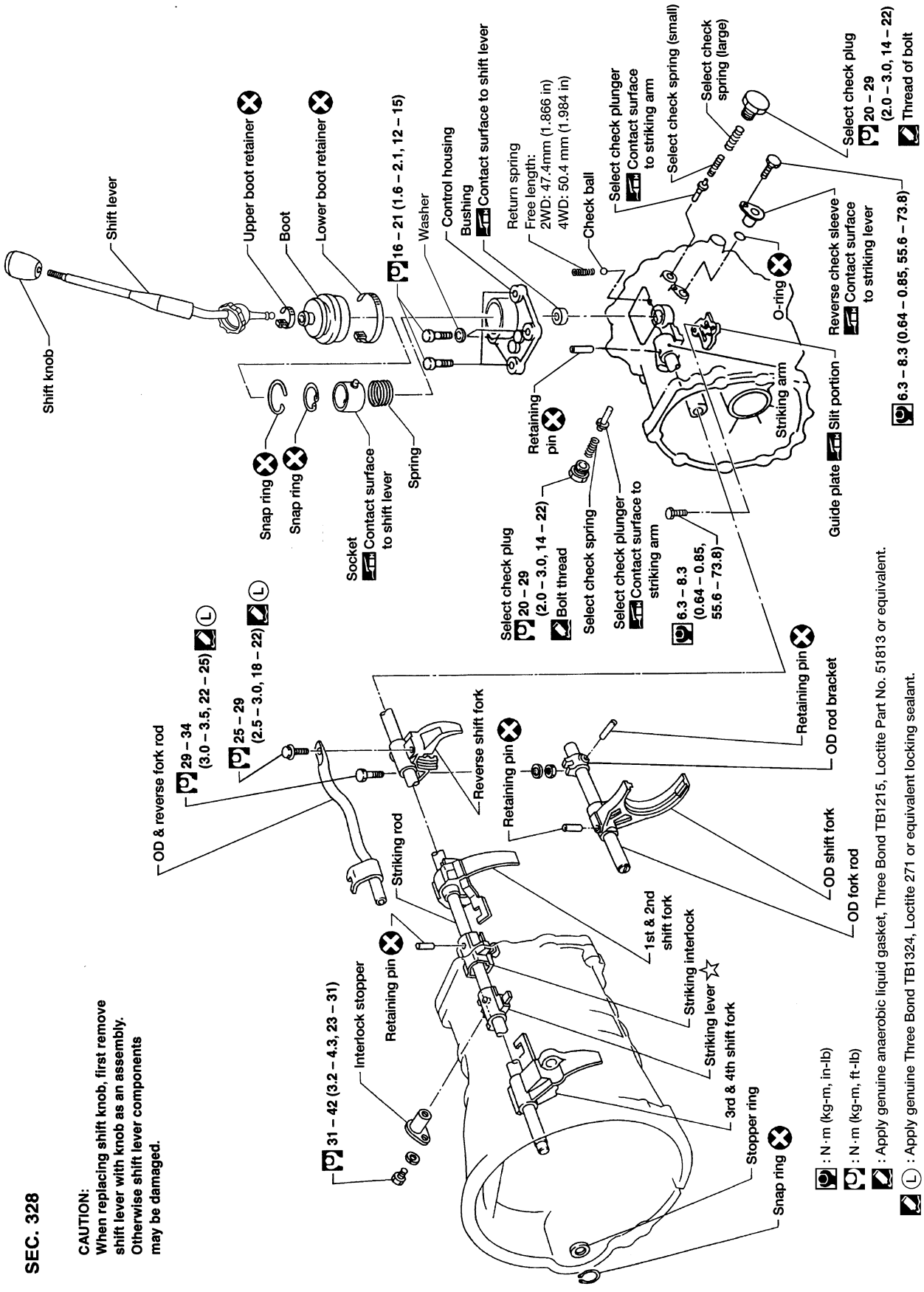

SEC. 328

CAUTION:
When replacing shift knob, first remove shift lever with knob as an assembly. Otherwise shift lever components may be damaged.

WMT032

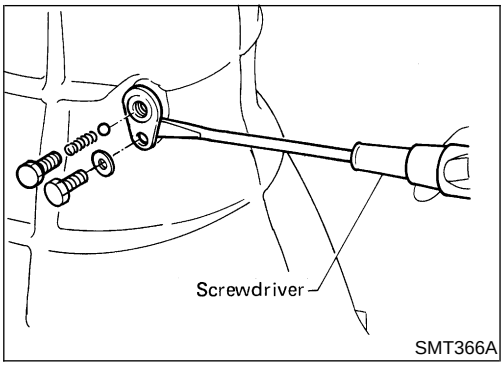

SMT366A

Case Components

DISASSEMBLY

NEMT0008

1. Remove check ball plug, check spring and check ball. Then remove interlock stopper.

- **If interlock assembly is removed as a unit, the check ball can fall into transmission case.**
- **Be careful not to lose check ball.**

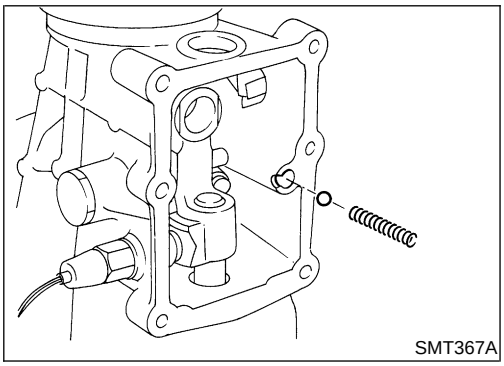
SMT367A

2. Remove control housing, return spring and check ball.

- **Be careful not to lose check ball.**

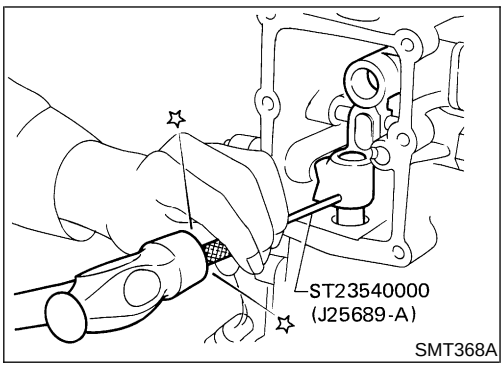

SMT368A

3. Drive out retaining pin from striking arm.

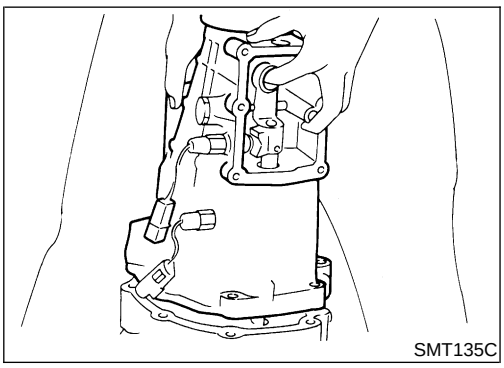
SMT135C

4. Remove rear extension (or OD gear case) together with striking arm by tapping lightly.

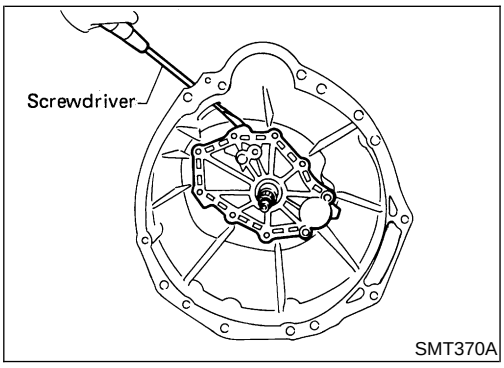

SMT370A

5. Remove front cover and gasket.

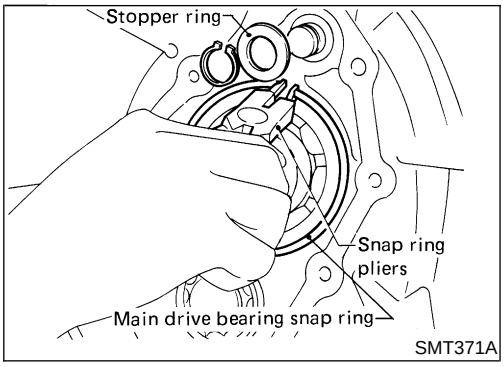

6. Remove stopper ring and main drive bearing snap ring.

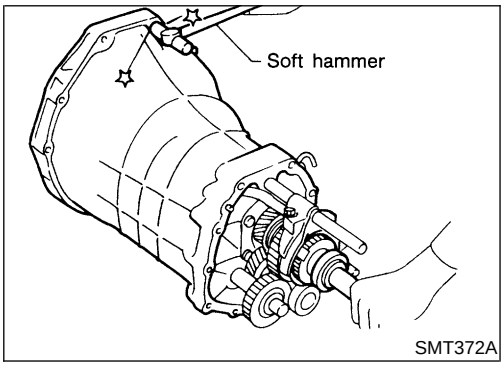

7. Remove transmission case by tapping lightly.

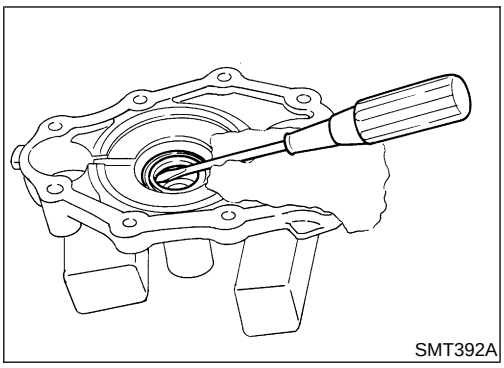

8. Remove front cover oil seal.

Shift Control Components

DISASSEMBLY

NEMT0009

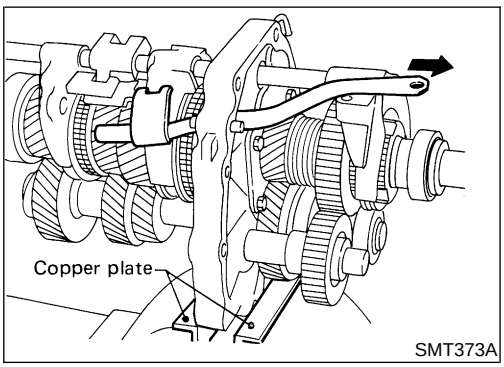

1. Mount adapter plate on vise.
2. Remove OD & reverse fork rod.

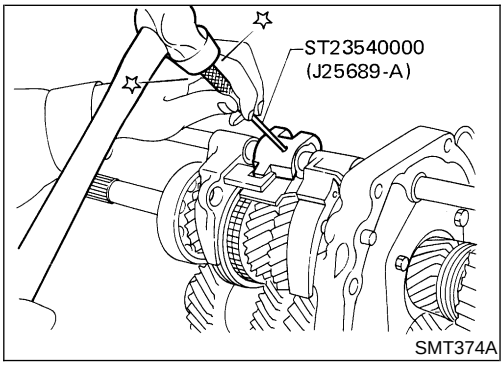

3. Drive out retaining pin from striking lever.
4. While pulling out striking rod, remove striking lever and striking interlock. Then remove 1st and 2nd, 3rd and 4th, and reverse shift forks.

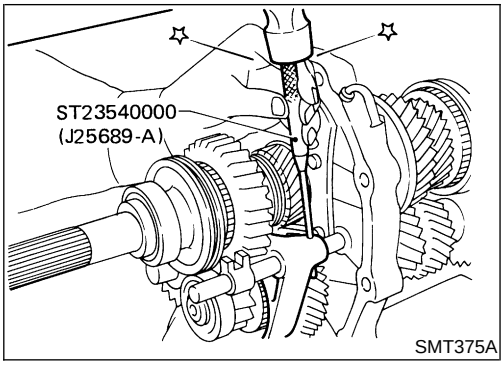

SMT375A

5. Drive out retaining pin from OD shift fork.
6. Pull out OD fork rod and then remove OD shift fork.

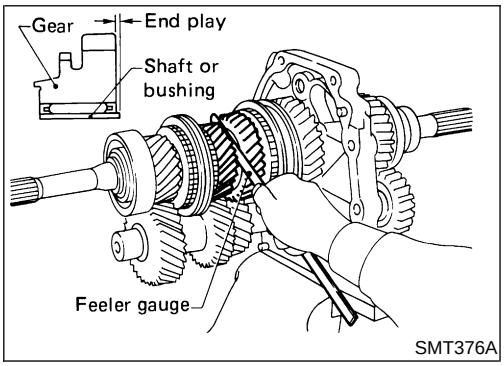

SMT376A

Gear Components

DISASSEMBLY

NEMT0010

1. Before removing gears and shafts, measure each gear end play. Refer to "Gear End Play", MT-67.

- If not within specification, disassemble and check contact surface of gear to hub, washer, bushing, needle bearing and shaft.

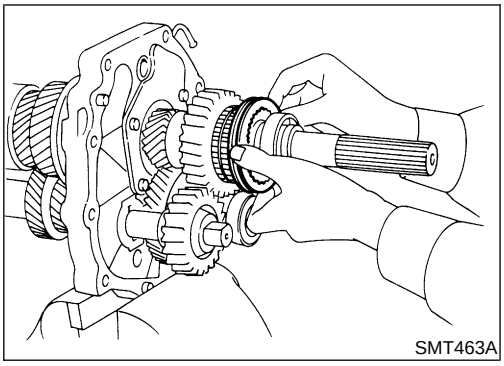
SMT463A

2. Remove rear side components on mainshaft and counter gear.

a. Remove reverse coupling sleeve.

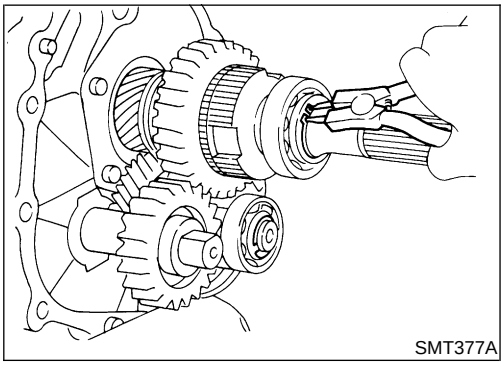
SMT377A

b. Remove mainshaft rear snap ring and counter gear rear snap ring.
c. Remove C-ring holder and mainshaft C-rings from mainshaft. Use punch and hammer to remove C-rings.

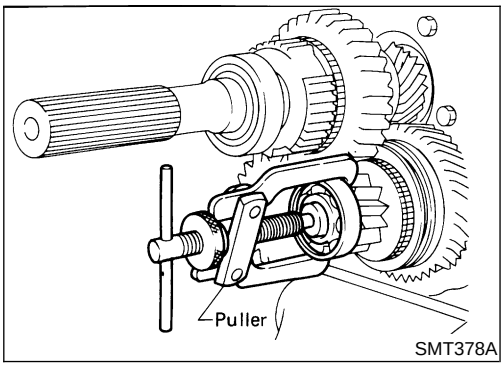

SMT378A

d. Pull out counter gear rear end bearing.
e. Remove reverse idler gear and reverse idler thrust washers.

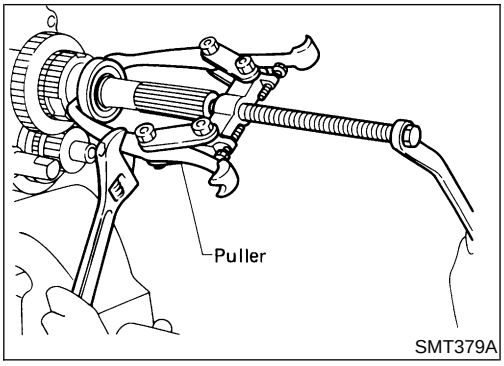

SMT379A

f. Pull out mainshaft rear bearing (2WD model).

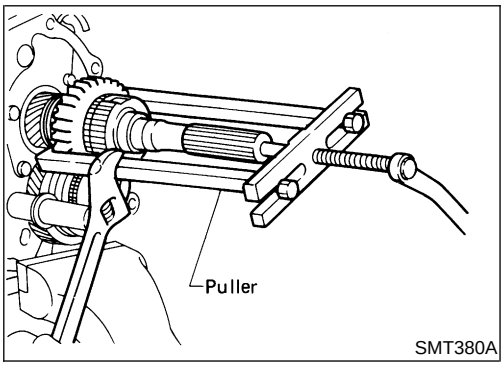

SMT380A

g. Pull out reverse main gear together with mainshaft spacer and reverse synchronizer hub. Then remove reverse gear needle bearings.

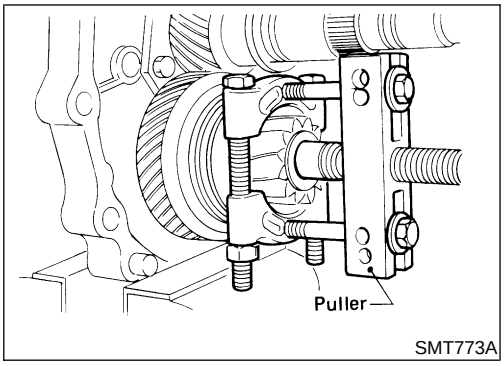

SMT773A

h. Pull out reverse counter gear.

i. Remove OD coupling sleeve together with OD baulk ring, reverse baulk ring and spring inserts.

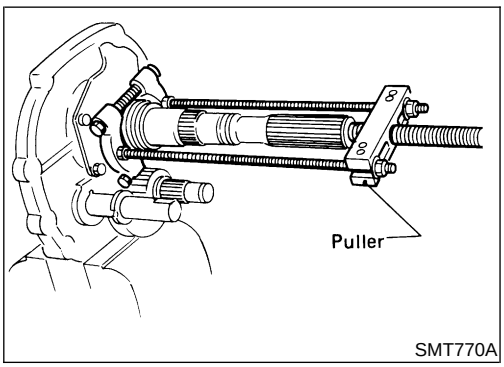

SMT770A

j. Pull out reverse gear bushing.

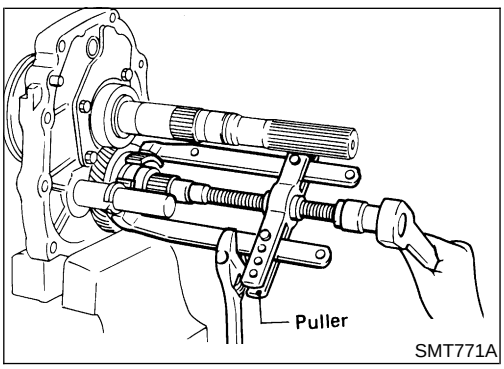

SMT771A

k. Pull out OD counter gear together with reverse cone.

3. Press out mainshaft and counter gear alternately.

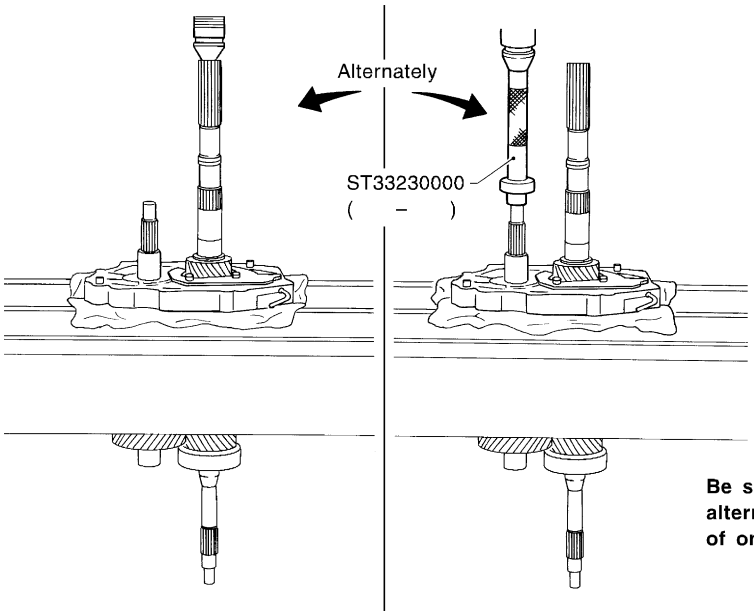

Be sure to press mainshaft and counter gear alternately so as not to allow the front surface of one to contact the rear surface of the other.

AMT174A

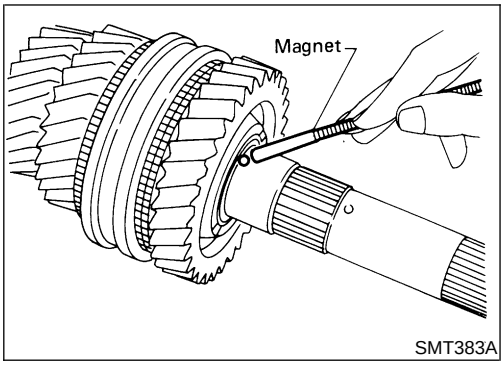

SMT383A

4. Remove front side components on mainshaft.

a. Remove 1st gear washer and steel ball.

b. Remove 1st main gear and 1st gear needle bearing.

- **Be careful not to lose steel ball.**

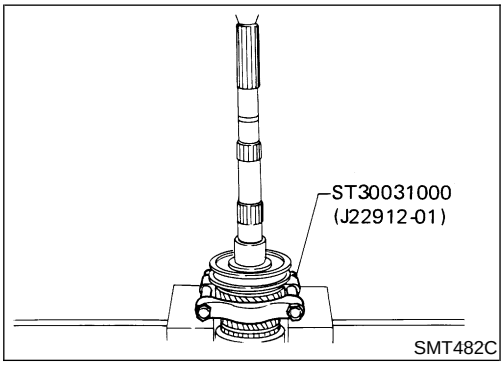

SMT482C

c. Press out 2nd main gear together with 1st gear bushing and 1st and 2nd synchronizer assembly.

d. Remove mainshaft front snap ring.

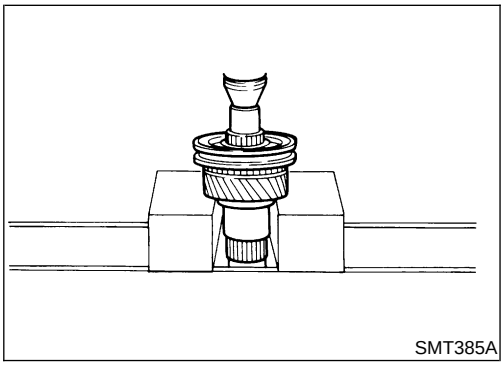

SMT385A

e. Press out 3rd main gear together with 3rd and 4th synchronizer assembly and 3rd gear needle bearing.

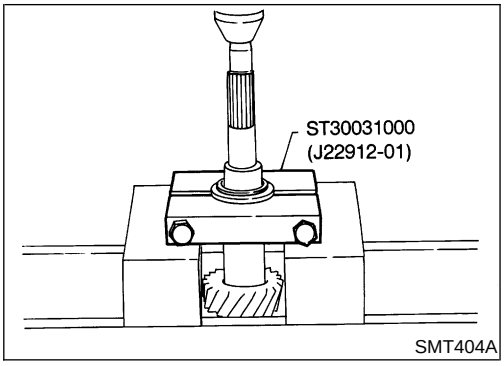

5. Remove front side components on counter gear.
a. Remove counter gear rear thrust bearing.

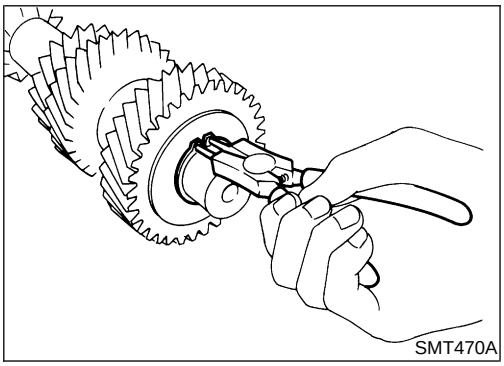

b. Remove sub-gear components.

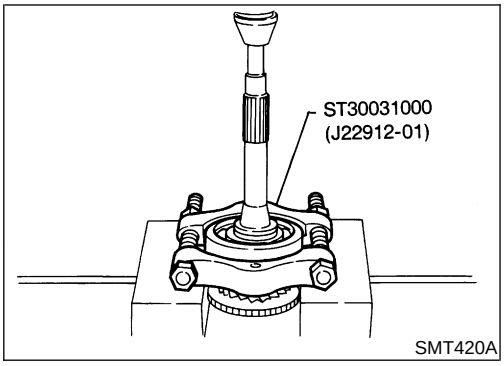

6. Remove main drive gear bearing.
a. Remove main drive gear snap ring.
b. Press out main drive gear bearing.

7. Remove bearings from case components.

Counter gear front bearing in transmission case

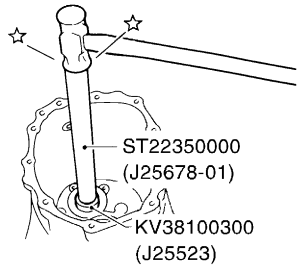

Mainshaft front bearing in adapter plate

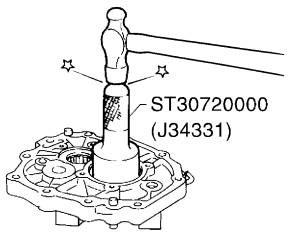

Mainshaft rear bearing in OD gear case

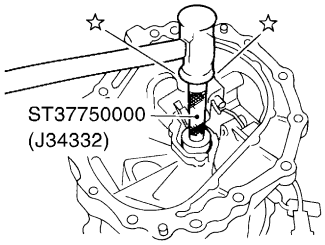

Counter gear rear bearing in adapter plate

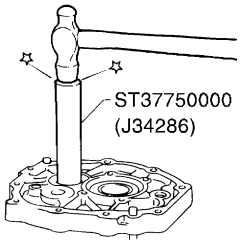

AMT173

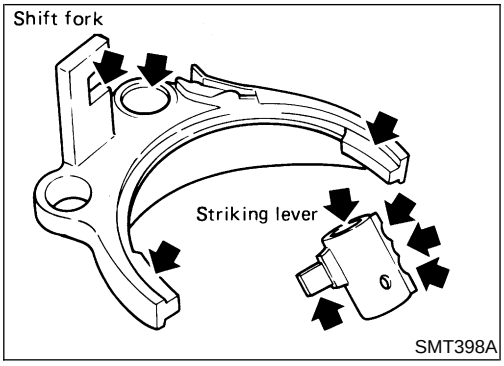

Shift Control Components

INSPECTION

NEMT0011

- Check contact surface and sliding surface for wear, scratches, projections or other damage.

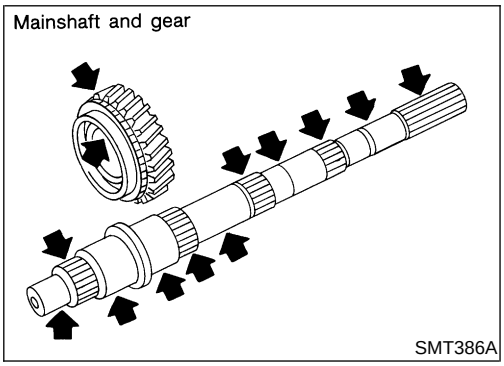

Gear Components

INSPECTION

NEMT0012

Gears and Shafts

NEMT0012S01

- Check shafts for cracks, wear or bending.
- Check gears for excessive wear, chips or cracks.

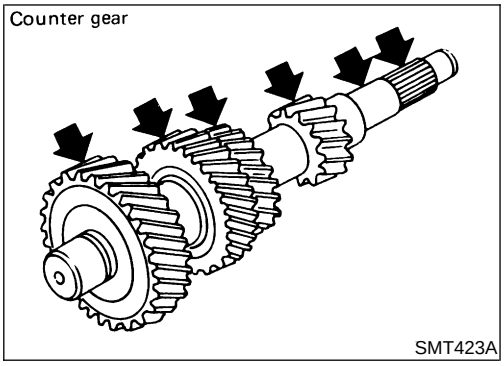

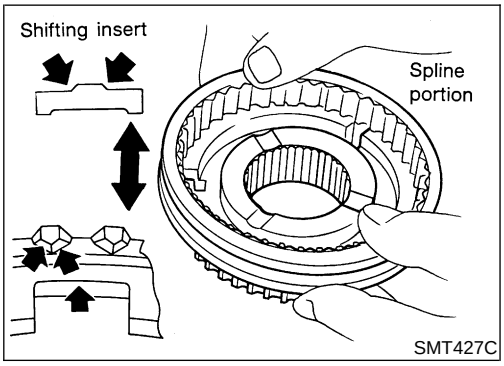

Synchronizers

NEMT0012S02

- Check spline portion of coupling sleeves, hubs, and gears for wear or cracks.
- Check baulk rings for cracks or deformation.
- Check shifting inserts for wear or deformation.
- Check insert springs for deformation.

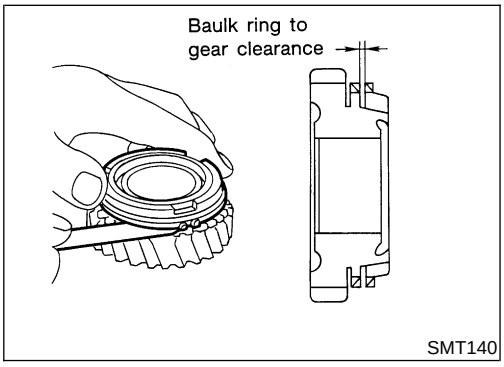

- Measure wear of main drive, 1st (VG33E model) and OD baulk rings. Refer to “Clearance Between Baulk Ring and Gear”, MT-67.
- If the clearance is smaller than the wear limit, replace baulk ring.

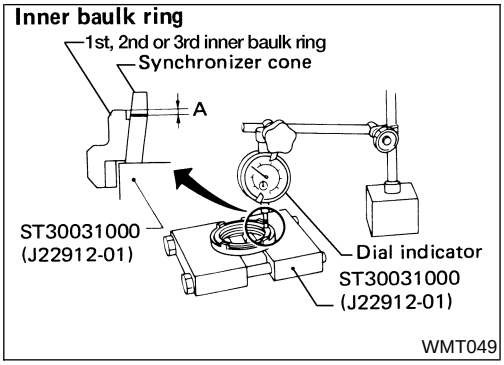

- Measure wear of 1st, 2nd and 3rd double baulk rings.
  1st, 2nd and 3rd double baulk rings: VG33ER model.
  2nd and 3rd double baulk rings: VG33E model.

a) Place baulk rings in position on synchronizer cone.

b) While holding baulk rings against synchronizer cone as far as it will go, measure dimensions "A" and "B".

Standard:

A 0.7 - 0.9 mm (0.028 - 0.035 in)

B 0.6 - 1.1 mm (0.024 - 0.043 in)

Wear limit:

0.2 mm (0.008 in)

- If dimension "A" or "B" is smaller than the wear limit, replace outer baulk ring, inner baulk ring and synchronizer cone as a set.

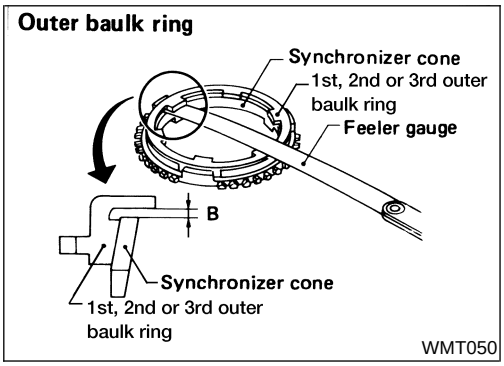

- Measure wear of reverse baulk ring.

a) Place baulk ring in position on reverse cone.

b) While holding baulk ring against reverse cone as far as it will go, measure dimension "A" with dial indicator.

Dimension "A":

Standard −0.1 to 0.35 mm (−0.0039 to 0.0138 in)

Wear limit 0.7 mm (0.028 in)

c) If dimension "A" is larger than the wear limit, replace baulk ring.

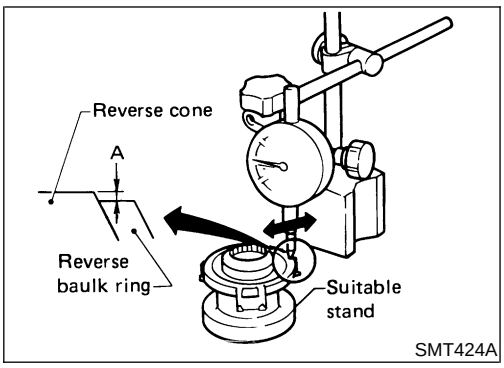

Bearings

NEMT0012S03

- Make sure bearings roll freely and are free from noise, crack, pitting or wear.

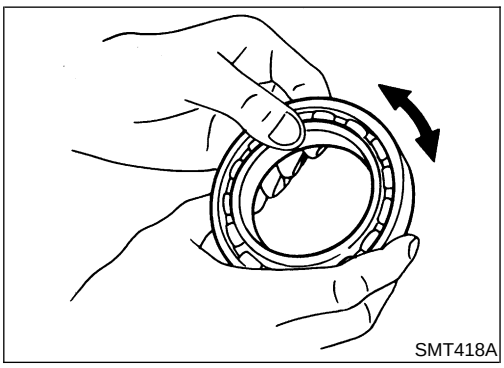

Gear Components

ASSEMBLY

NEMT0013

Counter gear front bearing in transmission case

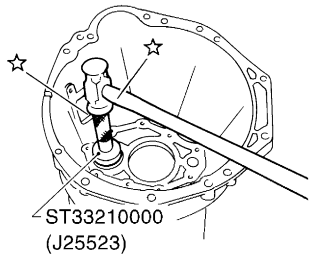

Mainshaft front bearing in adapter plate

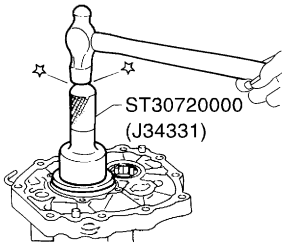

Mainshaft rear bearing in OD gear case

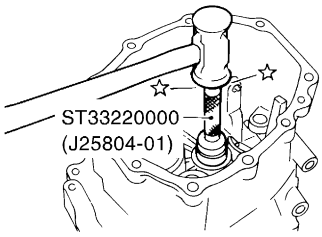

Be flush with front surface of OD gear case.

Counter gear rear bearing in adapter plate

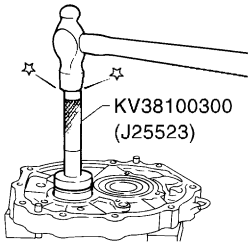

AMT172

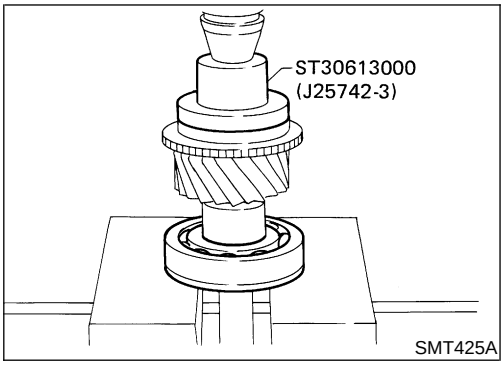

SMT425A

1. Install bearings into case components.
2. Install main drive gear bearing.

a. Press main drive gear bearing.

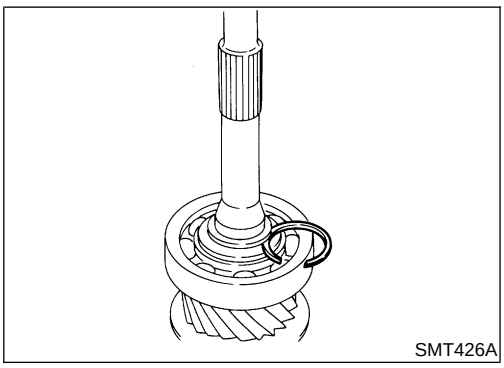

SMT426A

b. Select proper main drive gear snap ring to minimize clearance of groove. Refer to “MAIN DRIVE GEAR SNAP RING”, MT-68.

Allowable clearance of groove:
0 - 0.11 mm (0 - 0.004 in)

c. Install selected snap ring on main drive gear.

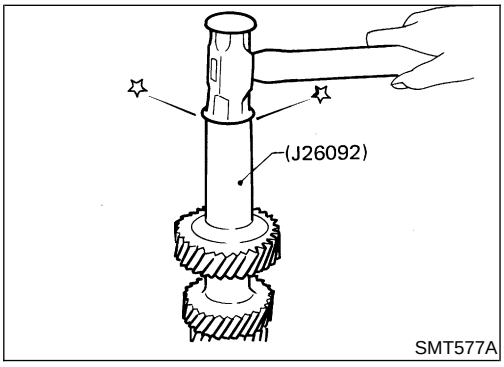

SMT577A

3. Install components on counter gear.

a. Install sub-gear components.

- **When installing sub-gear snap ring, tap sub-gear snap ring into position on counter gear.**

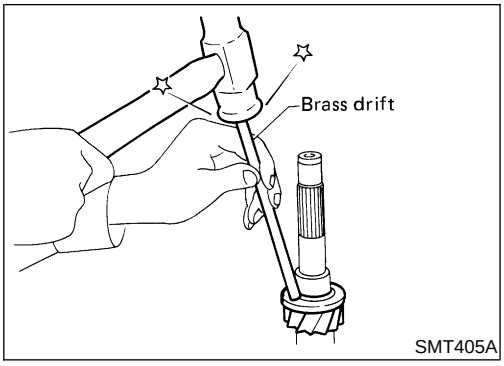

b. Install counter gear rear thrust bearing.

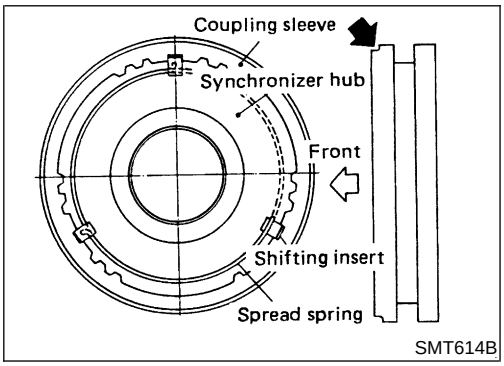

4. Install front side components on mainshaft.

a. Assemble 1st and 2nd synchronizer.

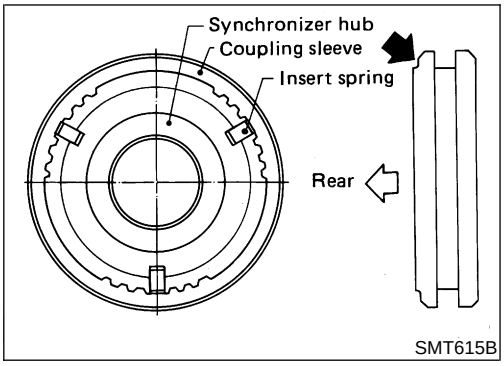

b. Assemble 3rd and 4th synchronizer.

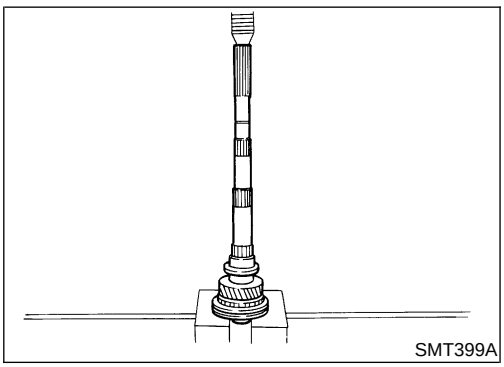

c. Press on 3rd and 4th synchronizer assembly together with 3rd main gear and 3rd gear needle bearing.

- **Pay attention to direction of synchronizer assembly.**

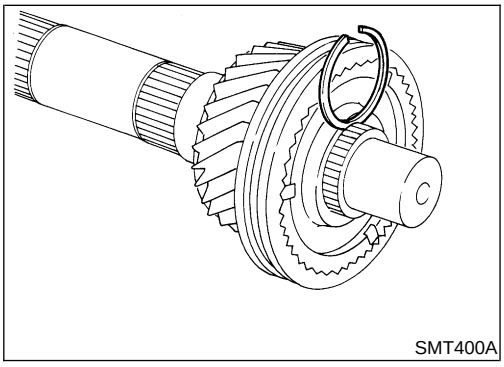

d. Select proper snap ring to minimize clearance of groove. Refer to "MAINSHAFT FRONT SNAP RING", MT-68.

Allowable clearance of groove:
0 - 0.1 mm (0 - 0.004 in)

e. Install selected snap ring on mainshaft.

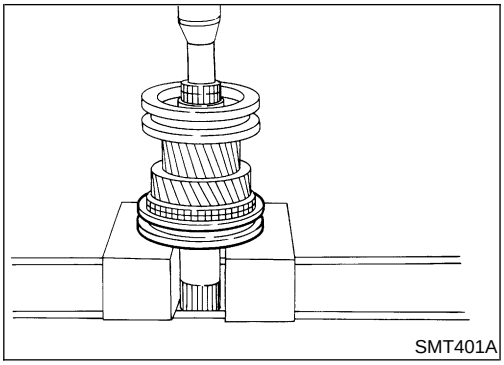
SMT401A

f. Press on 1st and 2nd synchronizer assembly together with 2nd main gear and 2nd gear needle bearing.

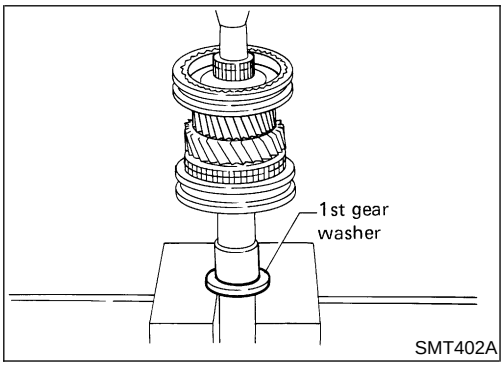

SMT402A

g. Press on 1st gear bushing using 1st gear washer.
h. Install 1st main gear and needle bearing.

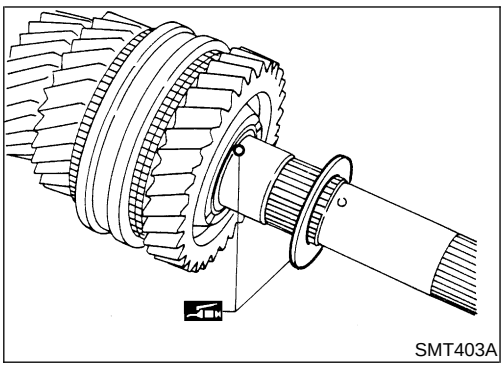
SMT403A

i. Install steel ball and 1st gear washer.

- **Apply multi-purpose grease to steel ball and 1st gear washer before installing.**

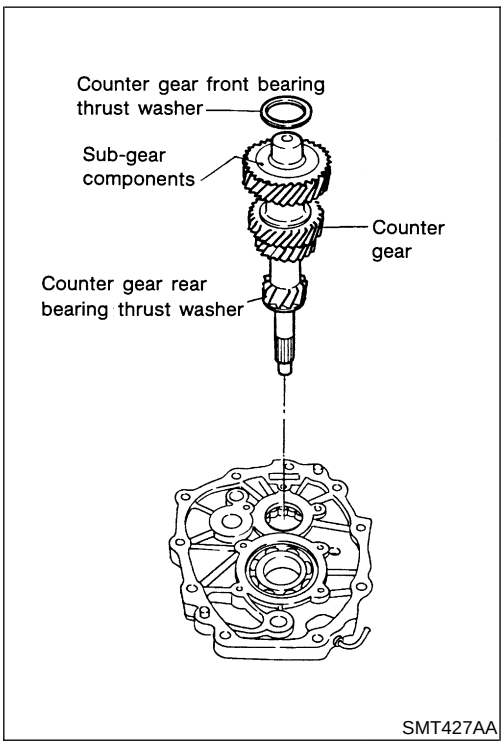

SMT427AA

5. Select proper counter gear front bearing thrust washer when replacing transmission case, counter gear, counter gear rear thrust bearing or sub-gear components.
a. Install counter gear with sub-gear components, counter gear front and rear bearing thrust washer on adapter plate.
b. Remove counter gear front bearing thrust washer from transmission case.
c. Place adapter plate and counter gear assembly in transmission case (case inverted).

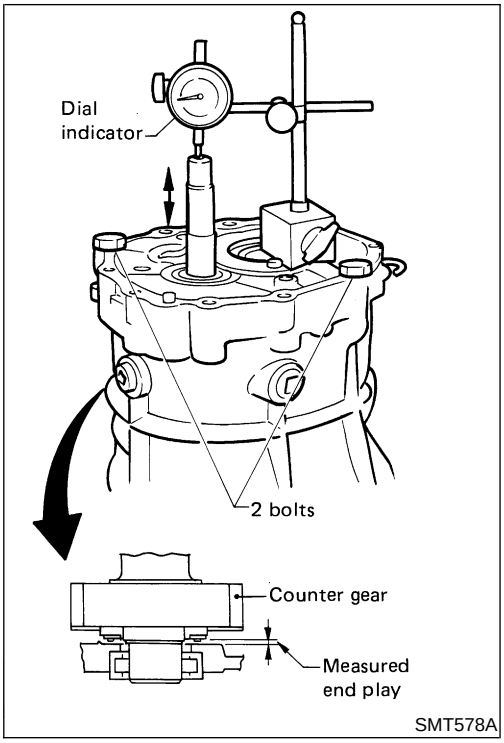

d. Tighten adapter plate to transmission case using 2 bolts.
e. Place dial indicator on rear end of counter gear.
f. Move counter gear up and down and measure dial indicator deflection.
g. Select proper thrust washer using the table as a guide. Refer to "TABLE FOR SELECTING PROPER COUNTER GEAR FRONT BEARING THRUST WASHER", MT-69.

Counter gear end play:
0.10 - 0.26 mm (0.0040 - 0.0102 in)

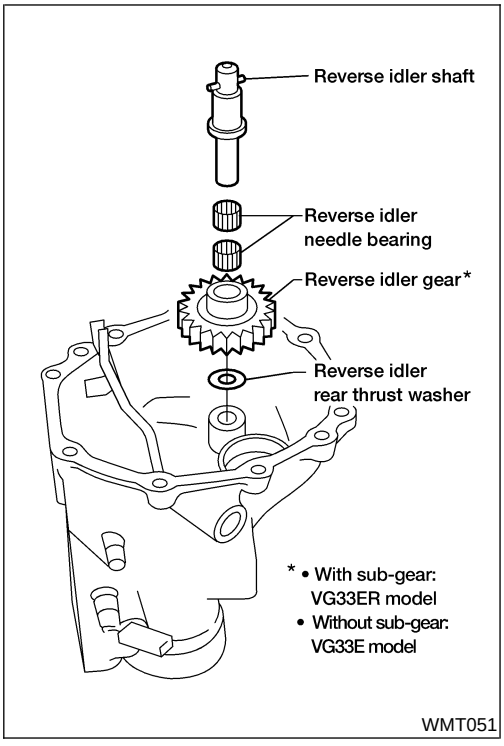

6. Select proper reverse idler rear thrust washer when replacing rear extension (or OD gear case), reverse idler gear, reverse idler shaft or reverse idler front thrust washer.
a. Install reverse idler gear, reverse idler needle bearings, reverse idler front thrust washers and reverse idler shaft into rear extension (or OD gear case).

- **When replacing reverse idler rear thrust washer, install either A or B. Refer to "REVERSE IDLER REAR THRUST WASHER", MT-70.**

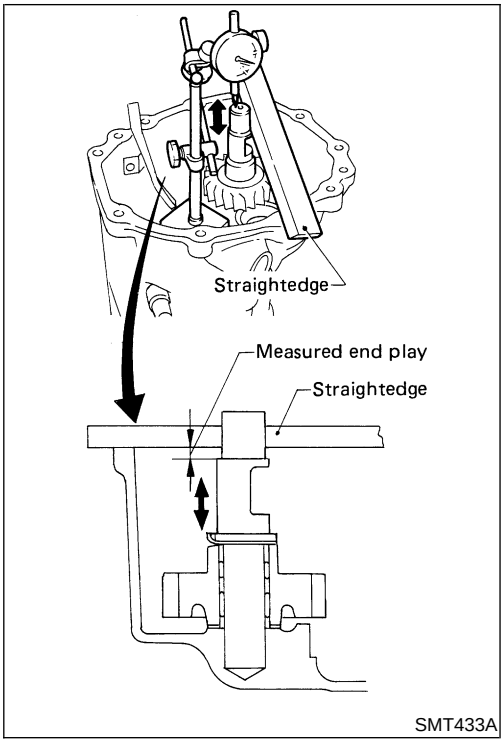

b. Place dial indicator on front end of reverse idler shaft.
c. Put straightedge on front surface of rear extension (or O/D gear case) as a stopper of reverse idler shaft.
d. Move reverse idler shaft up and down and measure reverse idler gear end play.

Reverse idler gear end play:
0.30 - 0.53 mm (0.0119 - 0.0208 in)

e. If not within specification, replace reverse idler rear thrust washer with the other (A or B) and check again.

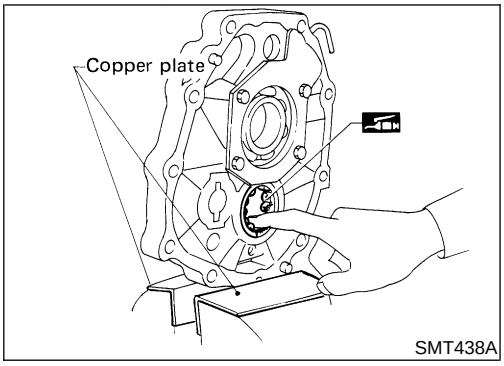

7. Install mainshaft and counter gear on adapter plate and main drive gear on mainshaft.
a. Mount adapter plate on vise and apply multi-purpose grease to counter gear rear bearing.

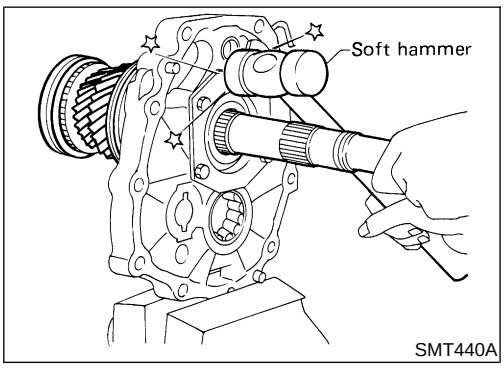

b. Install mainshaft a little on mainshaft front bearing.

- **To allow for installation of counter gear, do not install mainshaft completely.**

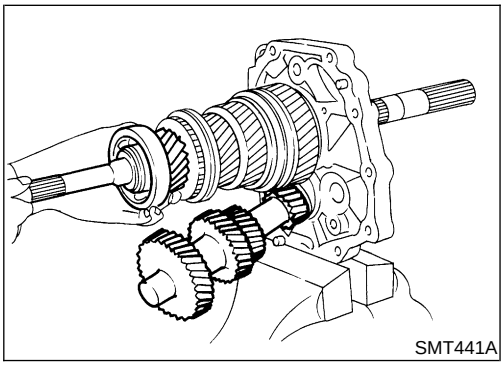

c. Install counter gear on counter gear rear bearing and install main drive gear, pilot bearing and spacer on mainshaft.

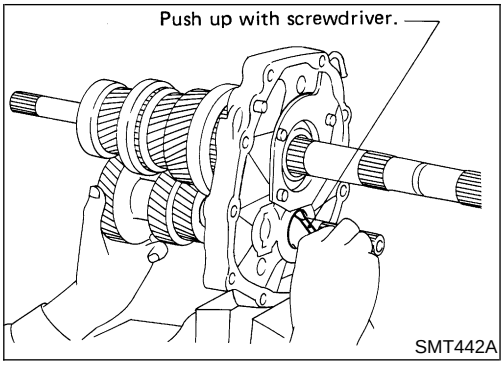

- **When installing counter gear into counter gear rear bearing, push up on upper roller of counter gear rear bearing with screwdriver.**

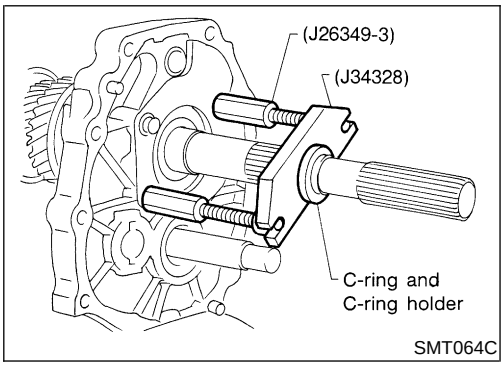

d. Install Tools (J26349-3) onto adapter plate and C-ring and C-ring holder on mainshaft.
e. Install Tool (J34328) on mainshaft.

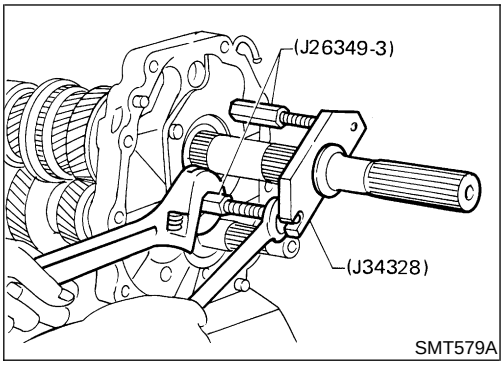

f. Install mainshaft and counter gear completely by extending length of (J26349-3).

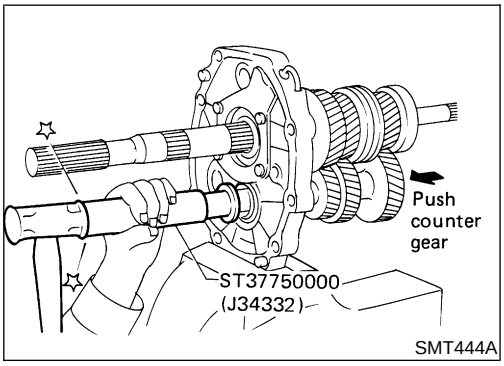

8. Install rear side components on mainshaft and counter gear.
a. Install OD gear bushing while pushing on the front of counter gear.

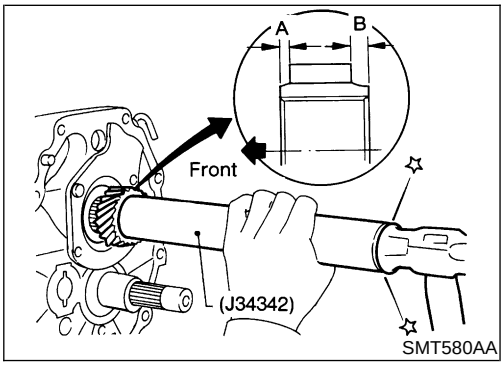

b. Install OD main gear.
- **Pay attention to direction of OD main gear. (B is wider than A as shown at left.)**

c. Install adapter plate with gear assembly onto transmission case.
d. Install OD gear needle bearing and then install OD counter gear and reverse idler shaft.

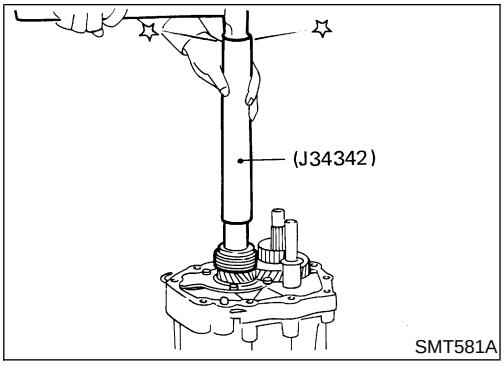

e. Install reverse gear bushing with speedometer drive gear (2WD model).

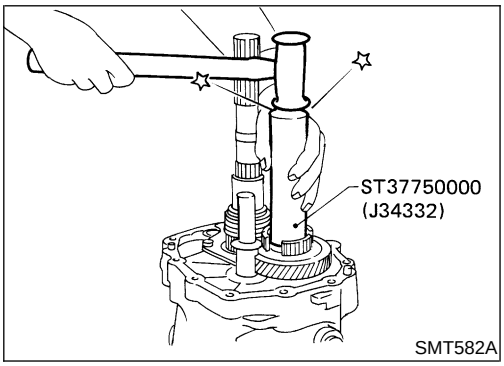

f. Install reverse cone.

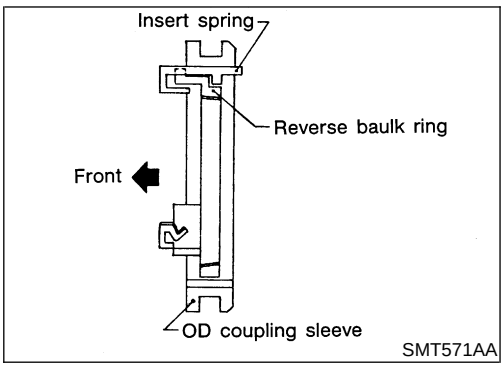

g. Install insert springs and reverse baulk ring on OD coupling sleeve. Then install them and OD baulk ring on OD counter gear.

- **Pay attention to direction of OD coupling sleeve.**

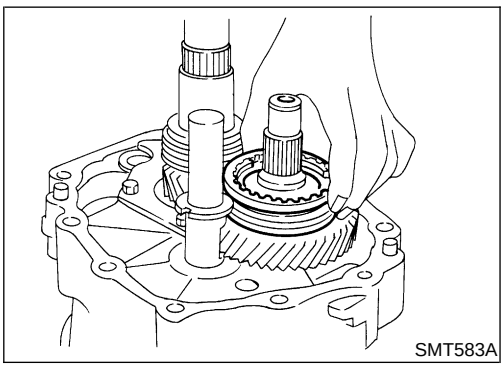

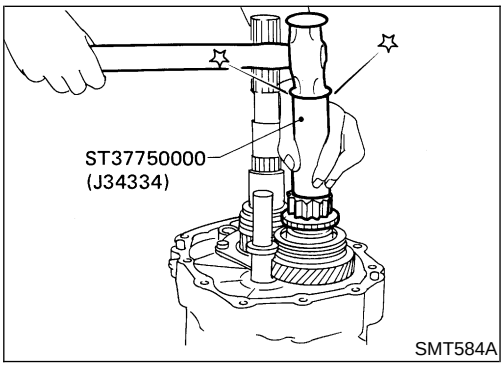

h. Install reverse counter gear.

i. Install reverse gear needle bearing and then install reverse main gear, reverse idler gear and reverse idler thrust washers.

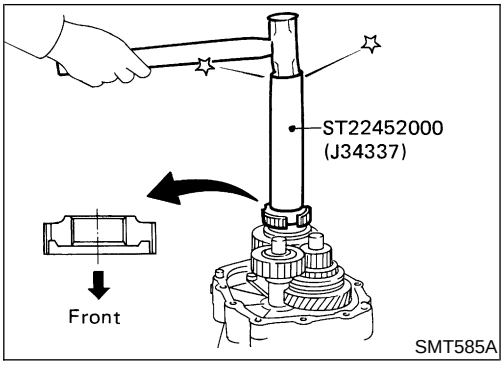

j. Install reverse hub.
- **Pay attention to its direction.**

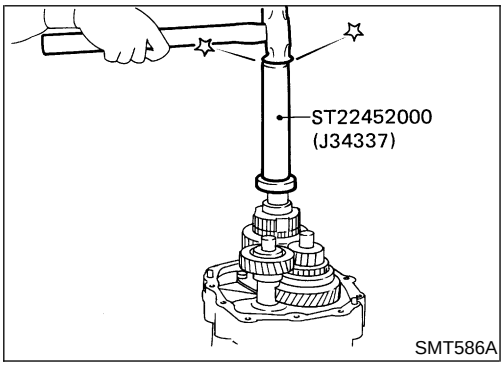

k. Install mainshaft spacer and mainshaft rear bearing (2WD model).

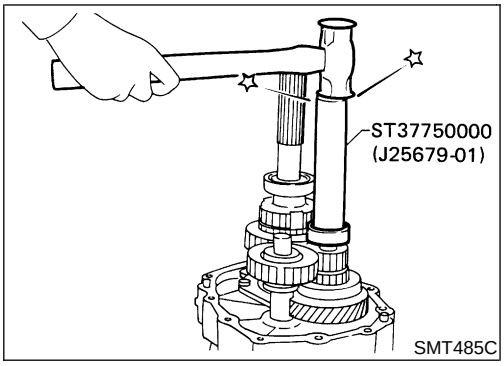

l. Install counter gear rear end bearing.

m. Separate adapter plate from transmission case and mount adapter plate on vise again.

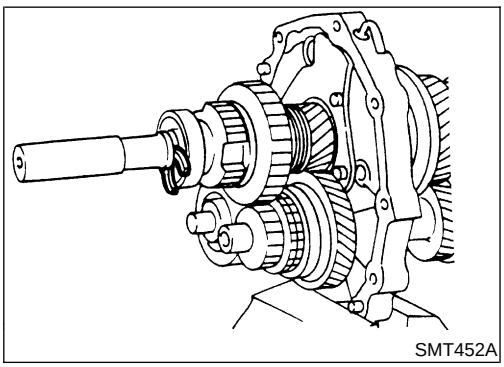

n. Select proper mainshaft C-ring to minimize clearance of groove. Refer to "MAINSHAFT C-RING", MT-69.

Allowable clearance of groove:
0 - 0.1 mm (0 - 0.004 in)

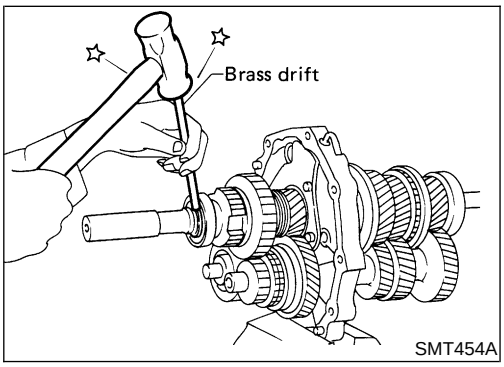

o. Install selected C-ring, C-ring holder and mainshaft rear snap ring.

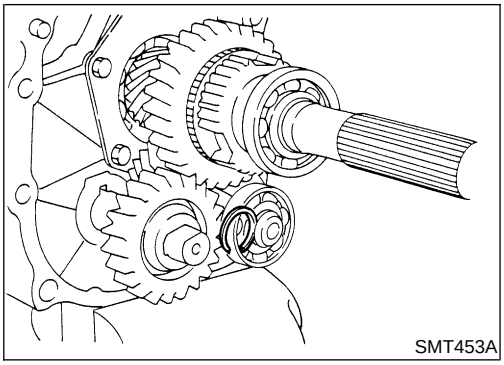
SMT453A

p. Select proper counter gear rear snap ring to minimize clearance of groove. Refer to "COUNTER GEAR REAR SNAP RING", MT-69.

Allowable clearance of groove:
0 - 0.11 mm (0 - 0.004 in)

q. Install selected counter gear rear snap ring.

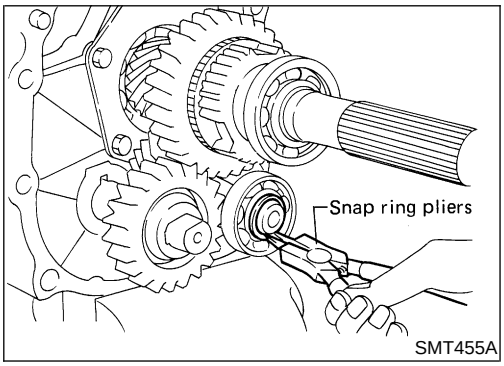

SMT455A

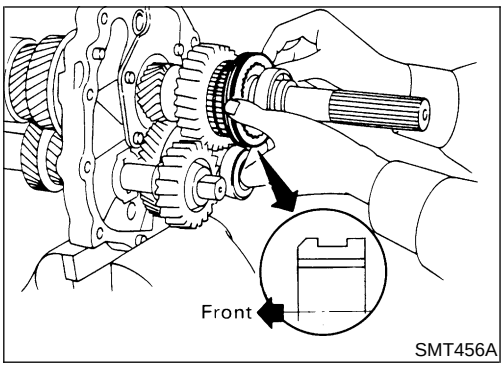

SMT456A

r. Install reverse coupling sleeve.

- **Pay attention to its direction.**

s. Measure each gear end play as a final check. Refer to "DISASSEMBLY", MT-50.

Shift Control Components

ASSEMBLY

NEMT0014

1. Install OD fork rod and OD shift fork. Then install retaining pin into OD shift fork.
2. Install 1st and 2nd, 3rd and 4th, and reverse shift forks onto coupling sleeve.

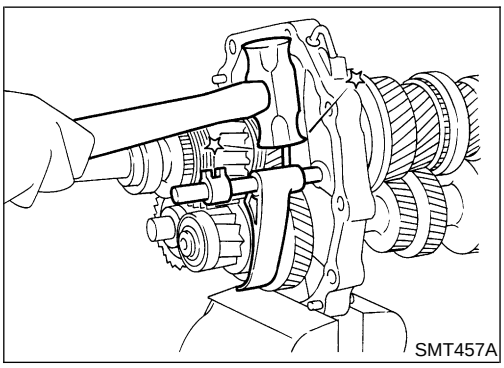
SMT457A

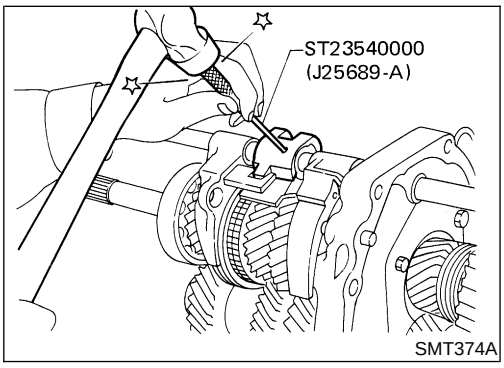

SMT374A

3. Install striking rod into hole of shift forks, striking lever and interlock and then install retaining pin into striking lever.

- **Make sure that striking rod moves smoothly.**

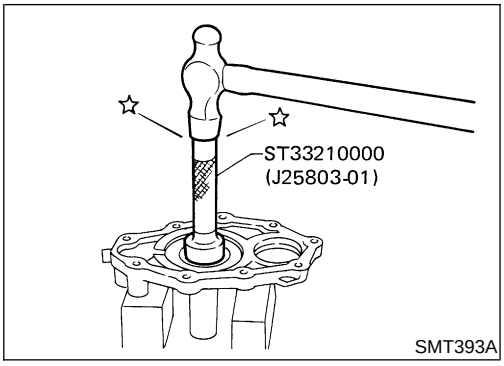

SMT393A

Case Components

ASSEMBLY

NEMT0015

1. Install front cover oil seal.
- **Apply multi-purpose grease to seal lip.**
2. Install selected counter gear front bearing shim onto transmission case.
- **Apply multi-purpose grease.**
3. Apply sealant to mating surface of transmission case.

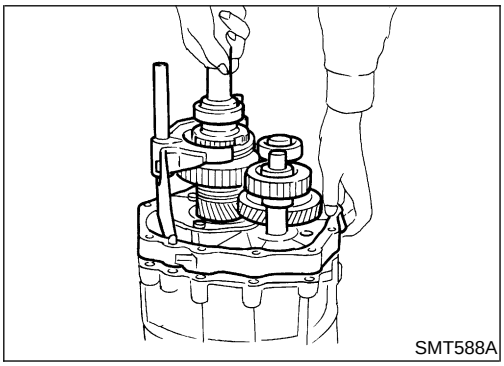
SMT588A

4. Install gear assembly onto transmission case.
5. Install check spring and check ball into interlock stopper.
- **Apply multi-purpose grease to check ball.**

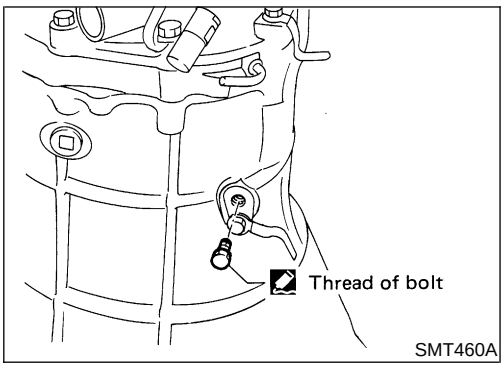

SMT460A

6. Install interlock stopper assembly and then tighten check ball plug. Refer to “Shift Control Components”, MT-47.
- **Apply sealant to thread of check ball plug.**

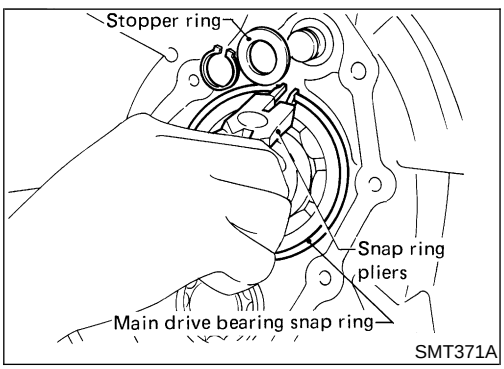

SMT371A

7. Install stopper ring and main drive bearing snap ring.

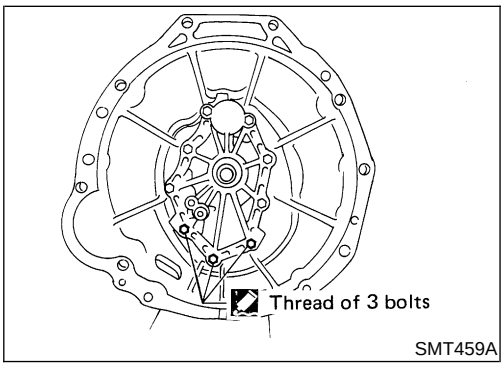

SMT459A

8. Install front cover and gasket. Refer to “Case Components”, MT-44.
- **Apply sealant to thread of 3 bolts shown left.**
9. Apply sealant to mating surface of adapter plate.

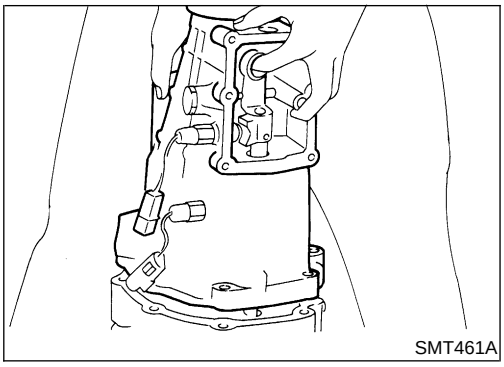
SMT461A

10. Install OD gear case together with striking arm.

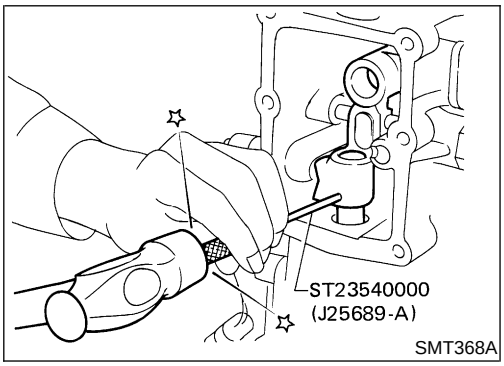

SMT368A

11. Install retaining pin into striking arm.

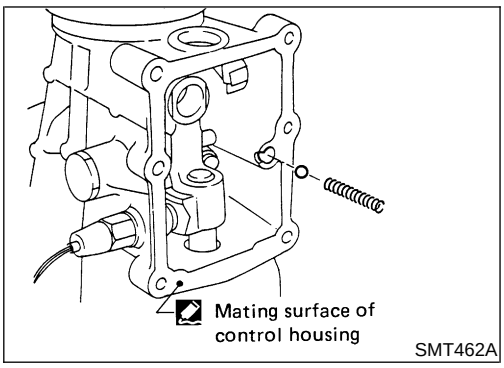

SMT462A

12. Install return spring and check ball and then install control housing.
- **Apply sealant to mating surface of OD gear case. Refer to "Case Components", MT-44.**

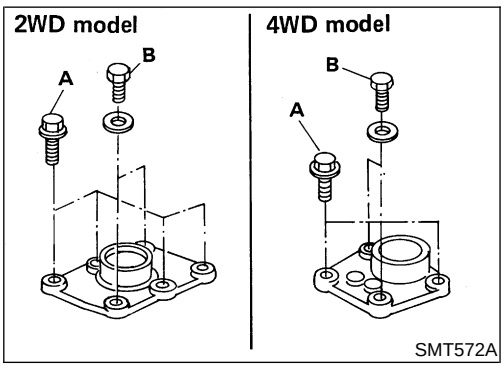

SMT572A

13. Tighten control housing bolts.

Bolt head size:

A bolts 12 mm (0.47 in)

B bolts 13 mm (0.51 in)

General Specifications

NEMT0016

	VG33E/VG33ER		
Transmission	FS5R30A		
	2WD		4WD
Number of speed	5		
Shift pattern	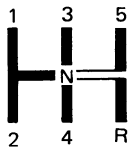 MT-SDS-2		
Synchromesh type	Warner		
	Gear ratio	Number of teeth	
		Mainshaft	Countershaft
Drive	—	22	32
1st	3.580	32	13
2nd	2.077	30	21
3rd	1.360	29	31
4th	1.000	—	—
OD	0.811	24	43
Reverse	3.636	30	12
Reverse idler gear	22		
Oil capacity ℓ (US pt, Imp pt)	2.8 (5-7/8, 4-7/8) — 2WD model		5.1 (10-3/4, 9) — 4WD model
Remarks	2nd & 3rd double baulk ring type synchronizer—VG33E model 1st, 2nd & 3rd double baulk ring type synchronizer—VG33ER model		

Gear End Play

NEMT0017

Unit: mm (in)

Gear	End play
1st main gear	0.23 - 0.33 (0.0091 - 0.0130)
2nd main gear	0.23 - 0.33 (0.0091 - 0.0130)
3rd main gear	0.06 - 0.16 (0.0024 - 0.0063)
OD counter gear	0.23 - 0.33 (0.0091 - 0.0130)
Reverse main gear	0.33 - 0.43 (0.0130 - 0.0169)
Counter gear	0.10 - 0.25 (0.0039 - 0.0098)
Reverse idler gear	0.30 - 0.53 (0.0118 - 0.0209)

Clearance Between Single Baulk Ring and Gear

NEMT0018

Unit: mm (in)

	Standard	Wear limit
1st (VG33E model)	1.05 - 1.3 (0.0413 - 0.0512)	0.7 (0.028)
Main drive	1.05 - 1.3 (0.0413 - 0.0512)	
OD	1.05 - 1.3 (0.0413 - 0.0512)	

Clearance Between Single Baulk Ring and Gear (Cont'd)

DOUBLE BAULK RING

NEMT0018S01

Unit: mm (in)

VG33E model	2nd & 3rd baulk rings
VG33ER model	1st, 2nd & 3rd baulk rings

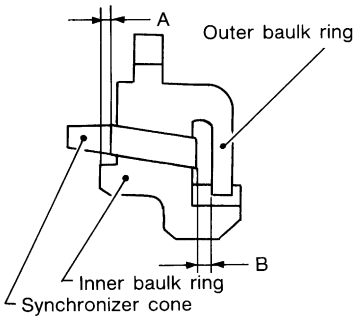

SMT742C

Dimension	Standard	Wear limit
A	0.7 - 0.9 (0.028 - 0.035)	0.2 (0.008)
B	0.6 - 1.1 (0.024 - 0.043)	

Distance Between Rear Surface of Reverse Cone and Reverse Baulk Ring

NEMT0019

Unit: mm (in)

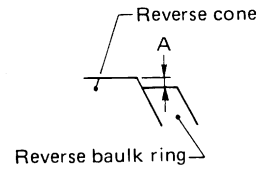

SMT428C

Dimension	Standard	Wear limit
A	−0.1 to 0.35 (−0.0039 to 0.0138)	0.7 (0.028)

Available Snap Ring

NEMT0020

MAIN DRIVE GEAR SNAP RING

NEMT0020S01

Unit: mm (in)

Allowable clearance 0 - 0.11 (0 - 0.004)

Thickness	Part number*	Thickness	Part number*
1.89 (0.0744)	32204-01G60	2.03 (0.0799)	32204-01G63
1.95 (0.0768)	32204-01G61	2.07 (0.0815)	32204-01G64
1.99 (0.0783)	32204-01G62	2.11 (0.0831)	32204-01G65

*Always check with the Parts Department for the latest parts information.

MAINSHAFT FRONT SNAP RING

NEMT0020S02

Unit: mm (in)

Allowable clearance 0 - 0.1 (0 - 0.004)

Thickness	Part number*	Thickness	Part number*
1.99 (0.0783)	32204-01G62	2.11 (0.0831)	32204-01G65
2.03 (0.0799)	32204-01G63	2.15 (0.0846)	32204-01G66
2.07 (0.0815)	32204-01G64	2.19 (0.0862)	32204-01G67

*Always check with the Parts Department for the latest parts information.

COUNTER GEAR REAR SNAP RING

NEMT0020S03
Unit: mm (in)

Allowable clearance	0 - 0.11 (0 - 0.004)		
Thickness	Part number*	Thickness	Part number*
1.32 (0.0520)	32236-01G00	1.56 (0.0614)	32236-01G04
1.38 (0.0543)	32236-01G01	1.62 (0.0638)	32236-01G05
1.44 (0.0567)	32236-01G02	1.68 (0.0661)	32236-01G06
1.50 (0.0591)	32236-01G03	1.74 (0.0685)	32236-01G07

*Always check with the Parts Department for the latest parts information.

Available C-ring

NEMT0021

MAINSHAFT C-RING

NEMT0021S01
Unit: mm (in)

Allowable clearance	0 - 0.1 (0 - 0.004)		
Thickness	Part number*	Thickness	Part number*
2.63 (0.1035)	32348-01G15	3.19 (0.1256)	32348-01G07
2.70 (0.1063)	32348-01G00	3.26 (0.1283)	32348-01G08
2.77 (0.1091)	32348-01G01	3.33 (0.1311)	32348-01G09
2.84 (0.1118)	32348-01G02	3.40 (0.1339)	32348-01G10
2.91 (0.1146)	32348-01G03	3.47 (0.1366)	32348-01G11
2.98 (0.1173)	32348-01G04	3.54 (0.1394)	32348-01G12
3.05 (0.1201)	32348-01G05	3.61 (0.1421)	32348-01G13
3.12 (0.1228)	32348-01G06	3.68 (0.1449)	32348-01G14

*Always check with the Parts Department for the latest parts information.

Available Shim and Washer

NEMT0022

TABLE FOR SELECTING PROPER COUNTER GEAR FRONT BEARING THRUST WASHER

NEMT0022S01
Unit: mm (in)

Allowable clearance	0.10 - 0.26 (0.040 - 0.0102)	
Dial indicator deflection	Thickness of proper washer	Part number*
0.93 - 1.02 (0.0366 - 0.0402)	0.80 (0.0315)	32218-01G00
1.01 - 1.10 (0.0398 - 0.0433)	0.88 (0.0346)	32218-01G11
1.09 - 1.18 (0.0429 - 0.0465)	0.96 (0.0378)	32218-01G12
1.17 - 1.26 (0.0461 - 0.0496)	1.04 (0.0409)	32218-01G13
1.25 - 1.34 (0.0492 - 0.0528)	1.12 (0.0441)	32218-01G14
1.33 - 1.42 (0.0524 - 0.0559)	1.20 (0.0472)	32218-01G04
1.41 - 1.50 (0.0555 - 0.0591)	1.28 (0.0504)	32218-01G15
1.49 - 1.58 (0.0587 - 0.0622)	1.36 (0.0535)	32218-01G16
1.57 - 1.66 (0.0618 - 0.0654)	1.44 (0.0567)	32218-01G17

*Always check with the Parts Department for the latest parts information.

Available Shim and Washer (Cont'd)

REVERSE IDLER REAR THRUST WASHER

NEMT0022S02

Unit: mm (in)

Allowable clearance	0.30 - 0.53 (0.0119 - 0.0208)	
Thickness		Part number*
A	1.97 (0.0776)	32284-01G10
B	2.07 (0.0815)	32284-01G11

*Always check with the Parts Department for the latest parts information.

AUTOMATIC TRANSMISSION

SECTION AT

CONTENTS

RL4R01A

PRECAUTIONS 5
Supplemental Restraint System (SRS) ″AIR BAG″ and ″SEAT BELT PRE-TENSIONER″.....5
Precautions.....5
Service Notice or Precautions.....6
Wiring Diagrams and Trouble Diagnosis.....6
PREPARATION 7
Special Service Tools 7
OVERALL SYSTEM 9
Circuit Diagram.....9
Wiring Diagram.....10
Cross-sectional View 13
Hydraulic Control Circuits.....14
Shift Mechanism 15
TROUBLE DIAGNOSIS - BASIC INSPECTION.....27
A/T Fluid Check.....27
Stall Test 27
Line Pressure Test.....30
Road Test.....32
TROUBLE DIAGNOSIS - GENERAL DESCRIPTION.....34
Symptom Chart.....34
DTC P1775 TORQUE CONVERTER CLUTCH SOLENOID VALVE (CIRCUIT).....43
Diagnostic Procedure 43
TROUBLE DIAGNOSES.....46
Component Inspection.....46
Electrical Component Inspection.....55
A/T SHIFT LOCK SYSTEM.....56
Description.....56
Shift Lock System Electrical Parts Location.....56
Removal and Installation 56
Wiring Diagram.....58
Diagnostic Procedure 59
ON-VEHICLE SERVICE 63
Control Valve Assembly and Accumulators.....63
Rear Oil Seal Replacement.....63
Parking Components Inspection.....64
Governor Valve 64
Throttle Wire Adjustment 64
Park/Neutral Position (PNP) Switch Adjustment 65
Control Cable Adjustment.....66
REMOVAL AND INSTALLATION.....67
Removal.....67
Installation.....69
OVERHAUL 71
Components.....71
Oil Channel.....73
Locations of Needle Bearings, Thrust Washers and Snap Rings.....74
DISASSEMBLY.....75
REPAIR FOR COMPONENT PARTS 86
Oil Pump.....86
Control Valve Assembly.....90
Control Valve Upper Body 95
Control Valve Lower Body 99
Governor Valve Assembly 100
Parking Gear.....101
Reverse Clutch 101
High Clutch 105
Forward and Overrun Clutches 107
Low & Reverse Brake..... 111
Forward Clutch Drum Assembly..... 114
Rear Internal Gear and Forward Clutch Hub..... 116
Band Servo Piston Assembly 118
Parking Pawl Components 122
ASSEMBLY.....124
Assembly (1).....124
Adjustment.....132
Assembly (2).....135
SERVICE DATA AND SPECIFICATIONS (SDS) 141
General Specifications.....141
Shift Schedule.....141
Stall Revolution.....141
Line Pressure.....141
Governor Pressure 142

CONTENTS (Cont'd)

Return Springs....142
Accumulator O-ring....143
Clutch and Brakes....143
Oil Pump and Low One-way Clutch....145
Total End Play....145
Parking Gear....145
Reverse Clutch Drum End Play....146
Removal and Installation....146

RE4R01A

TROUBLE DIAGNOSIS - INDEX....147
Alphabetical & P No. Index for DTC....147
PRECAUTIONS....149
Supplemental Restraint System (SRS) "AIR BAG" and "SEAT BELT PRE-TENSIONER"....149
Precautions for On Board Diagnostic (OBD) System of A/T and Engine....149
Precautions....150
Service Notice or Precautions....151
Wiring Diagrams and Trouble Diagnosis....152
PREPARATION....153
Special Service Tools....153
OVERALL SYSTEM....155
A/T Electrical Parts Location....155
Circuit Diagram....156
Cross-sectional View....157
Hydraulic Control Circuit....158
Shift Mechanism....159
Control System....169
Control Mechanism....170
Control Valve....175
ON BOARD DIAGNOSTIC SYSTEM DESCRIPTION....177
Introduction....177
OBD-II Function for A/T System....177
One or Two Trip Detection Logic of OBD-II....177
OBD-II Diagnostic Trouble Code (DTC)....177
Malfunction Indicator Lamp (MIL)....181
CONSULT-II....181
Diagnostic Procedure Without CONSULT-II....190
TROUBLE DIAGNOSIS - INTRODUCTION....199
Introduction....199
Work Flow....203
TROUBLE DIAGNOSIS - BASIC INSPECTION....206
A/T Fluid Check....206
Stall Test....206
Line Pressure Test....209
Road Test....211
Symptom Chart....229
TROUBLE DIAGNOSIS - GENERAL DESCRIPTION....243
TCM Terminals and Reference Value....243
TROUBLE DIAGNOSIS FOR POWER SUPPLY....247
Wiring Diagram - AT - MAIN....247
Diagnostic Procedure....248
DTC P0705 PARK/NEUTRAL POSITION (PNP) SWITCH....250
Description....250
Wiring Diagram - AT - PNP/SW....252
Diagnostic Procedure....253
Component Inspection....254
DTC P0710 A/T FLUID TEMPERATURE SENSOR CIRCUIT....256
Description....256
Wiring Diagram - AT - FTS....258
Diagnostic Procedure....259
Component Inspection....261
DTC P0720 VEHICLE SPEED SENSOR.A/T (REVOLUTION SENSOR)....262
Description....262
Wiring Diagram - AT - VSSA/T....264
Diagnostic Procedure....265
Component Inspection....266
DTC P0725 ENGINE SPEED SIGNAL....267
Description....267
Wiring Diagram - AT - ENGSS....269
Diagnostic Procedure....270
DTC P0731 IMPROPER SHIFTING TO 1ST GEAR POSITION....272
Description....272
Wiring Diagram - AT - 1ST....275
Diagnostic Procedure....276
Component Inspection....277
DTC P0732 IMPROPER SHIFTING TO 2ND GEAR POSITION....278
Description....278
Wiring Diagram - AT - 2ND....281
Diagnostic Procedure....282
Component Inspection....282
DTC P0733 IMPROPER SHIFTING TO 3RD GEAR POSITION....284
Description....284
Wiring Diagram - AT - 3RD....287
Diagnostic Procedure....288
Component Inspection....289
DTC P0734 IMPROPER SHIFTING TO 4TH GEAR POSITION....290
Description....290
Wiring Diagram - AT - 4TH....294
Diagnostic Procedure....295
Component Inspection....298
DTC P0740 TORQUE CONVERTER CLUTCH SOLENOID VALVE....299
Description....299

CONTENTS (Cont'd)

Wiring Diagram - AT - TCV....301
Diagnostic Procedure....302
Component Inspection....303
DTC P0744 IMPROPER LOCK-UP OPERATION....304
Description....304
Wiring Diagram - AT - TCCSIG....307
Diagnostic Procedure....308
Component Inspection....312
DTC P0745 LINE PRESSURE SOLENOID VALVE....313
Description....313
Wiring Diagram - AT - LPSV....315
Diagnostic Procedure....316
Component Inspection....317
DTC P0750 SHIFT SOLENOID VALVE A....318
Description....318
Wiring Diagram - AT - SSV/A....320
Diagnostic Procedure....321
Component Inspection....322
DTC P0755 SHIFT SOLENOID VALVE B....323
Description....323
Wiring Diagram - AT - SSV/B....325
Diagnostic Procedure....326
Component Inspection....327
DTC P1705 THROTTLE POSITION SENSOR....328
Description....328
Wiring Diagram - AT - TPS....331
Diagnostic Procedure....332
Component Inspection....336
DTC P1760 OVERRUN CLUTCH SOLENOID VALVE....337
Description....337
Wiring Diagram - AT - OVRCSV....339
Diagnostic Procedure....340
Component Inspection....341
DTC BATT/FLUID TEMP SEN (A/T FLUID TEMP SENSOR CIRCUIT AND TCM POWER SOURCE)....342
Description....342
Wiring Diagram - AT - BA/FTS....344
Diagnostic Procedure....345
Component Inspection....347
DTC VEHICLE SPEED SENSOR.MTR....348
Description....348
Wiring Diagram - AT - VSSMTR....350
Diagnostic Procedure....351
DTC TURBINE REVOLUTION SENSOR (VG33ER ONLY)....352
Description....352
Wiring Diagram - AT - TRSA/T....354
Diagnostic Procedure....355
Component Inspection....356
DTC CONTROL UNIT (RAM), CONTROL UNIT (ROM)....357
Description....357
Diagnostic Procedure....358
DTC CONTROL UNIT (EEP ROM)....359
Description....359
Diagnostic Procedure....360
TROUBLE DIAGNOSES FOR SYMPTOMS....361
Wiring Diagram - AT - NONDTC....361
1. O/D OFF Indicator Lamp Does Not Come On....364
2. Engine Cannot Be Started In P and N Position....366
3. In "P" Position, Vehicle Moves Forward Or Backward When Pushed....367
4. In N Position, Vehicle Moves....368
5. Large Shock. N -> R Position....370
6. Vehicle Does Not Creep Backward In R Position....372
7. Vehicle Does Not Creep Forward In D, 2 Or 1 Position....375
8. Vehicle Cannot Be Started From D_1....378
9. A/T Does Not Shift: D_1 -> D_2 Or Does Not Kickdown: D_4 -> D_2....381
10. A/T Does Not Shift: D_2 -> D_3....384
11. A/T Does Not Shift: D_3 -> D_4....387
12. A/T Does Not Perform Lock-up....390
13. A/T Does Not Hold Lock-up Condition....392
14. Lock-up Is Not Released....394
15. Engine Speed Does Not Return To Idle (Light Braking D_4 -> D_3)....395
16. Vehicle Does Not Start From D_1....397
17. A/T Does Not Shift: D_4 -> D_3, When Overdrive Control Switch ON -> OFF....398
18. A/T Does Not Shift: D_3 -> 2_2, When Selector Lever D -> 2 Position....399
19. A/T Does Not Shift: 2_2 -> 1_1, When Selector Lever 2 -> 1 Position....400
20. Vehicle Does Not Decelerate By Engine Brake....401
21. TCM Self-diagnosis Does Not Activate (PNP, Overdrive Control and Throttle Position Switches Circuit Checks)....401
A/T SHIFT LOCK SYSTEM....409
Description....409
Wiring Diagram - SHIFT -....410
Diagnostic Procedure....411
Component Check....413
KEY INTERLOCK CABLE....414
Components....414
Removal....414
Installation....415
ON-VEHICLE SERVICE....416
Control Valve Assembly and Accumulators....416
Revolution Sensor Replacement....417

CONTENTS (Cont'd)

Turbine Revolution Sensor Replacement (VG33ER only) 417
Rear Oil Seal Replacement 417
Parking Components Inspection 418
Park/Neutral Position (PNP) Switch Adjustment 418
Manual Control Linkage Adjustment 419
REMOVAL AND INSTALLATION 420
Removal 420
Installation 422
OVERHAUL 423
Components 423
Oil Channel 425
Locations of Needle Bearings, Thrust Washers and Snap Rings 426
DISASSEMBLY 427
REPAIR FOR COMPONENT PARTS 438
Oil Pump 438
Control Valve Assembly 442
Control Valve Upper Body 448
Control Valve Lower Body 453
Reverse Clutch 455
High Clutch 459
Forward and Overrun Clutches 461
Low & Reverse Brake 465
Forward Clutch Drum Assembly 469
Rear Internal Gear and Forward Clutch Hub 471
Band Servo Piston Assembly 474
Parking Pawl Components 478
ASSEMBLY 480
Assembly (1) 480
Adjustment 487
Assembly (2) 490
SERVICE DATA AND SPECIFICATIONS (SDS) 497
General Specifications 497
Shift Schedule 497
Stall Revolution 497
Line Pressure 498
Return Springs 498
Accumulator O-ring 499
Clutches and Brakes 499
Oil Pump and Low One-way Clutch 502
Total End Play 502
Reverse Clutch Drum End Play 502
Removal and Installation 502
Shift Solenoid Valves 502
Solenoid Valves 502
A/T Fluid Temperature Sensor 503
Turbine Revolution Sensor 503
Revolution Sensor 503
Dropping Resistor 503

Supplemental Restraint System (SRS) “AIR BAG” and “SEAT BELT PRE-TENSIONER”

NEAT0400

The Supplemental Restraint System such as “AIR BAG” and “SEAT BELT PRE-TENSIONER” used along with a seat belt, helps to reduce the risk or severity of injury to the driver and front passenger in a frontal collision. The Supplemental Restraint System consists of air bag modules (located in the center of the steering wheel and in the instrument panel on the passenger side), seat belt pre-tensioners, a diagnosis sensor unit, warning lamp, wiring harness, and spiral cable.

The vehicle (except Crew Cab model) is equipped with a passenger air bag deactivation switch. Because no rear seat exists where a rear-facing child restraint can be placed, the switch is designed to turn off the passenger air bag so that a rear-facing child restraint can be used in the front passenger seat. The switch is located in the center of the instrument panel, near the ashtray. When the switch is turned to the ON position, the passenger air bag is enabled and could inflate in a frontal collision. When the switch is turned to the OFF position, the passenger air bag is disabled and will not inflate in a frontal collision. A passenger air bag OFF indicator on the instrument panel lights up when the passenger air bag is switched OFF. The driver air bag always remains enabled and is not affected by the passenger air bag deactivation switch.

Information necessary to service the system safely is included in the **RS section** of this Service Manual.

WARNING:

- **To avoid rendering the SRS inoperative, which could increase the risk of personal injury or death in the event of a collision which would result in air bag inflation, all maintenance should be performed by an authorized NISSAN dealer.**
- **Improper maintenance, including incorrect removal and installation of the SRS, can lead to personal injury caused by unintentional activation of the system. For removal of Spiral Cable and Air Bag Module, see the RS section.**
- **Do not use electrical test equipment on any circuit related to the SRS unless instructed to in this Service Manual. Spiral cable and wiring harnesses (except “SEAT BELT PRE-TENSIONER”) are covered with yellow insulation either just before the harness connectors or for the complete harness are related to the SRS.**
- **The vehicle (except Crew Cab model) is equipped with a passenger air bag deactivation switch which can be operated by the customer. When the passenger air bag is switched OFF, the passenger air bag is disabled and will not inflate in a frontal collision. When the passenger air bag is switched ON, the passenger air bag is enabled and could inflate in a frontal collision. After SRS maintenance or repair, make sure the passenger air bag deactivation switch is in the same position (ON or OFF) as when the vehicle arrived for service.**

Precautions

NEAT0401

1) Before proceeding with disassembly, thoroughly clean the outside of the transmission. It is important to prevent the internal parts from becoming contaminated by dirt or other foreign matter.
2) Disassembly should be done in a clean work area.
3) Use lint-free cloth or towels for wiping parts clean. Common shop rags can leave fibers that could interfere with the operation of the transmission.
4) Place disassembled parts in order for easier and proper assembly.
5) All parts should be carefully cleaned with a general purpose, non-flammable solvent before inspection or reassembly.
6) Gaskets, seals and O-rings should be replaced any time the transmission is disassembled.
7) The valve body contains precision parts and requires extreme care when parts are removed and serviced. Place removed parts in order, on a parts rack, so they can be put back in the valve body in the same positions and sequences. Care will also prevent springs and small parts from becoming scattered or lost.
8) Properly installed valves, sleeves, plugs, etc. will slide along their bores in the valve body under their own weight.
9) Before assembly, apply a coat of recommended ATF to all parts. Apply petroleum jelly to protect O-rings and seals, or hold small bearings and washers in place during assembly. Do not use grease.
10) Extreme care should be taken to avoid damage to O-rings, seals and gaskets when assembling.
11) If A/T fluid contains frictional material (clutches, bands, etc.), replace radiator and flush cooler line using cleaning solvent and compressed air after repair of A/T. Refer to ***LC-14***, “Radiator”.
12) After overhaul, refill the transmission with new ATF.
13) When the A/T drain plug is removed, only some of the fluid is drained. Old A/T fluid will remain in torque converter and ATF cooling system.

Always follow the procedures when changing A/T fluid. Refer to ***MA-38***, “Changing A/T Fluid”.

Service Notice or Precautions

NEAT0402

TORQUE CONVERTER SERVICE

NEAT0402S01

The torque converter should be replaced under any of the following conditions:

- External leaks in the hub weld area.
- Converter hub is scored or damaged.
- Converter pilot is broken, damaged or fits poorly into crankshaft.
- Steel particles are found after flushing the cooler and cooler lines.
- Pump is damaged or steel particles are found in the converter.
- Vehicle has TCC shudder and/or no TCC apply. Replace only after all hydraulic and electrical diagnoses have been made (Converter clutch material may be glazed).
- Converter is contaminated with engine coolant containing antifreeze.
- Internal failure of stator roller clutch.
- Heavy clutch debris due to overheating (blue converter).
- Steel particles or clutch lining material found in fluid filter or on magnet when no internal parts in unit are worn or damaged — indicates that lining material came from converter.

The torque converter should not be replaced if:

- The fluid has an odor, is discolored, and there is no evidence of metal or clutch facing particles.
- The threads in one or more of the converter bolt holes are damaged.
- Transmission failure did not display evidence of damaged or worn internal parts, steel particles or clutch plate lining material in unit and inside the fluid filter.
- Vehicle has been exposed to high mileage (only). The exception may be where the torque converter clutch dampener plate lining has seen excess wear by vehicles operated in heavy and/or constant traffic, such as taxi, delivery or police use.

ATF COOLER SERVICE

NEAT0402S02

If A/T fluid contains frictional material (clutches, bands, etc.), replace radiator and flush cooler line using cleaning solvent and compressed air after repair of A/T. Refer to ***LC-14***, “Radiator”.

Wiring Diagrams and Trouble Diagnosis

NEAT0403

When you read wiring diagrams, refer to the following:

- Refer to ***GI-11***, “HOW TO READ WIRING DIAGRAMS” .
- Refer to ***EL-9***, “POWER SUPPLY ROUTING” for power distribution circuit.

When you perform trouble diagnosis, refer to the following:

- Refer to ***GI-34***, “How to Follow Test Groups in Trouble Diagnoses”.
- Refer to ***GI-23***, “HOW TO PERFORM EFFICIENT DIAGNOSIS FOR AN ELECTRICAL INCIDENT”.

Special Service Tools

NEAT0404

The actual shapes of Kent-Moore tools may differ from those of special service tools illustrated here.

Tool number (Kent-Moore No.) Tool name	Description	
(J34301-C) Oil pressure gauge set 1 (J34301-1) Oil pressure gauge 2 (J34301-2) Hose 3 (J34298) Joint pipe 4 (J34282-2) Adapter 5 (790-301-1230-A) 60° Adapter 6 (J34301-15) Square socket	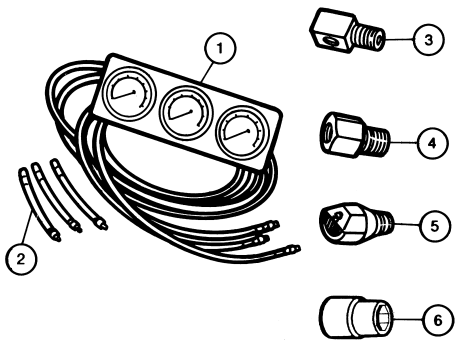 AAT546	Measuring line pressure and governor pressure
ST07870000 (J37068) Transmission case stand	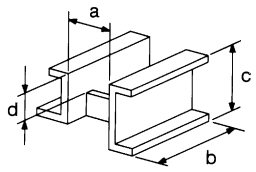 NT421	Disassembling and assembling A/T **a: 182 mm (7.17 in)** **b: 282 mm (11.10 in)** **c: 230 mm (9.06 in)** **d: 100 mm (3.94 in)**
KV31102100 (J37065) Torque converter one-way clutch check tool	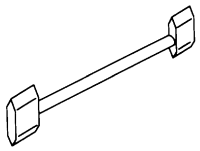 NT098	Checking one-way clutch in torque converter
ST25850000 (J25721-A) Sliding hammer	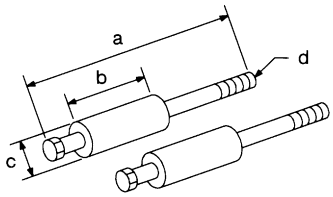 NT422	Removing oil pump assembly **a: 179 mm (7.05 in)** **b: 70 mm (2.76 in)** **c: 40 mm (1.57 in) dia.** **d: M12 x 1.75P**
KV31102400 (J34285 and J34285-87) Clutch spring compressor	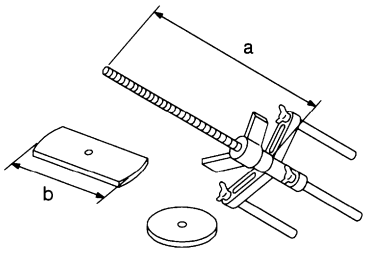 NT423	Removing and installing clutch return springs **a: 320 mm (12.60 in)** **b: 174 mm (6.85 in)**
ST33200000 (J26082) Drift	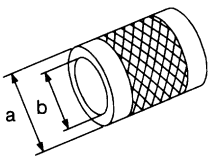 NT091	Installing oil pump housing oil seal Installing rear oil seal **a: 60 mm (2.36 in) dia.** **b: 44.5 mm (1.752 in) dia.**

Special Service Tools (Cont'd)

Tool number (Kent-Moore No.) Tool name	Description	
(J34291) Shim setting gauge set	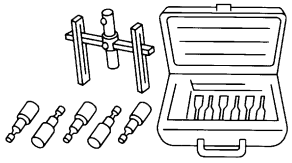 NT101	Selecting oil pump cover bearing race and oil pump thrust washer

Circuit Diagram

NEAT0405

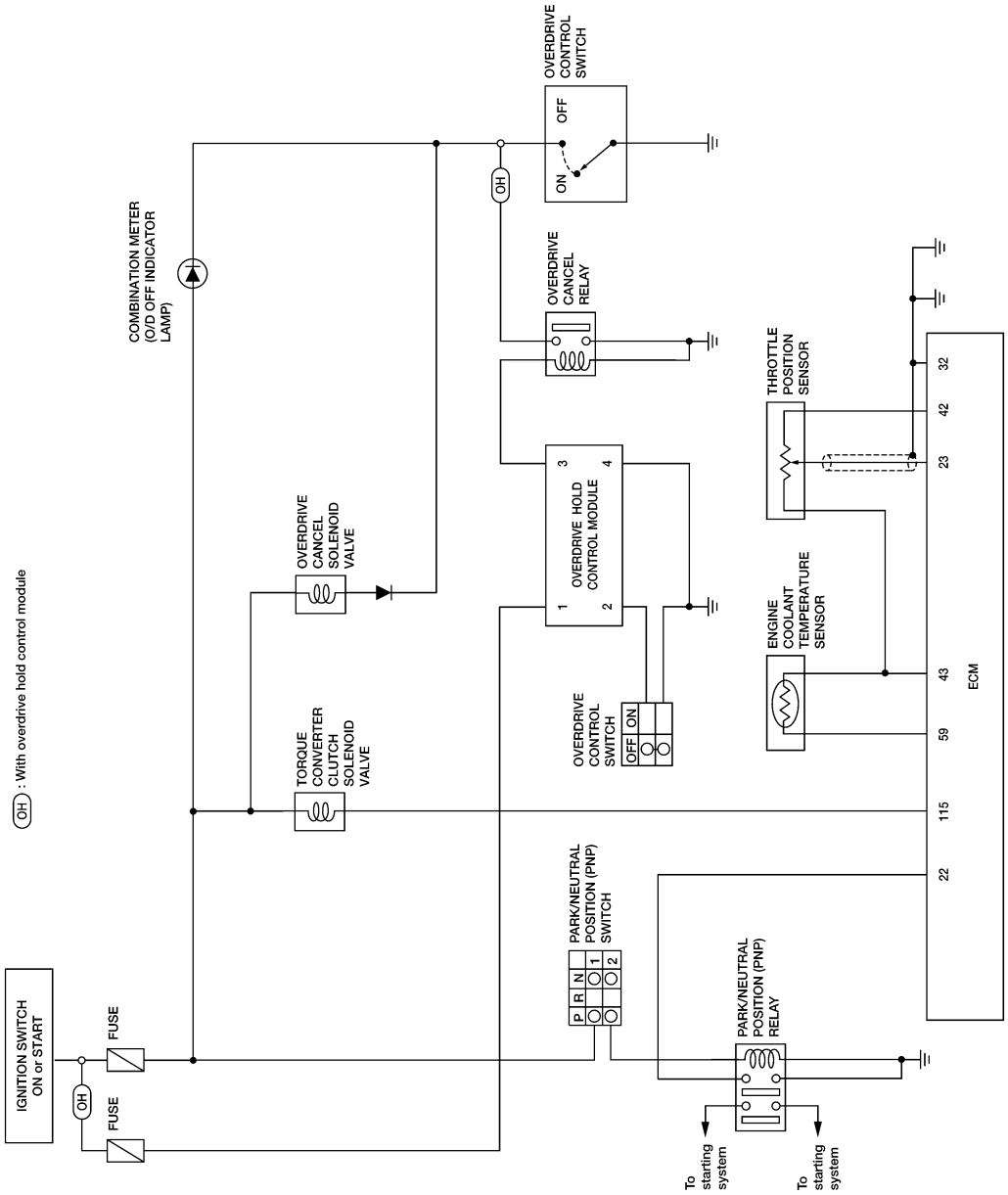

WAT533

Wiring Diagram

NEAT0406

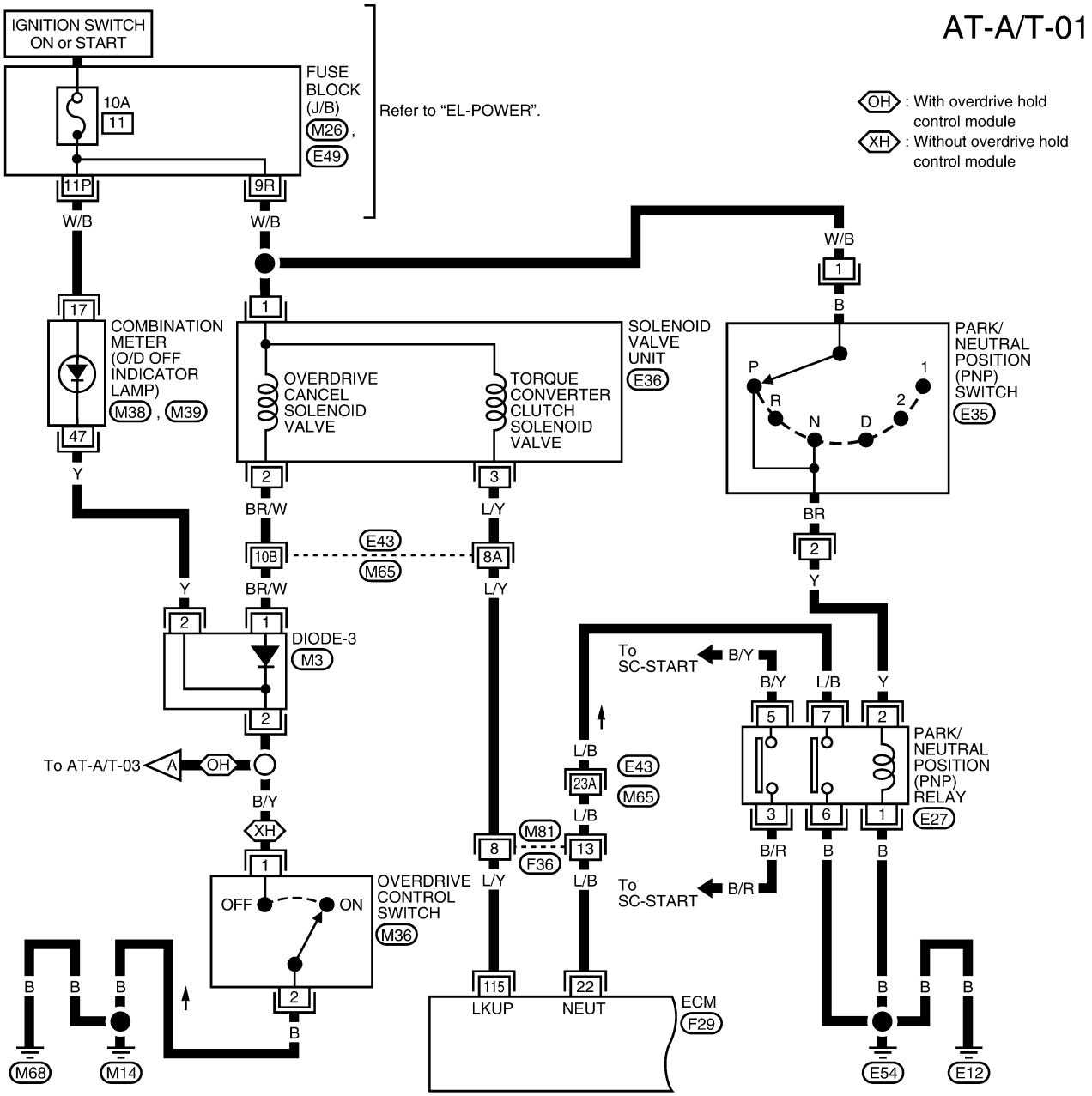

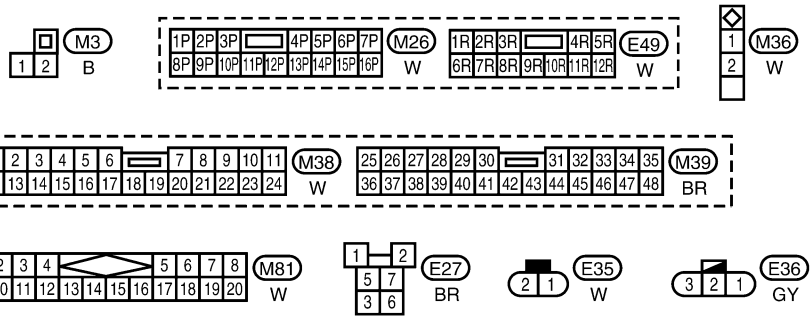

Refer to the following.
M65 , E43 - SUPER MULTIPLE JUNCTION (SMJ)
F29 - ELECTRICAL UNITS

WAT534

AT-A/T-02

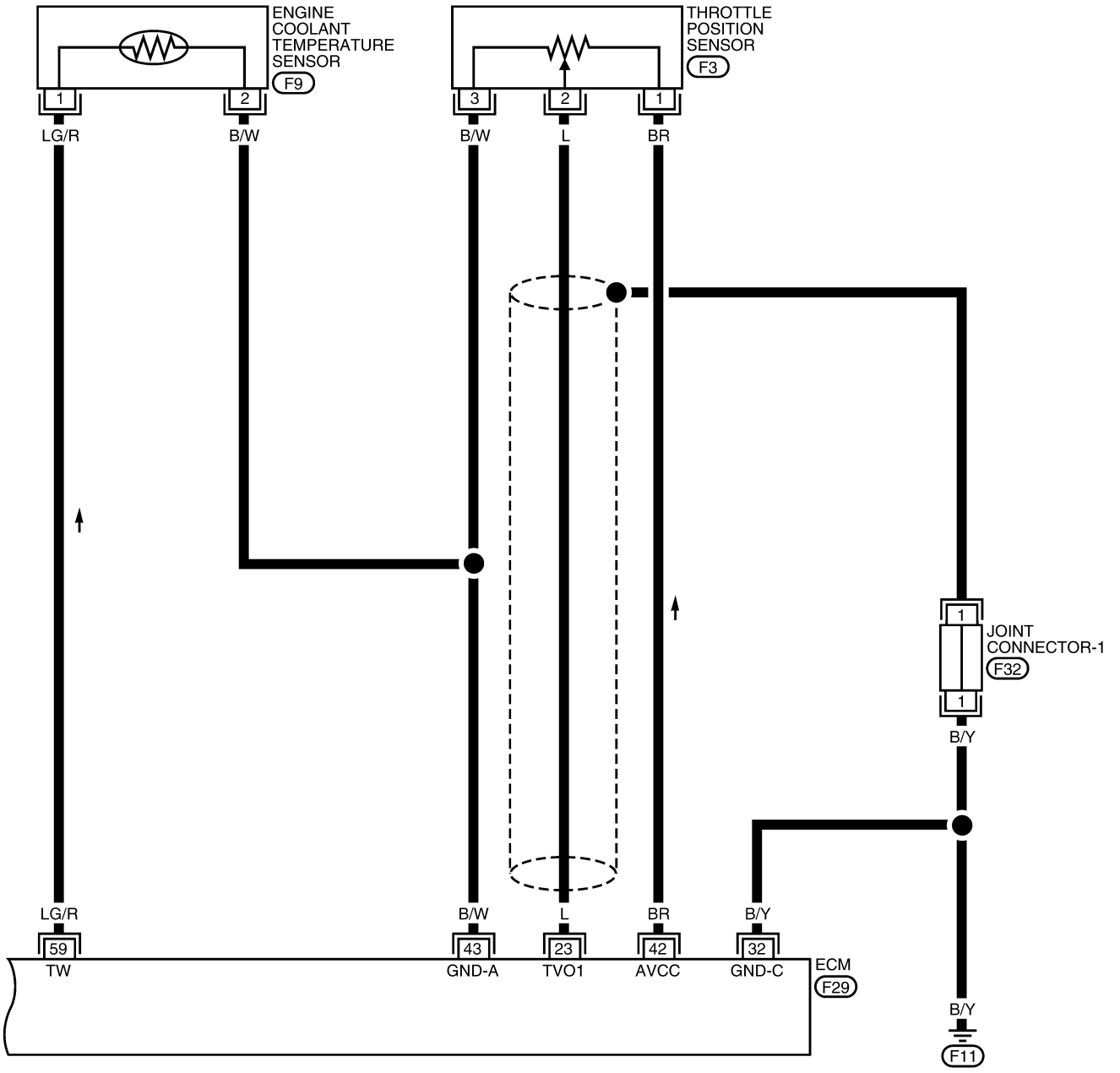

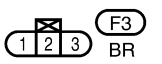



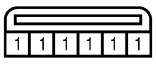

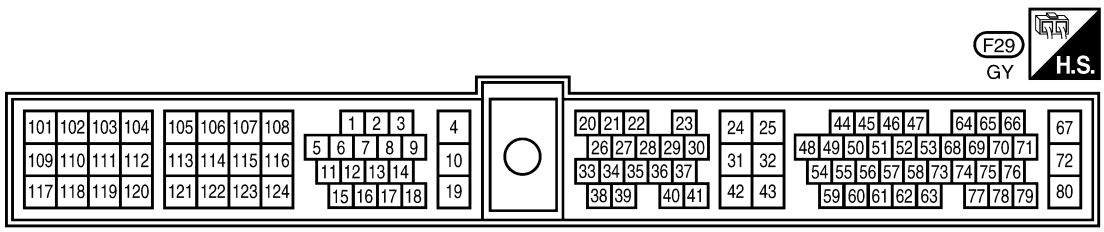

LAT442

AT-A/T-03

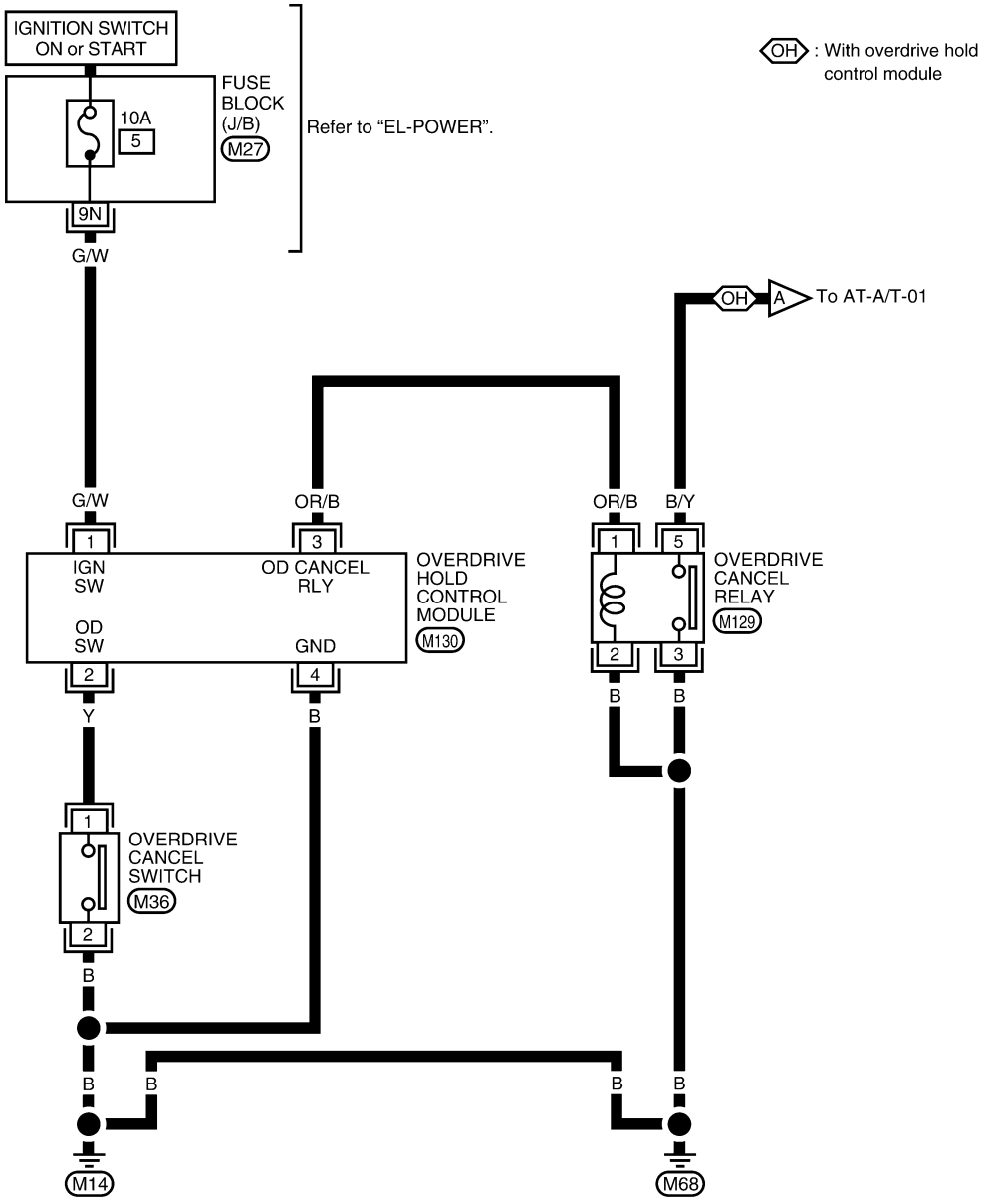

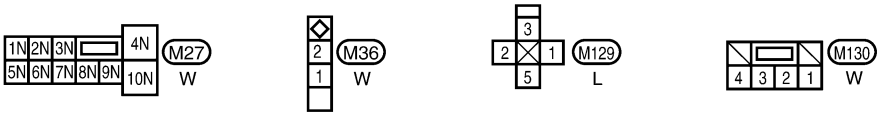

WAT535

Cross-sectional View

NEAT0407

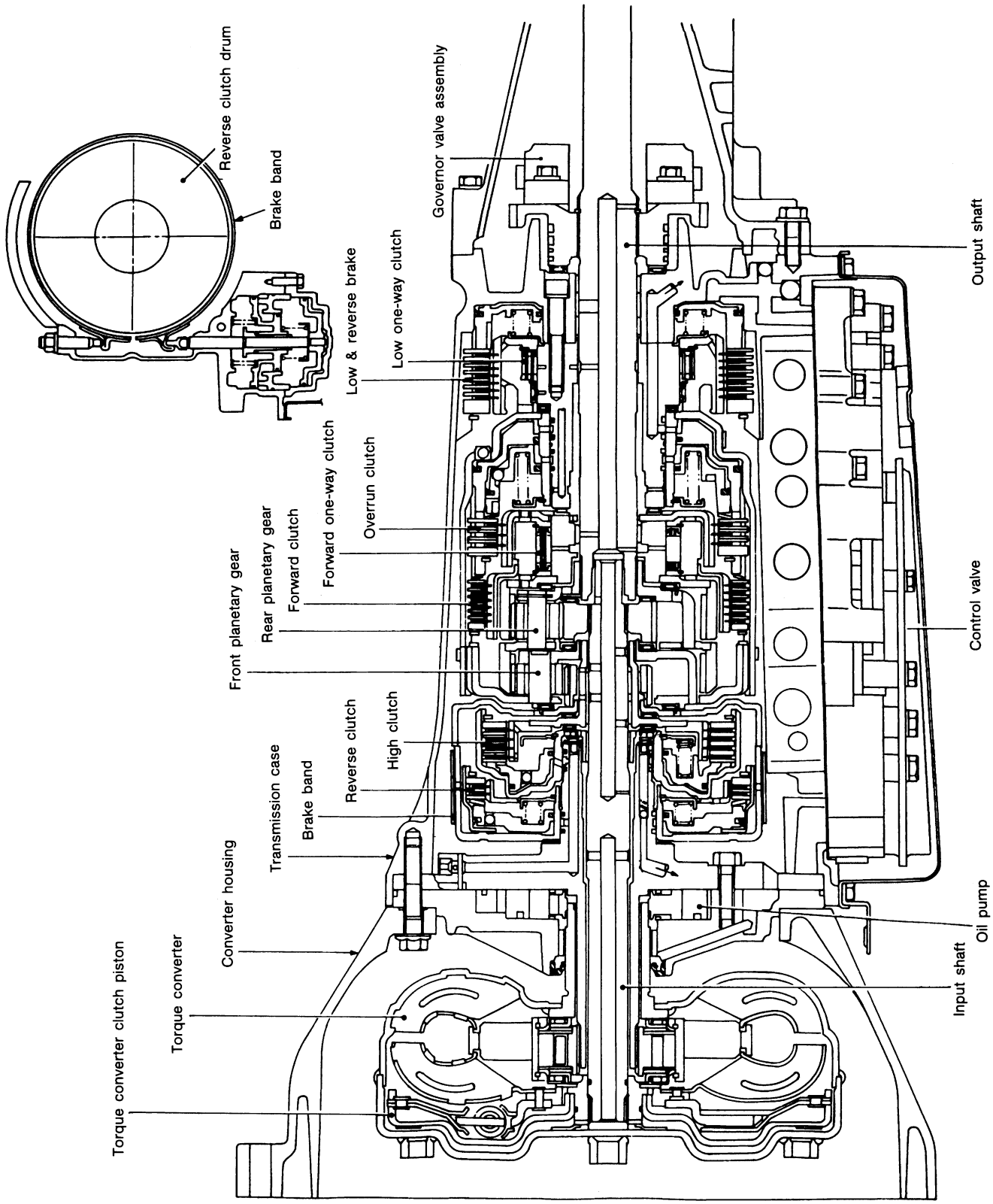

SAT117CA

Hydraulic Control Circuits

NEAT0408

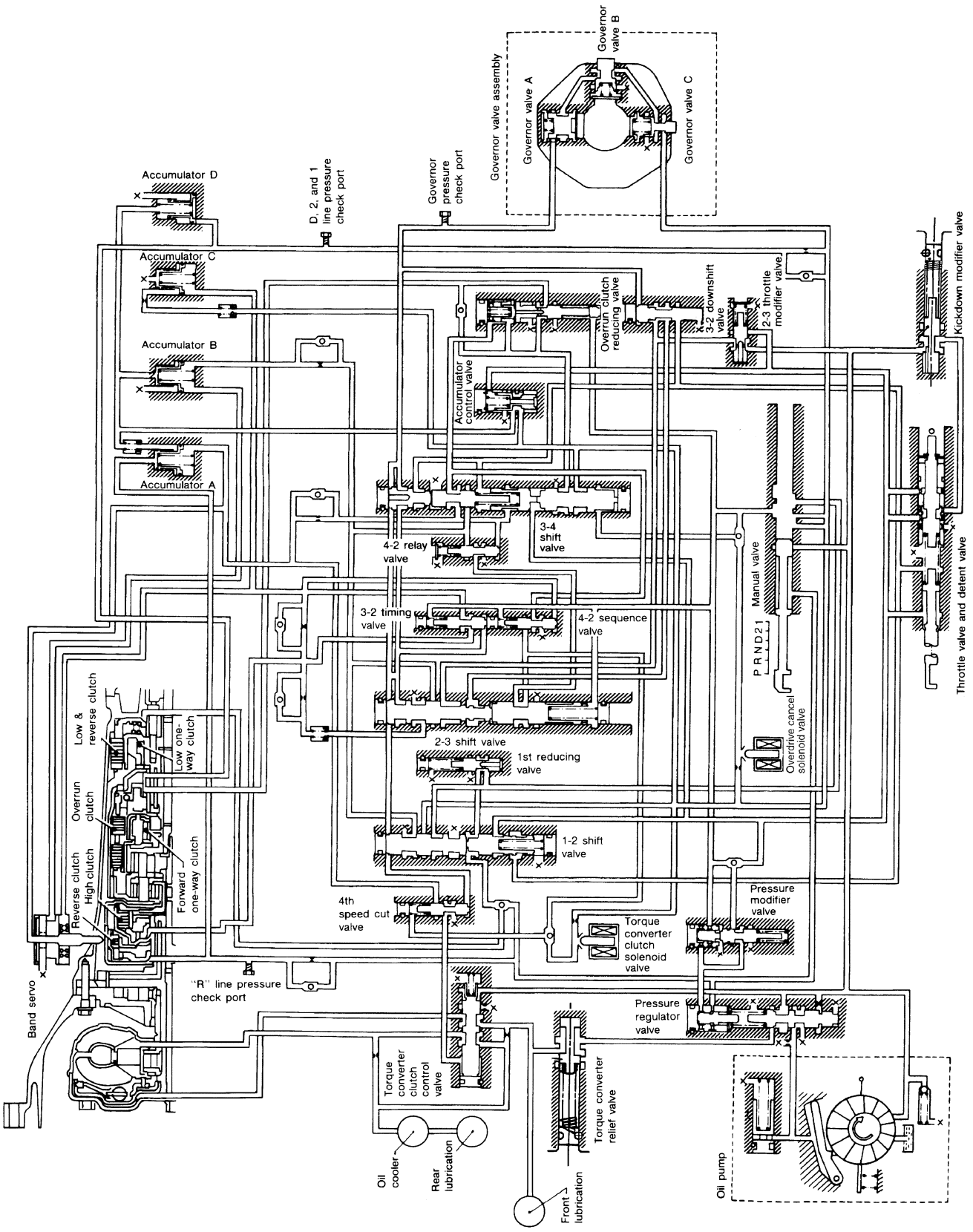

WAT393

Shift Mechanism

NEAT0409

The automatic transmission uses compact, dual planetary gear systems to improve power-transmission efficiency, simplify construction and reduce weight.
It also employs an optimum shift control and superwide gear ratios to improve starting performance and acceleration during medium and high-speed operation.
Two one-way clutches are also employed: one is used for the forward clutch, and the other for the low clutch.
These one-way clutches, combined with four accumulators, reduce shifting shock to a minimum.

CONSTRUCTION

NEAT0409S01

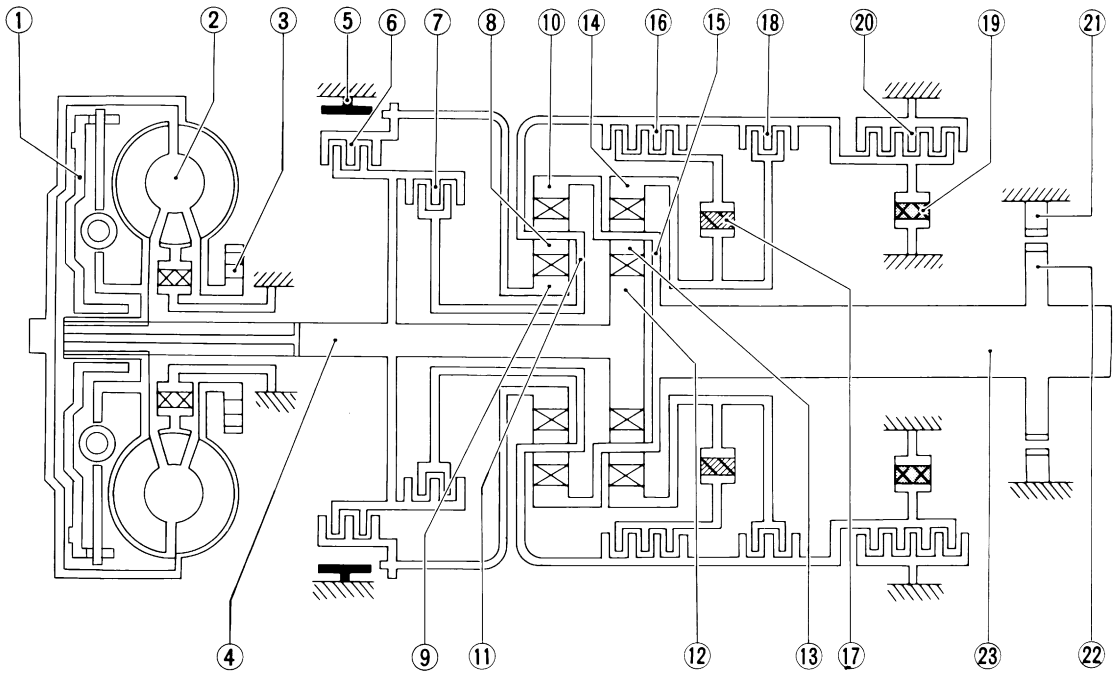

① Torque converter clutch piston
② Torque converter
③ Oil pump
④ Input shaft
⑤ Brake band
⑥ Reverse clutch
⑦ High clutch
⑧ Front pinion gear
⑨ Front sun gear
⑩ Front internal gear
⑪ Front planetary carrier
⑫ Rear sun gear
⑬ Rear pinion gear
⑭ Rear internal gear
⑮ Rear planetary carrier
⑯ Forward clutch
⑰ Forward one-way clutch
⑱ Overrun clutch
⑲ Low one-way clutch
⑳ Low & reverse brake
㉑ Parking pawl
㉒ Parking gear
㉓ Output shaft

SAT026HA

Shift Mechanism (Cont'd)

FUNCTION OF CLUTCH AND BRAKE

=NEAT0409S02

Clutch and brake components	Abbr.	Function
Reverse clutch **6**	R/C	To transmit input power to front sun gear **9**.
High clutch **7**	H/C	To transmit input power to front planetary carrier **11**.
Forward clutch **16**	F/C	To connect front planetary carrier **11** with forward one-way clutch **17**.
Overrun clutch **18**	O/C	To connect front planetary carrier **11** with rear internal gear **14**.
Brake band **5**	B/B	To lock front sun gear **9**.
Forward one-way clutch **17**	F/O.C	When forward clutch **16** is engaged, to stop rear internal gear **14** from rotating in opposite direction.
Low one-way clutch **19**	L/O.C	At D_1 position, to prevent rear internal gear **14** from rotating in opposite direction.
Low & reverse brake **20**	L & R/B	To lock rear internal gear **14** (2, 1_2 and 1_1), to lock front planetary carrier **11** (R position).

CLUTCH AND BAND CHART

NEAT0409S03

Shift position		Reverse clutch **6**	High clutch **7**	Forward clutch **16**	Overrun clutch **18**	Band servo			Forward one-way clutch **17**	Low one-way clutch **19**	Low & reverse brake **20**	Lock-up	Remarks
						2nd apply	3rd release	4th apply					
P													PARK POSITION
R		○									○		REVERSE POSITION
N													NEUTRAL POSITION
D *4	1st			○	D				B	B			Automatic shift 1 ⟷ 2 ⟷ 3 ⟷ 4
	2nd			○	*1A	○			B				
	3rd		○	○	A	*2C	C		B				
	4th		○	C		*3C	C	○				○	
2	1st			○	D				B	B			Automatic shift 1 ⟷ 2
	2nd			○	○	○			B				
1	1st			○	○				B		○		Locks (held stationary) in 1st speed 1 ← 2
	2nd			○	○	○			B				

*1 : Operates when overdrive control switch is set in OFF position.

*2 : Oil pressure is applied to both 2nd "apply" side and 3rd "release" side of band servo piston. However, brake band does not contract because oil pressure area on the "release" side is greater than that on the "apply" side.

*3 : Oil pressure is applied to 4th "apply" side in condition *2 above, and brake band contracts.

*4 : A/T will not shift to 4th when overdrive control switch is set to OFF position.

○ : Operates.

A: Operates when throttle opening is less than 3/16, activating engine brake.

B: Operates during "progressive" acceleration.

C: Operates but does not affect power-transmission.

D: Operates when throttle opening is less than 3/16, but does not affect engine brake.

POWER TRANSMISSION

=NEAT0409S04

"N" and "P" Positions

NEAT0409S0401

- "N" position
  No control members operate. Power from the input shaft is not transmitted to the output shaft because the clutches do not operate.
- "P" position
  Similar to the "N" position, no control members operate. The parking pawl interconnected with the select lever engages with the parking gear to mechanically hold the output shaft so that the powertrain is locked.

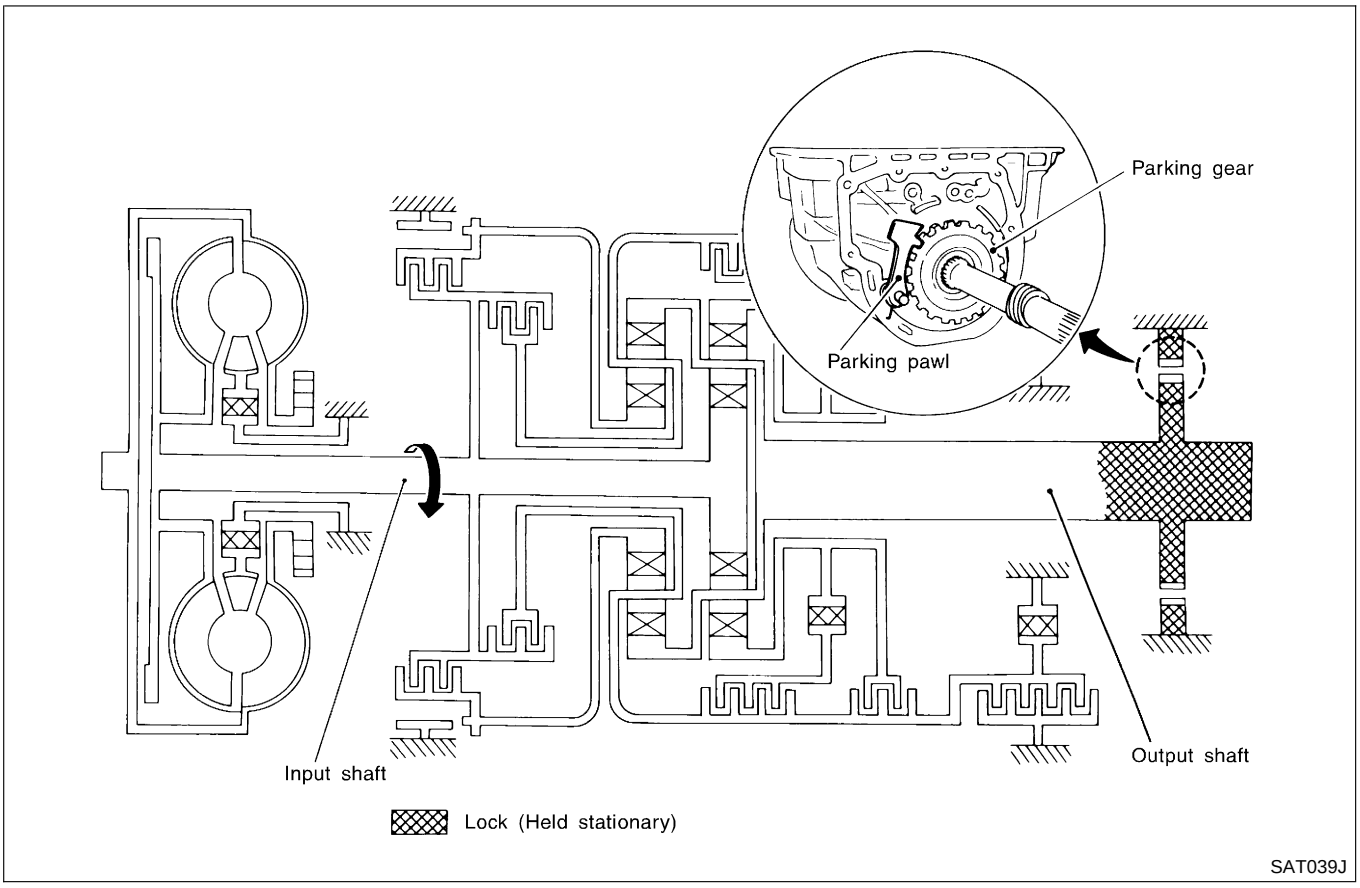

"1_1" Position

=NEAT0409S0402

• **Forward clutch** • **Forward one-way clutch** • **Overrun clutch** • **Low and reverse brake**	As overrun clutch engages, rear internal gear is locked by the operation of low and reverse brake. This is different from that of D_1 and 2_1.
Engine brake	Overrun clutch always engages, therefore engine brake can be obtained when decelerating.

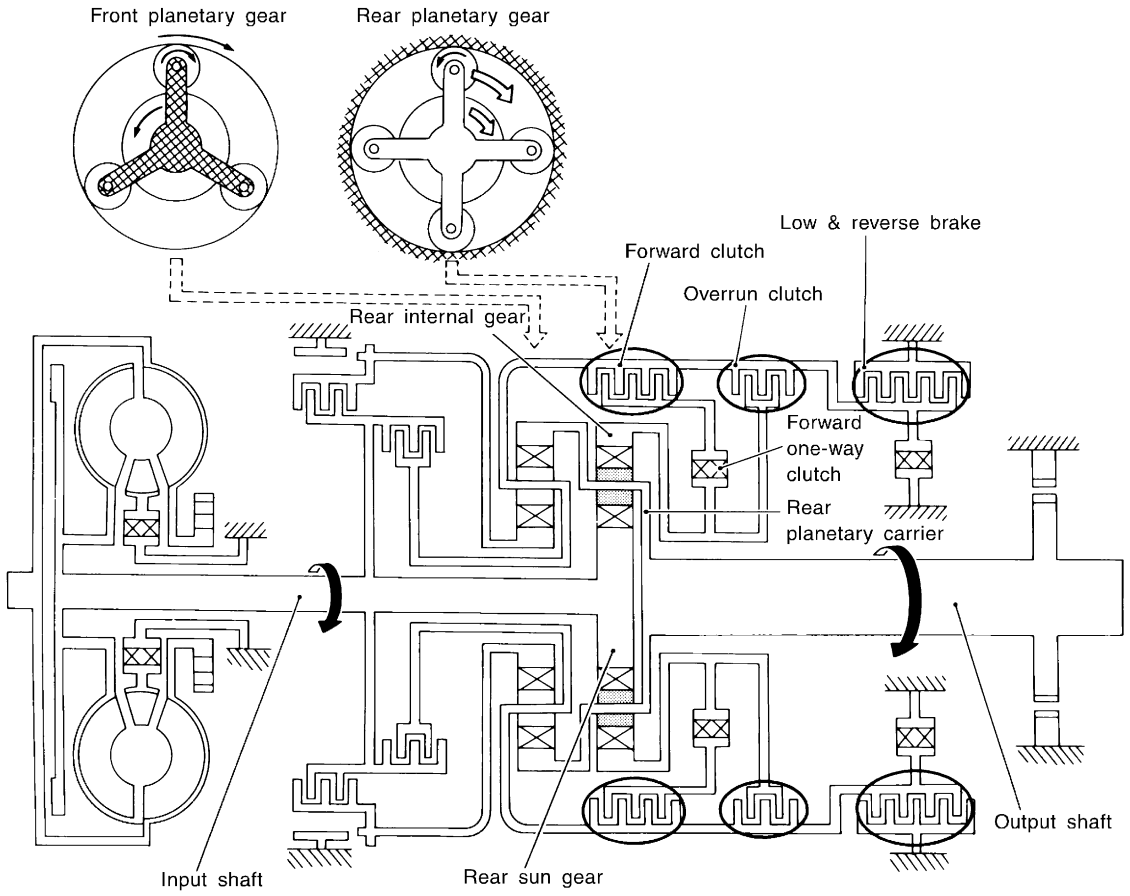

Power flow

Input shaft
⇩
Rear sun gear
⇩
Rear planetary gear ⇨ Output shaft

SAT100J

"D_1" and "2_1" Positions

=NEAT0409S0403

• **Forward one-way clutch** • **Forward clutch** • **Low one-way clutch**	Rear internal gear is locked to rotate counterclockwise because of the functioning of these three clutches (Start-up at D_1).
Overrun clutch engagement conditions (Engine brake)	D_1: Overdrive control switch "OFF" and throttle opening is less than 3/16 2_1: Throttle opening less than 3/16 At D_1 and 2_1 positions, engine brake is not activated due to free turning of low one-way clutch.

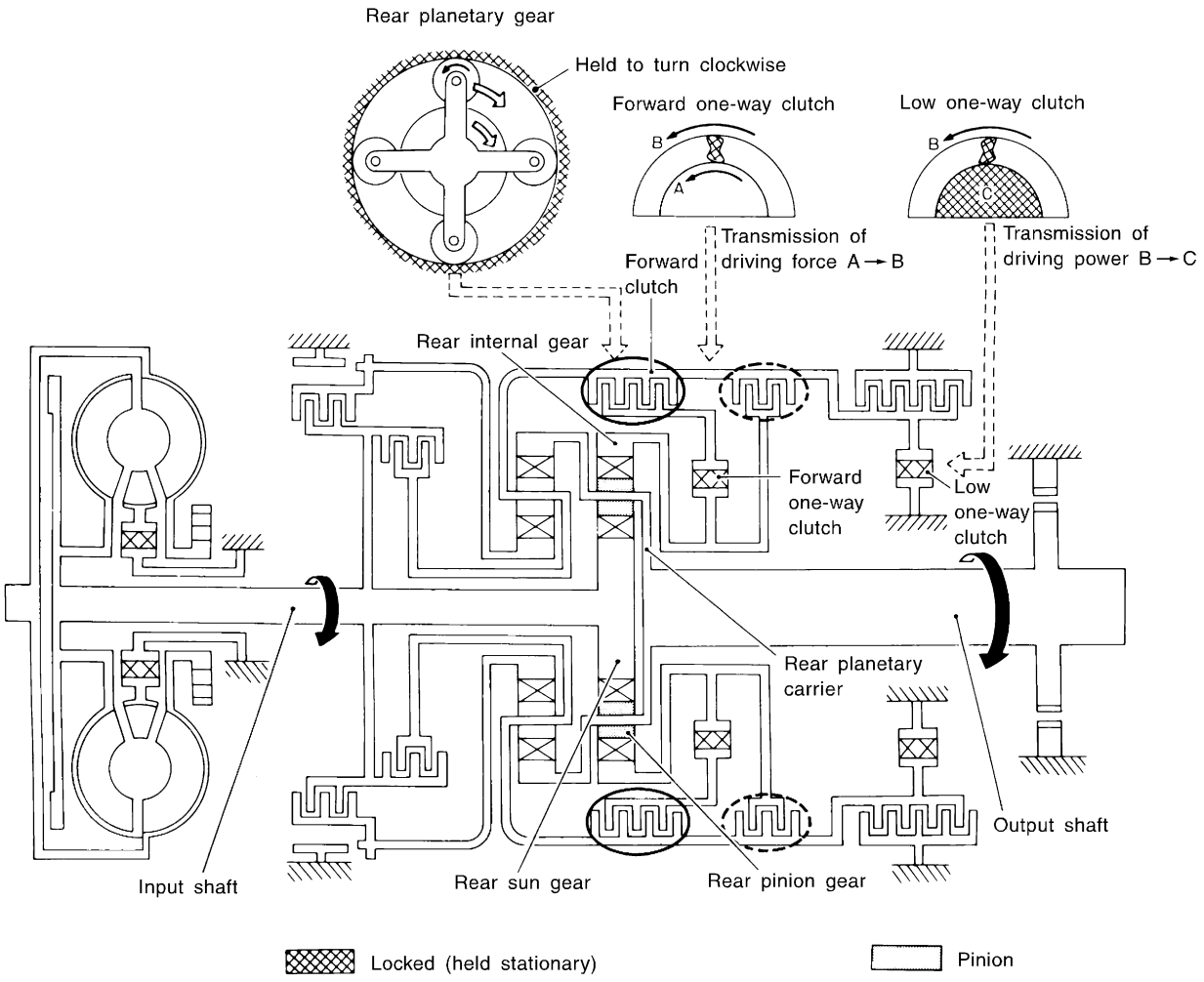

Power flow

Input shaft
⇩
Rear sun gear
⇩
Rear pinion gear
⇩
Rear planetary carrier → Output shaft

SAT096J

"D_2", "2_2" and "1_2" Positions

=NEAT0409S0404

• **Forward clutch** • **Forward one-way clutch** • **Brake band**	Rear sun gear drives rear planetary carrier and combined front internal gear. Front internal gear now rotates around front sun gear accompanying front planetary carrier. As front planetary carrier transfers the power to rear internal gear through forward clutch and forward one-way clutch, this rotation of rear internal gear increases the speed of rear planetary carrier compared with that of the 1st speed.
Overrun clutch engagement conditions	D_2: Overdrive control switch "OFF" and throttle opening is less than 3/16 2_2: Throttle opening less than 3/16 1_2: Always engaged

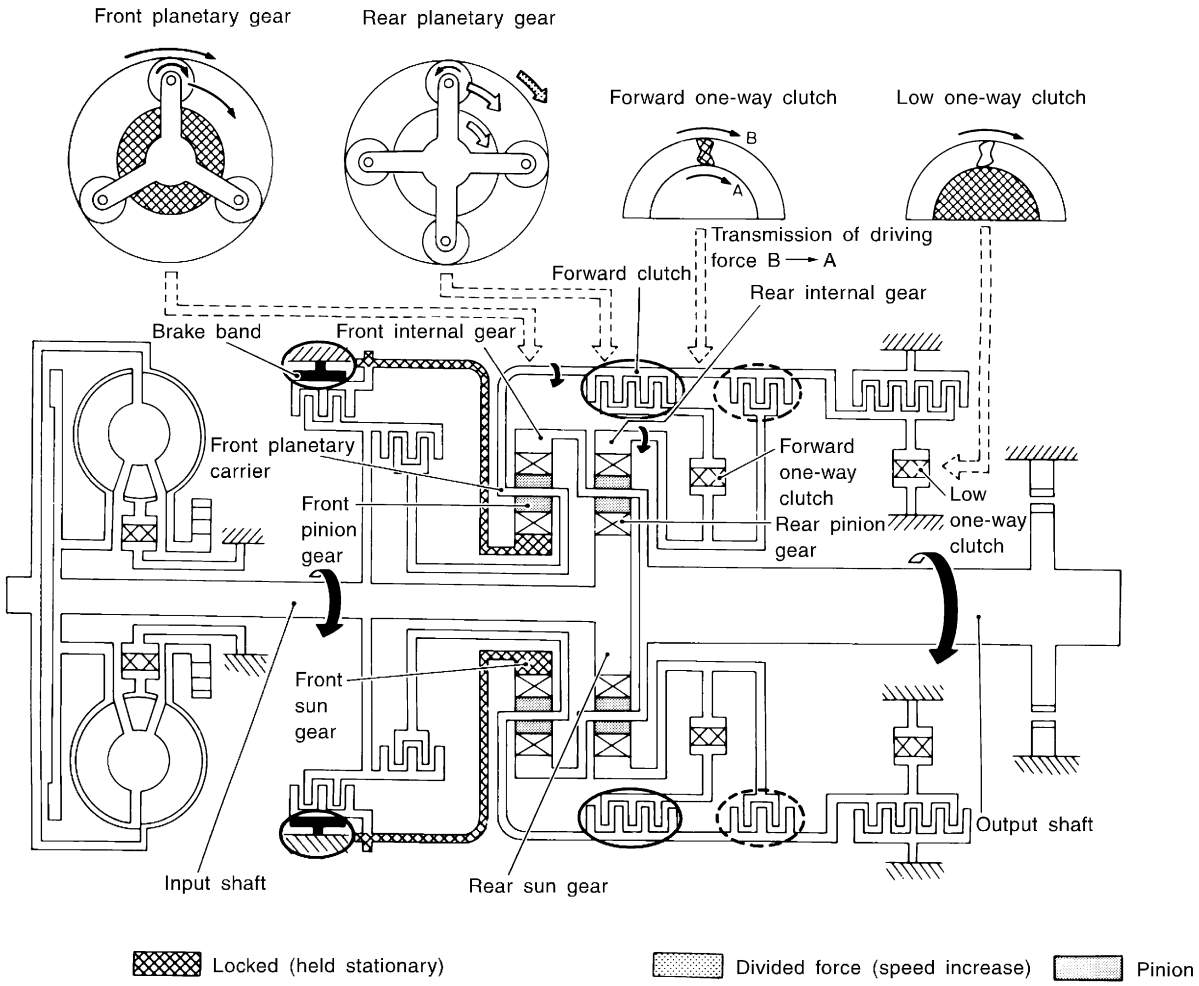

Power flow

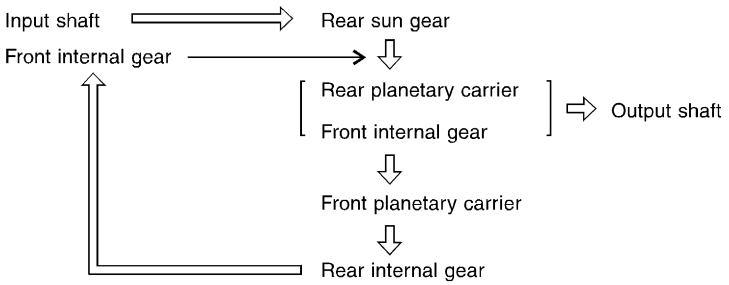

SAT097J

"D_3" Position

=NEAT0409S0405

• **High clutch** • **Forward clutch** • **Forward one-way clutch**	Input power is transmitted to front planetary carrier through high clutch. And front planetary carrier is connected to rear internal gear by operation of forward clutch and forward one-way clutch. This rear internal gear rotation and another input (the rear sun gear) accompany rear planetary carrier to turn at the same speed.
Overrun clutch engagement conditions	D_3: Overdrive control switch "OFF" and throttle opening is less than 3/16 Throttle opening less than 3/16

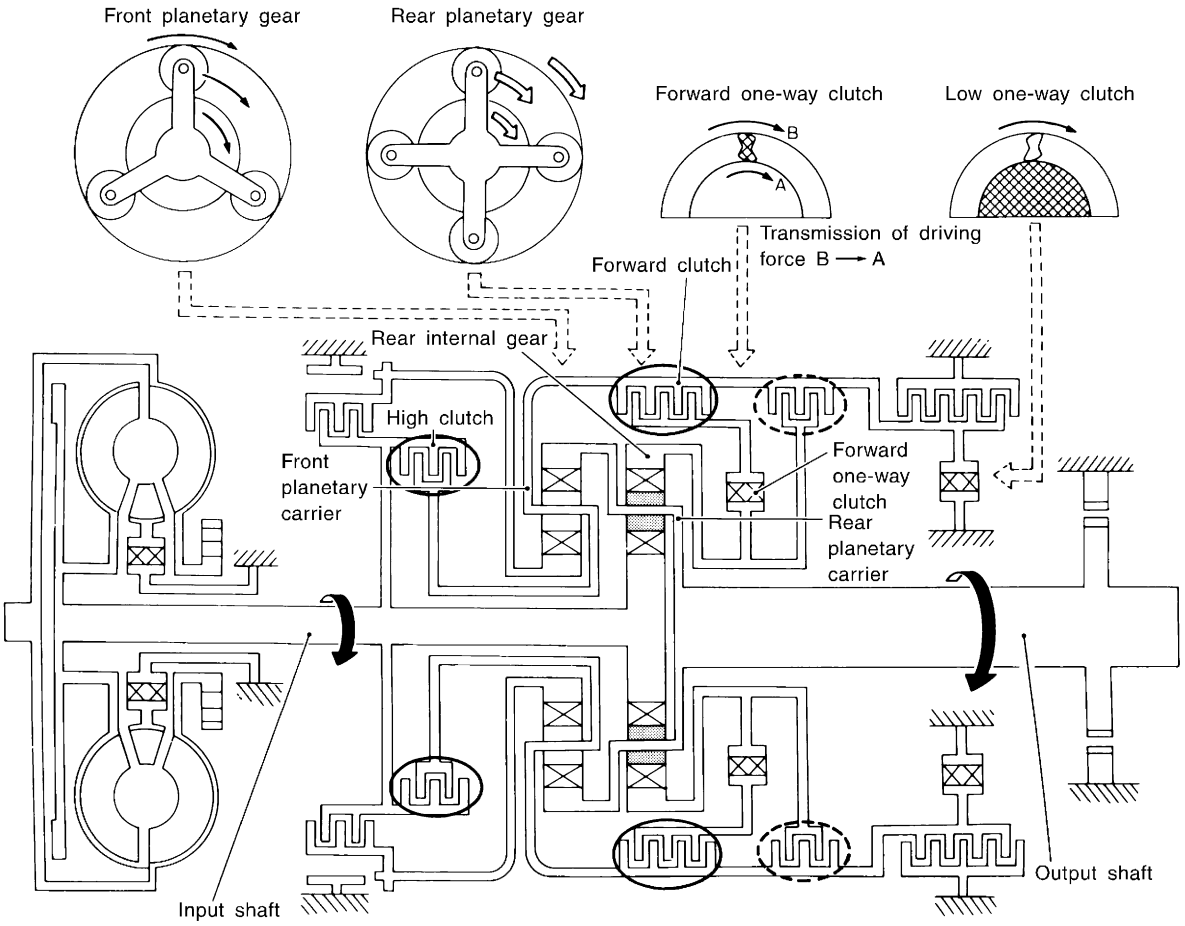

Power flow

Input shaft
⇩ High clutch
⇩ Front planetary carrier
⇩ Forward clutch
⇩ Forward one-way clutch
⇩ Rear internal gear
⇩ Rear planetary carrier ⇨ Output shaft

Input shaft ⇩ Rear sun gear ⇩ Rear planetary carrier ⇨ Output shaft

SAT098J

"D_4" (O/D) Position

=NEAT0409S0406

• **High clutch** • **Brake band** • **Forward clutch** (Does not affect power transmission)	Input power is transmitted to front carrier through high clutch. This front carrier turns around the sun gear, which is fixed by brake band, and makes front internal gear (output) turn faster.
Engine brake	At D_4 position, there is no one-way clutch in the power transmission line and engine brake can be obtained when decelerating.

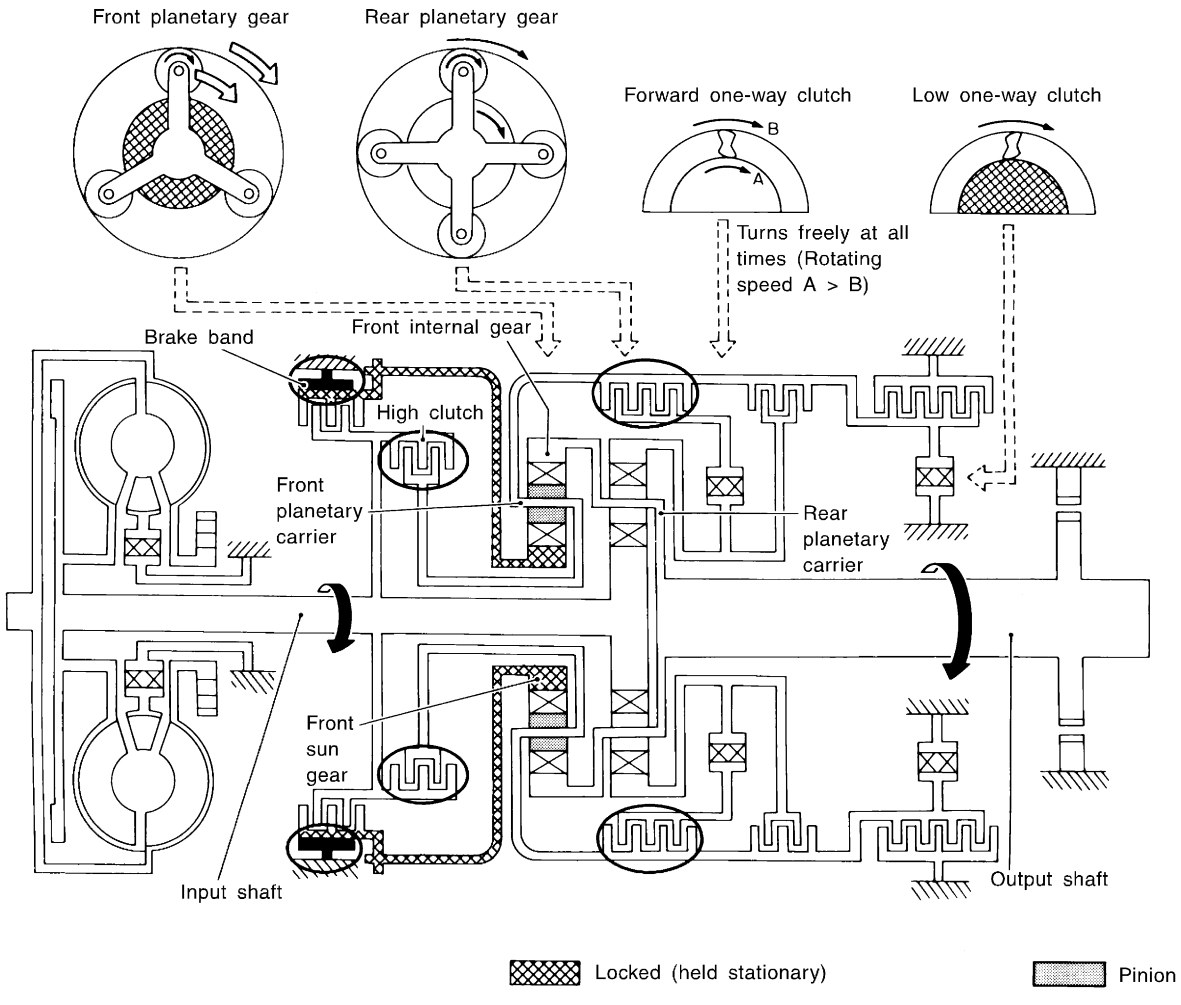

Power flow

Input shaft ⇩ High clutch ⇩ Front planetary carrier ⇩ Front pinion gear ⇨ Front internal gear ⇩ Rear planetary carrier ⇩ Output shaft

SAT099J

"R" Position

=NEAT0409S0407

• **Reverse clutch** • **Low and reverse brake**	Front planetary carrier is stationary because of the operation of low and reverse brake. Input power is transmitted to front sun gear through reverse clutch, which drives front internal gear in the opposite direction.
Engine brake	As there is no one-way clutch in the power transmission line, engine brake can be obtained when decelerating.

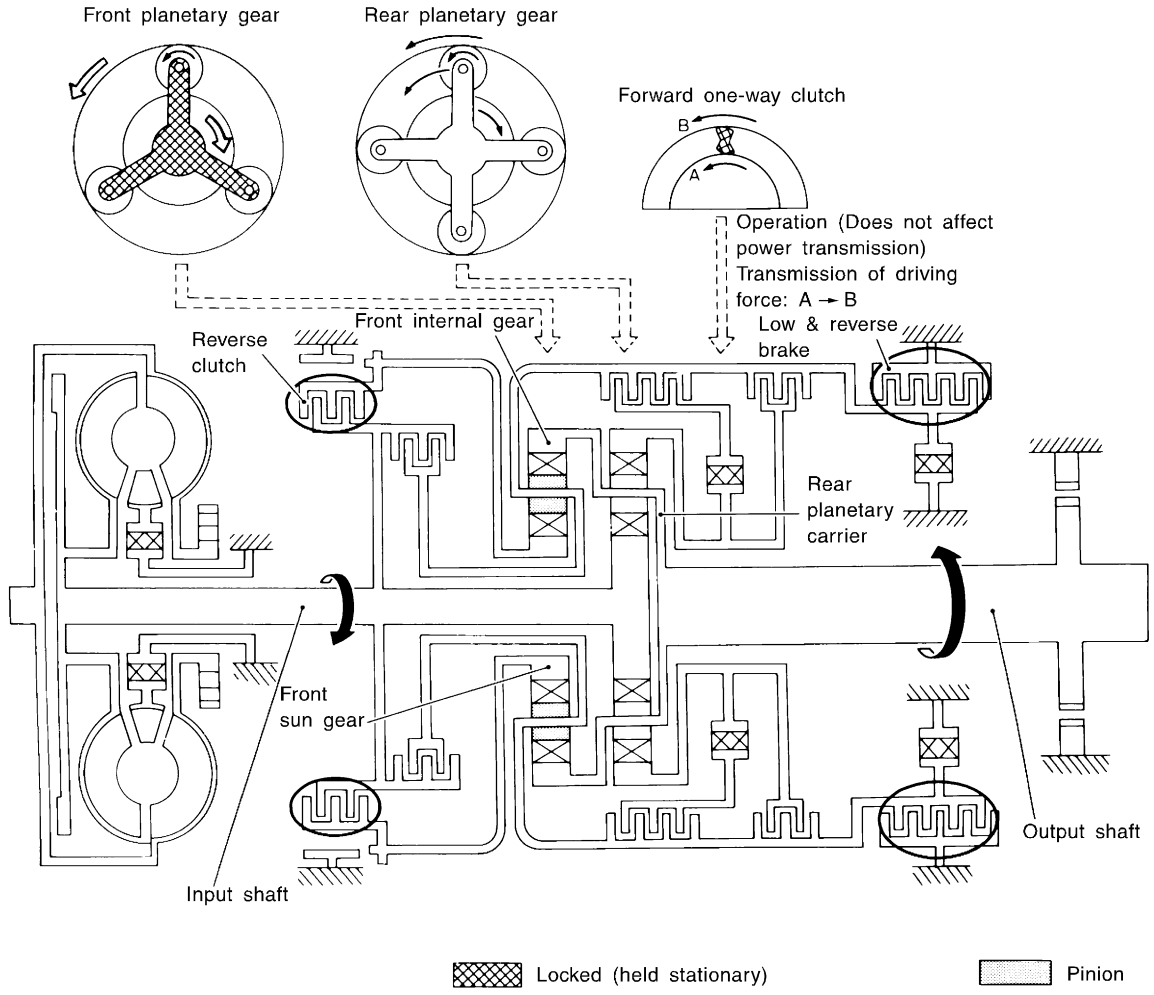

Power flow

Input shaft
⇩
Reverse clutch
⇩
Front pinion gear ⇦ Front sun gear
⇩
Front internal gear ⇨ Output shaft

SAT101J

FUNCTION OF CONTROL VALVES

=NEAT0409S05

<table>
<tr><th>Valve Name</th><th>Function</th></tr>
<tr><td>Pressure regulator valve</td><td>Optimally controls oil under pressure discharged from oil pump in response to driving conditions.</td></tr>
<tr><td>Throttle valve</td><td>Regulates line pressure to throttle pressure corresponding with throttle opening.</td></tr>
<tr><td>Detent valve</td><td>Activates throttle valve via spring in response to changes in throttle opening, thereby regulating throttle pressure.</td></tr>
<tr><td>Pressure modifier valve</td><td>Serves as an auxiliary signal valve of pressure regulator valve to control line pressure in response to driving conditions.</td></tr>
<tr><td>Accumulator control valve</td><td>Regulates accumulator pressure to pressure corresponding with driving conditions.</td></tr>
<tr><td>Manual valve</td><td>Directs line pressure to each oil circuit selected by the selector lever position.
<table>
<tr><th rowspan="2">Position</th><th colspan="4">Circuit</th></tr>
<tr><th>1</th><th>2</th><th>3</th><th>4</th></tr>
<tr><td>P</td><td></td><td></td><td></td><td></td></tr>
<tr><td>R</td><td></td><td></td><td></td><td>○</td></tr>
<tr><td>N</td><td></td><td></td><td></td><td></td></tr>
<tr><td>D</td><td>○</td><td></td><td></td><td></td></tr>
<tr><td>2</td><td>○</td><td>○</td><td></td><td></td></tr>
<tr><td>1</td><td>○</td><td>○</td><td>○</td><td></td></tr>
</table>
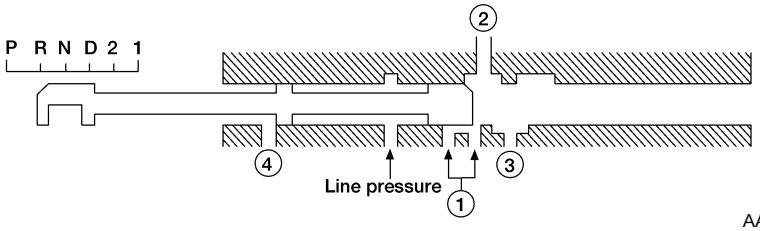

AAT681A

Hydraulic pressure drains when the shift lever is in N and P.</td></tr>
<tr><td>● 1-2 shift valve
● 2-3 shift valve
● 3-4 shift valve</td><td>Provides automatic shift control in response to driving conditions, such as vehicle speed, throttle opening, etc. Shift control is accomplished by activating or deactivating the clutch, brakes, brake bands, etc.</td></tr>
<tr><td>2-3 throttle modifier valve</td><td>Controls line pressure to provide optimum shifting point (2nd → 3rd) during partial-open throttle.
(2-3 throttle modulator pressure)</td></tr>
<tr><td>3-2 downshift valve</td><td>Delivers throttle pressure in a direction that overcomes 2-3 shift valve's governor pressure while shifting from "3rd" to "2nd" in the "D" position.</td></tr>
<tr><td>Kickdown modifier valve</td><td>Controls line pressure to provide optimum shifting points (1st → 2nd) and (2nd → 3rd) during kickdowns.
(Kickdown modifier pressure)</td></tr>
<tr><td>4-2 relay valve</td><td>Operates in conjunction with the 4-2 sequence valve to prevent downshifting from 4th to 3rd, then to 2nd while directly shifting from 4th to 2nd.</td></tr>
<tr><td>4-2 sequence valve</td><td>Prevents 4th band servo "apply" pressure from draining during direct shifting from 4th to 2nd before high clutch "apply" pressure and band servo "release" pressure in the same oil circuit are drained.</td></tr>
</table>

Shift Mechanism (Cont'd)

Valve Name	Function
3-2 timing valve	Engine speed increases in a short period of time at low engine speeds when accelerator is depressed during downshifts from D_3 to D_2. However, it takes longer for the engine to increase speed at high engine speeds. The 3-2 timing valve serves to delay the band servo "release" draining speed (At this point, the transmission is tentatively set in Neutral) during downshifts from D_3 to D_2 at speeds greater than those in the specifications, thereby providing smooth shifting.
1st reducing valve	Controls low & reverse brake "apply" pressure to relief shocks caused by engine brakes while shifting from 2nd to 1st in the 1 position.
Overrun clutch reducing valve	Controls pressure that operates the overrun clutch to relief shocks caused during engine braking. Line pressure acts on the overrun clutch reducing valve in the 1st or 2nd position to increase the pressure-regulating point with resultant high engine braking capabilities.
4th speed cut valve	Determines lock-up speed while operating in 4th gear.
• Torque converter clutch control valve • Torque converter clutch solenoid valve	Activates or deactivates lock-up system.
Torque converter relief valve	Prevents abnormal increase of converter oil pressure.

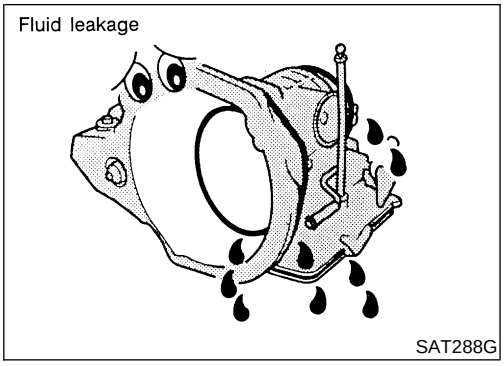

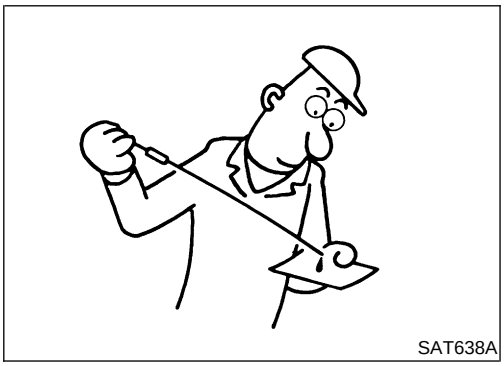

A/T Fluid Check

NEAT0410

FLUID LEAKAGE CHECK

NEAT0410S01

1. Clean area suspected of leaking, — for example, mating surface of converter housing and transmission case.
2. Start engine, apply foot brake, place selector lever in D position and wait a few minutes.
3. Stop engine.
4. Check for fresh leakage.

FLUID CONDITION CHECK

NEAT0410S02

Fluid color	Suspected problem
Dark or black with burned odor	Wear of frictional material
Milky pink	Water contamination – Road water entering through filler tube or breather
Varnished fluid, light to dark brown and tacky	Oxidation – Over or under filling – Overheating

FLUID LEVEL CHECK

NEAT0410S03

Refer to ***MA-38***, “Checking A/T Fluid”.

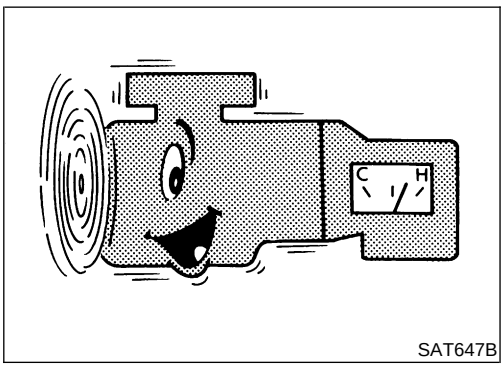

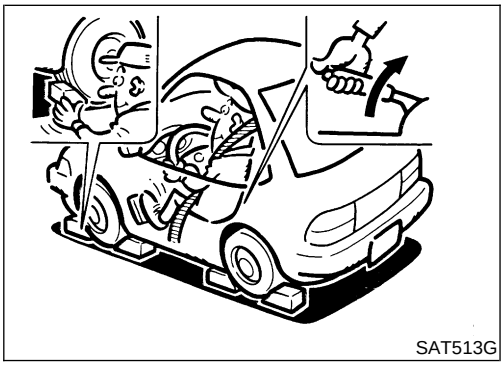

Stall Test

NEAT0411

STALL TEST PROCEDURE

NEAT0411S01

1. Check A/T fluid and engine oil levels. If necessary, add fluid and oil.
2. Drive vehicle for approx. 10 minutes or until fluid and oil reach operating temperature.

   ATF operating temperature:
   50 - 80°C (122 - 176°F)

3. Set parking brake and block wheels.
4. Install a tachometer where it can be seen by driver during test.

- **It is good practice to put a mark on point of specified engine speed on indicator.**

Stall Test (Cont'd)

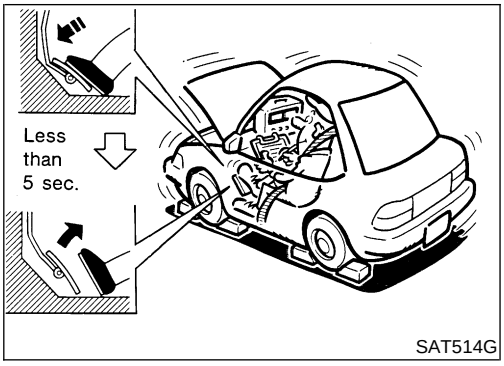

SAT514G

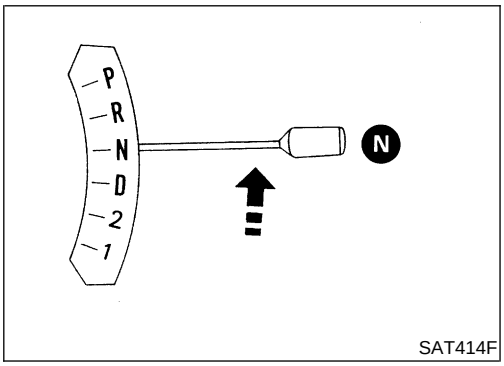

SAT414F

5. Start engine, apply foot brake, and place selector lever in D position.
6. Accelerate to wide open throttle gradually while applying foot brake.

- **During test, never hold throttle wide open for more than 5 seconds.**

7. Quickly note the engine stall revolution and immediately release throttle.

Stall revolution standard:
2,100 - 2,300 rpm

8. Shift selector lever to N position.
9. Cool off ATF.

- **Run engine at idle for at least one minute.**

10. Repeat steps 5 through 9 with selector lever in 2, 1 and R positions.

JUDGEMENT OF STALL TEST

NEAT0411S02

Selector lever position	Judgement		
D	L	O	H
2	L	O	H
1	L	O	O
R	L	H	H

O : Stall revolution is normal.
H : Stall revolution is higher than specified.
L : Stall revolution is lower than specified.

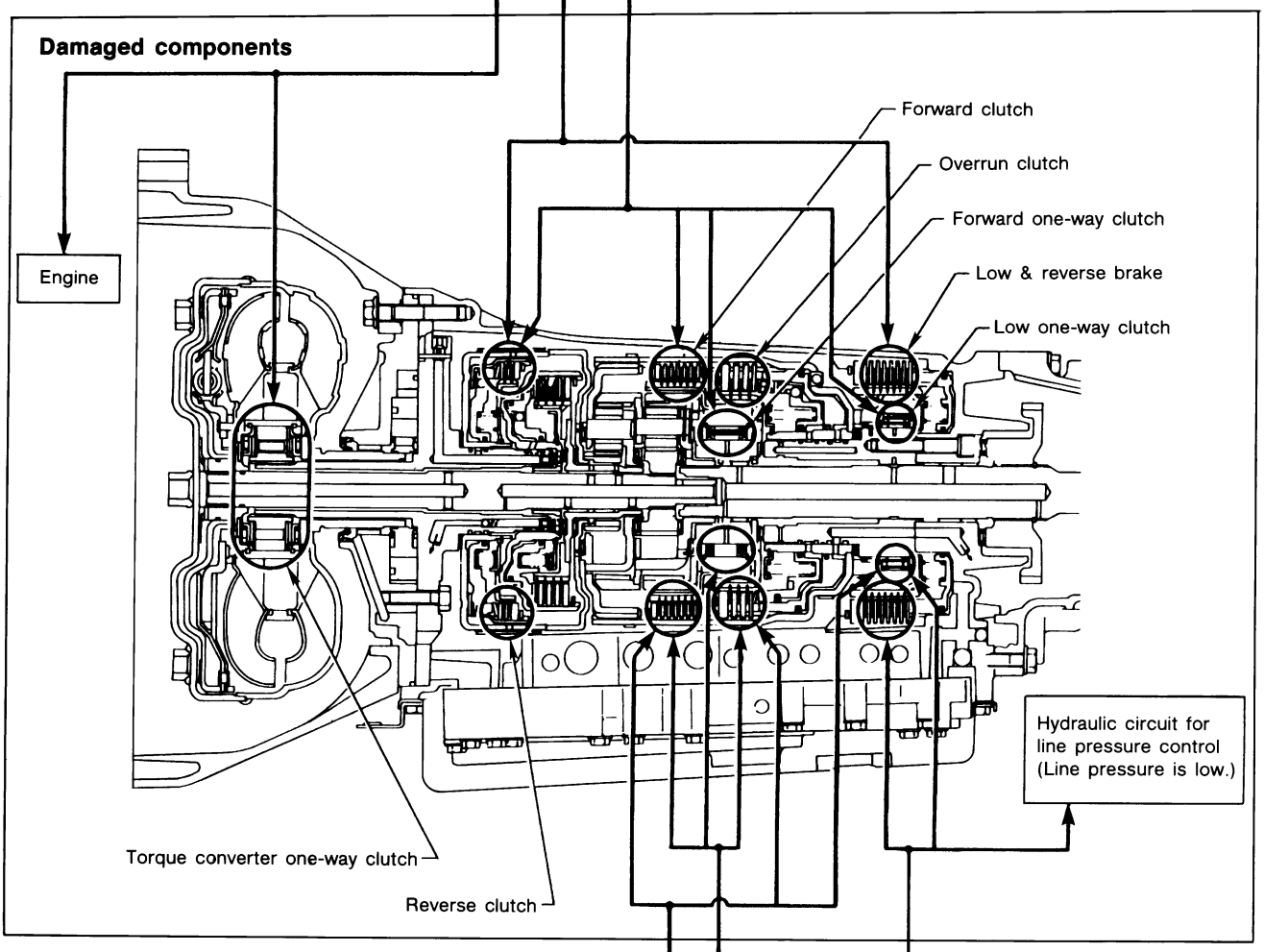

Clutches and brakes except high clutch and brake band are OK. (Condition of high clutch and brake band can not be confirmed by stall test.)

D	H	H	H	O
2	H	H	H	O
1	O	H	H	O
R	O	O	H	O
Selector lever position	Judgement			

SAT161GA

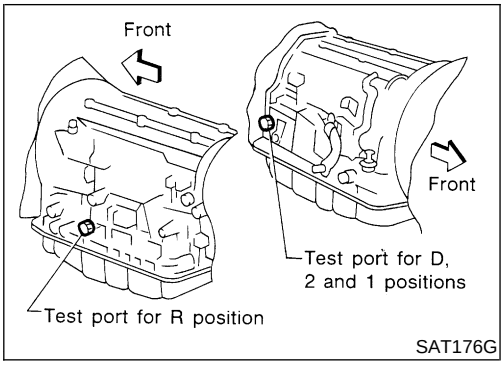

SAT176G

Line Pressure Test

NEAT0412

LINE PRESSURE TEST PORTS

NEAT0412S01

Location of line pressure test ports are shown in illustration.

- **Line pressure plugs are hexagon-headed bolts.**
- **Always replace line pressure plugs as they are self-sealing bolts.**

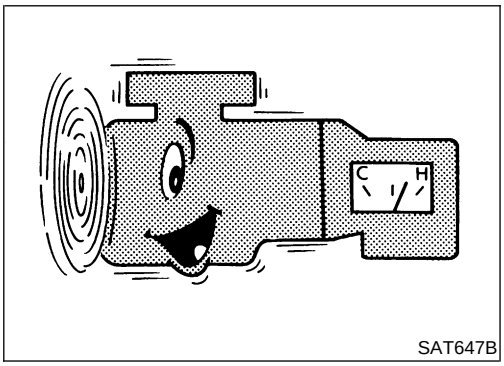

SAT647B

LINE PRESSURE TEST PROCEDURE

NEAT0412S02

1. Check A/T fluid and engine oil levels. If necessary, add fluid and oil.
2. Drive vehicle for approx. 10 minutes or until fluid and oil reach operating temperature.

   ATF operating temperature:
   50 - 80°C (122 - 176°F)

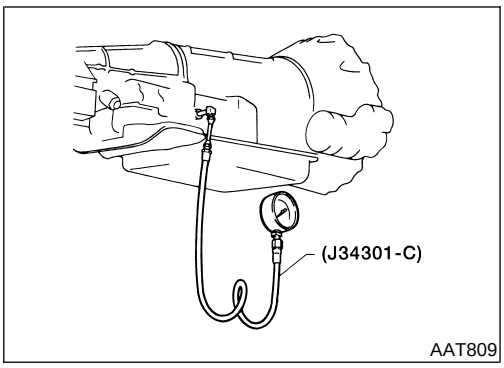

AAT809

3. Install pressure gauge to line pressure port.
   — D, 2 and 1 positions —

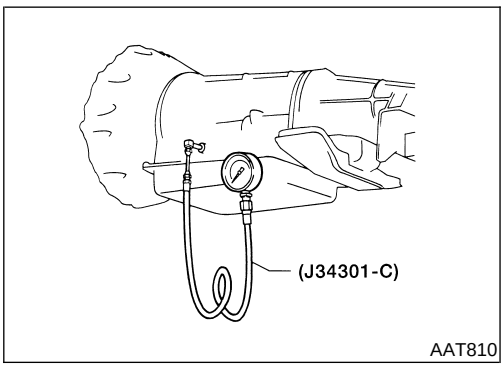

AAT810

— R position —

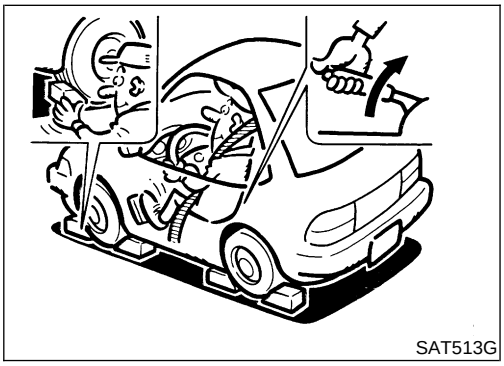
SAT513G

4. Set parking brake and block wheels.

- **Continue to depress brake pedal fully while performing line pressure test at stall speed.**

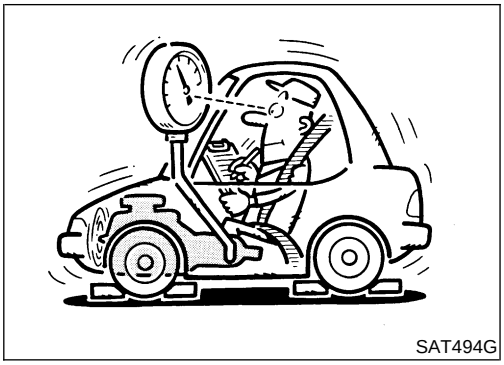
SAT494G

5. Start engine and measure line pressure at idle and stall speed.
- **When measuring line pressure at stall speed, follow the stall test procedure.**

Line pressure:

Refer to "Line Pressure", AT-141.

JUDGEMENT OF LINE PRESSURE TEST

NEAT0412S03

Judgement		Suspected parts
At idle	Line pressure is low in all positions.	• Oil pump wear • Control piston damage • Pressure regulator valve or plug sticking • Spring for pressure regulator valve damaged • Fluid pressure leakage between oil strainer and pressure regulator valve • Clogged strainer
	Line pressure is low in particular position.	• Fluid pressure leakage between manual valve and particular clutch. • For example, line pressure is: — Low in R and 1 positions, but — Normal in D and 2 positions. Therefore, fluid leakage exists at or around low & reverse brake circuit. Refer to "CLUTCH AND BAND CHART", AT-16.
	Line pressure is high.	• Maladjustment of throttle position sensor • Fluid temperature sensor damaged • Line pressure solenoid valve sticking • Short circuit of line pressure solenoid valve circuit • Pressure modifier valve sticking • Pressure regulator valve or plug sticking
At stall speed	Line pressure is low.	• Maladjustment of throttle position sensor • Control piston damaged • Line pressure solenoid valve sticking • Short circuit of line pressure solenoid valve circuit • Pressure regulator valve or plug sticking • Pressure modifier valve sticking • Pilot valve sticking

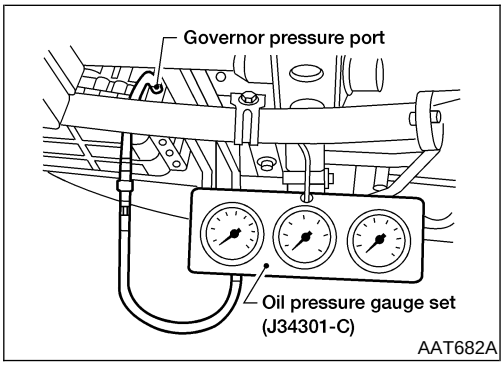

AAT682A

Governor Pressure Testing

NEAT0412S0301

1. Check A/T and engine fluid levels. If necessary, add fluid.
2. Drive vehicle for approx. 10 minutes or until engine oil and ATF reach operating temperature.

ATF operating temperature:

50 - 80°C (122 - 176°F)

3. Install pressure gauge to governor pressure port.

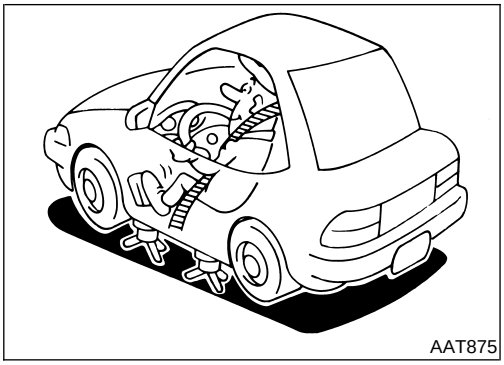
AAT875

4. Jack up front and rear wheels.
5. Set selector lever in D position and gradually depress accelerator pedal.

- **Be careful of rotating wheels.**

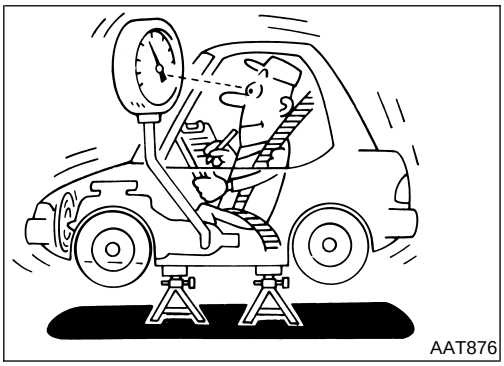
AAT876

- **Governor pressure is not generated when vehicle is stopped.**
- **Governor pressure rises gradually in response to vehicle speed.**

Governor pressure:

Refer to "Governor Pressure", AT-142.

If not, check governor valve assembly. Refer to "Governor Valve Assembly", AT-100.

Road Test

NEAT0413

Perform road tests using symptom chart. Refer to "Symptom Chart", AT-34.

P POSITION

NEAT0413S01

1. Place selector lever in P position and start the engine. Stop the engine and repeat the procedure in all positions, including N position.
2. Stop vehicle on a slight upgrade and place selector lever in P position. Release parking brake to make sure vehicle remains locked.

R POSITION

NEAT0413S02

1. Manually move selector lever from P or R, and note shift quality.
2. Drive vehicle in reverse long enough to detect slippage or other abnormalities.

N POSITION

NEAT0413S03

1. Manually move selector lever from R and D to N and note shift quality.
2. Release parking brake with selector lever in N position. Lightly depress accelerator pedal to make sure vehicle does not move. (When vehicle is new or soon after clutches have been replaced, vehicle may move slightly. This is not a problem.)

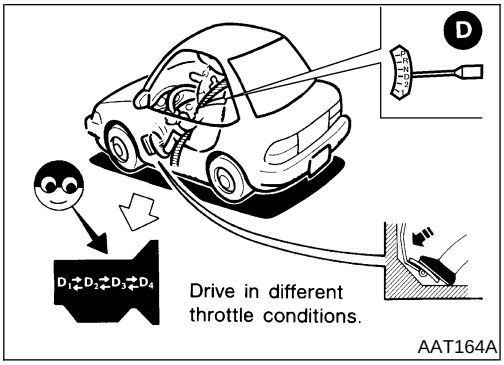

AAT164A

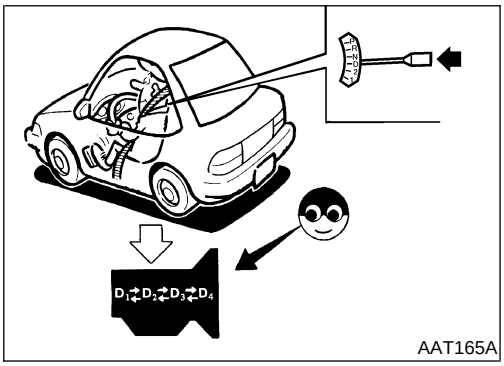

AAT165A

D POSITION

NEAT0413S04

1. Manually shift selector lever from N to D position, and note shift quality.
2. Using the shift schedule as a reference, drive vehicle in D position. Record, on Symptom Chart, respective vehicle speeds at which up-shifting and down-shifting occur. These speeds are to be read at three different throttle positions light, half and full. Also determine the timing at which shocks are encountered during shifting and which clutches are engaged.
3. Determine whether lock-up properly occurs while driving vehicle in proper gear position and at proper speeds.
4. Check to determine if shifting to overdrive gear cannot be made while overdrive control switch is OFF.
5. Drive vehicle at 65 to 80 km/h (40 to 50 MPH) with half to light throttle position (D_3 position). Fully depress accelerator pedal to make sure transmission downshifts from 3rd to 2nd gear.
6. Drive vehicle at 35 to 45 km/h (22 to 28 MPH) with half to light throttle position (D_2 position). Fully depress accelerator pedal to make sure transmission downshifts from 2nd to 1st gear.

2 POSITION

NEAT0413S05

1. Shift to 2 position and make sure vehicle starts in 1st gear.
2. Increase vehicle speed to make sure transmission upshifts from 1st to 2nd gear.
3. Further increase vehicle speed. Make sure transmission does not upshift to 3rd gear.
4. Drive vehicle at 35 to 45 km/h (22 to 28 MPH) with throttle at half to light position (2_2 position). Fully depress accelerator pedal to make sure transmission downshifts from 2nd to 1st gear.
5. Drive vehicle at idle in 2 position to make sure that transmission downshifts to 1st gear.
6. Move selector lever to D position and drive vehicle at 40 to 50 km/h (25 to 31 MPH). Then, move selector lever to 2 position to make sure transmission downshifts to 2nd gear.

1 POSITION

NEAT0413S06

1. Place selector lever in 1 position and accelerate. Make sure transmission does not shift from 1st to 2nd gear although vehicle speed increases.
2. While driving vehicle in 1 position, release accelerator pedal to make sure that engine compression acts as a brake.
3. Place selector lever in D or 2 position and drive vehicle at 20 to 30 km/h (12 to 19 MPH). Then move selector lever to 1 position to make sure transmission downshifts to 1st gear.

Symptom Chart

NEAT0414

Numbers are arranged in order of the inspection.
Perform inspections starting with number one and work up.
Numbers in the OFF VEHICLE columns indicate that the transmission must be removed from the vehicle to perform the inspection.
*: Valve suspected to be malfunctioning

Symptom		Condition	Diagnostic Item
Sharp shocks in shifting from N to D position		ON VEHICLE	1. Fluid level and fluid quality 2. Control linkage 3. Engine idling speed 4. Line pressure 5. Throttle wire 6. Accumulator N-D 7. Accumulator 3-4 (N-R) 8. Control valve * Pressure regulator valve * Pressure modifier valve * Accumulator control valve * Throttle valve & detent valve * Kickdown modifier valve
		OFF VEHICLE	9. Reverse clutch
Shift shocks	When shifting from 1st to 2nd or 2nd to 3rd.	ON VEHICLE	1. Fluid level and fluid quality 2. Control linkage 3. Line pressure 4. Throttle wire 5. Accumulator 1-2 6. Accumulator 2-3 7. Control valve * Pressure regulator valve * Pressure modifier valve * Accumulator control valve
	When shifting from 3rd to 4th.	ON VEHICLE	1. Fluid level and fluid quality 2. Control linkage 3. Line pressure 4. Throttle wire 5. Accumulator 3-4 (N-R) 6. Control valve * 4th speed cut valve * Pressure regulator valve * Pressure modifier valve
		OFF VEHICLE	7. Brake band 8. Overrun clutch
	When shifting from D to 2 and 1 position. When overdrive control switch is set from ON to OFF	ON VEHICLE	1. Fluid level and fluid quality 2. Control linkage 3. Line pressure 4. Throttle wire 5. Control valve * Pressure regulator valve * Pressure modifier valve * Throttle valve & detent valve * Overrun clutch reducing valve
		OFF VEHICLE	6. Brake band 7. High clutch

Symptom		Condition	Diagnostic Item
Shift shocks	When shifting from 2nd to 1st in 1 position	ON VEHICLE	1. Fluid level and fluid quality 2. Control linkage 3. Line pressure 4. Throttle wire 5. Control valve * Pressure regulator valve * Pressure modifier valve * 1st reducing valve
		OFF VEHICLE	6. Low one-way clutch
Shift slippage when upshifting	When shifting from 1st to 2nd	ON VEHICLE	1. Fluid level and fluid quality 2. Control linkage 3. Line pressure 4. Throttle wire 5. Accumulator 1-2 6. Control valve * Pressure regulator valve * Pressure modifier valve * Throttle valve & detent valve * Kickdown modifier valve
		OFF VEHICLE	7. Brake band
	When shifting from 2nd to 3rd	ON VEHICLE	1. Fluid level and fluid quality 2. Control linkage 3. Line pressure 4. Throttle wire 5. Accumulator 2-3 6. Control valve * Pressure regulator valve * Pressure modifier valve * Throttle valve & detent valve * Kickdown modifier valve
		OFF VEHICLE	7. Brake band 8. High clutch
	When shifting from 3rd to 4th	ON VEHICLE	1. Fluid level and fluid quality 2. Control linkage 3. Line pressure 4. Throttle wire 5. Accumulator 3-4 (N-R) 6. Control valve * Pressure regulator valve * Pressure modifier valve * Throttle valve & detent valve * Kickdown modifier valve
		OFF VEHICLE	7. Brake band 8. High clutch

Symptom Chart (Cont'd)

Symptom		Condition	Diagnostic Item
Shift slippage with accelerator pedal depressed	When shifting from 4th to 2nd.	ON VEHICLE	1. Fluid level and fluid quality 2. Control linkage 3. Line pressure 4. Governor pressure 5. Throttle wire 6. Accumulator N-D 7. Control valve * Pressure regulator valve * Pressure modifier valve * Throttle valve & detent valve * Kickdown modifier valve * 4-2 sequence valve 8. Accumulator 3-4 (N-R) 9. Accumulator 1-2 10. Accumulator 2-3 11. Governor valve * Primary governor valve * Secondary governor valve **1** * Secondary governor valve **2**
		OFF VEHICLE	12. Torque converter 13. Fluid pump 14. Reverse clutch 15. High clutch 16. Forward clutch 17. Forward one-way clutch 18. Overrun clutch 19. Low one-way clutch 20. Low & reverse clutch 21. Brake band
	When shifting from 4th to 3rd.	ON VEHICLE	1. Fluid level and fluid quality 2. Control linkage 3. Line pressure 4. Throttle wire 5. Accumulator 1-2 6. Control valve * Pressure regulator valve * Pressure modifier valve * Throttle valve & detent valve * Kickdown modifier valve 7. Accumulator 2-3 8. Accumulator 3-4 (N-R)
		OFF VEHICLE	9. Fluid pump 10. High clutch 11. Brake band 12. Overrun clutch 13. Low & reverse clutch

Symptom		Condition	Diagnostic Item
Shift slippage with accelerator pedal depressed	When shifting from 4th to 1st and shifting from 3rd to 1st.	ON VEHICLE	1. Fluid level and fluid quality 2. Control linkage 3. Line pressure 4. Governor pressure 5. Throttle wire 6. Accumulator 2-3 7. Control valve * Pressure regulator valve * Pressure modifier valve * Throttle valve & detent valve * Kickdown modifier valve * 3-2 timing valve 8. Governor valve * Primary governor valve * Secondary governor valve **1** * Secondary governor valve **2**
		OFF VEHICLE	9. High clutch 10. Brake band 11. Forward one-way clutch
Poor power/ acceleration	When vehicle starts.	ON VEHICLE	1. Fluid level and fluid quality 2. Control linkage 3. Line pressure 4. Throttle wire 5. Accumulator 2-3 6. Control valve * Pressure regulator valve * Pressure modifier valve * Throttle valve & detent valve * Kickdown modifier valve
		OFF VEHICLE	7. High clutch 8. Forward clutch
	When upshifting.	ON VEHICLE	1. Fluid level and fluid quality 2. Control linkage 3. Line pressure 4. Throttle wire 5. Governor pressure 6. Accumulator 2-3 7. Control valve * Pressure regulator valve * Pressure modifier valve * Throttle valve & detent valve * Kickdown modifier valve * 3-2 timing valve 8. Governor valve * Primary governor valve * Secondary governor valve **1** * Secondary governor valve **2**
		OFF VEHICLE	9. Forward clutch
No engine braking	When shifting from D to 2 and 1 position.	ON VEHICLE	1. Fluid level and fluid quality 2. Control linkage 3. Line pressure 4. Throttle wire 5. Accumulator 2-3 6. Control valve * Pressure regulator valve * Pressure modifier valve * Throttle valve & detent valve * Overrun clutch reducing valve
		OFF VEHICLE	7. Overrun clutch

Symptom Chart (Cont'd)

Symptom		Condition	Diagnostic Item
No engine braking	When overdrive control switch is set from ON to OFF.	ON VEHICLE	1. Fluid level and fluid quality 2. Control linkage 3. Line pressure 4. Throttle wire 5. Accumulator 2-3 6. Overdrive control switch, overdrive hold control module (if equipped), overdrive cancel relay (if equipped), and wiring 7. Overdrive cancel solenoid valve 8. Control valve * Pressure regulator valve * Pressure modifier valve * Throttle valve & detent valve * Overrun clutch reducing valve
		OFF VEHICLE	9. Overrun clutch
	When shifting from 2nd to 1st in 1 position.	ON VEHICLE	1. Fluid level and fluid quality 2. Control linkage 3. Line pressure 4. Throttle wire 6. Control valve * Pressure regulator valve * Pressure modifier valve * Throttle valve & detent valve * 1st reducing valve
		OFF VEHICLE	7. Overrun clutch 8. Low & reverse clutch

Symptom		Condition	Diagnostic Item
Shift quality	Too low a gear change point from 2nd to 3rd and from 3rd to 2nd.	ON VEHICLE	1. Fluid level and fluid quality 2. Line pressure 3. Governor pressure 4. Throttle wire 5. Control valve * 2-3 throttle modifier valve 6. Governor valve * Primary governor valve * Secondary governor valve **1** * Secondary governor valve **2**
	Too high a gear change point from 2nd to 3rd and from 3rd to 2nd.	ON VEHICLE	1. Fluid level and fluid quality 2. Line pressure 3. Governor pressure 4. Throttle wire 5. Control valve * 2-3 shift valve * 2-3 throttle modifier valve 6. Governor valve * Primary governor valve * Secondary governor valve **1** * Secondary governor valve **2**
	Too low a gear change point from 2nd to 1st in 1 position.	ON VEHICLE	1. Fluid level and fluid quality 2. Line pressure 3. Governor pressure 4. Throttle wire 5. Control valve * Pressure regulator valve * Pressure modifier valve * Throttle valve & detent valve * 1st reducing valve 6. Governor valve * Primary governor valve * Secondary governor valve **1** * Secondary governor valve **2**

Symptom Chart (Cont'd)

Symptom		Condition	Diagnostic Item
Shift quality	Too high a gear change point from 2nd to 1st in 1 position.	ON VEHICLE	1. Fluid level and fluid quality 2. Line pressure 3. Governor pressure 4. Throttle wire 5. Control valve * 1st reducing valve 6. Governor valve * Primary governor valve * Secondary governor valve **1** * Secondary governor valve **2**
	Failure to change gear from 4th to 2nd with accelerator pedal depressed.	ON VEHICLE	1. Fluid level and fluid quality 2. Line pressure 3. Governor pressure 4. Throttle wire 5. Control valve * 4-2 relay valve * 4-2 sequence valve 6. Governor valve * Primary governor valve * Secondary governor valve **1** * Secondary governor valve **2**
	Failure to change gear from 3rd to 2nd with accelerator pedal depressed.	ON VEHICLE	1. Fluid level and fluid quality 2. Line pressure 3. Governor pressure 4. Throttle wire 5. Control valve * 3-2 downshift valve 6. Governor valve * Primary governor valve * Secondary governor valve **1** * Secondary governor valve **2**
	Failure to change gear from 1st to 2nd in D and 2 position.	ON VEHICLE	1. Fluid level and fluid quality 2. Line pressure 3. Governor pressure 4. Throttle wire 5. Control valve * 1-2 shift valve 6. Governor valve * Primary governor valve * Secondary governor valve **1** * Secondary governor valve **2**
	Vehicle does not start from 1st in D and 2 position.	ON VEHICLE	1. Fluid level and fluid quality 2. Line pressure 3. Governor pressure 4. Throttle wire 5. Control valve * 1-2 shift valve 6. Governor valve * Primary governor valve * Secondary governor valve **1** * Secondary governor valve **2**

Symptom		Condition	Diagnostic Item
Shift quality	Failure to change gear to 3rd to 4th in D position.	ON VEHICLE	1. Fluid level and fluid quality 2. Line pressure 3. Governor pressure 4. Throttle wire 5. Overdrive control switch, overdrive hold control module (if equipped), overdrive cancel relay (if equipped), and wiring 6. Overdrive cancel solenoid valve 7. Control valve * 2-3 shift valve * 3-4 shift valve 8. Governor valve * Primary governor valve * Secondary governor valve **1** * Secondary governor valve **2**
	Changes gear to 1st directly when selector lever is set from D to 1 position.	ON VEHICLE	1. Fluid level and fluid quality 2. Line pressure 3. Governor pressure 4. Throttle wire 5. Control valve * 1st reducing valve 6. Governor valve * Primary governor valve * Secondary governor valve **1** * Secondary governor valve **2**
	Changes gear to 2nd in 1 position.	ON VEHICLE	1. Fluid level and fluid quality 2. Line pressure 3. Governor pressure 4. Throttle wire 5. Control valve * Pressure regulator valve * Pressure modifier valve * Throttle valve & detent valve * 1st reducing valve 6. Governor valve * Primary governor valve * Secondary governor valve **1** * Secondary governor valve **2**
	Too high or low a change point when lock-up operates.	ON VEHICLE	1. Fluid level and fluid quality 2. Line pressure 3. Governor pressure 4. Throttle wire 5. Control valve * Pressure regulator valve * Pressure modifier valve * Throttle valve & detent valve * Kickdown modifier valve 6. Governor valve * Primary governor valve * Secondary governor valve **1** * Secondary governor valve **2**

Symptom Chart (Cont'd)

Symptom		Condition	Diagnostic Item
Lock-up quality	Lock-up point is extremely high or low.	ON VEHICLE	1. Fluid level and fluid quality 2. Line pressure 3. Governor pressure 4. Throttle wire 5. Control valve * 4th speed cut valve * Pressure regulator valve * Pressure modifier valve * Torque converter clutch control valve * Throttle valve & detent valve 6. Governor valve * Primary governor valve * Secondary governor valve **1** * Secondary governor valve **2**
	Torque converter does not lock-up.	ON VEHICLE	1. Fluid level and fluid quality 2. Line pressure 3. Governor pressure 4. Throttle wire 5. Control valve * 4th speed cut valve * Torque converter clutch control valve 6. Governor valve * Primary governor valve * Secondary governor valve **1** * Secondary governor valve **2**
		OFF VEHICLE	7. Torque converter
	Lock-up is not released when accelerator pedal is released.	ON VEHICLE	1. Fluid level and fluid quality 2. Torque converter clutch solenoid valve
Engine does not start in P and N positions, or engine starts in positions other than P and N positions.		ON VEHICLE	1. Ignition switch and starter motor 2. Control linkage 3. PNP switch and wiring
Vehicle moves with selector lever in P position.		ON VEHICLE	1. Control linkage
		OFF VEHICLE	2. Parking components

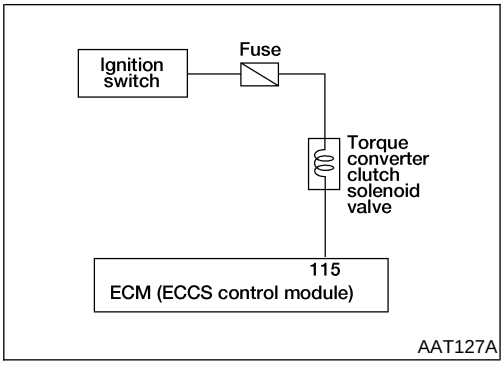

Diagnostic Procedure

NEAT0415

When the malfunction indicator lamp indicates DTC P1775, refer to ***EC-564***, “TROUBLE DIAGNOSIS FOR DTC P1775”.

1	CHECK GROUND CIRCUIT

1. Turn ignition switch OFF.
2. Disconnect ECM harness connector and torque converter clutch solenoid valve harness connector.
3. Check resistance between solenoid valve unit harness connector E36 terminal 3 and ECM harness connector F29 terminal 115.

Resistance:
Approximately 0Ω

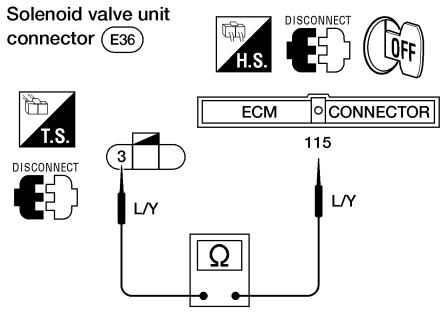

OK or NG

OK	▶	GO TO 2.
NG	▶	Repair or replace harness between ECM and torque converter clutch solenoid valve.

2	CHECK POWER SOURCE CIRCUIT

1. Turn ignition switch ON.
2. Check voltage between solenoid valve unit harness connector E36 terminal 1 and ground.

Voltage:
Battery voltage

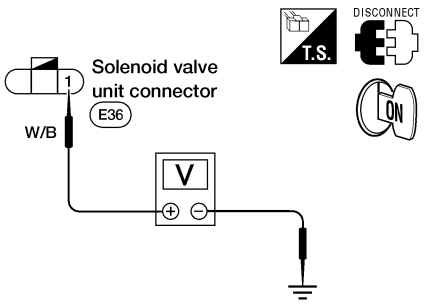

OK or NG

OK	▶	GO TO 4.
NG	▶	GO TO 3.

Diagnostic Procedure (Cont'd)

3	DETECT MALFUNCTIONING ITEM

Check the following items:
- Ignition switch and fuse
  Refer to ***EL-14***, "POWER SUPPLY ROUTING".
- Harness continuity between fuse and torque converter clutch solenoid valve.

OK or NG

OK	▶	GO TO 4.
NG	▶	Repair or replace damaged parts.

4	CHECK TORQUE CONVERTER CLUTCH SOLENOID VALVE (RESISTANCE)

Check resistance between solenoid valve unit connector E36 terminals 1 and 3.

Resistance:
Approximately 25Ω

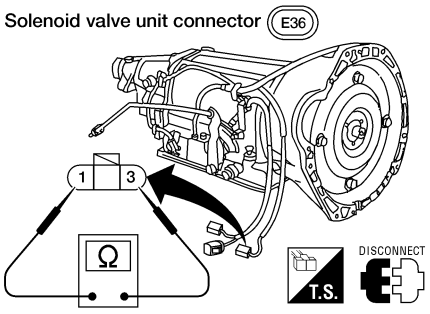

AAT130A

OK or NG

OK	▶	GO TO 5.
NG	▶	Replace torque converter clutch solenoid valve.

5	CHECK TORQUE CONVERTER CLUTCH SOLENOID VALVE (OPERATION)

1. Remove torque converter clutch solenoid valve. Refer to "REMOVAL", AT-63.
2. Check torque converter clutch solenoid valve operation.

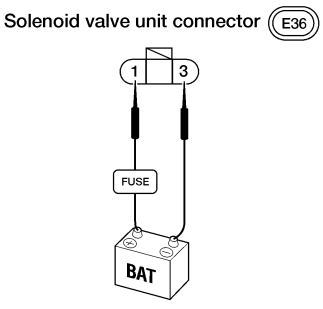

AAT131A

OK or NG

OK	▶	GO TO 6.
NG	▶	Replace torque converter clutch solenoid valve.

6	CHECK CONTROL VALVE

1. Disassemble control valve assembly. Refer to "Control Valve Assembly", AT-90.
2. Check torque converter clutch control valve.

- Valve, and sleeve slide along valve bore under their own weight.
- Valve, and sleeve are free from burrs, dents and scratches.
- Control valve springs are free from damage, deformation and fatigue.
- Hydraulic line is free from obstacles.

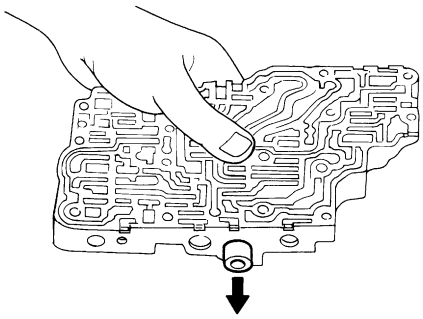

SAT740H

OK or NG

OK	▶	GO TO 7.
NG	▶	Repair control valve.

7	CHECK MALFUNCTION

Is malfunction eliminated?

Yes or No

Yes	▶	INSPECTION END
No	▶	Check control valve again. Repair or replace control valve assembly.

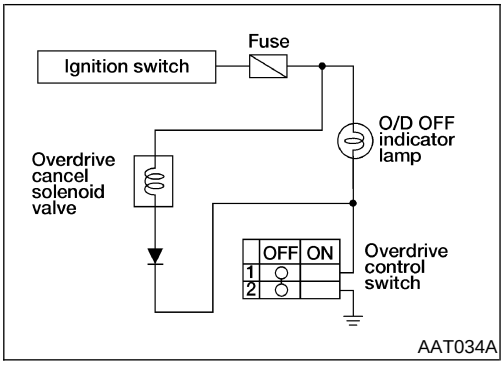

Component Inspection

NEAT0416

OVERDRIVE CONTROL SWITCH AND OVERDRIVE CANCEL SOLENOID VALVE (MODELS WITHOUT OVERDRIVE HOLD CONTROL MODULE)

NEAT0416S01

1	CHECK O/D OFF INDICATOR LAMP CIRCUIT

1. Turn ignition switch ON.
   (Do not start engine).
2. Set overdrive control switch OFF.
   O/D OFF indicator lamp should come on.

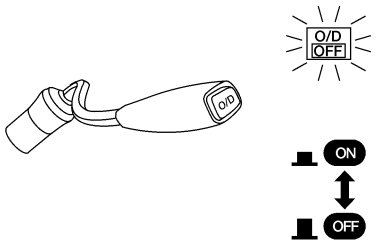

AAT146A

OK or NG

OK	▶	GO TO 4.
NG	▶	GO TO 2.

2	DETECT MALFUNCTIONING ITEM

Check the following items:

- O/D OFF indicator lamp
  Refer to ***EL-84***, “WARNING LAMPS”.
- Ignition switch and fuse
  Refer to ***EL-9***, “POWER SUPPLY ROUTING”.

OK or NG

OK	▶	GO TO 3.
NG	▶	Repair or replace damaged parts.

3	CHECK OVERDRIVE CONTROL SWITCH

Check continuity between overdrive control switch terminals 1 and 2.

Overdrive control switch position	Continuity
ON	No
OFF	Yes

MTBL0196

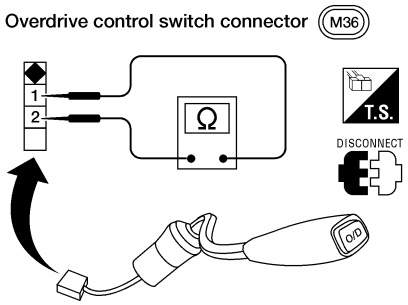

AAT147A

OK or NG

OK	▶	GO TO 4.
NG	▶	Replace overdrive control switch.

4	CHECK OVERDRIVE CANCEL SOLENOID VALVE CIRCUIT

Check resistance between overdrive cancel solenoid valve terminals 1 and 2.

Resistance:

Approximately 25Ω

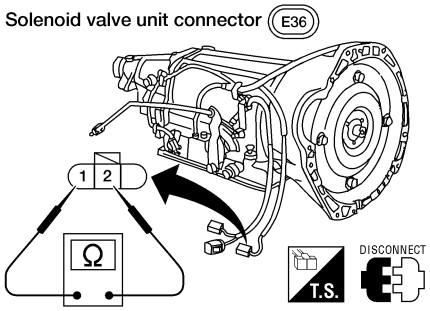

AAT132A

OK or NG

OK	▶	GO TO 5.
NG	▶	Replace overdrive cancel solenoid valve.

5	DETECT MALFUNCTIONING ITEM

Check the following items:

1. Harness continuity between fuse and overdrive cancel solenoid valve
2. Harness continuity between overdrive cancel solenoid valve and overdrive control switch
3. Condition of diode

OK or NG

OK	▶	INSPECTION END
NG	▶	Repair or replace damaged parts.

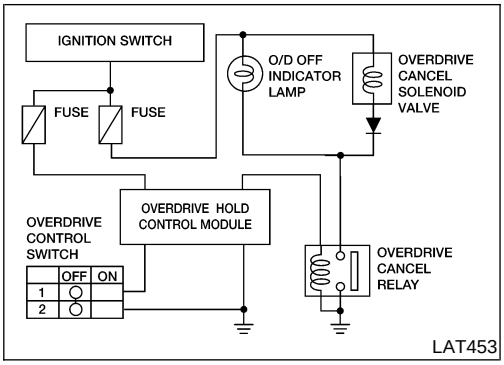

OVERDRIVE CONTROL SWITCH AND OVERDRIVE CANCEL SOLENOID VALVE (MODELS WITH OVERDRIVE HOLD CONTROL MODULE)

NEAT0416S04

1	CHECK O/D OFF INDICATOR LAMP CIRCUIT

1. Turn ignition switch ON.
   (Do not start engine).
2. Press and release overdrive control switch.
   O/D OFF indicator lamp should come on.

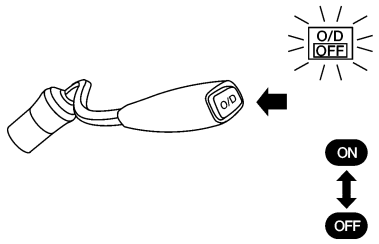

LAT454

OK or NG

OK	▶	GO TO 5.
NG	▶	GO TO 2.

2	CHECK OVERDRIVE CANCEL RELAY

Refer to "Overdrive Cancel Relay", AT-55

OK or NG

OK	▶	GO TO 3.
NG	▶	Replace overdrive cancel relay.

3	DETECT MALFUNCTIONING ITEM

Check the following items:
- O/D OFF indicator lamp
  Refer to ***EL-84***, "WARNING LAMPS".
- Ignition switch and fuse for overdrive hold control module and overdrive cancel solenoid
  Refer to ***EL-9***, "POWER SUPPLY ROUTING".

OK or NG

OK	▶	GO TO 4.
NG	▶	Repair or replace damaged parts.

4	CHECK OVERDRIVE CONTROL SWITCH

Check continuity between overdrive control switch terminals 1 and 2.

Overdrive control switch position	Continuity
ON	No
OFF	Yes

MTBL0196

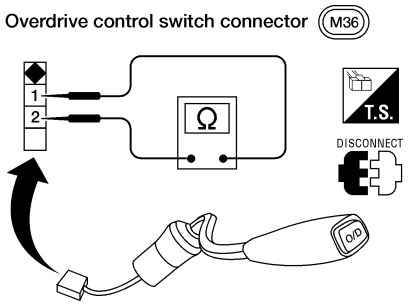

AAT147A

OK or NG

OK	▶	GO TO 5.
NG	▶	Replace overdrive control switch.

5	CHECK OVERDRIVE CANCEL SOLENOID VALVE CIRCUIT

Check resistance between overdrive cancel solenoid valve terminals 1 and 2.

Resistance:
Approximately 25Ω

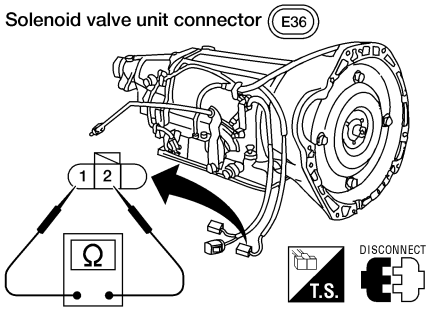

AAT132A

OK or NG

OK	▶	GO TO 6.
NG	▶	Replace overdrive cancel solenoid valve.

Component Inspection (Cont'd)

6	DETECT MALFUNCTIONING ITEM	
Check the following items: 1. Harness continuity between fuse and overdrive cancel solenoid valve 2. Harness continuity between fuse and overdrive hold control module 3. Harness continuity between overdrive cancel solenoid valve and overdrive cancel relay 4. Condition of diode 5. Harness continuity between overdrive hold control module and overdrive cancel relay 6. Harness continuity between overdrive hold control module and overdrive control switch 7. Harness continuity between overdrive hold control module and ground		
OK or NG		
OK	▶	Replace overdrive control module.
NG	▶	Repair or replace damaged parts.

PARK/NEUTRAL POSITION (PNP) SWITCH

=NEAT0416S02

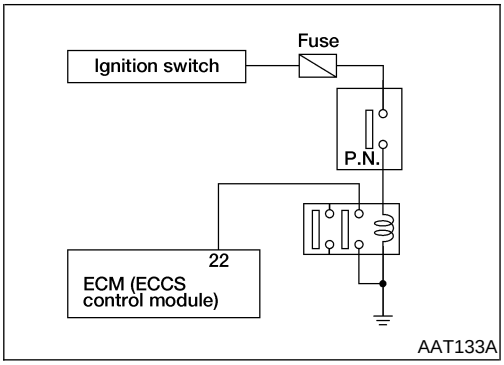

1	CHECK PNP SWITCH CIRCUIT STEP 1

1. Turn ignition switch ON.
   (Do not start engine).
2. Check voltage between ECM harness connector F29 terminal 22 and ground while moving selector lever through each position.
   P, N position: 0V
   R, D, 2, 1 position: Approx. 5V

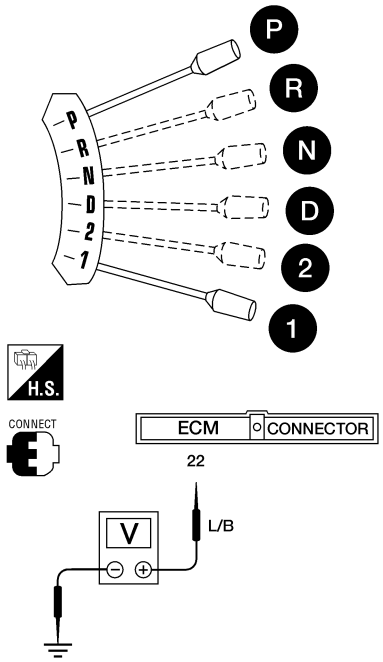

OK or NG

OK	▶	INSPECTION END.
NG	▶	GO TO 2.

2	CHECK POWER SUPPLY FOR PNP SWITCH

1. Disconnect PNP switch harness connector.
2. Turn ignition switch ON.
   (Do not start engine).

Do approx. 12 volts exist between PNP switch harness connector E35 terminal 1 and body ground?

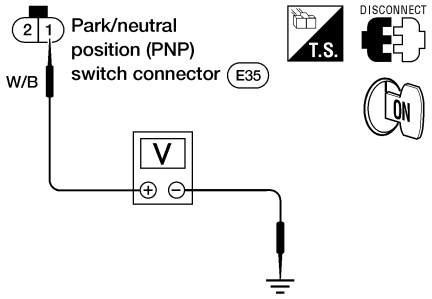

AAT519A

Yes or No

Yes	▶	GO TO 3.
No	▶	Check 10A fuse (No. 11, located in the fuse block), harness and connector. Refer to ***EL-11***, "Wiring Diagram".

3	CHECK PNP SWITCH

- Check continuity in N and P positions.
- With manual lever held in each position, turn manual shaft 1.5° in both directions (When manual lever is in each position, continuity normally exists within 1.5° range). If continuity does not exist equally in either direction, properly adjust PNP switch. Refer to "Park/Neutral Position (PNP) Switch Adjustment", AT-65.

Position	Terminal No.			
	1	2	3	5
Park/neutral position	○	○		

LAT394

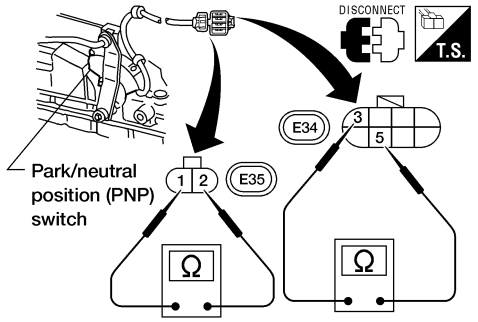

AAT520A

OK or NG

OK	▶	GO TO 4.
NG	▶	Replace PNP switch.

4	CHECK POWER SUPPLY FOR PNP RELAY

1. Reconnect PNP switch harness connector.
2. Turn ignition switch ON.
3. Disconnect PNP relay harness connector.
4. Put selector lever in P or N position.

Do approx. 12 volts exist between PNP relay harness connector E27 terminal 2 and body ground?

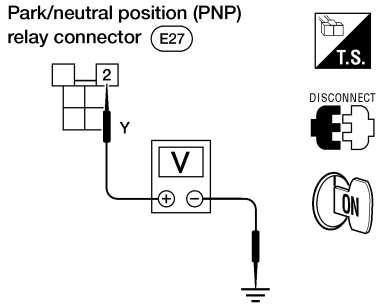

AAT521A

Yes or No

Yes	▶	GO TO 6.
No	▶	GO TO 5.

5	CHECK PNP SWITCH CIRCUIT STEP 2

1. Turn ignition switch OFF.
2. Disconnect PNP switch harness connector E35. Check circuit continuity between PNP switch harness connector E35 terminal 2 and PNP relay harness connector E27 terminal 2.
   Continuity should exist.

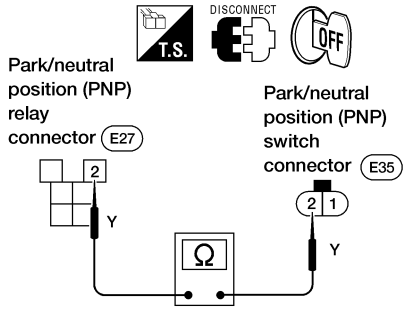

AAT522A

OK or NG

OK	▶	GO TO 6.
NG	▶	Repair harness or connector.

6	CHECK BODY GROUND CIRCUIT FOR PNP RELAY

1. Turn ignition switch OFF.
2. Does continuity exist between PNP relay E27 terminals (1, 6) and body ground?
   Continuity should exist.

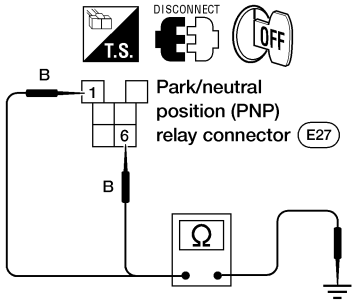

AAT523A

OK or NG

OK	▶	GO TO 7.
NG	▶	Repair harness or connector.

7	CHECK PNP RELAY

Check continuity between terminals 6 and 7.

Condition	Continuity
12V direct current supply between terminals 1 and 2	Yes
No current supply	No

MTBL0198

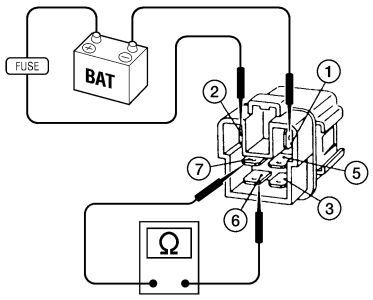

AAT124A

OK or NG

OK	▶	GO TO 8.
NG	▶	Replace PNP relay.

8	CHECK PNP SWITCH CIRCUIT STEP 3

1. Turn ignition switch OFF.
2. Check circuit continuity between ECM harness connector F27 terminal 22 and PNP relay harness connector E27 terminal 7.
   Continuity should exist.

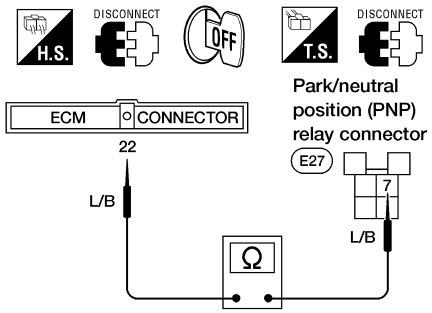

AAT524A

If OK, check harness for short.

OK or NG

OK	▶	Replace ECM.
NG	▶	Repair harness or connector.

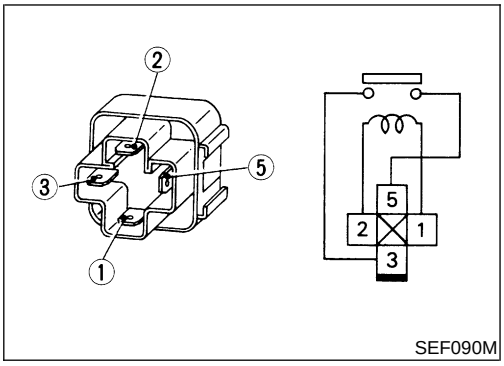

SEF090M

Electrical Component Inspection

NEAT0515

OVERDRIVE CANCEL RELAY

NEAT0515S01

Check continuity between terminals 3 and 5.

Conditions	Continuity
12V direct current supply between terminals 1 and 2	Yes
No current supply	No

If NG, replace relay.

Description

NEAT0417

- The mechanical key interlock mechanism also operates as a shift lock:
  With the key switch turned to ON, the selector lever cannot be shifted from P (Park) to any other position unless the brake pedal is depressed.
  With the key removed, the selector lever cannot be shifted from P to any other position.
  The key cannot be removed unless the selector lever is placed in P.
- The shift lock and key interlock mechanisms are controlled by the ON-OFF operation of the shift lock solenoid and by the operation of the rotator and slider located inside the key cylinder, respectively.

Shift Lock System Electrical Parts Location

NEAT0418

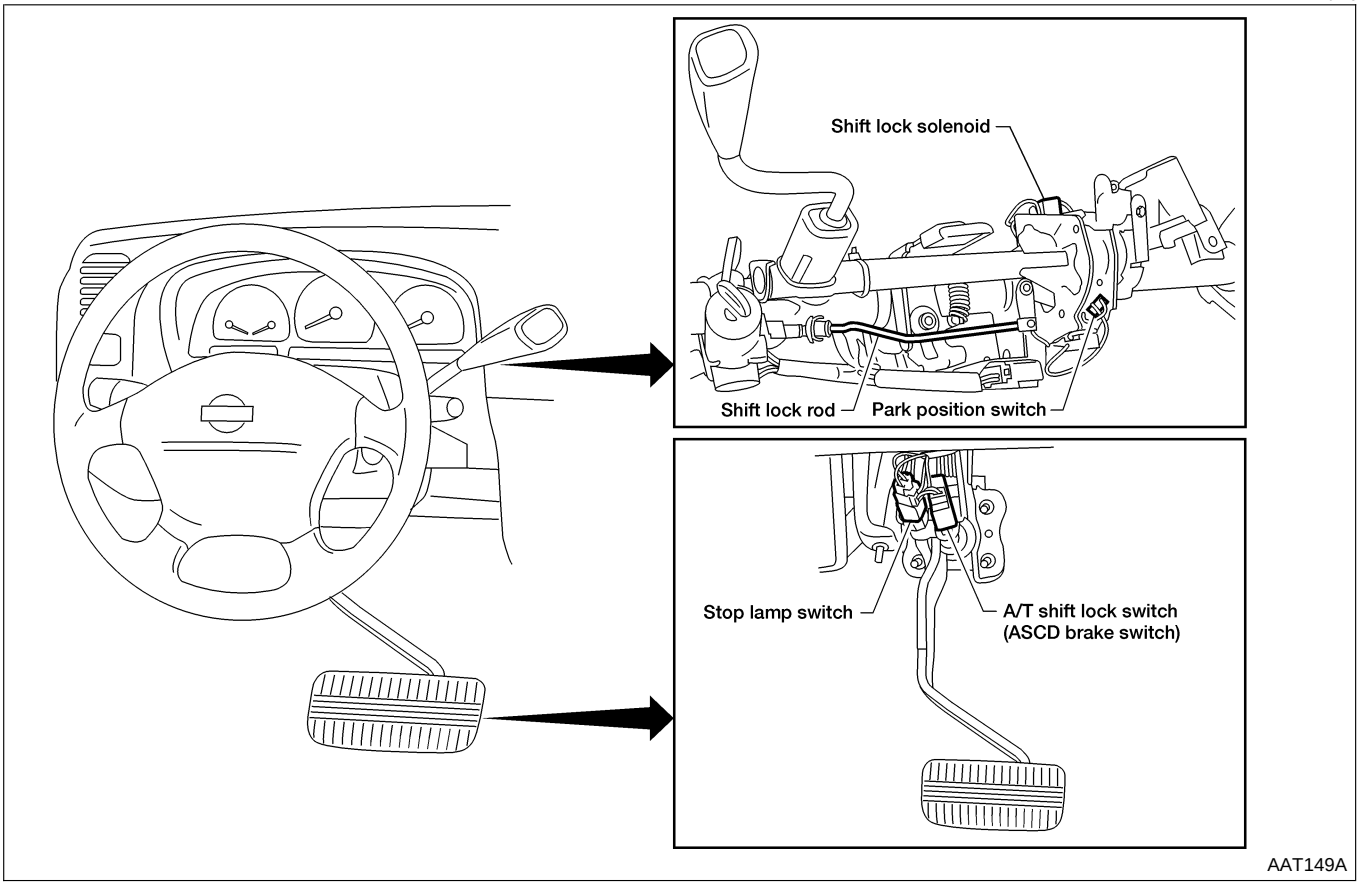

Removal and Installation

NEAT0419

SHIFT LOCK SOLENOID

NEAT0419S01

1. Remove lower instrument cover LH and knee protector.
2. Remove steering column covers.
3. Disconnect A/T device connector.
4. Remove two screws and two nuts attaching steering column.
5. Disconnect shift lock rod.
6. Remove shift control cable.
7. Remove two bolts attaching shift control tube and remove shift control tube.

8. Remove two screws from shift lock solenoid and two screws from park position switch.

SHIFT LOCK ROD

NEAT0419S02

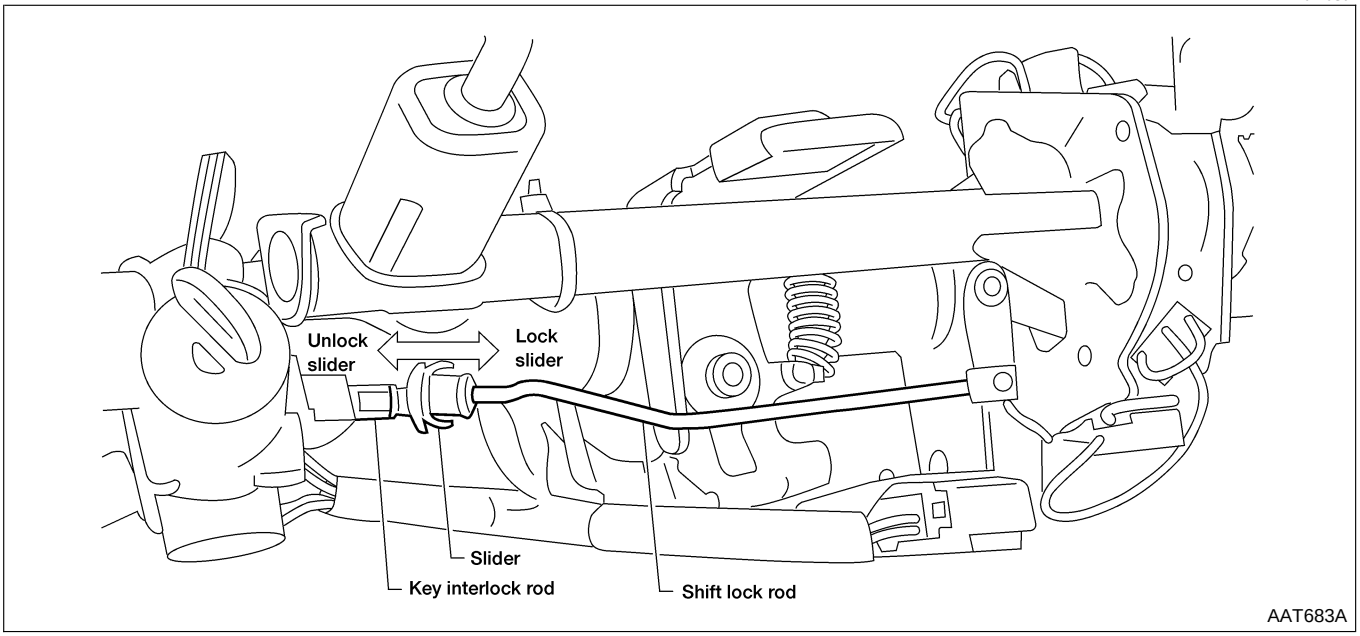

Removal

NEAT0419S0201

1. Turn ignition key to ACC position.
2. Unlock slider by squeezing lock tabs.
3. Remove shift lock rod from key interlock rod.

- For removal of key interlock rod, refer to ***ST-13***, "Disassembly and Assembly".

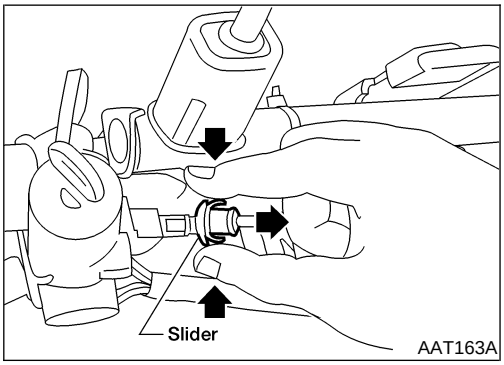

Installation and Adjustment

NEAT0419S0202

1. Place selector lever in P (Park) position.
2. Turn ignition key to ACC position.
3. Insert shift lock rod into slider.
4. Grab key interlock rod and push toward shift lock rod to adjust.

Do not hold shift lock rod.

5. Lock slider into position.
6. Test shift lock operation.

Wiring Diagram

NEAT0420

AT-SHIFT-01

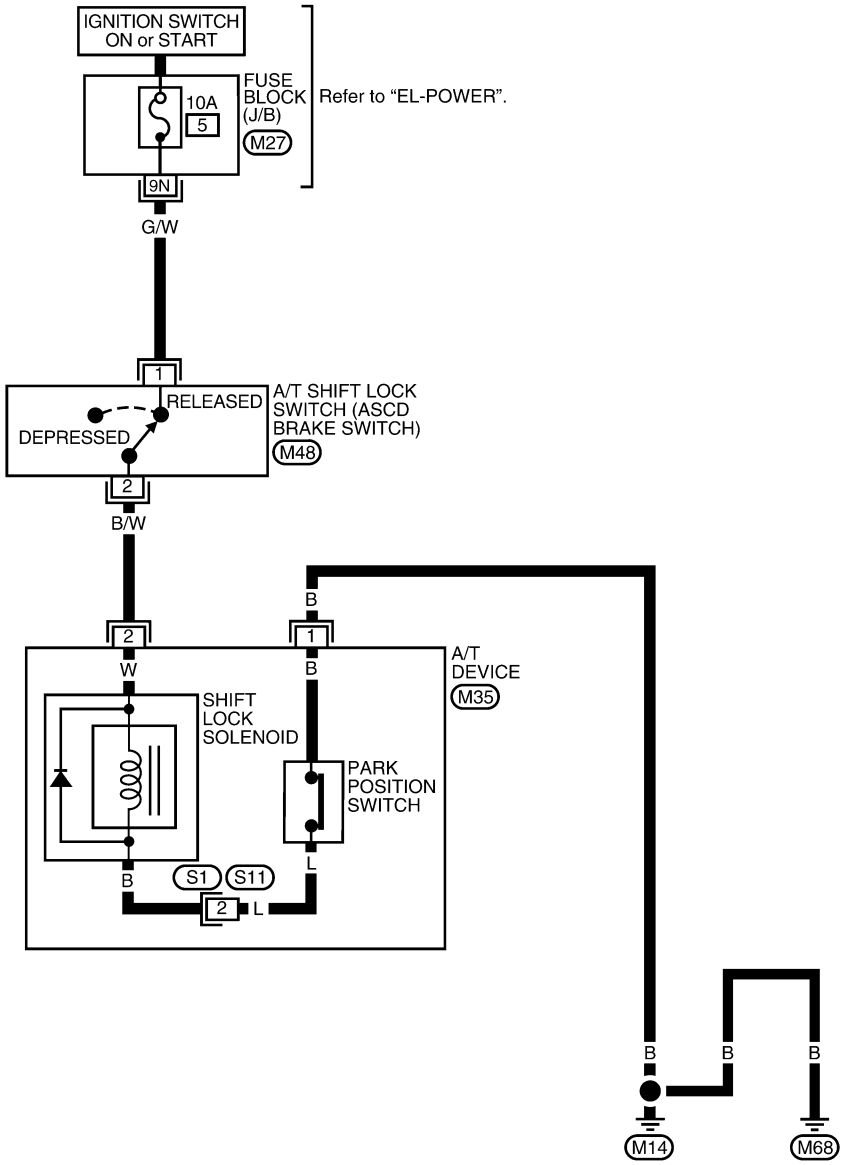

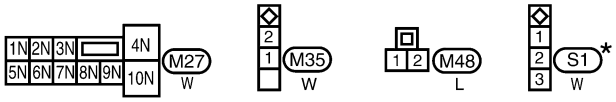

★ : This connector is not shown in “HARNESS LAYOUT” of EL section.

WAT536

Diagnostic Procedure

NEAT0421

SYMPTOM 1:

- **Selector lever cannot be moved from P position with key in ON position and brake pedal applied.**
- **Selector lever can be moved from P position with key in ON position and brake pedal released.**
- **Selector lever can be moved from P position when key is removed from key cylinder.**

SYMPTOM 2:

- **Ignition key cannot be removed when selector lever is set to P position.**
- **Ignition key can be removed when selector lever is set to any position except P.**

1	CHECK SHIFT LOCK ROD	
Check shift lock rod for damage. **OK or NG**		
OK	▶	GO TO 2.
NG	▶	Repair shift lock rod. Refer to “SHIFT LOCK ROD”, AT-57.

2	CHECK SELECTOR LEVER POSITION	
Check selector lever position indicator and selector lever for damage. **OK or NG**		
OK	▶	GO TO 3.
NG	▶	Check selector lever. Refer to “Park/neutral Position (PNP) Switch” and “Control Cable Adjustment”, AT-65, 66.

3	CHECK POWER SOURCE	
1. Turn ignition switch ON. (Do not start engine.) 2. Check voltage between A/T shift lock switch (ASCD brake switch) harness connector M48 terminal 1 and ground. **Voltage: Battery voltage** 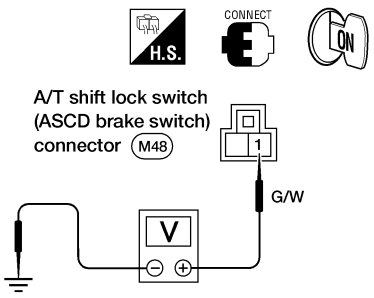 AAT140A **OK or NG**		
OK	▶	GO TO 5.
NG	▶	GO TO 4.

Diagnostic Procedure (Cont'd)

4	DETECT MALFUNCTIONING ITEM

Check the following items:

- 10A fuse (No. 5, located in the fuse block)
- Harness for short or open between fuse and A/T shift lock switch (ASCD brake switch) harness connector terminal 1
- Ignition switch. Refer to ***EL-14***, "IGNITION POWER SUPPLY — IGNITION SW. IN ON AND/OR START".

OK or NG

OK	▶	GO TO 5.
NG	▶	Repair or replace damaged parts.

5	CHECK INPUT SIGNAL [A/T SHIFT LOCK SWITCH (ASCD brake switch)]

1. Turn ignition switch ON.
   (Do not start engine.)
2. Check voltage between A/T device harness connector M35, terminal 2 (B/W) and ground.

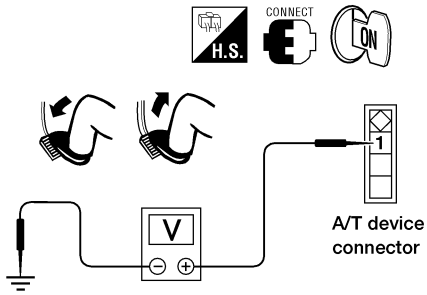

Brake pedal	Voltage
Depressed	0V
Released	Battery voltage

WAT332

OK or NG

OK	▶	GO TO 7.
NG	▶	GO TO 6.

6 DETECT MALFUNCTIONING ITEM

Check the following items:

- Harness for short or open between A/T device harness connector M35 terminal 2 and A/T shift lock switch (ASCD brake switch) harness connector terminal 2
- A/T shift lock switch (ASCD brake switch)
  Check continuity between terminals 1 and 2

Condition	Continuity
When brake pedal is depressed	No
When brake pedal is released	Yes

MTBL0208

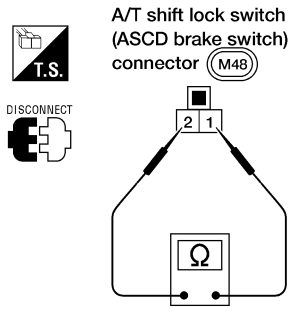

AAT145A

Check A/T shift lock switch (ASCD brake switch) after adjusting brake pedal. Refer to *BR-18*, "Adjustment".

OK or NG

OK	▶	GO TO 7.
NG	▶	Repair or replace damaged parts.

7 CHECK GROUND CIRCUIT

1. Turn ignition switch OFF.
2. Disconnect A/T device harness connector.
3. Check continuity between A/T device harness connector M35 terminal 1 and ground.
   Continuity should exist.
   If OK, check harness for short to ground and short to power.

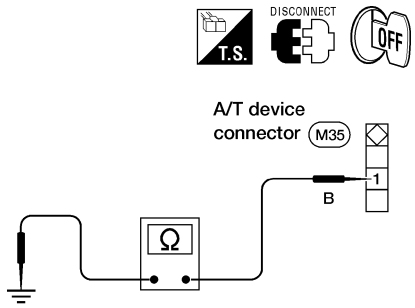

AAT142A

OK or NG

OK	▶	GO TO 8.
NG	▶	Repair harness or connector.

8	CHECK PARK POSITION SWITCH

- Check continuity between A/T device harness connector M35 terminal 1 (B) and park position switch harness connector S1 terminal 2 (L).

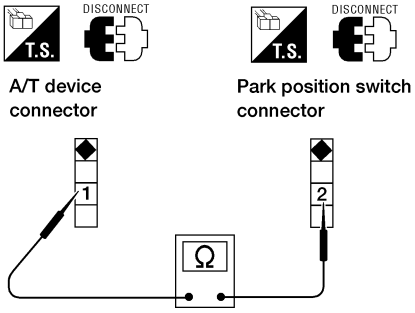

Condition	Continuity
When selector lever is set in "P" position and selector lever button is released	Yes
Except	No

WAT333

OK or NG

OK	▶	GO TO 9.
NG	▶	Replace park position switch.

9	CHECK SHIFT LOCK SOLENOID

- Check operation by applying battery voltage to A/T device connector M35 terminal 2 (B/W) and shift lock solenoid harness connector S1 terminal 2 (B).

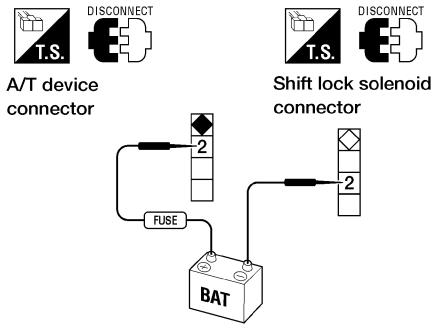

WAT334

OK or NG

OK	▶	GO TO 10.
NG	▶	Replace shift lock solenoid.

10	CHECK SHIFT LOCK OPERATION

1. Reconnect A/T device harness connector.
2. Turn ignition switch from OFF to ON position. (Do not start engine.)
3. Recheck shift lock operation.

OK or NG

OK	▶	INSPECTION END
NG	▶	1. Perform A/T device input/output signal inspection test. 2. If NG, recheck harness connector connection.

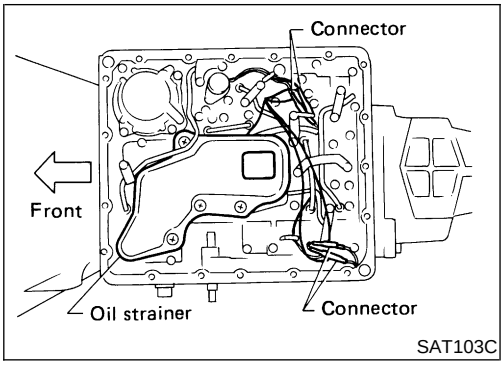

SAT103C

Control Valve Assembly and Accumulators

NEAT0422

REMOVAL

NEAT0422S01

1. Drain ATF from drain plug.
2. Remove oil pan and gasket.
3. Remove oil strainer.
4. Disconnect harness connector.

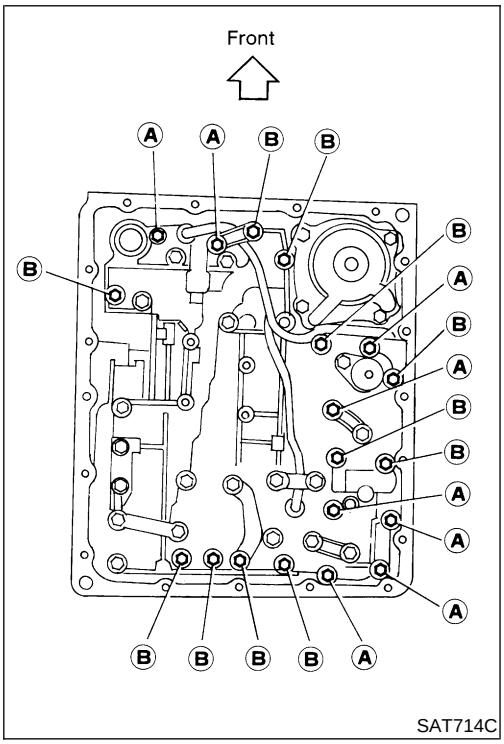

SAT714C

5. Remove control valve assembly by removing fixing bolts.

Bolt length and location

Bolt symbol	ℓ mm (in)
A	33 (1.30)
B	45 (1.77)

- **Be careful not to drop manual valve out of valve body.**

6. Remove solenoids and valves from valve body if necessary.
7. Remove terminal cord assembly if necessary.

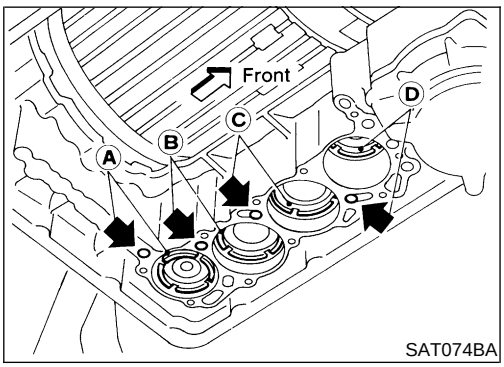

SAT074BA

8. Remove accumulators **A**, **B**, **C** and **D** by applying compressed air if necessary.

- **Hold each piston with a rag.**

9. Reinstall any part removed.

- **Always use new sealing parts.**
- **Always replace oil pan bolts as they are self-sealing bolts.**
- **After installing control valve assembly, make sure that selector lever can be moved to all positions.**

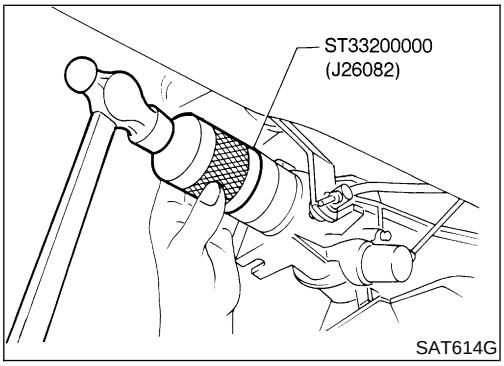

SAT614G

Rear Oil Seal Replacement

NEAT0423

1. Remove propeller shaft from vehicle. Refer to ***PD-9***, “Removal and Installation”.
2. Remove rear oil seal.
3. Install rear oil seal.

- **Apply ATF before installing.**

4. Reinstall any part removed.

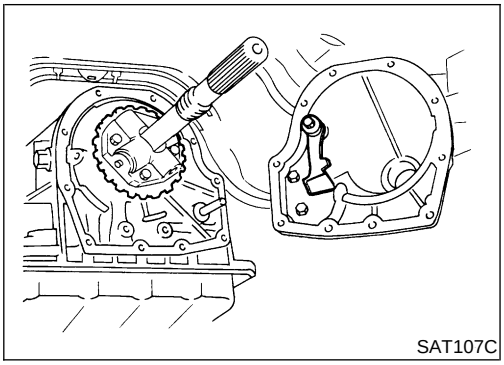
SAT107C

Parking Components Inspection

NEAT0424

1. Remove propeller shaft from vehicle. Refer to ***PD-9***, “Removal and Installation”.
2. Support A/T assembly with a jack.
3. Remove rear engine mounting member.
4. Remove rear extension from transmission case.
5. Replace parking components if necessary.
6. Reinstall any part removed.

- **Always use new sealing parts.**

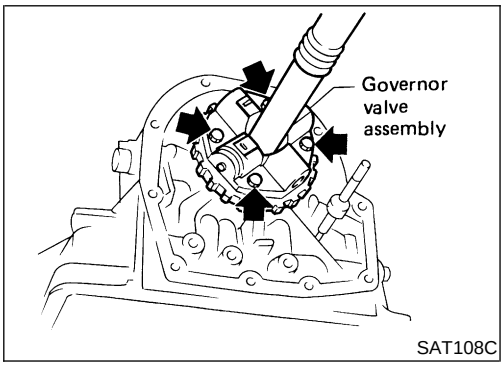

SAT108C

Governor Valve

NEAT0425

1. Remove propeller shaft from vehicle. Refer to ***PD-9***, “Removal and Installation”.
2. Support A/T assembly with a jack.
3. Remove rear engine mounting member from A/T assembly.
4. Remove rear extension from transmission case.
5. Remove governor valve assembly.
6. Inspect and repair governor valve assembly. Refer to “Governor Valve Assembly”, AT-100.

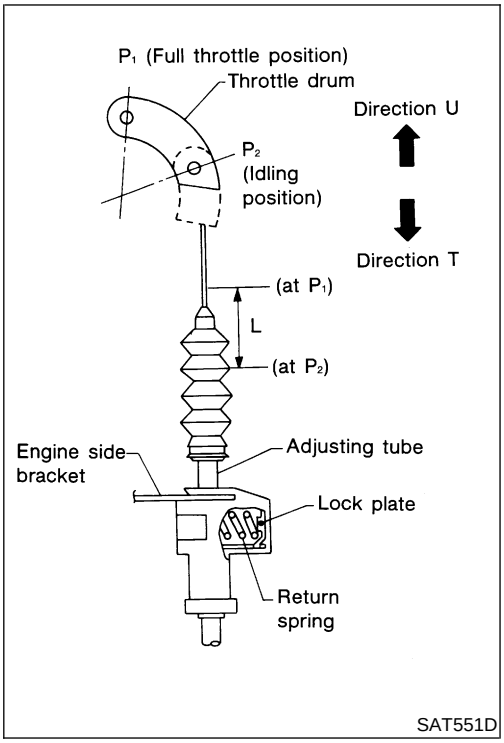

SAT551D

Throttle Wire Adjustment

NEAT0426

1. Turn ignition switch OFF.
2. While pressing lock plate, move adjusting tube in Direction T.
3. Release lock plate. (Adjusting tube is locked at this time.)
4. Move throttle drum from P_2 (Idling position) to P_1 (Full throttle position) quickly and release.
5. Ensure that throttle wire stroke “L” is within the specified range, between full throttle and idle.

Throttle wire stroke “L”:
39 - 43 mm (1.54 - 1.69 in)

- **Adjust throttle wire stroke after accelerator wire is installed and adjusted.**
- **When connecting throttle wire to throttle drum, do not use tools. Manually hook wire.**
- **Put mark on throttle wire for measuring wire stroke.**

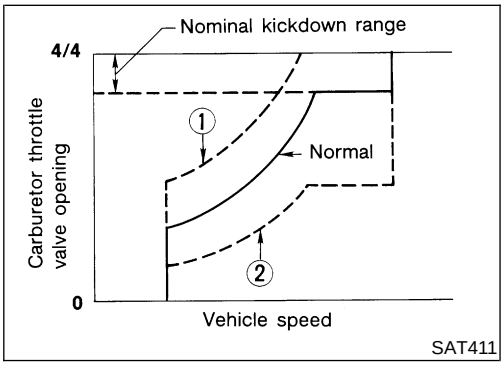

SAT411

If throttle wire stroke is improperly adjusted, the following problems may arise.

- When the throttle drum fully-open position P_1 is too far toward Direction T, the shift schedule will be as shown by **2** in the figure, and the kickdown range will greatly increase.
- When the throttle drum fully-open position P_1 is too far toward Direction U, the shift schedule will be as shown by **1** in the figure, and kickdown will not occur.

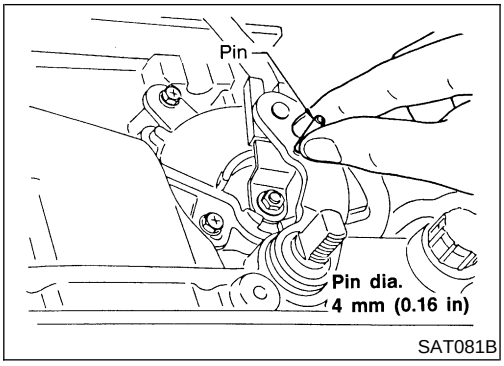

Park/Neutral Position (PNP) Switch Adjustment

NEAT0427

1. Remove control linkage and manual lever from manual shaft.
2. Set manual shaft in N position.
3. Loosen PNP switch fixing bolts.
4. Insert pin into adjustment holes in both PNP switch and manual as near vertical as possible.
5. Tighten PNP switch fixing bolts.
6. Remove pin.
7. Reinstall any part removed.
8. Adjust control linkage. Refer to “Control Cable Adjustment”, AT-66.
9. Check continuity of PNP switch. Refer to “PARK/NEUTRAL POSITION (PNP) SWITCH”, AT-51.

Control Cable Adjustment

=NEAT0428

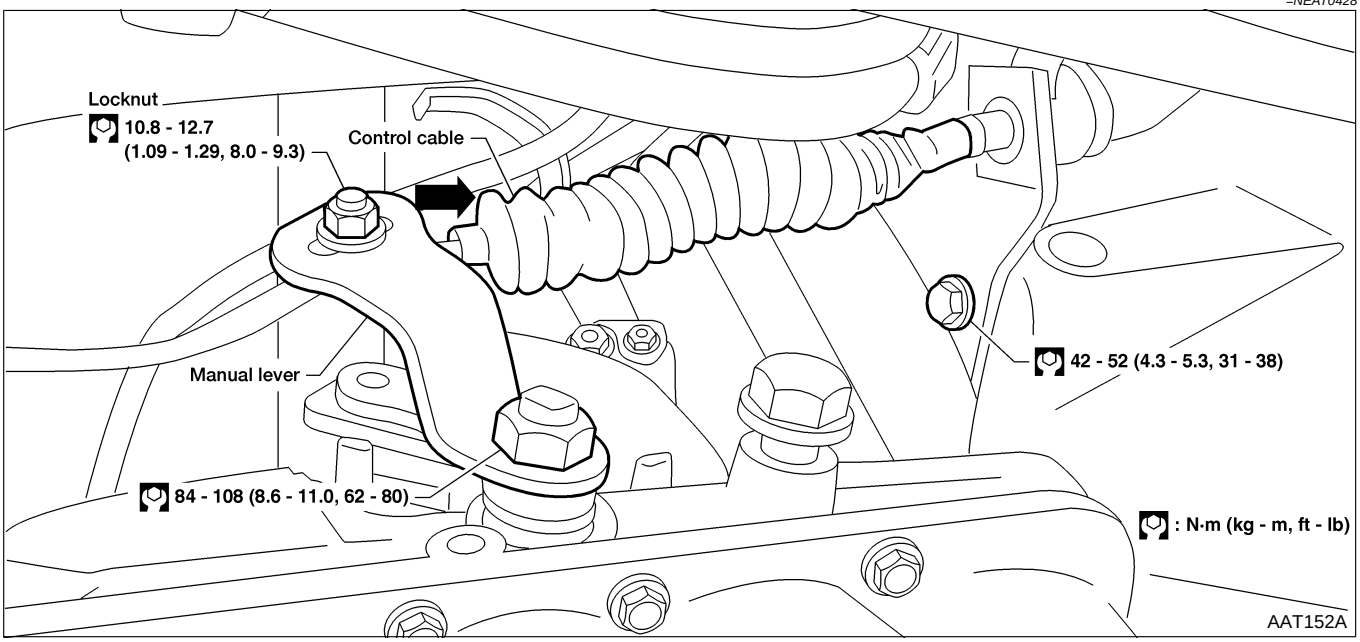

Move the selector lever from the P position to 1 position. You should be able to feel the detents in each position.
If the detents cannot be felt, the linkage needs adjustment.

1. Place selector lever in P position.
2. Loosen control cable lock nut and place manual shaft in P position.
3. Push control cable in the direction of the arrow shown in the illustration by specified force.

   Specified force: 19.6 N (2.0 kg, 4.4 lb)
4. Return control cable in the opposite direction of the arrow for 1.0 mm (0.039 in).
5. Tighten control cable lock nut.
6. Move selector lever from P to 1 position again. Make sure that selector lever moves smoothly.
7. Apply grease to contacting areas of selector lever and control cable. Install any part removed.

- **Make sure that the starter operates when the selector lever is placed in the N or P position.**
- **Make sure that the transmission is locked properly when the selector lever is placed in the P position.**

Removal

NEAT0429

SEC. 112 • 200 • 310

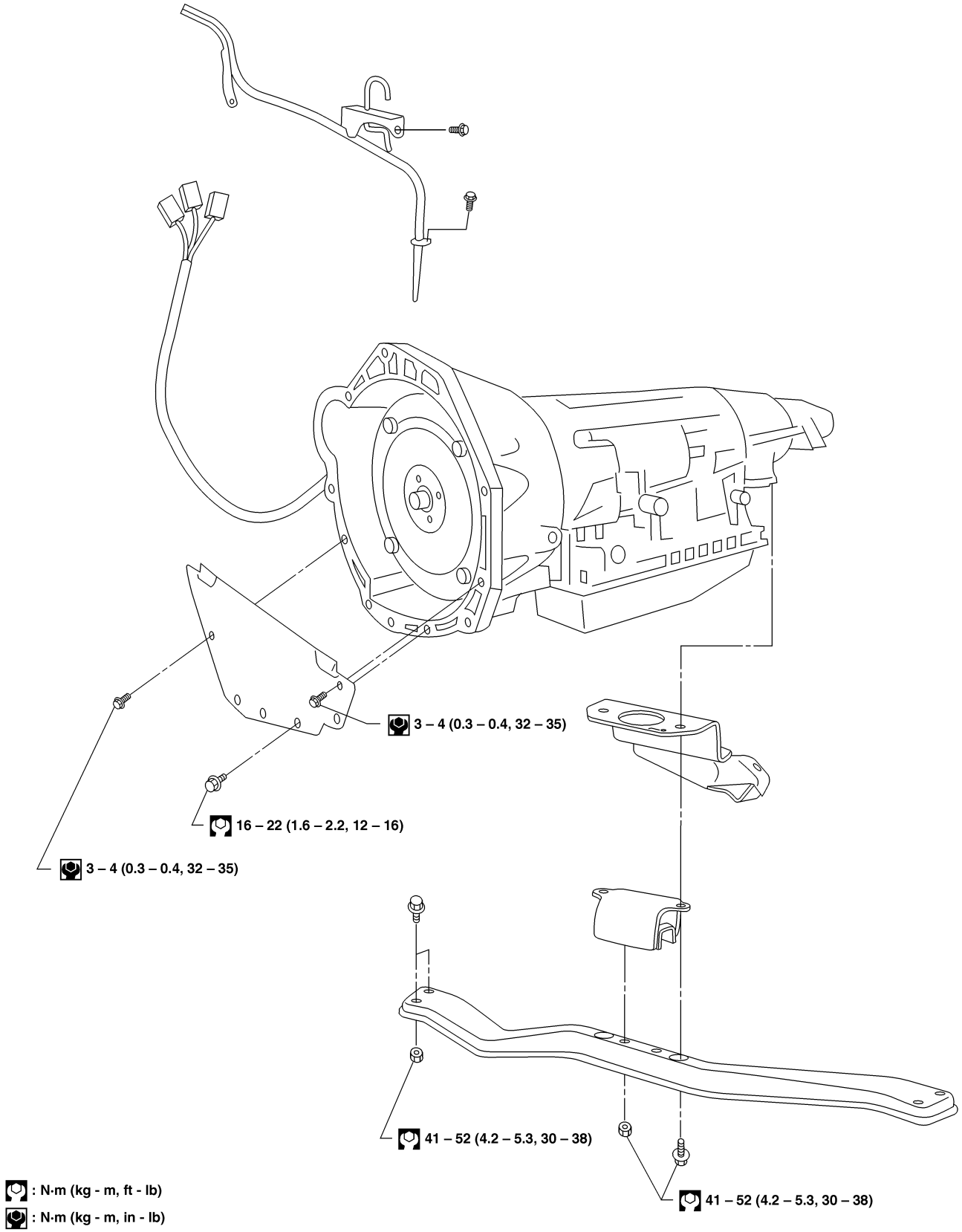

AAT151A

CAUTION:
Before separating the A/T assembly from engine, first remove the crankshaft position sensor (OBD) from the assembly. Be careful not to damage sensor edge.

NOTE:
To prevent oil spills, drain A/T fluid before removing A/T assembly or insert plug into rear oil seal after removing propeller shaft.

1. Disconnect battery negative terminal.
2. Remove fluid charging pipe from A/T assembly and plug opening.
3. Remove oil cooler pipe from A/T assembly and plug opening.
4. Remove A/T vent hose.
5. Remove propeller shaft.
   Refer to ***PD-9***, "Removal and Installation".

- **Be careful not to damage spline, sleeve yoke and rear oil seal.**

6. Remove A/T control cable from manual shaft.
7. Disconnect A/T harness connectors and vehicle speed sensor harness connector.
8. Disconnect throttle wire from A/T assembly.

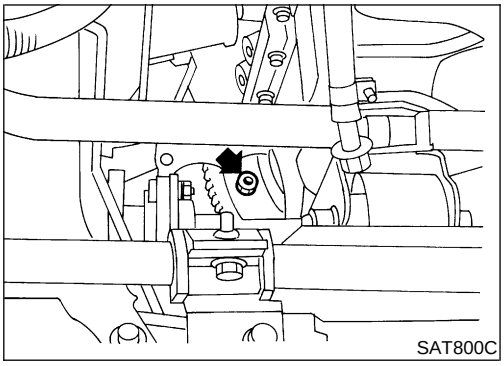
SAT800C

9. Remove starter motor. Refer to ***SC-28***, "Removal and Installation".
10. Remove bolts securing torque converter to drive plate.

- **Rotate crankshaft to gain access to securing bolts.**

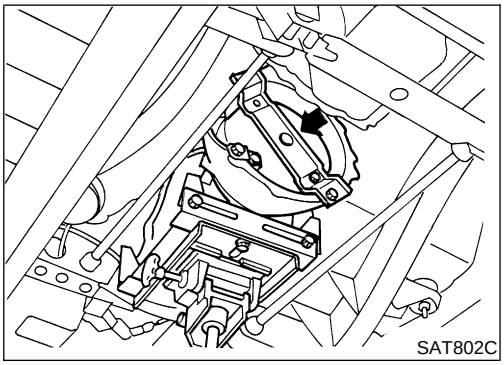
SAT802C

11. Support A/T assembly with a jack.
12. Remove rear mounting bracket from body and A/T assembly. Refer to ***EM-42***, "REMOVAL".
13. Remove bolts securing A/T assembly to engine.
14. Pull A/T assembly backwards.

- **Secure torque converter to prevent it from dropping.**
- **Secure A/T assembly to a jack.**

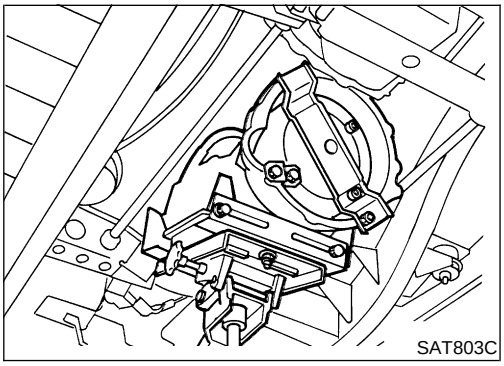
SAT803C

15. Slant and lower A/T assembly.

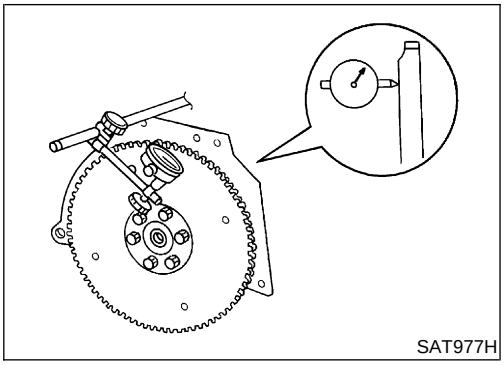
SAT977H

Installation

NEAT0430

1. Check drive plate runout.

CAUTION:
Do not allow any magnetic materials to contact the ring gear teeth.

Maximum allowable runout:
Refer to *EM-52*, "Flywheel/Drive Plate Runout".

If this runout is out of specification, replace drive plate with ring gear.

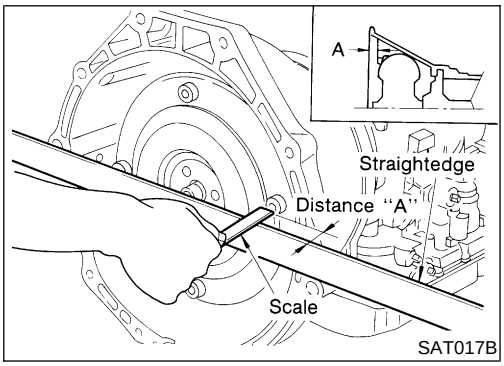

SAT017B

2. When connecting torque converter to transmission, measure distance "A" to be certain that they are correctly assembled.

Distance "A":
26.0 mm (1.024 in) or more

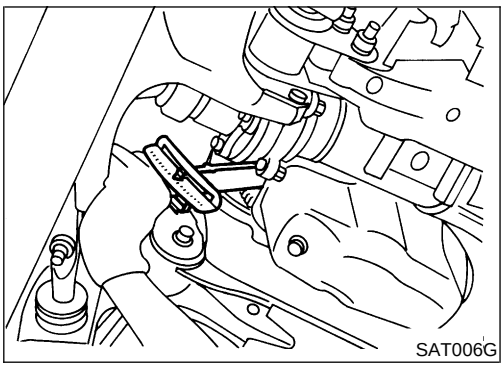
SAT006G

3. Install converter to drive plate.

- **With converter installed, rotate crankshaft several turns to check that transmission rotates freely without binding.**

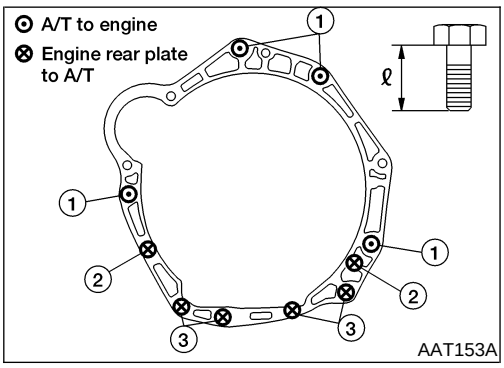

AAT153A

4. Tighten bolts securing transmission.

Bolt No.	Tightening torque N·m (kg-m, ft-lb)	Bolt length "ℓ" mm (in)
1	39 - 49 (4.0 - 5.0, 29 - 36)	43 (1.69)
2	3 - 4 (0.3 - 0.4, 2.2 - 2.9)	16 (0.63)
3	16 - 22 (1.6 - 2.2, 12 - 16)	16 (0.63)

5. Reinstall any part removed.

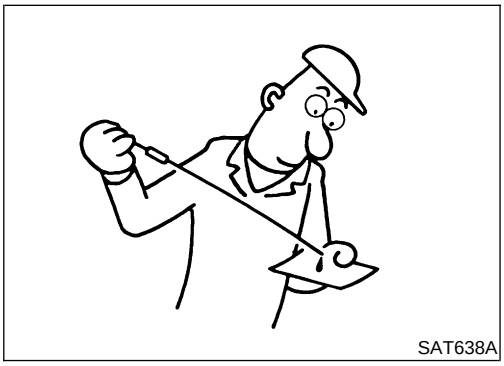
SAT638A

6. Adjust control cable. Refer to "Control Cable Adjustment", AT-66.
7. Adjust throttle wire. Refer to "Throttle Wire Adjustment", AT-64.
8. Adjust PNP switch. Refer to "Park/Neutral Position (PNP) Switch Adjustment", AT-65.
9. Refill transmission with ATF and check fluid level.
10. Move selector lever through all positions to be sure that transmission operates correctly.
With parking brake applied, allow engine to idle. Move selector lever through N to D, to 2, to 1 and to R. A slight shock

should be felt through hand gripping the selector each time the transmission is shifted.

11. Perform road test. Refer to "ROAD TEST", AT-32.

Components

NEAT0431

SEC. 311•313•315

: N•m (kg-m, ft-lb)
: **Genuine anaerobic liquid gasket Three Bond TB1215, Loctite Part No. 51813 or equivalent**
ATF : Apply ATF.
P : Apply petroleum jelly.
★ : Select with proper thickness.

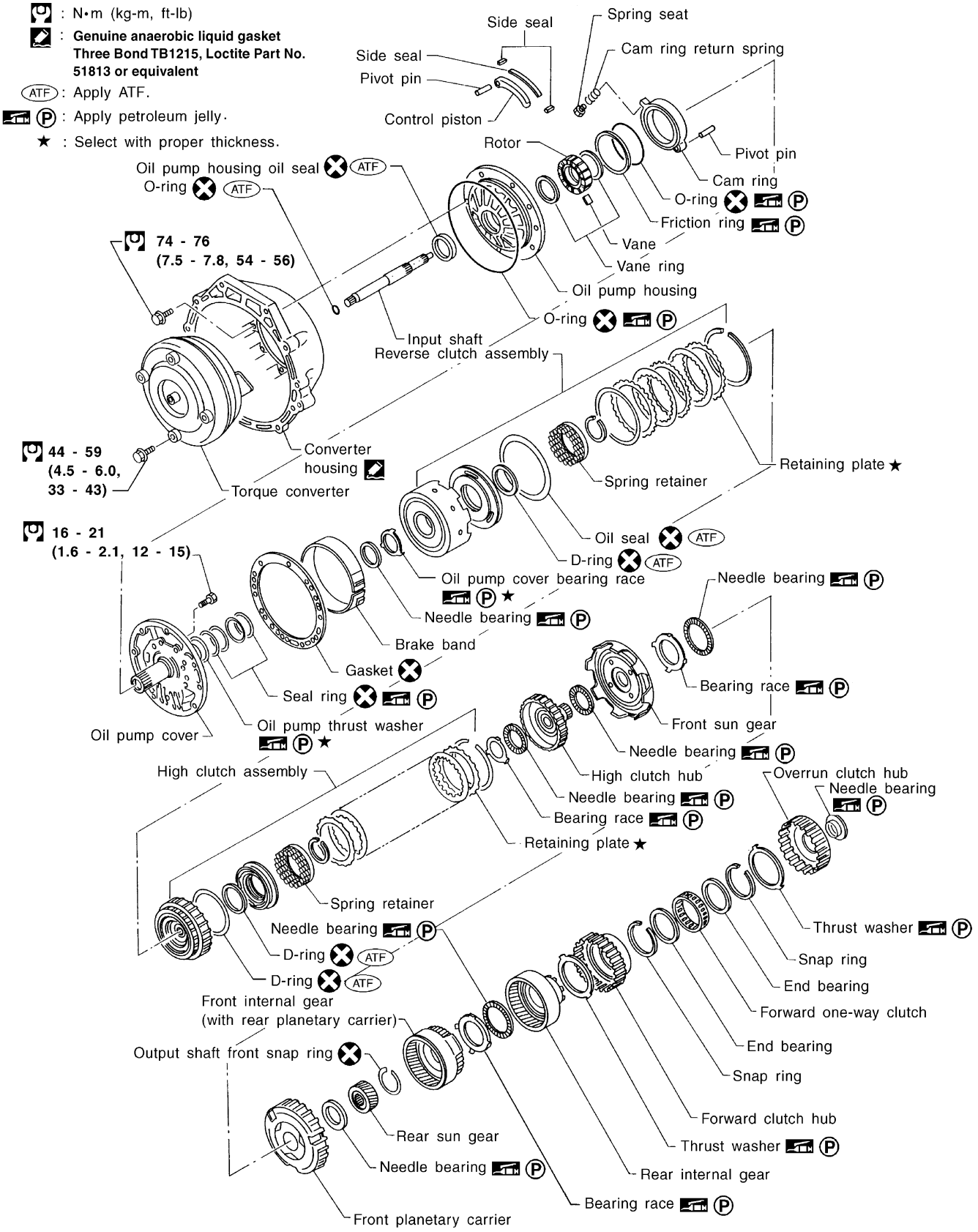

AAT103A

SEC. 311•315•317

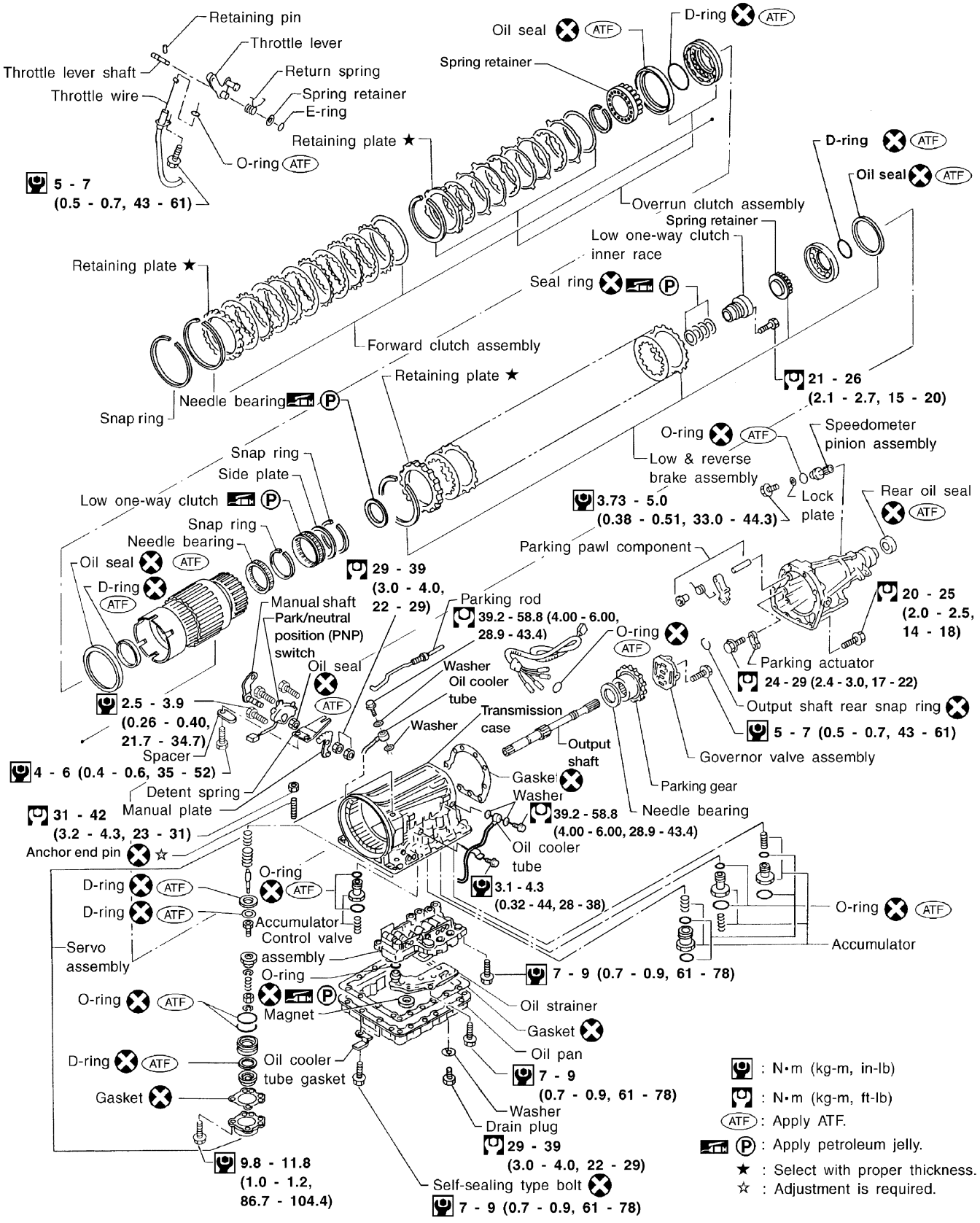

LAT397

Oil Channel

NEAT0432

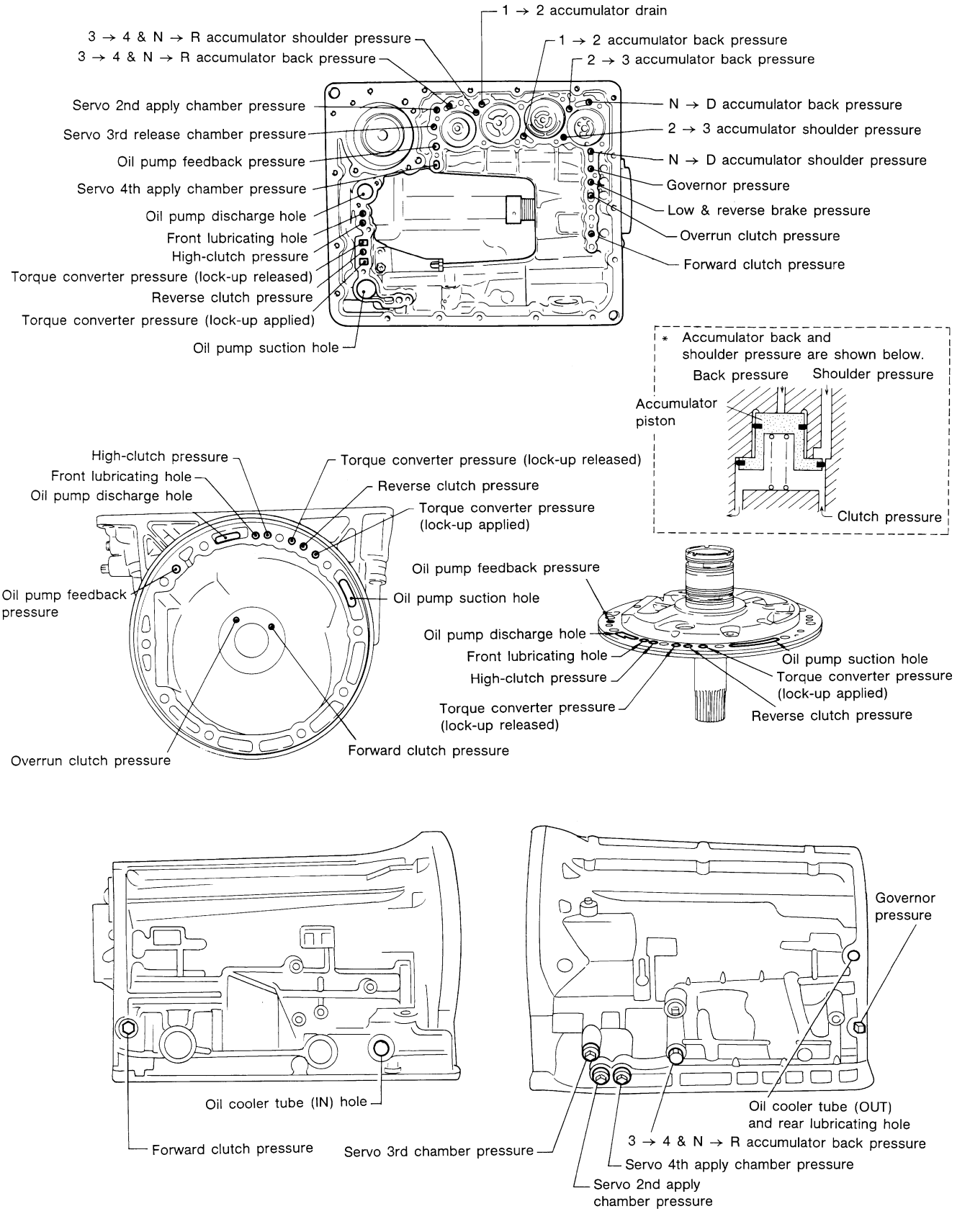

WAT390

Locations of Needle Bearings, Thrust Washers and Snap Rings

NEAT0433

Outer diameter of snap rings

Item number	Outer diameter mm (in)
②	161.0 (6.34)
③	140.1 (5.52)
④	156.4 (6.16)
⑥	142.0 (5.59)
⑦	159.2 (6.27)

Thrust washers

Item number	Color
①	Black
⑤	White

Outer diameter of needle bearings

Item number	Outer diameter mm (in)
⑧	47 (1.85)
⑨	53 (2.09)
⑪	78 (3.07)
⑫	53 (2.09)
⑬	78 (3.07)
⑭	57 (2.24)
⑮	78.1 (3.075)
⑯	64 (2.52)
⑰	53 (2.09)

Installation of one-piece bearings

Item number	Bearing race (black) location
⑩	Front
⑫	Front
⑮	Rear side
⑯	Rear side

Inner diameter of bearing races

Item number	Outer diameter mm (in)
⑪	58 (2.315)
⑬	58 (2.315)

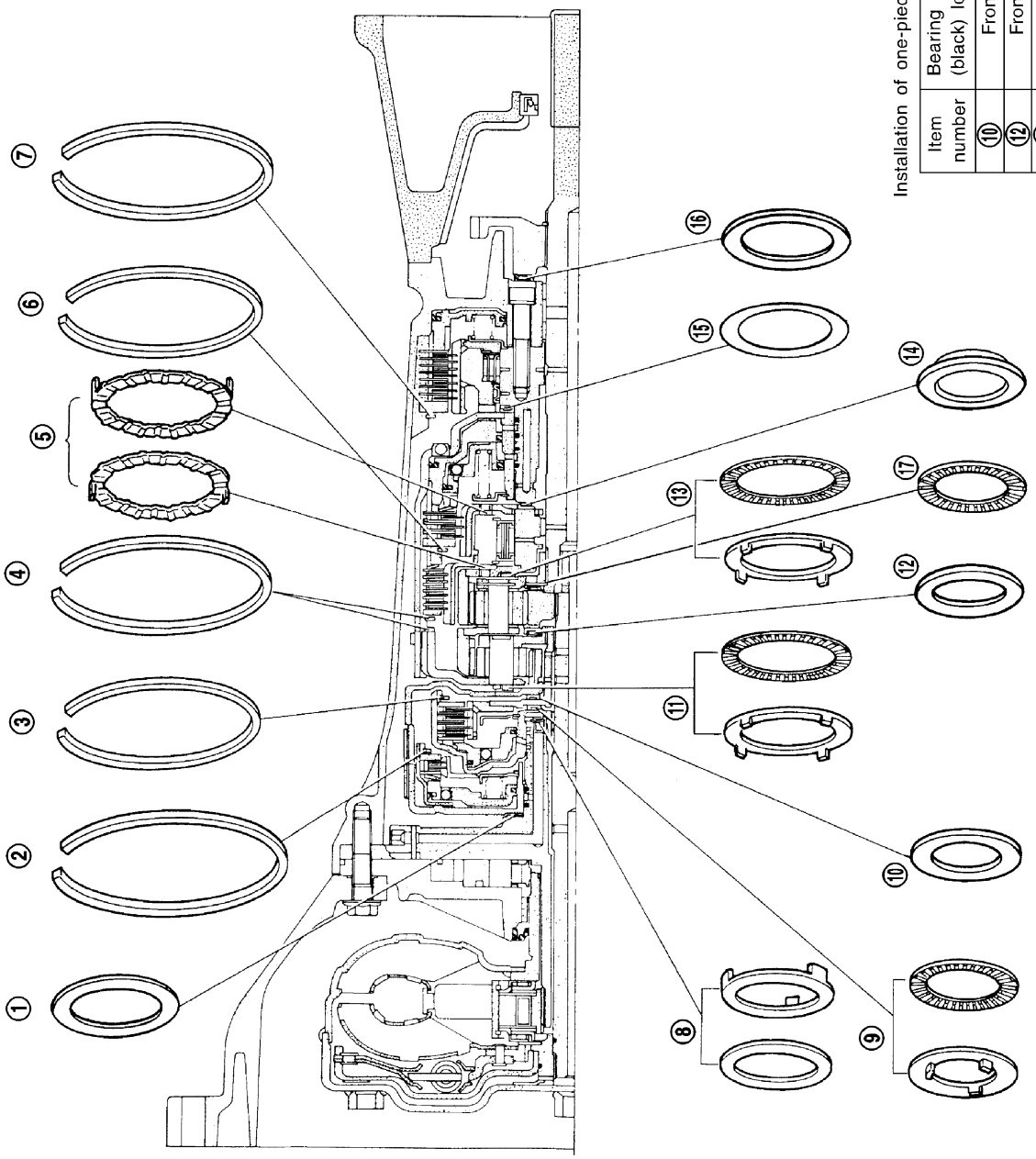

WAT378

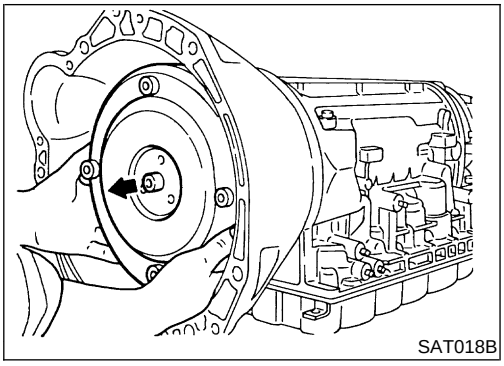
SAT018B

1. Removing torque converter by holding it firmly and turning while pulling straight out.

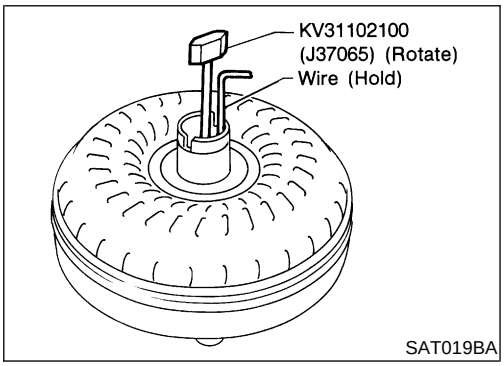

SAT019BA

2. Check torque converter one-way clutch.
a. Insert Tool into spline of one-way clutch inner race.
b. Hook bearing support unitized with one-way clutch outer race with suitable wire.
c. Check that one-way clutch inner race rotates only clockwise with Tool while holding bearing support with wire.

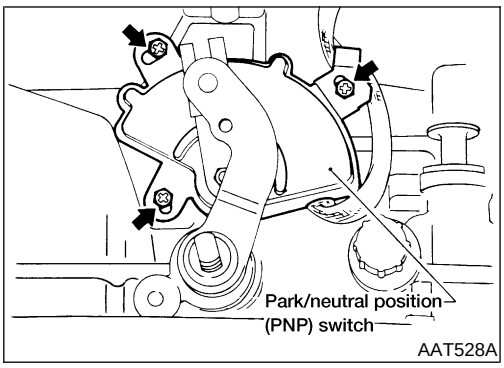

AAT528A

3. Remove PNP switch from transmission case.

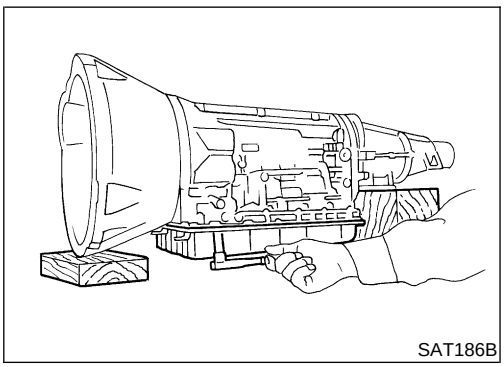
SAT186B

4. Separate the oil pan and transmission case.
a. Drain ATF from drain plug.
b. Raise oil pan by placing wooden blocks under converter housing and adapter case.
c. Remove oil pan and gasket.

- **Always place oil pan straight down so that foreign particles inside will not move.**
- **Do not reuse oil pan bolts.**

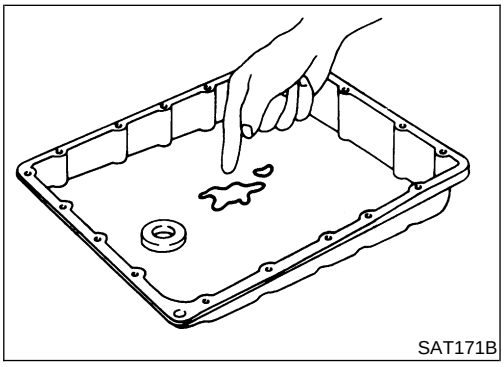
SAT171B

5. Check foreign materials in oil pan to help determine cause of malfunction. If the fluid is very dark, smells burned, or contains foreign particles, the frictional material (clutches, band) may need replacement. A tacky film that will not wipe clean indicates varnish buildup. Varnish can cause valves, servo, and clutches to stick and may inhibit pump pressure.

- **If frictional material is detected, replace radiator after repair of A/T. Refer to *LC-14*, "Radiator".**

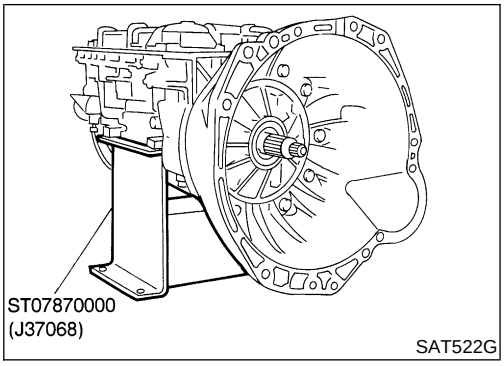

6. Place transmission into Tool with the control valve facing up.

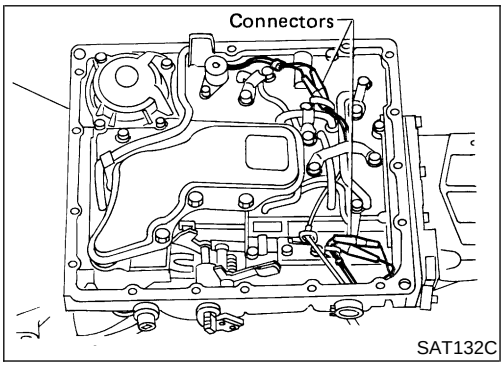

7. Remove torque converter clutch solenoid valve and overdrive cancel solenoid valve connectors.

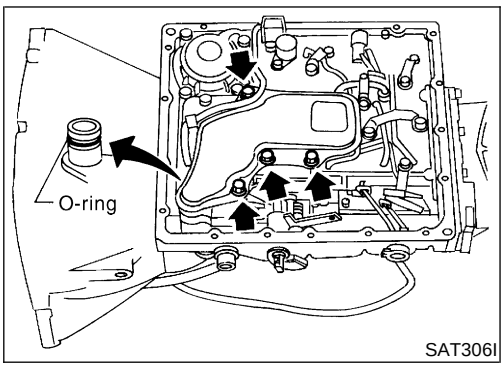

8. Remove oil strainer.
a. Remove oil strainer from control valve assembly. Then remove O-ring from oil strainer.

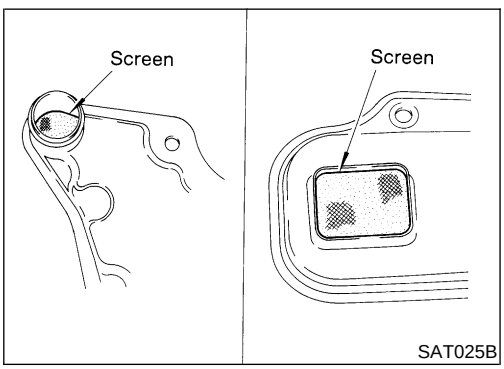

b. Check oil strainer screen for damage.

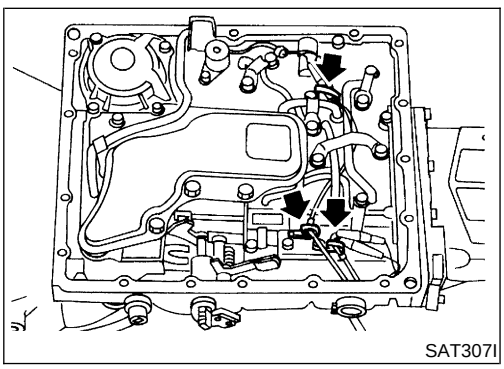

9. Remove control valve assembly.
a. Straighten terminal clips to free terminal cords, then remove terminal clips.

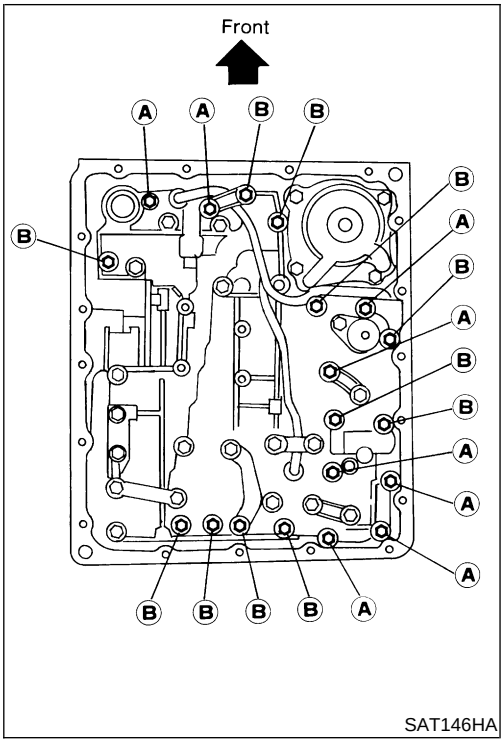

SAT146HA

b. Remove bolts **A** and **B**, and remove control valve assembly from transmission.

Bolt	ℓ mm (in) ℓ
A	33 (1.30)
B	45 (1.77)

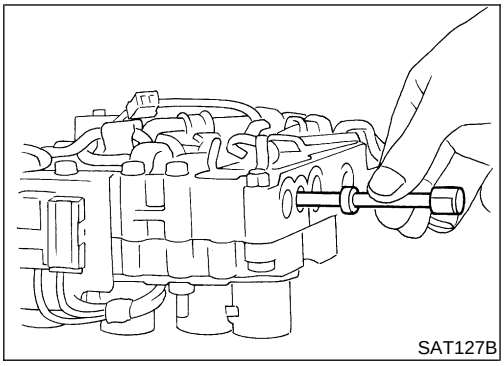
SAT127B

c. Remove manual valve from control valve assembly.

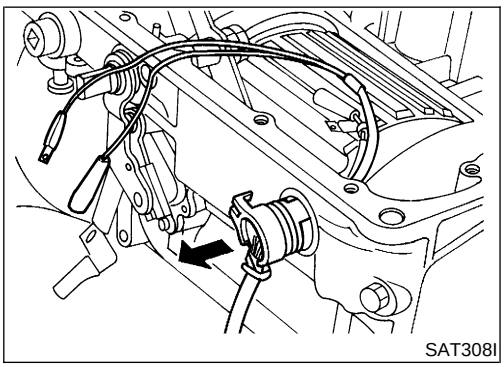
SAT308I

10. Remove terminal cord assembly from transmission case while pushing on stopper.

- **Be careful not to damage cord.**
- **Do not remove terminal cord assembly unless it is damaged.**

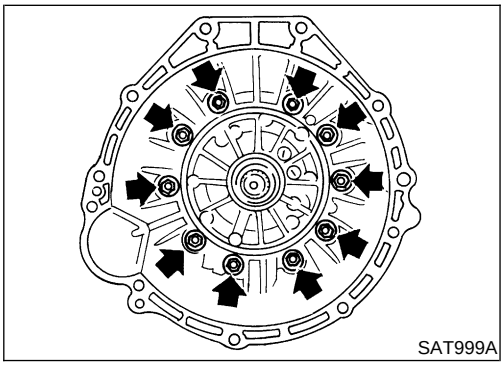
SAT999A

11. Remove converter housing.
a. Remove converter housing bolts.
b. Remove traces of sealant.

- **Be careful not to scratch converter housing.**

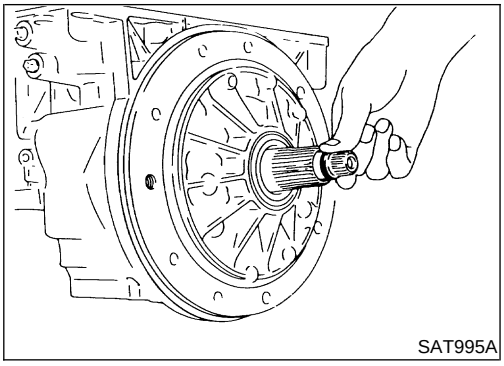
SAT995A

12. Remove O-ring from input shaft.

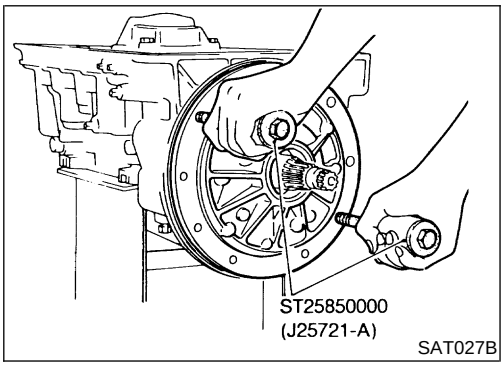

SAT027B

13. Remove oil pump assembly.
a. Attach Tool to oil pump assembly and extract it evenly from transmission case.

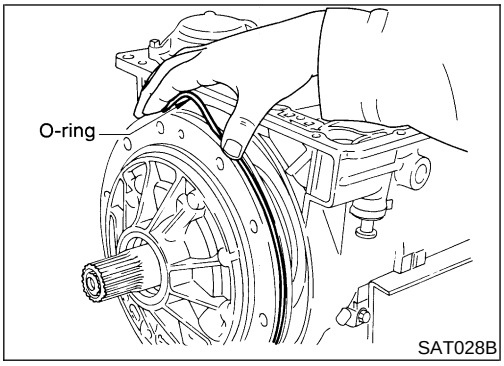

SAT028B

b. Remove O-ring from oil pump assembly.
c. Remove traces of sealant from oil pump housing.
- **Be careful not to scratch pump housing.**

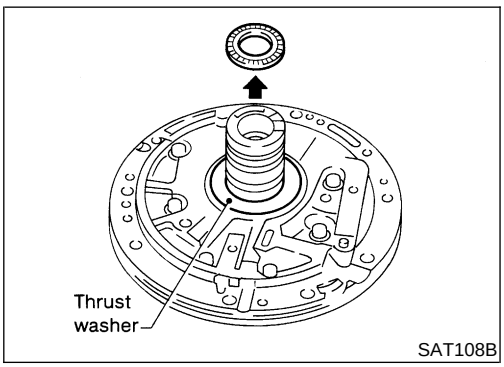

SAT108B

d. Remove needle bearing and thrust washer from oil pump assembly.

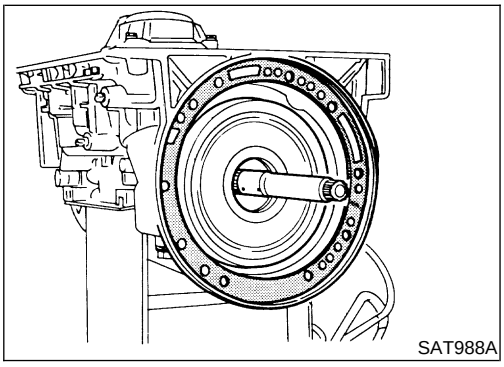
SAT988A

14. Remove input shaft and oil pump gasket.

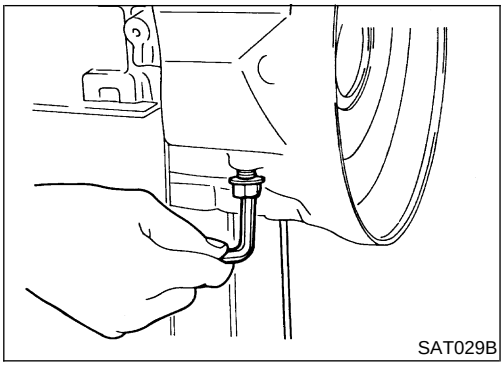
SAT029B

15. Remove brake band and band strut.
a. Loosen lock nut and remove band servo anchor end pin from transmission case.

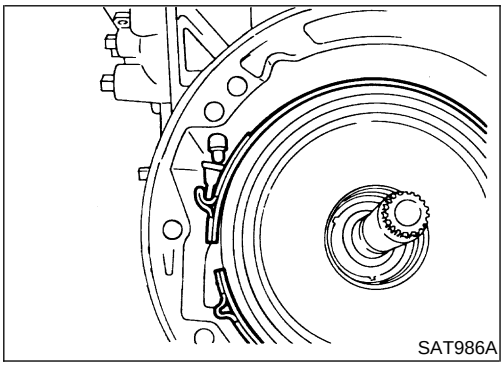
SAT986A

b. Remove brake band and band strut from transmission case.

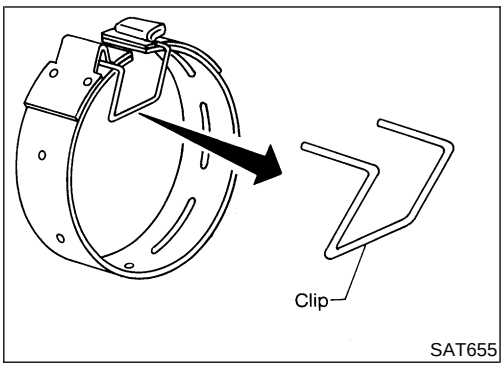

SAT655

- **To prevent brake linings from cracking or peeling, do not stretch the flexible band unnecessarily. When removing the brake band, always secure it with a clip as shown in the figure at left. Leave the clip in position after removing the brake band.**

c. Check brake band facing for damage, cracks, wear and burns.

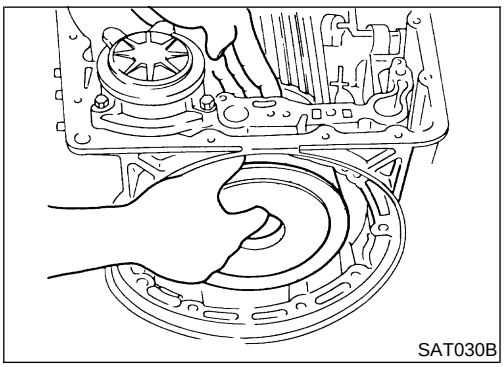
SAT030B

16. Remove front side clutch and gear components.
a. Remove clutch pack (reverse clutch, high clutch and front sun gear) from transmission case.

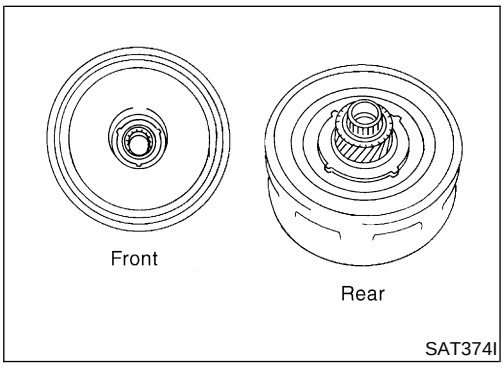

SAT374I

b. Remove front bearing race from clutch pack.
c. Remove rear bearing race from clutch pack.

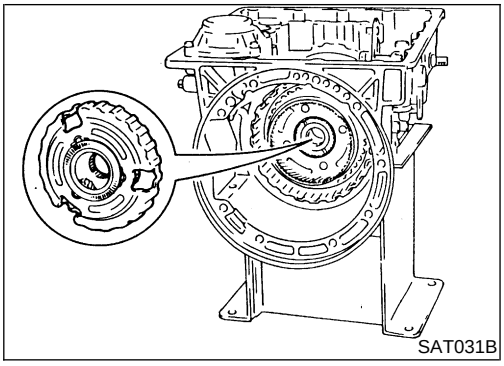
SAT031B

d. Remove front planetary carrier from transmission case.

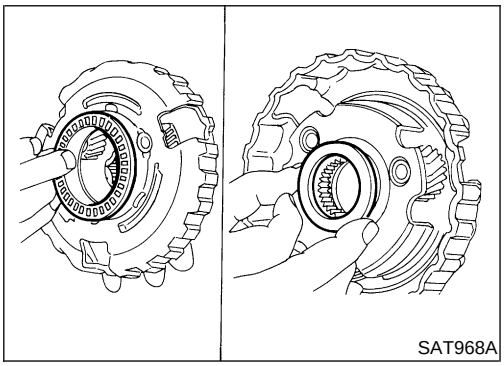
SAT968A

e. Remove front needle bearing from front planetary carrier.
f. Remove rear bearing from front planetary carrier.

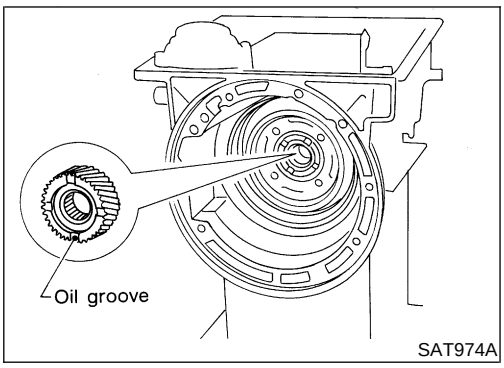

SAT974A

g. Remove rear sun gear from transmission case.

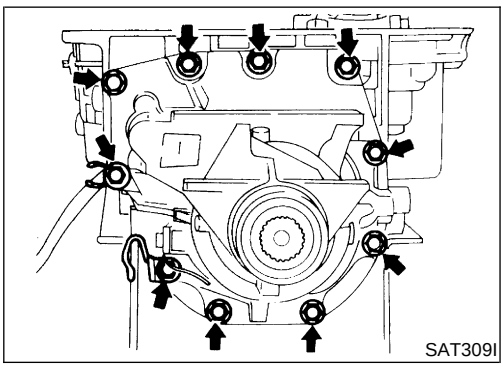
SAT309I

17. Remove rear extension case.
a. Remove rear extension case from transmission case.
b. Remove rear extension gasket from transmission case.

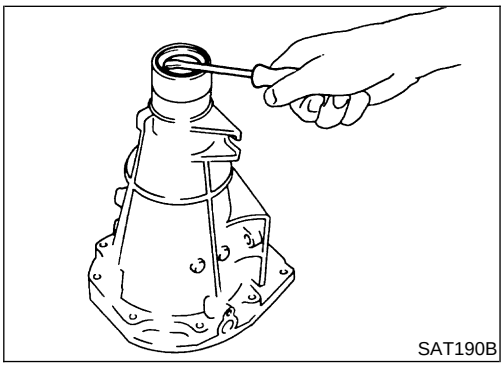
SAT190B

c. Remove oil seal from rear extension case.
- **Do not remove oil seal unless it is to be replaced.**

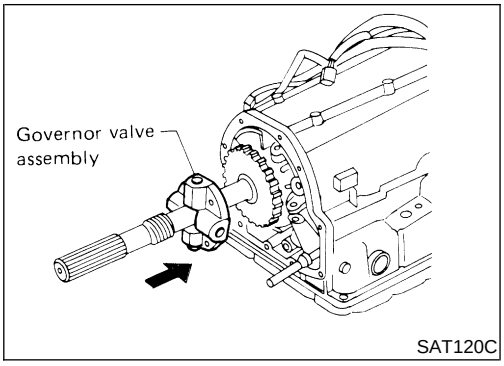

18. Remove output shaft and parking gear.
a. Remove governor valve assembly.

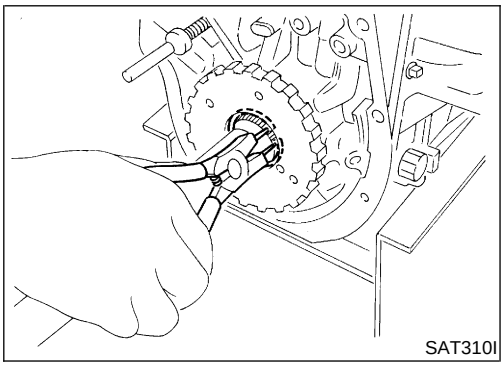

b. Remove rear snap ring from output shaft.

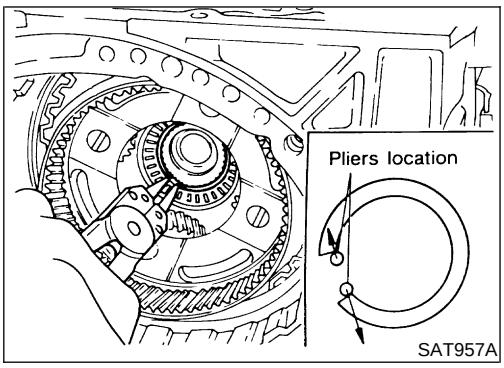

c. Slowly push output shaft all the way forward.
- **Do not use excessive force.**

d. Remove snap ring from output shaft.

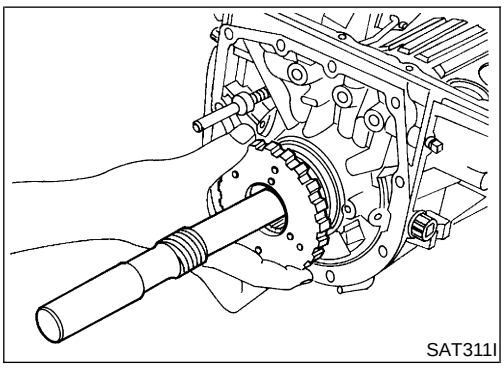

e. Remove output shaft and parking gear as a unit from transmission case.
f. Remove parking gear from output shaft.

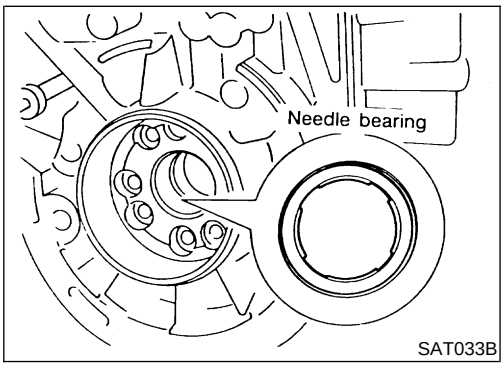

g. Remove needle bearing from transmission case.

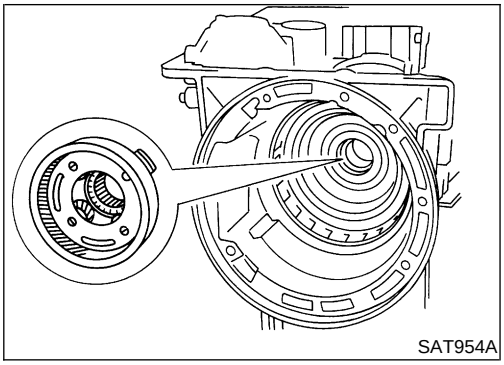
SAT954A

19. Remove rear side clutch and gear components.
a. Remove front internal gear.

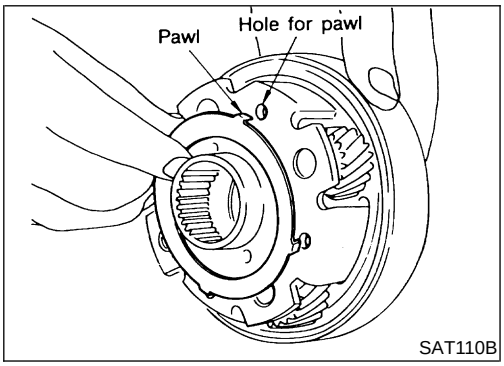

SAT110B

b. Remove bearing race from front internal gear.

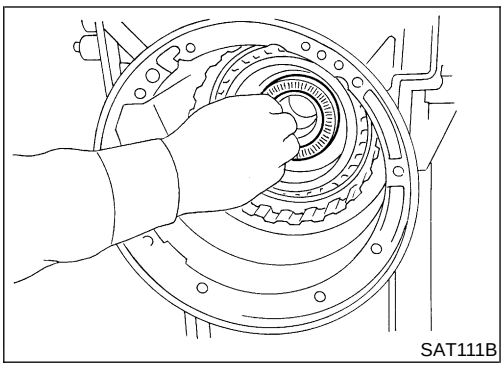
SAT111B

c. Remove needle bearing from rear internal gear.

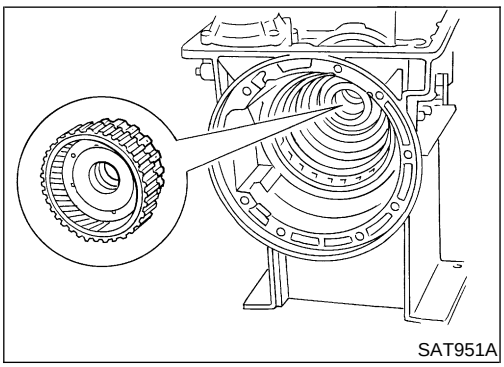
SAT951A

d. Remove rear internal gear, forward clutch hub and overrun clutch hub as a set from transmission case.

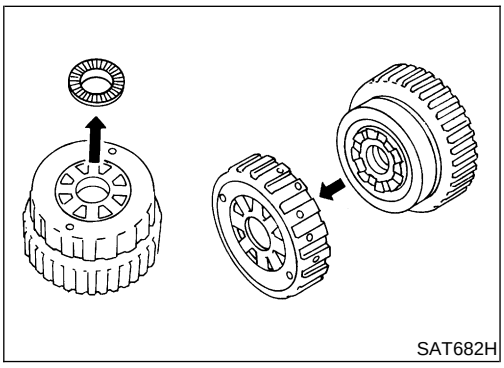
SAT682H

e. Remove needle bearing from overrun clutch hub.
f. Remove overrun clutch hub from rear internal gear and forward clutch hub.

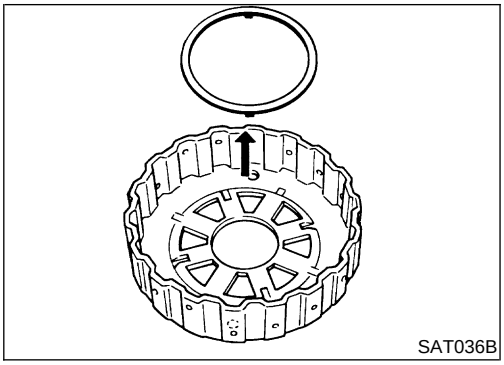
SAT036B

g. Remove thrust washer from overrun clutch hub.

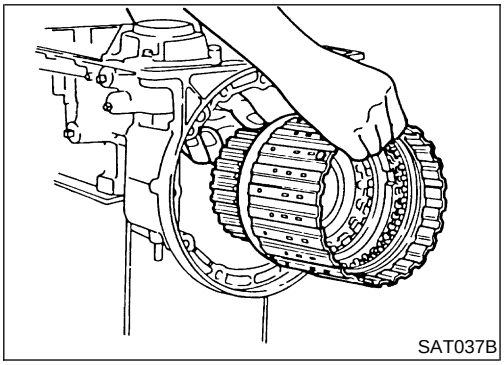
SAT037B

h. Remove forward clutch assembly from transmission case.

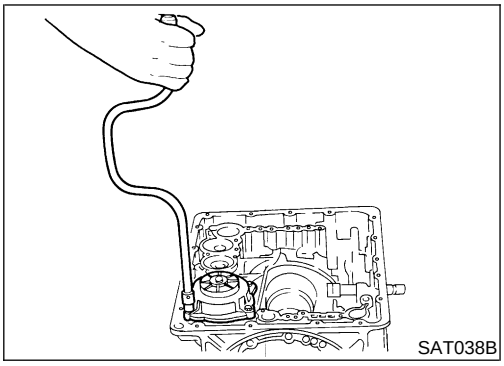
SAT038B

20. Remove band servo and accumulator components.
a. Remove band servo retainer from transmission case.

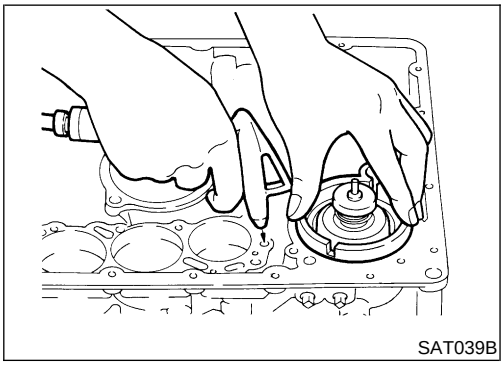
SAT039B

b. Apply compressed air to oil hole until band servo piston comes out of transmission case.
- **Hold piston with a rag and gradually direct air to oil hole.**

c. Remove return springs.

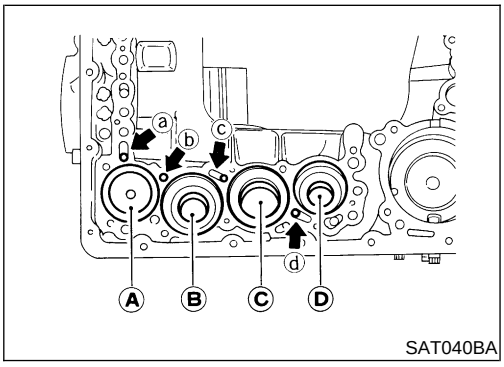

SAT040BA

d. Remove springs from accumulator pistons **A**, **B**, **C** and **D**.
e. Apply compressed air to each oil hole until piston comes out.
- **Hold piston with a rag and gradually direct air to oil hole.**

Identification of accumulator pistons	A	B	C	D
Identification of oil holes	a	b	c	d

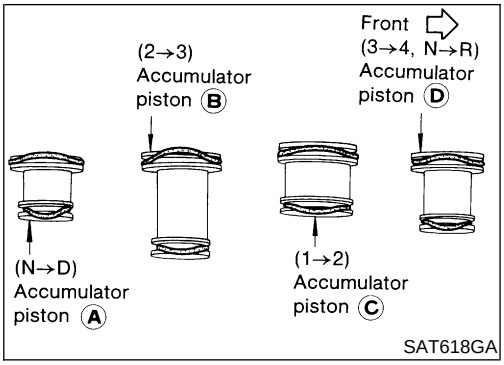

f. Remove O-ring from each piston.

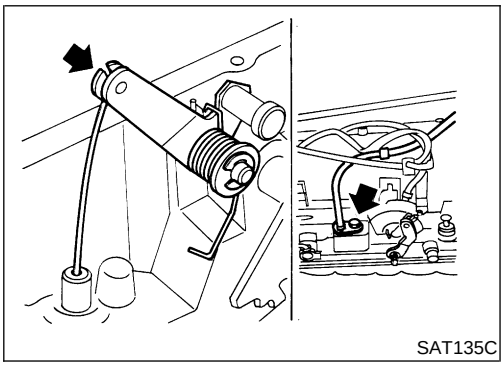

21. Remove throttle wire components if necessary.
a. Remove throttle wire from A/T assembly.

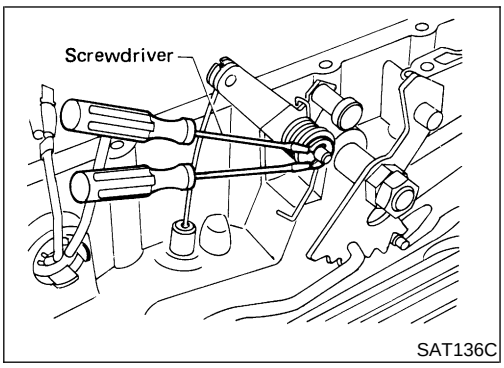

b. Remove throttle lever shaft E-ring.
c. Remove return spring.
d. Remove throttle lever.

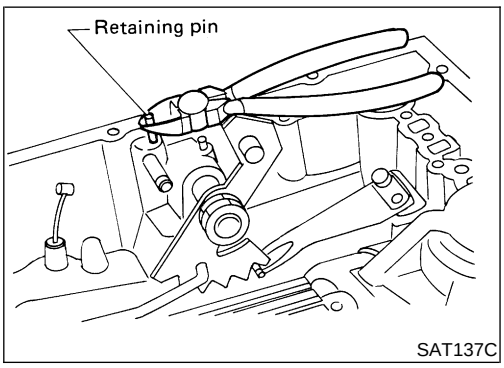

e. Remove throttle lever shaft retaining pin and throttle lever shaft.

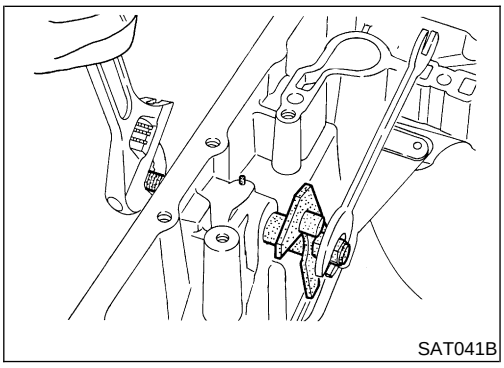

22. Remove manual shaft components, if necessary.
a. Hold width across flats of manual shaft (outside the transmission case) and remove lock nut from shaft.

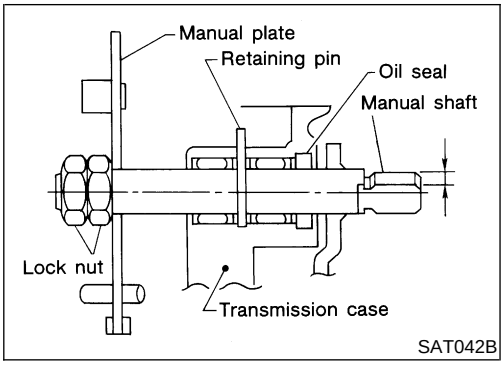

b. Remove retaining pin from transmission case.

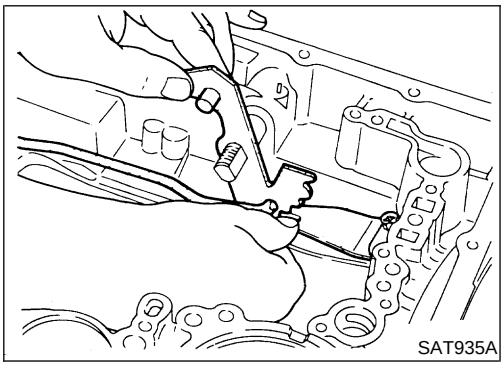

c. While pushing detent spring down, remove manual plate and parking rod from transmission case.

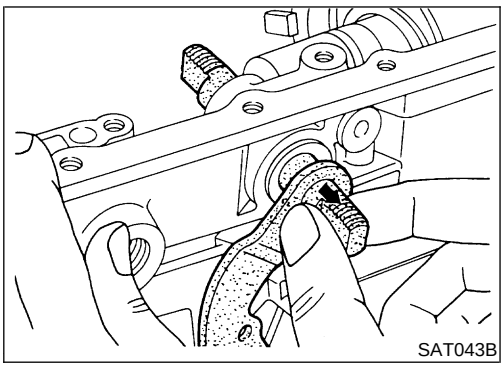

d. Remove manual shaft from transmission case.

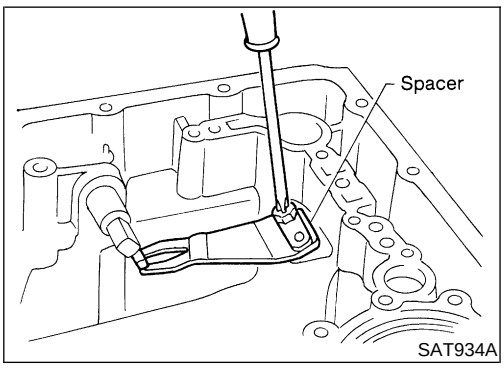

e. Remove spacer and detent spring from transmission case.

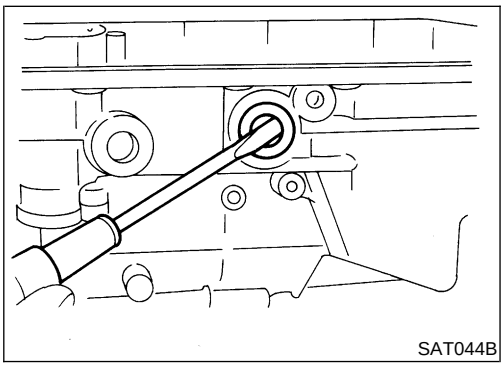

f. Remove oil seal from transmission case.

Oil Pump

COMPONENTS

NEAT0435

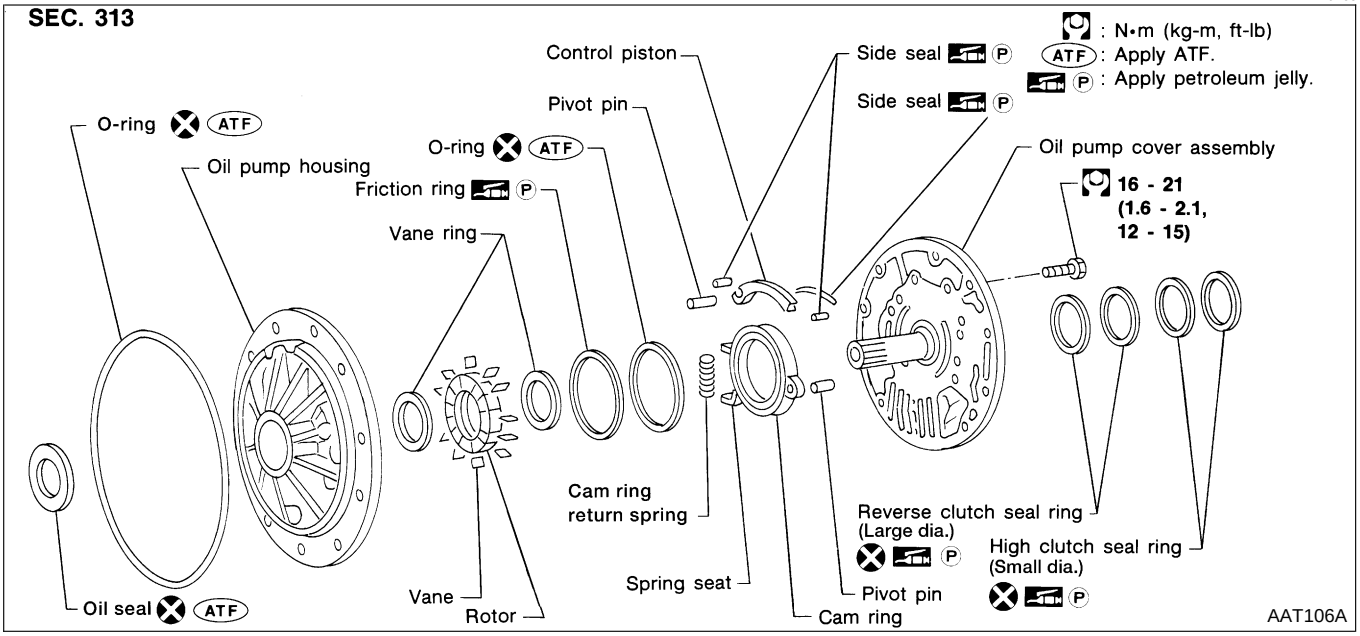

DISASSEMBLY

NEAT0436

1. Loosen bolts in numerical order and remove oil pump cover.

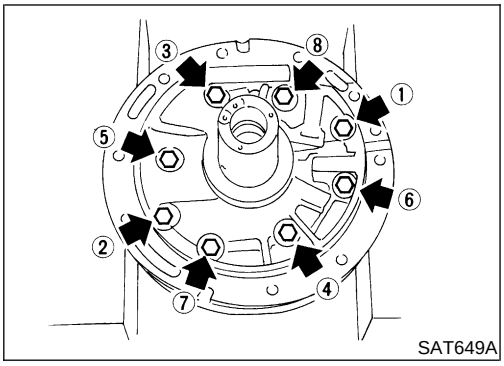

2. Remove rotor, vane rings and vanes.

- **Inscribe a mark on back of rotor for identification of fore-aft direction when reassembling rotor. Then remove rotor.**

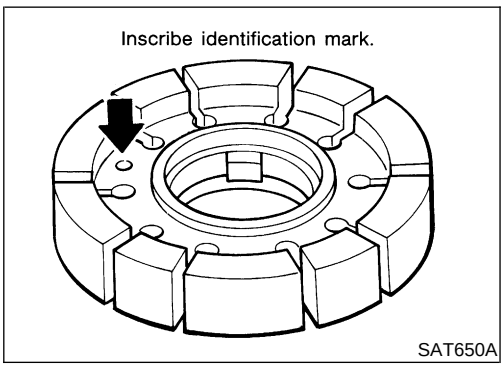

3. While pushing on cam ring, remove pivot pin.

- **Be careful not to scratch oil pump housing.**

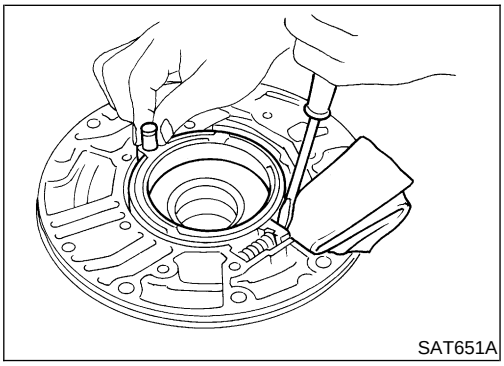

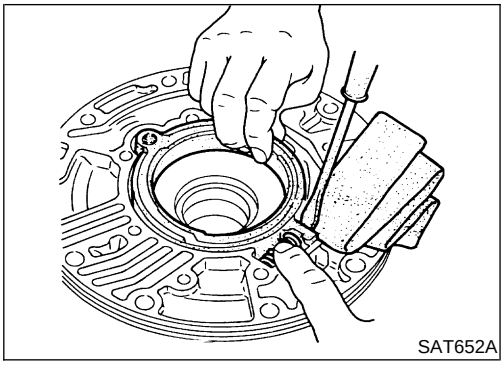
SAT652A

4. While holding cam ring and cam ring return spring, lift out cam ring return spring.
- **Be careful not to damage oil pump housing.**
- **Hold cam ring return spring to prevent it from jumping.**

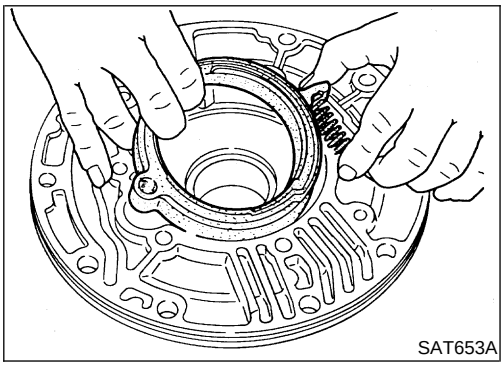
SAT653A

5. Remove cam ring and cam ring return spring from oil pump housing.

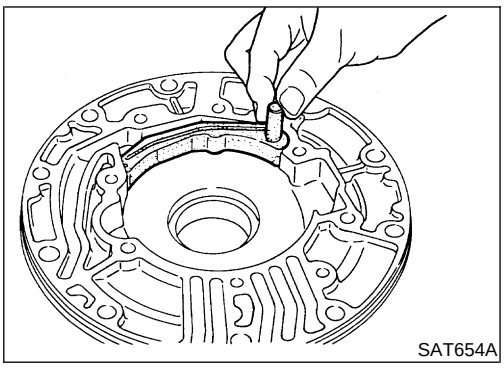
SAT654A

6. Remove pivot pin from control piston and remove control piston assembly.

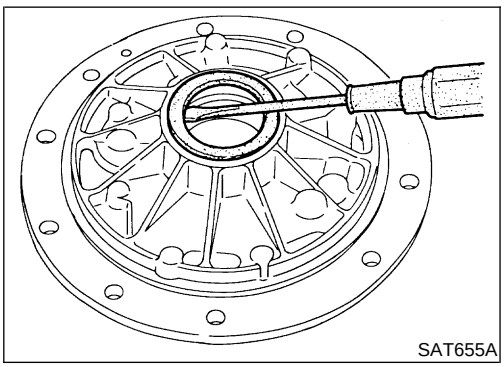
SAT655A

7. Remove oil seal from oil pump housing.
- **Be careful not to scratch oil pump housing.**

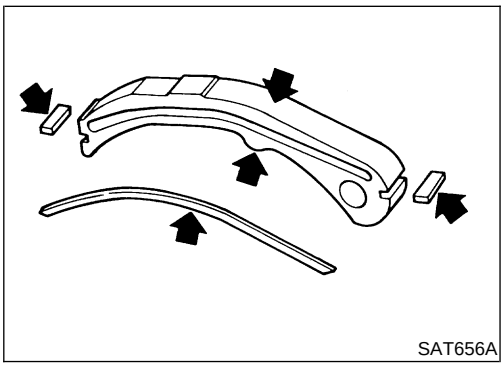
SAT656A

INSPECTION

NEAT0437

Oil Pump Cover, Rotor, Vanes, Control Piston, Side Seals, Cam Ring and Friction Ring

NEAT0437S01

- Check for wear and damage.

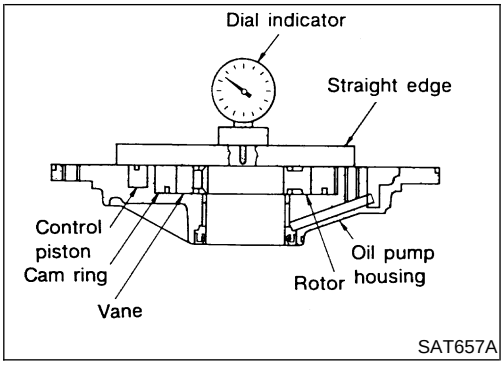

SAT657A

Side Clearances

NEAT0437S02

- Measure side clearances between end of oil pump housing and cam ring, rotor, vanes and control piston in at least four places along their circumferences. Maximum measured values should be within specified ranges.
- **Before measuring side clearance, check that friction rings, O-ring, control piston side seals and cam ring return spring are removed.**

  Standard clearance (Cam ring, rotor, vanes and control piston):

  Refer to "Oil Pump and Low One-way Clutch", AT-145.
- If not within standard clearance, replace oil pump assembly except oil pump cover assembly.

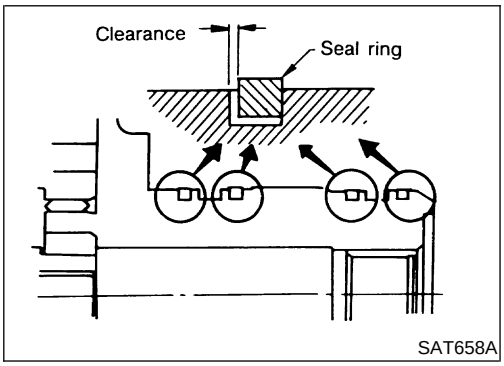

SAT658A

Seal Ring Clearance

NEAT0437S03

- Measure clearance between seal ring and ring groove.

  Standard clearance:

  0.10 - 0.25 mm (0.0039 - 0.0098 in)

  Wear limit:

  0.25 mm (0.0098 in)
- If not within wear limit, replace oil pump cover assembly.

ASSEMBLY

NEAT0438

1. Drive oil seal into oil pump housing.
- **Apply ATF to outer periphery and lip surface.**

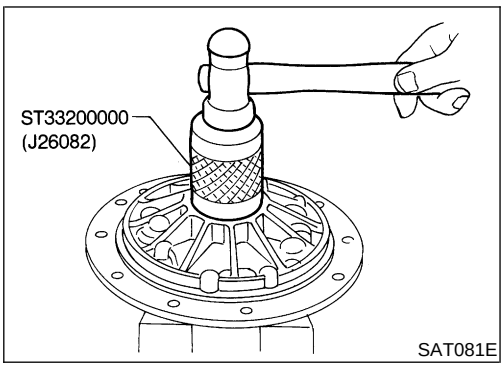

SAT081E

2. Install cam ring in oil pump housing as follows:

a. Install side seal on control piston.
- **Pay attention to its direction — black surface faces toward control piston.**
- **Apply petroleum jelly to side seal.**

b. Install control piston on oil pump.

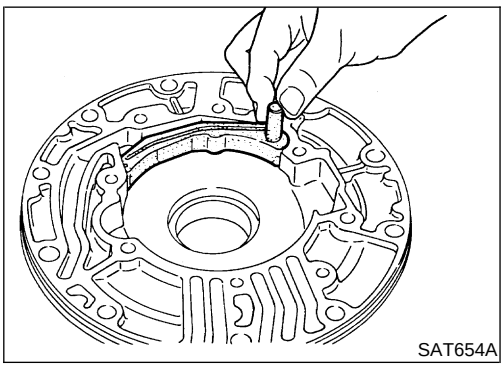
SAT654A

c. Install O-ring and friction ring on cam ring.
- **Apply petroleum jelly to O-ring.**

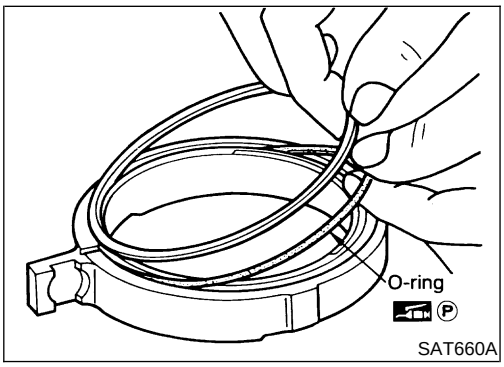

SAT660A

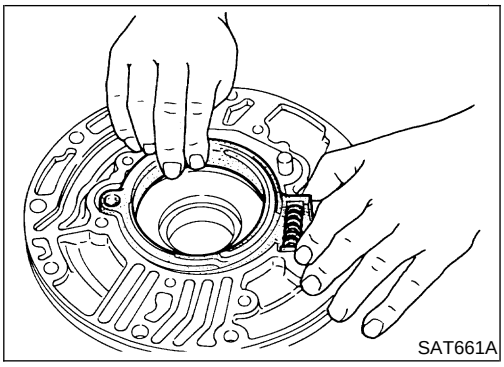
SAT661A

d. Assemble cam ring, cam ring return spring and spring seat. Install spring by pushing it against pump housing.

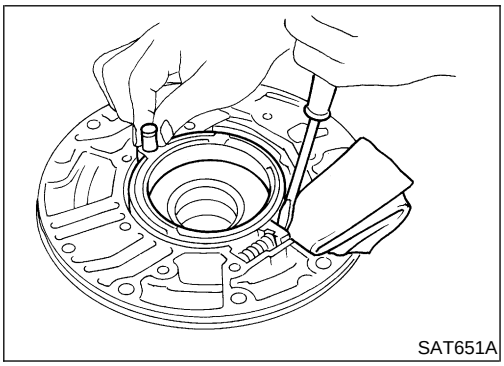
SAT651A

e. While pushing on cam ring, install pivot pin.

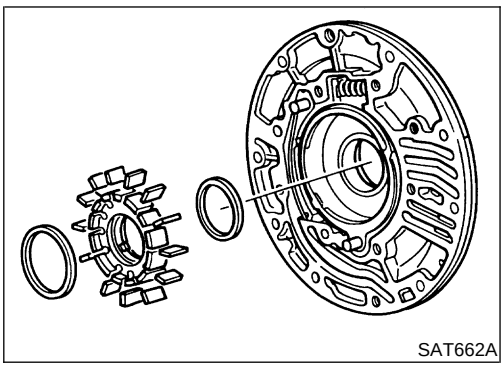
SAT662A

3. Install rotor, vanes and vane rings.
- **Pay attention to direction of rotor.**

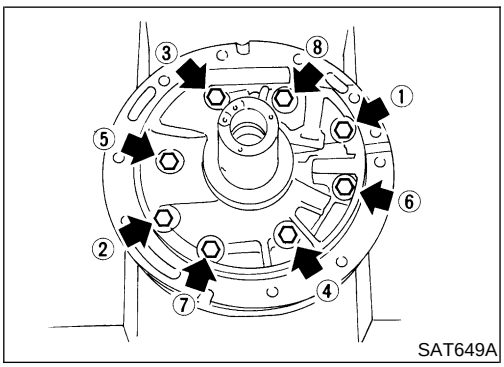

SAT649A

4. Install oil pump housing and oil pump cover.
a. Wrap masking tape around splines of oil pump cover assembly to protect seal. Position oil pump cover assembly in oil pump housing assembly, then remove masking tape.
b. Tighten bolts in numerical order as shown.

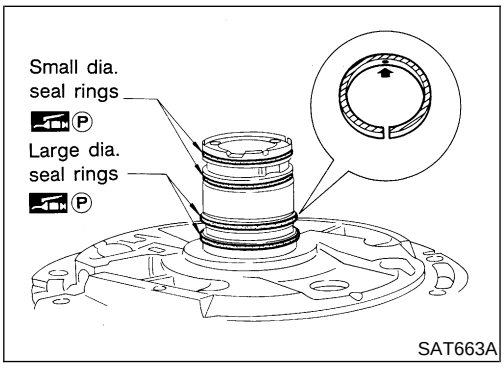

SAT663A

5. Install seal rings carefully after packing ring grooves with petroleum jelly. Press rings down into jelly for a close fit.
- **Seal rings come in two different diameters. Check fit carefully in each groove.**
  Small dia. seal ring:
  No mark
  Large dia. seal ring:
  Yellow mark in area shown by arrow
- **Do not spread gap of seal ring excessively while installing. It may deform ring.**

Control Valve Assembly

COMPONENTS

NEAT0439

SEC. 317

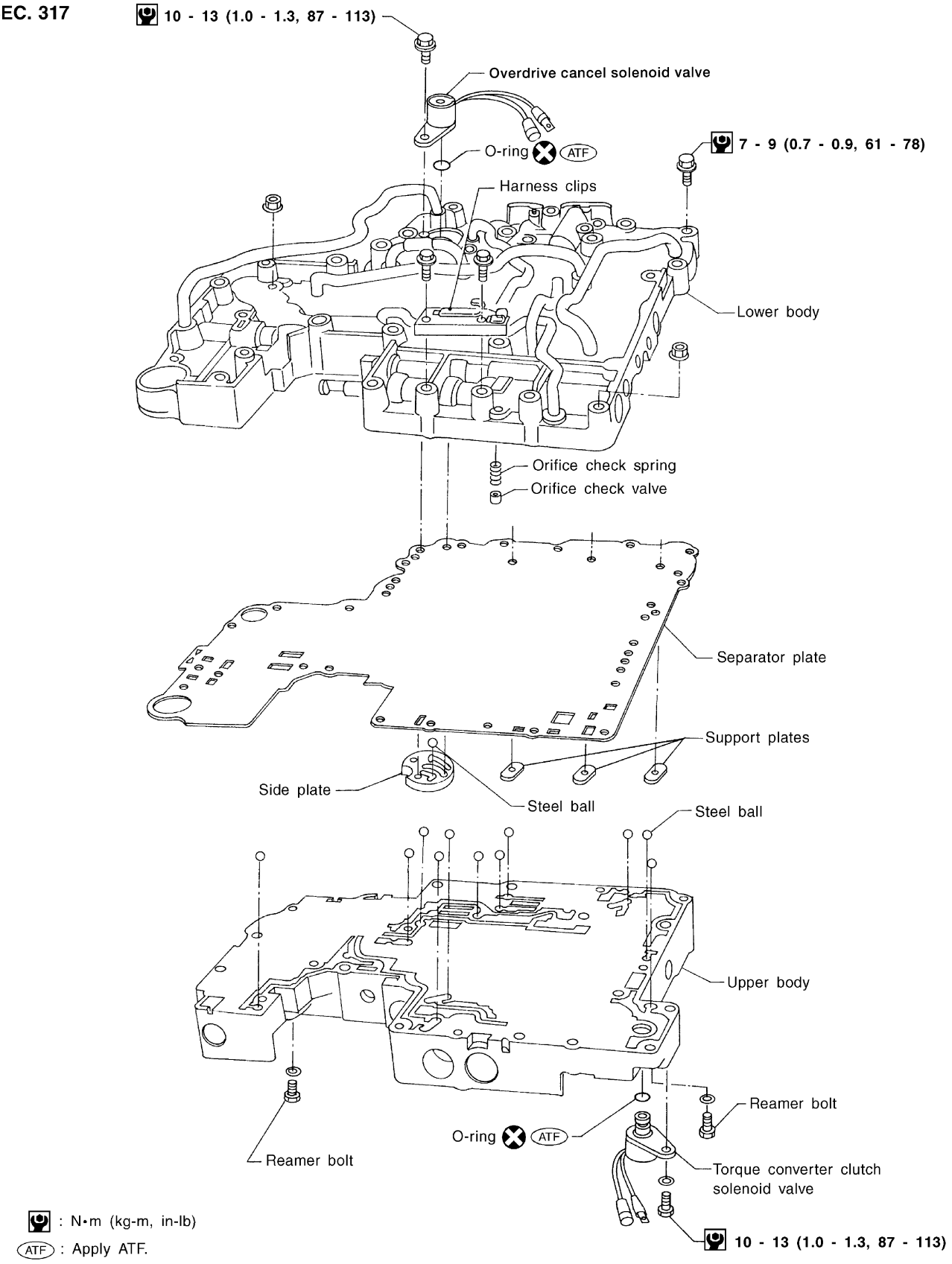

: N•m (kg-m, in-lb)

ATF : Apply ATF.

AAT107A

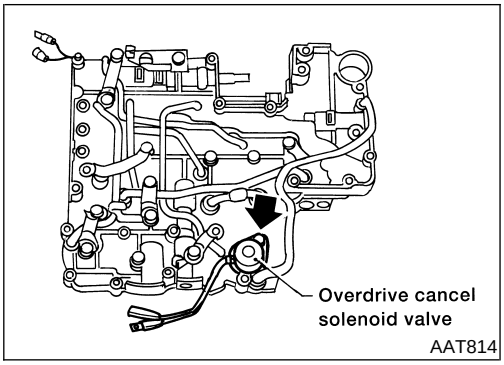

AAT814

DISASSEMBLY

NEAT0440

1. Remove solenoids.

a. Remove overdrive cancel solenoid valve and side plate from lower body.

b. Remove O-ring from solenoid.

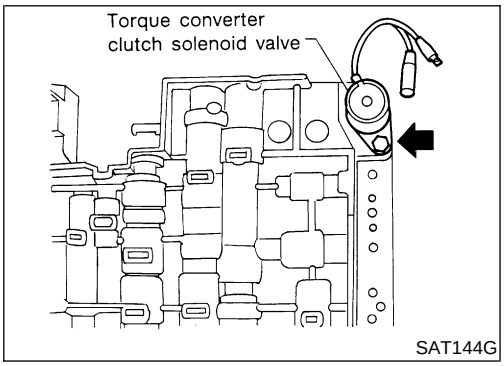

SAT144G

c. Remove torque converter clutch solenoid valve from upper body.

d. Remove O-ring from solenoid valve.

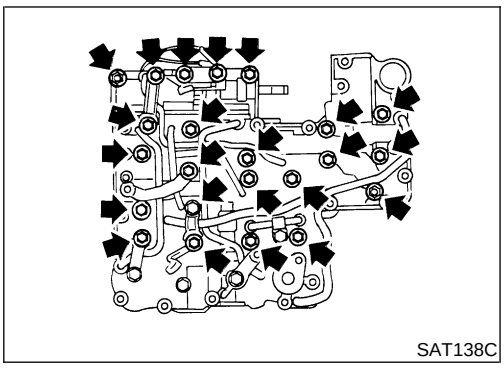
SAT138C

2. Disassemble upper and lower bodies.

a. Place upper body facedown, and remove bolts, reamer bolts, side plate and support plates.

b. Remove lower body and separator plate as a unit from upper body.

- **Be careful not to drop orifice check valve, spring and steel balls.**

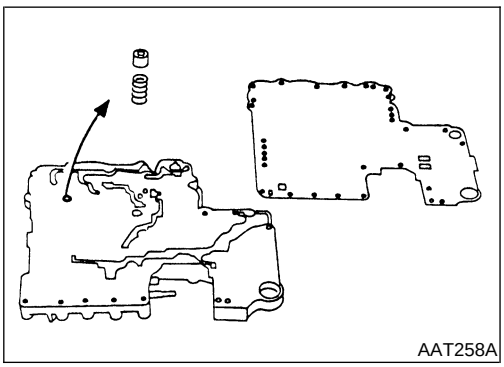
AAT258A

c. Place lower body facedown, and remove separator plate.

d. Remove orifice check valve and orifice check spring.

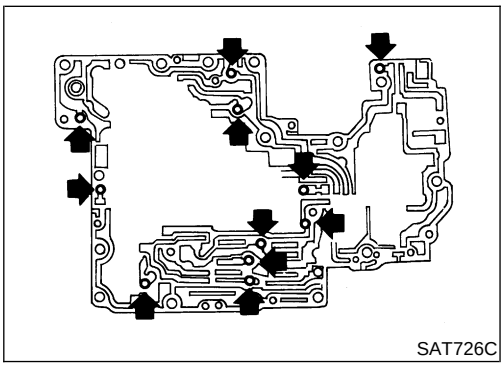
SAT726C

e. Check to see that steel balls are properly positioned in upper body and side plate, then remove them from upper body.

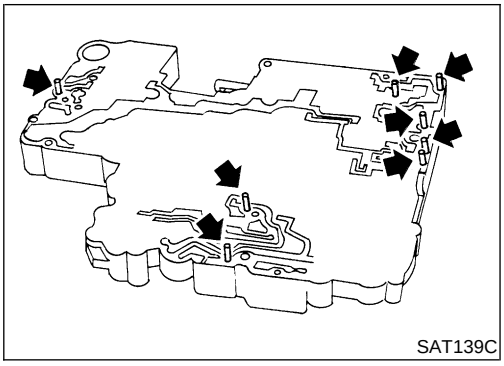
SAT139C

INSPECTION

NEAT0441

Lower and Upper Bodies

NEAT0441S01

- Check to see that there are pins and retainer plates in lower body.

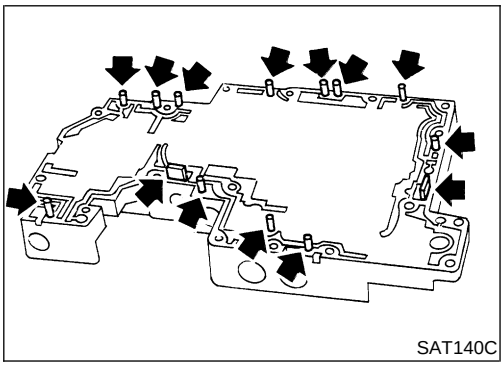
SAT140C

- Check to see that there are pins and retainer plates in upper body.
- **Be careful not to lose these parts.**

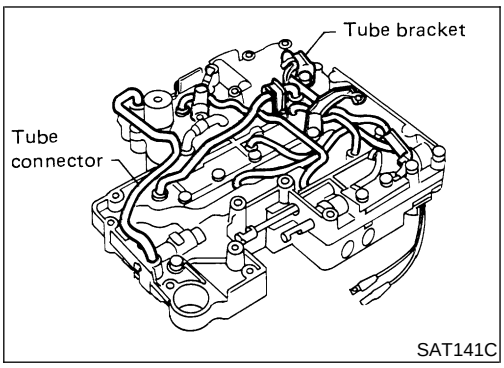

SAT141C

- Check to make sure that oil circuits are clean and free from damage.
- Check tube brackets and tube connectors for damage.

Separator Plates

NEAT0441S02

- Check to make sure that separator plate is free of damage and not deformed and oil holes are clean.

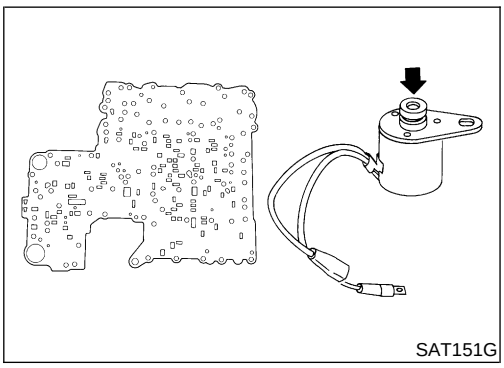
SAT151G

Overdrive Cancel Solenoid Valve and Torque Converter Clutch Solenoid Valve

NEAT0441S03

- Check that filter is not clogged or damaged.
- Measure resistance. Refer to "Component Inspection", AT-46.

ASSEMBLY

NEAT0442

1. Install upper and lower bodies.

a. Position upper body with oil circuit facing up. Install steel balls in their proper positions.

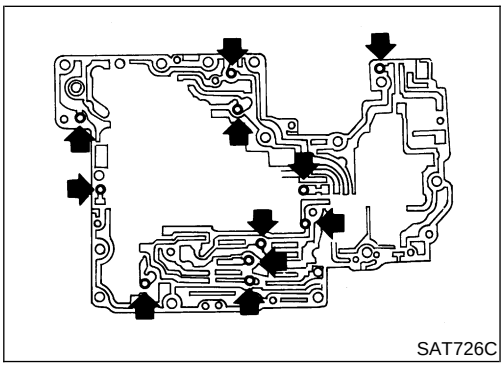
SAT726C

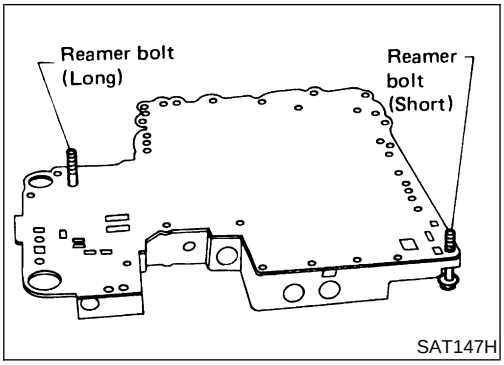

b. Install reamer bolts from bottom of upper body.

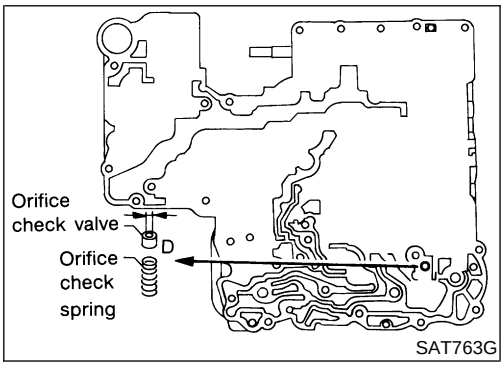

c. Position lower body with oil circuit facing up. Install orifice check spring, orifice check valve.

D: mm (in)
2.0 (0.079)

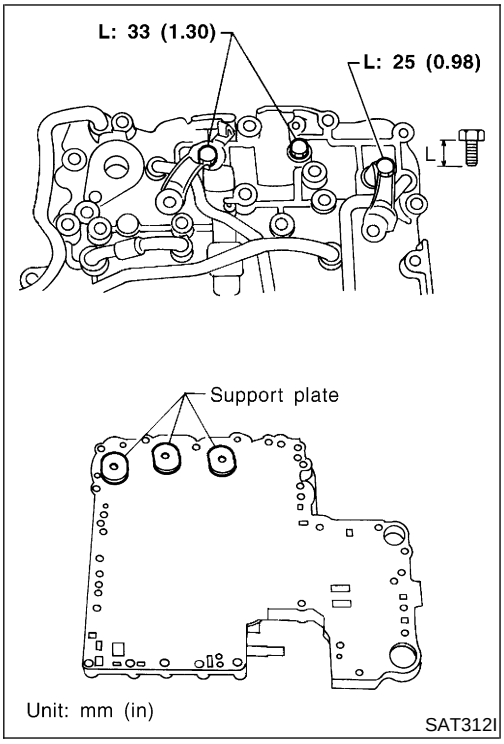

d. Install separator plate on lower body.
e. Temporarily install support plates, side plate (with steel ball) and tube brackets.

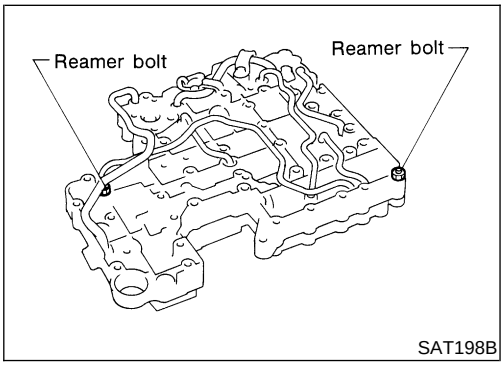

f. Temporarily assemble lower and upper bodies, using reamer bolt as a guide.

- **Be careful not to dislocate or drop steel balls, orifice check spring and orifice check valve.**

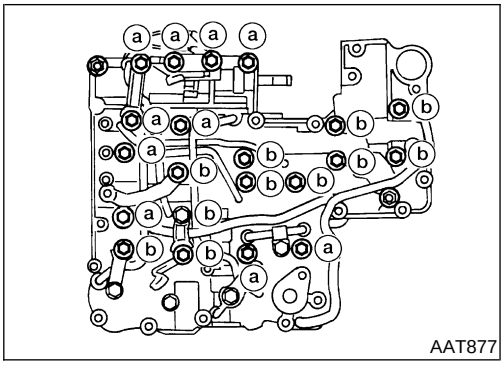

AAT877

g. Install and temporarily tighten bolts and tube brackets in their proper locations.

Bolt length and location:

	Bolt symbol	
	a	**b**
Bolt length mm (in)	45 (1.77)	33 (1.30)

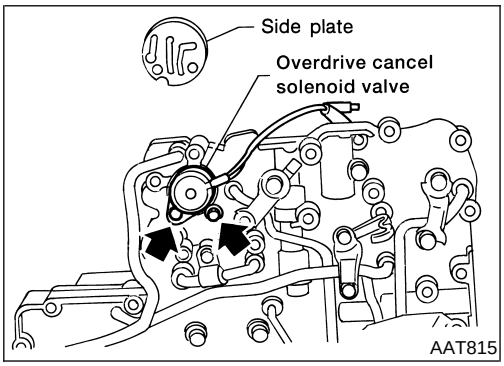

AAT815

2. Install solenoids.

a. Attach O-ring and install overdrive cancel solenoid valve and side plate onto lower body.

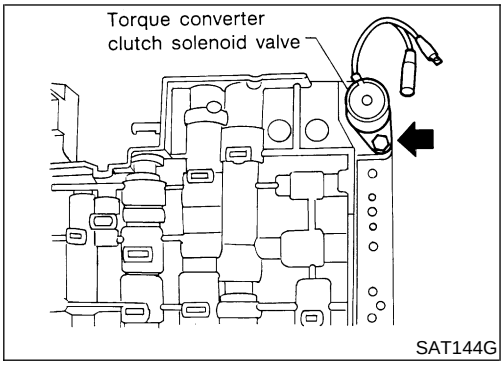

SAT144G

b. Attach O-ring and install torque converter clutch solenoid valve onto upper body.

3. Tighten bolt.

Control Valve Upper Body

COMPONENTS

NEAT0443

SEC. 317

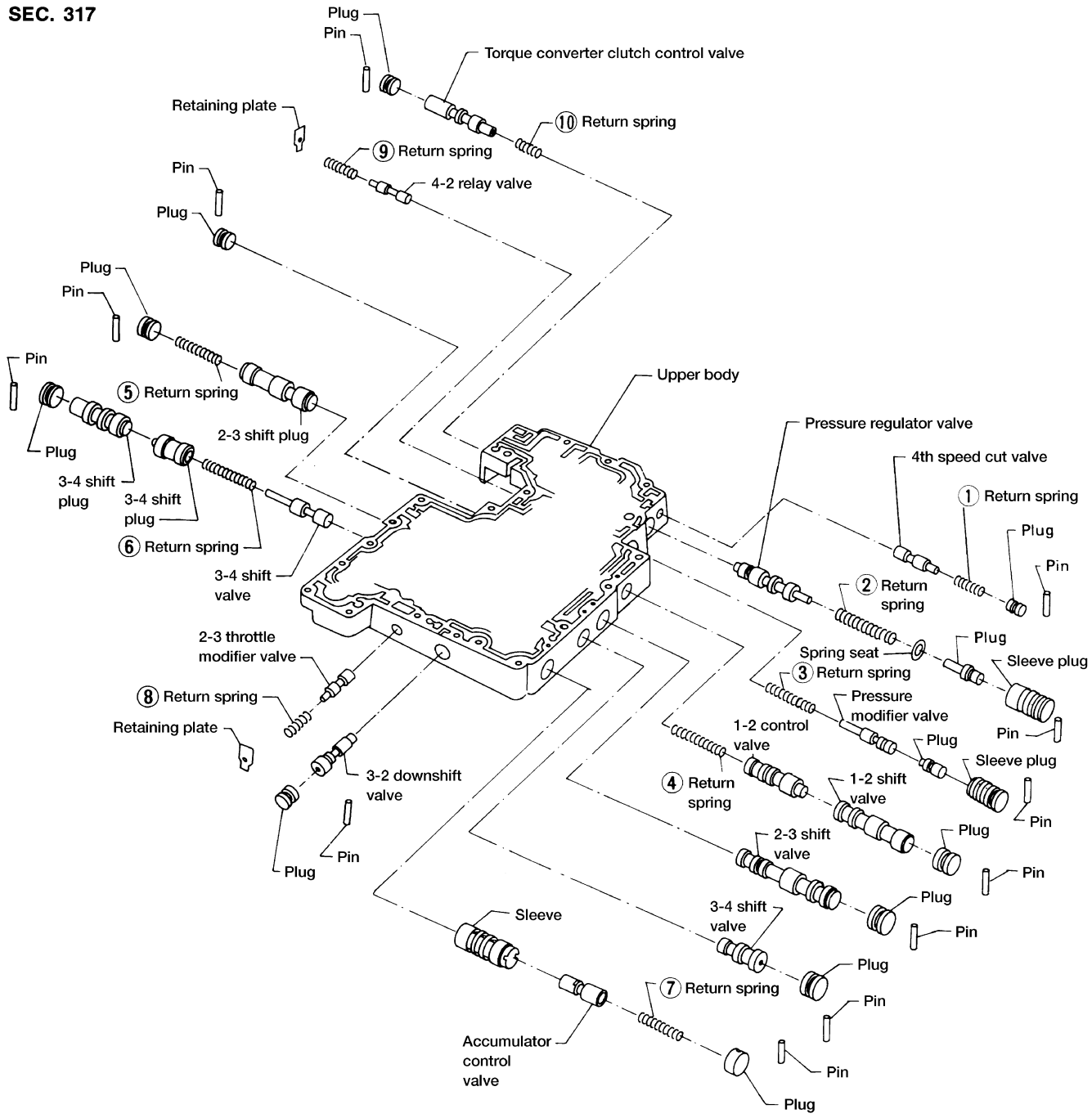

AAT040A

Apply ATF to all components before their installation.

Numbers preceding valve springs correspond with those shown in Return Springs Chart. Refer to “Return Springs”, AT-142.

DISASSEMBLY

NEAT0444

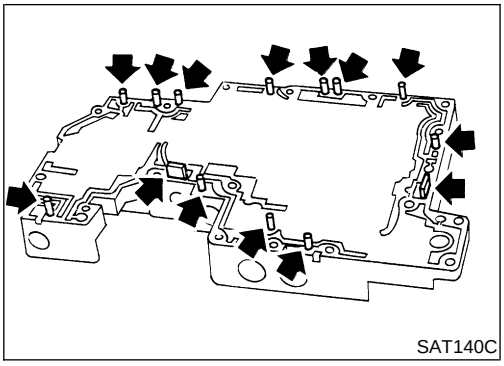
SAT140C

1. Remove valves at parallel pins.
- **Do not use a magnetic pick-up tool.**

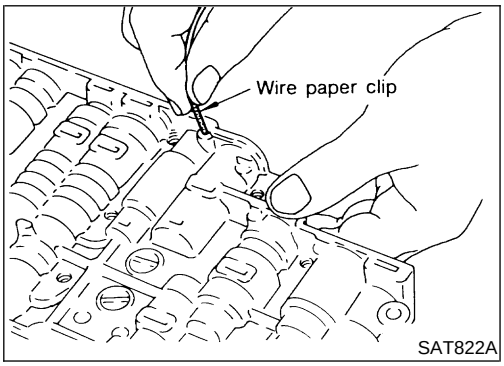

SAT822A

a. Use a wire paper clip to push out parallel pins.

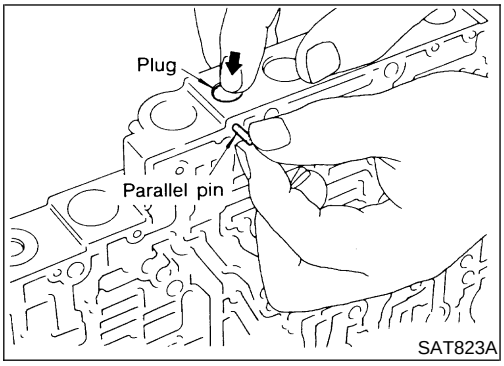

SAT823A

b. Remove parallel pins while pressing their corresponding plugs and sleeves.
- **Remove plug slowly to prevent internal parts from jumping out.**

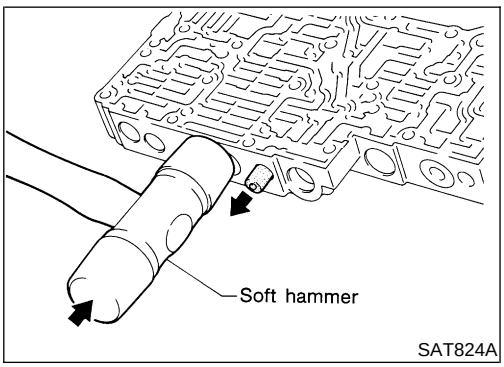

SAT824A

c. Place mating surface of valve facedown, and remove internal parts.
- **If a valve is hard to remove, place valve body facedown and lightly tap it with a soft hammer.**
- **Be careful not to drop or damage valves and sleeves.**

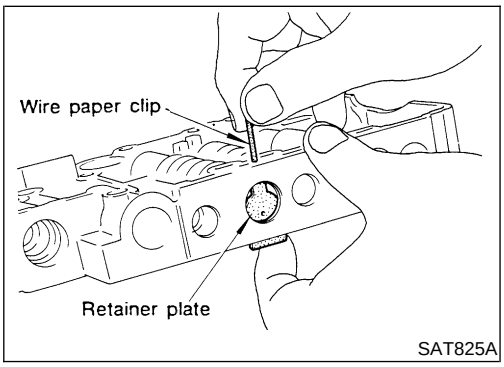

SAT825A

2. Remove valves at retainer plates.
a. Pry out retainer plate with wire paper clip.

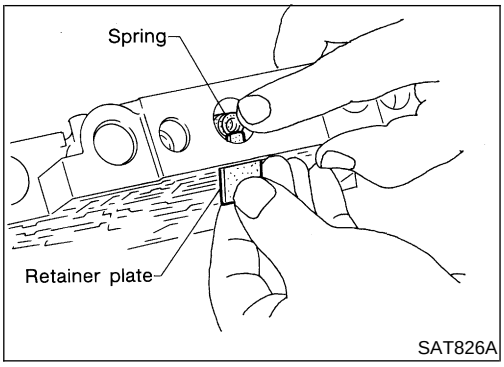

SAT826A

b. Remove retainer plates while holding spring.

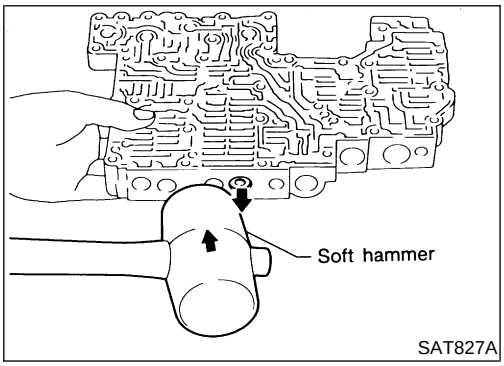

SAT827A

c. Place mating surface of valve facedown, and remove internal parts.

- **If a valve is hard to remove, lightly tap valve body with a soft hammer.**
- **Be careful not to drop or damage valves, sleeves, etc.**

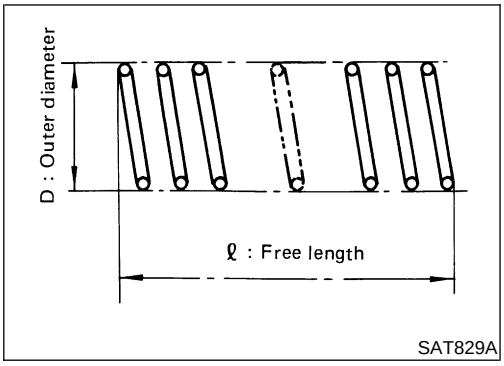

SAT829A

INSPECTION

NEAT0445

Valve Springs

NEAT0445S01

- Measure free length and outer diameter of each valve spring. Also check for damage or deformation.

  Inspection standard:

  Refer to "Return Springs", AT-142.

- Replace valve springs if deformed or fatigued.

Control Valves

NEAT0445S02

- Check sliding surfaces of valves, sleeves and plugs.

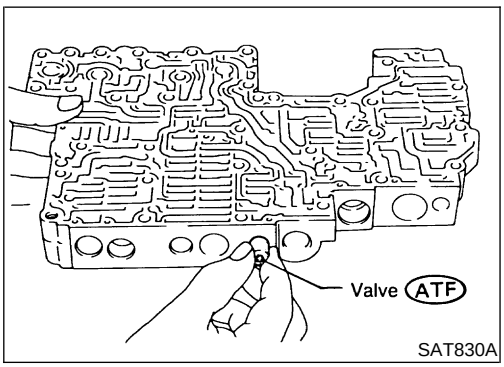

SAT830A

ASSEMBLY

NEAT0446

1. Lubricate the control valve body and all valves with ATF. Install control valves by sliding them carefully into their bores.

- **Be careful not to scratch or damage valve body.**

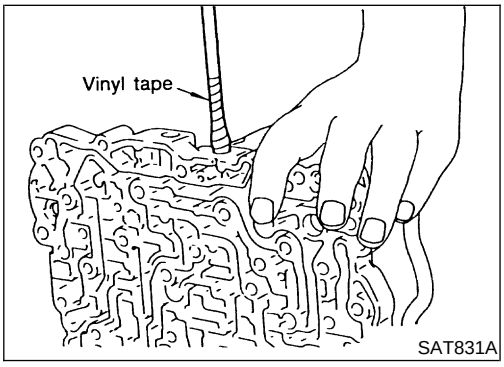

SAT831A

- Wrap a small screwdriver with vinyl tape and use it to insert the valves into proper position.

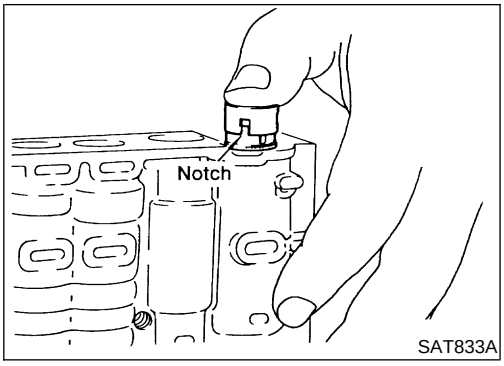

Accumulator Control Plug

NEAT0446S01

- Align protrusion of accumulator control sleeve with notch in plug.
- Align parallel pin groove in plug with parallel pin, and install accumulator control valve.

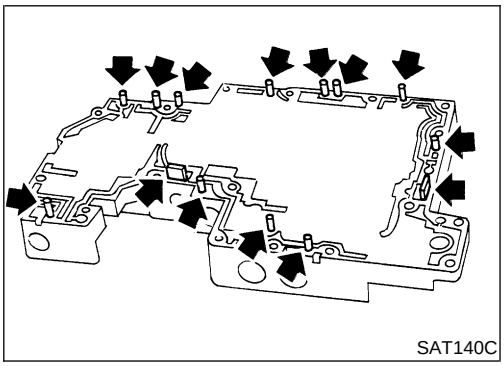

2. Install parallel pins and retainer plates.

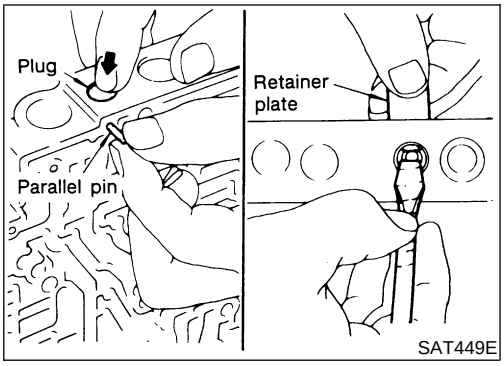

- While pushing plug, install parallel pin.
- Insert retainer plate while pushing spring.

Control Valve Lower Body

COMPONENTS

NEAT0447

SEC. 317

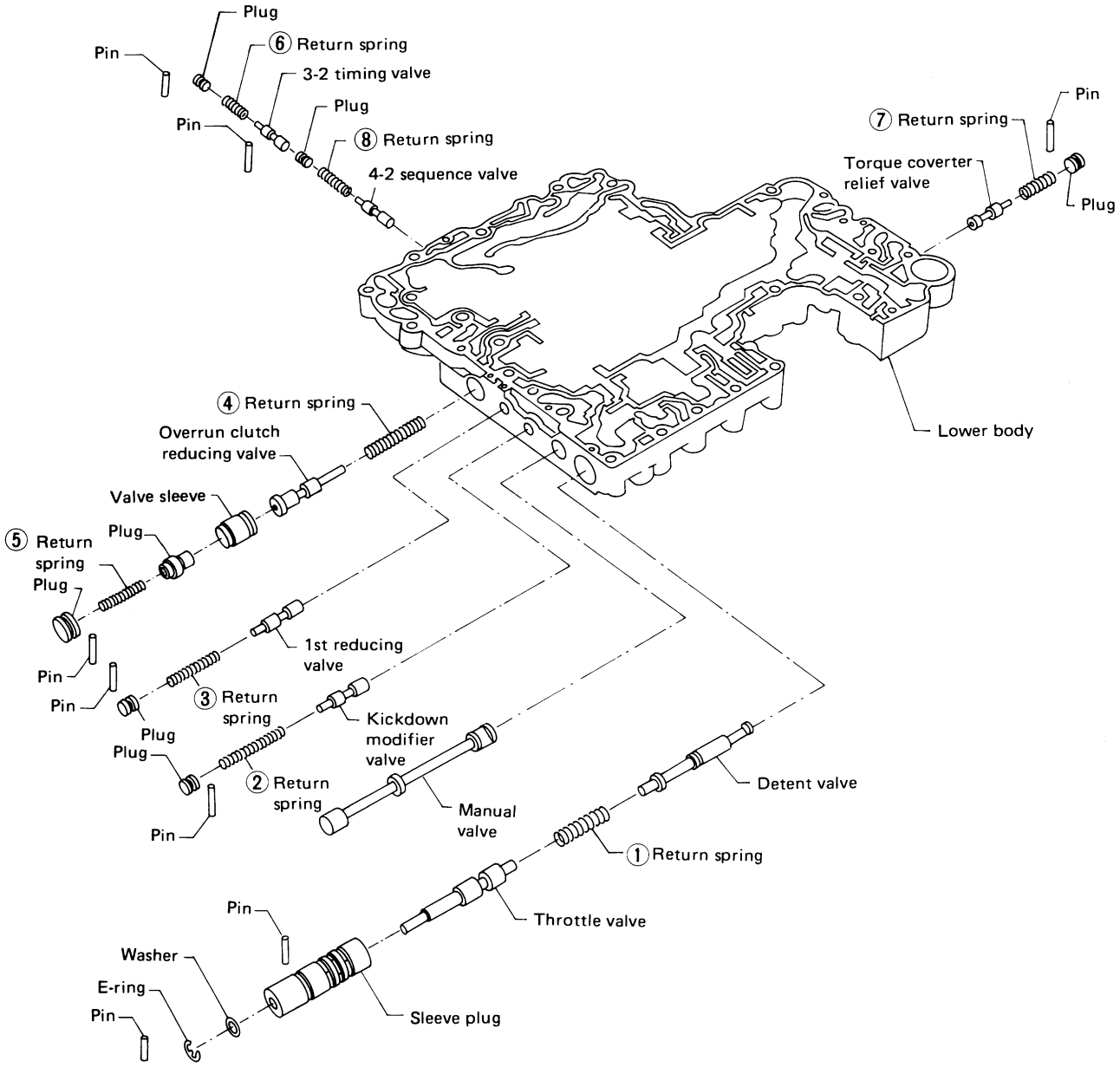

SAT752GA

Apply ATF to all components before their installation.

Numbers preceding valve springs correspond with those shown in Return Springs Chart in SDS. Refer to "Return Springs", AT-142.

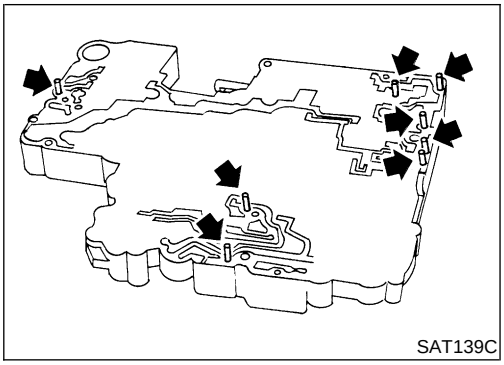
SAT139C

DISASSEMBLY

NEAT0448

1. Remove valves at parallel pins.
2. Remove valves at retainer plates.
   For removal procedures, refer to "DISASSEMBLY", AT-96.

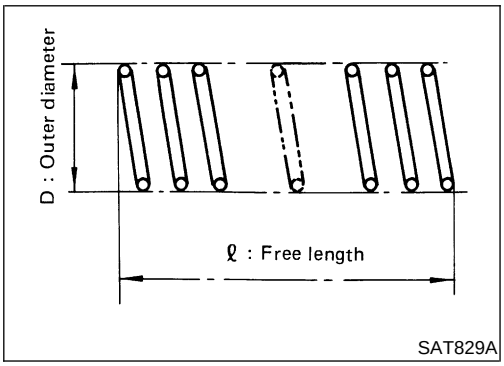

SAT829A

INSPECTION

NEAT0449

Valve Springs

NEAT0449S01

- Check each valve spring for damage and deformation. Also measure free length and outer diameter.

  Inspection standard:

  Refer to "Return Springs", AT-142.
- Replace valve springs if deformed or fatigued.

Control Valves

NEAT0449S02

- Check sliding surfaces of control valves, sleeves and plugs for damage.

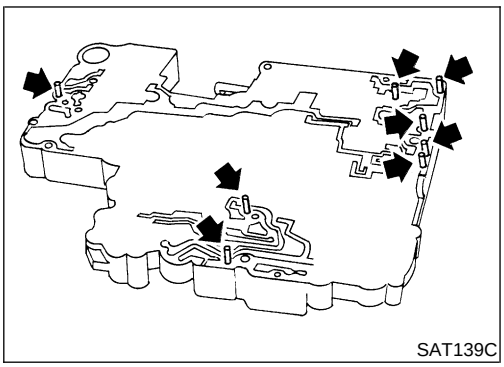
SAT139C

ASSEMBLY

NEAT0450

- Install control valves.
  For installation procedures, refer to "ASSEMBLY", AT-97.

Governor Valve Assembly

COMPONENTS

NEAT0451

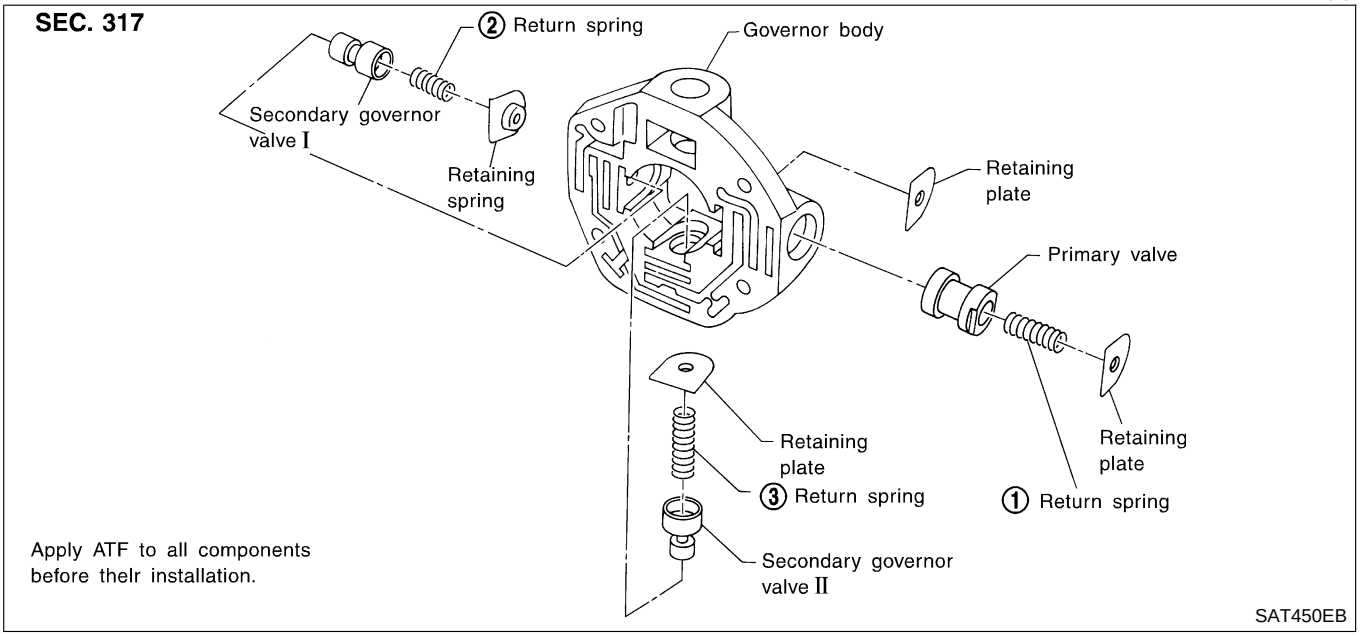

SAT450EB

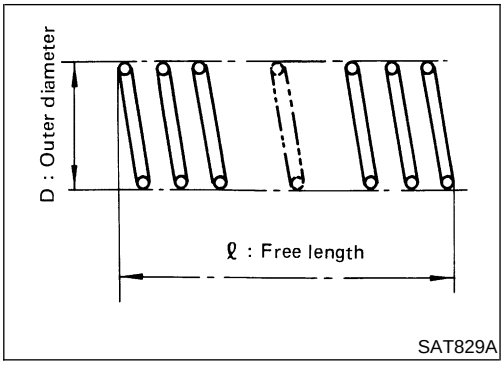

SAT829A

INSPECTION

NEAT0452

Valve Springs

NEAT0452S01

- Measure free length and outer diameter of each valve spring. Also check for damage or deformation.

Inspection standard:

Refer to "Return Springs", AT-142.

Governor Valves and Valve Body

NEAT0452S02

- Check governor valves and valve body for indication of burning or scratches.

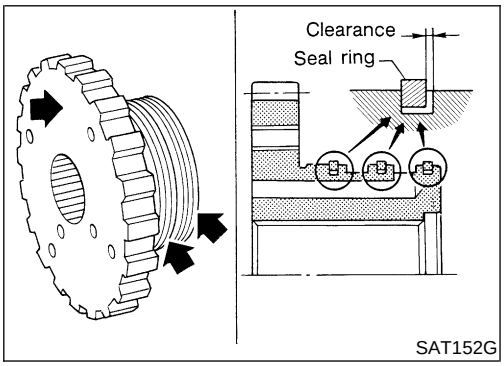

SAT152G

Parking Gear

INSPECTION

NEAT0453

- Check contacting surface of parking gear and ring groove areas for wear.
- Measure clearance between seal ring and ring groove.

Standard clearance:

0.15 - 0.40 mm (0.0059 - 0.0157 in)

Wear limit:

0.40 mm (0.0157 in)

Reverse Clutch

COMPONENTS

NEAT0454

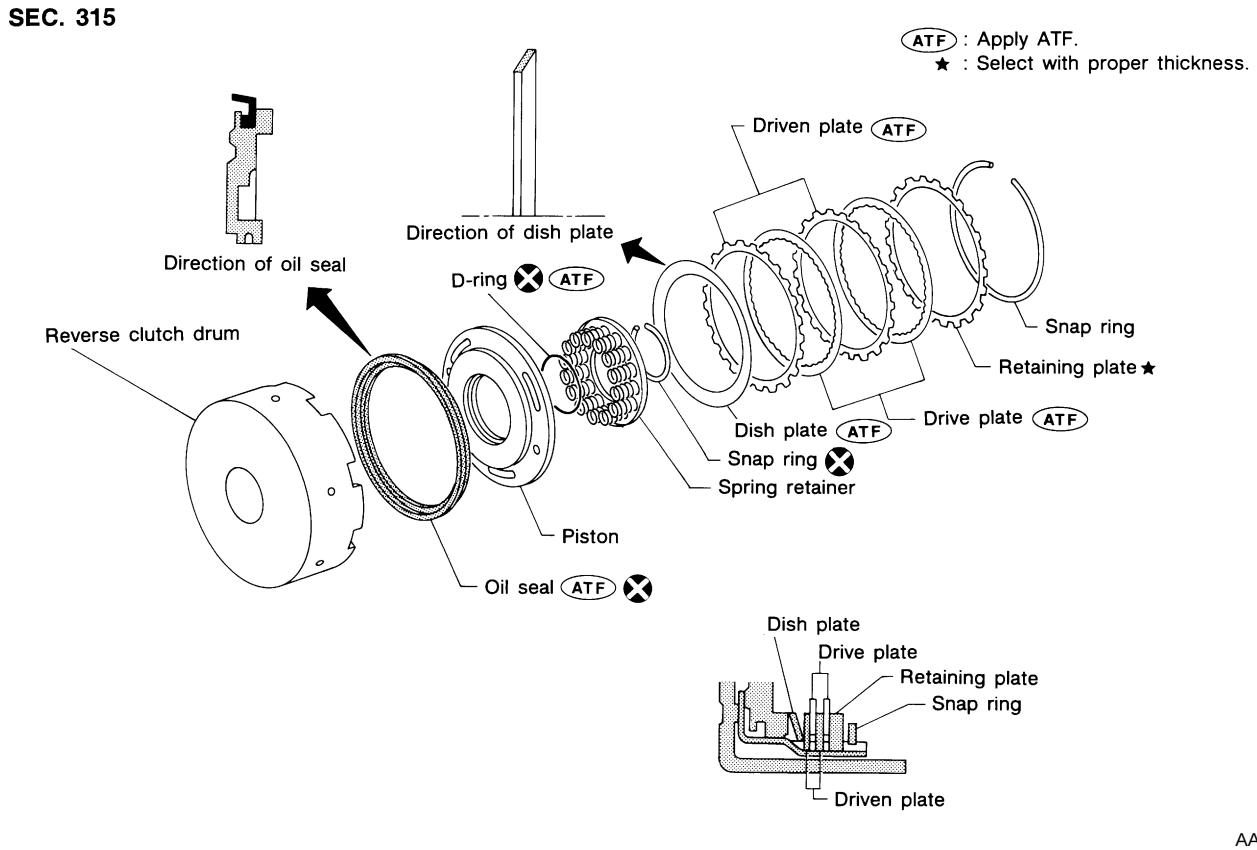

AAT108A

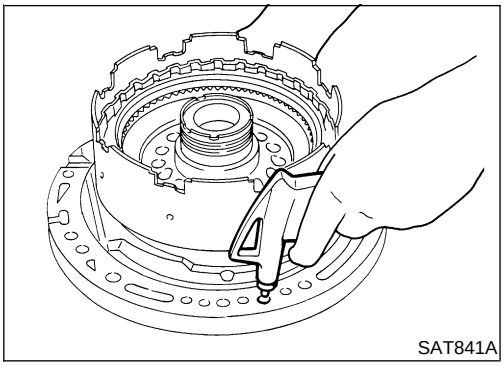
SAT841A

DISASSEMBLY

NEAT0455

1. Check operation of reverse clutch.

a. Install seal ring onto oil pump cover and install reverse clutch. Apply compressed air to oil hole.

b. Check to see that retaining plate moves to snap ring.

c. If retaining plate does not contact snap ring,

- D-ring might be damaged.
- Oil seal might be damaged.
- Fluid might be leaking past piston check ball.

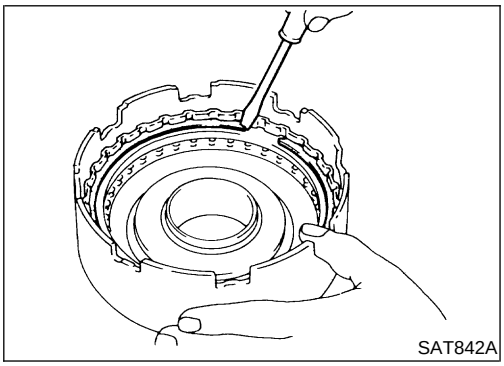
SAT842A

2. Remove snap ring, drive plates, driven plates, retaining plate and dish plate.

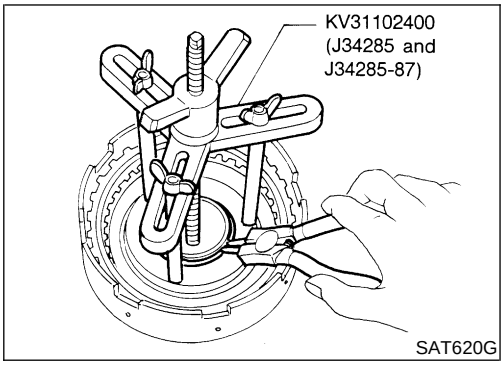

SAT620G

3. Remove snap ring from clutch drum while compressing clutch springs.

- **Set Tool directly over springs.**
- **Do not expand snap ring excessively.**

4. Remove spring retainer and return spring.

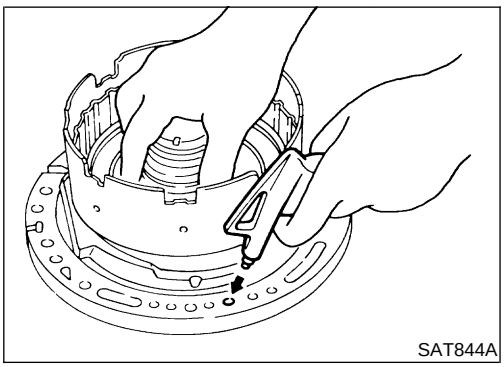
SAT844A

5. Install seal ring onto oil pump cover and install reverse clutch drum. While holding piston, gradually apply compressed air to oil hole until piston is removed.

- **Do not apply compressed air abruptly.**

6. Remove D-ring and oil seal from piston.

INSPECTION

NEAT0456

Reverse Clutch Snap Ring and Spring Retainer

NEAT0456S01

- Check for deformation, fatigue and damage.

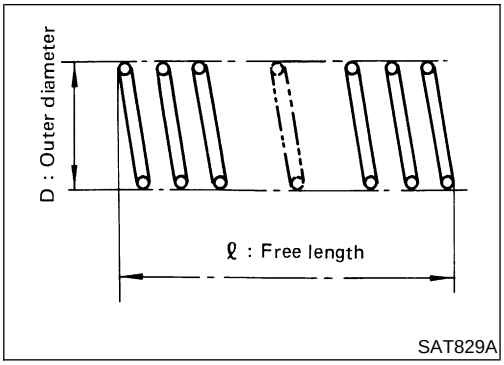

SAT829A

Reverse Clutch Return Springs

NEAT0456S02

- Check for deformation and damage. Also, measure free length and outside diameter.

Inspection standard:

Refer to "Return Springs", AT-142.

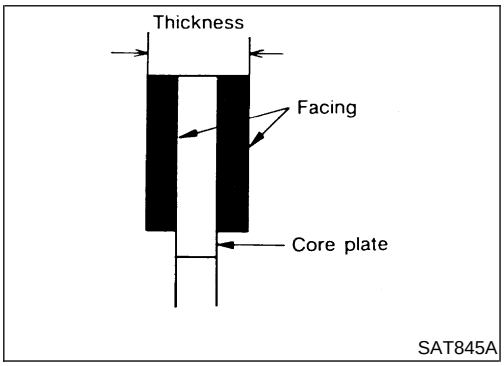

SAT845A

Reverse Clutch Drive Plates

NEAT0456S03

- Check facing for burns, cracks and damage.
- Measure thickness of facing.

Thickness of drive plate:

Standard value 1.90 - 2.05 mm (0.0748 - 0.0807 in)

Wear limit 1.80 mm (0.0709 in)

- If not within wear limit, replace.

Reverse Clutch Dish Plate

NEAT0456S04

- Check for deformation and damage.

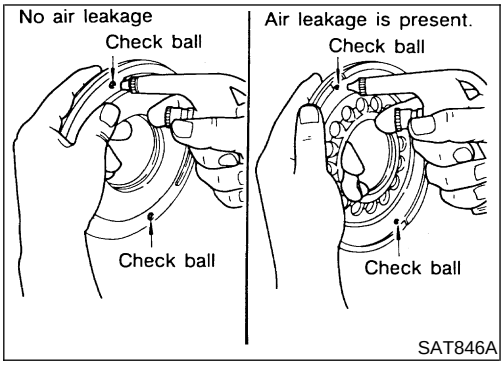

SAT846A

Reverse Clutch Piston

NEAT0456S05

- Shake piston to assure that balls are not seized.
- Apply compressed air to check ball oil hole opposite the return spring to assure that there is no air leakage.
- Also apply compressed air to oil hole on return spring side to assure that air leaks past ball.

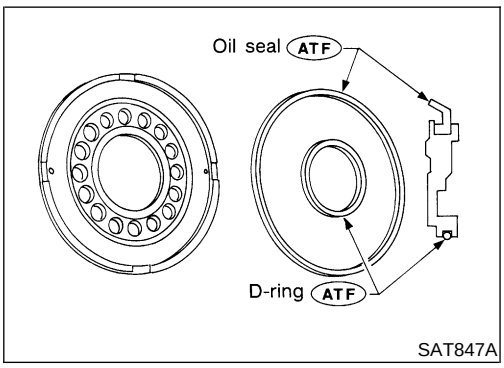

SAT847A

ASSEMBLY

NEAT0457

1. Install D-ring and oil seal on piston.

- **Apply ATF to both parts.**
- **Take care with the direction of oil seal.**

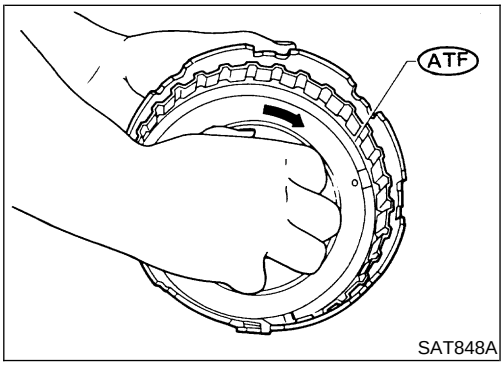

SAT848A

2. Install piston assembly by turning it slowly and evenly.

- **Apply ATF to inner surface of drum.**

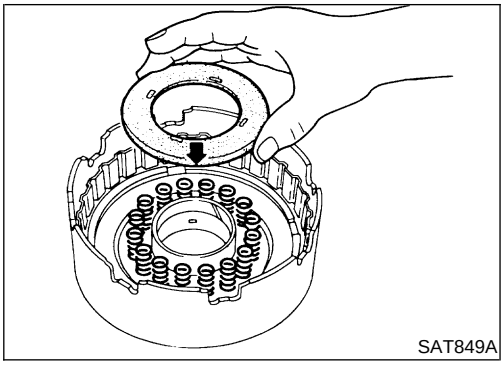
SAT849A

3. Install return springs and spring retainer.

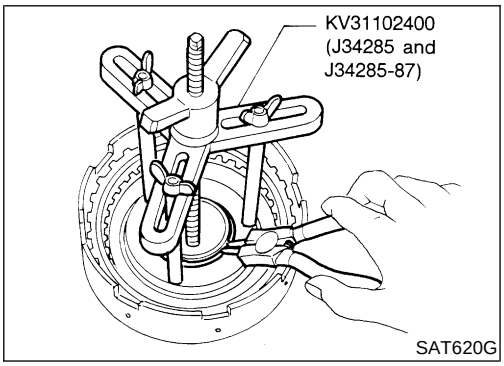

SAT620G

4. Set Tool on spring retainer and install snap ring while compressing clutch springs.

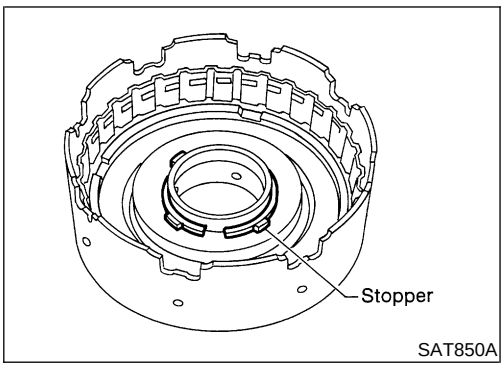

SAT850A

- **Do not align snap ring gap with spring retainer stopper.**

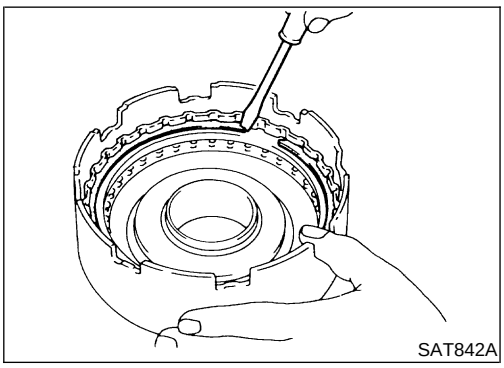
SAT842A

5. Install drive plates, driven plates, retaining plate and dish plate.
6. Install snap ring.

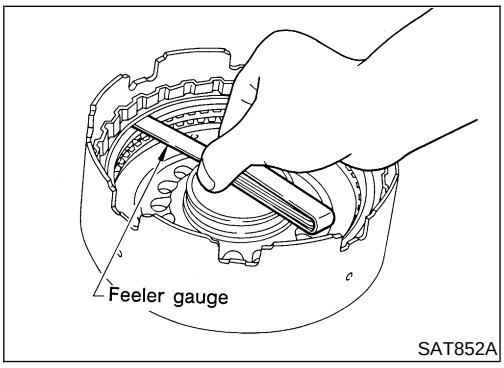

SAT852A

7. Measure clearance between retaining plate and snap ring. If not within allowable limit, select proper retaining plate.

Specified clearance:
Standard
0.5 - 0.8 mm (0.020 - 0.031 in)
Allowable limit
1.2 mm (0.047 in)
Retaining plate:
Refer to "REVERSE CLUTCH", AT-143.

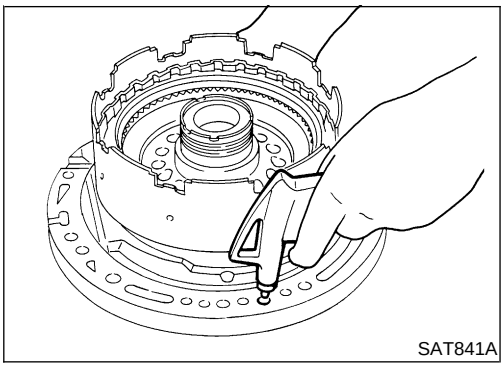
SAT841A

8. Check operation of reverse clutch.
   Refer to "DISASSEMBLY", AT-102.

High Clutch

COMPONENTS

NEAT0458

SEC. 315

For the number of clutch sheets (drive plate and driven plate), refer to the below cross-section.

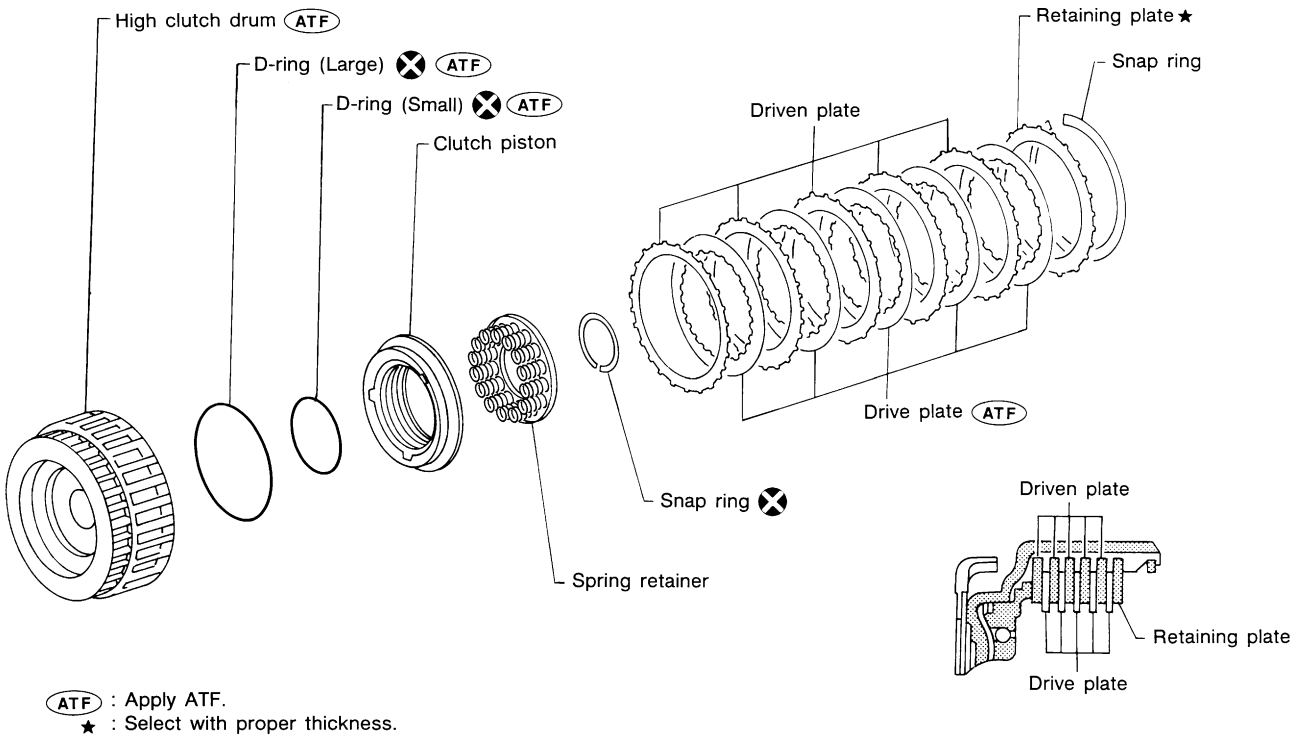

AAT109A

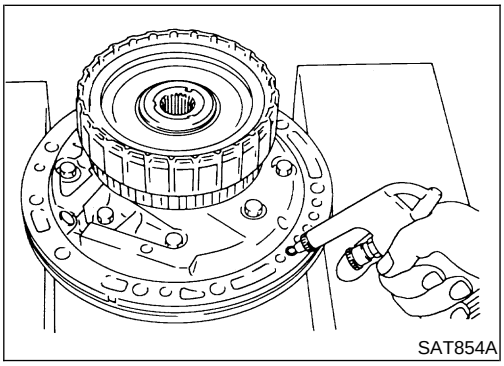
SAT854A

DISASSEMBLY AND ASSEMBLY

NEAT0459

Service procedures for high clutch are essentially the same as those for reverse clutch, with the following exceptions:

- Check of high clutch operation

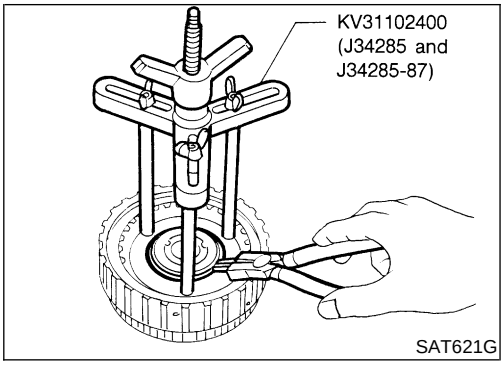

- Removal and installation of return spring

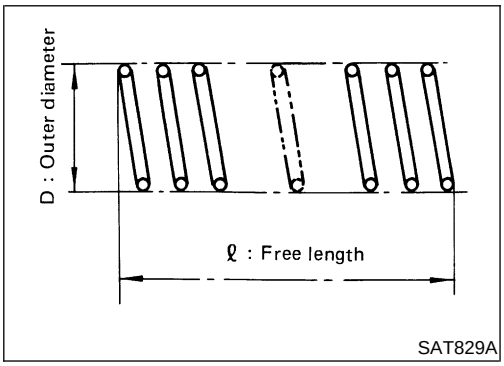

- Inspection of high clutch return springs

  Inspection standard:

  Refer to "Return Springs", AT-142.

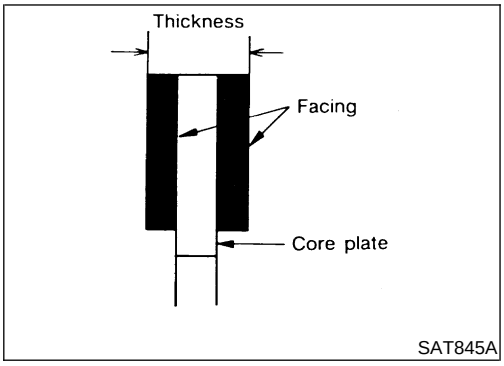

- Inspection of high clutch drive plate

  Thickness of drive plate:

  Standard

  1.52 - 1.67 mm (0.0598 - 0.0657 in)

  Wear limit

  1.40 mm (0.0551 in)

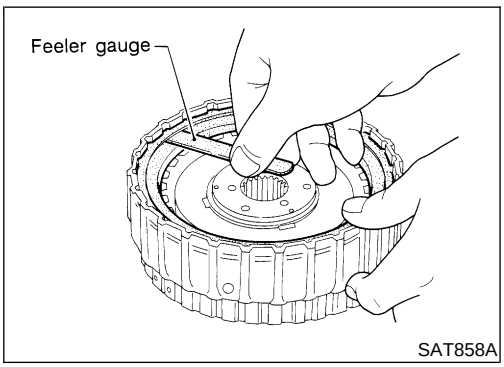

- Measurement of clearance between retaining plate and snap ring

  Specified clearance:

  Standard

  1.8 - 2.2 mm (0.071 - 0.087 in)

  Allowable limit

  2.8 mm (0.110 in)

  Retaining plate:

  Refer to "Clutch and Brakes", AT-143.

Forward and Overrun Clutches

COMPONENTS

NEAT0460

SEC. 315

For the number of clutch sheets (drive plate and driven plate), refer to the below cross-section.

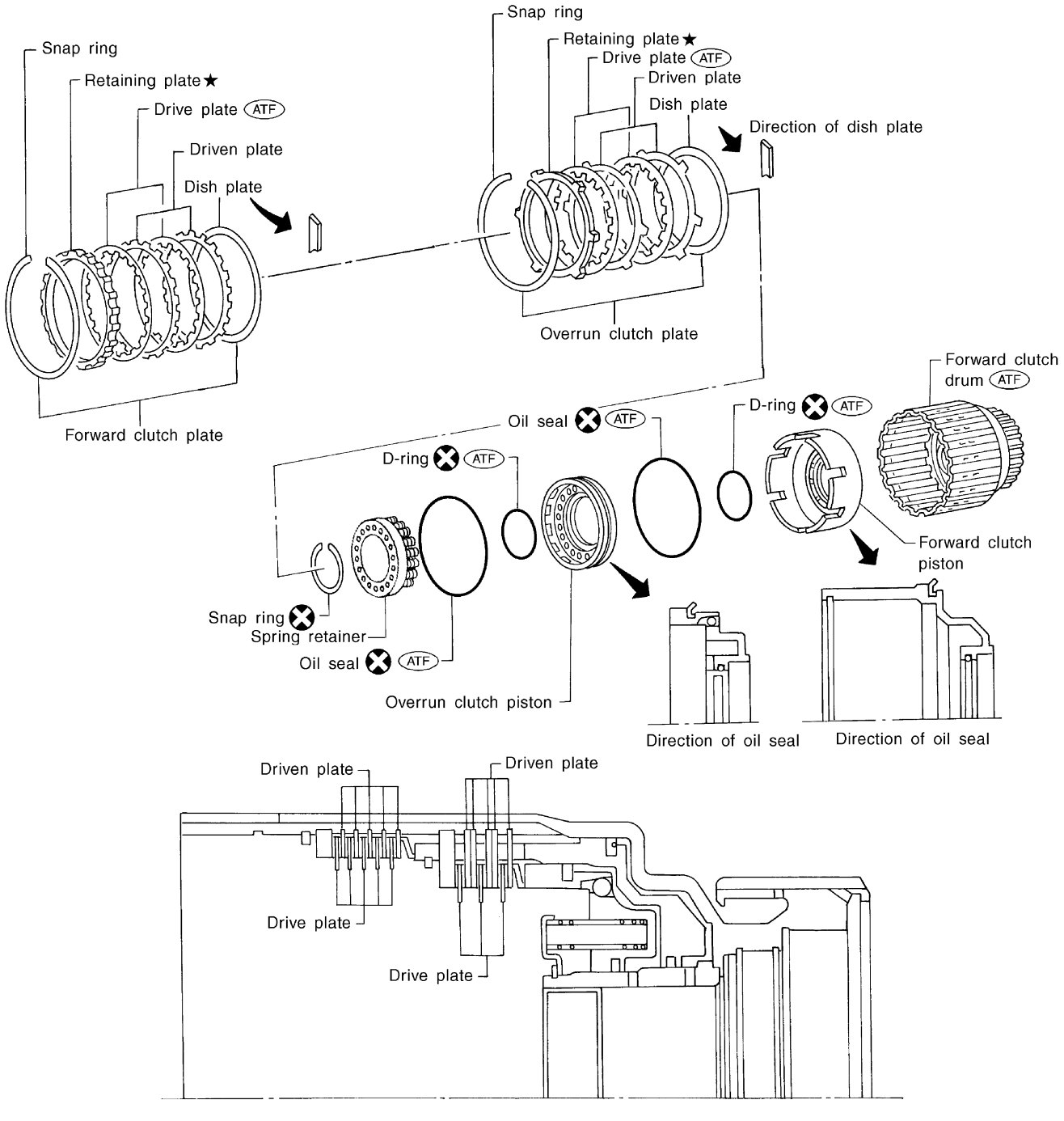

(ATF) : Apply ATF.
★ : Select with proper thickness.

AAT110A

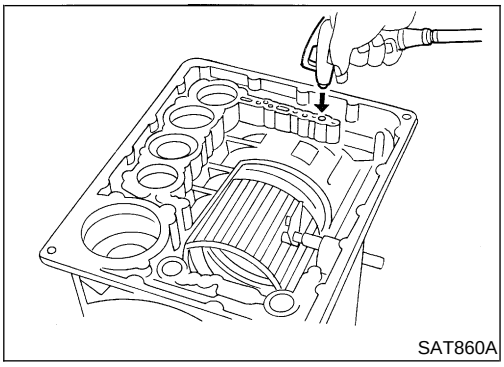
SAT860A

DISASSEMBLY AND ASSEMBLY

NEAT0461

Service procedures for forward and overrun clutches are essentially the same as those for reverse clutch, with the following exceptions:

- Check of forward clutch operation.

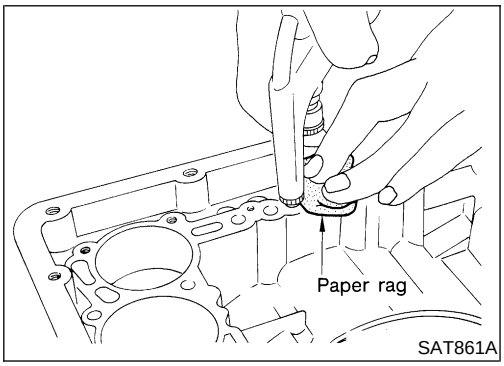

SAT861A

- Check of overrun clutch operation.

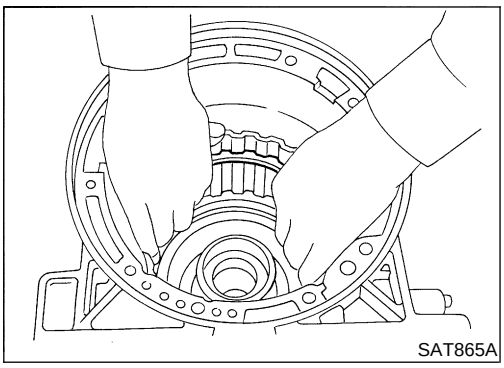
SAT865A

- Removal of forward clutch drum
  Remove forward clutch drum from transmission case by holding snap ring.

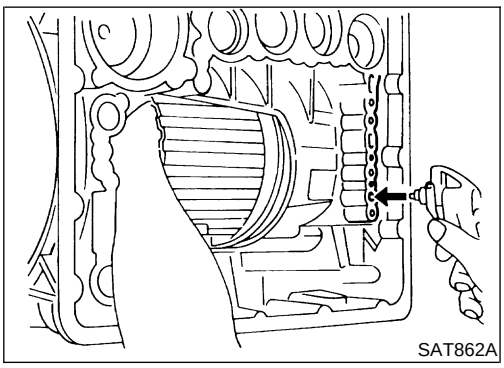
SAT862A

- Removal of forward clutch and overrun clutch pistons

a) While holding overrun clutch piston, gradually apply compressed air to oil hole.

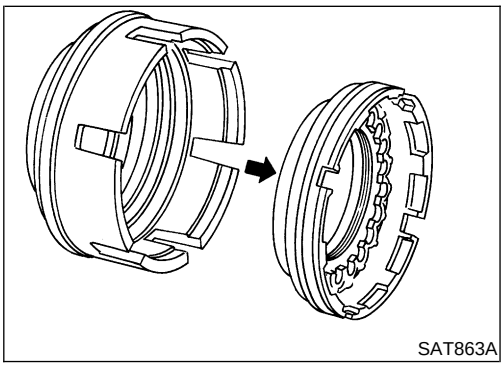
SAT863A

b) Remove overrun clutch from forward clutch.

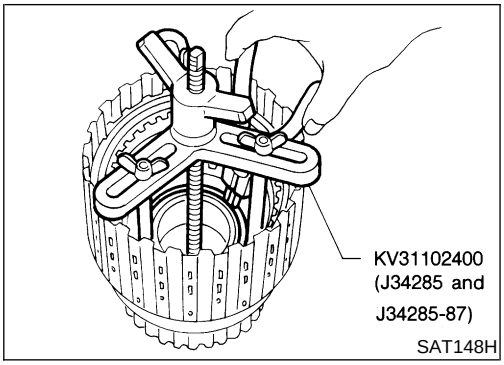

SAT148H

- Removal and installation of return springs

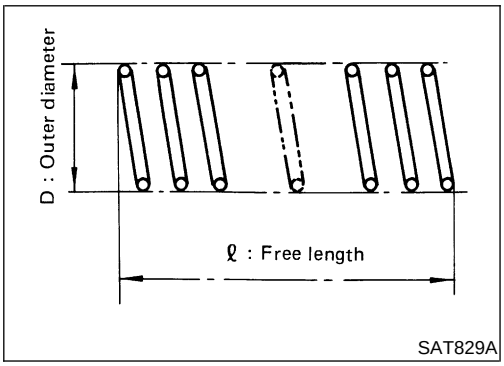

SAT829A

- Inspection of forward clutch and overrun clutch return springs

Inspection standard:

Refer to "Return Springs", AT-142.

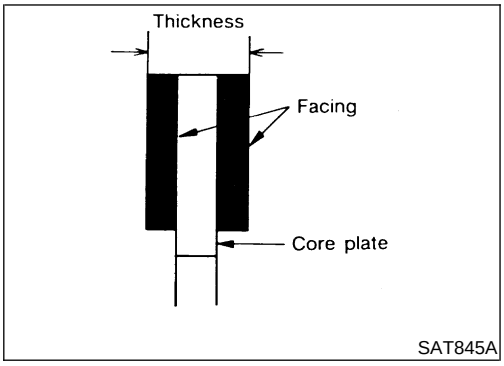

SAT845A

- Inspection of forward clutch drive plates

Thickness of drive plate:

Standard

1.52 - 1.67 mm (0.0598 - 0.0657 in)

Wear limit

1.40 mm (0.0551 in)

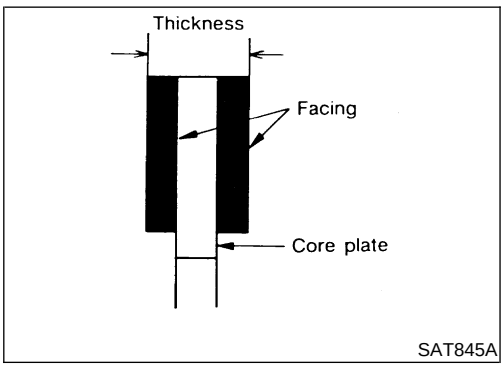

SAT845A

- Inspection of overrun clutch drive plates

Thickness of drive plate:

Standard

1.90 - 2.05 mm (0.0748 - 0.0807 in)

Wear limit

1.80 mm (0.0709 in)

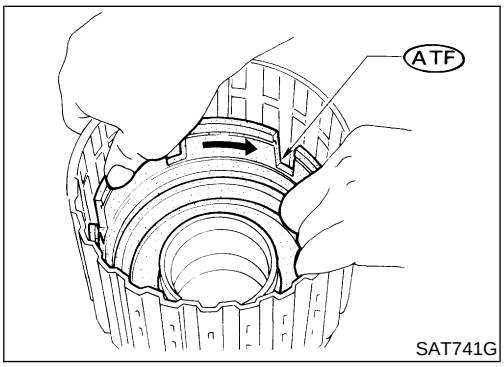

SAT741G

- Installation of forward clutch piston and overrun clutch piston

a) Install forward clutch piston by turning it slowly and evenly.

- **Apply ATF to inner surface of clutch drum.**

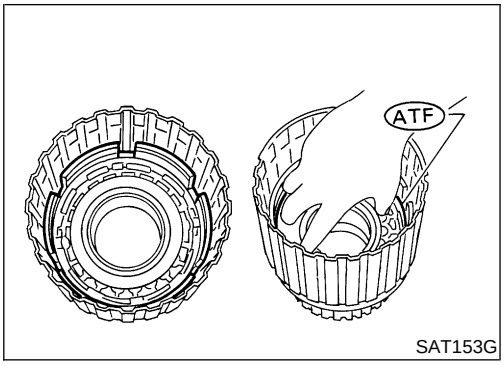

- **Align notch in forward clutch piston with groove in forward clutch drum.**

b) Install overrun clutch by turning it slowly and evenly.

- **Apply ATF to inner surface of forward clutch piston.**

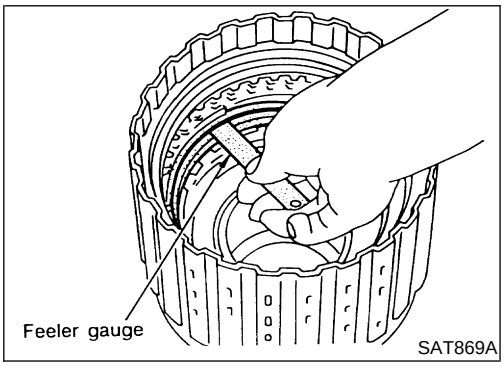

- Measurement of clearance between retaining plate and snap ring of overrun clutch

Specified clearance:
Standard
1.0 - 1.4 mm (0.039 - 0.055 in)
Allowable limit
2.0 mm (0.079 in)
Retaining plate:
Refer to "OVERRUN CLUTCH", AT-144.

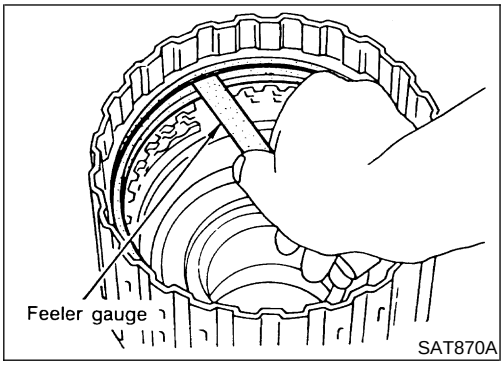

- Measurement of clearance between retaining plate and snap ring of forward clutch

Specified clearance:
Standard
0.35 - 0.75 mm (0.0138 - 0.0295 in)
Allowable limit
1.85 mm (0.728 in)
Retaining plate:
Refer to "FORWARD CLUTCH", AT-144.

Low & Reverse Brake

COMPONENTS

NEAT0462

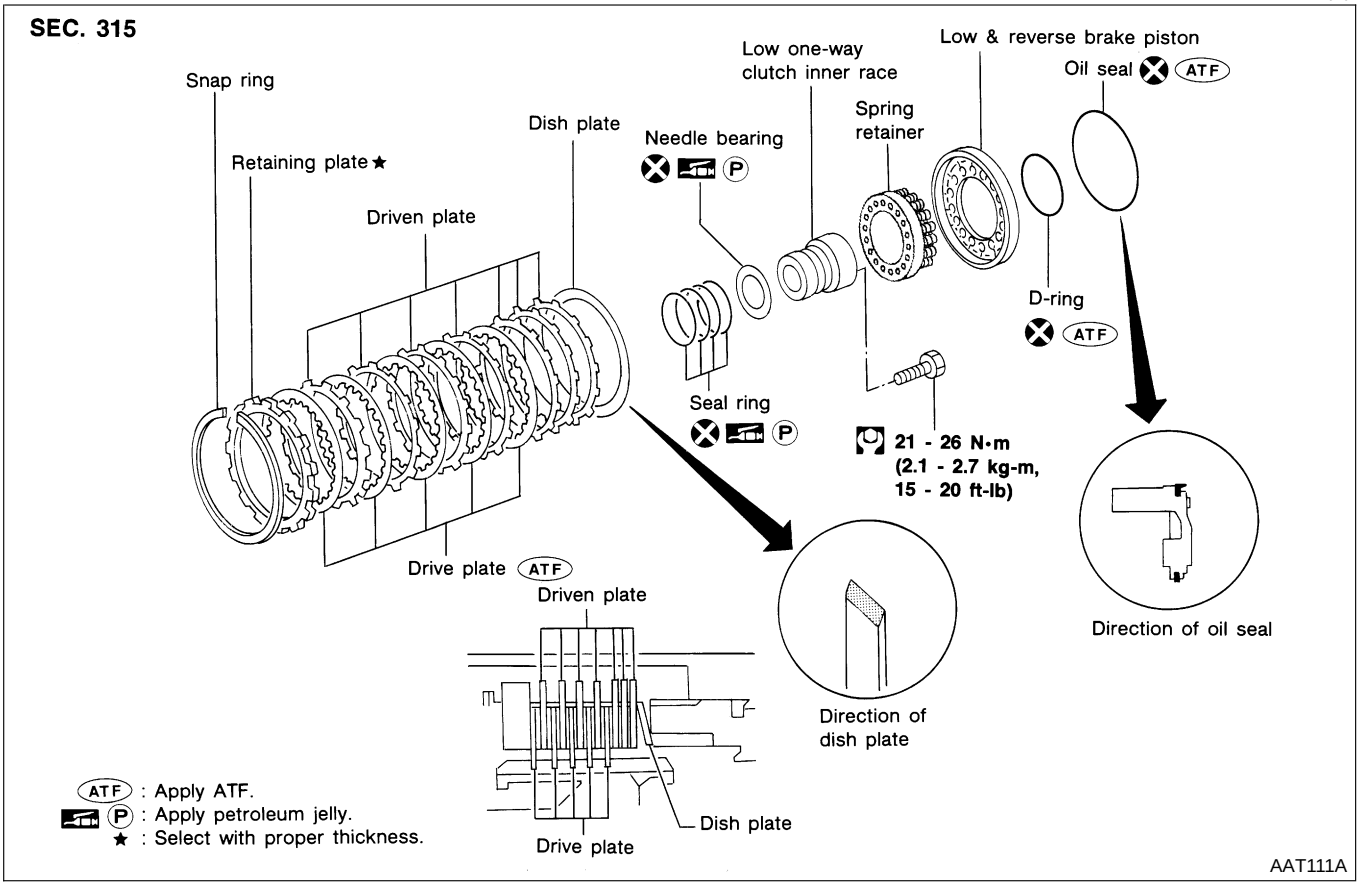

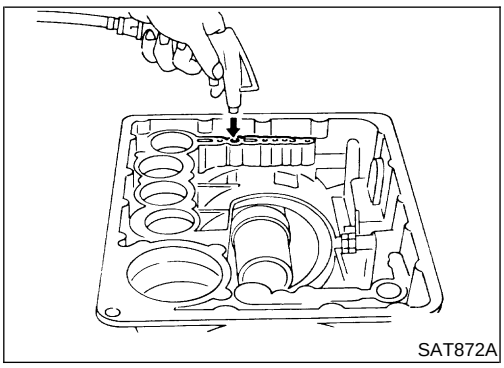
SAT872A

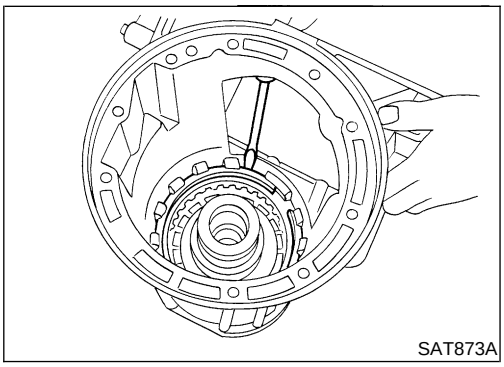
SAT873A

DISASSEMBLY

NEAT0463

1. Check operation of low and reverse brake.

a. Install seal ring onto oil pump cover and install reverse clutch. Apply compressed air to oil hole.
b. Check to see that retaining plate moves to snap ring.
c. If retaining plate does not contact snap ring:

- D-ring might be damaged.
- Oil seal might be damaged.
- Fluid might be leaking past piston check ball.

2. Remove snap ring, low & reverse brake drive plates, driven plates and dish plate.

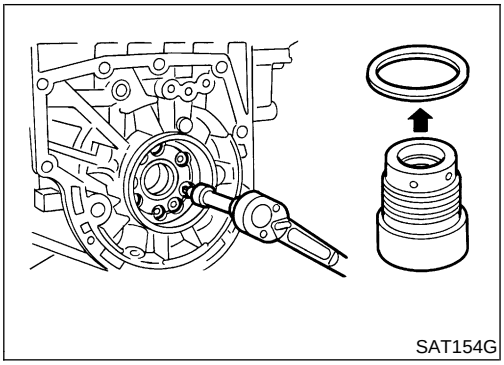
SAT154G

3. Remove low one-way clutch inner race, spring retainer and return spring from transmission case.
4. Remove seal rings from low one-way clutch inner race.
5. Remove needle bearing from low one-way clutch inner race.

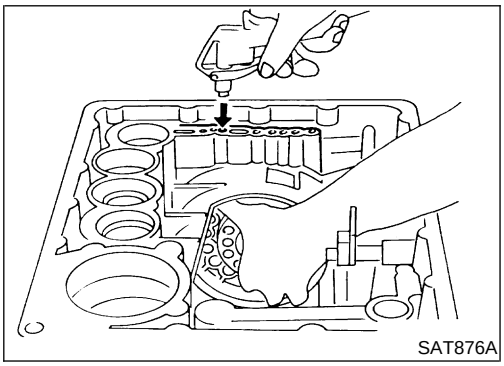
SAT876A

6. Remove low & reverse brake piston using compressed air.
7. Remove oil seal and D-ring from piston.

INSPECTION

NEAT0464

Low & Reverse Brake Snap Ring and Spring Retainer

NEAT0464S01

- Check for deformation, or damage.
- Replace if necessary.

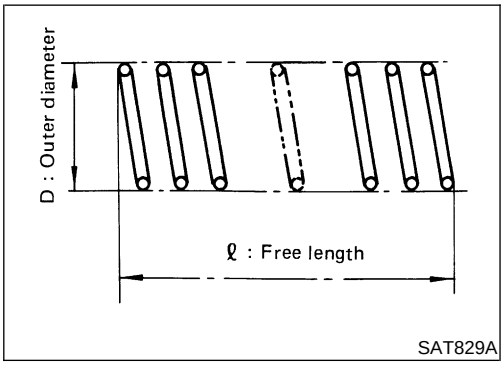

SAT829A

Low & Reverse Brake Return Springs

NEAT0464S02

- Check for deformation or damage. Also measure free length and outside diameter.

Inspection standard:

Refer to "Return Springs", AT-142.

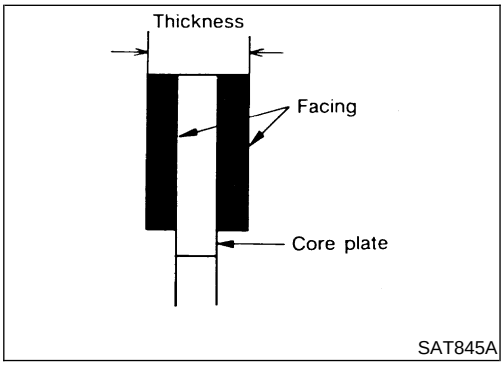

SAT845A

Low & Reverse Brake Drive Plates

NEAT0464S03

- Check facing for burns, cracks or damage.
- Measure thickness of facing.

Thickness of drive plate:

Standard value

1.52 - 1.67 mm (0.0598 - 0.0657 in)

Wear limit

1.4 mm (0.055 in)

- If not within wear limit, replace.

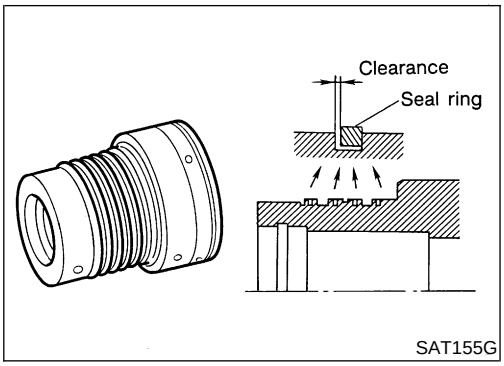

SAT155G

Low One-way Clutch Inner Race

NEAT0464S04

- Check frictional surface of inner race for wear or damage.
- Install new seal rings onto low one-way clutch inner race.
- **Be careful not to expand seal ring gap excessively.**
- Measure seal ring-to-groove clearance.

Inspection standard:

Standard value 0.10 - 0.25 mm (0.0039 - 0.0098 in)

Allowable limit 0.25 mm (0.0098 in)

- If not within allowable limit, replace low one-way clutch inner race.

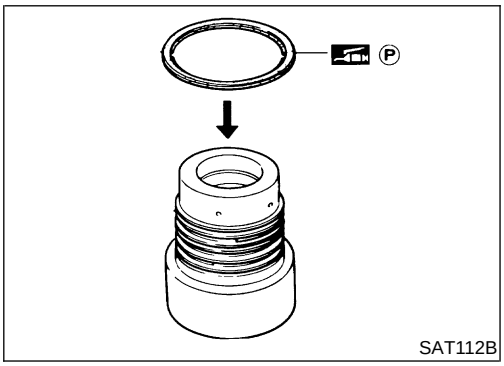

SAT112B

ASSEMBLY

NEAT0465

1. Install needle bearing onto one-way clutch inner race.
- **Pay attention to its direction — black surface faces to rear side.**
- **Apply petroleum jelly to thrust washers.**

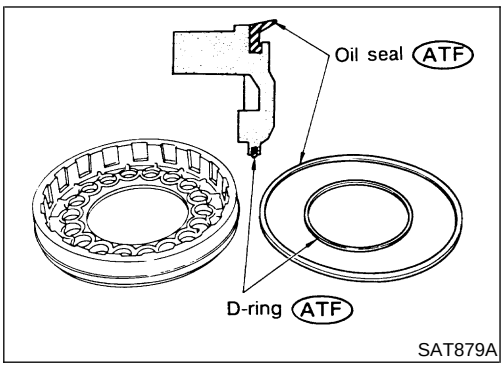

SAT879A

2. Install oil seal and D-ring onto piston.
- **Apply ATF to oil seal and D-ring.**

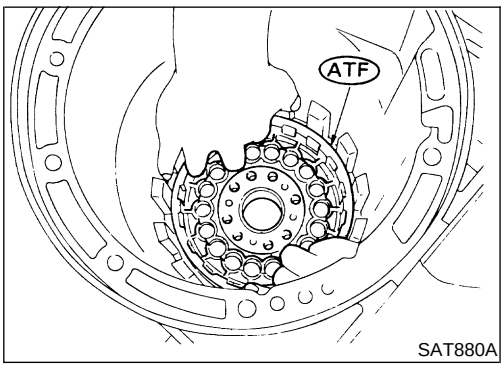

SAT880A

3. Install piston by rotating it slowly and evenly.
- **Apply ATF to inner surface of transmission case.**

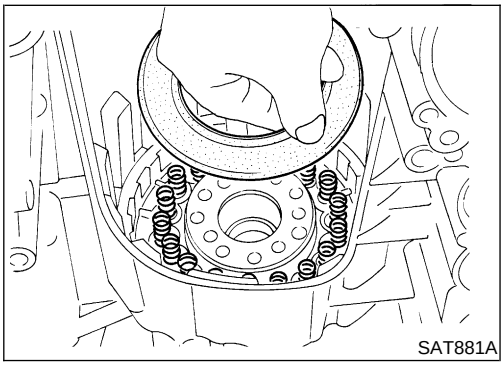
SAT881A

4. Install return springs, spring retainer and low one-way clutch inner race onto transmission case.
5. Install dish plate, low & reverse brake drive plates, driven plates and retaining plate.
6. Install snap ring on transmission case.

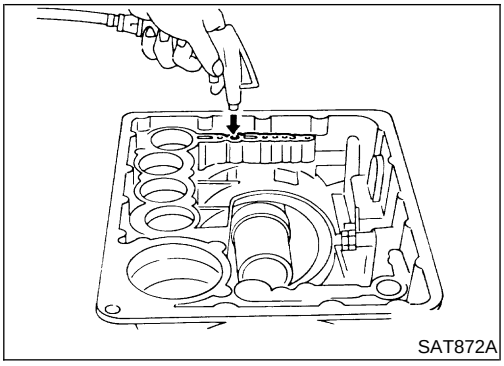
SAT872A

7. Check operation of low & reverse brake clutch piston. Refer to "DISASSEMBLY", AT-111.

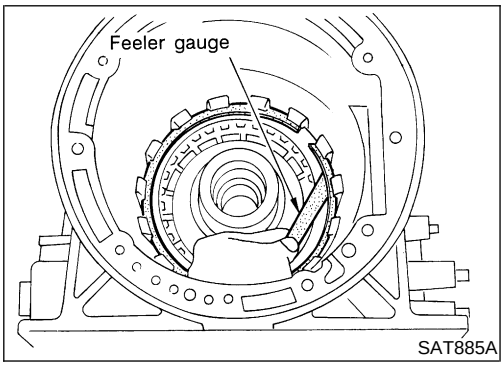

SAT885A

8. Measure clearance between retaining plate and snap ring. If not within allowable limit, select proper retaining plate.

Specified clearance:
Standard
0.5 - 0.8 mm (0.020 - 0.031 in)
Allowable limit
2.3 mm (0.091 in)
Retaining plate:
Refer to "LOW & REVERSE BRAKE", AT-144.

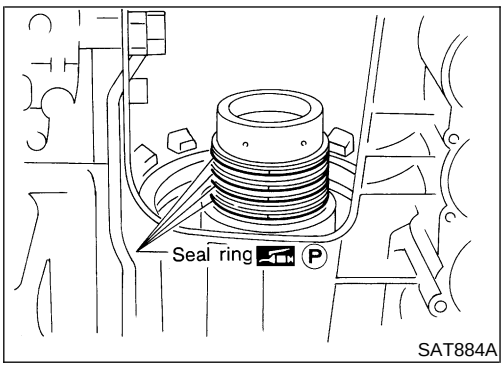

SAT884A

9. Install low one-way clutch inner race seal ring.
- **Apply petroleum jelly to seal ring.**
- **Make sure seal rings are pressed firmly into place and held by petroleum jelly.**

Forward Clutch Drum Assembly

COMPONENTS

NEAT0466

SEC. 315

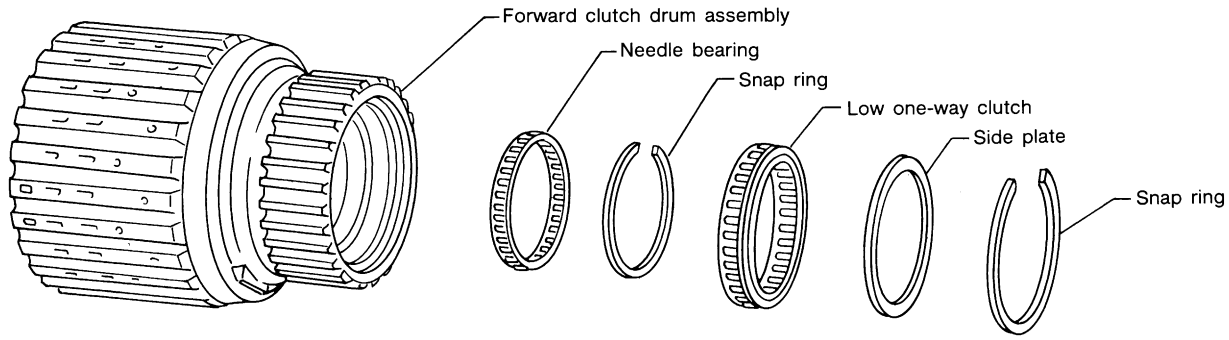

SAT886AA

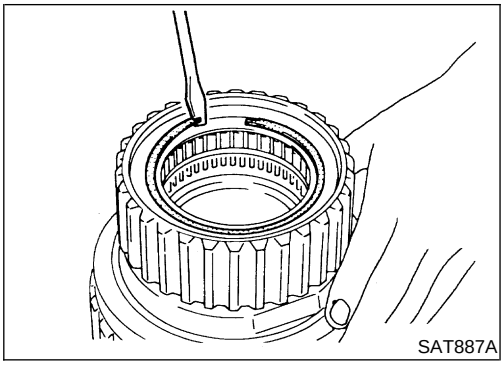
SAT887A

DISASSEMBLY

NEAT0467

1. Remove snap ring from forward clutch drum.
2. Remove side plate from forward clutch drum.
3. Remove low one-way clutch from forward clutch drum.
4. Remove snap ring from forward clutch drum.
5. Remove needle bearing from forward clutch drum.

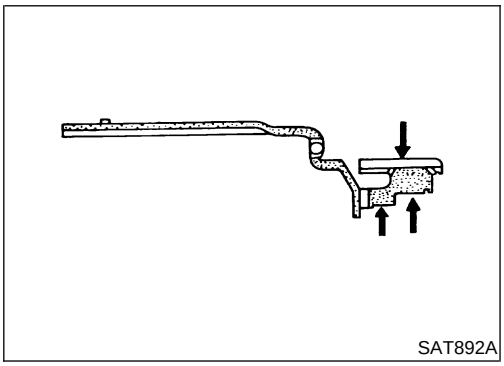
SAT892A

INSPECTION

NEAT0468

Forward Clutch Drum

NEAT0468S01

- Check spline portion for wear or damage.
- Check frictional surfaces of low one-way clutch and needle bearing for wear or damage.

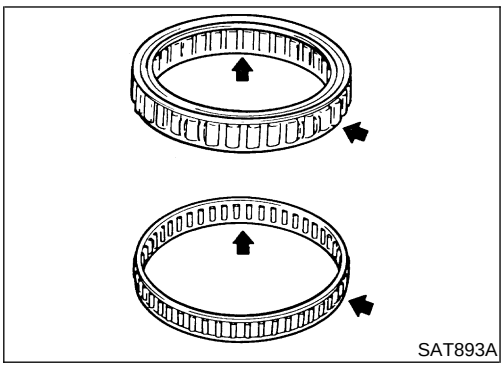
SAT893A

Needle Bearing and Low One-way Clutch

NEAT0468S02

- Check frictional surface for wear or damage.

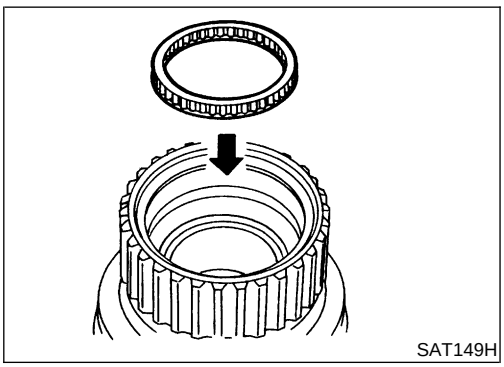
SAT149H

ASSEMBLY

NEAT0469

1. Install needle bearing in forward clutch drum.
2. Install snap ring onto forward clutch drum.

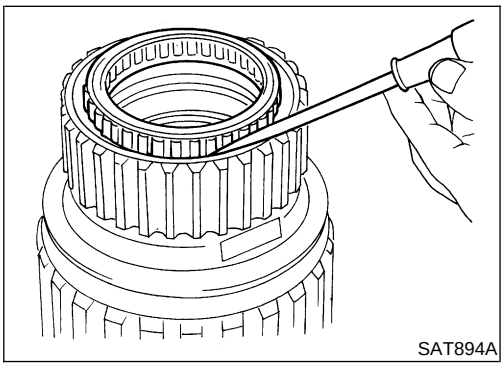
SAT894A

3. Install low one-way clutch onto forward clutch drum by pushing the roller in evenly.

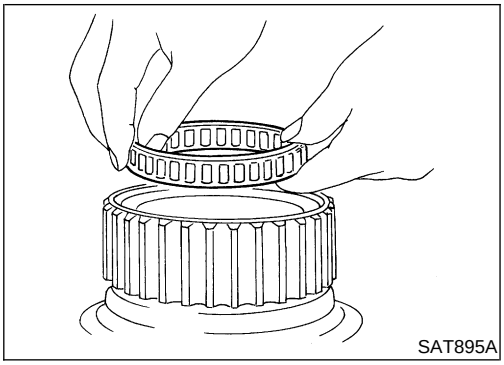
SAT895A

- **Install low one-way clutch with flange facing rearward.**

4. Install side plate onto forward clutch drum.
5. Install snap ring onto forward clutch drum.

Rear Internal Gear and Forward Clutch Hub

COMPONENTS

NEAT0470

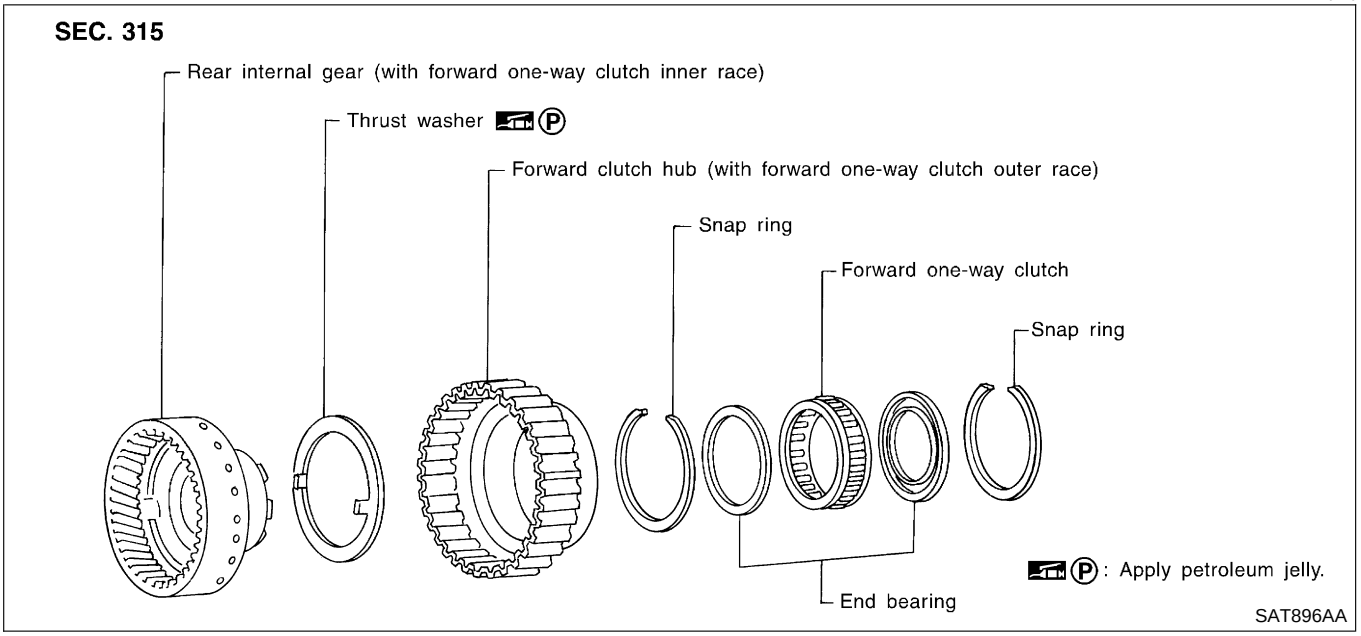

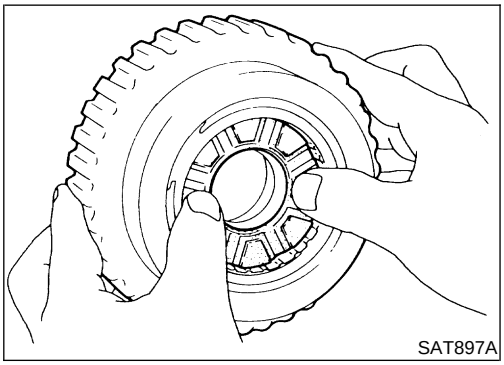
SAT897A

DISASSEMBLY

NEAT0471

1. Remove rear internal gear by pushing forward clutch hub forward.
2. Remove thrust washer from rear internal gear.
3. Remove snap ring from forward clutch hub.
4. Remove end bearing.

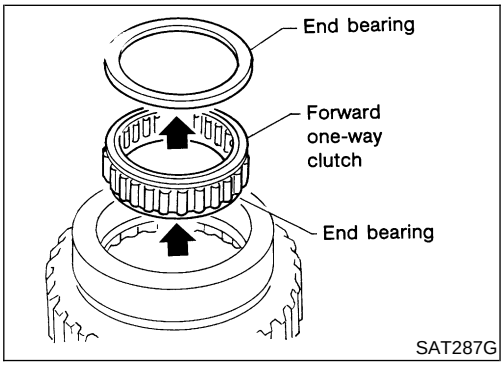

5. Remove forward one-way clutch and end bearing as a unit from forward clutch hub.
6. Remove snap ring from forward clutch hub.

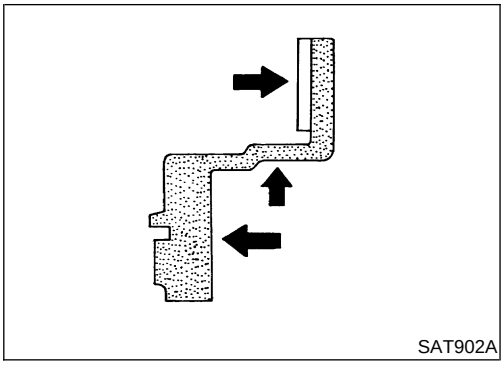
SAT902A

INSPECTION

NEAT0472

Rear Internal Gear and Forward Clutch Hub

NEAT0472S01

- Check gear for excessive wear, chips or cracks.
- Check frictional surfaces of forward one-way clutch and thrust washer for wear or damage.
- Check spline for wear or damage.

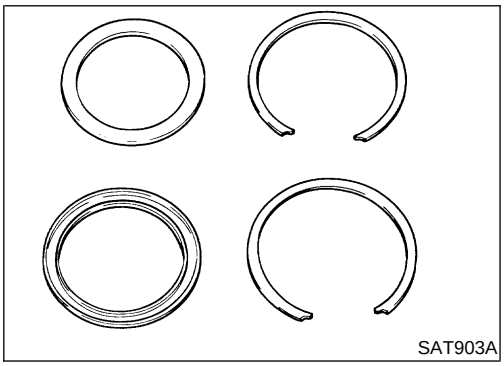
SAT903A

Snap Ring and End Bearing

NEAT0472S02

- Check for deformation or damage.

ASSEMBLY

NEAT0473

1. Install snap ring onto forward clutch hub.
2. Install end bearing.

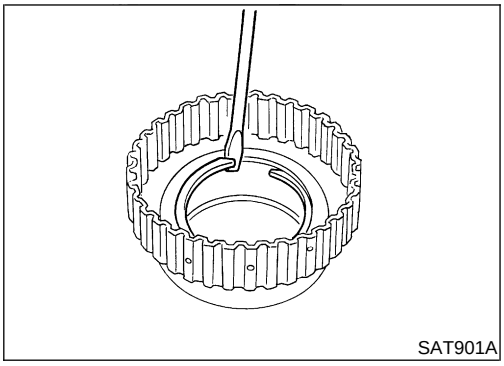
SAT901A

3. Install forward one-way clutch onto clutch hub.
- **Install forward one-way clutch with flange facing rearward.**
4. Install end bearing.
5. Install snap ring onto forward clutch hub.

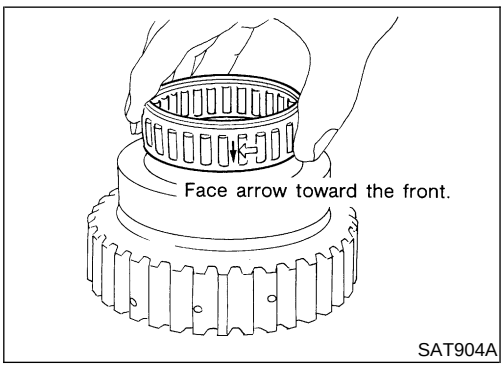

SAT904A

6. Install thrust washer onto rear internal gear.
- **Apply petroleum jelly to thrust washer.**
- **Securely insert pawls of thrust washer into holes in rear internal gear.**

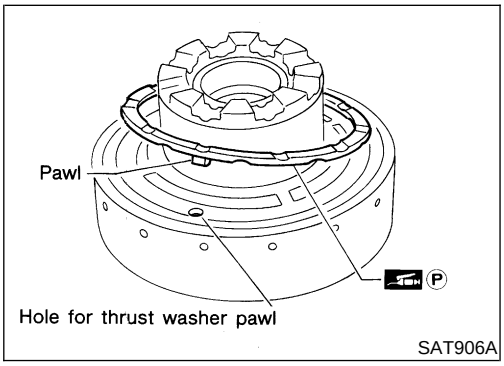

SAT906A

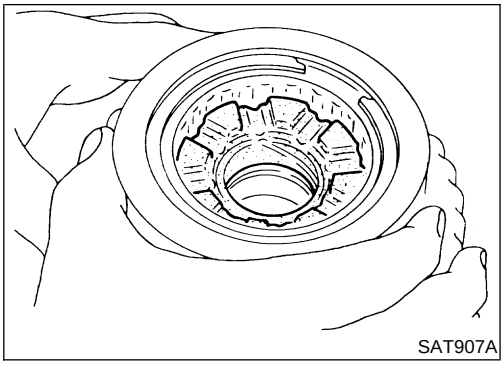
SAT907A

7. Position forward clutch hub in rear internal gear.

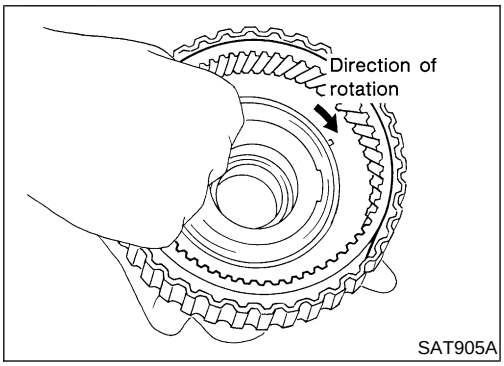

SAT905A

8. After installing, check to assure that forward clutch hub rotates clockwise.

Band Servo Piston Assembly

COMPONENTS

NEAT0474

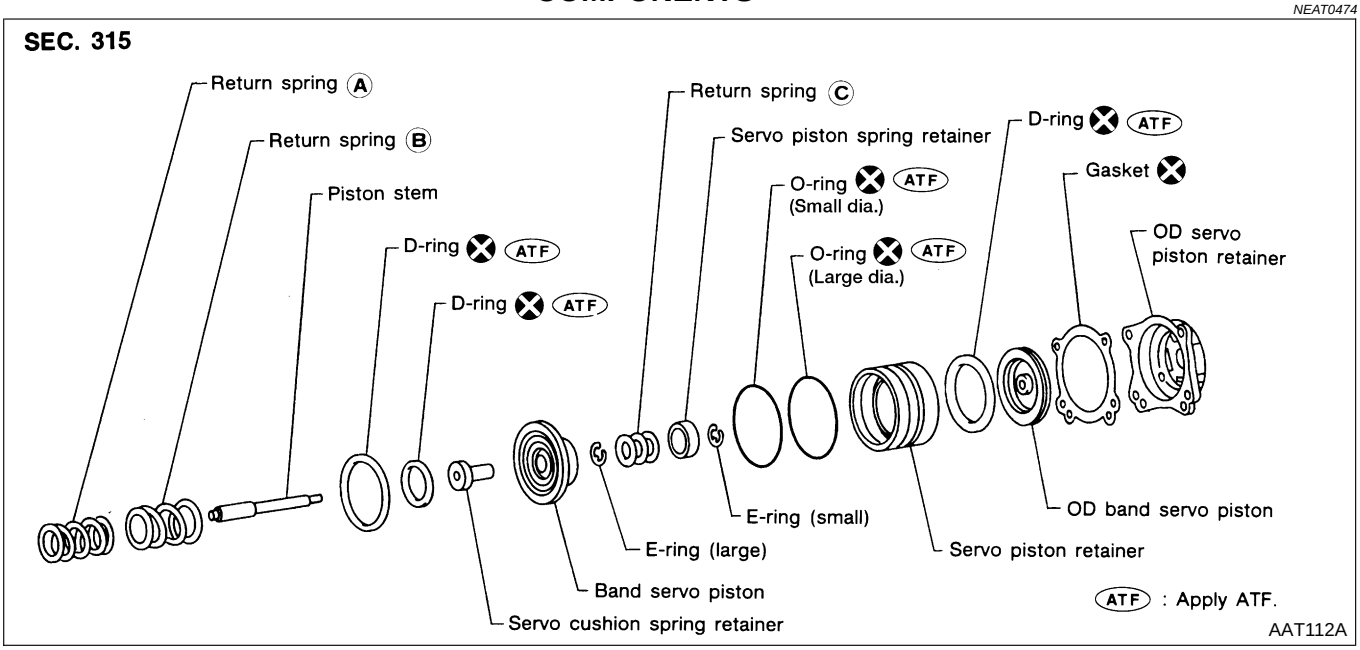

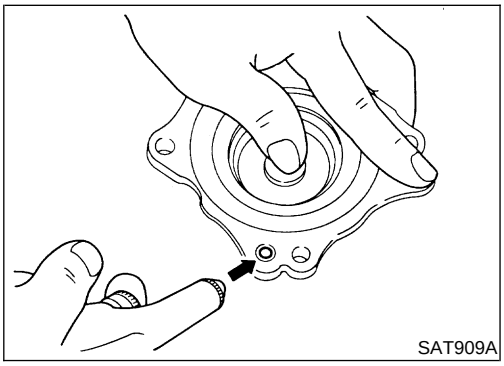
SAT909A

DISASSEMBLY

NEAT0475

1. Block one oil hole in O/D servo piston retainer and the center hole in O/D band servo piston.
2. Apply compressed air to the other oil hole in piston retainer to remove O/D band servo piston from retainer.
3. Remove D-ring from O/D band servo piston.

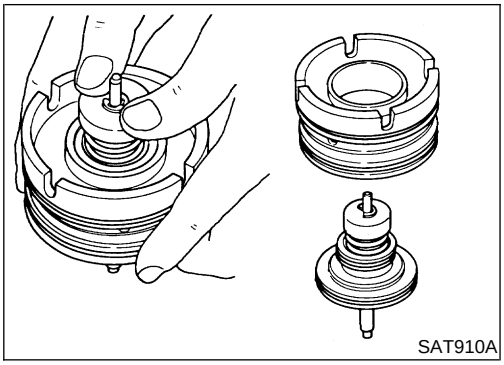
SAT910A

4. Remove band servo piston assembly from servo piston retainer by pushing it forward.

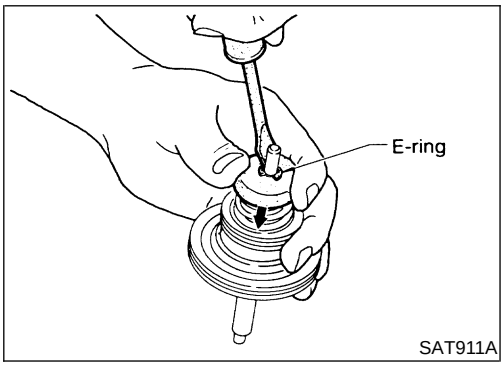

SAT911A

5. Place piston stem end on a wooden block. While pushing servo piston spring retainer down, remove E-ring.

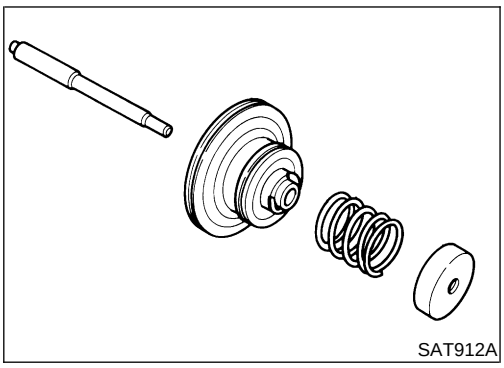
SAT912A

6. Remove servo piston spring retainer, return spring C and piston stem from band servo piston.

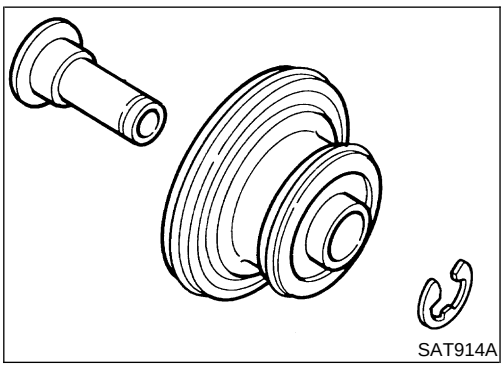
SAT914A

7. Remove E-ring from band servo piston.
8. Remove servo cushion spring retainer from band servo piston.
9. Remove D-rings from band servo piston.
10. Remove O-rings from servo piston retainer.

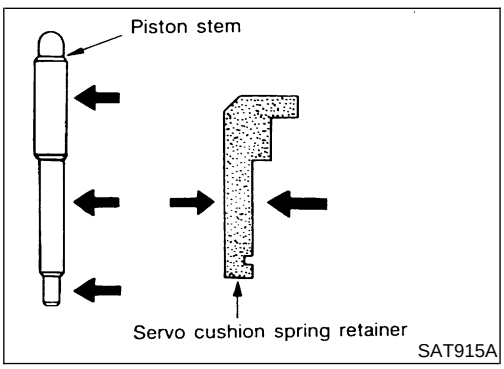

SAT915A

INSPECTION

NEAT0476

Pistons, Retainers and Piston Stem

NEAT0476S01

- Check frictional surfaces for abnormal wear or damage.

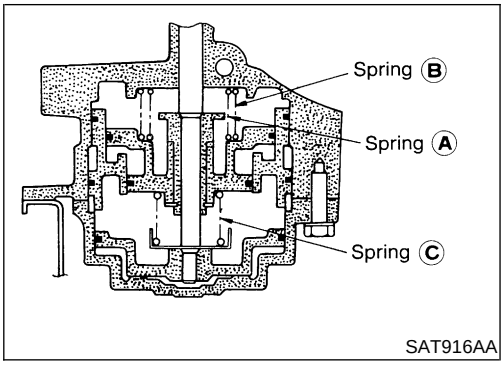

SAT916AA

Return Springs

NEAT0476S02

- Check for deformation or damage. Measure free length and outer diameter.

Inspection standard:

Refer to "Return Springs", AT-142.

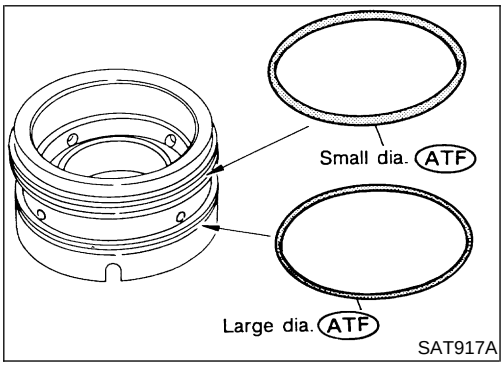

SAT917A

ASSEMBLY

NEAT0477

1. Install O-rings onto servo piston retainer.

- **Apply ATF to O-rings.**
- **Pay attention to position of each O-ring.**

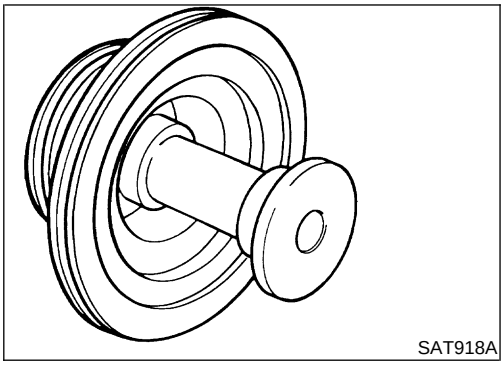
SAT918A

2. Install servo cushion spring retainer onto band servo piston.

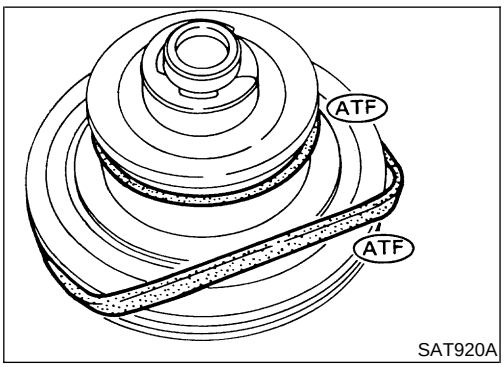

SAT920A

3. Install E-ring onto servo cushion spring retainer.
4. Install D-rings onto band servo piston.

- **Apply ATF to D-rings.**

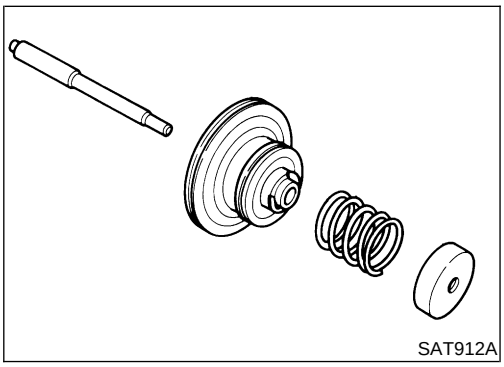
SAT912A

5. Install servo piston spring retainer, return spring C and piston stem onto band servo piston.

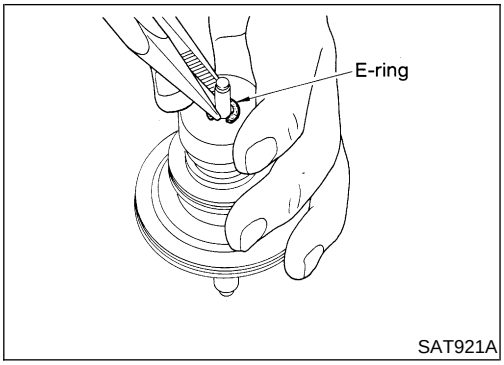

SAT921A

6. Place piston stem end on a wooden block. While pushing servo piston spring retainer down, install E-ring.

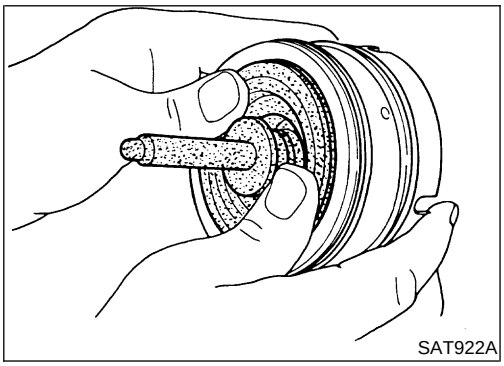
SAT922A

7. Install band servo piston assembly onto servo piston retainer by pushing it inward.

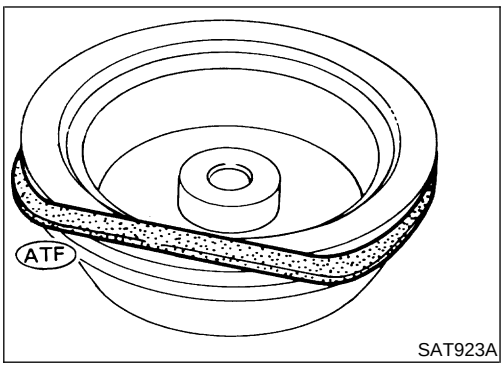

SAT923A

8. Install D-ring on O/D band servo piston.
- **Apply ATF to D-ring.**

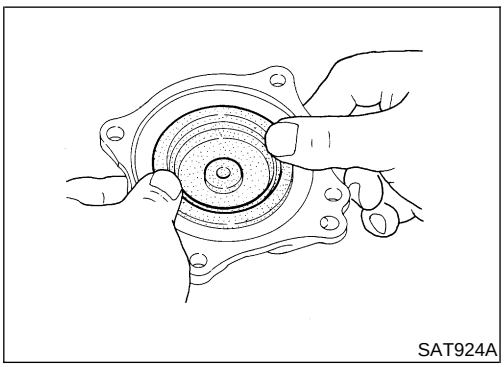
SAT924A

9. Install O/D band servo piston onto O/D servo piston retainer by pushing it inward.

Parking Pawl Components

COMPONENTS

NEAT0478

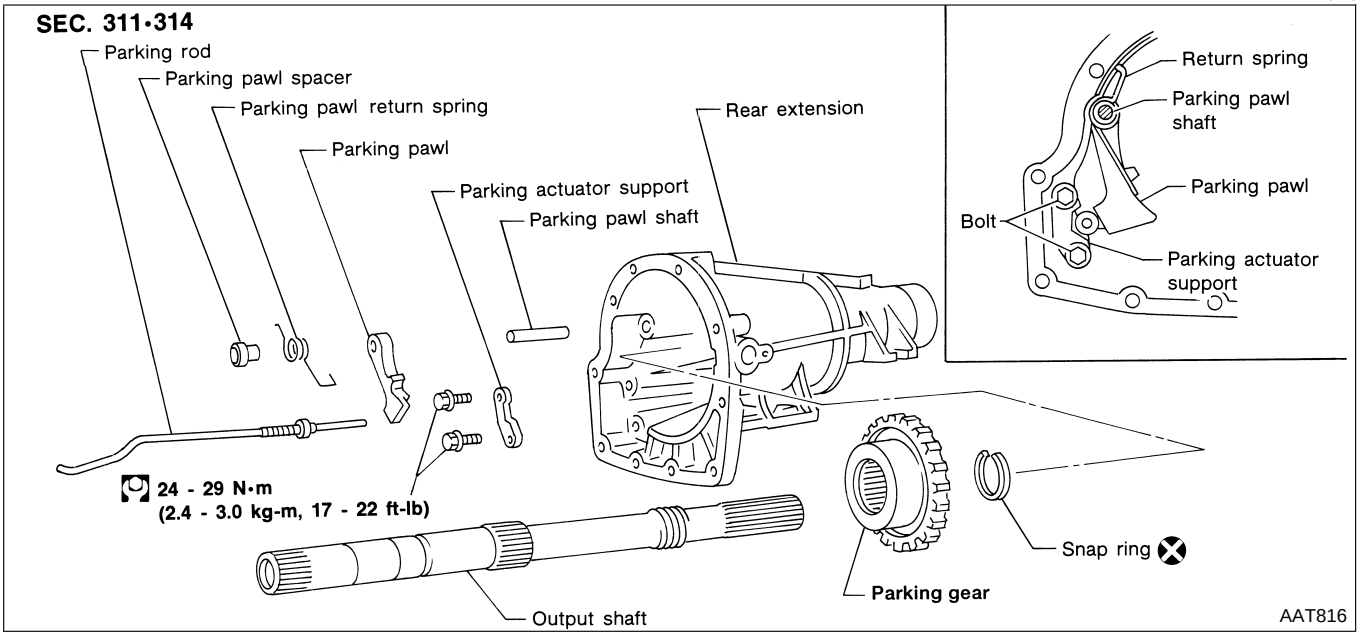

DISASSEMBLY

NEAT0479

1. Slide return spring to the front of rear extension flange.

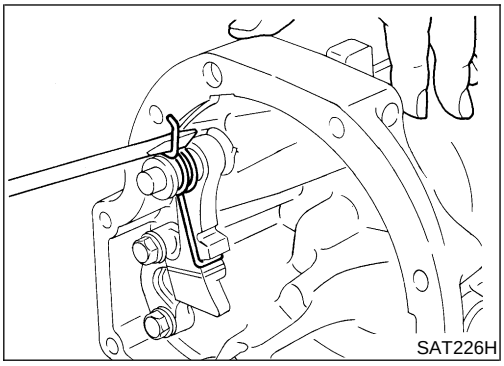

2. Remove return spring, pawl spacer and parking pawl from rear extension.
3. Remove parking pawl shaft from rear extension.

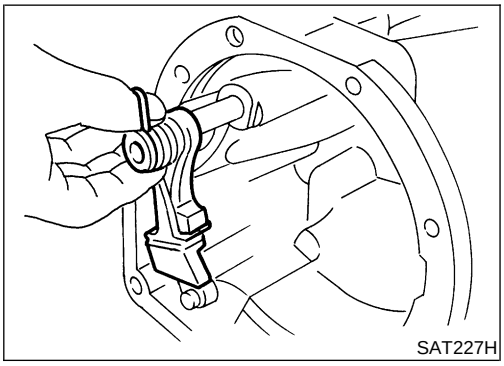

4. Remove parking actuator support from rear extension.

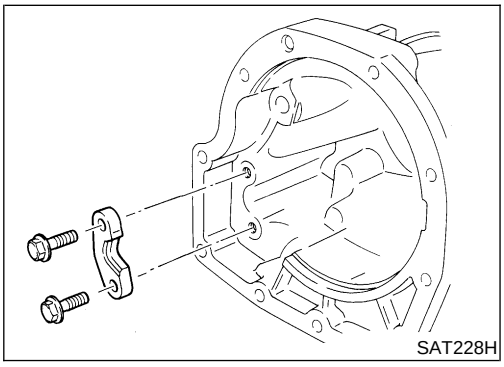

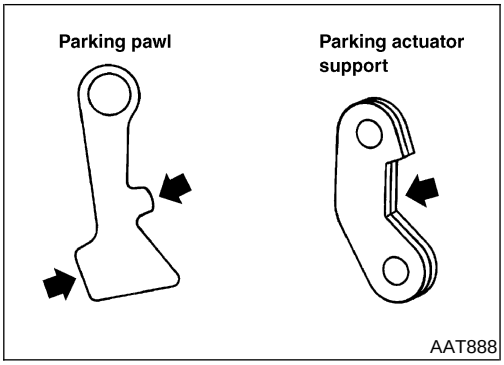

INSPECTION

NEAT0480

Parking Pawl and Parking Actuator Support

NEAT0480S01

- Check contact surface of parking rod and parking gear for wear.

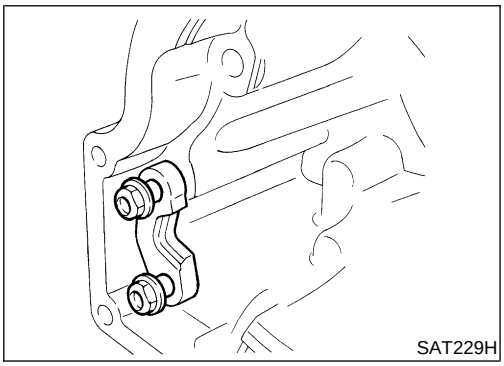

ASSEMBLY

NEAT0481

1. Install parking actuator support onto rear extension.
2. Insert parking pawl shaft into rear extension.

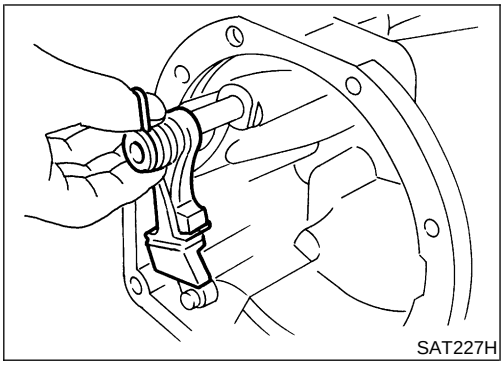

3. Install return spring, pawl spacer and parking pawl onto parking pawl shaft.

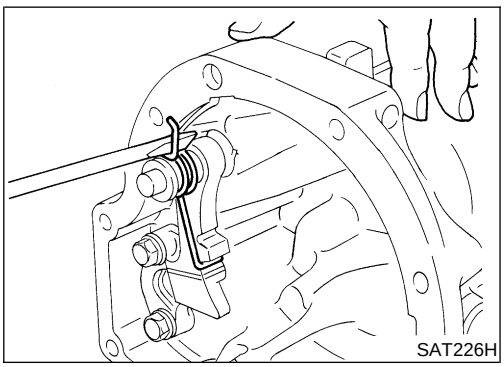

4. Bend return spring upward and install it onto rear extension.

Assembly (1)

NEAT0482

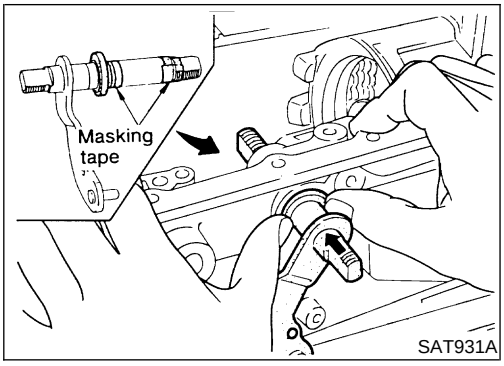

1. Install manual shaft components.

a. Install oil seal onto manual shaft.

- **Apply ATF to oil seal.**
- **Wrap threads of manual shaft with masking tape.**

b. Insert manual shaft and oil seal as a unit into transmission case.

c. Remove masking tape.

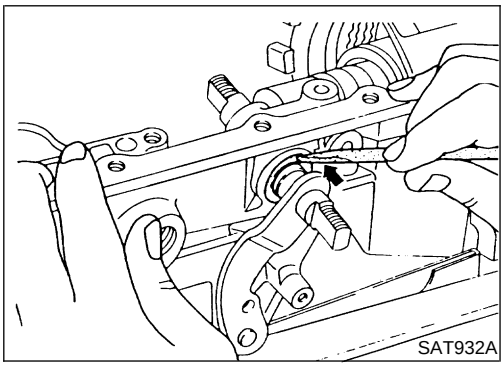

d. Push oil seal evenly and install it onto transmission case.

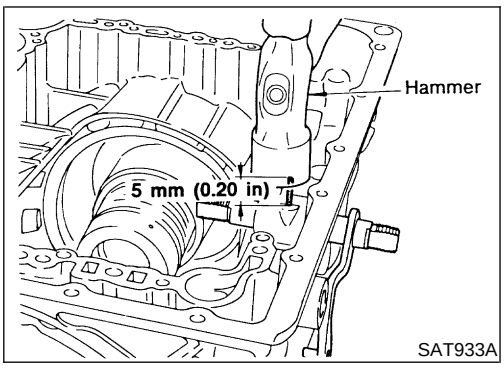

e. Align groove in shaft with drive pin hole; then drive pin into position as shown in figure at left.

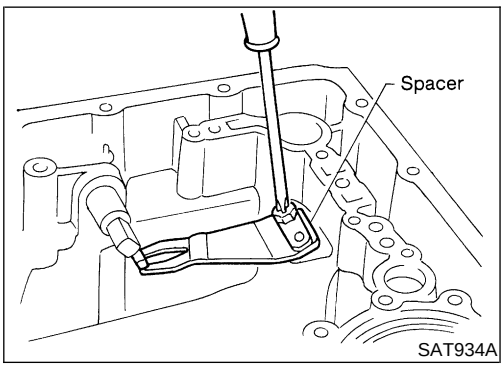

f. Install detent spring and spacer.

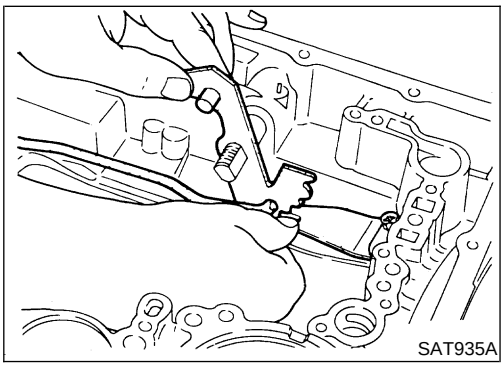

g. While pushing detent spring down, install manual plate onto manual shaft.

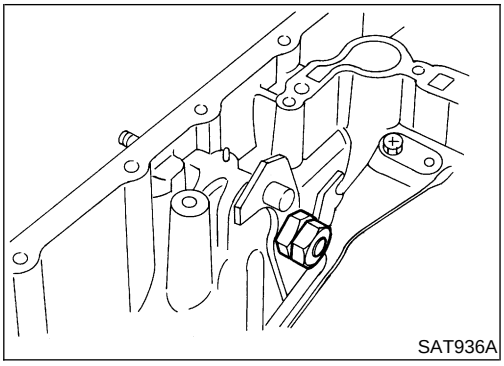
SAT936A

h. Install lock nuts onto manual shaft.

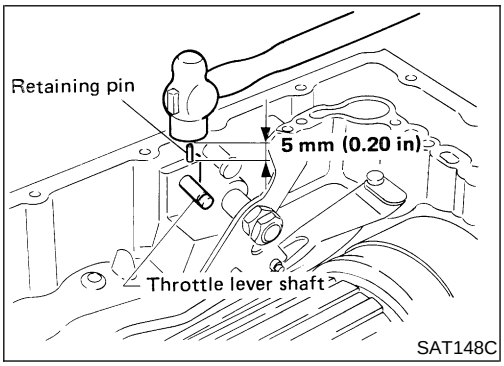

SAT148C

2. Install throttle lever components.
a. Install throttle lever shaft.
b. Align groove in shaft with drive pin hole, then drive pin into position as shown in figure at left.

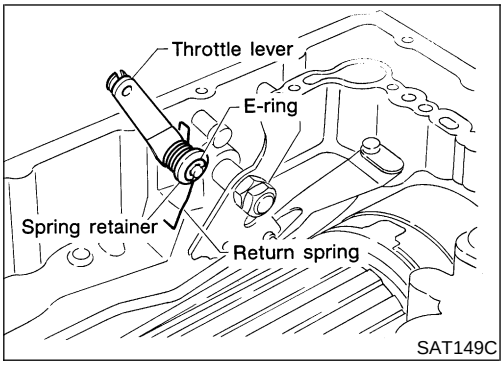

SAT149C

c. Install throttle lever, return spring, spring retainer and E-ring.

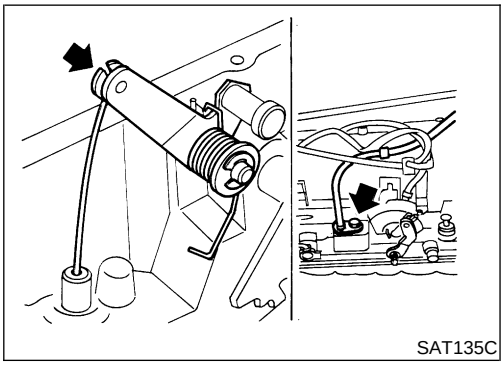
SAT135C

d. Install throttle wire.

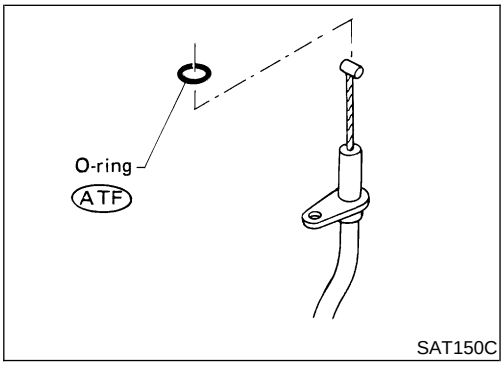

SAT150C

- **Apply ATF to O-ring.**

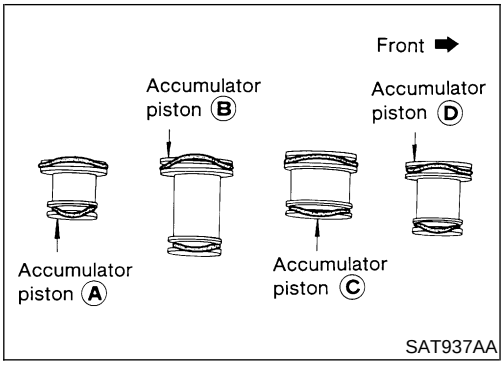

3. Install accumulator piston.
a. Install O-rings onto accumulator piston.
- **Apply ATF to O-rings.**

Accumulator piston O-rings:
Refer to "Accumulator O-ring", AT-143.

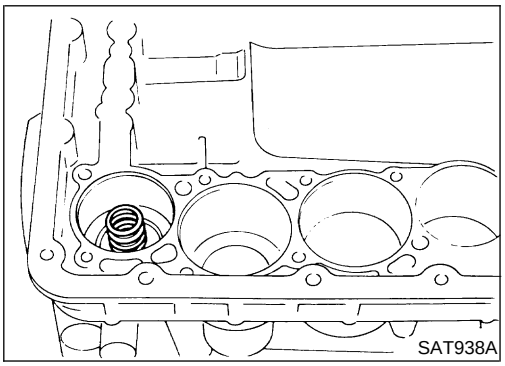

b. Install return spring for accumulator A onto transmission case.

Free length of return spring:
Refer to "Return Springs", AT-142.

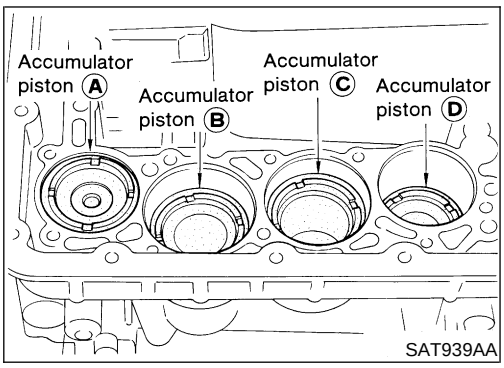

c. Install accumulator pistons **A**, **B**, **C** and **D**.
- **Apply ATF to transmission case.**

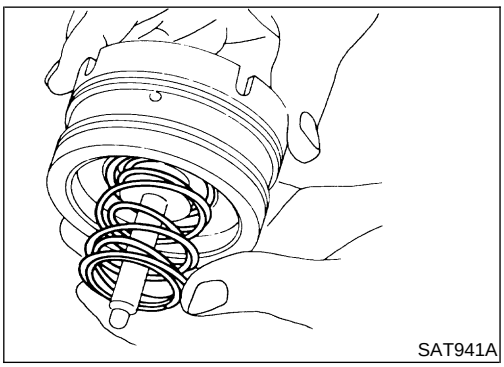

4. Install band servo piston.
a. Install return springs onto band servo piston.

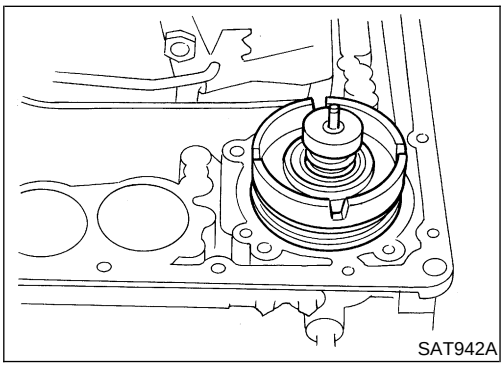

b. Install band servo piston onto transmission case.
- **Apply ATF to O-ring of band servo piston and transmission case.**

c. Install gasket for band servo onto transmission case.

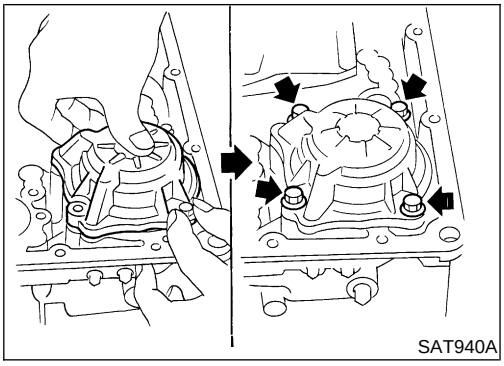
SAT940A

d. Install O/D servo piston retainer onto transmission case.

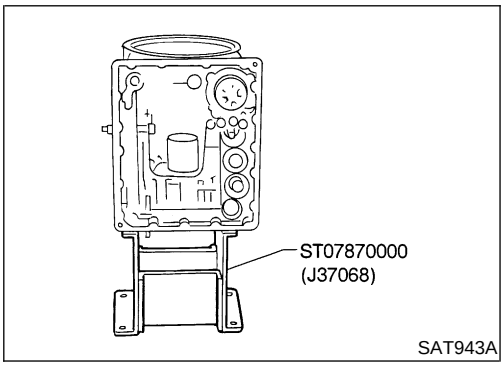

SAT943A

5. Install rear side clutch and gear components.

a. Place transmission case in vertical position.

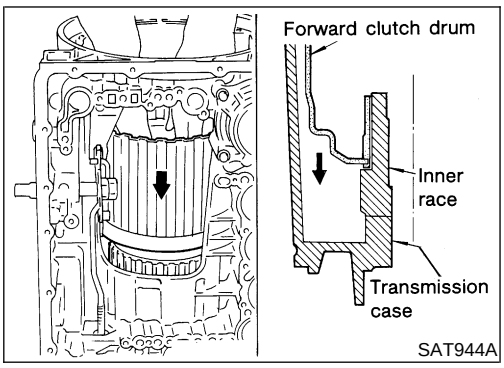

SAT944A

b. Slightly lift forward clutch drum assembly and slowly rotate it clockwise until its hub passes fully over the clutch inner race inside transmission case.

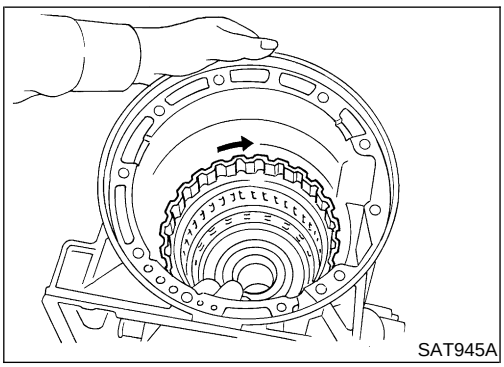
SAT945A

c. Check to be sure that rotation direction of forward clutch assembly is correct.

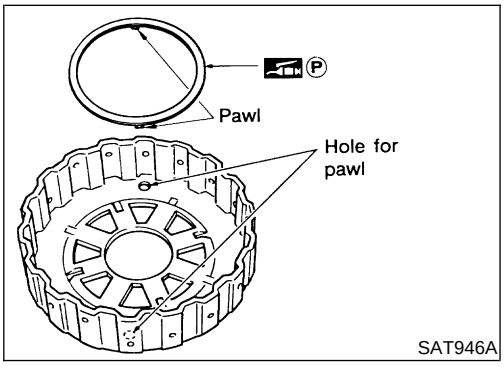

SAT946A

d. Install thrust washer onto front of overrun clutch hub.

- **Apply petroleum jelly to the thrust washer.**
- **Insert pawls of thrust washer securely into holes in overrun clutch hub.**

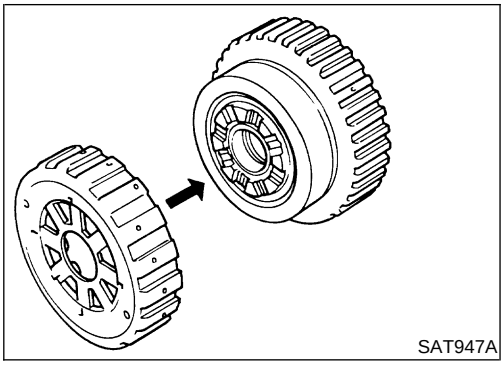
SAT947A

e. Install overrun clutch hub onto rear internal gear assembly.

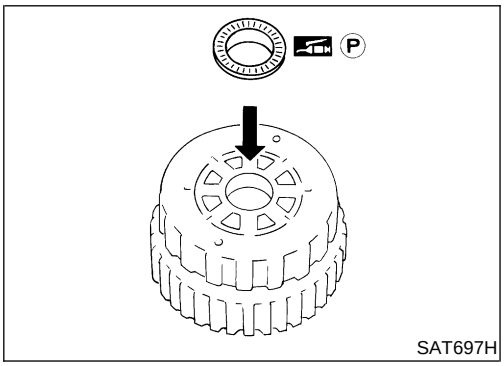

SAT697H

f. Install needle bearing onto rear of overrun clutch hub.
- **Apply petroleum jelly to needle bearing.**

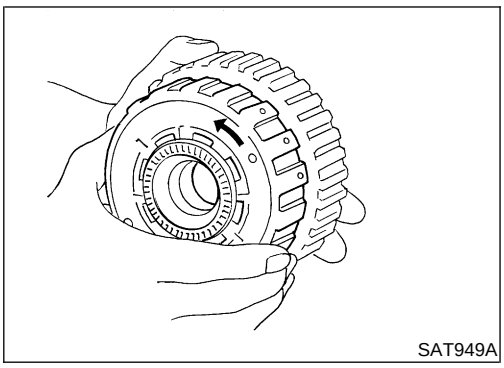
SAT949A

g. Check that overrun clutch hub rotates as shown while holding forward clutch hub.

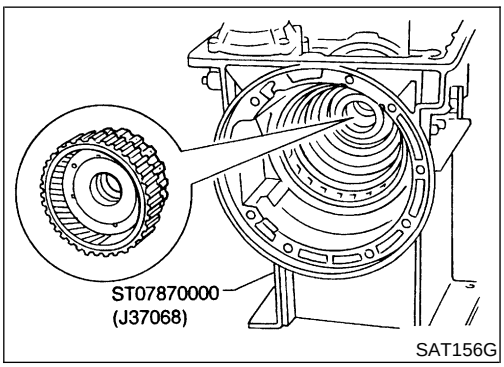

SAT156G

h. Place transmission case into horizontal position.
i. Install rear internal gear, forward clutch hub and overrun clutch hub as a unit onto transmission case.

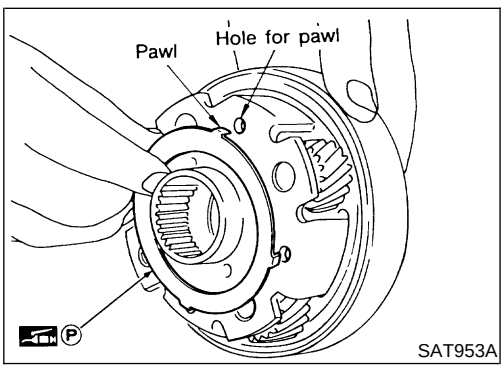

SAT953A

j. Install needle bearing onto rear internal gear.
- **Apply petroleum jelly to needle bearing.**

k. Install bearing race onto rear of front internal gear.
- **Apply petroleum jelly to bearing race.**
- **Securely engage pawls of bearing race with holes in front internal gear.**

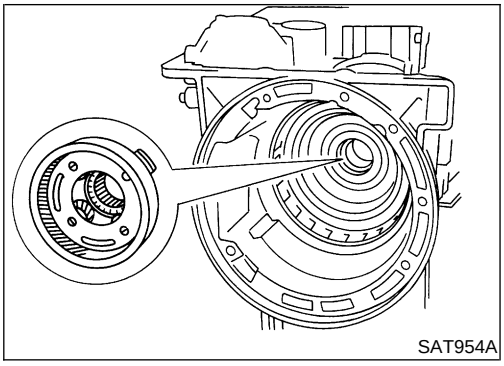
SAT954A

l. Install front internal gear on transmission case.

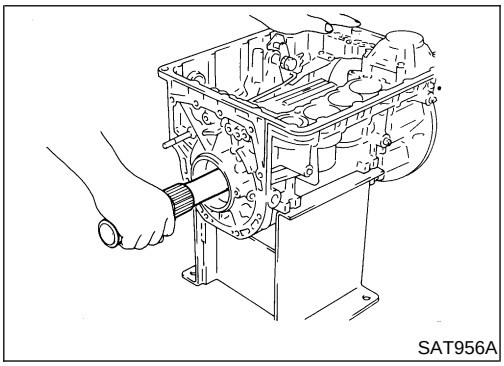
SAT956A

6. Install output shaft and parking gear.

a. Insert output shaft from rear of transmission case while slightly lifting front internal gear.

- **Do not force output shaft against front of transmission case.**

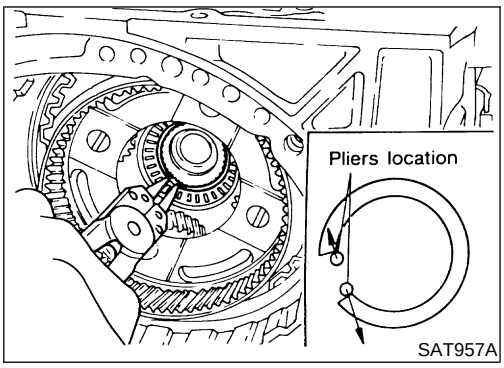

SAT957A

b. Carefully push output shaft against front of transmission case. Install snap ring on front of output shaft.

- **Check to be sure output shaft cannot be removed in rear direction.**

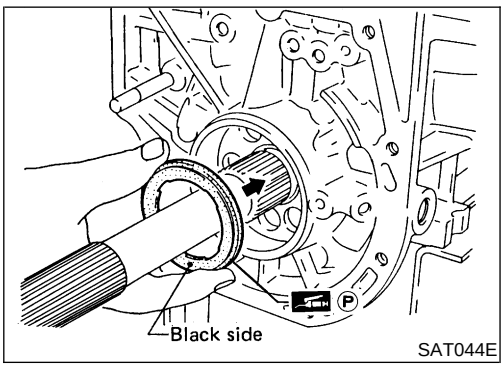

SAT044E

c. Install needle bearing on transmission case.

- **Pay attention to its direction — black side faces the rear.**
- **Apply petroleum jelly to needle bearing.**

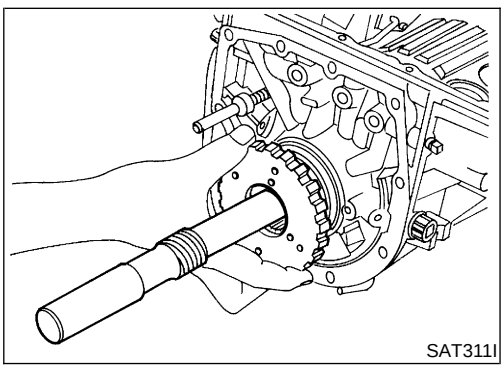
SAT311I

d. Install parking gear on transmission case.

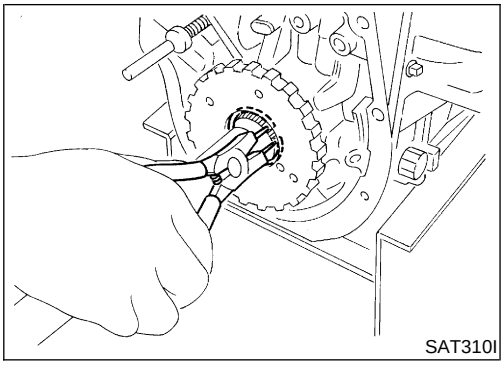
SAT310I

e. Install snap ring on rear of output shaft.
- **Check to be sure output shaft cannot be removed in forward direction.**

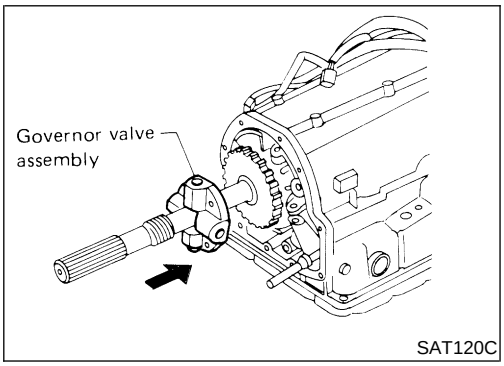

SAT120C

f. Install governor valve assembly on oil distributor.

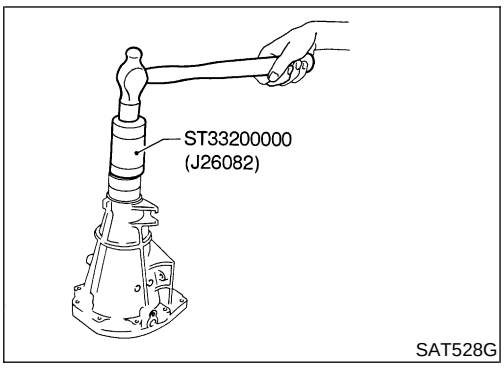

SAT528G

7. Install rear extension case.
a. Install oil seal on rear extension case.
- **Apply ATF to oil seal.**

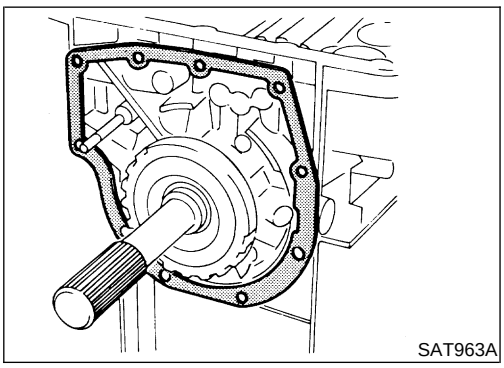
SAT963A

b. Install rear extension gasket on transmission case.

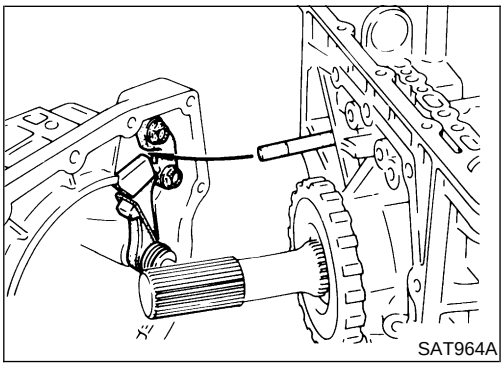
SAT964A

c. Install parking rod on transmission case.

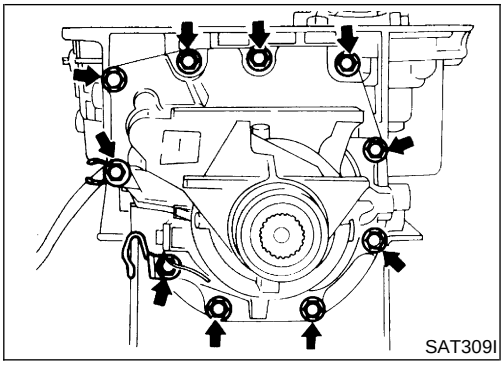
SAT309I

d. Install rear extension case on transmission case. Tighten bolts to specified torque.
: 20 - 25 N·m (2.0 - 2.5 kg-m, 14 - 18 ft-lb)

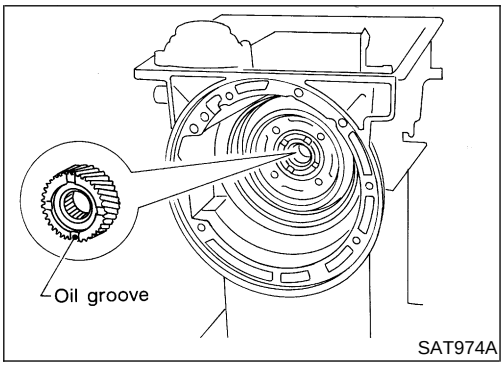

SAT974A

8. Install front side clutch and gear components.
a. Install rear sun gear on transmission case.
- **Pay attention to its direction.**

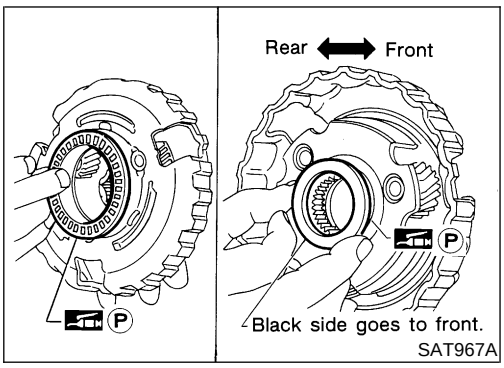

SAT967A

b. Install needle bearing on front of front planetary carrier.
- **Apply petroleum jelly to needle bearing.**

c. Install needle bearing on rear of front planetary carrier.
- **Apply petroleum jelly to needle bearing.**
- **Pay attention to its direction — black side faces the front.**

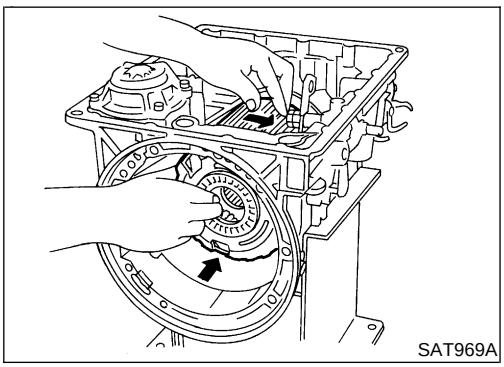
SAT969A

d. While rotating forward clutch drum clockwise, install front planetary carrier on forward clutch drum.

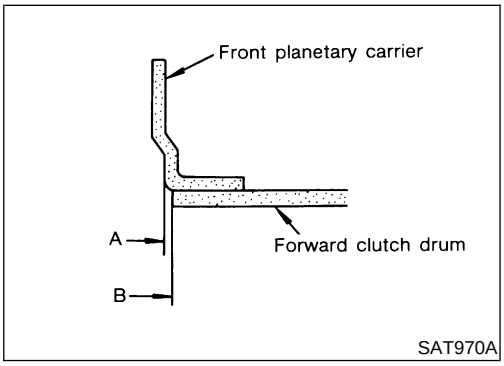

SAT970A

- **Check that portion A of front planetary carrier protrudes approximately 2 mm (0.08 in) beyond portion B of forward clutch assembly.**

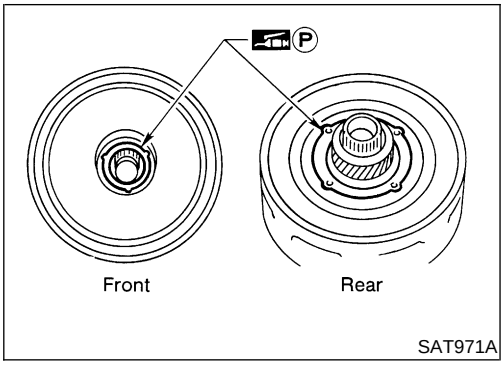

e. Install bearing races on front and rear of clutch pack.
- **Apply petroleum jelly to bearing races.**
- **Securely engage pawls of bearing races with holes in clutch pack.**

f. Place transmission case in vertical position.

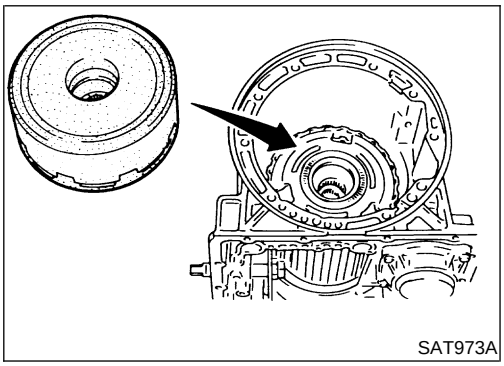

g. Install clutch pack into transmission case.

Adjustment

NEAT0483

When any parts listed in the following table are replaced, total end play or reverse clutch end play must be adjusted.

Part name	Item	
	Total end play	Reverse clutch end play
Transmission case	●	●
Low one-way clutch inner race	●	●
Overrun clutch hub	●	●
Rear internal gear	●	●
Rear planetary carrier	●	●
Rear sun gear	●	●
Front planetary carrier	●	●
Front sun gear	●	●
High clutch hub	●	●
High clutch drum	●	●
Oil pump cover	●	●
Reverse clutch drum	—	●

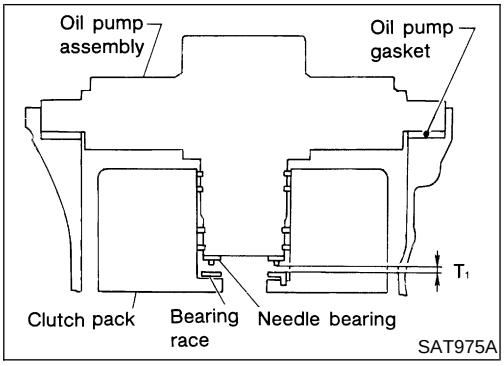

1. Adjust total end play.

Total end play "T_1":

0.25 - 0.55 mm (0.0098 - 0.0217 in)

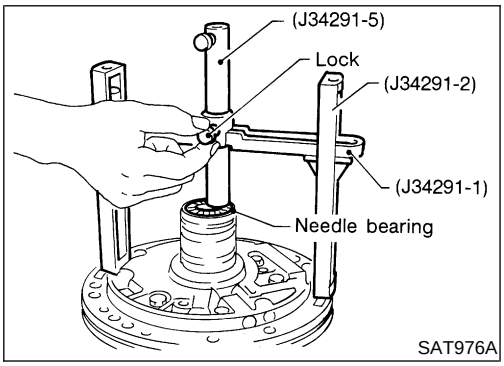

a. With original needle bearing installed, place J34291-1 (bridge), J34291-2 (legs) and the J34291-5 (gauging cylinder) onto oil pump. The long ends of legs should be placed firmly on machined surface of oil pump assembly, and gauging cylinder should rest on top of the needle bearing. Lock gauging cylinder in place with set screw.

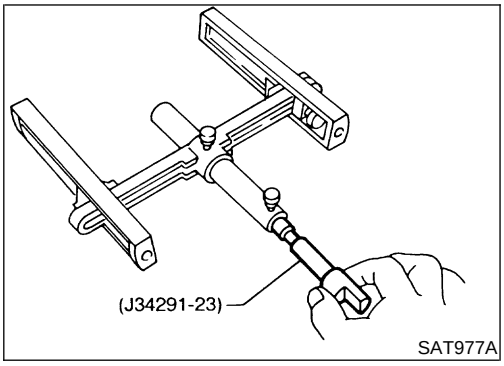

b. Install J34291-23 (gauging plunger) into gauging cylinder.

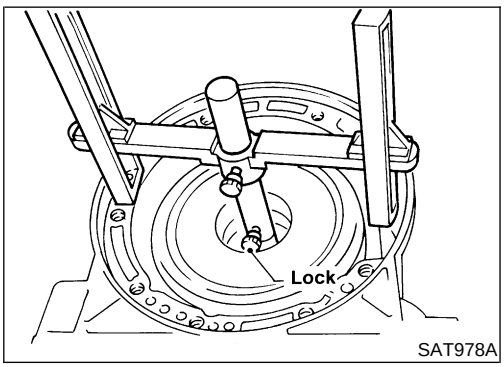

c. With original bearing race installed inside reverse clutch drum, place shim selecting gauge with its legs on machined surface of transmission case (no gasket) and allow gauging plunger to rest on bearing race. Lock gauging plunger in place with set screw.

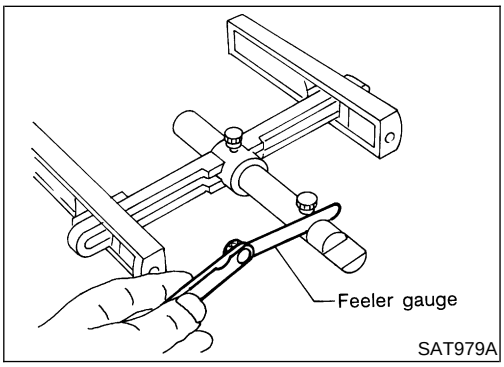

d. Remove Tool and use feeler gauge to measure gap between gauging cylinder and gauging plunger. This measurement should give exact total end play.

Total end play "T_1":

0.25 - 0.55 mm (0.0098 - 0.0217 in)

- If end play is out of specification, decrease or increase thickness of oil pump cover bearing race as necessary.

Available oil pump cover bearing race:

Refer to "Total End Play", AT-145.

Adjustment (Cont'd)

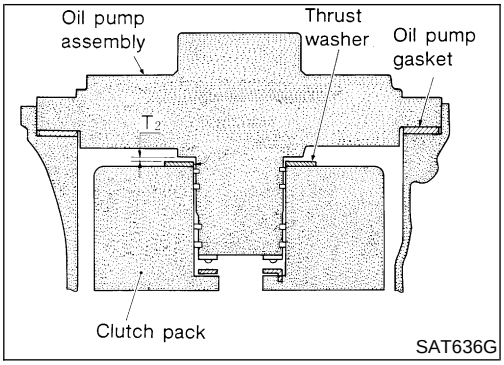

2. Adjust reverse clutch drum end play.

Reverse clutch drum end play "T_2":
0.55 - 0.90 mm (0.0217 - 0.0354 in)

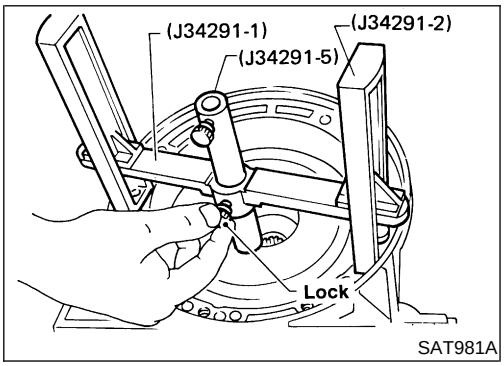

a. Place J34291-1 (bridge), J34291-2 (legs) and J34291-5 (gauging cylinder) on machined surface of transmission case (no gasket) and allow gauging cylinder to rest on front thrust surface of reverse clutch drum. Lock cylinder in place with set screw.

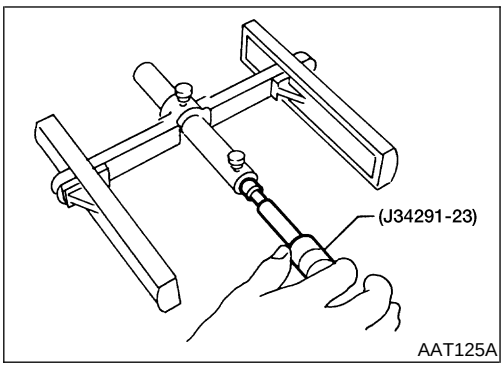

b. Install J34291-23 (gauging plunger) into gauging cylinder.

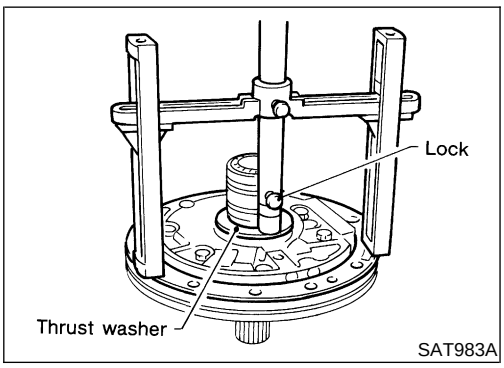

c. With original thrust washer installed on oil pump, place shim setting gauge legs onto machined surface of oil pump assembly and allow gauging plunger to rest on thrust washer. Lock plunger in place with set screw.

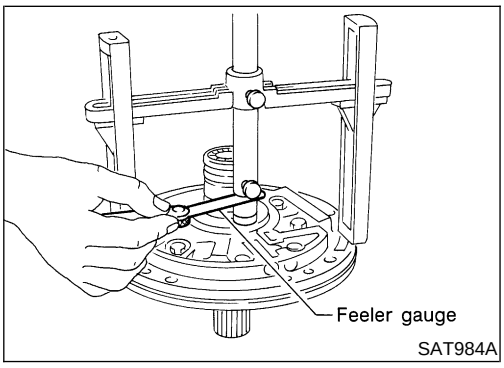

d. Use feeler gauge to measure gap between gauging plunger and gauging cylinder. This measurement should give you exact reverse clutch drum and play.

Reverse clutch drum end play "T_2":
0.55 - 0.90 mm (0.0217 - 0.0354 in)

- If end play is out of specification, decrease or increase thickness of oil pump thrust washer as necessary.

Available oil pump thrust washer:
Refer to "Reverse Clutch Drum End Play", AT-146.

Assembly (2)

NEAT0484

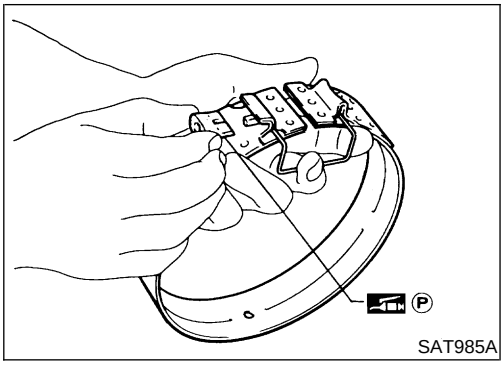

1. Place transmission case into horizontal position.
2. Install brake band and band strut.

a. Install band strut on brake band.

- **Apply petroleum jelly to band strut.**

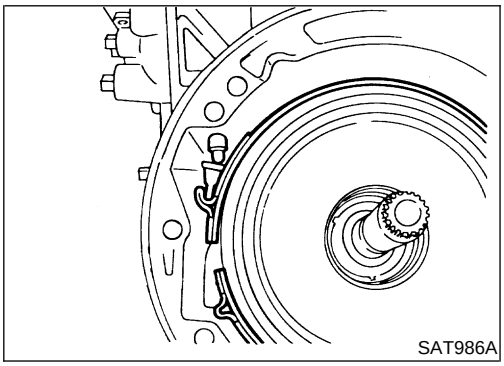

b. Place brake band around reverse clutch drum, and insert band strut into end of band servo piston stem.

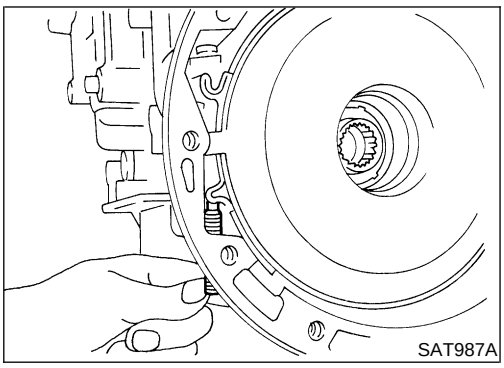

c. Install anchor end pin on transmission case. Then, tighten anchor end pin just enough so that reverse clutch drum (clutch pack) will not tilt forward.

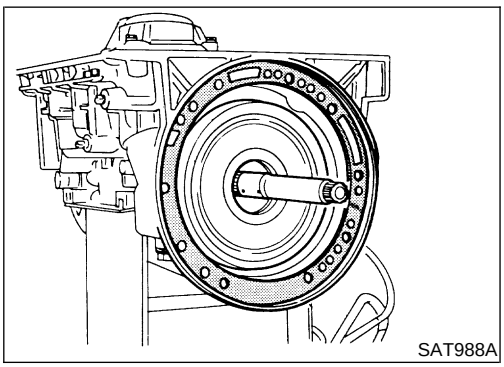

3. Install input shaft on transmission case.

- **Pay attention to its direction — O-ring groove side faces front.**

4. Install gasket on transmission case.

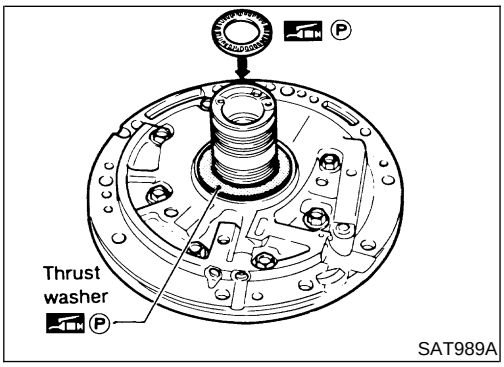

5. Install oil pump assembly.

a. Install needle bearing on oil pump assembly.

- **Apply petroleum jelly to the needle bearing.**

b. Install selected thrust washer on oil pump assembly.

- **Apply petroleum jelly to thrust washer.**

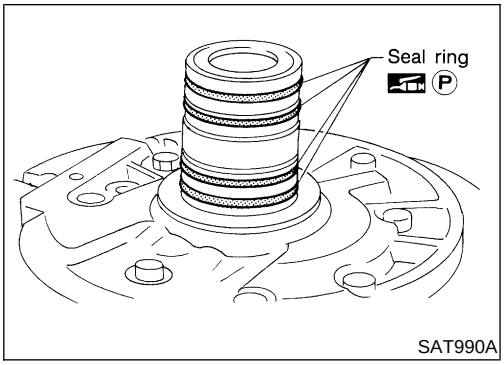

SAT990A

c. Carefully install seal rings into grooves and press them into the petroleum jelly so that they are a tight fit.

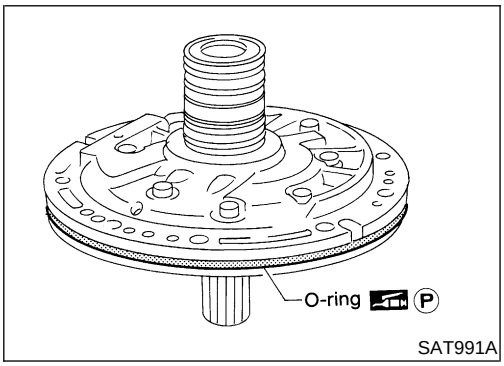

SAT991A

d. Install O-ring on oil pump assembly.

- **Apply petroleum jelly to O-ring.**

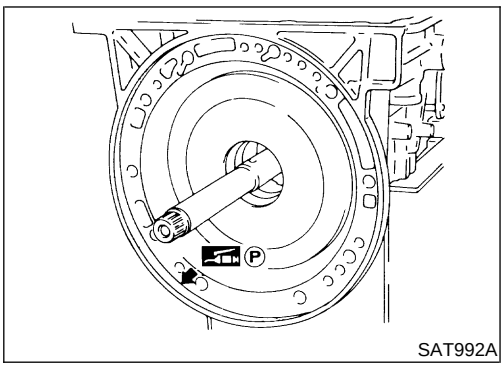

SAT992A

e. Apply petroleum jelly to mating surface of transmission case and oil pump assembly.

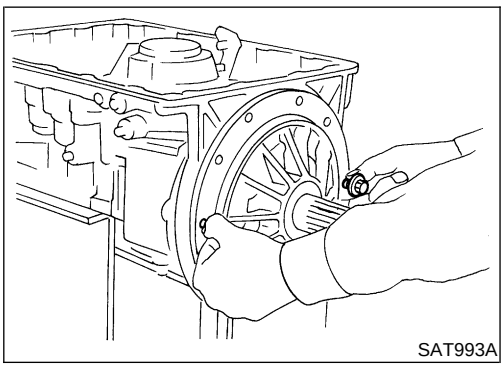
SAT993A

f. Install oil pump assembly.

- **Install two converter housing securing bolts in bolt holes in oil pump assembly as guides.**

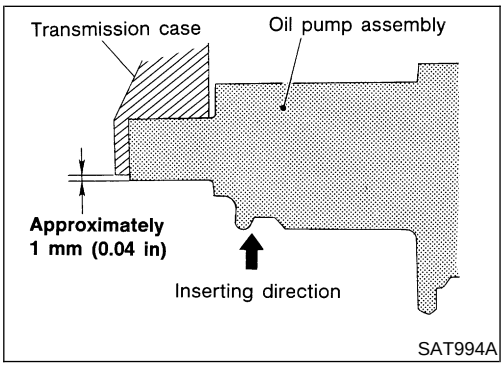

SAT994A

- **Insert oil pump assembly to the specified position in transmission, as shown at left.**

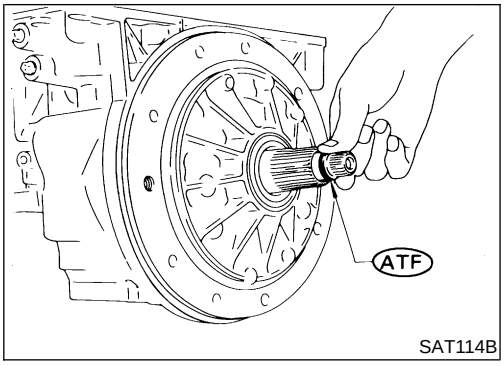

SAT114B

6. Install O-ring on input shaft.
- **Apply ATF to O-rings.**

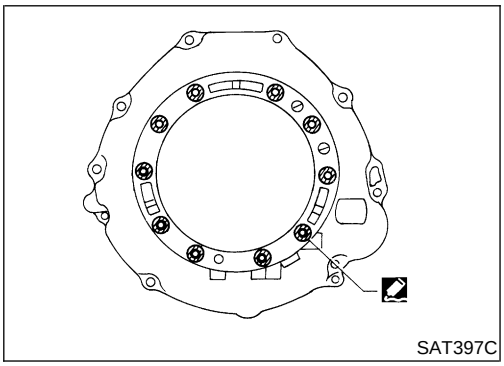
SAT397C

7. Install converter housing.
a. Apply genuine anaerobic liquid gasket Three Bond TB1215, Loctite Part No. 51813 or equivalent around bolt holes in converter housing.
- **Do not apply too much sealant.**

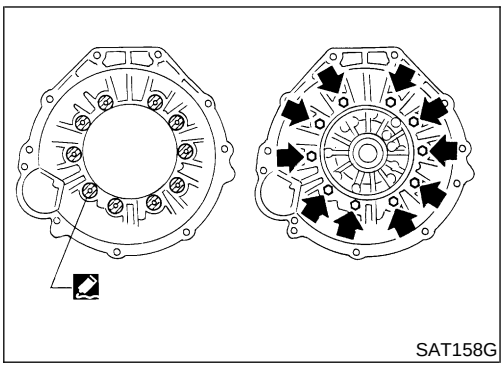
SAT158G

b. Apply genuine anaerobic liquid gasket Three Bond TB1215, Loctite Part No. 51813 or equivalent to seating surfaces of bolts that secure front of converter housing.
c. Install converter housing on transmission case.

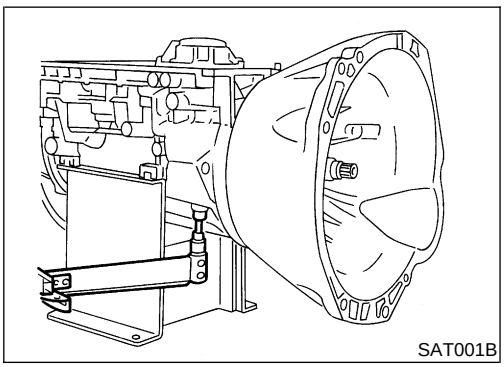
SAT001B

8. Adjust brake band.
a. Tighten anchor end pin to specified torque.

Anchor end pin:

: 4 - 6 N·m (0.4 - 0.6 kg-m, 35 - 52 in-lb)

b. Back off anchor end pin two and a half turns.

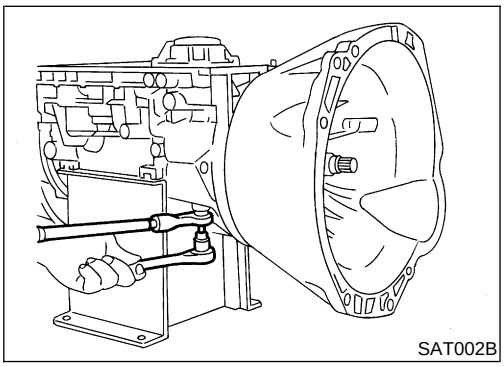
SAT002B

c. While holding anchor end pin, tighten lock nut.

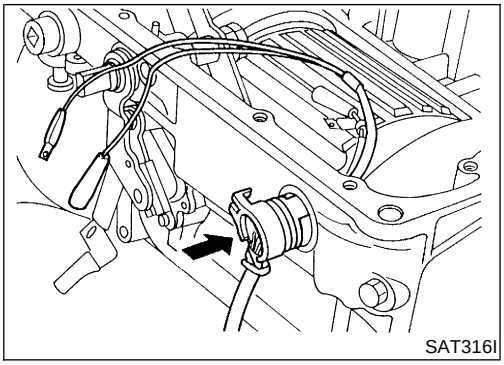
SAT316I

9. Install terminal cord assembly.
a. Install O-ring on terminal cord assembly.
- **Apply petroleum jelly to O-ring.**

b. Compress terminal cord assembly stopper and install terminal cord assembly on transmission case.

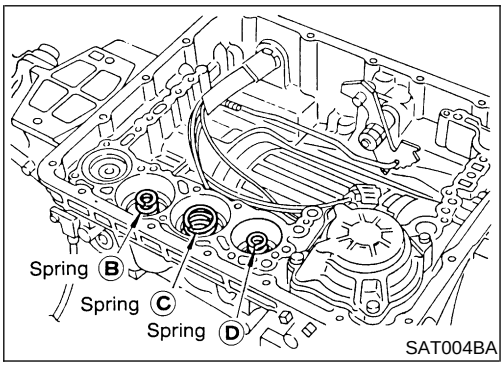

SAT004BA

10. Install control valve assembly.
a. Install accumulator piston return springs **B**, **C** and **D**.

Free length of return springs:
Refer to "Return Springs", AT-142.

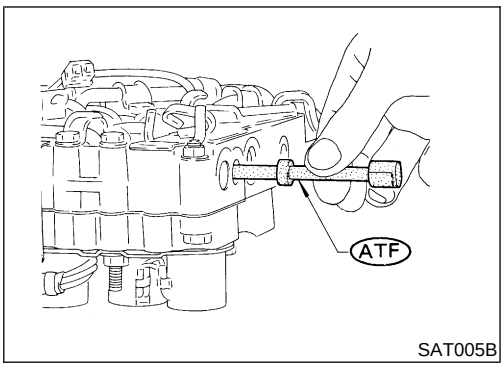

SAT005B

b. Install manual valve on control valve.
- **Apply ATF to manual valve.**

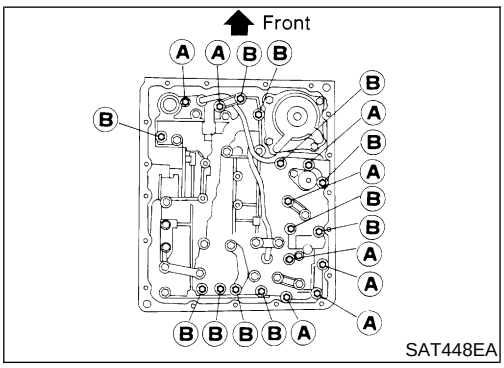

SAT448EA

c. Install control valve assembly on transmission case.
d. Install connector tube brackets and tighten bolts **A** and **B**.
- **Check that terminal assembly harness does not catch.**

Bolt	ℓ mm (in)
A	33 (1.30)
B	45 (1.77)

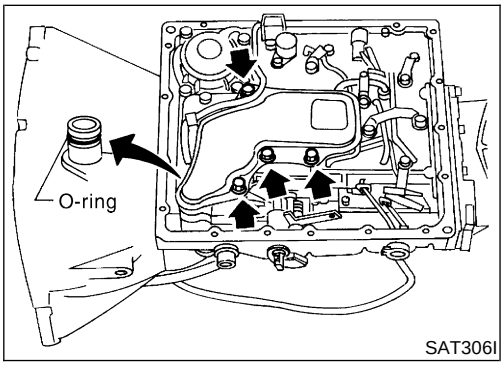

SAT306I

e. Install O-ring on oil strainer.
- **Apply petroleum jelly to O-ring.**

f. Install oil strainer on control valve.

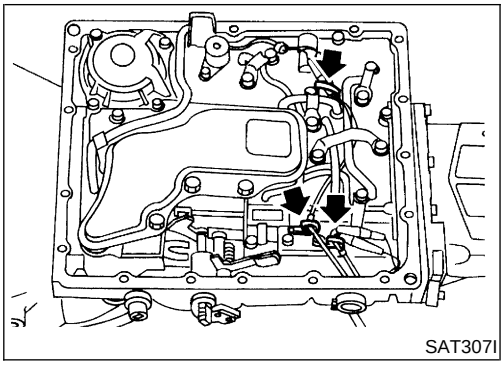
SAT307I

g. Securely fasten terminal harness with clips.

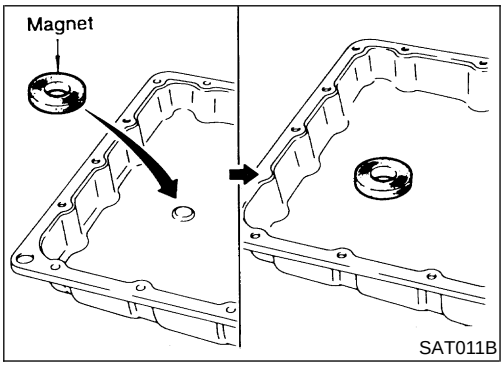

SAT011B

11. Install oil pan.
a. Attach a magnet to oil pan.

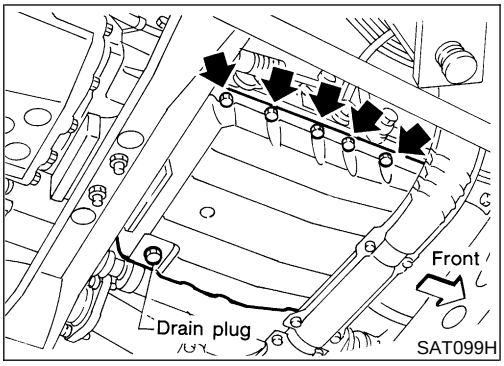

SAT099H

b. Install new oil pan gasket on transmission case.
c. Install oil pan and bracket on transmission case.
- **Always replace oil pan bolts as they are self-sealing bolts.**
- **Before installing bolts, remove traces of sealant and oil from mating surface and thread holes.**
- **Tighten four bolts in a crisscross pattern to prevent dislocation of gasket.**

d. Tighten drain plug.

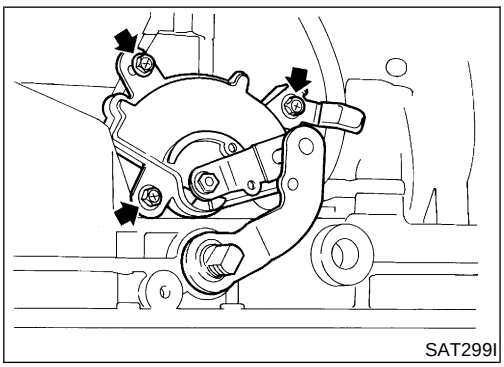
SAT299I

12. Install park/neutral position (PNP) switch.
a. Check that manual shaft is in 1 position.
b. Temporarily install PNP switch on manual shaft.
c. Move manual shaft to N.

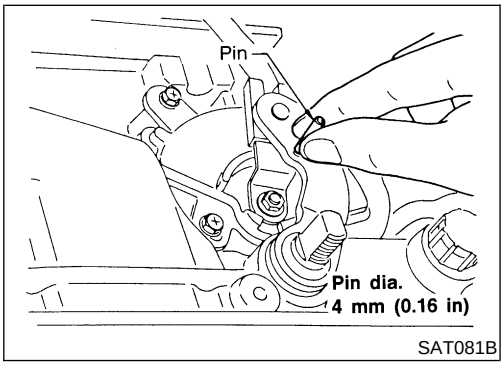

SAT081B

d. Use a 4 mm (0.16 in) pin for this adjustment.
i. Insert the pin straight into the manual shaft adjustment hole.
ii. Rotate PNP switch until the pin can also be inserted straight into hole in PNP switch.
e. Tighten PNP switch fixing bolts.
f. Remove pin from adjustment hole after adjusting PNP switch.

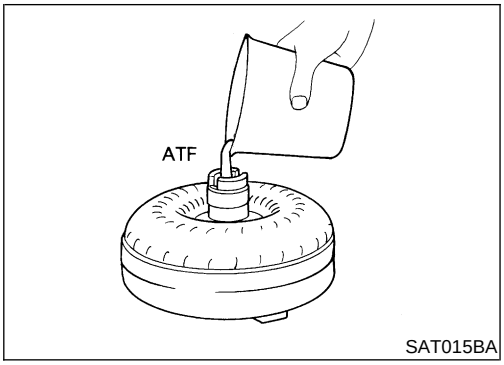

13. Install torque converter.

a. Pour ATF into torque converter.

- **Approximately 2 liters (2-1/8 US qt, 1-3/4 Imp qt) of fluid are required for a new torque converter.**
- **When reusing old torque converter, add the same amount of fluid as was drained.**

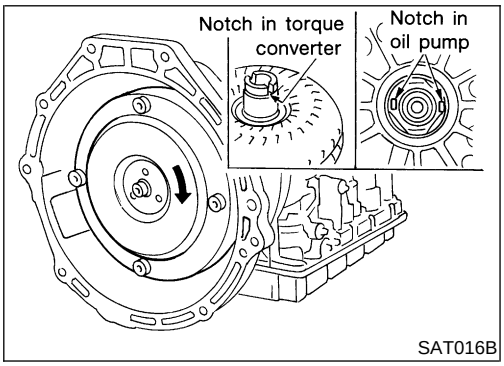

b. Install torque converter while aligning notches and oil pump.

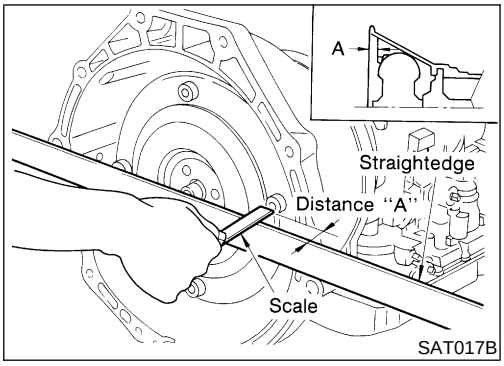

c. Measure distance A to check that torque converter is in proper position.

Distance "A":

26.0 mm (1.024 in) or more

General Specifications

NEAT0485

Automatic transmission model		RL4R01A
Transmission model code number		49X11
Stall torque ratio		2.0 : 1
Transmission gear ratio	1st	2.785
	2nd	1.545
	Top	1.000
	O/D	0.694
	Reverse	2.272
Recommended fluid		Nissan Matic “D” (Continental U.S. and Alaska) or Genuine Nissan Automatic Transmission Fluid (Canada)*1
Fluid capacity ℓ (US qt, Imp qt)		7.9 (8-3/8, 7)

*1: Refer to ***MA-13***, “Fluids and Lubricants”.

Shift Schedule

NEAT0486

VEHICLE SPEED WHEN SHIFTING GEARS

NEAT0486S01

Throttle position	Vehicle speed km/h (MPH)						
	$D_1 \rightarrow D_2$	$D_2 \rightarrow D_3$	$D_3 \rightarrow D_4$	$D_4 \rightarrow D_3$	$D_3 \rightarrow D_2$	$D_2 \rightarrow D_1$	$1_2 \rightarrow 1_1$
Full throttle	46 - 50 (29 - 31)	88 - 96 (55 - 60)	—	126 - 136 (78 - 85)	80 - 88 (50 - 55)	41 - 45 (25 - 28)	41 - 45 (25 - 28)
Half throttle	29 - 33 (18 - 21)	56 - 64 (35 - 40)	105 - 114 (65 - 71)	60 - 70 (37 - 43)	26 - 32 (16 - 20)	12 - 16 (7 - 10)	41 - 45 (25 - 28)

VEHICLE SPEED WHEN PERFORMING AND RELEASING LOCK-UP

NEAT0486S02

Throttle position	D_4 (O/D ON)	
	Vehicle speed km/h (MPH)	
	Lock-up ON	Lock-up OFF
4/8	105 - 113 (65 - 70)	61 - 69 (38 - 43)
3/8	76 - 84 (47 - 52)	55 - 63 (34 - 39)
2/8	58 - 66 (36 - 41)	55 - 63 (34 - 39)
1/8	58 - 66 (36 - 41)	55 - 63 (34 - 39)

Stall Revolution

NEAT0487

Stall revolution rpm	2,100 - 2,300

Line Pressure

NEAT0488

Engine speed rpm	Line pressure kPa (kg/cm^2, psi)		
	D position (Overdrive control switch ON and OFF)	2 and 1 positions	R position
Idle	471 - 510 (4.8 - 5.2, 68 - 74)	883 - 961 (9.0 - 9.8, 128 - 139)	736 - 775 (7.5 - 7.9, 107 - 112)
Stall	912 - 991 (9.3 - 10.1, 132 - 144)	883 - 961 (9.0 - 9.8, 128 - 139)	1,442 - 1,520 (14.7 - 15.5, 209 - 220)

Governor Pressure

NEAT0489

Vehicle speed	Governor pressure kPa (kg/cm^2, psi)
0 km/h (0 MPH)	0 (0, 0)
29 km/h (18 MPH)	119.6 - 123.6 (1.22 - 1.26, 17 - 18)
57 km/h (35 MPH)	235.4 - 284.4 (2.40 - 2.90, 34 - 41)
86 km/h (53 MPH)	351.1 - 409.9 (3.58 - 4.18, 51 - 59)

Return Springs

NEAT0490

Unit: mm (in)

Parts				Item		
				Part No.*	Free length	Outer diameter
Control valve	Upper body	**1**	4th speed cut valve spring	31756-48X06	23.5 (0.925)	7.4 (0.2913)
		2	Pressure regulator valve spring	31742-48X23	51.2 (2.016)	12.1 (0.476)
		3	Pressure modifier valve spring	31742-48X13	40.83 (1.6075)	8.0 (0.315)
		4	1-2 shift valve spring	31762-48X00	43.4 (1.709)	6.0 (0.236)
		5	2-3 shift valve spring	31762-48X14	47.4 (1.866)	9.0 (0.354)
		6	3-4 shift valve spring	31762-48X06	44.03 (1.7335)	8.0 (0.315)
		7	Accumulator control valve spring	31742-48X24	30.3 (1.193)	8.0 (0.315)
		—	3-2 downshift valve spring	—	—	—
		8	2-3 throttle modifier valve spring	31742-41X21	33.0 (1.299)	6.5 (0.256)
		9	4-2 relay valve spring	31756-41X00	29.1 (1.146)	6.95 (0.2736)
		10	Torque converter clutch control valve spring	31742-48X07	20.0 (0.787)	5.45 (0.2146)
	Lower body	**1**	Throttle valve & detent valve spring	31802-48X02	34.23 (1.3476)	11.0 (0.433)
		2	Kickdown modifier valve spring	31756-48X12	42.8 (1.685)	7.0 (0.276)
		3	1st reducing valve spring	31756-48X04	34.1 (1.343)	7.0 (0.276)
		4	Overrun clutch reducing valve spring	31742-48X21	33.2 (1.307)	7.7 (0.303)
		5		31742-48X05	31.0 (1.220)	5.2 (0.205)
		6	3-2 timing valve spring	31742-48X15	23.0 (0.906)	7.0 (0.276)
		7	Torque converter relief valve spring	31742-41X23	38.0 (1.496)	9.0 (0.354)
		8	4-2 sequence valve spring	31756-41X00	29.1 (1.146)	6.95 (0.2736)
Governor valve		**1**	Primary valve spring	31742-48X11	19.1 (0.752)	9.05 (0.3563)
		2	Secondary governor valve I spring	31742-48X09	30.58 (1.2039)	9.2 (0.362)
		3	Secondary governor valve II spring	31742-48X10	16.79 (0.6610)	9.0 (0.354)
Reverse clutch			16 pcs	31521-41X02 (Assembly)	19.7 (0.7756)	11.6 (0.457)
High clutch			10 pcs	31521-41X03 (Assembly)	24.2 (0.9528)	11.6 (0.457)
Forward clutch (Overrun clutch)			20 pcs	31521-41X04 (Assembly)	35.77 (1.4083)	9.7 (0.382)
Low & reverse brake			18 pcs	31655-41X00 (Assembly)	22.3 (0.878)	11.2 (0.4409)

Parts		Item		
		Part No.*	Free length	Outer diameter
Band servo	Spring **A**	31605-41X05	45.6 (1.795)	34.3 (1.350)
	Spring **B**	31605-41X00	53.8 (2.118)	40.3 (1.587)
	Spring **C**	31605-41X01	29.7 (1.1693)	27.6 (1.087)
Accumulator	Accumulator **A**	31605-41X02	43.0 (1.693)	18.0 (0.709)
	Accumulator **B**	31605-41X15	66.0 (2.598)	20.8 (0.819)
	Accumulator **C**	31605-51X01	45.0 (1.772)	29.3 (1.154)
	Accumulator **D**	31605-41X06	58.4 (2.299)	17.3 (0.681)

*: Always check with the Parts Department for the latest parts information.

Accumulator O-ring

NEAT0491

Accumulator	Diameter mm (in)			
	A	**B**	**C**	**D**
Small diameter end	29 (1.14)	32 (1.26)	45 (1.77)	29 (1.14)
Large diameter end	45 (1.77)	50 (1.97)	50 (1.97)	45 (1.77)

Clutch and Brakes

NEAT0492

REVERSE CLUTCH

NEAT0492S01

Code number		49X11	
Number of drive plates		2	
Number of driven plates		2	
Thickness of drive plate mm (in)	Standard	1.90 - 2.05 (0.0748 - 0.0807)	
	Wear limit	1.80 (0.0709)	
Clearance mm (in)	Standard	0.5 - 0.8 (0.020 - 0.031)	
	Allowable limit	1.2 (0.047)	
Thickness of retaining plate		Thickness mm (in)	Part No.*
		4.8 (0.189) 5.0 (0.197) 5.2 (0.205) 5.4 (0.213) 5.6 (0.220)	31537-42X02 31537-42X03 31537-42X04 31537-42X05 31537-42X06

*: Always check with the Parts Department for the latest parts information.

HIGH CLUTCH

NEAT0492S02

Code number		49X11
Number of drive plates		5
Number of driven plates		5
Thickness of drive plate mm (in)	Standard	1.52 - 1.67 (0.0598 - 0.0657)
	Wear limit	1.40 (0.0551)
Clearance mm (in)	Standard	1.8 - 2.2 (0.071 - 0.087)
	Allowable limit	3.2 (0.126)

	Thickness mm (in)	Part No.*
Thickness of retaining plate	3.4 (0.134) 3.6 (0.142) 3.8 (0.150) 4.0 (0.157) 4.2 (0.165) 4.4 (0.173) 4.6 (0.181) 4.8 (0.189)	31537-41X71 31537-41X61 31537-41X62 31537-41X63 31537-41X64 31537-41X65 31537-41X66 31537-41X67

*: Always check with the Parts Department for the latest parts information.

FORWARD CLUTCH

NEAT0492S03

Code number		49X11	
Number of drive plates		5	
Number of driven plates		5	
Thickness of drive plate mm (in)	Standard	1.52 - 1.67 (0.0598 - 0.0657)	
	Wear limit	1.40 (0.0551)	
Clearance mm (in)	Standard	0.35 - 0.75 (0.0138 - 0.0295)	
	Allowable limit	1.75 (0.069)	
Thickness of retaining plate		Thickness mm (in)	Part No.*
		8.0 (0.315) 8.1 (0.319) 8.2 (0.323) 8.3 (0.327) 8.4 (0.331) 8.5 (0.335) 8.6 (0.339) 8.7 (0.343) 8.8 (0.346) 8.9 (0.350) 9.0 (0.354) 9.1 (0.358) 9.2 (0.362)	31537-41X00 31537-42X60 31537-41X01 31537-42X61 31537-41X02 31537-42X62 31537-41X03 31537-42X63 31537-41X04 31537-42X64 31537-41X05 31537-42X65 31537-41X06

*: Always check with the Parts Department for the latest parts information.

OVERRUN CLUTCH

NEAT0492S04

Code number		49X11	
Number of drive plates		3	
Number of driven plates		5	
Thickness of drive plate mm (in)	Standard	1.90 - 2.05 (0.0748 - 0.0807)	
	Wear limit	1.80 (0.0709)	
Clearance mm (in)	Standard	1.0 - 1.4 (0.039 - 0.055)	
	Allowable limit	2.0 (0.079)	
Thickness of retaining plate		Thickness mm (in)	Part No.*
		4.2 (0.165) 4.4 (0.173) 4.6 (0.181) 4.8 (0.189) 5.0 (0.197)	31537-41X80 31537-41X81 31537-41X82 31537-41X83 31537-41X84

*: Always check with the Parts Department for the latest parts information.

LOW & REVERSE BRAKE

NEAT0492S05

Code number	49X11

Number of drive plates		5	
Number of driven plates		7	
Thickness of drive plate mm (in)	Standard	1.52 - 1.67 (0.0598 - 0.0657)	
	Wear limit	1.40 (0.0551)	
Clearance mm (in)	Standard	0.5 - 0.8 (0.020 - 0.031)	
	Allowable limit	1.8 (0.071)	
Thickness of retaining plate		Thickness mm (in)	Part No.*
		7.2 (0.283)	31667-41X13
		7.4 (0.291)	31667-41X14
		7.6 (0.299)	31667-41X07
		7.8 (0.307)	31667-41X08
		8.0 (0.315)	31667-41X00
		8.2 (0.323)	31667-41X01
		8.4 (0.331)	31667-41X02
		8.6 (0.339)	31667-41X03
		8.8 (0.346)	31667-41X04
		9.0 (0.354)	31667-41X05
		9.2 (0.362)	31667-41X06

*: Always check with the Parts Department for the latest parts information.

BRAKE BAND

NEAT0492S06

Code number	49X11
Anchor end pin nut tightening torque N·m (kg-m, ft-lb)	40 - 51 (4.1 - 5.2, 30 - 37)
Anchor end pin tightening torque N·m (kg-m, in-lb)	4 - 6 (0.4 - 0.6, 35 - 52)
Number of returning revolutions for anchor end pin	2.5

Oil Pump and Low One-way Clutch

NEAT0493

Oil pump clearance mm (in)	Cam ring — oil pump housing	Standard	0.01 - 0.024 (0.0004 - 0.0009)
	Rotor, vanes and control piston — oil pump housing	Standard	0.03 - 0.044 (0.0012 - 0.0017)
Seal ring clearance mm (in)	Standard		0.10 - 0.25 (0.0039 - 0.0098)
	Allowable limit		0.25 (0.0098)

Total End Play

NEAT0494

Total end play "T_1"	0.25 - 0.55 mm (0.0098 - 0.0217 in)	
Thickness of oil pump cover bearing race	Thickness mm (in)	Part No.*
	0.8 (0.031)	31435-41X01
	1.0 (0.039)	31435-41X02
	1.2 (0.047)	31435-41X03
	1.4 (0.055)	31435-41X04
	1.6 (0.063)	31435-41X05
	1.8 (0.071)	31435-41X06
	2.0 (0.079)	31435-41X07

*: Always check with the Parts Department for the latest parts information.

Parking Gear

NEAT0495

Seal ring — ring groove clearance mm (in)	Standard	0.20 - 0.40 (0.008 - 0.0157)
	Allowable limit	0.20 (0.008)

Reverse Clutch Drum End Play

NEAT0496

Reverse clutch drum end play "T_2"	0.55 - 0.90 mm (0.0217 - 0.0354 in)	
Thickness of oil pump thrust washer	Thickness mm (in)	Part No.*
	0.9 (0.035)	31528-21X01
	1.1 (0.043)	31528-21X02
	1.3 (0.051)	31528-21X03
	1.5 (0.059)	31528-21X04
	1.7 (0.067)	31528-21X05
	1.9 (0.075)	31528-21X06

*: Always check with the Parts Department for the latest parts information.

Removal and Installation

NEAT0497

Manual control cable	Number of returning revolutions for lock nut	1
	Lock nut tightening torque N·m (kg-m, ft-lb)	10.8 - 12.7 (1.09 - 1.29, 8.0 - 9.3)
Distance between end of converter housing and torque converter mm (in)		26.0 (1.024) or more

Alphabetical & P No. Index for DTC

NEAT0100

ALPHABETICAL INDEX FOR DTC

NEAT0100S01

Items (CONSULT-II screen terms)	DTC	Reference page
	CONSULT-II GST*1	
A/T 1ST GR FNCTN	P0731	AT-272
A/T 2ND GR FNCTN	P0732	AT-278
A/T 3RD GR FNCTN	P0733	AT-284
A/T 4TH GR FNCTN	P0734	AT-290
A/T TCC S/V FNCTN	P0744	AT-304
ATF TEMP SEN/CIRC	P0710	AT-256
ENGINE SPEED SIG	P0725	AT-267
L/PRESS SOL/CIRC	P0745	AT-313
O/R CLTCH SOL/CIRC	P1760	AT-337
PNP SW/CIRC	P0705	AT-250
SFT SOL A/CIRC*2	P0750	AT-318
SFT SOL B/CIRC*2	P0755	AT-323
TCC SOLENOID/CIRC	P0740	AT-299
TP SEN/CIRC A/T*2	P1705	AT-328
VEH SPD SEN/CIR AT*3	P0720	AT-262

*1: These numbers are prescribed by SAE J2012.

*2: When the fail-safe operation occurs, the MIL illuminates.

*3: The MIL illuminates when both the “Revolution sensor signal” and the “Vehicle speed sensor signal” meet the fail-safe condition at the same time.

P NO. INDEX FOR DTC

=NEAT0100S02

DTC CONSULT-II GST*1	Items (CONSULT-II screen terms)	Reference page
P0705	PNP SW/CIRC	AT-250
P0710	ATF TEMP SEN/CIRC	AT-256
P0720	VEH SPD SEN/CIR AT*3	AT-262
P0725	ENGINE SPEED SIG	AT-267
P0731	A/T 1ST GR FNCTN	AT-272
P0732	A/T 2ND GR FNCTN	AT-278
P0733	A/T 3RD GR FNCTN	AT-284
P0734	A/T 4TH GR FNCTN	AT-290
P0740	TCC SOLENOID/CIRC	AT-299
P0744	A/T TCC S/V FNCTN	AT-304
P0745	L/PRESS SOL/CIRC	AT-313
P0750	SFT SOL A/CIRC*2	AT-318
P0755	SFT SOL B/CIRC*2	AT-323
P1705	TP SEN/CIRC A/T*2	AT-328
P1760	O/R CLTCH SOL/CIRC	AT-337

*1: These numbers are prescribed by SAE J2012.

*2: When the fail-safe operation occurs, the MIL illuminates.

*3: The MIL illuminates when both the "Revolution sensor signal" and the "Vehicle speed sensor signal" meet the fail-safe condition at the same time.

Supplemental Restraint System (SRS) “AIR BAG” and “SEAT BELT PRE-TENSIONER”

NEAT0101

The Supplemental Restraint System such as “AIR BAG” and “SEAT BELT PRE-TENSIONER”, used along with a seat belt, help to reduce the risk or severity of injury to the driver and front passenger in a frontal collision. The Supplemental Restraint System consists of air bag modules (located in the center of the steering wheel and in the instrument panel on the passenger side), seat belt pre-tensioners, a diagnosis sensor unit, warning lamp, wiring harness, and spiral cable.

The vehicle (except Crew Cab model) is equipped with a passenger air bag deactivation switch. Because no rear seat exists where a rear-facing child restraint can be placed, the switch is designed to turn off the passenger air bag so that a rear-facing child restraint can be used in the front passenger seat. The switch is located in the center of the instrument panel, near the ashtray. When the switch is turned to the ON position, the passenger air bag is enabled and could inflate in a frontal collision. When the switch is turned to the OFF position, the passenger air bag is disabled and will not inflate in a frontal collision. A passenger air bag OFF indicator on the instrument panel lights up when the passenger air bag is switched OFF. The driver air bag always remains enabled and is not affected by the passenger air bag deactivation switch.

Information necessary to service the system safely is included in the **RS section** of this Service Manual.

WARNING:

- **To avoid rendering the SRS inoperative, which could increase the risk of personal injury or death in the event of a collision which would result in air bag inflation, all maintenance should be performed by an authorized NISSAN dealer.**
- **Improper maintenance, including incorrect removal and installation of the SRS, can lead to personal injury caused by unintentional activation of the system. For removal of Spiral Cable and Air Bag Module, see the RS section.**
- **Do not use electrical test equipment on any circuit related to the SRS unless instructed to in this Service Manual. Spiral cable and wiring harnesses (except “SEAT BELT PRE-TENSIONER”) are covered with yellow insulation either just before the harness connectors or for the complete harness are related to the SRS.**
- **The vehicle (except Crew Cab model) is equipped with a passenger air bag deactivation switch which can be operated by the customer. When the passenger air bag is switched OFF, the passenger air bag is disabled and will not inflate in a frontal collision. When the passenger air bag is switched ON, the passenger air bag is enabled and could inflate in a frontal collision. After SRS maintenance or repair, make sure the passenger air bag deactivation switch is in the same position (ON or OFF) as when the vehicle arrived for service.**

Precautions for On Board Diagnostic (OBD) System of A/T and Engine

NEAT0102

The ECM has an on board diagnostic system. It will light up the malfunction indicator lamp (MIL) to warn the driver of a malfunction causing emission deterioration.

CAUTION:

- **Be sure to turn the ignition switch OFF and disconnect the negative battery terminal before any repair or inspection work. The open/short circuit of related switches, sensors, solenoid valves, etc. will cause the MIL to light up.**
- **Be sure to connect and lock the connectors securely after work. A loose (unlocked) connector will cause the MIL to light up due to an open circuit (Be sure the connector is free from water, grease, dirt, bent terminals, etc.).**
- **Be sure to route and secure the harnesses properly after work. Interference of the harness with a bracket, etc. may cause the MIL to light up due to a short circuit.**
- **Be sure to connect rubber tubes properly after work. A misconnected or disconnected rubber tube may cause the MIL to light up due to a malfunction of the EGR system or fuel injection system, etc.**
- **Be sure to erase the unnecessary malfunction information (repairs completed) from the TCM and ECM before returning the vehicle to the customer.**

Precautions

NEAT0103

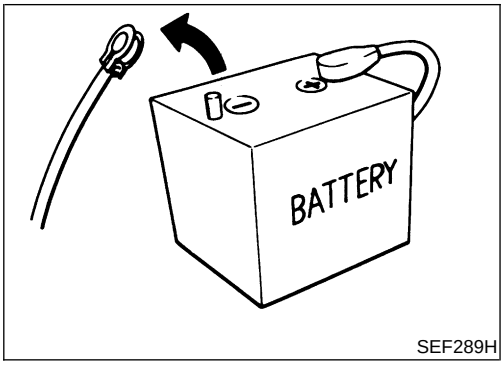

SEF289H

- **Before connecting or disconnecting the TCM harness connector, turn ignition switch OFF and disconnect negative battery terminal. Failure to do so may damage the TCM, because battery voltage is applied to TCM even if ignition switch is turned off.**

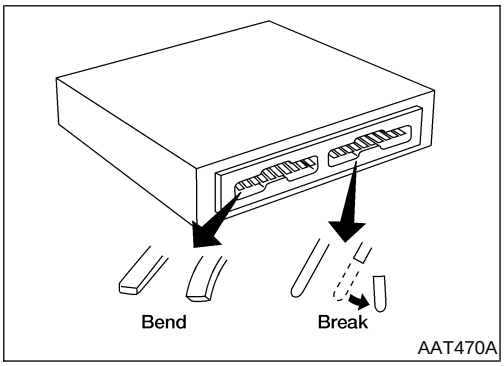

AAT470A

- **When connecting or disconnecting pin connectors into or from TCM, take care not to damage pin terminals (bend or break).**
  Make sure that there are not any bends or breaks on TCM pin terminal, when connecting pin connectors.

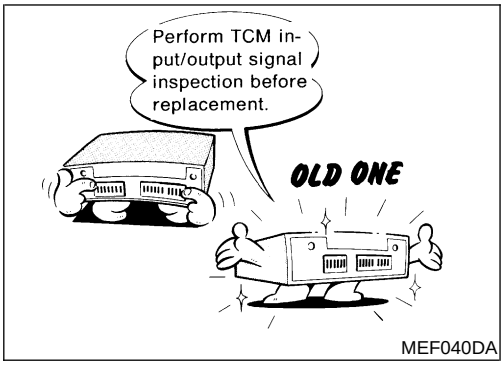

MEF040DA

- **Before replacing TCM, perform TCM input/output signal inspection and determine whether TCM functions properly or not. Refer to "TCM INSPECTION TABLE", AT-243.**

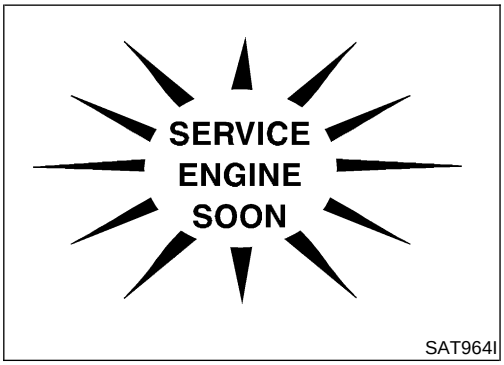

SAT964I

- **After performing each TROUBLE DIAGNOSIS, perform "DTC (Diagnostic Trouble Code) CONFIRMATION PROCEDURE".**
  The DTC should not be displayed in the "DTC CONFIRMATION PROCEDURE" if the repair is completed.

- Before proceeding with disassembly, thoroughly clean the outside of the transmission. It is important to prevent the internal parts from becoming contaminated by dirt or other foreign matter.
- Disassembly should be done in a clean work area.
- Use lint-free cloth or towels for wiping parts clean. Common shop rags can leave fibers that could interfere with the operation of the transmission.
- Place disassembled parts in order for easier and proper assembly.
- All parts should be carefully cleaned with a general purpose,

non-flammable solvent before inspection or reassembly.

- Gaskets, seals and O-rings should be replaced any time the transmission is disassembled.
- It is very important to perform functional tests whenever they are indicated.
- The valve body contains precision parts and requires extreme care when parts are removed and serviced. Place disassembled valve body parts in order for easier and proper assembly. Care will also prevent springs and small parts from becoming scattered or lost.
- Properly installed valves, sleeves, plugs, etc. will slide along bores in valve body under their own weight.
- Before assembly, apply a coat of recommended ATF to all parts. Apply petroleum jelly to protect O-rings and seals, or hold bearings and washers in place during assembly. Do not use grease.
- Extreme care should be taken to avoid damage to O-rings, seals and gaskets when assembling.
- Replace ATF cooler if excessive foreign material is found in oil pan or clogging strainer. Refer to "ATF COOLER SERVICE", AT-152.
- After overhaul, refill the transmission with new ATF.
- When the A/T drain plug is removed, only some of the fluid is drained. Old A/T fluid will remain in torque converter and ATF cooling system.
  Always follow the procedures when changing A/T fluid. Refer to ***MA-38***, "Changing A/T Fluid".

Service Notice or Precautions

NEAT0104

FAIL-SAFE

NEAT0104S01

The TCM has an electronic Fail-Safe (limp home mode). This allows the vehicle to be driven even if a major electrical input/output device circuit is damaged.
Under Fail-Safe, the vehicle always runs in third gear, even with a shift lever position of 1, 2 or D. The customer may complain of sluggish or poor acceleration.
When the ignition key is turned ON following Fail-Safe operation, O/D OFF indicator lamp blinks for about 8 seconds. Refer to "TCM SELF-DIAGNOSTIC PROCEDURE (No Tools)", AT-191.
The blinking of the O/D OFF indicator lamp for about 8 seconds will appear only once and be cleared. The customer may resume normal driving conditions.
Always follow the "Work Flow". Refer to "Work Flow", AT-203.
The SELF-DIAGNOSIS results will be as follows:
The first SELF-DIAGNOSIS will indicate damage to the vehicle speed sensor or the revolution sensor.
During the next SELF-DIAGNOSIS, performed after checking the sensor, no damages will be indicated.

TORQUE CONVERTER SERVICE

NEAT0104S02

The torque converter should be replaced under any of the following conditions:

- External leaks in the hub weld area.
- Converter hub is scored or damaged.
- Converter pilot is broken, damaged or fits poorly into crankshaft.
- Steel particles are found after flushing the cooler and cooler lines.
- Pump is damaged or steel particles are found in the converter.
- Vehicle has TCC shudder and/or no TCC apply. Replace only after all hydraulic and electrical diagnoses

have been made (Converter clutch material may be glazed).
- Converter is contaminated with engine coolant containing antifreeze.
- Internal failure of stator roller clutch.
- Heavy clutch debris due to overheating (blue converter).
- Steel particles or clutch lining material found in fluid filter or on magnet when no internal parts in unit are worn or damaged — indicates that lining material came from converter.

The torque converter should not be replaced if:
- The fluid has an odor, is discolored, and there is no evidence of metal or clutch facing particles.
- The threads in one or more of the converter bolt holes are damaged.
- Transmission failure did not display evidence of damaged or worn internal parts, steel particles or clutch plate lining material in unit and inside the fluid filter.
- Vehicle has been exposed to high mileage (only). The exception may be where the torque converter clutch dampener plate lining has seen excess wear by vehicles operated in heavy and/or constant traffic, such as taxi, delivery or police use.

ATF COOLER SERVICE

NEAT0104S03

If A/T fluid contains frictional material (clutches, bands, etc.) replace radiator and flush cooler line using cleaning solvent and compressed air after repair of A/T. Refer to ***LC-32***, "Radiator".

OBD-II SELF-DIAGNOSIS

NEAT0104S04

- A/T self-diagnosis is performed by the TCM in combination with the ECM. The results can be read through the blinking pattern of the O/D OFF indicator or the malfunction indicator lamp (MIL). Refer to the table on AT-182 for the indicator used to display each self-diagnostic result.
- The self-diagnostic results indicated by the MIL are automatically stored in both the ECM and TCM memories.
  Always perform the procedure "HOW TO ERASE DTC". Refer to "HOW TO ERASE DTC", AT-179 to complete the repair and avoid unnecessary blinking of the MIL.
- The following self-diagnostic items can be detected using ECM self-diagnostic results mode* only when the O/D OFF indicator lamp does not indicate any malfunctions.

− Park/neutral position (PNP) switch
− A/T 1st, 2nd, 3rd, or 4th gear function
− A/T TCC S/V function (lock-up)

*: For details of OBD-II, refer to ***EC-674*** (VG33E only) or ***EC-1274*** (VG33ER only), "ON BOARD DIAGNOSTIC SYSTEM DESCRIPTION".

- **Certain systems and components, especially those related to OBD, may use a new style slide-locking type harness connector. For description and how to disconnect, refer to *EL-5*, "Description".**

Wiring Diagrams and Trouble Diagnosis

NEAT0105

When you read wiring diagrams, refer to the following:
- Refer to ***GI-11***, "HOW TO READ WIRING DIAGRAMS".
- Refer to ***EL-9***, "POWER SUPPLY ROUTING" for power distribution circuit.

When you perform trouble diagnosis, refer to the following:
- Refer to ***GI-34***, "How to Follow Test Groups in Trouble Diagnoses".
- Refer to ***GI-23***, "HOW TO PERFORM EFFICIENT DIAGNOSIS FOR AN ELECTRICAL INCIDENT".

Special Service Tools

NEAT0106

The actual shapes of Kent-Moore tools may differ from those of special service tools illustrated here.

Tool number (Kent-Moore No.) Tool name	Description	
ST2505S001 (J34301-C) Oil pressure gauge set 1 ST25051001 (—) Oil pressure gauge 2 ST25052000 (—) Hose 3 ST25053000 (—) Joint pipe 4 ST25054000 (—) Adapter 5 ST25055000 (—) Adapter	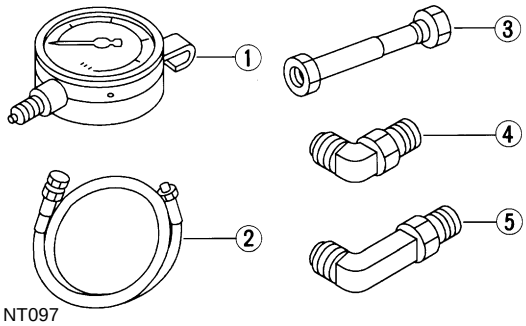 NT097	Measuring line pressure
ST07870000 (J37068) Transmission case stand	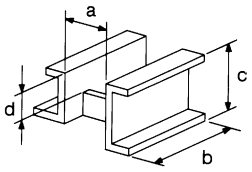 NT421	Disassembling and assembling A/T **a: 182 mm (7.17 in)** **b: 282 mm (11.10 in)** **c: 230 mm (9.06 in)** **d: 100 mm (3.94 in)**
KV31102100 (J37065) Torque converter one-way clutch check tool	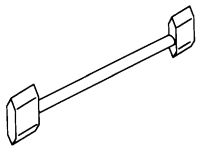 NT098	Checking one-way clutch in torque converter
ST25850000 (J25721-A) Sliding hammer	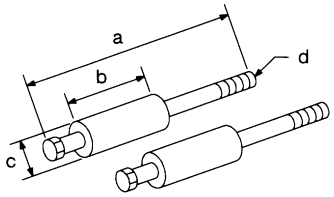 NT422	Removing oil pump assembly **a: 179 mm (7.05 in)** **b: 70 mm (2.76 in)** **c: 40 mm (1.57 in) dia.** **d: M12 x 1.75P**
KV31102400 (J34285 and J34285-87) Clutch spring compressor	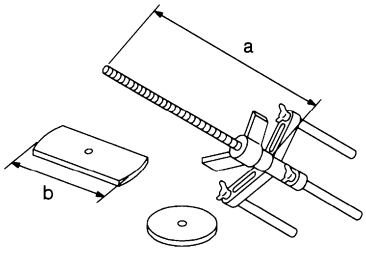 NT423	Removing and installing clutch return springs **a: 320 mm (12.60 in)** **b: 174 mm (6.85 in)**

Special Service Tools (Cont'd)

Tool number (Kent-Moore No.) Tool name	Description	
ST33200000 (J26082) Drift	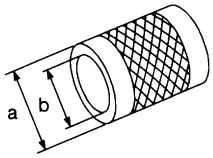 NT091	Installing oil pump housing oil seal Installing rear oil seal **a: 60 mm (2.36 in) dia.** **b: 44.5 mm (1.752 in) dia.**
(J34291) Shim setting gauge set	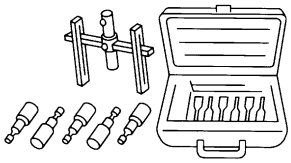 NT101	Selecting oil pump cover bearing race and oil pump thrust washer

A/T Electrical Parts Location

NEAT0107

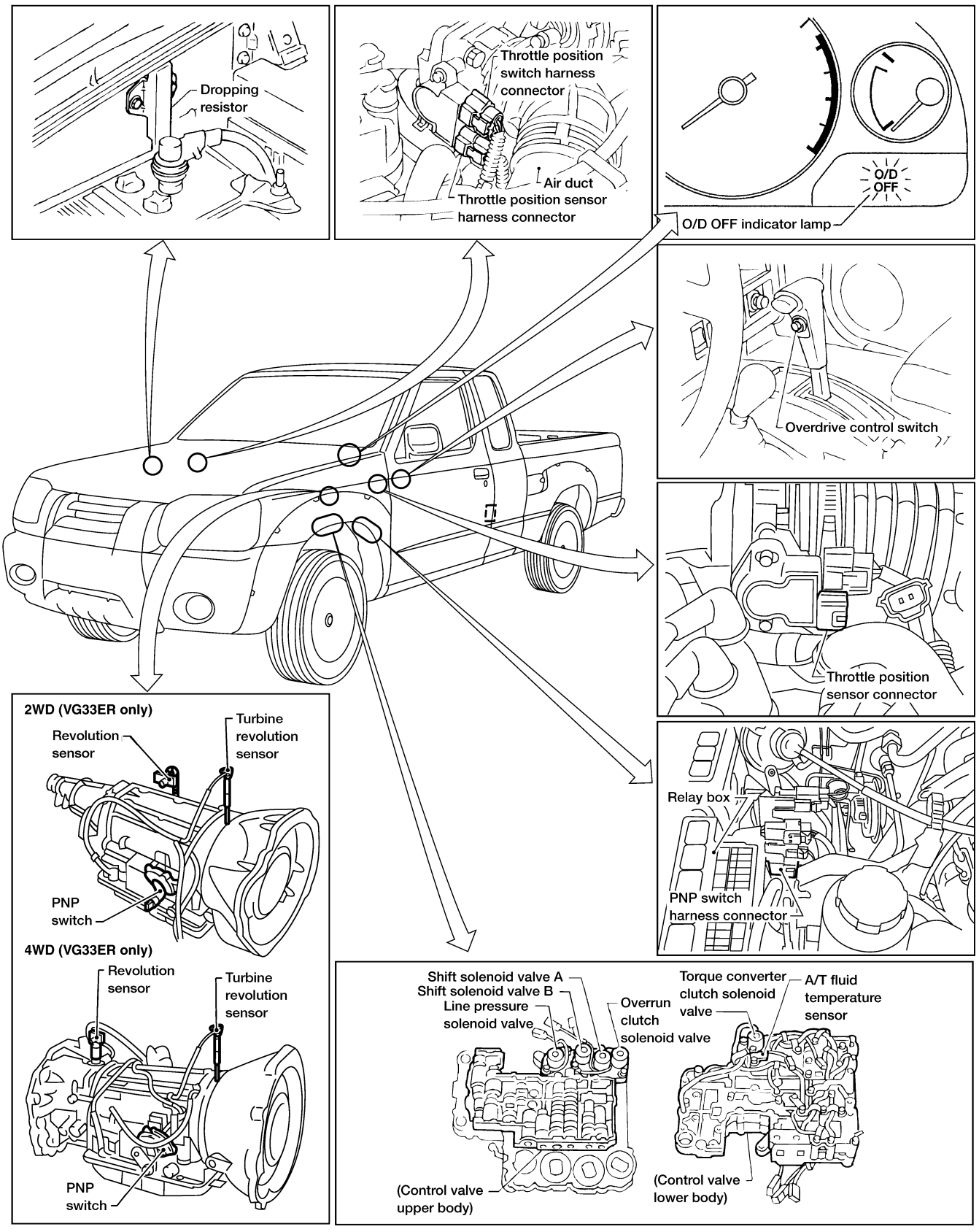

LAT417

Circuit Diagram

NEAT0108

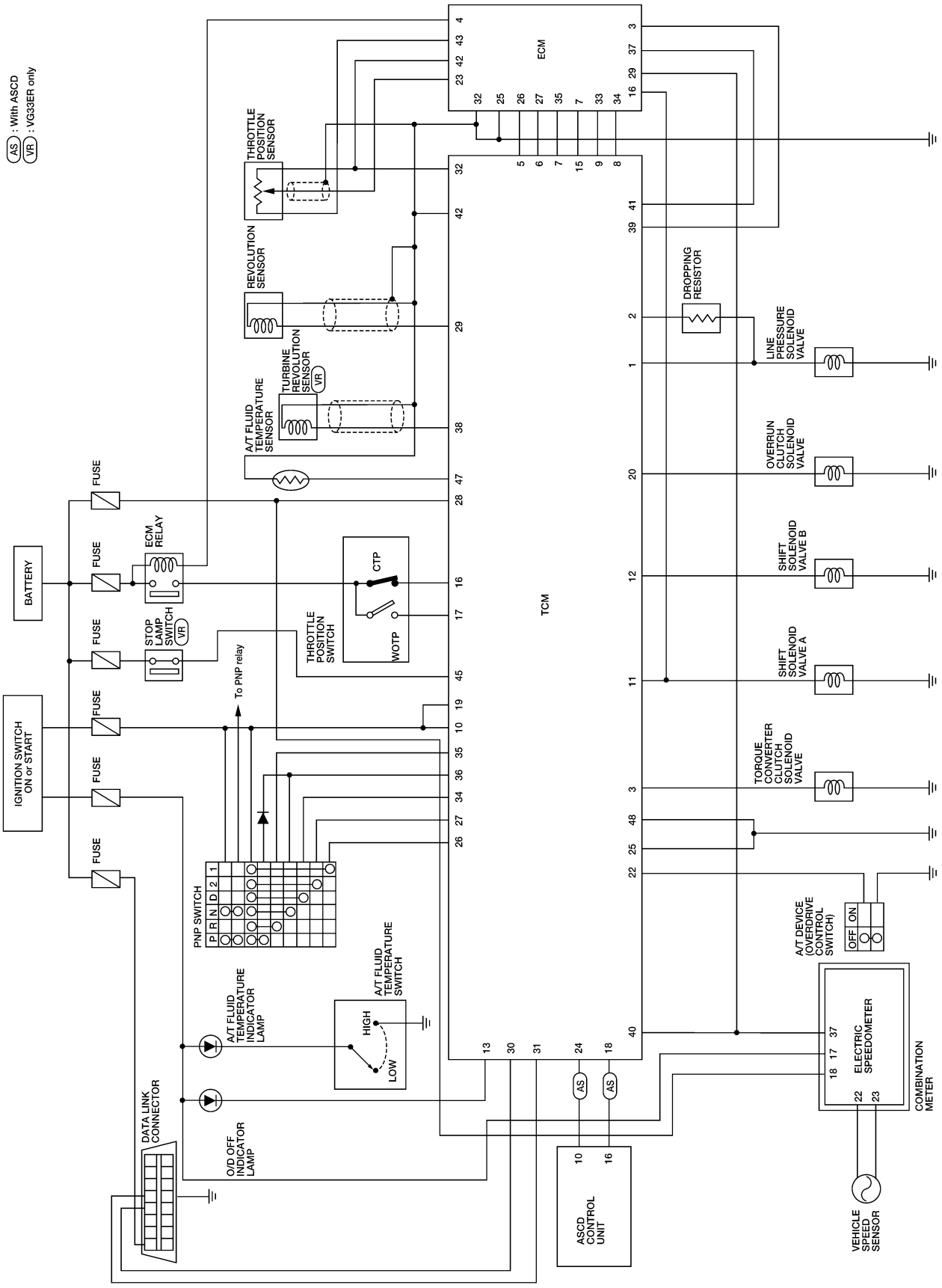

WAT537

Cross-sectional View

NEAT0109

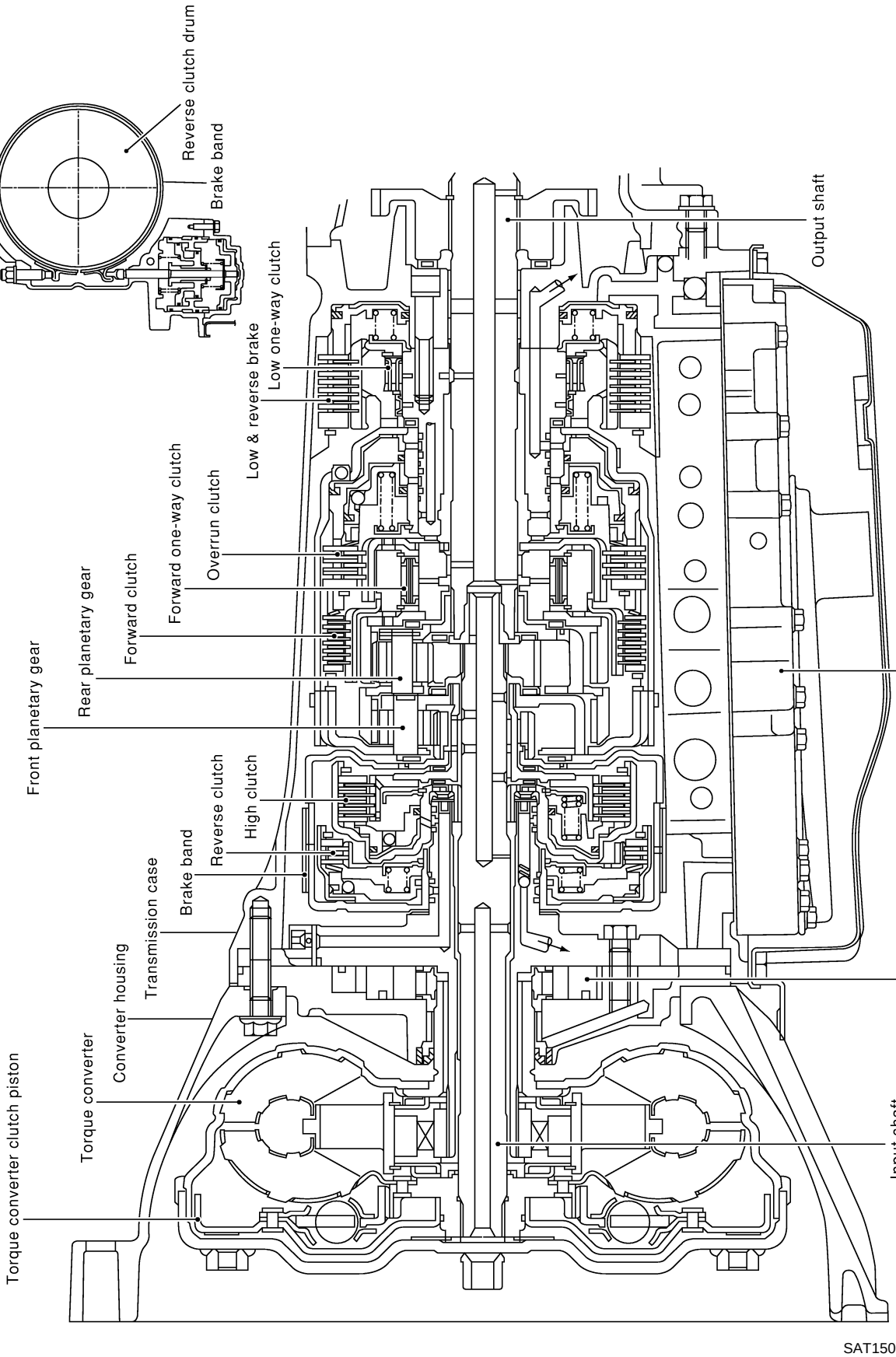

Hydraulic Control Circuit

NEAT0110

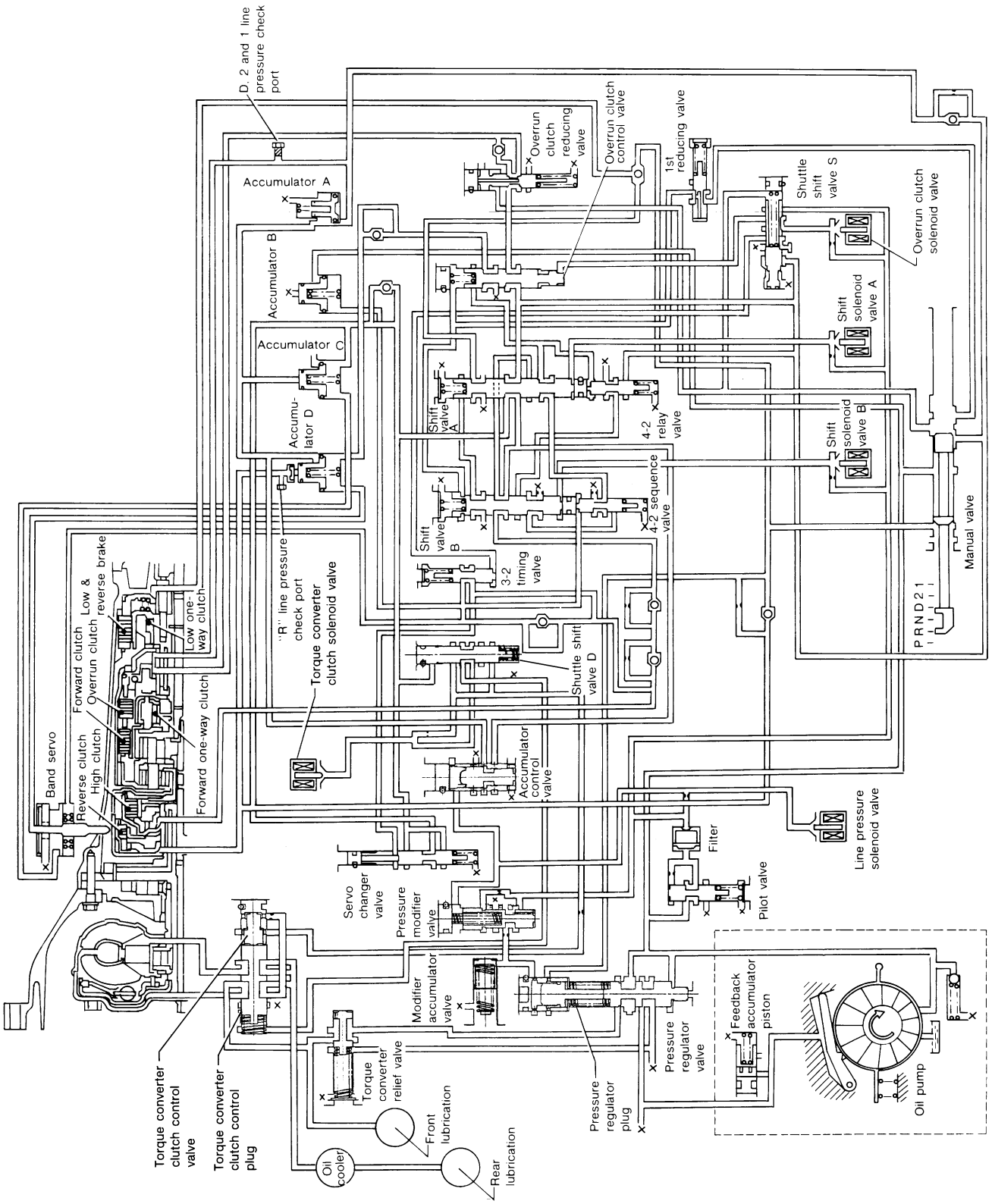

WAT371

Shift Mechanism

NEAT0111

The automatic transmission uses compact, dual planetary gear systems to improve power-transmission efficiency, simplify construction and reduce weight.
It also employs an optimum shift control and superwide gear ratios. They improve starting performance and acceleration during medium and high-speed operation.
Two one-way clutches are also employed: one is used for the forward clutch and the other for the low clutch. These one-way clutches, combined with four accumulators, reduce shifting shock to a minimum.

CONSTRUCTION

NEAT0111S01

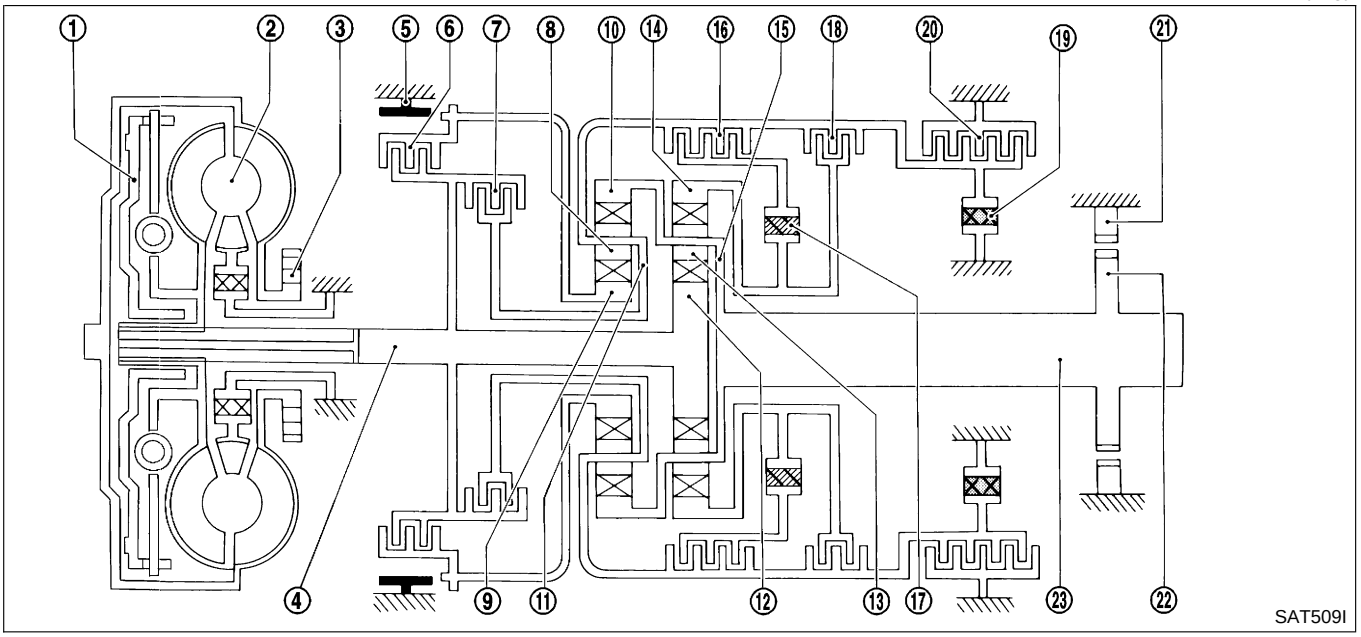

1. Torque converter clutch piston
2. Torque converter
3. Oil pump
4. Input shaft
5. Brake band
6. Reverse clutch
7. High clutch
8. Front pinion gear
9. Front sun gear
10. Front internal gear
11. Front planetary carrier
12. Rear sun gear
13. Rear pinion gear
14. Rear internal gear
15. Rear planetary carrier
16. Forward clutch
17. Forward one-way clutch
18. Overrun clutch
19. Low one-way clutch
20. Low & reverse brake
21. Parking pawl
22. Parking gear
23. Output shaft

Shift Mechanism (Cont'd)

FUNCTION OF CLUTCH AND BRAKE

=NEAT0111S02

Clutch and brake components	Abbr.	Function
Reverse clutch **6**	R/C	To transmit input power to front sun gear **9**.
High clutch **7**	H/C	To transmit input power to front planetary carrier **11**.
Forward clutch **16**	F/C	To connect front planetary carrier **11** with forward one-way clutch **17**.
Overrun clutch **18**	O/C	To connect front planetary carrier **11** with rear internal gear **14**.
Brake band **5**	B/B	To lock front sun gear **9**.
Forward one-way clutch **17**	F/O.C	When forward clutch **16** is engaged, to stop rear internal gear **14** from rotating in opposite direction against engine revolution.
Low one-way clutch **19**	L/O.C	To stop front planetary carrier **11** from rotating in opposite direction against engine revolution.
Low & reverse brake **20**	L & R/B	To lock front planetary carrier **11**.

CLUTCH AND BAND CHART

NEAT0111S03

Shift position		Reverse clutch	High clutch	Forward clutch	Overrun clutch	Band servo			Forward one-way clutch	Low one-way clutch	Low & reverse brake	Lock-up	Remarks
						2nd apply	3rd release	4th apply					
P													PARK POSITION
R		◯									◯		REVERSE POSITION
N													NEUTRAL POSITION
D*4	1st			◯	*1D				B	B			Automatic shift 1 ⇔ 2 ⇔ 3 ⇔ 4
	2nd			◯	*1A	◯			B				
	3rd		◯	◯	*1A	*2C	C		B			*5◯	
	4th		◯	C		*3C	C	◯				◯	
2	1st			◯	D				B	B			Automatic shift 1 ⇔ 2
	2nd			◯	A	◯			B				
1	1st			◯	◯				B	B	◯		Locks (held stationary) in 1st speed 1 ⇐ 2
	2nd			◯	◯	◯			B				

*1: Operates when overdrive control switch is being set in OFF position.

*2: Oil pressure is applied to both 2nd "apply" side and 3rd "release" side of band servo piston. However, brake band does not contract because oil pressure area on the "release" side is greater than that on the "apply" side.

*3: Oil pressure is applied to 4th "apply" side in condition *2 above, and brake band contracts.

*4: A/T will not shift to 4th when overdrive control switch is set in OFF position.

*5: Operates when overdrive control switch is OFF.

◯ : Operates.

A: Operates when throttle opening is less than 3/16, activating engine brake.

B: Operates during "progressive" acceleration.

C: Operates but does not affect power transmission.

D: Operates when throttle opening is less than 3/16, but does not affect engine brake.

POWER TRANSMISSION

=NEAT0111S04

P and N Positions

NEAT0111S0401

- P position
  Similar to the N position, no control members operate. The parking pawl interconnected with the select lever engages with the parking gear to mechanically hold the output shaft so that the power train is locked.
- N position
  No control members operate. Power from the input shaft is not transmitted to the output shaft since the clutch does not operate.

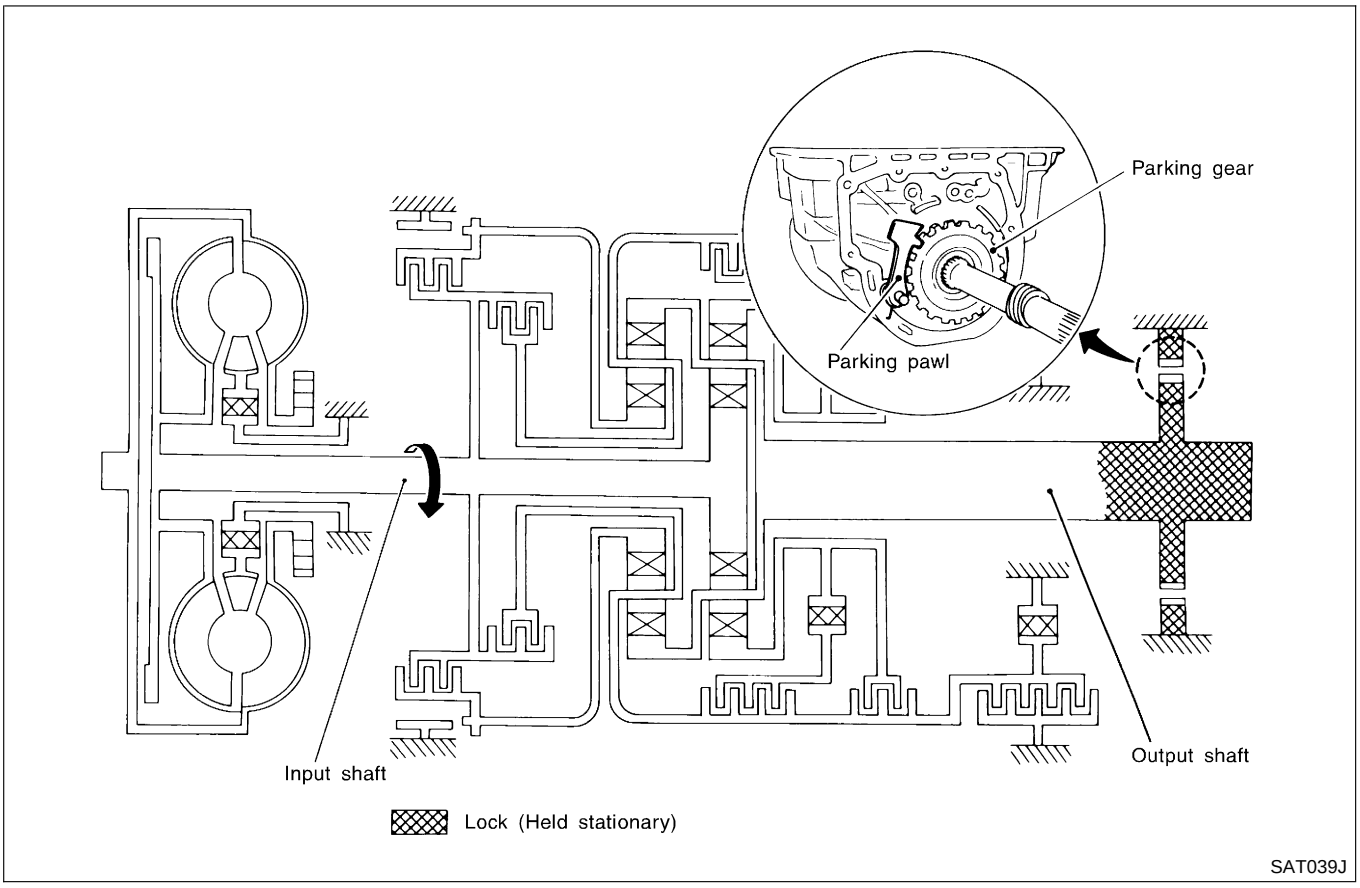

1_1 Position

=NEAT0111S0402

Forward clutch **Forward one-way clutch** **Overrun clutch** **Low and reverse brake**	As overrun clutch engages, rear internal gear is locked by the operation of low and reverse brake. This is different from that of D_1 and 2_1.
Engine brake	Overrun clutch always engages, therefore engine brake can be obtained when decelerating.

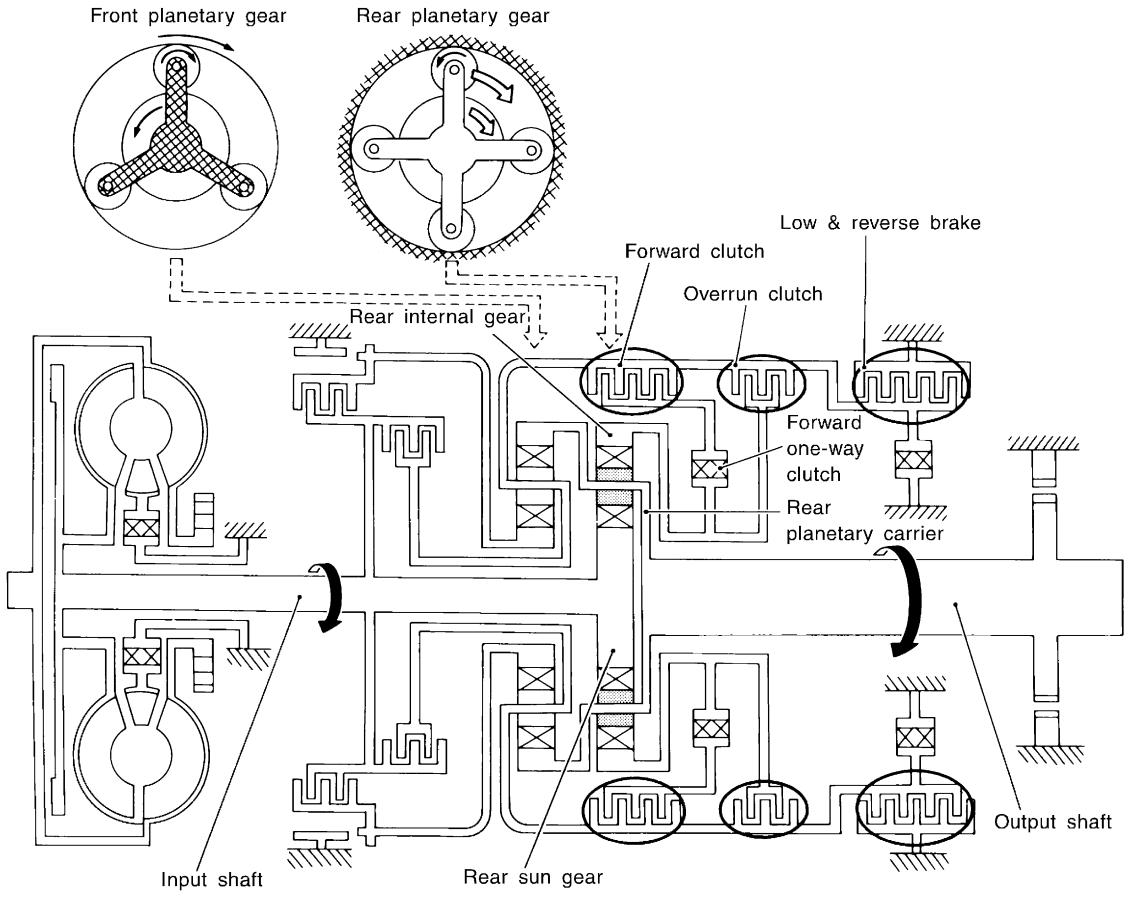

Power flow

Input shaft
⇩
Rear sun gear
⇩
Rear planetary gear ⇨ Output shaft

SAT100J

D_1 and 2_1 Positions

=NEAT0111S0403

Forward one-way clutch **Forward clutch** **Low one-way clutch**	Rear internal gear is locked to rotate counterclockwise because of the functioning of these three clutches. (Start-up at D_1)
Overrun clutch engagement conditions (Engine brake)	D_1: Overdrive control switch in OFF Throttle opening less than 3/16 2_1: Throttle opening less than 3/16 At D_1 and 2_1 positions, engine brake is not activated due to free turning of low one-way clutch.

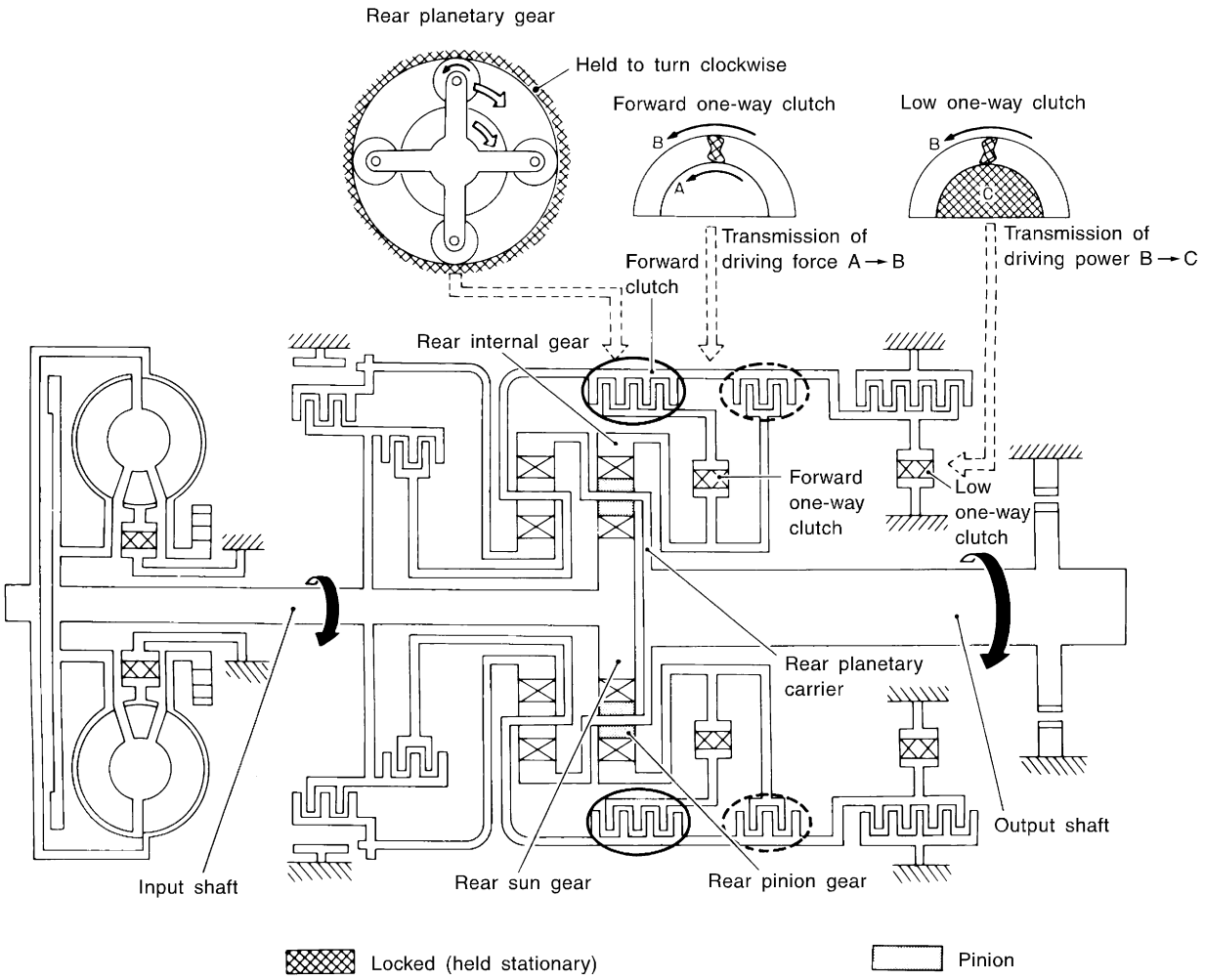

Power flow

Input shaft
⇩
Rear sun gear
⇩
Rear pinion gear
⇩
Rear planetary carrier → Output shaft

SAT096J

D_2, 2_2 and 1_2 Positions

=NEAT0111S0404

Forward clutch **Forward one-way clutch** **Brake band**	Rear sun gear drives rear planetary carrier and combined front internal gear. Front internal gear now rotates around front sun gear accompanying front planetary carrier. As front planetary carrier transfers the power to rear internal gear through forward clutch and forward one-way clutch, this rotation of rear internal gear increases the speed of rear planetary carrier compared with that of the 1st speed.
Overrun clutch engagement conditions	D_2: Overdrive control switch in OFF Throttle opening less than 3/16 2_2: Throttle opening less than 3/16 1_2: Always engaged

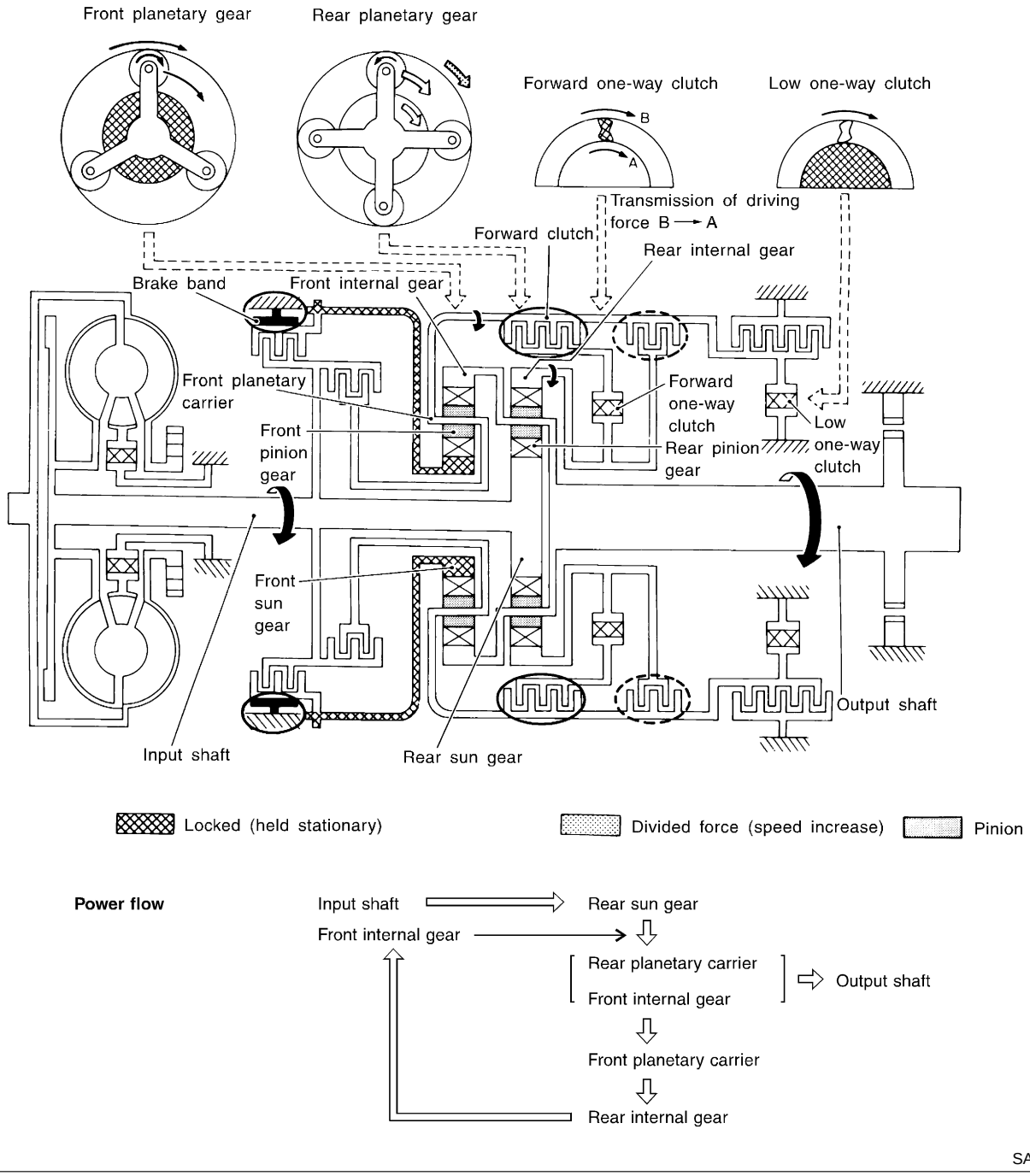

SAT097J

D_3 Position

=NEAT0111S0405

High clutch **Forward clutch** **Forward one-way clutch**	Input power is transmitted to front planetary carrier through high clutch. And front planetary carrier is connected to rear internal gear by operation of forward clutch and forward one-way clutch. This rear internal gear rotation and another input (the rear sun gear) accompany rear planetary carrier to turn at the same speed.
Overrun clutch engagement conditions	D_3: Overdrive control switch in OFF Throttle opening less than 3/16

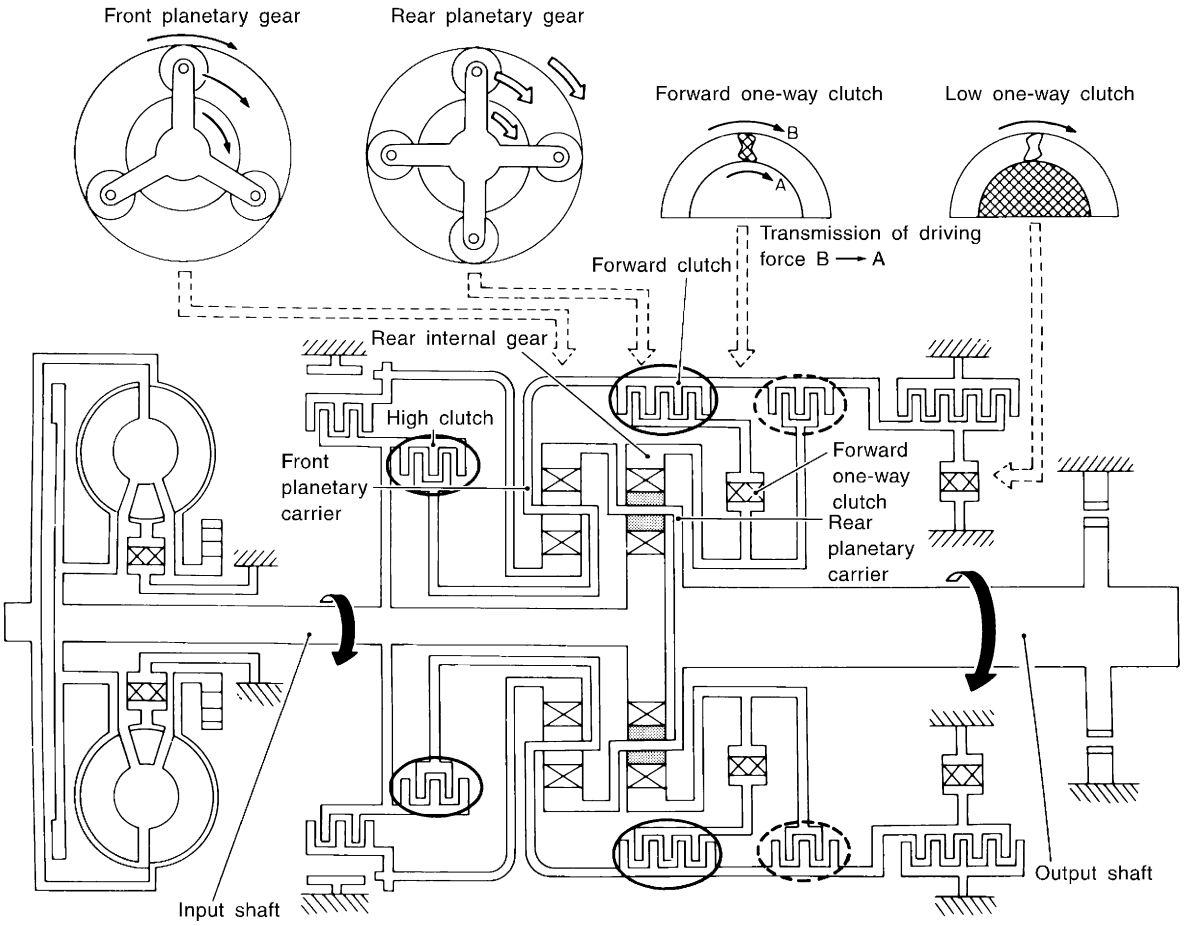

Power flow

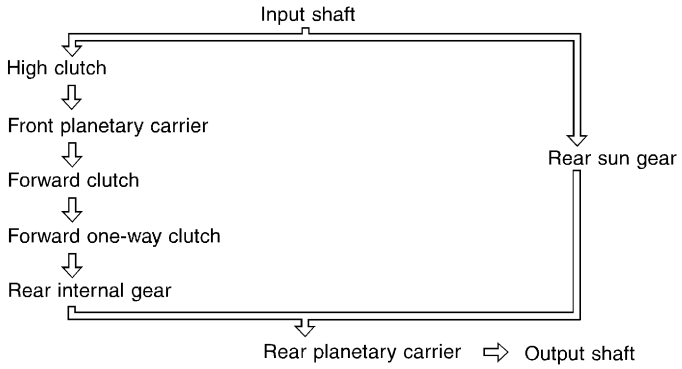

SAT098J

D_4 (O/D) Position

=NEAT0111S0406

High clutch **Brake band** **Forward clutch** (Does not affect power transmission)	Input power is transmitted to front carrier through high clutch. This front planetary carrier turns around the sun gear which is fixed by brake band and makes front internal gear (output) turn faster.
Engine brake	At D_4 position, there is no one-way clutch in the power transmission line and engine brake can be obtained when decelerating.

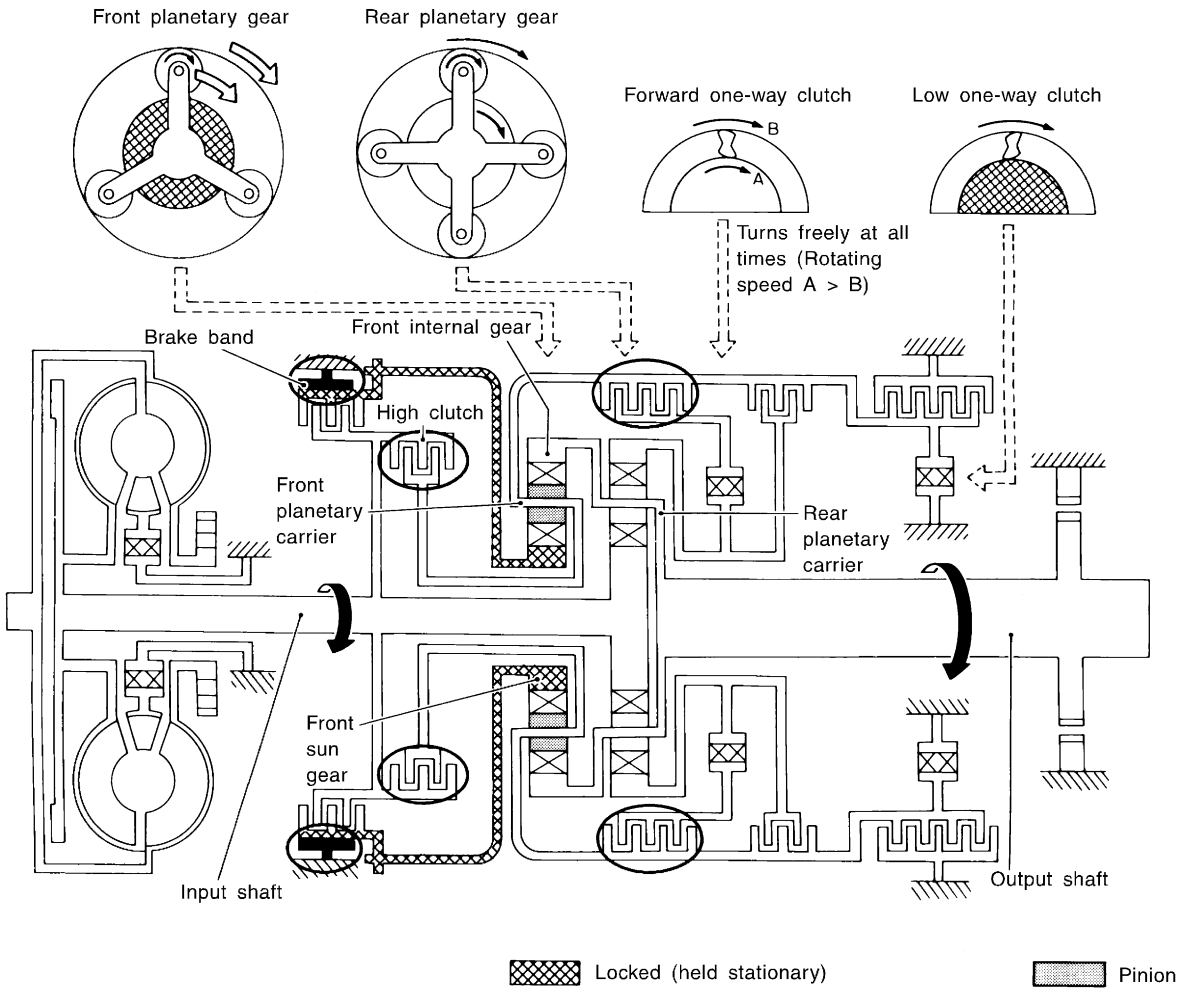

Power flow

Input shaft ⇩ High clutch ⇩ Front planetary carrier ⇩ Front pinion gear → Front internal gear ⇩ Rear planetary carrier ⇩ Output shaft

SAT099J

R Position

=NEAT0111S0407

Reverse clutch **Low and reverse brake**	Front planetary carrier is stationary because of the operation of low and reverse brake. Input power is transmitted to front sun gear through reverse clutch, which drives front internal gear in the opposite direction.
Engine brake	As there is no one-way clutch in the power transmission line, engine brake can be obtained when decelerating.

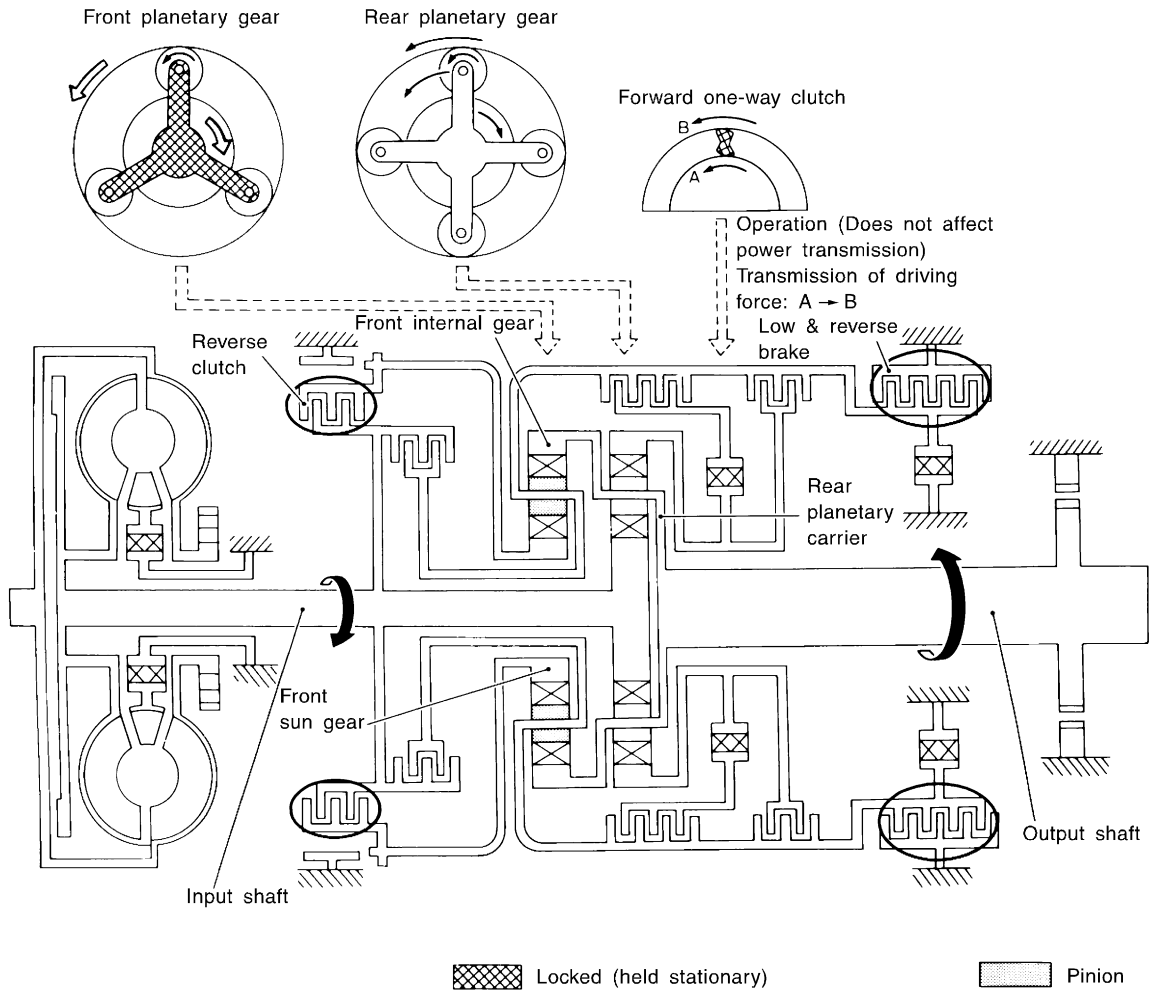

Power flow

Input shaft
⇩
Reverse clutch
⇩
Front pinion gear ⇦ Front sun gear
⇩
Front internal gear ⇨ Output shaft

SAT101J

Control System

=NEAT0112

OUTLINE

NEAT0112S01

The automatic transmission senses vehicle operating conditions through various sensors. It always controls the optimum shift position and reduces shifting and lock-up shocks.

SENSORS		TCM		ACTUATORS
PNP switch Throttle position sensor Closed throttle position switch Wide open throttle position switch Engine speed signal A/T fluid temperature sensor Revolution sensor Vehicle speed sensor Overdrive control switch ASCD control unit Stop lamp switch (VG33ER only) Turbine revolution sensor (VG33ER only)	▶	Shift control Line pressure control Lock-up control Overrun clutch control Timing control Fail-safe control Self-diagnosis CONSULT II communication line Duet-EA control	▶	Shift solenoid valve A Shift solenoid valve B Overrun clutch solenoid valve Torque converter clutch solenoid valve Line pressure solenoid valve O/D OFF indicator lamp

CONTROL SYSTEM

NEAT0112S02

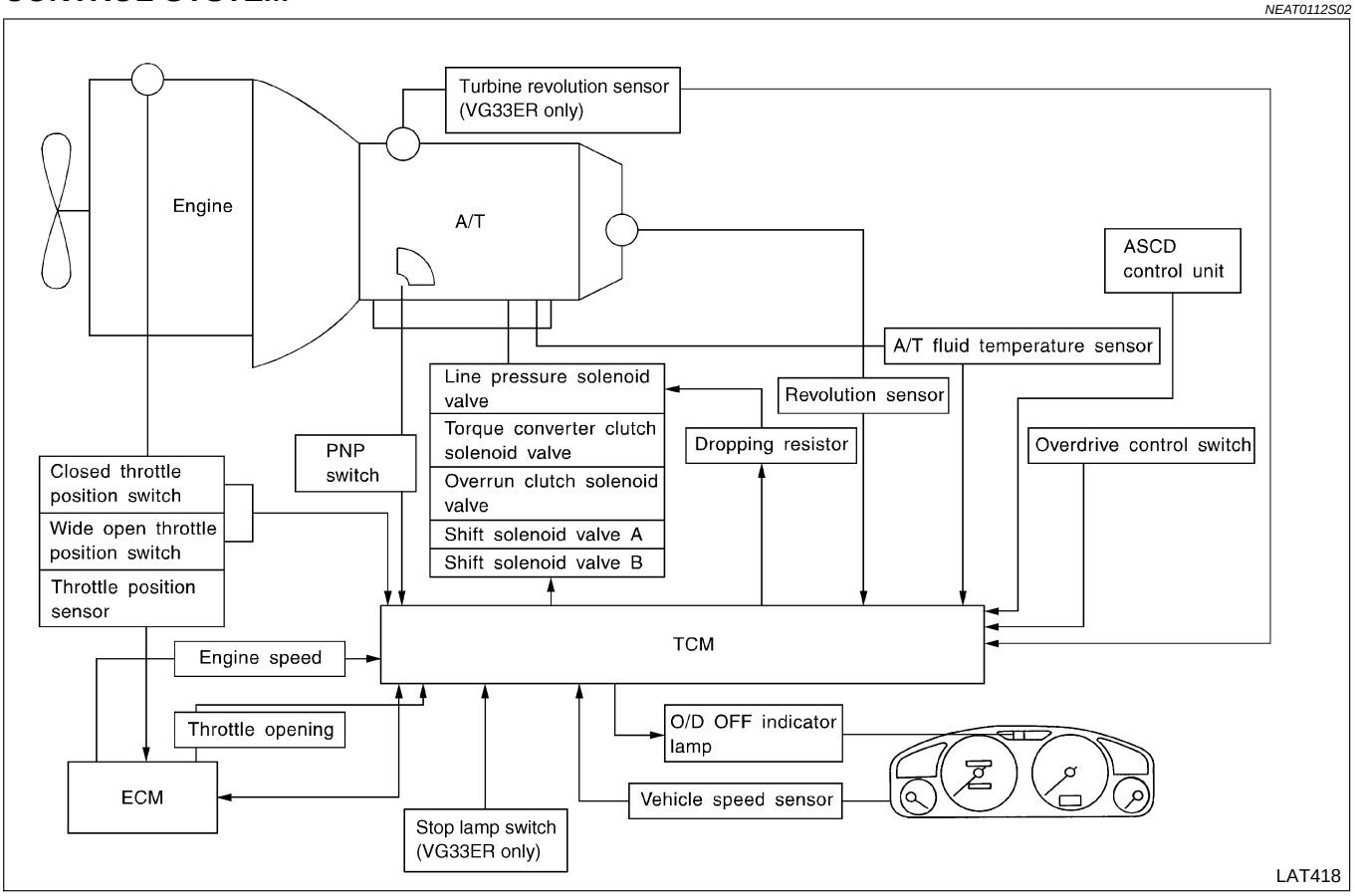

TCM FUNCTION

=NEAT0112S03

The function of the TCM is to:

- Receive input signals sent from various switches and sensors.
- Determine required line pressure, shifting point, lock-up operation, and engine brake operation.
- Send required output signals to the respective solenoids.

INPUT/OUTPUT SIGNAL OF TCM

NEAT0112S04

	Sensors and solenoid valves	Function
Input	PNP switch	Detects select lever position and sends a signal to TCM.
	Throttle position sensor	Detects throttle valve position and sends a signal to TCM.
	Closed throttle position switch	Detects throttle valve's fully-closed position and sends a signal to TCM.
	Wide open throttle position switch	Detects a throttle valve position of greater than 1/2 of full throttle and sends a signal to TCM.
	Engine speed signal	From ECM.
	A/T fluid temperature sensor	Detects transmission fluid temperature and sends a signal to TCM.
	Revolution sensor	Detects output shaft rpm and sends a signal to TCM.
	Vehicle speed sensor	Used as an auxiliary vehicle speed sensor. Sends a signal when revolution sensor (installed on transmission) malfunctions.
	Overdrive control switch	Sends a signal, which prohibits a shift to D_4 (overdrive) position, to the TCM.
	ASCD control unit	Sends the cruise signal and D_4 (overdrive) cancellation signal from ASCD control unit to TCM.
	Turbine revolution sensor (VG33ER only)	Sends the input shaft revolution signal.
	Stop lamp switch (VG33ER only)	Sends the lock-up release signal to the TCM at the time of D_4 (lock-up)
Output	Shift solenoid valve A/B	Selects shifting point suited to driving conditions in relation to a signal sent from TCM.
	Line pressure solenoid valve	Regulates (or decreases) line pressure suited to driving conditions in relation to a signal sent from TCM.
	Torque converter clutch solenoid valve	Regulates (or decreases) lock-up pressure suited to driving conditions in relation to a signal sent from TCM.
	Overrun clutch solenoid valve	Controls an "engine brake" effect suited to driving conditions in relation to a signal sent from TCM.
	O/D OFF indicator lamp	Shows TCM faults, when A/T control components malfunction.

Control Mechanism

NEAT0113

LINE PRESSURE CONTROL

NEAT0113S01

TCM has the various line pressure control characteristics to meet the driving conditions.

An ON-OFF duty signal is sent to the line pressure solenoid valve based on TCM characteristics.

Hydraulic pressure on the clutch and brake is electronically controlled through the line pressure solenoid valve to accommodate engine torque. This results in smooth shift operation.

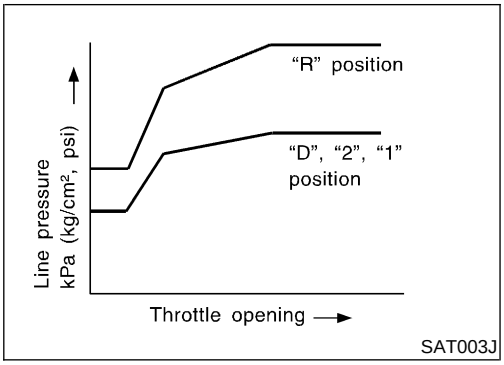

Normal Control

NEAT0113S0101

The line pressure to throttle opening characteristics is set for suitable clutch operation.

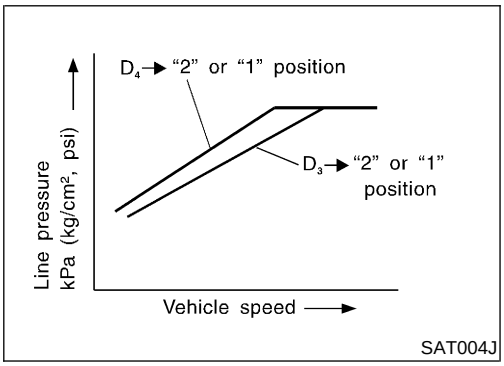

Back-up Control (Engine brake)

NEAT0113S0102

If the selector lever is shifted to 2 position while driving in D_4 (O/D) or D_3, great driving force is applied to the clutch inside the transmission. Clutch operating pressure (line pressure) must be increased to deal with this driving force.

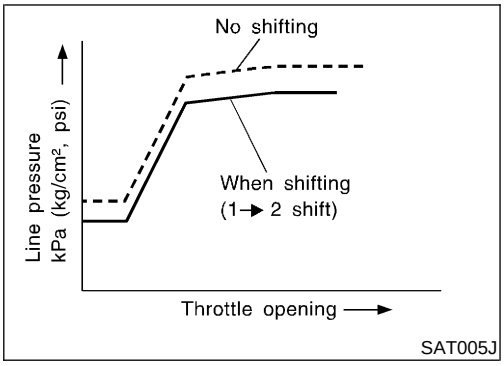

During Shift Change

NEAT0113S0103

The line pressure is temporarily reduced corresponding to a change in engine torque when shifting gears (that is, when the shift solenoid valve is switched for clutch operation) to reduce shifting shock.

At Low Fluid Temperature

NEAT0113S0104

- Fluid viscosity and frictional characteristics of the clutch facing change with fluid temperature. Clutch engaging or band-contacting pressure is compensated for, according to fluid temperature, to stabilize shifting quality.

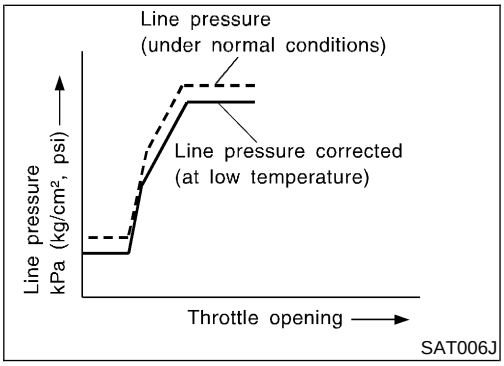

- The line pressure is reduced below 60°C (140°F) to prevent shifting shock due to low viscosity of automatic transmission fluid when temperature is low.

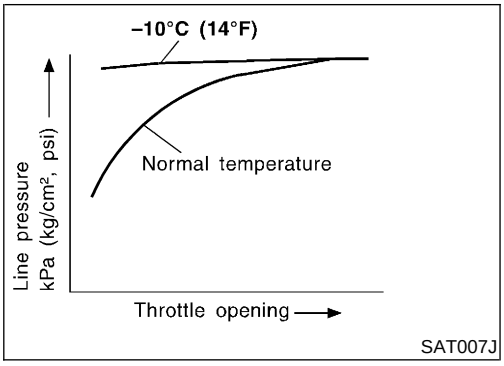

- Line pressure is increased to a maximum irrespective of the throttle opening when fluid temperature drops to −10°C (14°F). This pressure rise is adopted to prevent a delay in clutch and brake operation due to extreme drop of fluid viscosity at low temperature.

SHIFT CONTROL

NEAT0113S02

The shift is regulated entirely by electronic control to accommodate vehicle speed and varying engine operations. This is accomplished by electrical signals transmitted by the revolution sensor and throttle position sensor. This results in improved acceleration performance and fuel economy.

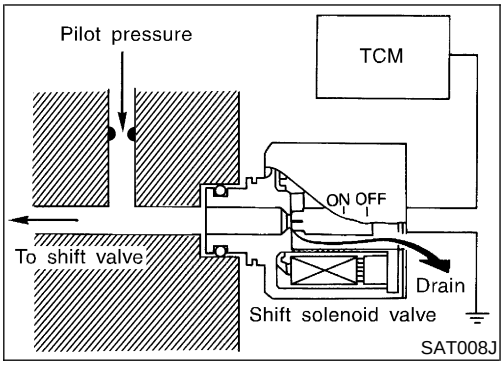

Control of Shift Solenoid Valves A and B

NEAT0113S0201

The TCM activates shift solenoid valves A and B according to signals from the throttle position sensor and revolution sensor to select the optimum gear position on the basis of the shift schedule memorized in the TCM.

The shift solenoid valve performs simple ON-OFF operation. When set to ON, the drain circuit closes and pilot pressure is applied to the shift valve.

[Relation between shift solenoid valves A and B and gear positions]

Shift solenoid valve	Gear position				
	D_1, 2_1, 1_1	D_2, 2_2, 1_2	D_3	D_4 (O/D)	N-P
A	ON (Closed)	OFF (Open)	OFF (Open)	ON (Closed)	ON (Closed)
B	ON (Closed)	ON (Closed)	OFF (Open)	OFF (Open)	ON (Closed)

Control of Shift Valves A and B

NEAT0113S0202

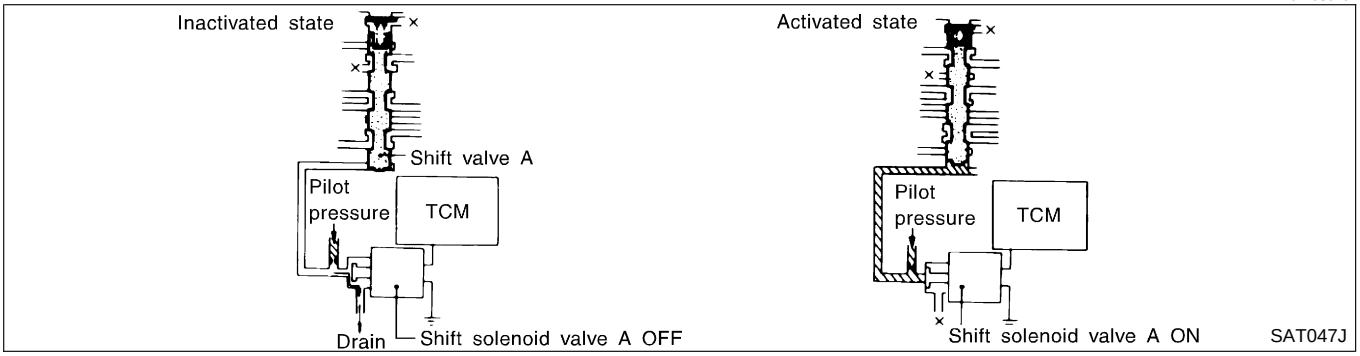

Pilot pressure generated by the operation of shift solenoid valves A and B is applied to the end face of shift valves A and B.
The drawing shows the operation of shift valve B. When the shift solenoid valve is "ON", pilot pressure applied to the end face of the shift valve overcomes spring force, moving the valve upward.

LOCK-UP CONTROL

NEAT0113S03

The torque converter clutch piston in the torque converter is locked to eliminate torque converter slip to increase power transmission efficiency. The solenoid valve is controlled by an ON-OFF duty signal sent from the TCM. The signal is converted to oil pressure signal which controls the torque converter clutch piston.

Conditions for Lock-up Operation

NEAT0113S0301

When vehicle is driven in 4th gear position, vehicle speed and throttle opening are detected. If the detected values fall within the lock-up zone memorized in the TCM, lock-up is performed.

Overdrive control switch	ON	OFF
Selector lever	D position	
Gear position	D_4	D_3
Vehicle speed sensor	More than set value	
Throttle position sensor	Less than set opening	
Closed throttle position switch	OFF	
A/T fluid temperature sensor	More than 40°C (104°F)	

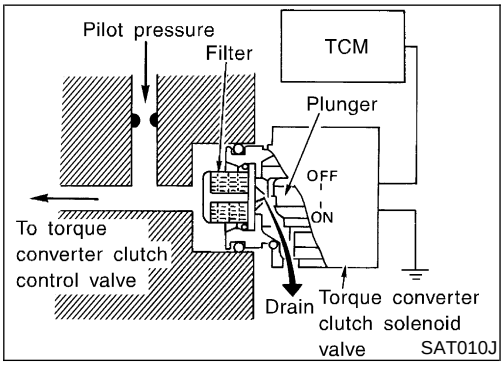

Torque Converter Clutch Solenoid Valve Control

NEAT0113S0302

The torque converter clutch solenoid valve is controlled by the TCM. The plunger closes the drain circuit during the OFF period, and opens the circuit during the ON period. If the percentage of OFF-time increases in one cycle, the pilot pressure drain time is reduced and pilot pressure remains high.
The torque converter clutch piston is designed to slip to adjust the ratio of ON-OFF, thereby reducing lock-up shock.

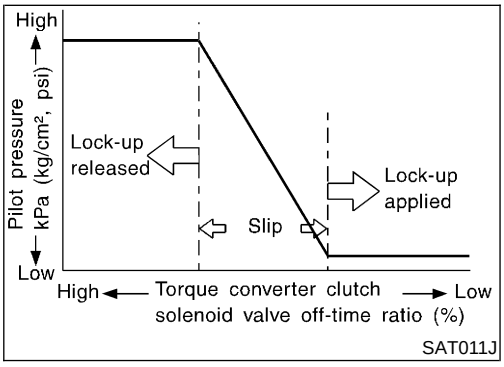

OFF-time INCREASING
↓
Amount of drain DECREASING
↓
Pilot pressure HIGH
↓
Lock-up RELEASING

Torque Converter Clutch Control Valve Operation

NEAT0113S0303

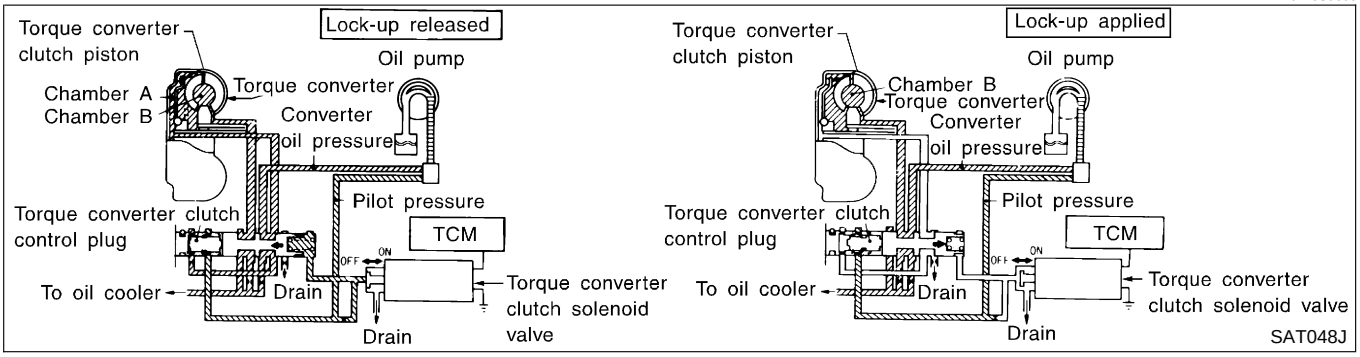

Lock-up Released

The OFF-duration of the torque converter clutch solenoid valve is long, and pilot pressure is high. The pilot pressure pushes the end face of the torque converter clutch control valve in combination with spring force to move the valve to the left. As a result, converter pressure is applied to chamber A (torque converter clutch piston release side). Accordingly, the torque converter clutch piston remains unlocked.

Lock-up Applied

When the OFF-duration of the torque converter clutch solenoid valve is short, pilot pressure drains and becomes low. Accordingly, the control valve moves to the right by the pilot pressure of the other circuit and converter pressure. As a result, converter pressure is applied to chamber B, keeping the torque converter clutch piston applied.

Also smooth lock-up is provided by transient application and release of the lock-up.

OVERRUN CLUTCH CONTROL (ENGINE BRAKE CONTROL)

NEAT0113S04

Forward one-way clutch is used to reduce shifting shocks in down-shifting operations. This clutch transmits engine torque to the wheels. However, drive force from the wheels is not transmitted to the engine because the one-way clutch rotates idle. This means the engine brake is not effective.

The overrun clutch operates when the engine brake is needed.

Overrun Clutch Operating Conditions

NEAT0113S0401

	Gear position	Throttle opening
D position	D_1, D_2, D_3 gear position	Less than 3/16
2 position	2_1, 2_2 gear position	
1 position	1_1, 1_2 gear position	At any position

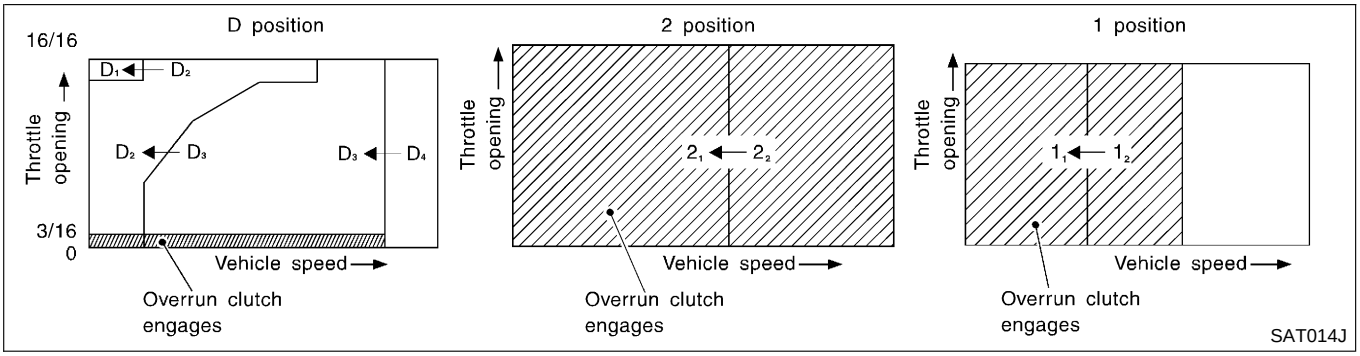

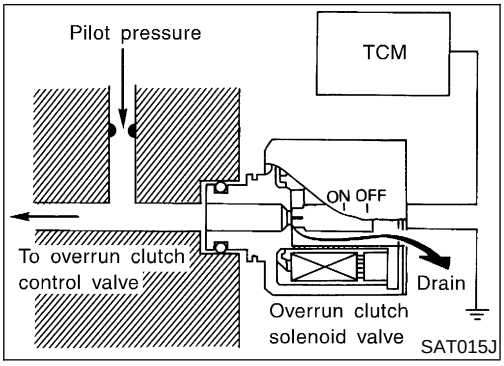

Overrun Clutch Solenoid Valve Control

NEAT0113S0402

The overrun clutch solenoid valve is operated by an ON-OFF signal transmitted by the TCM to provide overrun clutch control (engine brake control).
When this solenoid valve is ON, the pilot pressure drain port closes. When it is OFF, the drain port opens.
During the solenoid valve ON pilot pressure is applied to the end face of the overrun clutch control valve.

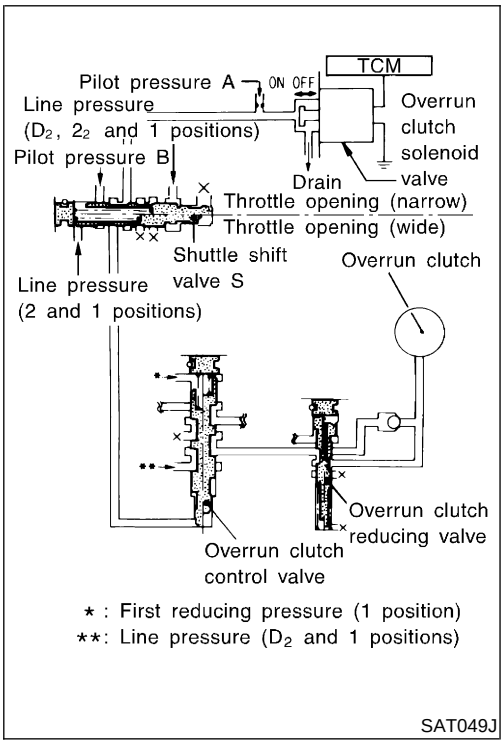

Overrun Clutch Control Valve Operation

NEAT0113S0403

When the solenoid valve is ON, pilot pressure A is applied to the overrun clutch control valve. This pushes up the overrun clutch control valve. The line pressure is then shut off so that the clutch does not engage.
When the solenoid valve is OFF, pilot pressure A is not generated. At this point, the overrun clutch control valve moves downward by spring force. As a result, overrun clutch operation pressure is provided by the overrun clutch reducing valve. This causes the overrun clutch to engage.
In the 1 position, the overrun clutch control valve remains pushed down so that the overrun clutch is engaged at all times.

Control Valve

NEAT0114

FUNCTION OF CONTROL VALVE

NEAT0114S01

Valve name	Function
• Pressure regulator valve • Pressure regulator plug • Pressure regulator sleeve plug	Regulate oil discharged from the oil pump to provide optimum line pressure for all driving conditions.
Pressure modifier valve	Used as a signal supplementary valve to the pressure regulator valve. Regulates pressure-modifier pressure (signal pressure) which controls optimum line pressure for all driving conditions.
Modifier accumulator piston	Smooths hydraulic pressure regulated by the pressure modifier valve to prevent pulsations.
Pilot valve	Regulates line pressure to maintain a constant pilot pressure level which controls lock-up mechanism, overrun clutch, 3-2 timing required for shifting.
Accumulator control valve Accumulator control sleeve	Regulate accumulator back-pressure to pressure suited to driving conditions.
Manual valve	Directs line pressure to oil circuits corresponding to select positions. Hydraulic pressure drains when the shift lever is in Neutral.

Control Valve (Cont'd)

Valve name	Function
Shift valve A	Simultaneously switches three oil circuits using output pressure of shift solenoid valve A to meet driving conditions (vehicle speed, throttle opening, etc.). Provides automatic downshifting and up-shifting (1st → 2nd → 3rd → 4th gears/4th → 3rd → 2nd → 1st gears) in combination with shift valve B.
Shift valve B	Simultaneously switches three oil circuits using output pressure of shift solenoid valve B in relation to driving conditions (vehicle speed, throttle opening, etc.). Provides automatic downshifting and up-shifting (1st → 2nd → 3rd → 4th gears/4th → 3rd → 2nd → 1st gears) in combination with shift valve A.
Shuttle shift valve S	Switches hydraulic circuits to provide 3-2 timing control and overrun clutch control in relation to the throttle opening. Inactivates the overrun clutch to prevent interlocking in 4th gear when the throttle is wide open.
Overrun clutch control valve	Switches hydraulic circuits to prevent engagement of the overrun clutch simultaneously with application of the brake band in 4th gear. (Interlocking occurs if the overrun clutch engages during D_4 gear operation.)
4-2 relay valve	Memorizes that the transmission is in 4th gear. Prevents the transmission from downshifting from 4th gear to 3rd and then to 2nd in combination with 4-2 sequence valve and shift valves A and B when downshifting from 4th to 2nd gear.
4-2 sequence valve	Prevents band servo pressure from draining before high clutch operating pressure and band servo releasing pressure drain (from the same circuit) during downshifting from 4th to 2nd gear.
Servo charger valve	An accumulator and a one-way orifice are used in the 2nd gear band servo oil circuit to dampen shifting shock when shifting from 1st to 2nd gear. To maintain adequate flow rate when downshifting from 4th or 3rd gear to 2nd gear, the servo charger valve directs 2nd gear band servo hydraulic pressure to the circuit without going through the one-way orifice when downshifting from 3rd or a higher gear.
3-2 timing valve	Prevents a late operation of the brake band when shifting selector lever from D to 1 or 2 position while driving in D_3.
1 reducing valve	Reduces low & reverse brake pressure to dampen engine-brake shock when downshifting from the 1 position 2nd gear to 1st gear.
Overrun clutch reducing valve	Reduces oil pressure directed to the overrun clutch and prevents engine-brake shock. In 1 and 2 positions, line pressure acts on the overrun clutch reducing valve to increase the pressure-regulating point, with resultant engine brake capability.
Torque converter relief valve	Prevents an excessive rise in torque converter pressure.
Torque converter clutch control valve, torque converter clutch control plug and torque converter clutch control sleeve	Activate or inactivate the lock-up function. Also provide smooth lock-up through transient application and release of the lock-up system.
Shuttle shift valve D	Switches hydraulic circuits so that output pressure of the torque converter clutch solenoid valve acts on the lock-up valve in the D position of 2nd, 3rd and 4th gears. (In the D position 1st gear, lock-up is inhibited.) ● Lock-up control is not affected in D position 2nd, 3rd or 4th gears, unless output pressure of the torque converter clutch solenoid valve is generated by a signal from the control unit.

Introduction

NEAT0115

The A/T system has two self-diagnostic systems.
The first is the emission-related on board diagnostic system (OBD-II) performed by the TCM in combination with the ECM. The malfunction is indicated by the MIL (malfunction indicator lamp) and is stored as a DTC in the ECM memory but not the TCM memory.
The second is the TCM original self-diagnosis indicated by the O/D OFF indicator lamp. The malfunction is stored in the TCM memory. The detected items are overlapped with OBD-II self-diagnostic items. For detail, refer to “SELF-DIAGNOSTIC RESULT TEST MODE”, AT-182.

OBD-II Function for A/T System

NEAT0116

The ECM provides emission-related on board diagnostic (OBD-II) functions for the A/T system. One function is to receive a signal from the TCM used with OBD-related parts of the A/T system. The signal is sent to the ECM when a malfunction occurs in the corresponding OBD-related part. The other function is to indicate a diagnostic result by means of the MIL (malfunction indicator lamp) on the instrument panel. Sensors, switches and solenoid valves are used as sensing elements.
The MIL automatically illuminates in One or Two Trip Detection Logic when a malfunction is sensed in relation to A/T system parts.

One or Two Trip Detection Logic of OBD-II

NEAT0117

ONE TRIP DETECTION LOGIC

NEAT0117S01

If a malfunction is sensed during the first test drive, the MIL will illuminate and the malfunction will be stored in the ECM memory as a DTC. The TCM is not provided with such a memory function.

TWO TRIP DETECTION LOGIC

NEAT0117S02

When a malfunction is sensed during the first test drive, it is stored in the ECM memory as a 1st trip DTC (diagnostic trouble code) or 1st trip freeze frame data. At this point, the MIL will not illuminate. — First Trip
If the same malfunction as that experienced during the first test drive is sensed during the second test drive, the MIL will illuminate. — Second Trip
A/T-related parts for which the MIL illuminates during the first or second test drive are listed below.

Items	MIL	
	One trip detection	Two trip detection
Shift solenoid valve A — DTC: P0750 (1108)	X	
Shift solenoid valve B — DTC: P0755 (1201)	X	
Throttle position sensor or switch — DTC: P1705 (1206)	X	
Except above		X

The “trip” in the “One or Two Trip Detection Logic” means a driving mode in which self-diagnosis is performed during vehicle operation.

OBD-II Diagnostic Trouble Code (DTC)

NEAT0118

HOW TO READ DTC AND 1ST TRIP DTC

NEAT0118S01

DTC and 1st trip DTC can be read by the following methods.

1. **(with CONSULT-II or GST)** CONSULT-II or GST (Generic Scan Tool) Examples: P0705, P0710, P0720, P0725, etc.
   These DTCs are prescribed by SAE J2012.
   (CONSULT-II also displays the malfunctioning component or system.)

- **1st trip DTC No. is the same as DTC No.**
- **Output of the diagnostic trouble code indicates that the indicated circuit has a malfunction. However, the GST does not indicate whether the malfunction is still occurring or occurred in the past and returned to normal.**
  CONSULT-II can identify them as shown below. Therefore, using CONSULT-II (if available) is recommended.

A sample of CONSULT-II display for DTC and 1st trip DTC is shown below. DTC or 1st trip DTC of a malfunction is displayed in SELF-DIAGNOSTIC RESULTS mode for “ENGINE” with CONSULT-II. Time data indicates how many times the vehicle was driven after the last detection of a DTC.

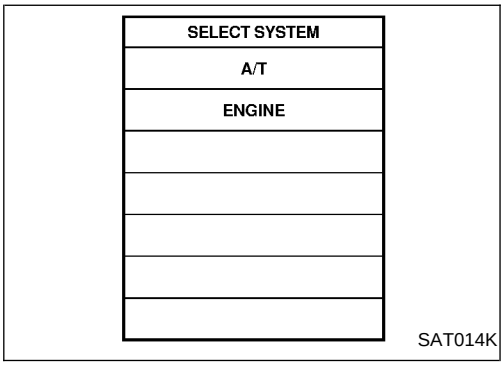

If the DTC is being detected currently, the time data will be "0".

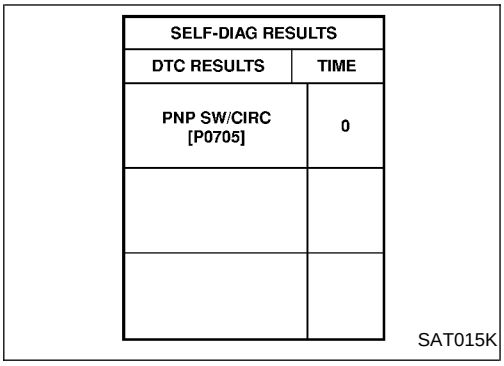

If a 1st trip DTC is stored in the ECM, the time data will be "[1t]".

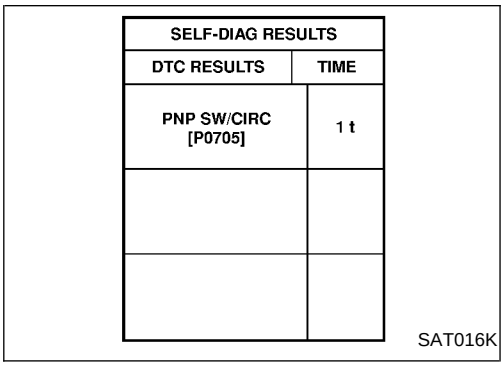

Freeze Frame Data and 1st Trip Freeze Frame Data

NEAT0118S0101

The ECM has a memory function, which stores the driving condition such as fuel system status, calculated load value, engine coolant temperature, short term fuel trim, long term fuel trim, engine speed and vehicle speed at the moment the ECM detects a malfunction.

Data which are stored in the ECM memory, along with the 1st trip DTC, are called 1st trip freeze frame data, and the data, stored together with the DTC data, are called freeze frame data and displayed on CONSULT-II or GST. The 1st trip freeze frame data can only be displayed on the CONSULT-II screen, not on the GST. For detail, refer to ***EC-696*** (VG33E only) or ***EC-1295*** (VG33ER only), "CONSULT-II".

Only one set of freeze frame data (either 1st trip freeze frame data of freeze frame data) can be stored in the ECM. 1st trip freeze frame data is stored in the ECM memory along with the 1st trip DTC. There is no priority for 1st trip freeze frame data and it is updated each time a different 1st trip DTC is detected. However, once freeze frame data (2nd trip detection/MIL on) is stored in the ECM memory, 1st trip freeze frame data is no longer stored. Remember, only one set of freeze frame data can be stored in the ECM. The ECM has the following priorities to update the data.

Priority	Items	
1	Freeze frame data	Misfire — DTC: P0300 - P0306 (0701, 0603 - 0608) Fuel Injection System Function — DTC: P0171 (0115), P0172 (0114), P0174 (0209), P0175 (0210)
2		Except the above items (Includes A/T related items)
3	1st trip freeze frame data	

Both 1st trip freeze frame data and freeze frame data (along with the DTCs) are cleared when the ECM memory is erased.

HOW TO ERASE DTC

NEAT0118S02

The diagnostic trouble code can be erased by CONSULT-II, GST or ECM DIAGNOSTIC TEST MODE as described following.

- **If the battery terminal is disconnected, the diagnostic trouble code will be lost within 24 hours.**
- **When you erase the DTC, using CONSULT-II or GST is easier and quicker than switching the mode selector on the ECM.**

The following emission-related diagnostic information is cleared from the ECM memory when erasing DTC related to OBD-II. For details, refer to ***EC-687*** (VG33E only) or ***EC-1287*** (VG33ER only), "How to Erase Emission-related Diagnostic Information".

- **Diagnostic trouble codes (DTC)**
- **1st trip diagnostic trouble codes (1st trip DTC)**
- **Freeze frame data**
- **1st trip freeze frame data**
- **System readiness test (SRT) codes**
- **Test values**

HOW TO ERASE DTC (WITH CONSULT-II)

NEAT0118S03

- **If a DTC is displayed for both ECM and TCM, it needs to be erased for both ECM and TCM.**

1. If the ignition switch stays ON after repair work, be sure to turn ignition switch OFF once. Wait at least 5 seconds and then turn it ON (engine stopped) again.
2. Turn CONSULT-II ON and touch "A/T".
3. Touch "SELF-DIAG RESULTS".
4. Touch "ERASE", (The DTC in the TCM will be erased), then touch "BACK" twice.
5. Touch "ENGINE".
6. Touch "SELF-DIAG RESULTS".
7. Touch "ERASE", (The DTC in the ECM will be erased).

How to erase DTC (With CONSULT-II)

1. If the ignition switch stays "ON" after repair work, be sure to turn ignition switch "OFF" once. Wait at least 5 seconds and then turn it "ON" (engine stopped) again.

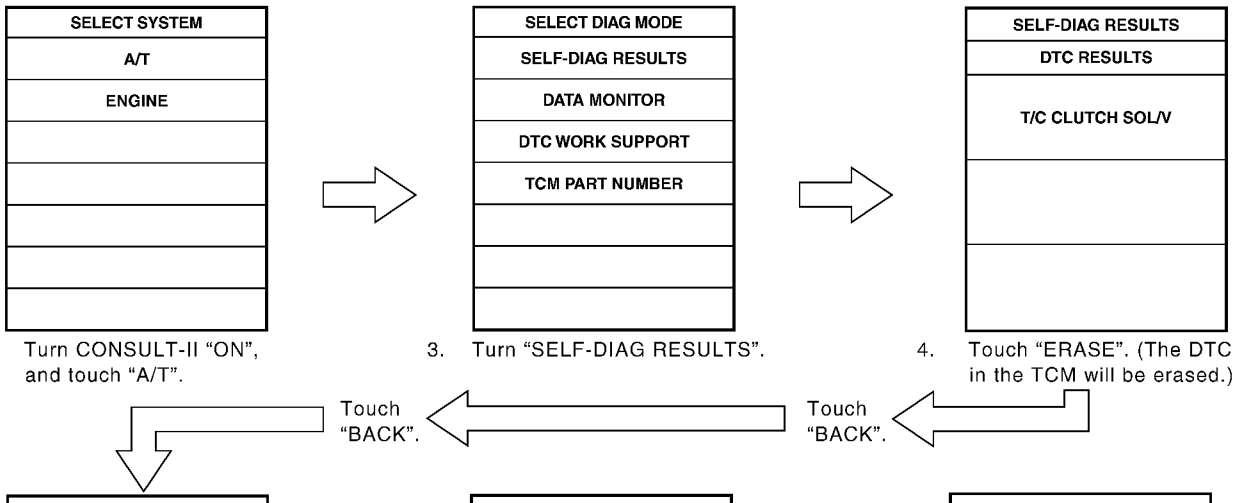

SAT017K

HOW TO ERASE DTC (WITH GST)

NEAT0118S04

1. If the ignition switch stays ON after repair work, be sure to turn ignition switch OFF once. Wait at least 5 seconds and then turn it ON (engine stopped) again.
2. Perform "OBD-II SELF-DIAGNOSTIC PROCEDURE (NO TOOLS)". Refer to "OBD-II SELF-DIAGNOSTIC PROCEDURE (NO TOOLS)", AT-190. (The engine warm-up step can be skipped when performing the diagnosis only to erase the DTC.)
3. Select Mode 4 with Generic Scan Tool (GST). For details, refer to ***EC-688*** (VG33E only) or ***EC-1288*** (VG33ER only), "Generic Scan Tool (GST)".

HOW TO ERASE DTC (NO TOOLS)

NEAT0118S05

1. If the ignition switch stays ON after repair work, be sure to turn ignition switch OFF once. Wait at least 5 seconds and then turn it ON (engine stopped) again.
2. Perform "TCM SELF-DIAGNOSTIC PROCEDURE (NO TOOLS)". Refer to "TCM SELF-DIAGNOSTIC PROCEDURE (NO TOOLS)", AT-191. (The engine warm-up step can be skipped when performing the diagnosis only to erase the DTC.)

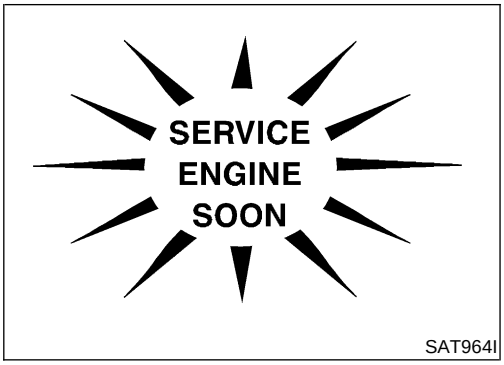

SAT964I

Malfunction Indicator Lamp (MIL)

NEAT0119

1. The malfunction indicator lamp will light up when the ignition switch is turned ON without the engine running. This is for checking the lamp.

- If the malfunction indicator lamp does not light up, refer to ***EL-84***, “Circuit Diagram” or ***EC-689*** (VG33E only) or ***EC-1289*** (VG33ER only), “Description”.

2. When the engine is started, the malfunction indicator lamp should go off.
   If the lamp remains on, the on board diagnostic system has detected an emission-related (OBD-II) malfunction. For detail, refer to ***EC-674*** (VG33E only) or ***EC-1274*** (VG33ER only), “ON BOARD DIAGNOSTIC SYSTEM DESCRIPTION”.

CONSULT-II

NEAT0120

After performing “SELF-DIAGNOSTIC PROCEDURE (WITH CONSULT-II)” [Refer to “SELF-DIAGNOSTIC PROCEDURE (WITH CONSULT-II)”, AT-182], place check marks for results on the Diagnostic Worksheet. Refer to “Diagnostic Worksheet”, AT-201. Reference pages are provided following the items.

NOTICE:

1) The CONSULT-II electrically displays shift timing and lock-up timing (that is, operation timing of each solenoid).
   Check for time difference between actual shift timing and the CONSULT-II display. If the difference is noticeable, mechanical parts (except solenoids, sensors, etc.) may be malfunctioning. Check mechanical parts using applicable diagnostic procedures.
2) Shift schedule (which implies gear position) displayed on CONSULT-II and that indicated in Service Manual may differ slightly. This occurs because of the following reasons:

- Actual shift schedule has more or less tolerance or allowance,
- Shift schedule indicated in Service Manual refers to the point where shifts start, and
- Gear position displayed on CONSULT-II indicates the point where shifts are completed.

3) Shift solenoid valve “A” or “B” is displayed on CONSULT-II at the start of shifting. Gear position is displayed upon completion of shifting (which is computed by TCM).
4) Additional CONSULT-II information can be found in the Operation Manual supplied with the CONSULT-II unit.

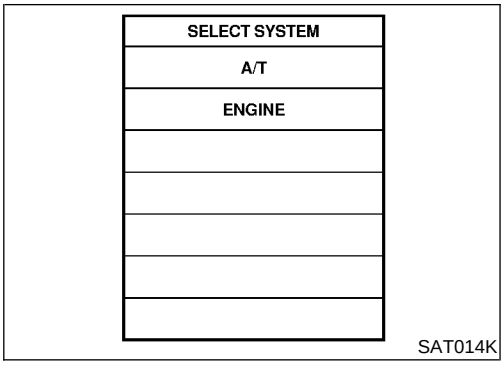

SELF-DIAGNOSTIC PROCEDURE (WITH CONSULT-II)

NEAT0120S01

1. Turn on CONSULT-II and touch "ENGINE" for OBD-II detected items or touch "A/T" for TCM self-diagnosis.
   If A/T is not displayed, check TCM power supply and ground circuit. Refer to "Wiring Diagram —AT—MAIN", AT-247. If result is NG, refer to ***EL-9***, "POWER SUPPLY ROUTING".

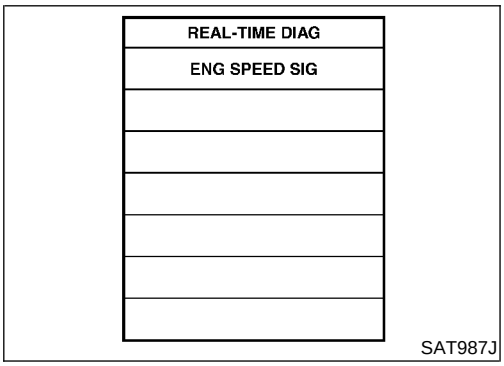

2. Touch "SELF-DIAG RESULTS".
   Display shows malfunction experienced since the last erasing operation.
   CONSULT-II performs REAL-TIME SELF-DIAGNOSIS.
   Also, any malfunction detected while in this mode will be displayed at real time.

SELF-DIAGNOSTIC RESULT TEST MODE

NEAT0120S02

Detected items (Screen terms for CONSULT-II, "SELF-DIAG RESULTS" test mode)		Malfunction is detected when ...	TCM self-diagnosis	OBD-II (DTC)
"A/T"	"ENGINE"		O/D OFF Available by O/D OFF indicator lamp or "A/T" on CONSULT-II	SERVICE ENGINE SOON Available by malfunction indicator lamp*2, "ENGINE" on CONSULT-II or GST
PNP position switch circuit		• TCM does not receive the correct voltage signal (based on the gear position) from the switch.	—	P0705
—	PNP SW/CIRC			
Revolution sensor		• TCM does not receive the proper voltage signal from the sensor.	X	P0720
VHCL SPEED SEN·A/T	VEH SPD SEN/CIR AT			
Vehicle speed sensor (Meter)		• TCM does not receive the proper voltage signal from the sensor.	X	—
VHCL SPEED SEN·MTR	—			
A/T 1st gear function		• A/T cannot be shifted to the 1st gear position even if electrical circuit is good.	—	P0731*1
—	A/T 1ST GR FNCTN			
A/T 2nd gear function		• A/T cannot be shifted to the 2nd gear position even if electrical circuit is good.	—	P0732*1
—	A/T 2ND GR FNCTN			
A/T 3rd gear function		• A/T cannot be shifted to the 3rd gear position even if electrical circuit is good.	—	P0733*1
—	A/T 3RD GR FNCTN			

Detected items (Screen terms for CONSULT-II, "SELF-DIAG RESULTS" test mode)		Malfunction is detected when ...	TCM self-diagnosis	OBD-II (DTC)
			O/D OFF Available by O/D OFF indicator lamp or "A/T" on CONSULT-II	SERVICE ENGINE SOON Available by malfunction indicator lamp*2, "ENGINE" on CONSULT-II or GST
"A/T"	"ENGINE"			
A/T 4th gear function		• A/T cannot be shifted to the 4th gear position even if electrical circuit is good.	—	P0734*1
—	A/T 4TH GR FNCTN			
A/T TCC S/V function (lock-up)		• A/T cannot perform lock-up even if electrical circuit is good.	—	P0744*1
—	A/T TCC S/V FNCTN			
Shift solenoid valve A		• TCM detects an improper voltage drop when it tries to operate the solenoid valve.	X	P0750
SHIFT SOLENOID/V A	SFT SOL A/CIRC			
Shift solenoid valve B		• TCM detects an improper voltage drop when it tries to operate the solenoid valve.	X	P0755
SHIFT SOLENOID/V B	SFT SOL B/CIRC			
Overrun clutch solenoid valve		• TCM detects an improper voltage drop when it tries to operate the solenoid valve.	X	P1760
OVERRUN CLUTCH S/V	O/R CLUCH SOL/ CIRC			
T/C clutch solenoid valve		• TCM detects an improper voltage drop when it tries to operate the solenoid valve.	X	P0740
T/C CLUTCH SOL/V	TCC SOLENOID/ CIRC			
Line pressure solenoid valve		• TCM detects an improper voltage drop when it tries to operate the solenoid valve.	X	P0745
LINE PRESSURE S/V	L/PRESS SOL/ CIRC			
Throttle position sensor Throttle position switch		• TCM receives an excessively low or high voltage from the sensor.	X	P1705
THROTTLE POSI SEN	TP SEN/CIRC A/T			
Engine speed signal		• TCM does not receive the proper voltage signal from the ECM.	X	P0725
ENGINE SPEED SIG				
A/T fluid temperature sensor		• TCM receives an excessively low or high voltage from the sensor.	X	P0710
BATT/FLUID TEMP SEN	ATF TEMP SEN/ CIRC			
Turbine revolution sensor (VG33ER only)		• TCM does not receive the proper voltage signal from the sensor.	X	—
TURBINE REV	—			
TCM (RAM)		• TCM memory (RAM) is malfunctioning.	—	—
CONTROL UNIT (RAM)	—			
TCM (ROM)		• TCM memory (ROM) is malfunctioning.	—	—
CONTROL UNIT (ROM)	—			

CONSULT-II (Cont'd)

Detected items (Screen terms for CONSULT-II, "SELF-DIAG RESULTS" test mode)		Malfunction is detected when ...	TCM self-diagnosis	OBD-II (DTC)
"A/T"	"ENGINE"		O/D OFF Available by O/D OFF indicator lamp or "A/T" on CONSULT-II	SERVICE ENGINE SOON Available by malfunction indicator lamp*2, "ENGINE" on CONSULT-II or GST
TCM (EEP ROM)		• TCM memory (EEP ROM) is malfunctioning.	—	—
CONT UNIT (EEP ROM)	—			
Initial start		• This is not a malfunction message (Whenever shutting off a power supply to the control unit, this message appears on the screen).	X	—
INITIAL START	—			
No failure (NO DTC IS DETECTED FURTHER TESTING MAY BE REQUIRED**)		• No failure has been detected.	X	X

X: Applicable
—: Not applicable
*1: These malfunctions cannot be displayed by MIL SERVICE ENGINE SOON if another malfunction is assigned to MIL.
*2: Refer to ***EC-689*** (VG33E only) or ***EC-1289*** (VG33ER only), "Malfunction Indicator Lamp (MIL)".

DATA MONITOR MODE (A/T)

NEAT0120S03

Item	Display	Monitor item		Description	Remarks
		TCM input signals	Main signals		
Vehicle speed sensor 1 (A/T) (Revolution sensor)	VHCL/S SE·A/T [km/h] or [mph]	X	—	• Vehicle speed computed from signal of revolution sensor is displayed.	When racing engine in P or N position with vehicle stationary, CONSULT-II data may not indicate 0 km/h (0 mph).
Vehicle speed sensor 2 (Meter)	VHCL/S SE·MTR [km/h] or [mph]	X	—	• Vehicle speed computed from signal of vehicle speed sensor is displayed.	Vehicle speed display may not be accurate under approx. 10 km/h (6 mph). It may not indicate 0 km/h (0 mph) when vehicle is stationary.
Throttle position sensor	THRTL POS SEN [V]	X	—	• Throttle position sensor signal voltage is displayed.	
A/T fluid temperature sensor	FLUID TEMP SE [V]	X	—	• A/T fluid temperature sensor signal voltage is displayed. • Signal voltage lowers as fluid temperature rises.	
Battery voltage	BATTERY VOLT [V]	X	—	• Source voltage of TCM is displayed.	
Engine speed	ENGINE SPEED [rpm]	X	X	• Engine speed, computed from engine speed signal, is displayed.	Engine speed display may not be accurate under approx. 800 rpm. It may not indicate 0 rpm even when engine is not running.

Item	Display	Monitor item		Description	Remarks
		TCM input signals	Main signals		
Turbine revolution sensor (VG33ER only)	TURBINE REV [rpm]	X	—	• Turbine revolution computed from signal of turbine revolution sensor is displayed.	Error may occur under approx. 800 rpm and will not indicate 0 rpm even if engine is not running.
Overdrive control switch	OVERDRIVE SW [ON/OFF]	X	—	• ON/OFF state computed from signal of overdrive control SW is displayed.	
PN position switch	PN POSI SW [ON/OFF]	X	—	• ON/OFF state computed from signal of PN position SW is displayed.	
R position switch	R POSITION SW [ON/OFF]	X	—	• ON/OFF state computed from signal of R position SW is displayed.	
D position switch	D POSITION SW [ON/OFF]	X	—	• ON/OFF state computed from signal of D position SW is displayed.	
2 position switch	2 POSITION SW [ON/OFF]	X	—	• ON/OFF status, computed from signal of 2 position SW, is displayed.	
1 position switch	1 POSITION SW [ON/OFF]	X	—	• ON/OFF status, computed from signal of 1 position SW, is displayed.	
ASCD cruise signal	ASCD - CRUISE [ON/OFF]	X	—	• Status of ASCD cruise signal is displayed. ON ... Cruising state OFF ... Normal running state	• This is displayed even when no ASCD is mounted.
ASCD - O/D cut signal	ASCD - O/D CUT [ON/OFF]	X	—	• Status of ASCD O/D release signal is displayed. ON ... O/D released OFF ... O/D not released	• This is displayed even when no ASCD is mounted.
Kickdown switch	KICKDOWN SW [ON/OFF]	X	—	• ON/OFF status, computed from signal of kickdown SW, is displayed.	• This is displayed even when no kickdown switch is equipped.
Closed throttle position switch	CLOSED THL/SW [ON/OFF]	X	—	• ON/OFF status, computed from signal of closed throttle position SW, is displayed.	
Wide open throttle position switch	W/O THRL/P-SW [ON/OFF]	X	—	• ON/OFF status, computed from signal of wide open throttle position SW, is displayed.	
Stop lamp switch (VG33ER only)	BRAKE SW [ON/OFF]	X	—	• ON/OFF status is displayed. ON...Brake pedal is depressed. OFF...Brake pedal switch is released.	

CONSULT-II (Cont'd)

Item	Display	Monitor item		Description	Remarks
		TCM input signals	Main signals		
Gear position	GEAR	—	X	• Gear position data used for computation by TCM, is displayed.	
Selector lever position	SLCT LVR POSI	—	X	• Selector lever position data, used for computation by TCM, is displayed.	• A specific value used for control is displayed if fail-safe is activated due to error.
Vehicle speed	VEHICLE SPEED [km/h] or [mph]	—	X	• Vehicle speed data, used for computation by TCM, is displayed.	
Throttle position	THROTTLE POSI [/8]	—	X	• Throttle position data, used for computation by TCM, is displayed.	• A specific value used for control is displayed if fail-safe is activated due to error.
Line pressure duty	LINE PRES DTY [%]	—	X	• Control value of line pressure solenoid valve, computed by TCM from each input signal, is displayed.	
Torque converter clutch solenoid valve duty	TCC S/V DUTY [%]	—	X	• Control value of torque converter clutch solenoid valve, computed by TCM from each input signal, is displayed.	
Shift solenoid valve A	SHIFT S/V A [ON/OFF]	—	X	• Control value of shift solenoid valve A, computed by TCM from each input signal, is displayed.	Control value of solenoid is displayed even if solenoid circuit is disconnected. The "OFF" signal is displayed if solenoid circuit is shorted.
Shift solenoid valve B	SHIFT S/V B [ON/OFF]	—	X	• Control value of shift solenoid valve B, computed by TCM from each input signal, is displayed.	
Overrun clutch solenoid valve	OVERRUN/C S/V [ON/OFF]	—	X	• Control value of overrun clutch solenoid valve computed by TCM from each input signal is displayed.	
Self-diagnosis display lamp (O/D OFF indicator lamp)	SELF-D DP LMP [ON/OFF]	—	X	• Control status of O/D OFF indicator lamp is displayed.	

X: Applicable

—: Not applicable

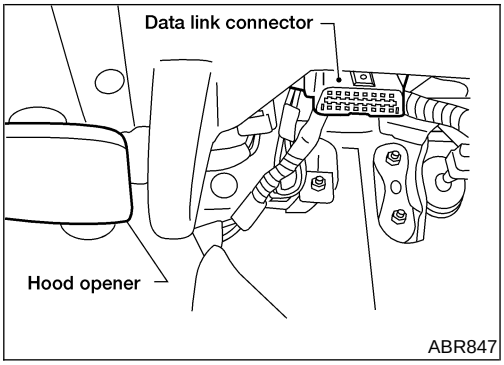

ABR847

DTC WORK SUPPORT MODE WITH CONSULT-II

NEAT0120S04

CONSULT-II Setting Procedure

NEAT0120S0401

1. Turn ignition switch OFF.
2. Connect CONSULT-II to data link connector. The data link connector is located in instrument lower panel on driver side.

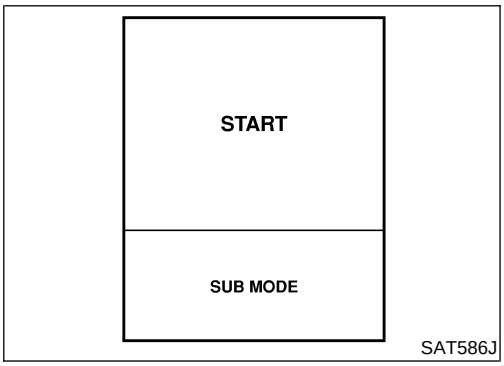

SAT586J

3. Turn ignition switch ON
4. Touch "START".

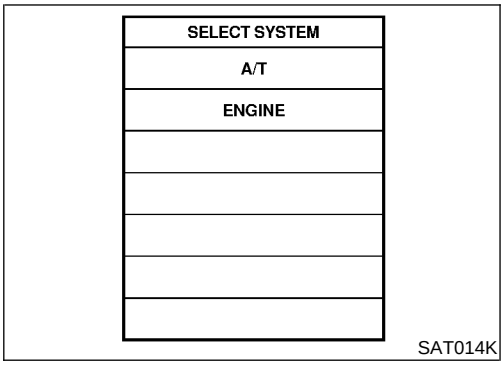

SAT014K

5. Touch "A/T".

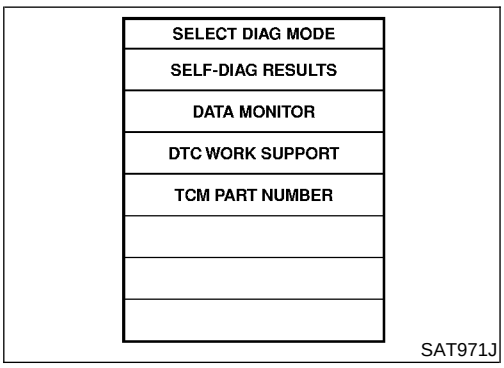

SAT971J

6. Touch "DTC WORK SUPPORT".

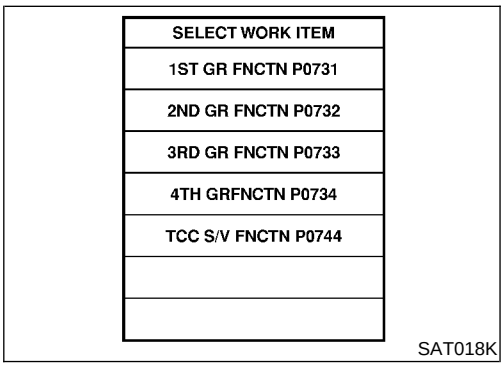

SAT018K

7. Touch select item menu (1ST, 2ND, etc.).

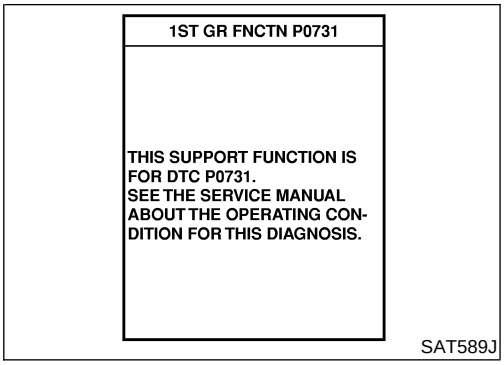

8. Touch "START".

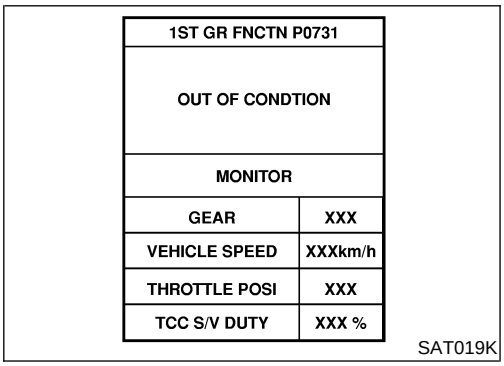

9. Perform driving test according to "DTC CONFIRMATION PROCEDURE" in "TROUBLE DIAGNOSIS FOR DTC".

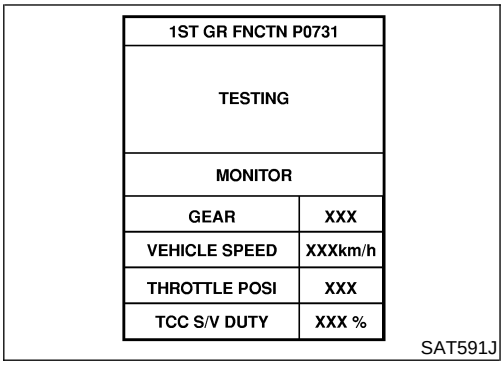

- **When testing conditions are satisfied, CONSULT-II screen changes from "OUT OF CONDITION" to "TESTING".**

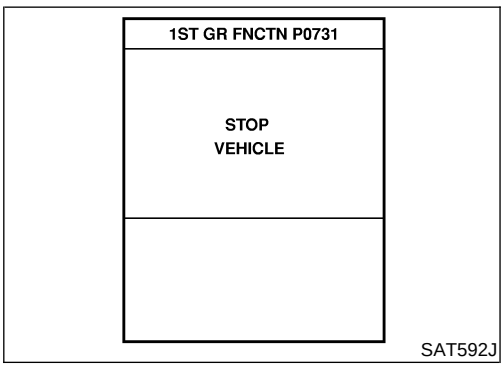

10. Stop vehicle. If "NG" appears on the screen, malfunction may exist. Go to "DIAGNOSTIC PROCEDURE".

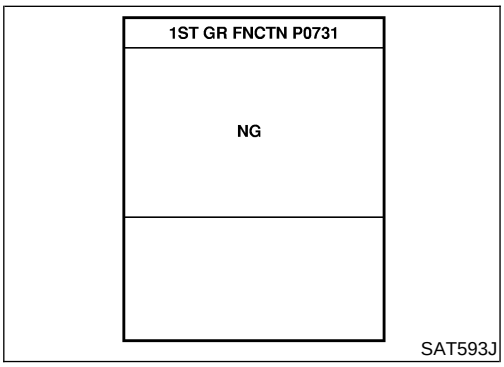

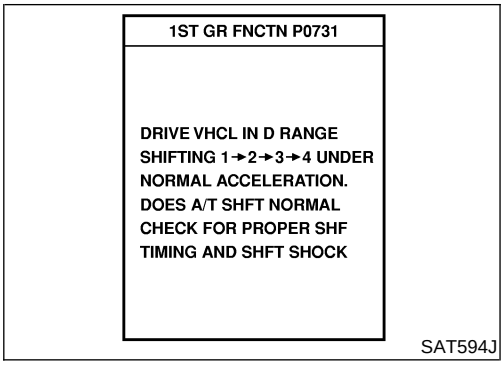

11. Perform test drive to check gear shift feeling in accordance with instructions displayed.

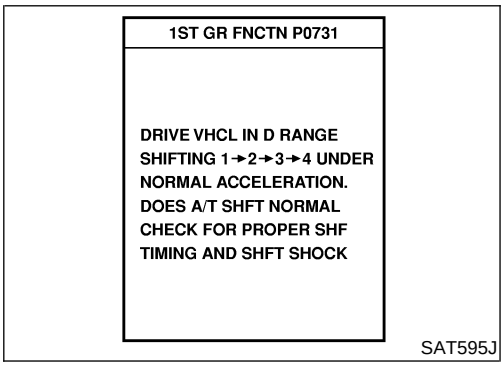

12. Touch "YES" or "NO".

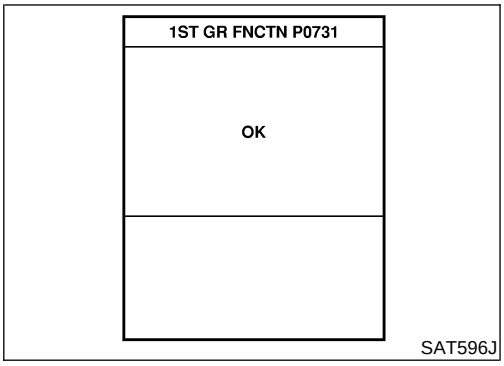

13. CONSULT-II procedure ended.
If "NG" appears on the screen, a malfunction may exist. Go to "DIAGNOSTIC PROCEDURE".

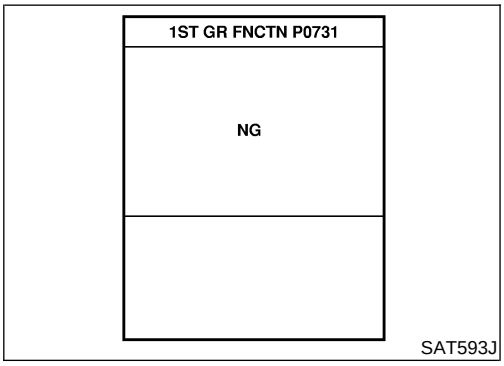

DTC WORK SUPPORT MODE

NEAT0120S05

DTC work support item	Description	Check item
1ST GR FNCTN P0731	Following items for "A/T 1st gear function (P0731)" can be confirmed. ● Self-diagnosis status (whether the diagnosis is being conducted or not) ● Self-diagnosis result (OK or NG)	● Shift solenoid valve A ● Shift solenoid valve B ● Each clutch ● Hydraulic control circuit

CONSULT-II (Cont'd)

DTC work support item	Description	Check item
2ND GR FNCTN P0732	Following items for "A/T 2nd gear function (P0732)" can be confirmed. ● Self-diagnosis status (whether the diagnosis is being conducted or not) ● Self-diagnosis result (OK or NG)	● Shift solenoid valve B ● Each clutch ● Hydraulic control circuit
3RD GR FNCTN P0733	Following items for "A/T 3rd gear function (P0733)" can be confirmed. ● Self-diagnosis status (whether the diagnosis is being conducted or not) ● Self-diagnosis result (OK or NG)	● Shift solenoid valve A ● Each clutch ● Hydraulic control circuit
4TH GR FNCTN P0734	Following items for "A/T 4th gear function (P0734)" can be confirmed. ● Self-diagnosis status (whether the diagnosis is being conducted or not) ● Self-diagnosis result (OK or NG)	● Shift solenoid valve A ● Shift solenoid valve B ● Overrun clutch solenoid valve ● Line pressure solenoid valve ● Each clutch ● Hydraulic control circuit
TCC S/V FNCTN P0744	Following items for "A/T TCC S/V function (lock-up) (P0744)" can be confirmed. ● Self-diagnosis status (whether the diagnosis is being conducted or not) ● Self-diagnosis result (OK or NG)	● Torque converter clutch solenoid valve ● Each clutch ● Hydraulic control circuit

Diagnostic Procedure Without CONSULT-II

NEAT0121

OBD-II SELF-DIAGNOSTIC PROCEDURE (WITH GST)

NEAT0121S01

Refer to ***EC-709*** (VG33E only) or ***EC-1308*** (VG33ER only), "Generic Scan Tool (GST)".

OBD-II SELF-DIAGNOSTIC PROCEDURE (NO TOOLS)

NEAT0121S02

Refer to***EC-689*** (VG33E only) or ***EC-1289***, "Malfunction Indicator Lamp (MIL)".

TCM SELF-DIAGNOSTIC PROCEDURE (NO TOOLS)

NEAT0121S03

1	CHECK O/D OFF INDICATOR LAMP

1. Selector lever in P position. Start the engine. Warm engine to normal operating temperature.
2. Turn ignition switch to OFF position.
3. Wait at least 5 seconds.

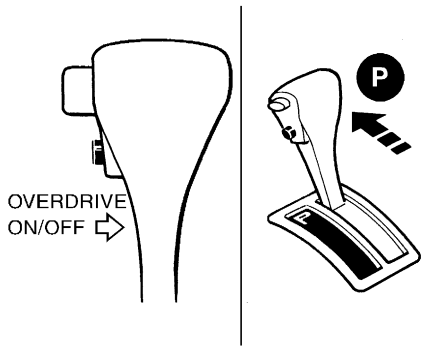

SAT967I

4. Turn ignition switch to ON position
   (Do not start engine).
5. Does O/D OFF indicator lamp come on for about 2 seconds?

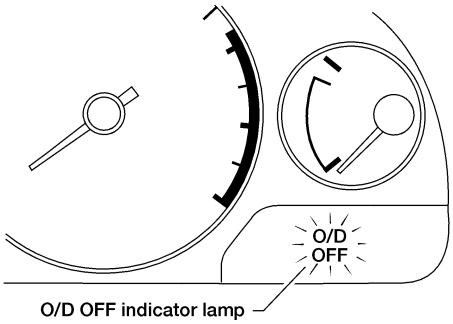

AAT612A

Yes or No

Yes	▶	GO TO 2.
No	▶	Go to "1. O/D OFF Indicator Lamp Does Not Come On", AT-364.

2	JUDGEMENT PROCEDURE STEP 1

1. Turn ignition switch to OFF position.
2. Depress shift lock release button.
3. Move selector lever from P to D position.
4. Turn ignition switch to ON position. Do not start engine.
5. Depress and hold overdrive control switch in OFF position (the O/D OFF indicator lamp will be ON) until directed to release the switch (If O/D OFF indicator lamp does not come on, go to step 3 on AT-402).
6. Turn ignition switch to OFF position.

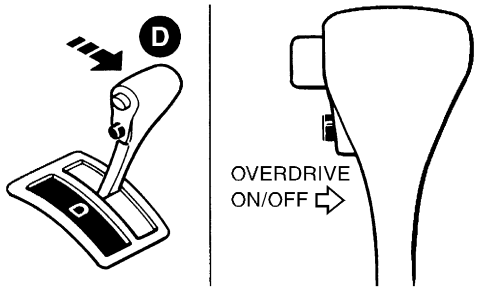

SAT968I

7. Turn ignition switch to ON position (Do not start engine).
8. Release the overdrive control switch (the O/D OFF indicator lamp will be OFF).

● Wait for more than 2 seconds after ignition switch ON.

9. Move selector lever to 2 position.
10. Depress and release the overdrive control switch (the O/D OFF indicator lamp will be ON).
11. Depress and hold the overdrive control switch (the O/D OFF indicator lamp will be OFF) until directed to release the switch.

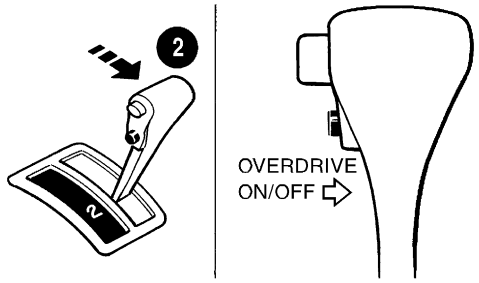

SAT969I

▶	GO TO 3.

3	JUDGEMENT PROCEDURE STEP 2

1. Move selector lever to 1 position.
2. Release the overdrive control switch.
3. Depress and release the overdrive control switch (the O/D OFF indicator lamp will be ON).
4. Depress and release the overdrive control switch (the O/D OFF indicator lamp will be OFF).
5. Depress and hold the overdrive control switch (the O/D OFF indicator lamp will be ON) until directed to release the switch.

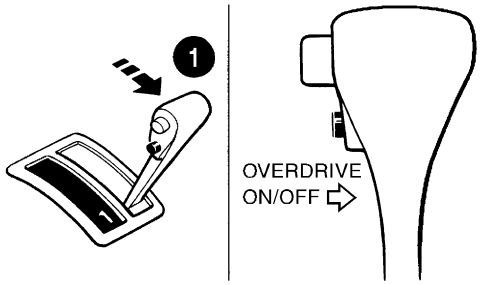

SAT970I

6. Depress accelerator pedal fully and release.
7. Release the overdrive control switch (the O/D OFF indicator lamp will begin to flash ON and OFF).

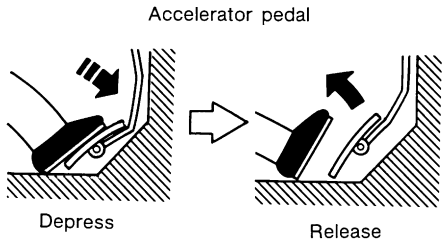

SAT981F

▶ GO TO 4.

4	CHECK SELF-DIAGNOSIS CODE

Check O/D OFF indicator lamp.
Refer to "JUDGEMENT OF SELF-DIAGNOSIS CODE", AT-194.

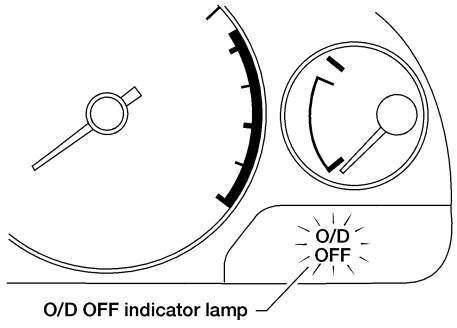

AAT612A

▶ **DIAGNOSIS END**

JUDGEMENT OF SELF-DIAGNOSIS CODE (VG33E ONLY)

NEAT0121S04

O/D OFF indicator lamp:

All judgement flickers are same.

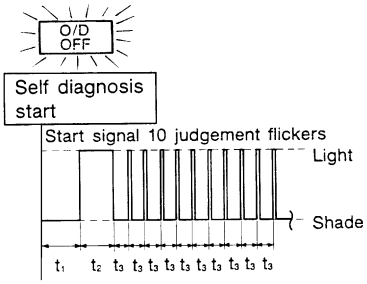

SAT436F

All circuits that can be confirmed by self-diagnosis are OK.

1st judgement flicker is longer than others.

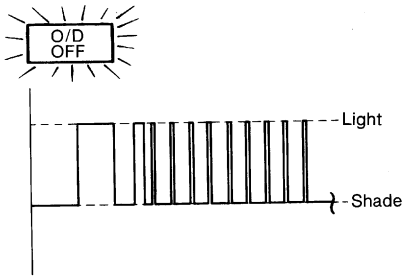

SAT437F

Revolution sensor circuit is short-circuited or disconnected.
⇒ **Go to "DTC P0720 VEHICLE SPEED SENSOR·A/T (REVOLUTION SENSOR)", AT-262.**

2nd judgement flicker is longer than others.

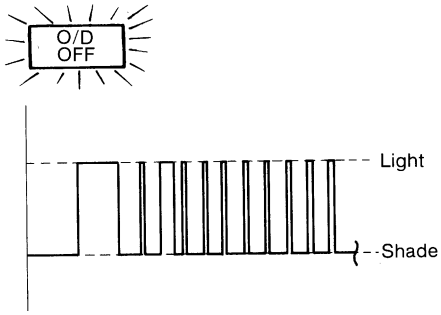

SAT439F

Vehicle speed sensor circuit is short-circuited or disconnected.
⇒ **Go to "DTC VEHICLE SPEED SENSOR·MTR", AT-348.**

3rd judgement flicker is longer than others.

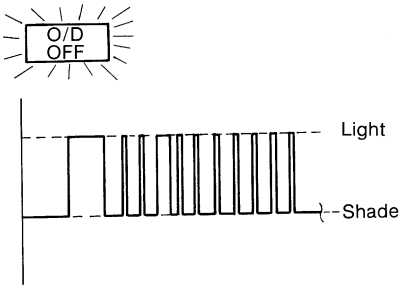

SAT441F

Throttle position sensor circuit is short-circuited or disconnected.
⇒ **Go to "DTC P1705 THROTTLE POSITION SENSOR", AT-328.**

4th judgement flicker is longer than others.

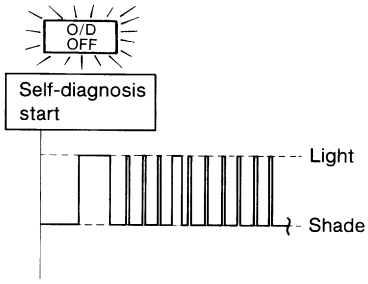

SAT443F

Shift solenoid valve A circuit is short-circuited or disconnected.
⇒ **Go to "DTC P0750 SHIFT SOLENOID VALVE A", AT-318.**

5th judgement flicker is longer than others.

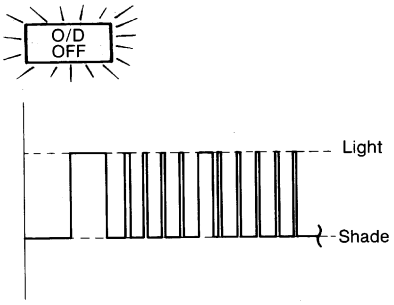

SAT445F

Shift solenoid valve B circuit is short-circuited or disconnected.
⇒ **Go to "DTC P0755 SHIFT SOLENOID VALVE B", AT-323.**

O/D OFF indicator lamp:

6th judgement flicker is longer than others.

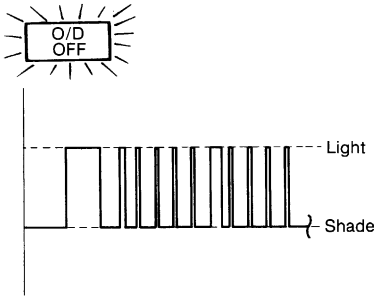

SAT447F

Overrun clutch solenoid valve circuit is short-circuited or disconnected.
⇒ **Go to "DTC P1760 OVERRUN CLUTCH SOLENOID VALVE", AT-337.**

7th judgement flicker is longer than others.

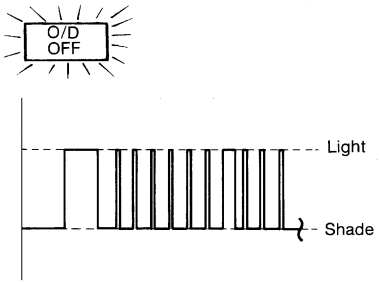

SAT449F

Torque converter clutch solenoid valve circuit is short-circuited or disconnected.
⇒ **Go to "DTC P0740 TORQUE CONVERTER CLUTCH SOLENOID VALVE", AT-299.**

8th judgement flicker is longer than others.

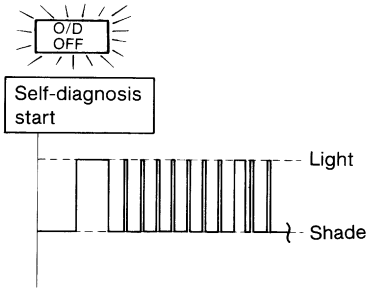

SAT451F

A/T fluid temperature sensor is disconnected or TCM power source circuit is damaged.
⇒ **Go to "DTC BATT/FLUID TEMP SEN (A/T FLUID TEMP SENSOR CIRCUIT AND TCM POWER SOURCE)", AT-342.**

9th judgement flicker is longer than others.

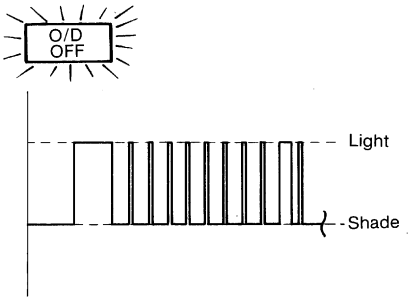

SAT453F

Engine speed signal circuit is short-circuited or disconnected.
⇒ **Go to "DTC P0725 ENGINE SPEED SIGNAL", AT-267.**

10th judgement flicker is longer than others.

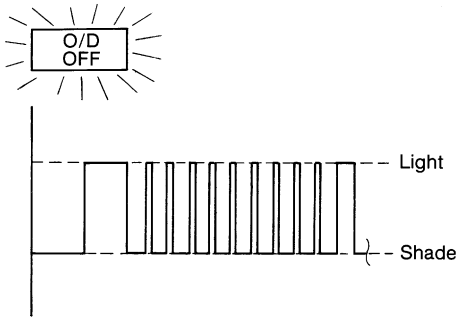

SAT455F

Line pressure solenoid valve circuit is short-circuited or disconnected.
⇒ **Go to "DTC P0745 LINE PRESSURE SOLENOID VALVE", AT-313.**

Flickers as shown below.

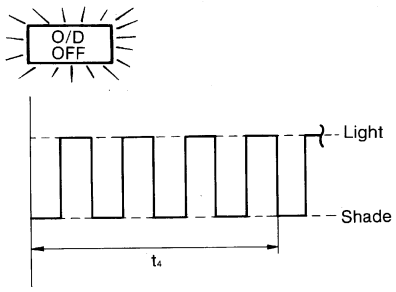

SAT457F

Battery power is low.
Battery has been disconnected for a long time.
Battery is connected conversely.
(When reconnecting TCM connectors. — This is not a problem.)

O/D OFF indicator lamp:

Lamp comes on.

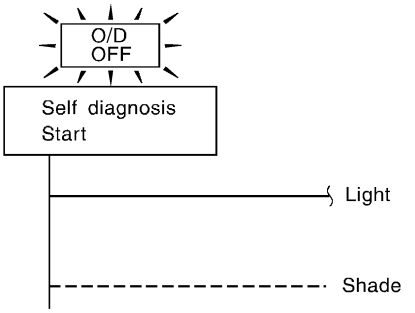

SAT367J

PNP switch, overdrive control switch or throttle position switch circuit is disconnected or TCM is damaged.
⇒ **Go to "21. TCM Self-diagnosis Does Not Activate (PNP, Overdrive Control and Throttle Position Switches Circuit Checks), AT-401.**

t_1 = 2.5 seconds t_2 = 2.0 seconds t_3 = 1.0 second t_4 = 1.0 second

JUDGEMENT OF SELF-DIAGNOSIS CODE (VG33ER ONLY)

NEAT0121S05

O/D OFF indicator lamp:

All judgement flickers are same.

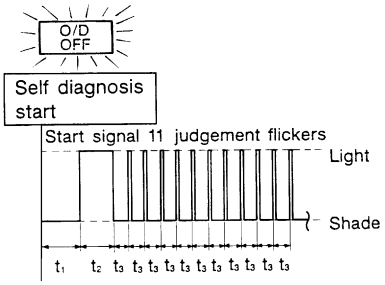

LAT425

All circuits that can be confirmed by self-diagnosis are OK.

1st judgement flicker is longer than others.

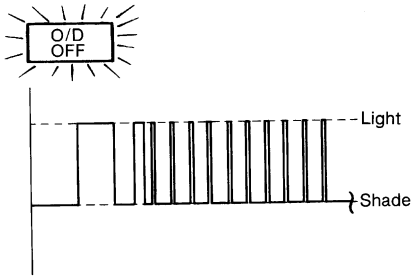

LAT426

Revolution sensor circuit is short-circuited or disconnected.
⇒ **Go to "DTC P0720 VEHICLE SPEED SENSOR·A/T (REVOLUTION SENSOR)", AT-262.**

2nd judgement flicker is longer than others.

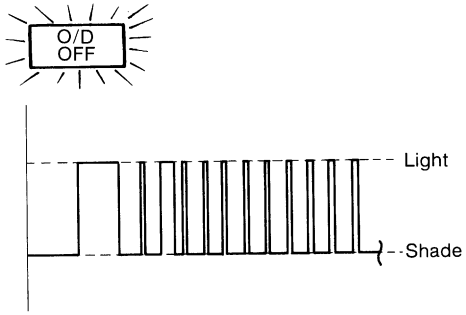

LAT427

Vehicle speed sensor circuit is short-circuited or disconnected.
⇒ **Go to "DTC VEHICLE SPEED SENSOR·MTR", AT-348.**

3rd judgement flicker is longer than others.

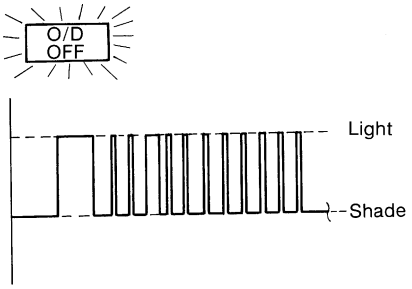

LAT428

Throttle position sensor circuit is short-circuited or disconnected.
⇒ **Go to "DTC P1705 THROTTLE POSITION SENSOR", AT-328.**

O/D OFF indicator lamp:

4th judgement flicker is longer than others.

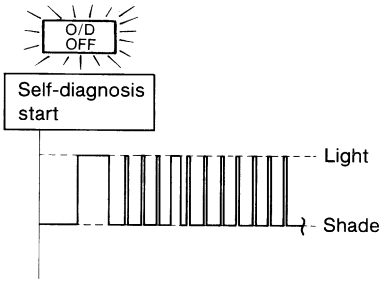

LAT429

Shift solenoid valve A circuit is short-circuited or disconnected.
⇒ **Go to "DTC P0750 SHIFT SOLENOID VALVE A", AT-318.**

5th judgement flicker is longer than others.

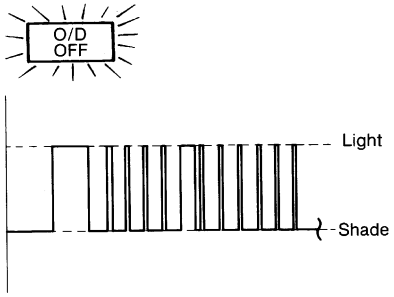

LAT430

Shift solenoid valve B circuit is short-circuited or disconnected.
⇒ **Go to "DTC P0755 SHIFT SOLENOID VALVE B", AT-323.**

6th judgement flicker is longer than others.

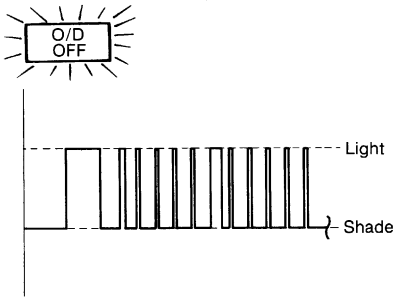

LAT431

Overrun clutch solenoid valve circuit is short-circuited or disconnected.
⇒ **Go to "DTC P1760 OVERRUN CLUTCH SOLENOID VALVE", AT-337.**

7th judgement flicker is longer than others.

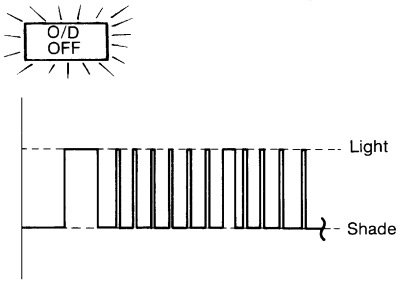

LAT432

Torque converter clutch solenoid valve circuit is short-circuited or disconnected.
⇒ **Go to "DTC P0740 TORQUE CONVERTER CLUTCH SOLENOID VALVE", AT-299.**

8th judgement flicker is longer than others.

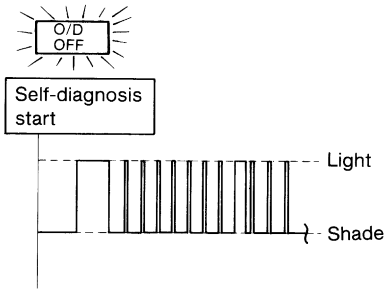

LAT433

A/T fluid temperature sensor is disconnected or TCM power source circuit is damaged.
⇒ **Go to "DTC BATT/FLUID TEMP SEN (A/T FLUID TEMP SENSOR CIRCUIT AND TCM POWER SOURCE)", AT-342.**

9th judgement flicker is longer than others.

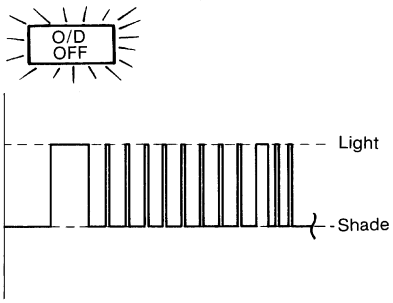

LAT434

Engine speed signal circuit is short-circuited or disconnected.
⇒ **Go to "DTC P0725 ENGINE SPEED SIGNAL", AT-267.**

O/D OFF indicator lamp:

10th judgement flicker is longer than others.

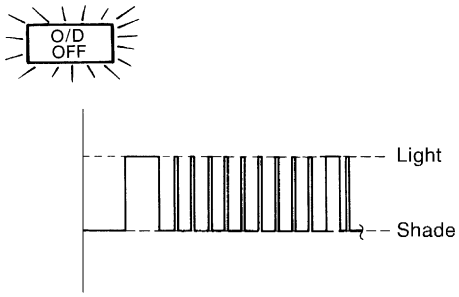

LAT435

⇒ **Go to "DTC TURBINE REVOLUTION SENSOR", AT-352.**

11th judgement flicker is longer than others.

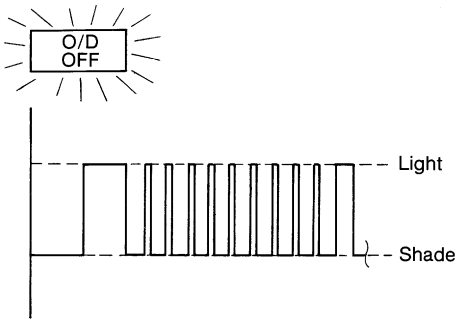

SAT455F

Line pressure solenoid valve circuit is short-circuited or disconnected.

⇒ **Go to "DTC P0745 LINE PRESSURE SOLENOID VALVE", AT-313.**

Flickers as shown below.

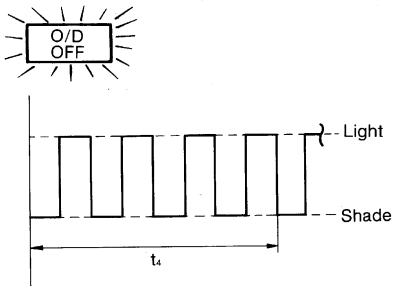

SAT457F

Battery power is low.
Battery has been disconnected for a long time.
Battery is connected conversely.
(When reconnecting TCM connectors. — This is not a problem.)

Lamp comes on.

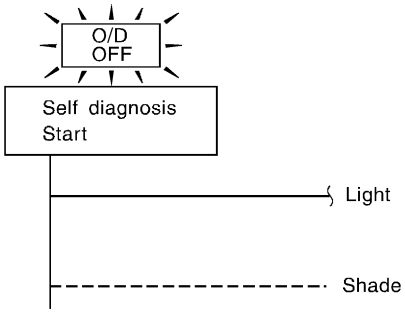

SAT367J

PNP switch, overdrive control switch or throttle position switch circuit is disconnected or TCM is damaged.

⇒ **Go to "21. TCM Self-diagnosis Does Not Activate (PNP, Overdrive Control and Throttle Position Switches Circuit Checks), AT-401.**

t_1 = 2.5 seconds t_2 = 2.0 seconds t_3 = 1.0 second t_4 = 1.0 second

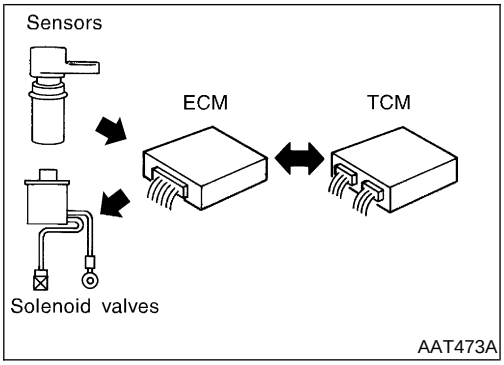

AAT473A

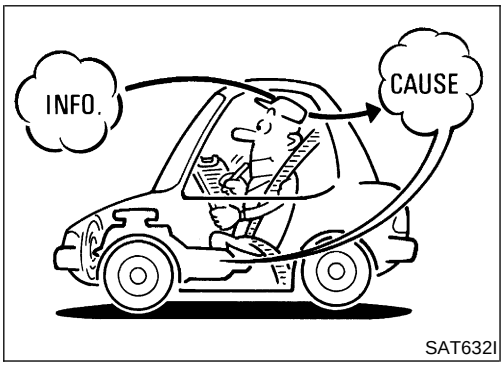

SAT632I

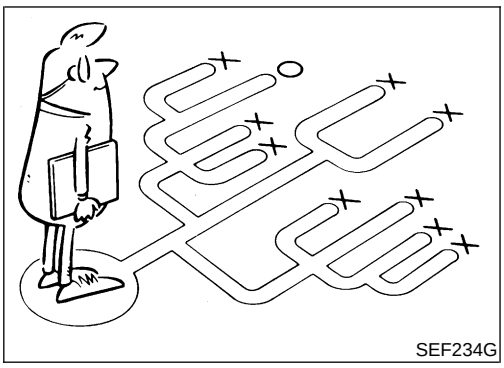
SEF234G

Introduction

NEAT0122

The TCM receives a signal from the vehicle speed sensor, throttle position sensor or PNP switch and provides shift control or lock-up control via A/T solenoid valves.

The TCM also communicates with the ECM by means of a signal sent from sensing elements used with the OBD-related parts of the A/T system for malfunction-diagnostic purposes. The TCM is capable of diagnosing malfunctioning parts while the ECM can store malfunctions in its memory.

Input and output signals must always be correct and stable in the operation of the A/T system. The A/T system must be in good operating condition and be free of valve seizure, solenoid valve malfunction, etc.

It is much more difficult to diagnose a problem that occurs intermittently rather than continuously. Most intermittent problems are caused by poor electric connections or improper wiring. In this case, careful checking of suspected circuits may help prevent the replacement of good parts.

A visual check only may not find the cause of the problems. A road test with CONSULT-II (or GST) or a circuit tester connected should be performed. Follow the “Work Flow”. Refer to “Work Flow”, AT-203.

Before undertaking actual checks, take a few minutes to talk with a customer who approaches with a driveability complaint. The customer can supply good information about such problems, especially intermittent ones. Find out what symptoms are present and under what conditions they occur. A “Diagnostic Worksheet” should be used. Refer to “Diagnostic Worksheet”, AT-201.

Start your diagnosis by looking for “conventional” problems first. This will help troubleshoot driveability problems on an electronically controlled engine vehicle.

Also check related Service bulletins.

DIAGNOSTIC WORKSHEET

=NEAT0122S01

Information From Customer

NEAT0122S0101

KEY POINTS

WHAT..... Vehicle & A/T model
WHEN..... Date, Frequencies
WHERE..... Road conditions
HOW..... Operating conditions, Symptoms

Customer name MR/MS	Model & Year	VIN
Trans. model	Engine	Mileage
Incident Date	Manuf. Date	In Service Date
Frequency	☐ Continuous ☐ Intermittent (times a day)	
Symptoms	☐ Vehicle does not move. (☐ Any position ☐ Particular position)	
	☐ No up-shift (☐ 1st → 2nd ☐ 2nd → 3rd ☐ 3rd → O/D)	
	☐ No down-shift (☐ O/D → 3rd ☐ 3rd → 2nd ☐ 2nd → 1st)	
	☐ Lockup malfunction	
	☐ Shift point too high or too low.	
	☐ Shift shock or slip (☐ N → D ☐ Lockup ☐ Any drive position)	
	☐ Noise or vibration	
	☐ No kickdown	
	☐ No pattern select	
	☐ Others ( )	
O/D OFF indicator lamp	Blinks for about 8 seconds.	
	☐ Continuously lit	☐ Not lit
Malfunction indicator lamp (MIL)	☐ Continuously lit	☐ Not lit

Diagnostic Worksheet

=NEAT0122S0102

1.	☐ Read the Fail-safe Remarks and listen to customer complaints.			AT-151
2.	☐ CHECK A/T FLUID			AT-206
	☐ Leakage (Follow specified procedure) ☐ Fluid condition ☐ Fluid level			
3.	Perform STALL TEST and LINE PRESSURE TEST.			AT-206, AT-209
	☐ Stall test — Mark possible damaged components/others.			
	☐ Torque converter one-way clutch ☐ Reverse clutch ☐ Forward clutch ☐ Overrun clutch ☐ Forward one-way clutch	☐ Low & reverse brake ☐ Low one-way clutch ☐ Engine ☐ Line pressure is low ☐ Clutches and brakes except high clutch and brake band are OK		
	☐ Line pressure test — Suspected parts:			
4.	☐ Perform all ROAD TEST and mark required procedures.			AT-211
	4-1.	Check before engine is started.		AT-212
		☐ SELF-DIAGNOSTIC PROCEDURE - Mark detected items.		
		☐PNP switch, AT-250. ☐ A/T fluid temperature sensor, AT-256. ☐ Vehicle speed sensor·A/T (Revolution sensor), AT-262. ☐ Engine speed signal, AT-267. ☐ Torque converter clutch solenoid valve, AT-299. ☐ Line pressure solenoid valve, AT-313. ☐ Shift solenoid valve A, AT-318. ☐ Shift solenoid valve B, AT-323. ☐ Throttle position sensor, AT-328. ☐ Overrun clutch solenoid valve, AT-337. ☐ A/T fluid temperature sensor and TCM power source, AT-342. ☐ PNP, overdrive control and throttle position switches, AT-401. ☐ Vehicle speed sensor·MTR, AT-348. ☐ Turbine revolution sensor (VG33ER only), AT-352. ☐ Control unit (RAM), control unit (ROM), AT-357. ☐ Control unit (EEP ROM), AT-359. ☐ Battery ☐ Others		
	4-2.	Check at idle		AT-214
		☐ 1. O/D OFF Indicator Lamp Does Not Come On, AT-364. ☐ 2. Engine Cannot Be Started In P And N Position, AT-366. ☐ 3. In P Position, Vehicle Moves Forward Or Backward When Pushed, AT-367. ☐ 4. In N Position, Vehicle Moves, AT-368. ☐ 5. Large Shock. N → R Position, AT-370. ☐ 6. Vehicle Does Not Creep Backward In R Position, AT-372. ☐ 7. Vehicle Does Not Creep Forward In D, 2 Or 1 Position, AT-375.		

4.	4-3.	Cruise test	AT-215 AT-219
		Part-1	
		☐ 8. Vehicle Cannot Be Started From D_1, AT-378. ☐ 9. A/T Does Not Shift: $D_1 \rightarrow D_2$ Or Does Not Kickdown: $D_4 \rightarrow D_2$, AT-381. ☐ 10. A/T Does Not Shift: $D_2 \rightarrow D_3$, AT-384. ☐ 11. A/T Does Not Shift: $D_3 \rightarrow D_4$, AT-387. ☐ 12. A/T Does Not Perform Lock-up, AT-390. ☐ 13. A/T Does Not Hold Lock-up Condition, AT-392. ☐ 14. Lock-up Is Not Released, AT-394. ☐ 15. Engine Speed Does Not Return To Idle (Light Braking $D_4 \rightarrow D_3$), AT-395.	
		Part-2	AT-223
		☐ 9. A/T Does Not Shift: $D_1 \rightarrow D_2$ Or Does Not Kickdown: $D_4 \rightarrow D_2$, AT-381. ☐ 10. A/T Does Not Shift: $D_2 \rightarrow D_3$, AT-384. ☐ 11. A/T Does Not Shift: $D_3 \rightarrow D_4$, AT-387. ☐ 16. Vehicle Does Not Start From D_1, AT-397.	
		Part-3	AT-225
		☐ 17. A/T Does Not Shift: $D_4 \rightarrow D_3$ When Overdrive Control Switch ON → OFF, AT-398 ☐ 15. Engine Speed Does Not Return To Idle (Light Braking $D_4 \rightarrow D_3$), AT-395. ☐ 18. A/T Does Not Shift: $D_3 \rightarrow 2_2$, When Selector Lever D → 2 Position, AT-399. ☐ 15. Engine Speed Does Not Return To Idle (Light Braking $D_4 \rightarrow D_3$), AT-395. ☐ 19. A/T Does Not Shift: $2_2 \rightarrow 1_1$, When Selector Lever 2 → 1 Position, AT-400. ☐ 20. Vehicle Does Not Decelerate By Engine Brake, AT-401. ☐ SELF-DIAGNOSTIC PROCEDURE — Mark detected items.	
		☐ PNP switch, AT-250. ☐ A/T fluid temperature sensor, AT-256. ☐ Vehicle speed sensor·A/T (Revolution sensor), AT-262. ☐ Engine speed signal, AT-267. ☐ Torque converter clutch solenoid valve, AT-299. ☐ Line pressure solenoid valve, AT-313. ☐ Shift solenoid valve A, AT-318. ☐ Shift solenoid valve B, AT-323. ☐ Throttle position sensor, AT-328. ☐ Overrun clutch solenoid valve, AT-337. ☐ A/T fluid temperature sensor and TCM power source, AT-342. ☐ PNP, overdrive control and throttle position switches, AT-401. ☐ Vehicle speed sensor·MTR, AT-348. ☐ Turbine revolution sensor (VG33ER only), AT-352. ☐ Control unit (RAM), control unit (ROM), AT-357. ☐ Control unit (EEP ROM), AT-359. ☐ Battery ☐ Battery ☐ Others	
5.		☐ For self-diagnosis NG items, inspect each component. Repair or replace the damaged parts.	AT-182
6.		☐ Perform all ROAD TEST and re-mark required procedures.	AT-211
7.		☐ Perform DTC CONFIRMATION PROCEDURE for following MIL indicating items and check out NG items. Refer to "Emission-related Diagnostic Information", ***EC-675*** (Vg33E only or ***EC-1275*** (VG33ER only).	***EC-675*** (Vg33E only or ***EC-1275*** (VG33ER only)
		☐ DTC (P0731, 1103) A/T 1st gear function, AT-272. ☐ DTC (P0732, 1104) A/T 2nd gear function, AT-278. ☐ DTC (P0733, 1105) A/T 3rd gear function, AT-284. ☐ DTC (P0734, 1106) A/T 4th gear function, AT-290. ☐ DTC (P0744, 1107) A/T TCC S/V function (lock-up), AT-304.	
8.		☐ Perform the Diagnostic Procedures for all remaining items marked NG. Repair or replace the damaged parts. Refer to the Symptom Chart when you perform the procedures, (The chart also shows some other possible symptoms and the component inspection orders).	AT-243 AT-229
9.		☐ Erase DTC from TCM and ECM memories.	AT-179

Work Flow

NEAT0123

HOW TO PERFORM TROUBLE DIAGNOSES FOR QUICK AND ACCURATE REPAIR

NEAT0123S01

A good understanding of the malfunction conditions can make troubleshooting faster and more accurate.
In general, each customer feels differently about a problem. It is important to fully understand the symptoms or conditions for a customer complaint.
Make good use of the two sheets provided, “Information From Customer”, AT-200, and “Diagnostic Worksheet”, AT-201, to perform the best troubleshooting possible.

Work Flow (Cont'd)

WORK FLOW CHART

NEAT0123S02

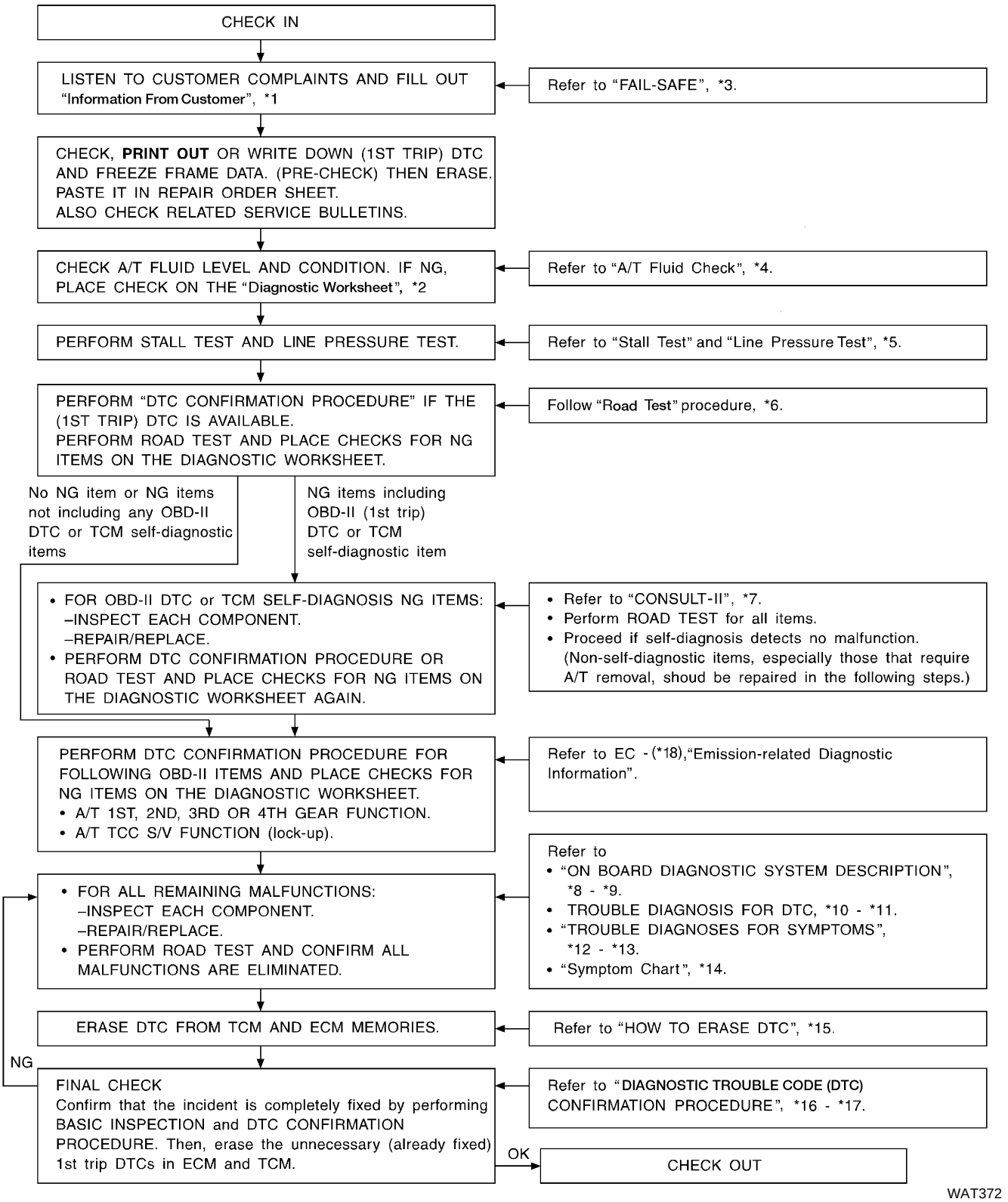

WAT372

*1: AT-200
*2: AT-201
*3: AT-151
*4: AT-206
*5: AT-206, 209
*6: AT-211
*7: AT-181
*8: AT-177
*9: AT-194
*10: AT-250
*11: AT-359
*12: AT-361
*13: AT-401
*14: AT-229
*15: AT-179
*16: AT-251
*17: AT-359
*18: ***EC-675*** (VG33E only) or ***EC-1275***

(VG33ER only)

A/T Fluid Check

NEAT0124

FLUID LEAKAGE CHECK

NEAT0124S01

1. Clean area suspected of leaking. — for example, mating surface of converter housing and transmission case.
2. Start engine, apply foot brake, place selector lever in D position and wait a few minutes.
3. Stop engine.
4. Check for fresh leakage.

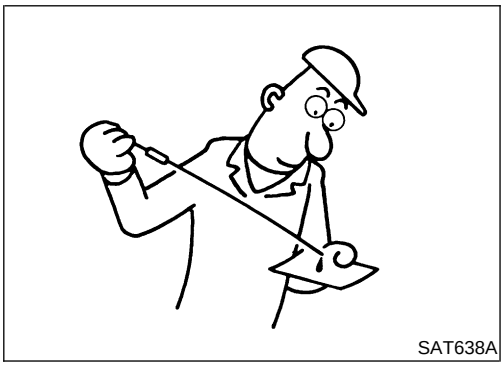
SAT638A

FLUID CONDITION CHECK

NEAT0124S02

Fluid color	Suspected problem
Dark or black with burned odor	Wear of frictional material
Milky pink	Water contamination — Road water entering through filler tube or breather
Varnished fluid, light to dark brown and tacky	Oxidation — Over or under filling, — Overheating

FLUID LEVEL CHECK

NEAT0124S03

Refer to ***MA-38***, “Checking A/T Fluid”.

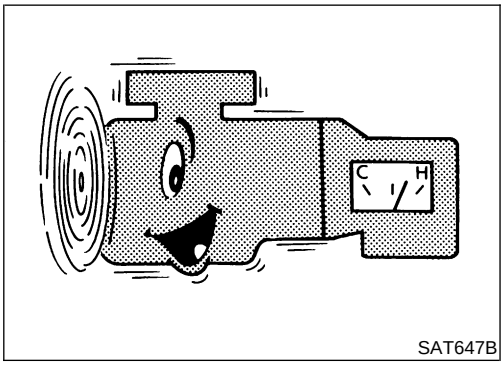

SAT647B

Stall Test

NEAT0125

STALL TEST PROCEDURE

NEAT0125S01

1. Check A/T fluid and engine oil levels. If necessary, add fluid or oil.
2. Drive vehicle for approx. 10 minutes or until engine oil and ATF reach operating temperature.

ATF operating temperature:
50 - 80°C (122 - 176°F)

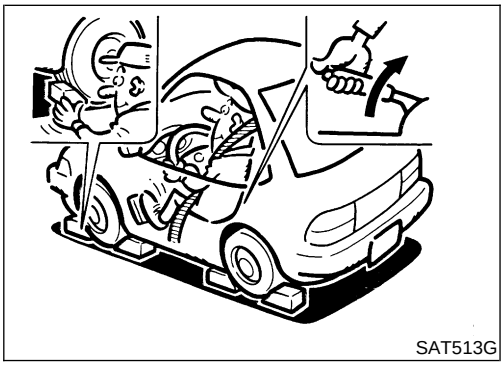
SAT513G

3. Set parking brake and block wheels.
4. Install a tachometer where it can be seen by driver during test.

- **It is good practice to put a mark on point of specified engine rpm on indicator.**

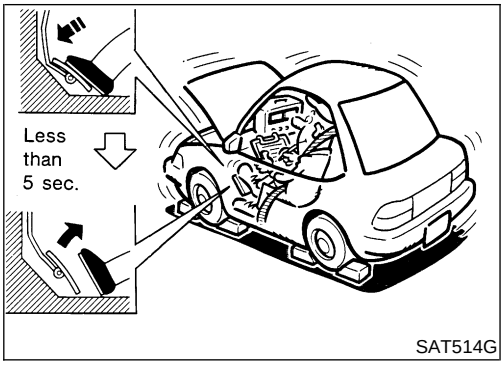

SAT514G

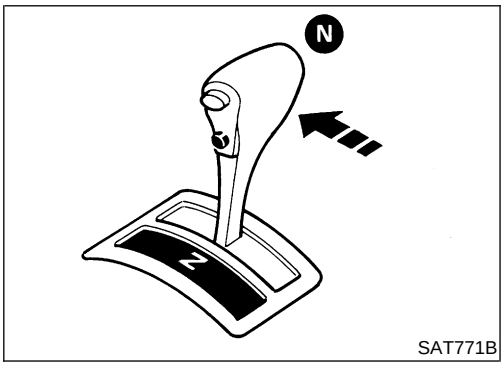

SAT771B

5. Start engine, apply foot brake, and place selector lever in D position.
6. Accelerate to wide open throttle gradually while applying foot brake.
7. Quickly note the engine stall revolution and immediately release throttle.

- **During test, never hold throttle wide open for more than 5 seconds.**

Stall revolution:
2,420 - 2,620 rpm

8. Move selector lever to N position.
9. Cool off ATF.

- **Run engine at idle for at least one minute.**

10. Repeat steps 5 through 9 with selector lever in 2, 1 and R positions.

JUDGEMENT OF STALL TEST

NEAT0125S02

The test result and possible damaged components relating to each result are shown in the illustration. In order to pinpoint the possible damaged components, follow the WORK FLOW. Refer to "WORK FLOW", AT-203.

NOTE:

Stall revolution is too high in D or 2 position:

- Slippage occurs in 1st gear but not in 2nd and 3rd gears. ..... Low one-way clutch slippage
- Slippage occurs at the following gears:
  1st through 3rd gears in D position and engine brake functions.
  1st and 2nd gears in 2 position and engine brake functions with accelerator pedal released (fully closed throttle). ..... Forward clutch or forward one-way clutch slippage

Stall revolution is too high in R position:

- Engine brake does not function in 1 position. ..... Low & reverse brake slippage
- Engine brake functions in 1 position. ..... Reverse clutch slippage

Stall revolution within specifications:

- Vehicle does not achieve speed of more than 80 km/h (50 MPH). ..... One-way clutch seizure in torque converter housing

CAUTION:

Be careful since automatic fluid temperature increases abnormally.

- Slippage occurs in 3rd and 4th gears in D position. ..... High clutch slippage
- Slippage occurs in 2nd and 4th gear in D position. ..... Brake band slippage

Stall revolution less than specifications:

- Poor acceleration during starts. ..... One-way clutch seizure in torque converter

Stall Test (Cont'd)

Selector lever position	Judgement		
D	L	O	H
2	L	O	H
1	L	O	O
R	L	H	H

O : Stall revolution is normal.
H : Stall revolution is higher than specified.
L : Stall revolution is lower than specified.

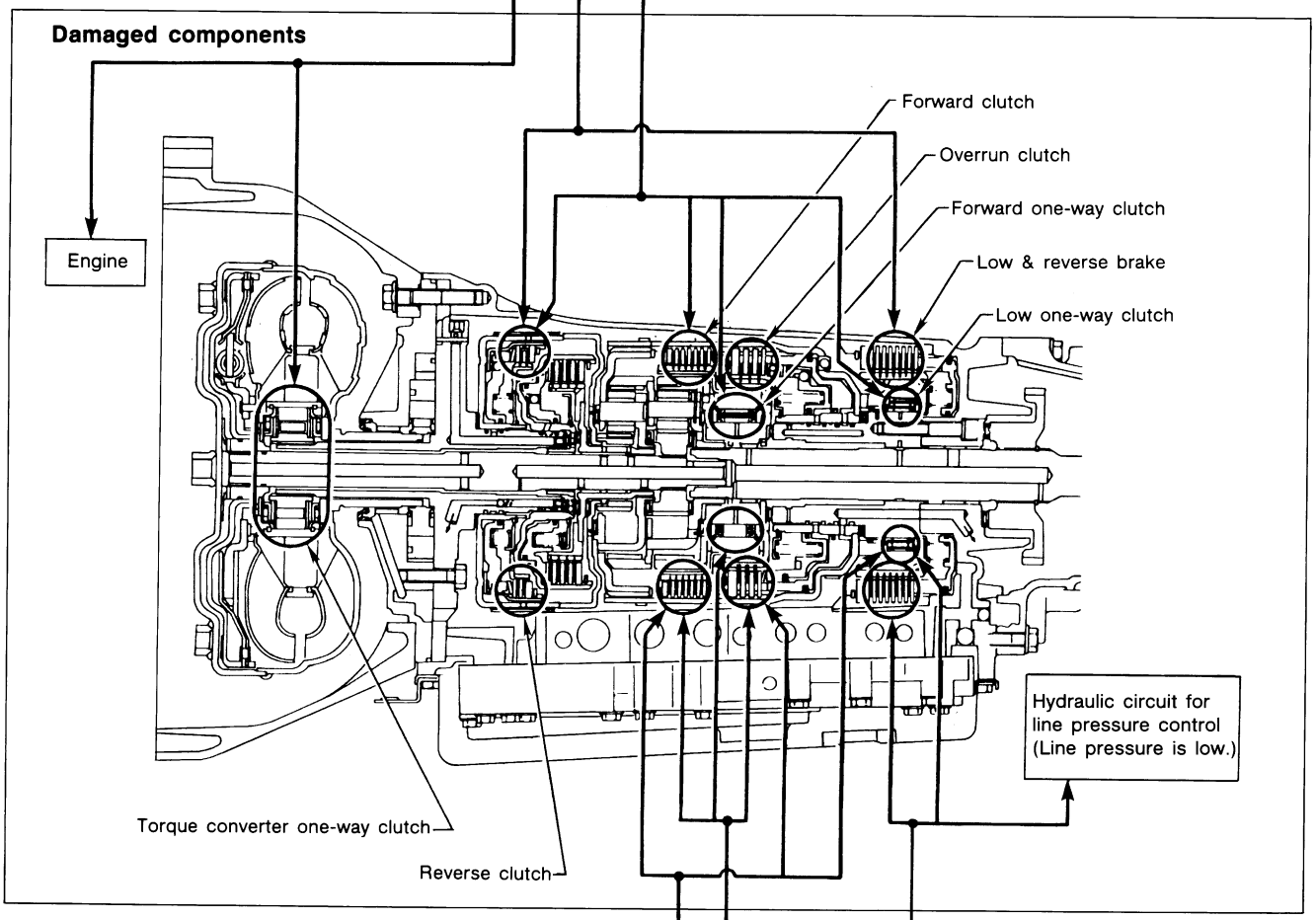

Clutches and brakes except high clutch and brake band are OK. (Condition of high clutch and brake band cannot be confirmed by stall test.)

D	H	H	H	O
2	H	H	H	O
1	O	H	H	O
R	O	O	H	O
Selector lever position	Judgement			

SAT392H

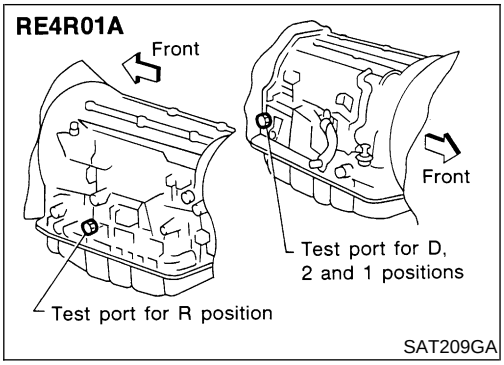

SAT209GA

Line Pressure Test

NEAT0126

LINE PRESSURE TEST PORTS

NEAT0126S01

- Location of line pressure test ports.
- **Always replace line pressure plugs as they are self-sealing bolts.**

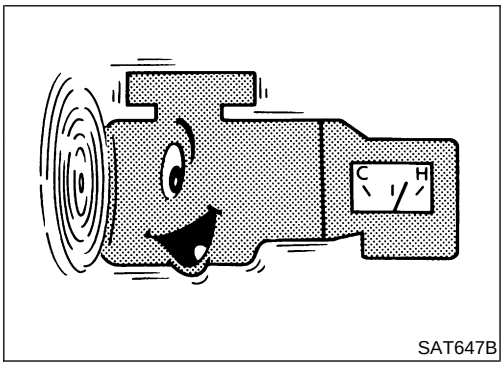

SAT647B

LINE PRESSURE TEST PROCEDURE

NEAT0126S02

1. Check A/T fluid and engine oil levels. If necessary, add fluid or oil.
2. Drive vehicle for approx. 10 minutes or until engine oil and ATF reach operating temperature.

   ATF operating temperature:
   50 - 80°C (122 - 176°F)

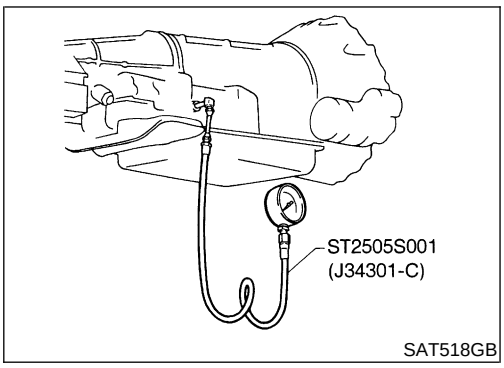

SAT518GB

3. Install pressure gauge to corresponding line pressure port.

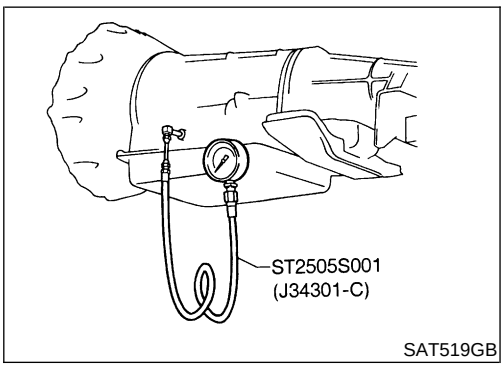

SAT519GB

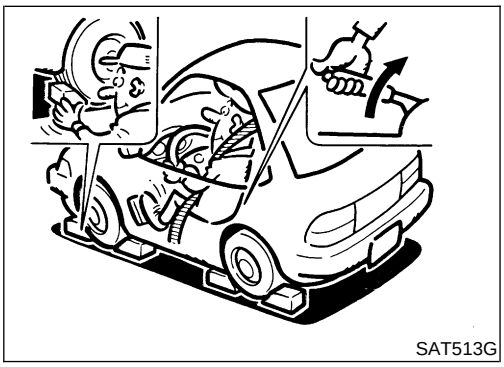
SAT513G

4. Set parking brake and block wheels.
- **Continue to depress brake pedal fully while line pressure test is being performed at stall speed.**

Line Pressure Test (Cont'd)

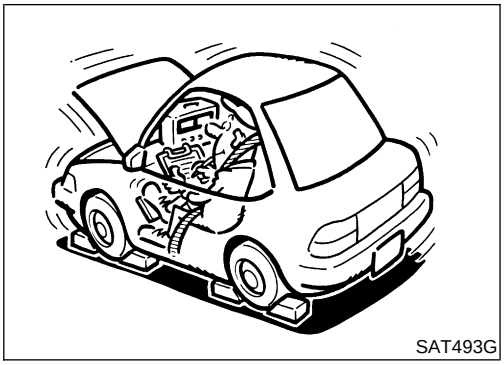
SAT493G

5. Start engine and measure line pressure at idle and stall speed.

- **When measuring line pressure at stall speed, follow the stall test procedure.**

Line pressure:

Refer to "Line Pressure", AT-498.

JUDGEMENT OF LINE PRESSURE TEST

NEAT0126S03

Judgement		Suspected parts
At idle	Line pressure is low in all positions.	• Oil pump wear • Control piston damage • Pressure regulator valve or plug sticking • Spring for pressure regulator valve damaged • Fluid pressure leakage between oil strainer and pressure regulator valve • Clogged strainer
	Line pressure is low in particular position.	• Fluid pressure leakage between manual valve and particular clutch • For example, line pressure is: — Low in R and 1 positions, but — Normal in D and 2 positions. Then, fluid leakage exists at or around low and reverse brake circuit. Refer to "CLUTCH AND BAND CHART", AT-160.
	Line pressure is high.	• Maladjustment of throttle position sensor • Fluid temperature sensor damaged • Line pressure solenoid valve sticking • Short circuit of line pressure solenoid valve circuit • Pressure modifier valve sticking • Pressure regulator valve or plug sticking • Open in dropping resistor circuit
At stall speed	Line pressure is low.	• Maladjustment of throttle position sensor • Line pressure solenoid valve sticking • Short circuit of line pressure solenoid valve circuit • Pressure regulator valve or plug sticking • Pressure modifier valve sticking • Pilot valve sticking

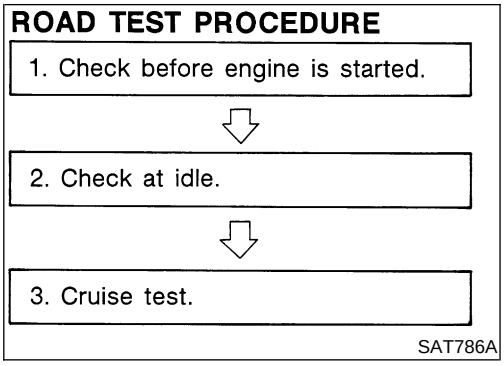

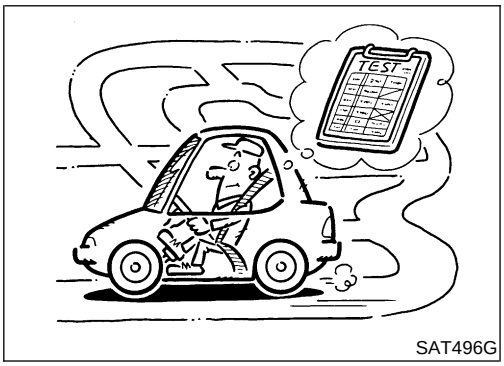

Road Test

=NEAT0127

DESCRIPTION

NEAT0127S01

- The purpose of the test is to determine overall performance of A/T and analyze causes of problems.
- The road test consists of the following three parts:

a) Check before engine is started
b) Check at idle
c) Cruise test

- Before road test, familiarize yourself with all test procedures and items to check.
- Conduct tests on all items until specified symptom is found. Troubleshoot items which check out No Good after road test. Refer to “ON BOARD DIAGNOSTIC SYSTEM DESCRIPTION”, AT-177 - 199 and “TROUBLE DIAGNOSES FOR SYMPTOMS”, AT-361 - 407.

1. CHECK BEFORE ENGINE IS STARTED

NEAT0127S02

1	CHECK O/D OFF INDICATOR LAMP

1. Park vehicle on flat surface.
2. Move selector lever to P position.
3. Turn ignition switch to OFF position.
   Wait at least 5 seconds.

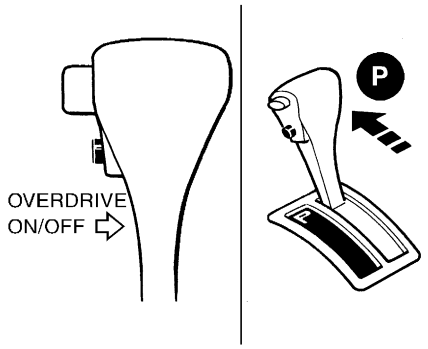

SAT967I

4. Turn ignition switch to ON position. (Do not start engine.)
5. Does O/D OFF indicator lamp come on for about 2 seconds?

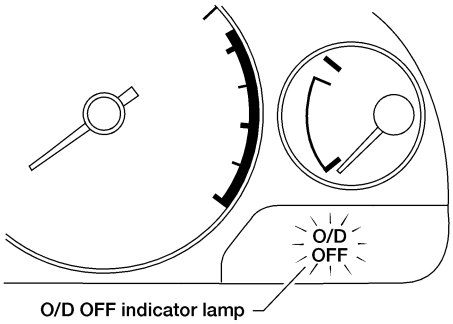

AAT612A

Yes or No

Yes	▶	GO TO 2.
No	▶	Go to "1. O/D OFF Indicator Lamp Does Not Come On", AT-364.

2	CHECK O/D OFF INDICATOR LAMP

Does O/D OFF indicator lamp flicker for about 8 seconds?

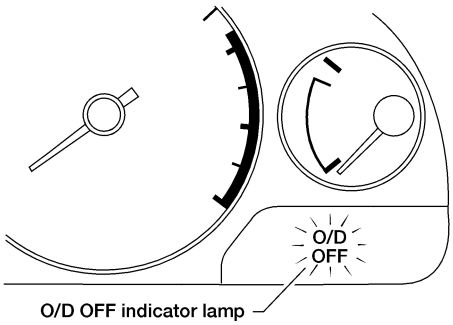

AAT612A

Yes or No

Yes	▶	Perform self-diagnosis. Refer to "TCM SELF-DIAGNOSTIC PROCEDURE (NO TOOLS)", AT-191.
No	▶	GO TO 3.

3	CHECK NG ITEM
1. Turn ignition switch to OFF position. 2. Perform self-diagnosis and note NG items. Refer to "TCM SELF-DIAGNOSTIC PROCEDURE (NO TOOLS)", AT-191.	
▶	Go to "2. CHECK AT IDLE", AT-214.

Road Test (Cont'd)

2. CHECK AT IDLE

=NEAT0127S03

1	CHECK ENGINE START

1. Park vehicle on flat surface.
2. Turn ignition switch to OFF position.
3. Move selector lever to P or N position.
4. Turn ignition switch to start position.
5. Is engine started?

Yes or No

Yes	▶	GO TO 2.
No	▶	Go to "2. Engine Cannot Be Started In P and N Position", AT-366.

2	CHECK ENGINE START

1. Turn ignition switch to OFF position.
2. Move selector lever to D, 1, 2 or R position.
3. Turn ignition switch to start position.
4. Is engine started?

Yes or No

Yes	▶	Go to "2. Engine Cannot Be Started In P and N Position", AT-366.
No	▶	GO TO 3.

3	CHECK VEHICLE MOVE

1. Turn ignition switch to OFF position.
2. Move selector lever to P position.
3. Release parking brake.
4. Push vehicle forward or backward.
5. Does vehicle move when it is pushed forward or backward?

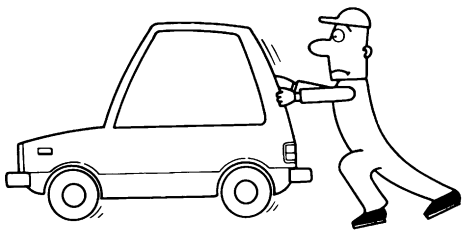

SAT796A

Yes or No

Yes	▶	Go to "3. In P Position, Vehicle Moves Forward Or Backward When Pushed", AT-367.
No	▶	GO TO 4.

4	CHECK VEHICLE MOVE

1. Apply parking brake.
2. Move selector lever to N position.
3. Turn ignition switch to START position and start engine.
4. Release parking brake.
5. Does vehicle move forward or backward?

Yes or No

Yes	▶	Go to "4. In N Position, Vehicle Moves", AT-368.
No	▶	GO TO 5.

5	CHECK SHIFT SHOCK

1. Apply foot brake.
2. Move selector lever to R position.
3. Is there large shock when changing from N to R position?

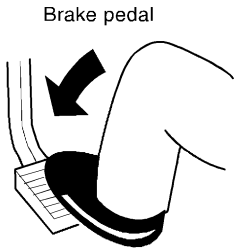

SAT082J

Yes or No

Yes	▶	Go to "5. Large Shock. N → R Position", AT-370.
No	▶	GO TO 6.

6	CHECK VEHICLE REVERSE MOVEMENT

1. Release foot brake for several seconds.
2. Does vehicle creep backward when foot brake is released?

Yes or No

Yes	▶	GO TO 7.
No	▶	Go to "6. Vehicle Does Not Creep Backward In R Position", AT-372.

7	CHECK VEHICLE FORWARD MOVEMENT

1. Move selector lever to D, 2 and 1 position and check if vehicle creeps forward.
2. Does vehicle creep forward in all three positions?

Yes or No

Yes	▶	Go to "3. CRUISE TEST", AT-215.
No	▶	Go to "7. Vehicle Does Not Creep Forward In D, 2 Or 1 Position", AT-375.

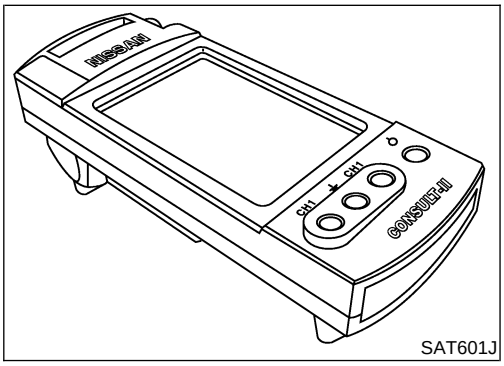

SAT601J

3. CRUISE TEST

NEAT0127S04

- Check all items listed in Parts 1 through 3.

With CONSULT-II

NEAT0127S0401

- Using CONSULT-II, conduct a cruise test and record the result.
- Print the result and ensure that shifts and lock-ups take place as per "Shift Schedule".

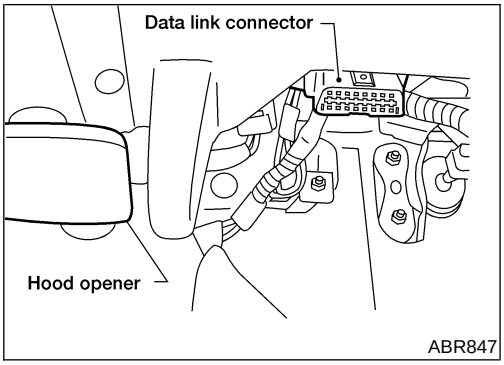

ABR847

CONSULT-II Setting Procedure

NEAT0127S0402

1. Turn ignition switch OFF.
2. Connect "CONSULT-II" to data link connector.
   The data link connector is located in instrument lower panel on driver side.

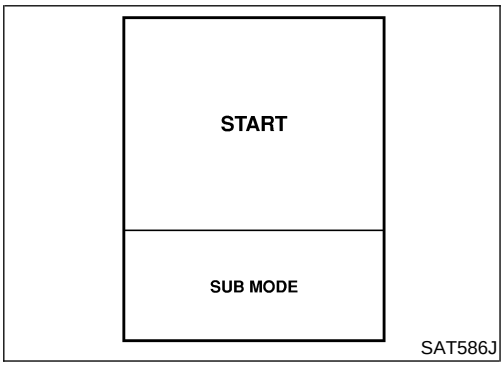

SAT586J

3. Turn ignition switch ON.
4. Touch "START".

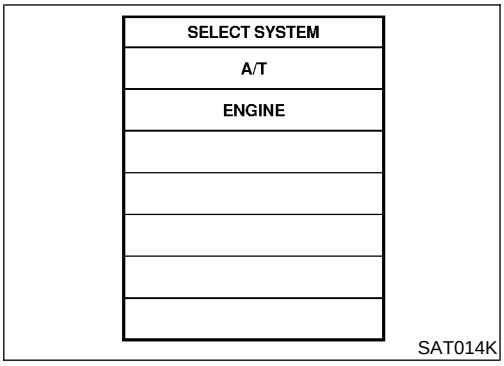

SAT014K

5. Touch "A/T".

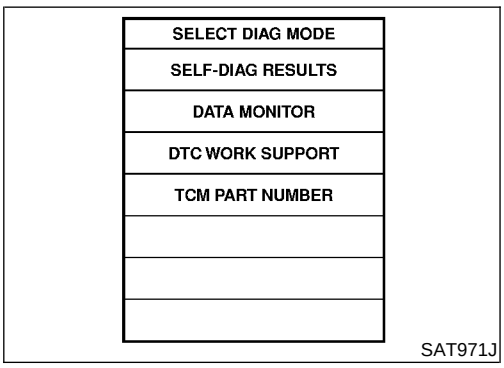

SAT971J

6. Touch "DATA MONITOR".

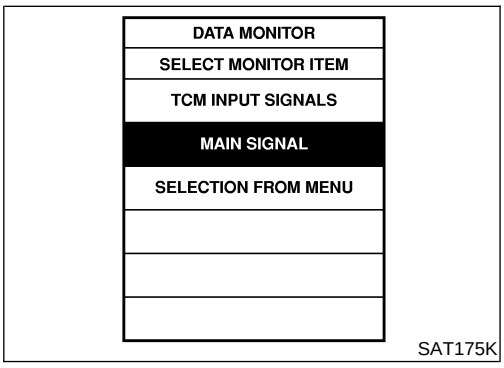

SAT175K

7. Touch "MAIN SIGNALS" or "TCM INPUT SIGNALS".
8. See "Numerical Display", "Bar Chart Display", or "Line Graph Display".

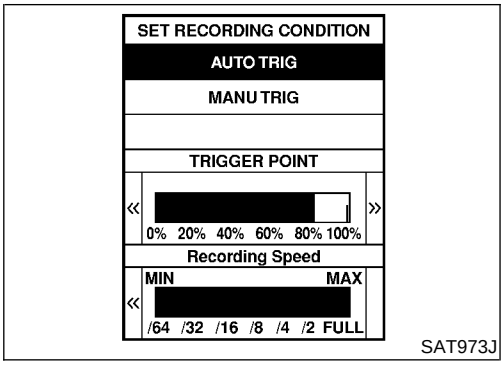

SAT973J

9. Touch "SETTING" to set recording condition ("AUTO TRIG" or "MANU TRIG") and touch "BACK".
10. Touch "START".
11. When performing cruise test touch "STORE DATA".

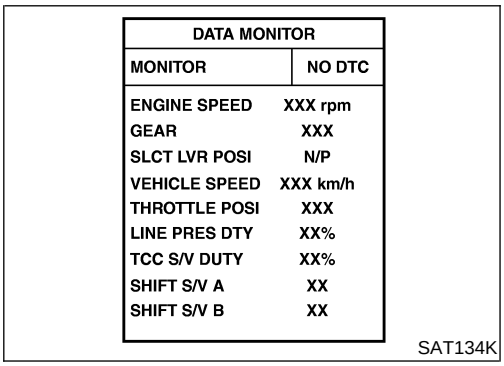

SAT134K

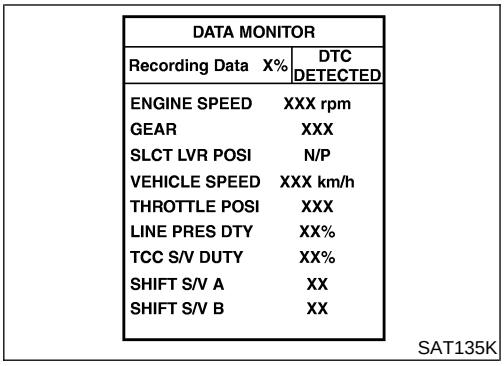

SAT135K

12. After finishing cruise test part 1, touch "STOP".

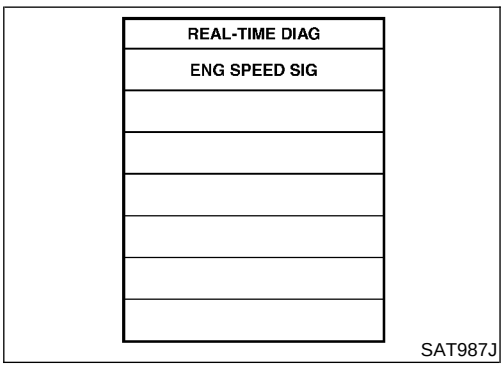

SAT987J

13. Touch "STORE" and touch "BACK".

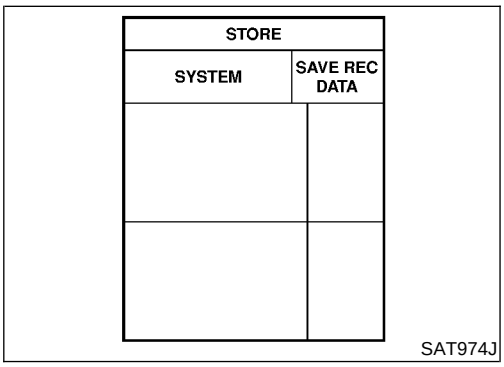

SAT974J

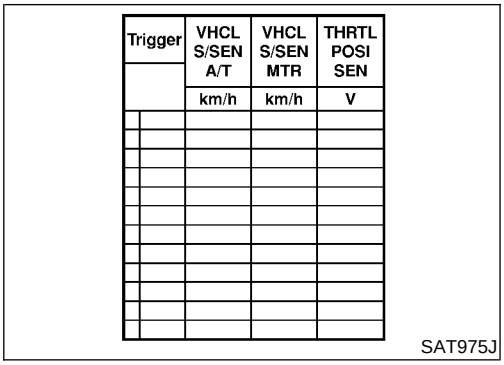

14. Touch "DISPLAY".
15. Touch "PRINT".
16. Check the monitor data printed out.
17. Continue cruise test part 2 and 3.

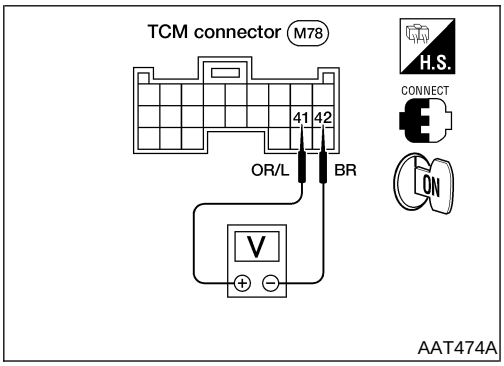

Without CONSULT-II

NEAT0127S0403

- Throttle position sensor can be checked by measuring voltage across terminals 41 and 42 of TCM.

Cruise Test — Part 1

=NEAT0127S0404

1	CHECK STARTING GEAR (D_1) POSITION

1. Drive vehicle for approx. 10 minutes to warm engine oil and ATF up to operating temperature.
   ATF operating temperature:
   50 - 80°C (122 - 176°F)
2. Park vehicle on flat surface.
3. Set overdrive control switch to ON position.
4. Move selector lever to P position.

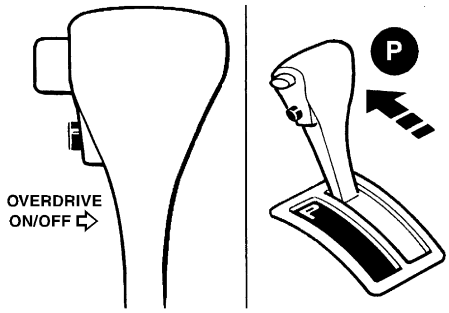

SAT001J

5. Start engine.
6. Move selector lever to D position.

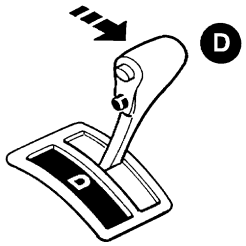

SAT952I

7. Accelerate vehicle by constantly depressing accelerator pedal halfway.

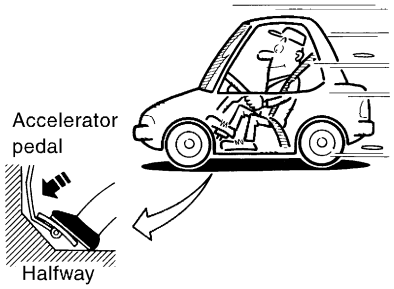

SAT953I

8. Does vehicle start from D_1?
   Read gear position.

Yes or No

Yes	▶	GO TO 2.
No	▶	Go to "8. Vehicle Cannot Be Started From D_1", AT-378.

2	CHECK SHIFT UP (D_1 TO D_2)

Does A/T shift from D_1 to D_2 at the specified speed?

Read gear position, throttle opening and vehicle speed.

Specified speed when shifting from D_1 to D_2:

Refer to "Shift Schedule", AT-497.

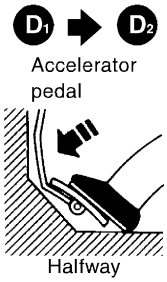

SAT954I

Yes or No

Yes	▶	GO TO 3.
No	▶	Go to "9. A/T Does Not Shift: $D_1 \rightarrow D_2$ or Does Not Kickdown: $D_4 \rightarrow D_2$", AT-381.

3	CHECK SHIFT UP (D_2 TO D_3)

Does A/T shift from D_2 to D_3 at the specified speed?

Read gear position, throttle opening and vehicle speed.

Specified speed when shifting from D_2 to D_3:

Refer to "Shift Schedule", AT-497.

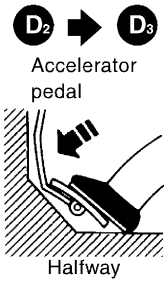

SAT955I

Yes or No

Yes	▶	GO TO 4.
No	▶	Go to "10. A/T Does Not Shift: $D_2 \rightarrow D_3$", AT-384.

4	CHECK SHIFT UP (D_3 TO D_4)

Does A/T shift from D_3 to D_4 at the specified speed?

Read gear position, throttle opening and vehicle speed.

Specified speed when shifting from D_3 to D_4:

Refer to "Shift Schedule", AT-497.

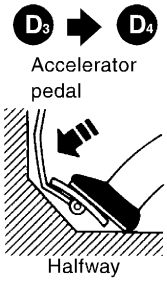

SAT956I

Yes or No

Yes	▶	GO TO 5.
No	▶	Go to "11. A/T Does Not Shift: $D_3 \rightarrow D_4$", AT-387.

5	CHECK LOCK-UP (D_4 TO D_4 L/U)

Does A/T perform lock-up at the specified speed?

Read vehicle speed, throttle position when lock-up duty becomes 94%.

Specified speed when lock-up occurs:

Refer to "Shift Schedule", AT-497.

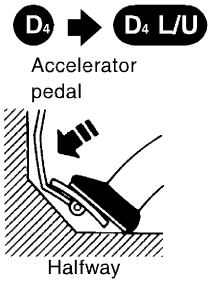

SAT957I

Yes or No

Yes	▶	GO TO 6.
No	▶	Go to "12. A/T Does Not Perform Lock-up", AT-390.

6	CHECK HOLD LOCK-UP

Does A/T hold lock-up condition for more than 30 seconds?

Yes or No

Yes	▶	GO TO 7.
No	▶	Go to "13. A/T Does Not Hold Lock-up Condition", AT-392.

7	CHECK LOCK-UP OFF (D_4 L/U TO D_4)

1. Release accelerator pedal.
2. Is lock-up released when accelerator pedal is released?

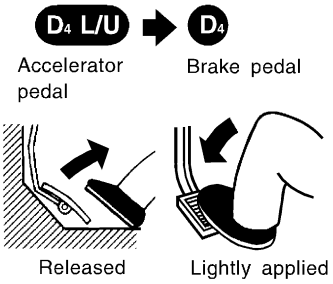

SAT958I

Yes or No

Yes	▶	GO TO 8.
No	▶	Go to "14. Lock-up Is Not Released", AT-394.

8	CHECK SHIFT DOWN (D_4 TO D_3)

1. Decelerate vehicle by applying foot brake lightly.
2. Does engine speed return to idle smoothly when A/T is shifted from D_4 to D_3?

Ⓜ **Read gear position and engine speed.**

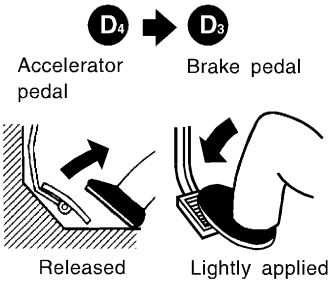

SAT959I

Yes or No

Yes	▶	1. Stop vehicle. 2. Go to "Cruise Test — Part 2", AT-223.
No	▶	Go to "15. Engine Speed Does Not Return To Idle (Light Braking $D_4 \rightarrow D_3$)", AT-395.

Cruise Test — Part 2

=NEAT0127S0405

1	CHECK STARTING GEAR (D_1) POSITION

1. Confirm overdrive control switch is in ON position.
2. Confirm selector lever is in D position.
3. Accelerate vehicle by half throttle again.
4. Does vehicle start from D_1?

Read gear position.

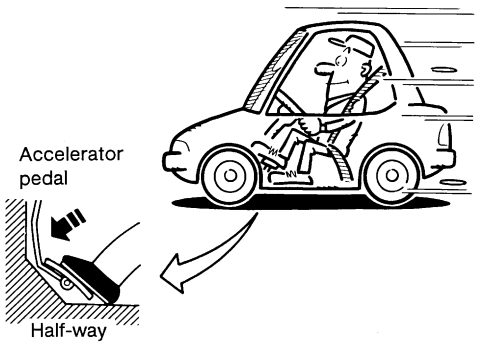

SAT495G

Yes or No

Yes	▶	GO TO 2.
No	▶	Go to "16. Vehicle Does Not Start From D_1", AT-397.

2	CHECK SHIFT UP AND SHIFT DOWN (D_3 TO D_4 TO D_2)

1. Accelerate vehicle to 80 km/h (50 MPH) as shown in illustration.
2. Release accelerator pedal and then quickly depress it fully.
3. Does A/T shift from D_4 to D_2 as soon as accelerator pedal is depressed fully?

Read gear position and throttle position.

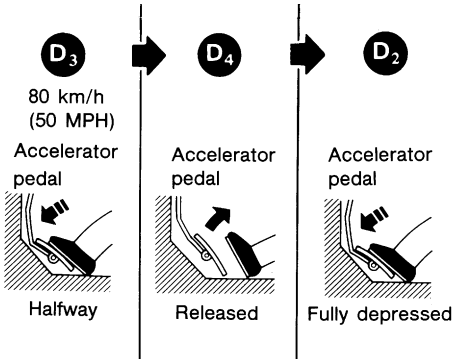

SAT404H

Yes or No

Yes	▶	GO TO 3.
No	▶	Go to "A/T Does Not Shift: $D_1 \rightarrow D_2$ Or Does Not Kickdown: $D_4 \rightarrow D_2$" AT-381.

3	CHECK SHIFT UP (D_2 TO D_3)

Does A/T shift from D_2 to D_3 at the specified speed?

Read gear position, throttle position and vehicle speed.

Specified speed when shifting from D_2 to D_3:

Refer to "Shift Schedule", AT-497.

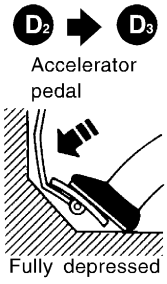

SAT960I

Yes or No

Yes	▶	GO TO 4.
No	▶	Go to "10. A/T Does Not Shift: $D_2 \rightarrow D_3$", AT-384.

4	CHECK SHIFT UP (D_3 TO D_4) AND ENGINE BRAKE

Release accelerator pedal after shifting from D_2 to D_3.

Does A/T shift from D_3 to D_4 and does vehicle decelerate by engine brake?

Read gear position, throttle position and vehicle speed.

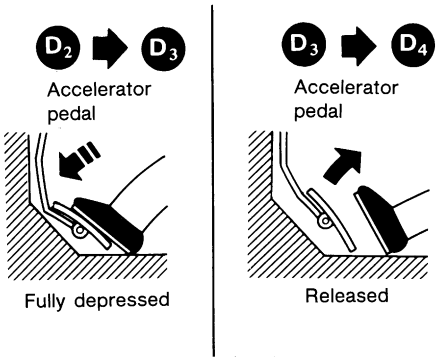

SAT405H

Yes or No

Yes	▶	1. Stop vehicle. 2. Go to "Cruise Test — Part 3", AT-225.
No	▶	Go to "11. A/T Does Not Shift: $D_3 \rightarrow D_4$", AT-387.

Cruise Test — Part 3

=NEAT0127S0406

1	VEHICLE SPEED D_4 POSITION

1. Confirm overdrive control switch is in ON position.
2. Confirm selector lever is in D position.
3. Accelerate vehicle using half-throttle to D_4.

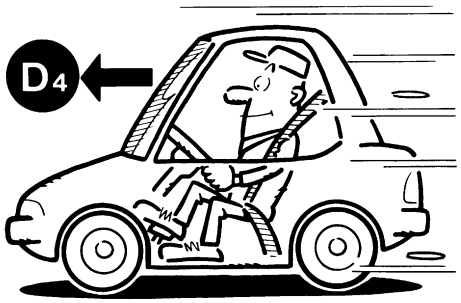

SAT812A

▶ GO TO 2.

2	CHECK SHIFT DOWN (D_4 TO D_3)

1. Release accelerator pedal.
2. Set overdrive control switch to OFF position while driving in D_4.
3. Does A/T shift from D_4 to D_3 (O/D OFF)?

Ⓟ **Read gear position and vehicle speed.**

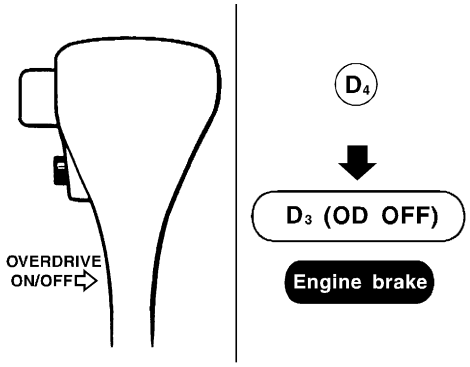

SAT999I

Yes or No

Yes	▶	GO TO 3.
No	▶	Go to "17. A/T Does Not Shift: $D_4 \rightarrow D_3$, When Overdrive Control Switch ON → OFF", AT-398.

3	CHECK ENGINE BRAKE

Does vehicle decelerate by engine brake?

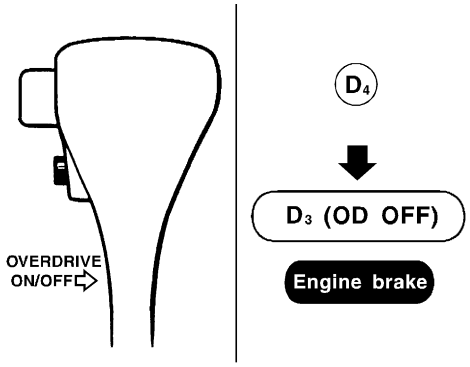

SAT999I

Yes or No

Yes	▶	GO TO 4.
No	▶	Go to "15. Engine Speed Does Not Return To Idle (Light Braking $D_4 \rightarrow D_3$)", AT-395.

4	CHECK SHIFT DOWN (D_3 TO D_2)

1. Move selector lever from D to 2 position while driving in D_3 (O/D OFF).
2. Does A/T shift from D_3 (O/D OFF) to 2_2?

Read gear position.

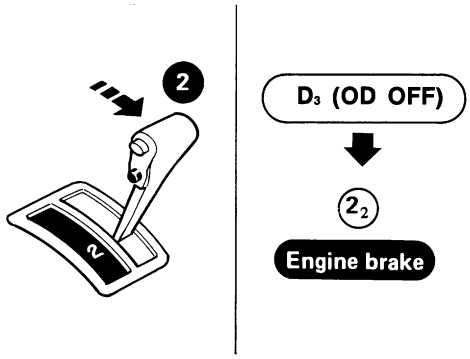

SAT791GA

Yes or No

Yes	▶	GO TO 5.
No	▶	Go to "18. A/T Does Not Shift: $D_3 \rightarrow 2_2$, When Selector Lever D → 2 Position", AT-399.

5	CHECK ENGINE BRAKE

Does vehicle decelerate by engine brake?

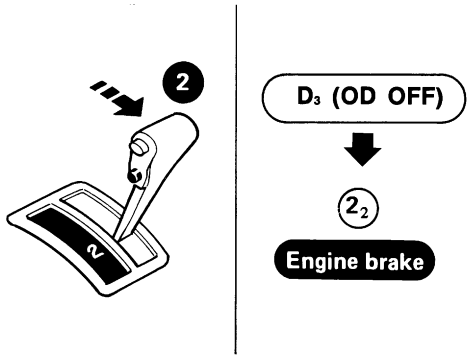

SAT791GA

Yes or No

Yes	▶	GO TO 6.
No	▶	Go to "15. Engine Speed Does Not Return To Idle (Light Braking $D_4 \rightarrow D_3$)", AT-395.

6	CHECK SHIFT DOWN (2_2 TO 1_1)

1. Move selector lever from 2 to 1 position while driving in 2_2.
2. Does A/T shift from 2_2 to 1_1 position?

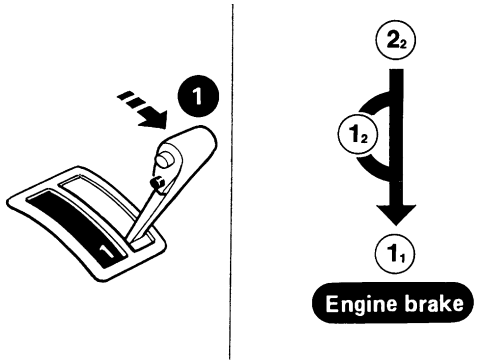

SAT778B

Yes or No

Yes	▶	GO TO 7.
No	▶	Go to "19. A/T Does Not Shift: $2_2 \rightarrow 1_1$, When Selector Lever 2 → 1 Position", AT-400.

7	CHECK ENGINE BRAKE

Does vehicle decelerate by engine brake?

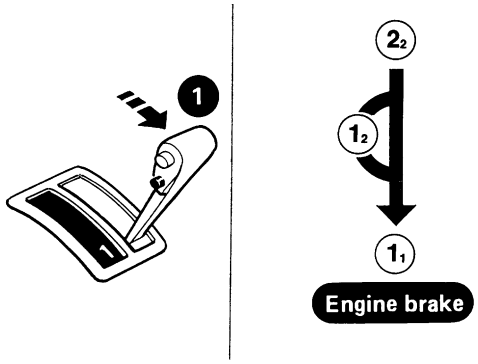

SAT778B

Yes or No

Yes	▶	1. Stop vehicle. 2. Perform self-diagnosis. Refer to "TCM SELF-DIAGNOSIS PROCEDURE (NO TOOLS)", AT-191.
No	▶	Go to "20. Vehicle Does Not Decelerate By Engine Brake", AT-401.

Symptom Chart

=NEAT0500

Numbers are arranged in order of inspection.
Perform inspections starting with number one and work up.

Items	Symptom	Condition	Diagnostic Item	Reference Page	
				VG33E only	VG33ER only
No Lock-up Engagement/ TCC Inoperative	Torque converter is not locked up.	ON vehicle	1. Throttle position sensor (Adjustment)	***EC-715***	***EC-1314***
			2. Vehicle speed sensor·A/T (Revolution sensor) and vehicle speed sensor·MTR	AT-262, 348	
			3. Park/neutral position (PNP) switch adjustment	AT-418	
			4. Engine speed signal	AT-267	
			5. A/T fluid temperature sensor	AT-256	
			6. Line pressure test	AT-209	
			7. Torque converter clutch solenoid valve	AT-299	
			8. Control valve assembly	AT-416	
		OFF vehicle	9. Torque converter	AT-427	
	Torque converter clutch piston slip.	ON vehicle	1. Fluid level	AT-206	
			2. Throttle position sensor (Adjustment)	***EC-715***	***EC-1314***
			3. Line pressure test	AT-209	
			4. Torque converter clutch solenoid valve	AT-299	
			5. Line pressure solenoid valve	AT-313	
			6. Control valve assembly	AT-416	
		OFF vehicle	7. Torque converter	AT-427	
	Lock-up point is extremely high or low. AT-390	ON vehicle	1. Throttle position sensor (Adjustment)	***EC-715***	***EC-1314***
			2. Vehicle speed sensor·A/T (Revolution sensor) and vehicle speed sensor·MTR	AT-262, 348	
			3. Torque converter clutch solenoid valve	AT-299	
			4. Control valve assembly	AT-416	

Symptom Chart (Cont'd)

Items	Symptom	Condition	Diagnostic Item	Reference Page	
				VG33E only	VG33ER only
Shift Shock	Sharp shock in shifting from N to D position.	ON vehicle	1. Engine idling rpm	***EC-715***	***EC-1314***
			2. Throttle position sensor (Adjustment)	***EC-715***	***EC-1314***
			3. Line pressure test	AT-209	
			4. A/T fluid temperature sensor	AT-256	
			5. Engine speed signal	AT-267	
			6. Line pressure solenoid valve	AT-313	
			7. Control valve assembly	AT-416	
			8. Accumulator N-D	AT-416	
		OFF vehicle	9. Turbine revolution sensor (VG33ER only)	AT-352	
			10. Forward Clutch	AT-461	
Shift Shock	Too sharp a shock in change from D_1 to D_2.	ON vehicle	1. Throttle position sensor (Adjustment)	***EC-715***	***EC-1314***
			2. Line pressure test	AT-209	
			3. Accumulator servo release	AT-416	
			4. Control valve assembly	AT-416	
			5. A/T fluid temperature sensor	AT-256	
		OFF vehicle	6. Brake band	AT-474	
	Too sharp a shock in change from D_2 to D_3.	ON vehicle	1. Throttle position sensor (Adjustment)	***EC-715***	***EC-1314***
			2. Line pressure test	AT-209	
			3. Control valve assembly	AT-416	
		OFF vehicle	4. High clutch	AT-459	
			5. Brake band	AT-474	
	Too sharp a shock in change from D_3 to D_4.	ON vehicle	1. Throttle position sensor (Adjustment)	***EC-715***	***EC-1314***
			2. Line pressure test	AT-209	
			3. Control valve assembly	AT-416	
		OFF vehicle	4. Brake band	AT-474	
			5. Overrun clutch	AT-461	
	Gear change shock felt during deceleration by releasing accelerator pedal.	ON vehicle	1. Throttle position sensor (Adjustment)	***EC-715***	***EC-1314***
			2. Line pressure test	AT-209	
			3. Overrun clutch solenoid valve	AT-337	
			4. Control valve assembly	AT-416	
	Large shock changing from 1_2 to 1_1 in 1 position.	ON vehicle	1. Control valve assembly	AT-416	
		ON vehicle	2. Low & reverse brake	AT-465	

Items	Symptom	Condition	Diagnostic Item	Reference Page	
				VG33E only	VG33ER only
Improper Shift Timing	Too high a gear change point from D_1 to D_2, from D_2 to D_3, from D_3 to D_4. AT-381, 384, 387	ON vehicle	1. Throttle position sensor (Adjustment)	***EC-715***	***EC-1314***
			2. Vehicle speed sensor·A/T (Revolution sensor) and vehicle speed sensor·MTR	AT-262, 348	
			3. Shift solenoid valve A	AT-318	
			4. Shift solenoid valve B	AT-323	
	Gear change directly from D_1 to D_3 occurs.	ON vehicle	1. Fluid level	AT-206	
			2. Accumulator servo release	AT-416	
		OFF vehicle	3. Brake band	AT-474	
	Too high a change point from D_4 to D_3, from D_3 to D_2, from D_2 to D_1.	ON vehicle	1. Throttle position sensor (Adjustment)	***EC-715***	***EC-1314***
			2. Vehicle speed sensor·A/T (Revolution sensor) and vehicle speed sensor·MTR	AT-262, 348	
	Kickdown does not operate when depressing pedal in D_4 within kickdown vehicle speed.	ON vehicle	1. Throttle position sensor (Adjustment)	***EC-715***	***EC-1314***
			2. Vehicle speed sensor·A/T (Revolution sensor) and vehicle speed sensor·MTR	AT-262, 348	
			3. Shift solenoid valve A	AT-318	
			4. Shift solenoid valve B	AT-323	
Improper Shift Timing	Kickdown operates or engine overruns when depressing pedal in D_4 beyond kickdown vehicle speed limit.	ON vehicle	1. Vehicle speed sensor·A/T (Revolution sensor) and vehicle speed sensor·MTR	AT-262, 348	
			2. Throttle position sensor (Adjustment)	***EC-715***	***EC-1314***
			3. Shift solenoid valve A	AT-318	
			4. Shift solenoid valve B	AT-323	
	Gear change from 2_2 to 2_3 in 2 position.	ON vehicle	1. Park/neutral position (PNP) switch adjustment	AT-418	
	Gear change from 1_1 to 1_2 in 1 position.	ON vehicle	1. Park/neutral position (PNP) switch adjustment	AT-418	
			2. Manual control linkage adjustment	AT-419	

Symptom Chart (Cont'd)

Items	Symptom	Condition	Diagnostic Item	Reference Page	
				VG33E only	VG33ER only
No Down Shift	Failure to change gear from D_4 to D_3.	ON vehicle	1. Fluid level	AT-206	
			2. Throttle position sensor (Adjustment)	***EC-715***	***EC-1314***
			3. Overrun clutch solenoid valve	AT-337	
			4. Shift solenoid valve A	AT-318	
			5. Line pressure solenoid valve	AT-313	
			6. Control valve assembly	AT-416	
		OFF vehicle	7. Low & reverse brake	AT-465	
			8. Overrun clutch	AT-461	
	Failure to change gear from D_3 to D_2 or from D_4 to D_2.	ON vehicle	1. Fluid level	AT-206	
			2. Throttle position sensor (Adjustment)	***EC-715***	***EC-1314***
			3. Shift solenoid valve A	AT-318	
			4. Shift solenoid valve B	AT-323	
			5. Control valve assembly	AT-416	
		OFF vehicle	6. High clutch	AT-459	
			7. Brake band	AT-474	
	Failure to change gear from D_2 to D_1 or from D_3 to D_1.	ON vehicle	1. Fluid level	AT-206	
			2. Throttle position sensor (Adjustment)	***EC-715***	***EC-1314***
			3. Shift solenoid valve A	AT-318	
			4. Shift solenoid valve B	AT-323	
			5. Control valve assembly	AT-416	
		OFF vehicle	6. Low one-way clutch	AT-469	
			7. High clutch	AT-459	
			8. Brake band	AT-474	

Items	Symptom	Condition	Diagnostic Item	Reference Page	
				VG33E only	VG33ER only
No Down Shift	Failure to change from D_3 to 2_2 when changing lever into 2 position. AT-395	ON vehicle	1. Park/neutral position (PNP) switch adjustment	AT-418	
			2. Throttle position sensor (Adjustment)	***EC-715***	***EC-1314***
			3. Overrun clutch solenoid valve	AT-337	
			4. Shift solenoid valve B	AT-323	
			5. Shift solenoid valve A	AT-318	
			6. Control valve assembly	AT-416	
			7. Manual control linkage adjustment	AT-419	
		OFF vehicle	8. Brake band	AT-474	
			9. Overrun clutch	AT-461	
	Does not change from 1_2 to 1_1 in 1 position.	ON vehicle	1. Park/neutral position (PNP) switch adjustment	AT-418	
			2. Vehicle speed sensor·A/T (Revolution sensor) and vehicle speed sensor·MTR	AT-262, 348	
			3. Shift solenoid valve A	AT-318	
			4. Control valve assembly	AT-416	
			5. Overrun clutch solenoid valve	AT-337	
		OFF vehicle	6. Overrun clutch	AT-461	
			7. Low & reverse brake	AT-465	
No Up Shift	Failure to change gear from D_1 to D_2.	ON vehicle	1. Park/neutral position (PNP) switch adjustment	AT-418	
			2. Manual control linkage adjustment	AT-419	
			3. Shift solenoid valve A	AT-318	
			4. Control valve assembly	AT-416	
			5. Vehicle speed sensor·A/T (Revolution sensor) and vehicle speed sensor·MTR	AT-262, 348	
		OFF vehicle	6. Brake band	AT-474	
	Failure to change gear from D_2 to D_3.	ON vehicle	1. Park/neutral position (PNP) switch adjustment	AT-418	
			2. Manual control linkage adjustment	AT-419	
			3. Shift solenoid valve B	AT-323	
			4. Control valve assembly	AT-416	
			5. Vehicle speed sensor·A/T (Revolution sensor) and vehicle speed sensor·MTR	AT-262, 348	
		OFF vehicle	6. High clutch	AT-459	
			7. Brake band	AT-474	

Symptom Chart (Cont'd)

Items	Symptom	Condition	Diagnostic Item	Reference Page	
				VG33E only	VG33ER only
No Up Shift	Failure to change gear from D_3 to D_4.	ON vehicle	1. Park/neutral position (PNP) switch adjustment	AT-418	
			2. Manual control linkage adjustment	AT-419	
			3. Shift solenoid valve A	AT-318	
			4. Vehicle speed sensor·A/T (Revolution sensor) and vehicle speed sensor·MTR	AT-262, 348	
			5. A/T fluid temperature sensor	AT-256	
		OFF vehicle	6. Brake band	AT-474	
	A/T does not shift to D_4 when driving with overdrive control switch ON.	ON vehicle	1. Throttle position sensor (Adjustment)	***EC-715***	***EC-1314***
			2. Park/neutral position (PNP) switch adjustment	AT-418	
			3. Vehicle speed sensor·A/T (Revolution sensor) and vehicle speed sensor·MTR	AT-262, 348	
			4. Shift solenoid valve A	AT-318	
			5. Overrun clutch solenoid valve	AT-337	
			6. Control valve assembly	AT-416	
			7. A/T fluid temperature sensor	AT-256	
			8. Line pressure solenoid valve	AT-313	
		OFF vehicle	9. Brake band	AT-474	
			10. Overrun clutch	AT-461	
Slips/Will Not Engage	Vehicle will not run in R position (but runs in D, 2 and 1 positions). Clutch slips. Very poor acceleration. AT-372	ON vehicle	1. Manual control linkage adjustment	AT-419	
			2. Line pressure test	AT-209	
			3. Line pressure solenoid valve	AT-313	
			4. Control valve assembly	AT-416	
		OFF vehicle	5. Reverse clutch	AT-455	
			6. High clutch	AT-459	
			7. Forward clutch	AT-461	
			8. Overrun clutch	AT-461	
			9. Low & reverse brake	AT-465	
	Vehicle will not run in D and 2 positions (but runs in 1 and R positions).	ON vehicle	1. Manual control linkage adjustment	AT-419	
		OFF vehicle	2. Low one-way clutch	AT-469	

Items	Symptom	Condition	Diagnostic Item	Reference Page	
				VG33E only	VG33ER only
Slips/Will Not Engage	Vehicle will not run in D, 1, 2 positions (but runs in R position). Clutch slips. Very poor acceleration. AT-375	ON vehicle	1. Fluid level	AT-206	
			2. Line pressure test	AT-209	
			3. Line pressure solenoid valve	AT-313	
			4. Control valve assembly	AT-416	
			5. Accumulator N-D	AT-416	
		OFF vehicle	6. Reverse clutch	AT-455	
			7. High clutch	AT-459	
			8. Forward clutch	AT-461	
			9. Forward one-way clutch	AT-461	
			10. Low one-way clutch	AT-469	
	Clutches or brakes slip somewhat in starting.	ON vehicle	1. Fluid level	AT-206	
			2. Manual control linkage adjustment	AT-419	
			3. Throttle position sensor (Adjustment)	***EC-715***	***EC-1314***
			4. Line pressure test	AT-209	
			5. Line pressure solenoid valve	AT-313	
			6. Control valve assembly	AT-416	
			7. Accumulator N-D	AT-416	
		OFF vehicle	8. Forward clutch	AT-461	
			9. Reverse clutch	AT-455	
			10. Low & reverse brake	AT-465	
			11. Oil pump	AT-438	
			12. Torque converter	AT-427	
	No creep at all. AT-372, 375	ON vehicle	1. Fluid level	AT-206	
			2. Line pressure test	AT-209	
			3. Control valve assembly	AT-416	
		OFF vehicle	4. Forward clutch	AT-461	
			5. Oil pump	AT-438	
			6. Torque converter	AT-427	
	Almost no shock or clutches slipping in change from D_1 to D_2.	ON vehicle	1. Fluid level	AT-206	
			2. Throttle position sensor (Adjustment)	***EC-715***	***EC-1314***
			3. Line pressure test	AT-209	
			4. Accumulator servo release	AT-416	
			5. Control valve assembly	AT-416	
		OFF vehicle	6. Brake band	AT-474	

Symptom Chart (Cont'd)

Items	Symptom	Condition	Diagnostic Item	Reference Page	
				VG33E only	VG33ER only
Slips/Will Not Engage	Almost no shock or slipping in change from D_2 to D_3 .	ON vehicle	1. Fluid level	AT-206	
			2. Throttle position sensor (Adjustment)	***EC-715***	***EC-1314***
			3. Line pressure test	AT-209	
			4. Control valve assembly	AT-416	
		OFF vehicle	5. High clutch	AT-459	
			6. Forward clutch	AT-461	
	Almost no shock or slipping in change from D_3 to D_4 .	ON vehicle	1. Fluid level	AT-206	
			2. Throttle position sensor (Adjustment)	***EC-715***	***EC-1314***
			3. Line pressure test	AT-209	
			4. Control valve assembly	AT-416	
		OFF vehicle	5. High clutch	AT-459	
			6. Brake band	AT-474	
	Races extremely fast or slips in changing from D_4 to D_3 when depressing pedal.	ON vehicle	1. Fluid level	AT-206	
			2. Throttle position sensor (Adjustment)	***EC-715***	***EC-1314***
			3. Line pressure test	AT-209	
			4. Line pressure solenoid valve	AT-313	
			5. Control valve assembly	AT-416	
		OFF vehicle	6. High clutch	AT-459	
			7. Forward clutch	AT-461	

Items	Symptom	Condition	Diagnostic Item	Reference Page	
				VG33E only	VG33ER only
Slips/Will Not Engage	Races extremely fast or slips in changing from D_4 to D_2 when depressing pedal.	ON vehicle	1. Fluid level	AT-206	
			2. Throttle position sensor (Adjustment)	***EC-715***	***EC-1314***
			3. Line pressure test	AT-209	
			4. Line pressure solenoid valve	AT-313	
			5. Shift solenoid valve A	AT-318	
			6. Control valve assembly	AT-416	
		OFF vehicle	7. Brake band	AT-474	
			8. Forward clutch	AT-461	
	Races extremely fast or slips in changing from D_3 to D_2 when depressing pedal.	ON vehicle	1. Fluid level	AT-206	
			2. Throttle position sensor (Adjustment)	***EC-715***	***EC-1314***
			3. Line pressure test	AT-209	
			4. Line pressure solenoid valve	AT-313	
			5. Control valve assembly	AT-416	
			6. A/T fluid temperature sensor	AT-256	
		OFF vehicle	7. Brake band	AT-474	
			8. Forward clutch	AT-461	
			9. High clutch	AT-459	
	Races extremely fast or slips in changing from D_4 or D_3 to D_1 when depressing pedal.	ON vehicle	1. Fluid level	AT-206	
			2. Throttle position sensor (Adjustment)	***EC-715***	***EC-1314***
			3. Line pressure test	AT-209	
			4. Line pressure solenoid valve	AT-313	
			5. Control valve assembly	AT-416	
		OFF vehicle	6. Forward clutch	AT-461	
			7. Forward one-way clutch	AT-461	
			8. Low one-way clutch	AT-469	

Symptom Chart (Cont'd)

Items	Symptom	Condition	Diagnostic Item	Reference Page	
				VG33E only	VG33ER only
Slips/Will Not Engage	Vehicle will not run in any position.	ON vehicle	1. Fluid level	AT-206	
			2. Manual control linkage adjustment	AT-418	
			3. Line pressure test	AT-209	
			4. Line pressure solenoid valve	AT-313	
		OFF vehicle	5. Oil pump	AT-438	
			6. High clutch	AT-459	
			7. Brake band	AT-474	
			8. Low & reverse brake	AT-465	
			9. Torque converter	AT-427	
			10. Parking pawl components	AT-478	
NOT USED	Engine cannot be started in P and N positions. AT-366	ON vehicle	1. Ignition switch and starter	***EL-9***, ***SC-13***	
			2. Manual control linkage adjustment	AT-419	
			3. Park/neutral position (PNP) switch adjustment	AT-418	
	Engine starts in positions other than P and N. AT-366	ON vehicle	1. Manual control linkage adjustment	AT-419	
			2. Park/neutral position (PNP) switch adjustment	AT-418	
	Transmission noise in P and N positions.	ON vehicle	1. Fluid level	AT-206	
			2. Line pressure test	AT-209	
			3. Throttle position sensor (Adjustment)	***EC-715***	***EC-1314***
			4. Vehicle speed sensor·A/T (Revolution sensor) and vehicle speed sensor·MTR	AT-262, 348	
			5. Engine speed signal	AT-267	
		OFF vehicle	6. Oil pump	AT-438	
			7. Torque converter	AT-427	

Items	Symptom	Condition	Diagnostic Item	Reference Page	
				VG33E only	VG33ER only
NOT USED	Vehicle moves when changing into P position or parking gear does not disengage when shifted out of P position. AT-366	ON vehicle	1. Manual control linkage adjustment	AT-419	
		OFF vehicle	2. Parking pawl components	AT-478	
	Vehicle runs in N position. AT-368	ON vehicle	1. Manual control linkage adjustment	AT-419	
		OFF vehicle	2. Forward clutch	AT-461	
			3. Reverse clutch	AT-455	
			4. Overrun clutch	AT-461	
	Vehicle braked when shifting into R position.	ON vehicle	1. Fluid level	AT-206	
			2. Manual control linkage adjustment	AT-419	
			3. Line pressure test	AT-209	
			4. Line pressure solenoid valve	AT-313	
			5. Control valve assembly	AT-416	
		OFF vehicle	6. High clutch	AT-459	
			7. Brake band	AT-474	
			8. Forward clutch	AT-461	
			9. Overrun clutch	AT-461	
	Excessive creep.	ON vehicle	1. Engine idling rpm	***EC-715***	***EC-1314***
	Engine stops when shifting lever into R, D, 2 and 1.	ON vehicle	1. Engine idling rpm	***EC-715***	***EC-1314***
			2. Torque converter clutch solenoid valve	AT-299	
			3. Control valve assembly	AT-416	
		OFF vehicle	4. Torque converter	AT-427	

Symptom Chart (Cont'd)

Items	Symptom	Condition	Diagnostic Item	Reference Page	
				VG33E only	VG33ER only
NOT USED	Vehicle braked by gear change from D_1 to D_2.	ON vehicle	1. Fluid level	AT-206	
		OFF vehicle	2. Reverse clutch	AT-455	
			3. Low & reverse brake	AT-465	
			4. High clutch	AT-459	
			5. Low one-way clutch	AT-469	
	Vehicle braked by gear change from D_2 to D_3.	ON vehicle	1. Fluid level	AT-206	
		OFF vehicle	2. Brake band	AT-474	
	Vehicle braked by gear change from D_3 to D_4.	ON vehicle	1. Fluid level	AT-206	
		OFF vehicle	2. Overrun clutch	AT-461	
			3. Forward one-way clutch	AT-461	
			4. Reverse clutch	AT-455	
	Maximum speed not attained. Acceleration poor.	ON vehicle	1. Fluid level	AT-206	
			2. Park/neutral position (PNP) switch adjustment	AT-418	
			3. Shift solenoid valve A	AT-318	
			4. Shift solenoid valve B	AT-323	
			5. Control valve assembly	AT-416	
		OFF vehicle	6. Reverse clutch	AT-455	
			7. High clutch	AT-459	
			8. Brake band	AT-474	
			9. Low & reverse brake	AT-465	
			10. Oil pump	AT-438	
			11. Torque converter	AT-427	

Items	Symptom	Condition	Diagnostic Item	Reference Page	
				VG33E only	VG33ER only
NOT USED	Transmission noise in D, 2, 1 and R positions.	ON vehicle	1. Fluid level	AT-206	
		ON vehicle	2. Torque converter	AT-427	
	Engine brake does not operate in "1" position. AT-397	ON vehicle	1. Park/neutral position (PNP) switch adjustment	AT-418	
			2. Manual control linkage adjustment	AT-419	
			3. Throttle position sensor (Adjustment)	***EC-715***	***EC-1314***
			4. Vehicle speed sensor·A/T (Revolution sensor) and vehicle speed sensor·MTR	AT-262, 348	
			5. Shift solenoid valve A	AT-318	
			6. Control valve assembly	AT-416	
			7. Overrun clutch solenoid valve	AT-337	
		OFF vehicle	8. Overrun clutch	AT-461	
			9. Low & reverse brake	AT-465	

Symptom Chart (Cont'd)

Items	Symptom	Condition	Diagnostic Item	Reference Page	
				VG33E only	VG33ER only
NOT USED	Transmission overheats.	ON vehicle	1. Fluid level	AT-206	
			2. Engine idling rpm	***EC-715***	***EC-1314***
			3. Throttle position sensor (Adjustment)	***EC-715***	***EC-1314***
			4. Line pressure test	AT-209	
			5. Line pressure solenoid valve	AT-313	
			6. Control valve assembly	AT-416	
		OFF vehicle	7. Oil pump	AT-438	
			8. Reverse clutch	AT-455	
			9. High clutch	AT-459	
			10. Brake band	AT-474	
			11. Forward clutch	AT-461	
			12. Overrun clutch	AT-461	
			13. Low & reverse brake	AT-465	
			14. Torque converter	AT-427	
	ATF shoots out during operation. White smoke emitted from exhaust pipe during operation.	ON vehicle	1. Fluid level	AT-206	
		OFF vehicle	2. Reverse clutch	AT-455	
			3. High clutch	AT-459	
			4. Brake band	AT-474	
			5. Forward clutch	AT-461	
			6. Overrun clutch	AT-461	
			7. Low & reverse brake	AT-465	
	Offensive smell at fluid charging pipe.	ON vehicle	1. Fluid level	AT-206	
		OFF vehicle	2. Torque converter	AT-427	
			3. Oil pump	AT-438	
			4. Reverse clutch	AT-455	
			5. High clutch	AT-459	
			6. Brake band	AT-474	
			7. Forward clutch	AT-461	
			8. Overrun clutch	AT-461	
			9. Low & reverse brake	AT-465	
	Engine is stopped at R, D, 2 and 1 positions.	ON vehicle	1. Fluid level	AT-206	
			2. Torque converter clutch solenoid valve	AT-299	
			3. Shift solenoid valve B	AT-323	
			4. Shift solenoid valve A	AT-318	
			5. Control valve assembly	AT-416	

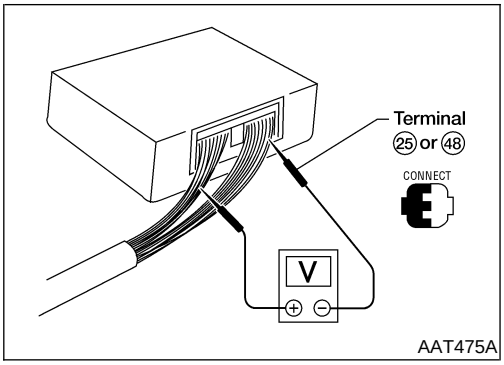

TCM Terminals and Reference Value

=NEAT0129

PREPARATION

NEAT0129S01

- Measure voltage between each terminal and terminal 25 or 48 by following “TCM INSPECTION TABLE”.

TCM HARNESS CONNECTOR TERMINAL LAYOUT

NEAT0129S02

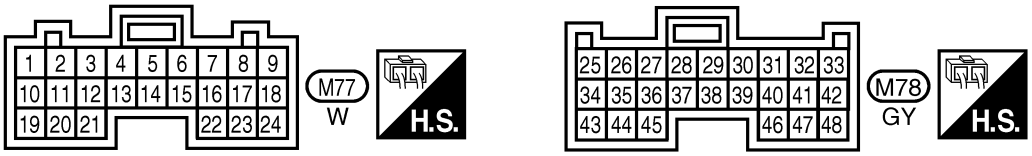

AAT494A

TCM INSPECTION TABLE

(Data are reference values.)

NEAT0129S03

Terminal No.	Wire color	Item	Condition		Judgement standard (Approx.)
1	GY/R	Line pressure solenoid valve		When releasing accelerator pedal after warming up engine.	1.5 - 2.5V
				When depressing accelerator pedal fully after warming up engine.	0V
2	BR/Y	Line pressure solenoid valve (with dropping resistor)		When releasing accelerator pedal after warming up engine.	4 - 14V
				When depressing accelerator pedal fully after warming up engine.	0V
3	G/OR	Torque converter clutch solenoid valve		When A/T performs lock-up.	Battery voltage
				When A/T does not perform lock-up.	0V
5*1	PU/W	DT1	—	—	—
6*1	P/B	DT2		—	—
7*1	G/R	DT3		—	—
8*1,*3	R/Y	DT5	—	—	—
9*1,*3	W/G	DT4	—	—	—
10	W/R	Power source	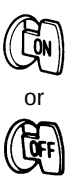	When turning ignition switch to ON.	Battery voltage
				When turning ignition switch to OFF.	0V

TCM Terminals and Reference Value (Cont'd)

Terminal No.	Wire color	Item	Condition		Judgement standard (Approx.)
11	L/W	Shift solenoid valve A		When shift solenoid valve A operates (When driving in D_1 or D_4).	Battery voltage
				When shift solenoid valve A does not operate (When driving in D_2 or D_3).	0V
12	L/Y	Shift solenoid valve B		When shift solenoid valve B operates (When driving in D_1 or D_2).	Battery voltage
				When shift solenoid valve B does not operate (When driving in D_3 or D_4).	0V
13	Y	O/D OFF indicator lamp		When setting overdrive control switch in OFF position.	0V
				When setting overdrive control switch in ON position.	Battery voltage
15*1	Y/G	OBD-II	—	—	—
16	BR/W	Closed throttle position switch (in throttle position switch)		When releasing accelerator pedal after warming up engine.	Battery voltage
				When depressing accelerator pedal after warming up engine.	0V
17	OR/B	Wide open throttle position switch (in throttle position switch)		When depressing accelerator pedal more than half-way after warming up engine.	Battery voltage
				When releasing accelerator pedal after warming up engine.	0V
18	B/Y	ASCD cruise signal		When ASCD cruise is being performed ("CRUISE" light comes on).	Battery voltage
				When ASCD cruise is not being performed, ("CRUISE" light does not comes on).	0V
19	W/R	Power source	 or 	When turning ignition switch to ON	Battery voltage
				When turning ignition switch to OFF	0V
20	L/B	Overrun clutch solenoid valve		When overrun clutch solenoid valve operates.	Battery voltage
				When overrun clutch shift solenoid valve does not operates.	0V
22	R	Overdrive control switch		When setting overdrive control switch in OFF position	0V
				When setting overdrive control switch in ON position	Battery voltage

Terminal No.	Wire color	Item	Condition		Judgement standard (Approx.)
24	GY	ASCD O/D cut signal		When ASCD permits O/D.	5 - 8V
				When ASCD requires O/D to be OFF.	0V
25	B/Y	Ground	—	—	0V
26	G/B	PNP switch 1 position		When setting selector lever to 1 position.	Battery voltage
				When setting selector lever to other position.	0V
27	G/W	PNP switch 2 position		When setting selector lever to 2 position.	Battery voltage
				When setting selector lever to other position.	0V
28	R/Y	Power source (Memory back-up)	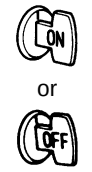	When turning ignition switch to ON.	Battery voltage
				When turning ignition switch to OFF.	Battery voltage
29	B/R	Revolution sensor (Measure in AC range)		When vehicle cruises at 30 km/h (19 MPH).	1V or more Voltage rises gradually in response to vehicle speed.
				When vehicle parks.	0V
30*2	Y/R	DATA LINK CONNECTOR data in	—	—	—
31*2	GY/L	DATA LINK CONNECTOR data out	—	—	—
32	B/W	Throttle position sensor (Power source)		Ignition switch ON	4.5 - 5.5V
				Ignition switch OFF	0V
34	L	PNP switch D position		When setting selector lever to D position.	Battery voltage
				When setting selector lever to other position.	0V
35	Y/R	PNP switch R position		When setting selector lever to R position.	Battery voltage
				When setting selector lever to other position.	0V
36	G/R	PNP switch P or N position		When setting selector lever to P or N position.	Battery voltage
				When setting selector lever to other position.	0V

TCM Terminals and Reference Value (Cont'd)

Terminal No.	Wire color	Item	Condition		Judgement standard (Approx.)
38*3	Y	Turbine revolution sensor (measured in AC range		When engine runs at approximately 1,000 rpm.	1.2V
39	P/L	Engine speed signal		When engine runs at idle speed.	0.5 - 2.5V
40	G/B	Vehicle speed sensor		When moving vehicle at 2 to 3 km/h (1 to 2 MPH) for 1m (3 ft) or more.	Voltage varies between less than 1V and more than 4.5V
41	OR/L	Throttle position sensor		When depressing accelerator pedal slowly after warming up engine (Voltage rises gradually in response to throttle position).	Fully-closed throttle: 0.5V - 0.7V Fully-open throttle: 4V
42	BR	Throttle position sensor (Ground)		—	0V
45*3	BR/R	Stop lamp switch	—	When brake pedal is depressed.	Battery voltage
				When brake pedal is released.	0V
47	R/B	A/T fluid temperature sensor		When ATF temperature is 20°C (68°F).	1.5V
				When ATF temperature is 80°C (176°F).	0.5V
48	B/Y	Ground	—	—	0V

*1: These terminals are connected to the ECM.

*2: These terminals are connected to the Data link connector for CONSULT-II.

*3: VG33ER only.

Wiring Diagram — AT — MAIN

NEAT0130

AT-MAIN-01

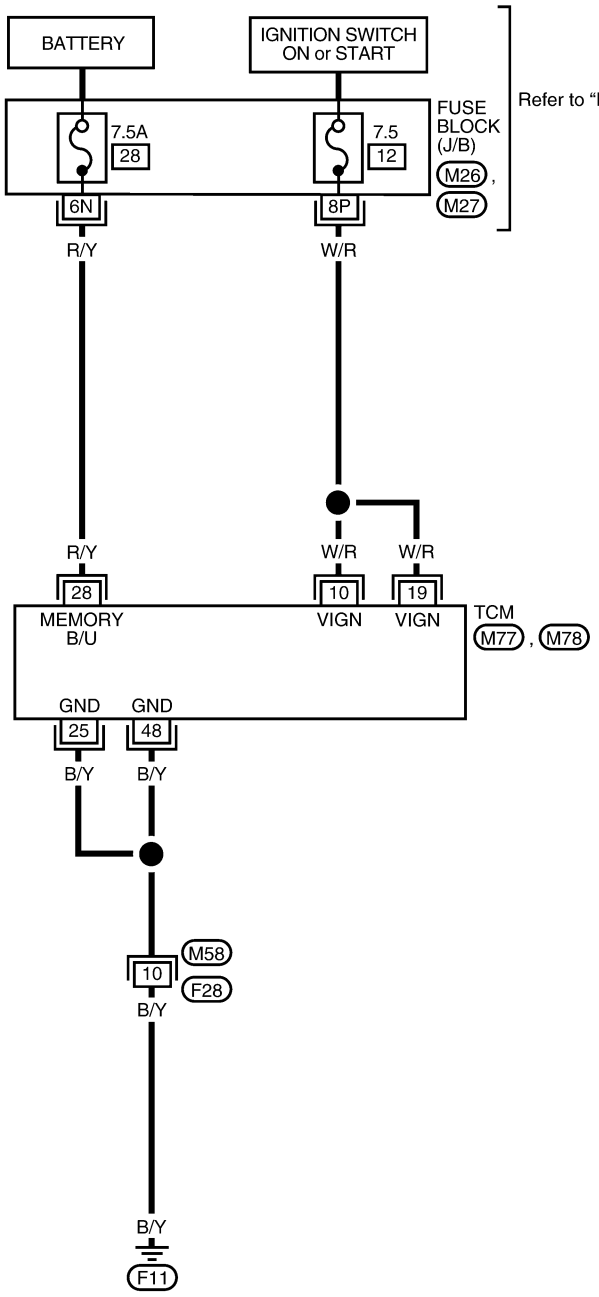

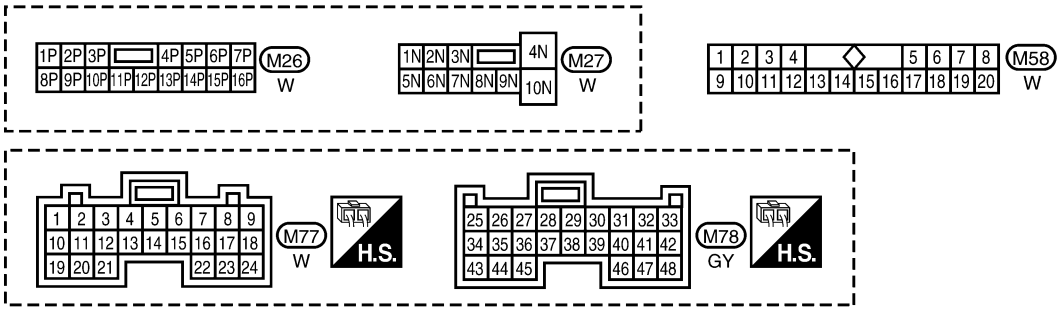

LAT443

TCM TERMINALS AND REFERENCE VALUE

NEAT0130S01

Remarks: Specification data are reference values.

Terminal No.	Wire color	Item	Condition		Judgement standard (Approx.)
10	W/R	Power source	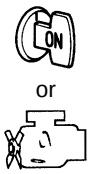	When turning ignition switch to ON	Battery voltage
				When turning ignition switch to OFF	0V
19	W/R	Power source		Same as No. 10	
25	B/Y	Ground	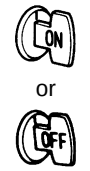	When turning ignition switch to ON	0V
				When turning ignition switch to OFF	0V
28	R/Y	Power source (Memory back-up)		When turning ignition switch to OFF	Battery voltage
				When turning ignition switch to ON	Battery voltage
48	B/Y	Ground		When turning ignition switch to ON	0V
				When turning ignition switch to OFF	0V

Diagnostic Procedure

NEAT0501

1 CHECK TCM POWER SOURCE

1. Turn ignition switch to ON position.
   (Do not start engine.)
2. Check voltage between TCM harness connectors M77, M78 terminals (10, 19, 28) and ground.

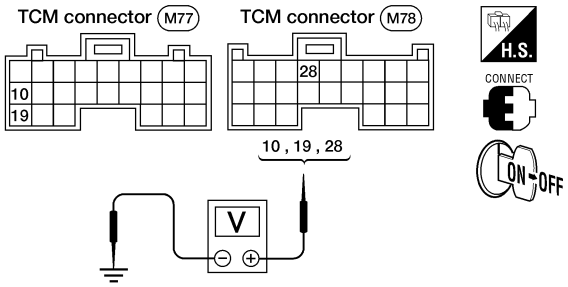

AAT476A

Voltage: Battery voltage

3. Turn ignition switch to OFF position.
4. Check voltage between TCM harness connector M78 terminal 28 and ground.

Voltage: Battery voltage

OK or NG

OK	▶	GO TO 2.
NG	▶	**Check the following items:** ● Harness for open or short between fuse block J/B harness connectors M26, M27 and TCM harness connectors M77, M78 ● Ignition switch and fuse Refer to ***EL-9***, "POWER SUPPLY ROUTING".

2	CHECK TCM GROUND CIRCUIT

1. Turn ignition switch to OFF position.
2. Disconnect TCM harness connector.
3. Check continuity between TCM harness connector M78 terminals (25, 48) and ground.

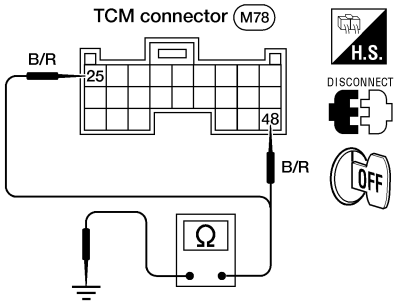

AAT477A

Continuity should exist.

If OK, check harness for short to ground and short to power.

OK or NG

OK	▶	**INSPECTION END**
NG	▶	Repair open circuit or short to ground or short to power in harness or connectors.

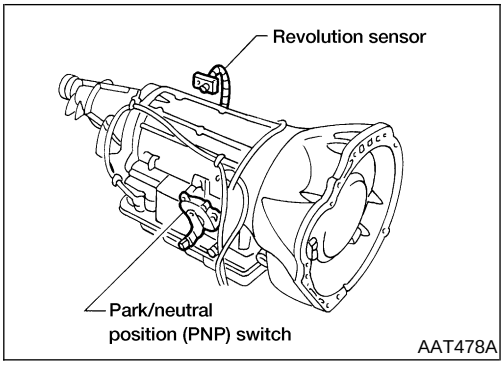

Description

NEAT0131

- The PNP switch assembly includes a transmission range switch.
- The transmission range switch detects the selector position and sends a signal to the TCM.

TCM TERMINALS AND REFERENCE VALUE

NEAT0131S01

Remarks: Specification data are reference values.

Terminal No.	Wire color	Item	Condition		Judgement standard (Approx.)
26	G/B	PNP switch 1 position		When setting selector lever to 1 position.	Battery voltage
				When setting selector lever to other positions.	0V
27	G/W	PNP switch 2 position		When setting selector lever to 2 position.	Battery voltage
				When setting selector lever to other positions.	0V
34	L	PNP switch D position		When setting selector lever to D position.	Battery voltage
				When setting selector lever to other positions.	0V
35	Y	PNP switch R position		When setting selector lever to R position.	Battery voltage
				When setting selector lever to other positions.	0V
36	G/R	PNP switch P or N position		When setting selector lever to P or N position.	Battery voltage
				When setting selector lever to other positions.	0V

ON BOARD DIAGNOSIS LOGIC

NEAT0131S02

Diagnostic trouble code	Malfunction is detected when ...	Check item (Possible cause)
: PNP SW/CIRC	TCM does not receive the correct voltage signal from the switch based on the gear position.	• Harness or connectors (The PNP switch circuit is open or shorted) • PNP switch
: P0705		

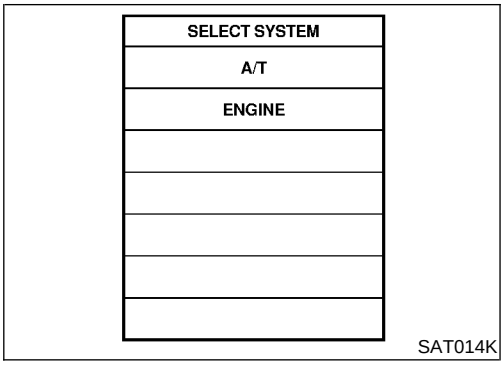

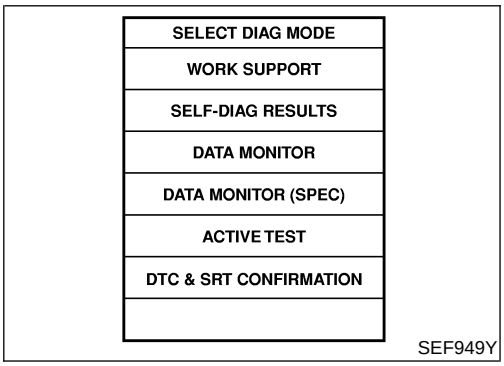

DIAGNOSTIC TROUBLE CODE (DTC) CONFIRMATION PROCEDURE

NEAT0131S03

CAUTION:

Always drive vehicle at a safe speed.

NOTE:

If "DIAGNOSTIC TROUBLE CODE CONFIRMATION PROCEDURE" has been previously conducted, always turn ignition switch OFF and wait at least 5 seconds before conducting the next test.

After the repair, perform the following procedure to confirm the malfunction is eliminated.

With CONSULT-II

1) Turn ignition switch ON.
2) Select "DATA MONITOR" mode for "ENGINE" with CONSULT-II.
3) Start engine and maintain the following conditions for at least 5 consecutive seconds.
   VHCL SPEED SE: 10 km/h (6 MPH) or more
   THRTL POS SEN: More than 1.3V
   Selector lever: D position (O/D ON or OFF)

With GST

1) Follow the procedure "With CONSULT-II".

Wiring Diagram — AT — PNP/SW

NEAT0132

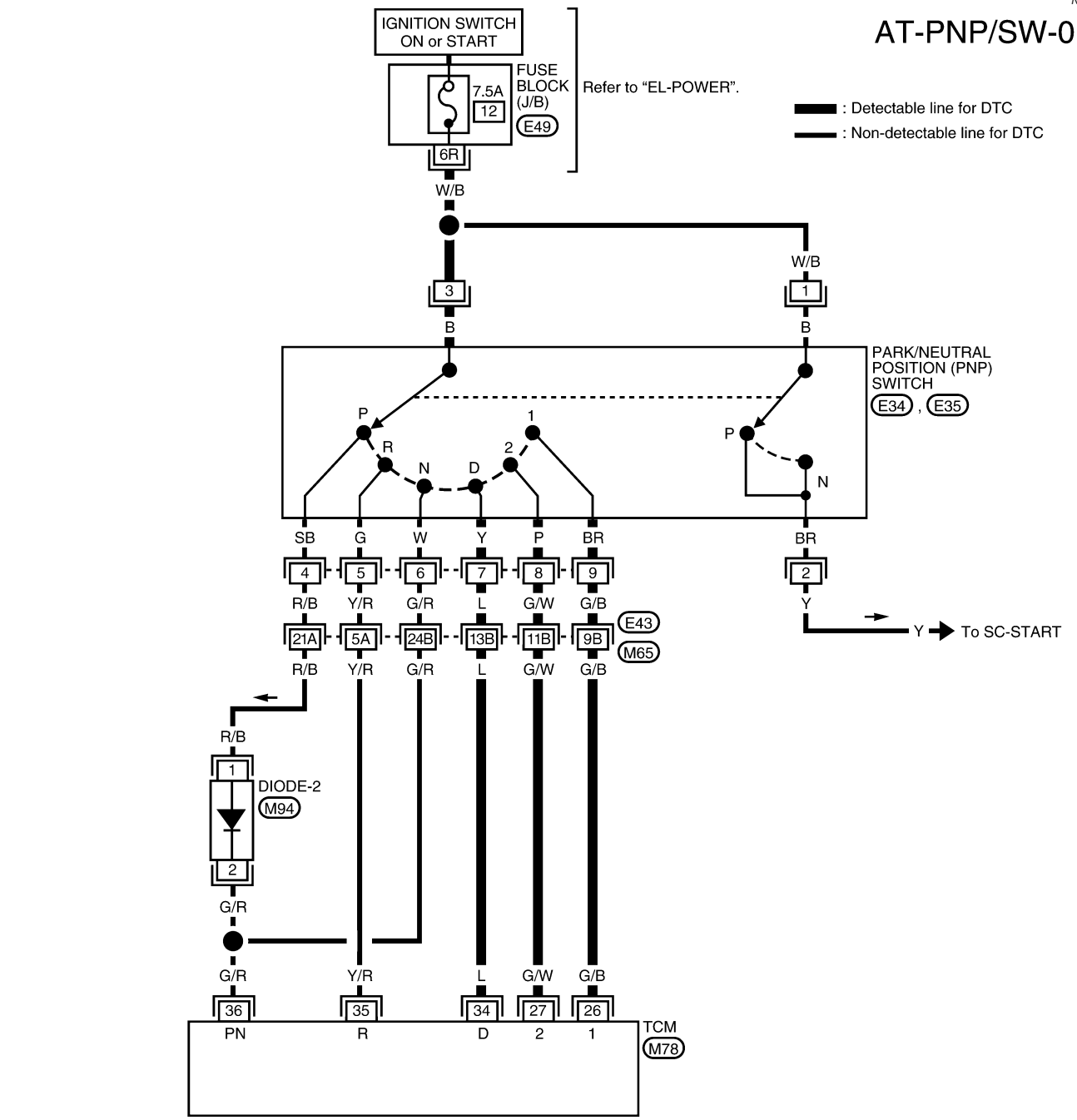

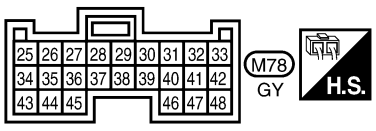



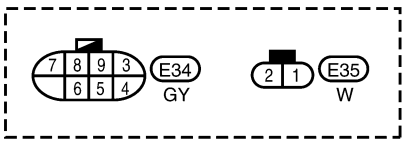

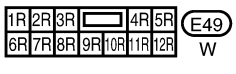

Refer to the following.
M65, E43 - SUPER MULTIPLE JUNCTION (SMJ)

WAT363

Diagnostic Procedure

NEAT0133

1	CHECK PNP SWITCH CIRCUIT (With CONSULT-II)	

With CONSULT-II

1. Turn ignition switch to ON position
   (Do not start engine).
2. Select “TCM INPUT SIGNALS” in “DATA MONITOR” mode for “A/T” with CONSULT-II.
3. Read out P, R, N, D, 2 and 1 position switches moving selector lever to each position. Check the signal of the selector lever position is indicated properly.

DATA MONITOR	
MONITORING	
PN POSI SW	OFF
R POSITION SW	OFF
D POSITION SW	OFF
2 POSITION SW	ON
1 POSITION SW	OFF

SAT701J

OK or NG

OK	▶	GO TO 3.
NG	▶	**Check the following items:** ● PNP switch Refer to “Component Inspection”, AT-254. ● Harness for short or open between ignition switch and PNP switch (Main harness) ● Harness for short or open between PNP switch and TCM (Main harness) ● Diode (P position)

Diagnostic Procedure (Cont'd)

2	CHECK PNP SWITCH CIRCUIT (Without CONSULT-II)

Without CONSULT-II

1. Turn ignition switch to ON position
   (Do not start engine).
2. Check voltage between TCM harness connector M78 terminals (26, 27, 34, 35, 36) and ground while moving selector lever through each position.

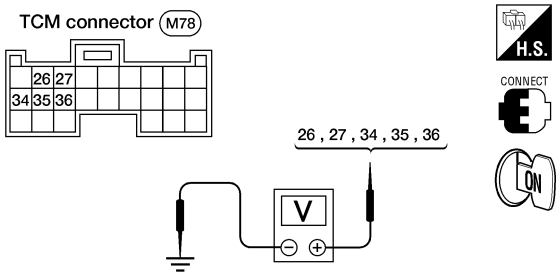

AAT480A

Lever position	Terminals				
	36	35	34	27	26
P, N	**B**	0	0	0	0
R	0	**B**	0	0	0
D	0	0	**B**	0	0
2	0	0	0	**B**	0
1	0	0	0	0	**B**

AAT479A

Does battery voltage exist (B) or non-existent (0)?

Yes	▶	GO TO 3.
No	▶	**Check the following items:** ● PNP switch Refer to "Component Inspection", AT-254. ● Harness for short or open between ignition switch and PNP switch ● Harness for short or open between PNP switch connector E34 and TCM connector M78 ● Diode (P position)

3	CHECK DTC

Perform Diagnostic Trouble Code (DTC) confirmation procedure. Refer to "DIAGNOSTIC TROUBLE CODE (DTC) CONFIRMATION PROCEDURE", AT-251.

OK or NG

OK	▶	**INSPECTION END**
NG	▶	1. Perform TCM input/output signal inspection. 2. If NG, recheck TCM pin terminals for damage or loose connection with harness connector.

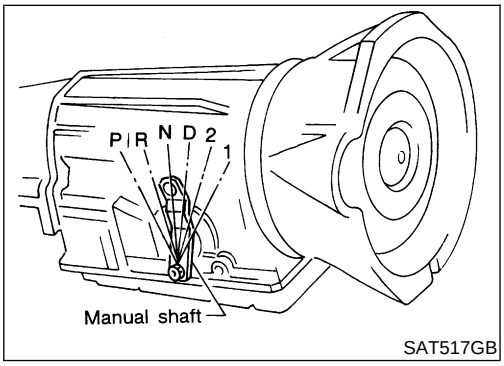

SAT517GB

Component Inspection

NEAT0134

PNP SWITCH

NEAT0134S01

1. Check continuity between terminals 1 and 2 and between terminals 3 and (4, 5, 6, 7, 8, 9) while moving manual shaft through each position.

Lever position	P	R	N	D	2	1
Terminal No.	1 - 2	3 - 5	1 - 2	3 - 7	3 - 8	3 - 9
	3 - 4		3 - 6			

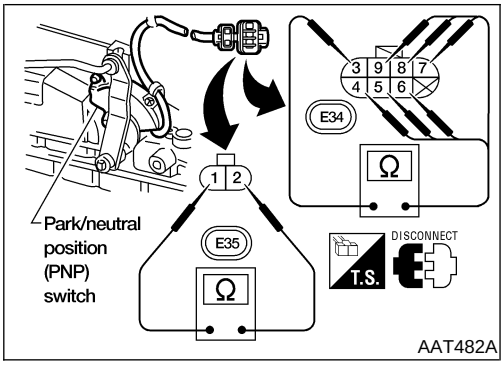

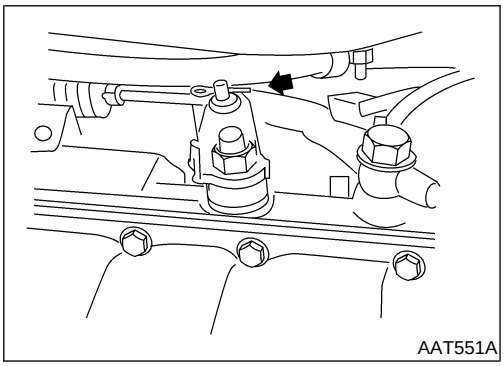

2. If NG, check again with manual control linkage disconnected from manual shaft of A/T assembly. Refer to step 1.
3. If OK on step 2, adjust manual control linkage. Refer to "Manual Control Linkage Adjustment", AT-419.

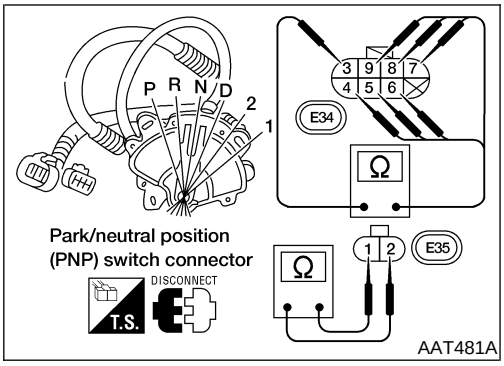

4. If NG on step 2, remove PNP switch from A/T and check continuity of PNP switch terminals. Refer to step 1.
5. If OK on step 4, adjust PNP switch. Refer to "Park/Neutral Position (PNP) Switch Adjustment", AT-418.
6. If NG on step 4, replace PNP switch.

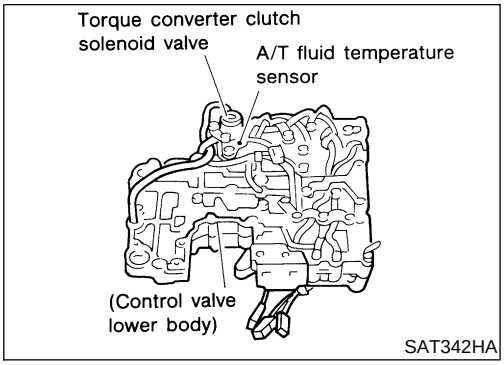

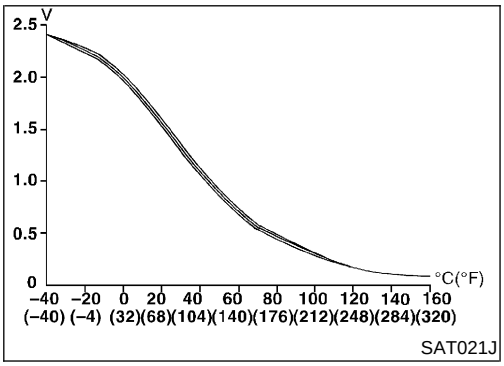

Description

NEAT0135

The A/T fluid temperature sensor detects the A/T fluid temperature and sends a signal to the TCM.

CONSULT-II REFERENCE VALUE IN DATA MONITOR MODE

NEAT0135S01

Remarks: Specification data are reference values.

Monitor item	Condition	Specification (Approx.)	
A/T fluid temperature sensor	Cold [20°C (68°F)] ↓ Hot [80°C (176°F)]	1.5V ↓ 0.5V	2.5kΩ ↓ 0.3kΩ

TCM TERMINALS AND REFERENCE VALUE

NEAT0135S02

Remarks: Specification data are reference values.

Terminal No.	Wire color	Item	Condition		Judgement standard (Approx.)
42	BR	Throttle position sensor (Ground)		—	—
47	R/B	A/T fluid temperature sensor		When ATF temperature is 20°C (68°F).	1.5V
				When ATF temperature is 80°C (176°F).	0.5V

ON BOARD DIAGNOSIS LOGIC

NEAT0135S03

Diagnostic trouble code	Malfunction is detected when....	Check item (Possible cause)
: ATF TEMP SEN/CIRC	TCM receives an excessively low or high voltage from the sensor.	• Harness or connectors (The sensor circuit is open or shorted) • A/T fluid temperature sensor
: P0710		

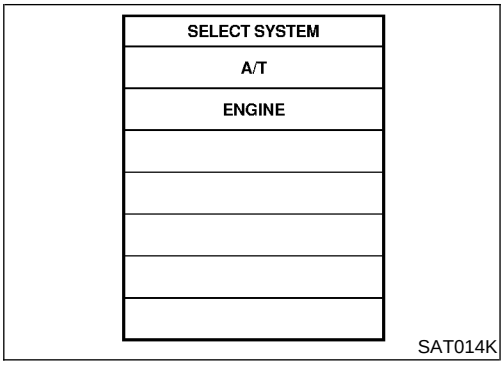

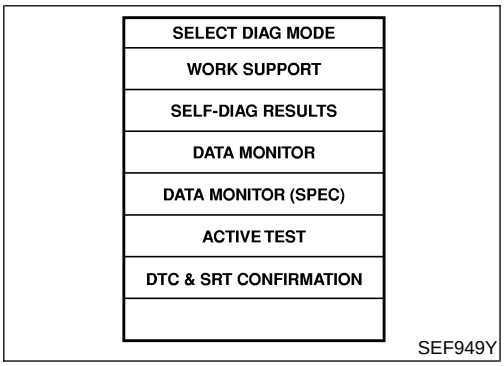

DIAGNOSTIC TROUBLE CODE (DTC) CONFIRMATION PROCEDURE

NEAT0135S04

CAUTION:

Always drive vehicle at a safe speed.

NOTE:

If "DIAGNOSTIC TROUBLE CODE CONFIRMATION PROCEDURE" has been previously conducted, always turn ignition switch OFF and wait at least 5 seconds before conducting the next test.

After the repair, perform the following procedure to confirm the malfunction is eliminated.

With CONSULT-II

1) Turn ignition switch ON and select "DATA MONITOR" mode for "ENGINE" with CONSULT-II.
2) Start engine and maintain the following conditions for at least 10 minutes (Total: It is not necessary to maintain continuously).
   CMPS·RPM (REF): 450 rpm or more
   VHCL SPEED SE: 10 km/h (6 MPH) or more
   THRTL POS SEN: More than 1.2V
   Selector lever: D position (O/D ON)

With GST

1) Follow the procedure "With CONSULT-II".

Wiring Diagram — AT — FTS

NEAT0136

AT-FTS-01

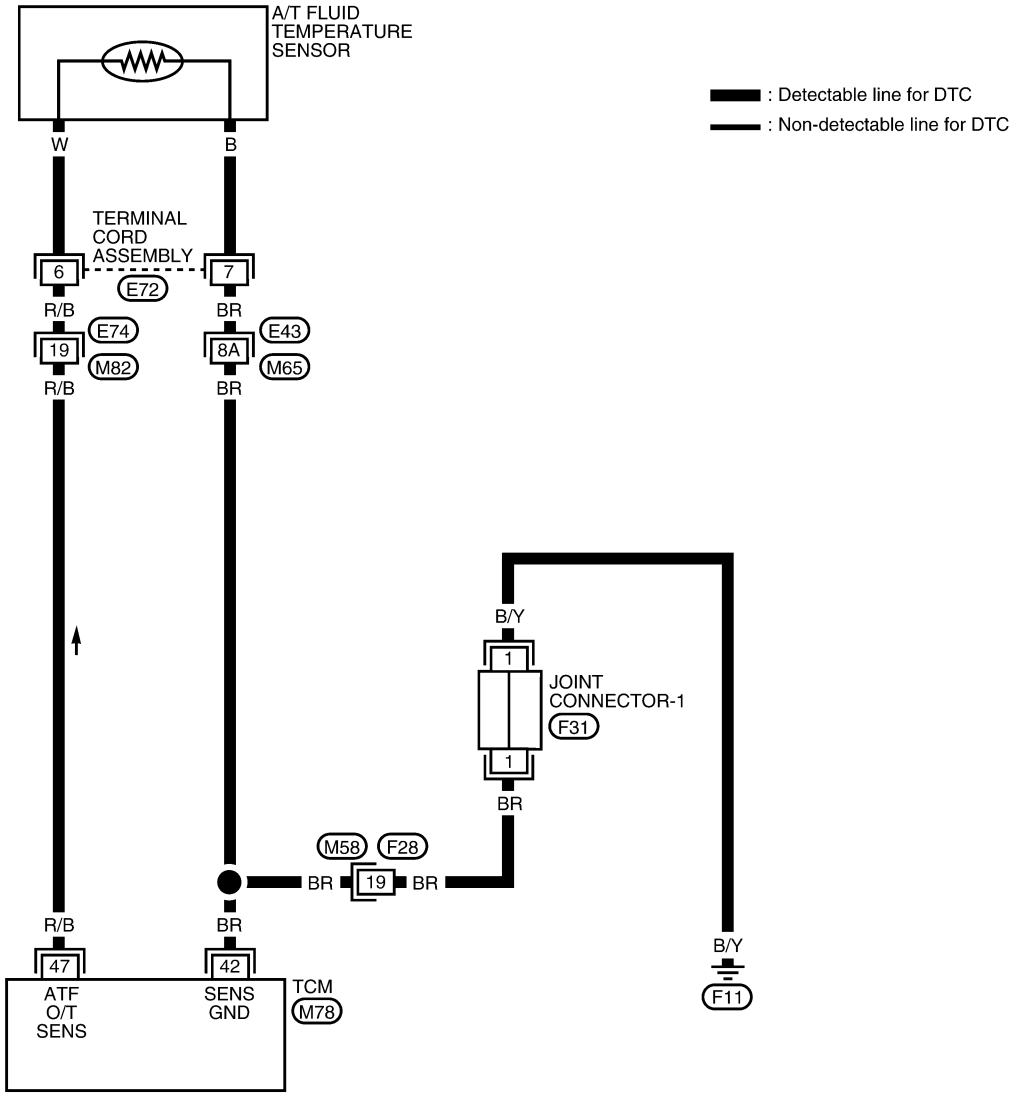

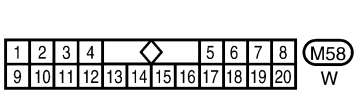

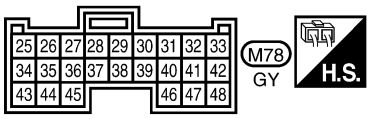

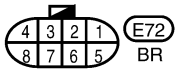

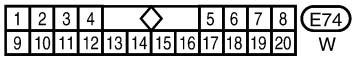

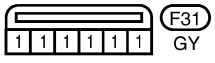

Refer to the following.
M65 , E43 - SUPER MULTIPLE JUNCTION (SMJ)

LAT444

Diagnostic Procedure

NEAT0137

1	CHECK A/T FLUID TEMPERATURE SENSOR WITH TERMINAL CORD ASSEMBLY

1. Turn ignition switch to OFF position.
2. Disconnect terminal cord assembly connector in engine compartment.
3. Check resistance between terminal cord assembly connector E72 terminals 6 and 7 when A/T is cold [20°C (68°F)].

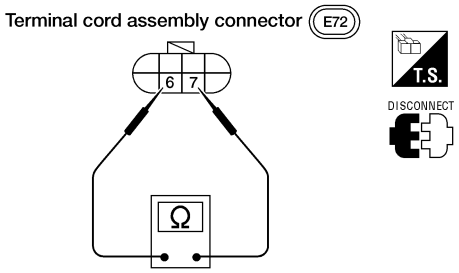

AAT483A

Is resistance approx. 2.5 kΩ?

Yes	▶	GO TO 2.
No	▶	1. Remove oil pan. 2. Check the following items: ● A/T fluid temperature sensor Refer to “Component Inspection”, AT-261. ● Harness of terminal cord assembly for short or open

Diagnostic Procedure (Cont'd)

2	CHECK INPUT SIGNAL OF A/T FLUID TEMPERATURE SENSOR

With CONSULT-II

1. Start engine.
2. Select "TCM INPUT SIGNALS" in "DATA MONITOR" mode for "A/T" with CONSULT-II.
3. Read out the value of "FLUID TEMP SE".

Voltage:

Cold [20°C (68°F)] → Hot [80°C (176°F)]:

Approximately 1.5V → 0.5V

DATA MONITOR	
MONITORING	
VHCL/S SE-A/T	XXX km/h
VHCL/S SE-MTR	XXX km/h
THRTL POS SEN	XXX V
FLUID TEMP SE	XXX V
BATTERY VOLT	XXX V

SAT614J

Without CONSULT-II

1. Start engine.
2. Check voltage between TCM harness connector M78 terminal 47 and ground while warming up A/T.

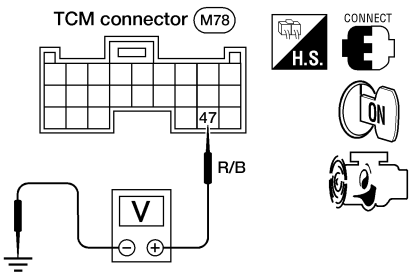

AAT484A

Voltage:

Cold [20°C (68°F)] → Hot [80°C (176°F)]:

Approximately 1.5V → 0.5V

OK or NG

OK	▶	GO TO 3.
NG	▶	**Check the following item:** ● Harness for short or open between TCM and terminal cord assembly (Main harness)

3	CHECK DTC

Perform Diagnostic Trouble Code (DTC) confirmation procedure. Refer to "DIAGNOSTIC TROUBLE CODE (DTC) CONFIRMATION PROCEDURE", AT-257.

OK or NG

OK	▶	**INSPECTION END**
NG	▶	1. Perform TCM input/output signal inspection. 2. If NG, recheck TCM pin terminals for damage or loose connection with harness connector.

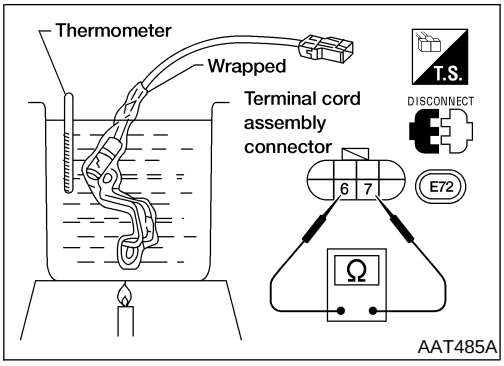

Component Inspection

NEAT0138

A/T FLUID TEMPERATURE SENSOR

NEAT0138S01

- For removal, refer to “REMOVAL”, AT-416.
- Check resistance between A/T fluid temperature sensor terminals 6 and 7 while changing temperature as shown at left.

Temperature °C (°F)	Resistance (Approx.)
20 (68)	2.5 kΩ
80 (176)	0.3 kΩ

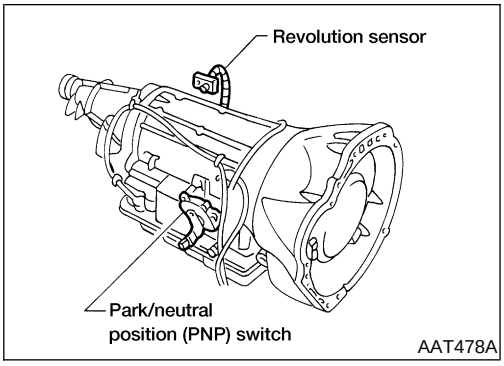

Description

NEAT0139

The revolution sensor detects the revolution of the output shaft parking pawl lock gear and emits a pulse signal. The pulse signal is sent to the TCM which converts it into vehicle speed.

TCM TERMINALS AND REFERENCE VALUE

NEAT0139S01

Remarks: Specification data are reference values.

Terminal No.	Wire color	Item	Condition		Judgement standard (Approx.)
29	B/R	Revolution sensor (Measure in AC range)		When vehicle cruises at 30 km/h (19 MPH).	1V or more Voltage rises gradually in response to vehicle speed.
				When vehicle parks.	0V
42	BR	Throttle position sensor (Ground)		—	0V

ON BOARD DIAGNOSIS LOGIC

NEAT0139S02

Diagnostic trouble code	Malfunction is detected when ...	Check item (Possible cause)
: VEH SPD SEN/CIR AT	TCM does not receive the proper voltage signal from the sensor.	• Harness or connectors (The sensor circuit is open or shorted) • Revolution sensor
: P0720		

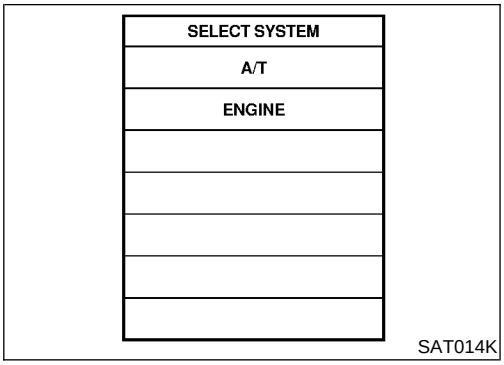

SAT014K

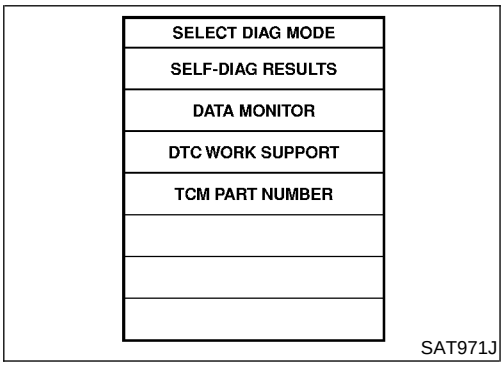

SAT971J

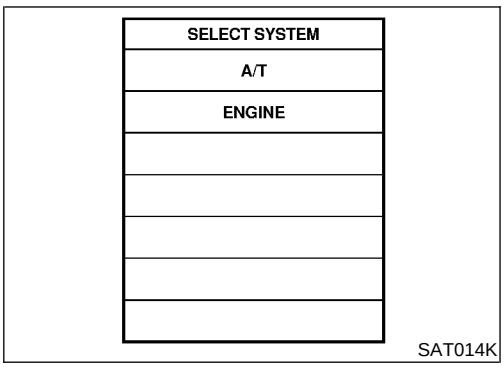

SAT014K

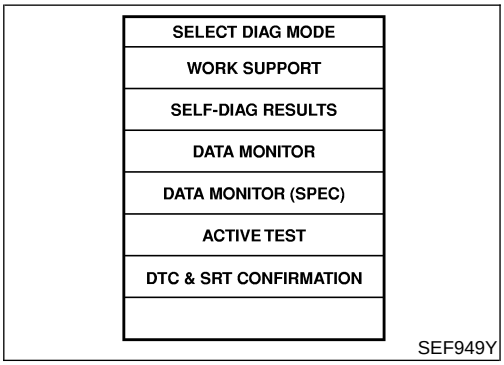

SEF949Y

DIAGNOSTIC TROUBLE CODE (DTC) CONFIRMATION PROCEDURE

NEAT0139S03

CAUTION:

- **Always drive vehicle at a safe speed.**
- **Be careful not to rev engine into the red zone on the tachometer.**

NOTE:

If "DIAGNOSTIC TROUBLE CODE CONFIRMATION PROCEDURE" has been previously conducted, always turn ignition switch OFF and wait at least 5 seconds before conducting the next test.

After the repair, perform the following procedure to confirm the malfunction is eliminated.

With CONSULT-II

1) Turn ignition switch ON and select "DATA MONITOR" mode for "A/T" with CONSULT-II.
2) Drive vehicle and check for an increase of "VHCL/S SE·MTR" value.
   If the check result is NG, go to "DIAGNOSTIC PROCEDURE", AT-351.
   If the check result is OK, go to following step.
3) Select "DATA MONITOR" mode for "ENGINE" with CONSULT-II.
4) Start engine and maintain the following conditions for at least 5 consecutive seconds.
   VHCL SPEED SE: 30 km/h (19 MPH) or more
   THRTL POS SEN: More than 1.2V
   Selector lever: D position (O/D ON)
   Driving condition: Driving the vehicle uphill (increased engine load) will help maintain the driving conditions required for this test.
   If the check result is NG, go to "DIAGNOSTIC PROCEDURE", AT-265.
   If the check result is OK, go to following step.
5) Maintain the following conditions for at least 5 consecutive seconds.
   CMPS·RPM (REF): 3,500 rpm or more
   THRTL POS SEN: More than 1.2V
   Selector lever: D position (O/D ON)
   Driving condition: Driving the vehicle uphill (increased engine load) will help maintain the driving conditions required for this test.

With GST

1) Follow the procedure "With CONSULT-II".

Wiring Diagram — AT — VSSA/T

NEAT0140

AT-VSSAT-01

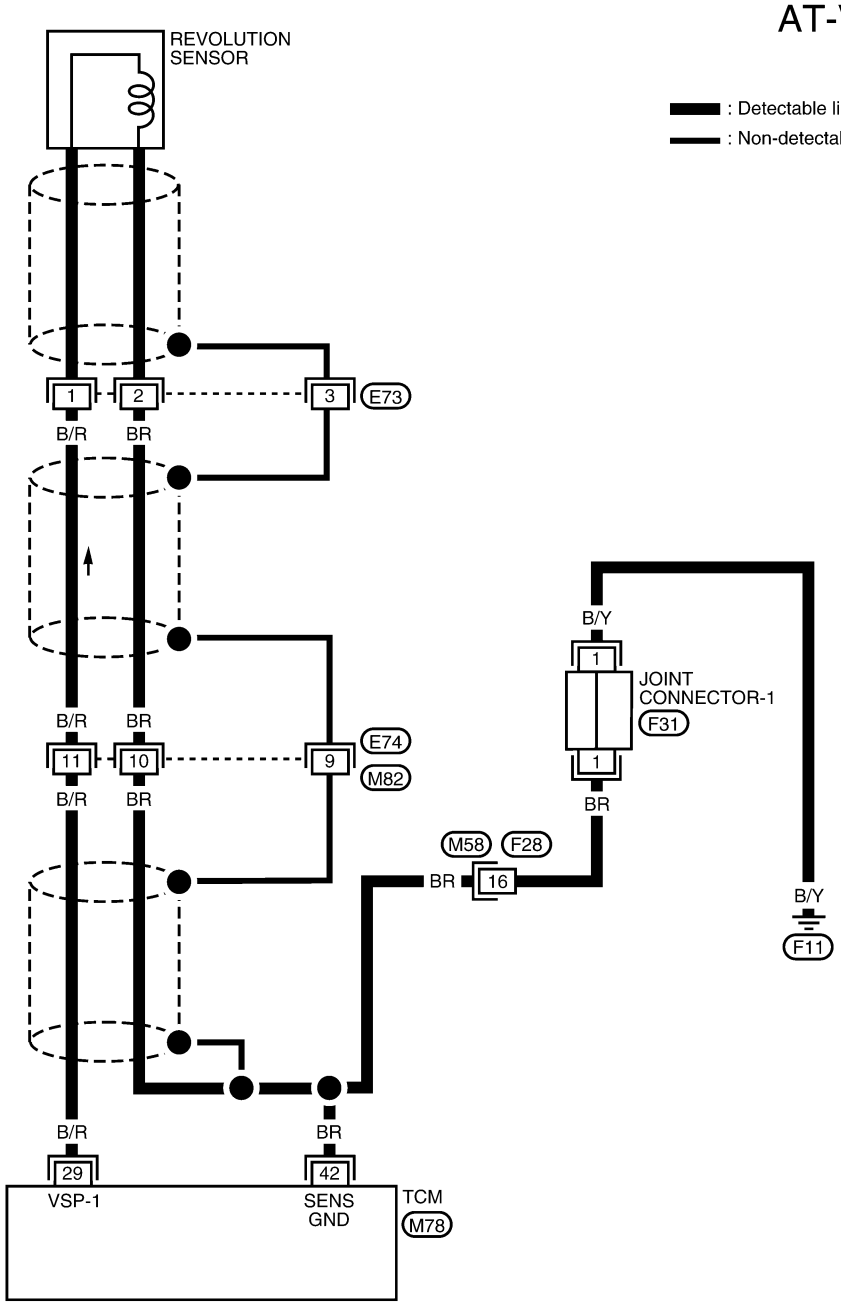

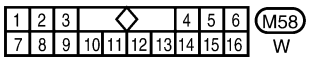

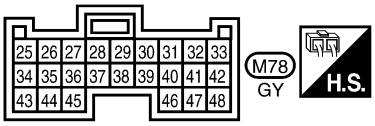

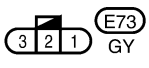

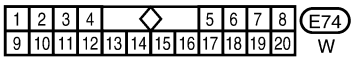

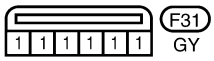

LAT445

Diagnostic Procedure

NEAT0141

1	CHECK REVOLUTION SENSOR	
Refer to “Component Inspection”, AT-266.		
OK or NG		
OK	▶	GO TO 2.
NG	▶	Repair or replace revolution sensor.

2 CHECK INPUT SIGNAL

With CONSULT-II

1. Start engine.
2. Select “TCM INPUT SIGNALS” in “DATA MONITOR” mode for “A/T” with CONSULT-II.
3. Read out the value of “VHCL/S SE·A/T” while driving.
   Check the value changes according to driving speed.

DATA MONITOR	
MONITORING	
VHCL/S SE-A/T	XXX km/h
VHCL/S SE-MTR	XXX km/h
THRTL POS SEN	XXX V
FLUID TEMP SE	XXX V
BATTERY VOLT	XXX V

SAT614J

Without CONSULT-II

1. Start engine.
2. Check voltage between TCM harness connector M78 terminal 29 and ground while driving.
   (Measure with AC range)

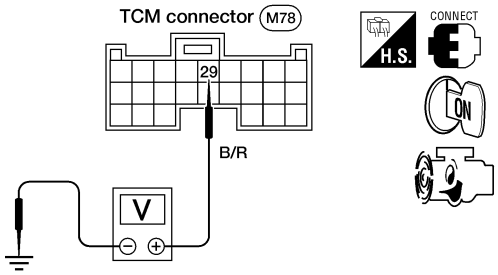

AAT486A

Voltage:
At 0 km/h (0 MPH):
0V
At 30 km/h (19 MPH):
1V or more
(Voltage rises gradually in response to vehicle speed.)

OK or NG

OK	▶	GO TO 3.
NG	▶	**Check the following items:** ● Harness for short or open between TCM and revolution sensor (Main harness) ● Harness for short or open between revolution sensor harness connector E73 and ECM harness connector M78 ● Ground circuit for ECM Refer to ***EL-9***, “TROUBLE DIAGNOSIS FOR POWER SUPPLY”.

Diagnostic Procedure (Cont'd)

3	CHECK DTC	
Perform Diagnostic Trouble Code (DTC) confirmation procedure. Refer to "DIAGNOSTIC TROUBLE CODE (DTC) CONFIRMATION PROCEDURE", AT-263.		
OK or NG		
OK	▶	**INSPECTION END**
NG	▶	1. Perform TCM input/output signal inspection. 2. If NG, recheck TCM pin terminals for damage or loose connection with harness connector.

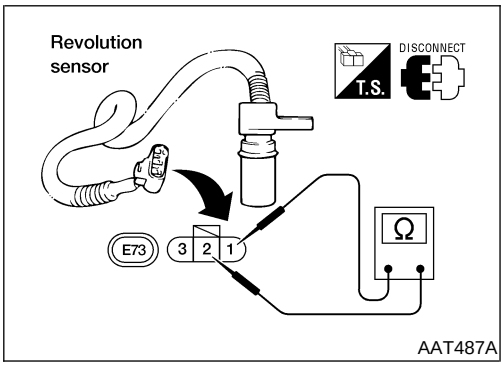

Component Inspection

NEAT0142

REVOLUTION SENSOR

NEAT0142S01

- For removal, refer to "REMOVAL", AT-417.
- Check resistance between terminals 1 and 2.

Terminal No.		Resistance
1	2	500 - 650Ω

Description

NEAT0143

The engine speed signal is sent from the ECM to the TCM.

TCM TERMINALS AND REFERENCE VALUE

NEAT0143S01

Remarks: Specification data are reference values.

Terminal No.	Wire color	Item	Condition		Judgement standard (Approx.)
39	P/L	Engine speed signal		When engine runs at idle speed.	0.5 - 2.5V

ON BOARD DIAGNOSIS LOGIC

NEAT0143S02

Diagnostic trouble code	Malfunction is detected when ...	Check item (Possible cause)
: ENGINE SPEED SIG	TCM does not receive the proper voltage signal from ECM.	• Harness or connectors (The sensor circuit is open or shorted)
: P0725		

DIAGNOSTIC TROUBLE CODE (DTC) CONFIRMATION PROCEDURE

=NEAT0143S03

CAUTION:

Always drive vehicle at a safe speed.

NOTE:

If "DIAGNOSTIC TROUBLE CODE CONFIRMATION PROCEDURE" has been previously conducted, always turn ignition switch OFF and wait at least 5 seconds before conducting the next test.

After the repair, perform the following procedure to confirm the malfunction is eliminated.

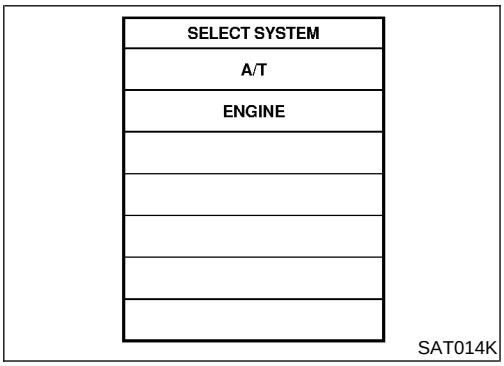

With CONSULT-II

1) Turn ignition switch ON and select "DATA MONITOR" mode for "ENGINE" with CONSULT-II.
2) Start engine and maintain the following conditions for at least 10 consecutive seconds.
   VHCL SPEED SE: 10 km/h (6 MPH) or more
   THRTL POS SEN: More than 1.2V
   Selector lever: D position (O/D ON)

With GST

1) Follow the procedure "With CONSULT-II".

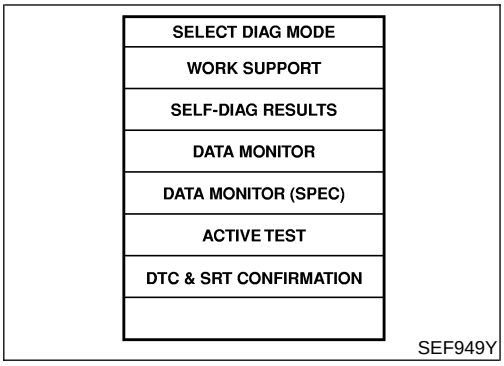

Wiring Diagram — AT — ENGSS

NEAT0144

AT-ENGSS-01

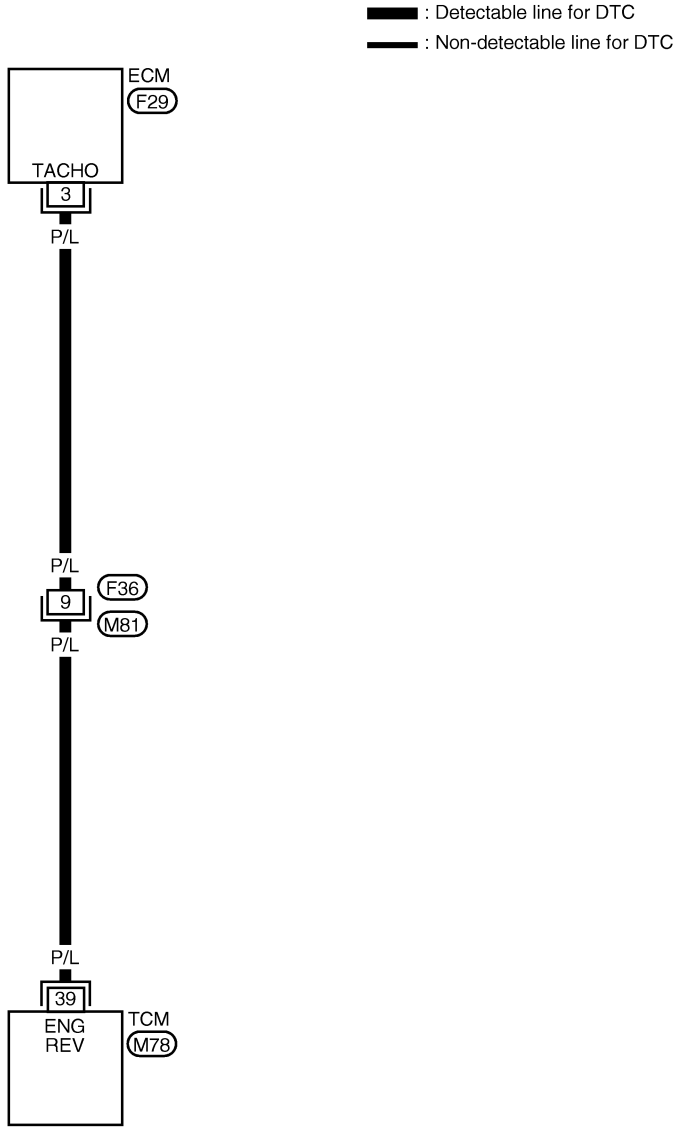

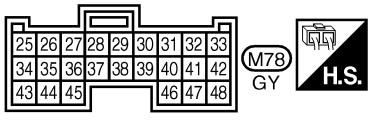

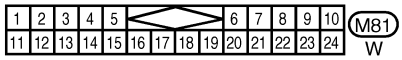

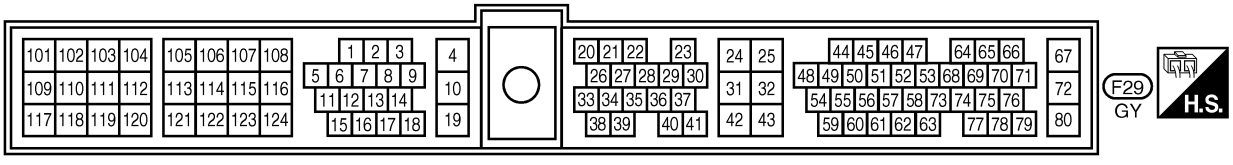

AAT585A

Diagnostic Procedure

NEAT0145

1	CHECK DTC WITH ECM	
Perform diagnostic test mode II (self-diagnostic results) for engine control. Check ignition signal circuit condition.		
OK or NG		
OK	▶	GO TO 2.
NG	▶	Check ignition signal circuit for engine control. Refer to ***EC-1183*** (VG33E only) or ***EC-1786*** (VG33ER only), “IGNITION SIGNAL”.

2	CHECK INPUT SIGNAL	
With CONSULT-II 1. Start engine. 2. Select “TCM INPUT SIGNALS” in “DATA MONITOR” mode for “A/T” with CONSULT-II. 3. Read out the value of “ENGINE SPEED”. Check engine speed changes according to throttle position.		

DATA MONITOR	
MONITORING	
ENGINE SPEED	XXX rpm
TURBINE REV	XXX rpm
OVERDRIVE SW	ON
PN POSI SW	OFF
R POSITION SW	OFF

SAT645J

Without CONSULT-II
1. Start engine.
2. Check voltage between TCM harness connector M78 terminal 39 and ground.

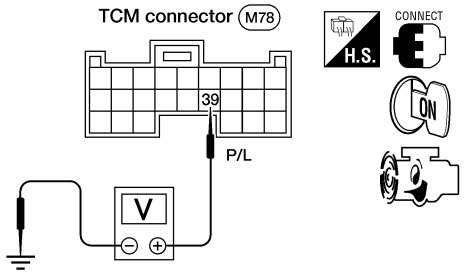

AAT488A

Does battery voltage (idle speed) 0.5 - 2.5V?

Yes	▶	GO TO 3.
No	▶	**Check the following items:** ● Harness for short or open between TCM connector M78 and ECM connector F29 ● Resistor ● Ignition coil Refer to ***EC-1183*** (VG33E only) or ***EC-1786*** (VG33ER only), “IGNITION SIGNAL”.

3	CHECK DTC	
Perform Diagnostic Trouble Code (DTC) confirmation procedure. Refer to "DIAGNOSTIC TROUBLE CODE (DTC) CONFIRMATION PROCEDURE", AT-268.		
OK or NG		
OK	▶	**INSPECTION END**
NG	▶	1. Perform TCM input/output signal inspection. 2. If NG, recheck TCM pin terminals for damage or loose connection with harness connector.

Description

NEAT0146

- This is an OBD-II self-diagnostic item and not available in TCM self-diagnosis.
- This malfunction will not be detected while the O/D OFF indicator lamp is indicating another self-diagnosis malfunction.
- This malfunction is detected when the A/T does not shift into first gear position as instructed by the TCM. This is not caused by electrical malfunction (circuits open or shorted) but by mechanical malfunction such as control valve sticking, improper solenoid valve operation, etc.

Gear position	1	2	3	4
Shift solenoid valve A	ON (Closed)	OFF (Open)	OFF (Open)	ON (Closed)
Shift solenoid valve B	ON (Closed)	ON (Closed)	OFF (Open)	OFF (Open)

TCM TERMINALS AND REFERENCE VALUE

NEAT0146S01

Remarks: Specification data are reference values.

Terminal No.	Wire color	Item	Condition		Judgement standard (Approx.)
11	L/W	Shift solenoid valve A		When shift solenoid valve A operates. (When driving in D_1 or D_4)	Battery voltage
				When shift solenoid valve A does not operate. (When driving in D_2 or D_3)	0V
12	L/Y	Shift solenoid valve B		When shift solenoid valve B operates. (When driving in D_1 or D_2)	Battery voltage
				When shift solenoid valve B does not operate. (When driving in D_3 or D_4)	0V

ON BOARD DIAGNOSIS LOGIC

NEAT0146S02

This diagnosis monitors actual gear position by checking the torque converter slip ratio calculated by TCM as follows:
Torque converter slip ratio = A x C/B
A: Output shaft revolution signal from revolution sensor
B: Engine speed signal from ECM
C: Gear ratio determined as gear position which TCM supposes
If the actual gear position is higher than the position (1st) supposed by TCM, the slip ratio will be more than normal. In case the ratio exceeds the specified value, TCM judges this diagnosis malfunction.
This malfunction will be caused when either shift solenoid valve A is stuck open or shift solenoid valve B is stuck open.

Gear position supposed by TCM	1	2	3	4
In case of gear position with no malfunctions	1	2	3	4
In case of gear position with shift solenoid valve A stuck open	2*	2	3	3
In case of gear position with shift solenoid valve B stuck open	4*	3	3	4

*: P0731 is detected.

Diagnostic trouble code	Malfunction is detected when ...	Check item (Possible cause)
: A/T 1ST GR FNCTN	A/T cannot be shifted to the 1st gear position even if electrical circuit is good.	• Shift solenoid valve A • Shift solenoid valve B • Each clutch • Hydraulic control circuit
GST : P0731		

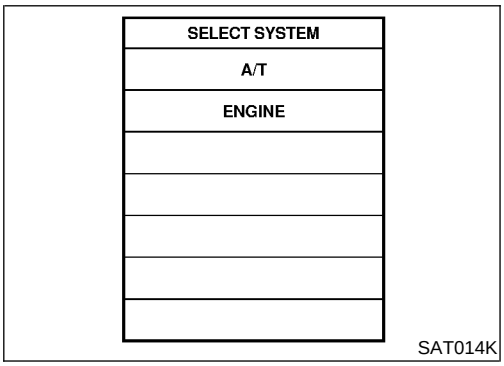

SAT014K

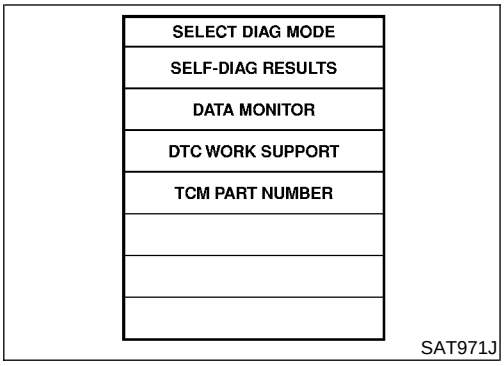

SAT971J

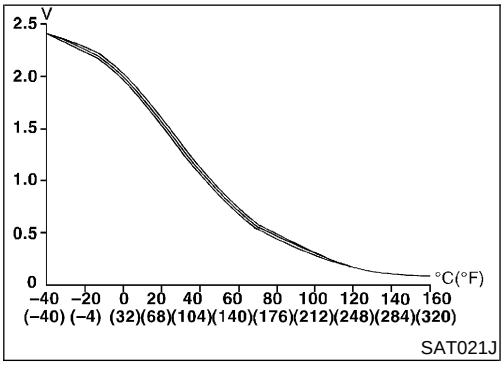

SAT021J

DIAGNOSTIC TROUBLE CODE (DTC) CONFIRMATION PROCEDURE

NEAT0146S03

CAUTION:

- **Always drive vehicle at a safe speed.**
- **Be careful not to rev engine into the red zone on the tachometer.**

NOTE:
If "DIAGNOSTIC TROUBLE CODE CONFIRMATION PROCEDURE" has been previously conducted, always turn ignition switch OFF and wait at least 5 seconds before conducting the next test.

TESTING CONDITIONS:
Always drive vehicle on a level road to improve the accuracy of test.
After the repair, perform the following procedure to confirm the malfunction is eliminated.

With CONSULT-II

1) Start engine and select "DATA MONITOR" mode for "A/T" with CONSULT-II.
2) Make sure that output voltage of A/T fluid temperature sensor is within the range below.
   FLUID TEMP SEN: 0.4 - 1.5V
   If out of range, drive the vehicle to decrease the voltage (warm up the fluid) or stop engine to increase the voltage (cool down the fluid).
3) Select "1ST GR FNCTN P0731" of "DTC WORK SUPPORT" mode for "A/T" with CONSULT-II and touch "START".
4) Accelerate vehicle to 17 to 23 km/h (11 to 14 MPH) under the following condition and release the accelerator pedal completely.
   THROTTLE POSI: Less than 1/8 (at all times during step 4)
   Selector lever: D position (O/D ON)
   - **Check that "GEAR" shows 2 after releasing pedal.**
5) Depress accelerator pedal to WOT (more than 7/8 of "THROTTLE POSI") quickly from a speed of 17 to 23 km/h (11 to 14 MPH) until "TESTING" changes to "STOP VEHICLE" or "COMPLETED". (It will take approximately 3 seconds)
   If the check result NG appears on CONSULT-II screen, go to "DIAGNOSTIC PROCEDURE", AT-276.
   If "STOP VEHICLE" appears on CONSULT-II screen, go to the following step.
   - **Check that "GEAR" shows 1 when depressing accelerator pedal to WOT.**
   - **If "TESTING" does not appear on CONSULT-II for a long time, select "SELF-DIAG RESULTS" for "ENGINE". In case**

a 1st trip DTC other than P0731 is shown, refer to applicable "TROUBLE DIAGNOSIS FOR DTC".

6) Stop vehicle.
7) Follow the instruction displayed. (Check for normal shifting referring to the table below.)

Vehicle condition	Gear on actual transmission shift pattern when screen is changed to 1 → 2 → 3 → 4
No malfunction exists	1 → 2 → 3 → 4
Malfunction for P0731 exists.	2 → 2 → 3 → 3
	4 → 3 → 3 → 4

8) Make sure that "OK" is displayed. (If "NG" is displayed, refer to "DIAGNOSTIC PROCEDURE".)
Refer to "DIAGNOSTIC PROCEDURE", AT-276.
Refer to shift schedule, AT-497.

With GST

1) Follow the procedure "With CONSULT-II".

Wiring Diagram — AT — 1ST

NEAT0147

AT-1STSIG-01

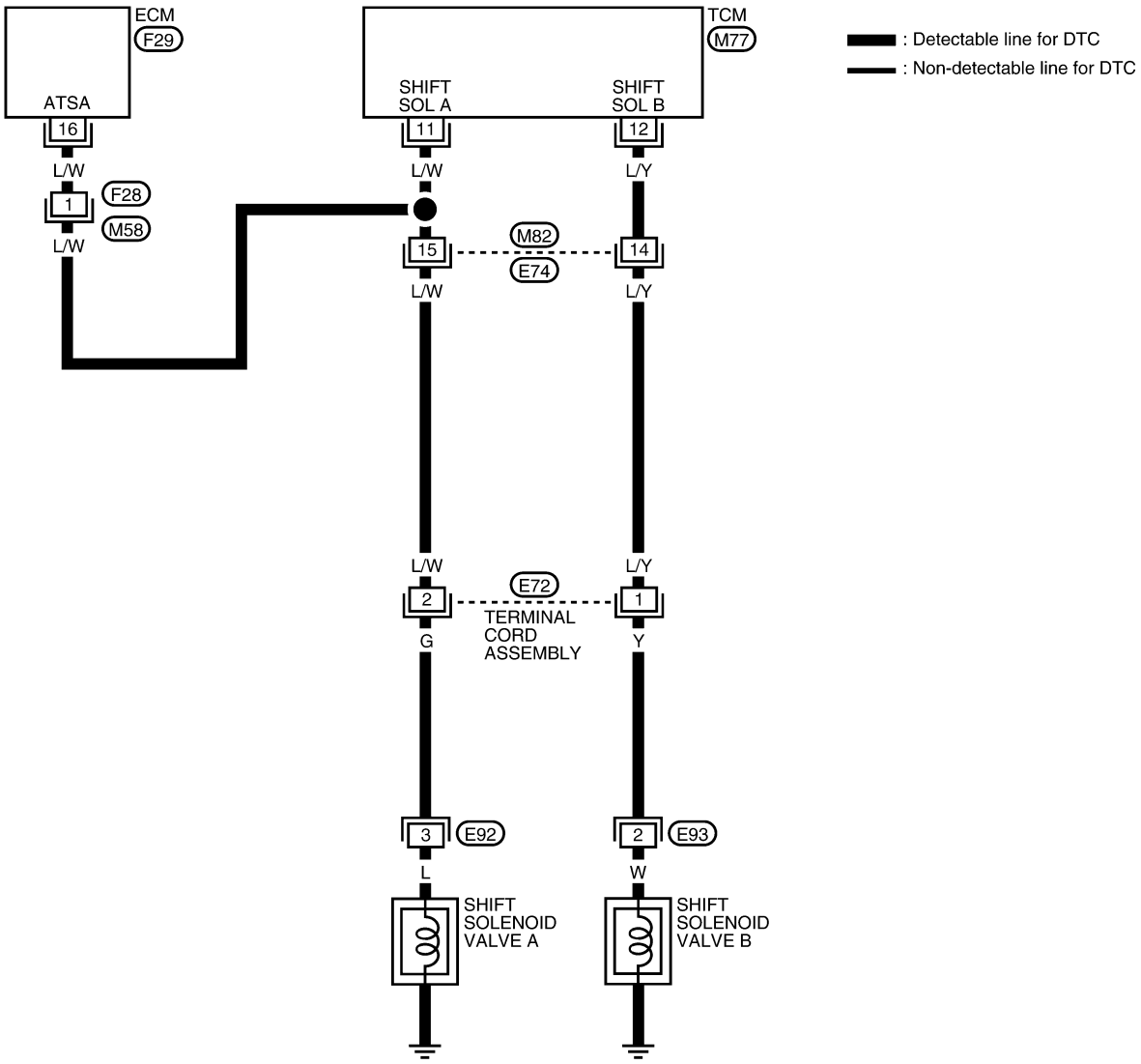

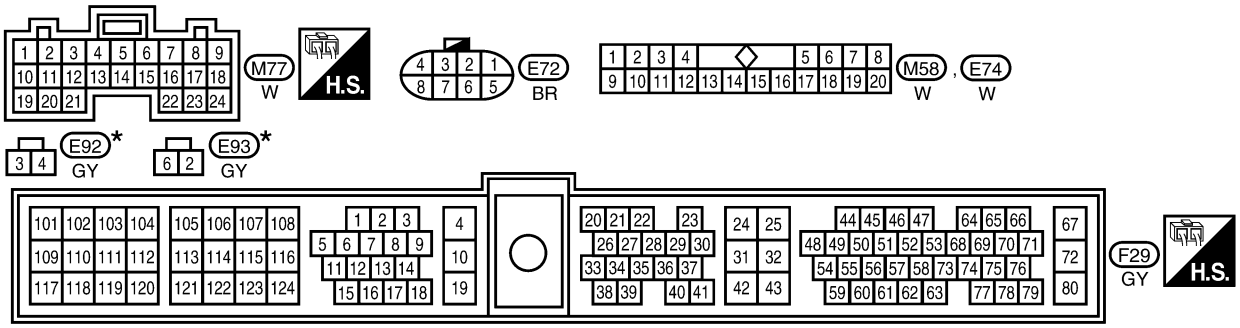

★: This connector is not shown in "HARNESS LAYOUT" of EL section.

LAT373

Diagnostic Procedure

NEAT0148

1	CHECK SHIFT SOLENOID VALVE

1. Remove control valve assembly. Refer to “REMOVAL”, AT-416.
2. Check shift solenoid valve operation.
- Shift solenoid valve A
- Shift solenoid valve B

Refer to “Component Inspection”, AT-277.

OK or NG

OK	▶	GO TO 2.
NG	▶	Repair or replace shift solenoid valve assembly.

2	CHECK CONTROL VALVE

1. Disassemble control valve assembly.
   Refer to “Control Valve Assembly”, AT-442.
2. Check to ensure that:
- Valve, sleeve and plug slide along valve bore under their own weight.
- Valve, sleeve and plug are free from burrs, dents and scratches.
- Control valve springs are free from damage, deformation and fatigue.
- Hydraulic line is free from obstacles.

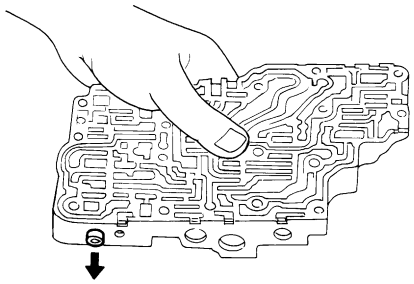

SAT367H

OK or NG

OK	▶	GO TO 3.
NG	▶	Repair control valve assembly.

3	CHECK DTC

Perform Diagnostic Trouble Code (DTC) confirmation procedure. Refer to “DIAGNOSTIC TROUBLE CODE (DTC) CONFIRMATION PROCEDURE”, AT-273.

OK or NG

OK	▶	**INSPECTION END**
NG	▶	Check control valve again. Repair or replace control valve assembly.

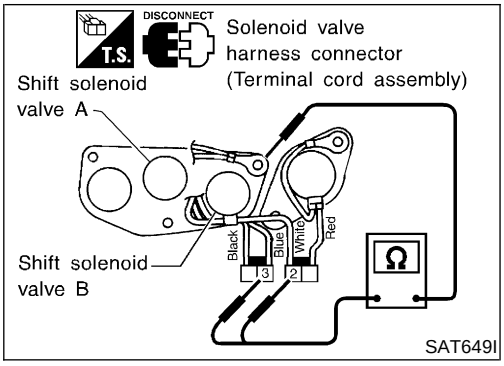

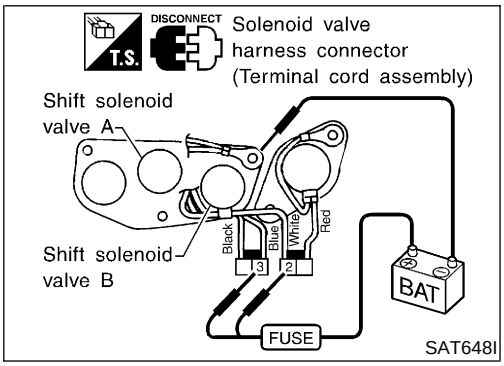

Component Inspection

=NEAT0149

SHIFT SOLENOID VALVE A AND B

NEAT0149S01

- For removal, refer to “REMOVAL”, AT-416.

Resistance Check

NEAT0149S0101

- Check resistance between terminals (2 or 3) and ground.

Solenoid valve	Terminal No.		Resistance (Approx.)
Shift solenoid valve A	3	Ground	20 - 40Ω
Shift solenoid valve B	2		

Operation Check

NEAT0149S0102

- Check solenoid valve by listening for its operating sound while applying battery voltage to the terminals (2 or 3) and ground.

Description

NEAT0150

- This is an OBD-II self-diagnostic item and not available in TCM self-diagnosis.
- This malfunction will not be detected while the O/D OFF indicator lamp is indicating another self-diagnosis malfunction.
- This malfunction is detected when the A/T does not shift into second gear position as instructed by the TCM. This is not caused by electrical malfunction (circuits open or shorted) but by mechanical malfunction such as control valve sticking, improper solenoid valve operation, etc.

Gear position	1	2	3	4
Shift solenoid valve A	ON (Closed)	OFF (Open)	OFF (Open)	ON (Closed)
Shift solenoid valve B	ON (Closed)	ON (Closed)	OFF (Open)	OFF (Open)

TCM TERMINALS AND REFERENCE VALUE

NEAT0150S01

Remarks: Specification data are reference values.

Terminal No.	Wire color	Item	Condition		Judgement standard (Approx.)
12	L/Y	Shift solenoid valve B		When shift solenoid valve B operates. (When driving in "D_1" or "D_2")	Battery voltage
				When shift solenoid valve B does not operate. (When driving in "D_3" or "D_4")	0V

ON BOARD DIAGNOSIS LOGIC

NEAT0150S02

This diagnosis monitors actual gear position by checking the torque converter slip ratio calculated by TCM as follows:
Torque converter slip ratio = A x C/B
A: Output shaft revolution signal from revolution sensor
B: Engine speed signal from ECM
C: Gear ratio determined as gear position which TCM supposes
If the actual gear position is higher than the position (2nd) supposed by TCM, the slip ratio will be more than normal. In case the ratio exceeds the specified value, TCM judges this diagnosis malfunction.
This malfunction will be caused when shift solenoid valve B is stuck open.

Gear position supposed by TCM	1	2	3	4
In case of gear position with no malfunctions	1	2	3	4
In case of gear position with shift solenoid valve B stuck open	4	3*	3	4

*: P0732 is detected.

Diagnostic trouble code	Malfunction is detected when ...	Check item (Possible cause)
: A/T 2ND SIGNAL	A/T cannot be shifted to the 2nd gear position even if electrical circuit is good.	• Shift solenoid valve B • Each clutch • Hydraulic control circuit
: P0732		

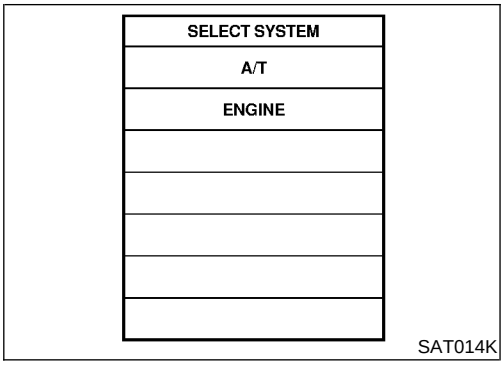

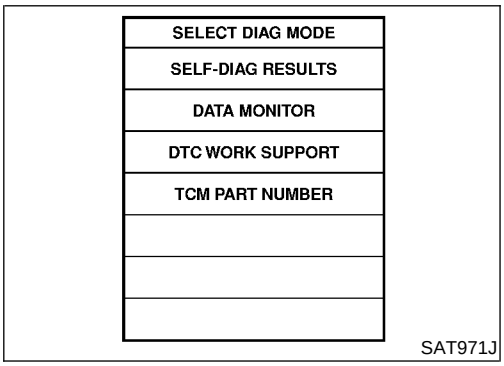

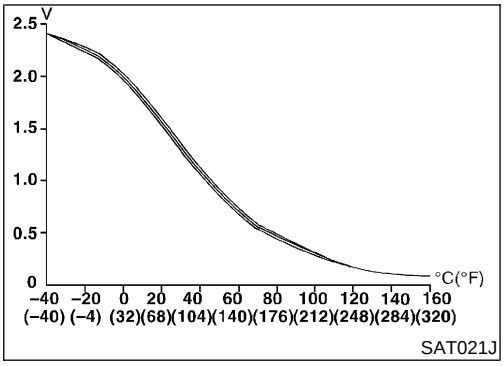

DIAGNOSTIC TROUBLE CODE (DTC) CONFIRMATION PROCEDURE

NEAT0150S03

CAUTION:

- **Always drive vehicle at a safe speed.**
- **Be careful not to rev engine into the red zone on the tachometer.**

NOTE:
If "DIAGNOSTIC TROUBLE CODE CONFIRMATION PROCEDURE" has been previously conducted, always turn ignition switch OFF and wait at least 5 seconds before conducting the next test.

TESTING CONDITIONS:
Always drive vehicle on a level road to improve the accuracy of test.
After the repair, perform the following procedure to confirm the malfunction is eliminated.

With CONSULT-II

1) Start engine and select "DATA MONITOR" mode for "A/T" with CONSULT-II.
2) Make sure that output voltage of A/T fluid temperature sensor is within the range below.
   FLUID TEMP SEN: 0.4 - 1.5V
   If out of range, drive the vehicle to decrease the voltage (warm up the fluid) or stop engine to increase the voltage (cool down the fluid).
3) Select "2ND GR FNCTN P0732" of "DTC WORK SUPPORT" mode for "A/T" with CONSULT-II and touch "START".
4) Accelerate vehicle to 50 to 55 km/h (31 to 34 MPH) under the following condition and release the accelerator pedal completely.
   THROTTLE POSI: Less than 1/8 (at all times during step 4)
   Selector lever: D position (O/D ON)
   - **Check that "GEAR" shows 3 or 4 after releasing pedal.**
5) Depress accelerator pedal to WOT (more than 7/8 of "THROTTLE POSI") quickly from a speed of 50 to 55 km/h (31 to 34 MPH) until "TESTING" changes to "STOP VEHICLE" or "COMPLETED". (It will take approximately 3 seconds.)
   If the check result NG appears on CONSULT-II screen, go to "DIAGNOSTIC PROCEDURE", AT-282.
   If "STOP VEHICLE" appears on CONSULT-II screen, go to following step.
   - **Check that "GEAR" shows 2 when depressing accelerator pedal to WOT.**
   - **If "TESTING" does not appear on CONSULT-II for a long time, select "SELF-DIAG RESULTS" for "ENGINE". In case a 1st trip DTC other than P0732 is shown, refer to applicable "TROUBLE DIAGNOSIS FOR DTC".**
6) Stop vehicle.
7) Follow the instruction displayed. (Check for normal shifting referring to the table below.)

Vehicle condition	Gear on actual transmission shift pattern when screen is changed to 1 → 2 → 3 → 4
No malfunction exists	1 → 2 → 3 → 4
Malfunction for P0732 exists.	4 → 3 → 3 → 4

8) Make sure that "OK" is displayed. (If "NG" is displayed, refer

to "DIAGNOSTIC PROCEDURE".) Refer to "DIAGNOSTIC PROCEDURE", AT-282. Refer to "Shift Schedule", AT-497.

With GST

1) Follow the procedure "With CONSULT-II".

Wiring Diagram — AT — 2ND

NEAT0151

AT-2NDSIG-01

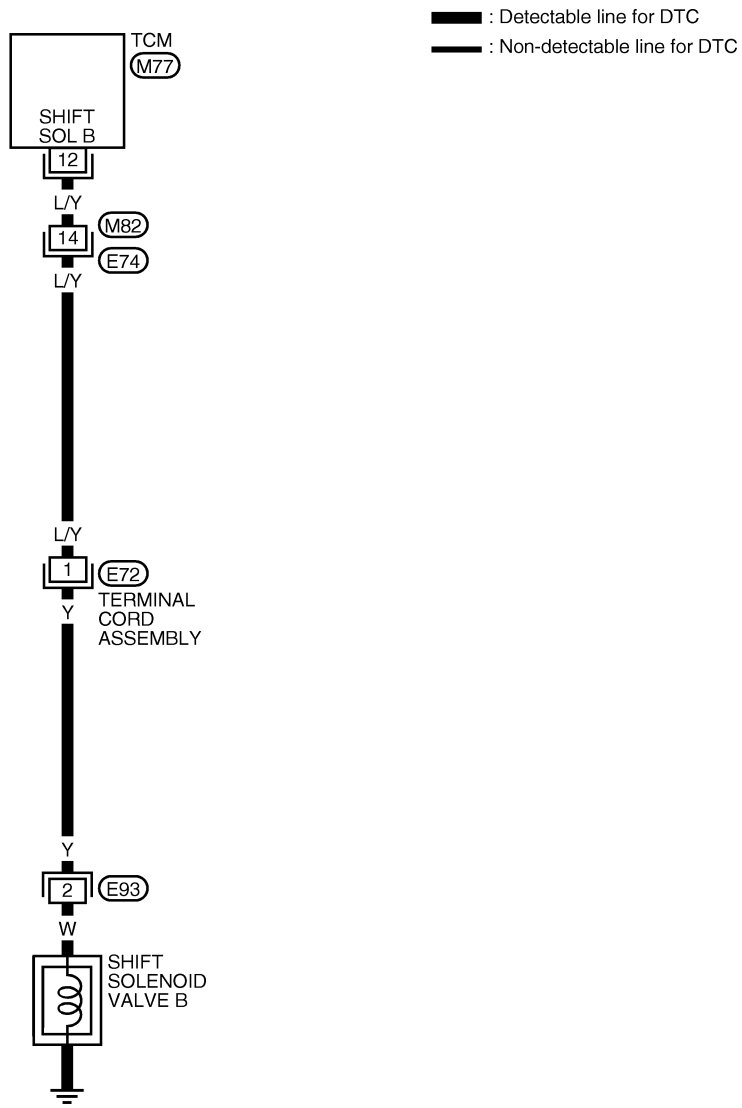

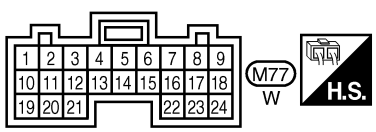

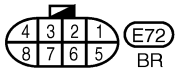

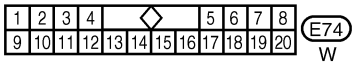

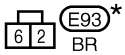

*: This connector is not shown in "HARNESS LAYOUT" of EL section.

AAT587A

Diagnostic Procedure

NEAT0152

1	CHECK SHIFT SOLENOID VALVE

1. Remove control valve assembly. Refer to “REMOVAL”, AT-416.
2. Check shift solenoid valve operation.
- Shift solenoid valve B

Refer to “Component Inspection”, AT-282.

OK or NG

OK	▶	GO TO 2.
NG	▶	Repair or replace shift solenoid valve assembly.

2	CHECK CONTROL VALVE

1. Disassemble control valve assembly.
   Refer to “Control Valve Assembly”, AT-442.
2. Check to ensure that:
- Valve, sleeve and plug slide along valve bore under their own weight.
- Valve, sleeve and plug are free from burrs, dents and scratches.
- Control valve springs are free from damage, deformation and fatigue.
- Hydraulic line is free from obstacles.

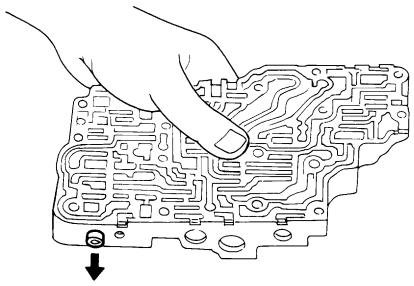

SAT367H

OK or NG

OK	▶	GO TO 3.
NG	▶	Repair control valve assembly.

3	CHECK DTC

Perform Diagnostic Trouble Code (DTC) confirmation procedure. Refer to “DIAGNOSTIC TROUBLE CODE (DTC) CONFIRMATION PROCEDURE”, AT-279.

OK or NG

OK	▶	**INSPECTION END**
NG	▶	Check control valve again. Repair or replace control valve assembly.

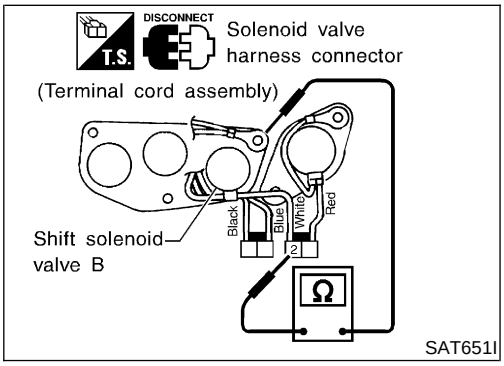

SAT651I

Component Inspection

NEAT0153

SHIFT SOLENOID VALVE B

NEAT0153S01

- For removal, refer to AT-416.

Resistance Check

NEAT0153S0101

- Check resistance between terminal 2 and ground.

Solenoid valve	Terminal No.		Resistance (Approx.)
Shift solenoid valve B	2	Ground	20 - 40Ω

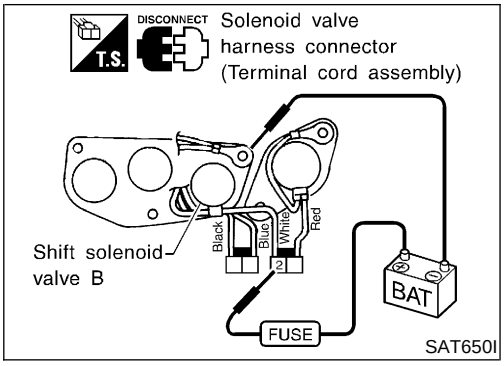

Operation Check

NEAT0153S0102

- Check solenoid valve by listening for its operating sound while applying battery voltage to the terminal 2 and ground.

Description

NEAT0154

- This is an OBD-II self-diagnostic item and not available in TCM self-diagnosis.
- This malfunction will not be detected while the O/D OFF indicator lamp is indicating another self-diagnosis malfunction.
- This malfunction is detected when the A/T does not shift into third gear position as instructed by the TCM. This is not caused by electrical malfunction (circuits open or shorted) but by mechanical malfunction such as control valve sticking, improper solenoid valve operation, malfunctioning servo piston or brake band, etc.

Gear position	1	2	3	4
Shift solenoid valve A	ON (Closed)	OFF (Open)	OFF (Open)	ON (Closed)
Shift solenoid valve B	ON (Closed)	ON (Closed)	OFF (Open)	OFF (Open)

TCM TERMINALS AND REFERENCE VALUE

NEAT0154S01

Remarks: Specification data are reference values.

Terminal No.	Wire color	Item	Condition		Judgement standard (Approx.)
11	L/W	Shift solenoid valve A		When shift solenoid valve A operates. (When driving in D_1 or D_4)	Battery voltage
				When shift solenoid valve A does not operate. (When driving in D_2 or D_3)	0V

ON BOARD DIAGNOSIS LOGIC

NEAT0154S02

This diagnosis monitors actual gear position by checking the torque converter slip ratio calculated by TCM as follows:
Torque converter slip ratio = A x C/B
A: Output shaft revolution signal from revolution sensor
B: Engine speed signal from ECM
C: Gear ratio determined as gear position which TCM supposes
If the actual gear position is higher than the position (3rd) supposed by TCM, the slip ratio will be more than normal. In case the ratio exceeds the specified value, TCM judges this diagnosis malfunction.
This malfunction will be caused when shift solenoid valve A is stuck closed.

Gear position supposed by TCM	1	2	3	4
In case of gear position with no malfunctions	1	2	3	4
In case of gear position with shift solenoid valve A stuck closed	1	1	4*	4

*: P0733 is detected.

Diagnostic trouble code	Malfunction is detected when ...	Check item (Possible cause)
: A/T 3RD GR FNCTN	A/T cannot be shifted to the 3rd gear position even if electrical circuit is good.	• Shift solenoid valve A • Each clutch • Hydraulic control circuit
: P0733		

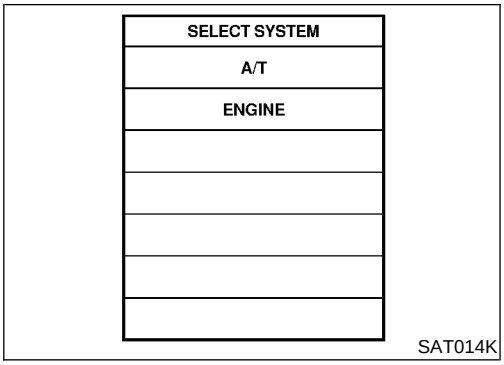

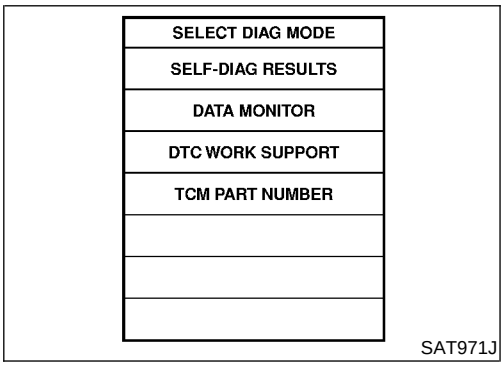

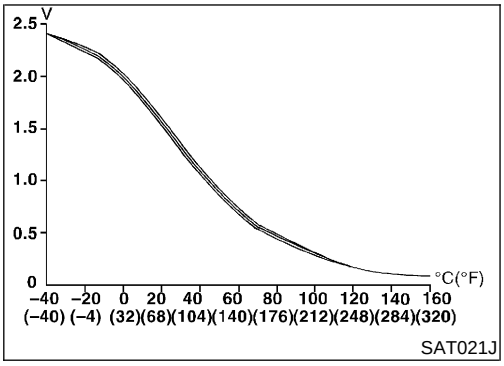

DIAGNOSTIC TROUBLE CODE (DTC) CONFIRMATION PROCEDURE

NEAT0154S03

CAUTION:

- **Always drive vehicle at a safe speed.**
- **Be careful not to rev engine into the red zone on the tachometer.**

NOTE:

If "DIAGNOSTIC TROUBLE CODE CONFIRMATION PROCEDURE" has been previously conducted, always turn ignition switch OFF and wait at least 5 seconds before conducting the next test.

TESTING CONDITIONS:

Always drive vehicle on a level road to improve the accuracy of test.

After the repair, perform the following procedure to confirm the malfunction is eliminated.

With CONSULT-II

1) Start engine and select "DATA MONITOR" mode for "A/T" with CONSULT-II.
2) Make sure that output voltage of A/T fluid temperature sensor is within the range below.
   FLUID TEMP SEN: 0.4 - 1.5V
   If out of range, drive the vehicle to decrease the voltage (warm up the fluid) or stop engine to increase the voltage (cool down the fluid).
3) Select "3RD GR FNCTN P0733" of "DTC WORK SUPPORT" mode for "A/T" with CONSULT-II and touch "START".
4) Accelerate vehicle to 70 to 85 km/h (43 to 53 MPH) under the following condition and release the accelerator pedal completely.
   THROTTLE POSI: Less than 1/8 (at all times during step 4)
   Selector lever: D position (O/D ON)
   - **Check that "GEAR" shows 4 after releasing pedal.**
5) Depress accelerator pedal steadily with 3.5/8 - 4.5/8 of "THROTTLE POSI" from a speed of 70 to 85 km/h (43 to 53 MPH) until "TESTING" changes to "STOP VEHICLE" or "COMPLETED". (It will take approximately 3 seconds.)
   If the check result NG appears on CONSULT-II screen, go to "DIAGNOSTIC PROCEDURE", AT-288.
   If "STOP VEHICLE" appears on CONSULT-II screen, go to following step.
   - **Check that "GEAR" shows 3 when depressing accelerator pedal with 3.5/8 - 4.5/8 of "THROTTLE POSI".**
   - **If "TESTING" does not appear on CONSULT-II for a long time, select "SELF-DIAG RESULTS" for "ENGINE". In case a 1st trip DTC other than P0733 is shown, refer to applicable "TROUBLE DIAGNOSIS FOR DTC".**
6) Stop vehicle.
7) Follow the instruction displayed. (Check for normal shifting referring to the table below.)

Vehicle condition	Gear on actual transmission shift pattern when screen is changed to 1 → 2 → 3 → 4
No malfunction exists.	1 → 2 → 3 → 4
Malfunction for P0733 exists.	1 → 1 → 4 → 4

8) Make sure that "OK" is displayed. (If "NG" is displayed, refer

to "DIAGNOSTIC PROCEDURE".) Refer to "DIAGNOSTIC PROCEDURE", AT-288.
Refer to "Shift Schedule", AT-497.

With GST

1) Follow the procedure "With CONSULT-II".

Wiring Diagram — AT — 3RD

NEAT0155

AT-3RDSIG-01

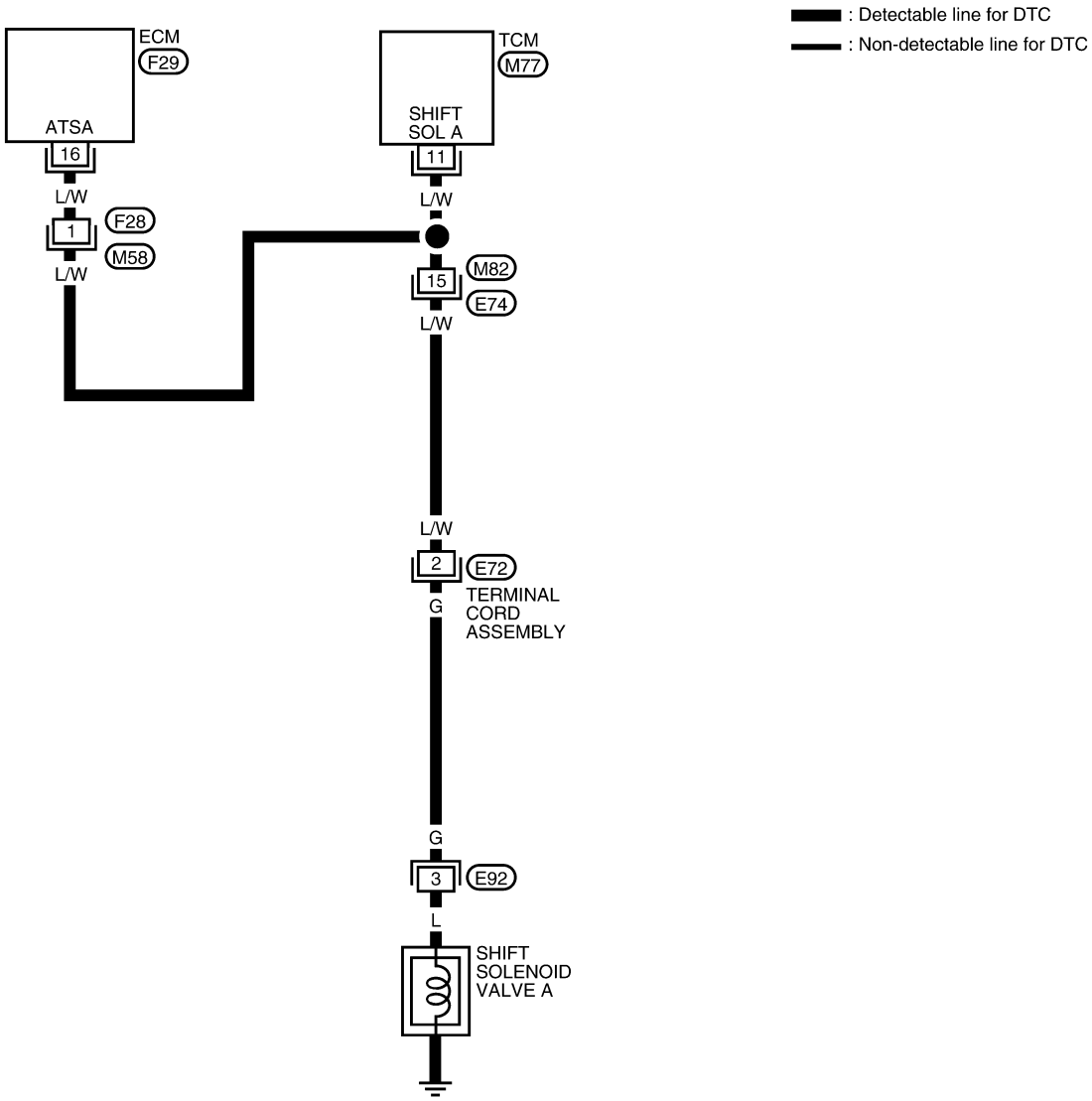

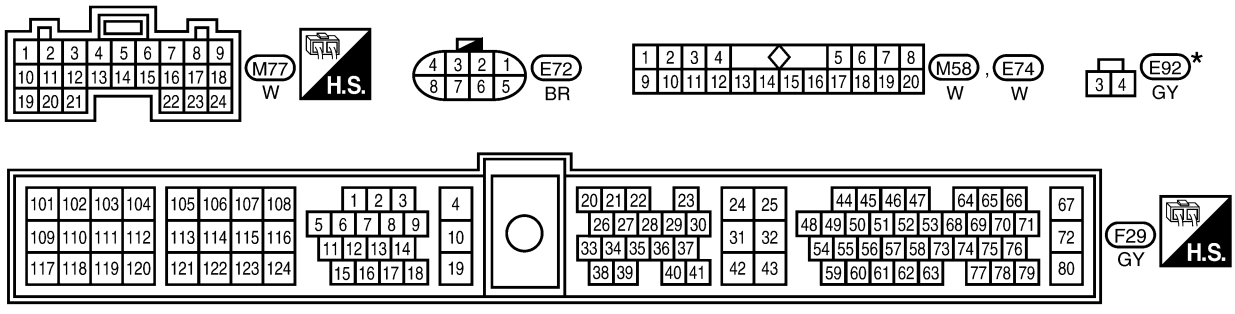

*: This connector is not shown in "HARNESS LAYOUT" of EL section.

WAT374

Diagnostic Procedure

NEAT0156

1	CHECK SHIFT SOLENOID VALVE

1. Remove control valve assembly. Refer to “REMOVAL”, AT-416.
2. Check shift solenoid valve operation.

- Shift solenoid valve A

Refer to “Component Inspection”, AT-289.

OK or NG

OK	▶	GO TO 2.
NG	▶	Repair or replace shift solenoid valve assembly.

2	CHECK CONTROL VALVE

1. Disassemble control valve assembly.
   Refer to “Control Valve Assembly”, AT-442.
2. Check to ensure that:

- Valve, sleeve and plug slide along valve bore under their own weight.
- Valve, sleeve and plug are free from burrs, dents and scratches.
- Control valve springs are free from damage, deformation and fatigue.
- Hydraulic line is free from obstacles.

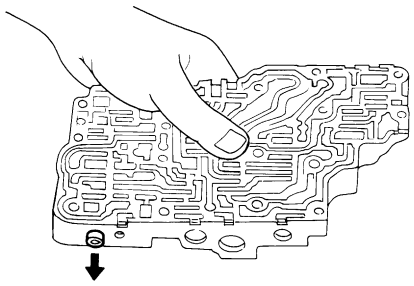

SAT367H

OK or NG

OK	▶	GO TO 3.
NG	▶	Repair control valve assembly.

3	CHECK DTC

Perform Diagnostic Trouble Code (DTC) confirmation procedure. Refer to “DIAGNOSTIC TROUBLE CODE (DTC) CONFIRMATION PROCEDURE”, AT-285.

OK or NG

OK	▶	**INSPECTION END**
NG	▶	Check control valve again. Repair or replace control valve assembly.

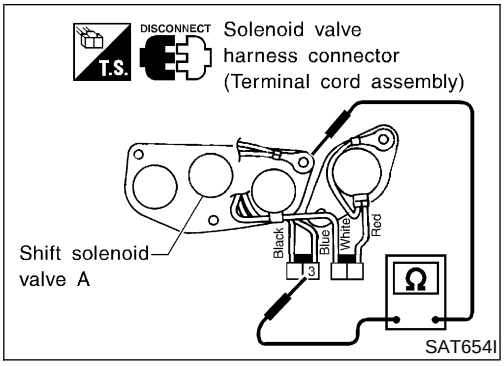

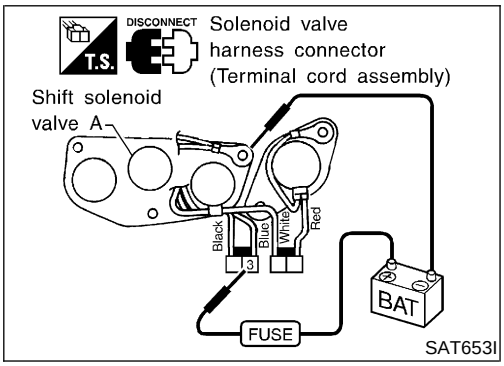

Component Inspection

=NEAT0157

SHIFT SOLENOID VALVE A

NEAT0157S01

- For removal, refer to “REMOVAL”, AT-416.

Resistance Check

NEAT0157S0101

- Check resistance between terminal 3 and ground.

Solenoid valve	Terminal No.		Resistance (Approx.)
Shift solenoid valve A	3	Ground	20 - 40Ω

Operation Check

NEAT0157S0102

- Check solenoid valve by listening for its operating sound while applying battery voltage to the terminal 3 and ground.

Description

NEAT0158

- This is an OBD-II self-diagnostic item and not available in TCM self-diagnosis.
- This malfunction will not be detected while the O/D OFF indicator lamp is indicating another self-diagnosis malfunction.
- This malfunction is detected when the A/T does not shift into fourth gear position or the torque converter clutch does not lock up as instructed by the TCM. This is not caused by electrical malfunction (circuits open or shorted) but by mechanical malfunction such as control valve sticking, improper solenoid valve operation, malfunctioning oil pump or torque converter clutch, etc.

CONSULT-II REFERENCE VALUE IN DATA MONITOR MODE

NEAT0158S01

Remarks: Specification data are reference values.

Monitor item	Condition	Specification (Approx.)
Torque converter clutch solenoid valve duty	Lock-up OFF ↓ Lock-up ON	4% ↓ 94%
Line pressure solenoid valve duty	Small throttle opening (Low line pressure) ↓ Large throttle opening (High line pressure)	24% ↓ 95%

Gear position	1	2	3	4
Shift solenoid valve A	ON (Closed)	OFF (Open)	OFF (Open)	ON (Closed)
Shift solenoid valve B	ON (Closed)	ON (Closed)	OFF (Open)	OFF (Open)

TCM TERMINALS AND REFERENCE VALUE

NEAT0158S02

Remarks: Specification data are reference values.

Terminal No.	Wire color	Item	Condition		Judgement standard (Approx.)
1	GY/R	Line pressure solenoid valve		When releasing accelerator pedal after warming up engine.	1.5 - 2.5V
				When depressing accelerator pedal fully after warming up engine.	0V
2	BR/Y	Line pressure solenoid valve (with dropping resistor)		When releasing accelerator pedal after warming up engine.	4 - 14V
				When depressing accelerator pedal fully after warming up engine.	0V

Terminal No.	Wire color	Item	Condition		Judgement standard (Approx.)
11	L/W	Shift solenoid valve A		When shift solenoid valve A operates. (When driving in D_1 or D_4.)	Battery voltage
				When shift solenoid valve A does not operate. (When driving in D_2 or D_3.)	0V
12	L/Y	Shift solenoid valve B		When shift solenoid valve B operates. (When driving in D_1 or D_2.)	Battery voltage
				When shift solenoid valve B does not operate. (When driving in D_3 or D_4.)	0V

ON BOARD DIAGNOSIS LOGIC

NEAT0158S03

This diagnosis monitors actual gear position by checking the torque converter slip ratio calculated by TCM as follows:
Torque converter slip ratio = A x C/B
A: Output shaft revolution signal from revolution sensor
B: Engine speed signal from ECM
C: Gear ratio determined as gear position which TCM supposes
If the actual gear position is much lower than the position (4th) supposed by TCM, the slip ratio will be much less than normal. In case the ratio does not reach the specified value, TCM judges this diagnosis malfunction.
This malfunction will be caused when shift solenoid valve B is stuck closed.

Gear position supposed by TCM	1	2	3	4
In case of gear position with no malfunctions	1	2	3	4
In case of gear position with shift solenoid valve B stuck closed	1	2	2	1*

*: P0734 is detected.

Diagnostic trouble code	Malfunction is detected when ...	Check item (Possible cause)
: A/T 4TH GR FNCTN	A/T cannot be shifted to the 4th gear position even if electrical circuit is good.	• Shift solenoid valve A • Shift solenoid valve B • Line pressure solenoid valve • Each clutch • Hydraulic control circuit
GST : P0734		

Description (Cont'd)

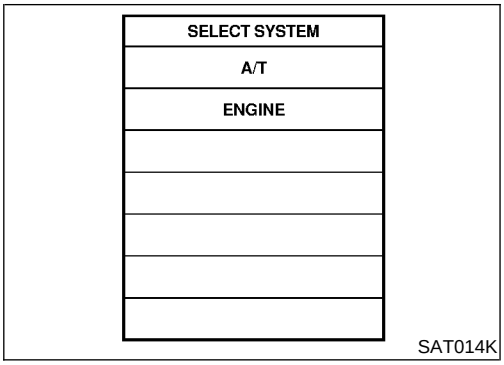

SAT014K

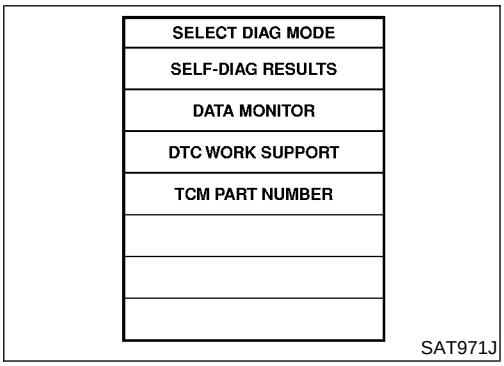

SAT971J

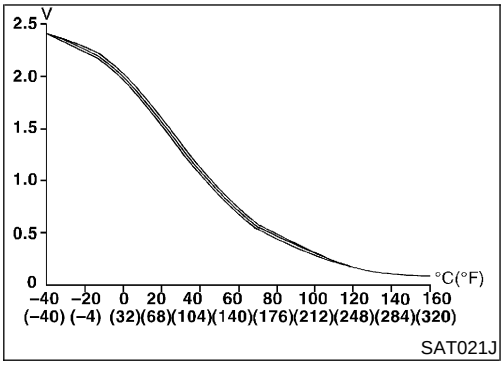

SAT021J

DIAGNOSTIC TROUBLE CODE (DTC) CONFIRMATION PROCEDURE

NEAT0158S04

CAUTION:

- **Always drive vehicle at a safe speed.**
- **Be careful not to rev engine into the red zone on the tachometer.**

NOTE:

If "DIAGNOSTIC TROUBLE CODE CONFIRMATION PROCEDURE" has been previously conducted, always turn ignition switch OFF and wait at least 5 seconds before conducting the next test.

TESTING CONDITIONS:

Always drive vehicle on a level road to improve the accuracy of test.

After the repair, perform the following procedure to confirm the malfunction is eliminated.

With CONSULT-II

1) Start engine and select "DATA MONITOR" mode for "A/T" with CONSULT-II.
2) Make sure that output voltage of A/T fluid temperature sensor is within the range below.
   FLUID TEMP SEN: 0.4 - 1.5V
   If out of range, drive the vehicle to decrease the voltage (warm up the fluid) or stop engine to increase the voltage (cool down the fluid).
3) Select "4TH GR FNCTN P0734" of "DTC WORK SUPPORT" mode for "A/T" with CONSULT-II and touch "START".
4) Accelerate vehicle to 50 to 60 km/h (31 to 37 MPH) under the following condition and release the accelerator pedal completely.
   THROTTLE POSI: Less than 5.5/8 (at all times during step 4)
   Selector lever: D position (O/D ON)
   - **Check that "GEAR" shows 3 after releasing pedal.**
5) Depress accelerator pedal steadily with 1/8 - 2/8 of "THROTTLE POSI" from a speed of 50 to 60 km/h (31 to 37 MPH) until "TESTING" has turned to "STOP VEHICLE" or "COMPLETED". (It will take approximately 3 seconds.)
   If the check result NG appears on CONSULT-II screen, go to "DIAGNOSTIC PROCEDURE", AT-295.
   If "STOP VEHICLE" appears on CONSULT-II screen, go to following step.
   - **Check that "GEAR" shows 4 when depressing accelerator pedal with 1/8 - 2/8 of "THROTTLE POSI".**
   - **If "TESTING" does not appear on CONSULT-II for a long time, select "SELF-DIAG RESULTS" for "ENGINE". In case a 1st trip DTC other than P0734 is shown, refer to applicable "TROUBLE DIAGNOSIS FOR DTC".**
6) Stop vehicle.
7) Follow the instruction displayed. (Check for normal shifting referring to the table below.)

Vehicle condition	Gear on actual transmission shift pattern when screen is changed to 1 → 2 → 3 → 4
No malfunction exists	1 → 2 → 3 → 4
Malfunction for P0734 exists.	1 → 2 → 2 → 1

8) Make sure that "OK" is displayed. (If "NG" is displayed, refer to "DIAGNOSTIC PROCEDURE".) Refer to "DIAGNOSTIC PROCEDURE", AT-295.
Refer to "Shift Schedule", AT-497.

With GST

1) Follow the procedure "With CONSULT-II".

Wiring Diagram — AT — 4TH

NEAT0159

AT-4THSIG-01

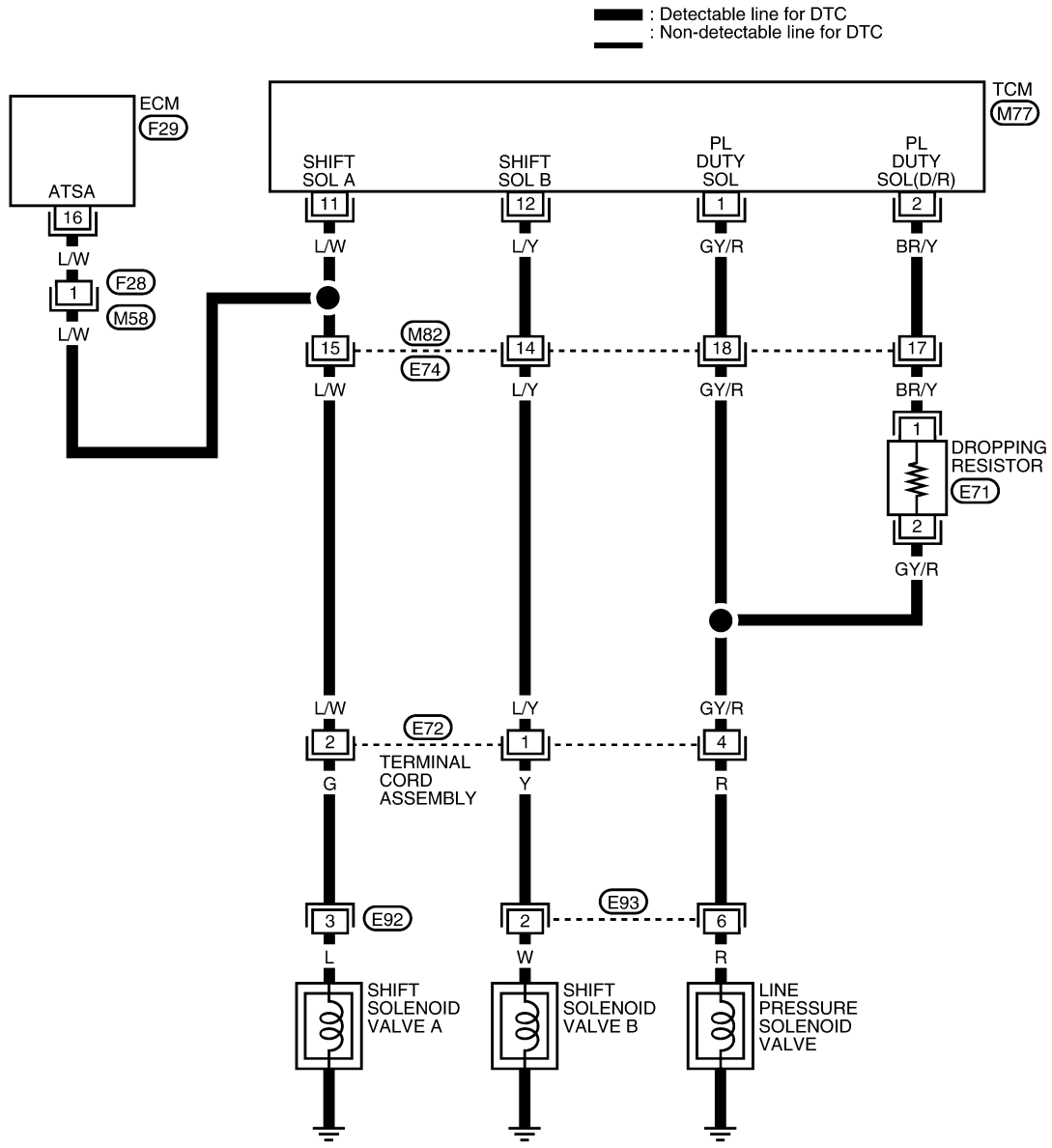

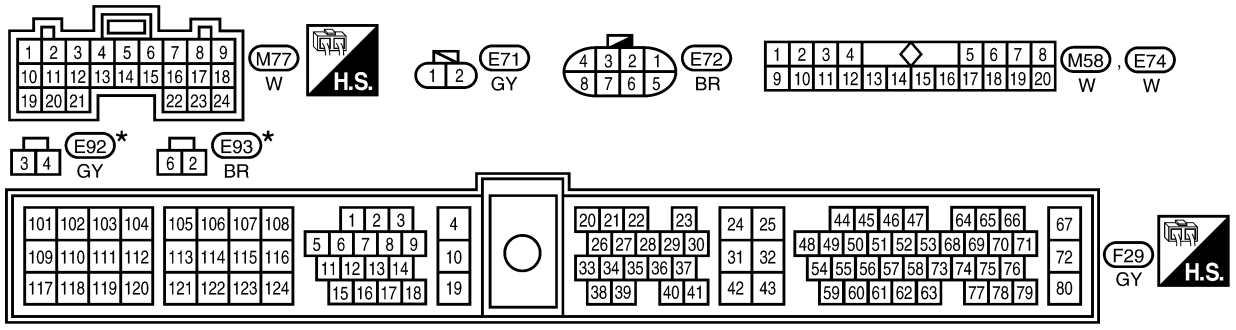

*: This connector is not shown in “HARNESS LAYOUT” of EL section.

LAT375

Diagnostic Procedure

NEAT0160

1	CHECK SHIFT UP (D_3 TO D_4)

During “Cruise Test − Part 1”, AT-219, does A/T shift from D_3 to D_4 at the specified speed?

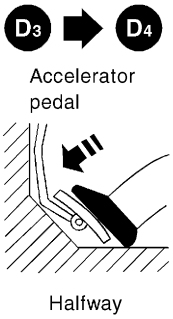

SAT988H

Yes or No

Yes	▶	• GO TO 9.
No	▶	GO TO 2.

2	CHECK LINE PRESSURE

Perform line pressure test. Refer to “Line Pressure Test”, AT-209.

OK or NG

OK	▶	GO TO 3.
NG	▶	GO TO 7.

3	CHECK SOLENOID VALVES

1. Remove control valve assembly. Refer to “REMOVAL”, AT-416.
2. Refer to “Component Inspection”, AT-298.

OK or NG

OK	▶	GO TO 4.
NG	▶	Replace solenoid valve assembly.

Diagnostic Procedure (Cont'd)

4	CHECK CONTROL VALVE

1. Disassemble control valve assembly. Refer to "Control Valve Assembly", AT-442.
2. Check to ensure that:

- Valve, sleeve and plug slide along valve bore under their own weight.
- Valve, sleeve and plug are free from burrs, dents and scratches.
- Control valve springs are free from damage, deformation and fatigue.
- Hydraulic line is free from obstacles.

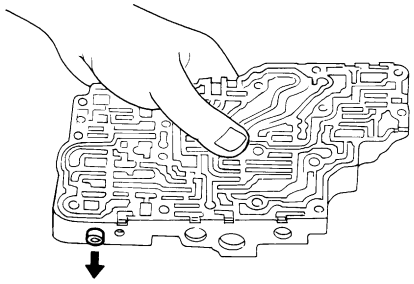

SAT367H

OK or NG

OK	▶	GO TO 5.
NG	▶	Repair control valve.

5	CHECK SHIFT UP (D_3 TO D_4)

Does A/T shift from D_3 to D_4 at the specified speed?

Yes or No

Yes	▶	GO TO 9.
No	▶	Check control valve again. Repair or replace control valve assembly.

6	CHECK LINE PRESSURE SOLENOID VALVE

1. Remove control valve assembly. Refer to "REMOVAL", AT-416.
2. Refer to "Component Inspection", AT-298.

OK or NG

OK	▶	GO TO 7.
NG	▶	Replace solenoid valve assembly.

7	CHECK CONTROL VALVE

1. Disassemble control valve assembly. Refer to "Control Valve Assembly", AT-442.
2. Check line pressure circuit valves for sticking.
- Pressure regulator valve
- Pilot valve
- Pressure modifier valve

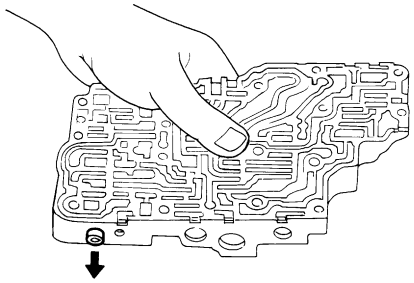

SAT367H

OK or NG

OK	▶	GO TO 8.
NG	▶	Repair control valve.

8	CHECK SHIFT UP (D_3 TO D_4)

Does A/T shift from D_3 to D_4 at the specified speed?

OK or NG

OK	▶	GO TO 9.
NG	▶	Check control valve again. Repair or replace control valve assembly.

9	CHECK DTC

Perform Diagnostic Trouble Code (DTC) confirmation procedure. Refer to "DIAGNOSTIC TROUBLE CODE (DTC) CONFIRMATION PROCEDURE", AT-292.

OK or NG

OK	▶	**INSPECTION END**
NG	▶	Perform "Cruise Test — Part 1" again and return to the start point of this flow chart.

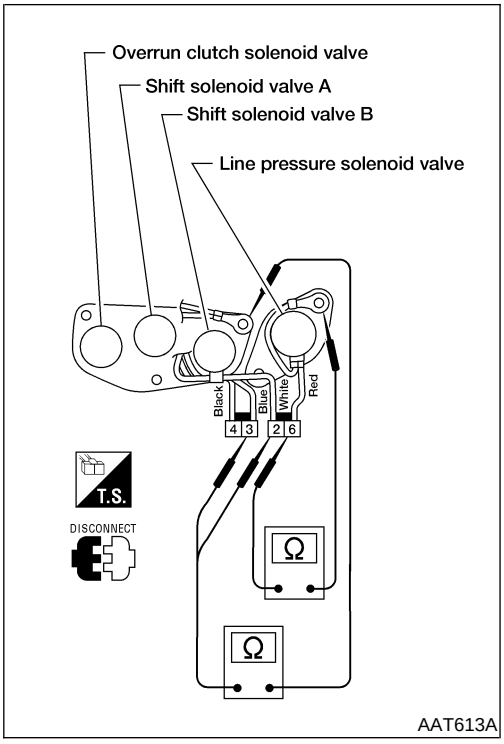

AAT613A

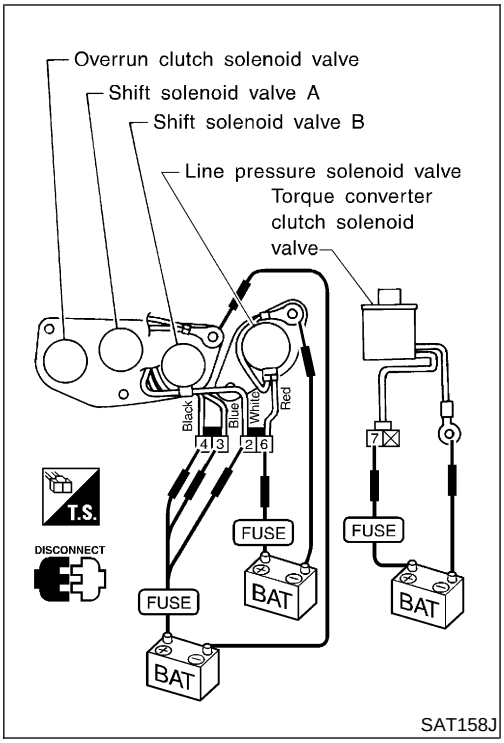

SAT158J

Component Inspection

NEAT0161

SOLENOID VALVES

NEAT0161S01

- For removal, refer to “REMOVAL”, AT-416.

Resistance Check

NEAT0161S0101

- Check resistance between terminals (3, 2, or 6) and ground.

Solenoid valve	Terminal No.		Resistance (Approx.)
Shift solenoid valve A	3	Ground	20 - 40Ω
Shift solenoid valve B	2		
Line pressure solenoid valve	6		2.5 - 5Ω

Operation Check

NEAT0161S0102

- Check solenoid valve by listening for its operating sound while applying battery voltage to the terminals (3, 2, 4, 6 or 7) and ground.

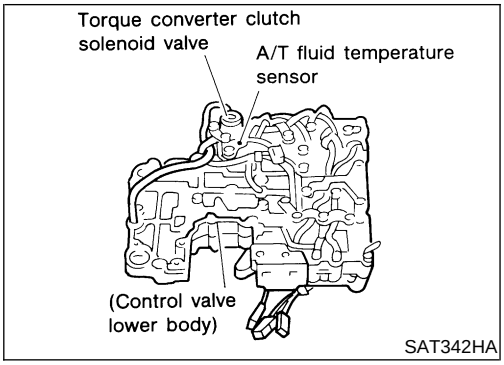

Description

NEAT0162

The torque converter clutch solenoid valve is activated, with the gear in D_4, by the TCM in response to signals sent from the vehicle speed and throttle position sensors. Lock-up piston operation will then be controlled.

Lock-up operation, however, is prohibited when A/T fluid temperature is too low.

When the accelerator pedal is depressed (less than 2/8) in lock-up condition, the engine speed should not change abruptly. If there is a big jump in engine speed, there is no lock-up.

CONSULT-II REFERENCE VALUE IN DATA MONITOR MODE

NEAT0162S01

Remarks: Specification data are reference values.

Monitor item	Condition	Specification (Approx.)
Torque converter clutch solenoid valve duty	Lock-up OFF ↓ Lock-up ON	4% ↓ 94%

TCM TERMINALS AND REFERENCE VALUE

NEAT0162S02

Remarks: Specification data are reference values.

Terminal No.	Wire color	Item	Condition		Judgement standard (Approx.)
3	G/OR	Torque converter clutch solenoid valve		When A/T performs lock-up.	8 - 15V
				When A/T does not perform lock-up.	0V

ON BOARD DIAGNOSIS LOGIC

NEAT0162S03

Diagnostic trouble code	Malfunction is detected when ...	Check item (Possible cause)
(H) : TCC SOLENOID/CIRC	TCM detects an improper voltage drop when it tires to operate the solenoid valve.	• Harness or connectors (The solenoid circuit is open or shorted.) • T/C clutch solenoid valve
(GST) : P0740		

Description (Cont'd)

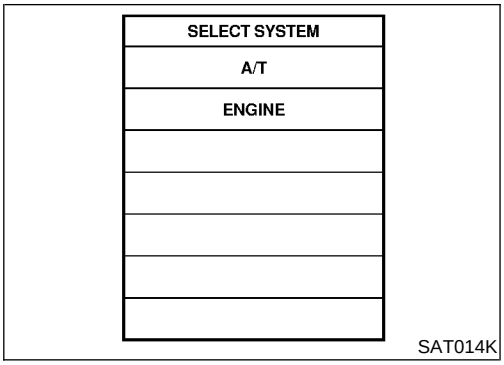

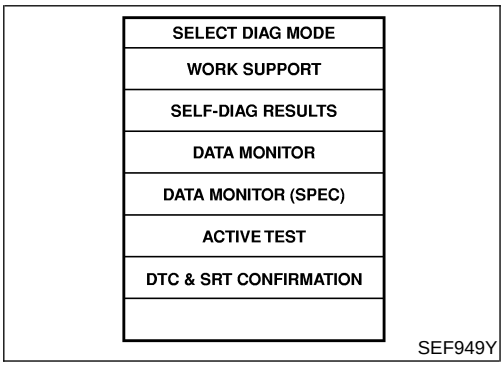

DIAGNOSTIC TROUBLE CODE (DTC) CONFIRMATION PROCEDURE

NEAT0162S04

NOTE:

If "DIAGNOSTIC TROUBLE CODE CONFIRMATION PROCEDURE" has been previously conducted, always turn ignition switch OFF and wait at least 5 seconds before conducting the next test.

After the repair, perform the following procedure to confirm the malfunction is eliminated.

With CONSULT-II

1) Turn ignition switch ON.
2) Select "DATA MONITOR" mode for "ENGINE" with CONSULT-II and wait at least 1 second.

With GST

1) Follow the procedure "With CONSULT-II".

Wiring Diagram — AT — TCV

NEAT0163

AT-TCV-01

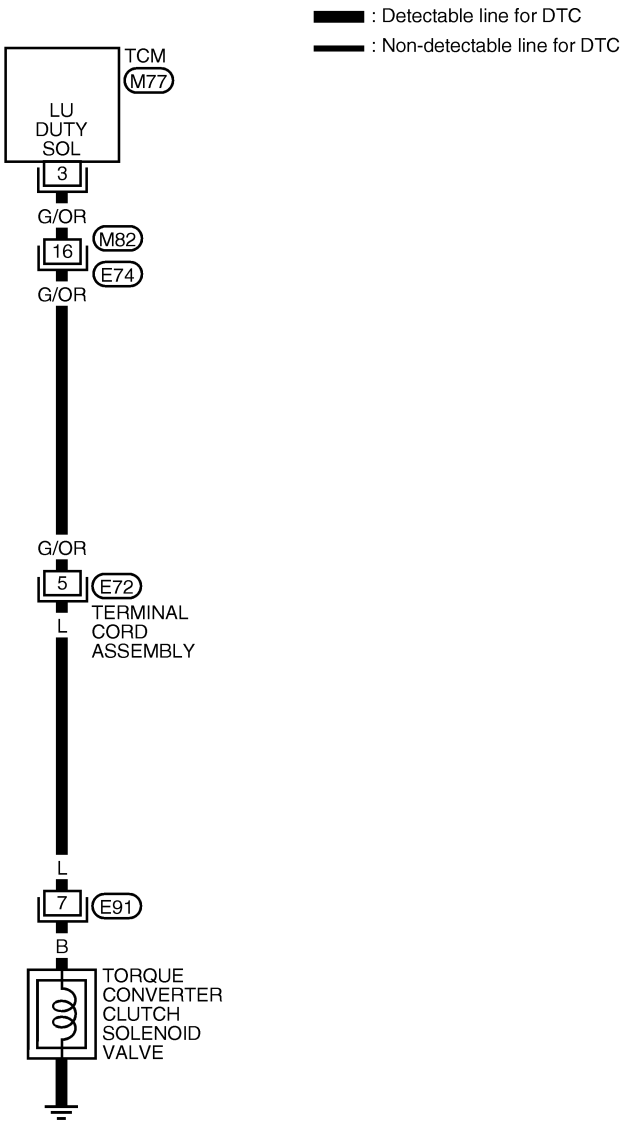

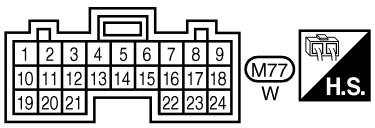

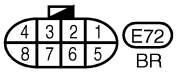

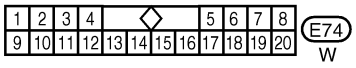

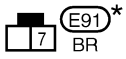

*: This connector is not shown in "HARNESS LAYOUT" of EL section.

AAT590A

Diagnostic Procedure

NEAT0164

1	CHECK GROUND CIRCUIT	
1. Turn ignition switch to OFF position. 2. Disconnect terminal cord assembly connector in engine compartment. 3. Check resistance between terminal cord assembly connector E72 terminal 5 and ground. Refer to wiring diagram. **Is resistance approx. 10 - 20 Ω?**		
Yes	▶	GO TO 2.
No	▶	1. Remove oil pan. Refer to “REMOVAL”, AT-416. 2. Check the following items: ● Torque converter clutch solenoid valve Refer to “Component Inspection”, AT-303. ● Harness of terminal cord assembly for short or open

2	CHECK RESISTANCE	
1. Turn ignition switch to OFF position. 2. Disconnect TCM harness connector. 3. Check resistance between terminal cord assembly connector E72 terminal 5 and TCM harness connector M77 terminal 3. Refer to wiring diagrams. If OK, check harness for short to ground and short to power. **Is resistance approx. 0 Ω?**		
Yes	▶	GO TO 3.
No	▶	Repair open circuit or short to ground or short to power in harness or connectors.

3	CHECK DTC	
Perform Diagnostic Trouble Code (DTC) confirmation procedure. Refer to “DIAGNOSTIC TROUBLE CODE (DTC) CONFIRMATION PROCEDURE”, AT-300. **OK or NG**		
OK	▶	**INSPECTION END**
NG	▶	1. Perform TCM input/output signal inspection. 2. If NG, recheck TCM pin terminals for damage or loose connection with harness connector.

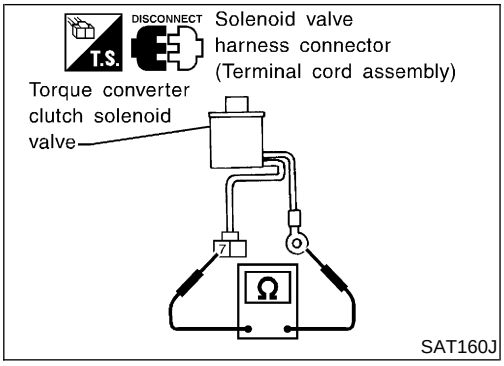

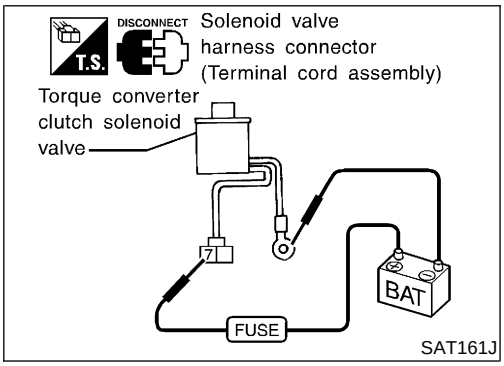

Component Inspection

TORQUE CONVERTER CLUTCH SOLENOID VALVE

=NEAT0165

NEAT0165S01

- For removal, refer to “REMOVAL”, AT-416.

Resistance Check

NEAT0165S0101

- Check resistance between torque converter clutch solenoid valve terminal 7 and ground.

Solenoid valve	Terminal No.		Resistance (Approx.)
Torque converter clutch solenoid valve	7	Ground	10 - 20 Ω

Operation Check

NEAT0165S0102

- Check solenoid valve by listening for its operating sound while applying battery voltage to the terminal 7 and ground.

Description

NEAT0166

- This is an OBD-II self-diagnostic item and not available in TCM self-diagnosis.
- This malfunction will not be detected while the O/D OFF indicator lamp is indicating another self-diagnosis malfunction.
- This malfunction is detected when the A/T does not shift into fourth gear position, or the torque converter clutch does not lock up as instructed by the TCM. This is not caused by electrical malfunction (circuits open or shorted), but by mechanical malfunction such as control valve sticking, improper solenoid valve operation, malfunctioning oil pump or torque converter clutch, etc.

CONSULT-II REFERENCE VALUE IN DATA MONITOR MODE

NEAT0166S01

Remarks: Specification data are reference values.

Monitor item	Condition	Specification (Approx.)
Torque converter clutch solenoid valve duty	Lock-up OFF ↓ Lock-up ON	4% ↓ 94%

TCM TERMINALS AND REFERENCE VALUE

NEAT0166S02

Remarks: Specification data are reference values.

Terminal No.	Wire color	Item	Condition		Judgement standard (Approx.)
1	GY/R	Line pressure solenoid valve		When releasing accelerator pedal after warming up engine.	1.5 - 2.5V
				When depressing accelerator pedal fully after warming up engine.	0V
2	BR/Y	Line pressure solenoid valve (with dropping resistor)		When releasing accelerator pedal after warming up engine.	4 - 14V
				When depressing accelerator pedal fully after warming up engine.	0V
3	G/OR	Torque converter clutch solenoid valve		When A/T performs lock-up.	8 - 15V
				When A/T does not perform lock- up.	0V

ON BOARD DIAGNOSIS LOGIC

=NEAT0166S03

This diagnosis monitors actual gear position by checking the torque converter slip ratio calculated by TCM as follows:
Torque converter slip ratio = A x C/B
A: Output shaft revolution signal from revolution sensor
B: Engine speed signal from ECM
C: Gear ratio determined as gear position which TCM supposes
If the actual gear position is much lower than the position (4th) supposed by TCM, the slip ratio will be much less than normal. In case the ratio does not reach the specified value, TCM judges this diagnosis malfunction.
This malfunction will be caused when shift solenoid valve B is stuck closed.

Gear position supposed by TCM	1	2	3	4
In case of gear position with no malfunctions	1	2	3	4
In case of gear position with shift solenoid valve B stuck closed	1	2	2	1*

*: P0744 is detected.

Diagnostic trouble code	Malfunction is detected when ...	Check item (Possible cause)
: A/T TCC S/V FNCTN	A/T cannot perform lock-up even if electrical circuit is good.	• Line pressure solenoid valve • Torque converter clutch solenoid valve • Each clutch • Hydraulic control circuit
: P0744		

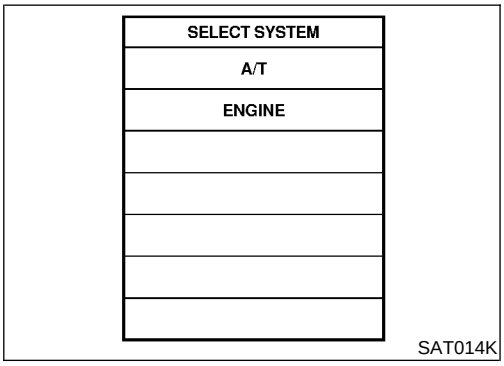

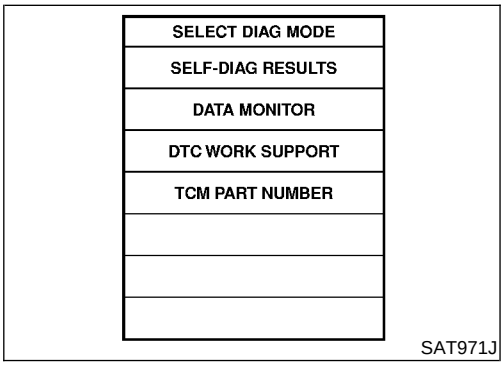

DIAGNOSTIC TROUBLE CODE (DTC) CONFIRMATION PROCEDURE

NEAT0166S04

CAUTION:
Always drive vehicle at a safe speed.

NOTE:
If "DIAGNOSTIC TROUBLE CODE CONFIRMATION PROCEDURE" has been previously conducted, always turn ignition switch OFF and wait at least 5 seconds before conducting the next test.

After the repair, perform the following procedure to confirm the malfunction is eliminated.

With CONSULT-II

1) Start engine and select "DATA MONITOR" mode for "A/T" with CONSULT-II.
2) Make sure that output voltage of A/T fluid temperature sensor is within the range below.
   FLUID TEMP SEN: 0.4 - 1.5V
   If out of range, drive the vehicle to decrease the voltage (warm up the fluid), or stop engine to increase the voltage (cool down the fluid).
3) Select "TCC S/V FNCTN P0744" of "DTC WORK SUPPORT" mode for "A/T" with CONSULT-II and touch "START".

Description (Cont'd)

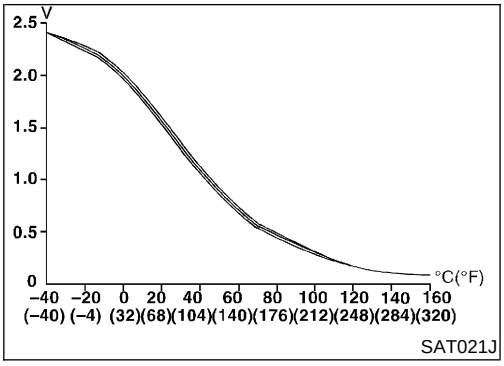

4) Accelerate vehicle to more than 70 km/h (43 MPH) and maintain the following condition continuously until "TESTING" has turned to "COMPLETED". (It will take approximately 30 seconds after "TESTING" shows.)
THROTTLE POSI: 1/8 - 2/8 (at all times during step 4)
Selector lever: D position (O/D ON)
TCC S/V DUTY: More than 94%
VHCL/S SE·A/T: Constant speed of more than 70 km/h (43 MPH)

- **Check that "GEAR" shows 4.**
- **For shift schedule, refer to "Shift Schedule", AT-497.**
- **If "TESTING" does not appear on CONSULT II for a long time, select "SELF-DIAG RESULTS". In case a 1st trip DTC other than P0744 is shown, refer to applicable "TROUBLE DIAGNOSIS FOR DTC".**

5) Make sure that "OK" is displayed. (If "NG" is displayed, refer to "DIAGNOSTIC PROCEDURE".)
Refer to "DIAGNOSTIC PROCEDURE", AT-308.
Refer to "Shift Schedule", AT-497.

With GST

1) Follow the procedure "With CONSULT-II".

Wiring Diagram — AT — TCCSIG

NEAT0167

AT-TCCSIG-01

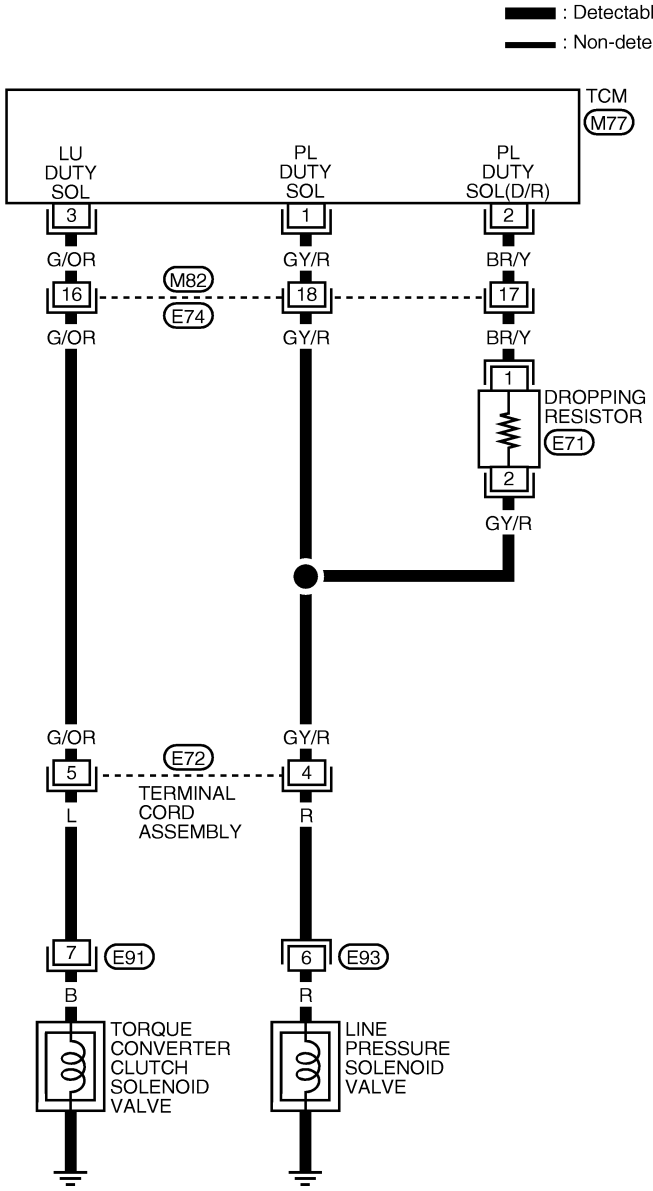

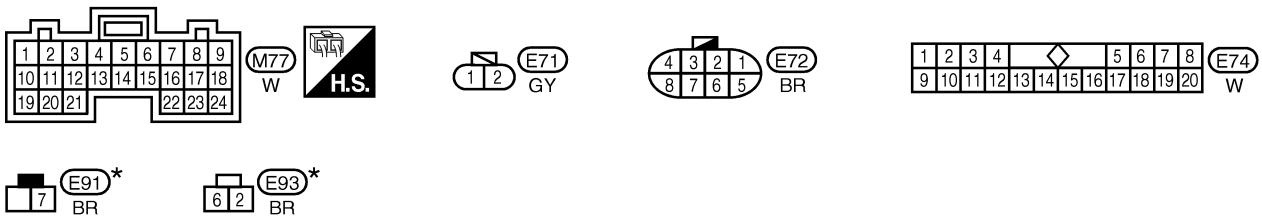

*: This connector is not shown in "HARNESS LAYOUT" of EL section.

AAT591A

Diagnostic Procedure

=NEAT0168

1	CHECK SHIFT UP (D_3 TO D_4)

During “Cruise Test − Part 1”, AT-219, does A/T shift from D_3 to D_4 at the specified speed?

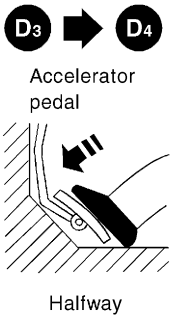

SAT988H

Yes or No

Yes	▶	● Check for proper lock-up. GO TO 10.
No	▶	GO TO 2.

2	CHECK LINE PRESSURE

Perform line pressure test. Refer to “Line Pressure Test”, AT-209.

OK or NG

OK	▶	GO TO 3.
NG	▶	GO TO 6.

3	CHECK CONTROL VALVE

1. Disassemble control valve assembly. Refer to “Control Valve Assembly”, AT-442.
2. Check to ensure that:

- Valve, sleeve and plug slide along valve bore under their own weight.
- Valve, sleeve and plug are free from burrs, dents and scratches.
- Control valve springs are free from damage, deformation and fatigue.
- Hydraulic line is free from obstacles.

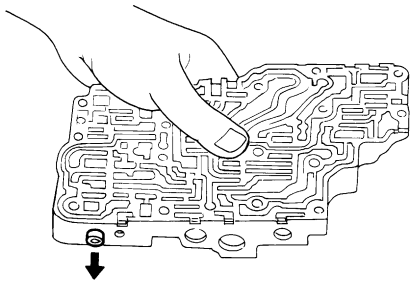

SAT367H

OK or NG

OK	▶	GO TO 4.
NG	▶	Repair control valve.

4	CHECK SHIFT UP (D_3 TO D_4)	
Does A/T shift from D_3 to D_4 at the specified speed?		
Yes or No		
Yes	▶	GO TO 5.
No	▶	Check control valve again. Repair or replace control valve assembly.

5	CHECK DTC	
Perform Diagnostic Trouble Code (DTC) confirmation procedure. Refer to "DIAGNOSTIC TROUBLE CODE (DTC) CONFIRMATION PROCEDURE", AT-305.		
OK or NG		
OK	▶	**INSPECTION END**
NG	▶	• Check for proper lock-up. GO TO 10.

6	CHECK LINE PRESSURE SOLENOID VALVE	
1. Remove control valve assembly. Refer to "REMOVAL", AT-416. 2. Check line pressure solenoid valve operation. Refer to "SOLENOID VALVES", AT-312.		
OK or NG		
OK	▶	GO TO 7.
NG	▶	Replace solenoid valve assembly.

7	CHECK CONTROL VALVE	
1. Disassemble control valve assembly. Refer to "Control Valve Assembly", AT-442. 2. Check line pressure circuit valves for sticking. • Pressure regulator valve • Pilot valve • Pressure modifier valve		
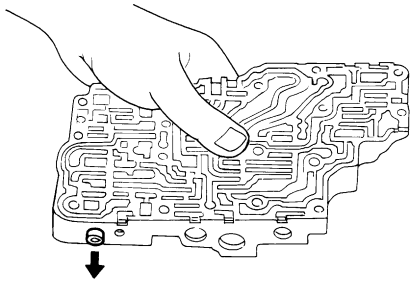 SAT367H		
OK or NG		
OK	▶	GO TO 8.
NG	▶	Repair control valve.

8	CHECK SHIFT UP (D_3 TO D_4)	
Does A/T shift from D_3 to D_4 at the specified speed?		
Yes or No		
Yes	▶	GO TO 9.
No	▶	Check control valve again. Repair or replace control valve assembly.

Diagnostic Procedure (Cont'd)

9	CHECK DTC
Perform Diagnostic Trouble Code (DTC) confirmation procedure. Refer to "DIAGNOSTIC TROUBLE CODE (DTC) CONFIRMATION PROCEDURE", AT-305.	
OK or NG	
OK ▶	**INSPECTION END**
NG ▶	● Check for proper lock-up. GO TO 10.

10	CHECK LOCK-UP CONDITION
During "Cruise Test − Part 1", AT-219, Does A/T perform lock-up at the specified speed?	
Yes or No	
Yes ▶	Perform "Cruise Test − Part 1" again and return to the start point of this flow chart.
No ▶	GO TO 11.

11	CHECK TORQUE CONVERTER CLUTCH SOLENOID VALVE
1. Remove control valve assembly. Refer to "REMOVAL", AT-416. 2. Check torque converter clutch solenoid valve operation. Refer to AT-312.	
OK or NG	
OK ▶	GO TO 12.
NG ▶	Replace solenoid valve assembly.

12	CHECK CONTROL VALVE
1. Disassemble control valve assembly. Refer to "Control Valve Assembly", AT-442. 2. Check control valves for sticking. ● Torque converter clutch control valve ● Torque converter clutch relief valve	
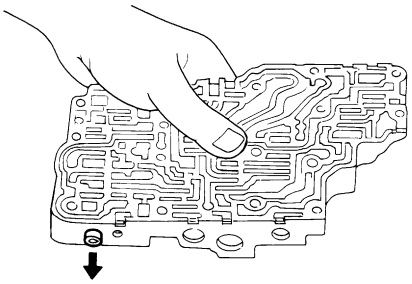 SAT367H	
OK or NG	
OK ▶	GO TO 13.
NG ▶	Repair control valve

13	CHECK LOCK-UP CONDITION
Does A/T perform lock-up at the specified speed?	
Yes or No	
Yes ▶	GO TO 14.
No ▶	Check control valve again. Repair or replace control valve assembly.

14	CHECK DTC	
Perform Diagnostic Trouble Code (DTC) confirmation procedure. Refer to "DIAGNOSTIC TROUBLE CODE (DTC) CONFIRMATION PROCEDURE", AT-305.		
OK or NG		
OK	▶	**INSPECTION END**
NG	▶	Perform "Cruise Test — Part 1" again and return to the start point of this flow chart.

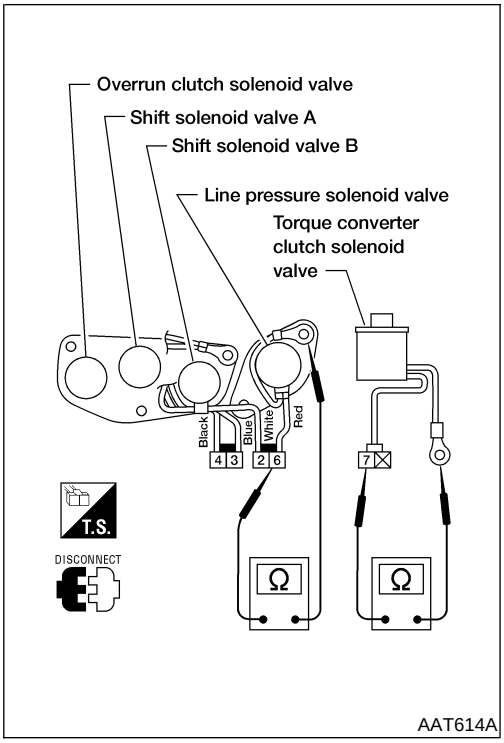

AAT614A

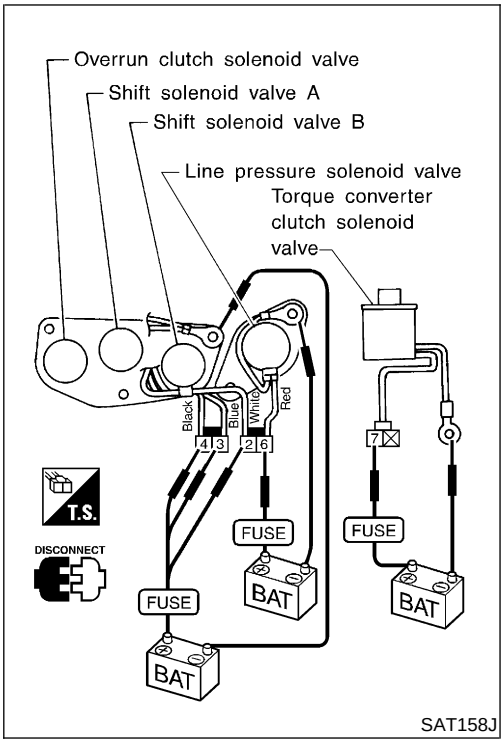

SAT158J

Component Inspection

=NEAT0169

SOLENOID VALVES

NEAT0169S01

- For removal, refer to “REMOVAL”, AT-416.

Resistance Check

NEAT0169S0101

- Check resistance between terminals (6, 7) and ground.

Solenoid valve	Terminal No.		Resistance (Approx.)
Line pressure solenoid valve	6	Ground	2.5 - 5 Ω
Torque converter clutch solenoid valve	7		10 - 20 Ω

Operation Check

NEAT0169S0102

- Check solenoid valve by listening for its operating sound while applying battery voltage to the terminals (3, 2, 4, 6 or 7) and ground.

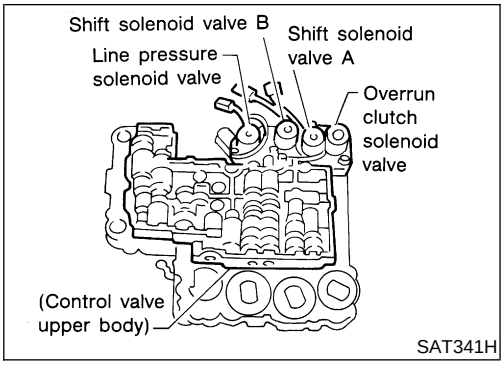

Description

NEAT0170

The line pressure solenoid valve regulates the oil pump discharge pressure to suit the driving condition in response to a signal sent from the TCM.

The line pressure duty cycle value is not consistent when the closed throttle position switch is ON. To confirm the line pressure duty cycle at low pressure, the accelerator (throttle) should be open until the closed throttle position switch is OFF.

CONSULT-II REFERENCE VALUE IN DATA MONITOR MODE

NEAT0170S01

Remarks: Specification data are reference values.

Monitor item	Condition	Specification (Approx.)
Line pressure solenoid valve duty	Small throttle opening (Low line pressure) ↓ Large throttle opening (High line pressure)	24% ↓ 95%

NOTE:

The line pressure duty cycle value is not consistent when the closed throttle position switch is ON. To confirm the line pressure duty cycle at low pressure, the accelerator (throttle) should be open until the closed throttle position switch is OFF.

TCM TERMINALS AND REFERENCE VALUE

NEAT0170S02

Remarks: Specification data are reference values.

Terminal No.	Wire color	Item	Condition		Judgement standard (Approx.)
1	GY/R	Line pressure solenoid valve		When releasing accelerator pedal after warming up engine.	1.5 - 2.5V
				When depressing accelerator pedal fully after warming up engine.	0V
2	BR/Y	Line pressure solenoid valve (with dropping resistor)		When releasing accelerator pedal after warming up engine.	4 - 14V
				When depressing accelerator pedal fully after warming up engine.	0V

ON BOARD DIAGNOSIS LOGIC

NEAT0170S03

Diagnostic trouble code	Malfunction is detected when ...	Check item (Possible cause)
(P) : L/PRESS SOL/CIRC	TCM detects an improper voltage drop when it tries to operate the solenoid valve.	• Harness or connectors (The solenoid circuit is open or shorted) • Line pressure solenoid valve
(GST) : P0745		

Description (Cont'd)

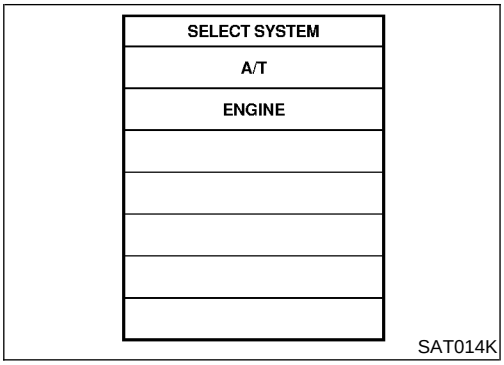

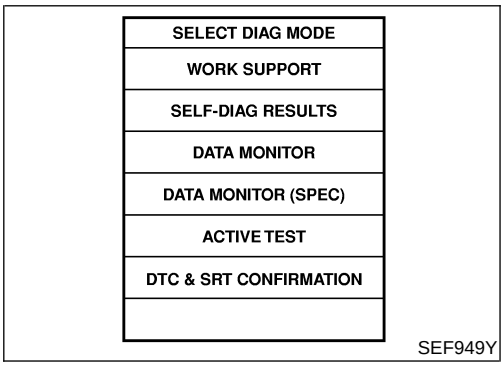

DIAGNOSTIC TROUBLE CODE (DTC) CONFIRMATION PROCEDURE

NEAT0170S04

NOTE:

If "DIAGNOSTIC TROUBLE CODE CONFIRMATION PROCEDURE" has been previously conducted, always turn ignition switch OFF and wait at least 5 seconds before conducting the next test.

After the repair, perform the following procedure to confirm the malfunction is eliminated.

With CONSULT-II

1) Turn ignition switch ON and select "DATA MONITOR" mode for "ENGINE" with CONSULT-II.
2) Depress accelerator pedal completely and wait at least 1 second.

With GST

1) Follow the procedure "With CONSULT-II".

Wiring Diagram — AT — LPSV

NEAT0171

AT-LPSV-01

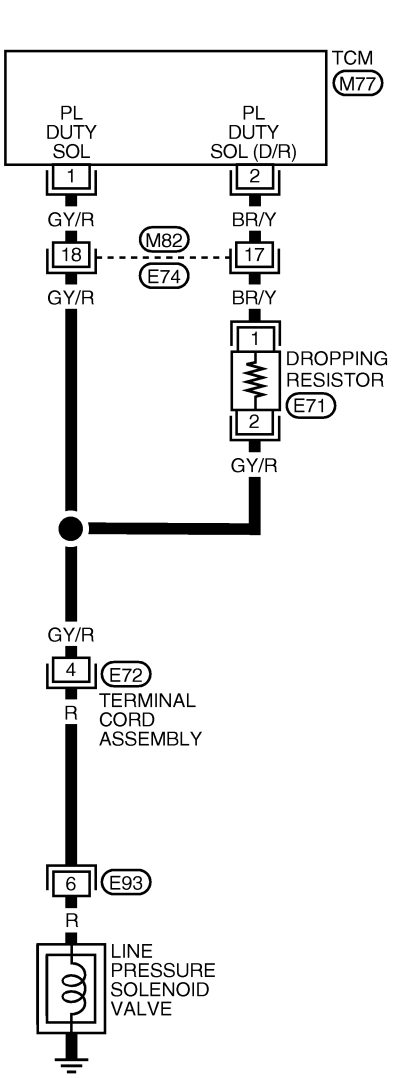

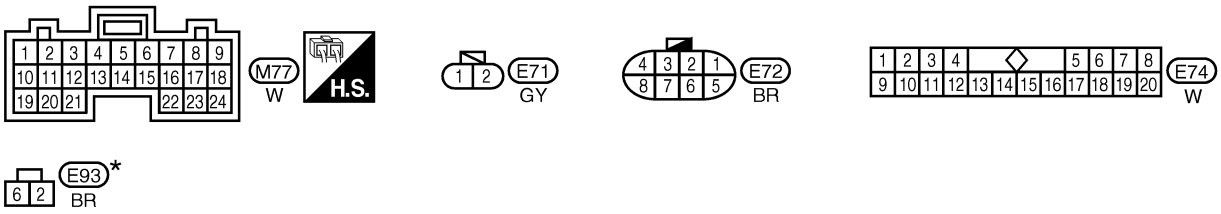

*: This connector is not shown in "HARNESS LAYOUT" of EL section.

AAT592A

Diagnostic Procedure

NEAT0172

1	CHECK GROUND CIRCUIT	
1. Turn ignition switch to OFF position. 2. Disconnect terminal cord assembly connector in engine compartment. 3. Check resistance between terminal cord assembly connector E72 terminal 4 and ground. Refer to the wiring diagram. **Is resistance approx. 2.5 - 5 Ω?**		
Yes	▶	GO TO 2.
No	▶	1. Remove control valve assembly. Refer to “REMOVAL”, AT-416. 2. Check the following items: ● Line pressure solenoid valve Refer to “Component Inspection”, AT-317. ● Harness of terminal cord assembly for short or open

2	CHECK POWER SOURCE CIRCUIT	
1. Turn ignition switch to OFF position. 2. Disconnect TCM harness connector. 3. Check resistance between terminal cord assembly connector E72 terminal 4 and TCM harness connector M77 terminal 2. Refer to the wiring diagram. **Is resistance approx. 11.2 - 12.8 Ω?**		
Yes	▶	GO TO 3.
No	▶	**Check the following items:** ● Dropping resistor Refer to “Component Inspection”, AT-317. ● Harness for short or open between TCM terminal 2 and terminal cord assembly connector

3	CHECK POWER SOURCE CIRCUIT	
1. Turn ignition switch to OFF position. 2. Check resistance between terminal cord assembly connector E72 terminal 4 and TCM harness connector M77 terminal 1. Refer to the wiring diagram. **Is resistance approx. 0 Ω?**		
Yes	▶	GO TO 4.
No	▶	Repair or replace harness between TCM terminal 1 and terminal cord assembly.

4	CHECK DTC	
Perform Diagnostic Trouble Code (DTC) confirmation procedure. Refer to “DIAGNOSTIC TROUBLE CODE (DTC) CONFIRMATION PROCEDURE”, AT-314. **OK or NG**		
OK	▶	**INSPECTION END**
NG	▶	1. Perform TCM input/output signal inspection. 2. If NG, recheck TCM pin terminals for damage or loose connection with harness connector.

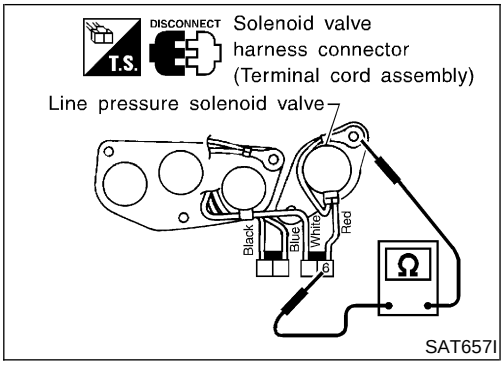

SAT657I

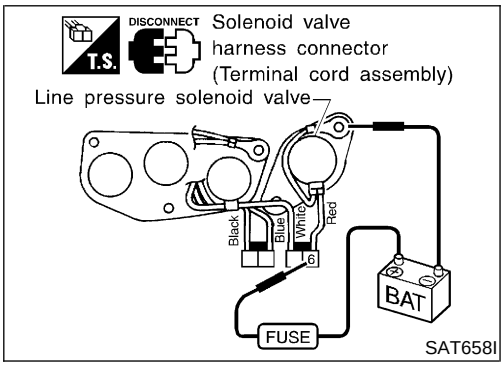

SAT658I

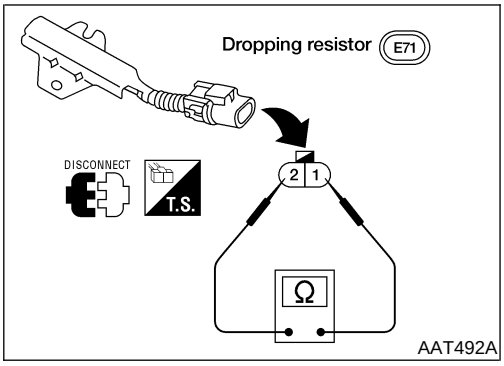

AAT492A

Component Inspection

=NEAT0173

LINE PRESSURE SOLENOID VALVE

NEAT0173S01

- For removal, refer to “REMOVAL”, AT-416.

Resistance Check

NEAT0173S0101

- Check resistance between terminal 6 and ground.

Solenoid valve	Terminal No.		Resistance (Approx.)
Line pressure solenoid valve	6	Ground	2.5 - 5 Ω

Operation Check

NEAT0173S0102

- Check solenoid valve by listening for its operating sound while applying battery voltage to the terminal 6 and ground.

DROPPING RESISTOR

NEAT0173S02

- Check resistance between terminals 1 and 2.

Resistance: 11.2 - 12.8 Ω

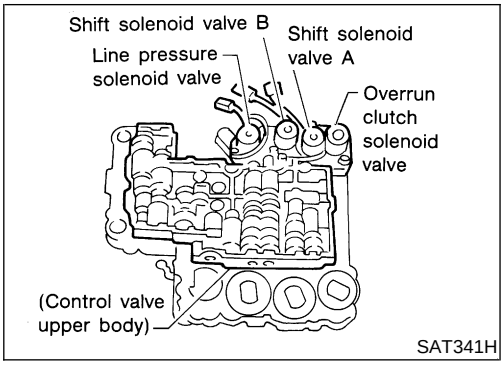

Description

NEAT0174

Shift solenoid valves A and B are turned ON or OFF by the TCM in response to signals sent from the PNP switch, vehicle speed and throttle position sensors. Gears will then be shifted to the optimum position.

Gear position	1	2	3	4
Shift solenoid valve A	ON (Closed)	OFF (Open)	OFF (Open)	ON (Closed)
Shift solenoid valve B	ON (Closed)	ON (Closed)	OFF (Open)	OFF (Open)

TCM TERMINALS AND REFERENCE VALUE

NEAT0174S01

Remarks: Specification data are reference values.

Terminal No.	Wire color	Item	Condition		Judgement standard (Approx.)
11	L/W	Shift solenoid valve A		When shift solenoid valve A operates. (When driving in D_1 or D_4)	Battery voltage
				When shift solenoid valve A does not operate. (When driving in D_2 or D_3)	0V

ON BOARD DIAGNOSIS LOGIC

NEAT0174S02

Diagnostic trouble code	Malfunction is detected when ...	Check item (Possible cause)
: SFT SOL A/CIRC	TCM detects an improper voltage drop when it tires to operate the solenoid valve.	• Harness or connectors (The solenoid circuit is open or shorted) • Shift solenoid valve A
GST : P0750		

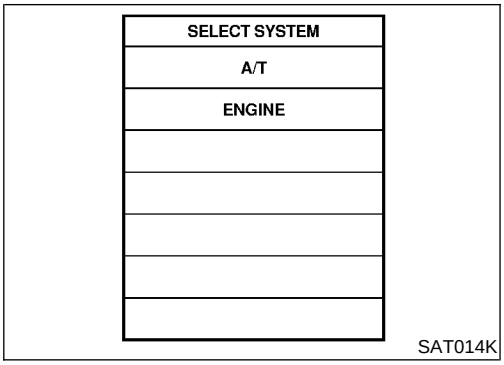

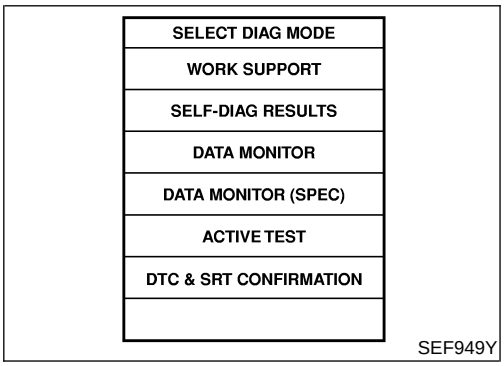

DIAGNOSTIC TROUBLE CODE (DTC) CONFIRMATION PROCEDURE

NEAT0174S03

CAUTION:

Always drive vehicle at a safe speed.

NOTE:

If "DIAGNOSTIC TROUBLE CODE CONFIRMATION PROCEDURE" has been previously conducted, always turn ignition switch OFF and wait at least 5 seconds before conducting the next test.

After the repair, perform the following procedure to confirm the malfunction is eliminated.

With CONSULT-II

1) Turn ignition switch ON and select "DATA MONITOR" mode for "ENGINE" with CONSULT-II.
2) Start engine.
3) Drive vehicle in D position and allow the transmission to shift 1 → 2 ("GEAR").

With GST

1) Follow the procedure "With CONSULT-II".

Wiring Diagram — AT — SSV/A

NEAT0175

AT-SSV/A-01

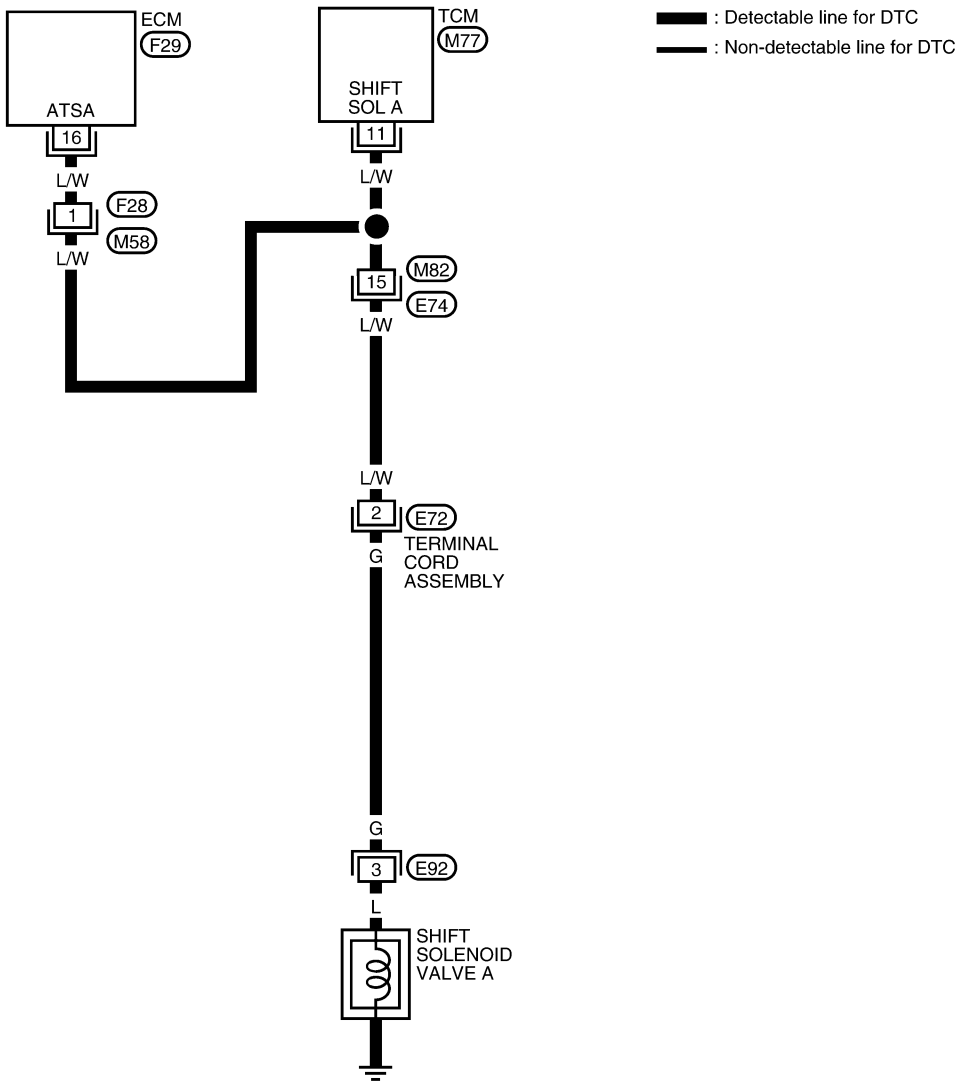

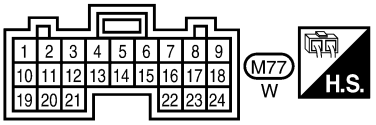

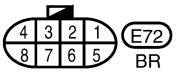

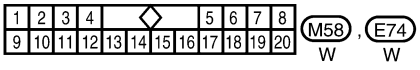

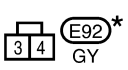

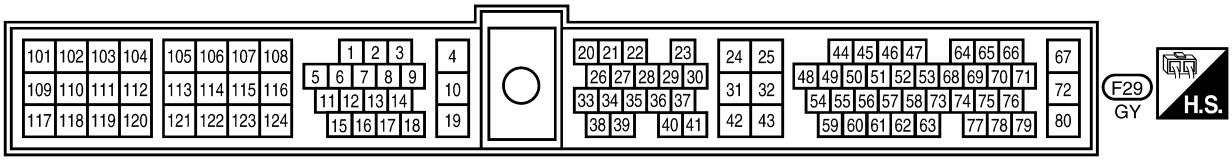

*: This connector is not shown in “HARNESS LAYOUT” of EL section.

LAT376

Diagnostic Procedure

NEAT0176

1	CHECK GROUND CIRCUIT

1. Turn ignition switch to OFF position.
2. Disconnect terminal cord assembly connector in engine compartment.
3. Check resistance between terminal cord assembly connector E72 terminal 2 and ground.

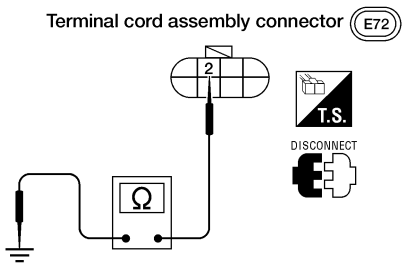

AAT506A

Is resistance approx. 20 - 40 Ω?

Yes	▶	GO TO 2.
No	▶	1. Remove control valve assembly. Refer to “REMOVAL”, AT-416. 2. Check the following items: ● Shift solenoid valve A Refer to “Component Inspection”, AT-322. ● Harness of terminal cord assembly for short or open

2	CHECK POWER SOURCE CIRCUIT

1. Turn ignition switch to OFF position.
2. Disconnect TCM harness connector.
3. Check resistance between terminal cord assembly connector E72 terminal 2 and TCM harness connector M77 terminal 11. Refer to wiring diagram.

If OK, check harness for short to ground and short to power.

Is resistance approx. 0 Ω?

Yes	▶	GO TO 3.
No	▶	Repair open circuit or short to ground or short to power in harness or connectors.

3	CHECK DTC

Perform Diagnostic Trouble Code (DTC) confirmation procedure. Refer to “DIAGNOSTIC TROUBLE CODE (DTC) CONFIRMATION PROCEDURE”, AT-319.

OK or NG

OK	▶	**INSPECTION END**
NG	▶	1. Perform TCM input/output signal inspection. 2. If NG, recheck TCM pin terminals for damage or loose connection with harness connector.

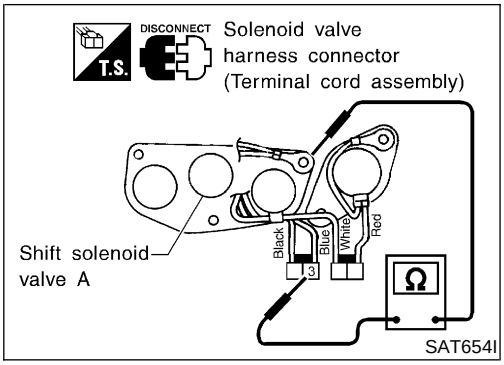

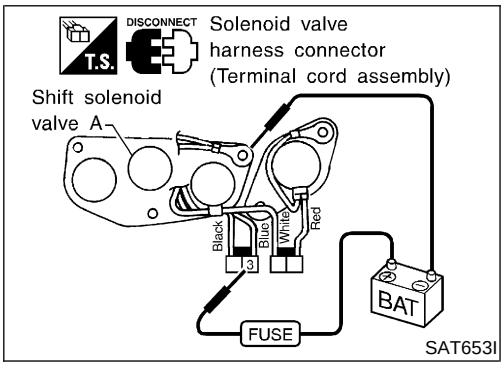

Component Inspection

=NEAT0177

SHIFT SOLENOID VALVE A

NEAT0177S01

- For removal, refer to “REMOVAL”, AT-416.

Resistance Check

NEAT0177S0101

- Check resistance between terminal 3 and ground.

Solenoid valve	Terminal No.		Resistance (Approx.)
Shift solenoid valve A	3	Ground	20 - 40 Ω

Operation Check

NEAT0177S0102

- Check solenoid valve by listening for its operating sound while applying battery voltage to the terminal 3 and ground.

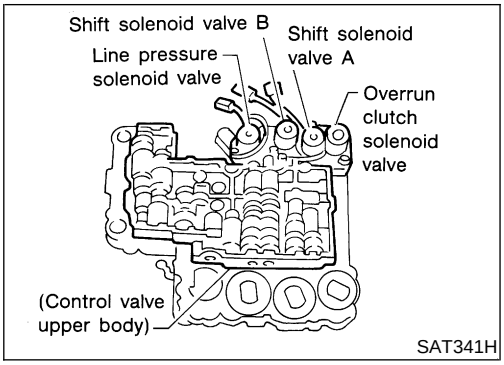

Description

NEAT0178

Shift solenoid valves A and B are turned ON or OFF by the TCM in response to signals sent from the PNP switch, vehicle speed and throttle position sensors. Gears will then be shifted to the optimum position.

Gear position	1	2	3	4
Shift solenoid valve A	ON (Closed)	OFF (Open)	OFF (Open)	ON (Closed)
Shift solenoid valve B	ON (Closed)	ON (Closed)	OFF (Open)	OFF (Open)

TCM TERMINALS AND REFERENCE VALUE

NEAT0178S01

Remarks: Specification data are reference values.

Terminal No.	Wire color	Item	Condition		Judgement standard (Approx.)
12	L/Y	Shift solenoid valve B		When shift solenoid valve B operates. (When driving in D_1 or D_2)	Battery voltage
				When shift solenoid valve B does not operate. (When driving in D_3 or D_4)	0V

ON BOARD DIAGNOSIS LOGIC

NEAT0178S02

Diagnostic trouble code	Malfunction is detected when ...	Check item (Possible cause)
(OBD) : SFT SOL B/CIRC	TCM detects an improper voltage drop when it tires to operate the solenoid valve.	• Harness or connectors (The solenoid circuit is open or shorted) • Shift solenoid valve B
(GST) : P0755		

Description (Cont'd)

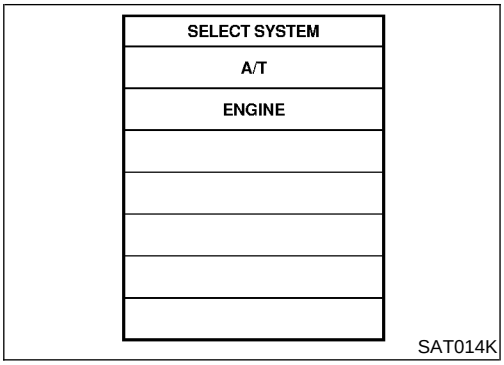

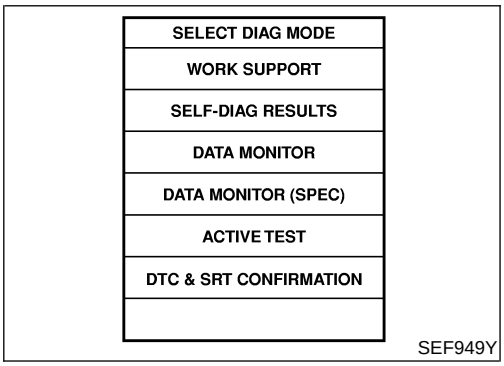

DIAGNOSTIC TROUBLE CODE (DTC) CONFIRMATION PROCEDURE

NEAT0178S03

CAUTION:

Always drive vehicle at a safe speed.

NOTE:

If "DIAGNOSTIC TROUBLE CODE CONFIRMATION PROCEDURE" has been previously conducted, always turn ignition switch OFF and wait at least 5 seconds before conducting the next test.

After the repair, perform the following procedure to confirm the malfunction is eliminated.

With CONSULT-II

1) Turn ignition switch ON and select "DATA MONITOR" mode for "ENGINE" with CONSULT-II.
2) Drive vehicle in D position and allow the transmission to shift 1 → 2 → 3 ("GEAR").

With GST

1) Follow the procedure "With CONSULT-II".

Wiring Diagram — AT — SSV/B

NEAT0179

AT-SSV/B-01

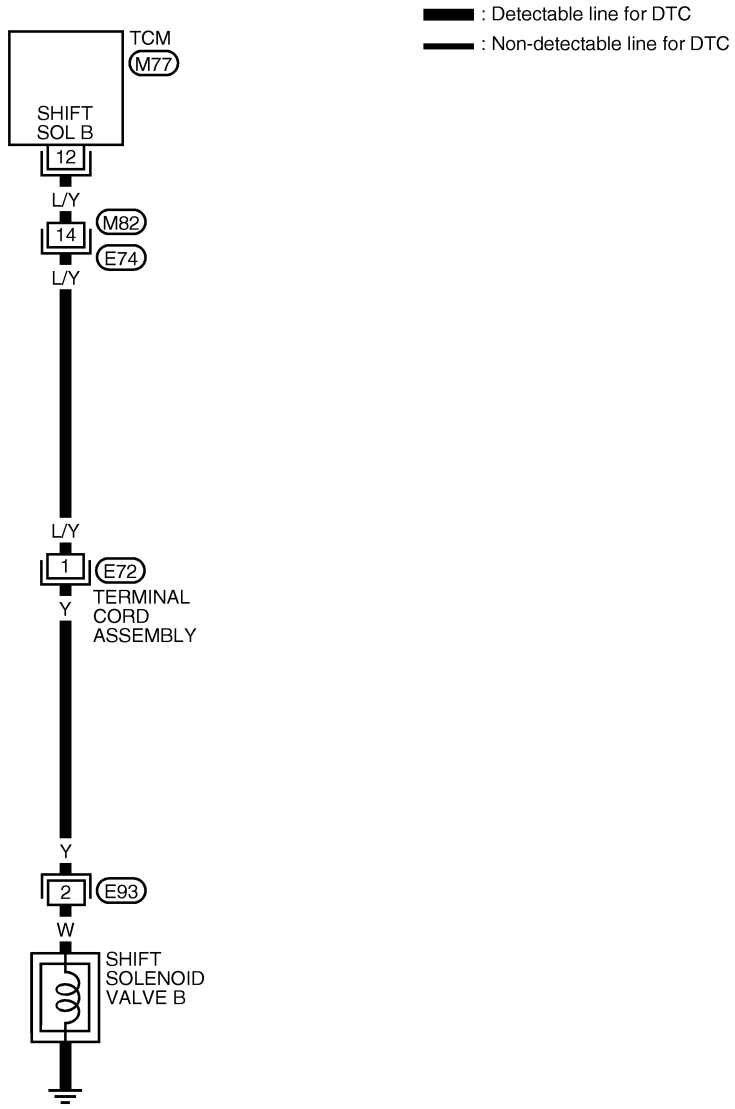

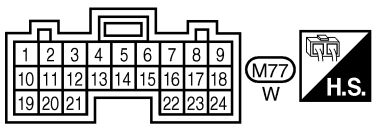

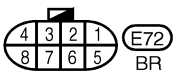

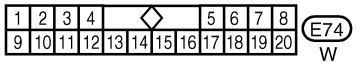

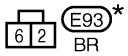

∗: This connector is not shown in “HARNESS LAYOUT” of EL section.

AAT594A

Diagnostic Procedure

NEAT0180

1	CHECK GROUND CIRCUIT

1. Turn ignition switch to OFF position.
2. Disconnect terminal cord assembly connector in engine compartment.
3. Check resistance between terminal cord assembly connector E72 terminal 1 and ground.

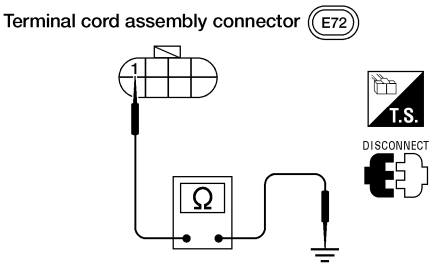

AAT508A

Is resistance approx. 20 - 40Ω?

Yes	▶	GO TO 2.
No	▶	1. Remove control valve assembly. Refer to “REMOVAL”, AT-416. 2. Check the following items: ● Shift solenoid valve B Refer to “Component Inspection”, AT-327. ● Harness of terminal cord assembly for short or open

2	CHECK POWER SOURCE CIRCUIT

1. Turn ignition switch to OFF position.
2. Disconnect TCM harness connector.
3. Check resistance between terminal cord assembly connector E72 terminal 1 and TCM harness connector M77 terminal 12. Refer to wiring diagram.

If OK, check harness for short to ground and short to power.

Is resistance approx. 0Ω?

Yes	▶	GO TO 3.
No	▶	Repair open circuit or short to ground or short to power in harness or connectors.

3	CHECK DTC

Perform Diagnostic Trouble Code (DTC) confirmation procedure. Refer to “DIAGNOSTIC TROUBLE CODE (DTC) CONFIRMATION PROCEDURE”, AT-324.

OK or NG

OK	▶	**INSPECTION END**
NG	▶	1. Perform TCM input/output signal inspection. 2. If NG, recheck TCM pin terminals for damage or loose connection with harness connector.

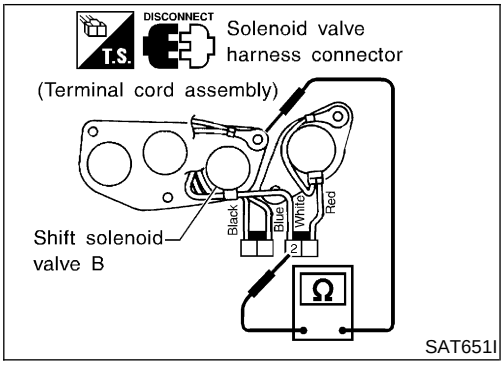

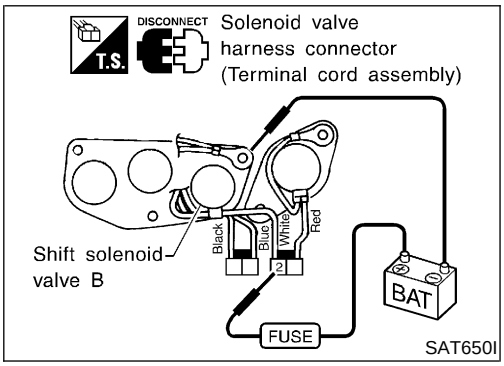

Component Inspection

=NEAT0181

SHIFT SOLENOID VALVE B

NEAT0181S01

- For removal, refer to “REMOVAL”, AT-416.

Resistance Check

NEAT0181S0101

- Check resistance between terminal 2 and ground.

Solenoid valve	Terminal No.		Resistance (Approx.)
Shift solenoid valve B	2	Ground	20 - 40Ω

Operation Check

NEAT0181S0102

- Check solenoid valve by listening for its operating sound while applying battery voltage to the terminal 2 and ground.

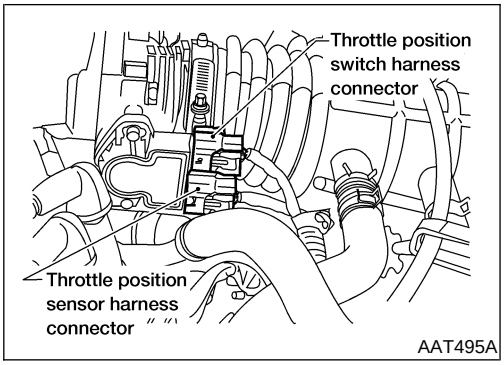

Description

NEAT0182

- Throttle position sensor
  The throttle position sensor detects the throttle valve position and sends a signal to the TCM.
- Throttle position switch
  Consists of a wide open throttle position switch and a closed throttle position switch. The wide open position switch sends a signal to the TCM when the throttle valve is open at least 1/2 of the full throttle position. The closed throttle position switch sends a signal to the TCM when the throttle valve is fully closed.

CONSULT-II REFERENCE VALUE IN DATA MONITOR MODE

NEAT0182S01

Remarks: Specification data are reference values.

Monitor item	Condition	Specification
Throttle position sensor	Fully-closed throttle	Approximately 0.5V
	Fully-open throttle	Approximately 4V

TCM TERMINALS AND REFERENCE VALUE

NEAT0182S02

Remarks: Specification data are reference values.

Terminal No.	Wire color	Item	Condition		Judgement standard (Approx.)
16	BR/W	Closed throttle position switch (in throttle position switch)		When releasing accelerator pedal after warming up engine. [Refer to “Preparation”, “TCM SELF-DIAGNOSIS PROCEDURE (NO TOOLS)”, AT-191]	Battery voltage
				When depressing accelerator pedal after warming up engine.	0V
17	OR/B	Wide open throttle position switch (in throttle position switch)		When depressing accelerator pedal more than half-way after warming up engine. [Refer to “Preparation”, “TCM SELF-DIAGNOSIS PROCEDURE (NO TOOLS)”, AT-191]	Battery voltage
				When releasing accelerator pedal after warming up engine.	0V
32	B/W	Throttle position sensor (Power source)	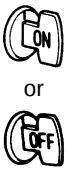	Ignition switch ON	4.5 - 5.5V
				Ignition switch OFF	0V
41	OR/L	Throttle position sensor		When depressing accelerator pedal slowly after warming up engine. (Voltage rises gradually in response to throttle position.)	Fully-closed throttle: 0.5V Fully-open throttle: 4V
42	BR	Throttle position sensor (Ground)		—	0V

ON BOARD DIAGNOSIS LOGIC

NEAT0182S03

Diagnostic trouble code	Malfunction is detected when ...	Check item (Possible cause)
(TP) : TP SEN/CIRC A/T	TCM receives an excessively low or high voltage from the sensor.	• Harness or connectors (The solenoid circuit is open or shorted.) • Throttle position sensor • Throttle position switch
(GST) : P1705		

Description (Cont'd)

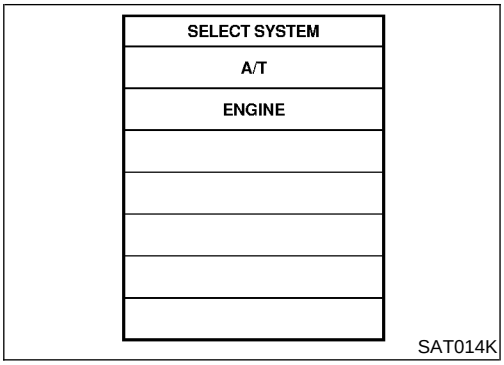

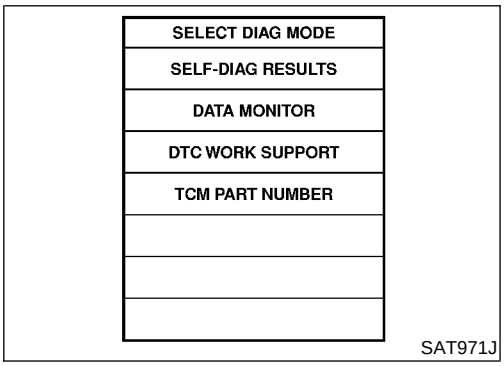

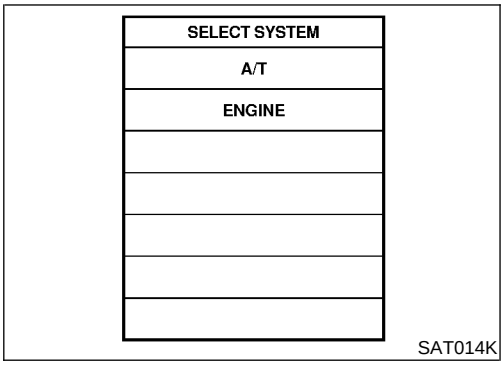

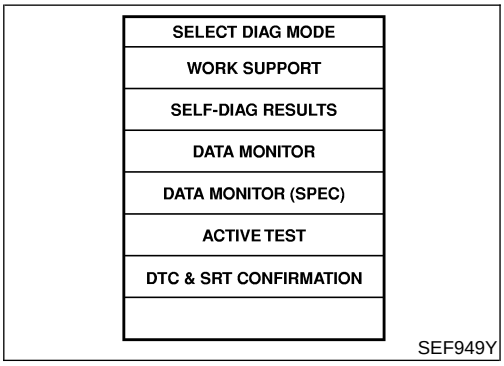

DIAGNOSTIC TROUBLE CODE (DTC) CONFIRMATION PROCEDURE

=NEAT0182S04

CAUTION:

Always drive vehicle at a safe speed.

NOTE:

If "DIAGNOSTIC TROUBLE CODE CONFIRMATION PROCEDURE" has been previously conducted, always turn ignition switch OFF and wait at least 5 seconds before conducting the next test.

After the repair, perform the following procedure to confirm the malfunction is eliminated.

With CONSULT-II

1) Turn ignition switch ON and select "DATA MONITOR" mode for "A/T" with CONSULT-II.
2) Apply vacuum to the throttle opener, then check the following. Refer to step 1 and step 2 of "Preparation", "TCM SELF-DIAGNOSIS PROCEDURE (NO TOOLS)", AT-191.

Accelerator pedal condition	THRTL POS SEN	CLOSED THL/SW	W/O THRL/P·SW
Fully released	Less than 4.7V	ON	OFF
Partially depressed	0.1 - 4.6V	OFF	OFF
Fully depressed	More than 1.9 - 4.6V	OFF	ON

If the check result is NG, go to "DIAGNOSTIC PROCEDURE", AT-332.
If the check result is OK, go to following step.

3) Turn ignition switch ON and select "DATA MONITOR" mode for "ENGINE" with CONSULT-II.
4) Start engine and maintain the following conditions for at least 3 consecutive seconds. Then release accelerator pedal completely.
   VHCL SPEED SE: 10 km/h (6 MPH) or more
   THRTL POS SEN: Approximately 3V or less
   Selector lever: D position (O/D ON)
   If the check result is NG, go to "DIAGNOSTIC PROCEDURE", AT-332.
   If the check result is OK, go to following step.
5) Maintain the following conditions for at least 3 consecutive seconds. Then release accelerator pedal completely.
   VHCL SPEED SE: 10 km/h (6 MPH) or more
   Accelerator pedal: Wide open throttle
   Selector lever: D position (O/D ON)

With GST

1) Follow the procedure "With CONSULT-II".

Wiring Diagram — AT — TPS

NEAT0183

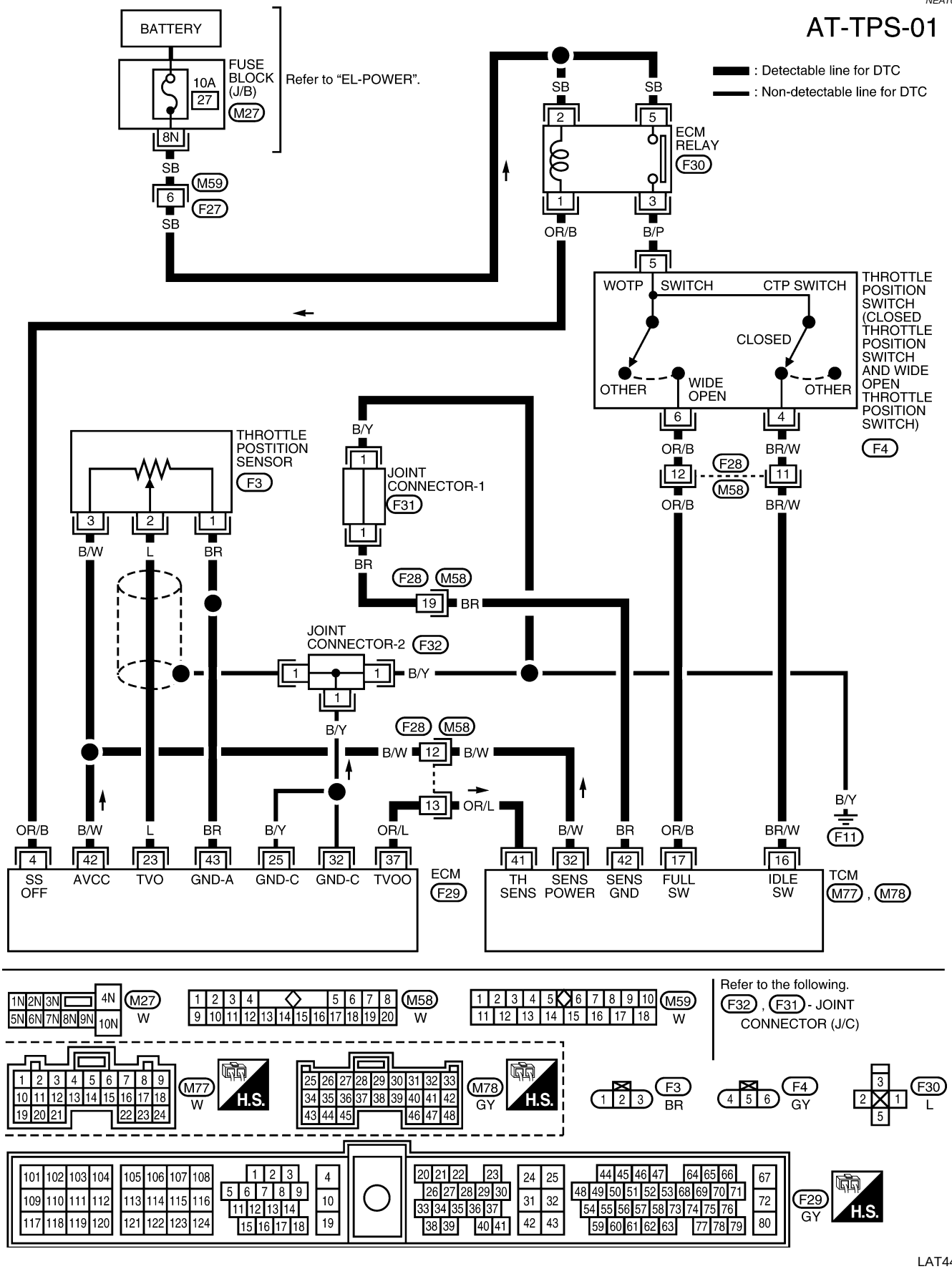

LAT446

Diagnostic Procedure

NEAT0184

1	CHECK DTC WITH ECM	
Perform diagnostic test mode II (self-diagnostic results) for engine control. Refer to ***EC-689*** (VG33E only) or ***EC-1289*** (VG33ER only), “Malfunction Indicator Lamp (MIL)”.		
OK or NG		
OK	▶	GO TO 2.
NG	▶	Check throttle position sensor circuit for engine control. Refer to ***EC-781*** (VG33E only) or ***EC-1381*** (VG33ER only), “DTC P0120 THROTTLE POSITION SENSOR”.

2 **CHECK INPUT SIGNAL**

With CONSULT-II

1. Turn ignition switch to ON position.
   (Do not start engine.)
2. Select "TCM INPUT SIGNALS" in "DATA MONITOR" mode for "A/T" with CONSULT-II.
3. Read out the value of "THRTL POS SEN".

DATA MONITOR	
MONITORING	
VHCL/S SE-A/T	XXX km/h
VHCL/S SE-MTR	XXX km/h
THRTL POS SEN	XXX V
FLUID TEMP SE	XXX V
BATTERY VOLT	XXX V

SAT614J

Voltage:
Fully-closed throttle:
Approximately 0.5V
Fully-open throttle:
Approximately 4V

Without CONSULT-II

1. Turn ignition switch to ON position.
   (Do not start engine.)
2. Check voltage between TCM terminals 41 and 42 while accelerator pedal is depressed slowly.

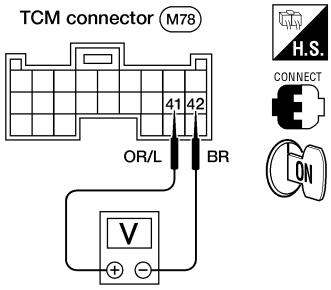

AAT474A

Voltage:
Fully-closed throttle valve:
Approximately 0.5V
Fully-open throttle valve:
Approximately 4V
(Voltage rises gradually in response to throttle position.)

OK or NG

OK (With CONSULT-II) ▶	GO TO 3.
OK (Without CONSULT-II) ▶	GO TO 4.
NG ▶	Check harness for short or open between ECM and TCM regarding throttle position sensor circuit. (Main harness)

3 CHECK THROTTLE POSITION SWITCH CIRCUIT (With CONSULT-II)

With CONSULT-II

1. Turn ignition switch to ON position.
   (Do not start engine.)
2. Select "TCM INPUT SIGNALS" in "DATA MONITOR" mode for "A/T" with CONSULT-II.
3. Read out "CLOSED THL/SW" and "W/O THRL/P-SW" depressing and releasing accelerator pedal.
   Check the signal of throttle position switch is indicated properly.

Accelerator pedal condition	Data monitor	
	CLOSED THL/SW	W/O THRL/P-SW
Released	ON	OFF
Fully depressed	OFF	ON

MTBL0011

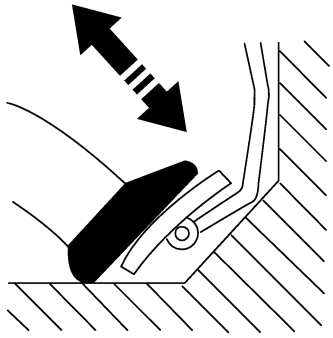

DATA MONITOR	
MONITORING	
POWERSHIFT SW	OFF
CLOSED THL/SW	OFF
W/O THRL/P-SW	OFF
HOLD SW	OFF
BRAKE SW	ON

SAT646J

OK or NG

OK	▶	GO TO 5.
NG	▶	**Check the following items:** ● Throttle position switch Refer to "Component Inspection", AT-336. ● Harness for short or open between ignition switch and throttle position switch (Main harness) ● Harness for short or open between throttle position switch and TCM (Main harness)

4	CHECK THROTTLE POSITION SWITCH CIRCUIT (Without CONSULT-II)

Without CONSULT-II

1. Turn ignition switch to ON position.
   (Do not start engine.)
2. Check voltage between TCM connector M77 terminals 16 (BR/W), 17 (OR/B) and ground while depressing, and releasing accelerator pedal slowly. (after warming up engine)

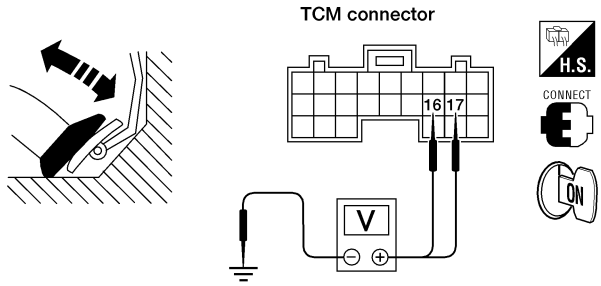

Accelerator pedal condition	Voltage	
	Terminal No. 16	Terminal No. 17
Released	Battery voltage	0V
Fully Depressed	0V	Battery voltage

WAT337

OK or NG

OK	▶	GO TO 5.
NG	▶	**Check the following items:** ● Throttle position switch Refer to "Component Inspection", AT-336. ● Harness for short or open between ignition switch and throttle position switch (Main harness) ● Harness for short or open between throttle position switch and TCM (Main harness)

5	CHECK DTC

Perform Diagnostic Trouble Code (DTC) confirmation procedure. Refer to "DIAGNOSTIC TROUBLE CODE (DTC) CONFIRMATION PROCEDURE", AT-330.

OK or NG

OK	▶	**INSPECTION END**
NG	▶	1. Perform TCM input/output signal inspection. 2. If NG, recheck TCM pin terminals for damage or loose connection with harness connector.

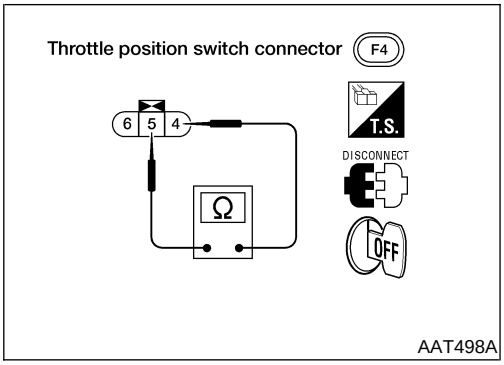

Component Inspection

=NEAT0185

THROTTLE POSITION SWITCH

NEAT0185S01

Closed Throttle Position Switch (Idle position)

NEAT0185S0101

- Check continuity between terminals 4 and 5.

Accelerator pedal condition	Continuity
Released	Yes
Depressed	No

- To adjust closed throttle position switch, refer to ***EC-715*** (VG33E only) or ***EC-1314*** (VG33ER only), “Basic Inspection”.

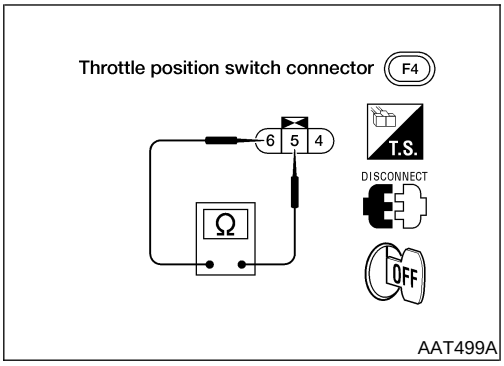

Wide Open Throttle Position Switch

NEAT0185S0102

- Check continuity between terminals 5 and 6.

Accelerator pedal condition	Continuity
Released	No
Depressed	Yes

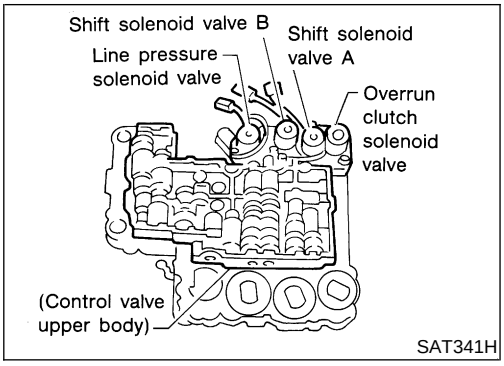

Description

NEAT0186

The overrun clutch solenoid valve is activated by the TCM in response to signals sent from the PNP switch, overdrive control switch, vehicle speed and throttle position sensors. The overrun clutch operation will then be controlled.

TCM TERMINALS AND REFERENCE VALUE

NEAT0186S01

Remarks: Specification data are reference values.

Terminal No.	Wire color	Item	Condition		Judgement standard (Approx.)
20	L/B	Overrun clutch solenoid valve		When overrun clutch solenoid valve operates.	Battery voltage
				When overrun clutch solenoid valve does not operate.	0V

ON BOARD DIAGNOSIS LOGIC

NEAT0186S02

Diagnostic trouble code	Malfunction is detected when ...	Check item (Possible cause)
: O/R CLTCH SOL/CIRC	TCM detects an improper voltage drop when it tries to operate the solenoid valve.	• Harness or connectors (The solenoid circuit is open or shorted.) • Overrun clutch solenoid valve
: P1760		

Description (Cont'd)

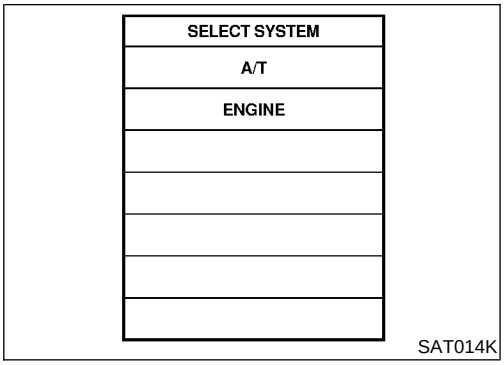

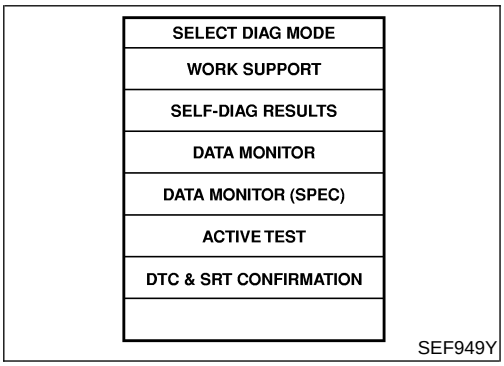

DIAGNOSTIC TROUBLE CODE (DTC) CONFIRMATION PROCEDURE

=NEAT0186S03

CAUTION:

Always drive vehicle at a safe speed.

NOTE:

If "DIAGNOSTIC TROUBLE CODE CONFIRMATION PROCEDURE" has been previously conducted, always turn ignition switch OFF and wait at least 5 seconds before conducting the next test.

TESTING CONDITION:

Always drive vehicle on a level road to improve accuracy of test.

After the repair, perform the following procedure to confirm the malfunction is eliminated.

With CONSULT-II

1) Turn ignition switch ON and select "DATA MONITOR" mode for "ENGINE" with CONSULT-II.
2) Start engine.
3) Accelerate vehicle to a speed of more than 10 km/h (6MPH) in D position (O/D ON).
4) Release accelerator pedal completely in D position (O/D OFF).

With GST

1) Follow the procedure "With CONSULT-II".

Wiring Diagram — AT — OVRCSV

NEAT0187

AT-OVRCSV-01

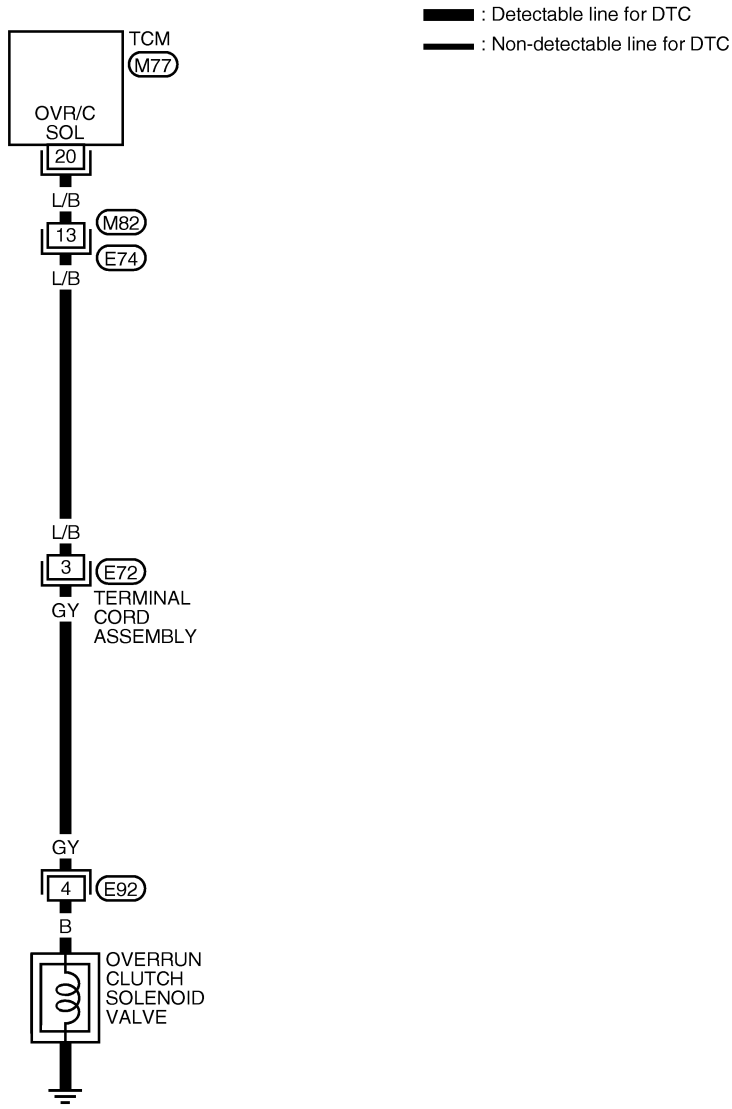

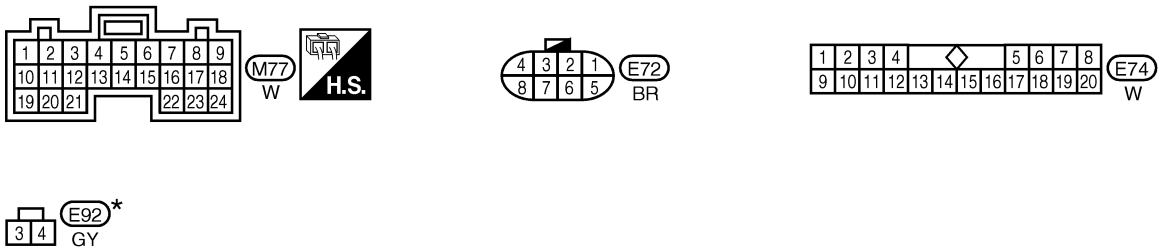

*: This connector is not shown in "HARNESS LAYOUT" of EL section.

AAT596A

Diagnostic Procedure

NEAT0188

1	CHECK GROUND CIRCUIT

1. Turn ignition switch to OFF position.
2. Disconnect terminal cord assembly connector in engine compartment.
3. Check resistance between terminal cord assembly connector E72 terminal 3 and ground.

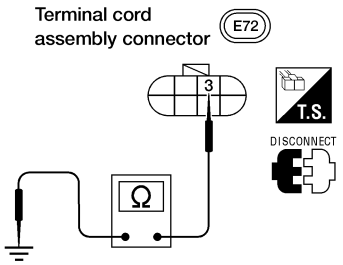

AAT500A

Is resistance approx. 20 - 40Ω?

Yes	▶	GO TO 2.
No	▶	1. Remove control valve assembly. Refer to “REMOVAL”, AT-416. 2. Check the following items: ● Overrun clutch solenoid valve Refer to “Component Inspection”, AT-341. ● Harness of terminal cord assembly for short or open

2	CHECK POWER SOURCE CIRCUIT

1. Turn ignition switch to OFF position.
2. Disconnect TCM harness connector.
3. Check resistance between terminal cord assembly connector E72 terminal 3 and TCM harness connector M77 terminal 20.

If OK, check harness for short to ground and short to power.

Is resistance approx 0Ω?

Yes	▶	GO TO 3.
No	▶	Repair open circuit or short to ground or short to power in harness or connectors.

3	CHECK DTC

Perform Diagnostic Trouble Code (DTC) confirmation procedure. Refer to “DIAGNOSTIC TROUBLE CODE (DTC) CONFIRMATION PROCEDURE”, AT-338.

OK or NG

OK	▶	**INSPECTION END**
NG	▶	1. Perform TCM input/output signal inspection. 2. If NG, recheck TCM pin terminals for damage or loose connection with harness connector.

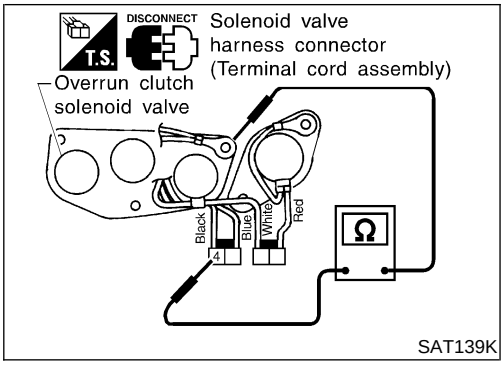

SAT139K

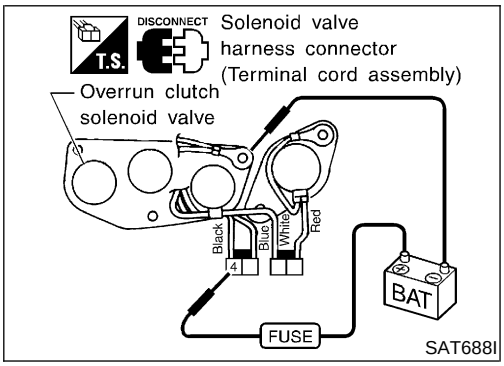

SAT688I

Component Inspection

=NEAT0189

OVERRUN CLUTCH SOLENOID VALVE

NEAT0189S01

- For removal, refer to “REMOVAL”, AT-416.

Resistance Check

NEAT0189S0101

- Check resistance between terminal 4 and ground.

Solenoid valve	Terminal No.		Resistance (Approx.)
Overrun clutch solenoid valve	4	Ground	20 - 40Ω

Operation Check

NEAT0189S0102

- Check solenoid valve by listening for its operating sound while applying battery voltage to the terminal 4 and ground.

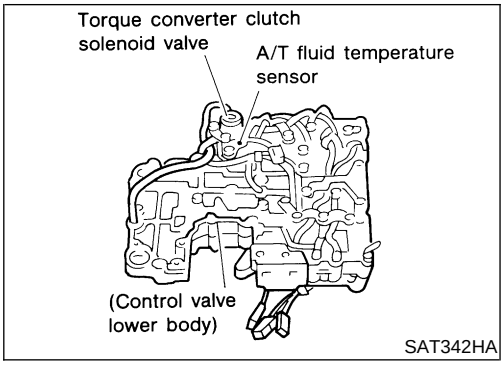

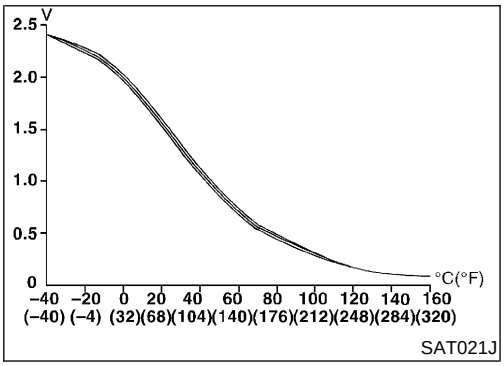

Description

NEAT0190

The A/T fluid temperature sensor detects the A/T fluid temperature and sends a signal to the TCM.

CONSULT-II REFERENCE VALUE IN DATA MONITOR MODE

NEAT0190S01

Remarks: Specification data are reference values.

Monitor item	Condition	Specification (Approx.)	
A/T fluid temperature sensor	Cold [20°C (68°F)] ↓ Hot [80°C (176°F)]	1.5V ↓ 0.5V	2.5kΩ ↓ 0.3kΩ

TCM TERMINALS AND REFERENCE VALUE

NEAT0190S02

Remarks: Specification data are reference values.

Terminal No.	Wire color	Item	Condition		Judgement standard (Approx.)
10	W/R	Power source		When turning ignition switch to ON.	Battery voltage
				When turning ignition switch to OFF.	0V
19	W/R	Power source		When turning ignition switch to ON.	Battery voltage
				When turning ignition switch to OFF.	0V
28	R/Y	Power source (Memory back-up)	 or 	When turning ignition switch to OFF.	Battery voltage
				When turning ignition switch to ON.	Battery voltage
42	BR	Throttle position sensor (Ground)		—	0V
47	R/B	A/T fluid temperature sensor		When ATF temperature is 20°C (68°F).	1.5V
				When ATF temperature is 80°C (176°F).	0.5V

ON BOARD DIAGNOSIS LOGIC

NEAT0190S03

Diagnostic trouble code	Malfunction is detected when ...	Check item (Possible cause)
: BATT/FLUID TEMP SEN	TCM receives an excessively low or high voltage from the sensor.	• Harness or connections (The sensor circuit is open or shorted) • A/T fluid temperature sensor
: 8th judgement flicker		

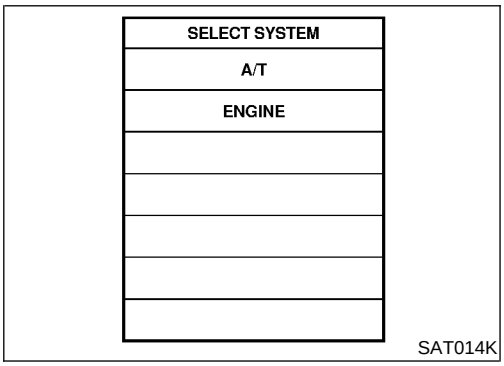

SAT014K

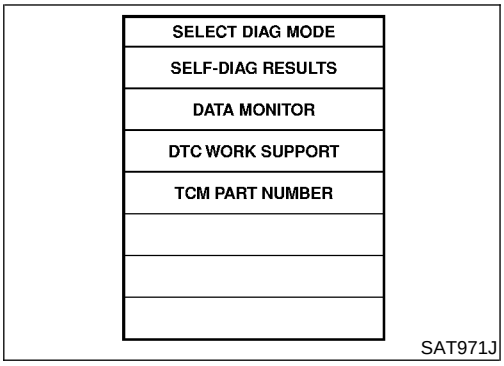

SAT971J

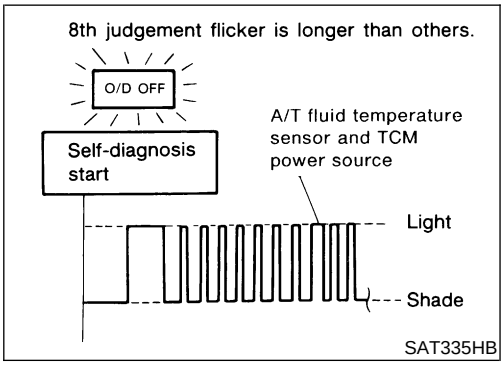

SAT335HB

DIAGNOSTIC TROUBLE CODE (DTC) CONFIRMATION PROCEDURE

NEAT0190S04

After the repair, perform the following procedure to confirm the malfunction is eliminated.

With CONSULT-II

1) Start engine.
2) Select "DATA MONITOR" mode for "A/T" with CONSULT-II.
3) Drive vehicle under the following conditions:
   Selector lever in D position, vehicle speed higher than 20 km/h (12 MPH).

Without CONSULT-II

1) Follow the procedure "With CONSULT-II".

Wiring Diagram — AT — BA/FTS

NEAT0191

AT-BA/FTS-01

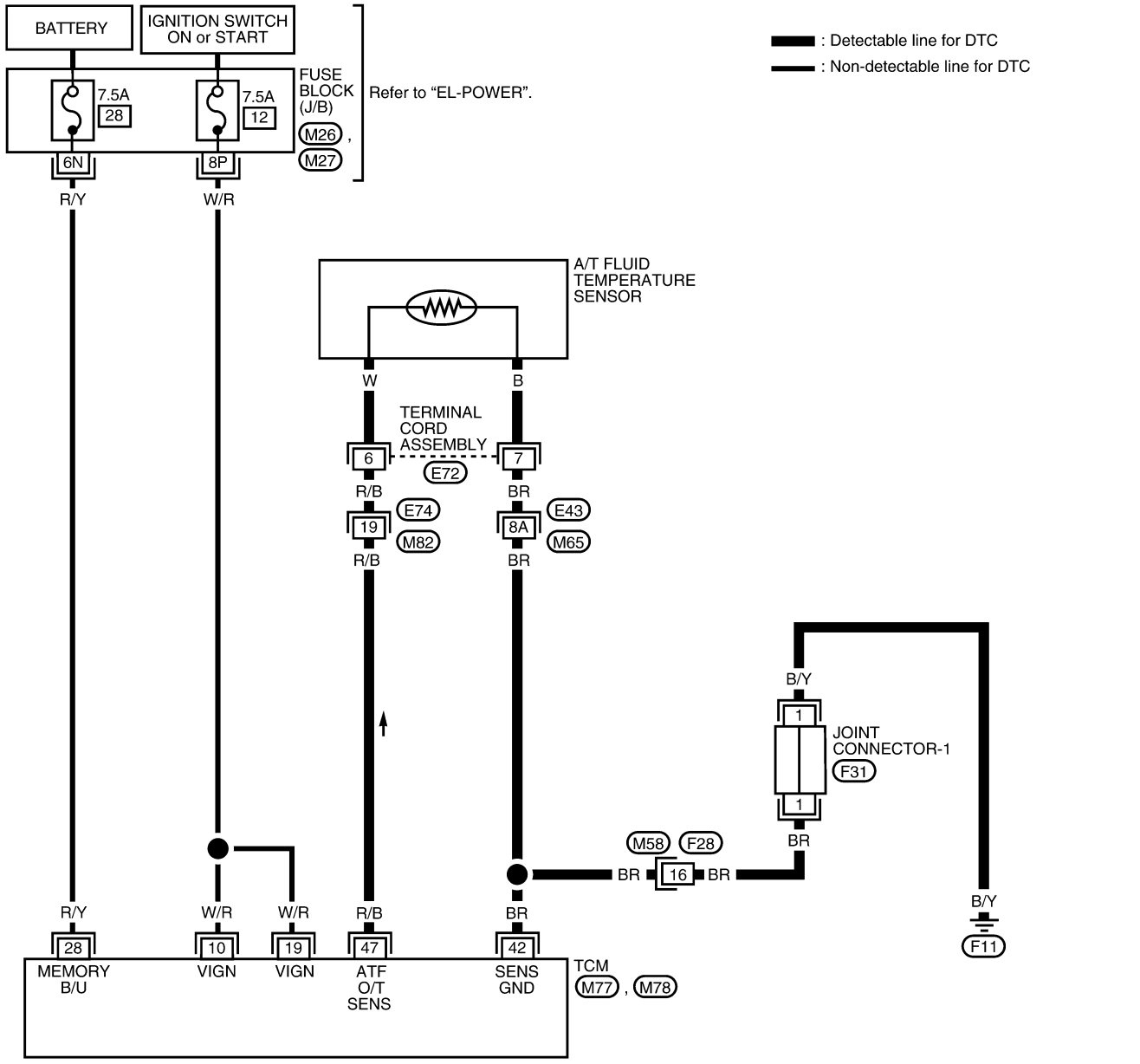

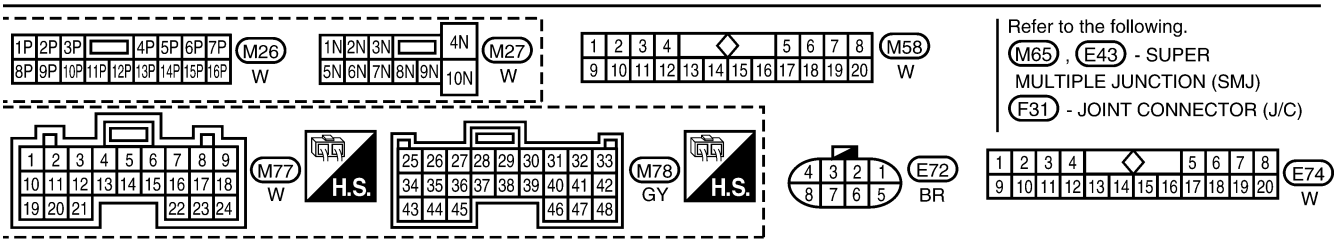

LAT447

Diagnostic Procedure

NEAT0192

1	CHECK TCM POWER SOURCE

1. Turn ignition switch to ON position.
   (Do not start engine.)
2. Check voltage between TCM harness connectors M77, M78 terminals (10, 19, 28) and ground.

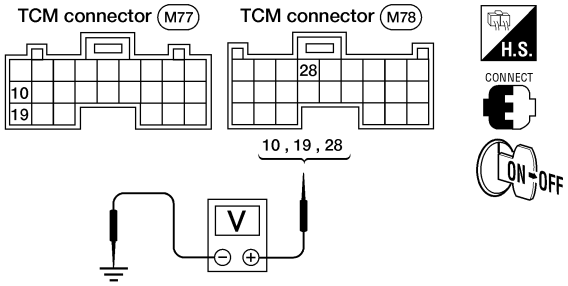

AAT476A

Voltage: Battery voltage

3. Turn ignition switch to OFF position.
4. Check voltage between TCM terminal 28 and ground.
   Voltage: Battery voltage

OK or NG

OK	▶	GO TO 2.
NG	▶	**Check the following items:** ● Harness for short or open between fuse block J/B harness and TCM terminals (10, 19 and 28) (Main harness) ● Ignition switch and fuse Refer to ***EL-9***, “POWER SUPPLY ROUTING”.

2	CHECK A/T FLUID TEMPERATURE SENSOR WITH TERMINAL CORD ASSEMBLY

1. Turn ignition switch to OFF position.
2. Disconnect terminal cord assembly connector in engine compartment.
3. Check resistance between terminals 6 and 7 when A/T is cold [20°C (68°F)].

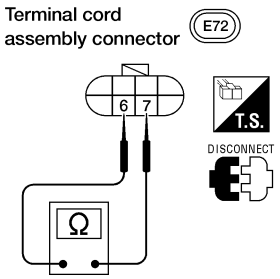

AAT502A

Is resistance approx. 2.5kΩ?

Yes	▶	GO TO 3.
No	▶	1. Remove oil pan. 2. Check the following items: ● A/T fluid temperature sensor Refer to “Component Inspection”, AT-347. ● Harness of terminal cord assembly for short or open

Diagnostic Procedure (Cont'd)

3	CHECK INPUT SIGNAL OF A/T FLUID TEMPERATURE SENSOR

With CONSULT-II

1. Start engine.
2. Select "TCM INPUT SIGNALS" in "DATA MONITOR" mode for "A/T" with CONSULT-II.
3. Read out the value of "FLUID TEMP SE".

DATA MONITOR	
MONITORING	
VHCL/S SE-A/T	XXX km/h
VHCL/S SE-MTR	XXX km/h
THRTL POS SEN	XXX V
FLUID TEMP SE	XXX V
BATTERY VOLT	XXX V

SAT614J

Voltage:
Cold [20°C (68°F)] → Hot [80°C (176°F)]:
Approximately 1.5V → 0.5V

Without CONSULT-II

1. Start engine.
2. Check voltage between TCM terminal 47 and ground while warming up A/T.

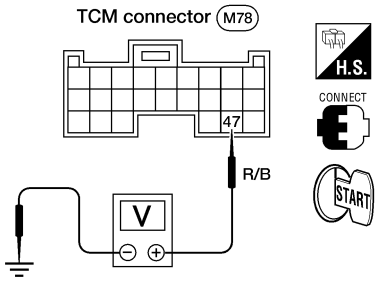

AAT503A

Voltage:
Cold [20°C (68°F)] → Hot [80°C (176°F)]:
Approximately 1.5V → 0.5V

OK or NG

OK	▶	GO TO 4.
NG	▶	**Check the following item:** ● Harness for short or open between TCM and terminal cord assembly (Main harness)

4	CHECK DTC

Perform Diagnostic Trouble Code (DTC) confirmation procedure. Refer to "DIAGNOSTIC TROUBLE CODE (DTC) CONFIRMATION PROCEDURE", AT-343.

OK or NG

OK	▶	**INSPECTION END**
NG	▶	● Perform TCM input/output signal inspection. ● If NG, recheck TCM pin terminals for damage or loose connection with harness connector.

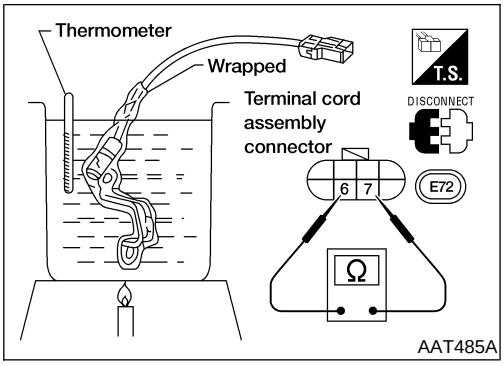

Component Inspection

NEAT0193

A/T FLUID TEMPERATURE SENSOR

NEAT0193S01

- For removal, refer to “REMOVAL”, AT-416.
- Check resistance between terminals 6 and 7 while changing temperature as shown at left.

Temperature °C (°F)	Resistance (Approx.)
20 (68)	2.5 kΩ
80 (176)	0.3 kΩ

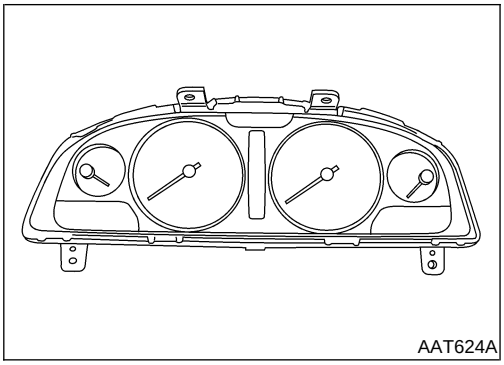
AAT624A

Description

NEAT0194

The vehicle speed sensor·MTR is built into the speedometer assembly. The sensor functions as an auxiliary device to the revolution sensor when it is malfunctioning. The TCM will then use a signal sent from the vehicle speed sensor·MTR.

TCM TERMINALS AND REFERENCE VALUE

NEAT0194S01

Remarks: Specification data are reference values.

Terminal No.	Wire color	Item	Condition		Judgement standard (Approx.)
40	G/B	Vehicle speed sensor		When moving vehicle at 2 to 3 km/h (1 to 2 MPH) for 1 m (3 ft) or more.	Voltage varies between less than 1V and more than 4.5V

ON BOARD DIAGNOSIS LOGIC

NEAT0194S02

Diagnostic trouble code	Malfunction is detected when ...	Check item (Possible cause)
: VHCL SPEED SEN·MTR	TCM does not receive the proper voltage signal from the sensor.	• Harness or connectors (The sensor circuit is open or shorted.) • Vehicle speed sensor
: 2nd judgement flicker		

SELECT SYSTEM
A/T
ENGINE

SAT014K

SELECT DIAG MODE
SELF-DIAG RESULTS
DATA MONITOR
DTC WORK SUPPORT
TCM PART NUMBER

SAT971J

VG33E

2nd judgement flicker is longer than others.

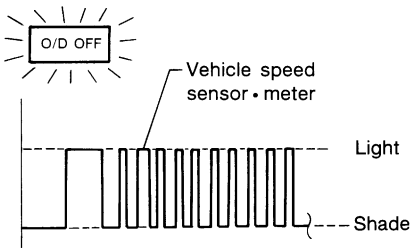

VG33ER

2nd judgement flicker is longer than others.

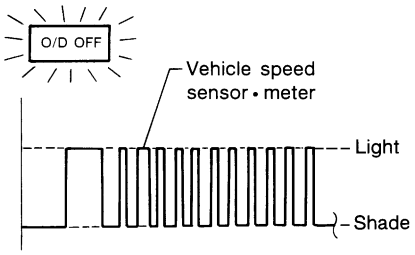

LAT436

DIAGNOSTIC TROUBLE CODE (DTC) CONFIRMATION PROCEDURE

=NEAT0194S03

CAUTION:

- **Always drive vehicle at a safe speed.**
- **If conducting this "DTC CONFIRMATION PROCEDURE" again, always turn ignition switch OFF and wait at least 5 seconds before continuing.**

After the repair, perform the following procedure to confirm the malfunction is eliminated.

With CONSULT-II

1) Turn ignition switch ON and select "DATA MONITOR" mode for "A/T" with CONSULT-II.
2) Start engine and accelerate vehicle from 0 to 25 km/h (0 to 6 MPH).

Without CONSULT-II

1) Follow the procedure "With CONSULT-II".

Wiring Diagram — AT — VSSMTR

NEAT0195

AT-VSSMTR-01

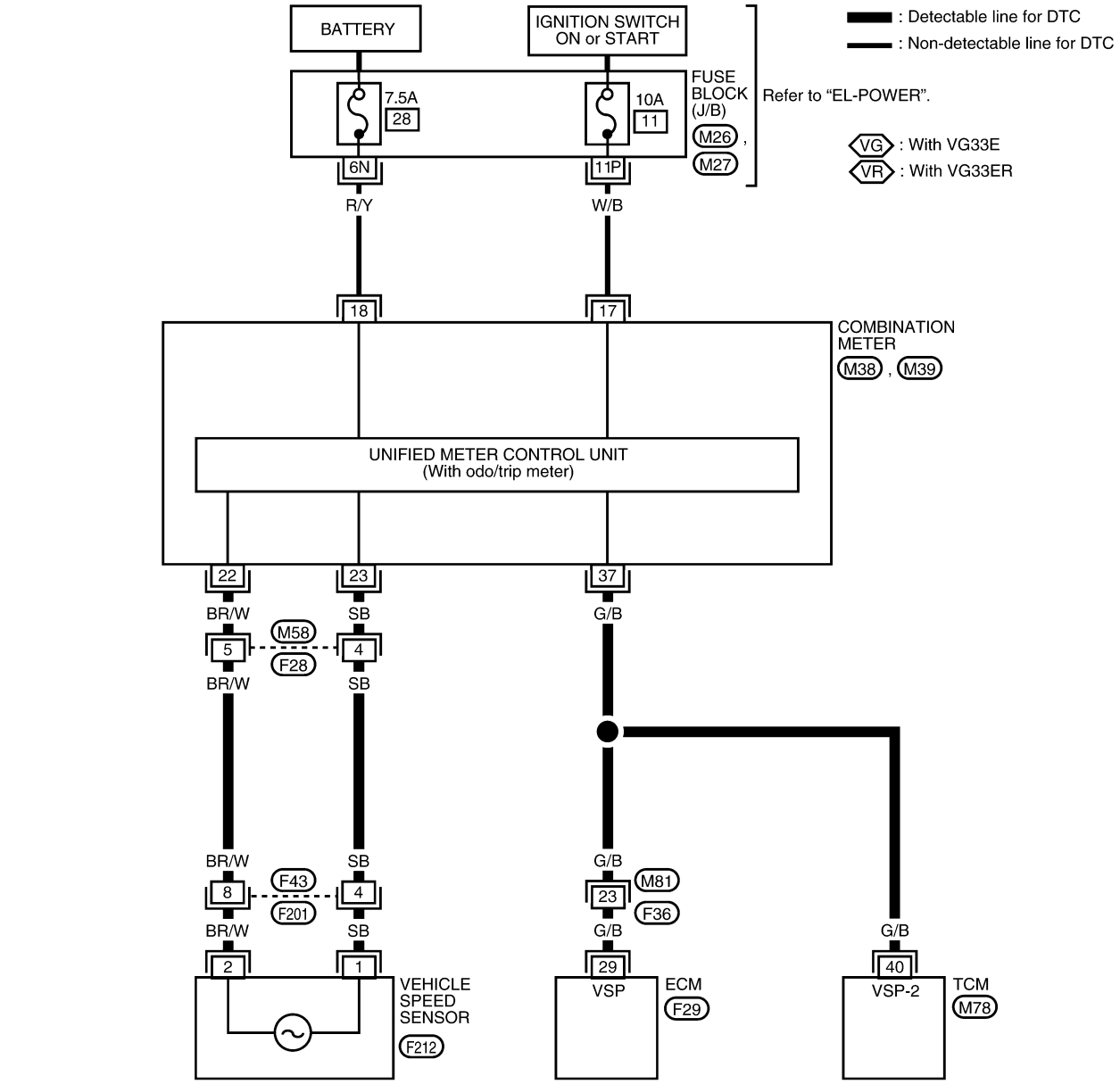

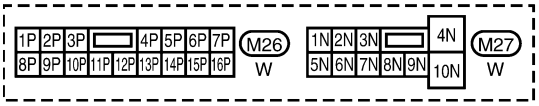

Refer to the following.
M78 , F29 - ELECTRICAL UNITS

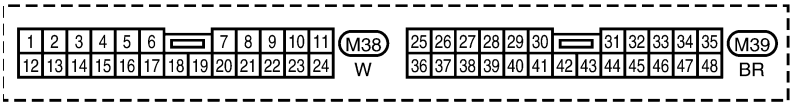

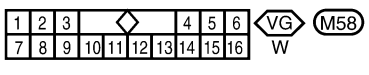

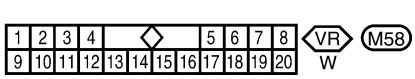



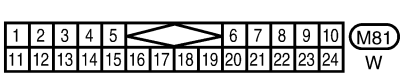



WAT368

Diagnostic Procedure

NEAT0196

1	CHECK INPUT SIGNAL.

With CONSULT-II

1. Start engine.
2. Select “TCM INPUT SIGNALS” in “DATA MONITOR” mode for “A/T” with CONSULT-II.
3. Read out the value of “VHCL/S SE·MTR” while driving.
   Check the value changes according to driving speed.

DATA MONITOR	
MONITORING	
VHCL/S SE-A/T	XXX km/h
VHCL/S SE-MTR	XXX km/h
THRTL POS SEN	XXX V
FLUID TEMP SE	XXX V
BATTERY VOLT	XXX V

SAT614J

Without CONSULT-II

1. Start engine.
2. Check voltage between TCM harness connector M78 terminal 40 and ground while driving at 2 to 3 km/h (1 to 2 MPH) for 1 m (3 ft) or more.

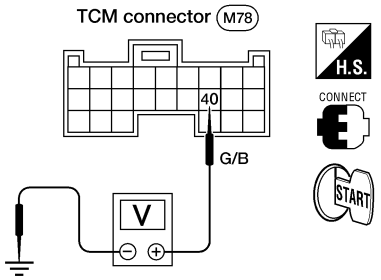

AAT504A

Does battery voltage vary between less than 1V and more than 4.5V?

Yes	▶	GO TO 2.
No	▶	**Check the following items:** ● Vehicle speed sensor and ground circuit for vehicle speed sensor. Refer to ***EL-69***, “METERS AND GAUGES”. ● Harness for short or open between TCM and vehicle speed sensor (Main harness)

2	CHECK DTC

Perform “DIAGNOSTIC TROUBLE CODE (DTC) CONFIRMATION PROCEDURE”, AT-349.

OK or NG

OK	▶	**INSPECTION END**
NG	▶	1. Perform TCM input/output signal inspection. 2. If NG, recheck TCM pin terminals for damage or loose connection with harness connector.

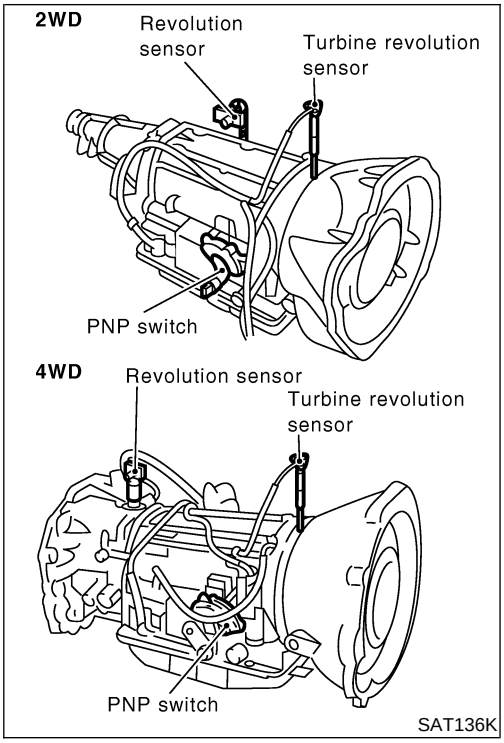

Description

NEAT0510

The turbine revolution sensor detects input shaft rpm (revolutions per minute). It is located on the input side of the automatic transmission. The vehicle speed sensor A/T (Revolution sensor) is located on the output side of the automatic transmission. With the two sensors, input and output shaft rpms are accurately detected. The result is optimal shift timing during deceleration and improved shifting.

TCM TERMINALS AND REFERENCE VALUE

NEAT0510S01

Remarks: Specification data are reference values.

Terminal No.	Wire color	Item	Condition		Judgement standard (Approx.)
38	Y	Turbine revolution sensor (Measure in AC range)		When engine is running at 1,000 rpm	1.2V Voltage rises gradually in response to engine speed.
42	BR	Throttle position sensor (Ground)		—	0V

ON BOARD DIAGNOSIS LOGIC

NEAT0510S02

Diagnostic trouble code	Malfunction is detected when ...	Check item (Possible cause)
: TURBINE REV	TCM does not receive the proper voltage signal from the sensor.	• Harness or connectors (The sensor circuit is open or shorted.) • Turbine revolution sensor
: 10th judgement flicker		

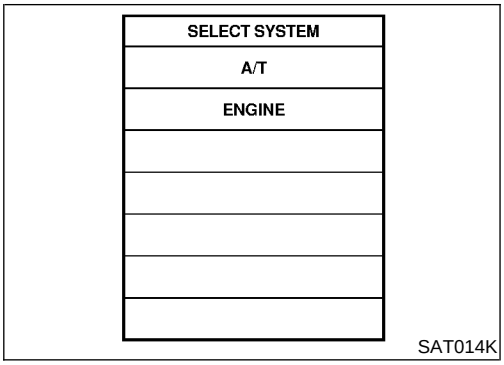

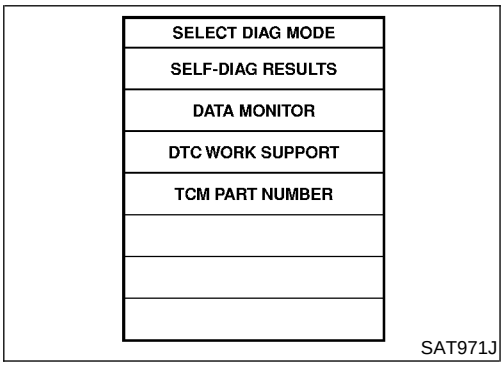

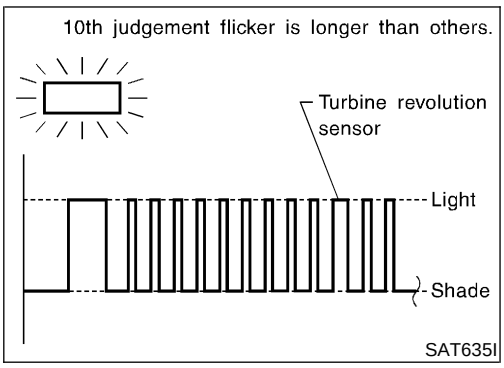

DIAGNOSTIC TROUBLE CODE (DTC) CONFIRMATION PROCEDURE

NEAT0510S03

CAUTION:

- **Always drive vehicle at a safe speed.**
- **If conducting this "DTC CONFIRMATION PROCEDURE" again, always turn ignition switch "OFF" and wait at least 5 seconds before continuing.**

After the repair, perform the following procedure to confirm the malfunction is eliminated.

With CONSULT-II

1) Start engine.
2) Select "DATA MONITOR" mode for "A/T" with CONSULT-II.
3) Drive vehicle under the following conditions:
   Selector lever in "D", vehicle speed higher than 40 km/h (25 MPH), engine speed higher than 1,500 rpm, throttle opening greater than 1.0/8 of the full throttle position and driving for more than 5 seconds.

No Tools

1) Start engine.
2) Drive vehicle under the following conditions:
   Selector lever in "D", vehicle speed higher than 40 km/h (25 MPH), engine speed higher than 1,500 rpm, throttle opening greater than 1/8 of the full throttle position and driving for more than 5 seconds.
3) Perform self-diagnosis.
   Refer to "TCM SELF-DIAGNOSTIC PROCEDURE (No Tools)", AT-191.

Wiring Diagram — AT — TRSA/T

NEAT0511

AT-TRSA/T-01

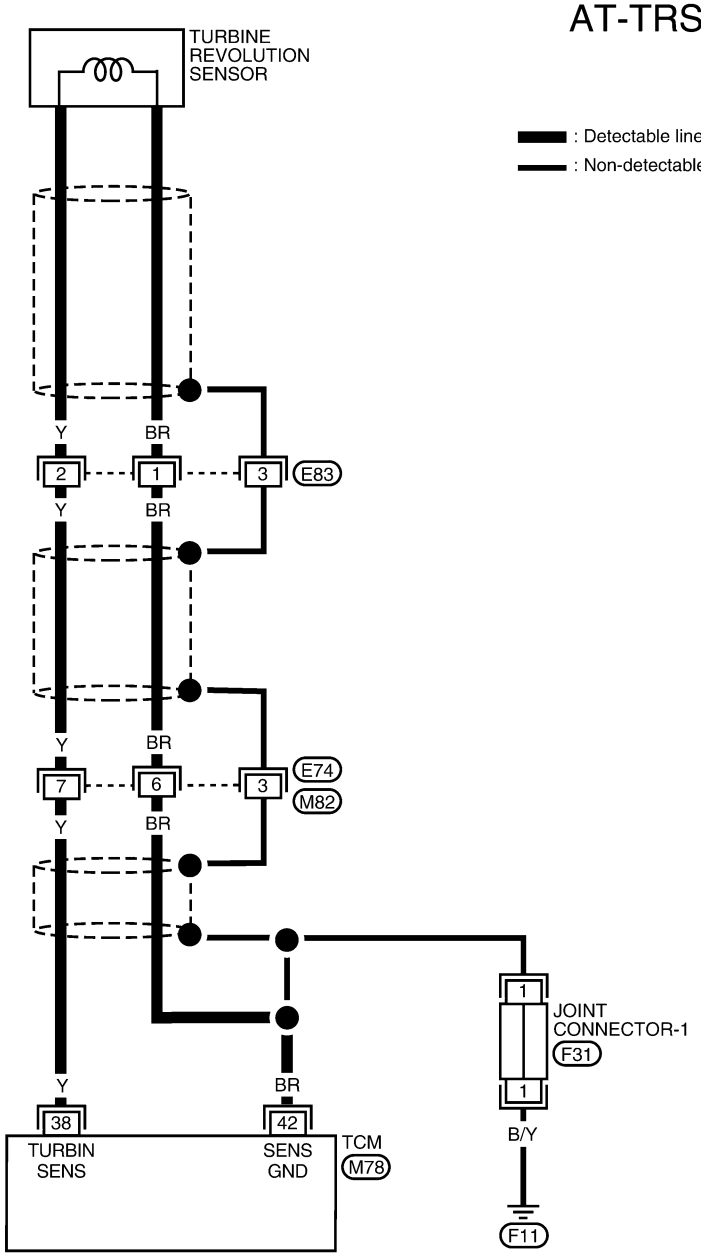

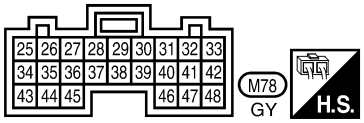

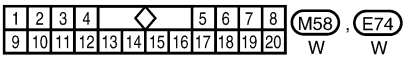



Refer to the following.
F31 - JOINT CONNECTOR

WAT539

Diagnostic Procedure

NEAT0512

1	CHECK INPUT SIGNAL

With CONSULT-II

1. Start engine.
2. Select “TCM INPUT SIGNALS” in “DATA MONITOR” mode for “A/T” with CONSULT-II.
3. Read out the value of “TURBINE REV”. Check the value changes according to engine speed.

DATA MONITOR	
MONITORING	
ENGINE SPEED	XXX rpm
TURBINE REV	XXX rpm
OVERDRIVE SW	ON
PN POSI SW	OFF
R POSITION SW	OFF

SAT740J

Without CONSULT-II

1. Start engine.
2. Check voltage between TCM terminal 38 and ground. (Measure in AC range.)

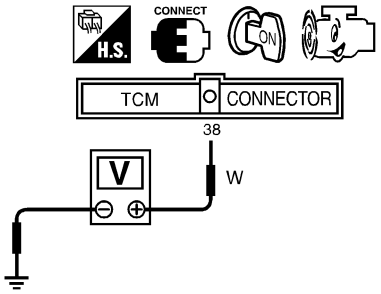

Approximately 1.2V
(Voltage rises gradually in response to engine speed.)

SAT140K

OK or NG

OK	▶	GO TO 3.
NG	▶	GO TO 2.

2	DETECT MALFUNCTIONING ITEM

Check harness for short or open between TCM and turbine revolution sensor.

OK or NG

OK	▶	GO TO 3.
NG	▶	Repair or replace damaged parts.

3	CHECK DTC

Perform “DIAGNOSTIC TROUBLE CODE (DTC) CONFIRMATION PROCEDURE”, AT-353.

OK or NG

OK	▶	**INSPECTION END**
NG	▶	GO TO 4.

Diagnostic Procedure (Cont'd)

4	CHECK TCM INSPECTION	
1. Perform TCM input/output signal inspection. 2. If NG, recheck TCM pin terminal for damage or loose connection with harness connector.		
OK or NG		
OK	▶	**INSPECTION END**
NG	▶	Repair or replace damaged parts.

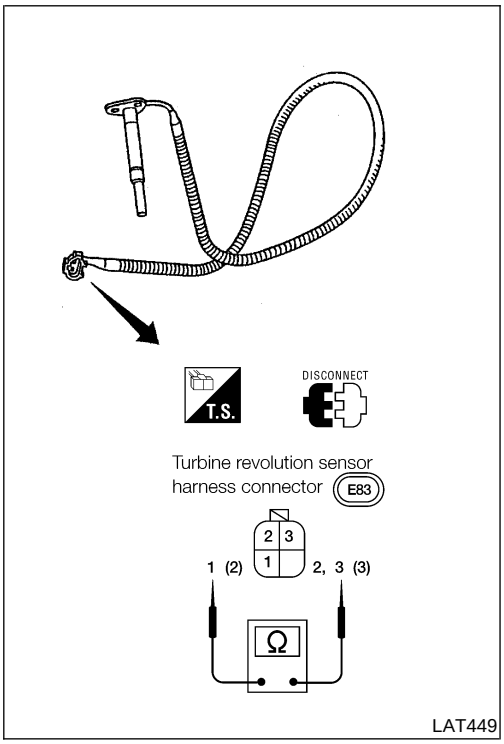

Component Inspection

NEAT0513

TURBINE REVOLUTION SENSOR

NEAT0513S01

- Check resistance between terminals 1, 2 and 3.

Terminal No.		Resistance (Approx.)
1	2	2.4 - 2.8 kΩ
1	3	No continuity
2	3	No continuity

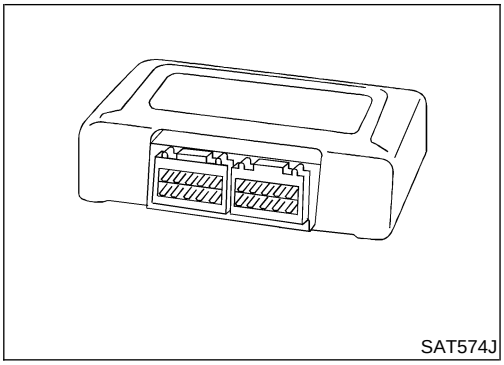
SAT574J

Description

NEAT0297

The TCM consists of a microcomputer and connectors for signal input and output and for power supply. The unit controls the A/T.

ON BOARD DIAGNOSIS LOGIC

NEAT0297S01

Diagnostic trouble code	Malfunction is detected when ...	Check Items (Possible Cause)
Ⓑ : CONTROL UNIT (RAM) : CONTROL UNIT (ROM)	• TCM memory (RAM) or (ROM) is malfunctioning.	• TCM

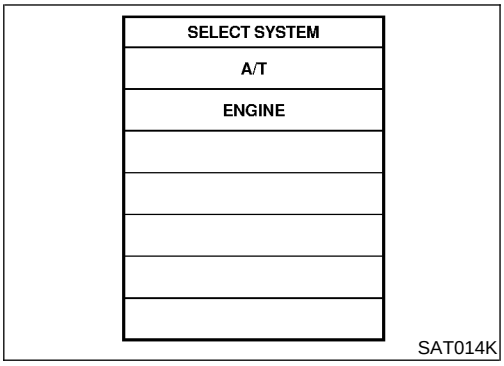

SAT014K

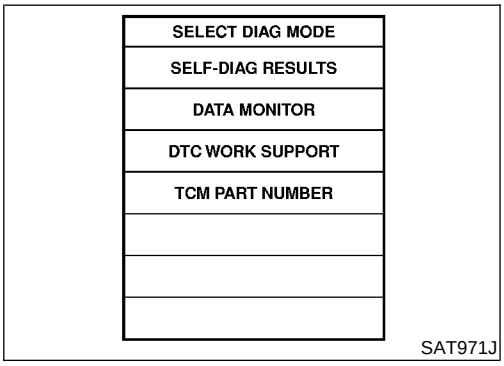

SAT971J

DIAGNOSTIC TROUBLE CODE (DTC) CONFIRMATION PROCEDURE

NEAT0297S02

NOTE:

If "DTC CONFIRMATION PROCEDURE" has been previously conducted, always turn ignition switch OFF and wait at least 5 seconds before conducting the next test.

Ⓑ **With CONSULT-II**

1) Turn ignition switch ON and select "DATA MONITOR" mode for A/T with CONSULT-II.
2) Start engine.
3) Run engine for at least 2 seconds at idle speed.

Diagnostic Procedure

NEAT0298

1	INSPECTION START	
With CONSULT-II 1. Turn ignition switch ON and select “SELF DIAG RESULTS” mode for A/T with CONSULT-II. 2. Touch “ERASE”. 3. Turn ignition switch OFF for 10 seconds. 4. Perform “DIAGNOSTIC TROUBLE CODE (DTC) CONFIRMATION PROCEDURE”, refer to AT-357. **Is the “CONTROL UNIT (RAM)” or “CONTROL UNIT (ROM)” displayed again?**		
Yes or No		
Yes	▶	Replace TCM.
No	▶	**INSPECTION END**

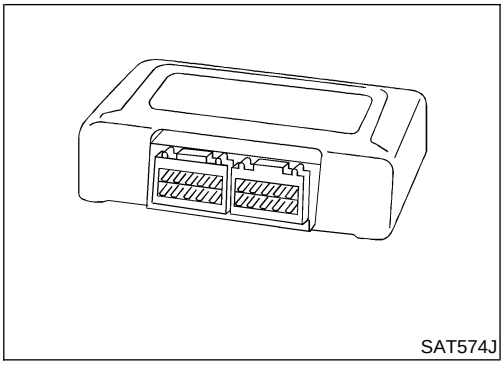

SAT574J

Description

NEAT0299

The TCM consists of a microcomputer and connectors for signal input and output and for power supply. The unit controls the A/T.

ON BOARD DIAGNOSIS LOGIC

NEAT0299S01

Diagnostic trouble code	Malfunction is detected when ...	Check item (Possible cause)
Ⓑ : CONT UNIT (EEP ROM)	TCM memory (EEP ROM) is malfunctioning.	TCM

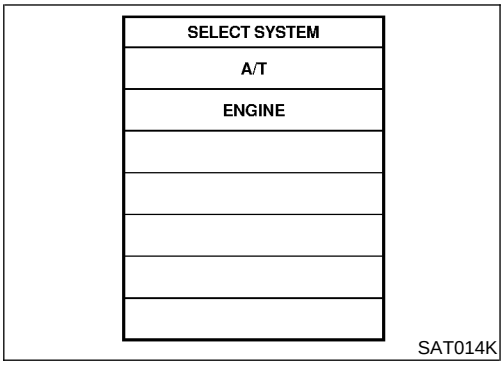

SAT014K

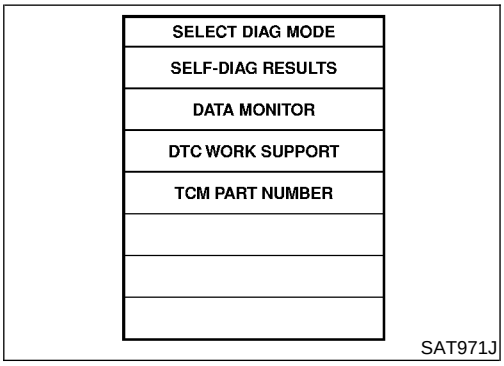

SAT971J

DIAGNOSTIC TROUBLE CODE (DTC) CONFIRMATION PROCEDURE

NEAT0299S02

NOTE:

If "DTC CONFIRMATION PROCEDURE" has been previously conducted, always turn ignition switch OFF and wait at least 5 seconds before conducting the next test.

Ⓑ **With CONSULT-II**

1) Turn ignition switch ON and select "DATA MONITOR" mode for A/T with CONSULT-II.
2) Start engine.
3) Run engine for at least 2 seconds at idle speed.

Diagnostic Procedure

NEAT0301

1	INSPECTION START	
With CONSULT-II 1. Turn ignition switch ON and select “SELF DIAG RESULTS” mode for A/T with CONSULT-II. 2. Move selector lever to “R” position. 3. Depress accelerator pedal (Full throttle position). 4. Touch “ERASE”. 5. Turn ignition switch OFF for ten seconds. Perform “DIAGNOSTIC TROUBLE CODE (DTC) CONFIRMATION PROCEDURE”, refer to AT-359. **Is the “CONT UNIT (EEPROM)” displayed again?**		
Yes or No		
Yes	▶	Replace TCM.
No	▶	**INSPECTION END**

Wiring Diagram — AT — NONDTC

NEAT0198

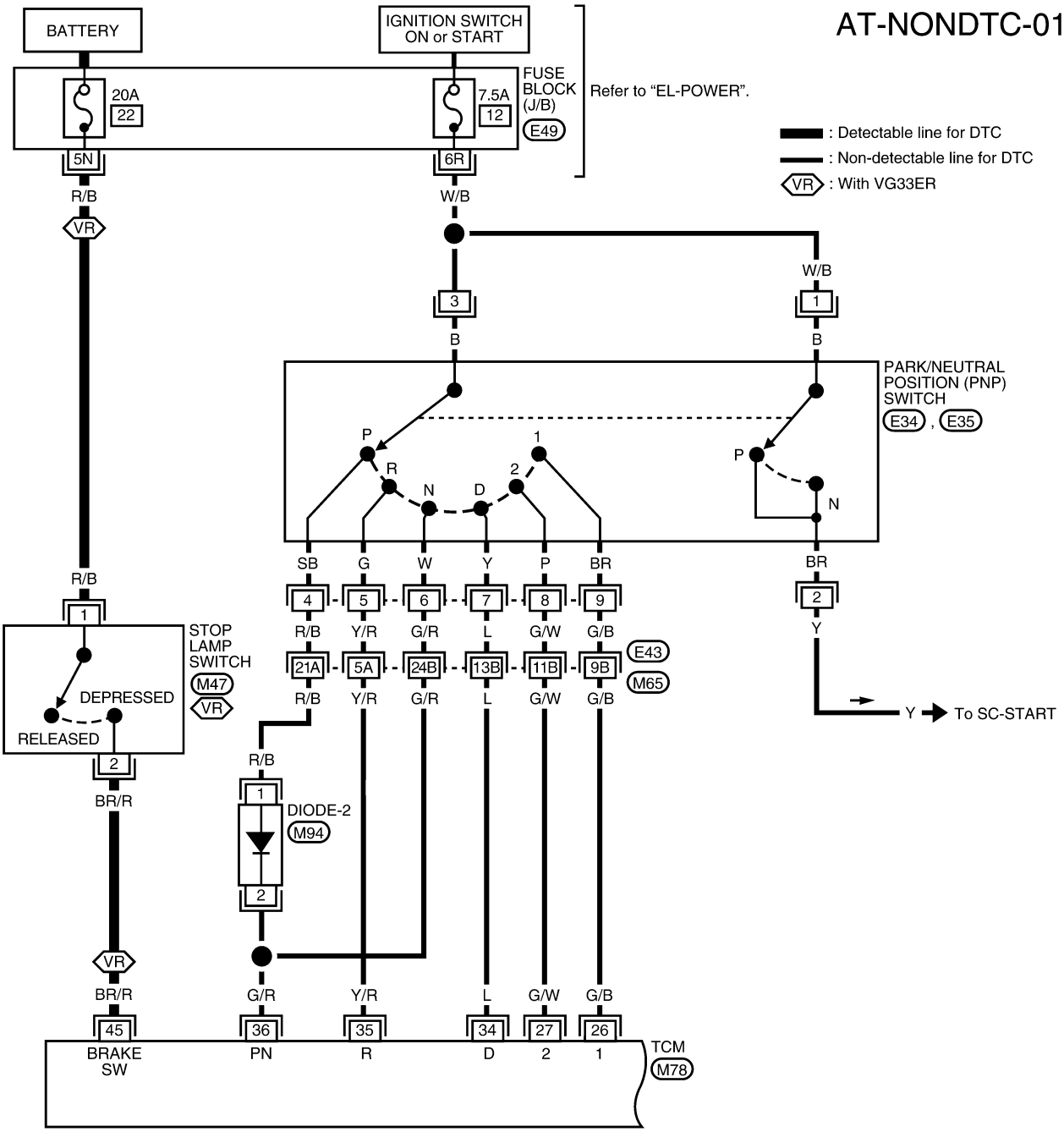

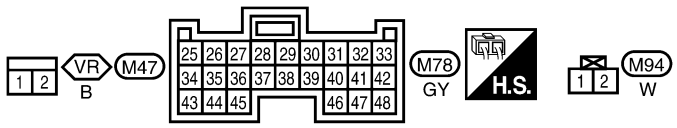

Refer to the following.
M65, E43 - SUPER MULTIPLE JUNCTION (SMJ)

WAT369

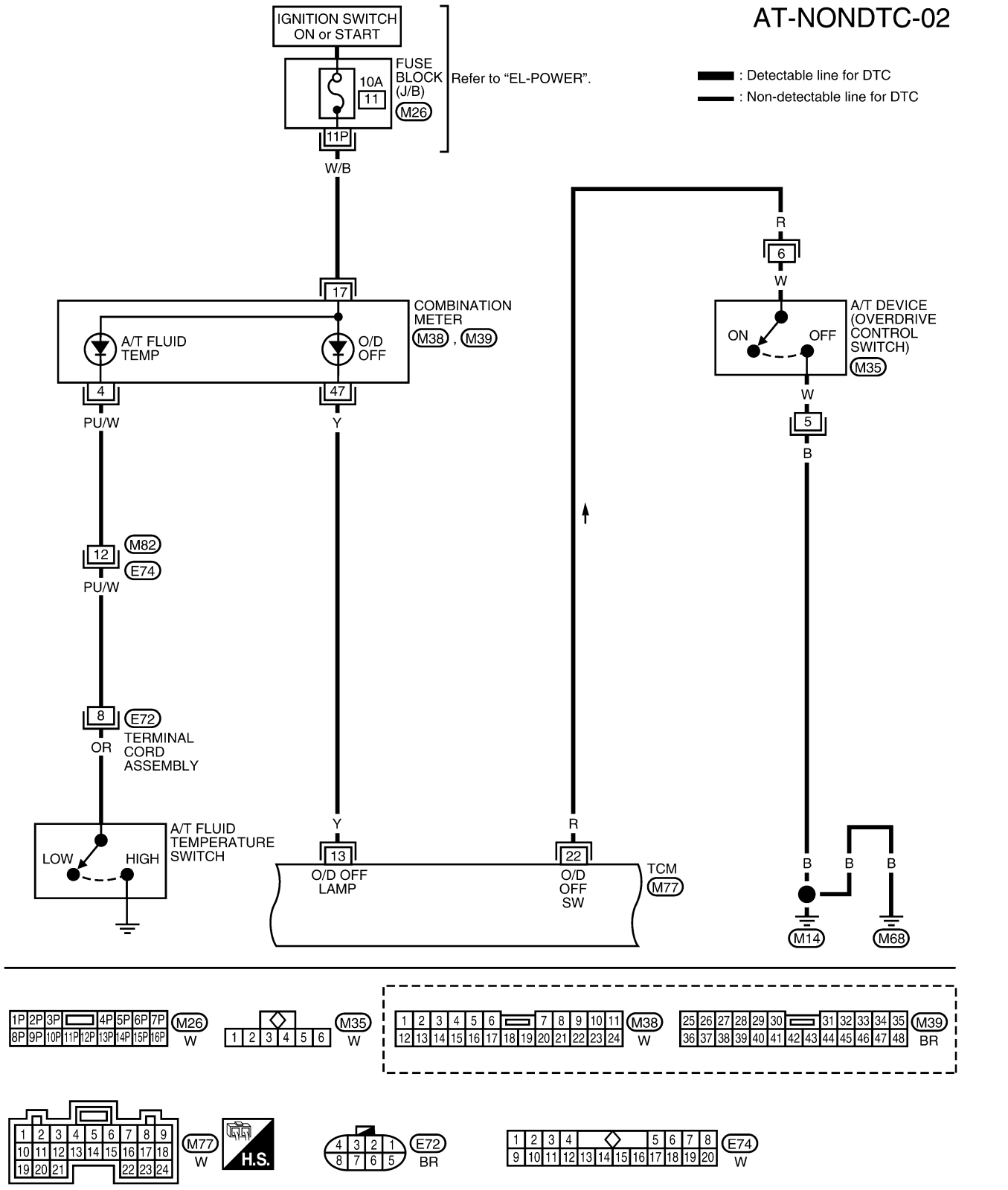
AT-NONDTC-02
: Detectable line for DTC
: Non-detectable line for DTC
IGNITION SWITCH ON or START
FUSE BLOCK (J/B)
10A
11
M26
11P
W/B
Refer to "EL-POWER".
17
COMBINATION METER
M38 , M39
A/T FLUID TEMP
O/D OFF
4
47
PU/W
Y
R
6
W
A/T DEVICE (OVERDRIVE CONTROL SWITCH)
ON
OFF
M35
W
5
B
12
M82
E74
PU/W
8
E72
OR
TERMINAL CORD ASSEMBLY
A/T FLUID TEMPERATURE SWITCH
LOW
HIGH
Y
13
O/D OFF LAMP
R
22
O/D OFF SW
TCM
M77
B
B
B
M14
M68
1P 2P 3P 4P 5P 6P 7P 8P 9P 10P 11P 12P 13P 14P 15P 16P
M26
W
1 2 3 4 5 6
M35
W
1 2 3 4 5 6 7 8 9 10 11 12 13 14 15 16 17 18 19 20 21 22 23 24
M38
W
25 26 27 28 29 30 31 32 33 34 35 36 37 38 39 40 41 42 43 44 45 46 47 48
M39
BR
1 2 3 4 5 6 7 8 9 10 11 12 13 14 15 16 17 18 19 20 21 22 23 24
M77
W
H.S.
4 3 2 1 8 7 6 5
E72
BR
1 2 3 4 5 6 7 8 9 10 11 12 13 14 15 16 17 18 19 20
E74
W

WAT538

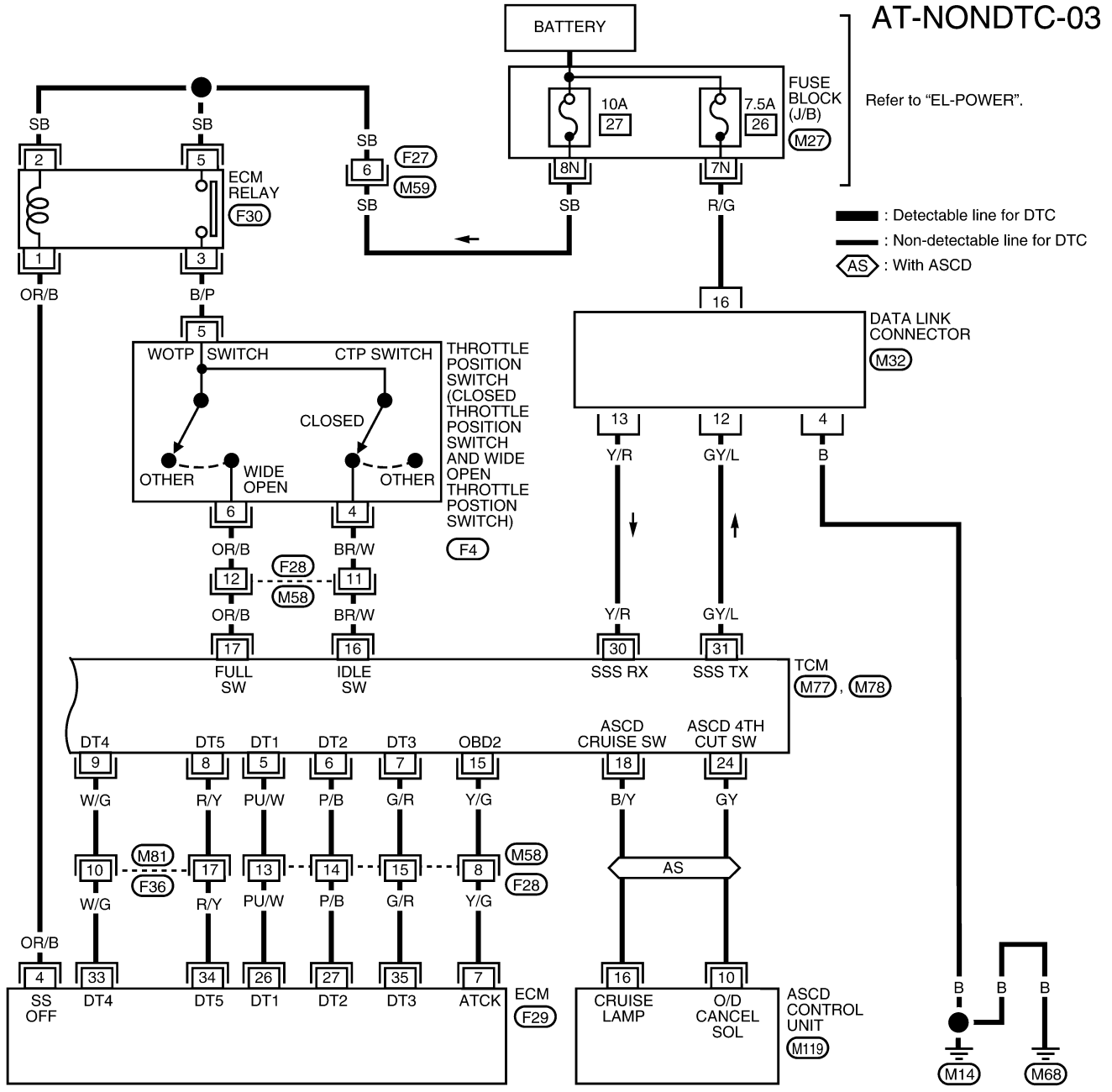

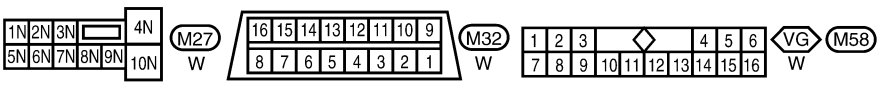

Refer to the following.
M77, M78, F29 - ELECTRICAL UNITS

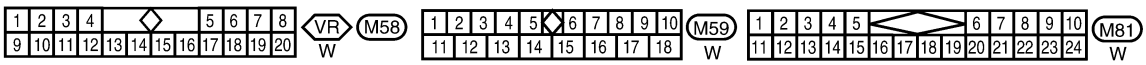

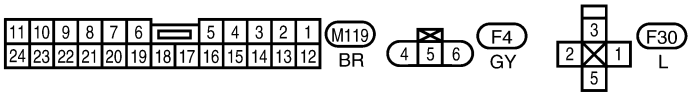

WAT377

1. O/D OFF Indicator Lamp Does Not Come On

NEAT0199

SYMPTOM:

O/D OFF indicator lamp does not come on for about 2 seconds when turning ignition switch to ON.

1	CHECK TCM POWER SOURCE

1. Turn ignition switch to ON position.
   (Do not start engine.)
2. Check voltage between TCM harness connectors (M77, M78) terminals (10, 19, 28) and ground.

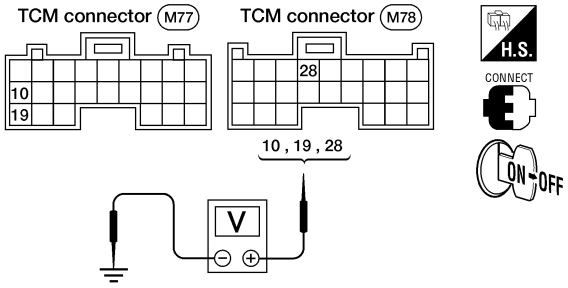

AAT476A

Voltage: Battery voltage

3. Turn ignition switch to OFF position.
4. Check voltage between TCM connector terminal 28 and ground.
   Voltage: Battery voltage

OK or NG

OK	▶	GO TO 2.
NG	▶	**Check the following items:** ● Harness for short or open between ignition switch and TCM (Main harness) ● Refer to “Wiring Diagram — AT — MAIN”, AT-247. ● Ignition switch and fuse Refer to ***EL-9***, “POWER SUPPLY ROUTING”.

2	CHECK TCM GROUND CIRCUIT

1. Turn ignition switch to OFF position.
2. Disconnect TCM harness connector.
3. Check resistance between TCM harness connector M78 terminals (25, 48) and ground. Refer to wiring diagram.

If OK, check harness for short to ground and short to power.

Is resistance approx. 0Ω?

Yes	▶	GO TO 3.
No	▶	● Repair open circuit or short to ground or short to power in harness or connectors. ● Refer to “Wiring Diagram — AT — MAIN”, AT-247.

3	CHECK LAMP CIRCUIT

1. Turn ignition switch to ON position.
2. Set overdrive control switch to ON position.
3. Check voltage between TCM harness connector M78 terminal 13 and ground.

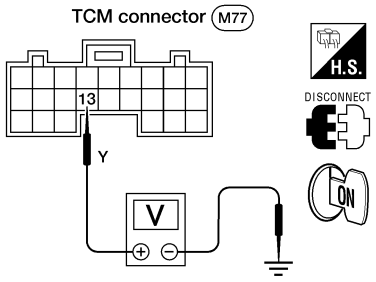

AAT505A

Does battery voltage exist?

Yes	▶	GO TO 4.
No	▶	**Check the following items.** ● Fuse ● O/D OFF indicator lamp Refer to ***EL-84***, "WARNING LAMPS". ● Harness for short or open between ignition switch and O/D OFF indicator lamp (Main harness) ● Refer to ***EL-9***, "POWER SUPPLY ROUTING". ● Harness for short or open between O/D OFF indicator lamp and TCM

4	CHECK SYMPTOM

Check again.

OK or NG

OK	▶	**INSPECTION END**
NG	▶	1. Perform TCM input/output signal inspection. 2. If NG, recheck TCM pin terminals for damage or loose connection with harness connector.

2. Engine Cannot Be Started In P and N Position

=NEAT0200

SYMPTOM:

Engine cannot be started with selector lever in P or N position.

Engine cannot be started with selector lever in P. Engine can be started with selector lever in D, 2, 1 or R position.

1	CHECK PNP SWITCH CIRCUIT

With CONSULT-II
Does “TCM INPUT SIGNALS” in Data Monitor show damage to PNP switch circuit?

Without CONSULT-II
Does self-diagnosis show damage to PNP switch circuit?

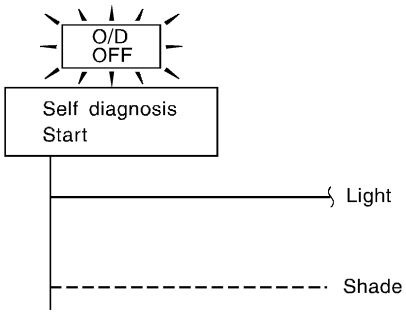

SAT367J

Yes or No

Yes	▶	Check PNP switch circuit. Refer to “DTC P0705”, AT-250.
No	▶	GO TO 2.

2	CHECK PNP SWITCH INSPECTION

Check for short or open of PNP switch 2-pin connector. Refer to “Component Inspection”, AT-254.

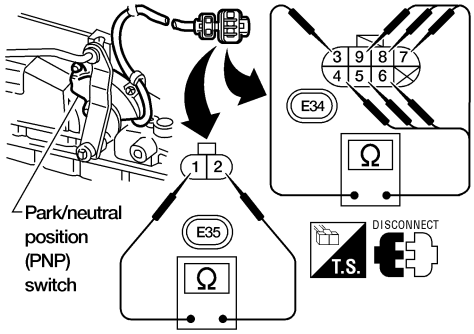

AAT482A

OK or NG

OK	▶	GO TO 3.
NG	▶	Repair or replace PNP switch.

3	CHECK STARTING SYSTEM

Check starting system. Refer to ***SC-10***, “System Description”.

OK or NG

OK	▶	**INSPECTION END**
NG	▶	Repair or replace damaged parts.

3. In “P” Position, Vehicle Moves Forward Or Backward When Pushed

=NEAT0201

SYMPTOM:

Vehicle moves when it is pushed forward or backward with selector lever in P position.

1	CHECK PARKING COMPONENTS

Check parking components.
Refer to “Parking Pawl Components”, AT-478.

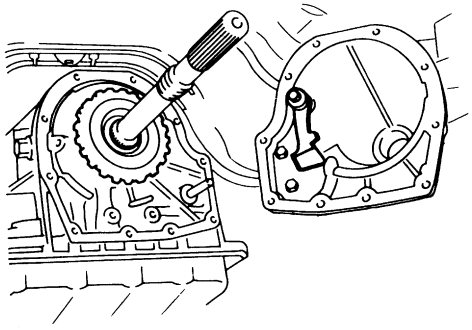

SAT133B

OK or NG

OK	▶	**INSPECTION END**
NG	▶	Repair or replace damaged parts.

4. In N Position, Vehicle Moves

=NEAT0202

SYMPTOM:

Vehicle moves forward or backward when selecting N position.

1	CHECK PNP SWITCH CIRCUIT
With CONSULT Does “TCM INPUT SIGNALS” in Data Monitor show damage to PNP switch circuit?	
Without CONSULT Does self-diagnosis show damage to PNP switch circuit? 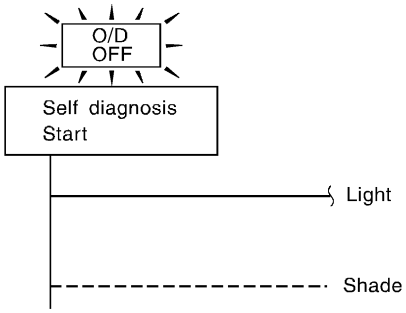 SAT367J	
Yes or No	
Yes ▶	Check PNP switch circuit. Refer to “DTC P0705”, AT-250.
No ▶	GO TO 2.

2	CHECK CONTROL LINKAGE
Check control linkage. Refer to “Manual Control Linkage Adjustment”, AT-419. **“P” position** 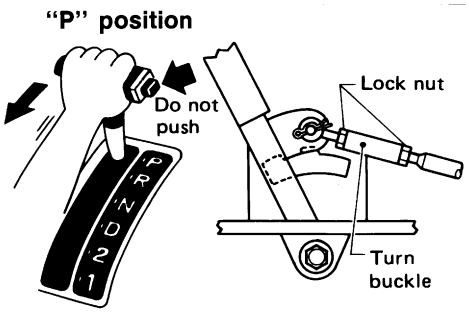 SAT032G	
OK or NG	
OK ▶	GO TO 3.
NG ▶	Adjust control linkage. Refer to “Manual Control Linkage Adjustment”, AT-419.

3	CHECK A/T FLUID LEVEL

Check A/T fluid level again.



SAT638A

OK or NG

OK	▶	GO TO 4.
NG	▶	Refill ATF.

4	CHECK A/T FLUID CONDITION

1. Remove oil pan.
2. Check A/T fluid condition.

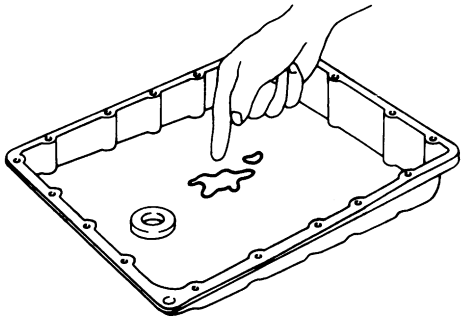

SAT171B

OK or NG

OK	▶	GO TO 5.
NG	▶	1. Disassemble A/T. 2. Check the following items: ● Forward clutch assembly ● Overrun clutch assembly ● Reverse clutch assembly

5	CHECK SYMPTOM

Check again.

OK or NG

OK	▶	**INSPECTION END**
NG	▶	1. Perform TCM input/output signal inspection. 2. If NG, recheck TCM pin terminals for damage or loose connection with harness connector.

5. Large Shock. N → R Position

=NEAT0203

SYMPTOM:

There is large shock when changing from N to R position.

1	CHECK SELF-DIAGNOSTIC RESULTS

Does self-diagnosis show damage to A/T fluid temperature sensor, line pressure solenoid valve or throttle position sensor circuit?

VG33E only

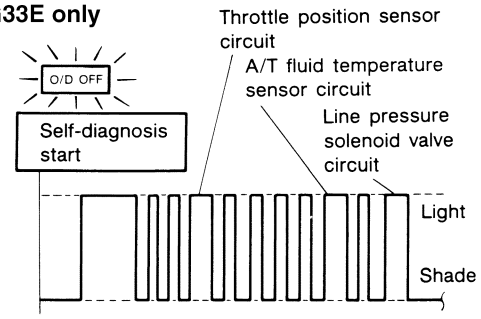

VG33ER only

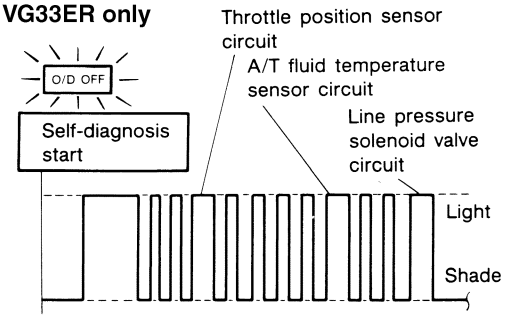

LAT456

Yes or No

Yes	▶	Check damaged circuit. Refer to “DTC P0710 A/T FLUID TEMPERATURE SENSOR” AT-259, “DTC P0745 LINE PRESSURE SOLENOID VALVE”, AT-316 or “DTC P1705 THROTTLE POSITION SENSOR”, AT-332.
No	▶	GO TO 2.

2	CHECK THROTTLE POSITION SENSOR

Check throttle position sensor. Refer to ***EC-781*** (VG33E only) or ***EC-1381*** (VG33ER only), “ DTC P0120 THROTTLE POSITION SENSOR”.

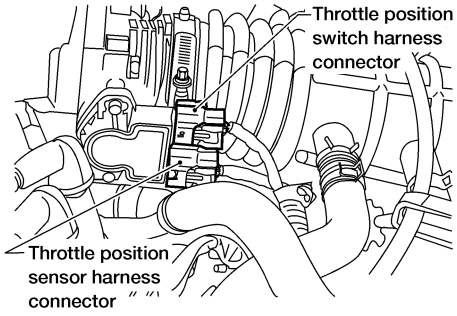

AAT495A

OK or NG

OK	▶	GO TO 3.
NG	▶	Repair or replace throttle position sensor.

3	CHECK LINE PRESSURE

Check line pressure at idle with selector lever in D position. Refer to "LINE PRESSURE TEST", AT-209.

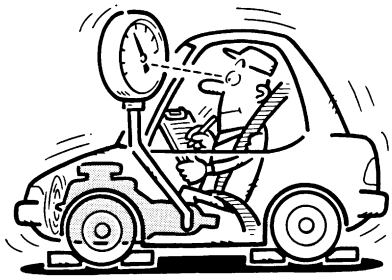

SAT494G

OK or NG

OK	▶	GO TO 4.
NG	▶	1. Remove control valve assembly. Refer to "REMOVAL", AT-416. 2. Check the following items: ● Valves to control line pressure (Pressure regulator valve, pressure modifier valve, pilot valve and pilot filter) ● Line pressure solenoid valve

4	CHECK SYMPTOM

Check again.

OK or NG

OK	▶	**INSPECTION END**
NG	▶	1. Perform TCM input/output signal inspection. 2. If NG, recheck TCM pin terminals for damage or loose connection with harness connector.

6. Vehicle Does Not Creep Backward In R Position

=NEAT0204

SYMPTOM:

Vehicle does not creep backward when selecting R position.

1	CHECK A/T FLUID LEVEL	
Check A/T fluid level again.  SAT638A **OK or NG**		
OK	▶	GO TO 2.
NG	▶	Refill ATF.

2	CHECK STALL TEST	
Check stall revolution with selector lever in 1 and R positions. Refer to “Stall Revolution”, AT-497.  SAT493G **OK or NG**		
OK	▶	GO TO 3.
OK in 1 position, NG in R position	▶	1. Remove control valve assembly. Refer to “REMOVAL”, AT-416. 2. Check the following items: ● Valves to control line pressure (Pressure regulator valve, pressure modifier valve, pilot valve and pilot filter) ● Line pressure solenoid valve 3. Disassemble A/T. 4. Check the following items: ● Oil pump assembly ● Torque converter ● Reverse clutch assembly ● High clutch assembly
NG in both 1 and R positions	▶	GO TO 6.

3	CHECK LINE PRESSURE

Check line pressure at idle with selector lever in R position. Refer to "LINE PRESSURE TEST", AT-209.

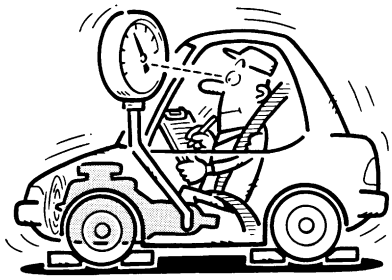

SAT494G

OK or NG

OK	▶	GO TO 4.
NG	▶	1. Remove control valve assembly. Refer to "REMOVAL", AT-416. 2. Check the following items: ● Valves to control line pressure (Pressure regulator valve, pressure modifier valve, pilot valve and pilot filter) ● Line pressure solenoid valve 3. Disassemble A/T. 4. Check the following items: ● Oil pump assembly

4	CHECK A/T FLUID CONDITION

1. Remove oil pan.
2. Check A/T fluid condition.

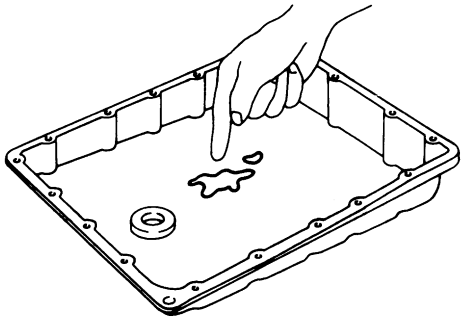

SAT171B

OK or NG

OK	▶	GO TO 5.
NG	▶	GO TO 6.

5	CHECK SYMPTOM

Check again.

OK or NG

OK	▶	**INSPECTION END**
NG	▶	1. Perform TCM input/output signal inspection. 2. If NG, recheck TCM pin terminals for damage or loose connection with harness connector.

6. Vehicle Does Not Creep Backward In R Position (Cont'd)

6	DETECT MALFUNCTIONING ITEM
1. Remove control valve assembly. Refer to "REMOVAL", AT-416. 2. Check the following items: ● Valves to control line pressure (Pressure regulator valve, pressure modifier valve, pilot valve and pilot filter) ● Line pressure solenoid valve 3. Disassemble A/T. 4. Check the following items: ● Oil pump assembly ● Torque converter ● Reverse clutch assembly ● High clutch assembly ● Low & reverse brake assembly ● Low one-way clutch	
▶	Repair or replace damaged parts.

7. Vehicle Does Not Creep Forward In D, 2 Or 1 Position

=NEAT0205

SYMPTOM:

Vehicle does not creep forward when selecting D, 2 or 1 position.

1	CHECK A/T FLUID LEVEL

Check A/T fluid level again.



SAT638A

OK or NG

OK	▶	GO TO 2.
NG	▶	Refill ATF.

2	CHECK STALL TEST

Check stall revolution with selector lever in D position.
Refer to “STALL TEST”, AT-206.

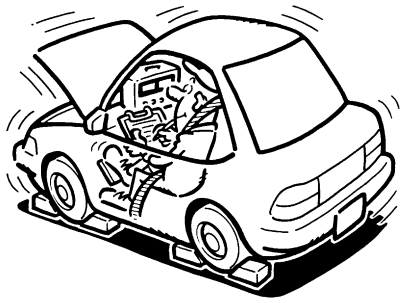

SAT493G

OK or NG

OK	▶	GO TO 3.
NG	▶	GO TO 6.

3	CHECK LINE PRESSURE

Check line pressure at idle with selector lever in R position.
Refer to "LINE PRESSURE TEST", AT-209.

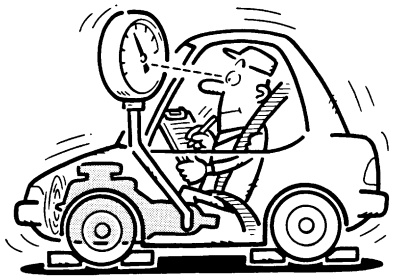

SAT494G

OK or NG

OK	▶	GO TO 4.
NG	▶	1. Remove control valve assembly. Refer to "REMOVAL", AT-416. 2. Check the following items: ● Valves to control line pressure (Pressure regulator valve, pressure modifier valve, pilot valve and pilot filter) ● Line pressure solenoid valve 3. Disassemble A/T. 4. Check the following items: ● Oil pump assembly

4	CHECK A/T FLUID CONDITION

1. Remove oil pan.
2. Check A/T fluid condition.

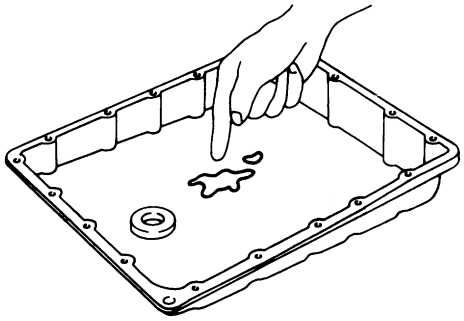

SAT171B

OK or NG

OK	▶	GO TO 5.
NG	▶	GO TO 6.

5	CHECK SYMPTOM

Check again.

OK or NG

OK	▶	**INSPECTION END**
NG	▶	1. Perform TCM input/output signal inspection. 2. If NG, recheck TCM pin terminals for damage or loose connection with harness connector.

6	DETECT MALFUNCTIONING ITEM
1. Remove control valve assembly. Refer to "REMOVAL", AT-416. 2. Check the following items: ● Valves to control line pressure (Pressure regulator valve, pressure modifier valve, pilot valve and pilot filter) ● Line pressure solenoid valve 3. Disassemble A/T. 4. Check the following items: ● Oil pump assembly ● Forward clutch assembly ● Forward one-way clutch ● Low one-way clutch ● Low & reverse brake assembly ● Torque converter	
▶	Repair or replace damaged parts.

8. Vehicle Cannot Be Started From D_1

=NEAT0206

SYMPTOM:

Vehicle cannot be started from D_1 on Cruise Test — Part 1.

1	CHECK SYMPTOM	
Is “6. Vehicle Does Not Creep Backward In R Position” OK?		
Yes or No		
Yes	▶	GO TO 2.
No	▶	Go to “6. Vehicle Does Not Creep Backward In R Position”, AT-372.

2	CHECK SELF-DIAGNOSTIC RESULTS	
Does self-diagnosis show damage to vehicle speed sensor·A/T (revolution sensor), shift solenoid valve A, B or vehicle speed sensor·MTR after cruise test?		

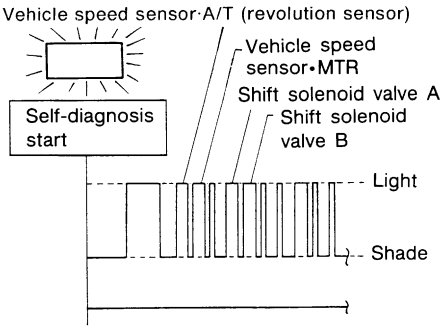

SAT934FB

Yes or No		
Yes	▶	Check damaged circuit. Refer to “DTC P0720 VEHICLE SPEED SENSOR·A/T (REVOLUTION SENSOR)” AT-262, “DTC P0750 SHIFT SOLENOID VALVE A”, AT-318, “DTC P0755 SHIFT SOLENOID VALVE B”, AT-323, or “DTC VEHICLE SPEED SENSOR·MTR”, AT-348.
No	▶	GO TO 3.

3	CHECK THROTTLE POSITION SENSOR	
Check throttle position sensor. Refer to ***EC-781*** (VG33E only) or ***EC-1381*** (VG33ER only), “ DTC P0120 THROTTLE POSITION SENSOR”.		

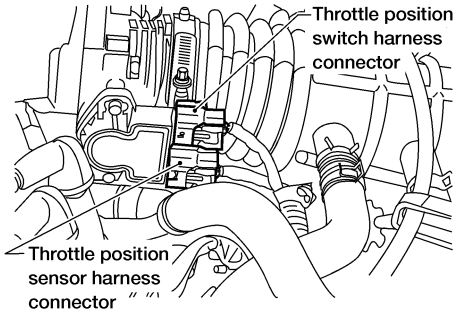

AAT495A

OK or NG		
OK	▶	GO TO 4.
NG	▶	Repair or replace throttle position sensor.

4	CHECK LINE PRESSURE

Check line pressure at stall point with selector lever in D position.
Refer to "LINE PRESSURE TEST", AT-209.

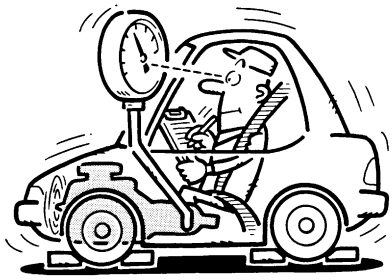

SAT494G

OK or NG

OK	▶	GO TO 5.
NG	▶	GO TO 8.

5	CHECK A/T FLUID CONDITION

1. Remove oil pan.
2. Check A/T fluid condition.

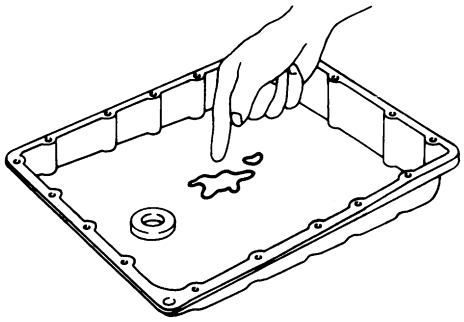

SAT171B

OK or NG

OK	▶	GO TO 6.
NG	▶	GO TO 8.

6	DETECT MALFUNCTIONING ITEM

1. Remove control valve assembly.
   Refer to "REMOVAL", AT-416.
2. Check the following items:

- Shift valve A
- Shift valve B
- Shift solenoid valve A
- Shift solenoid valve B
- Pilot valve
- Pilot filter

OK or NG

OK	▶	GO TO 7.
NG	▶	Repair or replace damaged parts.

7	CHECK SYMPTOM	
Check again. **OK or NG**		
OK	▶	**INSPECTION END**
NG	▶	1. Perform TCM input/output signal inspection. 2. If NG, recheck TCM pin terminals for damage or loose connection with harness connector.

8	DETECT MALFUNCTIONING ITEM	
1. Remove control valve assembly. Refer to "REMOVAL", AT-416. 2. Check the following items: ● Shift valve A ● Shift valve B ● Shift solenoid valve A ● Shift solenoid valve B ● Pilot valve ● Pilot filter 3. Disassemble A/T. 4. Check the following items: ● Forward clutch assembly ● Forward one-way clutch ● Low one-way clutch ● High clutch assembly ● Torque converter ● Oil pump assembly **OK or NG**		
OK	▶	GO TO 7.
NG	▶	Repair or replace damaged parts.

9. A/T Does Not Shift: $D_1 \rightarrow D_2$ Or Does Not Kickdown: $D_4 \rightarrow D_2$

=NEAT0207

SYMPTOM:

A/T does not shift from D_1 to D_2 at the specified speed.
A/T does not shift from D_4 to D_2 when depressing accelerator pedal fully at the specified speed.

1	CHECK SYMPTOM	
Are "7. Vehicle Does Not Creep Forward In D, 2 Or 1 Position" and "8. Vehicle Cannot Be Started From D_1" OK?		
Yes or No		
Yes	▶	GO TO 2.
No	▶	Go to "7. Vehicle Does Not Creep Forward In D, 2 Or 1 Position", AT-375 and "8. Vehicle Cannot Be Started From D_1", AT-378.

2	CHECK PNP SWITCH CIRCUIT	
With CONSULT Does "TCM INPUT SIGNALS" in Data Monitor show damage to PNP switch circuit?		
Without CONSULT Does self-diagnosis show damage to PNP switch circuit?		
Yes or No		
Yes	▶	Check PNP switch circuit. Refer to "DTC P0705", AT-253.
No	▶	GO TO 3.

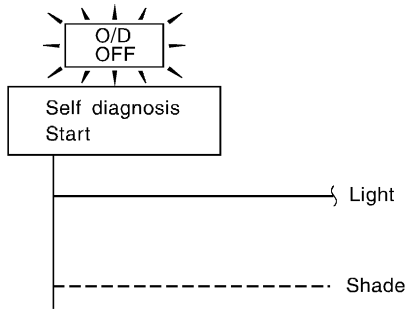

SAT367J

3	CHECK VEHICLE SPEED SENSOR·A/T AND VEHICLE SPEED SENSOR·MTR CIRCUIT	
Check vehicle speed sensor·A/T (revolution sensor) and vehicle speed sensor·MTR circuit. Refer to "DTC P0720 VEHICLE SPEED SENSOR·A/T (REVOLUTION SENSOR), AT-265 and "VEHICLE SPEED SENSOR·MTR", AT-351.		
OK or NG		
OK	▶	GO TO 4.
NG	▶	Repair or replace vehicle speed sensor·A/T (revolution sensor) and vehicle speed sensor·MTR circuits.

4	CHECK THROTTLE POSITION SENSOR

Check throttle position sensor. Refer ***EC-781*** (VG33E only) or ***EC-1381*** (VG33ER only), "DTC P0120 THROTTLE POSITION SENSOR".

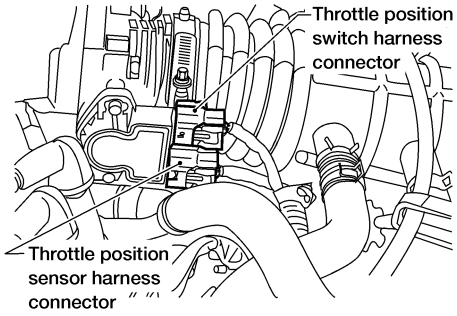

AAT495A

OK or NG

OK	▶	GO TO 5.
NG	▶	Repair or replace throttle position sensor.

5	CHECK A/T FLUID CONDITION

1. Remove oil pan.
2. Check A/T fluid condition.

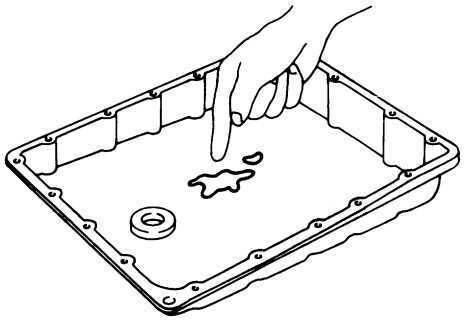

SAT171B

OK or NG

OK	▶	GO TO 6.
NG	▶	GO TO 8.

6	DETECT MALFUNCTIONING ITEM

1. Remove control valve. Refer to "REMOVAL", AT-416.
2. Check the following items:
- Shift valve A
- Shift solenoid valve A
- Pilot valve
- Pilot filter

OK or NG

OK	▶	GO TO 7.
NG	▶	Repair or replace damaged parts.

7	CHECK SYMPTOM	
Check again.		
OK or NG		
OK	▶	**INSPECTION END**
NG	▶	1. Perform TCM input/output signal inspection. 2. If NG, recheck TCM pin terminals for damage or loose connection with harness connector.

8	DETECT MALFUNCTIONING ITEM	
1. Remove control valve. Refer to "REMOVAL", AT-416. 2. Check the following items: ● Shift valve A ● Shift solenoid valve A ● Pilot valve ● Pilot filter 3. Disassemble A/T. 4. Check the following items: ● Servo piston assembly ● Brake band ● Oil pump assembly		
OK or NG		
OK	▶	GO TO 7.
NG	▶	Repair or replace damaged parts.

10. A/T Does Not Shift: $D_2 \rightarrow D_3$

=NEAT0208

SYMPTOM:

A/T does not shift from D_2 to D_3 at the specified speed.

1	CHECK SYMPTOM	
Are “7. Vehicle Does Not Creep Forward In D, 2 Or 1 Position” and “8. Vehicle Cannot Be Started From D_1” OK?		
Yes or No		
Yes	▶	GO TO 2.
No	▶	Go to “7. Vehicle Does Not Creep Forward In D, 2 Or 1 Position”, AT-375 and “8. Vehicle Cannot Be Started From D_1”, AT-378.

2	CHECK PNP SWITCH CIRCUIT	
With CONSULT Does “TCM INPUT SIGNALS” in Data Monitor show damage to PNP switch circuit?		
Without CONSULT Does self-diagnosis show damage to PNP switch circuit?		

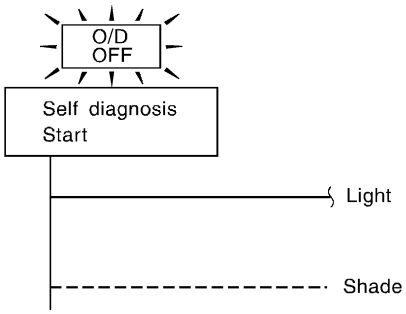

SAT367J

Yes or No

Yes	▶	Check PNP switch circuit. Refer to “DTC P0705”, AT-253.
No	▶	GO TO 3.

3	CHECK THROTTLE POSITION SENSOR	
Check throttle position sensor. Refer to ***EC-781*** (VG33E only) or ***EC-1381*** (VG33ER only), “DTC P0120 THROTTLE POSITION SENSOR”.		

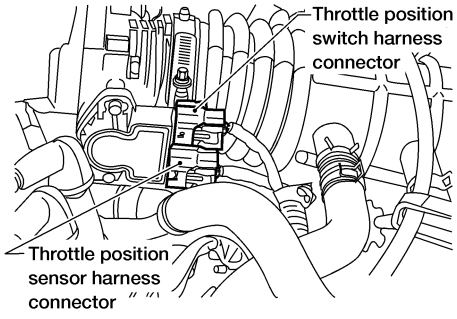

AAT495A

OK or NG

OK	▶	GO TO 4.
NG	▶	Repair or replace throttle position sensor.

4	CHECK A/T FLUID CONDITION

1. Remove oil pan.
2. Check A/T fluid condition.

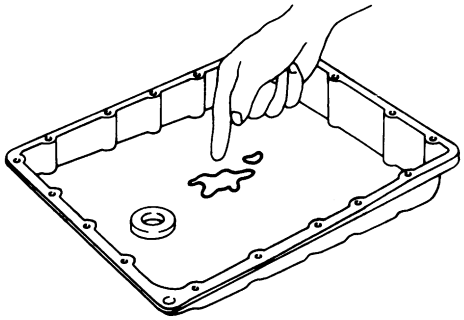

SAT171B

OK or NG

OK	▶	GO TO 5.
NG	▶	GO TO 7.

5	DETECT MALFUNCTIONING ITEM

1. Remove control valve assembly. Refer to "REMOVAL", AT-416.
2. Check the following items:
- Shift valve B
- Shift solenoid valve B
- Pilot valve
- Pilot filter

OK or NG

OK	▶	GO TO 6.
NG	▶	Repair or replace damaged parts.

6	CHECK SYMPTOM

Check again.

OK or NG

OK	▶	**INSPECTION END**
NG	▶	1. Perform TCM input/output signal inspection. 2. If NG, recheck TCM pin terminals for damage or loose connection with harness connector.

7	DETECT MALFUNCTIONING ITEM	
1. Remove control valve assembly. Refer to "REMOVAL", AT-416. 2. Check the following items: ● Shift valve B ● Shift solenoid valve B ● Pilot valve ● Pilot filter 3. Disassemble A/T. 4. Check the following items: ● Servo piston assembly ● High clutch assembly ● Oil pump assembly		
OK or NG		
OK	▶	GO TO 6.
NG	▶	Repair or replace damaged parts.

11. A/T Does Not Shift: $D_3 \rightarrow D_4$

=NEAT0209

SYMPTOM:

- **A/T does not shift from D_3 to D_4 at the specified speed.**
- **A/T must be warm before D_3 to D_4 shift will occur.**

1	CHECK SYMPTOM	
Are “7. Vehicle Does Not Creep Forward In D, 2 Or 1 Position” and “8. Vehicle Cannot Be Started From D_1” OK?		
Yes or No		
Yes	▶	GO TO 2.
No	▶	Go to “7. Vehicle Does Not Creep Forward In D, 2 Or 1 Position”, AT-375 and “8. Vehicle Cannot Be Started From D_1”, AT-378.

2	CHECK SELF-DIAGNOSTIC RESULTS	
With CONSULT Does self-diagnosis, after Cruise Test, show damage to any of the following circuits? ● PNP switch ● Overdrive control switch ● A/T fluid temperature sensor ● Revolution sensor ● Shift solenoid valve A or B ● Vehicle speed sensor		
Yes or No		
Yes	▶	Check damaged circuit. Refer to “DTC P1705 THROTTLE POSITION SENSOR”, AT-332, “DTC P0710 A/T FLUID TEMPERATURE SENSOR”, AT-259, “DTC P0720 VEHICLE SPEED SENSOR·A/T (REVOLUTION SENSOR)”, AT-265, “DTC P0750 SHIFT SOLENOID VALVE A”, AT-321, “DTC P0755 SHIFT SOLENOID VALVE B”, AT-326, or “DTC VEHICLE SPEED SENSOR·MTR”, AT-351.
No	▶	GO TO 3.

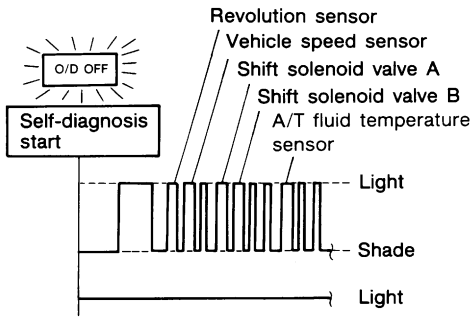

SAT363HA

3	CHECK THROTTLE POSITION SENSOR

Check throttle position sensor. Refer to ***EC-781*** (VG33E only) or ***EC-1381*** (VG33ER only), "DTC P0120 THROTTLE POSITION SENSOR".

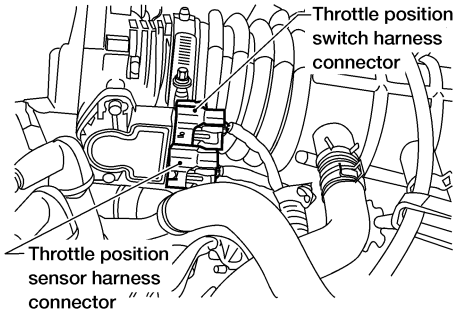

AAT495A

OK or NG

OK	▶	GO TO 4.
NG	▶	Repair or replace throttle position sensor.

4	CHECK A/T FLUID CONDITION

1. Remove oil pan.
2. Check A/T fluid condition.

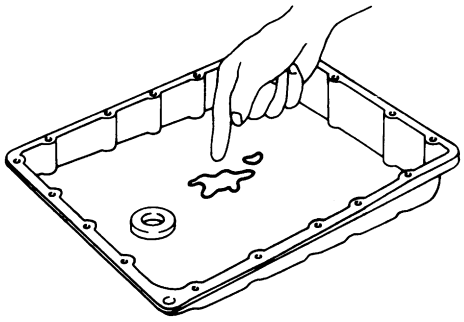

SAT171B

OK or NG

OK	▶	GO TO 5.
NG	▶	GO TO 7.

5	DETECT MALFUNCTIONING ITEM

1. Remove control valve assembly. Refer to "REMOVAL", AT-416.
2. Check the following items:
- Shift valve B
- Overrun clutch control valve
- Shift solenoid valve B
- Pilot valve
- Pilot filter

OK or NG

OK	▶	GO TO 6.
NG	▶	Repair or replace damaged parts.

6	CHECK SYMPTOM	
Check again. **OK or NG**		
OK	▶	**INSPECTION END**
NG	▶	1. Perform TCM input/output signal inspection. 2. If NG, recheck TCM pin terminals for damage or loose connection with harness connector.

7	DETECT MALFUNCTIONING ITEM	
1. Remove control valve assembly. Refer to "REMOVAL", AT-416. 2. Check the following items: ● Shift valve B ● Overrun clutch control valve ● Shift solenoid valve B ● Pilot valve ● Pilot filter 3. Disassemble A/T. 4. Check the following items: ● Servo piston assembly ● Brake band ● Torque converter ● Oil pump assembly **OK or NG**		
OK	▶	GO TO 6.
NG	▶	Repair or replace damaged parts.

12. A/T Does Not Perform Lock-up

=NEAT0210

SYMPTOM:

A/T does not perform lock-up at the specified speed.

1	CHECK SELF-DIAGNOSTIC RESULTS

Does self-diagnosis show damage to torque converter clutch solenoid valve circuit after Cruise Test?

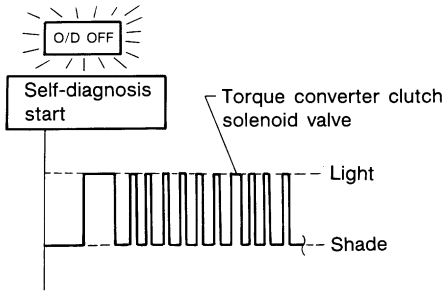

SAT346H

Yes or No

Yes	▶	Check torque converter clutch solenoid valve circuit. Refer to “DTC P0740 TORQUE CONVERTER CLUTCH SOLENOID VALVE”, AT-302.
No	▶	GO TO 2.

2	CHECK THROTTLE POSITION SENSOR

Check throttle position sensor. Refer to ***EC-781*** (VG33E only) or ***EC-1381*** (VG33ER only), “P0120 THROTTLE POSITION SENSOR”.

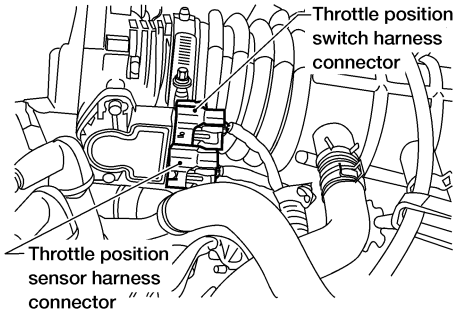

AAT495A

OK or NG

OK	▶	GO TO 3.
NG	▶	Repair or replace throttle position sensor.

3	DETECT MALFUNCTIONING ITEM

1. Remove control valve. Refer to “REMOVAL”, AT-416.
2. Check following items:

- Torque converter clutch control valve
- Torque converter relief valve
- Torque converter clutch solenoid valve
- Pilot valve
- Pilot filter

OK or NG

OK	▶	GO TO 4.
NG	▶	Repair or replace damaged parts.

4	CHECK SYMPTOM	
Check again. **OK or NG**		
OK	▶	**INSPECTION END**
NG	▶	1. Perform TCM input/output signal inspection. 2. If NG, recheck TCM pin terminals for damage or loose connection with harness connector.

13. A/T Does Not Hold Lock-up Condition

=NEAT0211

SYMPTOM:

A/T does not hold lock-up condition for more than 30 seconds.

1	CHECK DIAGNOSTIC RESULTS	
Does self-diagnosis show damage to engine speed signal circuit after Cruise Test?		
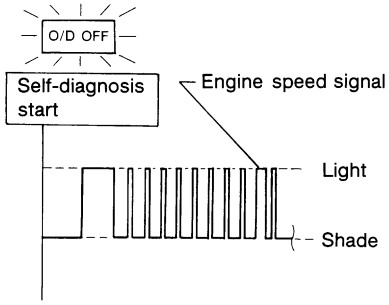 SAT347H		
Yes or No		
Yes	▶	Check engine speed signal circuit. Refer to “DTC P0725 ENGINE SPEED SIGNAL”, AT-270.
No	▶	GO TO 2.

2	CHECK A/T FLUID CONDITION	
1. Remove oil pan. 2. Check A/T fluid condition.		
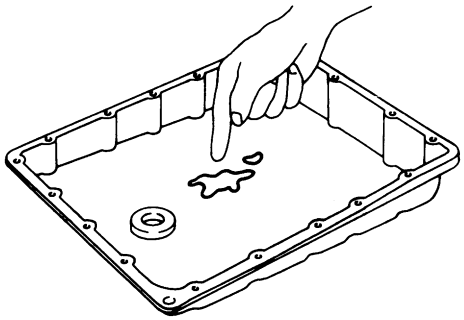 SAT171B		
OK or NG		
OK	▶	GO TO 3.
NG	▶	GO TO 5.

3	DETECT MALFUNCTIONING ITEM	
1. Remove control valve assembly. Refer to “REMOVAL”, AT-416. 2. Check the following items: ● Torque converter clutch control valve ● Pilot valve ● Pilot filter		
OK or NG		
OK	▶	GO TO 4.
NG	▶	Repair or replace damaged parts.

4	CHECK SYMPTOM
Check again. **OK or NG**	
OK ▶	**INSPECTION END**
NG ▶	1. Perform TCM input/output signal inspection. 2. If NG, recheck TCM pin terminals for damage or loose connection with harness connector.

5	DETECT MALFUNCTIONING ITEM
1. Remove control valve assembly. Refer to "REMOVAL", AT-416. 2. Check the following items: ● Torque converter clutch control valve ● Pilot valve ● Pilot filter 3. Disassemble A/T. 4. Check torque converter and oil pump assembly. **OK or NG**	
OK ▶	GO TO 4.
NG ▶	Repair or replace damaged parts.

14. Lock-up Is Not Released

=NEAT0212

SYMPTOM:

Lock-up is not released when accelerator pedal is released.

1	CHECK THROTTLE POSITION SWITCH CIRCUIT

With CONSULT

Does “TCM INPUT SIGNALS” in Data Monitor show damage to closed throttle position switch circuit?

Without CONSULT

Does self-diagnosis show damage to closed throttle position switch circuit?

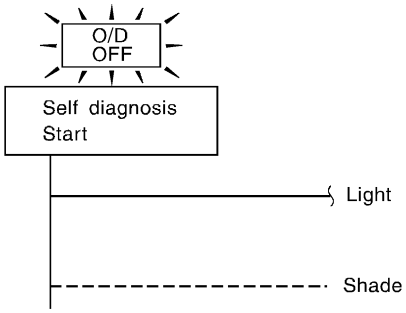

SAT367J

Yes or No

Yes	▶	Check closed throttle position switch circuit. Refer to “DTC P1705 THROTTLE POSITION SENSOR”, AT-332.
No	▶	GO TO 2.

2	CHECK SYMPTOM

Check again.

OK or NG

OK	▶	**INSPECTION END**
NG	▶	1. Perform TCM input/output signal inspection. 2. If NG, recheck TCM pin terminals for damage or loose connection with harness connector.

15. Engine Speed Does Not Return To Idle (Light Braking $D_4 \rightarrow D_3$)

=NEAT0213

SYMPTOM:

- **Engine speed does not smoothly return to idle when A/T shifts from D_4 to D_3.**
- **Vehicle does not decelerate by engine brake when turning overdrive control switch OFF.**
- **Vehicle does not decelerate by engine brake when shifting A/T from D to 2 position.**

1	CHECK SELF-DIAGNOSTIC RESULTS

Does self-diagnosis show damage to overrun clutch solenoid valve circuit after Cruise Test?

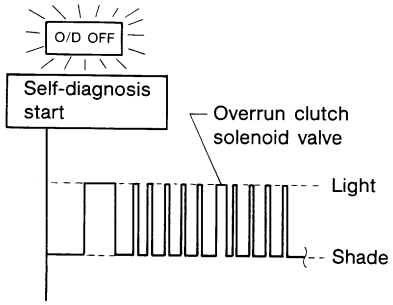

SAT348H

Yes or No

Yes	▶	Check overrun clutch solenoid valve circuit. Refer to “DTC P1760 OVERRUN CLUTCH SOLENOID VALVE”, AT-340.
No	▶	GO TO 2.

2	CHECK THROTTLE POSITION SENSOR

Check throttle position sensor. Refer to “DTC P0120 THROTTLE POSITION SENSOR”, ***EC-781*** (VG33E only) or ***EC-1381*** (VG33ER only).

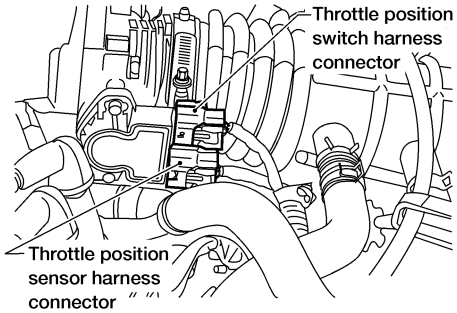

AAT495A

OK or NG

OK	▶	GO TO 3.
NG	▶	Repair or replace throttle position sensor.

3	CHECK A/T FLUID CONDITION

1. Remove oil pan.
2. Check A/T fluid condition.

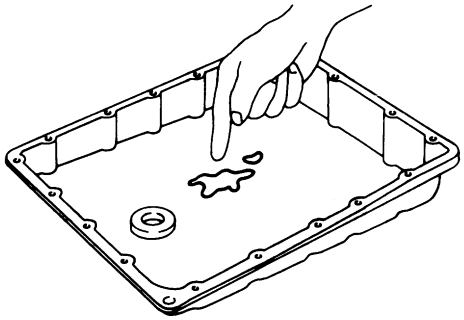

SAT171B

OK or NG

OK	▶	GO TO 4.
NG	▶	GO TO 6.

4	DETECT MALFUNCTIONING ITEM

1. Remove control valve assembly. Refer to "REMOVAL", AT-416.
2. Check the following items:
- Overrun clutch control valve
- Overrun clutch reducing valve
- Overrun clutch solenoid valve

OK or NG

OK	▶	GO TO 5.
NG	▶	Repair or replace damaged parts.

5	CHECK SYMPTOM

Check again.

OK or NG

OK	▶	**INSPECTION END**
NG	▶	1. Perform TCM input/output signal inspection. 2. If NG, recheck TCM pin terminals for damage or loose connection with harness connector.

6	DETECT MALFUNCTIONING ITEM

1. Remove control valve assembly. Refer to "REMOVAL", AT-416.
2. Check the following items:
- Overrun clutch control valve
- Overrun clutch reducing valve
- Overrun clutch solenoid valve
3. Disassemble A/T.
4. Check the following items:
- Overrun clutch assembly
- Oil pump assembly

OK or NG

OK	▶	GO TO 5.
NG	▶	Repair or replace damaged parts.

16. Vehicle Does Not Start From D_1

NEAT0214

SYMPTOM:

Vehicle does not start from D_1 on Cruise Test — Part 2.

1	CHECK SELF-DIAGNOSTIC RESULTS	
Does self-diagnosis show damage to vehicle speed sensor·A/T (revolution sensor), shift solenoid valve A, B or vehicle speed sensor·MTR after Cruise Test? 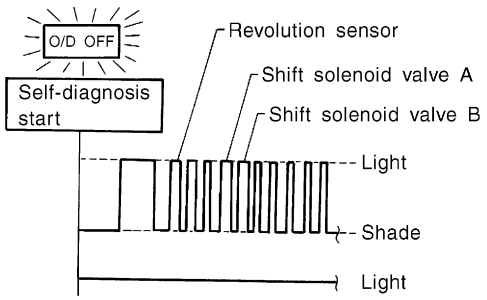 SAT633I		
Yes or No		
Yes	▶	Check damaged circuit. Refer to “DTC P0720 VEHICLE SPEED SENSOR·A/T (REVOLUTION SENSOR)”, AT-265, “DTC P0750 SHIFT SOLENOID VALVE A”, AT-321, “DTC P0755 SHIFT SOLENOID VALVE B”, AT-326, or “DTC VEHICLE SPEED SENSOR·MTR”, AT-351.
No	▶	GO TO 2.

2	CHECK SYMPTOM	
Check again.		
OK or NG		
OK	▶	Go to “8. Vehicle Cannot Be Started From D_1”, AT-378.
NG	▶	1. Perform TCM input/output signal inspection. 2. If NG, recheck TCM pin terminals for damage or loose connection with harness connector.

17. A/T Does Not Shift: $D_4 \rightarrow D_3$, When Overdrive Control Switch ON $\rightarrow$ OFF

=NEAT0215

SYMPTOM:

A/T does not shift from D_4 to D_3 when changing overdrive control switch to OFF position.

1	CHECK OVERDRIVE CONTROL SWITCH CIRCUIT	
With CONSULT Does “TCM INPUT SIGNALS” in Data Monitor show damage to overdrive control switch circuit?		
Without CONSULT Does self-diagnosis show damage to overdrive control switch circuit? 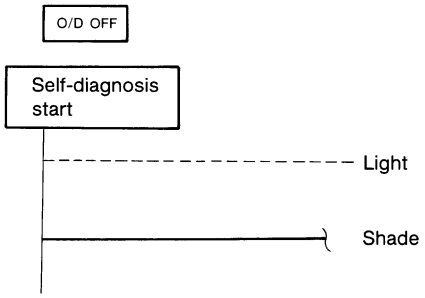 SAT344H		
Yes or No		
Yes	▶	Check overdrive control switch circuit. Refer to “DIAGNOSTIC PROCEDURE”, AT-402.
No	▶	Go to “10. A/T Does Not Shift: $D_2 \rightarrow D_3$”, AT-384.

18. A/T Does Not Shift: $D_3 \rightarrow 2_2$, When Selector Lever D $\rightarrow$ 2 Position

=NEAT0216

SYMPTOM:

A/T does not shift from D_3 to 2_2 when changing selector lever from D to 2 position.

1	CHECK PNP SWITCH CIRCUIT	
With CONSULT Does “TCM INPUT SIGNALS” in Data Monitor show damage to PNP switch circuit?		
Without CONSULT Does self-diagnosis show damage to PNP switch circuit? 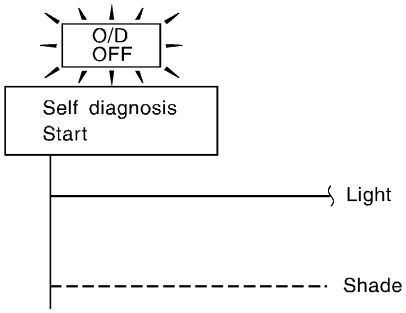 SAT367J		
Yes or No		
Yes	▶	Check PNP switch circuit. Refer to “DTC P0705”, AT-253.
No	▶	Go to “9. A/T Does Not Shift: $D_1 \rightarrow D_2$ Or Does Not Kick-down: $D_4 \rightarrow D_2$”, AT-381.

19. A/T Does Not Shift: $2_2 \rightarrow 1_1$, When Selector Lever 2 → 1 Position

=NEAT0217

SYMPTOM:

A/T does not shift from 2_2 to 1_1 when changing selector lever from 2 to 1 position.

1	CHECK PNP SWITCH CIRCUIT
With CONSULT Does “TCM INPUT SIGNALS” in Data Monitor show damage to PNP switch circuit?	
Without CONSULT Does self-diagnosis show damage to PNP switch circuit? 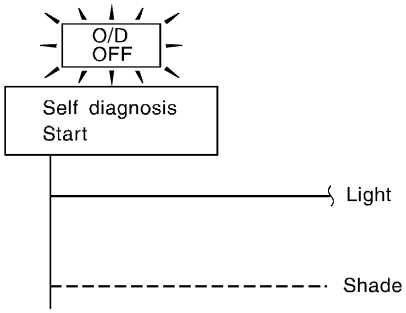 SAT367J	
Yes or No	
Yes ▶	Check PNP switch circuit. Refer to “DTC P0705 PARK/NEUTRAL POSITION (PNP) SWITCH”, AT-253.
No ▶	GO TO 2.

2	CHECK SYMPTOM
Check again. 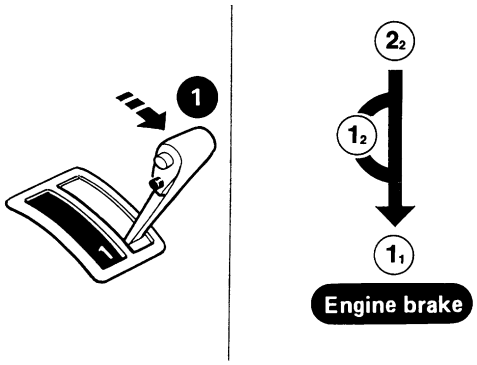 SAT778B	
OK or NG	
OK ▶	**INSPECTION END**
NG ▶	1. Perform TCM input/output signal inspection. 2. If NG, recheck TCM pin terminals for damage or loose connection with harness connector.

20. Vehicle Does Not Decelerate By Engine Brake

NEAT0218

SYMPTOM:

Vehicle does not decelerate by engine brake when shifting from 2_2 (1_2) to 1_1.

1	CHECK SYMPTOM	
Is "6. Vehicle Does Not Creep Backward In R Position" OK?		
Yes or No		
Yes	▶	Go to "15. Engine Speed Does Not Return To Idle (Light Braking $D_4 \rightarrow D_3$)", AT-395.
No	▶	Go to "6. Vehicle Does Not Creep Backward In R Position", AT-372.

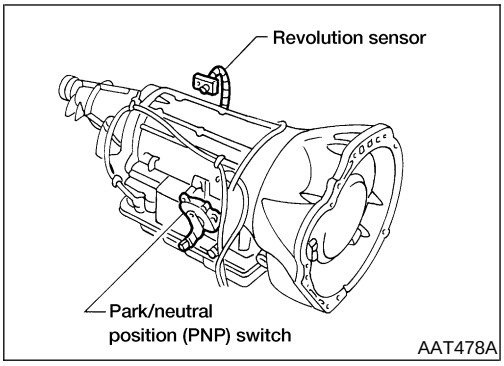

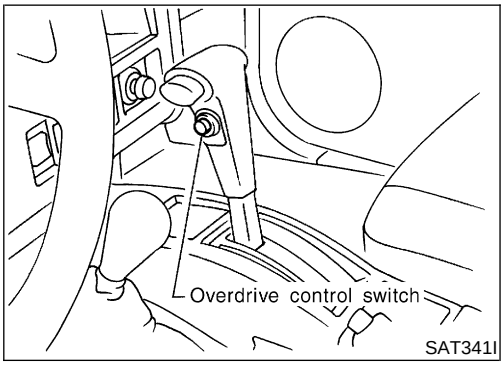

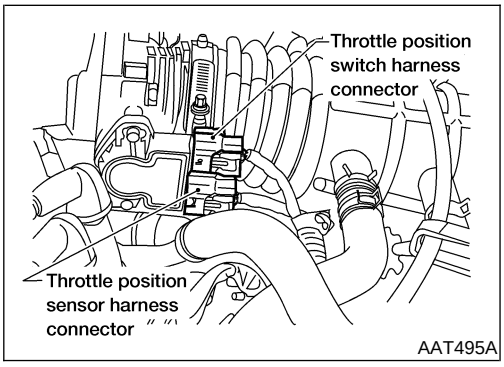

21. TCM Self-diagnosis Does Not Activate (PNP, Overdrive Control and Throttle Position Switches Circuit Checks)

NEAT0219

SYMPTOM:

O/D OFF indicator lamp does not come on in TCM self-diagnostic procedure even the lamp circuit is good.

DESCRIPTION

NEAT0219S01

- PNP switch
  The PNP switch assembly includes a transmission range switch.
  The transmission range switch detects the selector position and sends a signal to the TCM.
- Overdrive control switch
  Detects the overdrive control switch position (ON or OFF) and sends a signal to the TCM.
- Throttle position switch
  Consists of a wide open throttle position switch and a closed throttle position switch.
  The wide open position switch sends a signal to the TCM when the throttle valve is open at least 1/2 of the full throttle position.
  The closed throttle position switch sends a signal to the TCM when the throttle valve is fully closed.

DIAGNOSTIC PROCEDURE

=NEAT0219S02

NOTE:
The diagnostic procedure includes inspections for the overdrive control and throttle position switch circuits.

1	CHECK PNP SWITCH CIRCUIT (With CONSULT-II)

With CONSULT-II
1. Turn ignition switch to ON position.
   (Do not start engine.)
2. Select "TCM INPUT SIGNALS" in "DATA MONITOR" mode for "A/T" with CONSULT-II.
3. Read out P, R, N, D, 2 and 1 position switches moving selector lever to each position. Check the signal of the selector lever position is indicated properly.

DATA MONITOR	
MONITORING	
PN POSI SW	OFF
R POSITION SW	OFF
D POSITION SW	OFF
2 POSITION SW	ON
1 POSITION SW	OFF

SAT701J

OK or NG

OK	▶	GO TO 3.
NG	▶	**Check the following items:** ● PNP switch Refer to "Component Inspection", AT-407. ● Harness for short or open between ignition switch and PNP switch (Main harness) ● Harness for short or open between PNP switch and TCM (Main harness)

2 **CHECK PNP SWITCH CIRCUIT (Without CONSULT-II)**

Without CONSULT-II

1. Turn ignition switch to ON position.
   (Do not start engine.)
2. Check voltage between TCM terminals (26, 27, 34, 35, 36) and ground while moving selector lever through each position.

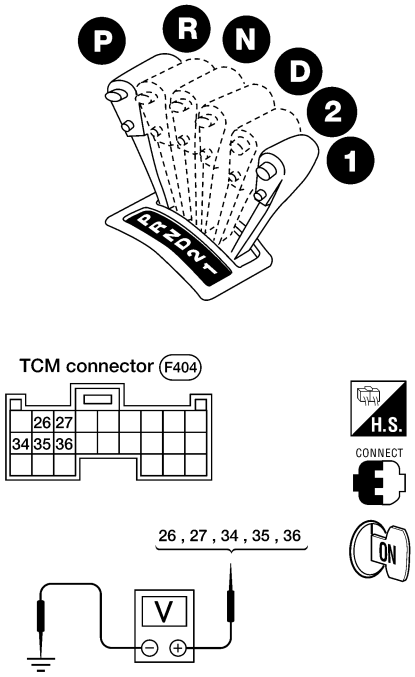

LAT457

Lever position	Terminals				
	36	35	34	27	26
P, N	**B**	0	0	0	0
R	0	**B**	0	0	0
D	0	0	**B**	0	0
2	0	0	0	**B**	0
1	0	0	0	0	**B**

AAT479A

Does battery voltage exist (B) or non-existent (0)?

Yes	▶	GO TO 3.
No	▶	**Check the following items:** ● PNP switch Refer to "Component Inspection", AT-407. ● Harness for short or open between ignition switch and PNP switch (Main harness) ● Harness for short or open between PNP switch and TCM (Main harness)

3	CHECK OVERDRIVE CONTROL SWITCH CIRCUIT

With CONSULT-II

1. Turn ignition switch to ON position.
   (Do not start engine.)
2. Select "TCM INPUT SIGNALS" in "DATA MONITOR" mode for "A/T" with CONSULT-II.
3. Read out "OVERDRIVE SW". Check the signal of the overdrive control switch is indicated properly.
   (Overdrive control switch ON displayed on CONSULT-II means overdrive OFF.)

DATA MONITOR	
MONITORING	
ENGINE SPEED	XXX rpm
TURBINE REV	XXX rpm
OVERDRIVE SW	ON
PN POSI SW	OFF
R POSITION SW	OFF

SAT645J

Without CONSULT-II

1. Turn ignition switch to ON position.
   (Do not start engine.)
2. Check voltage between TCM harness connector M77 terminal 22 and ground when overdrive control switch is ON and OFF.

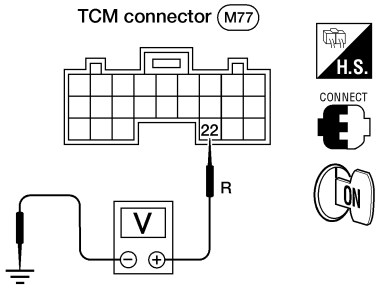

AAT510A

Voltage:
Switch position ON:
Battery voltage
Switch position OFF:
1V or less

OK or NG

OK (With CONSULT-II)	▶	GO TO 4.
OK (Without CONSULT-II)	▶	GO TO 5.
NG	▶	**Check the following items:** ● Overdrive control switch Refer to "Component Inspection", AT-406. ● Harness for short or open between TCM and overdrive control switch (Main harness) ● Harness for short or open of ground circuit for overdrive control switch (Main harness)

4 **CHECK THROTTLE POSITION SWITCH CIRCUIT (With CONSULT-II)**

With CONSULT-II

1. Turn ignition switch to ON position.
   (Do not start engine.)
2. Select "TCM INPUT SIGNALS" in "DATA MONITOR" mode for "A/T" with CONSULT-II.
3. Read out "CLOSED THL/SW" and "W/O THRL/P-SW" depressing and releasing accelerator pedal.
   Check the signal of throttle position switch is indicated properly.

Accelerator pedal condition	Data monitor	
	CLOSED THL/SW	W/O THRL/P-SW
Released	ON	OFF
Fully depressed	OFF	ON

MTBL0011

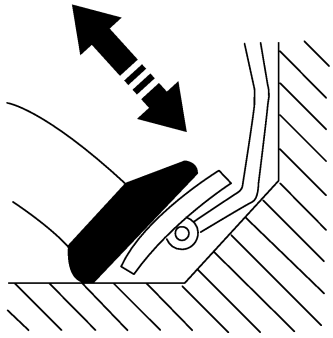

DATA MONITOR	
MONITORING	
POWERSHIFT SW	OFF
CLOSED THL/SW	OFF
W/O THRL/P-SW	OFF
HOLD SW	OFF
BRAKE SW	ON

SAT646J

OK or NG

OK	▶	GO TO 6.
NG	▶	**Check the following items:** ● Throttle position switch Refer to "Component Inspection", AT-407. ● Harness for short or open between ignition switch and throttle position switch (Main harness) ● Harness for short or open between throttle position switch and TCM (Main harness)

5	CHECK THROTTLE POSITION SWITCH CIRCUIT (Without CONSULT-II)

Without CONSULT-II

1. Turn ignition switch to ON position.
   (Do not start engine.)
2. Check voltage between TCM terminals (16, 17) and ground while depressing, and releasing accelerator pedal slowly.
   (after warming up engine).

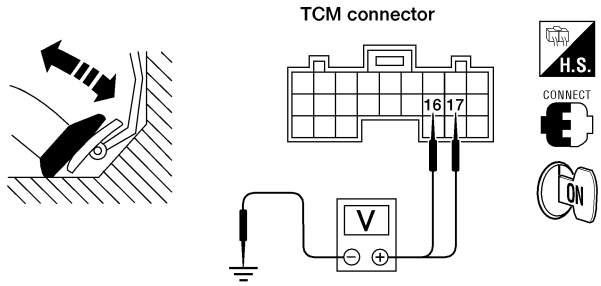

Accelerator pedal condition	Voltage	
	Terminal No. 16	Terminal No. 17
Released	Battery voltage	0V
Fully Depressed	0V	Battery voltage

WAT337

OK or NG

OK	▶	GO TO 6.
NG	▶	**Check the following items:** ● Throttle position switch Refer to "Component Inspection", AT-407. ● Harness for short or open between ignition switch and throttle position switch (Main harness) ● Harness for short or open between throttle position switch and TCM (Main harness)

6	CHECK DTC

Perform diagnostic procedure. Refer to "DIAGNOSTIC PROCEDURE", AT-402.

OK or NG

OK	▶	**INSPECTION END**
NG	▶	1. Perform TCM input/output signal inspection. 2. If NG, recheck TCM pin terminals for damage or loose connection with harness connector.

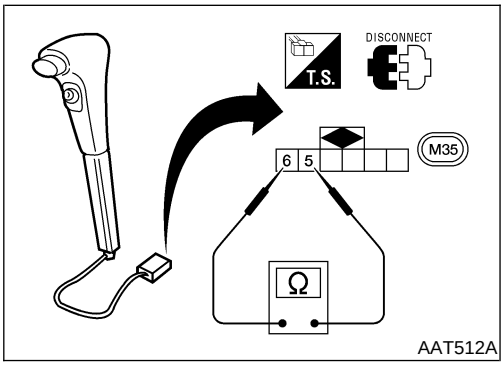

COMPONENT INSPECTION

NEAT0219S03

Overdrive Control Switch

NEAT0219S0301

- Check continuity between terminals 5 and 6.

Continuity:

Switch position ON:

No

Switch position OFF:

Yes

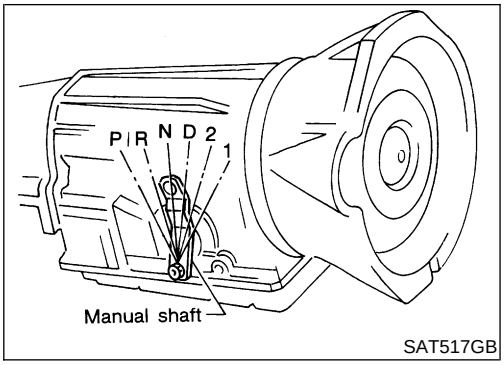

SAT517GB

PNP Switch

NEAT0219S0302

1. Check continuity between terminals 1 and 2 and between terminals 3 and (4, 5, 6, 7, 8, 9) while moving manual shaft through each position.

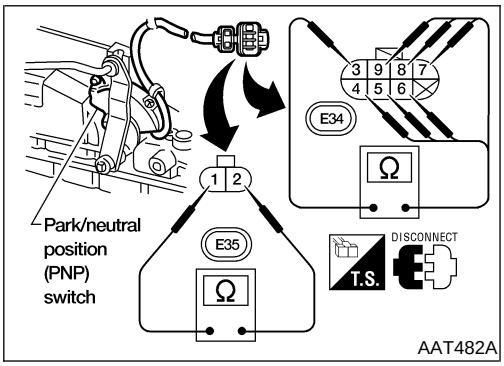

AAT482A

Lever position	P	R	N	D	2	1
Terminal No.	1 - 2	3 - 5	1 - 2	3 - 7	3 - 8	3 - 9
	3 - 4		3 - 6			

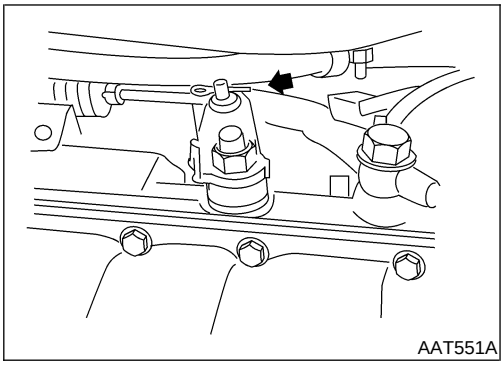
AAT551A

2. If NG, check again with manual control linkage disconnected from manual shaft of A/T assembly. Refer to step 1.
3. If OK on step 2, adjust manual control linkage. Refer to "Manual Control Linkage Adjustment", AT-419.

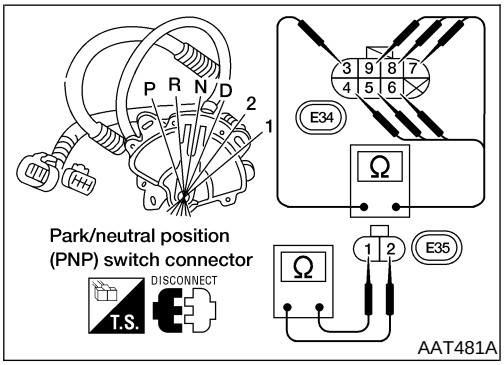

AAT481A

4. If NG on step 2, remove PNP switch from A/T and check continuity of PNP switch terminals. Refer to step 1.
5. If OK on step 4, adjust PNP switch. Refer to "Park/Neutral Position (PNP) Switch Adjustment", AT-418.
6. If NG on step 4, replace PNP switch.

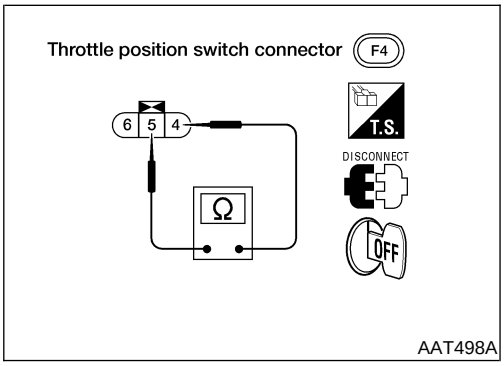

AAT498A

Throttle Position Switch

NEAT0219S0303

Closed Throttle Position Switch (Idle Position)

- Check continuity between terminals 4 and 5.

Accelerator pedal condition	Continuity
Released	Yes
Depressed	No

- To adjust closed throttle position switch, refer to ***EC-715*** (VG33E only) or ***EC-1314*** (VG33ER only), "Basic Inspection".

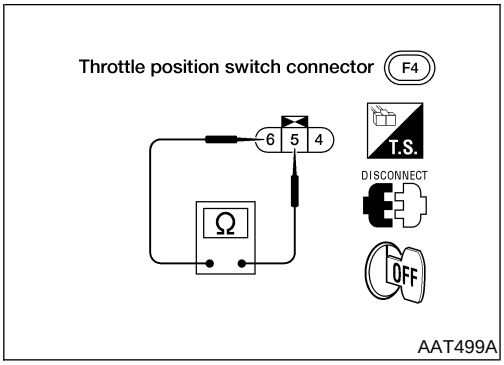

Wide Open Throttle Position Switch

- Check continuity between terminals 5 and 6.

Accelerator pedal condition	Continuity
Released	No
Depressed	Yes

Description

NEAT0220

- The mechanical key interlock mechanism also operates as a shift lock:
  With the key switch turned to ON, the selector lever cannot be shifted from P (park) to any other position unless the brake pedal is depressed.
  With the key removed, the selector lever cannot be shifted from P to any other position.
  The key cannot be removed unless the selector lever is placed in P.
- The shift lock and key interlock mechanisms are controlled by the ON-OFF operation of the shift lock solenoid and by the operation of the rotator and slider located inside the key cylinder, respectively.

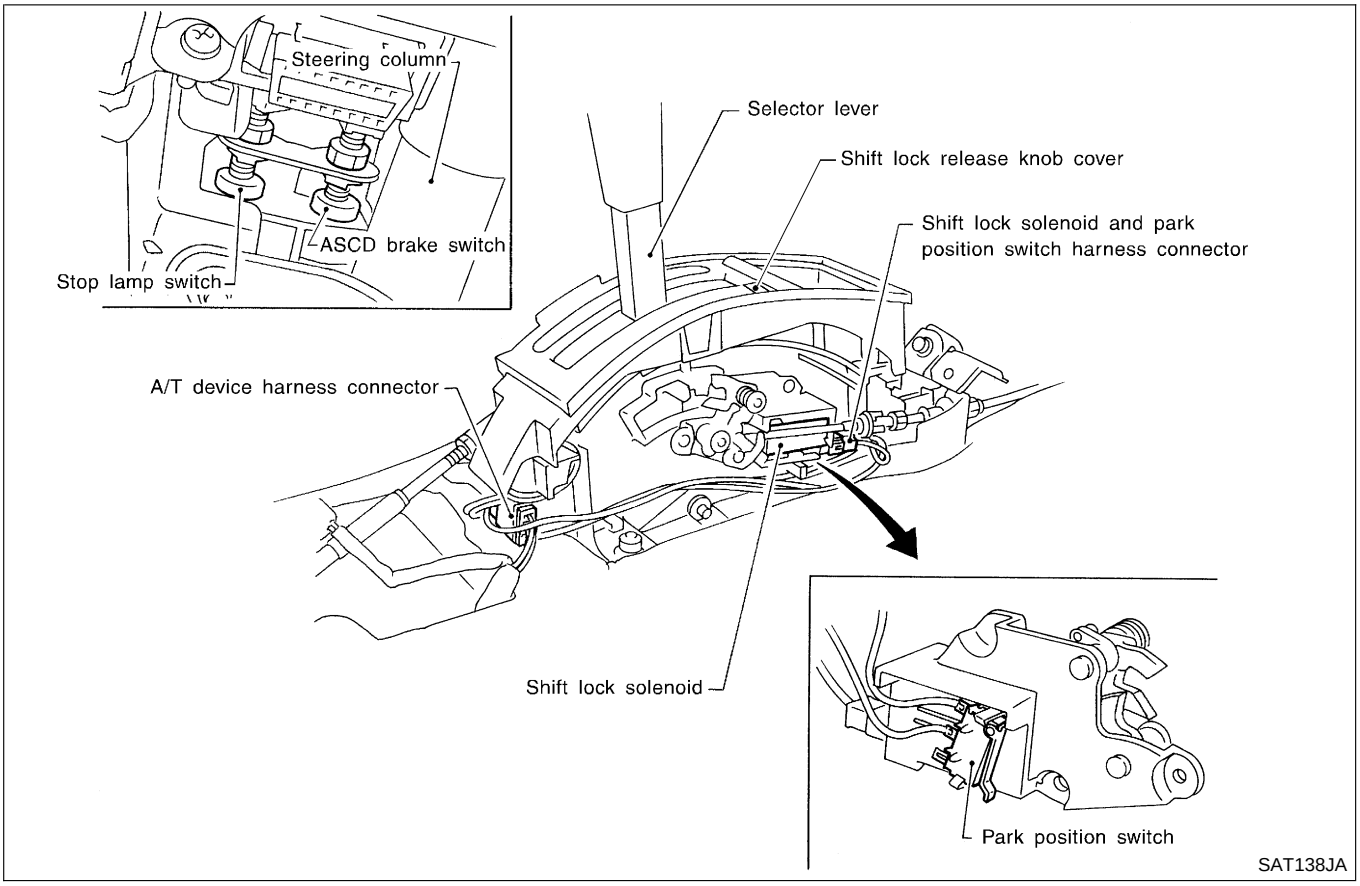

Wiring Diagram — SHIFT —

NEAT0221

AT-SHIFT-01

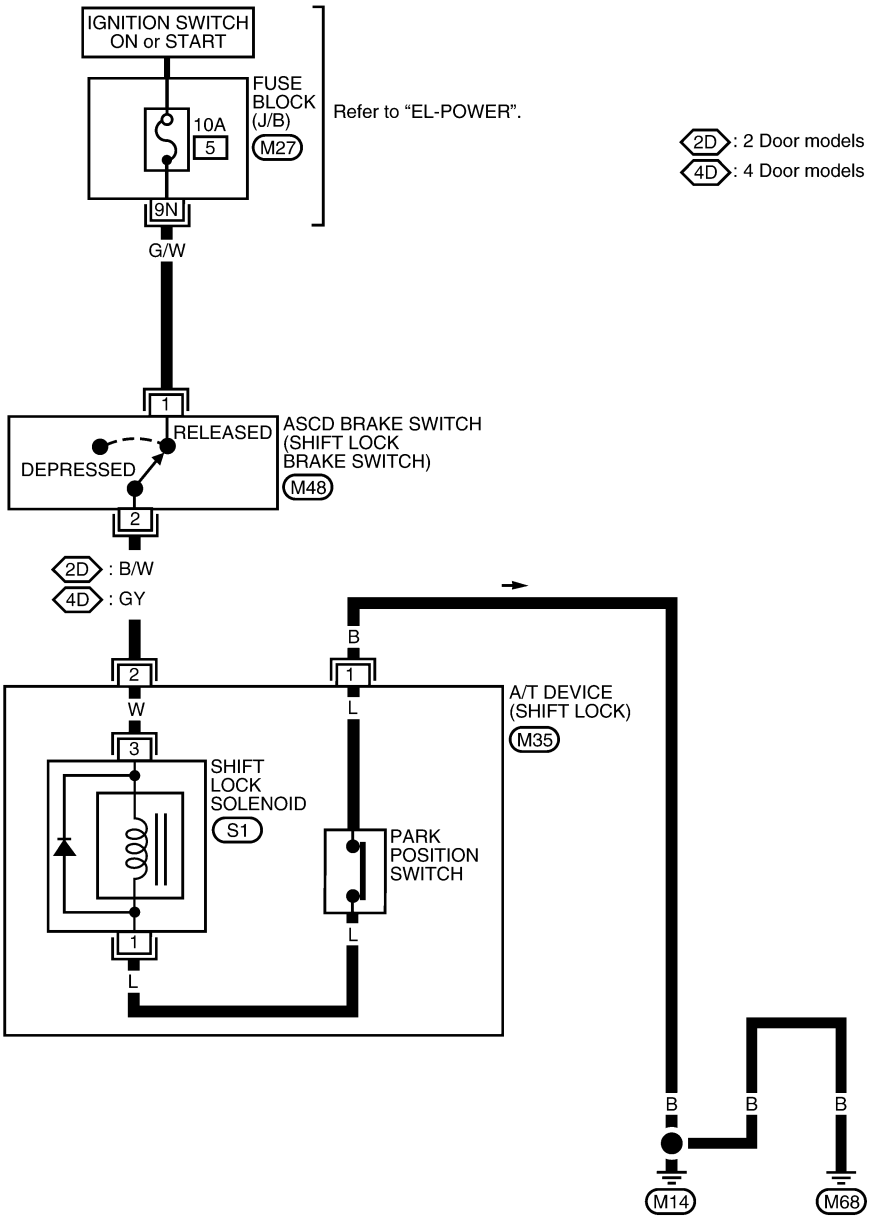

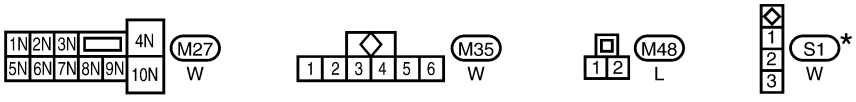

*: This connector is not shown in “HARNESS LAYOUT” of EL section.

WAT540

Diagnostic Procedure

NEAT0222

SYMPTOM 1:

- **Selector lever cannot be moved from P position with key in ON position and brake pedal applied.**
- **Selector lever can be moved from P position with key in ON position and brake pedal released.**
- **Selector lever can be moved from P position when key is removed from key cylinder.**

SYMPTOM 2:

Ignition key cannot be removed when selector lever is set to P position. It can be removed when selector lever is set to any position except P.

1	CHECK KEY INTERLOCK CABLE	
Check key interlock cable for damage. **OK or NG**		
OK	▶	GO TO 2.
NG	▶	Repair key interlock cable. Refer to “Key Interlock Cable”, AT-414.

2	CHECK SELECTOR LEVER POSITION	
Check selector lever position for damage. **OK or NG**		
OK	▶	GO TO 3.
NG	▶	Check selector lever. Refer to “PNP Switch and Manual Control Linkage Adjustment”, AT-418.

3	CHECK POWER SOURCE	
1. Turn ignition switch to ON position. (Do not start engine.) 2. Check voltage between ASCD brake switch (shift lock brake switch) harness terminal 1 and ground. 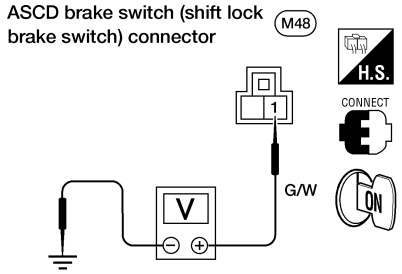 AAT513A **Does battery voltage exist?**		
Yes	▶	GO TO 4.
No	▶	**Check the following items:** ● Harness for short or open between battery and ASCD brake switch (shift lock brake switch) harness terminal 1 ● Fuse ● Ignition switch Refer to ***EL-9***, “POWER SUPPLY ROUTING”.

4	CHECK INPUT SIGNAL (BRAKE SWITCH)

Turn ignition switch to ON position.
(Do not start engine.)
- Check voltage between A/T device harness connector M35 terminal 2 (2WD: B/W, 4WD: GY) and ground.

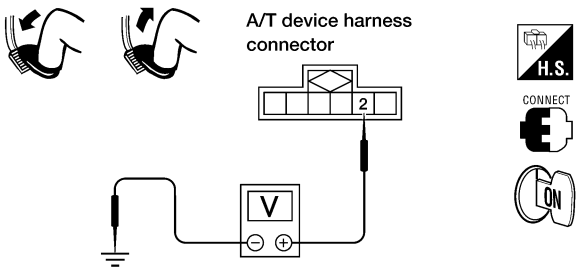

LAT421

Voltage:
Brake pedal depressed:
0V
Brake pedal released:
Battery voltage

OK or NG

OK	▶	GO TO 5.
NG	▶	**Check the following items:** • Harness for short or open between A/T device harness connector 2 and ASCD brake switch (shift lock brake switch) harness connector 2 • ASCD brake switch (shift lock brake switch) Refer to "Component Check", AT-413.

5	CHECK GROUND CIRCUIT

1. Turn ignition switch to OFF position.
2. Disconnect A/T device harness connector.
3. Check continuity between A/T device harness terminal 1 and ground.

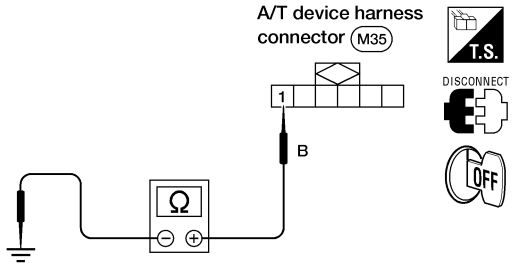

AAT515A

OK or NG

OK	▶	GO TO 6.
NG	▶	Repair harness or connector.

6	CHECK PARK POSITION SWITCH

Refer to "Component Check", AT-413.

OK or NG

OK	▶	GO TO 7.
NG	▶	Replace park position switch.

7	CHECK SHIFT LOCK SOLENOID	
Refer to "Component Check", AT-413.		
OK or NG		
OK	▶	GO TO 8.
NG	▶	Replace shift lock solenoid.

8	CHECK SHIFT LOCK OPERATION	
1. Reconnect shift lock harness connector. 2. Turn ignition switch from OFF to ON" position. (Do not start engine.) 3. Recheck shift lock operation.		
OK or NG		
OK	▶	**INSPECTION END**
NG	▶	1. Perform A/T device input/output signal inspection test. 2. If NG, recheck harness connector connection.

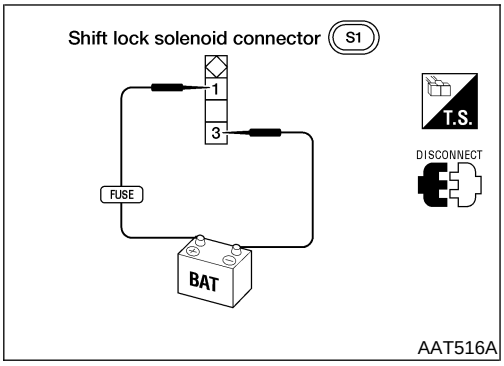

AAT516A

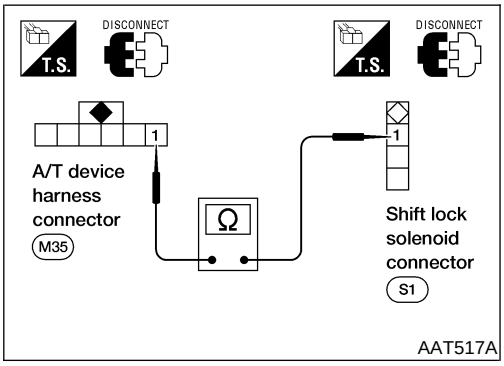

AAT517A

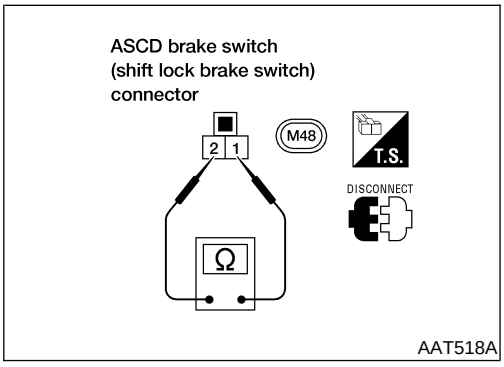

AAT518A

Component Check

NEAT0223

SHIFT LOCK SOLENOID

NEAT0223S01

- Check operation by applying battery voltage between shift lock solenoid connector terminals 1 and 3.

PARK POSITION SWITCH

NEAT0223S02

- Check continuity between park position switch harness connector terminal 1 and A/T device harness connector terminal 1.

Condition	Continuity
When selector lever is set in "P" position and selector lever button is released	Yes
Except above	No

ASCD BRAKE SWITCH (SHIFT LOCK BRAKE SWITCH)

NEAT0223S03

- Check continuity between ASCD brake switch (shift lock brake switch) harness connector terminals 1 and 2.

Condition	Continuity
When brake pedal is depressed	No
When brake pedal is released	Yes

Check ASCD brake switch (shift lock brake switch) after adjusting brake pedal — refer to *BR-18*, "Adjustment".

Components

NEAT0224

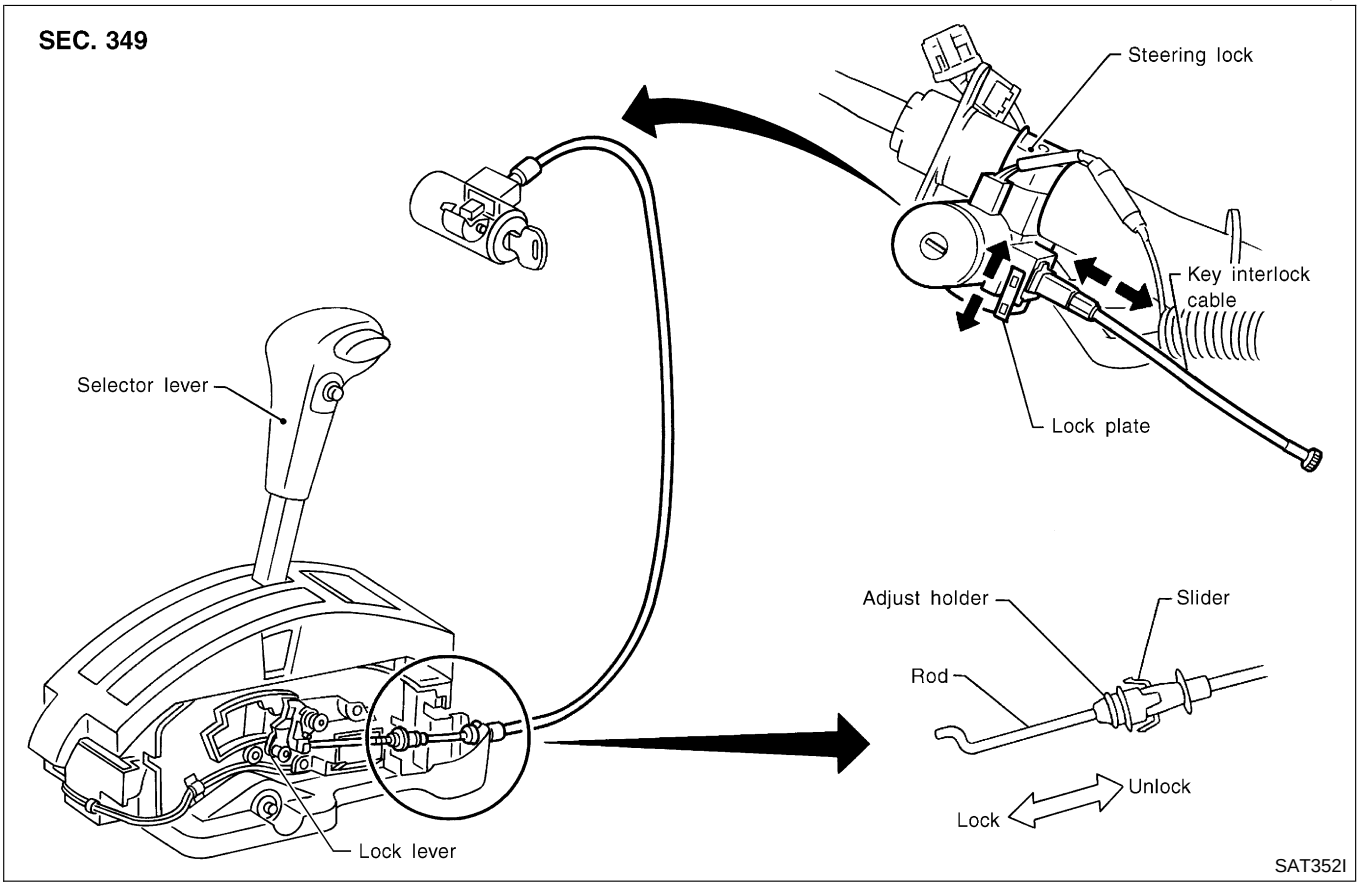

CAUTION:

- **Install key interlock cable in such a way that it will not be damaged by sharp bends, twists or interference with adjacent parts.**
- **After installing key interlock cable to control device, make sure that casing cap and bracket are firmly secured in their positions. If casing cap can be removed with an external load of less than 39.2 N (4.0 kg, 8.8 lb), replace key interlock cable with new one.**

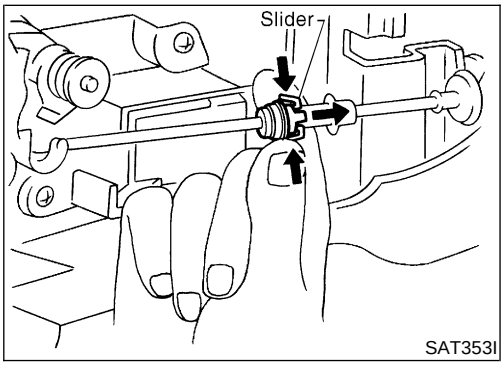

Removal

NEAT0225

Unlock slider from adjuster holder and remove rod from cable.

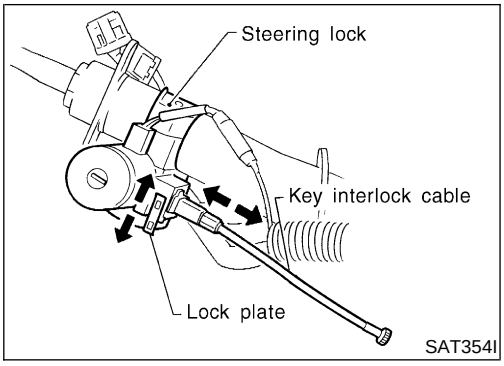

Installation

NEAT0226

1. Set key interlock cable to steering lock assembly and install lock plate.
2. Clamp cable to steering column and fix to control cable with band.
3. Set selector lever to P position.

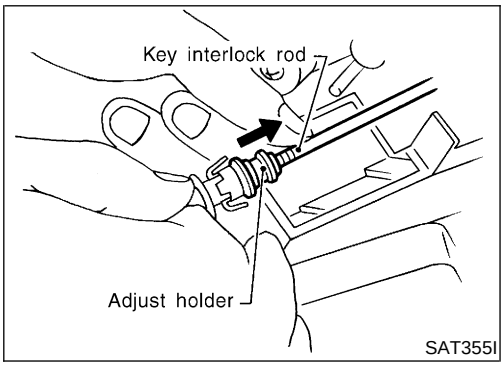

4. Insert interlock rod into adjuster holder.

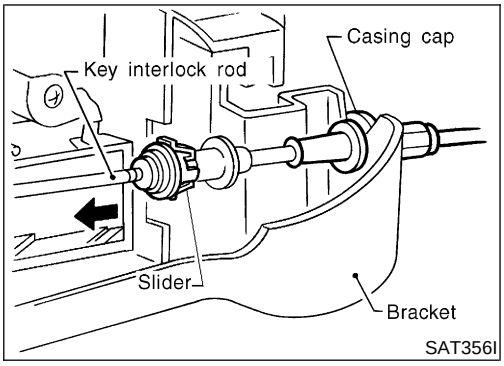

5. Install casing cap to bracket.
6. Move slider in order to fix adjuster holder to interlock rod.

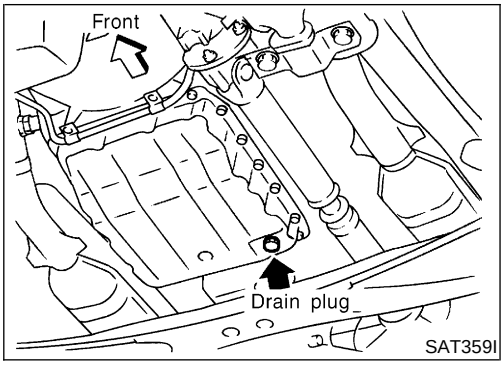

Control Valve Assembly and Accumulators

NEAT0227

REMOVAL

NEAT0227S01

1. Remove exhaust front tube.
2. Remove oil pan and gasket and drain ATF.

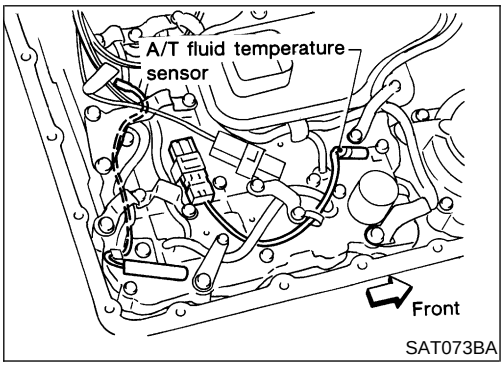

3. Remove A/T fluid temperature sensor if necessary.
4. Remove oil strainer.

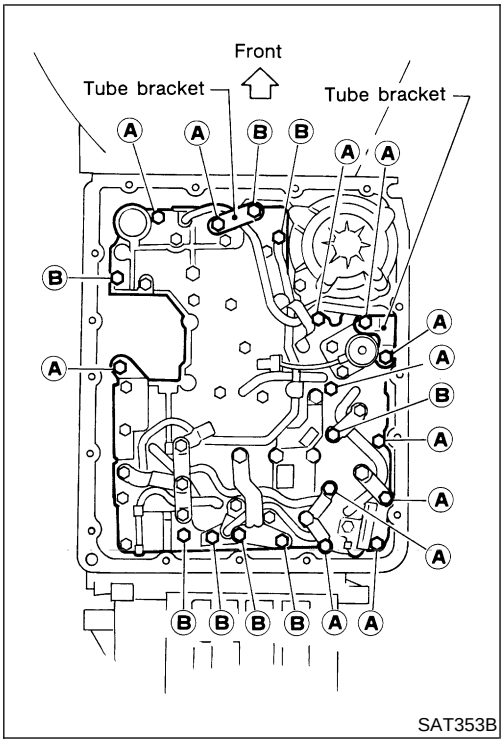

5. Remove control valve assembly by removing fixing bolts and disconnecting harness connector.

Bolt length and location

Bolt symbol	ℓ mm (in)
A	33 (1.30)
B	45 (1.77)

6. Remove solenoids and valves from valve body if necessary.
7. Remove terminal cord assembly if necessary.

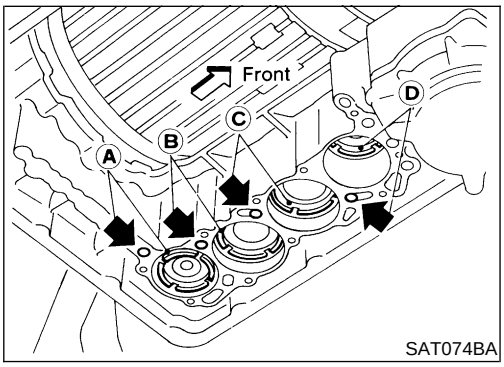

8. Remove accumulator **A, B, C** and **D** by applying compressed air if necessary.

- **Hold each piston with rag.**

9. Reinstall any part removed.

- **Always use new sealing parts.**
- **Always replace oil pan bolts as they are self-sealing bolts.**

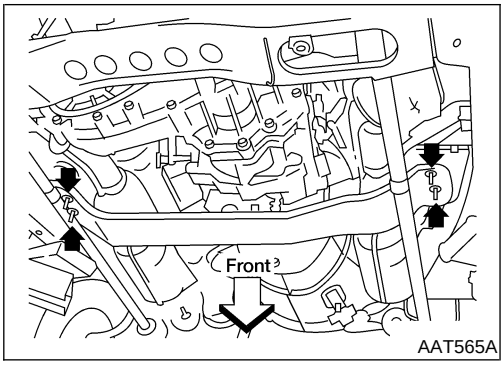

Revolution Sensor Replacement

NEAT0502

—4WD MODEL—

NEAT0502S01

1. Remove rear engine mounting member from side member while supporting A/T with transfer case with jack. Tighten rear engine mounting member to the specified torque. Refer to ***EM-112***, “ENGINE REMOVAL”.
2. Lower A/T with transfer case as much as possible.
3. Remove revolution sensor from A/T.
4. Reinstall any part removed.

- **Always use new sealing parts.**

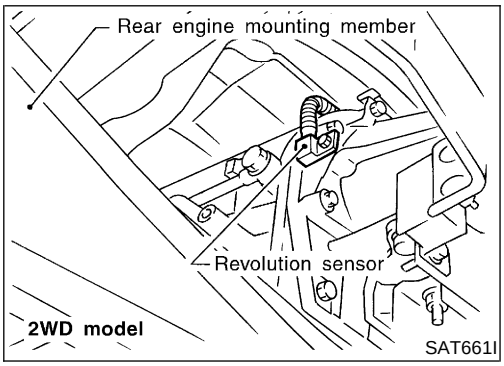

—2WD MODEL—

NEAT0502S02

- Remove revolution sensor from A/T.
- **Always use new sealing parts.**

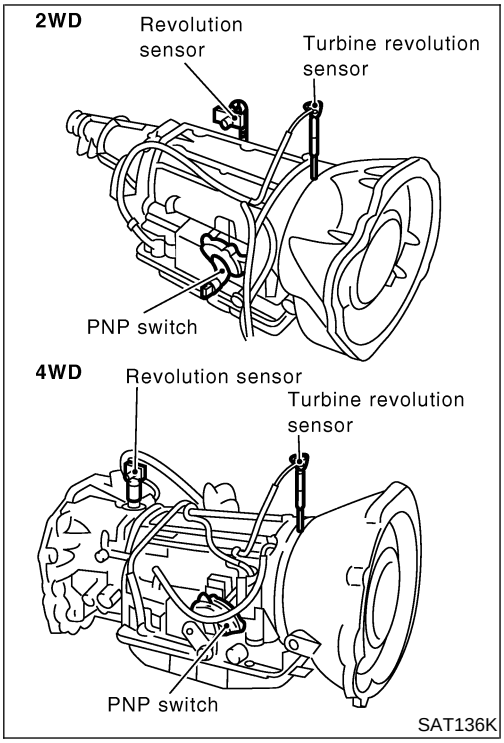

Turbine Revolution Sensor Replacement (VG33ER only)

NEAT0514

1. Remove A/T assembly. Refer to “Removal”, AT-420.
2. Remove turbine revolution sensor from A/T assembly upper side.
3. Reinstall any part removed.

- **Always use new sealing parts.**

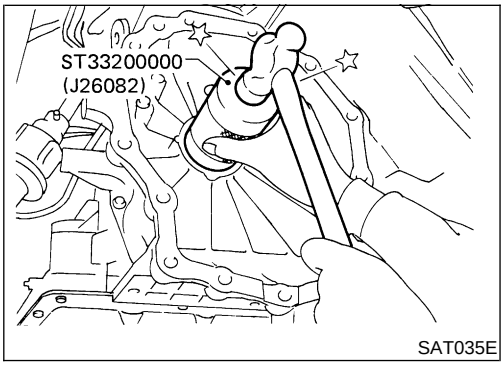

Rear Oil Seal Replacement

NEAT0503

—4WD MODEL—

NEAT0503S01

1. Remove transfer case from vehicle. Refer to ***TF-10*** “Removal”.
2. Remove rear oil seal.
3. Install rear oil seal.

- **Apply ATF before installing.**

4. Reinstall any part removed.

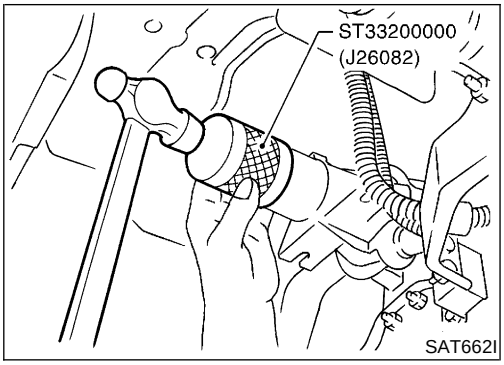

—2WD MODEL—

NEAT0503S02

1) Remove propeller shaft from vehicle. Refer to ***PD-9***, "Removal".
2) Remove rear oil seal.
3) Install rear oil seal.
- **Apply ATF before installing.**

4) Reinstall any part removed.

Parking Components Inspection

NEAT0504

—4WD MODEL—

NEAT0504S01

1. Remove propeller shaft. Refer to ***PD-9***, "Removal".
2. Remove transfer case from vehicle. Refer to ***TF-10***, "Removal".
3. Remove A/T control cable bracket from transmission case.

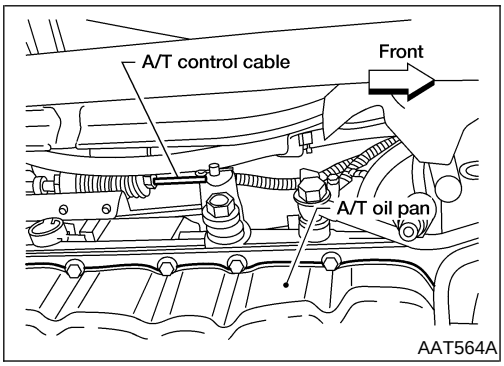

4. Support A/T assembly with a jack.
5. Remove adapter case from transmission case.
6. Replace parking components if necessary.
7. Reinstall any part removed.
- **Always use new sealing parts.**

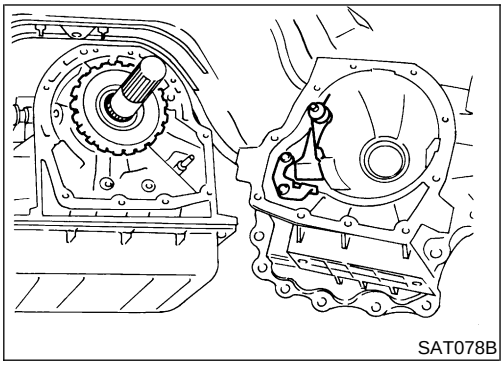

—2WD MODEL—

NEAT0504S02

1) Remove propeller shaft from vehicle. Refer to ***PD-9***, "Removal".
2) Support A/T assembly with jack.
3) Remove rear engine mounting member. Tighten rear engine mounting member to the specified torque. Refer ***EM-112***, "ENGINE REMOVAL".
4) Remove rear extension from transmission case.
5) Replace parking components if necessary.
6) Reinstall any part removed.
- **Always use new sealing parts.**

Park/Neutral Position (PNP) Switch Adjustment

NEAT0231

1. Remove manual control linkage from manual shaft of A/T assembly.
2. Set manual shaft of A/T assembly in N position.
3. Loosen PNP switch fixing bolts.
4. Insert pin into adjustment holes in both PNP switch and manual shaft of A/T assembly as near vertical as possible.
5. Reinstall any part removed.
6. Check continuity of PNP switch. Refer to "Component Inspection", AT-254.

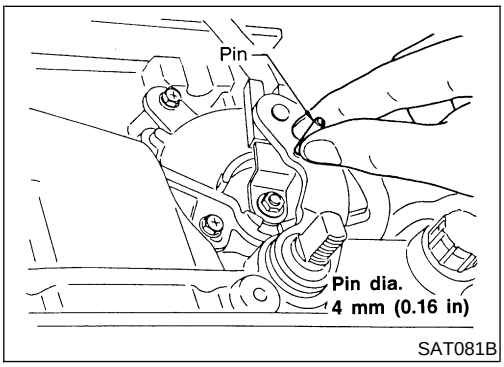

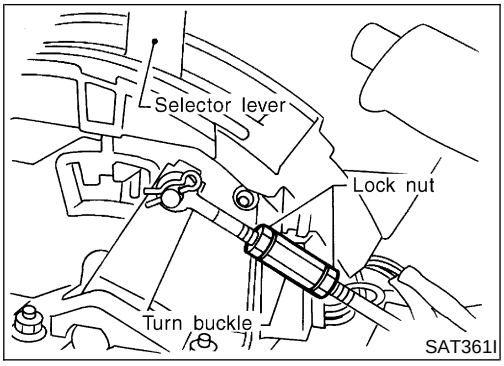

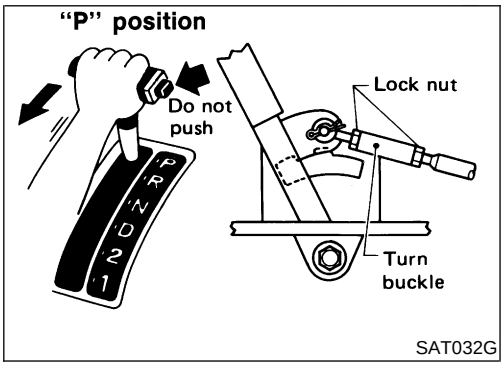

Manual Control Linkage Adjustment

NEAT0232

Move selector lever from P position to 1 position. You should be able to feel the detents in each position.
If the detents cannot be felt or the pointer indicating the position is improperly aligned, the linkage needs adjustment.

1. Place selector lever in P position.
2. Loosen lock nuts.
3. Tighten turn buckle until it aligns with inner cable, pulling selector lever toward R position side without pushing button.
4. Back off turn buckle 1 turn and tighten lock nuts to the specified torque.

   Lock nut:

   : 4.4 - 5.9 N·m (0.45 - 0.60 kg-m, 39.1 - 52.1 in-lb)
5. Move selector lever from P position to 1 position. Make sure that selector lever can move smoothly.

Removal

NEAT0233

—4WD MODEL—

NEAT0233S01

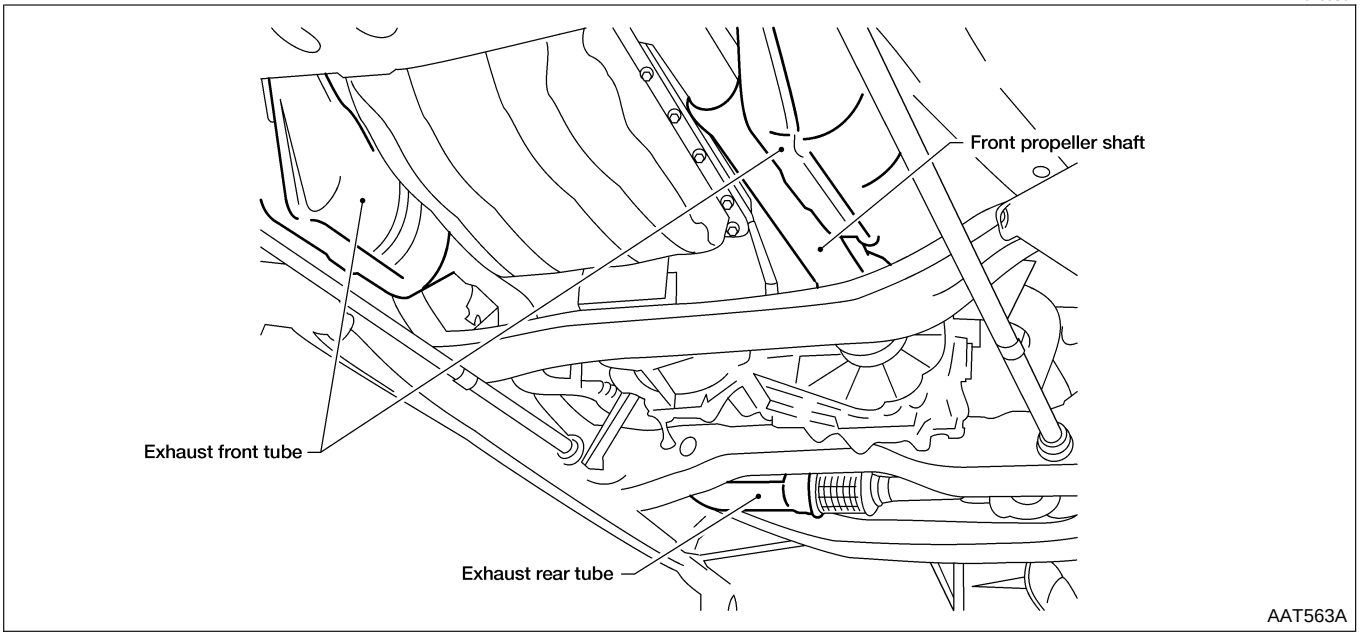

CAUTION:

When removing the A/T assembly from engine, first remove the crankshaft position sensor (OBD) from the A/T assembly upper side.

Be careful not to damage sensor edge.

1. Remove battery negative terminal.
2. Remove exhaust front and rear tubes.
3. Remove fluid charging pipe from A/T assembly.
4. Remove oil cooler pipe from A/T assembly.
5. Plug up openings such as the fluid charging pipe hole, etc.
6. Remove propeller shaft. Refer to ***PD-9***, “Removal and Installation”.
7. Remove transfer control linkage from transfer. Refer to ***TF-10***, “Removal”.

- **Insert plug into rear oil seal after removing rear propeller shaft.**
- **Be careful not to damage spline, sleeve yoke and rear oil seal.**

8. Remove A/T control cable from A/T assembly.
9. Disconnect A/T, turbine revolution sensor (VG33ER only) and vehicle speed sensor harness connectors.

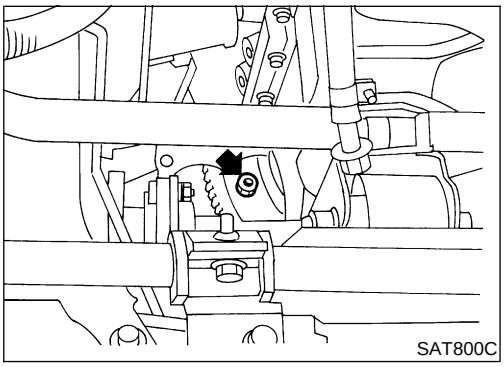

10. Remove starter motor.

    Tightening torque:

    Refer to *SC-28*, “Removal”.
11. Remove gusset and rear plate cover securing engine to A/T assembly.
12. Remove bolts securing torque converter to drive plate.

- **Remove the bolts by turning crankshaft.**

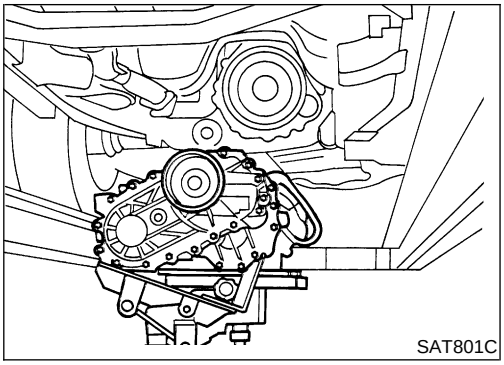
SAT801C

13. Support A/T and transfer assembly with a jack.
14. Remove rear engine mounting member from body and A/T assembly. Tighten rear engine mounting member to the specified torque. Refer to ***EM-111***, "ENGINE REMOVAL".
15. Remove bolts securing A/T assembly to engine.
16. Lower A/T assembly with transfer.

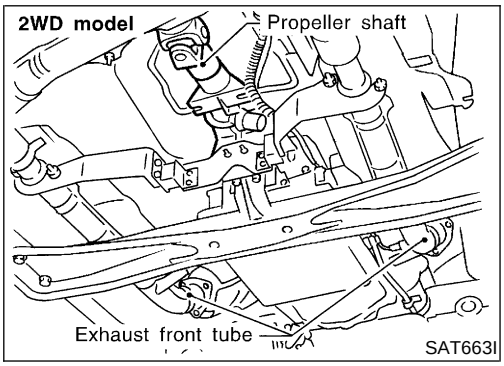

—2WD MODEL—

NEAT0233S02

1) Remove battery negative terminal.
2) Remove exhaust front and rear tubes.
3) Remove fluid charging pipe from A/T assembly.
4) Remove oil cooler pipe from A/T assembly.
5) Plug up openings such as the fluid charging pipe hole, etc.
6) Remove propeller shaft. Refer to ***PD-9***, "Removal and Installation".
7) Remove transfer control linkage from transfer. Refer to ***TF-10***, "Removal".

- **Insert plug into rear oil seal after removing rear propeller shaft.**
- **Be careful not to damage spline, sleeve yoke and rear oil seal**.

8) Remove A/T control cable from A/T assembly.
9) Disconnect A/T, turbine revolution sensor (VG33ER only) and vehicle speed sensor harness connectors.
10) Remove starter motor.

Tightening torque:
Refer to *SC-28*, "VG33E AND VG33ER MODELS".

11) Remove gusset and rear plate cover securing engine to A/T assembly.
12) Remove bolts securing torque converter to drive plate.

- **Remove the bolts by turning crankshaft.**

13) Support A/T assembly with a jack.
14) Remove rear engine mounting member from body and A/T assembly. Tighten rear engine mounting member to the specified torque. Refer to ***EM-112***, "ENGINE REMOVAL".
15) Remove bolts securing A/T assembly to engine.
16) Pull A/T assembly backwards.

- **Secure torque converter to prevent it from dropping.**
- **Secure A/T assembly to a jack.**

17) Lower A/T assembly.

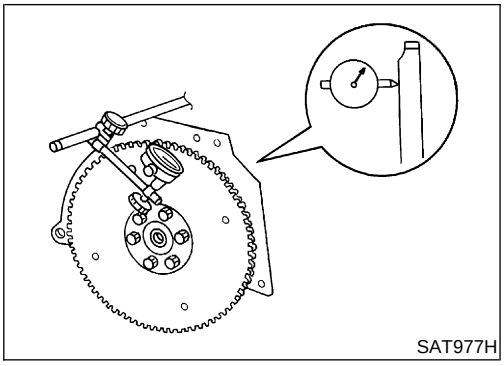
SAT977H

Installation

NEAT0234

- Drive plate runout

  Maximum allowable runout:

  Refer to *EM-123*, “Flywheel/Drive Plate Runout”.

  If this runout is out of specification, replace drive plate with ring gear.

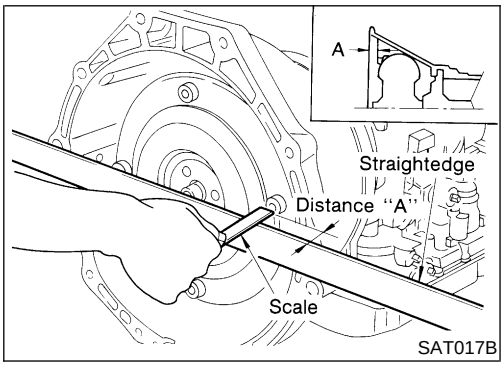

SAT017B

- When connecting torque converter to transmission, measure distance “A” to be certain that they are correctly assembled.

  Distance “A”:

  VG33E: 26.0 mm (1.024 in) or more

  VG33ER: 25.0 mm (0.984 in) or more

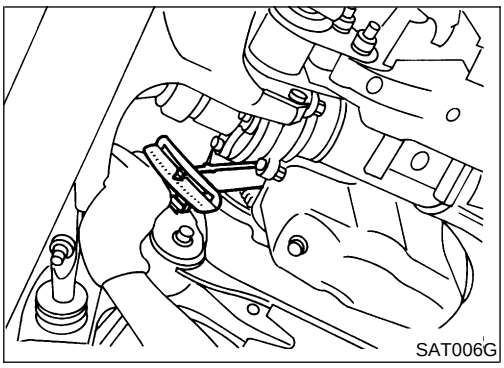
SAT006G

- Install converter to drive plate.
- **After converter is installed to drive plate, rotate crankshaft several turns and check to be sure that transmission rotates freely without binding.**

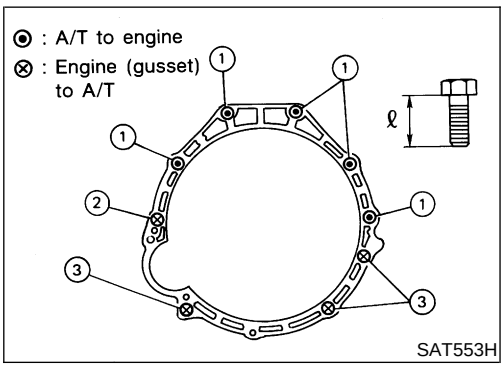

SAT553H

- Tighten bolts securing transmission.

Bolt No.	Tightening torque N·m (kg-m, ft-lb)	Bolt length “ℓ” mm (in)
1	39 - 49 (4.0 - 5.0, 29 - 36)	47.5 (1.870)
2	39 - 49 (4.0 - 5.0, 29 - 36)	58.0 (2.283)
3	29 - 39 (3.0 - 4.0, 22 - 29)	25.0 (0.984)
Gusset to engine	29 - 39 (3.0 - 4.0, 22 - 29)	20.0 (0.787)

- Reinstall any part removed.

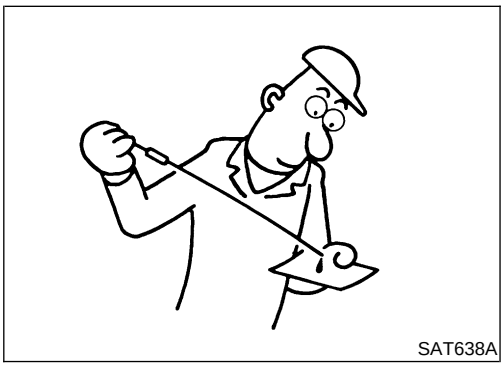
SAT638A

- Check fluid level in transmission.
- Move selector lever through all positions to be sure that transmission operates correctly.
  With parking brake applied, rotate engine at idling. Move selector lever through N to D, to 2, to 1 and to R positions. A slight shock should be felt by hand gripping selector each time transmission is shifted.
- Perform road test. Refer to “ROAD TEST”, AT-211.

Components

NEAT0235

SEC. 311•313•315

: N•m (kg-m, ft-lb)
: Apply recommended sealant (Genuine anaerobic liquid gasket, Three Bond TB1215, Locktite Part No. 51813 or equivalent).
ATF : Apply ATF.
Ⓟ : Apply petroleum jelly.
★ : Select with proper thickness.

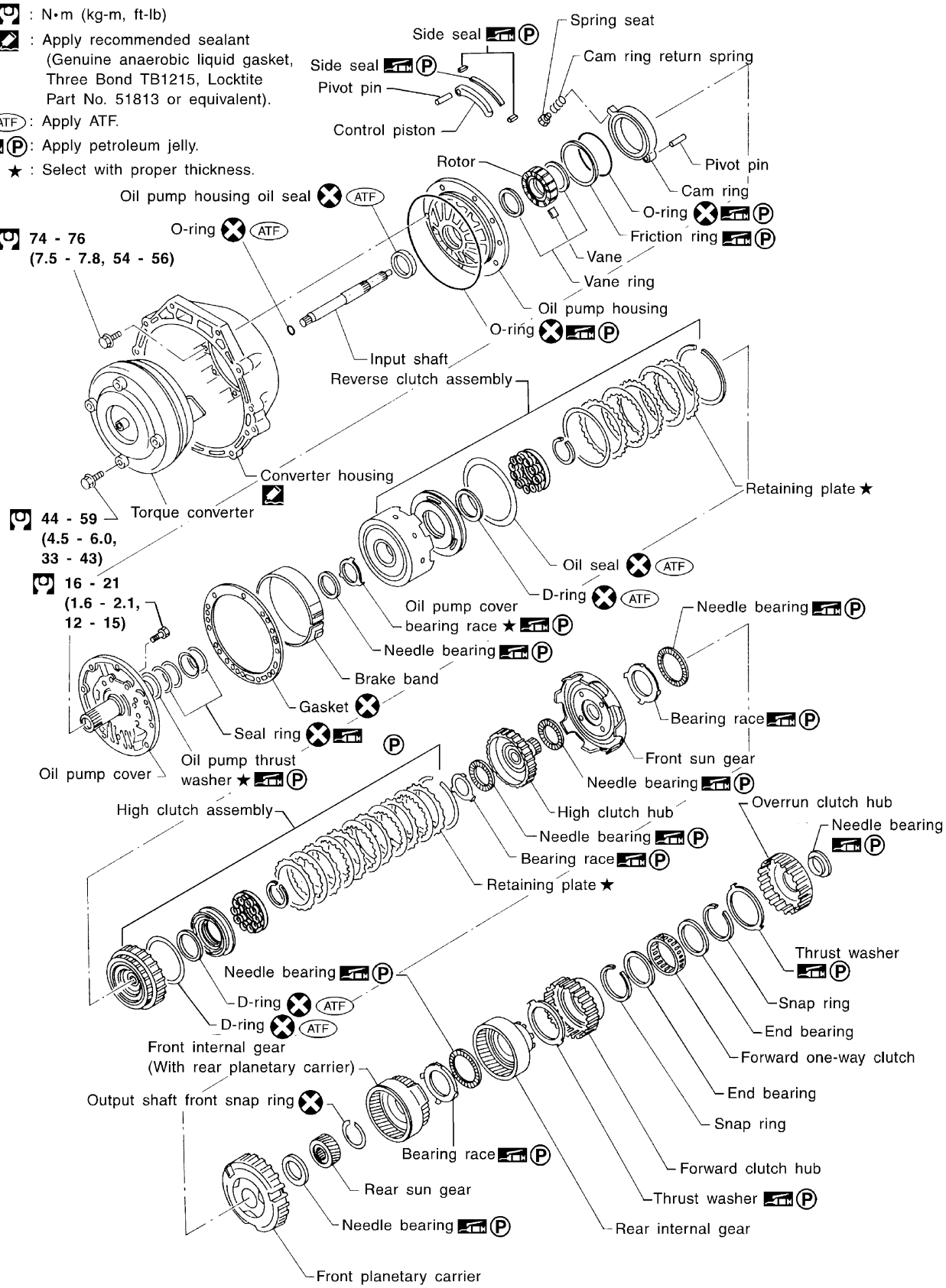

SAT147JA

SEC. 311 • 315 • 317

: N•m (kg-m, in-lb)
: N•m (kg-m, ft-lb)
ATF : Apply ATF.
Ⓟ : Apply petroleum jelly.
★ : Select with proper thickness.
☆ : Adjustment is required.

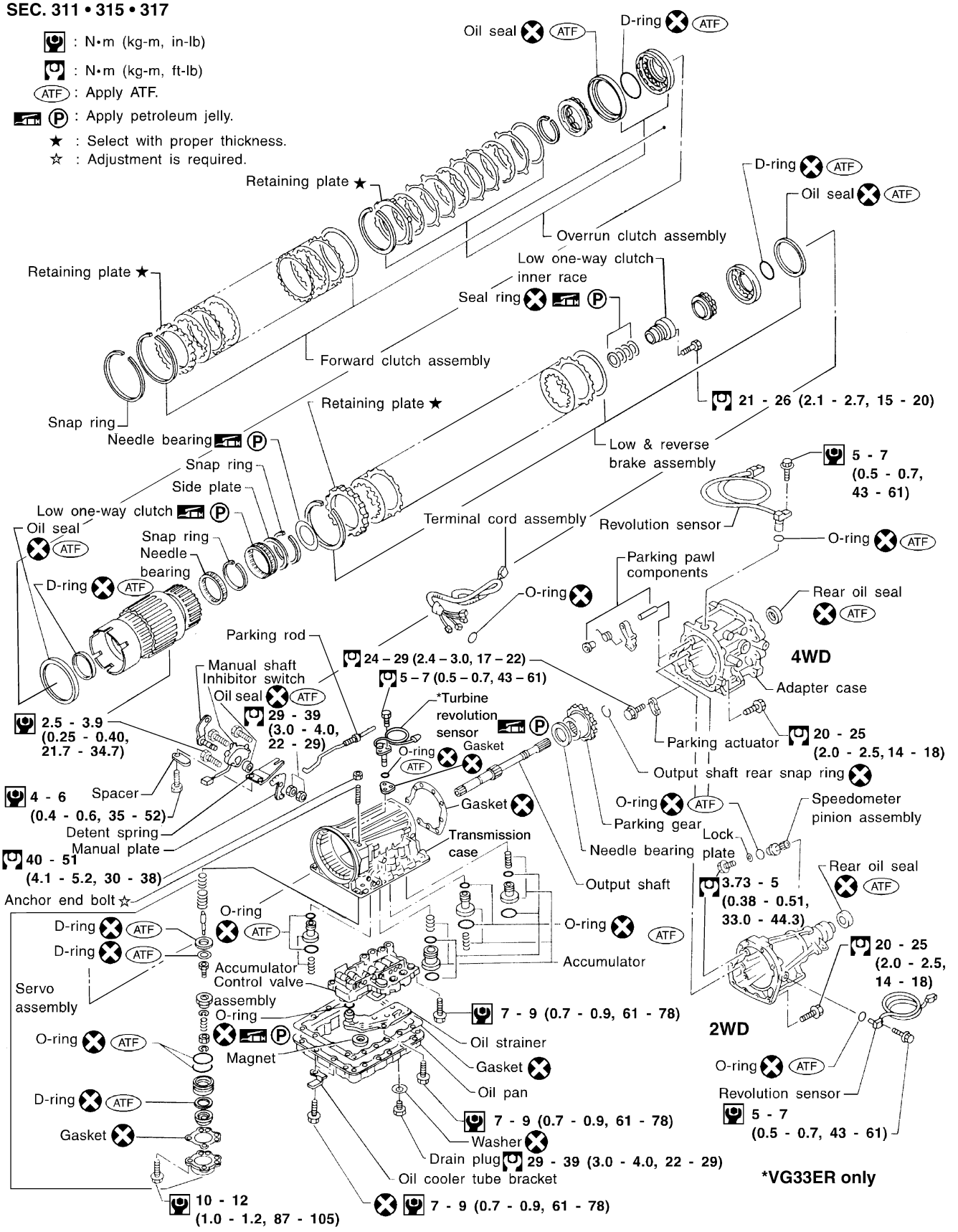

LAT438

Oil Channel

NEAT0236

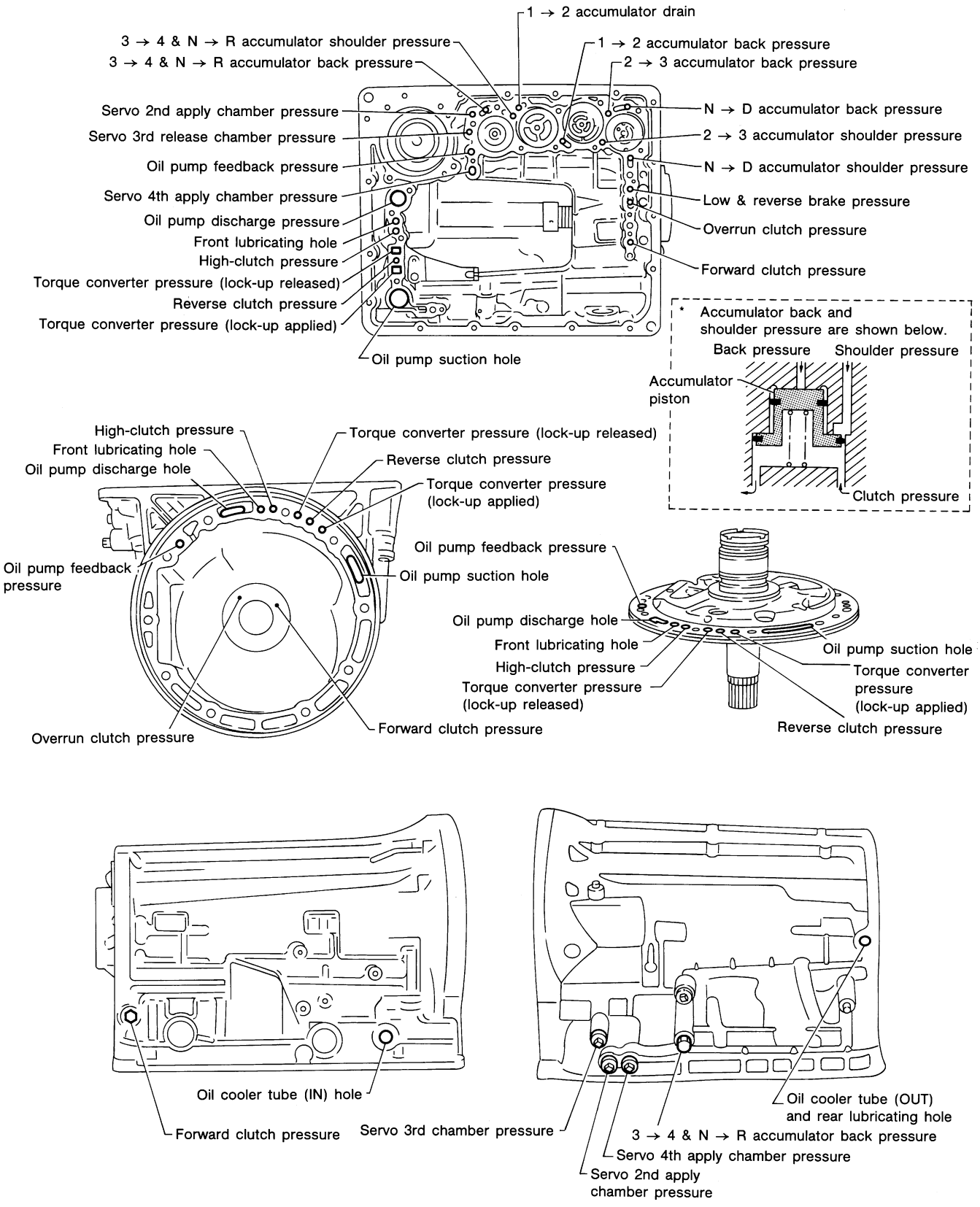

SAT185B

Locations of Needle Bearings, Thrust Washers and Snap Rings

NEAT0237

Outer diameter of snap rings

Item number	Outer diameter mm (in)
②	161.0 (6.34)
③	140.1 (5.52)
④	156.4 (6.16)
⑥	142.0 (5.59)
⑦	159.2 (6.27)

Thrust washers

Item number	Color
①	Black
⑤	White

Outer diameter of needle bearings

Item number	Outer diameter mm (in)
⑧	47 (1.85)
⑨	53 (2.09)
⑪	78 (3.07)
⑫	53 (2.09)
⑬	78 (3.07)
⑭	57 (2.24)
⑮	78.1 (3.075)
⑯	64 (2.52)
⑰	53 (2.09)

Installation of one-piece bearings

Item number	Bearing race (black) location
⑩	Front
⑫	Front
⑮	Rear side
⑯	Rear side

Inner diameter of bearing races

Item number	Outer diameter mm (in)
⑪	58 (2.315)
⑬	58 (2.315)

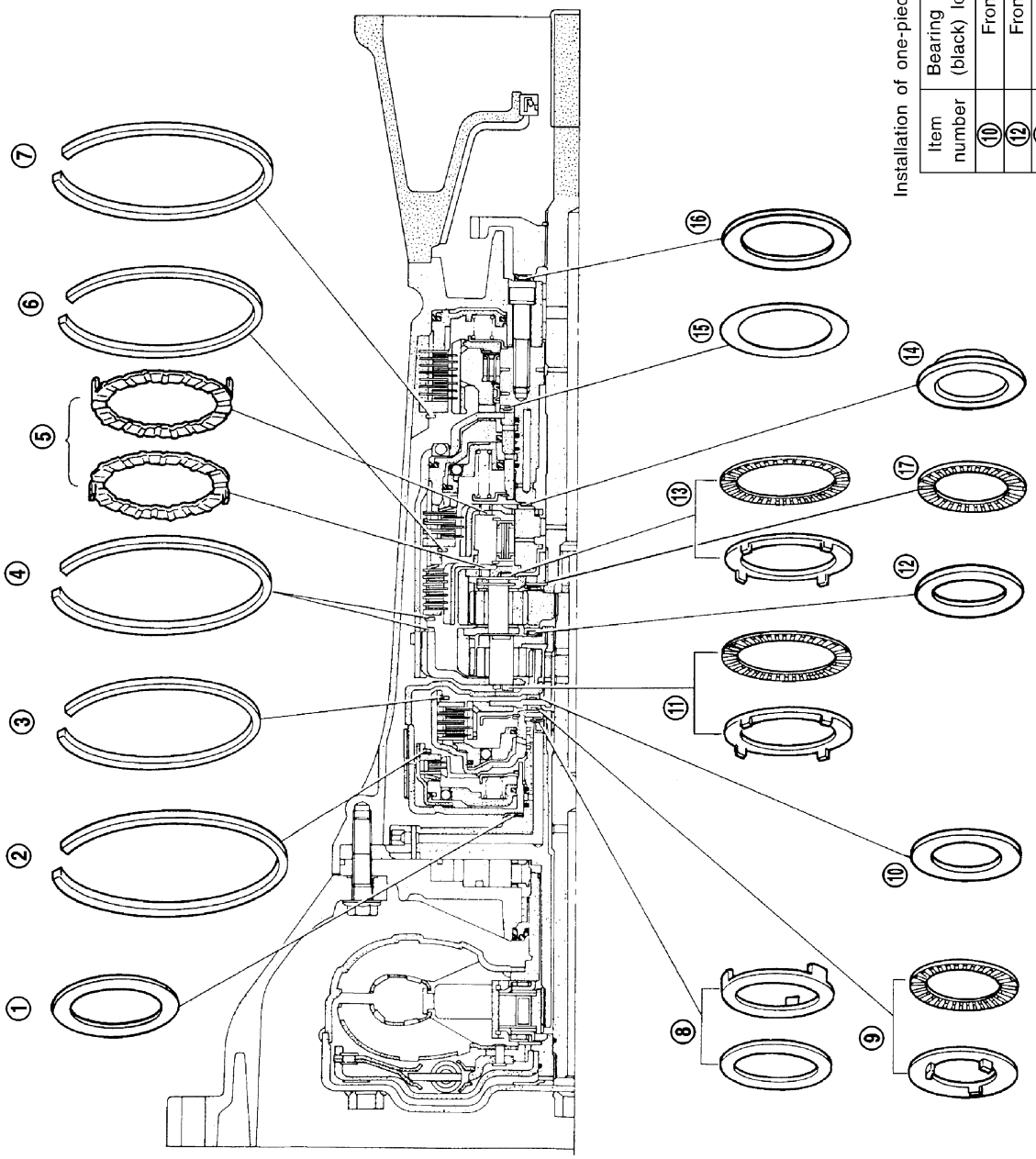

WAT378

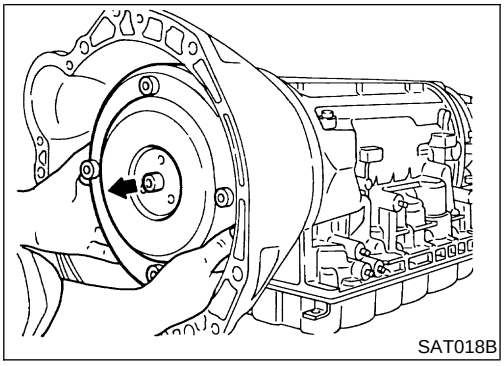
SAT018B

1. Drain ATF through drain plug.
2. Remove turbine revolution sensor (VG33ER only).
3. Remove torque converter by holding it firmly and turning while pulling straight out.

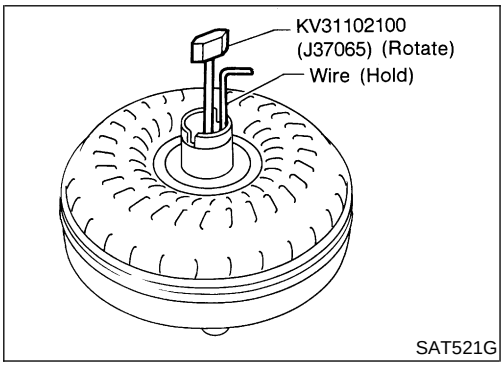

SAT521G

4. Check torque converter one-way clutch.
a. Insert Tool into spline of one-way clutch inner race.
b. Hook bearing support unitized with one-way clutch outer race with suitable wire.
c. Check that one-way clutch inner race rotates only clockwise with Tool while holding bearing support with wire.

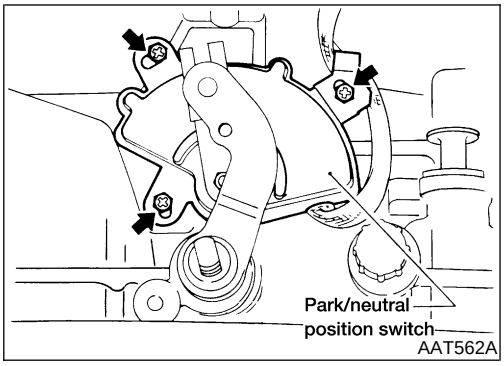

AAT562A

5. Remove park/neutral position (PNP) switch from transmission case.

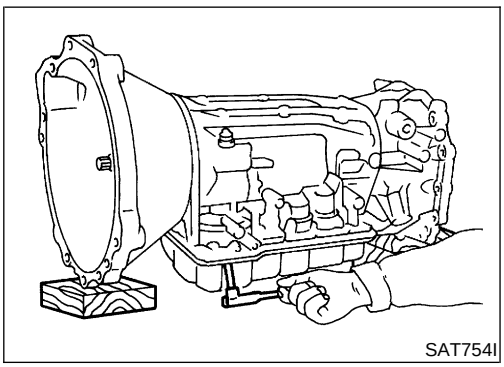
SAT754I

6. Remove oil pan.
- Always place oil pan straight down so that foreign particles inside will not move.

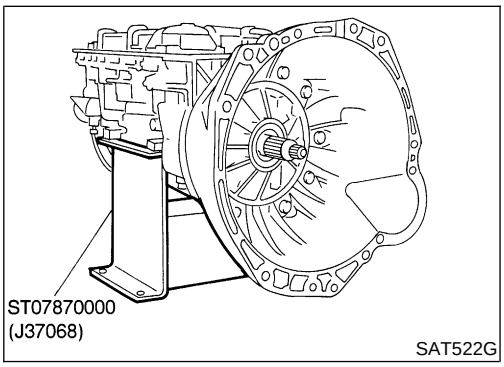

SAT522G

7. Place transmission into Tool with the control valve facing up.

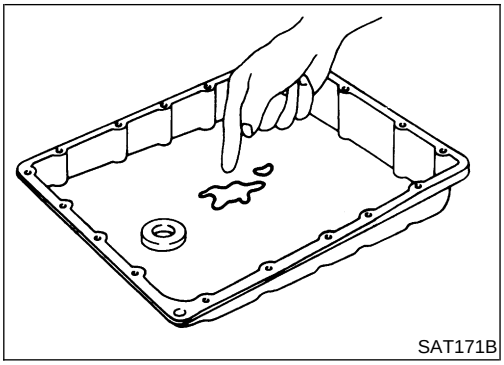
SAT171B

8. Check foreign materials in oil pan to help determine cause of malfunction. If the fluid is very dark, smells burned, or contains foreign particles, the frictional material (clutches, band) may need replacement. A tacky film that will not wipe clean indicates varnish build up. Varnish can cause valves, servo, and clutches to stick and may inhibit pump pressure.
- **If frictional material is detected, replace radiator after repair of A/T. Refer to *LC-32*, "Radiator".**

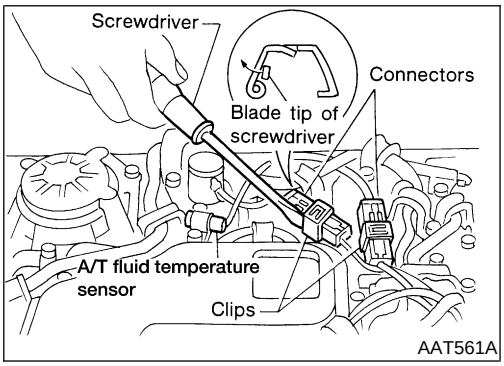

AAT561A

9. Remove torque converter clutch solenoid valve and A/T fluid temperature sensor connectors.
- **Be careful not to damage connector.**

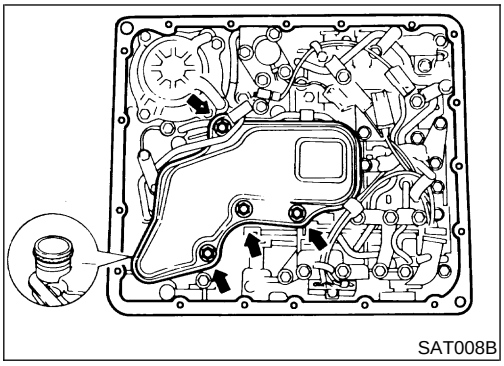
SAT008B

10. Remove oil strainer.
a. Remove oil strainer from control valve assembly. Then remove O-ring from oil strainer.

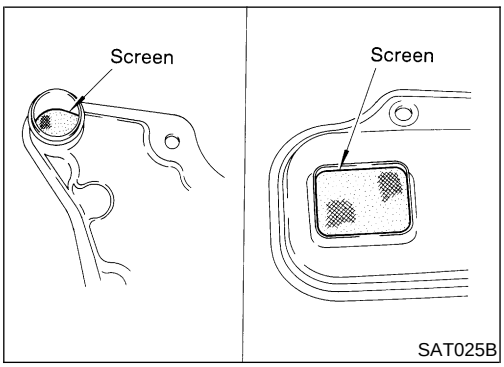

SAT025B

b. Check oil strainer screen for damage.

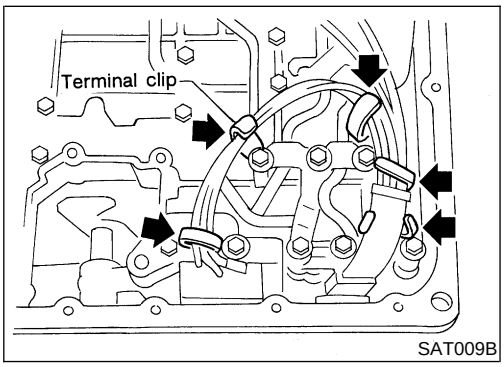

SAT009B

11. Remove control valve assembly.
a. Straighten terminal clips to free terminal cords then remove terminal clips.

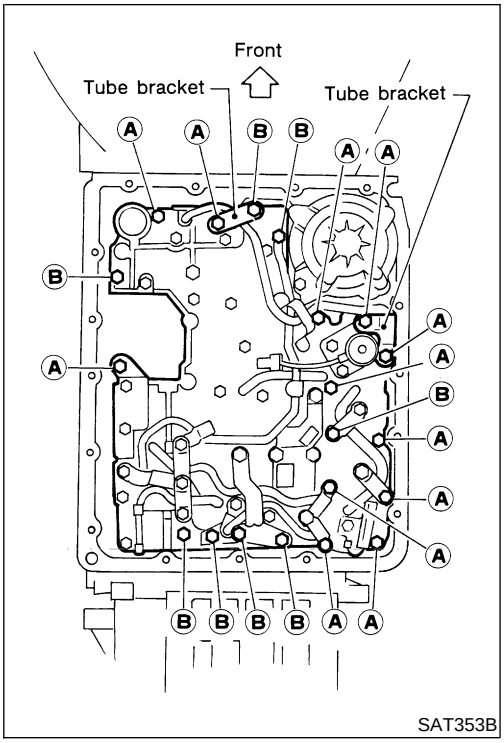

SAT353B

b. Remove bolts A and B, and remove control valve assembly from transmission.

Bolt symbol	Length mm (in)
A	33 (1.30)
B	45 (1.77)

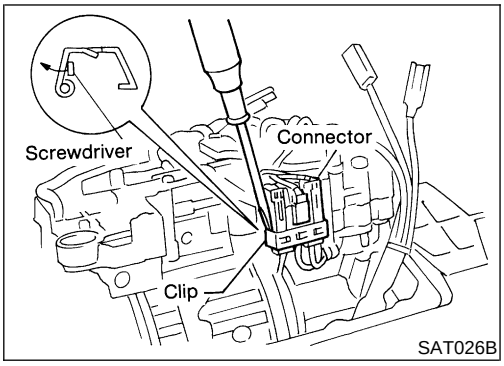

SAT026B

c. Remove solenoid connector.
- **Be careful not to damage connector.**

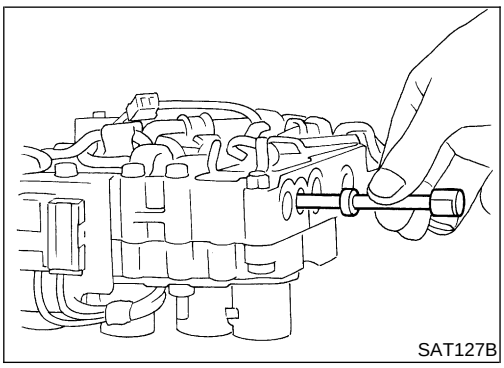
SAT127B

d. Remove manual valve from control valve assembly.

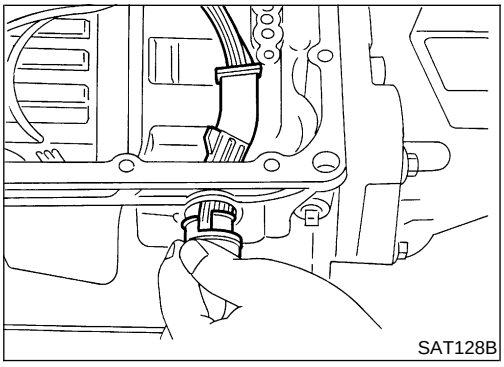
SAT128B

12. Remove terminal cord assembly from transmission case while pushing on stopper.
- **Be careful not to damage cord.**
- **Do not remove terminal cord assembly unless it is damaged.**

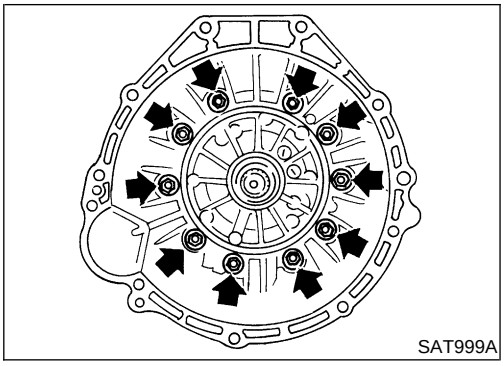
SAT999A

13. Remove converter housing from transmission case.
- **Be careful not to scratch converter housing.**

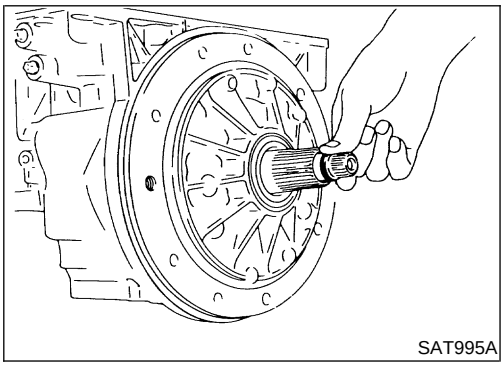
SAT995A

14. Remove O-ring from input shaft.

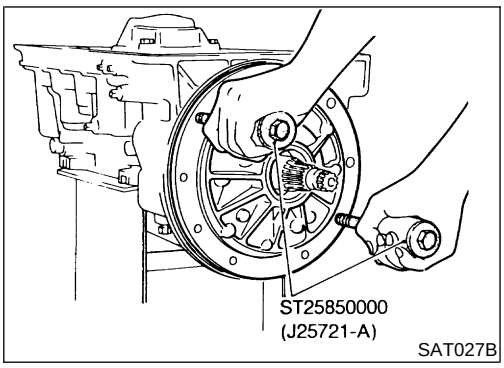

SAT027B

15. Remove oil pump assembly.

a. Attach Tool to oil pump assembly and extract it evenly from transmission case.

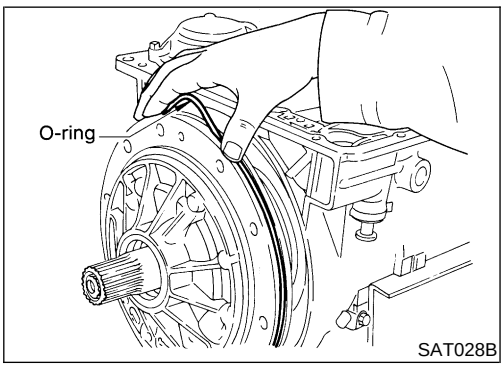

SAT028B

b. Remove O-ring from oil pump assembly.
c. Remove traces of sealant from oil pump housing.
- **Be careful not to scratch pump housing.**

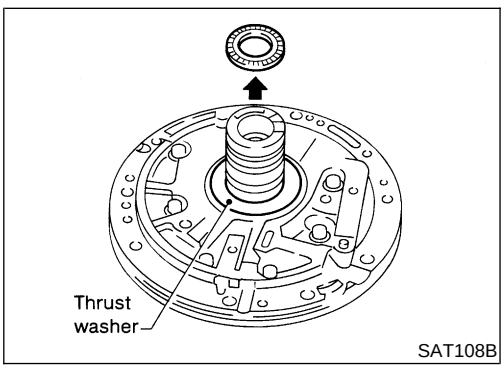

SAT108B

d. Remove needle bearing and thrust washer from oil pump assembly.

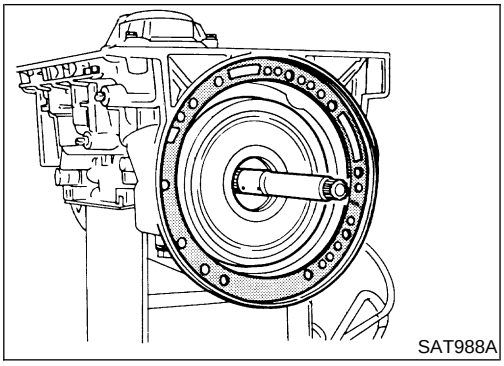
SAT988A

16. Remove input shaft and oil pump gasket.

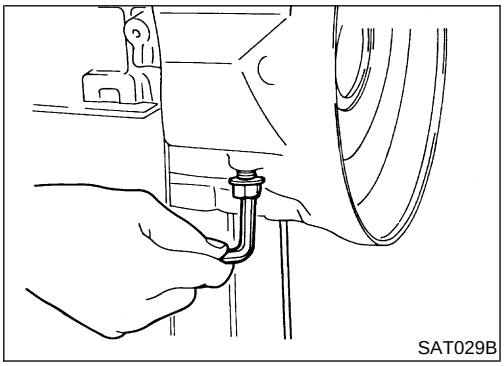
SAT029B

17. Remove brake band and band strut.
a. Loosen lock nut and remove band servo anchor end pin from transmission case.

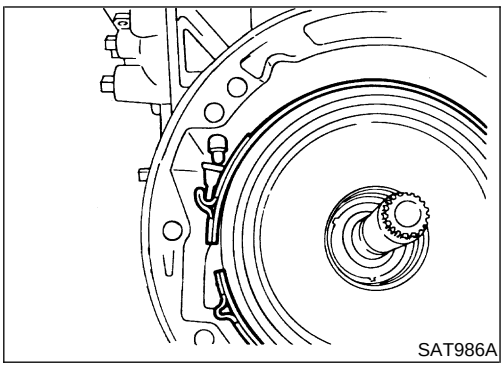
SAT986A

b. Remove brake band and band strut from transmission case.

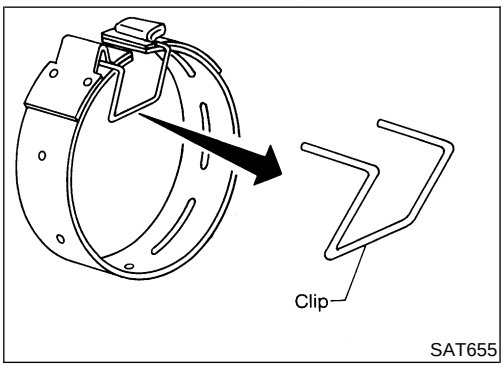

SAT655

c. Hold brake band in a circular shape with clip.

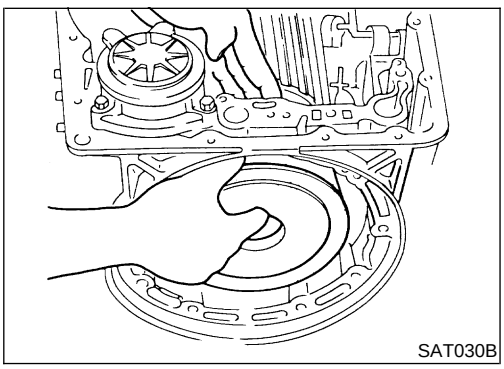
SAT030B

18. Remove front side clutch and gear components.
a. Remove clutch pack (reverse clutch, high clutch and front sun gear) from transmission case.

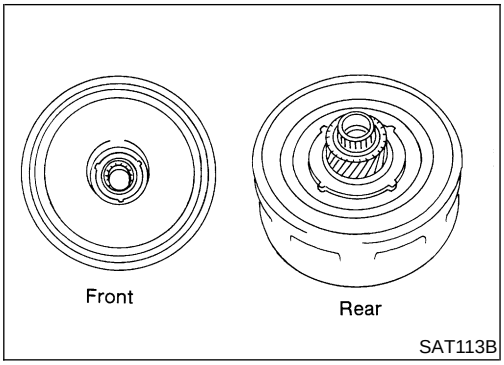

b. Remove front bearing race from clutch pack.
c. Remove rear bearing race from clutch pack.

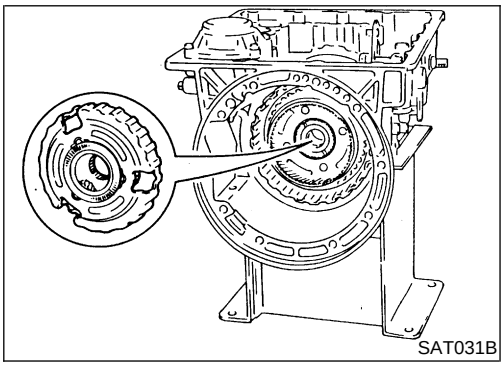

d. Remove front planetary carrier from transmission case.

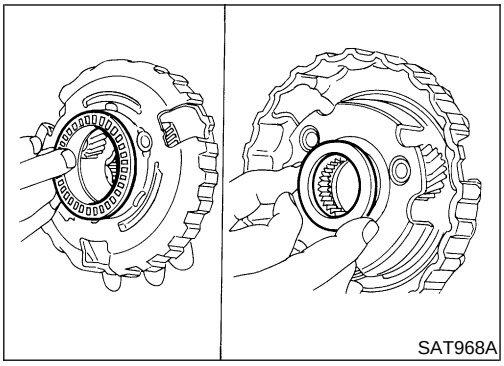

e. Remove front needle bearing from front planetary carrier.
f. Remove rear bearing from front planetary carrier.

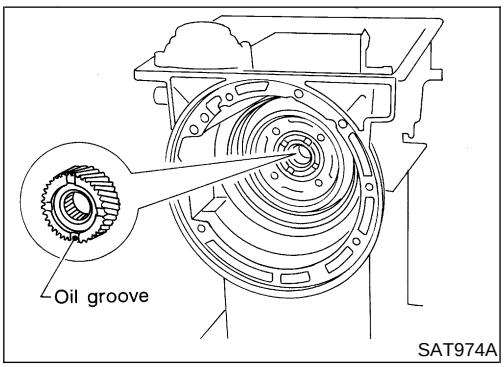

g. Remove rear sun gear from transmission case.

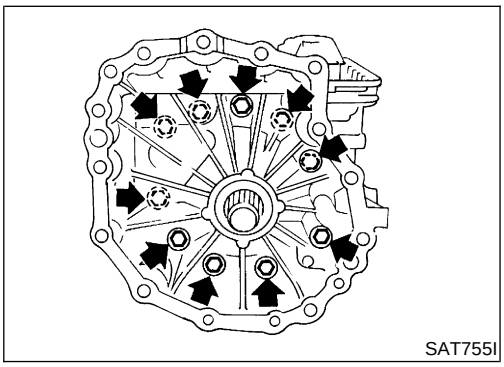

19. Remove adapter case.
a. Remove adapter case from transmission case.
b. Remove adapter case gasket from transmission case.

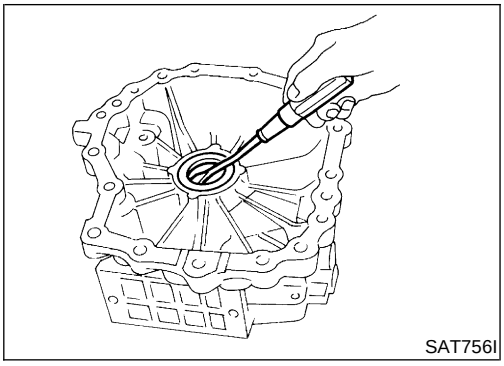
SAT756I

c. Remove oil seal from adapter case.
- **Do not remove oil seal unless it is to be replaced.**

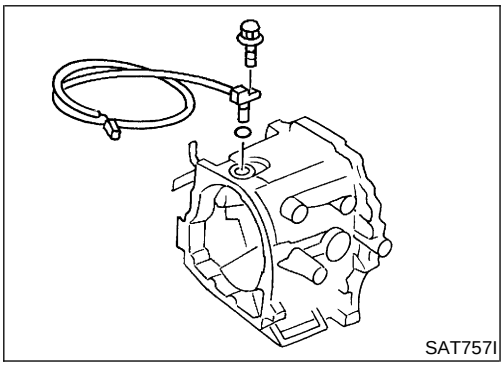
SAT757I

d. Remove revolution sensor from adapter case.
e. Remove O-ring from revolution sensor.

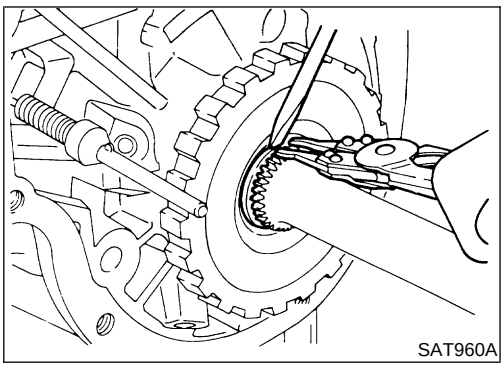
SAT960A

20. Remove output shaft and parking gear.
a. Remove rear snap ring from output shaft.

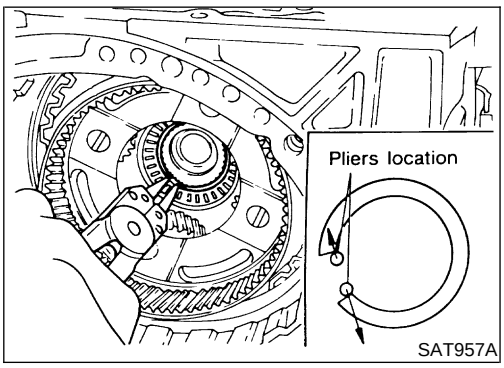

SAT957A

b. Slowly push output shaft all the way forward.
- **Do not use excessive force.**

c. Remove snap ring from output shaft.

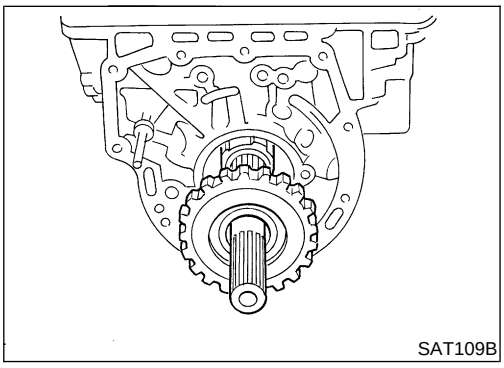
SAT109B

d. Remove output shaft and parking gear as a unit from transmission case.
e. Remove parking gear from output shaft.

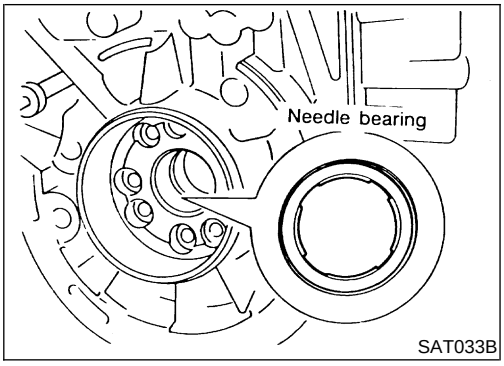

f. Remove needle bearing from transmission case.

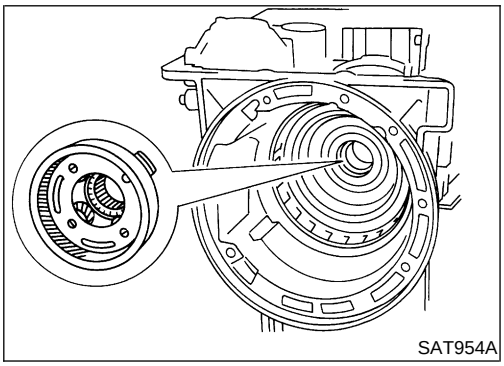

21. Remove rear side clutch and gear components.
a. Remove front internal gear.

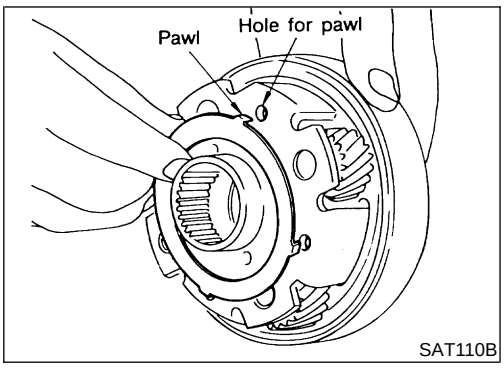

b. Remove bearing race from front internal gear.

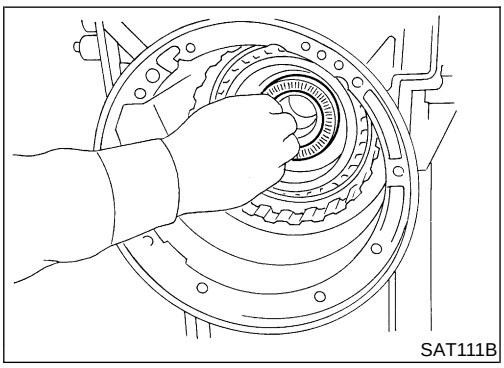

c. Remove needle bearing from rear internal gear.

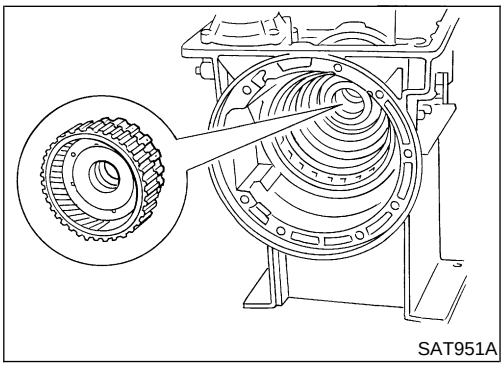

d. Remove rear internal gear, forward clutch hub and overrun clutch hub as a set from transmission case.

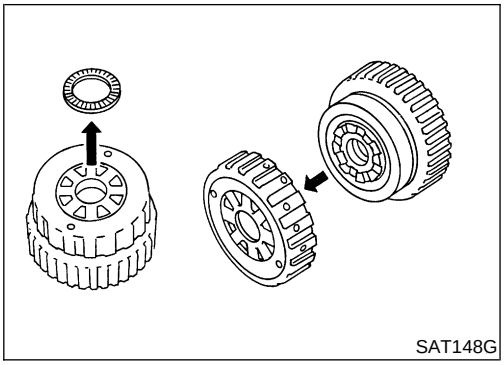
SAT148G

e. Remove needle bearing from overrun clutch hub.
f. Remove overrun clutch hub from rear internal gear and forward clutch hub.

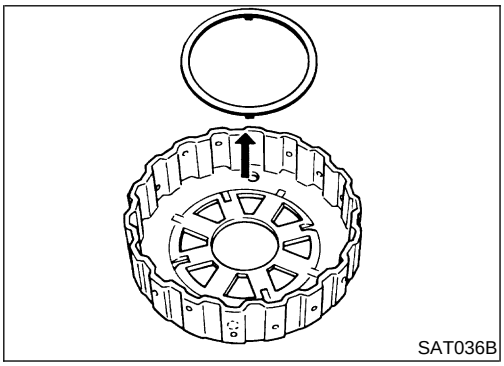
SAT036B

g. Remove thrust washer from overrun clutch hub.

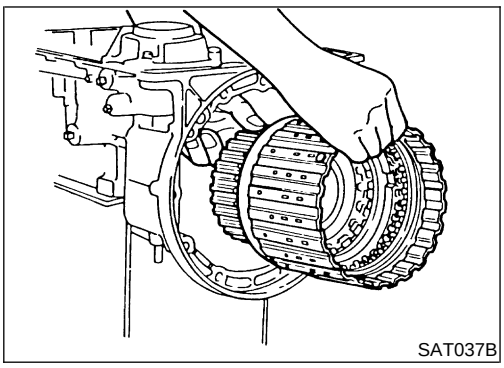
SAT037B

h. Remove forward clutch assembly from transmission case.

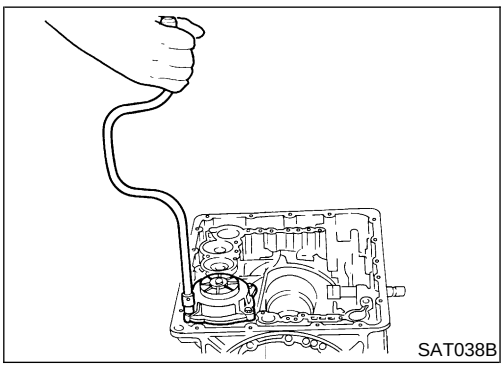
SAT038B

22. Remove band servo and accumulator components.
a. Remove band servo retainer from transmission case.

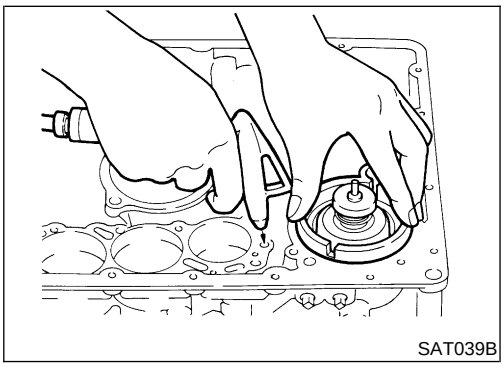
SAT039B

b. Apply compressed air to oil hole until band servo piston comes out of transmission case.
- **Hold piston with a rag and gradually direct air to oil hole.**

c. Remove return springs.

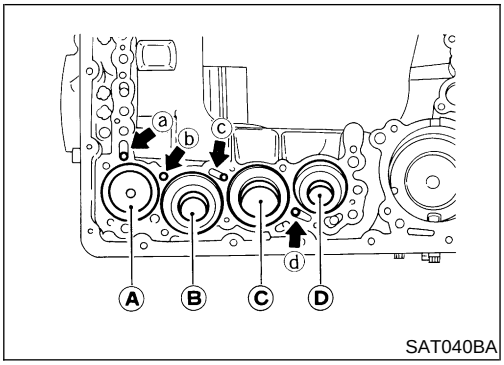

SAT040BA

d. Remove springs from accumulator pistons B, C and D.
e. Apply compressed air to each oil hole until piston comes out.

- **Hold piston with a rag and gradually direct air to oil hole.**

Identification of accumulator pistons	A	B	C	D
Identification of oil holes	a	b	c	d

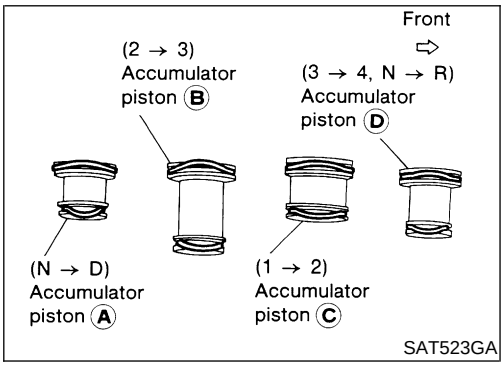

SAT523GA

f. Remove O-ring from each piston.

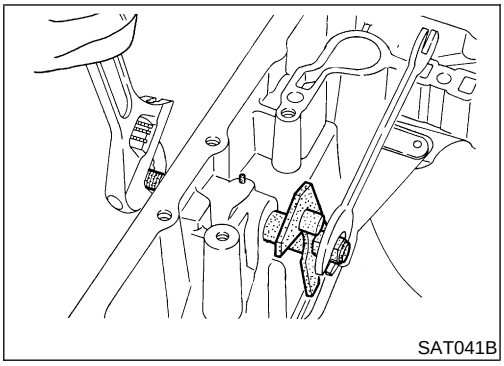
SAT041B

23. Remove manual shaft components, if necessary.
a. Hold width across flats of manual shaft (outside the transmission case) and remove lock nut from shaft.

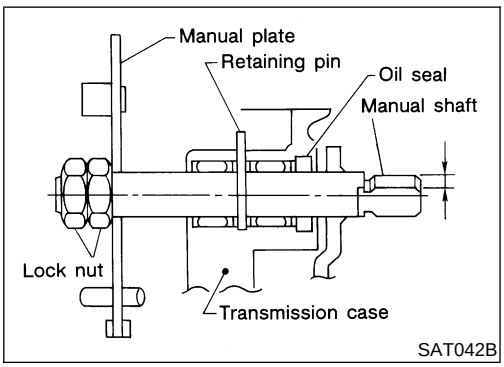

SAT042B

b. Remove retaining pin from transmission case.

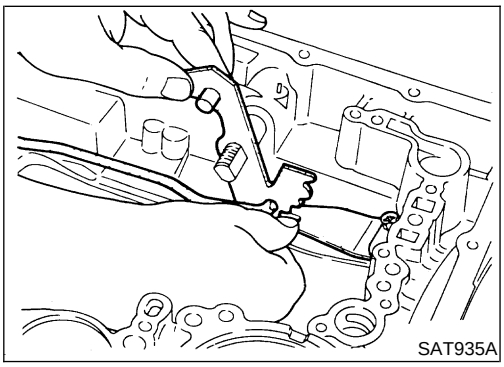
SAT935A

c. While pushing detent spring down, remove manual plate and parking rod from transmission case.

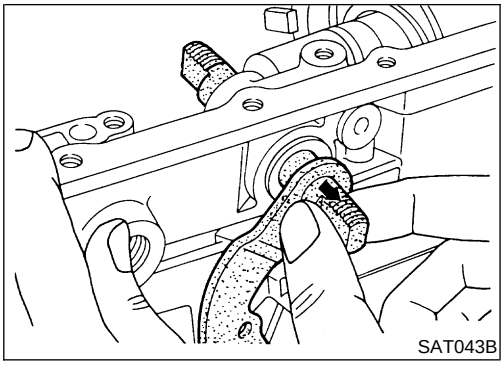
SAT043B

d. Remove manual shaft from transmission case.

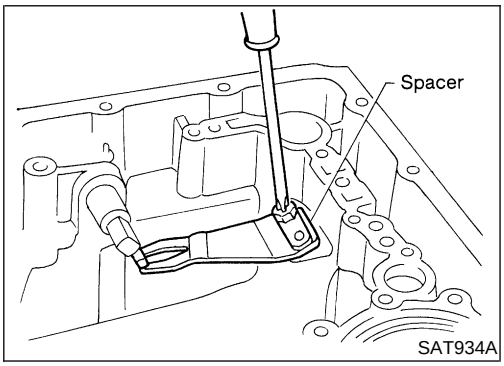

SAT934A

e. Remove spacer and detent spring from transmission case.

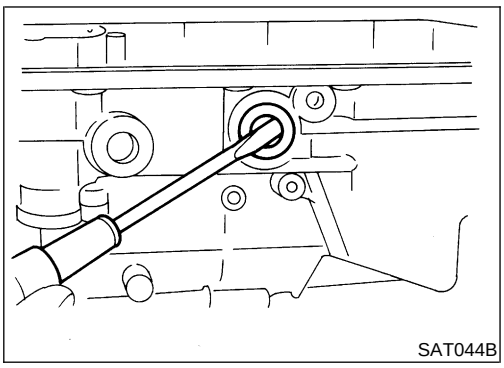
SAT044B

f. Remove oil seal from transmission case.

Oil Pump

COMPONENTS

NEAT0239

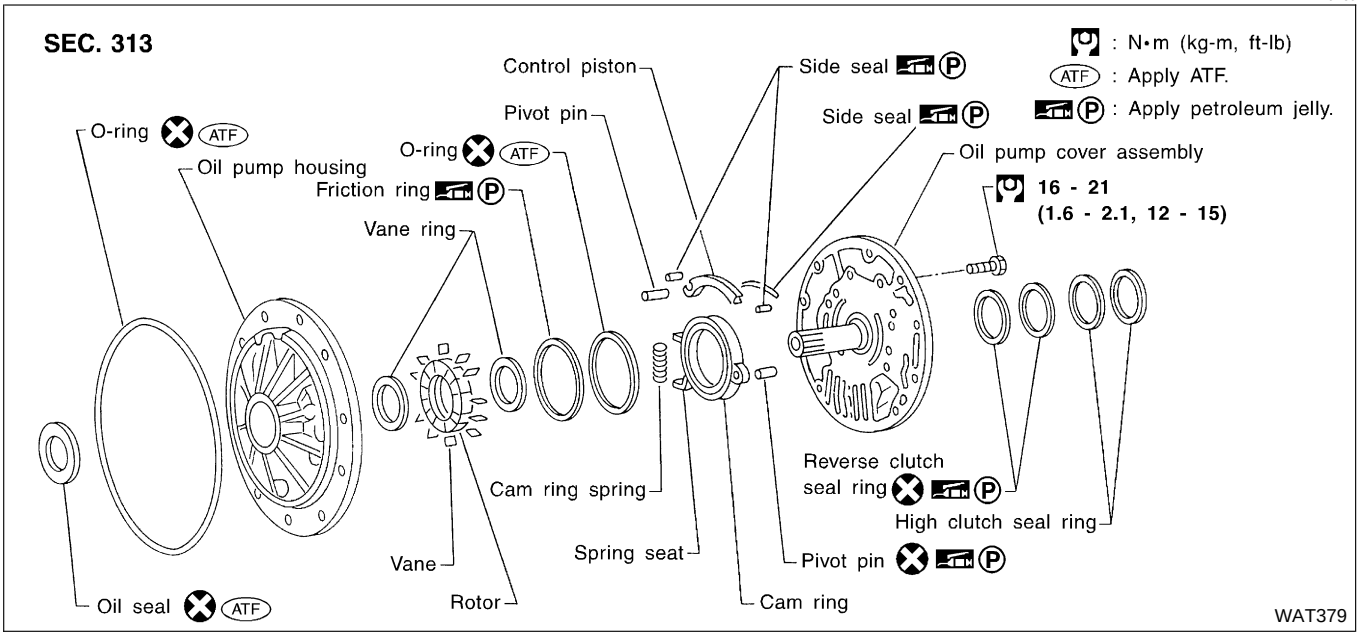

DISASSEMBLY

NEAT0240

1. Loosen bolts in numerical order and remove oil pump cover.

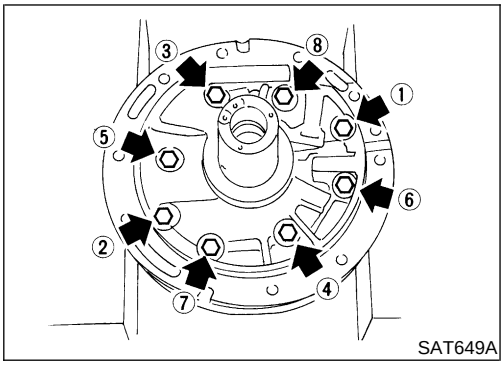

2. Remove rotor, vane rings and vanes.

- **Inscribe a mark on back of rotor for identification of fore-aft direction when reassembling rotor. Then remove rotor.**

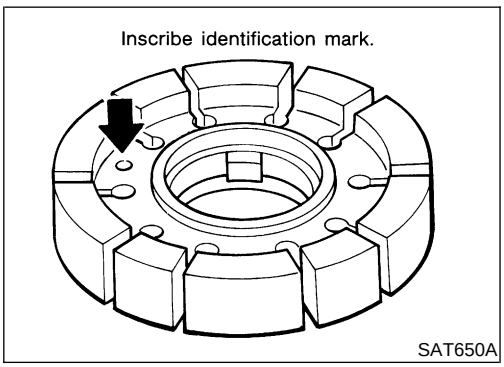

3. While pushing on cam ring remove pivot pin.

- **Be careful not to scratch oil pump housing.**

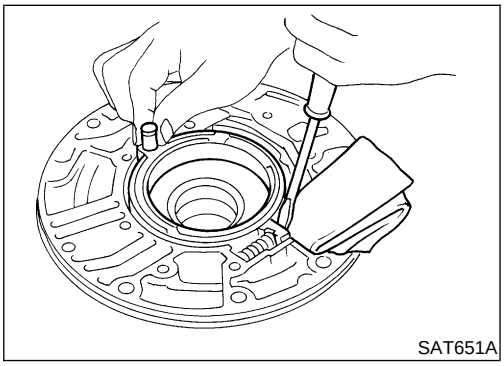

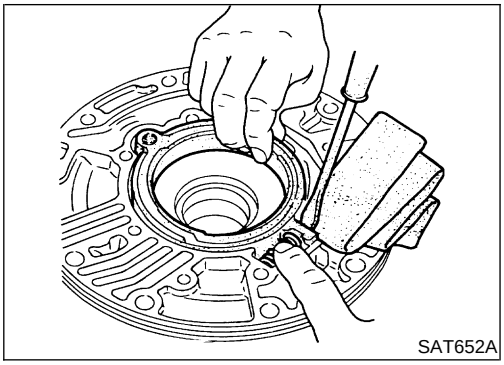
SAT652A

4. While holding cam ring and spring lift out cam ring spring.
- **Be careful not to damage oil pump housing.**
- **Hold cam ring spring to prevent it from jumping.**

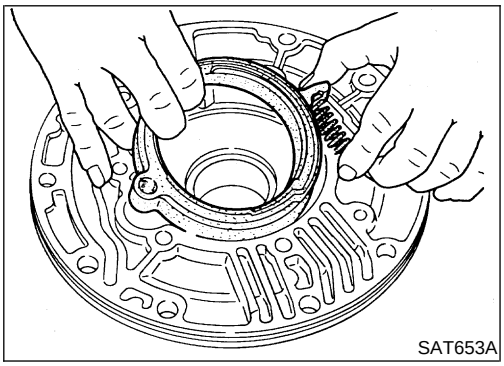
SAT653A

5. Remove cam ring and cam ring spring from oil pump housing.

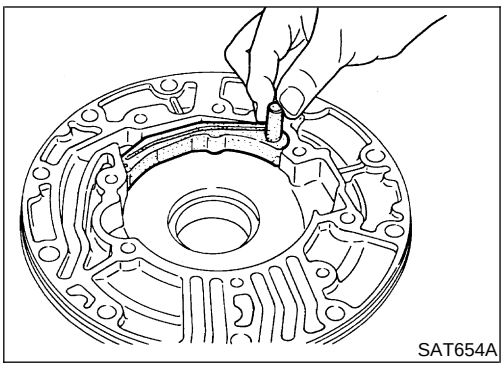
SAT654A

6. Remove pivot pin from control piston and remove control piston assembly.

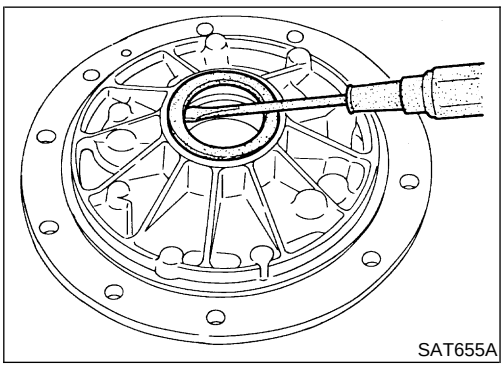
SAT655A

7. Remove oil seal from oil pump housing.
- **Be careful not to scratch oil pump housing.**

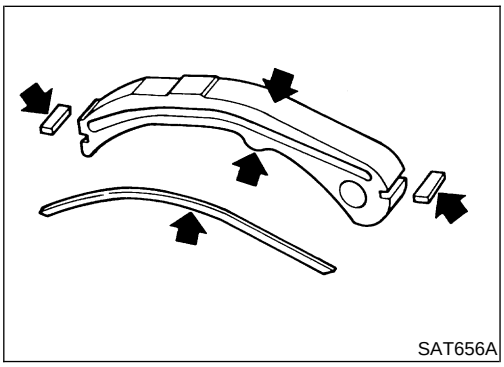
SAT656A

INSPECTION

NEAT0241

Oil Pump Cover, Rotor, Vanes, Control Piston, Side Seals, Cam Ring and Friction Ring

NEAT0241S01

- Check for wear or damage.

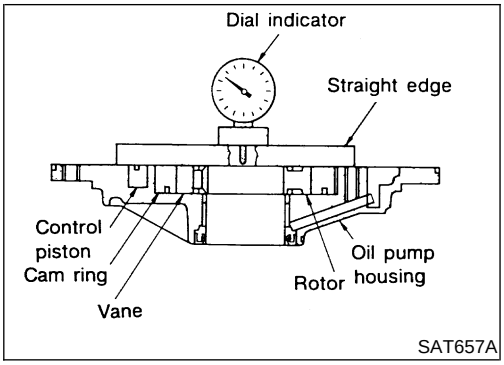

SAT657A

Side Clearances

NEAT0241S02

- Measure side clearances between end of oil pump housing and cam ring, rotor, vanes and control piston. Measure in at least four places along their circumferences. Maximum measured values should be within specified positions.
- **Before measurement, check that friction rings, O-ring, control piston side seals and cam ring spring are removed.**

  Standard clearance (Cam ring, rotor, vanes and control piston):

  Refer to "Oil Pump and Low One-way Clutch", AT-502.
- If not within standard clearance, replace oil pump assembly except oil pump cover assembly.

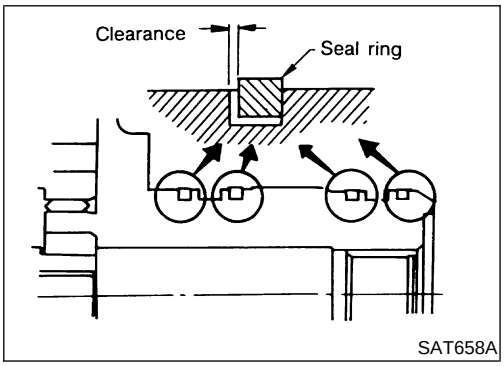

SAT658A

Seal Ring Clearance

NEAT0241S03

- Measure clearance between seal ring and ring groove.

  Standard clearance:

  0.10 - 0.25 mm (0.0039 - 0.0098 in)

  Wear limit:

  0.25 mm (0.0098 in)
- If not within wear limit, replace oil pump cover assembly.

ASSEMBLY

NEAT0242

1. Drive oil seal into oil pump housing.
- **Apply ATF to outer periphery and lip surface.**

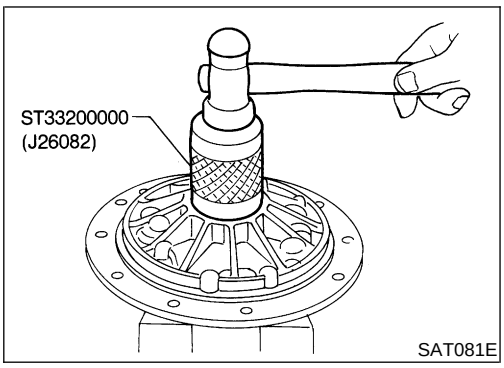

SAT081E

2. Install cam ring in oil pump housing as follows:

a. Install side seal on control piston.
- **Pay attention to its direction — Black surface goes toward control piston.**
- **Apply petroleum jelly to side seal.**

b. Install control piston on oil pump.

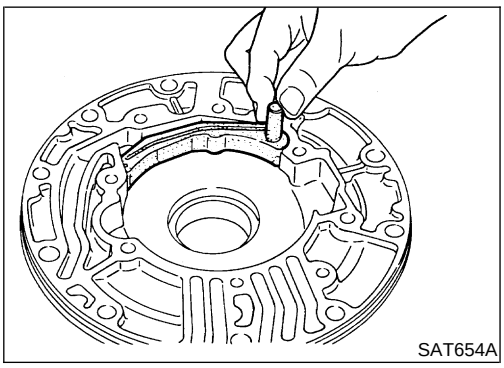
SAT654A

c. Install O-ring and friction ring on cam ring.
- **Apply petroleum jelly to O-ring.**

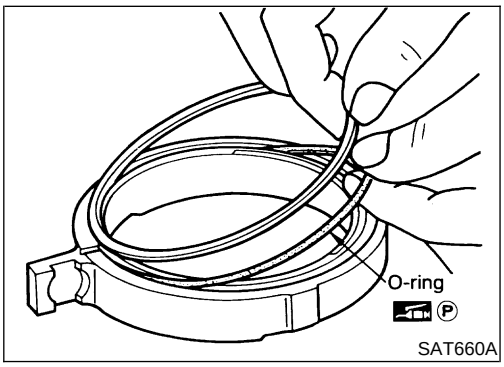

SAT660A

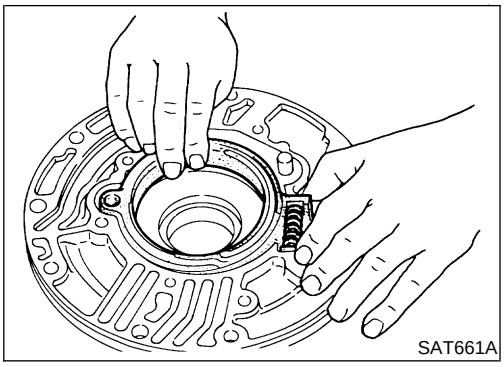
SAT661A

d. Assemble cam ring, cam ring spring and spring seat. Install spring by pushing it against pump housing.

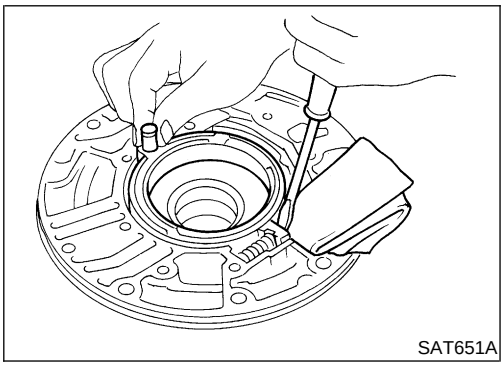
SAT651A

e. While pushing on cam ring install pivot pin.

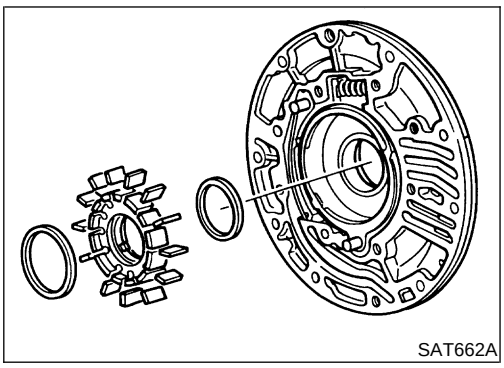
SAT662A

3. Install rotor, vanes and vane rings.
- **Pay attention to direction of rotor.**

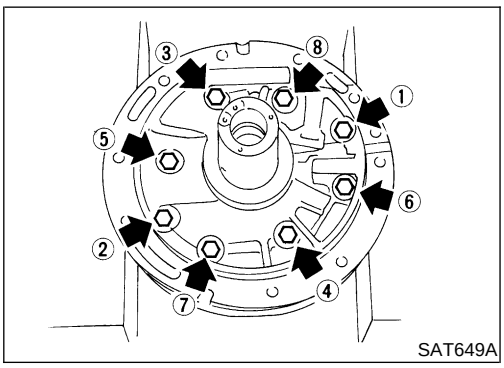

SAT649A

4. Install oil pump housing and oil pump cover.
a. Wrap masking tape around splines of oil pump cover assembly to protect seal. Position oil pump cover assembly in oil pump housing assembly, then remove masking tape.
b. Tighten bolts in a crisscross pattern.

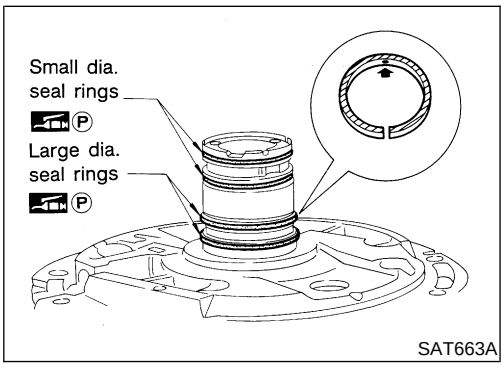

SAT663A

5. Install new seal rings carefully after packing ring grooves with petroleum jelly. Press rings down into jelly to a close fit.
- **Seal rings come in two different diameters. Check fit carefully in each groove.**
  Small dia. seal ring:
  No mark
  Large dia. seal ring:
  Yellow mark in area shown by arrow
- **Do not spread gap of seal ring excessively while installing. It may deform ring.**

Control Valve Assembly

COMPONENTS

NEAT0243

SEC. 317

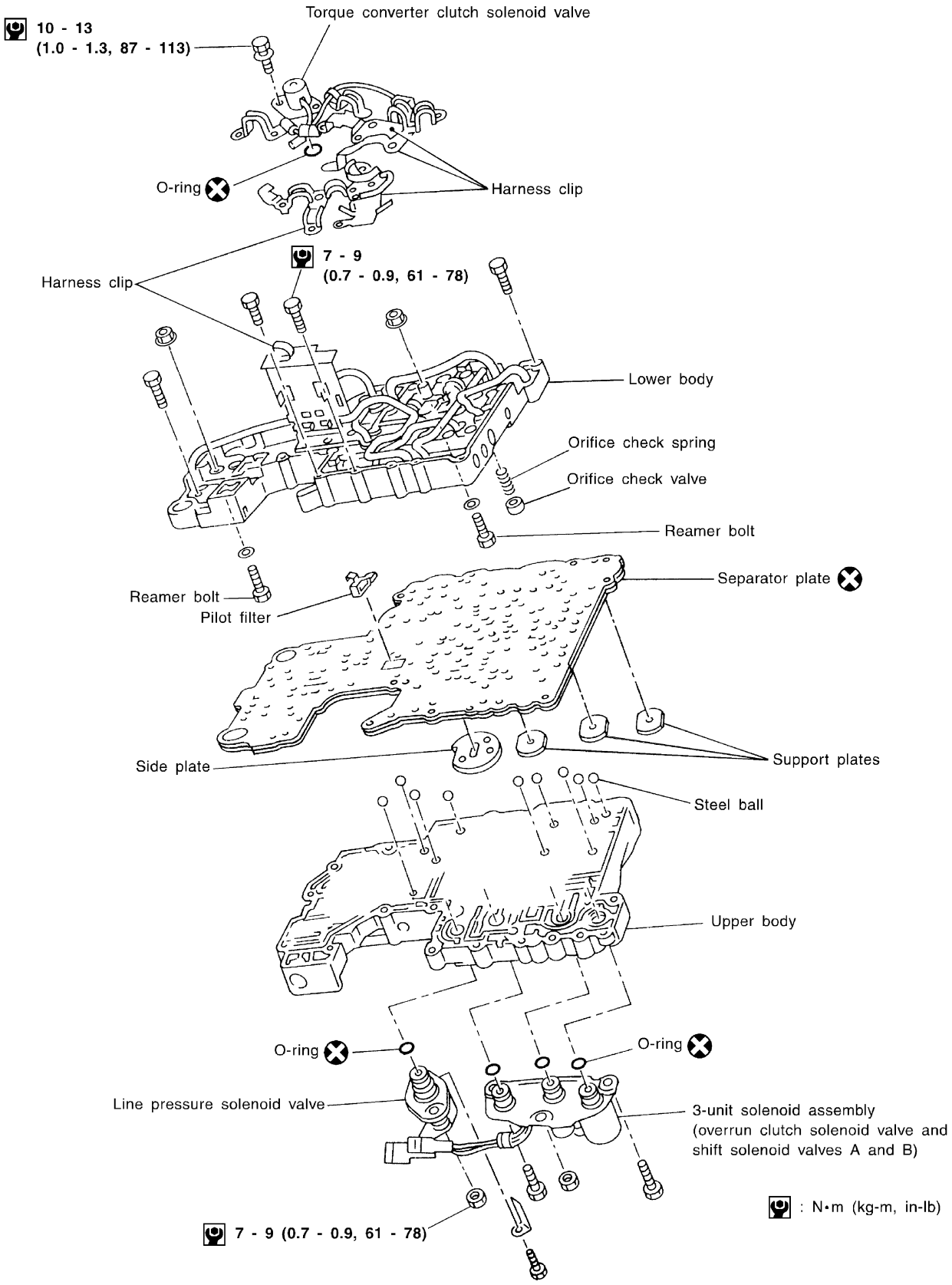

WAT380

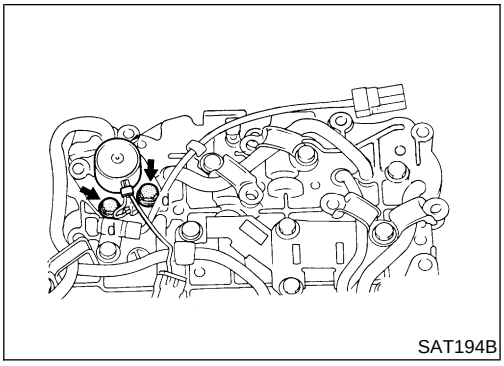
SAT194B

DISASSEMBLY

NEAT0244

1. Remove solenoids.

a. Remove torque converter clutch solenoid valve and side plate from lower body.

b. Remove O-ring from solenoid.

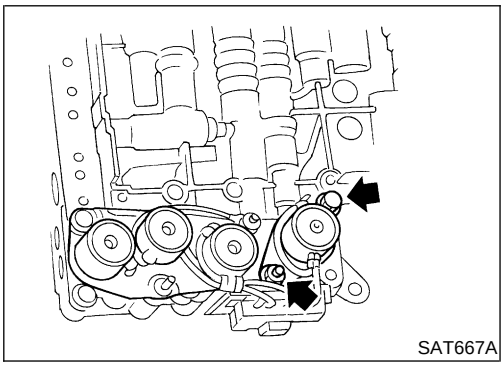
SAT667A

c. Remove line pressure solenoid valve from upper body.

d. Remove O-ring from solenoid.

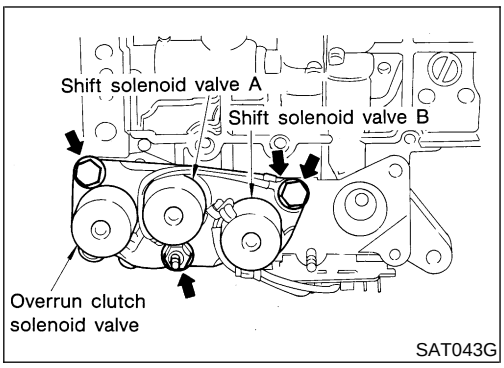

SAT043G

e. Remove 3-unit solenoid assembly from upper body.

f. Remove O-rings from solenoids.

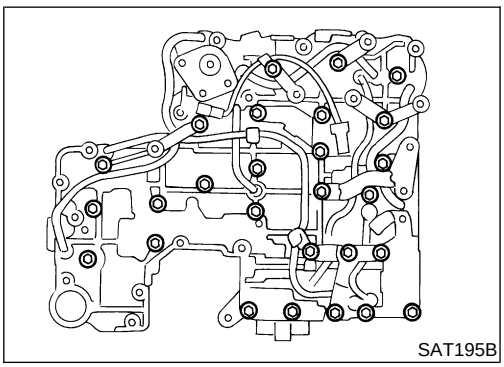
SAT195B

2. Disassemble upper and lower bodies.

a. Place upper body face down, and remove bolts, reamer bolts, side plate and support plates.

b. Remove lower body and separator plate as a unit from upper body.

- **Be careful not to drop pilot filter, orif ice check valve, spring and steel balls.**

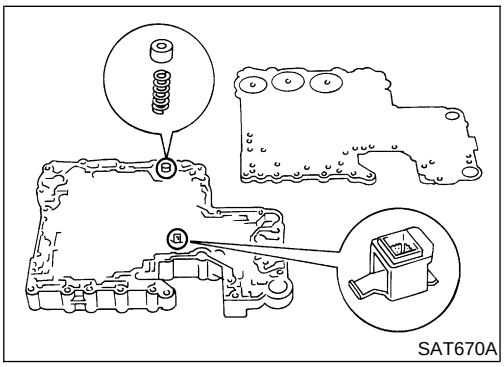
SAT670A

c. Place lower body face down, and remove separator plate.

d. Remove pilot filter, orifice check valve and orifice check spring.

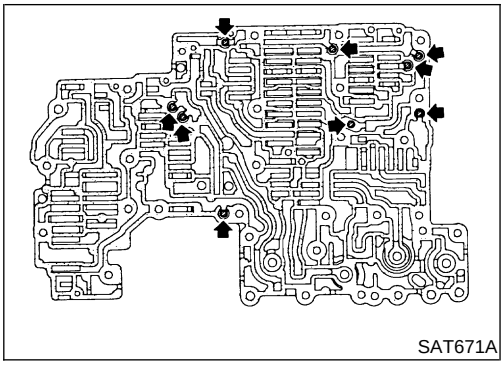
SAT671A

e. Check to see that steel balls are properly positioned in upper body. Then remove them from upper body.

INSPECTION

NEAT0245

Lower and Upper Bodies

NEAT0245S01

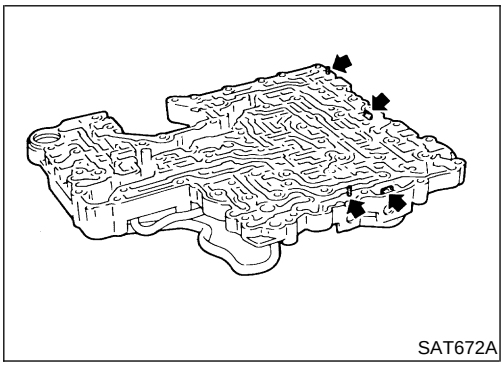
SAT672A

- Check to see that there are pins and retainer plates in lower body.

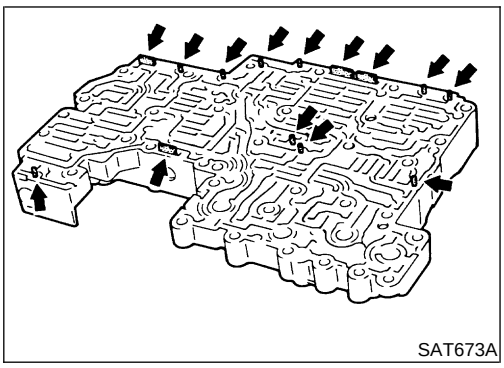
SAT673A

- Check to see that there are pins and retainer plates in upper body.
- **Be careful not to lose these parts.**

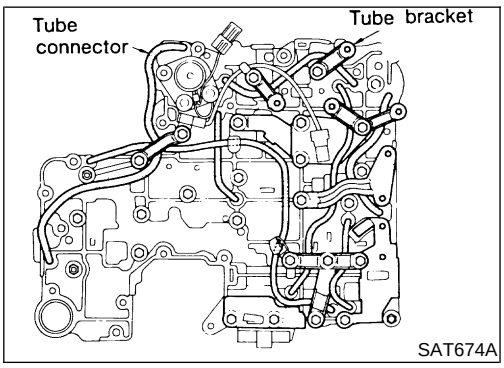

SAT674A

- Check to make sure that oil circuits are clean and free from damage.
- Check tube brackets and tube connectors for damage.

Separator Plate

NEAT0245S02

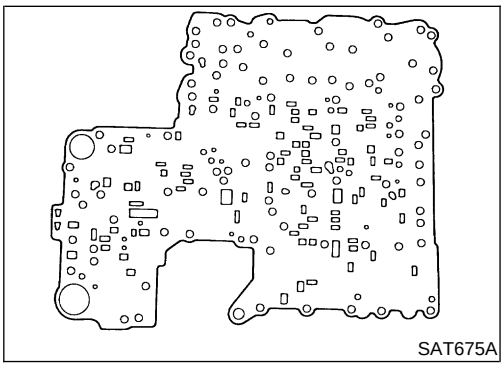
SAT675A

- Make sure that separator plate is free of damage and not deformed and oil holes are clean.

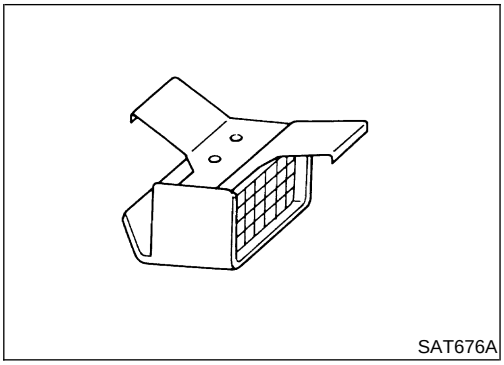
SAT676A

Pilot Filter

NEAT0245S03

- Check to make sure that filter is not clogged or damaged.

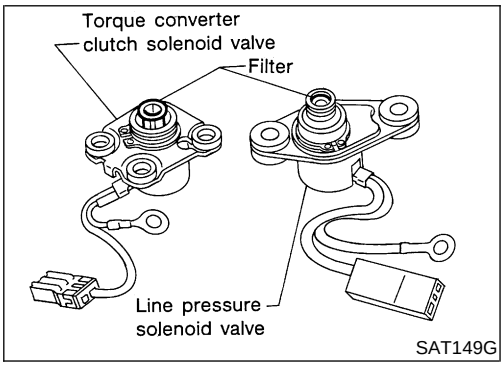

SAT149G

Torque Converter Clutch Solenoid Valve

NEAT0245S04

- Check that filter is not clogged or damaged.
- Measure resistance. Refer to "Component Inspection", AT-303.

Line Pressure Solenoid Valve

NEAT0245S05

- Check that filter is not clogged or damaged.
- Measure resistance. Refer to "Component Inspection", AT-317.

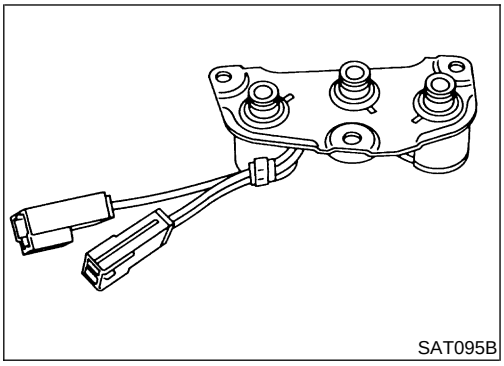
SAT095B

3-Unit Solenoid Assembly (Overrun Clutch Solenoid Valve and Shift Solenoid Valves A and B)

NEAT0245S06

- Measure resistance of each solenoid. Refer to "Component Inspection", AT-322, 327, 341.

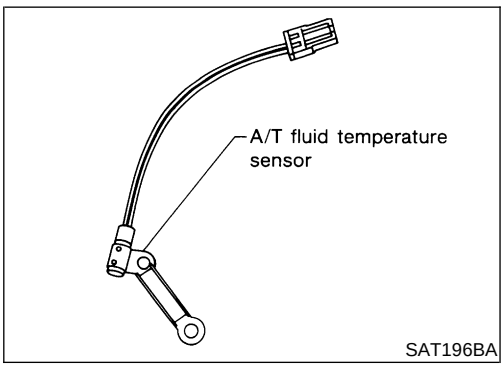

SAT196BA

A/T Fluid Temperature Sensor

NEAT0245S07

- Measure resistance. Refer to "Component Inspection", AT-261.

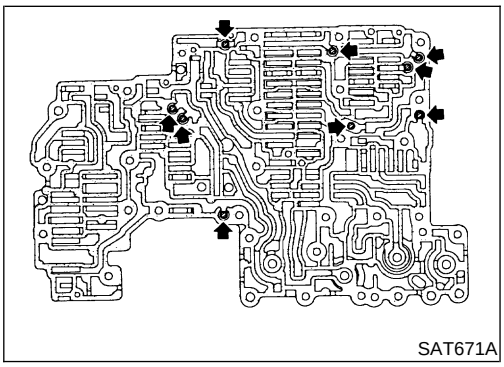
SAT671A

ASSEMBLY

NEAT0246

1. Install upper and lower bodies.

a. Place oil circuit of upper body face up. Install steel balls in their proper positions.

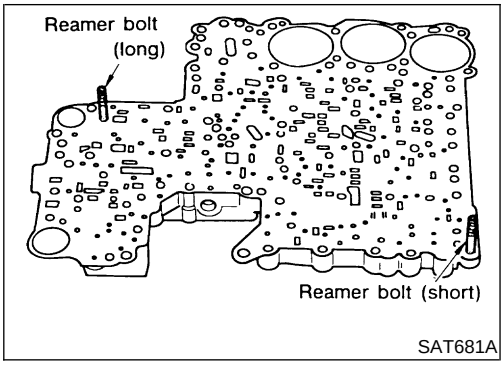

SAT681A

b. Install reamer bolts from bottom of upper body.

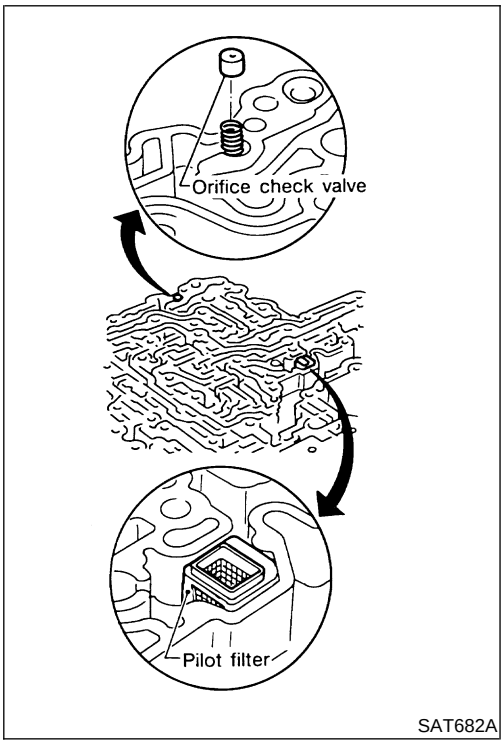

SAT682A

c. Place oil circuit of lower body face up. Install orifice check spring, orifice check valve and pilot filter.

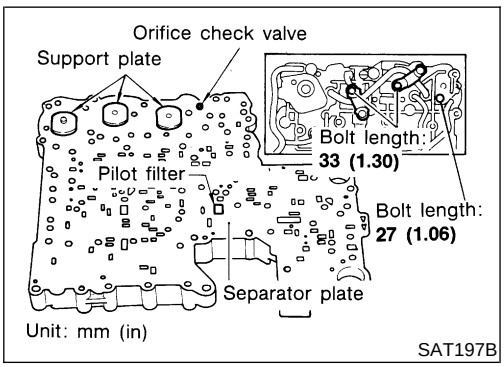

SAT197B

d. Install separator plate on lower body.
e. Install and temporarily tighten support plates, fluid temperature sensor and tube brackets.

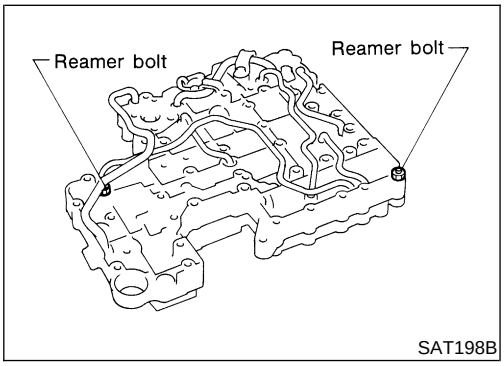

SAT198B

f. Temporarily assemble lower and upper bodies, using reamer bolt as a guide.

- **Be careful not to dislocate or drop steel balls, orifice check spring, orifice check valve and pilot filter.**

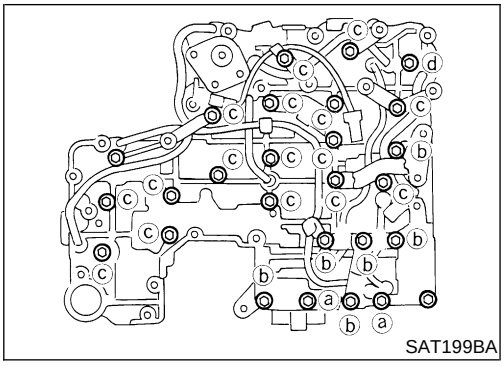

g. Install and temporarily tighten bolts and tube brackets in their proper locations.

Bolt length and location:

Bolt symbol	a	b	c	d
Bolt length mm (in)	70 (2.76)	50 (1.97)	33 (1.30)	27 (1.06)

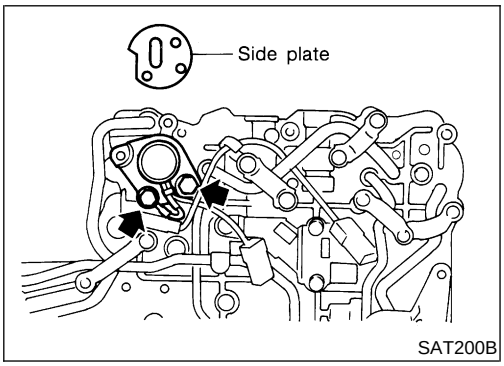

2. Install solenoids.

a. Attach O-ring and install torque converter clutch solenoid valve and side plates onto lower body.

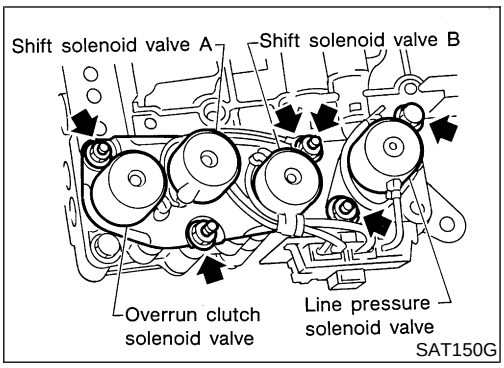

b. Attach O-rings and install 3-unit solenoids assembly onto upper body.

c. Attach O-ring and install line pressure solenoid valve onto upper body.

3. Tighten all bolts.

Control Valve Upper Body

COMPONENTS

NEAT0247

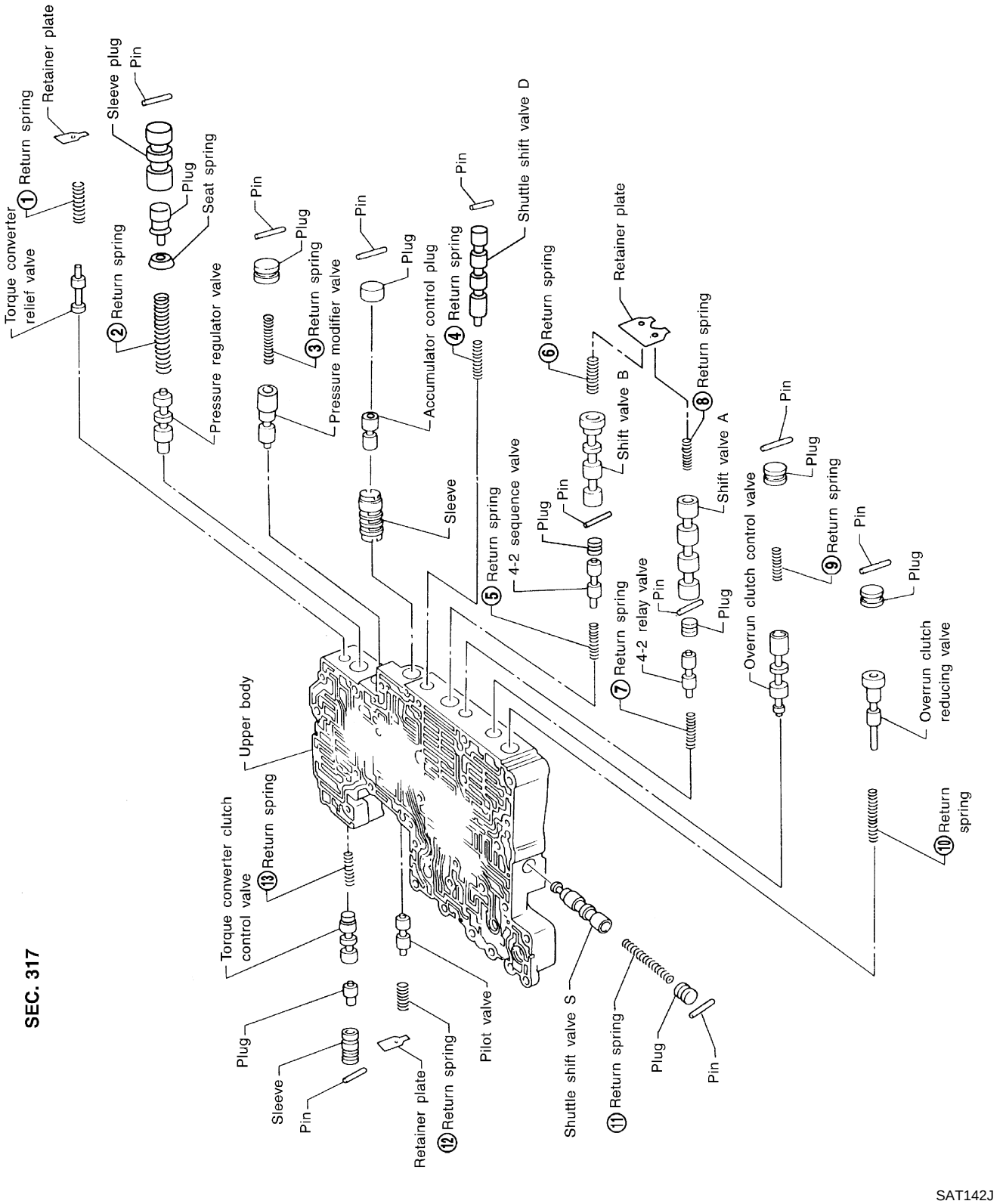

SAT142J

Apply ATF to all components before their installation.
Numbers preceding valve springs correspond with those shown in “Return Springs”, AT-498.

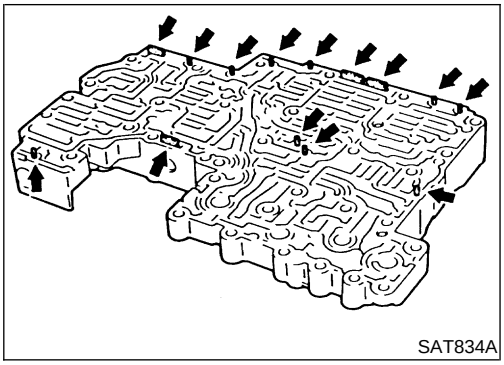
SAT834A

DISASSEMBLY

NEAT0248

1. Remove valves at parallel pins.
- **Do not use a magnetic hand.**

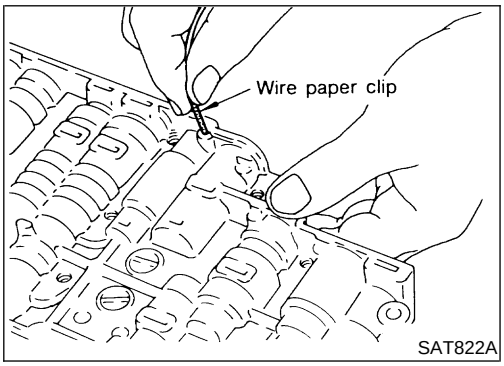

SAT822A

a. Use a wire paper clip to push out parallel pins.

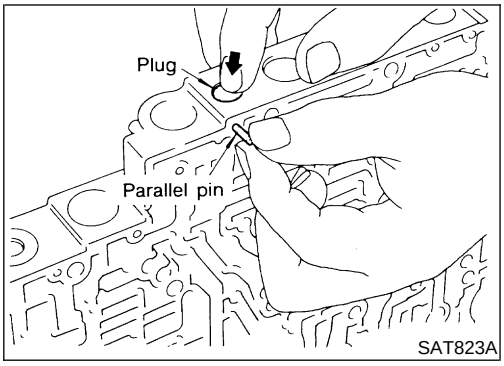

SAT823A

b. Remove parallel pins while pressing their corresponding plugs and sleeves.
- **Remove plug slowly to prevent internal parts from jumping out.**

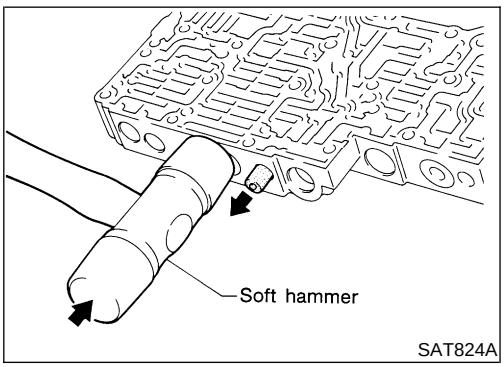

SAT824A

c. Place mating surface of valve face down, and remove internal parts.
- **If a valve is hard to remove, place valve body face down and lightly tap it with a soft hammer.**
- **Be careful not to drop or damage valves and sleeves.**

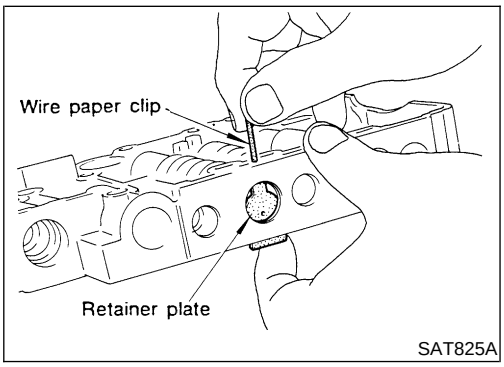

SAT825A

2. Remove valves at retainer plates.
a. Pry out retainer plate with wire paper clip.

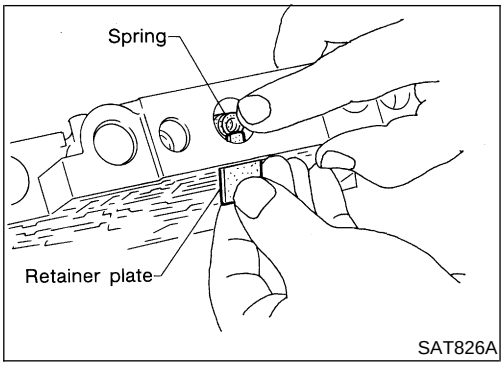

b. Remove retainer plates while holding spring.

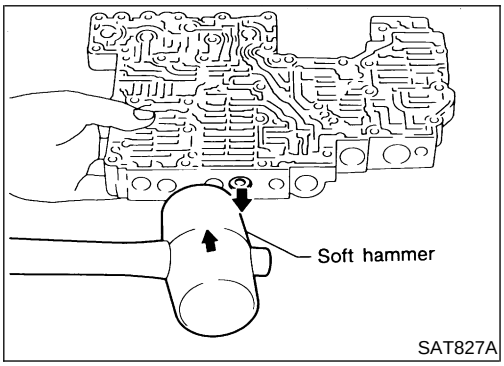

c. Place mating surface of valve face down, and remove internal parts.

- **If a valve is hard to remove, lightly tap valve body with a soft hammer.**
- **Be careful not to drop or damage valves, sleeves, etc.**

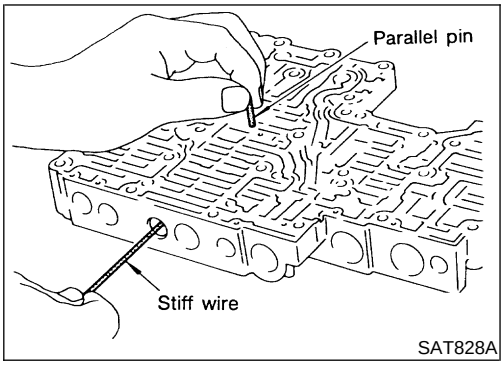

- 4-2 sequence valve and relay valve are located far back in upper body. If they are hard to remove, carefully push them out using stiff wire.
- **Be careful not to scratch sliding surface of valve with wire.**

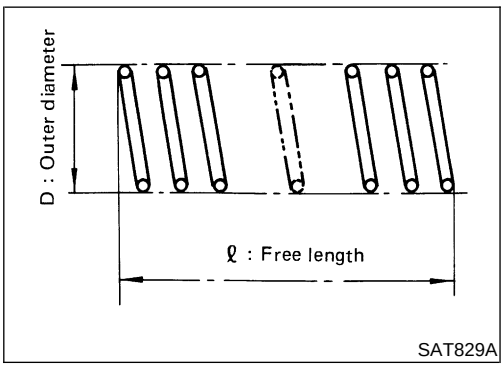

INSPECTION

NEAT0249

Valve Springs

NEAT0249S01

- Measure free length and outer diameter of each valve spring. Also check for damage or deformation.

  Inspection standard:

  Refer to "Return Springs", AT-498.
- Replace valve springs if deformed or fatigued.

Control Valves

NEAT0249S02

- Check sliding surfaces of valves, sleeves and plugs.

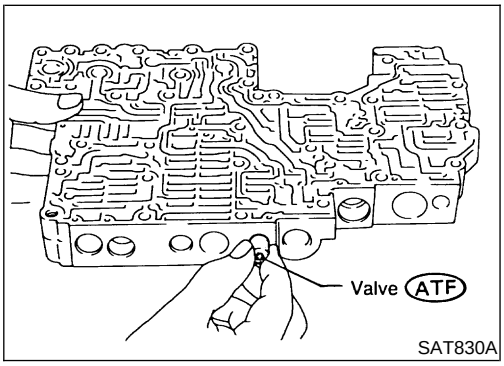

ASSEMBLY

NEAT0250

1. Lubricate the control valve body and all valves with ATF. Install control valves by sliding them carefully into their bores.

- **Be careful not to scratch or damage valve body.**

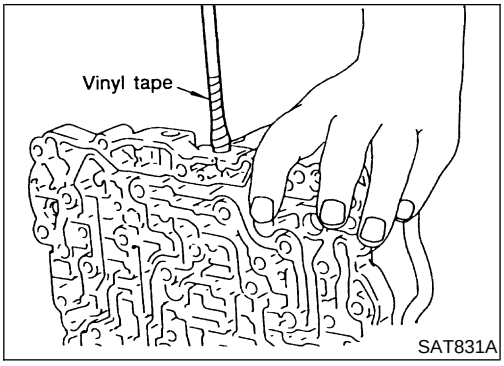

- Wrap a small screwdriver with vinyl tape and use it to insert the valves into proper position.

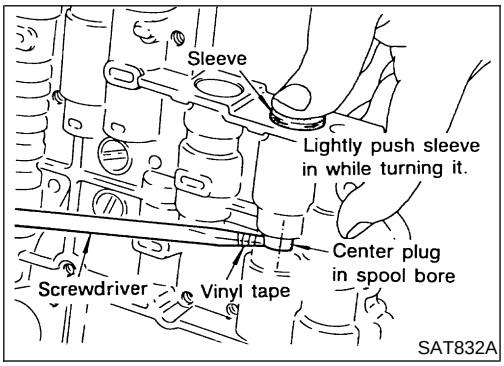

Pressure regulator valve

- If pressure regulator plug is not centered properly, sleeve cannot be inserted into bore in upper body. If this happens, use vinyl tape wrapped screwdriver to center sleeve until it can be inserted.
- Turn sleeve slightly while installing.

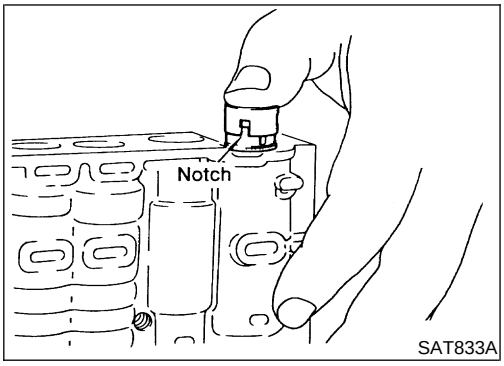

Accumulator control plug

- Align protrusion of accumulator control sleeve with notch in plug.
- Align parallel pin groove in plug with parallel pin, and install accumulator control valve.

2. Install parallel pins and retainer plates.

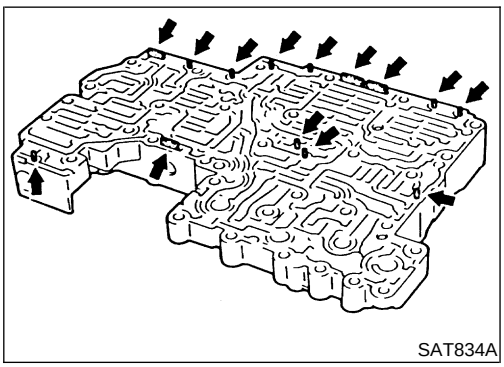

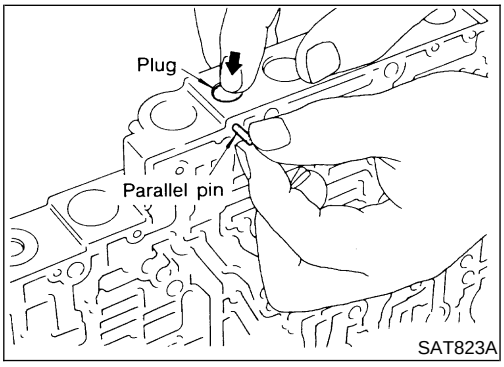

- **While pushing plug, install parallel pin.**

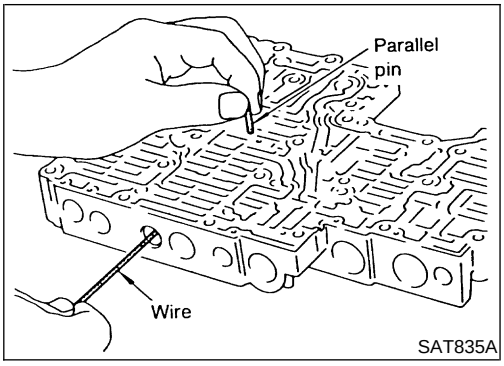

4-2 sequence valve and relay valve

- Push 4-2 sequence valve and relay valve with wire wrapped in vinyl tape to prevent scratching valve body. Install parallel pins.

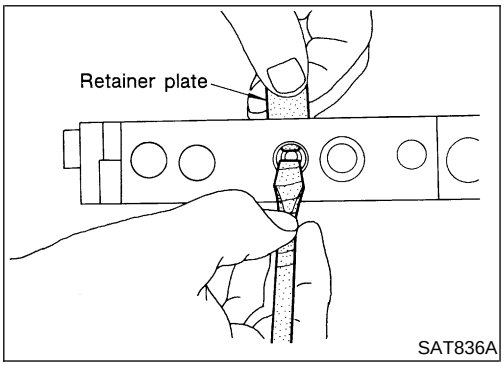

- Insert retainer plate while pushing spring.

Control Valve Lower Body

COMPONENTS

NEAT0251

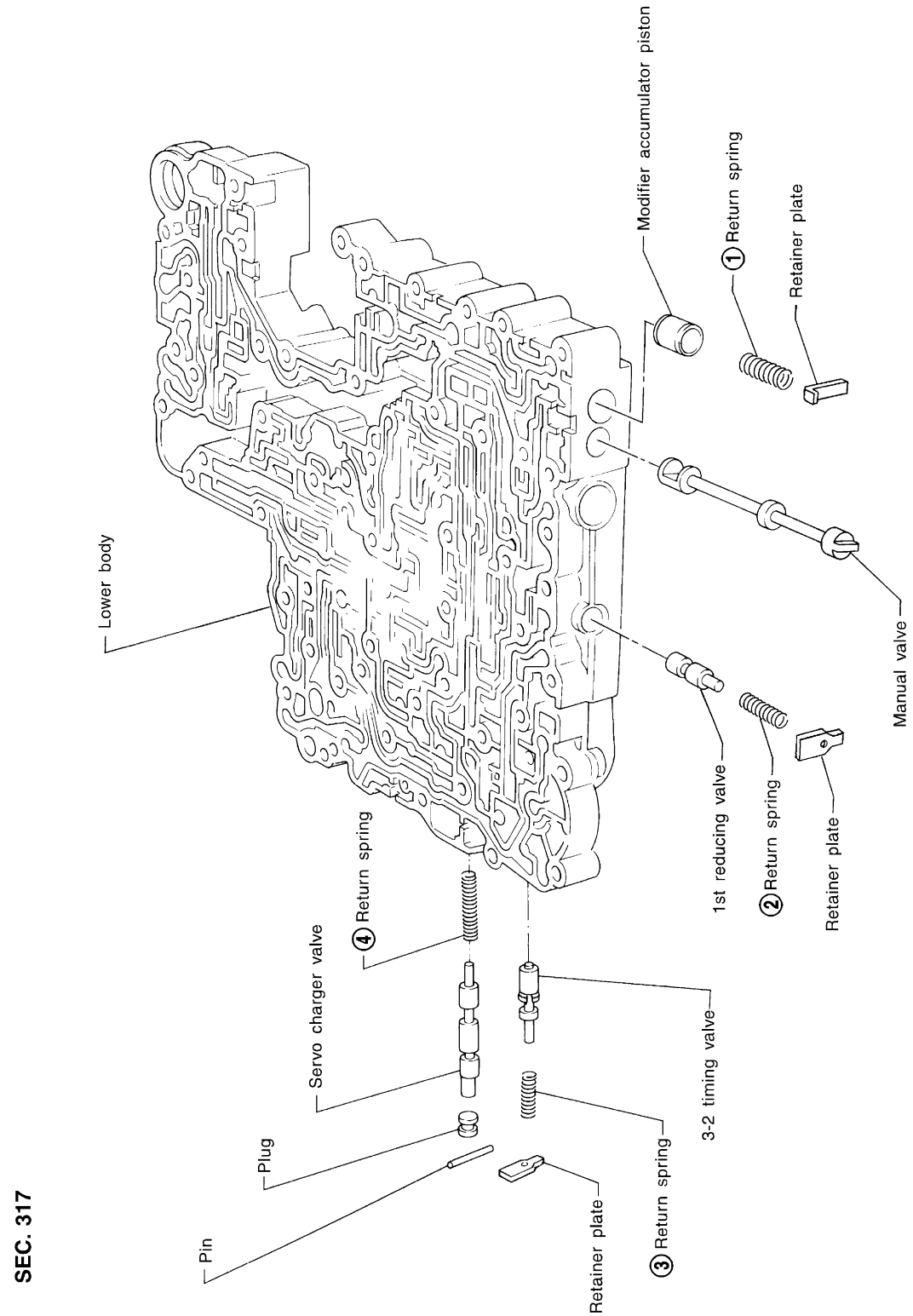

SEC. 317

SAT966I

Apply ATF to all components before their installation.
Numbers preceding valve springs correspond with those shown in “Return Springs” AT-498.

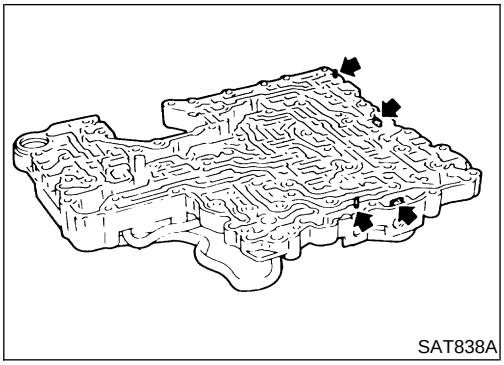
SAT838A

DISASSEMBLY

NEAT0252

1. Remove valves at parallel pins.
2. Remove valves at retainer plates.
   For removal procedures, refer to "DISASSEMBLY" of control valve upper body.

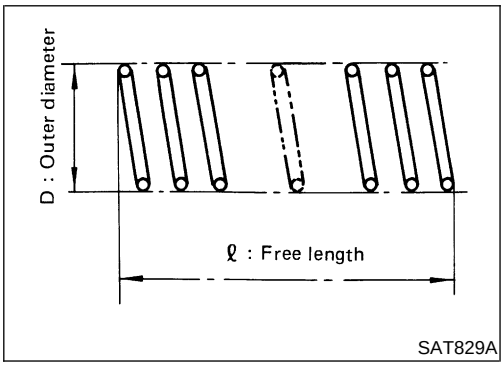

SAT829A

INSPECTION

NEAT0253

Valve Springs

NEAT0253S01

- Check each valve spring for damage or deformation. Also measure free length and outer diameter.

  Inspection standard:

  Refer to "Return Springs", AT-498.

- Replace valve springs if deformed or fatigued.

Control Valves

NEAT0253S02

- Check sliding surfaces of control valves, sleeves and plugs for damage.

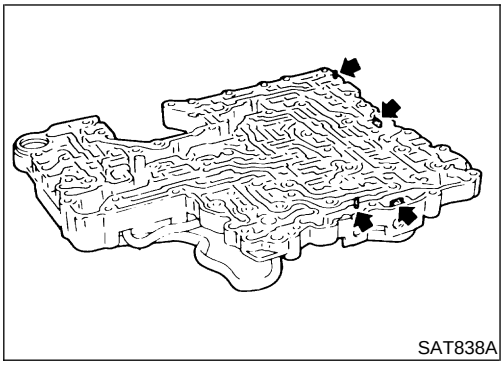
SAT838A

ASSEMBLY

NEAT0254

- Install control valves.
  For installation procedures, refer to "ASSEMBLY", AT-450.

Reverse Clutch

COMPONENTS

NEAT0255

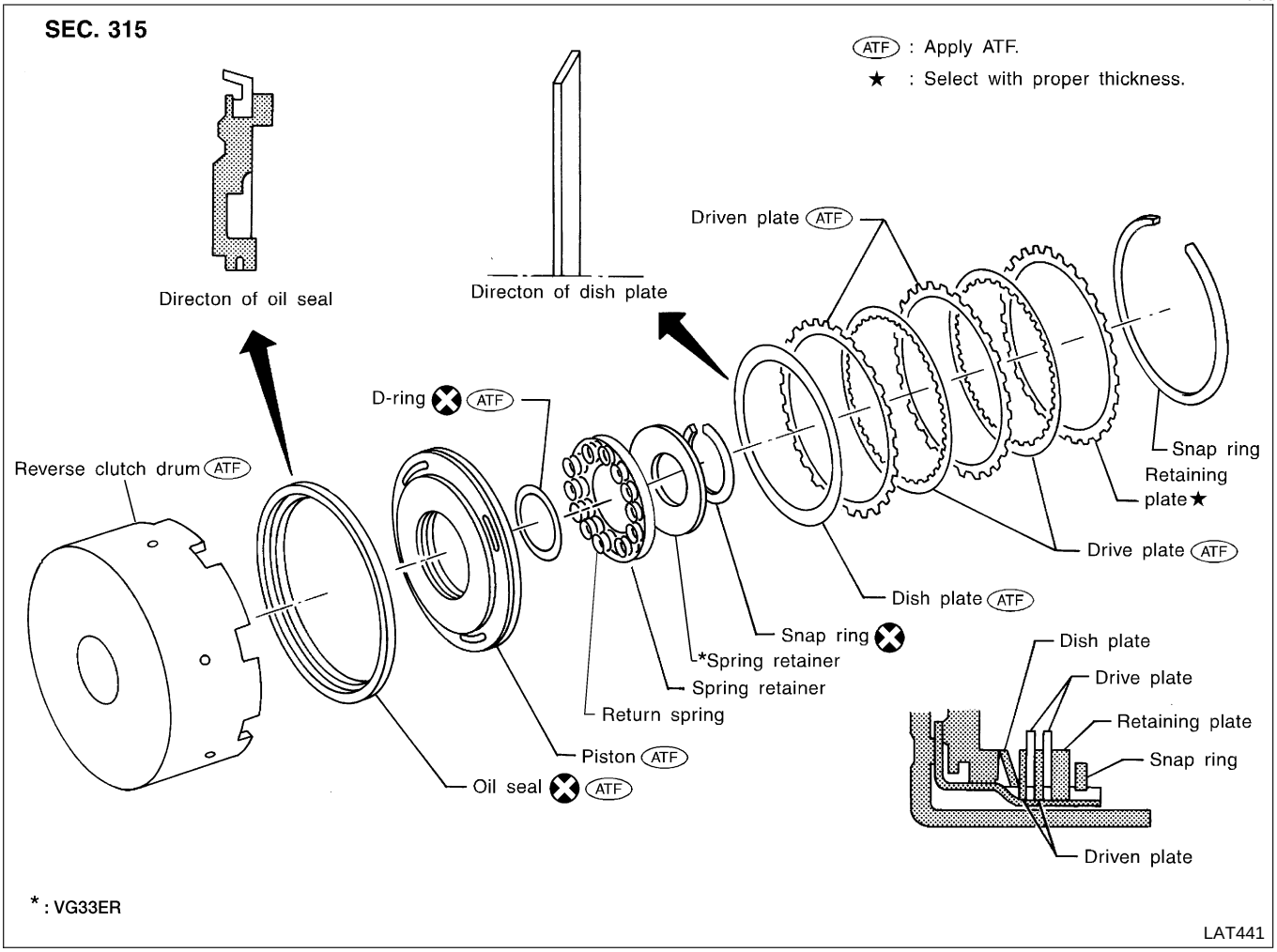

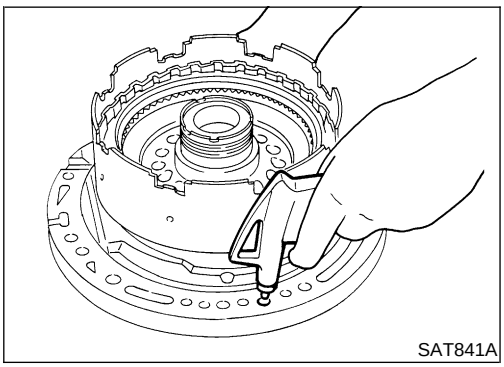
SAT841A

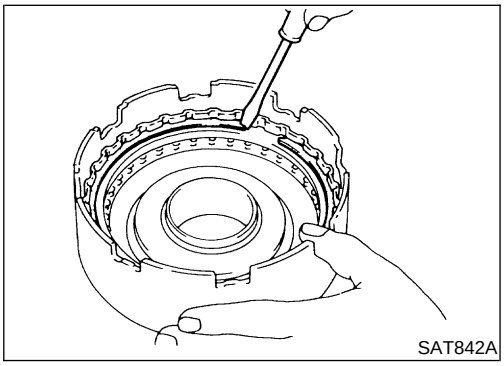
SAT842A

DISASSEMBLY

NEAT0256

1. Check operation of reverse clutch.

a. Install seal ring onto oil pump cover and install reverse clutch. Apply compressed air to oil hole.

b. Check to see that retaining plate moves to snap ring.

c. If retaining plate does not contact snap ring:

- D-ring might be damaged.
- Oil seal might be damaged.
- Fluid might be leaking past piston check ball.

2. Remove drive plates, driven plates, retaining plate, dish plate and snap ring.

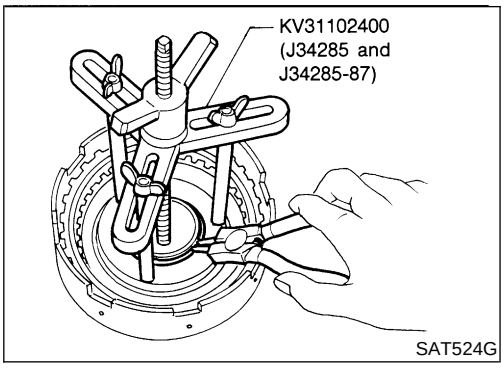

3. Remove snap ring from clutch drum while compressing clutch spring(s).
- **Do not expand snap ring excessively.**
4. Remove spring retainer and return spring.

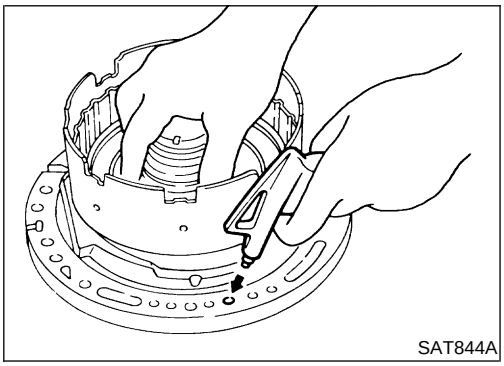

5. Install seal ring onto oil pump cover and install reverse clutch drum. While holding piston, gradually apply compressed air to oil hole until piston is removed.
- **Do not apply compressed air abruptly.**
6. Remove D-ring and oil seal from piston.

INSPECTION

NEAT0257

Reverse Clutch Snap Ring and Spring Retainer

NEAT0257S01

- Check for deformation, fatigue or damage.

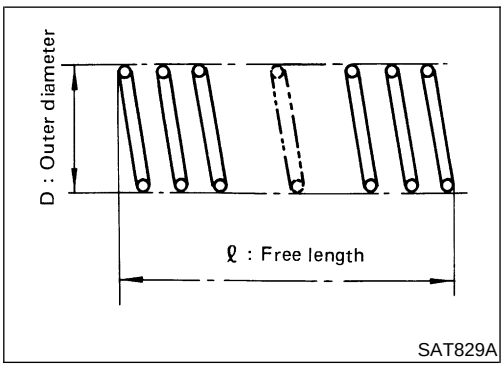

Reverse Clutch Return Springs (VG33E only)

NEAT0257S02

- Check for deformation or damage. Also measure free length and outside diameter.

Inspection standard:

Refer to "Return Springs", AT-498.

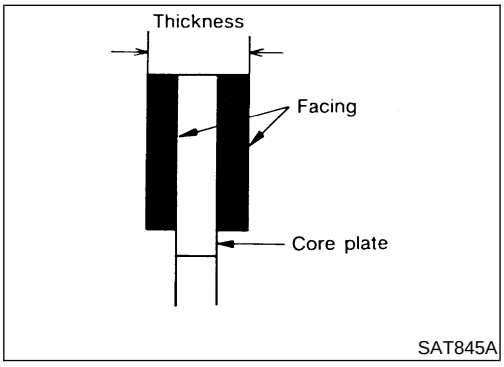

Reverse Clutch Drive Plates

NEAT0257S03

- Check facing for burns, cracks or damage.
- Measure thickness of facing.

Thickness of drive plate:

Standard value: 1.90 - 2.05 mm (0.0748 - 0.0807 in)

Wear limit: 1.80 mm (0.0709 in)

- If not within wear limit, replace.

Reverse Clutch Dish Plate

NEAT0257S04

- Check for deformation or damage.

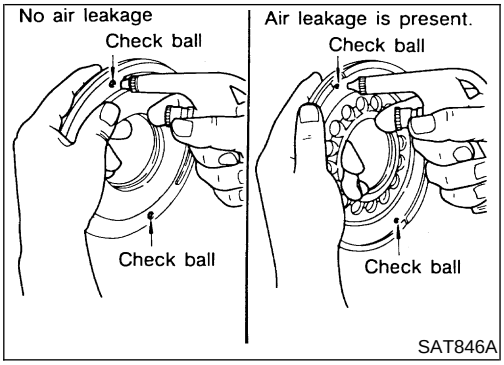

Reverse Clutch Piston

NEAT0257S05

- Shake piston to assure that balls are not seized.
- Apply compressed air to check ball oil hole opposite the return spring. Make sure there is no air leakage.
- Also apply compressed air to oil hole on return spring side to assure that air leaks past ball.

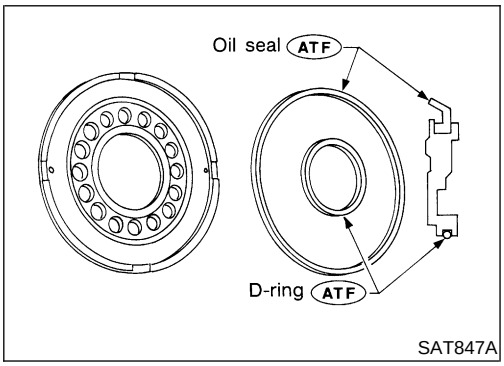

ASSEMBLY

NEAT0258

1. Install D-ring and oil seal on piston.
- **Apply ATF to both parts.**

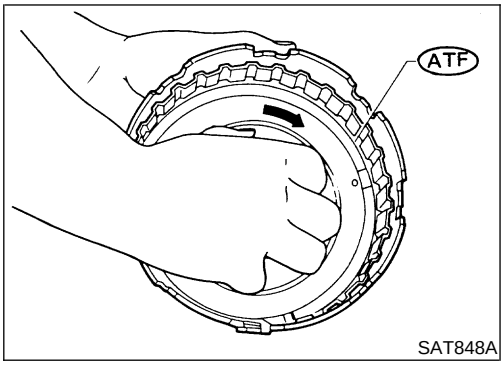

2. Install piston assembly by turning it slowly and evenly.
- **Apply ATF to inner surface of drum.**

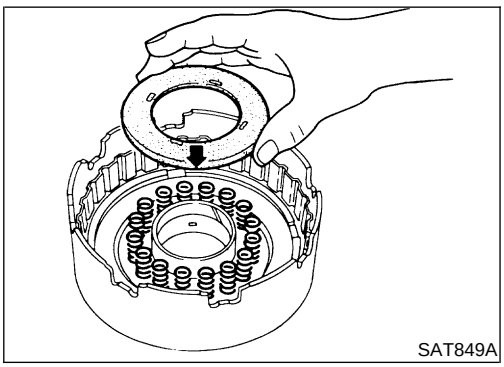

3. Install return springs and spring retainer (VG33E only) or spring retainer (VG33ER only).

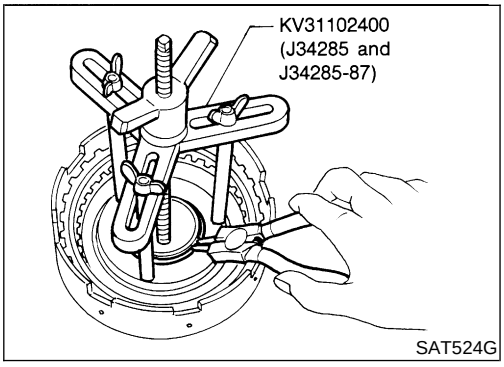

4. Install snap ring while compressing clutch springs.

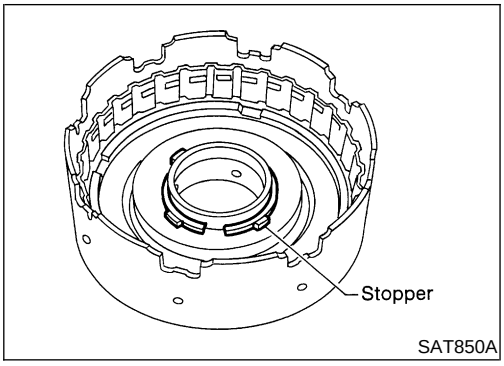

SAT850A

- **Do not align snap ring gap with spring retainer stopper.**

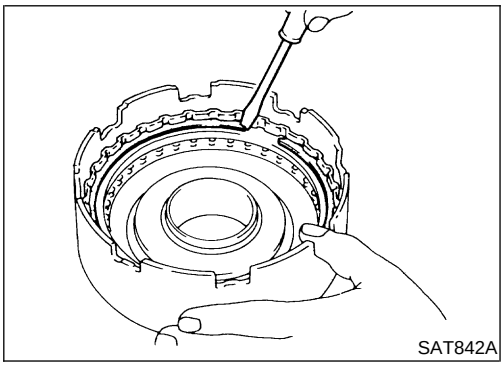
SAT842A

5. Install drive plates, driven plates, retaining plate and dish plate.
6. Install snap ring.

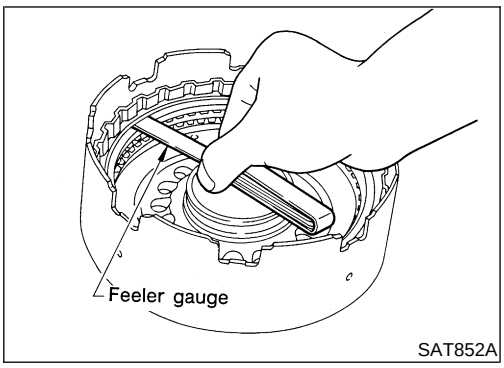

SAT852A

7. Measure clearance between retaining plate and snap ring. If not within allowable limit, select proper retaining plate.

Specified clearance:
Standard
0.5 - 0.8 mm (0.020 - 0.031 in)
Allowable limit
1.2 mm (0.047 in)
Retaining plate:
Refer to "REVERSE CLUTCH", AT-499.

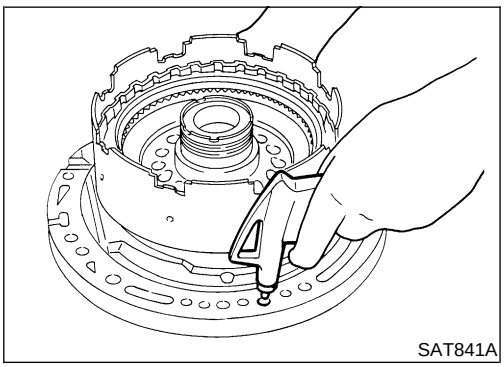
SAT841A

8. Check operation of reverse clutch.
Refer to "DISASSEMBLY", AT-455.

High Clutch

COMPONENTS

NEAT0259

SEC. 315

For the number of clutch sheets (drive plate and driven plate), refer to the below cross-section.

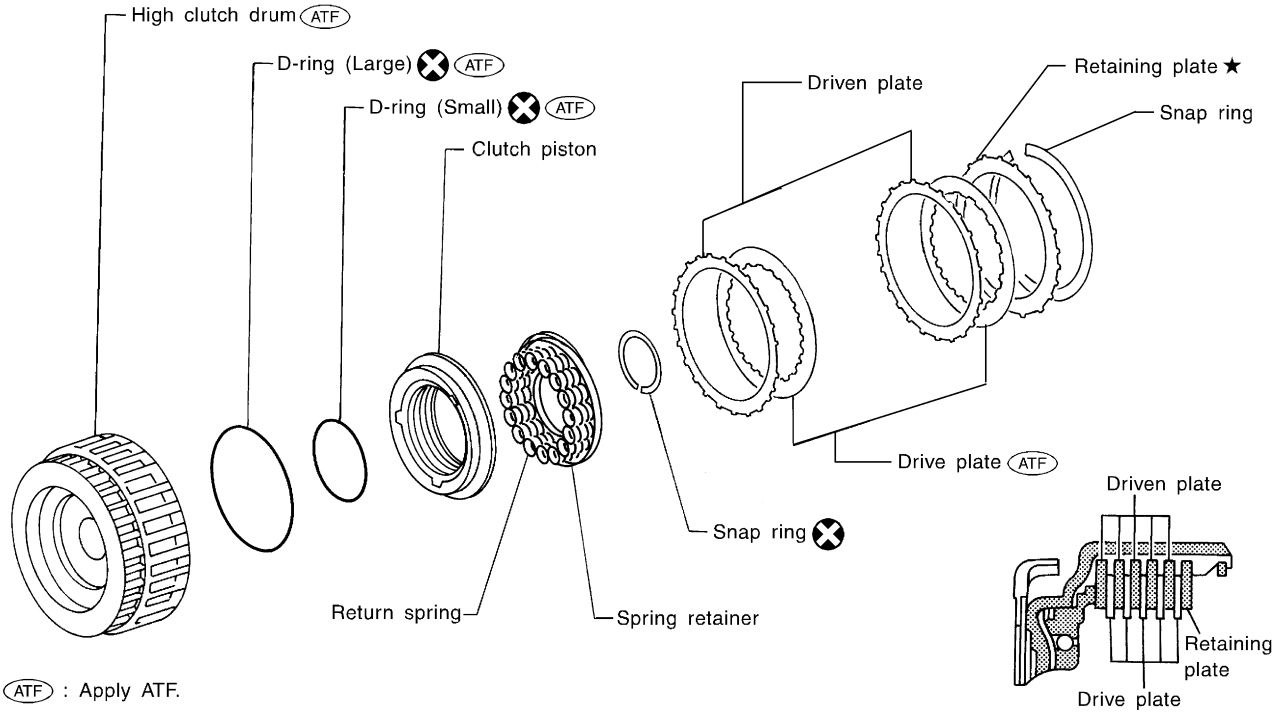

(ATF) : Apply ATF.
★ : Select with proper thickness.

LAT437

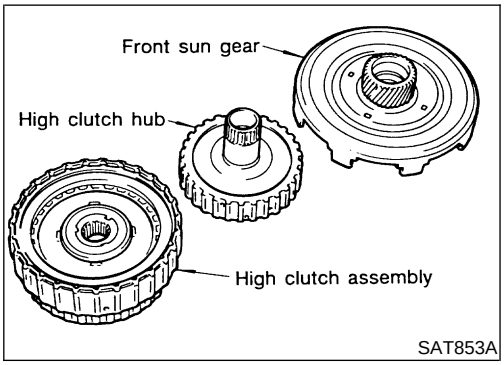

SAT853A

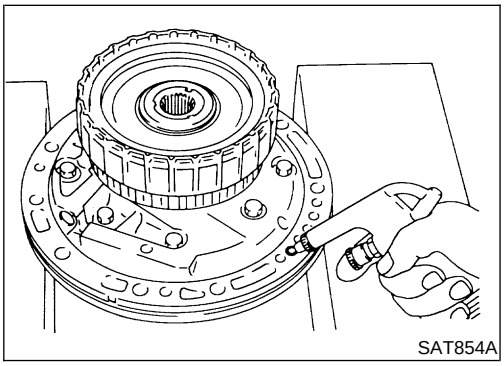

SAT854A

DISASSEMBLY AND ASSEMBLY

NEAT0260

Service procedures for high clutch are essentially the same as those for reverse clutch, with the following exception:

- Check of high clutch operation

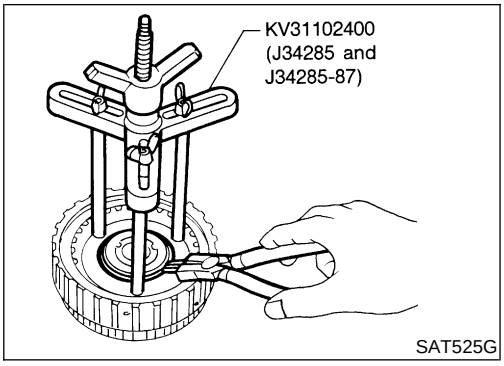

- Removal and installation of return spring

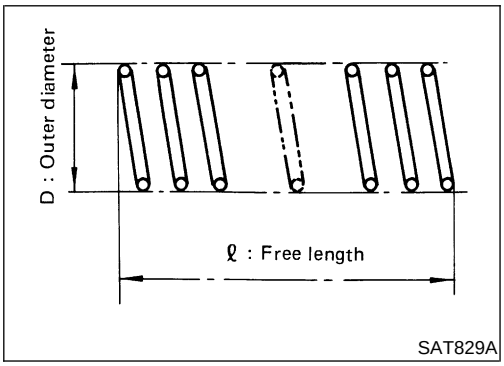

- Inspection of high clutch return springs

  Inspection standard:

  Refer to "Return Springs", AT-498.

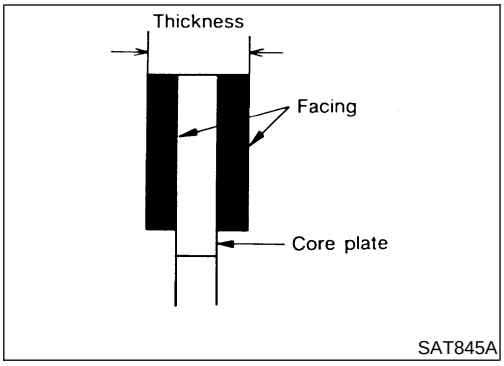

- Inspection of high clutch drive plate

  Thickness of drive plate:

  Standard

  1.52 - 1.67 mm (0.0598 - 0.0657 in)

  Wear limit

  1.40 mm (0.0551 in)

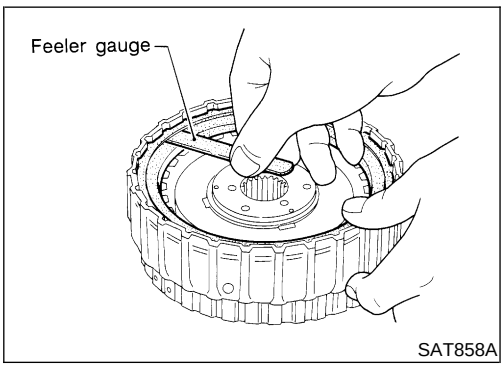

- Measurement of clearance between retaining plate and snap ring

  Specified clearance:

  Standard

  1.8 - 2.2 mm (0.071 - 0.087 in)

  Allowable limit

  VG33E only: 2.8 mm (0.110 in)

  VG33ER only: 2.2 mm (0.087 in)

  Retaining plate:

  Refer to "HIGH CLUTCH", AT-500.

Forward and Overrun Clutches

COMPONENTS

NEAT0261

SEC. 315

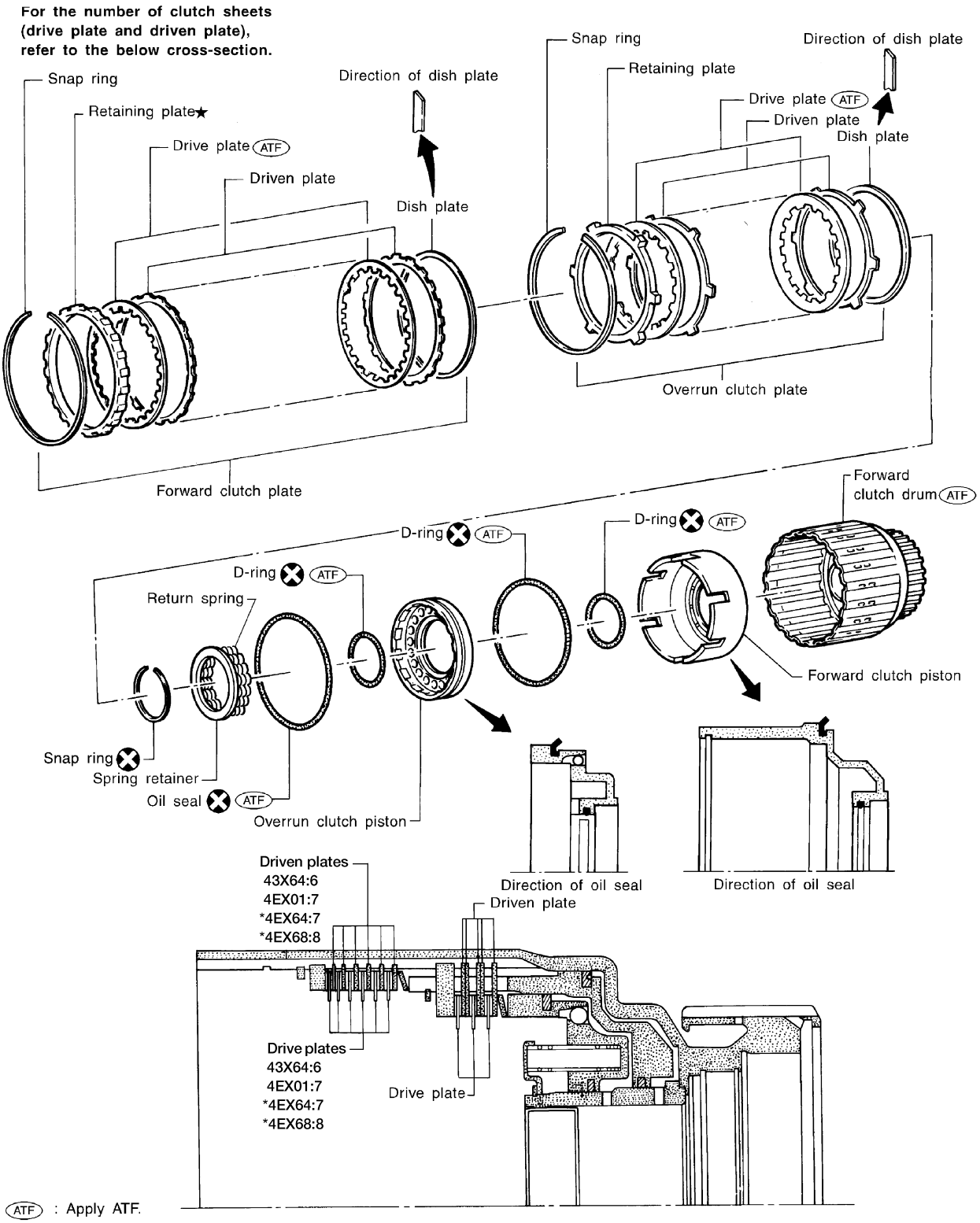

LAT422

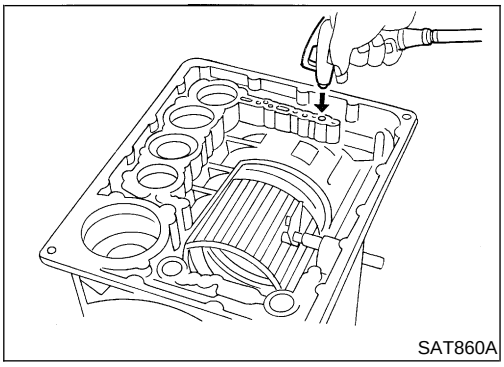
SAT860A

DISASSEMBLY AND ASSEMBLY

NEAT0262

Forward and overrun clutches are serviced essentially the same way as reverse clutch is serviced. However, note the following exceptions.

- Check of forward clutch operation

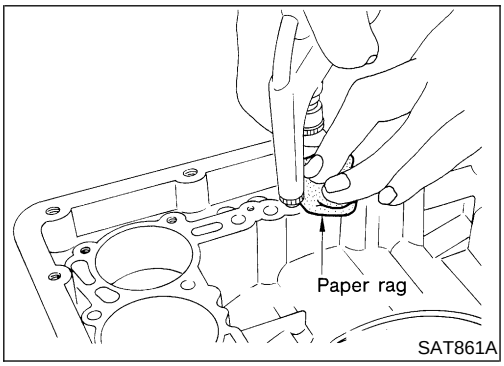

SAT861A

- Check of overrun clutch operation

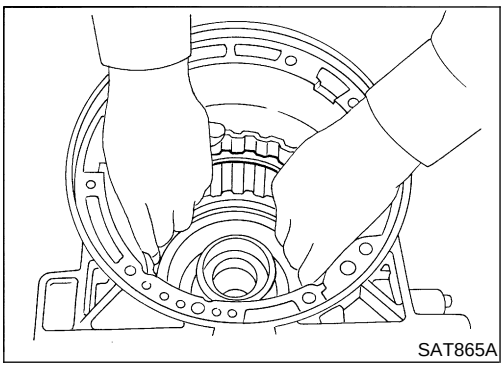
SAT865A

- Removal of forward clutch drum
  Remove forward clutch drum from transmission case by holding snap ring.

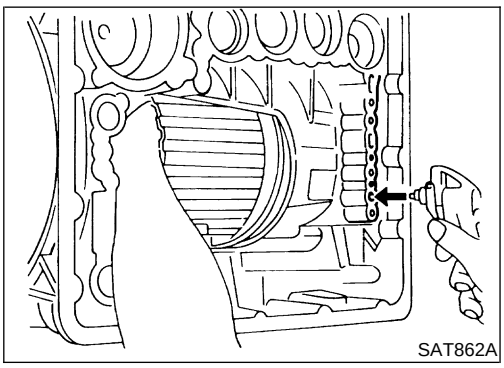
SAT862A

- Removal of forward clutch and overrun clutch pistons

a) While holding overrun clutch piston, gradually apply compressed air to oil hole.

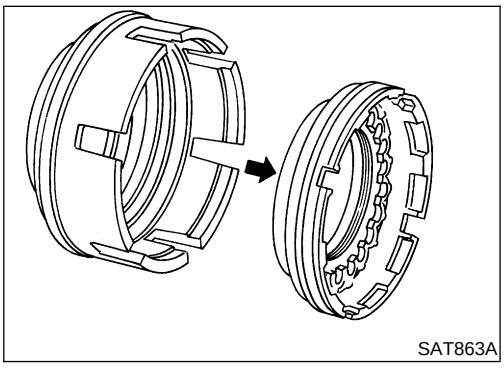
SAT863A

b) Remove overrun clutch from forward clutch.

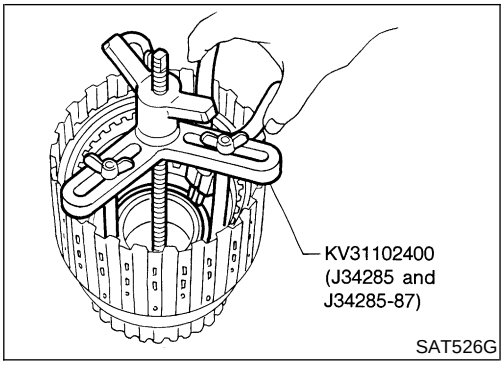

SAT526G

- Removal and installation of return springs

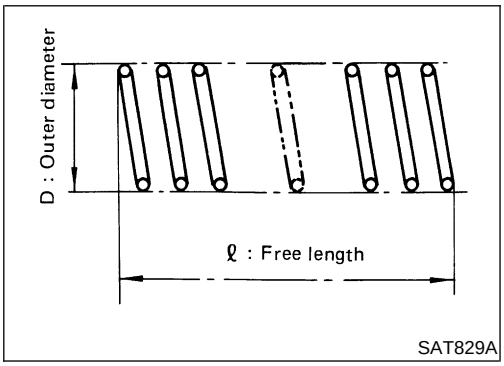

SAT829A

- Inspection of forward clutch and overrun clutch return springs

Inspection standard:

Refer to "Return Springs", AT-498.

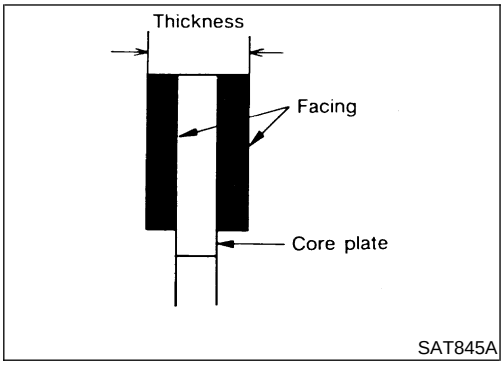

SAT845A

- Inspection of forward clutch drive plates

Thickness of drive plate:

Standard

1.52 - 1.67 mm (0.0598 - 0.0657 in)

Wear limit

1.40 mm (0.0551 in)

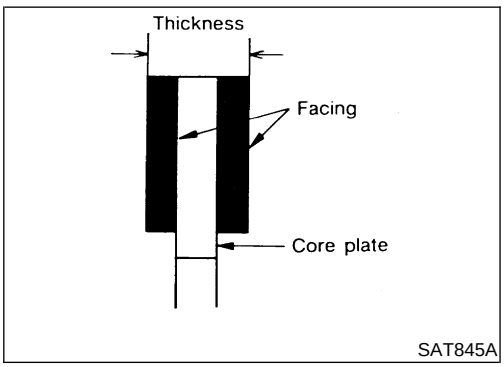

SAT845A

- Inspection of overrun clutch drive plates

Thickness of drive plate:

Standard

1.90 - 2.05 mm (0.0748 - 0.0807 in)

Wear limit

1.80 mm (0.0709 in)

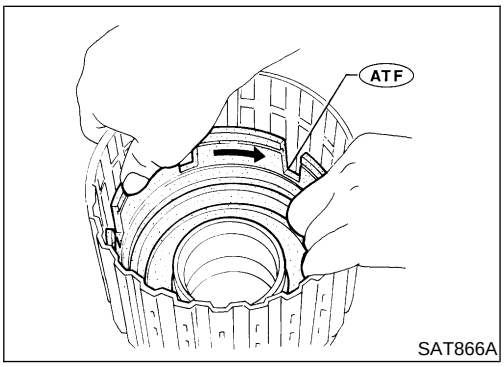

SAT866A

- Installation of forward clutch piston and overrun clutch piston

a) Install forward clutch piston by turning it slowly and evenly.

- **Apply ATF to inner surface of clutch drum.**

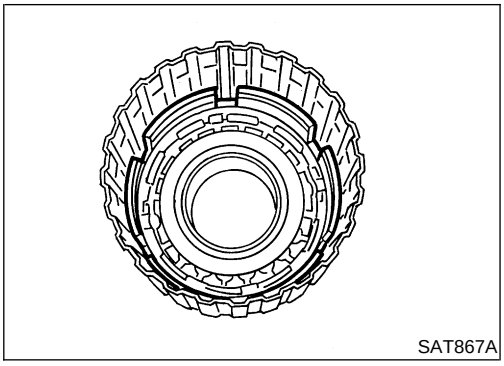
SAT867A

- **Align notch in forward clutch piston with groove in forward clutch drum.**

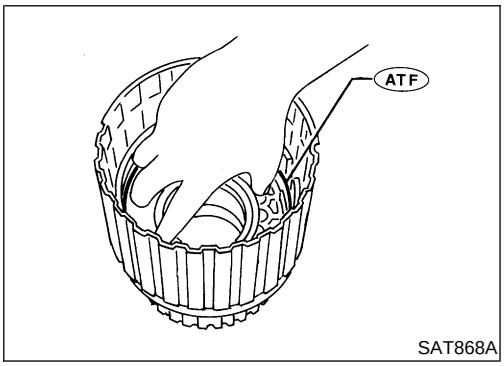

SAT868A

b) Install overrun clutch by turning it slowly and evenly.

- **Apply ATF to inner surface of forward clutch piston.**

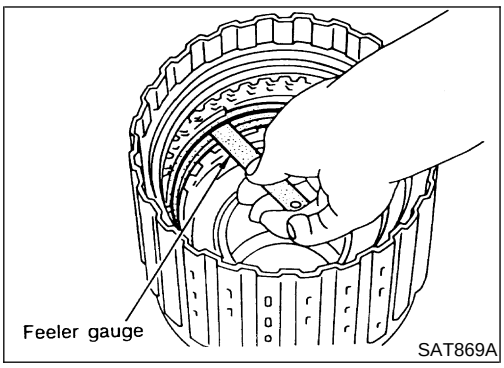

SAT869A

- Measurement of clearance between retaining plate and snap ring of overrun clutch

Specified clearance:
Standard
1.0 - 1.4 mm (0.039 - 0.055 in)
Allowable limit
VG33E only: 2.0 mm (0.079 in)
VG33ER only: 2.4 mm (0.094 in)
Retaining plate:
Refer to "FORWARD CLUTCH", AT-501.

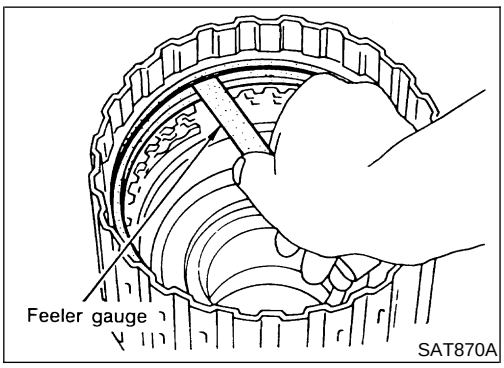

SAT870A

- Measurement of clearance between retaining plate and snap ring of forward clutch

Specified clearance:
Standard
0.35 - 0.75 mm (0.0138 - 0.0295 in)
Allowable limit
VG33E only:
Model 43X64 (2WD): 1.95 mm (0.077 in)
Model 4EX01 (4WD): 2.15 mm (0.085 in)
VG33ER only:
Model 4EX67 (2WD): 2.15 mm (0.085 in)
Model 4EX68 (4WD): 2.35 mm (0.093 in)
Retaining plate:
Refer to "FORWARD CLUTCH", AT-500.

Low & Reverse Brake

COMPONENTS

NEAT0263

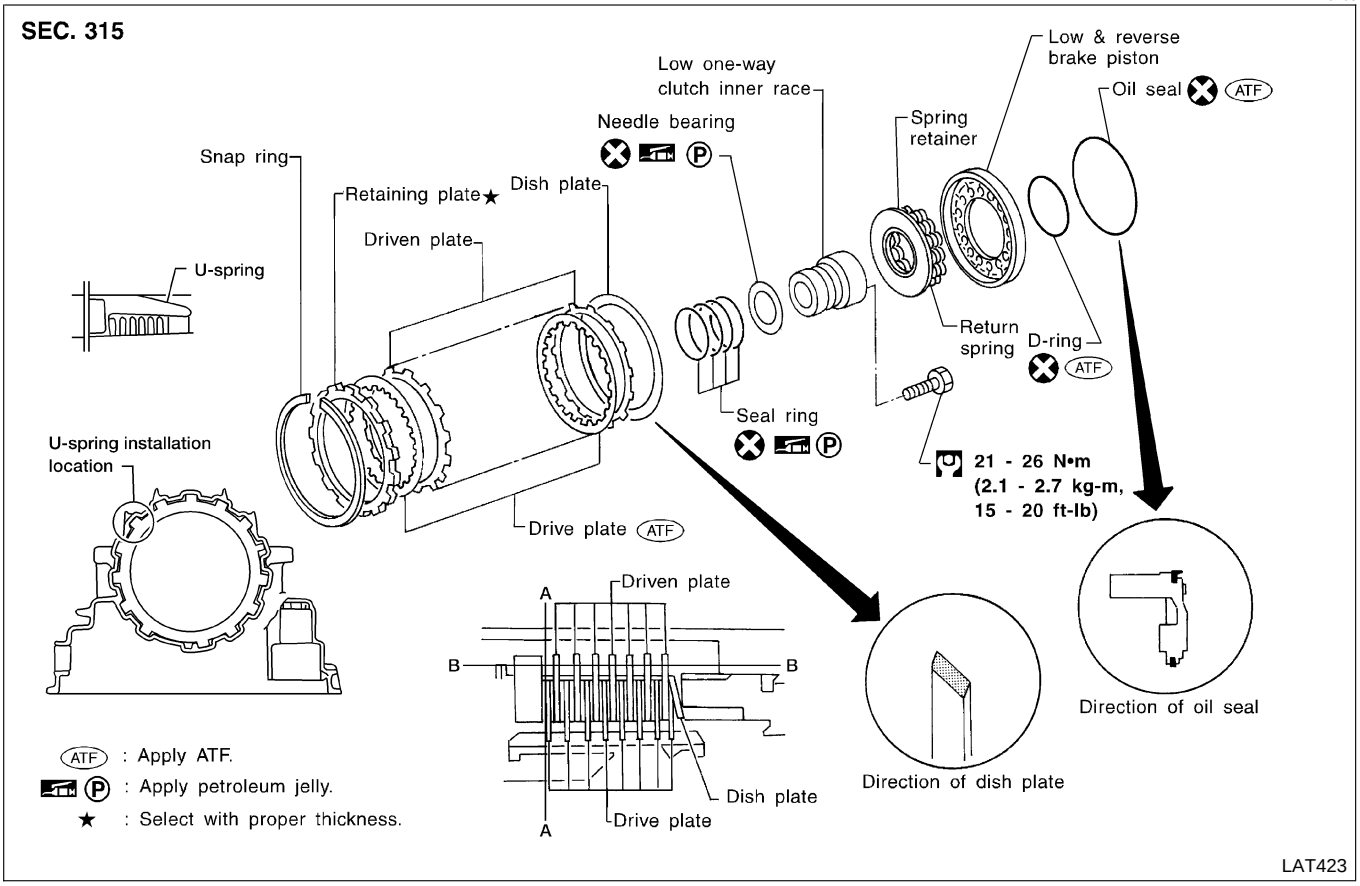

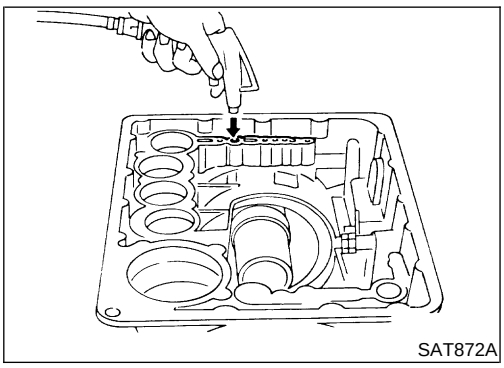
SAT872A

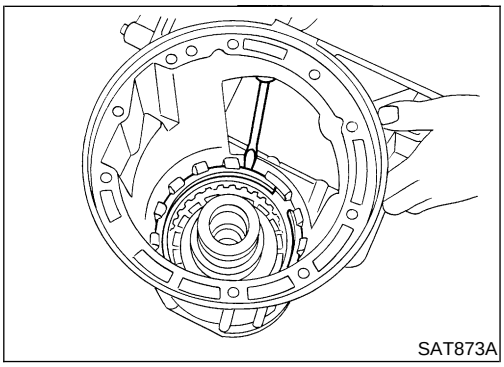
SAT873A

DISASSEMBLY

NEAT0264

1. Check operation of low and reverse brake.

a. Install seal ring onto oil pump cover and install reverse clutch. Apply compressed air to oil hole.
b. Check to see that retaining plate moves to snap ring.
c. If retaining plate does not contact snap ring:

- D-ring might be damaged.
- Oil seal might be damaged.
- Fluid might be leaking past piston check ball.

2. Remove snap ring, low and reverse brake drive plates, driven plates and dish plate.

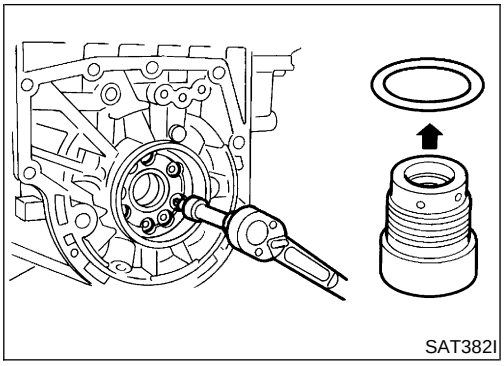
SAT382I

3. Remove low one-way clutch inner race, spring retainer and return spring from transmission case.
4. Remove seal rings from low one-way clutch inner race.
5. Remove needle bearing from low one-way clutch inner race.

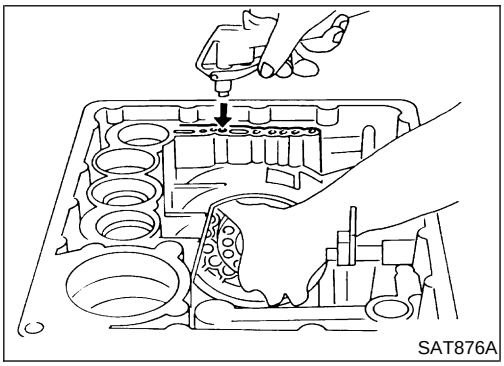
SAT876A

6. Remove low and reverse brake piston using compressed air.
7. Remove oil seal and D-ring from piston.

INSPECTION

NEAT0265

Low and Reverse Brake Snap Ring and Spring Retainer

NEAT0265S01

- Check for deformation, or damage.

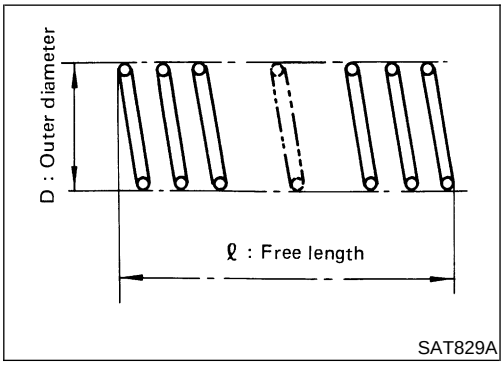

SAT829A

Low and Reverse Brake Return Springs

NEAT0265S02

- Check for deformation or damage. Also measure free length and outside diameter.

Inspection standard:

Refer to "Return Springs", AT-498.

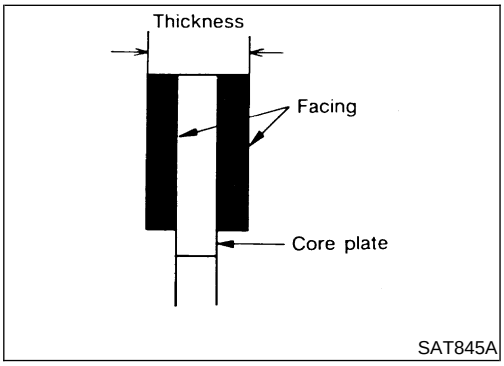

SAT845A

Low and Reverse Brake Drive Plates

NEAT0265S03

- Check facing for burns, cracks or damage.
- Measure thickness of facing.

Thickness of drive plate:

Standard value

1.52 - 1.67 mm (0.0598 - 0.0657 in)

Wear limit

1.40 mm (0.0551 in)

- If not within wear limit, replace.

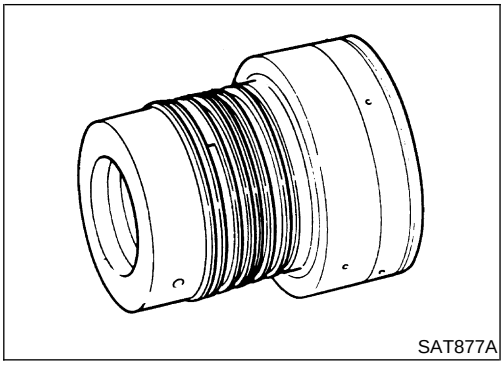
SAT877A

Low One-way Clutch Inner Race

NEAT0265S04

- Check frictional surface of inner race for wear or damage.

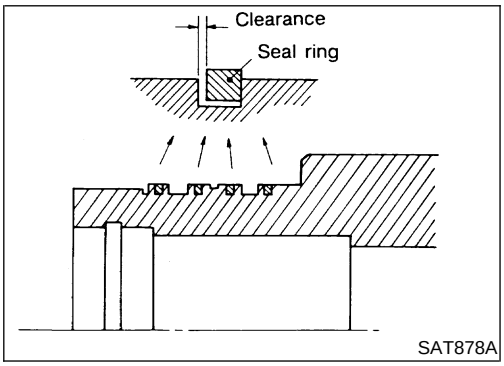

SAT878A

- Install a new seal rings onto low one-way clutch inner race.
- **Be careful not to expand seal ring gap excessively.**
- Measure seal ring-to-groove clearance.

Inspection standard:

Standard value: 0.10 - 0.25 mm (0.0039 - 0.0098 in)

Allowable limit: 0.25 mm (0.0098 in)

- If not within allowable limit, replace low one-way clutch inner race.

ASSEMBLY

NEAT0266

1. Install needle bearing onto one-way clutch inner race.

- **Pay attention to its direction — Black surface goes to rear side.**
- **Apply petroleum jelly to needle bearing.**

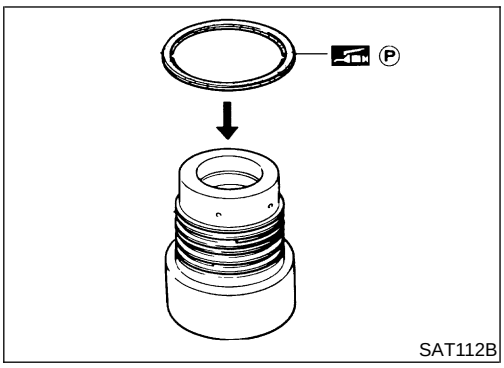

SAT112B

2. Install oil seal and D-ring onto piston.

- **Apply ATF to oil seal and D-ring.**

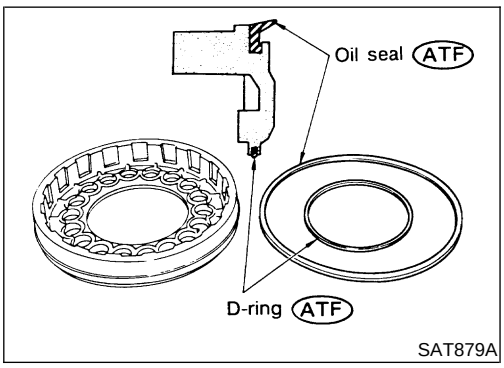

SAT879A

3. Install piston by rotating it slowly and evenly.

- **Apply ATF to inner surface of transmission case.**

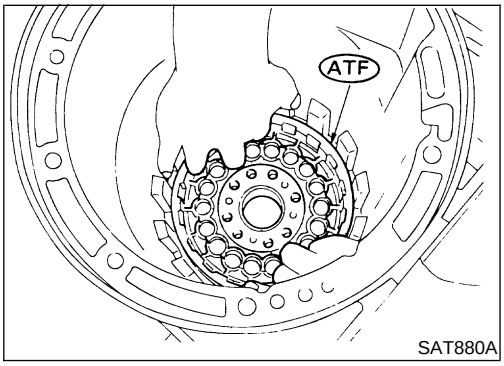

SAT880A

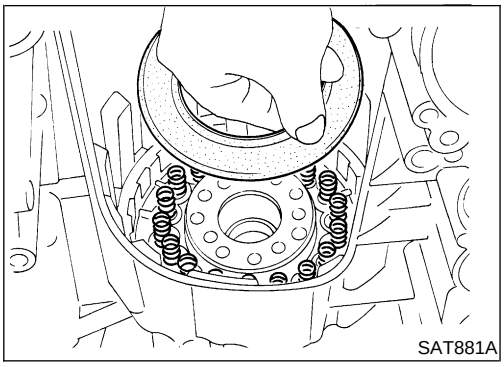
SAT881A

4. Install return springs, spring retainer and low one-way clutch inner race onto transmission case.
5. Install dish plate, low and reverse brake drive plates, driven plates and retaining plate.
6. Install snap ring on transmission case.

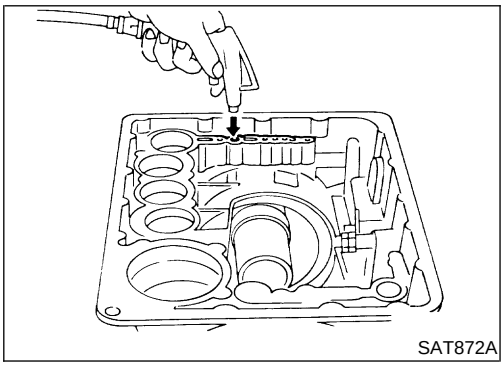
SAT872A

7. Check operation of low and reverse brake clutch piston. Refer to "DISASSEMBLY", AT-465.

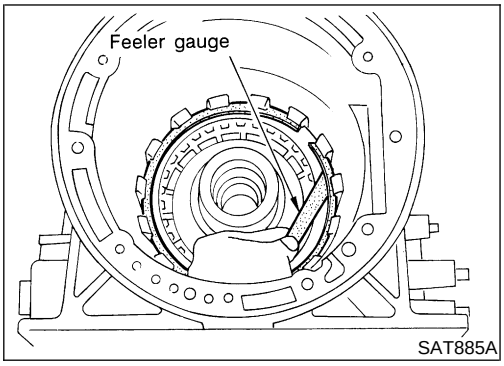

SAT885A

8. Measure clearance between retaining plate and snap ring. If not within allowable limit, select proper retaining plate.

Specified clearance:

Standard

0.8 - 1.1 mm (0.031 - 0.043 in)

Allowable limit

VG33E only: 2.5 mm (0.098 in)

VG33ER only: 2.7 mm (0.106 in)

Retaining plate:

Refer to "LOW & REVERSE BRAKE", AT-501.

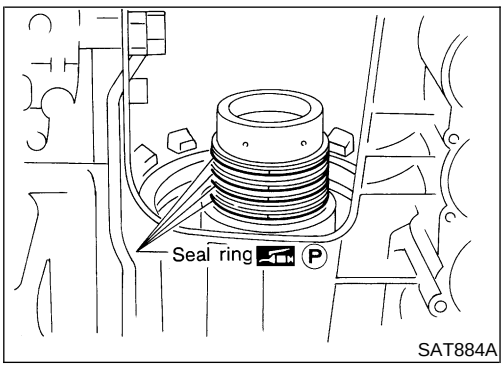

SAT884A

9. Install low one-way clutch inner race seal ring.

- **Apply petroleum jelly to seal ring.**
- **Make sure seal rings are pressed firmly into place and held by petroleum jelly.**

Forward Clutch Drum Assembly

COMPONENTS

NEAT0267

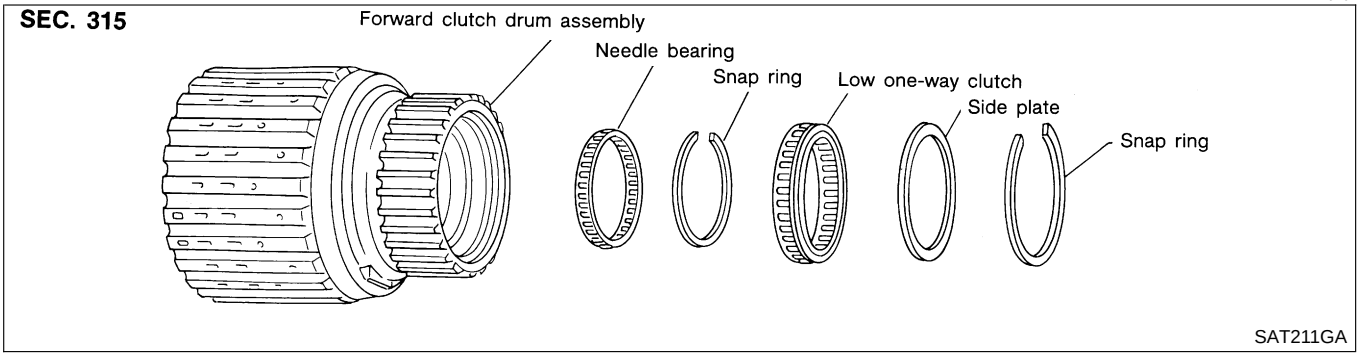

DISASSEMBLY

NEAT0268

1. Remove snap ring from forward clutch drum.
2. Remove side plate from forward clutch drum.

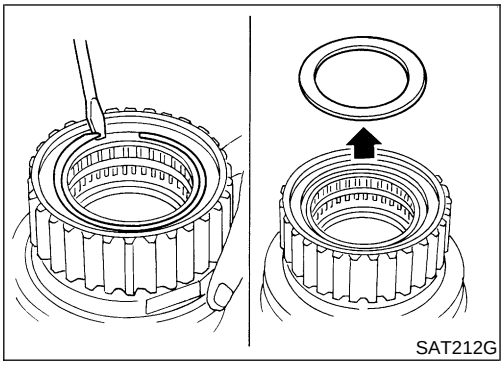

3. Remove low one-way clutch from forward clutch drum.
4. Remove snap ring from forward clutch drum.

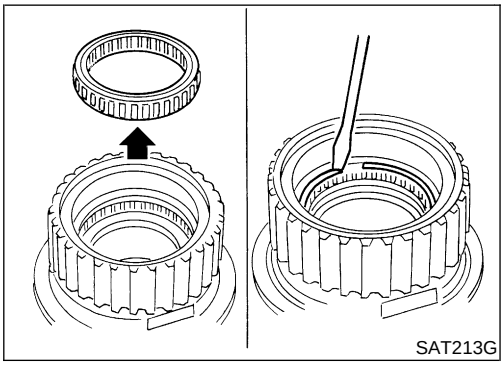

5. Remove needle bearing from forward clutch drum.

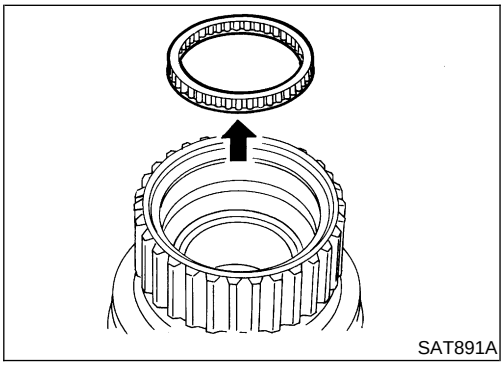

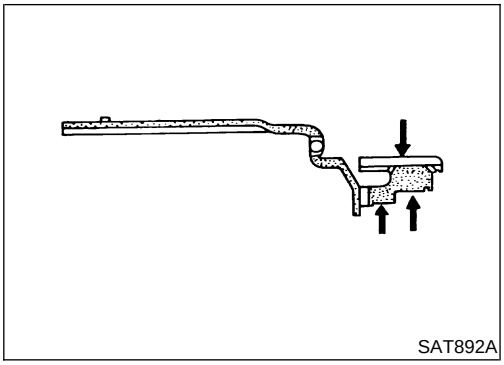
SAT892A

INSPECTION

NEAT0269

Forward Clutch Drum

NEAT0269S01

- Check spline portion for wear or damage.
- Check frictional surfaces of low one-way clutch and needle bearing for wear or damage.

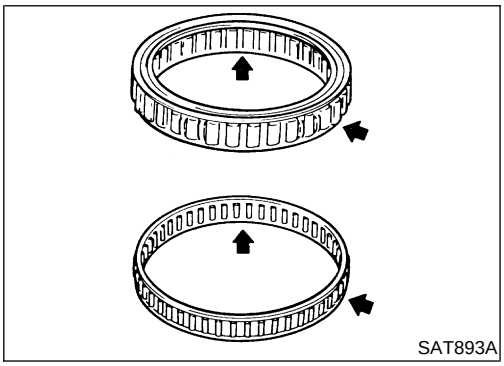
SAT893A

Needle Bearing and Low One-way Clutch

NEAT0269S02

- Check frictional surface for wear or damage.

ASSEMBLY

NEAT0270

1. Install needle bearing in forward clutch drum.
2. Install snap ring onto forward clutch drum.

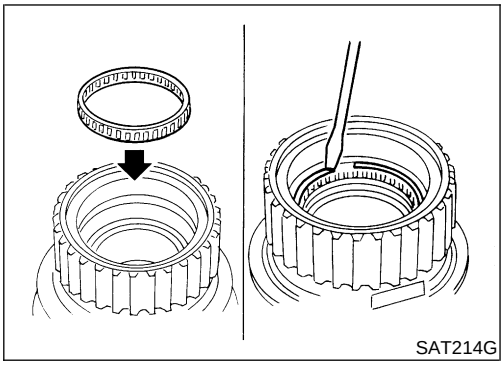
SAT214G

3. Install low one-way clutch onto forward clutch drum by pushing the roller in evenly.

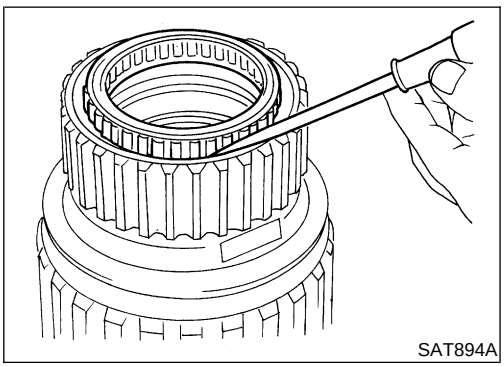
SAT894A

- **Install low one-way clutch with flange facing rearward.**

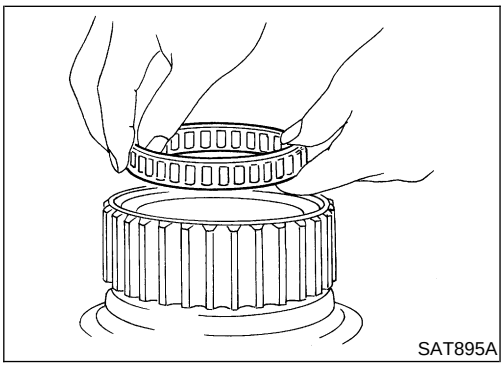
SAT895A

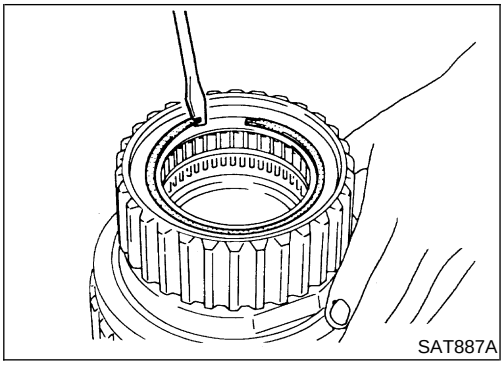
SAT887A

4. Install side plate onto forward clutch drum.
5. Install snap ring onto forward clutch drum.

Rear Internal Gear and Forward Clutch Hub

COMPONENTS

NEAT0271

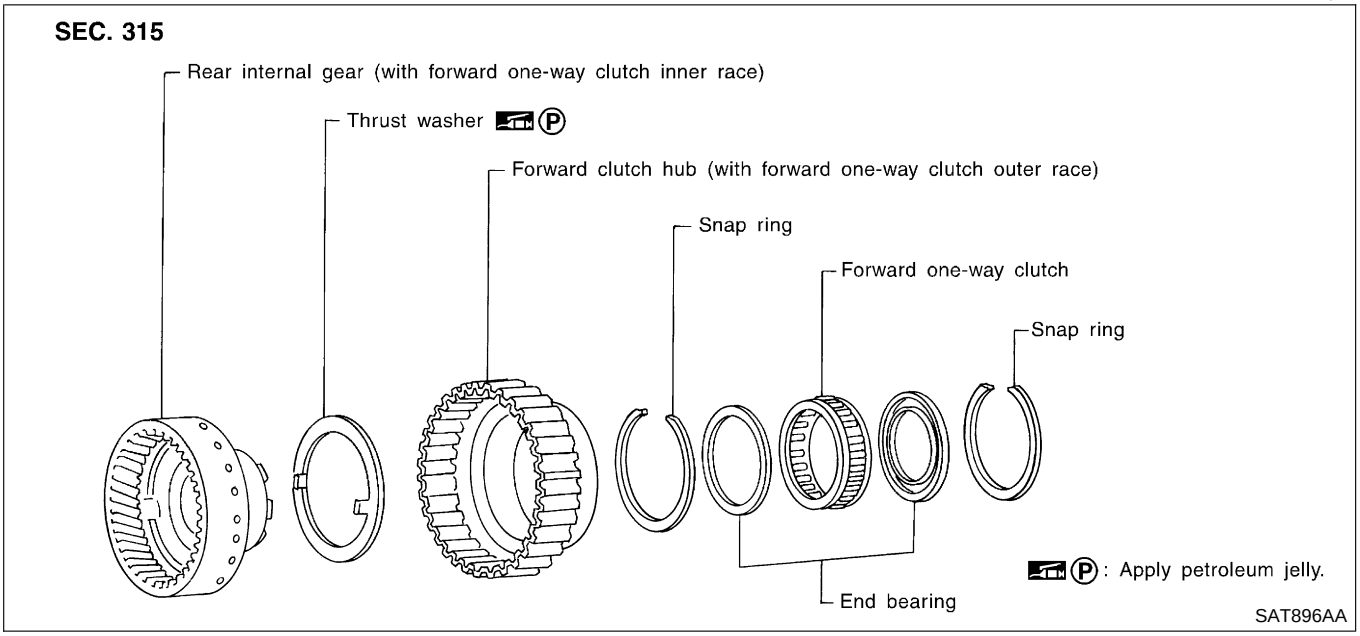

DISASSEMBLY

NEAT0272

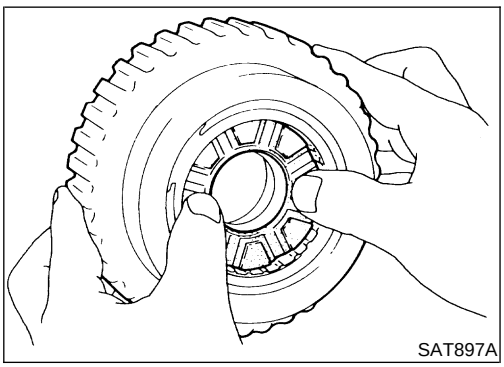
SAT897A

1. Remove rear internal gear by pushing forward clutch hub forward.

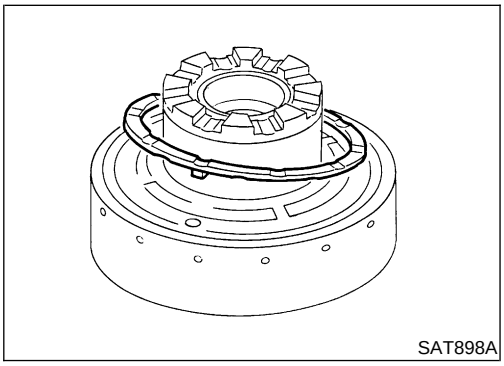
SAT898A

2. Remove thrust washer from rear internal gear.

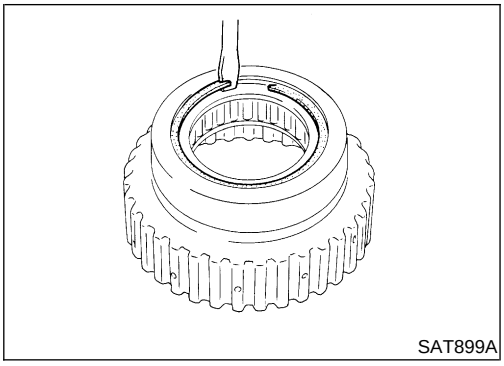
SAT899A

3. Remove snap ring from forward clutch hub.

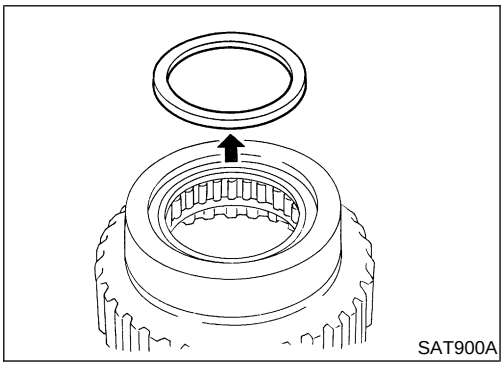
SAT900A

4. Remove end bearing.

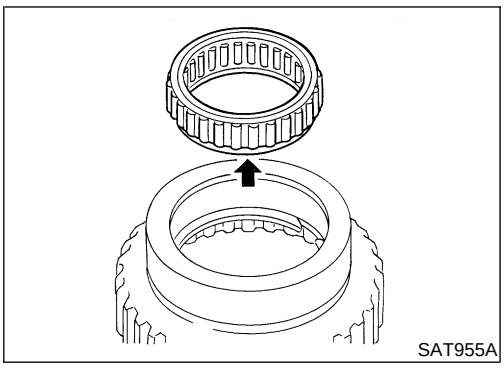
SAT955A

5. Remove forward one-way clutch and end bearing as a unit from forward clutch hub.

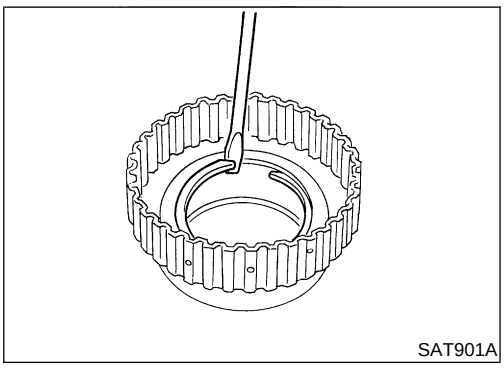
SAT901A

6. Remove snap ring from forward clutch hub.

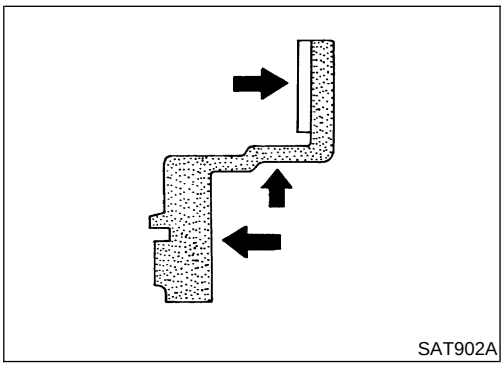
SAT902A

INSPECTION

NEAT0273

Rear Internal Gear and Forward Clutch Hub

NEAT0273S01

- Check gear for excessive wear, chips or cracks.
- Check frictional surfaces of forward one-way clutch and thrust washer for wear or damage.
- Check spline for wear or damage.

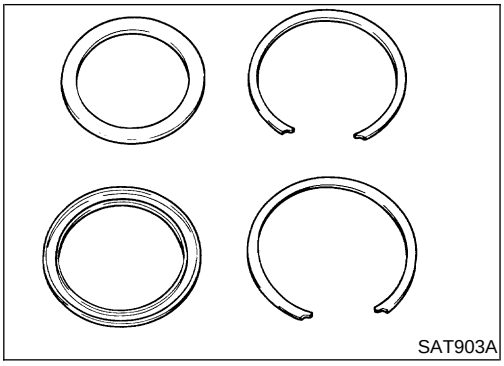
SAT903A

Snap Ring and End Bearing

NEAT0273S02

- Check for deformation or damage.

ASSEMBLY

NEAT0274

1. Install snap ring onto forward clutch hub.

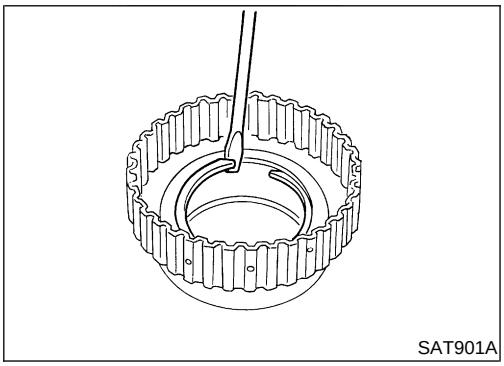
SAT901A

2. Install end bearing.

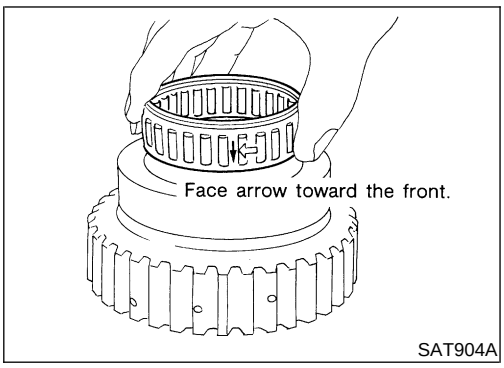

SAT904A

3. Install forward one-way clutch onto clutch hub.
- **Install forward one-way clutch with flange facing rearward.**
4. Install end bearing.
5. Install snap ring onto forward clutch hub.

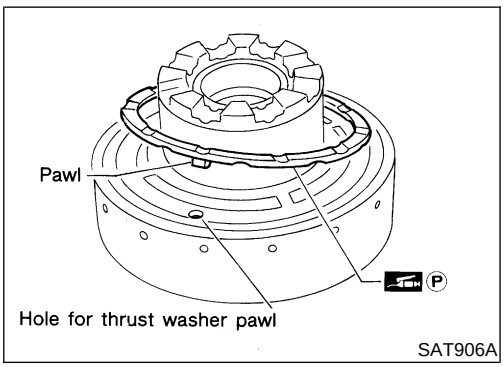

SAT906A

6. Install thrust washer onto rear internal gear.
- **Apply petroleum jelly to thrust washer.**
- **Securely insert pawls of thrust washer into holes in rear internal gear.**

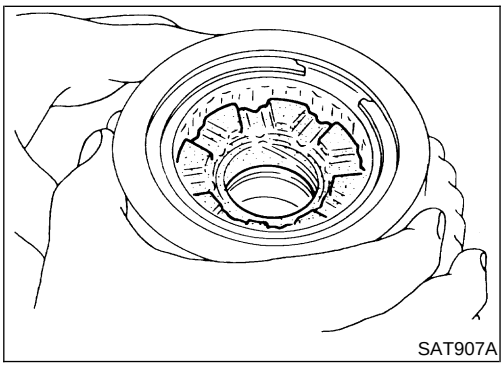
SAT907A

7. Position forward clutch hub in rear internal gear.

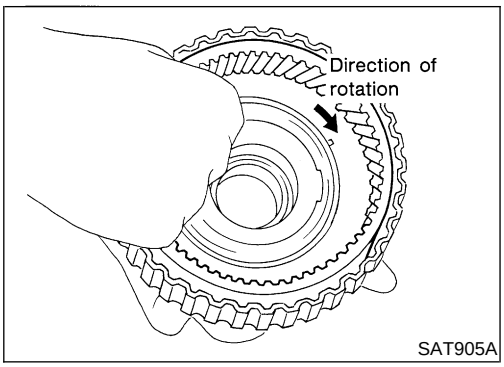

8. After installing, check to assure that forward clutch hub rotates clockwise.

Band Servo Piston Assembly

COMPONENTS

NEAT0275

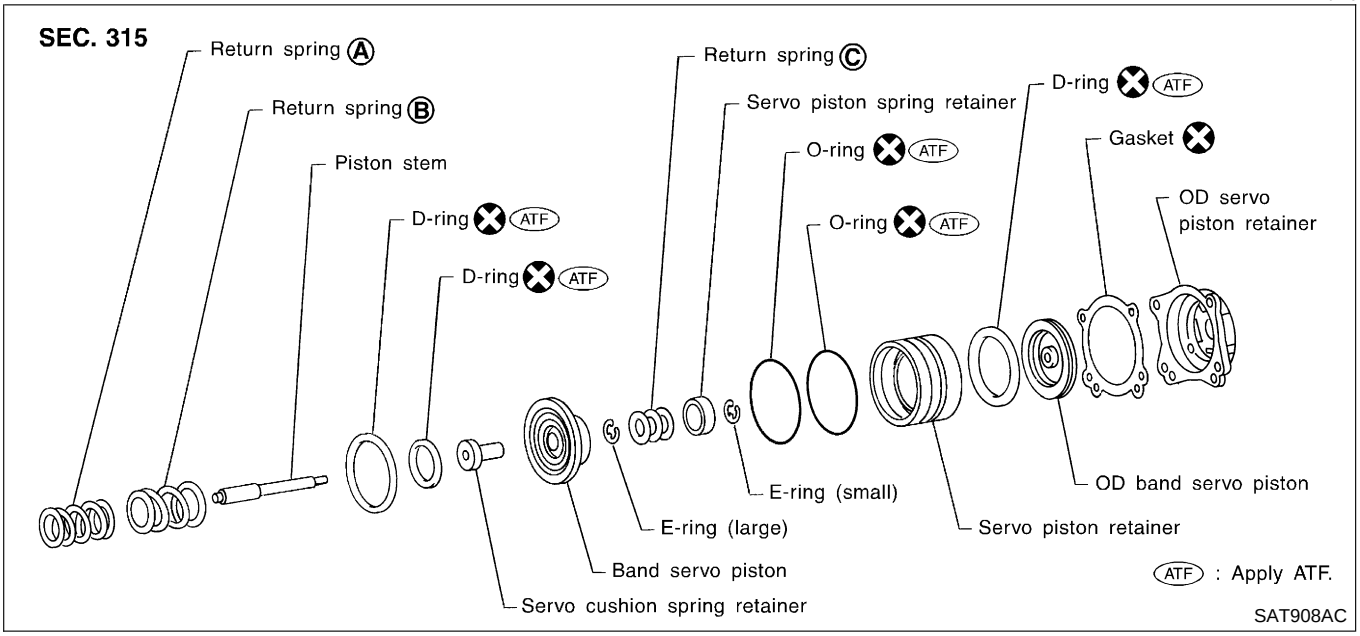

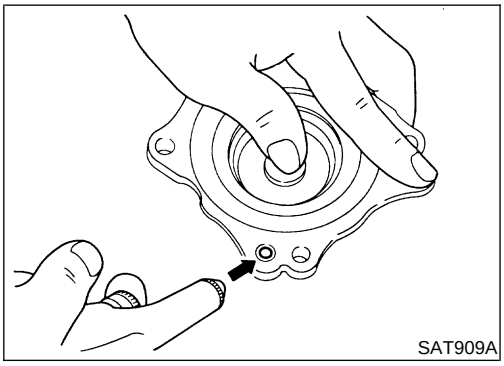

DISASSEMBLY

NEAT0276

1. Block one oil hole in O/D servo piston retainer and the center hole in O/D band servo piston.
2. Apply compressed air to the other oil hole in piston retainer to remove O/D band servo piston from retainer.
3. Remove D-ring from O/D band servo piston.

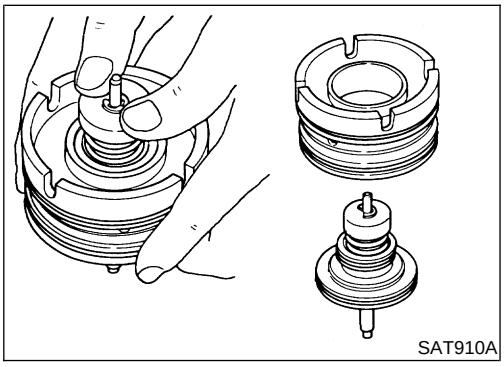

4. Remove band servo piston assembly from servo piston retainer by pushing it forward.

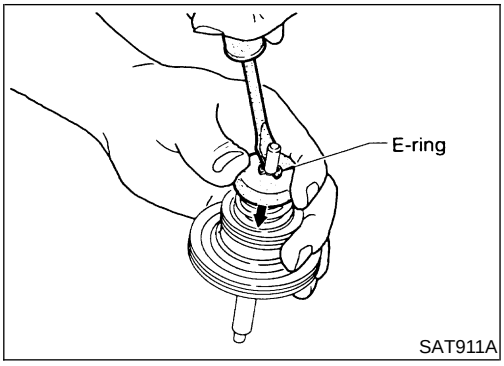

SAT911A

5. Place piston stem end on a wooden block. While pushing servo piston spring retainer down, remove E-ring.

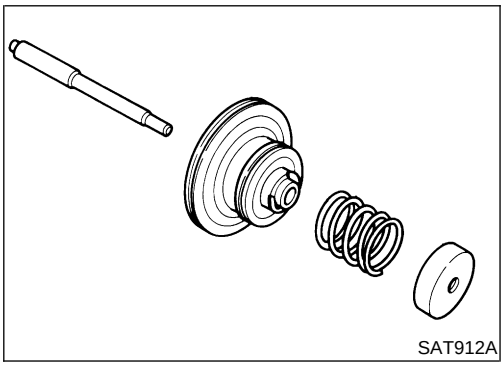
SAT912A

6. Remove servo piston spring retainer, return spring C and piston stem from band servo piston.

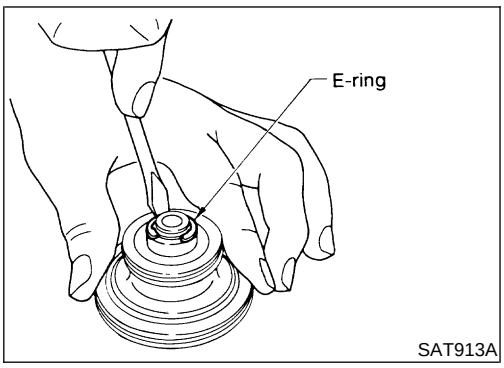

SAT913A

7. Remove E-ring from band servo piston.

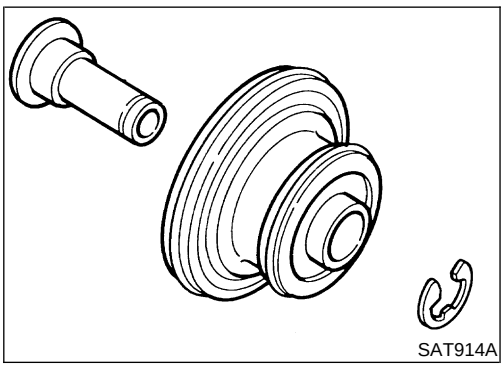
SAT914A

8. Remove servo cushion spring retainer from band servo piston.
9. Remove D-rings from band servo piston.
10. Remove O-rings from servo piston retainer.

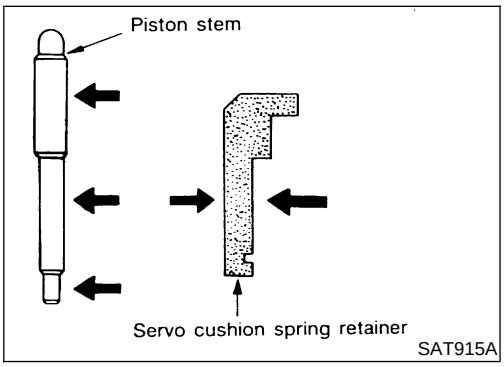

SAT915A

INSPECTION

NEAT0277

Pistons, Retainers and Piston Stem

NEAT0277S01

- Check frictional surfaces for abnormal wear or damage.

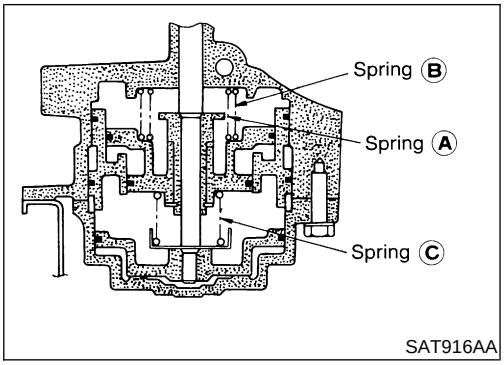

SAT916AA

Return Springs

NEAT0277S02

- Check for deformation or damage. Measure free length and outer diameter.

Inspection standard:

Refer to "Return Springs", AT-498.

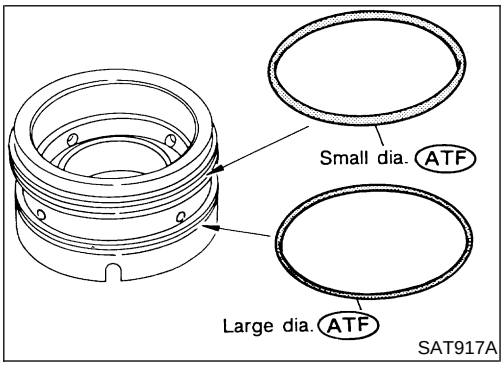

SAT917A

ASSEMBLY

NEAT0278

1. Install O-rings onto servo piston retainer.
- **Apply ATF to O-rings.**
- **Pay attention to position of each O-ring.**

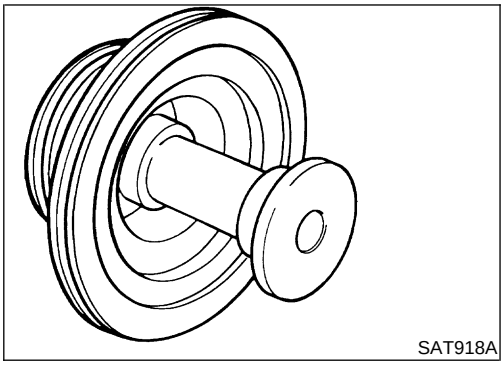
SAT918A

2. Install servo cushion spring retainer onto band servo piston.

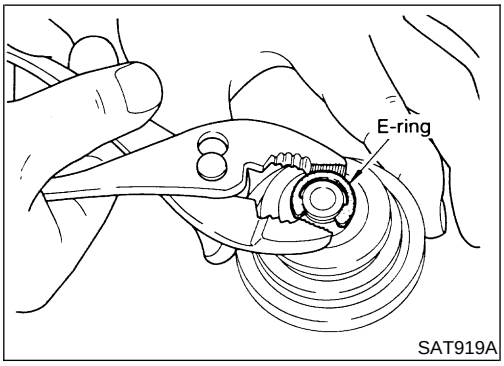

SAT919A

3. Install E-ring onto servo cushion spring retainer.

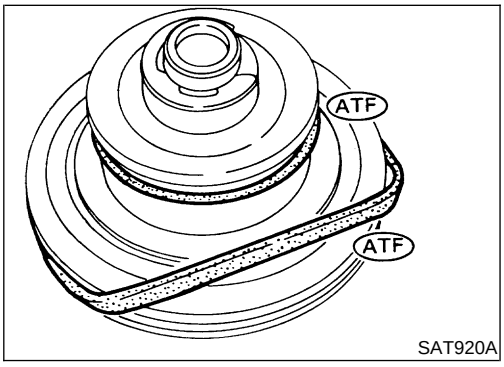

SAT920A

4. Install D-rings onto band servo piston.
- **Apply ATF to D-rings.**

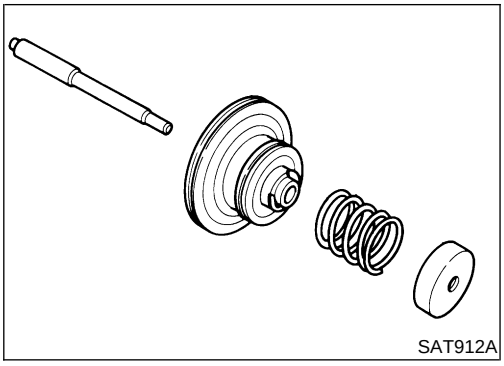
SAT912A

5. Install servo piston spring retainer, return spring C and piston stem onto band servo piston.

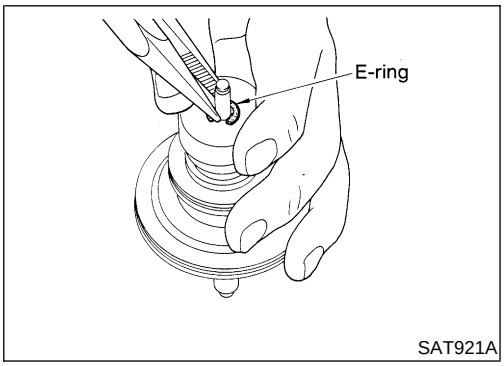

SAT921A

6. Place piston stem end on a wooden block. While pushing servo piston spring retainer down, install E-ring.

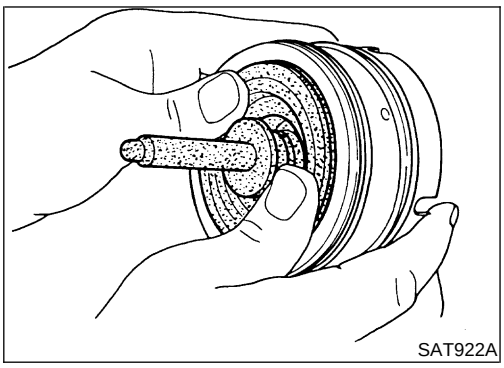
SAT922A

7. Install band servo piston assembly onto servo piston retainer by pushing it inward.

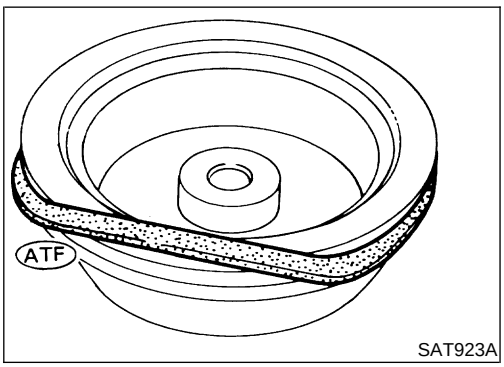

SAT923A

8. Install D-ring on O/D band servo piston.
- **Apply ATF to D-ring.**

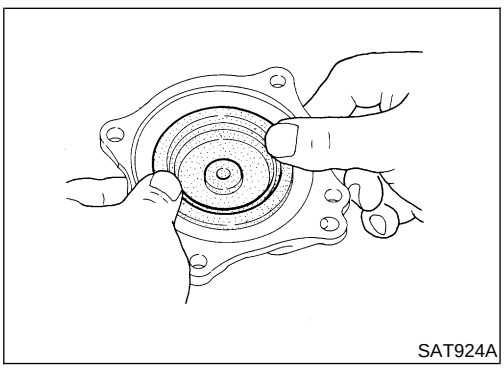
SAT924A

9. Install O/D band servo piston onto servo piston retainer by pushing it inward.

Parking Pawl Components

COMPONENTS

NEAT0279

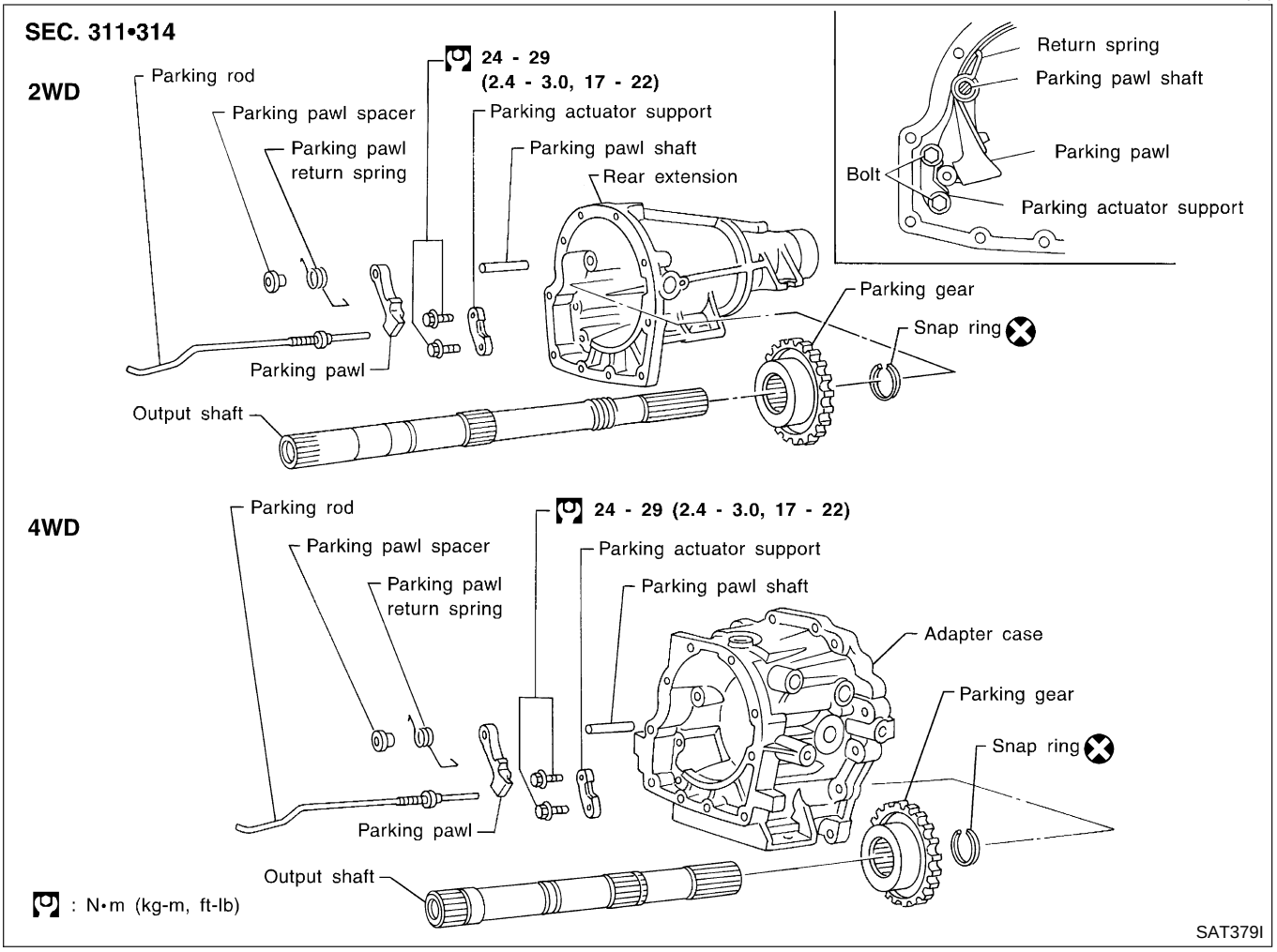

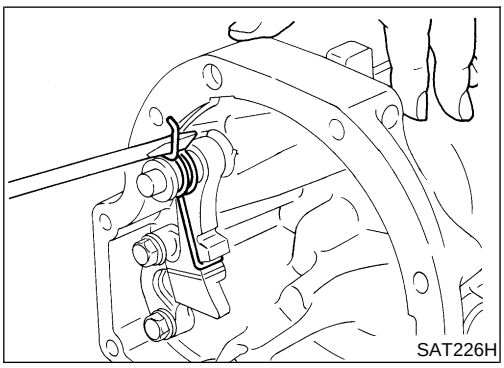

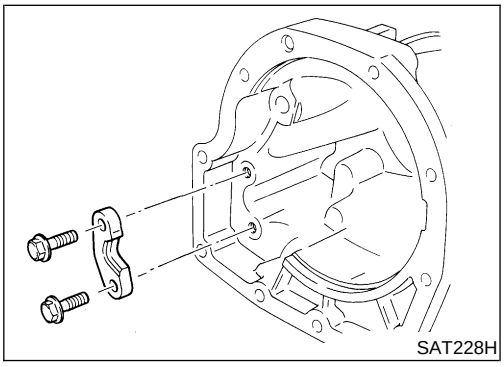

DISASSEMBLY

NEAT0280

1. Slide return spring to the front of adapter case flange.
2. Remove return spring, pawl spacer and parking pawl from adapter case.
3. Remove parking pawl shaft from adapter case.
4. Remove parking actuator support from adapter case.

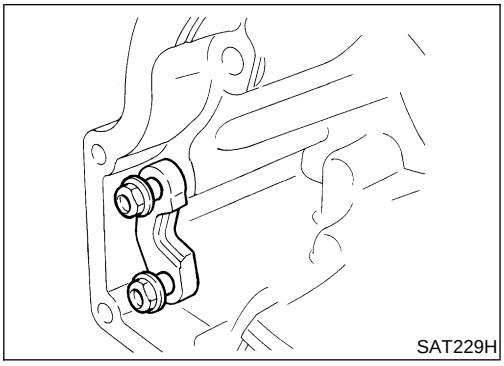
SAT229H

ASSEMBLY

=NEAT0281

1. Install parking actuator support onto adapter case.
2. Insert parking pawl shaft into adapter case.
3. Install return spring, pawl spacer and parking pawl onto parking pawl shaft.

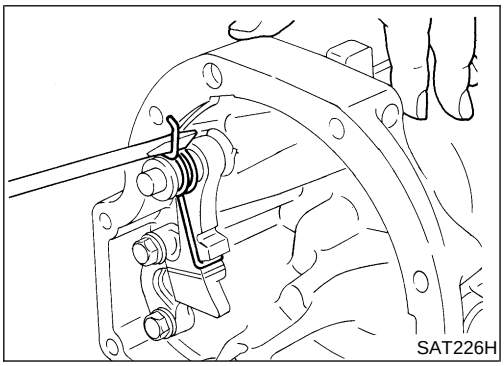
SAT226H

4. Bend return spring upward and install it onto adapter case.

Assembly (1)

NEAT0282

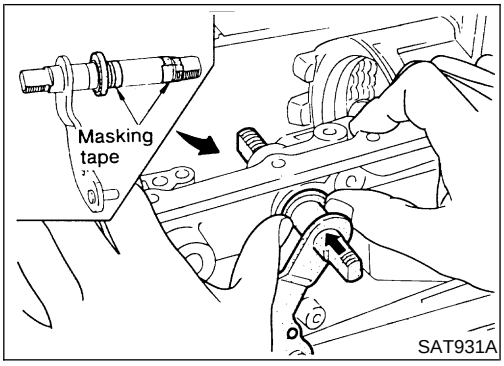

1. Install manual shaft components.

a. Install oil seal onto manual shaft.

- **Apply ATF to oil seal.**
- **Wrap threads of manual shaft with masking tape.**

b. Insert manual shaft and oil seal as a unit into transmission case.

c. Remove masking tape.

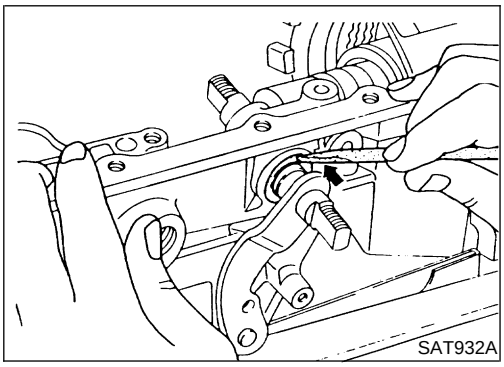

d. Push oil seal evenly and install it onto transmission case.

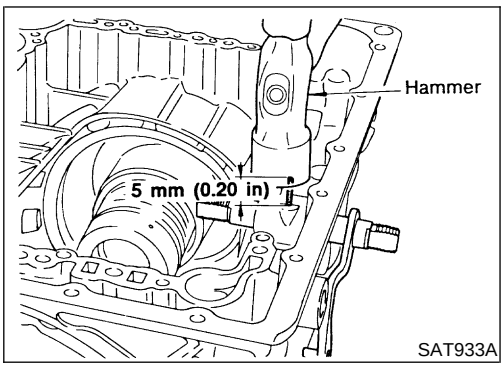

e. Align groove in shaft with drive pin hole, then drive pin into position as shown.

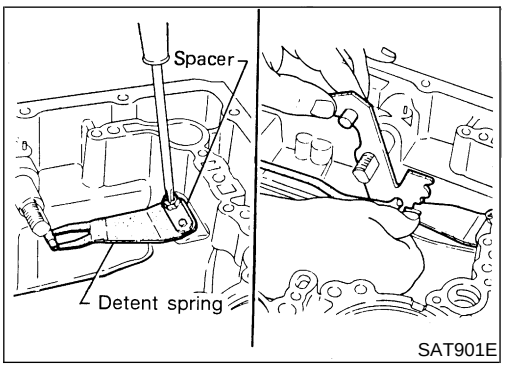

f. Install detent spring and spacer.

g. While pushing detent spring down, install manual plate onto manual shaft.

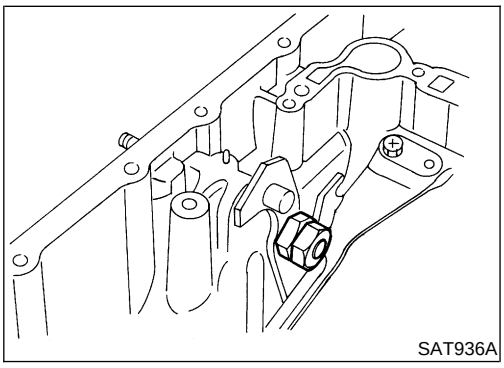

h. Install lock nuts onto manual shaft.

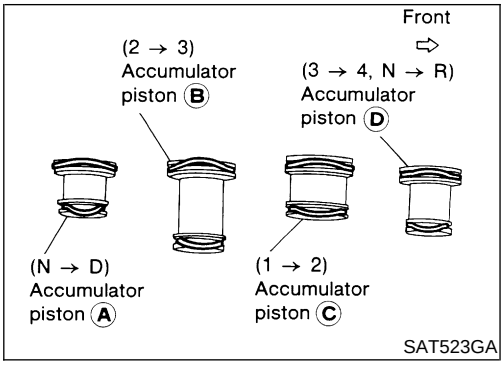

2. Install accumulator piston.
a. Install O-rings onto accumulator piston.
- **Apply ATF to O-rings.**

Accumulator piston O-rings

Unit: mm (in)

Accumulator	A	B	C	D
Small diameter end	29 (1.14)	32 (1.26)	45 (1.77)	29 (1.14)
Large diameter end	45 (1.77)	50 (1.97)	50 (1.97)	45 (1.77)

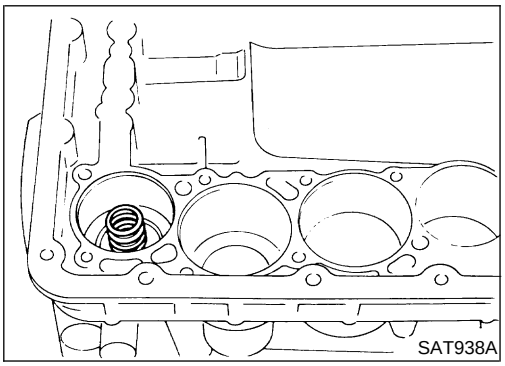

b. Install return spring for accumulator A onto transmission case.

Free length of return spring:
Refer to "Return Springs", AT-498.

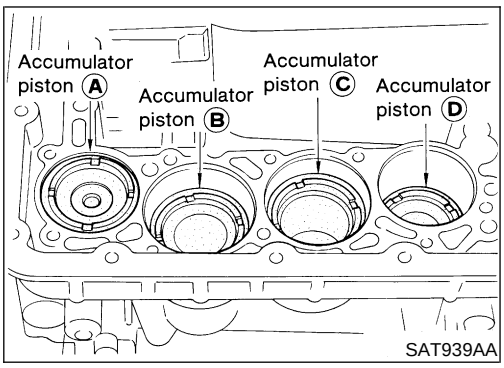

c. Install accumulator pistons A, B, C and D.
- **Apply ATF to transmission case.**

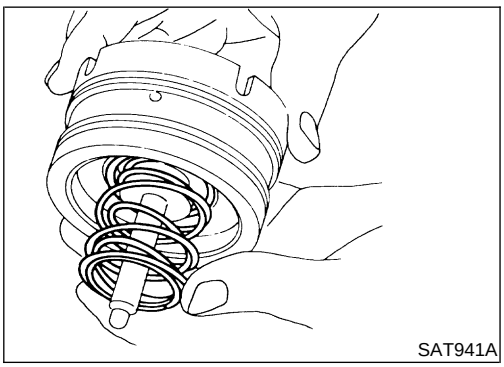

3. Install band servo piston.
a. Install return springs onto servo piston.

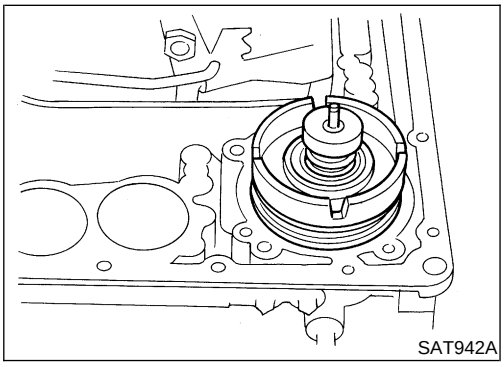

b. Install band servo piston onto transmission case.
- **Apply ATF to O-ring of band servo piston and transmission case.**

c. Install gasket for band servo onto transmission case.

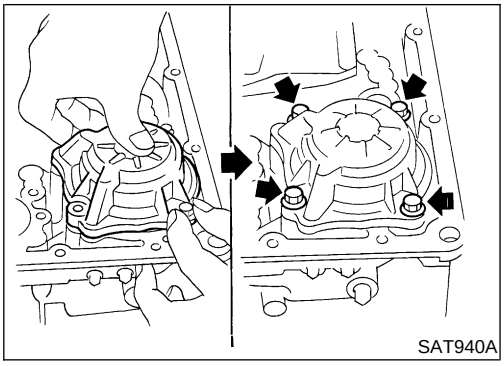
SAT940A

d. Install band servo retainer onto transmission case.

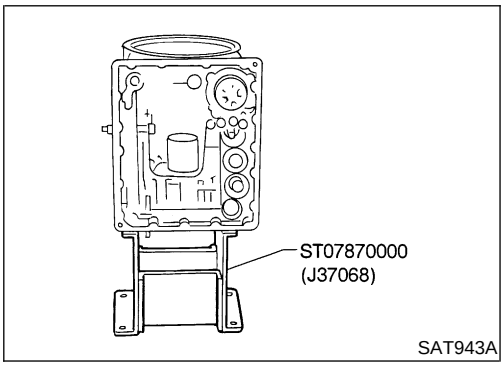

SAT943A

4. Install rear side clutch and gear components.
a. Place transmission case in vertical position.

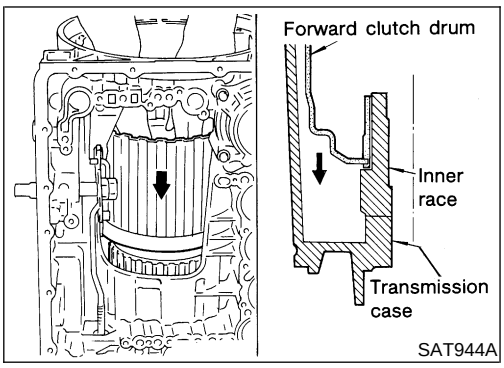

SAT944A

b. Slightly lift forward clutch drum assembly. Then slowly rotate it clockwise until its hub passes fully over clutch inner race inside transmission case.

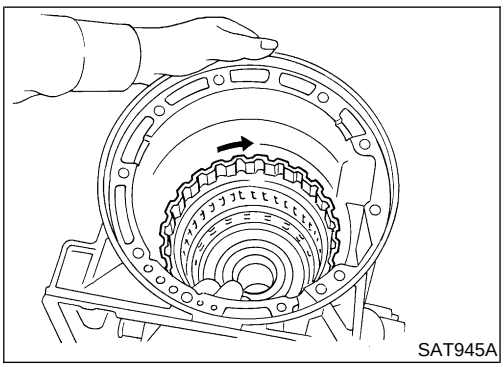
SAT945A

c. Check to be sure that rotation direction of forward clutch assembly is correct.

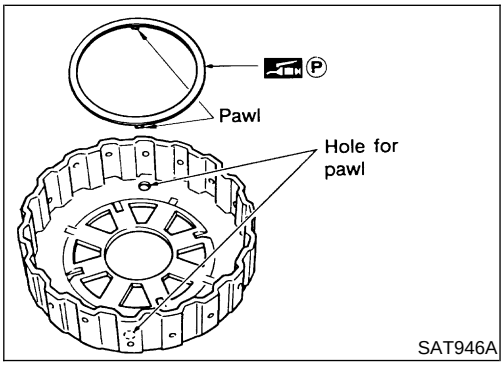

SAT946A

d. Install thrust washer onto front of overrun clutch hub.
- **Apply petroleum jelly to the thrust washer.**
- **Insert pawls of thrust washer securely into holes in overrun clutch hub.**

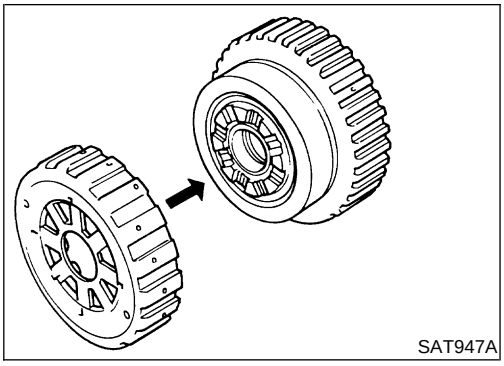
SAT947A

e. Install overrun clutch hub onto rear internal gear assembly.

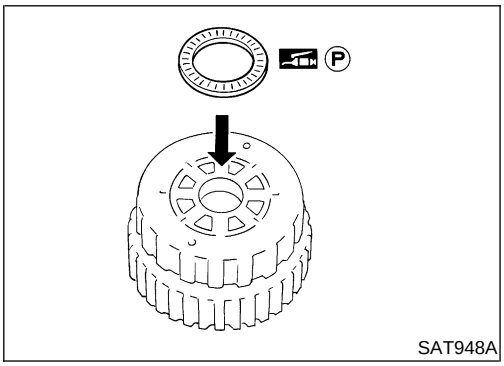

SAT948A

f. Install needle bearing onto rear of overrun clutch hub.
- **Apply petroleum jelly to needle bearing.**

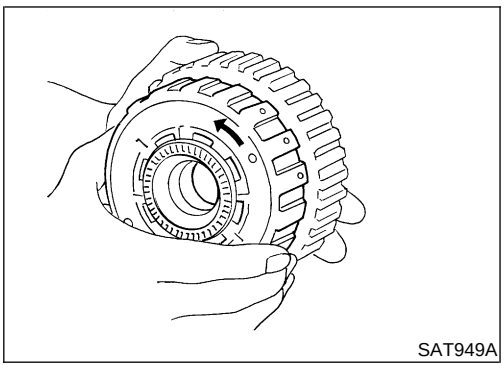
SAT949A

g. Check that overrun clutch hub rotates as shown while holding forward clutch hub.

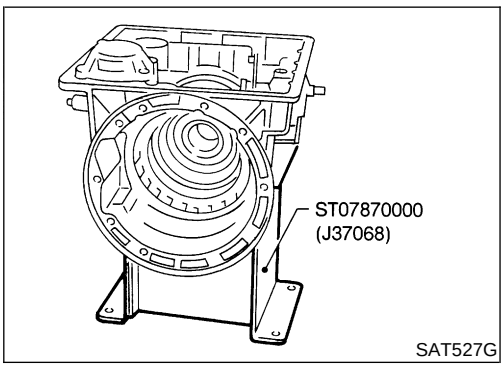

SAT527G

h. Place transmission case into horizontal position.

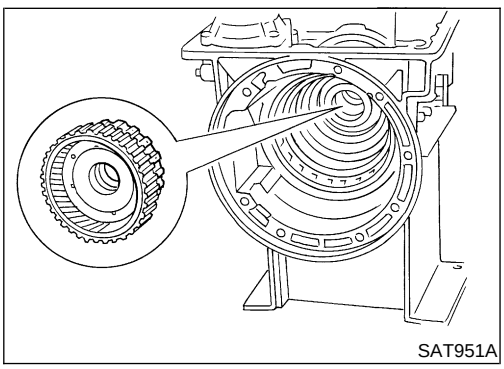
SAT951A

i. Install rear internal gear, forward clutch hub and overrun clutch hub as a unit onto transmission case.

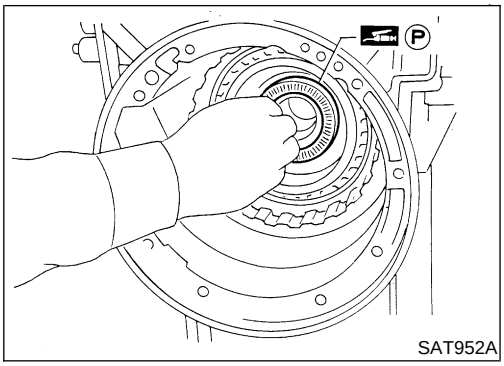

j. Install needle bearing onto rear internal gear.
- **Apply petroleum jelly to needle bearing.**

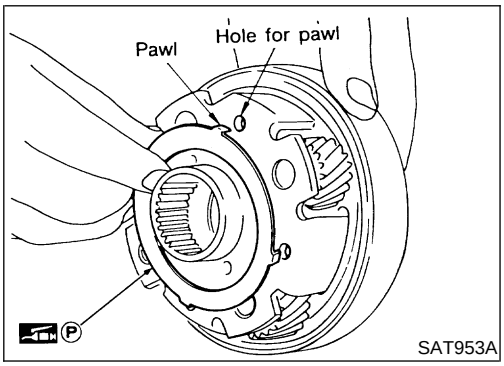

k. Install bearing race onto rear of front internal gear.
- **Apply petroleum jelly to bearing race.**
- **Securely engage pawls of bearing race with holes in front internal gear.**

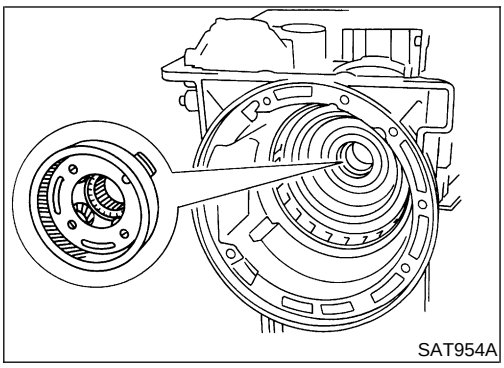

l. Install front internal gear on transmission case.

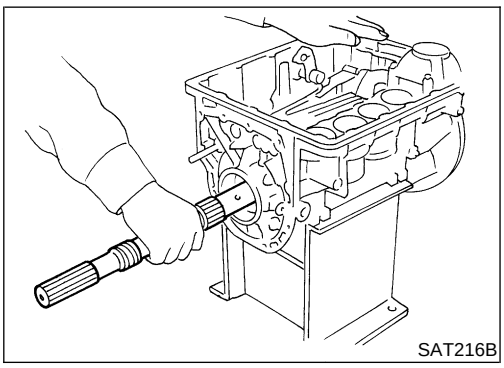

5. Install output shaft and parking gear.

a. Insert output shaft from rear of transmission case while slightly lifting front internal gear.
- **Do not force output shaft against front of transmission case.**

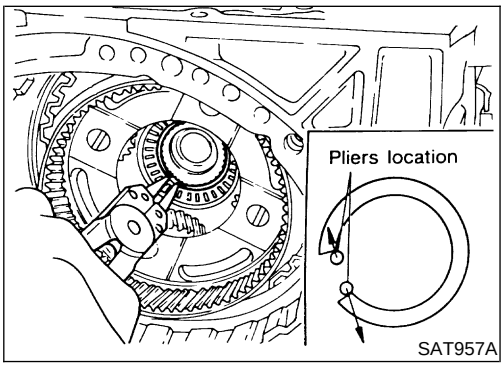

b. Carefully push output shaft against front of transmission case. Install snap ring on front of output shaft.
- **Check to be sure output shaft cannot be removed in rear direction.**

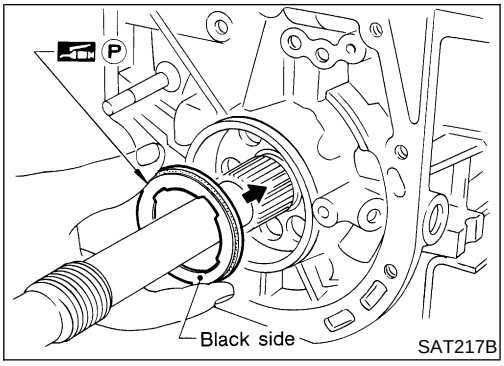

c. Install needle bearing on transmission case.
- **Pay attention to its direction — black side goes to rear.**
- **Apply petroleum jelly to needle bearing.**

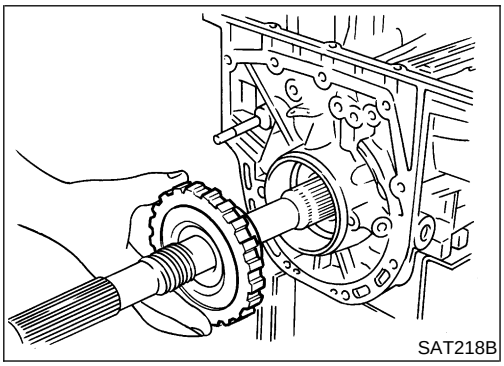

d. Install parking gear on transmission case.

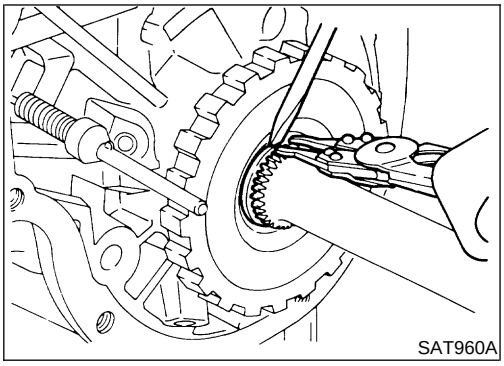

e. Install snap ring on rear of output shaft.
- **Check to be sure output shaft cannot be removed in forward direction.**

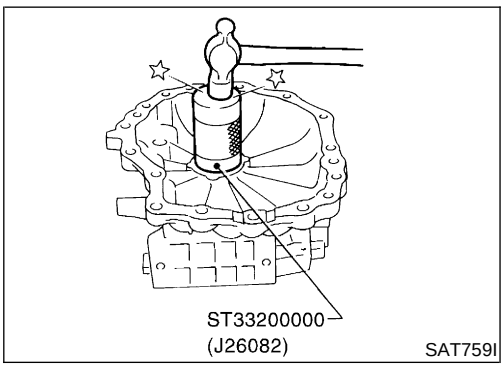

6. Install adapter case.
a. Install oil seal on adapter case.
- **Apply ATF to oil seal.**

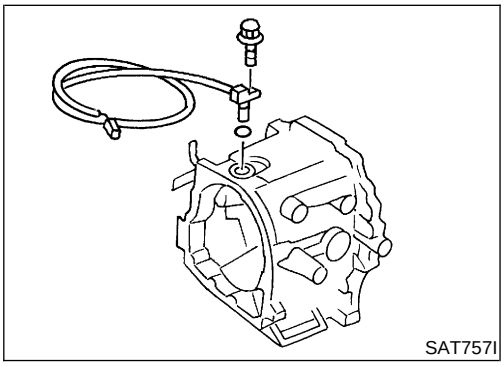

b. Install O-ring on revolution sensor.
- **Apply ATF to O-ring.**

c. Install revolution sensor on adapter case.

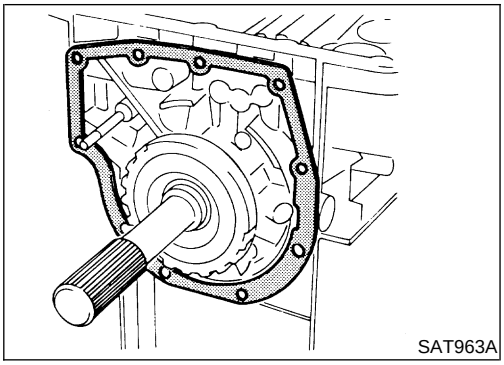
SAT963A

d. Install rear extension gasket on transmission case.

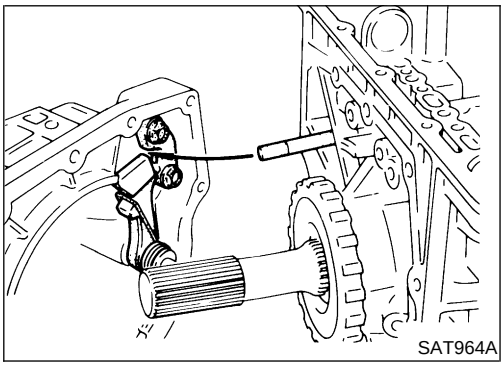
SAT964A

e. Install parking rod on transmission case.

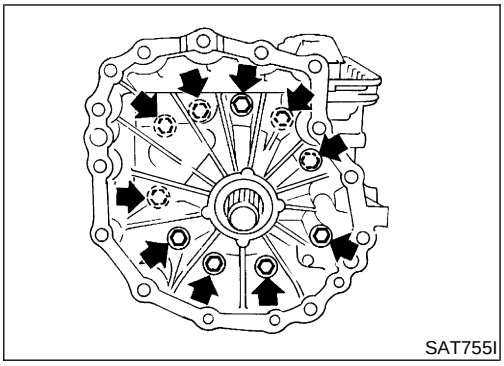
SAT755I

f. Install rear extension or adapter case on transmission case.

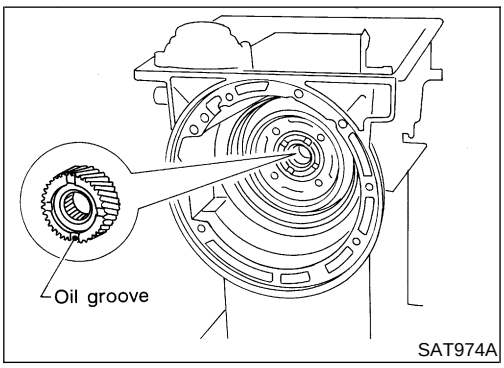

SAT974A

7. Install front side clutch and gear components.
a. Install rear sun gear on transmission case.
- **Pay attention to its direction.**

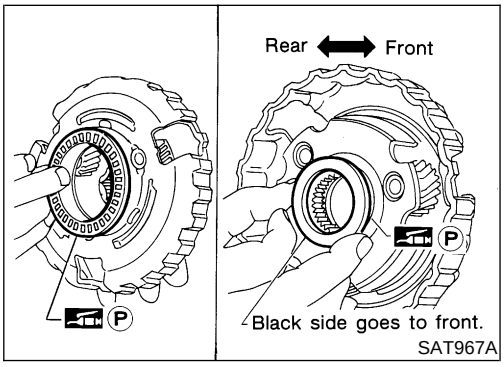

SAT967A

b. Make sure needle bearing is on front of front planetary carrier.
- **Apply petroleum jelly to needle bearing.**

c. Make sure needle bearing is on rear of front planetary carrier.
- **Apply petroleum jelly to bearing.**
- **Pay attention to its direction — Black side goes to front.**

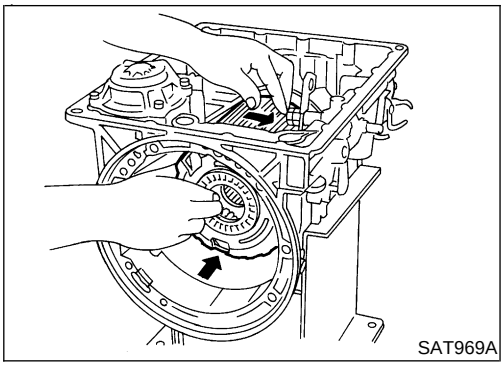
SAT969A

d. While rotating forward clutch drum clockwise, install front planetary carrier on forward clutch drum.

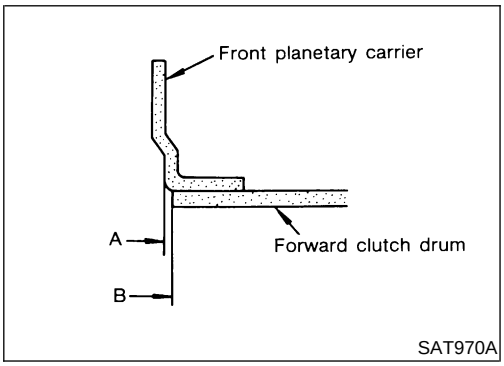

SAT970A

- **Check that portion A of front planetary carrier protrudes approximately 2 mm (0.08 in) beyond portion B of forward clutch assembly.**

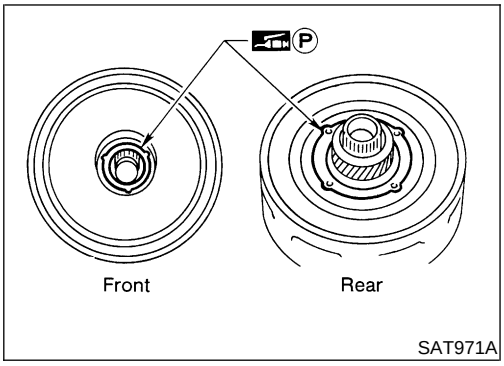

SAT971A

e. Make sure bearing races are on front and rear of clutch pack.
- **Apply petroleum jelly to bearing races.**
- **Securely engage pawls of bearing races with holes in clutch pack.**

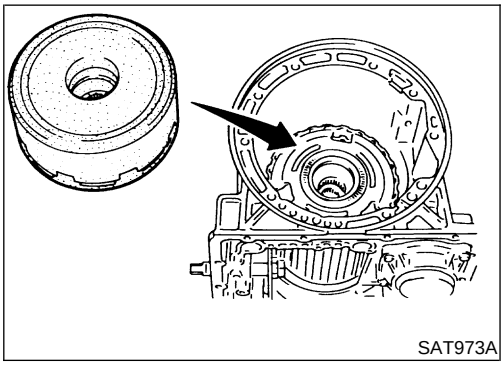
SAT973A

f. Install clutch pack into transmission case.

Adjustment

NEAT0283

When any parts listed in the following table are replaced, total end play or reverse clutch end play must be adjusted.

Part name	Total end play	Reverse clutch end play
Transmission case	●	●
Low one-way clutch inner race	●	●
Overrun clutch hub	●	●
Rear internal gear	●	●

Part name	Total end play	Reverse clutch end play
Rear planetary carrier	●	●
Rear sun gear	●	●
Front planetary carrier	●	●
Front sun gear	●	●
High clutch hub	●	●
High clutch drum	●	●
Oil pump cover	●	●
Reverse clutch drum	—	●

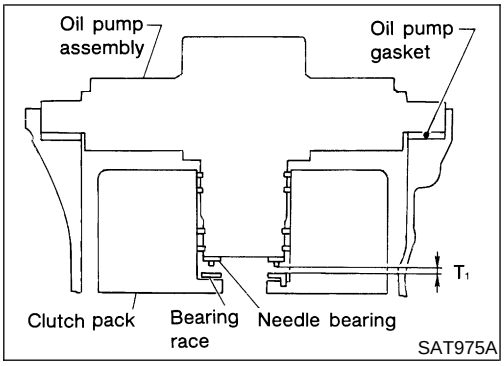

1. Adjust total end play.
   Total end play "T_1":
   0.25 - 0.55 mm (0.0098 - 0.0217 in)

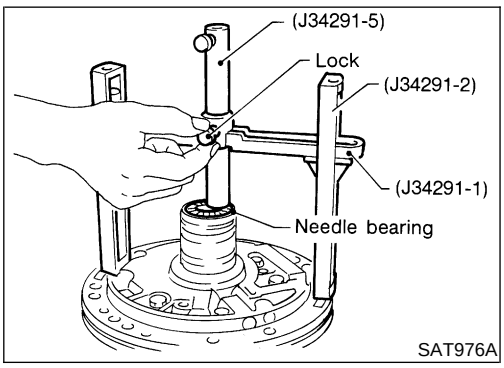

a. With needle bearing installed, place J34291-1 (bridge), J34291-2 (legs) and the J34291-5 (gauging cylinder) onto oil pump. The long ends of legs should be placed firmly on machined surface of oil pump assembly. The gauging cylinder should rest on top of the needle bearing. Lock gauging cylinder in place with set screw.

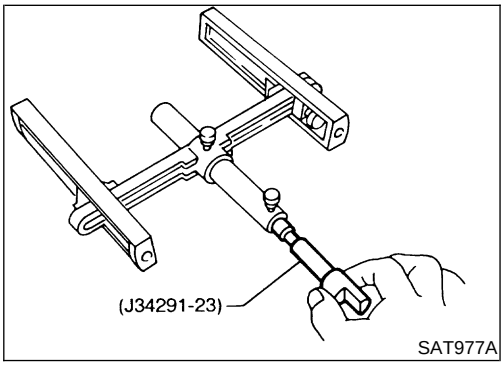

b. Install J34291-23 (gauging plunger) into gauging cylinder.

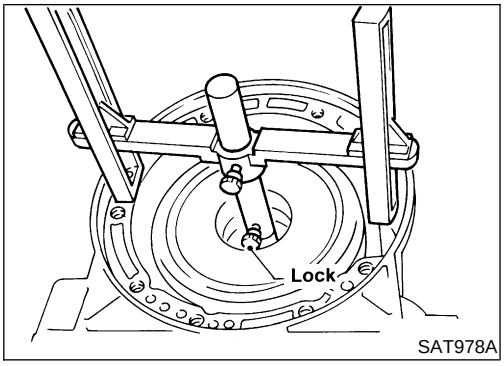

c. Install original bearing race inside reverse clutch drum. Place shim selecting gauge with its legs on machined surface of transmission case (no gasket). Allow gauging plunger to rest on bearing race. Lock gauging plunger in place with set screw.

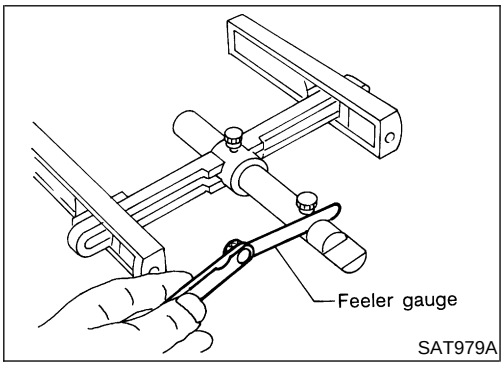

d. Remove Tool and use feeler gauge to measure gap between gauging cylinder and gauging plunger. This measurement should give exact total end play.

Total end play "T_1":
0.25 - 0.55 mm (0.0098 - 0.0217 in)

- If end play is out of specification, decrease or increase thickness of oil pump cover bearing race as necessary.

Available oil pump cover bearing race:
Refer to "Total End Play", AT-502.

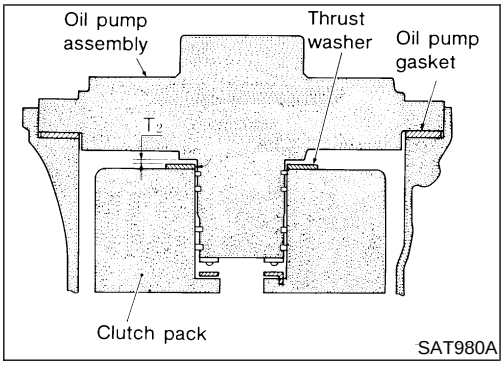

2. Adjust reverse clutch drum end play.

Reverse clutch drum end play "T_2":
0.55 - 0.90 mm (0.0217 - 0.0354 in)

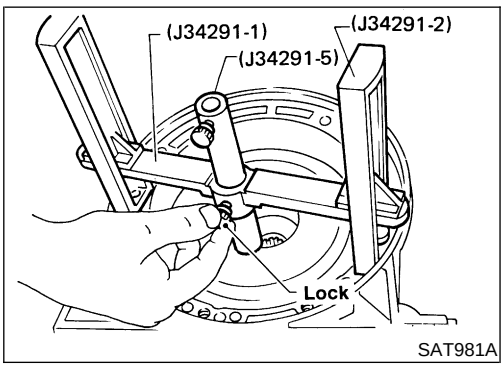

a. Place J34291-1 (bridge), J34291-2 (legs) and J34291-5 (gauging cylinder) on machined surface of transmission case (no gasket). Allow gauging cylinder to rest on front thrust surface of reverse clutch drum. Lock cylinder in place with set screw.

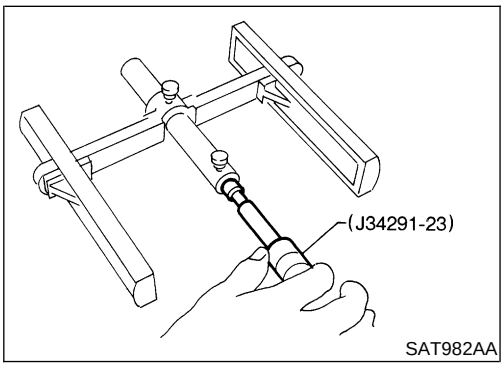

b. Install J34291-23 (gauging plunger) into gauging cylinder.

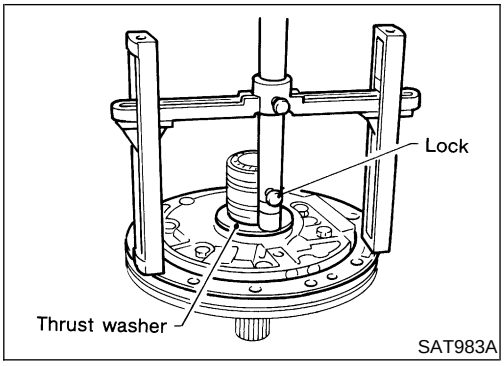

c. Install original thrust washer on oil pump. Place shim setting gauge legs onto machined surface of oil pump assembly. Allow gauging plunger to rest on thrust washer. Lock plunger in place with set screw.

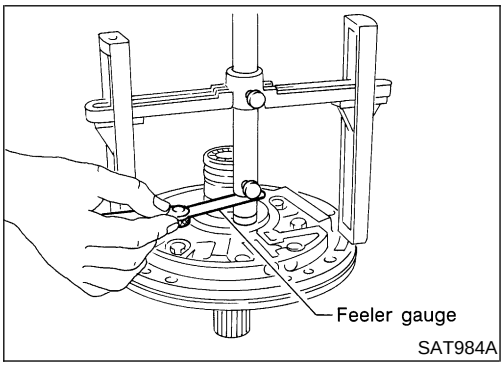

d. Use feeler gauge to measure gap between gauging plunger and gauging cylinder. This measurement should give you exact reverse clutch drum end play.

Reverse clutch drum end play "T_2":
0.55 - 0.90 mm (0.0217 - 0.0354 in)

- If end play is out of specification, decrease or increase thickness of oil pump thrust washer as necessary.

Available oil pump thrust washer:
Refer to "Reverse Clutch Drum End Play", AT-502.

Assembly (2)

NEAT0284

1. Install brake band and band strut.

a. Install band strut on brake band.

- **Apply petroleum jelly to band strut.**

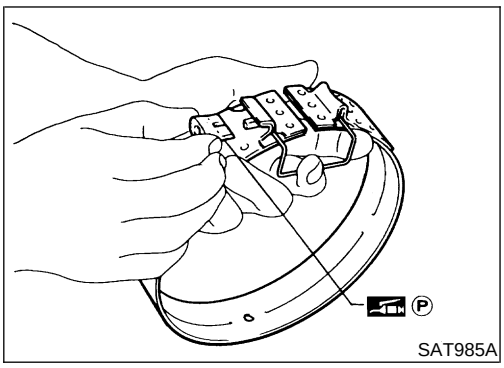

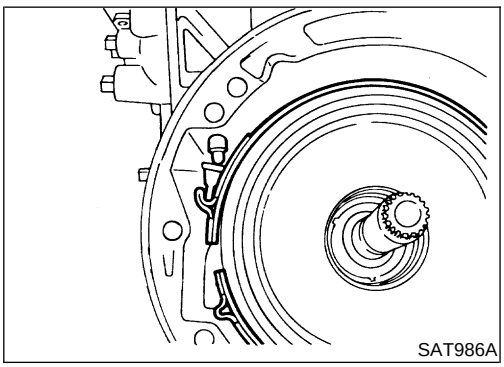

b. Place brake band on periphery of reverse clutch drum, and insert band strut into end of band servo piston stem.

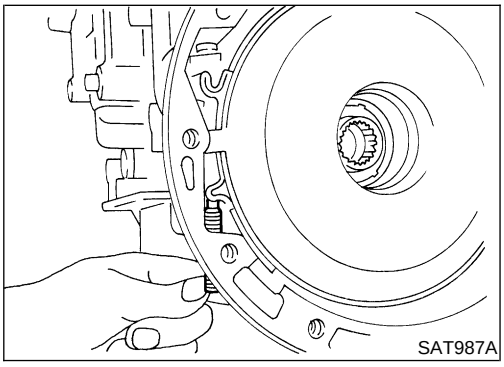

c. Install anchor end pin on transmission case. Then, tighten anchor end pin just enough so that reverse clutch drum (clutch pack) will not tilt forward.

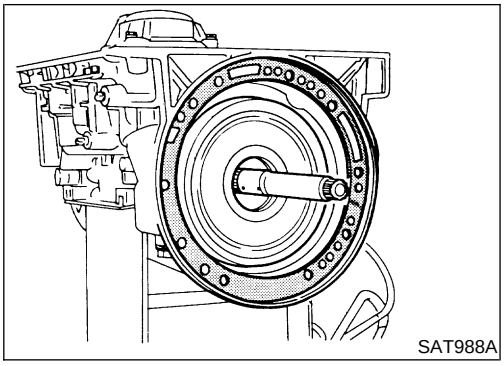
SAT988A

2. Install input shaft on transmission case.
- **Pay attention to its direction — O-ring groove side is front.**
3. Install gasket on transmission case.

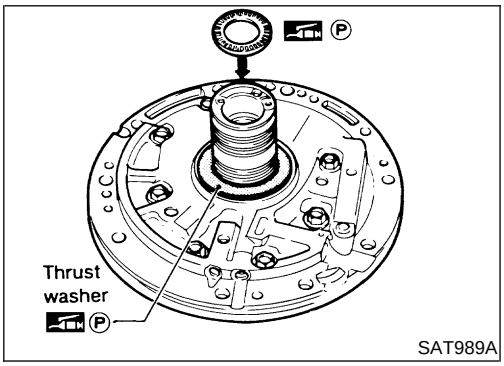

SAT989A

4. Install oil pump assembly.
a. Install needle bearing on oil pump assembly.
- **Apply petroleum jelly to the needle bearing.**
b. Install selected thrust washer on oil pump assembly.
- **Apply petroleum jelly to thrust washer.**

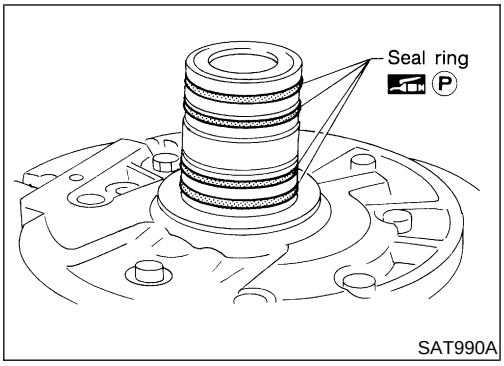

SAT990A

c. Carefully install seal rings into grooves and press them into the petroleum jelly so that they are a tight fit.

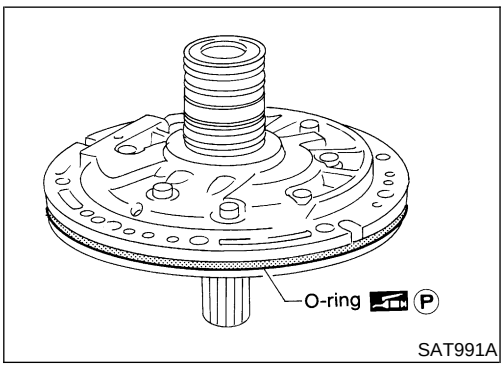

SAT991A

d. Install O-ring on oil pump assembly.
- **Apply petroleum jelly to O-ring.**

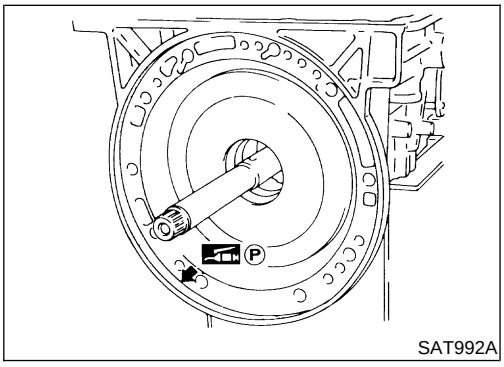

SAT992A

e. Apply petroleum jelly to mating surface of transmission case and oil pump assembly.

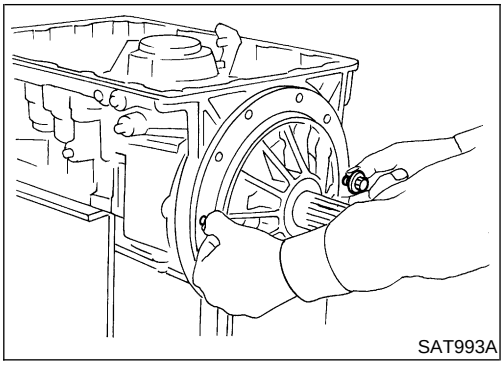
SAT993A

f. Install oil pump assembly.

- **Install two converter housing securing bolts in bolt holes in oil pump assembly as guides.**

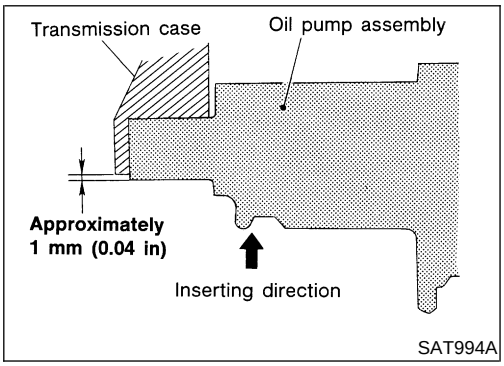

SAT994A

- **Insert oil pump assembly to the specified position in transmission, as shown at left.**

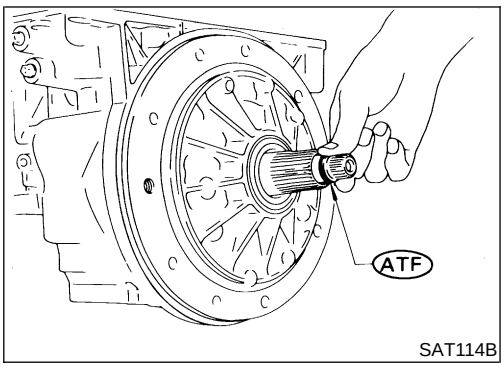

SAT114B

5. Install O-ring on input shaft.

- **Apply ATF to O-rings.**

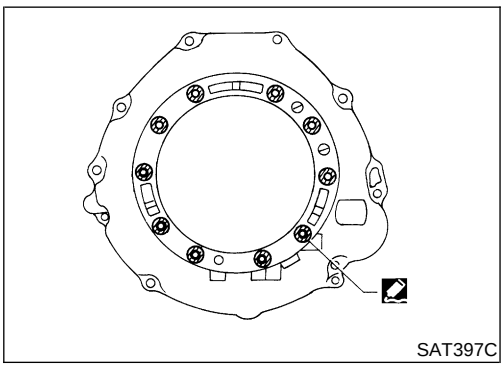
SAT397C

6. Install converter housing.

a. Apply recommended sealant (Genuine anaerobic liquid gasket, Three Bond TB1215, Locktite Part No. 51813 or equivalent) to outer periphery of bolt holes in converter housing.

- **Do not apply too much sealant.**

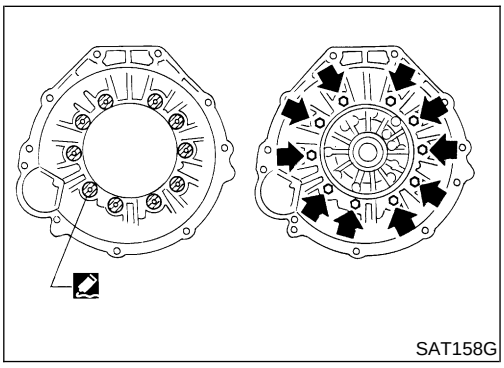
SAT158G

b. Apply recommended sealant (Genuine anaerobic liquid gasket, Three Bond TB1215, Locktite Part No. 51813 or equivalent) to seating surfaces of bolts that secure front of converter housing.

c. Install converter housing on transmission case.

7. Install turbine revolution sensor (VG33ER only).

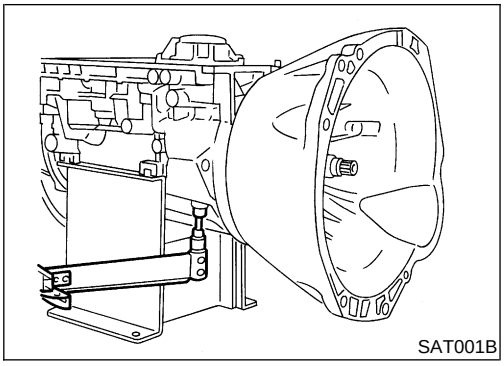
SAT001B

8. Adjust brake band.
a. Tighten anchor end bolt to specified torque.
Anchor end bolt:
: 4 - 6 N·m (0.4 - 0.6 kg-m, 35 - 52 in-lb)
b. Back off anchor end bolt two and a half turns.

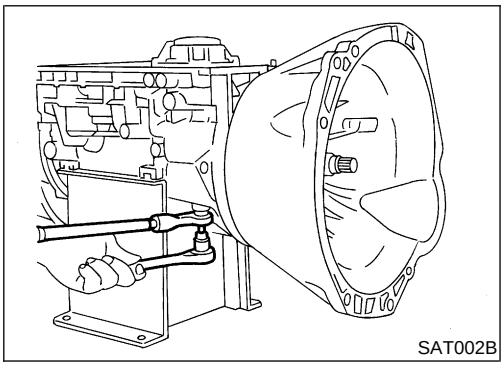
SAT002B

c. While holding anchor end pin, tighten lock nut.

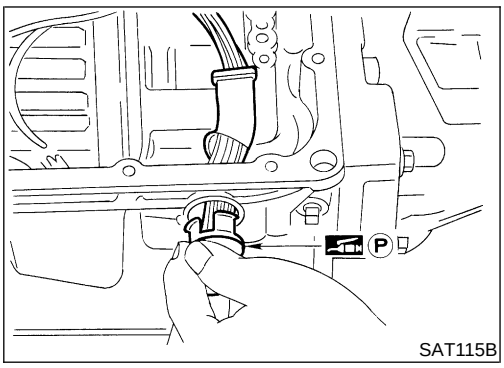

SAT115B

9. Install terminal cord assembly.
a. Install O-ring on terminal cord assembly.
- **Apply petroleum jelly to O-ring.**
b. Compress terminal cord assembly stopper and install terminal cord assembly on transmission case.

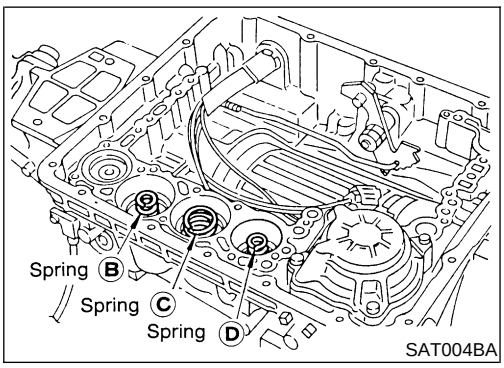

SAT004BA

10. Install control valve assembly.
a. Install accumulator piston return springs B, C and D.
Free length of return springs:
Refer to "Return Springs", AT-498.

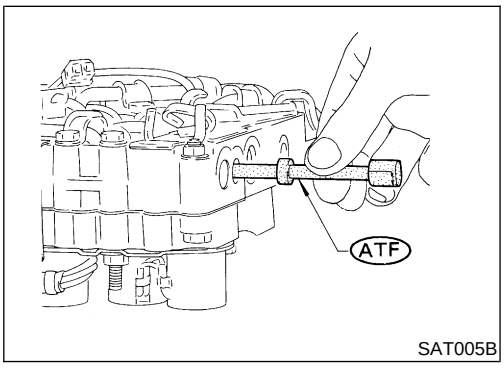

SAT005B

b. Install manual valve on control valve.
- **Apply ATF to manual valve.**

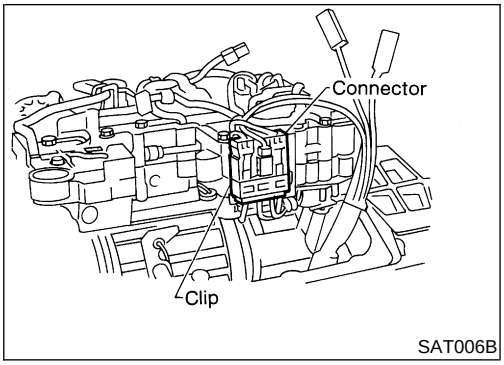

SAT006B

c. Place control valve assembly on transmission case. Connect solenoid connector for upper body.
d. Install connector clip.

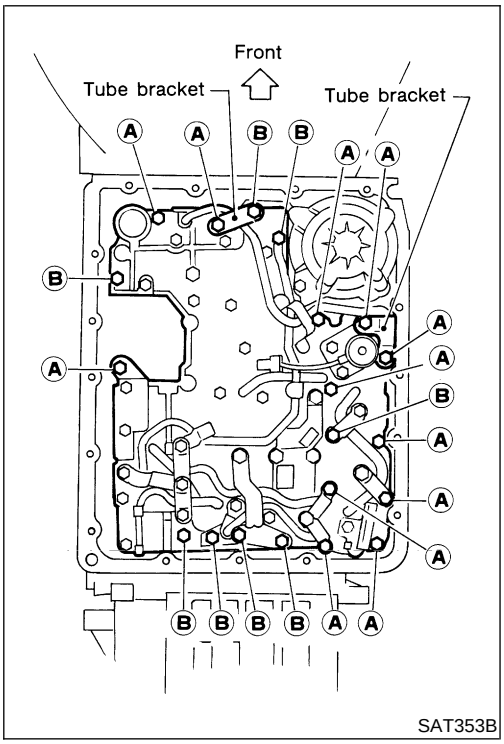

SAT353B

e. Install control valve assembly on transmission case.
f. Install connector tube brackets and tighten bolts A and B.

- **Check that terminal assembly does not catch.**

Bolt symbol	ℓ mm (in)
A	33 (1.30)
B	45 (1.77)

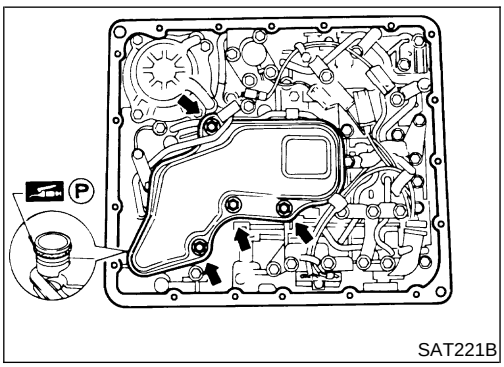

SAT221B

g. Install O-ring on oil strainer.

- **Apply petroleum jelly to O-ring.**

h. Install oil strainer on control valve.

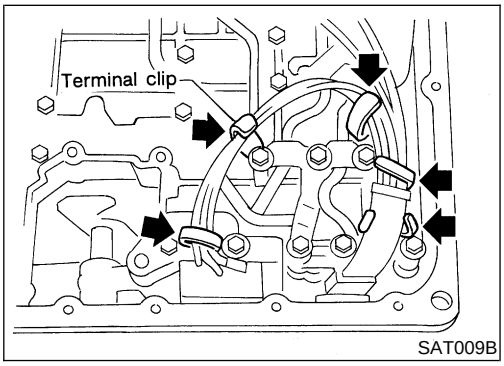

SAT009B

i. Securely fasten terminal harness with clips.

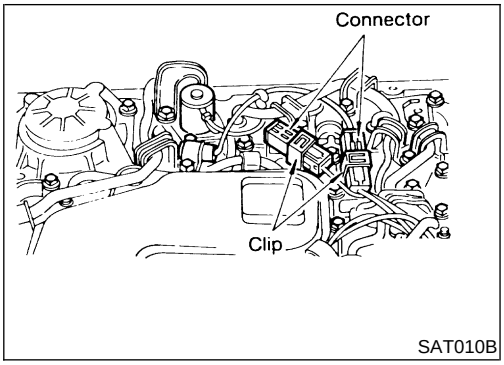

SAT010B

j. Install torque converter clutch solenoid valve and fluid temperature sensor connectors.

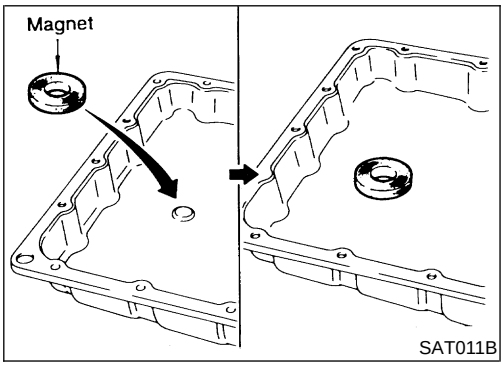

SAT011B

11. Install oil pan.
a. Attach a magnet to oil pan.

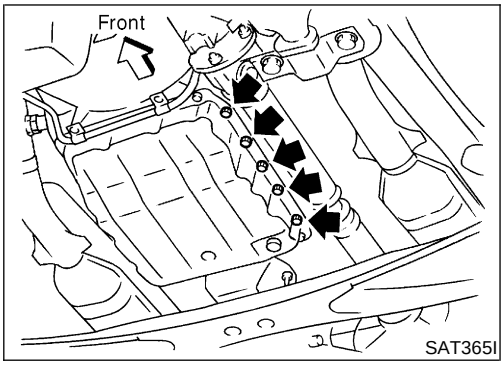

SAT365I

b. Install new oil pan gasket on transmission case.
c. Install oil pan and bracket on transmission case.
- **Always replace oil pan bolts as they are self-sealing bolts.**
- **Before installing bolts, remove traces of sealant and oil from mating surface and thread holes.**
- **Tighten four bolts in a crisscross pattern to prevent dislocation of gasket.**

d. Tighten drain plug.

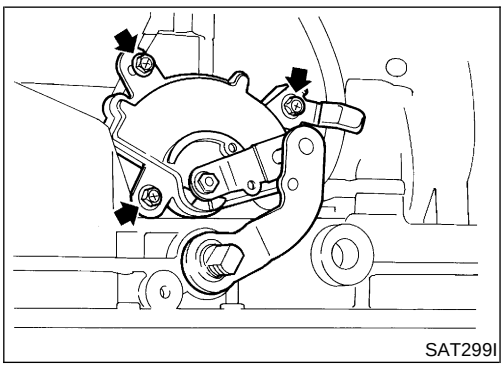
SAT299I

12. Install park/neutral position (PNP) switch.
a. Check that manual shaft is in 1 position.
b. Temporarily install park/neutral position (PNP) switch on manual shaft.
c. Move manual shaft to N.

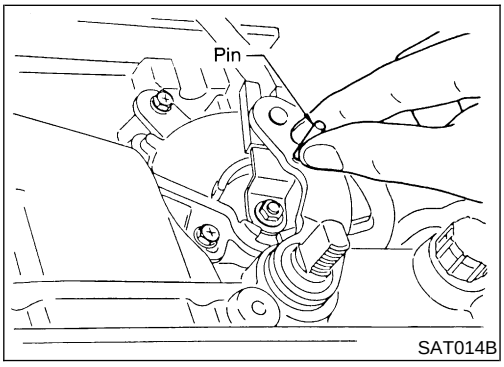

SAT014B

d. Tighten bolts while inserting 4.0 mm (0.157 in) dia. pin vertically into locating holes in park/neutral position (PNP) switch and manual shaft.

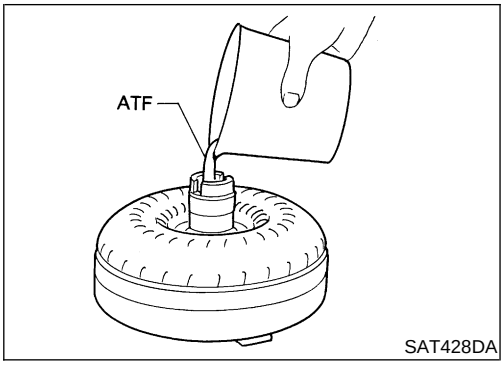

13. Install torque converter.

a. Pour ATF into torque converter.

- **Approximately 2 liters (2-1/8 US qt, 1-3/4 Imp qt) of fluid are required for a new torque converter.**
- **When reusing old torque converter, add the same amount of fluid as was drained.**

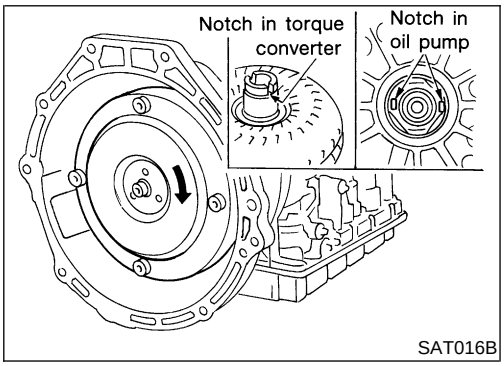

b. Install torque converter while aligning notches and oil pump.

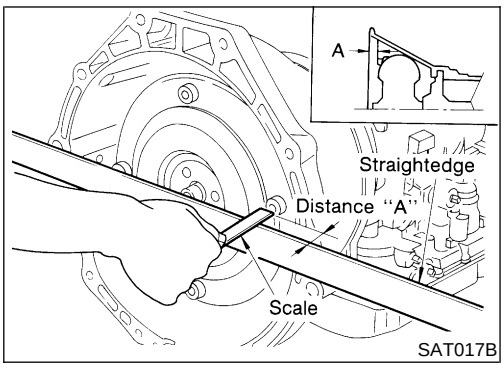

c. Measure distance A to check that torque converter is in proper position.

Distance "A":

VG33E only: 26.0 mm (1.024 in) or more

VG33ER only: 25.0 mm (0.984 in) or more

General Specifications

NEAT0285

Applied model		VG33E engine		VG33ER engine	
		2WD	4WD	2WD	4WD
Automatic transmission model		RE4R01A			
Transmission model code number		43X64	4EX01	4EX67	4EX68
Stall torque ratio		2.0 : 1			
Transmission gear ratio	1st	2.785			
	2nd	1.545			
	Top	1.000			
	O/D	0.694			
	Reverse	2.272			
Recommended fluid		Nissan Matic “D” (Continental U.S. and Alaska) or Genuine Nissan Automatic Transmission Fluid (Canada)*1			
Fluid capacity		8.3ℓ (8-3/4 US qt, 7-1/4 Imp qt)	8.5ℓ (9 US qt, 7-1/2 Imp qt)	8.3ℓ (8-3/4 US qt, 7-1/4 Imp qt)	8.5ℓ (9 US qt, 7-1/2 Imp qt)

*1: Refer to ***MA-13***, “Fluids and Lubricants”.

Shift Schedule

NEAT0286

VEHICLE SPEED WHEN SHIFTING GEARS THROTTLE POSITION

NEAT0286S01

Throttle position		Vehicle speed km/h (MPH)						
		$D_1 \rightarrow D_2$	$D_2 \rightarrow D_3$	$D_3 \rightarrow D_4$	$D_4 \rightarrow D_3$	$D_3 \rightarrow D_2$	$D_2 \rightarrow D_1$	$1_2 \rightarrow 1_1$
Full throttle	VG33E only	47 - 51 (29 - 32)	92 - 100 (57 - 62)	146 - 156 (91 - 97)	141 - 151 (88 - 94)	87 - 95 (54 - 59)	42 - 46 (26 - 29)	43 - 47 (27 - 29)
	VG33ER only	49 - 53 (30 - 33)	94 - 102 (58 - 63)	151 - 161 (94 - 100)	147 - 157 (91 - 98)	87 - 95 (54 - 59)	43 - 47 (27 - 29)	54 - 58 (34 - 36)
Half throttle	VG33E only	34 - 38 (21 - 24)	68 - 74 (42 - 46)	132 - 140 (82 - 87)	59 - 67 (37 - 42)	31 - 37 (19 - 23)	10 - 14 (6 - 9)	43 - 47 (27 - 29)
	VG33ER only	41 - 45 (25 - 28)	68 - 74 (42 - 46)	121 - 129 (75 - 80)	76 - 84 (47 - 52)	41 - 47 (25 - 29)	11 - 15 (7 - 9)	54 - 58 (34 - 36)

VEHICLE SPEED WHEN PERFORMING AND RELEASING LOCK-UP

NEAT0286S02

Throttle position		Overdrive control switch [Shift position]	Vehicle speed km/h (MPH)	
			Lock-up “ON”	Lock-up “OFF”
Full throttle	VG33E only	ON [D_4]	147 - 155 (91 - 96)	142 - 150 (88 - 93)
		OFF [D_3]	74 - 82 (46 - 51)	71 - 79 (44 - 49)
	VG33ER only	ON [D_4]	152 - 160 (94 - 99)	148 -156 (92 - 97)
		OFF [D_3]	86 - 94 (53 - 58)	83 - 91 (52 - 57)
Half throttle	VG33E only	ON [D_4]	139 - 147 (86 - 91)	84 - 92 (52 - 57)
		OFF [D_3]	74 - 82 (46 - 51)	71 - 79 (44 - 49)
	VG33ER only	ON [D_4]	134 - 142 (83 - 88)	103 - 111 (64 - 69)
		OFF [D_3]	86 - 94 (53 - 58)	83 - 91 (52 - 57)

Stall Revolution

NEAT0287

Stall revolution rpm	2,420 - 2,620

Line Pressure

NEAT0288

Engine speed rpm	Line pressure kPa (kg/cm^2, psi)	
	D, 2 and 1 positions	R position
Idle	422 - 461 (4.3 - 4.7, 61 - 67)	667 - 706 (6.8 - 7.2, 97 - 102)
Stall	1,020 - 1,098 (10.4 - 11.2, 148 - 159)	1,422 - 1,500 (14.5 - 15.3, 206 - 218)

Return Springs

NEAT0289

Unit: mm (in)

Parts				Item		
				Part No.*	Free length	Outer diameter
Control valve	Upper body	1	Torque converter relief valve spring	31742-41X23	38.0 (1.496)	9.0 (0.354)
		2	Pressure regulator valve spring	31742-41X24	44.02 (1.7331)	14.0 (0.551)
		3	Pressure modifier valve spring	31742-41X19	31.95 (1.2579)	6.8 (0.268)
		—	Accumulator control valve spring	—	—	—
		4	Shuttle shift valve D spring	31762-41X01	25.0 (0.984)	7.0 (0.276)
		5	4-2 sequence valve spring	31756-41X00	29.1 (1.146)	6.95 (0.2736)
		6	Shift valve B spring	31762-41X01	25.0 (0.984)	7.0 (0.276)
		7	4-2 relay valve spring	31756-41X00	29.1 (1.146)	6.95 (0.2736)
		8	Shift valve A spring	31762-41X01	25.0 (0.984)	7.0 (0.276)
		9	Overrun clutch control valve spring	31762-41X03 (VG33E only) 31762-41X14 (VG33ER only)	23.6 (0.929) (VG33E only) 38.7 (1.524) (VG33ER only)	7.0 (0.276)
		10	Overrun clutch reducing valve spring	31742-41X20	32.5 (1.280)	7.0 (0.276)
		11	Shuttle shift valve S spring	31762-41X04	51.0 (2.008)	5.65 (0.2224)
		12	Pilot valve spring	31742-41X13	25.7 (1.012)	9.0 (0.354)
		13	Lock-up control valve spring	31742-41X22	18.5 (0.728)	13.0 (0.512)
	Lower body	1	Modifier accumulator piston spring	31742-27X70	31.4 (1.236)	9.8 (0.386)
		2	1st reducing valve spring	31756-41X05 (VG33E only) 31756-60X60 (VG33ER only)	25.4 (1.000) (VG33E only) 29.5 (1.161) (VG33ER only)	6.75 (0.2657) (VG33E only) 7.00 (0.2756) (VG33ER only)
		3	3-2 timing valve spring	31742-41X06	23.0 (0.906)	6.7 (0.264)
		4	Servo charger valve spring	31742-41X06	23.0 (0.906)	6.7 (0.264)
Reverse clutch			16 pcs VG33E only 1 pc VG33ER only	31521-41X02 (Assembly) (VG33E only) 31505-41X07 (Assembly) (VG33ER only)	19.7 (0.7756) (VG33E only) — (VG33ER only)	11.6 (0.457) (VG33E only) — (VG33ER only)
High clutch			10 pcs	31521-41X03 (Assembly)	24.2 (0.9528)	11.6 (0.457)
Forward clutch (Overrun clutch)			20 pcs	31521-41X04 (Assembly)	35.77 (1.4083)	9.7 (0.382)

Parts			Item		
			Part No.*	Free length	Outer diameter
Low & reverse brake		18 pcs	31655-41X00 (Assembly)	22.3 (0.878)	11.2 (0.441)
Band servo		Spring A	31605-41X05 (VG33E only) 31605-41X14 (VG33ER only)	45.6 (1.795) (VG33E only) 47.6 (1.874) (VG33ER only)	34.3 (1.350) (VG33E only) 26.5 (1.043) (VG33ER only)
		Spring B	31605-41X00	53.8 (2.118)	40.3 (1.587)
		Spring C	31605-41X01	29.7 (1.169)	27.6 (1.087)
Accumulator		Accumulator A	31605-41X02	43.0 (1.693)	18.0 (0.709)
		Accumulator B	31605-41X10 (VG33E only) 31605-4AX03 (VG33ER only)	66.0 (2.598)	20.0 (0.787)
		Accumulator C	31605-41X09	45.0 (1.772)	29.3 (1.154)
		Accumulator D	31605-41X06	58.4 (2.299)	17.3 (0.681)

*: Always check with the Parts Department for the latest parts information.

Accumulator O-ring

NEAT0290

Accumulator	Diameter mm (in)			
	A	B	C	D
Small diameter end	29 (1.14)	32 (1.26)	45 (1.77)	29 (1.14)
Large diameter end	45 (1.77)	50 (1.97)	50 (1.97)	45 (1.77)

Clutches and Brakes

REVERSE CLUTCH

NEAT0291

NEAT0291S01

Code number		43X64 (VG33E only)	4EX01 (VG33E only)	4EX67 (VG33ER only)	4EX68 (VG33ER only)
Number of drive plates		2			
Number of driven plates		2			
Thickness of drive plate mm (in)	Standard	1.90 - 2.05 (0.0748 - 0.0807)			
	Wear limit	1.80 (0.0709)			
Clearance mm (in)	Standard	0.5 - 0.8 (0.020 - 0.031)			
	Allowable limit	1.2 (0.047)			
Thickness of retaining plate		Thickness mm (in)	Part No.*	Thickness mm (in)	Part No.*
		4.8 (0.189) 5.0 (0.197) 5.2 (0.205) 5.4 (0.213) 5.6 (0.220)	31537-42X02 31537-42X03 31537-42X04 31537-42X05 31537-42X06	4.6 (0.181) 4.8 (0.189) 5.0 (0.197) 5.2 (0.205) 5.4 (0.213)	31537-42X20 31537-42X21 31537-42X22 31537-42X23 31537-42X24

*: Always check with the Parts Department for the latest parts information.

HIGH CLUTCH

NEAT0291S02

Code number		43X64	4EX01	4EX67	4EX68
Number of drive plates		5			
Number of driven plates		5		6	
Thickness of drive plate mm (in)	Standard	1.52 - 1.67 (0.0598 - 0.0657)			
	Wear limit	1.40 (0.0551)			
Clearance mm (in)	Standard	1.8 - 2.2 (0.071 - 0.087)			
	Allowable limit	3.2 (0.126)		2.2 (0.087)	
Thickness of retaining plate		Thickness mm (in)	Part No.*	Thickness mm (in)	Part No.*
		3.4 (0.134) 3.6 (0.142) 3.8 (0.150) 4.0 (0.157) 4.2 (0.165) 4.4 (0.173) 4.6 (0.181) 4.8 (0.189)	31537-41X71 31537-41X61 31537-41X62 31537-41X63 31537-41X64 31537-41X65 31537-41X66 31537-41X67	3.4 (0.134) 3.6 (0.142) 3.8 (0.150) 4.0 (0.157) 4.2 (0.165) 4.4 (0.173) 4.6 (0.181) 4.8 (0.189) 5.0 (0.197)	31537-41X71 31537-41X61 31537-41X62 31537-41X63 31537-41X64 31537-41X65 31537-41X66 31537-41X67 31537-41X68

*: Always check with the Parts Department for the latest parts information.

FORWARD CLUTCH

NEAT0291S03

Code number		43X64 (VG33E only)		4EX01 (VG33E only)		4EX67 (VG33ER only)		4EX68 (VG33ER only)	
Number of drive plates		6		7		7		8	
Number of driven plates		6		7		7		8	
Thickness of drive plate mm (in)	Standard	1.52 - 1.67 (0.0598 - 0.0657)							
	Wear limit	1.40 (0.0551)							
Clearance mm (in)	Standard	0.35 - 0.75 (0.0138 - 0.0295)							
	Allowable limit	1.95 (0.0768)		2.15 (0.0846)		2.15 (0.0846)		2.35 (0.0925)	
Thickness of retaining plate		Thickness mm (in)	Part No.*	Thickness mm (in)	Part No.*	Thickness mm (in)	Part No.*	Thickness mm (in)	Part No.*
		8.0 (0.315) 8.1 (0.319) 8.2 (0.323) 8.3 (0.327) 8.4 (0.331) 8.5 (0.335) 8.6 (0.339) 8.7 (0.343) 8.8 (0.346) 8.9 (0.350) 9.0 (0.354) 9.1 (0.358) 9.2 (0.362)	31537-41X00 31537-42X60 31537-41X01 31537-42X61 31537-41X02 31537-42X62 31537-41X03 31537-42X63 31537-41X04 31537-42X64 31537-41X05 31537-42X65 31537-41X06	4.6 (0.181) 4.8 (0.189) 5.0 (0.197) 5.2 (0.205) 5.4 (0.213) 5.6 (0.220)	31537-42X13 31537-42X14 31537-42X15 31537-4AX00 31537-4AX01 31537-4AX02	4.6 (0.181) 4.8 (0.189) 5.0 (0.197) 5.2 (0.205) 5.4 (0.213) 5.6 (0.220)	31537-42X13 31537-42X14 31537-42X15 31537-4AX00 31537-4AX01 31537-4AX02	4.2 (0.165) 4.4 (0.173) 4.6 (0.181) 4.8 (0.189) 5.0 (0.197) 5.2 (0.205) 5.4 (0.213)	31537-42X11 31537-42X12 31537-42X13 31537-42X14 31537-42X15 31537-4AX00 31537-4AX01

*: Always check with the Parts Department for the latest parts information.

OVERRUN CLUTCH

NEAT0291S04

Code number		43X64 (VG33E only)	4EX01 (VG33E only)	4EX67 (VG33ER only)	4EX68 (VG33ER only)
Number of drive plates		3			
Number of driven plates		5			
Thickness of drive plate mm (in)	Standard	1.90 - 2.05 (0.0748 - 0.0807)			
	Wear limit	1.80 (0.0709)			
Clearance mm (in)	Standard	1.0 - 1.4 (0.039 - 0.055)			
	Allowable limit	2.4 (0.094)			
Thickness of retaining plate		Thickness mm (in)		Part No.*	
		4.2 (0.165) 4.4 (0.173) 4.6 (0.181) 4.8 (0.189) 5.0 (0.197)		31537-41X80 31537-41X81 31537-41X82 31537-41X83 31537-41X84	

*: Always check with the Parts Department for the latest parts information.

LOW & REVERSE BRAKE

NEAT0291S05

Code number		43X64 (VG33E only)	4EX01 (VG33E only)	4EX67 (VG33ER only)	4EX68 (VG33ER only)
Number of drive plates		7		8	
Number of driven plates		7		8	
Thickness of drive plate mm (in)	Standard	1.52 - 1.67 (0.0598 - 0.0657)			
	Wear limit	1.40 (0.0551)			
Clearance mm (in)	Standard	0.8 - 1.1 (0.031 - 0.043)			
	Allowable limit	2.5 (0.098)		2.7 (0.106)	
Thickness of retaining plate		Thickness mm (in)	Part No.*	Thickness mm (in)	Part No.*
		6.6 (0.260) 6.8 (0.268) 7.0 (0.276) 7.2 (0.283) 7.4 (0.291) 7.6 (0.299) 7.8 (0.307) 8.0 (0.315) 8.2 (0.323) 8.4 (0.331) 8.6 (0.339) 8.8 (0.346) 9.0 (0.354)	31667-41X17 31667-41X11 31667-41X12 31667-41X13 31667-41X14 31667-41X07 31667-41X08 31667-41X00 31667-41X01 31667-41X02 31667-41X03 31667-41X04 31667-41X05	7.6 (0.299) 7.8 (0.307) 8.0 (0.315) 8.2 (0.323) 8.4 (0.331) 8.6 (0.339) 8.8 (0.346) 9.0 (0.354) 9.2 (0.362) 9.4 (0.370) 9.6 (0.378)	31667-41X07 31667-41X08 31667-41X00 31667-41X01 31667-41X02 31667-41X03 31667-41X04 31667-41X05 31667-41X06 31667-41X09 31667-41X10

*: Always check with the Parts Department for the latest parts information.

BRAKE BAND

NEAT0291S06

Anchor end bolt tightening torque	4 - 6 N·m (0.4 - 0.6 kg-m, 35 - 52 in-lb)
Number of returning revolution for anchor end bolt	2.5

Oil Pump and Low One-way Clutch

NEAT0292

Unit: mm (in)

Oil pump clearance	Cam ring — oil pump housing	Standard	0.01 - 0.024 (0.0004 - 0.0009)
	Rotor, vanes and control piston — oil pump housing	Standard	0.03 - 0.044 (0.0012 - 0.0017)
Seal ring clearance		Standard	0.10 - 0.25 (0.0039 - 0.0098)
		Allowable limit	0.25 (0.0098)

Total End Play

NEAT0293

Total end play "T_1"	0.25 - 0.55 mm (0.0098 - 0.0217 in)	
Thickness of oil pump cover bearing race	Thickness mm (in)	Part No.*
	0.8 (0.031)	31435-41X01
	1.0 (0.039)	31435-41X02
	1.2 (0.047)	31435-41X03
	1.4 (0.055)	31435-41X04
	1.6 (0.063)	31435-41X05
	1.8 (0.071)	31435-41X06
	2.0 (0.079)	31435-41X07

*: Always check with the Parts Department for the latest parts information.

Reverse Clutch Drum End Play

NEAT0294

Reverse clutch drum end play "T_2"	0.55 - 0.90 mm (0.0217 - 0.0354 in)	
Thickness of oil pump thrust washer	Thickness mm (in)	Part No.*
	0.9 (0.035)	31528-21X01
	1.1 (0.043)	31528-21X02
	1.3 (0.051)	31528-21X03
	1.5 (0.059)	31528-21X04
	1.7 (0.067)	31528-21X05
	1.9 (0.075)	31528-21X06

*: Always check with the Parts Department for the latest parts information.

Removal and Installation

NEAT0295

Manual control linkage	Number of returning revolutions for lock nut	2
	Lock nut tightening torque	4.4 - 5.9 N·m (0.45 - 0.60 kg-m, 39.1 - 52.1 in-lb)
Distance between end of clutch housing and torque converter		26.0 mm (1.024 in) or more (VG33E only) 25.0 mm (0.984 in) or more (VG33ER only)

Shift Solenoid Valves

NEAT0505

Gear position	1	2	3	4
Shift solenoid valve A	ON (Closed)	OFF (Open)	OFF (Open)	ON (Closed)
Shift solenoid valve B	ON (Closed)	ON (Closed)	OFF (Open)	OFF (Open)

Solenoid Valves

NEAT0506

Solenoid valves	Resistance (Approx.) Ω	Terminal No.
Shift solenoid valve A	20 - 40	3
Shift solenoid valve B	20 - 40	2
Overrun clutch solenoid valve	20 - 40	4
Line pressure solenoid valve	2.5 - 5	6

Torque converter clutch solenoid valve	10 - 20	7

A/T Fluid Temperature Sensor

NEAT0507

Remarks: Specification data are reference values.

Monitor item	Condition	Specification (Approx.)	
A/T fluid temperature sensor	Cold [20°C (68°F)] ↓ Hot [80°C (176°F)]	1.5V ↓ 0.5V	2.5 kΩ ↓ 0.3 kΩ

Turbine Revolution Sensor

NEAT0516

Terminal No.		Resistance (Approx.)
1	2	2.4 - 2.8 KΩ
1	3	No continuity
2	3	No continuity

Revolution Sensor

NEAT0508

Terminal No.		Resistance (Approx.)
1	2	500 - 650Ω
2	3	No continuity
1	3	No continuity

Dropping Resistor

NEAT0509

Resistance	11.2 - 12.8Ω

NOTES

TRANSFER

SECTION TF

CONTENTS

PREPARATION 2
Special Service Tools 2
Commercial Service Tools 3
NOISE, VIBRATION AND HARSHNESS (NVH) TROUBLESHOOTING 5
NVH Troubleshooting Chart 5
TRANSFER 5
DESCRIPTION 6
Cross-sectional View 6
ON-VEHICLE SERVICE 7
Replacing Oil Seal 7
CENTER CASE OIL SEAL 7
SHIFT SHAFT OIL SEAL 8
REAR OIL SEAL 8
Position Switch Check 9
REMOVAL AND INSTALLATION 10
Removal 10
Installation 10
M/T MODEL 10
A/T MODEL 10
OVERHAUL 11
Transfer Gear Control 11
Case Components 12
Gear Components 13
Shift Control Components 14
DISASSEMBLY 15
REPAIR FOR COMPONENT PARTS 20
Mainshaft 20
DISASSEMBLY 20
INSPECTION 21
ASSEMBLY 22
Front Drive Shaft 22
DISASSEMBLY 22
INSPECTION 22
ASSEMBLY 22
Counter Gear 23
DISASSEMBLY 23
INSPECTION 23
ASSEMBLY 23
Main Gear 23
DISASSEMBLY 23
INSPECTION 24
ASSEMBLY 24
Front Case 25
REMOVAL 25
INSTALLATION 25
Front Case Cover 25
REMOVAL 25
INSTALLATION 25
Bearing Retainer 26
REMOVAL 26
INSTALLATION 26
Center Case 26
REMOVAL 26
INSTALLATION 26
Rear Case 26
REMOVAL 26
INSTALLATION 27
Shift Control Components 27
INSPECTION 27
ASSEMBLY 29
SERVICE DATA AND SPECIFICATIONS (SDS) 37
General Specifications 37
Inspection and Adjustment 37
CLEARANCE BETWEEN FRONT DRIVE SPROCKET AND 2-4 COUPLING SLEEVE 37
GEAR END PLAY 37
CLEARANCE BETWEEN BAULK RING AND CLUTCH GEAR 37
AVAILABLE SHIM 37
AVAILABLE SNAP RING 37

Special Service Tools

NETF0001

The actual shapes of Kent-Moore tools may differ from those of special service tools illustrated here.

Tool number (Kent-Moore No.) Tool name	Description	
KV38108300 (—) Companion Flange wrench	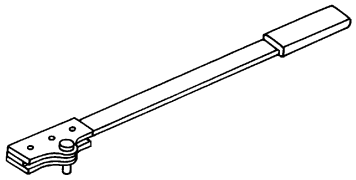 NT771	Removing companion flange nut Installing companion flange nut
ST30021000 (J22912-01) Puller	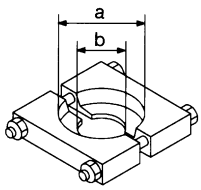 NT411	Removing counter gear front bearing (Use with ST36710010) Removing L & H hub **a: 110 mm (4.33 in) dia.** **b: 68 mm (2.68 in) dia.**
ST30031000 (J22912-01) Puller	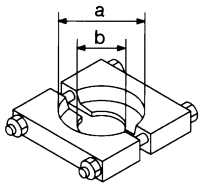 NT411	Removing counter gear rear bearing (Use with ST36710010) **a: 90 mm (3.54 in) dia.** **b: 50 mm (1.97 in) dia.**
ST33290001 (J34286) Puller	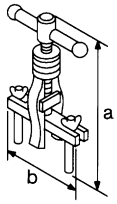 NT414	Removing center case oil seal Removing rear oil seal **a: 250 mm (9.84 in)** **b: 160 mm (6.30 in)**
ST33051001 (J22888) Puller	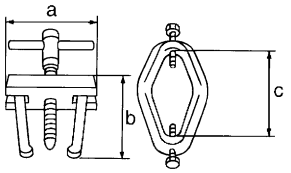 NT657	Removing companion flange **a: 135 mm (5.31 in)** **b: 100 mm (3.94 in)** **c: 130 mm (5.12 in)**
ST30720000 1 (J25273) 2 (J25405) Drift	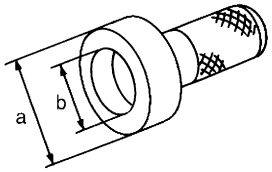 NT658	1 Installing center case oil seal 2 Installing rear oil seal **a: 77 mm (3.03 in) dia.** **b: 55.5 mm (2.185 in) dia.**

Tool number (Kent-Moore No.) Tool name	Description	
ST36710010 (—) Drift	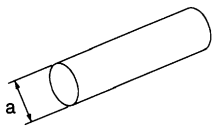 NT063	Removing counter gear front bearing (Use with ST30021000) Removing counter gear rear bearing (Use with ST30031000) **a: 34.5 mm (1.358 in) dia.**
ST33061000 (J8107-2) Drift	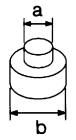 NT116	Removing main gear bearing **a: 28.5 mm (1.122 in) dia.** **b: 38 mm (1.50 in) dia.**
ST30613000 1 (J25742-3) 2 (J34339) Drift	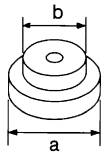 NT073	1 Installing main gear bearing 2 Installing front case cover oil seal **a: 72 mm (2.83 in) dia.** **b: 48 mm (1.89 in) dia.**
(J35864) Drift	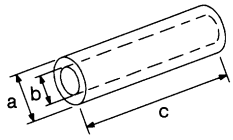 NT117	Installing shift shaft oil seal **a: 26 mm (1.02 in) dia.** **b: 20 mm (0.79 in) dia.** **c: 150 mm (5.91 in)**
(J26092) Drift	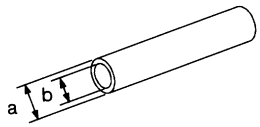 NT065	Seating counter gear assembly **a: 44.5 mm (1.752 in) dia.** **b: 38.5 mm (1.516 in) dia.**
(J34291) Shim setting gauge set	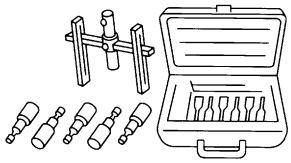 NT101	Selecting counter gear rear bearing shim
(J34291-20) Plunger-shim setting gauge	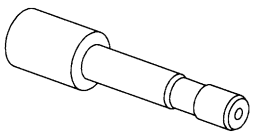 NT118	Selecting counter gear rear bearing shim

Commercial Service Tools

NETF0002

The actual shapes of Kent-Moore tools may differ from those of special service tools illustrated here.

Tool name	Description	
Puller	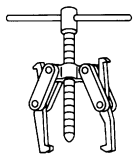 NT077	Removing front drive shaft front bearing Removing front drive shaft rear bearing Removing main gear bearing

Commercial Service Tools (Cont'd)

Tool name	Description	
Drift	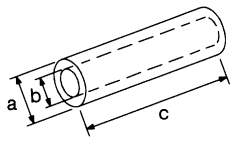 NT117	1 Installing mainshaft rear bearing 2 Installing L & H hub 1 **a: 50 mm (1.97 in) dia.** **b: 42 mm (1.65 in) dia.** **c: 180 mm (7.09 in)** 2 **a: 60 mm (2.36 in) dia.** **b: 50 mm (1.97 in) dia.** **c: 60 mm (2.36 in)**

NVH Troubleshooting Chart

NETF0039S01

Use the chart below to help you find the cause of the symptom. The numbers indicate the order of inspection. If necessary, repair or replace these parts.

TRANSFER

NETF0039S0101

		Refer to ***MA-39***, "Checking Transfer Fluid"			TF-12	TF-12	TF-12, 14	TF-14	TF-13	TF-13	TF-13	TF-13
Reference page												
SUSPECTED PARTS (Possible cause)		FLUID (Level low)	FLUID (Wrong)	FLUID (Level too high)	LIQUID GASKET (Damaged)	OIL SEAL (Worn or damaged)	CHECK SPRING AND CHECK BALL (Worn or damaged)	SHIFT FORK (Worn)	GEAR (Worn or damaged)	BEARING (Worn or damaged)	BAULK RING (Worn or damaged)	SHIFTING INSERT (Damaged)
Symptom	Noise	1	2						3	3		
	Fluid leakage		3	1	2	2						
	Hard to shift or will not shift		1	1							2	2
	Jumps out of gear						1	2	2			

Cross-sectional View

NETF0003

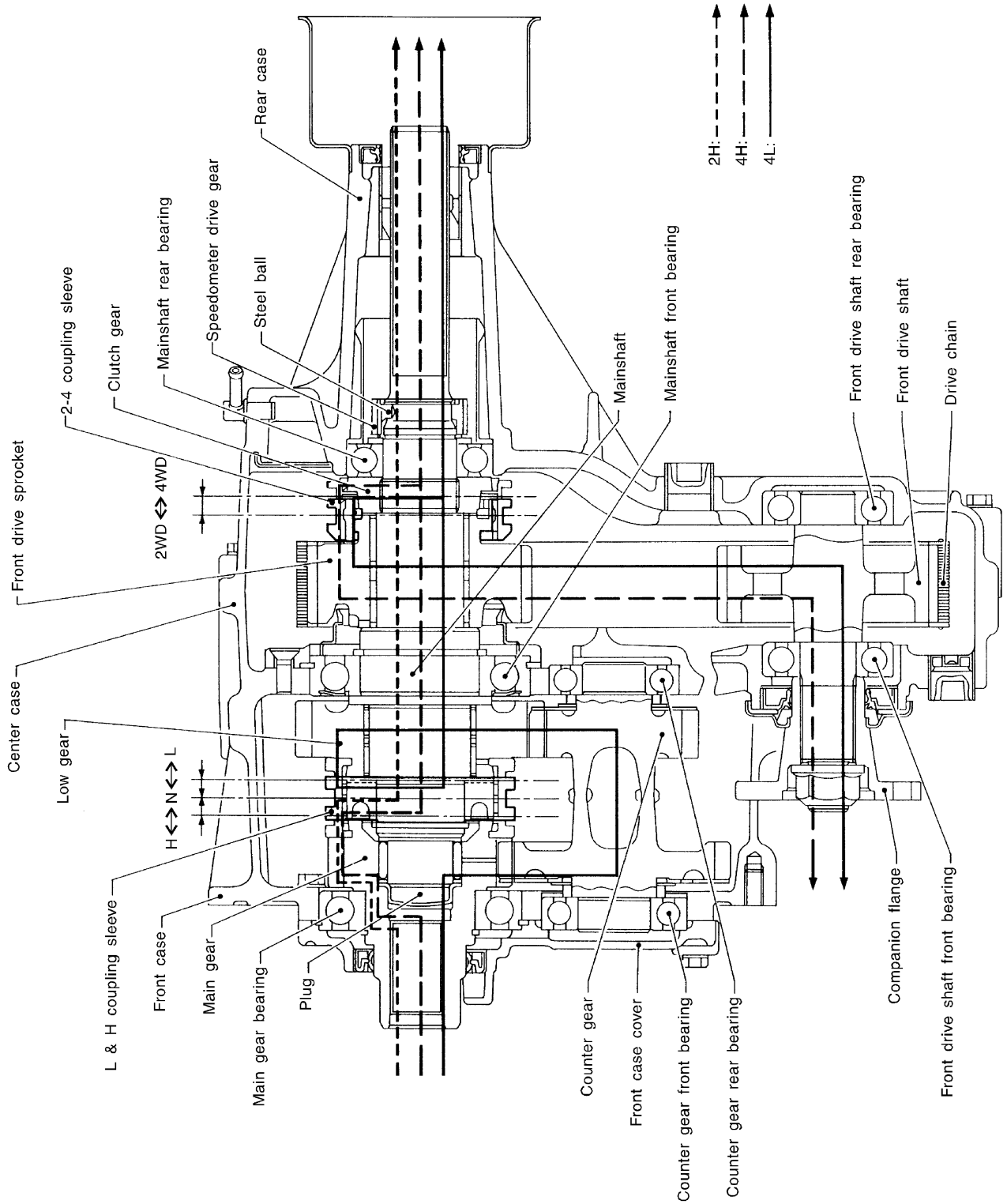

ATF021

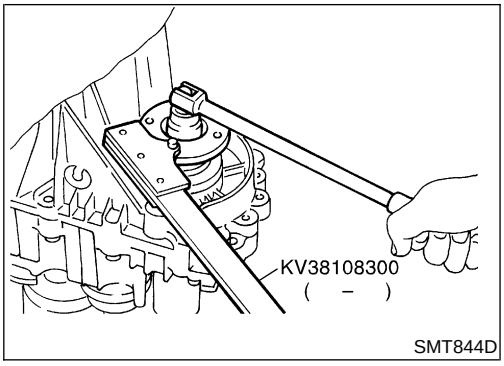

SMT844D

Replacing Oil Seal

NETF0004

CENTER CASE OIL SEAL

NETF0004S01

1. Remove front propeller shaft. Refer to ***PD-9***, “PROPELLER SHAFT”.
2. Remove companion flange nut.

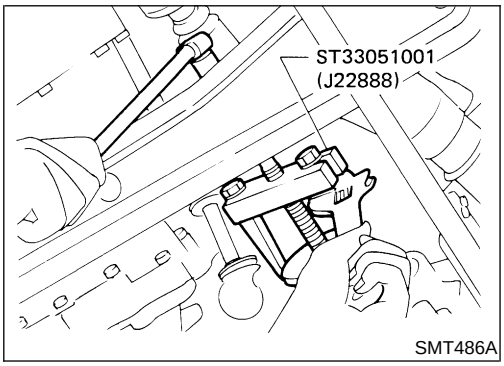

SMT486A

3. Remove companion flange.

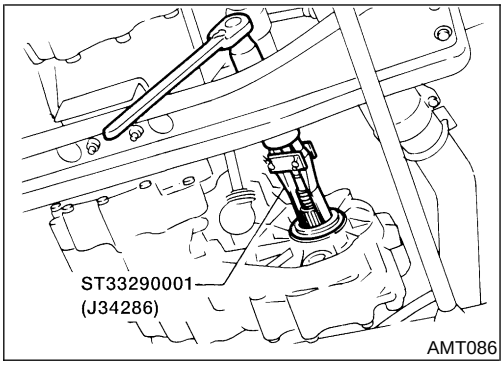

AMT086

4. Remove center case oil seal.
5. Install center case oil seal.

- **Before installing, apply multi-purpose grease to seal lip.**

6. Install companion flange.

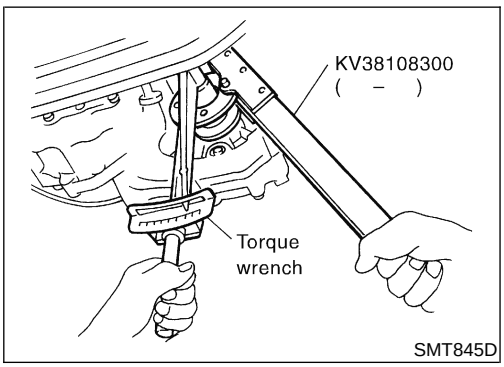

SMT845D

7. Tighten companion flange nut.

: 226 - 324 N·m (23 - 33 kg-m, 166 - 239 ft-lb)

8. Install front propeller shaft. Refer to ***PD-9***, “PROPELLER SHAFT”.

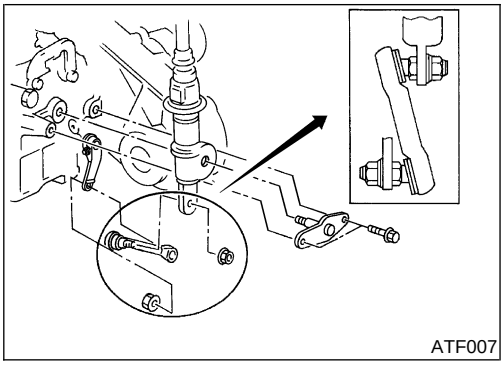

SHIFT SHAFT OIL SEAL

NETF0004S02

1. Remove front propeller shaft. Refer to ***PD-9***, "PROPELLER SHAFT".
2. Remove companion flange. Refer to "CENTER CASE OIL SEAL", TF-7.
3. Remove transfer control lever from transfer outer shift lever. Then remove outer shift lever.

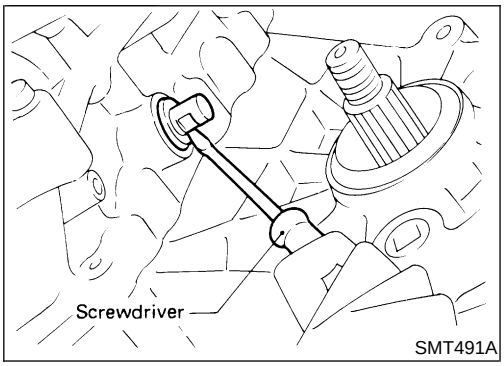

4. Remove shift shaft oil seal.

- **Be careful not to damage cross shaft.**

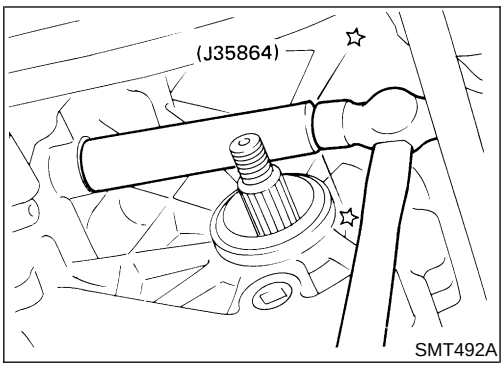

5. Install shift shaft oil seal.

- **Before installing, apply multi-purpose grease to seal lip.**

6. Install transfer control linkage.
7. Install companion flange. Refer to "CENTER CASE OIL SEAL", TF-7.
8. Install front propeller shaft. Refer to ***PD-9***, "PROPELLER SHAFT".

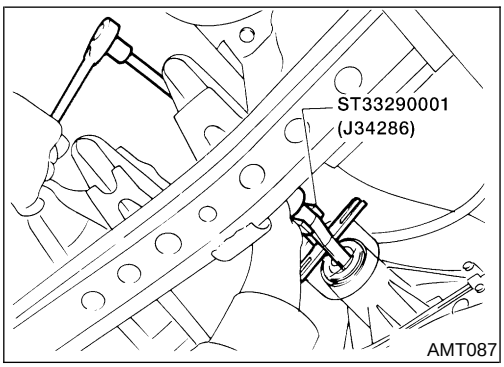

REAR OIL SEAL

NETF0004S03

1. Remove rear propeller shaft. Refer to Refer to ***PD-9***, "PROPELLER SHAFT".
2. Remove rear oil seal.

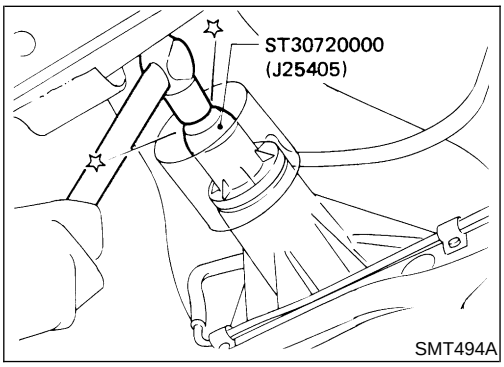

3. Install rear oil seal.

- **Before installing apply multi-purpose grease to seal lip.**

4. Install rear propeller shaft. Refer to ***PD-9***, "PROPELLER SHAFT".

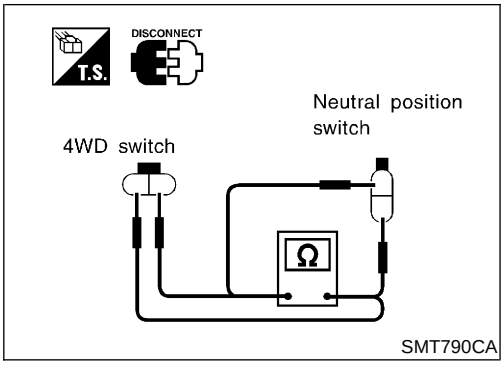

Position Switch Check

NETF0042

Switch	Gear Position	Continuity
4WD Switch	4WD	Yes
	Except 4WD	No
Neutral Position Switch	Neutral	No
	Except Neutral	Yes

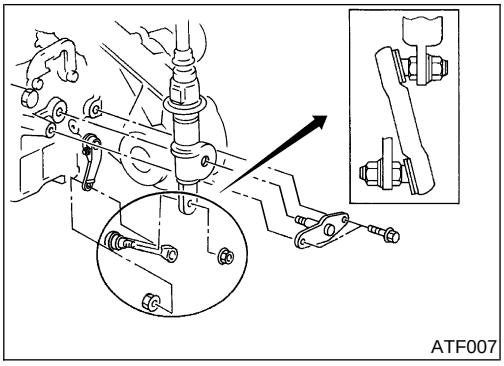
ATF007

Removal

NETF0006

1. Drain fluid from transfer, and drain oil from transmission.
2. Remove front and rear propeller shaft. Refer to ***PD-9***, “PROPELLER SHAFT”.
   Insert plug into rear oil seal after removing propeller shaft.
- **Be careful not to damage spline, sleeve yoke and rear oil seal, when removing propeller shaft.**
3. Remove torsion bar spring. Refer to ***SU-14***, “Removal”. Then remove second crossmember.
4. Remove exhaust front and rear tubes. Refer to ***FE-8***, “EXHAUST SYSTEM”.
5. Disconnect vehicle speed sensor, transfer neutral position switch and 4WD switch harness connectors.
6. Remove air breather hose.
7. Remove control lever (holder assembly) from outer shift lever.
8. Separate transfer from transmission.

WARNING:
Support transfer while removing it.

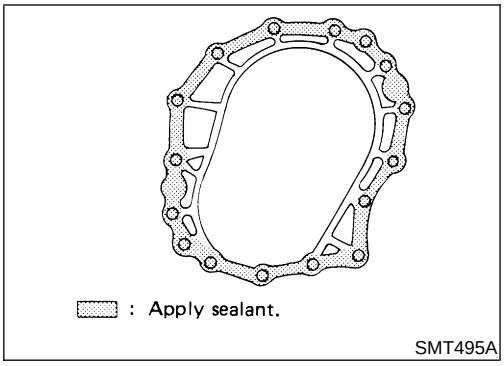

SMT495A

Installation

NETF0007

- Apply sealant to mating surface to transmission. (M/T model only)

  Use genuine anaerobic liquid gasket, Three Bond TB1215, Loctite Part No. 51813 or equivalent.

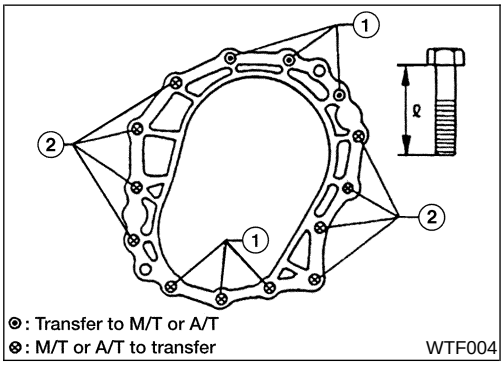

WTF004

- Tighten bolts securing transfer.

M/T MODEL

NETF0007S01

Bolt No.	Tightening torque N·m (kg-m, ft-lb)	ℓ mm (in)
1	31 - 42 (3.2 - 4.3, 23 - 31)	60 (2.36)
2	31 - 42 (3.2 - 4.3, 23 - 31)	45 (1.77)

A/T MODEL

NETF0007S02

Bolt No.	Tightening torque N·m (kg-m, ft-lb)	ℓ mm (in)
1	31 - 42 (3.2 - 4.3, 23 - 31)	45 (1.77)
2	31 - 42 (3.2 - 4.3, 23 - 31)	45 (1.77)

- Adjust the torsion bars for the correct vehicle height. Refer to ***SU-15***, “INSTALLATION AND ADJUSTMENT”.

Transfer Gear Control

NETF0008

SEC. 333

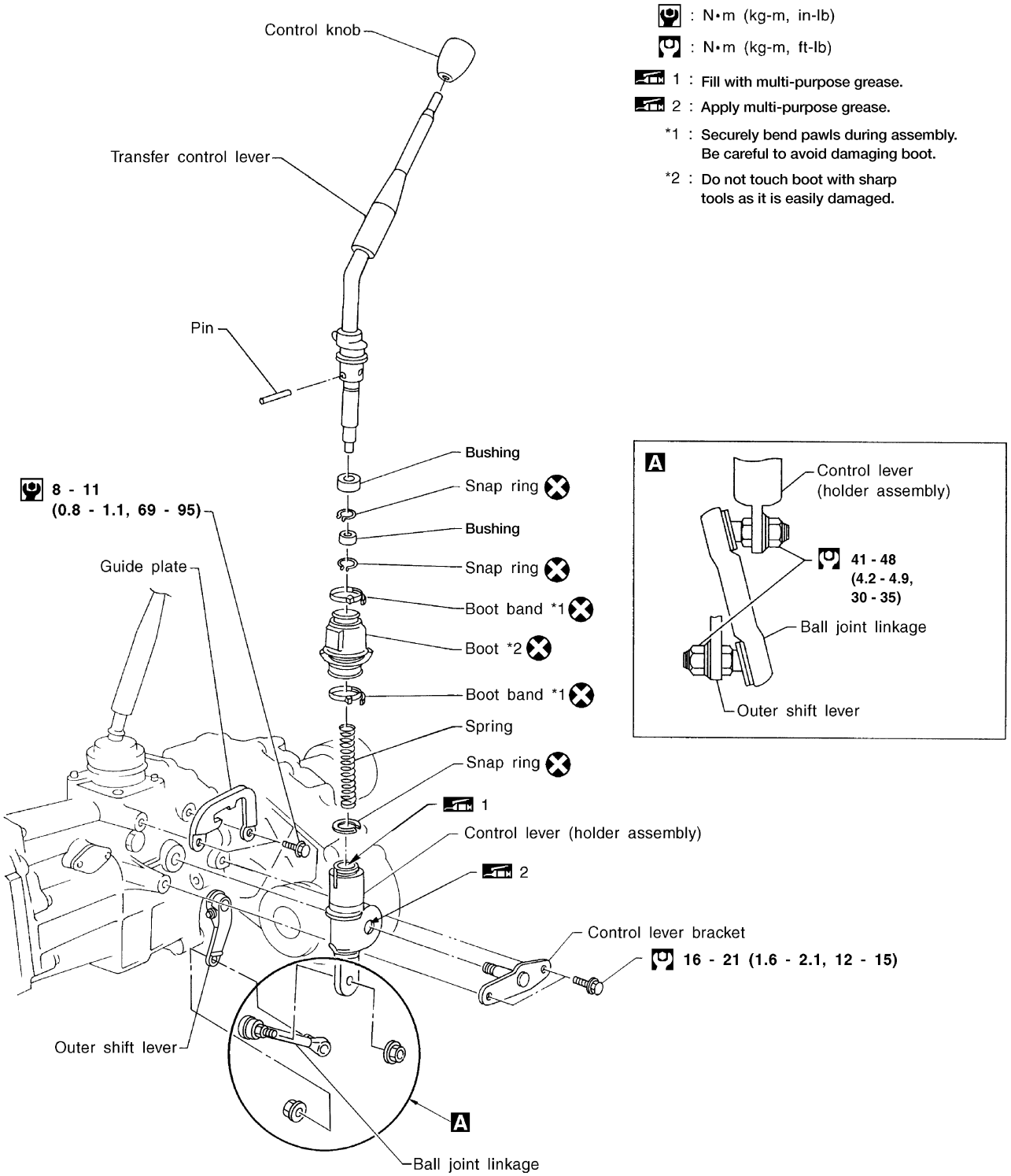

ATF022

Case Components

NETF0009

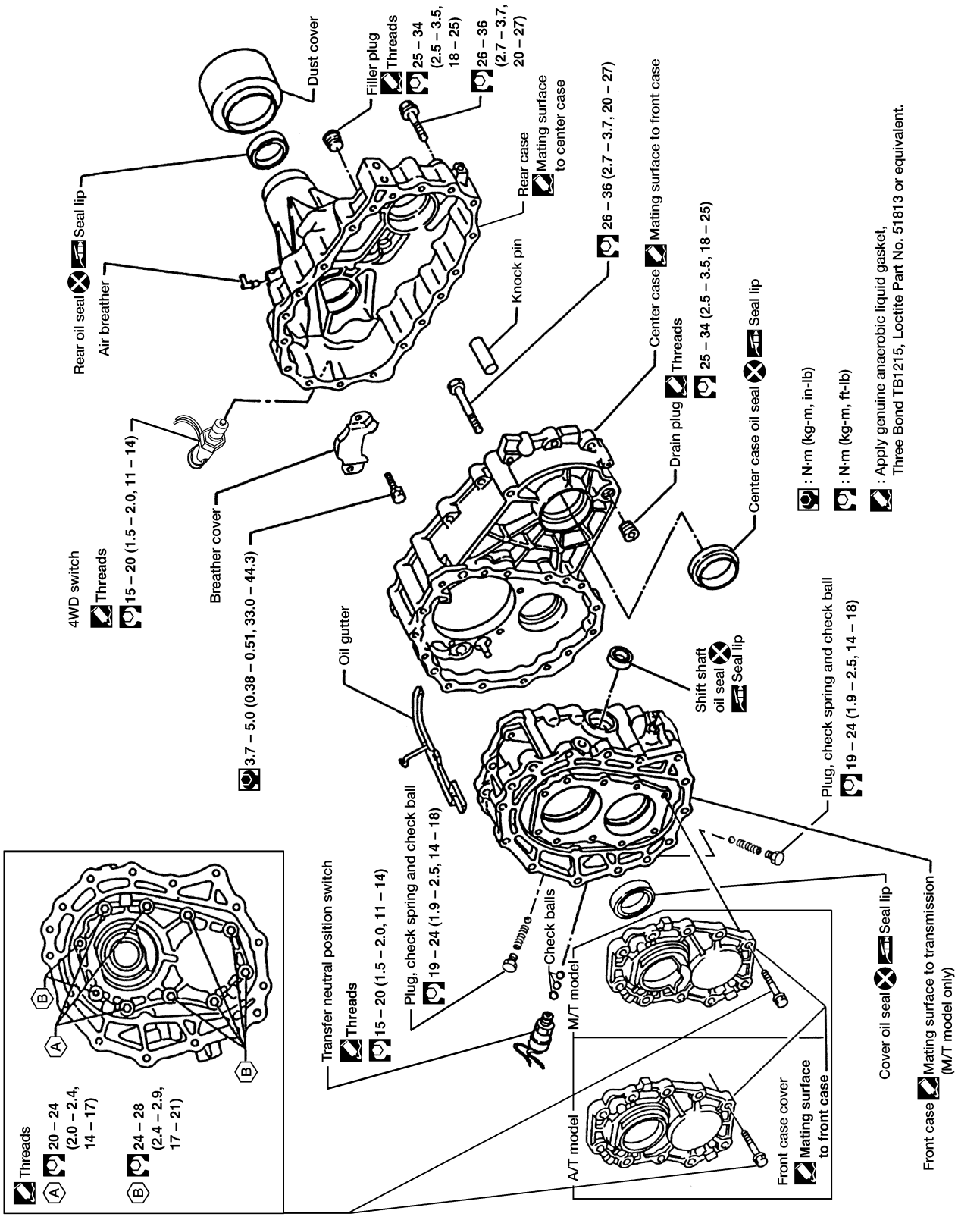

WTF005

Gear Components

NETF0010

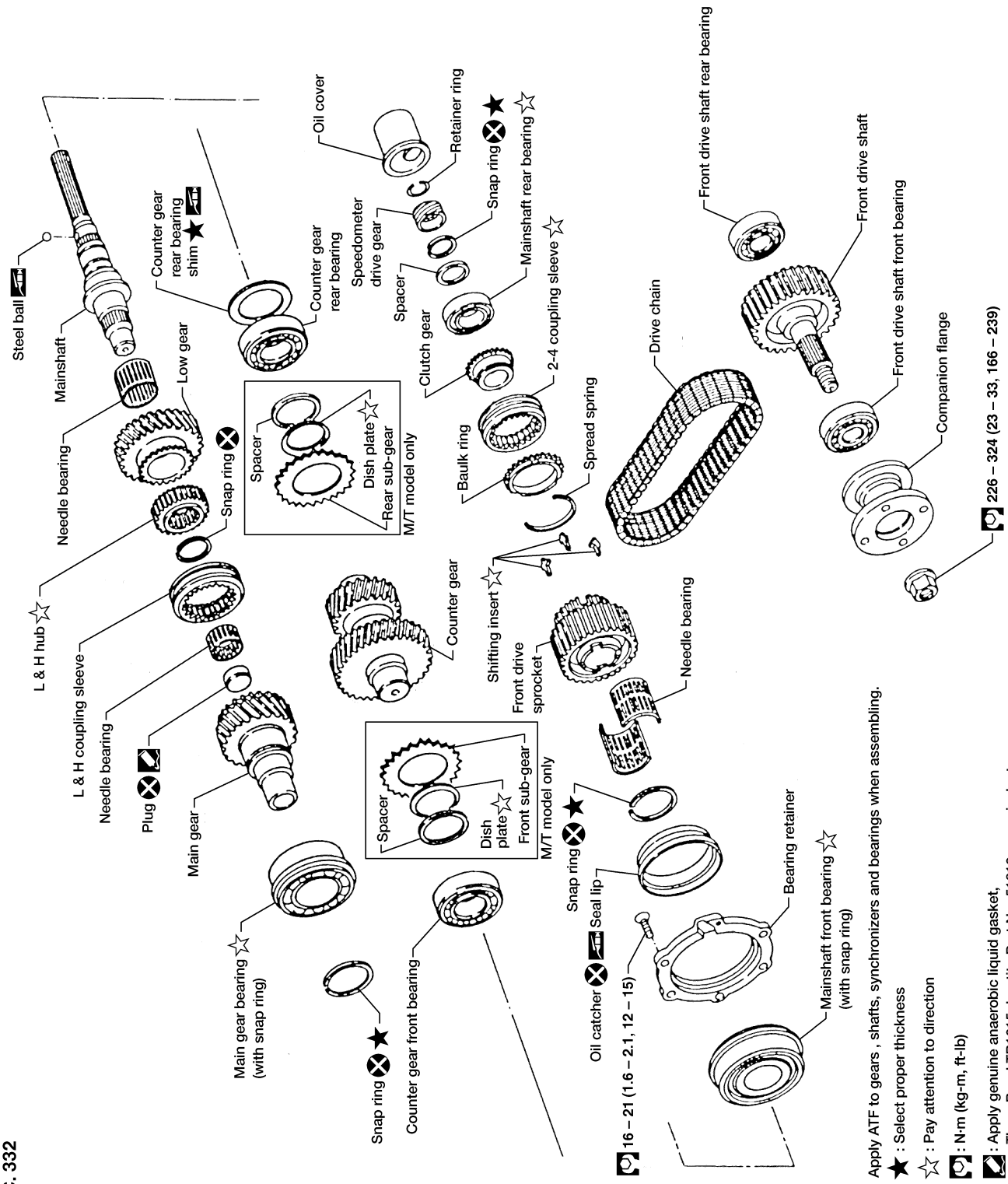

SEC. 332

WTF006

Shift Control Components

NETF0011

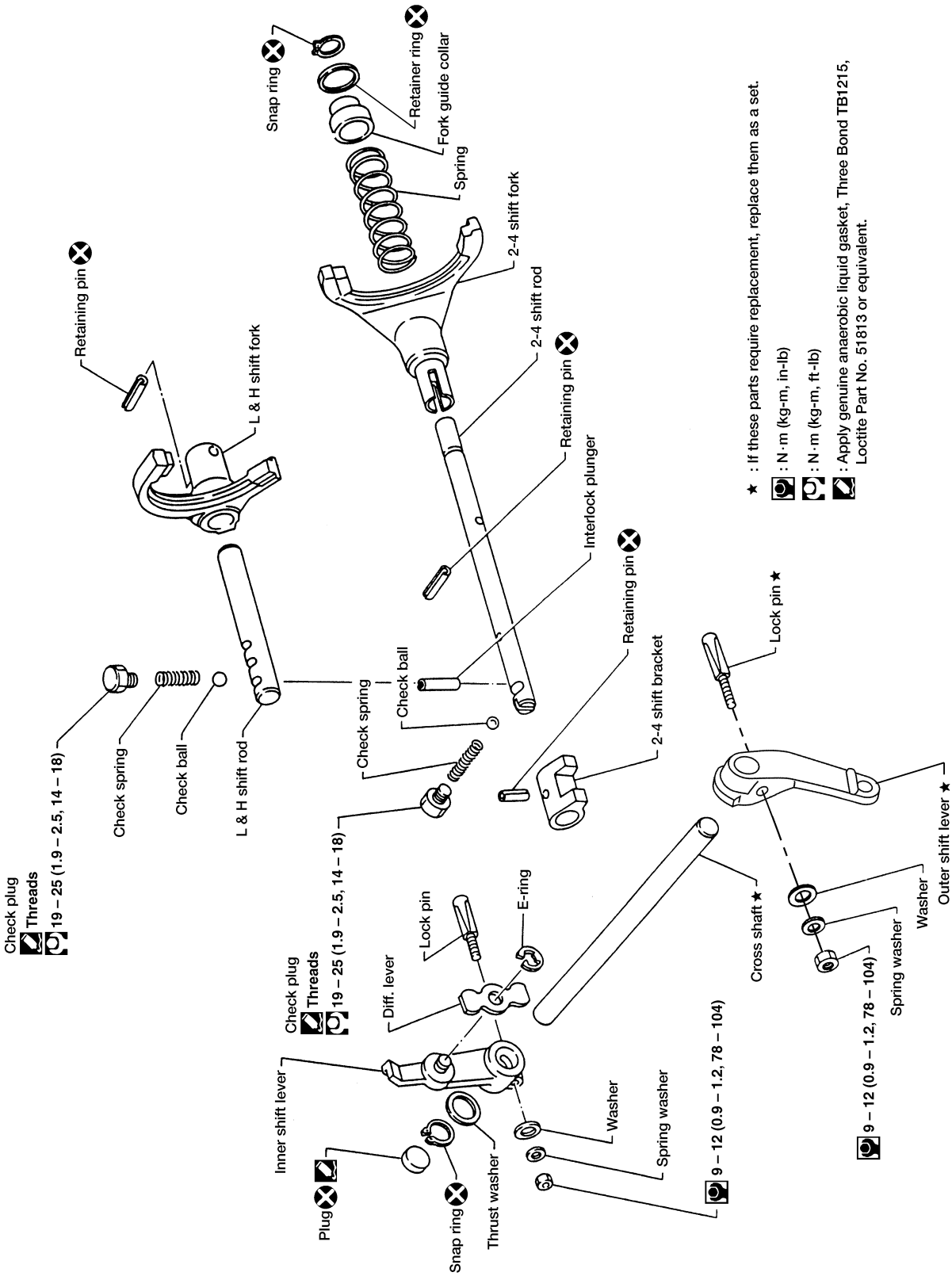

SEC. 333

WTF007

DISASSEMBLY

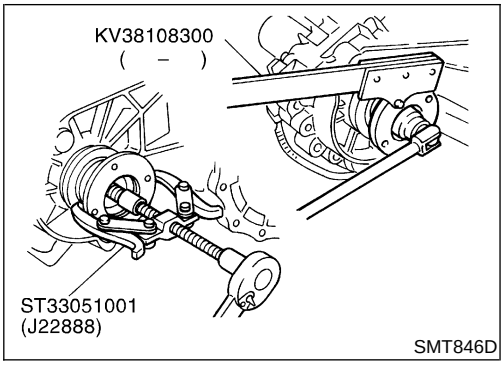

1. Remove companion flange nut.
2. Remove companion flange.

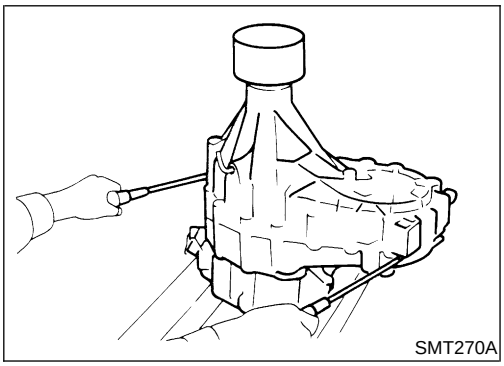

3. Remove 4WD switch.
4. Remove rear case.

- **Be careful not to damage the mating surface.**

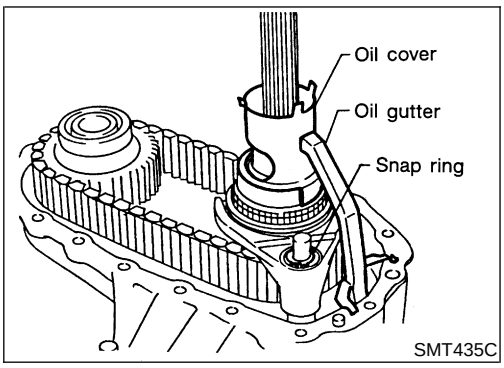

5. Remove oil cover and oil gutter.
6. Remove snap ring and retainer ring from 2-4 shift rod.

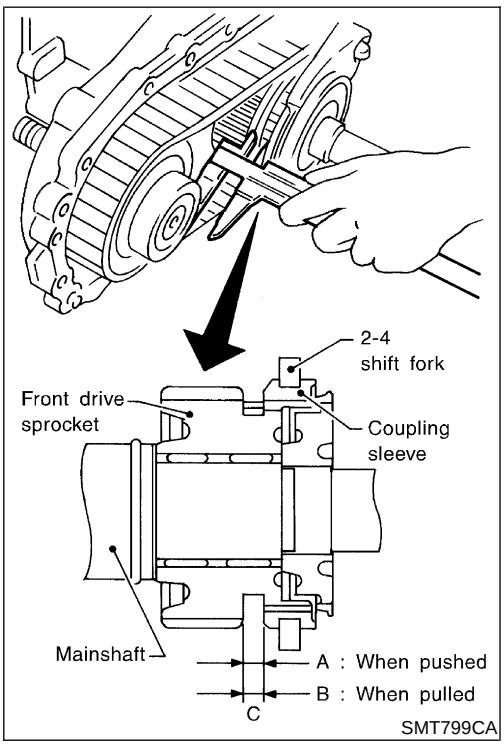

7. Using calipers, measure the difference between front drive sprocket and 2–4 coupling sleeve as outlined under measuring method below. If it is outside specifications, check front drive sprocket, 2–4 coupling sleeve, clutch gear, 2–4 shift fork and 2–4 fork rod for abnormalities. Replace faulty part(s) as required.

Measuring method

Move coupling sleeve until it is in contact with sprocket, then measure dimension A. Move coupling sleeve until it is in contact with clutch gear, then measure dimension B. Obtain dimension difference C between two measurements A and B.

A – B = C

To determine dimension A, measure at 3 or 4 different points by rotating sprocket and obtain average value of 3 or 4 measurements.

Specification C: Refer to “Clearance Between Front Drive Sprocket and 2–4 Coupling Sleeve”, TF-37.

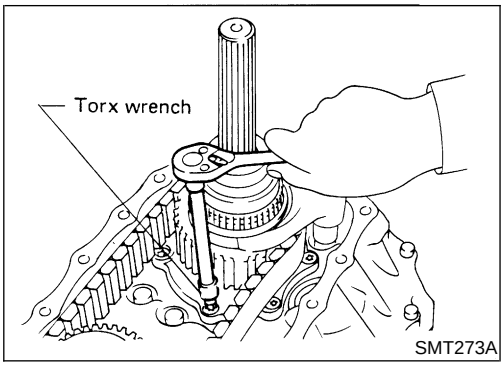

8. Remove bolts securing bearing retainer.

- **This step is necessary to remove mainshaft from center case.**

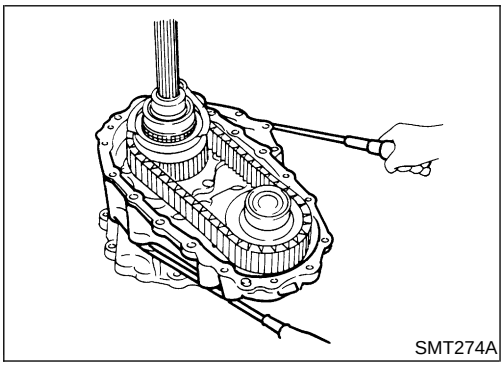

9. Remove bolts securing center case to front case and then separate center case and front case.

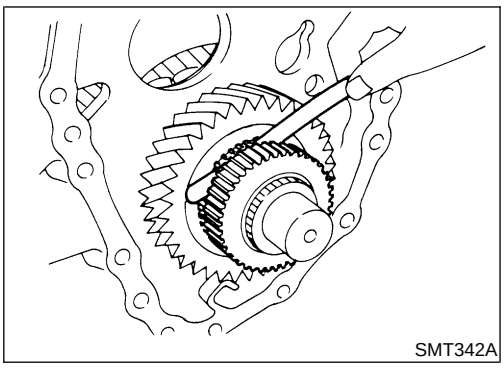

10. Measure low gear end play.

Standard:

0.2 - 0.35 mm (0.0079 - 0.0138 in)

- **If end play is beyond the maximum value, check low gear and L & H hub for wear.**

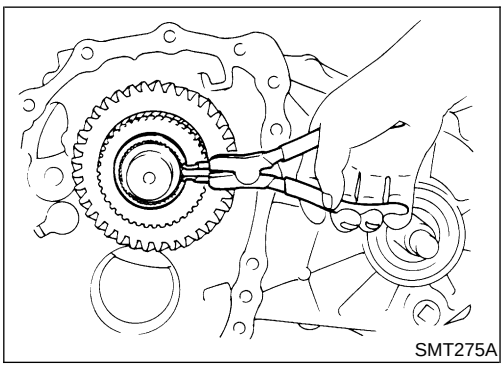

11. Disassemble center case assembly.

a. Remove snap ring from mainshaft.

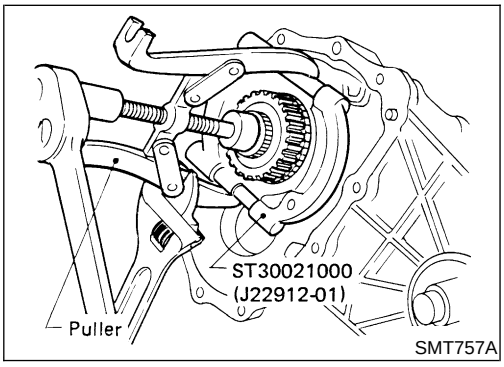

b. Pull out low gear with L & H hub.

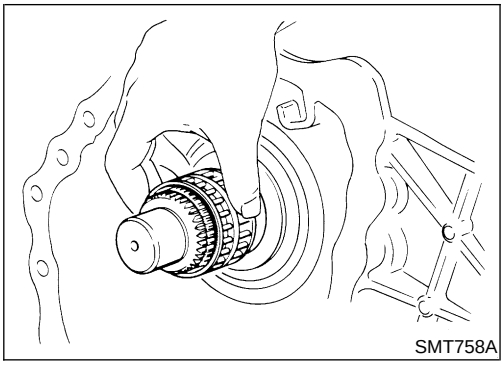
SMT758A

c. Remove needle bearing from main shaft.

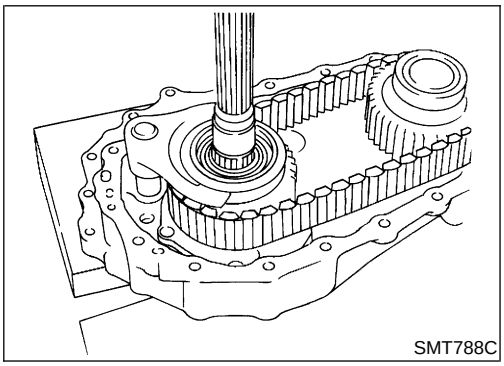
SMT788C

d. Make note of the direction of the drive chain before removing it. (It must be reinstalled in the same direction.)

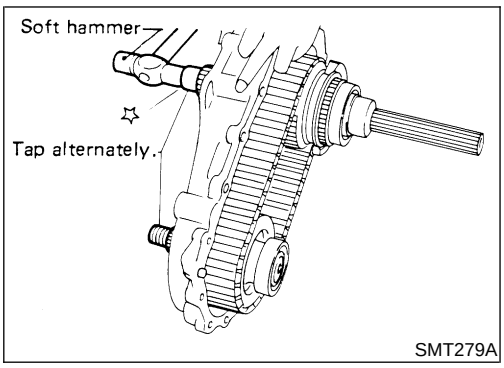

SMT279A

e. Remove mainshaft, front drive and drive chain as a set by tapping front end of mainshaft and front drive shaft alternately.

- **Be careful not to bend drive chain.**

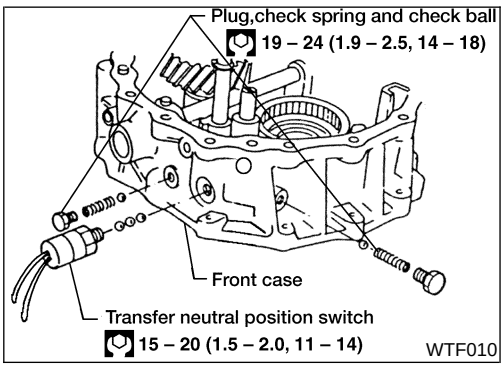

WTF010

12. Disassemble front case assembly.

a. Remove transfer neutral position switch, plugs, check springs and check balls.

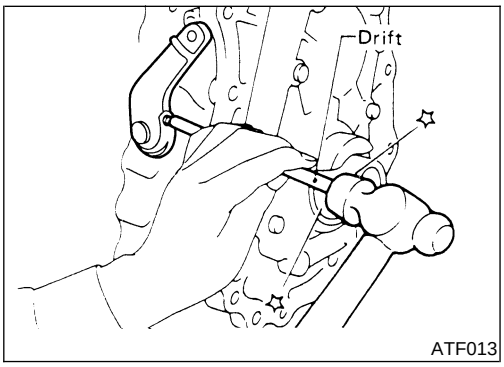

ATF013

b. Remove lock pin from outer shift lever, then remove outer shift lever.

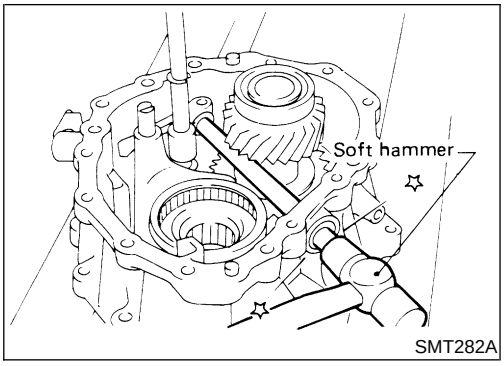

c. Remove lock pin of inner shift lever and drive out cross shaft with plug.

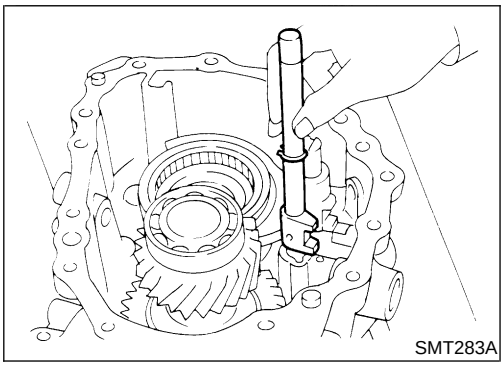

d. Remove 2-4 shift rod.

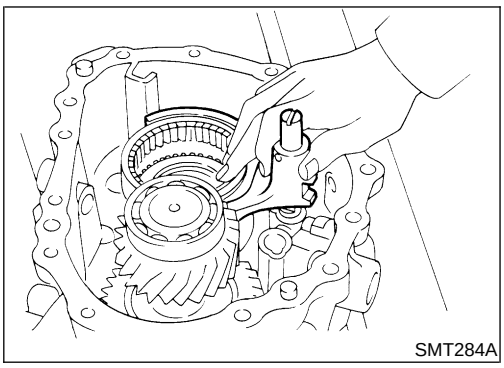

e. Remove L & H shift rod and fork assembly with coupling sleeve.

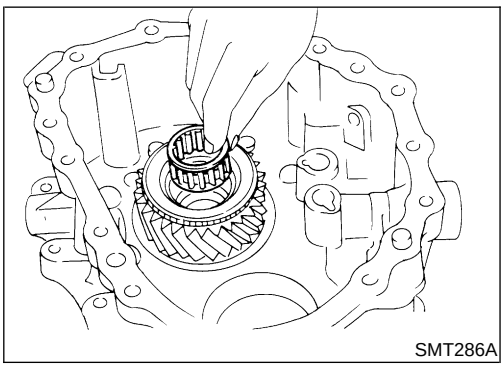

f. Remove needle bearing from main gear.

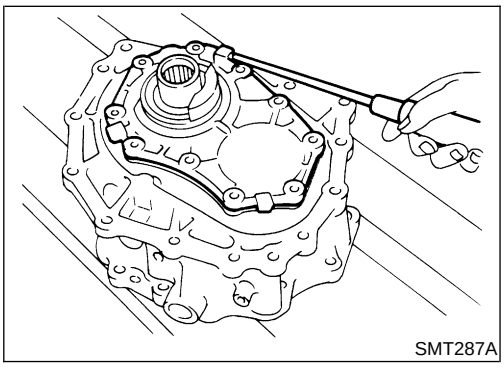

g. Remove bolts securing front case cover and then remove case.

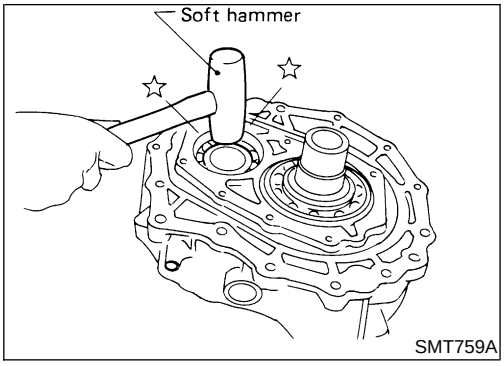

h. Remove counter gear by tapping lightly.

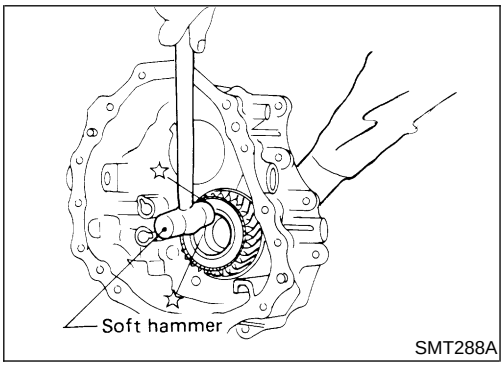

i. Remove main gear by tapping lightly.

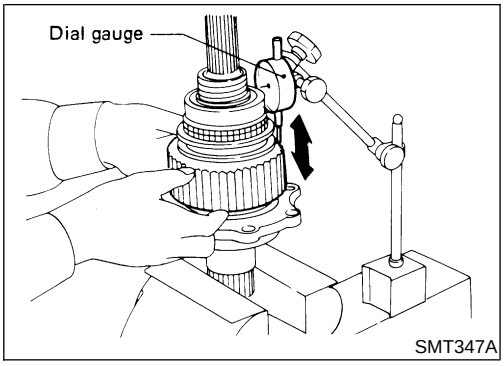

Mainshaft

DISASSEMBLY

NETF0013

1. Check front drive sprocket end play.

Standard:

0.2 - 0.35 mm (0.0079 - 0.0138 in)

- **If end play is not within specification, check front drive sprocket and clutch gear for wear.**

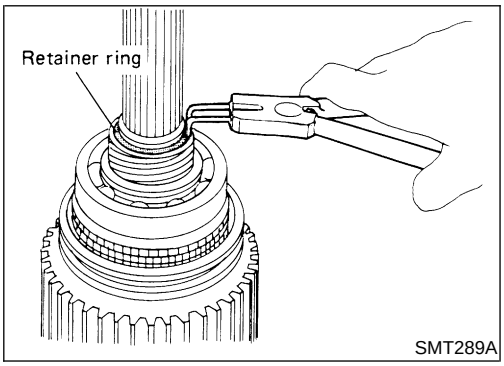

2. Remove retainer ring, speedometer drive gear and steel ball.

- **Be careful not to lose the steel ball.**

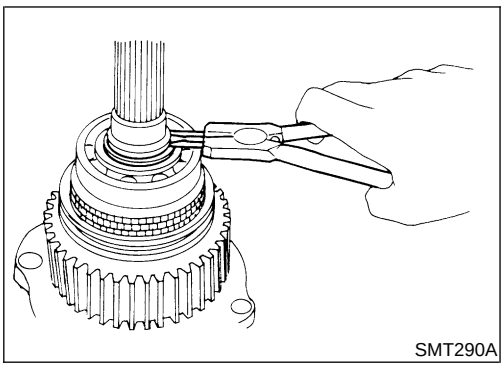

3. Remove snap ring and spacer.

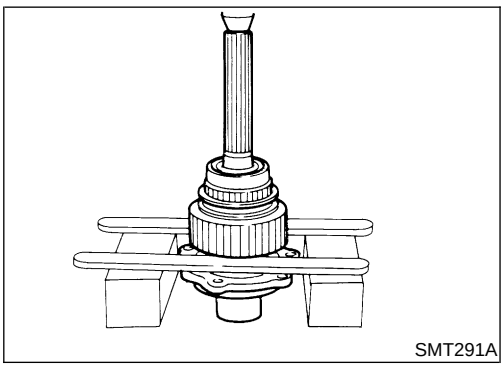

4. Use a press to remove front drive sprocket with mainshaft rear bearing and clutch gear together.
5. Remove needle bearing.

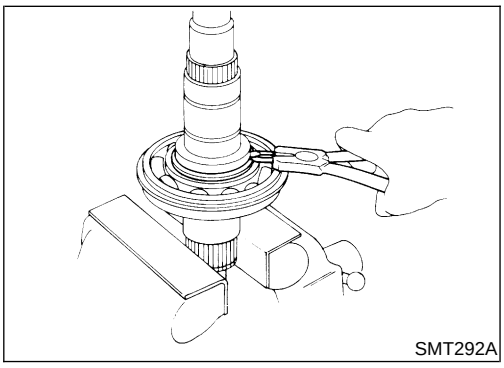

6. Remove bearing retainer and then remove snap ring.

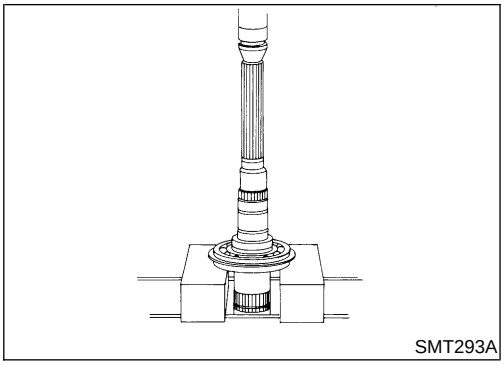
SMT293A

7. Use a press to remove mainshaft front bearing from mainshaft.

INSPECTION

NETF0014

Gear and Shaft

NETF0014S01

- Check gears for excessive wear, chips or cracks.
- Check shaft for cracks, wear or bending.
- Check coupling sleeve for wear or damage.

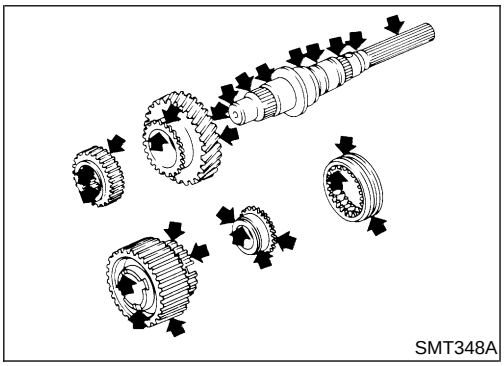
SMT348A

Baulk ring

NETF0014S03

- Check baulk ring for cracks or deformation.

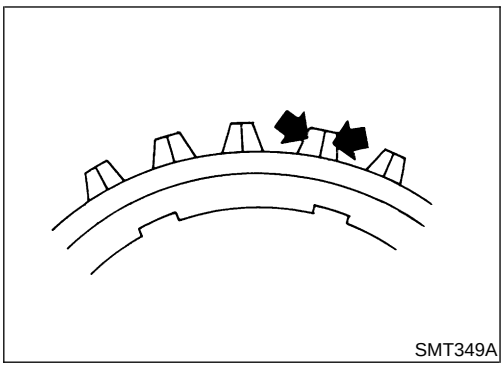
SMT349A

- Measure clearance between baulk ring and clutch gear.

  Baulk ring to clutch gear clearance:

  Refer to "CLEARANCE BETWEEN BAULK RING AND CLUTCH GEAR", TF-37.

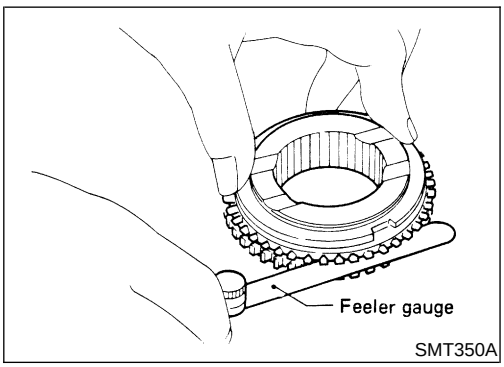

SMT350A

Bearing

NETF0014S02

- Make sure bearings roll freely and are free from noise, cracks, pitting or wear.

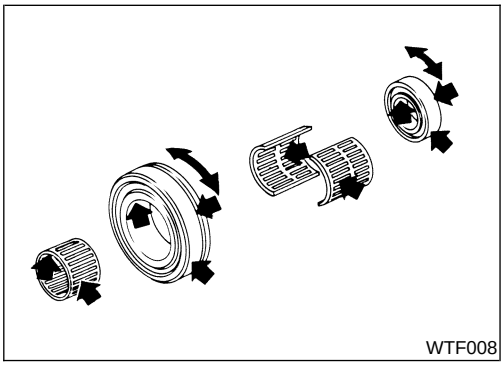
WTF008

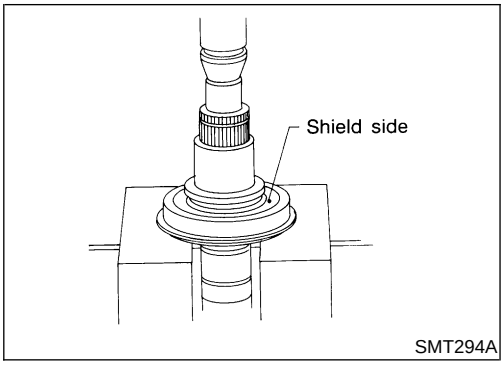

ASSEMBLY

NETF0015

1. Press mainshaft front bearing onto mainshaft.
- **Pay special attention to its direction.**

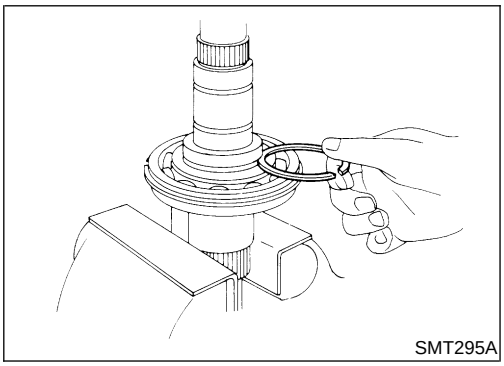

2. Select snap ring with proper thickness.

Allowable clearance between snap ring and groove:
0 - 0.15 mm (0 - 0.0059 in)
Available snap ring for mainshaft front bearing:
Refer to "MAINSHAFT FRONT BEARING", TF-37.

3. For further procedures, refer to "ASSEMBLY", TF-29.

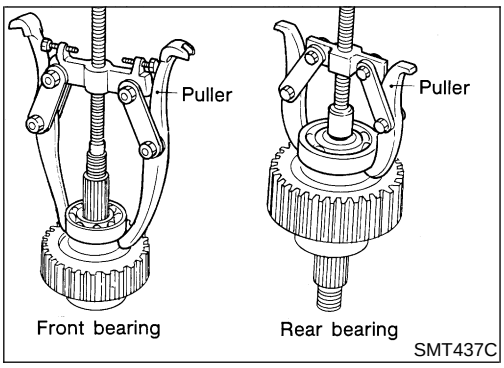

Front Drive Shaft

DISASSEMBLY

NETF0016

- Using a gear puller, remove front drive shaft front and rear bearings.

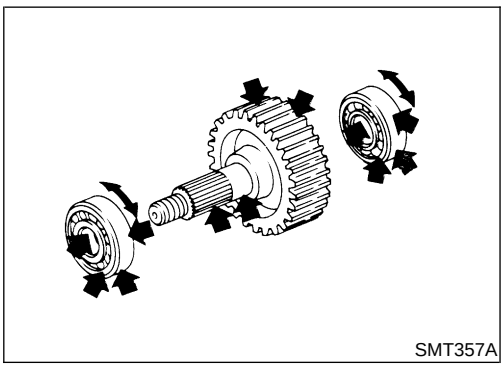

INSPECTION

NETF0017

Sprocket and Shaft

NETF0017S01

- Check sprocket for excessive wear, chips or cracks.
- Check shaft for cracks or wear.

Bearing

NETF0017S02

- Make sure bearings roll freely and are free from noise, cracks, pitting or wear.

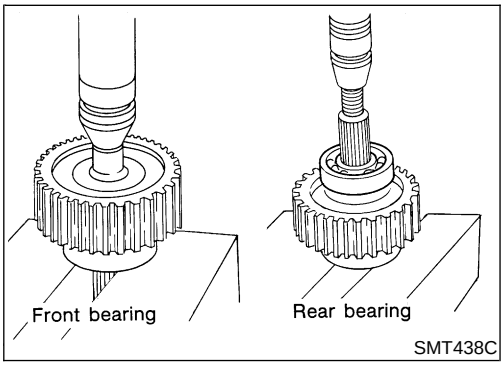

ASSEMBLY

NETF0018

- Press front drive shaft front and rear bearings onto front drive shaft.

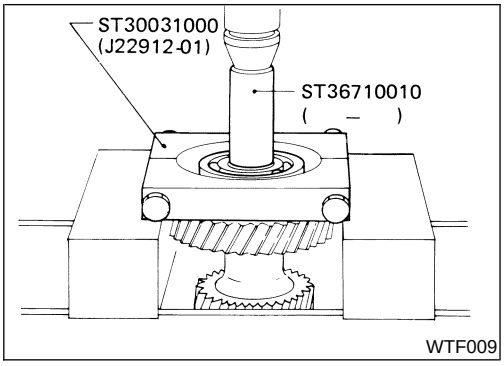

WTF009

Counter Gear

DISASSEMBLY

NETF0019

1. Press out counter gear front bearing.
- Remove front sub-gear, dish plate and spacer (M/T model only).

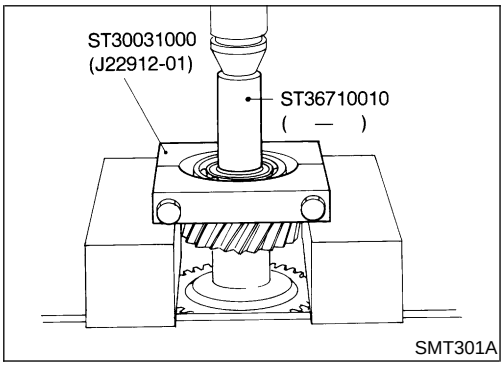

SMT301A

2. Press out counter gear rear bearing.
- Remove rear sub-gear, dish plate and spacer (M/T model only).

INSPECTION

NETF0020

Gear and Shaft

NETF0020S01

- Check gears for excessive wear, chips or cracks.
- Check shaft for cracks or wear.

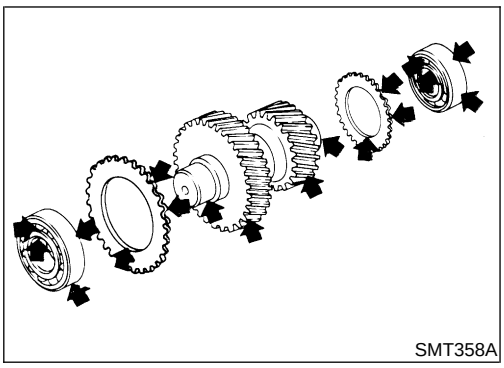
SMT358A

Bearing

NETF0020S02

- Make sure bearings roll freely and are free from noise, cracks, pitting or wear.

ASSEMBLY

NETF0021

1. Install front sub-gear, dish plate and spacer (M/T model only).
2. Press on counter gear front bearing.
3. Install rear sub-gear, dish plate and spacer (M/T model only).
4. Press on counter gear rear bearing.

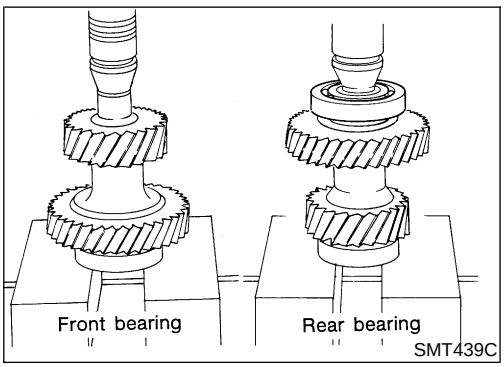

SMT439C

Main Gear

DISASSEMBLY

NETF0022

Main Gear Bearing

NETF0022S01

1. Remove snap ring.

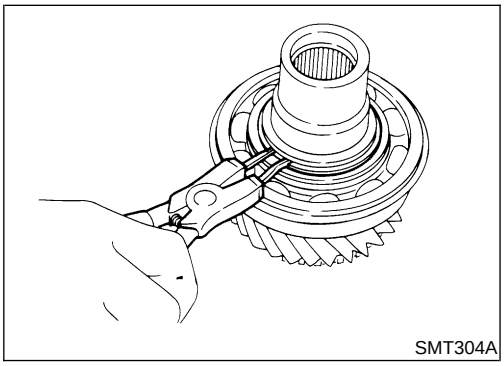
SMT304A

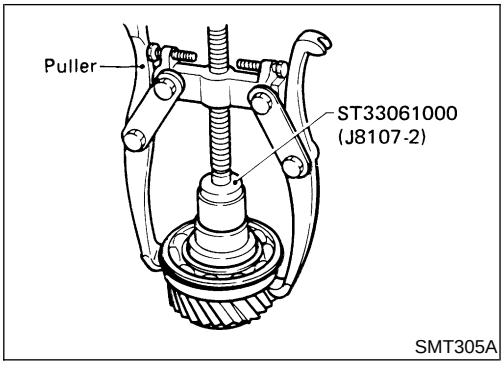

SMT305A

2. Pull out main gear bearing.

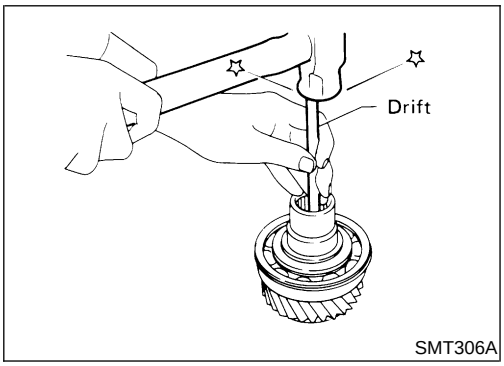

SMT306A

Plug

NETF0022S02

- **Always replace it with new one whenever it has been removed.**

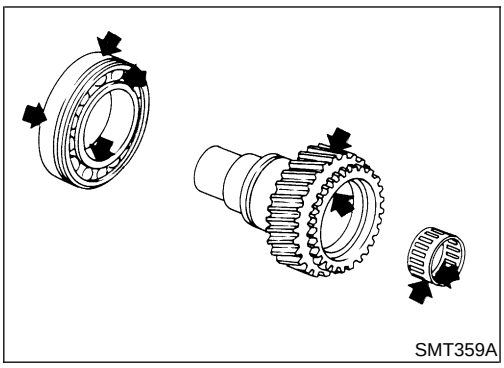
SMT359A

INSPECTION

NETF0023

Gear and Shaft

NETF0023S01

- Check gears for excessive wear, chips or cracks.
- Check shaft for cracks or wear.

Bearing

NETF0023S02

- Make sure bearings roll freely and are free from noise, cracks, pitting or wear.

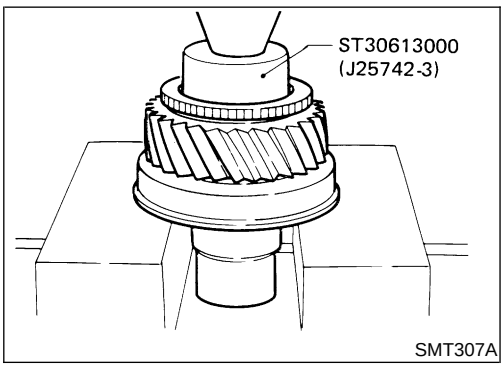

SMT307A

ASSEMBLY

NETF0024

Main Gear Bearing

NETF0024S01

1. Press on main gear bearing.

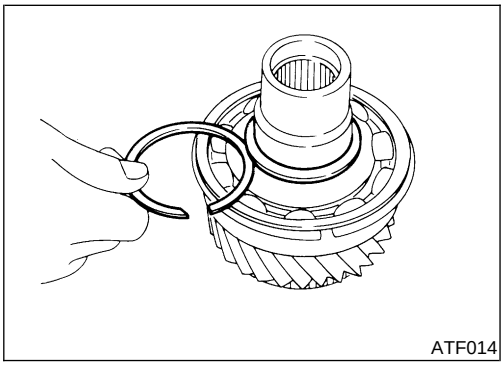
ATF014

2. Select and install snap ring with proper thickness.

Allowable clearance between snap ring and groove:
0 - 0.15 mm (0 - 0.0059 in)
Available snap ring for main gear bearing:
Refer to "MAIN GEAR BEARING", TF-38.

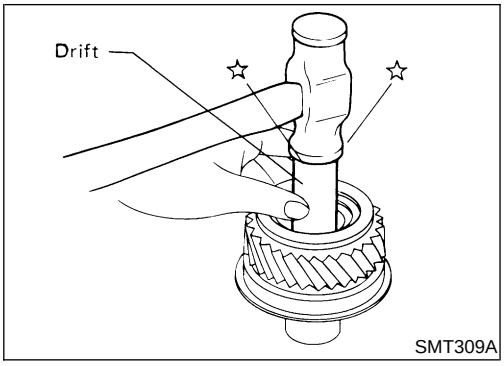

Plug

NETF0024S02

Apply sealant to plug, then install.

- **Use genuine anaerobic liquid gasket, Three Bond TB1215, Loctite part No. 51813 or equivalent.**

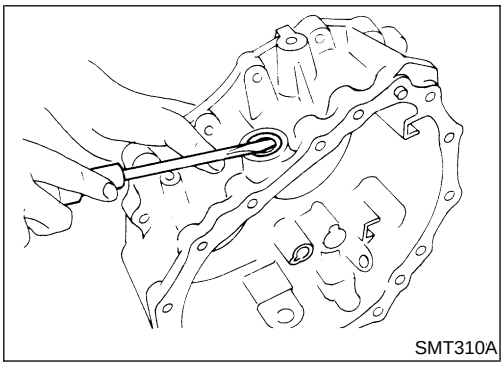

Front Case

REMOVAL

NETF0025

Shift Shaft Oil Seal

NETF0025S01

- Use a screwdriver to pry out old seal.
- Be careful not to damage case.
- Always replace with a new one whenever it has been removed.

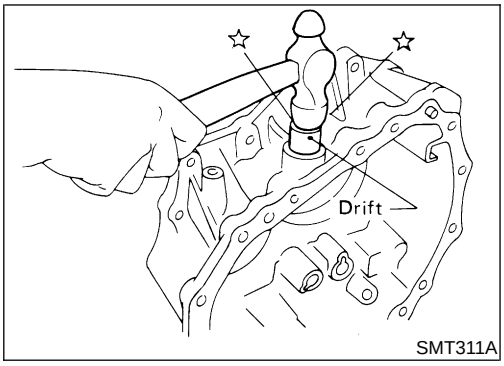

INSTALLATION

NETF0026

Shift Shaft Oil Seal

NETF0026S01

- Install new shift shaft oil seal until flush with case.
- Before installing, apply multi-purpose grease to seal lip.

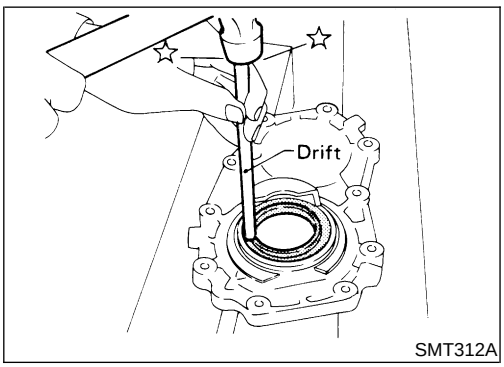

Front Case Cover

REMOVAL

NETF0027

Cover Oil Seal

NETF0027S01

- Drive out old seal from inside of front case cover.
- Be careful not to damage front case cover.

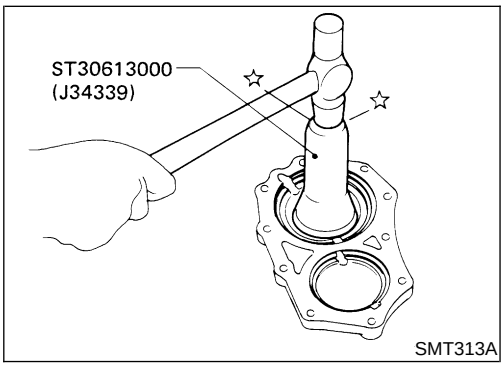

INSTALLATION

NETF0028

Cover Oil Seal

NETF0028S01

- Install new front case cover oil seal until it stops.
- Before installing, apply multi-purpose grease to seal lip.

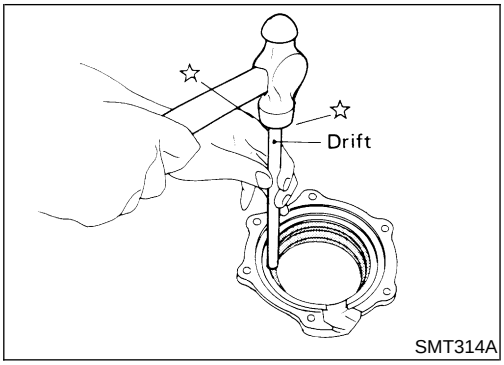

SMT314A

Bearing Retainer

REMOVAL

NETF0029

Oil Catcher

NETF0029S01

- Drive out oil catcher from inside of bearing retainer.
- Be careful not to damage bearing retainer.

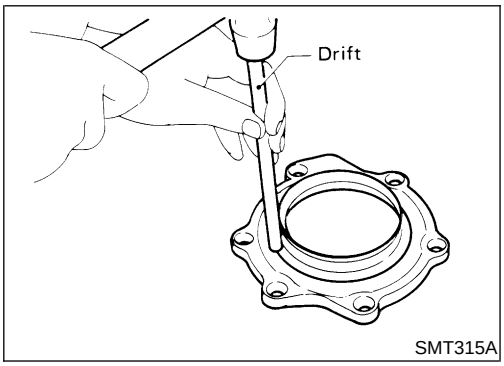

SMT315A

INSTALLATION

NETF0030

Oil Catcher

NETF0030S01

- Install oil catcher until it stops.
- Be careful not to damage or distort oil catcher or bearing retainer.
- Before installing, apply multi-purpose grease to seal lip.

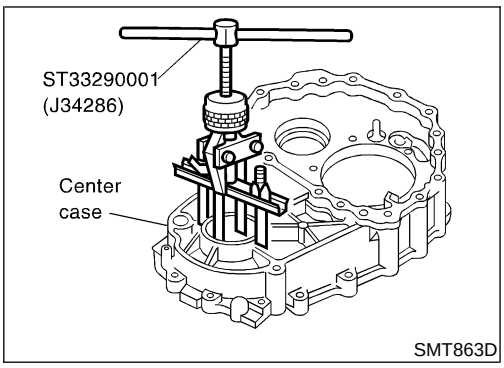

SMT863D

Center Case

REMOVAL

NETF0044

Center Case Oil Seal

NETF0044S01

- Remove center case oil seal.

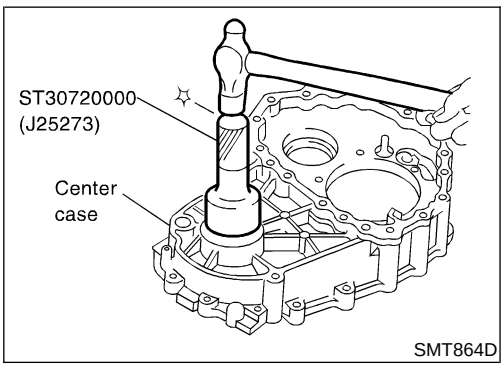

SMT864D

INSTALLATION

NETF0045

Center Case Oil Seal

NETF0045S01

- Install center case oil seal.

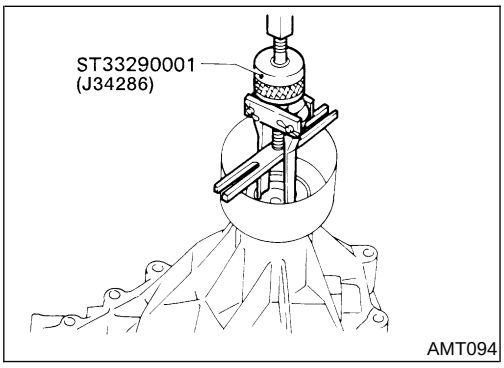

AMT094

Rear Case

REMOVAL

NETF0031

Rear Oil Seal

NETF0031S01

- Pull out rear oil seal.

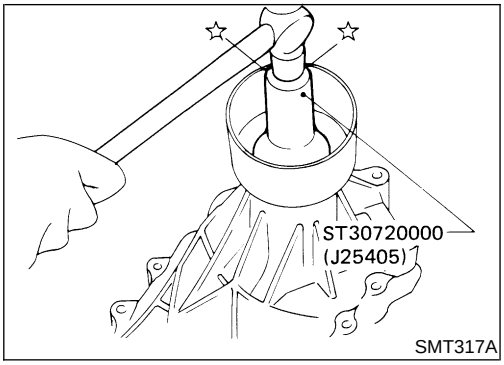

SMT317A

INSTALLATION

NETF0032

Rear Oil Seal

NETF0032S01

- Install new rear oil seal until it stops.
- Before installing, apply multi-purpose grease to seal lip.

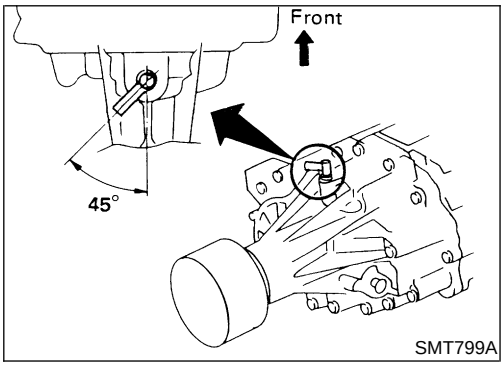

SMT799A

Air Breather

NETF0032S02

Install as shown in illustration.

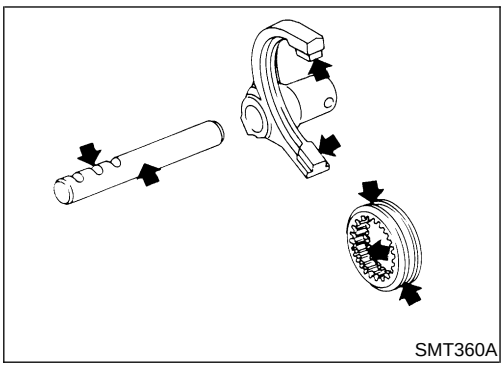
SMT360A

Shift Control Components

INSPECTION

NETF0033

- Check contact surface and sliding surface for wear, scratches, projections or other faulty conditions.

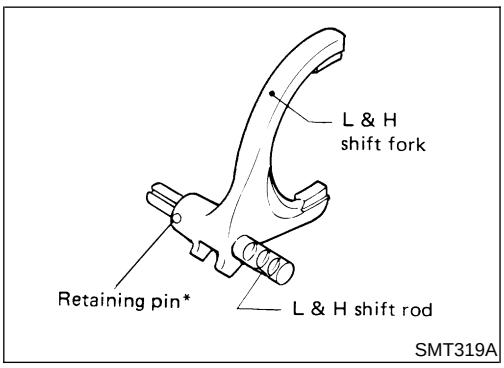

SMT319A

L & H Shift Rod & Fork

NETF0033S01

- Assemble as shown in illustration.
  * Retaining pin is the same size as the one for 2-4 shift rod.

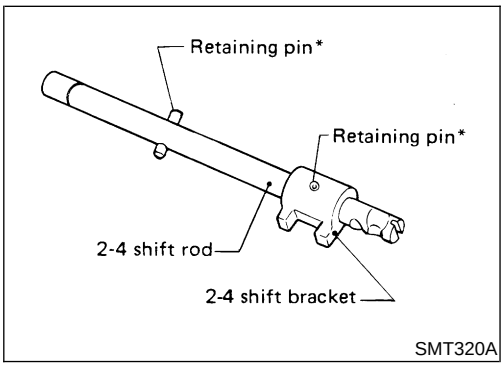

SMT320A

2-4 Shift Rod & Fork

NETF0033S02

- Assemble as shown in illustration.
  * Retaining pins are the same size.

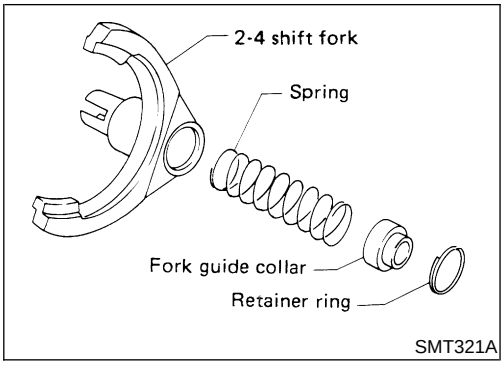

- **Pay special attention to the direction of fork guide collar.**

ASSEMBLY

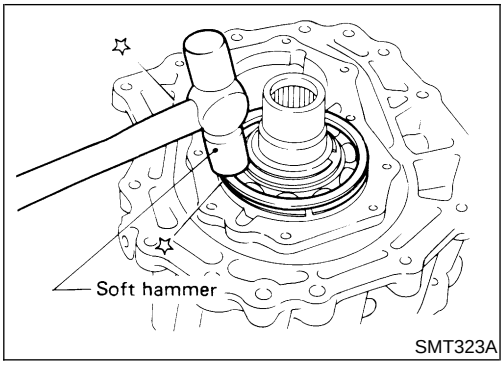

SMT323A

1. Assemble front case.

a. Install main gear assembly by tapping lightly.

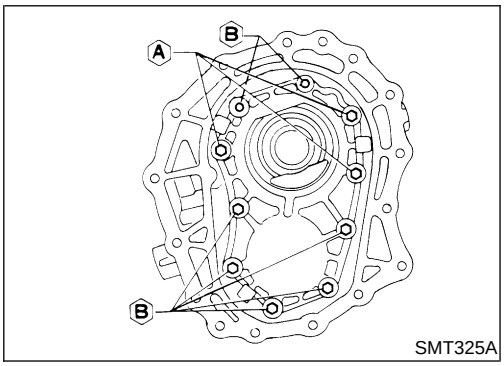

SMT325A

b. Apply sealant to the mating surface and bolts of front case cover, then attach it to the front case.

- **Use genuine anaerobic liquid gasket, Three Bond TB1215, Loctite Part No. 51813 or equivalent.**
- **These ten bolts should be coated with sealant.**

  Bolts A: 20 - 24 N·m (2.0 - 2.4 kg-m, 14 - 17 ft-lb)

  Bolts B: 24 - 28 N·m (2.4 - 2.9 kg-m, 17 - 21 ft-lb)

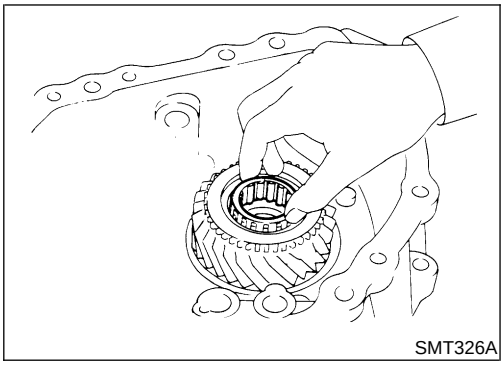
SMT326A

c. Apply ATF to needle bearing and install it into main gear.

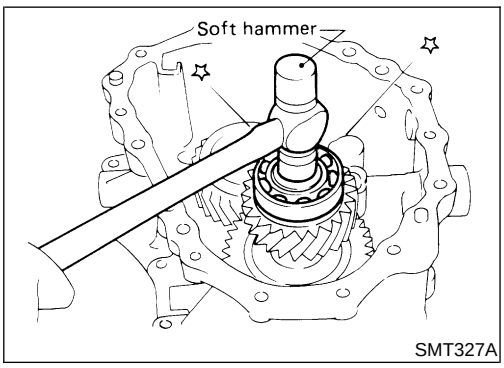

SMT327A

d. Install counter gear assembly by tapping lightly.

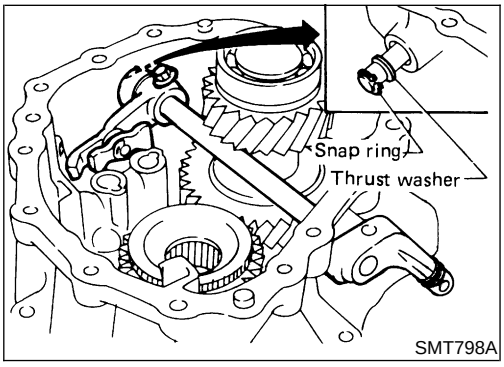

SMT798A

e. Install cross shaft and inner shift lever.

- **When replacing cross shaft, outer shift lever or outer shift lever lock pin, replace them as a set.**

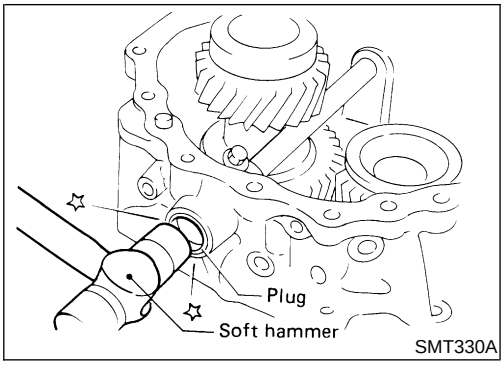

f. Apply sealant to plug and install it into front case.
Use genuine anaerobic liquid gasket, Three Bond TB1215, Loctite Part No. 51813 or equivalent.

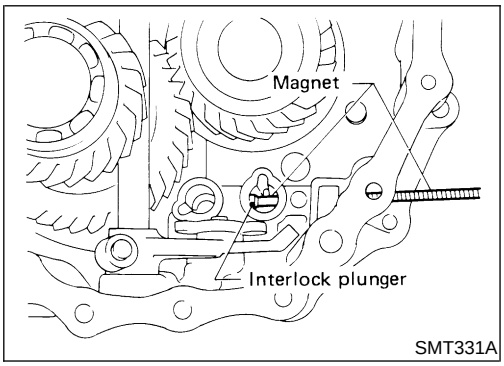

g. Insert interlock plunger into front case.

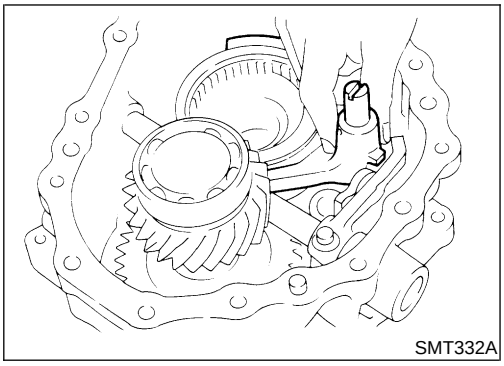

h. Install L & H shift rod and fork assembly with coupling sleeve.

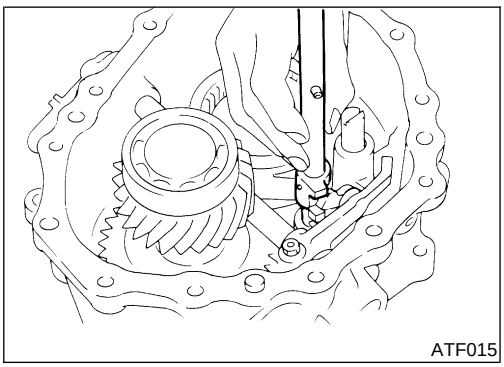

i. Install 2-4 shift rod.

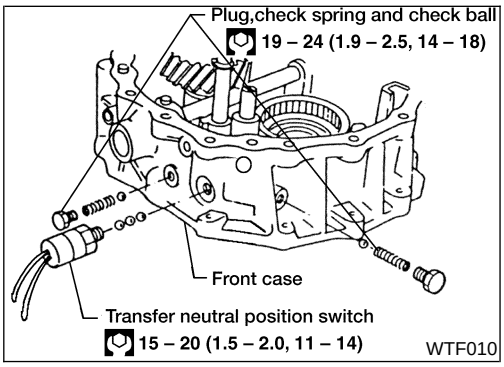

j. Install transfer neutral position switch, check balls, check springs and plugs.
- **Apply sealant to switches and plugs.**
- **Use genuine anaerobic liquid gasket, Three Bond TB1215, Loctite Part No. 51813 or equivalent.**

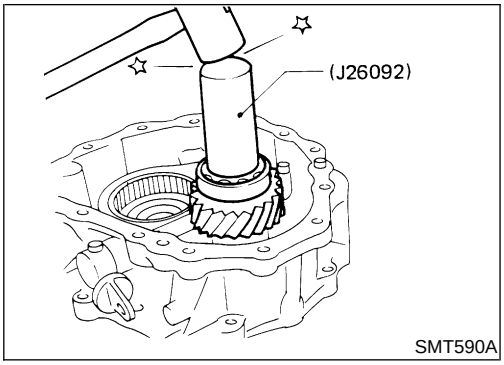

2. Select counter gear rear bearing shim.

a. Seat counter gear assembly.

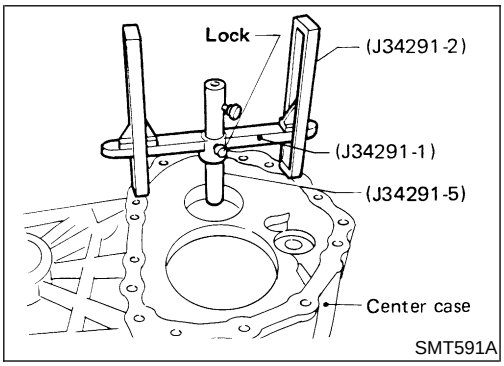

b. Place J34291-1 (bridge), J34291-2 (legs) and J34291-5 (gauging cylinder) on machined surface of center case, allowing gauging cylinder to rest on top outer portion of counter gear rear bearing. Lock gauging cylinder in place.

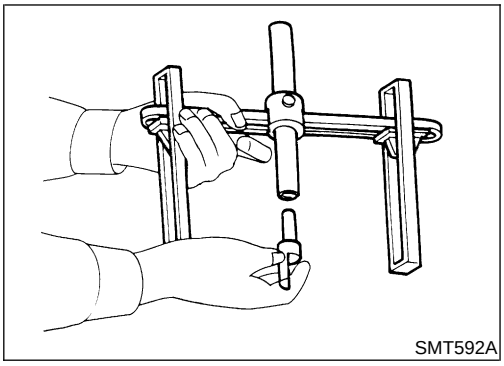

c. Insert J34291-20 (gauging plunger) into J34291-5 (gauging cylinder).

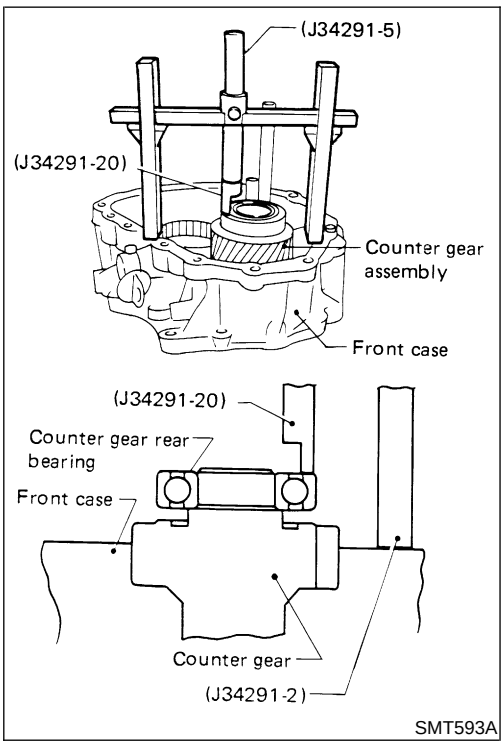

d. Place bridge, legs, gauging cylinder and gauging plunger onto machined surface of front case assembly, allowing gauging plunger to drop until it contacts counter gear rear bearing mating surface.

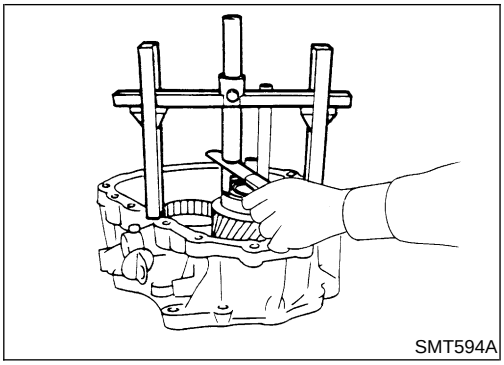
SMT594A

e. Lock gauging plunger in place and use feeler gauge to measure end play between gauging cylinder and gauging plunger.
f. Use measured distance to select correct counter gear rear bearing shim.

Allowable counter gear end play:
0 - 0.2 mm (0 - 0.008 in)
Allowable counter gear rear bearing shim:
Refer to “COUNTER GEAR REAR BEARING”, TF-37.

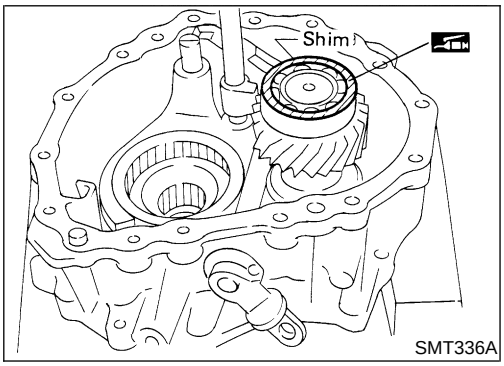

SMT336A

3. Place suitable shim with grease on counter gear rear bearing.
4. Apply ATF to each part in front case.

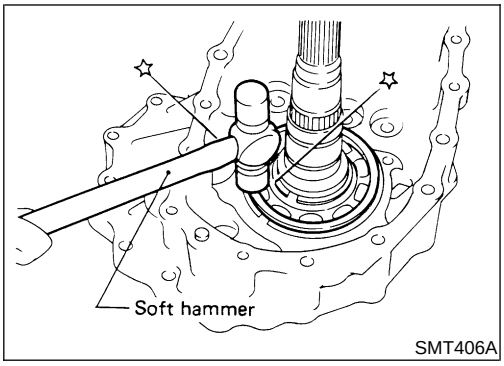

SMT406A

5. Assemble center case assembly.
a. Install mainshaft on center case by tapping lightly.

- **Apply ATF to mainshaft front bearing.**

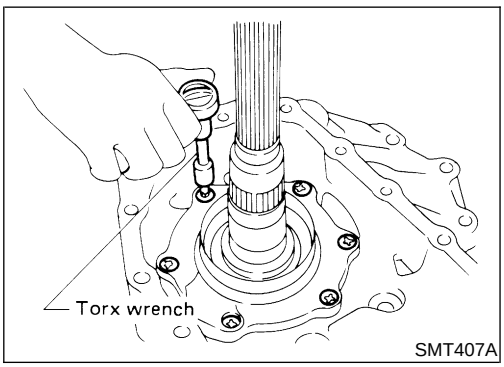

SMT407A

b. Install bearing retainer.

: 16 - 21 N·m (1.6 - 2.1 kg-m, 12 - 15 ft-lb)

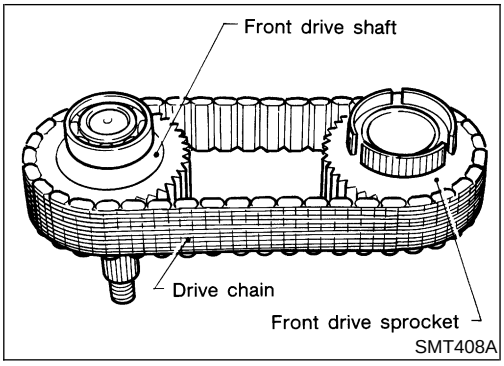

SMT408A

c. Put drive chain onto the front drive sprocket and front drive shaft, and then put them in center case.

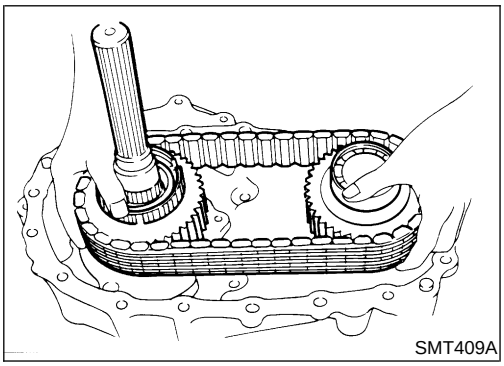
SMT409A

d. Install front drive shaft by tapping lightly.

- **Make sure shafts are aligned in the case.**

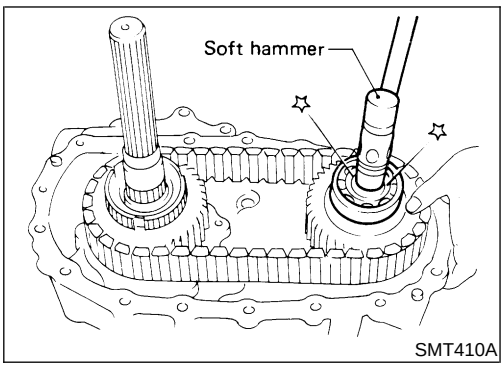

SMT410A

e. Apply ATF to needle bearings and install them into front drive sprocket.

- **These needle bearings can be installed more easily if front drive sprocket is rotated while installing them.**

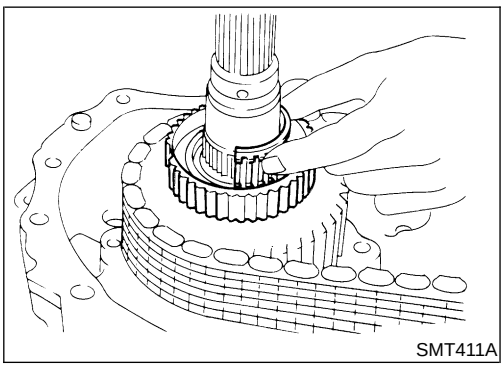
SMT411A

f. Install 2-4 coupling sleeve with 2-4 shift fork.

- **Pay special attention to direction of coupling sleeve.**

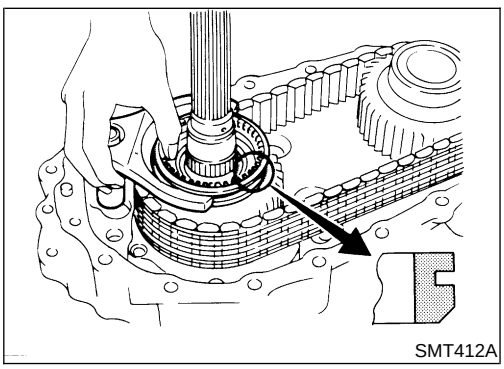
SMT412A

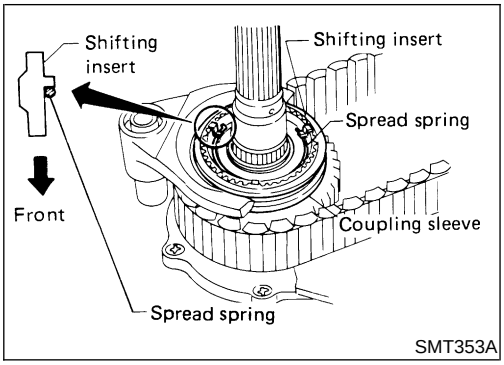

g. Install shifting inserts and spread spring.

- **Pay attention to the direction of shifting inserts.**

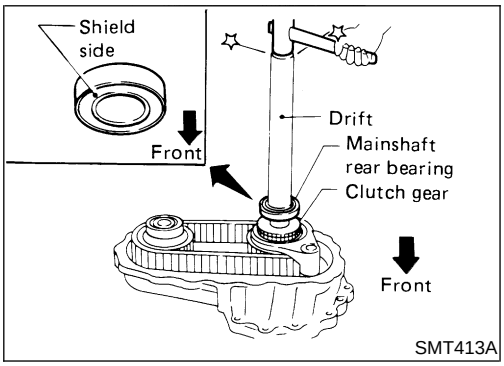

h. Install baulk ring, then install clutch gear and mainshaft rear bearing.

- **Place wooden block under mainshaft in order to protect mainshaft front bearing.**

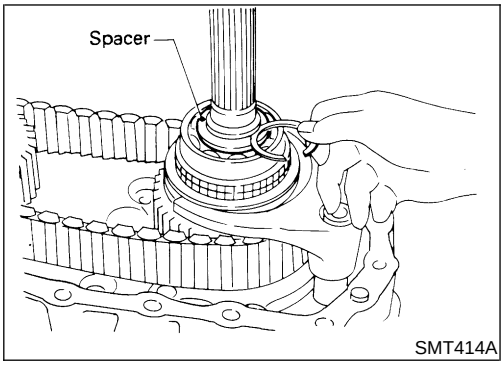

i. Install spacer.

j. Select and install snap ring with proper thickness.

Allowable clearance between snap ring and groove:
0 - 0.15 mm (0 - 0.0059 in)
Available snap ring for mainshaft rear bearing:
Refer to “MAINSHAFT REAR BEARING”, TF-38.

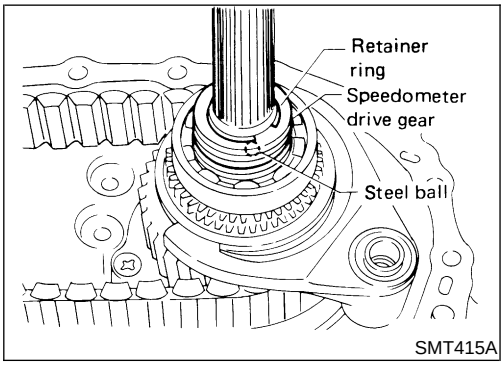

k. Install steel ball, speedometer drive gear and retainer ring.

- **Steel ball is the smallest of check balls for this unit.**

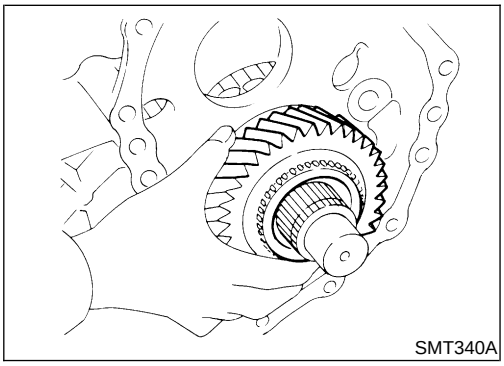

l. Install low gear and its bearing onto mainshaft.

- **Apply ATF to needle bearing.**

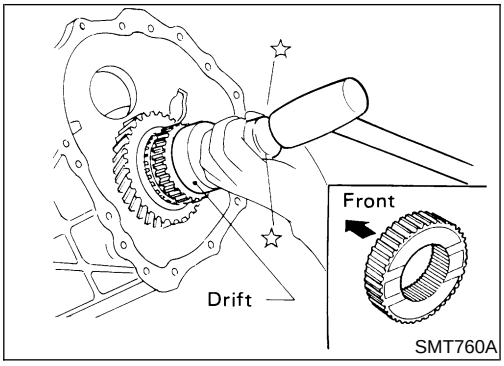

m. Install L & H hub and snap ring to mainshaft.
- **Pay attention to direction of L & H hub.**

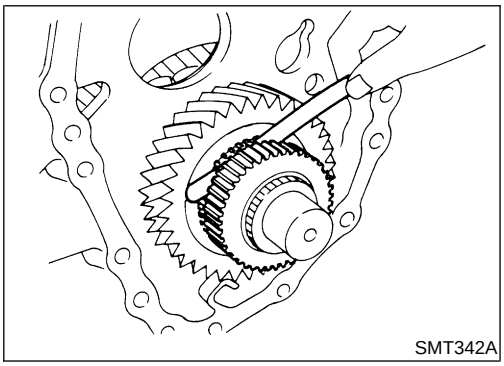

n. Measure low gear end play.
Standard:
0.2 - 0.35 mm (0.0079 - 0.0138 in)

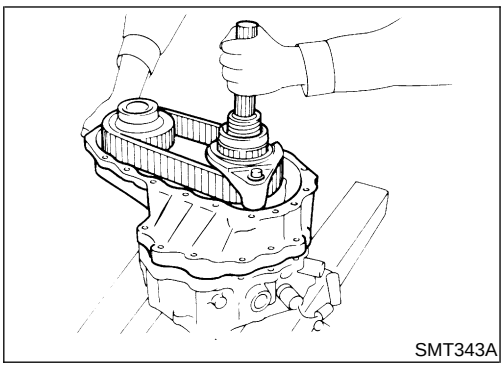

6. Apply sealant to mating surface of center case then attach to front case and tighten bolts.
- **Use genuine anaerobic liquid gasket, Three Bond TB1215, Loctite Part No. 51813 or equivalent.**

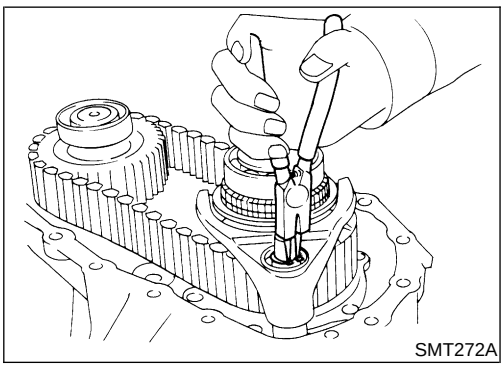

7. Install snap ring to 2-4 shift rod.

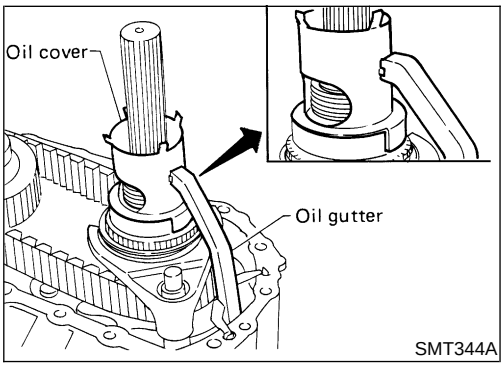

8. Install oil gutter and oil cover.
9. Apply ATF to each part in center case.

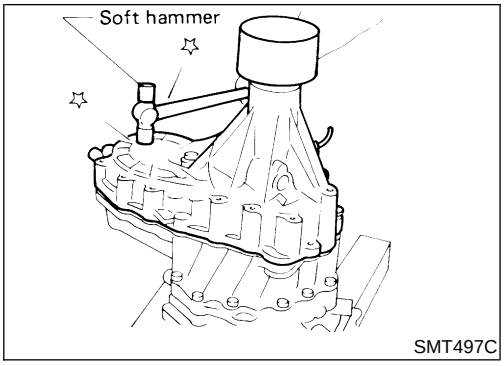

10. Apply sealant to mating surface of rear case then attach it to center case and tighten bolts.
- **Use genuine anaerobic liquid gasket, Three Bond TB1215, Loctite Part No. 51813 or equivalent.**

11. Install 4WD switch.
- **Apply sealant to switch threads.**
- **Use genuine anaerobic liquid gasket, Three Bond TB1215, Loctite Part No. 51813 or equivalent.**

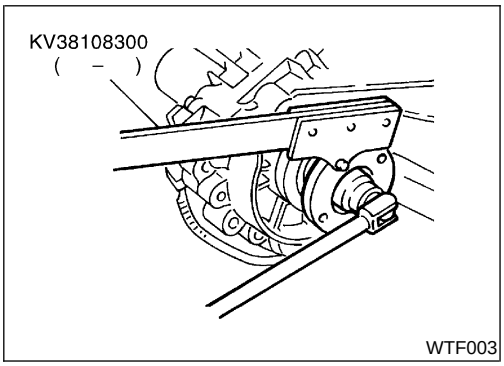

12. Install the companion flange and the companion flange nut.
- **Tighten the companion flange nut to specification. Refer to “Gear Components”, TF-13.**

General Specifications

NETF0035

Transfer model			TX10A
Gear ratio	High		1.000
	Low		2.020
Number of teeth	Main gear		29
	Low gear		37
	Counter gear	High	38
		Low	24
	Front drive sprocket		41
	Front drive shaft		41
Fluid capacity ℓ (US qt, Imp qt)			2.2 (2-3/8, 2)

Inspection and Adjustment

CLEARANCE BETWEEN FRONT DRIVE SPROCKET AND 2-4 COUPLING SLEEVE

NETF0040

NETF0040S01

Unit: mm (in)

Allowable clearance ″C″	0.2 - 0.54 (0.008 - 0.0213)

GEAR END PLAY

NETF0040S02

Unit: mm (in)

Front drive sprocket	0.2 - 0.35 (0.0079 - 0.0138)
Low gear	0.2 - 0.35 (0.0079 - 0.0138)
Counter gear	0 - 0.2 (0 - 0.008)

CLEARANCE BETWEEN BAULK RING AND CLUTCH GEAR

NETF0040S03

Unit: mm (in)

Standard	Wear limit
1.0 - 1.5 (0.039 - 0.059)	0.5 (0.020)

AVAILABLE SHIM

Counter Gear Rear Bearing

NETF0040S04

NETF0040S0401

Allowable clearance	0 - 0.2 mm (0 - 0.008 in)
Thickness mm (in)	Part No.*
0.1 (0.004)	33112-C6900
0.2 (0.008)	33112-C6901
0.3 (0.012)	33112-C6902
0.4 (0.016)	33112-C6903
0.5 (0.020)	33112-33G00
0.6 (0.024)	33112-33G01

*: Always check with the Parts Department for the latest parts information.

AVAILABLE SNAP RING

Mainshaft Front Bearing

NETF0040S05

NETF0040S0501

Allowable clearance	0 - 0.15 mm (0 - 0.0059 in)
Thickness mm (in)	Part No.*
3.10 (0.1220)	33138-73P10
3.19 (0.1256)	33138-73P11
3.28 (0.1291)	33138-73P12

*: Always check with the Parts Department for the latest parts information.

Main Gear Bearing

NETF0040S0502

Allowable clearance	0 - 0.15 mm (0 - 0.0059 in)
Thickness mm (in)	Part No.*
2.60 (0.1024)	33114-73P00
2.69 (0.1059)	33114-73P01
2.78 (0.1094)	33114-73P02

*: Always check with the Parts Department for the latest parts information.

Mainshaft Rear Bearing

NETF0040S0503

Allowable clearance	0 - 0.15 mm (0 - 0.0059 in)
Thickness mm (in)	Part No.*
1.80 (0.0709)	33138-73P20
1.89 (0.0744)	33138-73P21
1.98 (0.0780)	33138-73P22
2.07 (0.0815)	33138-73P23
2.16 (0.0850)	33138-73P24

*: Always check with the Parts Department for the latest parts information.

PROPELLER SHAFT & DIFFERENTIAL CARRIER

SECTION PD

CONTENTS

PROPELLER SHAFT 3
- Preparation 3
  - SPECIAL SERVICE TOOLS 3
- Noise, Vibration and Harshness (NVH) Troubleshooting 4
  - NVH TROUBLESHOOTING CHART 4
- Components 5
  - FRONT PROPELLER SHAFT 5
  - REAR PROPELLER SHAFT 6
- On-vehicle Service 8
  - PROPELLER SHAFT VIBRATION 8
  - APPEARANCE CHECKING 8
- Removal and Installation 9
- Inspection 9
- Disassembly 9
  - CENTER BEARING 9
  - JOURNAL 10
- Assembly 11
  - CENTER BEARING 11
  - JOURNAL 11
- Service Data and Specifications (SDS) 13
  - GENERAL SPECIFICATIONS 13
  - SERVICE DATA 13

R200A

FRONT FINAL DRIVE 14
- Preparation 14
  - SPECIAL SERVICE TOOLS 14
- Noise, Vibration and Harshness (NVH) Troubleshooting 16
- On-vehicle Service 16
  - FRONT OIL SEAL REPLACEMENT 16
  - REAR COVER GASKET REPLACEMENT 17
- Components 18
- Removal and Installation 19
  - REMOVAL 19
  - INSTALLATION 19
- Disassembly 20
  - PRE-INSPECTION 20
  - FINAL DRIVE HOUSING 20
  - DIFFERENTIAL CASE 23
  - DIFFERENTIAL SIDE SHAFT 23
- Inspection 24
  - RING GEAR AND DRIVE PINION 24
  - DIFFERENTIAL CASE ASSEMBLY 25
  - BEARING 25
- Adjustment 25
  - SIDE BEARING PRELOAD 25
  - PINION GEAR HEIGHT AND PINION BEARING PRELOAD 27
  - TOOTH CONTACT 31
- Assembly 32
  - DIFFERENTIAL SIDE SHAFT 32
  - DIFFERENTIAL CASE 32
  - FINAL DRIVE HOUSING 34
- Service Data and Specifications (SDS) 38
  - R200A 38

C200

REAR FINAL DRIVE 40
- Preparation 40
  - SPECIAL SERVICE TOOLS 40
- Noise, Vibration and Harshness (NVH) Troubleshooting 42
- On-vehicle Service 43
  - FRONT OIL SEAL REPLACEMENT 43
  - REAR COVER GASKET REPLACEMENT 43
- Components 44
- Removal and Installation 45
  - REMOVAL 45
  - INSTALLATION 45
- Disassembly 45
  - PRE-INSPECTION 45
  - DIFFERENTIAL CARRIER 46
  - DIFFERENTIAL CASE 48
- Inspection 49
  - RING GEAR AND DRIVE PINION 49
  - DIFFERENTIAL CASE ASSEMBLY 49
  - BEARING 49
- Adjustment 49

CONTENTS (Cont'd)

SIDE BEARING PRELOAD 50
PINION GEAR HEIGHT AND PINION BEARING PRELOAD 51
TOOTH CONTACT 56
Assembly 57
DIFFERENTIAL CASE 57
DIFFERENTIAL CARRIER 58
Service Data and Specifications (SDS) 62
C200 62

H233B

REAR FINAL DRIVE 64
Preparation 64
SPECIAL SERVICE TOOLS 64
Noise, Vibration and Harshness (NVH) Troubleshooting 66
On-vehicle Service 67
FRONT OIL SEAL REPLACEMENT 67
Components 68
Removal and Installation 69
REMOVAL 69
INSTALLATION 69
Disassembly 69
PRE-INSPECTION 69
DIFFERENTIAL CARRIER 70
DIFFERENTIAL CASE 72
Inspection 73
RING GEAR AND DRIVE PINION 73
DIFFERENTIAL CASE ASSEMBLY 73
BEARING 73
Limited Slip Differential 74
PREPARATION FOR DISASSEMBLY 74
DISASSEMBLY 74
INSPECTION 75
ADJUSTMENT 76
ASSEMBLY 78
Adjustment 79
PINION GEAR HEIGHT 80
TOOTH CONTACT 83
Assembly 84
DIFFERENTIAL CASE 84
DIFFERENTIAL CARRIER 85
Service Data and Specifications (SDS) 88
H233B 88

Preparation

SPECIAL SERVICE TOOLS

NEPD0001

The actual shapes of Kent-Moore tools may differ from those of special service tools illustrated here.

Tool number (Kent-Moore No.) Tool name	Description	
KV38108300 (J-44195) Companion flange wrench	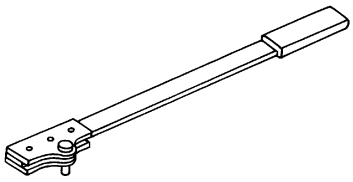 NT771	Removing and installing propeller shaft lock nut, and drive pinion lock nut
ST3090S000 (—) Drive pinion rear inner race puller set 1 ST30031000 (J22912-01) Puller 2 ST30901000 (J26010-01) Base	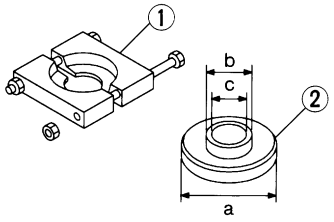 NT527	Removing and installing drive pinion rear inner cone **a: 79 mm (3.11 in) dia.** **b: 45 mm (1.77 in) dia.** **c: 35 mm (1.38 in) dia.**

Noise, Vibration and Harshness (NVH) Troubleshooting

=NEPD0049

NVH TROUBLESHOOTING CHART

NEPD0049S01

Use the chart below to help you find the cause of the symptom. If necessary, repair or replace these parts.

Reference page			—	PD-6	—	—	—	PD-8	PD-8	PD-24, 49, 73	PD-31, 56, 83	PD-24, 49, 73	PD-20, 45, 69	—	—	Refer to PROPELLER SHAFT in this chart.	Refer to DIFFERENTIAL in this chart.	Refer to NVH, ***AX-4***	Refer to NVH, ***AX-4***	Refer to NVH, ***SU-3***	Refer to NVH, ***SU-3***	Refer to NVH, ***SU-3***	Refer to NVH, ***BR-8***	Refer to NVH, ***ST-5***
Possible cause and SUSPECTED PARTS			Uneven rotation torque	Center bearing improper installation	Excessive center bearing axial end play	Center bearing mounting (insulator) cracks, damage or deterioration	Excessive joint angle	Rotation imbalance	Excessive runout	Rough gear tooth	Improper gear contact	Tooth surfaces worn	Incorrect backlash	Companion flange excessive runout	Improper gear oil	PROPELLER SHAFT	DIFFERENTIAL	DRIVE SHAFT	AXLE	SUSPENSION	TIRES	ROAD WHEEL	BRAKES	STEERING
Symptom	PROPELLER SHAFT	Noise	×	×	×	×	×	×	×								×	×	×	×	×	×	×	×
		Shake		×			×											×	×	×	×	×	×	×
		Vibration	×	×	×	×	×	×	×									×	×	×	×			×
	DIFFERENTIAL	Noise								×	×	×	×	×	×	×		×	×	×	×	×	×	×

×: Applicable

Components

NEPD0002

FRONT PROPELLER SHAFT

NEPD0002S01

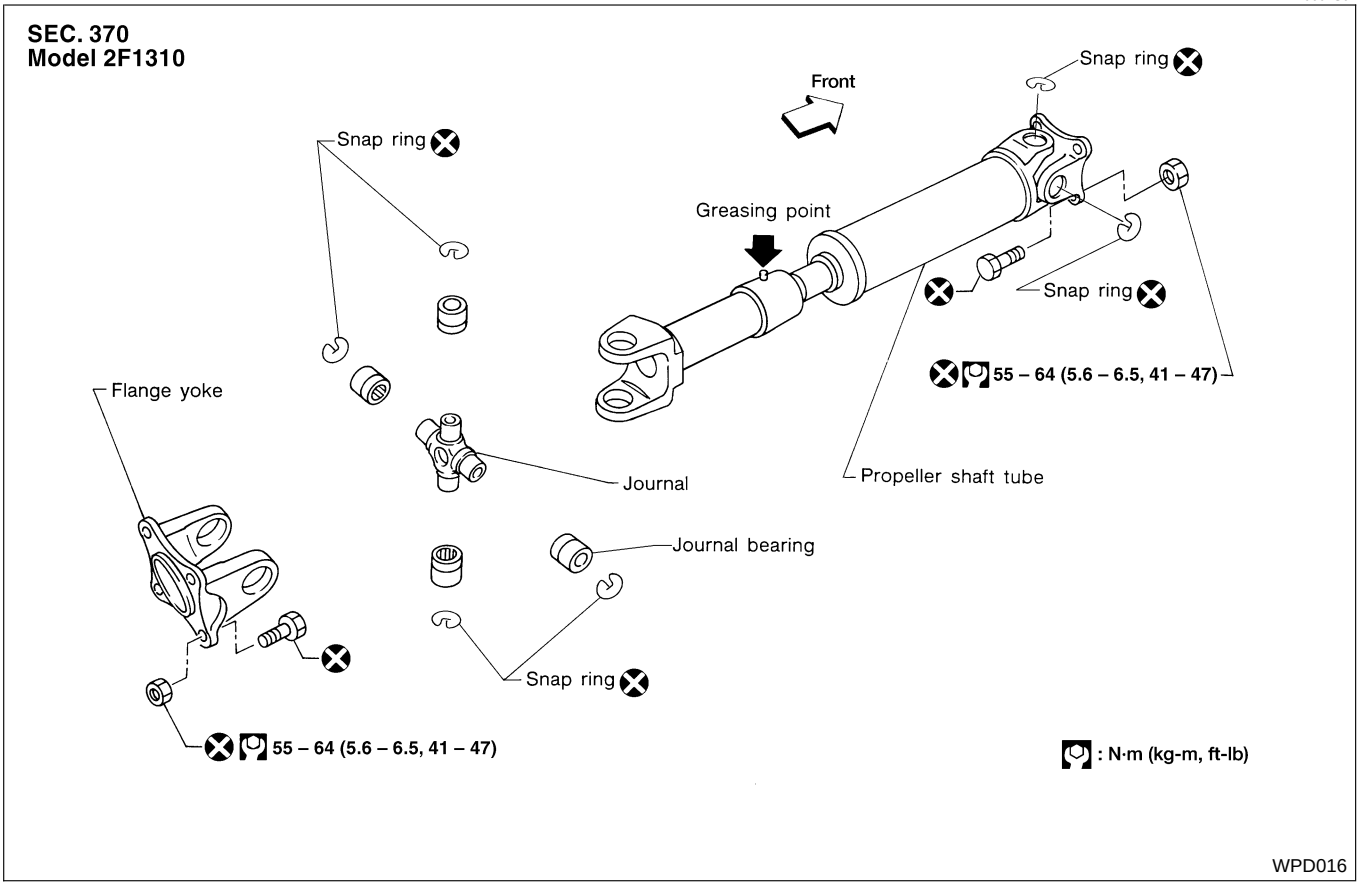

Components (Cont'd)

REAR PROPELLER SHAFT

NEPD0002S02

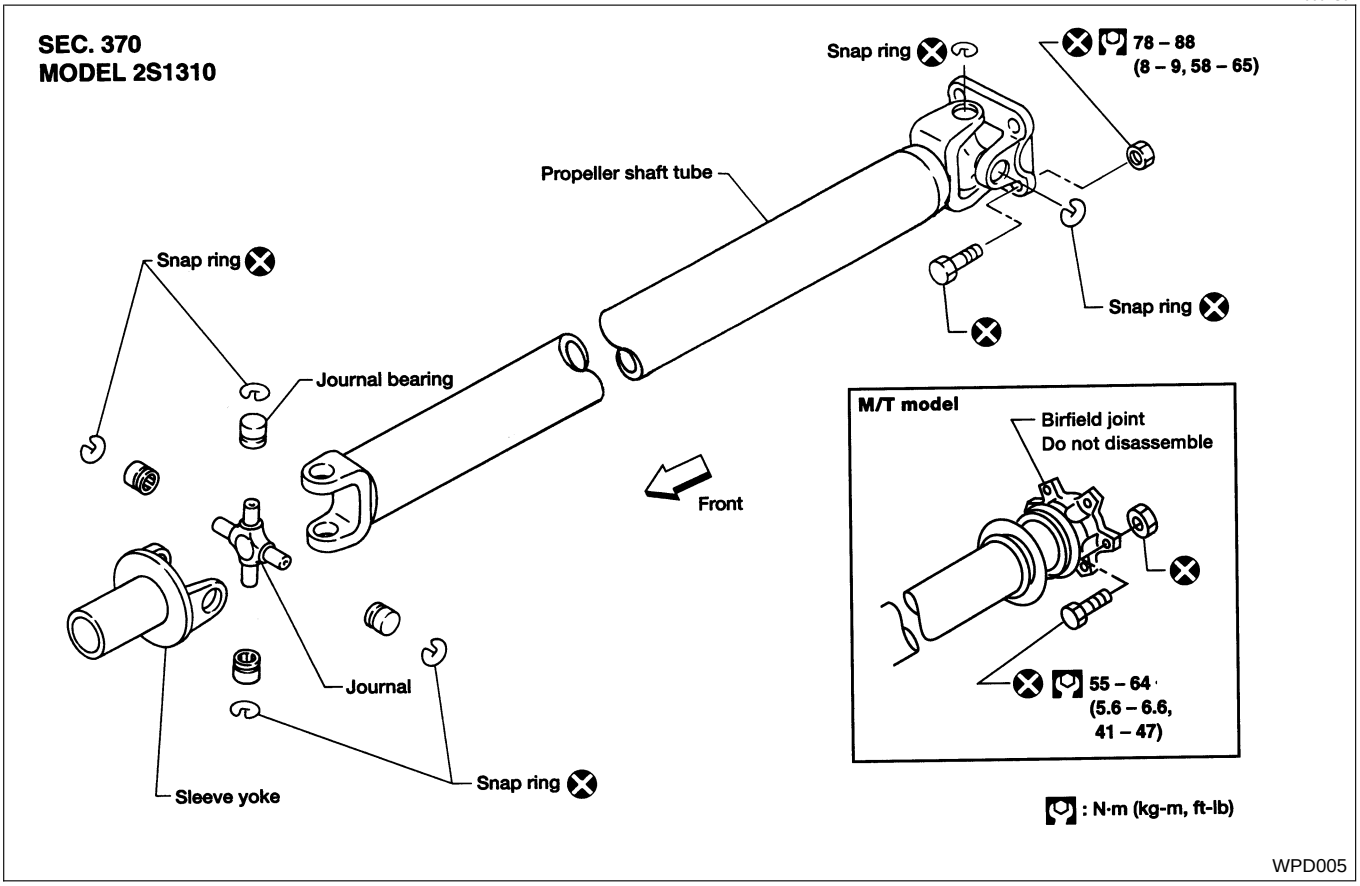

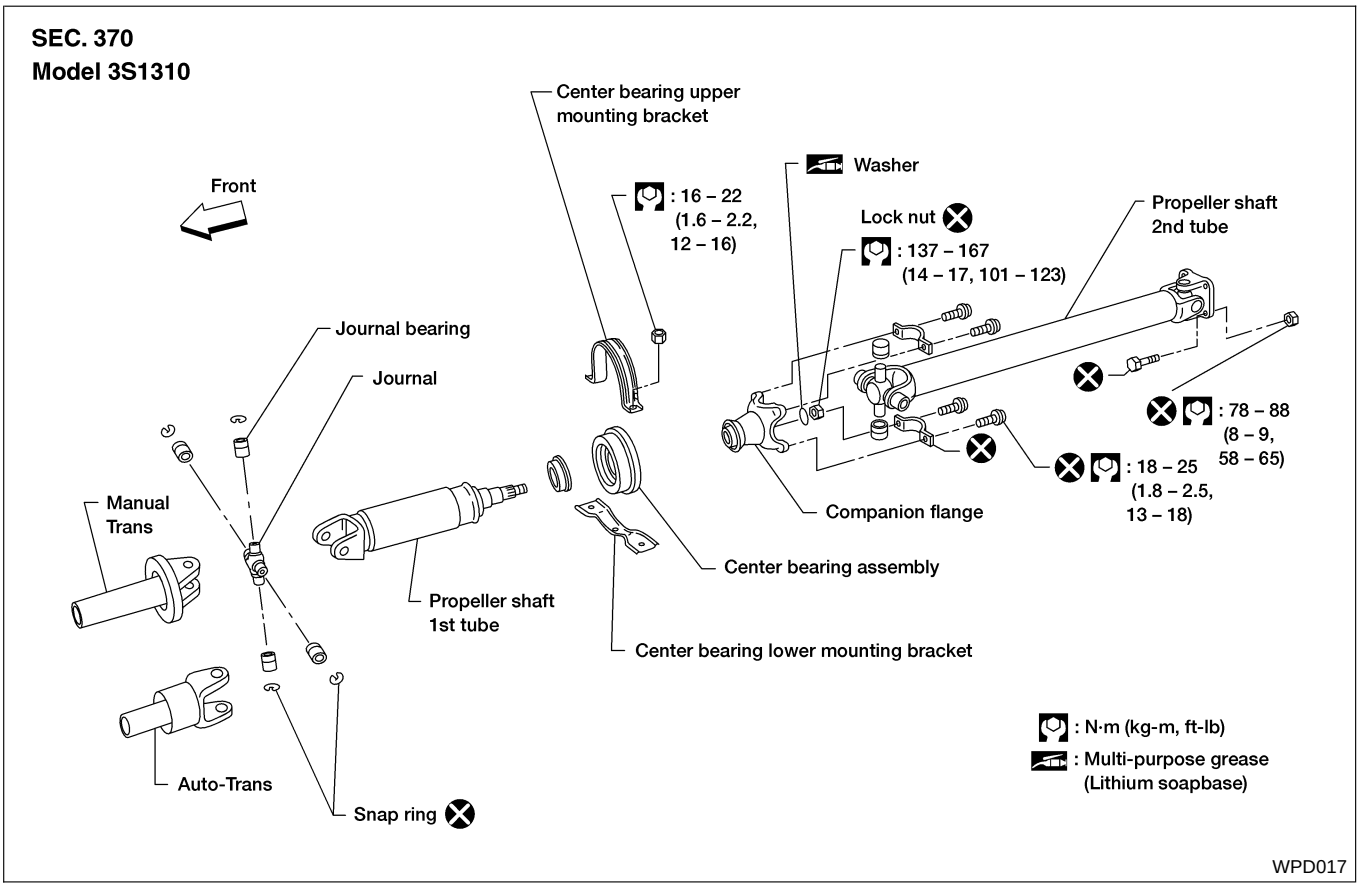

SEC. 370
Model 3580B-2BJ

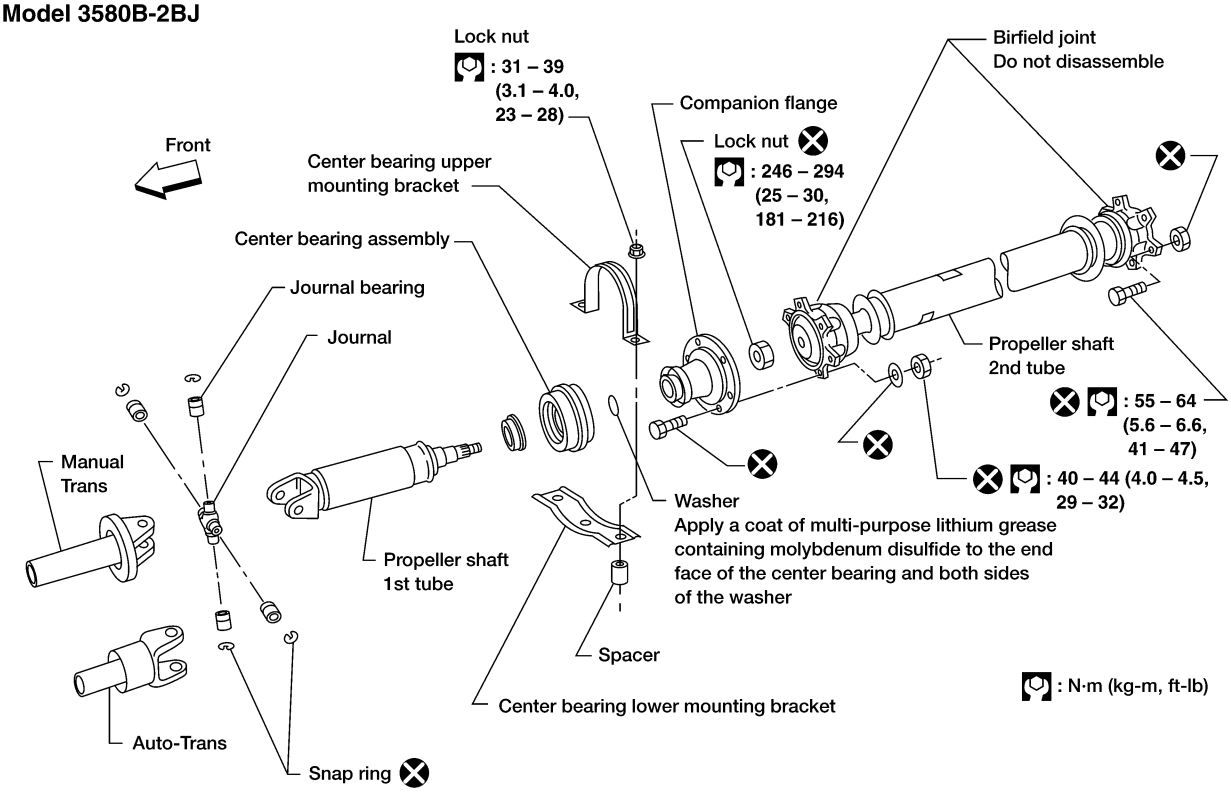

WPD006

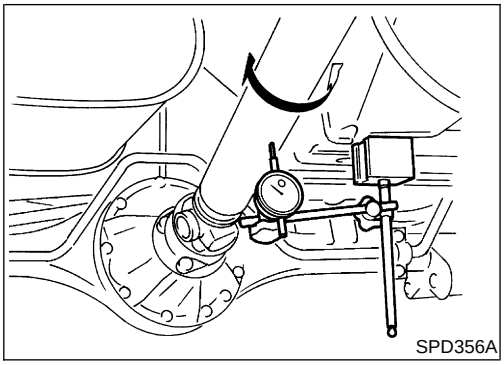

SPD356A

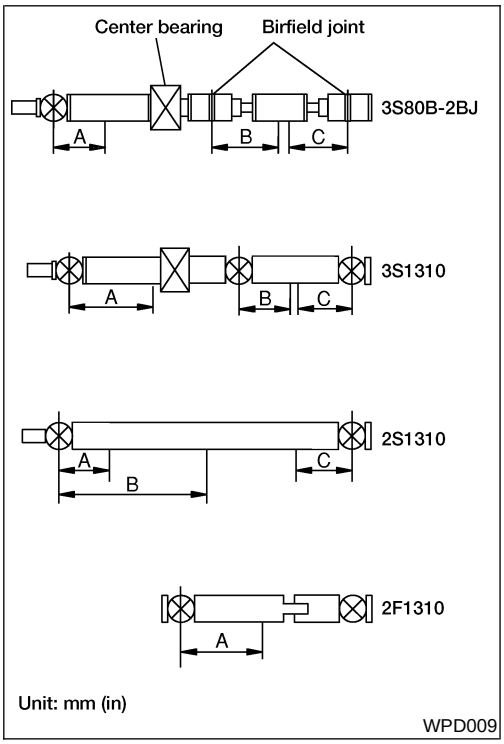

WPD009

On-vehicle Service

PROPELLER SHAFT VIBRATION

NEPD0003

If vibration is present at high speed, inspect propeller shaft runout first.

1. Raise rear end of vehicle until wheels are clear of the ground.
2. Measure propeller shaft runout at several points along propeller shaft by rotating final drive companion flange with hands.

Runout limit: 0.6 mm (0.024 in)

Propeller shaft runout measuring points:

KA24DE engine

Unit: mm (in)

Distance		A	B	C
3S1310 (King Cab)	A/T	226	485	—
	M/T	274	485	—
3S1310 (Regular Cab)	A/T	226	336	—
2S1310 (Regular Cab)	M/T	237	658	237

VG33E engine

Unit: mm (in)

Distance		A	B	C
3S1310 (2WD)	A/T	241	491	—
	M/T	288	491	—
2S1310 (4WD)	All	237	623.5	237
2F1310 (4WD)	A/T	271	—	—
	M/T	271	—	—

VG33ER engine

Unit: mm (in)

Distance		A	B	C
3S80B-2BJ (Supercharger)	All	162	240	240

3. If runout exceeds specifications, disconnect propeller shaft at final drive companion flange; then rotate companion flange 180 degrees and reconnect propeller shaft.
4. Check runout again. If runout still exceeds specifications, replace propeller shaft assembly.
5. Perform road test.

APPEARANCE CHECKING

NEPD0004

- Inspect propeller shaft tube surface for dents or cracks. If damaged, replace propeller shaft assembly.
- If center bearing is noisy or damaged, replace center bearing.

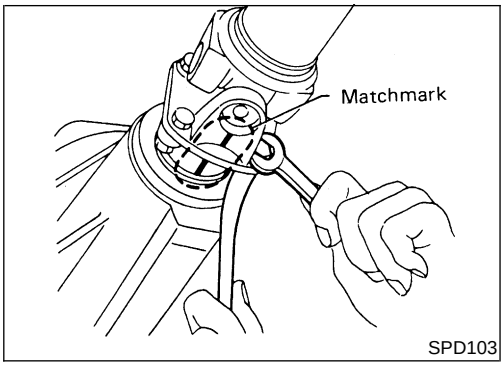

SPD103

Removal and Installation

NEPD0005

1) Put match marks on flanges and separate propeller shaft from final drive.

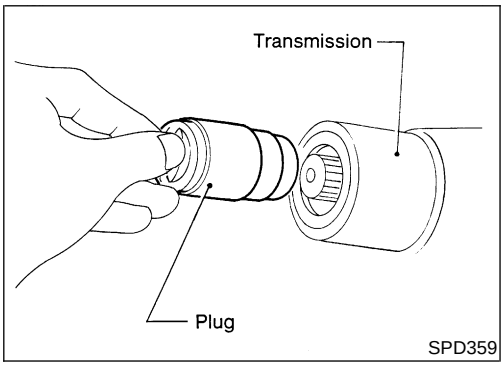

SPD359

2) Remove propeller shaft.
Insert plug into rear oil seal after removing rear propeller shaft.

Inspection

NEPD0006

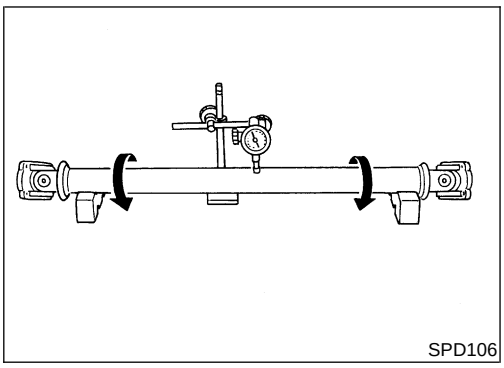
SPD106

- Inspect propeller shaft runout. If runout exceeds specifications, replace propeller shaft assembly.
  Runout limit: 0.6 mm (0.024 in)

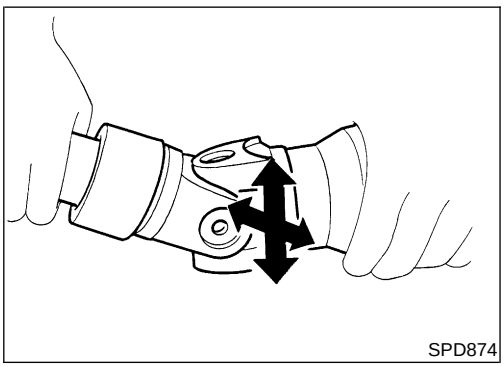
SPD874

- If the play exceeds specifications, replace propeller shaft assembly.
  Journal axial play:
  0.02 mm (0.0008 in) or less

Disassembly

NEPD0007

CENTER BEARING

NEPD0007S01

1. Put match marks on flanges, and separate 2nd tube from 1st tube.

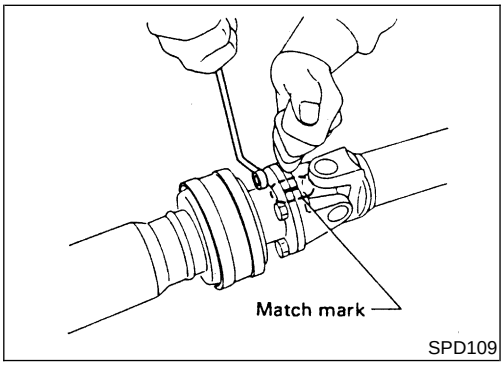

SPD109

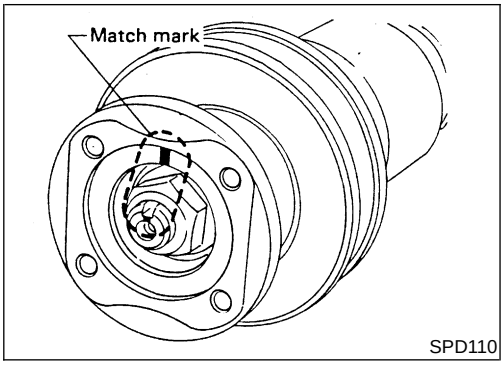

2. Put match marks on the flange and shaft.

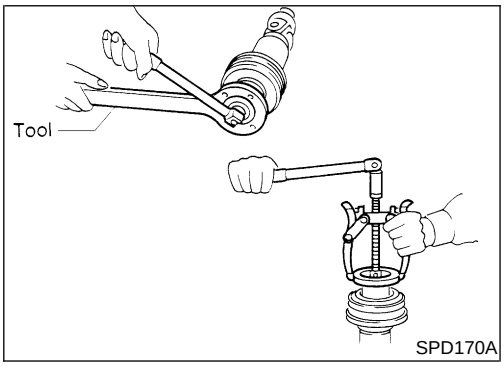

3. Remove locking nut with Tool.
   Tool number:
   KV38108300 (J-44195)
4. Remove companion flange with puller.

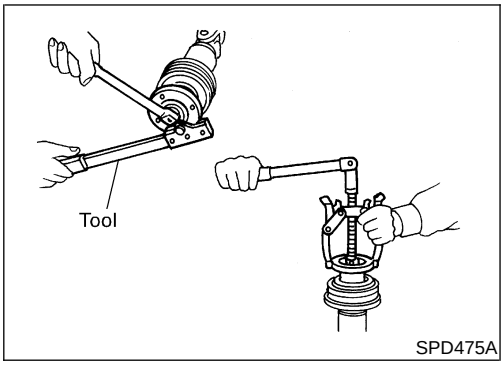

5. Remove center bearing with Tool and press.
   Tool number: ST30031000 (J22912-01)

JOURNAL

NEPD0007S02

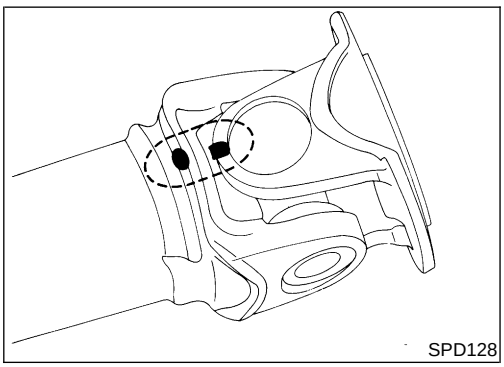

1. Put match marks on shaft and flange or yoke.

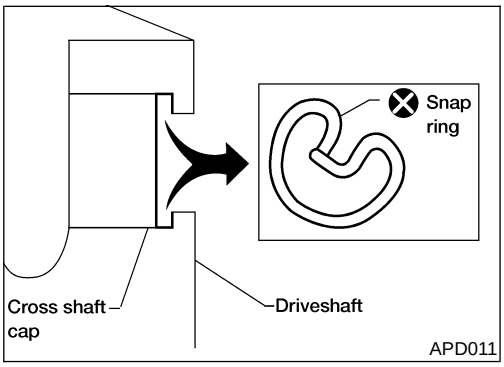

2. Remove snap ring.

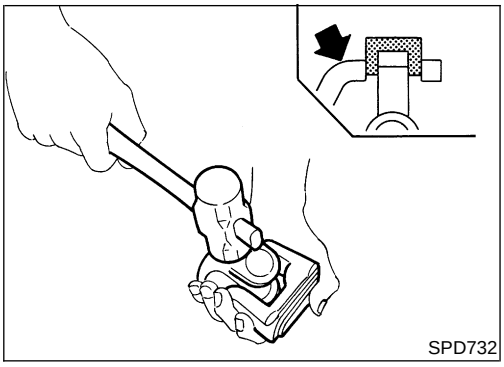
SPD732

3. Remove pushed out journal bearing by lightly tapping yoke with a hammer, taking care not to damage journal and yoke hole.

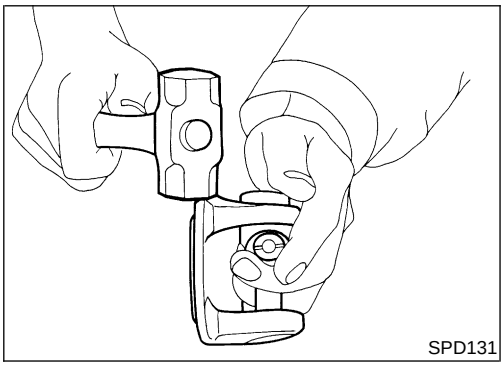
SPD131

4. Remove bearing at opposite side in above operation.

Put marks on disassembled parts so that they can be reinstalled in their original positions from which they were removed.

Assembly

NEPD0008

CENTER BEARING

NEPD0008S01

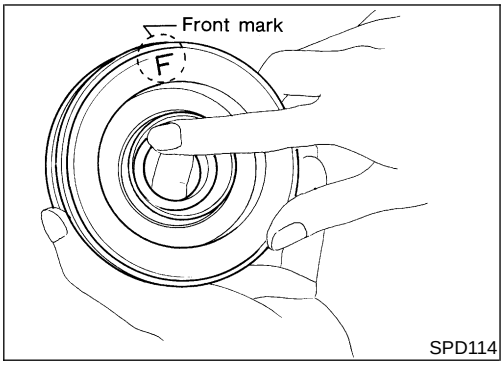

SPD114

- When installing center bearing, position the "F" mark on center bearing toward front of vehicle.
- **Apply a coat of multi-purpose lithium grease containing molybdenum disulfide to the end face of the center bearing and both sides of the washer.**

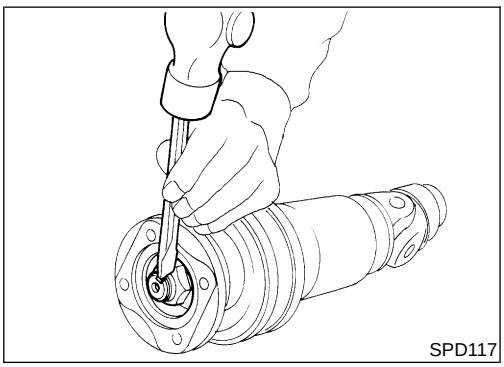
SPD117

- Stake the nut. Always use a new one.
- Align match marks when assembling tubes.

JOURNAL

NEPD0008S02

1. Assemble journal bearing. Apply recommended multi-purpose grease on bearing inner surface.

When assembling, be careful that needle bearing does not fall down.

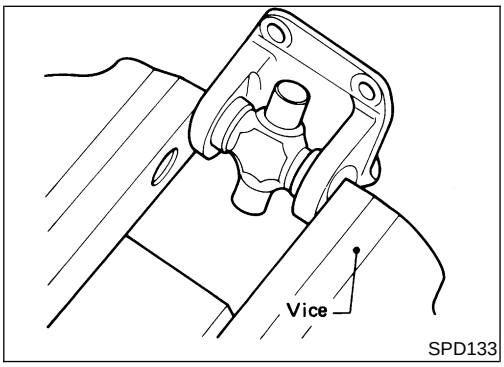

SPD133

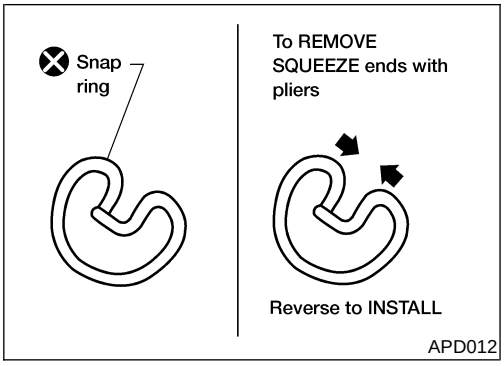

2. Install new snap rings.

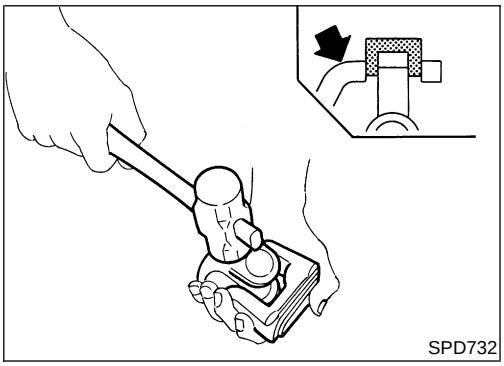

3. Adjust thrust clearance between bearing and snap ring to zero by tapping yoke.

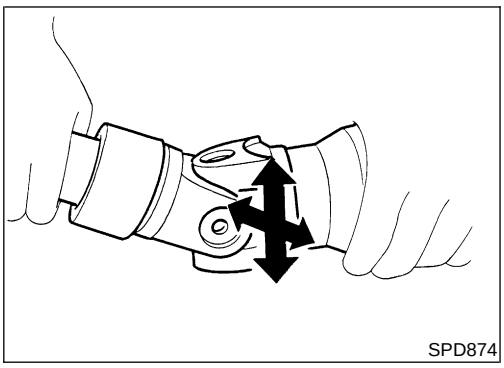

4. Check to see that journal moves smoothly and check for axial play.

Axial play: 0.02 mm (0.0008 in) or less

Service Data and Specifications (SDS)

GENERAL SPECIFICATIONS

2WD KA24DE Models

=NEPD0009

NEPD0009S01

Applied model		Standard wheelbase		Long wheelbase	
Propeller shaft model		M/T	A/T	M/T	A/T
		2S1310	3S1310		
Number of joints		2	3		
Coupling method with transmission		Sleeve type			
Type of journal bearings		Solid type (disassembly type)			
Shaft length (Spider to spider) mm (in)	1st tube	1317 (51.85)	549.6 (21.64)	644.7 (25.38)	549.6 (21.64)
	2nd tube	—	672 (26.46)	970.3 (38.20)	970.3 (38.20)
Shaft diameter mm (in)	1st tube	88.9 (3.50)	63.5 (2.50)	63.5 (2.50)	63.5 (2.50)
	2nd tube	—	63.5 (2.50)	63.5 (2.50)	63.5 (2.50)

2WD VG33E and VG33ER Models

NEPD0009S03

Grade		XE, SE		SC	
Transmission		M/T	A/T	M/T	A/T
Propeller shaft model		3S1310		3S80B-2BJ	
Number of joints		3		3	
Coupling method with transmission		Sleeve type			
Type of journal bearings		Solid type (disassembly type)		Solid type (disassembly type without Birfield joint)	
Shaft length (Spider to spider) mm (in)	1st tube	661 (26.02)	566 (22.28)	681 (26.81)	586 (23.07)
	2nd tube	982.3 (38.67)	982.3 (38.67)	980 (38.58)	
Shaft outer diameter mm (in)	1st tube	63.5 (2.50)	63.5 (2.50)	75 (2.95)	
	2nd tube	63.5 (2.50)	63.5 (2.50)	65 (2.56)	

4WD Models

NEPD0009S04

Grade	XE, SE		SC	
Location	Front	Rear	Front	Rear
Propeller shaft model	2F1310	2S1310	2F1310	2S1310
Number of joints	2	2	2	2
Coupling method with transmission	Flange type	Sleeve type	Flange type	Sleeve type
Type of journal bearings	Solid type (disassembly type)			
Distance between yokes mm (in)	71 (2.80)	80 (3.15)	71 (2.80)	80 (3.15)
Shaft length (Spider to spider) mm (in)	522 (20.55)	1247 (49.09)	522 (20.60)	1247 (49.09)
Shaft outer diameter mm (in)	50.8 (2.00)	76.2 (3.00)	50.8 (2.00)	88.9 (3.50)

SERVICE DATA

NEPD0010

Unit: mm (in)

Propeller shaft runout limit	0.6 (0.024)
Journal axial play	0.02 (0.0008) or less

Preparation

SPECIAL SERVICE TOOLS

NEPD0013

The actual shapes of Kent-Moore tools may differ from those of special service tools illustrated here.

Tool number (Kent-Moore No.) Tool name	Description	
ST3127S000 (See J25765-A) Preload gauge 1 GG91030000 (J25765) Torque wrench 2 HT62940000 (—) Socket adapter 3 HT62900000 (—) Socket adapter	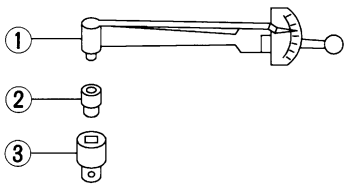 NT124	Measuring pinion bearing preload and total preload
KV38100800 (J34310, J25604-01) Differential attachment	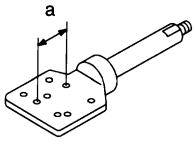 NT119	Mounting final drive (To use, make a new hole.) **a: 152 mm (5.98 in)**
KV38108300 (J-44195) Companion flange wrench	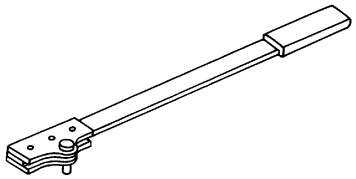 NT771	Removing and installing propeller shaft lock nut, and drive pinion lock nut
ST3090S000 (—) Drive pinion rear inner race puller set 1 ST30031000 (J22912-01) Puller 2 ST30901000 (J26010-01) Base	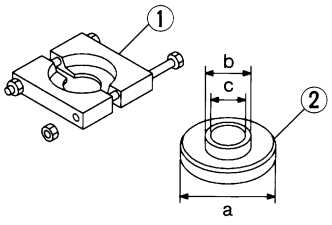 NT527	Removing and installing drive pinion rear inner cone **a: 79 mm (3.11 in) dia.** **b: 45 mm (1.77 in) dia.** **c: 35 mm (1.38 in) dia.**
ST3306S001 Differential side bearing puller set 1 ST33051001 (J22888-20) Body 2 ST33061000 (J8107-2) Adapter	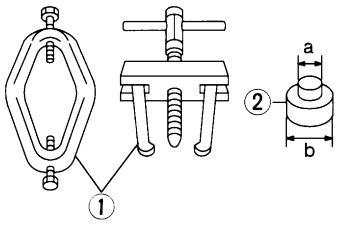 NT072	Removing and installing differential side bearing inner cone **a: 28.5 mm (1.122 in) dia.** **b: 38 mm (1.50 in) dia.**
KV38100300 (J25523) Differential side bearing drift	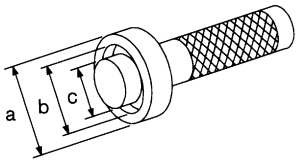 NT085	Installing side bearing inner cone **a: 54 mm (2.13 in) dia.** **b: 46 mm (1.81 in) dia.** **c: 32 mm (1.26 in) dia.**

Tool number (Kent-Moore No.) Tool name	Description	
KV38100600 (J25267) Side bearing spacer drift	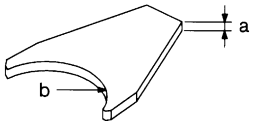 NT528	Installing side bearing spacer **a: 8 mm (0.31 in)** **b: R42.5 mm (1.673 in)**
ST30611000 (J25742-1) Drift	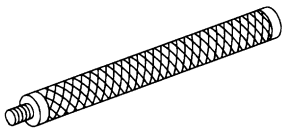 NT090	Installing pinion rear bearing outer race (Use with ST30621000 or ST30613000)
ST30621000 (J25742-5) Drift	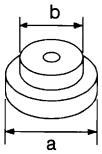 NT073	Installing pinion rear bearing outer race (Use with ST30611000) **a: 79 mm (3.11 in) dia.** **b: 59 mm (2.32 in) dia.**
ST30613000 (J25742-3) Drift	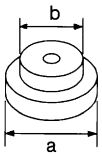 NT073	Installing pinion front bearing outer race (Use with ST30611000) **a: 72 mm (2.83 in) dia.** **b: 48 mm (1.89 in) dia.**
KV38100500 (J25273) Gear carrier front oil seal drift	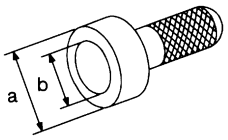 NT115	Installing front oil seal **a: 85 mm (3.35 in) dia.** **b: 60 mm (2.36 in) dia.**
KV38100200 (J26233) Gear carrier side oil seal drift	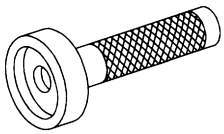 NT120	Installing side oil seal
(J34309) Differential shim selector	 NT134	Adjusting bearing pre-load and gear height
(J25269-4) Side bearing discs (2 Req'd)	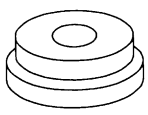 NT136	Selecting pinion height adjusting washer

Tool number (Kent-Moore No.) Tool name	Description
(J8129) Spring gauge	Measuring carrier turning torque 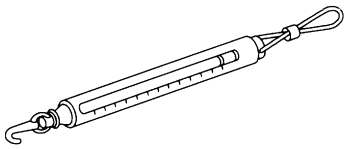 NT127

Noise, Vibration and Harshness (NVH) Troubleshooting

NEPD0050

Refer to "NVH TROUBLESHOOTING CHART", PD-4.

On-vehicle Service

FRONT OIL SEAL REPLACEMENT

NEPD0014

(Front final drive: Model R200A)

1. Remove front propeller shaft. Refer to "Removal and Installation", PD-9.
2. Loosen drive pinion nut.

   Tool number: KV38108300 (J-44195)

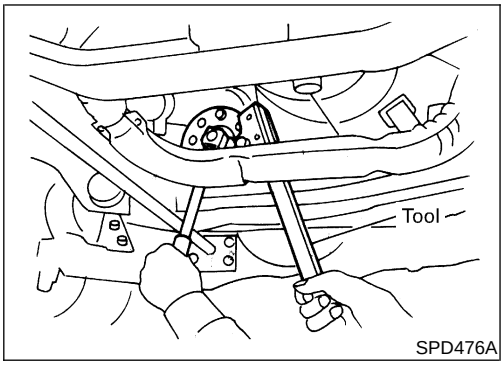

SPD476A

3. Remove companion flange.

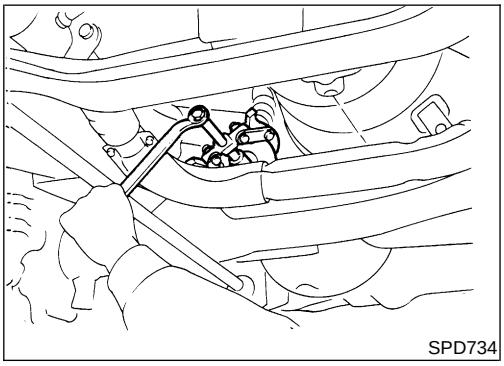
SPD734

4. Remove front oil seal.

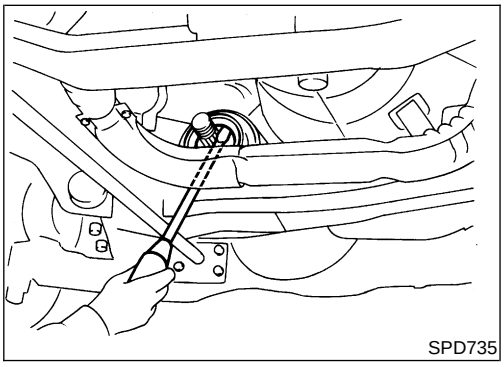
SPD735

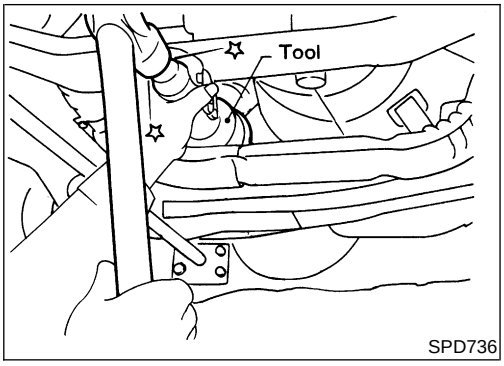

5. Apply multi-purpose grease to cavity at sealing lips of oil seal. Press front oil seal into carrier.
6. Install companion flange and drive pinion nut.
7. Install propeller shaft.

Tool number:
KV38100500 (J25273)

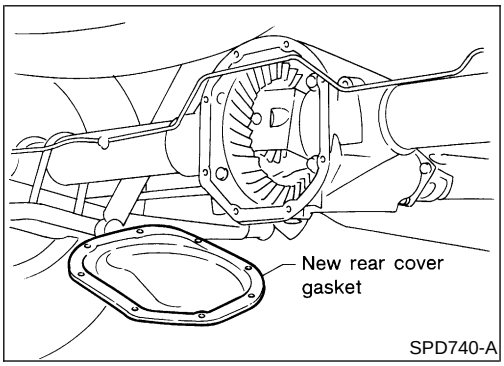

REAR COVER GASKET REPLACEMENT

NEPD0015

1. Drain gear oil.
2. Remove rear cover and rear cover gasket.
3. Install new rear cover gasket and rear cover.
4. Fill final drive with recommended gear oil.

Components

NEPD0016

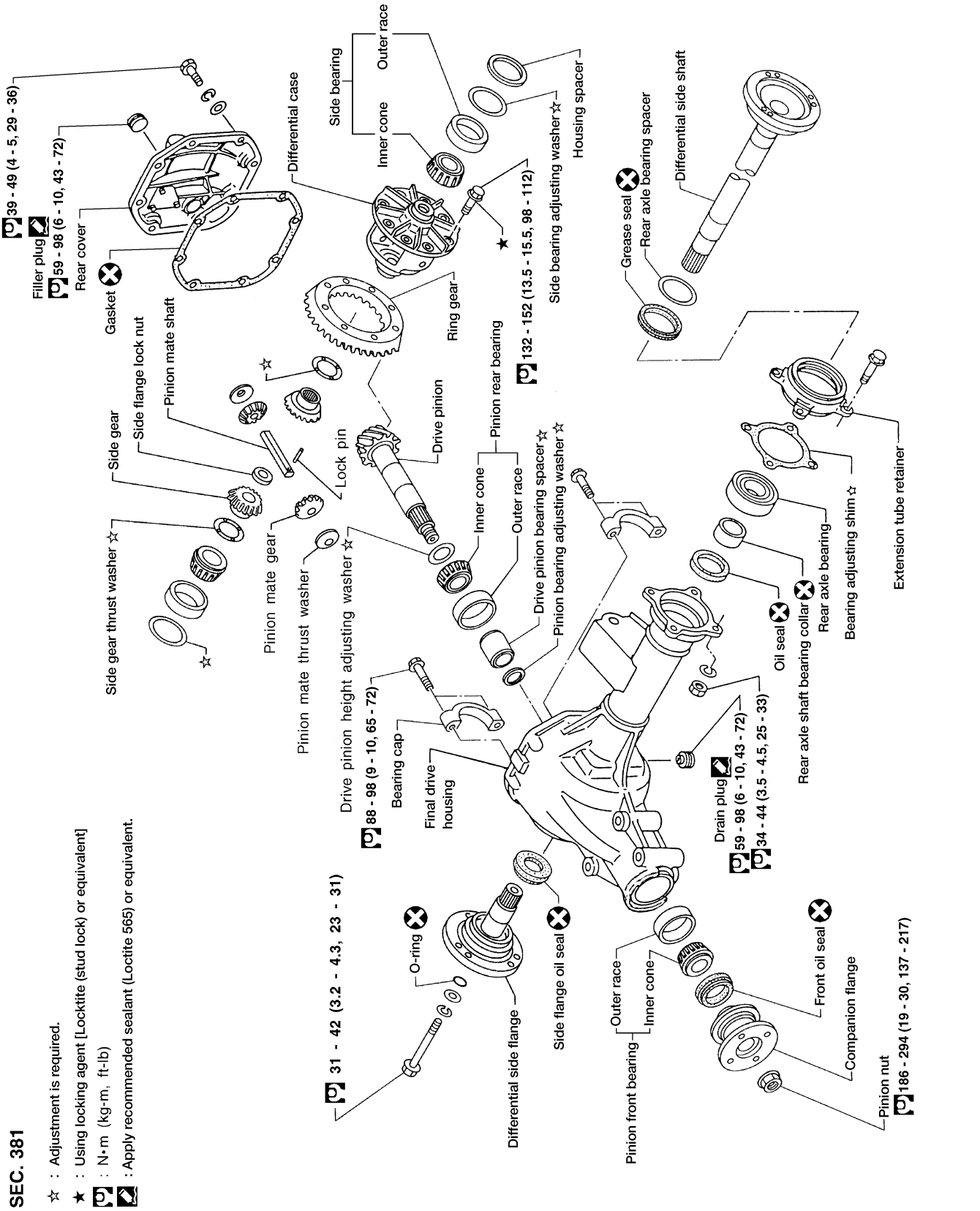

WPD007

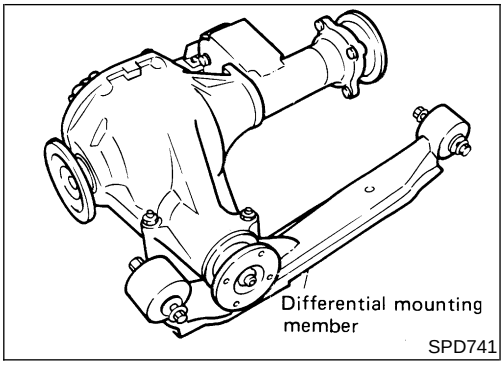

SPD741

Removal and Installation

NEPD0017

REMOVAL

NEPD0017S01

1) Remove front propeller shaft. Refer to “Removal and Installation”, PD-9.
2) Separate drive shaft from front final drive. Refer to ***AX-7***, “Drive Shaft”.
3) Remove engine mounting bolts and raise up engine.
4) Remove front final drive together with differential mounting member.

CAUTION:

Be careful not to damage spline, sleeve yoke and front oil seal when removing propeller shaft.

Before removing the final drive assembly or rear axle assembly, disconnect the ABS sensor harness connector from the assembly and move it away from the final drive/rear axle assembly area. Failure to do so may result in the sensor wires being damaged and the sensor becoming inoperative.

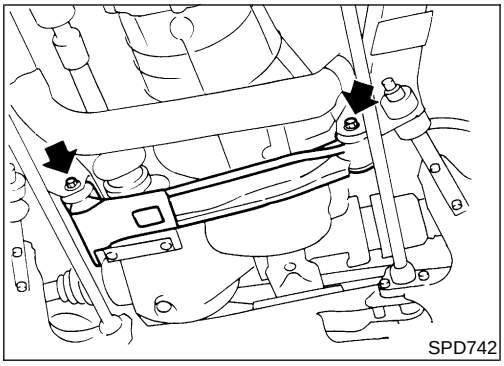
SPD742

INSTALLATION

NEPD0017S02

1) Install front final drive assembly together with differential mounting member.

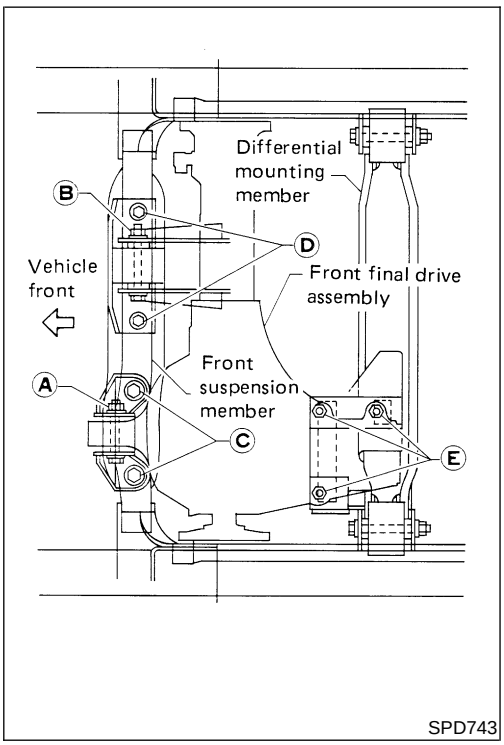

SPD743

2) Tighten front final drive securing bolts and nuts by following the procedure to prevent drive train vibration.
a) Temporarily tighten nut **A**.
b) Temporarily tighten nut **B**.
c) Tighten bolt **C** to the torque of 68 to 87 N·m (6.9 to 8.9 kg-m, 50 to 64 ft-lb).
d) Tighten bolt **D** to the torque of 68 to 87 N·m (6.9 to 8.9 kg-m, 50 to 64 ft-lb).
e) Tighten nut **A** to the torque of 68 to 87 N·m (6.9 to 8.9 kg-m, 50 to 64 ft-lb).
f) Tighten nut **B** to the torque of 68 to 87 N·m (6.9 to 8.9 kg-m, 50 to 64 ft-lb).
g) Tighten bolt **E** to the torque of 68 to 87 N·m (6.9 to 8.9 kg-m, 50 to 64 ft-lb).
3) Install drive shaft. Refer to ***AX-7***, “Drive Shaft”.
4) Install front propeller shaft. Refer to “Removal and Installation”, PD-9.

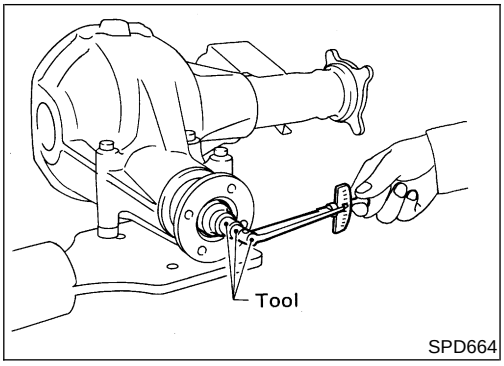

Disassembly

NEPD0018

PRE-INSPECTION

NEPD0018S01

Before disassembling final drive, perform the following inspection.

- Total preload

a) Turn drive pinion in both directions several times to set bearing rollers.

b) Check total preload with Tool.

Tool number: ST3127S000 (J25765-A)

Total preload:

1.4 - 1.7 N·m (14 - 17 kg-cm, 12 - 15 in-lb)

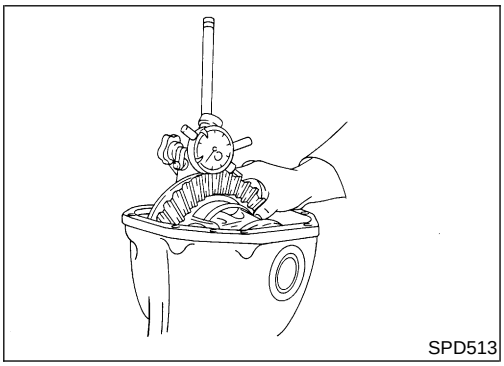

- Ring gear to drive pinion backlash

Check backlash of ring gear with a dial indicator at several points.

Ring gear-to-drive pinion backlash:

0.10 - 0.15 mm (0.0039 - 0.0059 in)

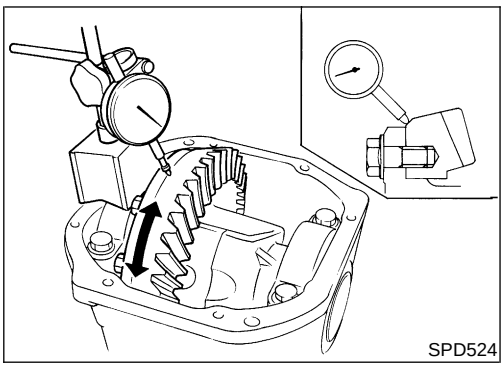

- Ring gear runout

Check runout of ring gear with a dial indicator.

Runout limit:

0.05 mm (0.0020 in)

- Tooth contact

Check tooth contact. Refer to “TOOTH CONTACT”, PD-31.

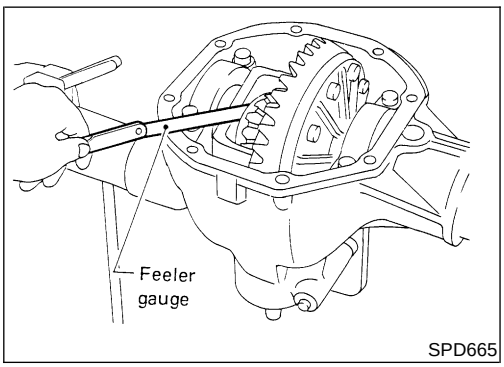

- Side gear to pinion mate gear backlash

Using a feeler gauge, measure clearance between side gear thrust washer and differential case.

Clearance between side gear thrust washer and differential case:

Less than 0.15 mm (0.0059 in)

FINAL DRIVE HOUSING

NEPD0018S02

1. Using three spacers [20 mm (0.79 in)], mount final drive assembly on Tool.

Tool number:

KV38100800 (J34310, J25604-01)

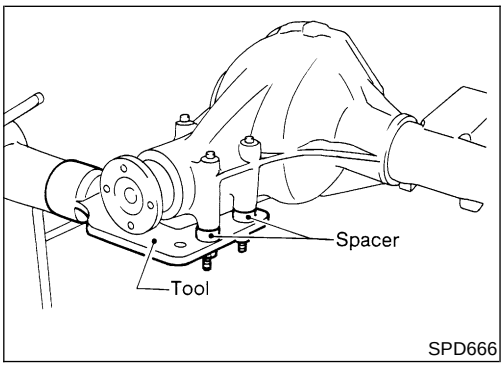

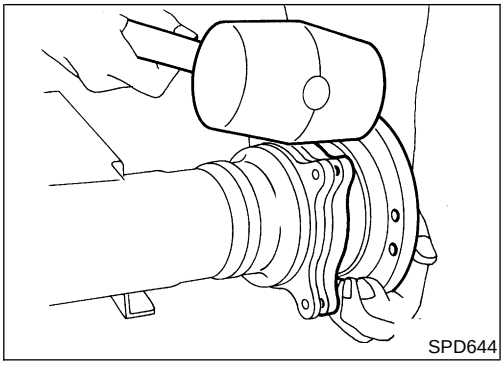
SPD644

2. Remove differential side shaft assembly.

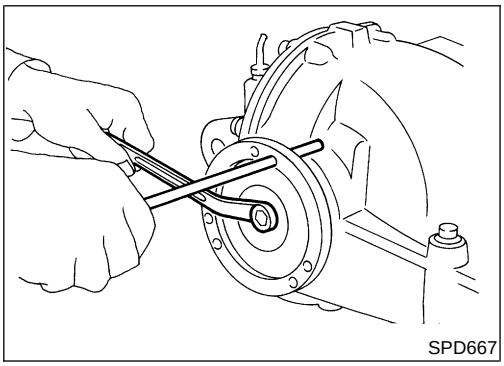
SPD667

3. Remove differential side flange.

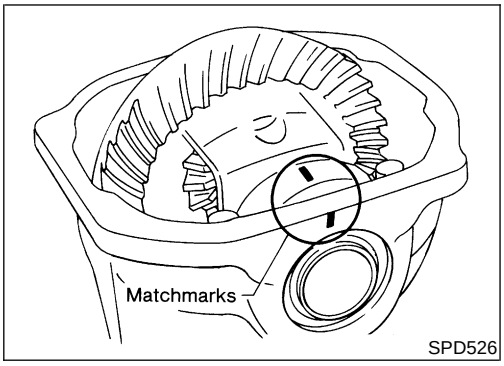

SPD526

4. Put match marks on one side of side bearing cap with paint or punch to ensure that it is replaced in proper position during reassembly.

Bearing caps are line-bored during manufacture and should be put back in their original places.

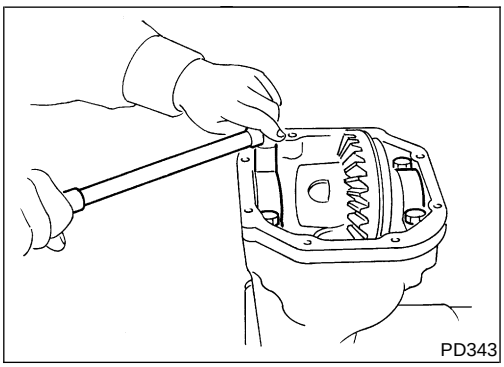
PD343

5. Remove side bearing caps.

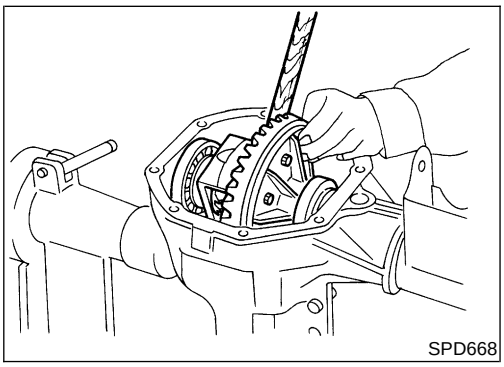
SPD668

6. Remove differential case assembly with a pry bar.

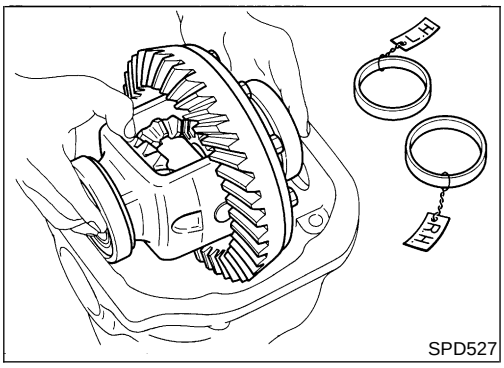

SPD527

Be careful to keep the side bearing outer races together with their respective inner cones — do not mix them up.

CAUTION:

Side bearing spacer is placed on either the left or right depending upon final drive gear ratio. It should be labeled so that it may be replaced correctly.

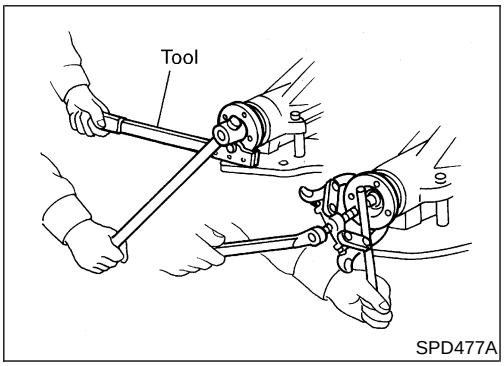

SPD477A

7. Loosen drive pinion nut.
   Tool number: KV38108300 (J-44195)
8. Remove companion flange with puller.

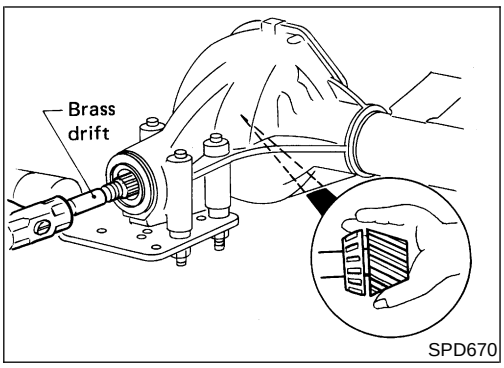

SPD670

9. Take out drive pinion together with rear bearing inner cone, drive pinion bearing spacer and pinion bearing adjusting washer.
10. Remove front oil seal and pinion front bearing inner cone.

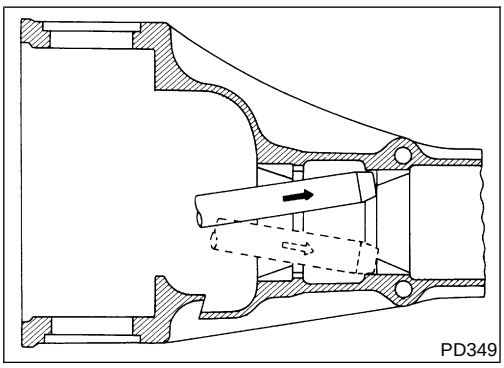
PD349

11. Remove pinion bearing outer races with a brass drift.

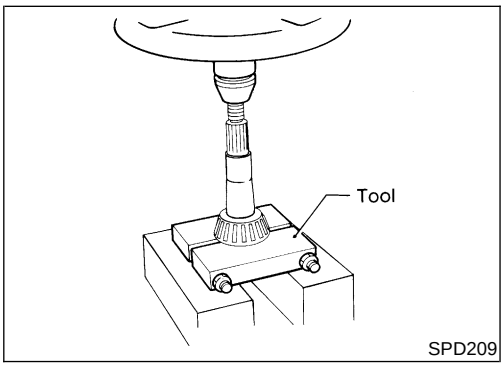

SPD209

12. Remove pinion rear bearing inner cone and drive pinion height adjusting washer.
    Tool number: ST30031000 (J22912-01)

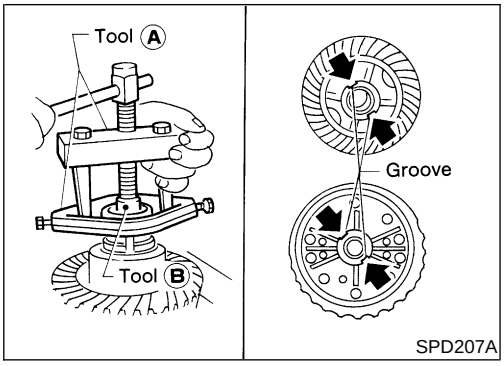

DIFFERENTIAL CASE

NEPD0018S03

1. Remove side bearing inner cones.

To prevent damage to bearing, engage puller jaws in grooves.

Tool number:
A ST33051001 (J22888-20)
B ST33061000 (J8107-2)

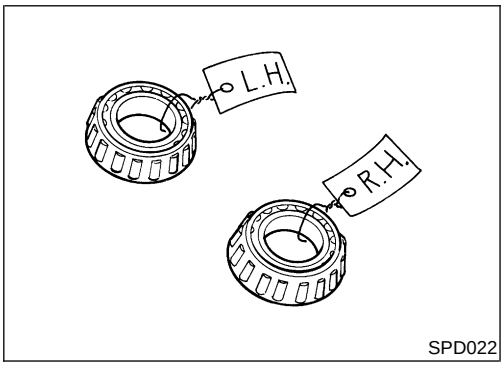

Be careful not to confuse the right-hand and left-hand parts. Keep bearing and bearing race for each side together.

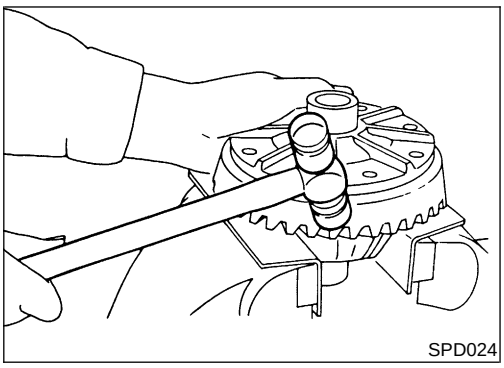

2. Loosen ring gear bolts in a crisscross pattern.
3. Tap ring gear off the differential case with a soft hammer.

Tap evenly all around to keep ring gear from binding.

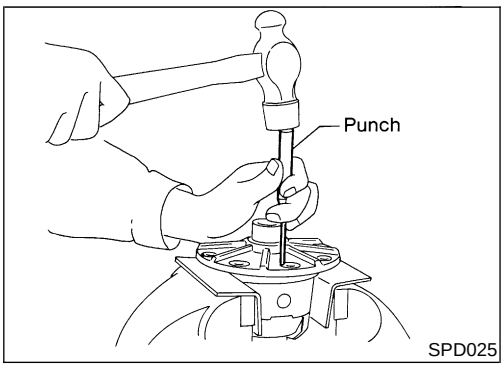

4. Punch off pinion mate shaft lock pin from ring gear side.

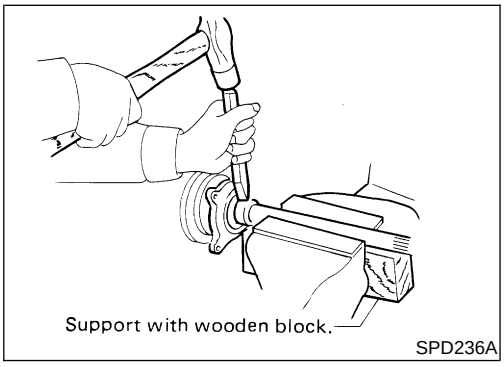

DIFFERENTIAL SIDE SHAFT

NEPD0018S04

1. Cut collar with cold chisel. Be careful not to damage differential side shaft.

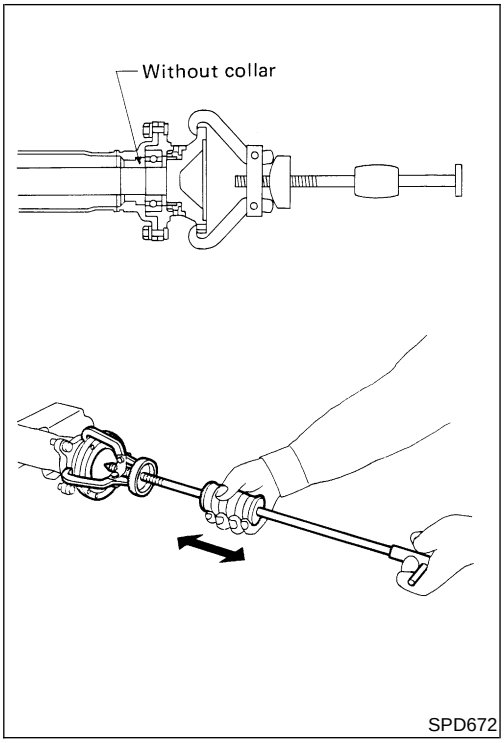

SPD672

2. Reinstall differential side shaft into extension tube and secure with bolts. Remove rear axle bearing by drawing out differential side shaft from rear axle bearing with puller.

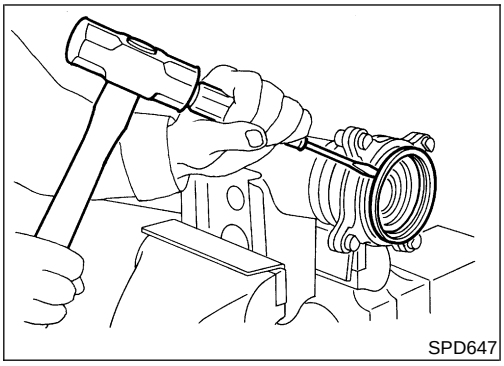
SPD647

3. Remove grease seal and oil seal.

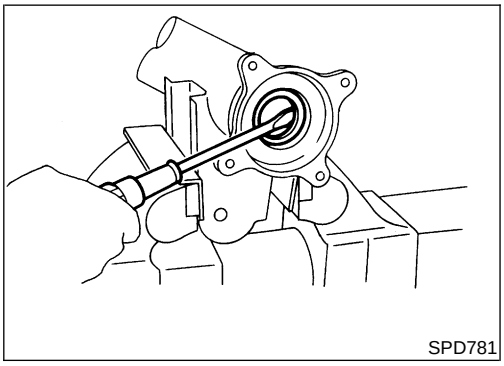
SPD781

Inspection

NEPD0019

RING GEAR AND DRIVE PINION

NEPD0019S01

Check gear teeth for scoring, cracking or chipping.
If any damaged part is evident, replace ring gear and drive pinion as a set (hypoid gear set).

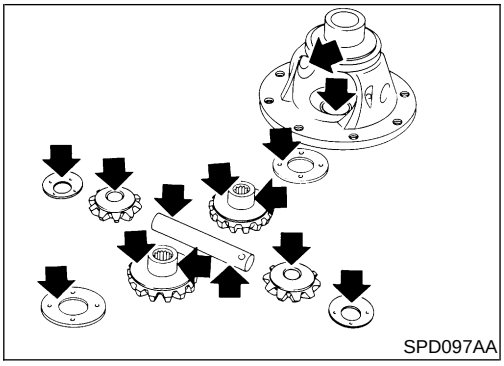
SPD097AA

DIFFERENTIAL CASE ASSEMBLY

NEPD0019S02

Check mating surfaces of differential case, side gears, pinion mate gears, pinion mate shaft and thrust washers.

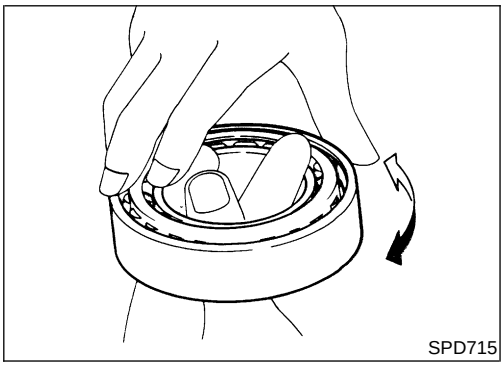
SPD715

BEARING

NEPD0019S03

1. Thoroughly clean bearing.
2. Check bearing for wear, scratches, pitting or flaking.
   Check tapered roller bearing for smooth rotation. If damaged, replace outer race and inner cone as a set.

Adjustment

NEPD0020

For quiet and reliable final drive operation, the following five adjustments must be made correctly:

1. Side bearing preload. Refer to "SIDE BEARING PRELOAD", PD-25.
2. Pinion gear height. Refer to "PINION GEAR HEIGHT AND PINION BEARING PRELOAD", PD-27.
3. Pinion bearing preload. Refer to "PINION GEAR HEIGHT AND PINION BEARING PRELOAD", PD-27.
4. Ring gear-to-pinion backlash. Refer to "Total Preload Adjustment", PD-38.
5. Ring and pinion gear tooth contact pattern. Refer to "TOOTH CONTACT", PD-31.

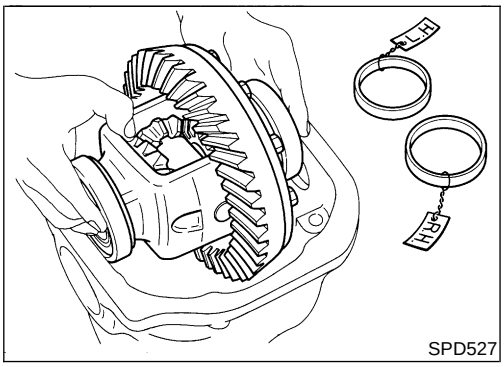

SPD527

SIDE BEARING PRELOAD

NEPD0020S01

A selection of carrier side bearing adjusting washers is required for successful completion of this procedure.

1. Make sure all parts are clean and that the bearings are well lubricated with light oil or "DEXRON™" type automatic transmission fluid.
2. Place the differential carrier, with side bearings and bearing races installed, into the final drive housing.

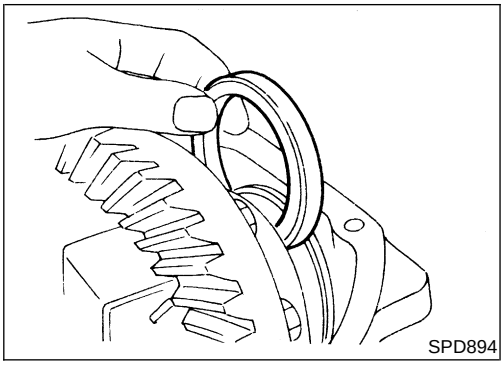
SPD894

3. Put the side bearing spacer in place.

CAUTION:
Side bearing spacer is placed on either the right or left depending upon final drive gear ratio. Be sure to replace it on the correct side.

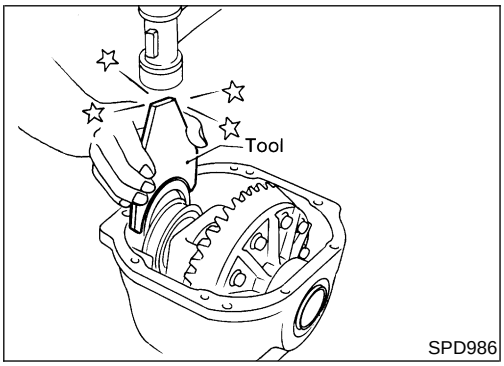

SPD986

4. Using Tool, install original carrier side bearing preload shims on the carrier end, opposite the ring gear.
   Tool number: KV38100600 (J25267)

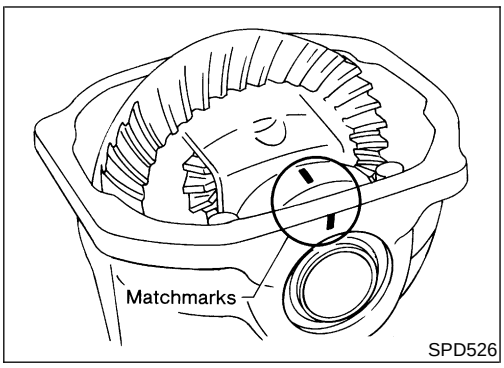

SPD526

5. Install the side bearing caps in their correct locations and torque the bearing cap retaining bolts.
   Specification:
   88 - 98 N·m (9 - 10 kg-m, 65 - 72 ft-lb)
6. Turn the carrier several times to seat the bearings.

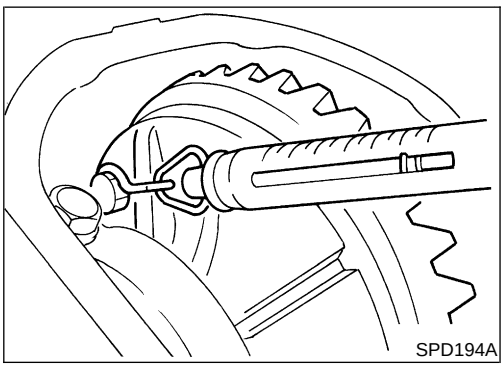
SPD194A

7. Measure the turning torque of the carrier at the ring gear retaining bolts with a spring gauge, J8129.
   Specification:
   34.3 - 39.2 N (3.5 - 4.0 kg, 7.7 - 8.8 lb) of pulling force at the ring gear bolt

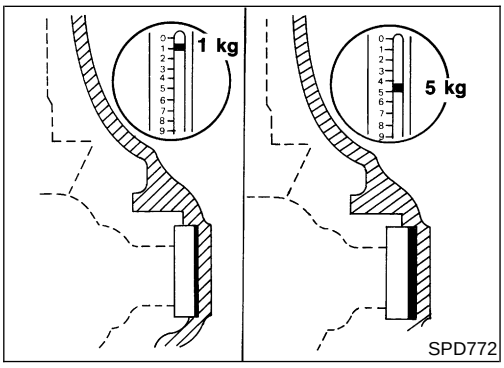

SPD772

8. If the carrier turning torque is not within the specification range, increase or decrease the total thickness of the side bearing adjusting washers until the turning torque is correct. If the turning torque is less than the specified range, install washers of greater thickness; if the turning torque is greater than the specification, install thinner washers. Refer to "Side Bearing Adjustment", PD-38 for washer dimensions and part numbers.
9. Record the total amount of washer thickness required for the correct carrier side bearing preload.

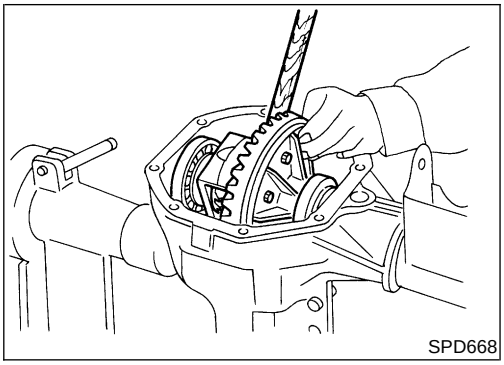
SPD668

10. Remove the carrier from the final drive housing, saving the selected preload washers for later use during the assembly of the final drive unit.

PINION GEAR HEIGHT AND PINION BEARING PRELOAD

NEPD0020S02

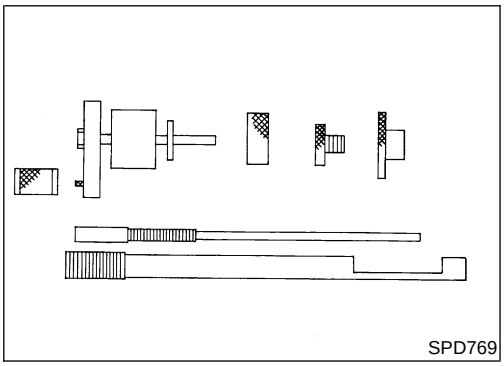
SPD769

1. Make sure all parts are clean and that the bearings are well lubricated.
2. Assemble the pinion gear bearings into the pinion preload shim selector Tool, J34309.

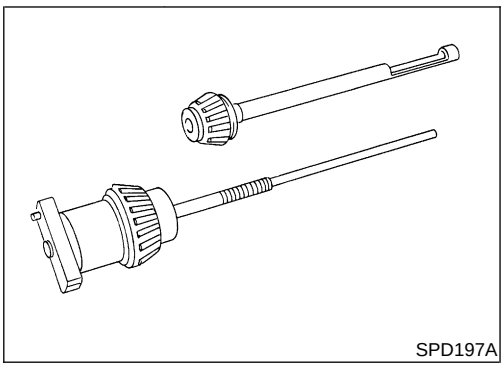
SPD197A

- **Front Pinion Bearing** — make sure the J34309-3 front pinion bearing seat is secured tightly against the J34309-2 gauge anvil. Then turn the front pinion bearing pilot, J34309-5, to secure the bearing in its proper position.
- **Rear Pinion Bearing** — the rear pinion bearing pilot, J34309-15, is used to center the rear pinion bearing only. The rear pinion bearing locking seat, J34309-4, is used to lock the bearing to the assembly.

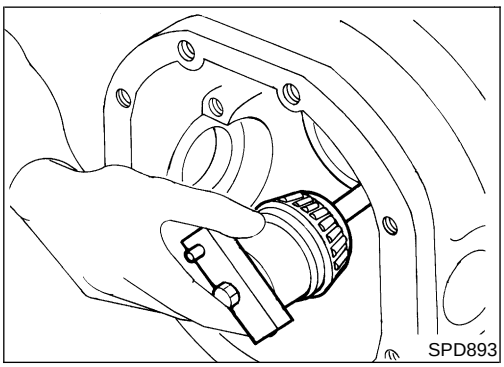
SPD893

3. Place the pinion preload shim selector Tool, J34309-1, gauge screw assembly with the pinion rear bearing inner cone installed into the final drive housing.

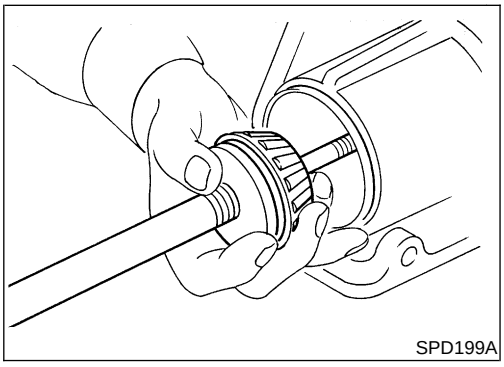
SPD199A

4. Assemble the front pinion bearing inner cone and the J34309-2 gauge anvil together with the J34309-1 gauge screw in the final drive housing. Make sure that the pinion height gauge plate, J34309-16, will turn a full 360 degrees, and tighten the two sections together by hand.

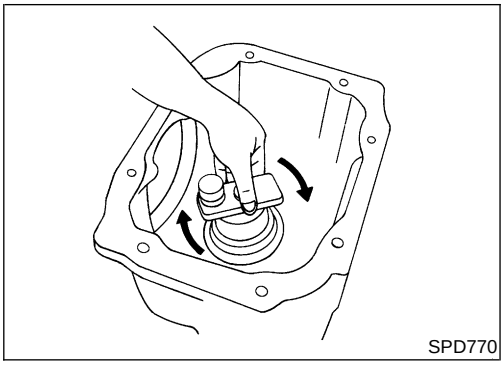
SPD770

5. Turn the assembly several times to seat the bearings.

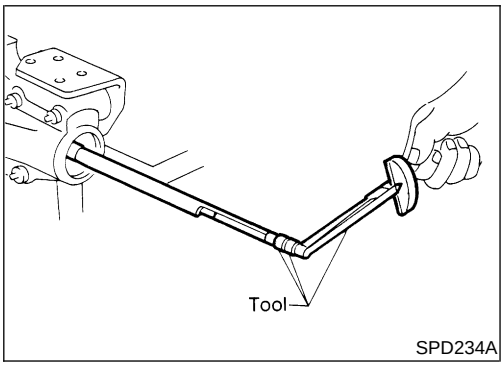

SPD234A

6. Measure the turning torque at the end of the J34309-2 gauge anvil using torque wrench J25765A.
   Turning torque specification:
   1.0 - 1.3 N·m (10 - 13 kg-cm, 8.7 - 11.3 in-lb)

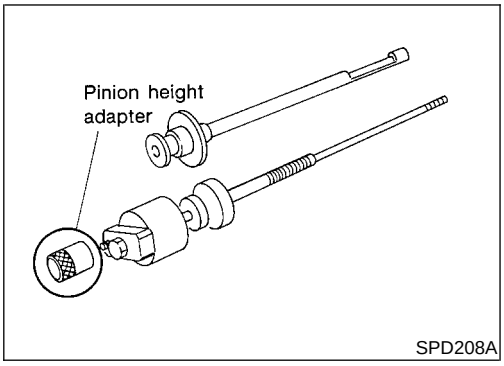

SPD208A

7. Place the J34309-1 "R200A" pinion height adapter onto the gauge plate and tighten it by hand.

CAUTION:
Make sure all machined surfaces are clean.

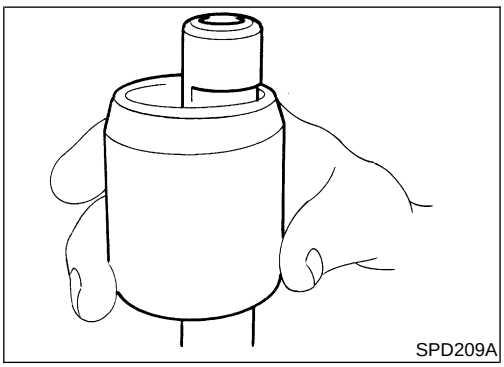
SPD209A

PINION BEARING PRELOAD WASHER SELECTION

8. Place the solid pinion bearing spacer, small end first, over the J34309-2 gauge anvil and seat the small end squarely against the tip of the J34309-1 gauge screw in the tool recessed portion.

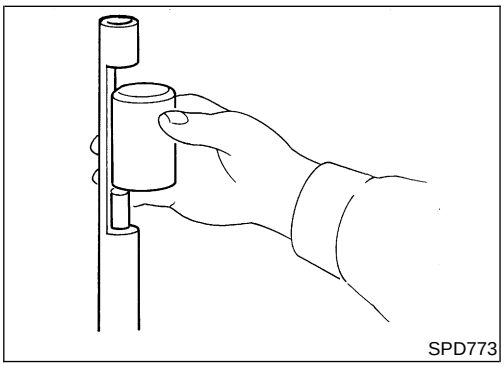
SPD773

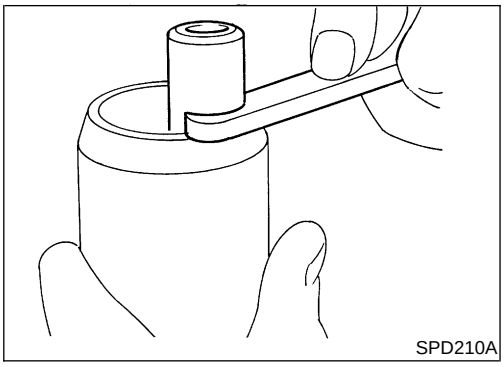
SPD210A

9. Select the correct thickness of pinion bearing preload adjusting washer using a standard gauge of 3.5 mm (0.138 in) and J34309-101 feeler gauge. The exact measure is the thickness of the adjusting washer required. Select the correct washer.

Drive pinion bearing preload adjusting washer:

Refer to "Drive Pinion Preload Adjustment", PD-39.

10. Set the selected, correct pinion bearing preload adjusting washer aside for use when assembling the pinion gear and bearings into the final drive.

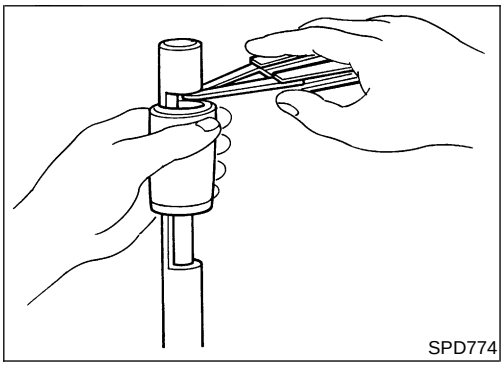
SPD774

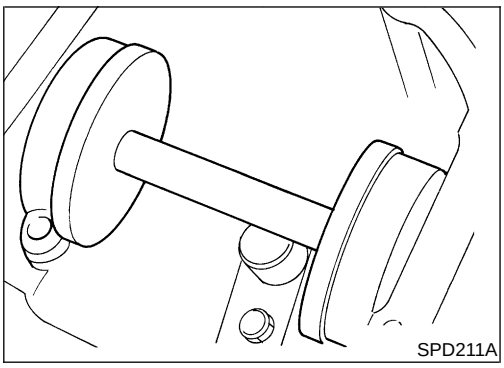
SPD211A

PINION HEIGHT ADJUSTING WASHER SELECTION

11. Position the side bearing discs, J25269-4, and arbor firmly into the side bearing bores.

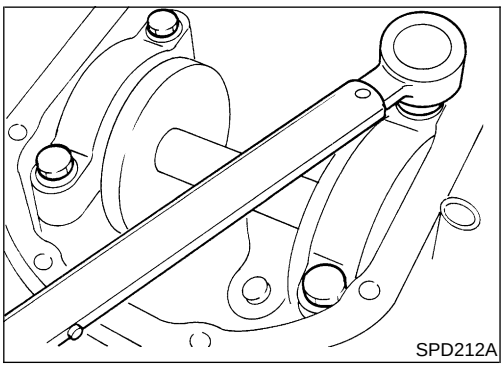
SPD212A

12. Install the side bearing caps and tighten the cap bolts.

Specification:

88 - 98 N·m (9 - 10 kg-m, 65 - 72 ft-lb)

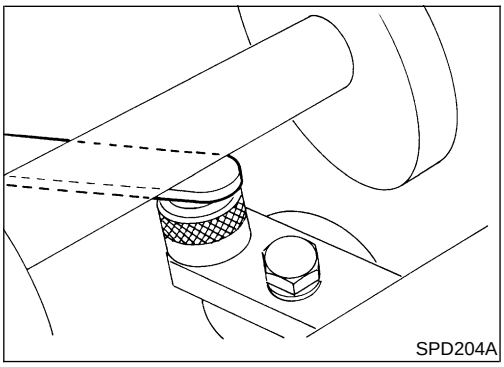
SPD204A

13. Select the correct standard pinion height adjusting washer thickness by using a standard gauge of 3.0 mm (0.118 in) and J34309-101 feeler gauge. Measure the gap between the J34309-11 "R200A" pinion height adapter and the arbor.
14. Write down the exact total measurement.

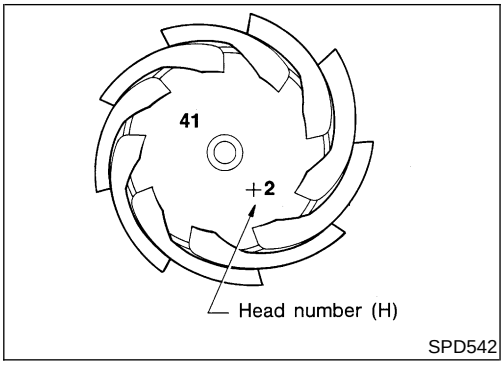

15. Correct the pinion height washer size by referring to the "pinion head number".

There are two numbers painted on the pinion gear. The first one refers to the pinion and ring gear as a matched set and should be the same as the number on the ring gear. The second number is the "pinion head height number", and it refers to the ideal pinion height from standard for quietest operation. Use the following chart to determine the correct pinion height washer. Refer to "Drive Pinion Height Adjustment", PD-39.

Pinion Head Height Number	Add or Remove from the Standard Pinion Height Washer Thickness Measurement
−6	Add 0.06 mm (0.0024 in)
−5	Add 0.05 mm (0.0020 in)
−4	Add 0.04 mm (0.0016 in)
−3	Add 0.03 mm (0.0012 in)
−2	Add 0.02 mm (0.0008 in)
−1	Add 0.01 mm (0.0004 in)
0	Use the selected washer thickness
+1	Subtract 0.01 mm (0.0004 in)
+2	Subtract 0.02 mm (0.0008 in)
+3	Subtract 0.03 mm (0.0012 in)
+4	Subtract 0.04 mm (0.0016 in)
+5	Subtract 0.05 mm (0.0020 in)
+6	Subtract 0.06 mm (0.0024 in)

16. Select the correct drive pinion height washer.

Drive pinion height adjusting washer:

Refer to "Drive Pinion Height Adjustment", PD-39.

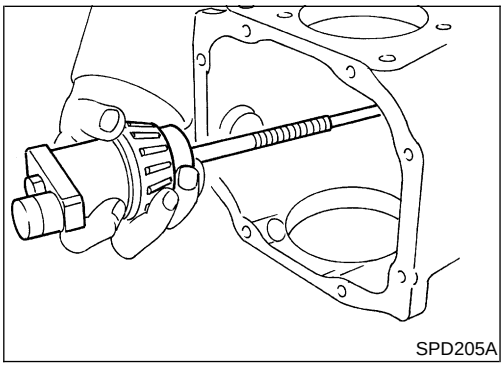

17. Remove the J34309 pinion preload shim selector tool from the final drive housing and disassemble to retrieve the pinion bearings.

TOOTH CONTACT

=NEPD0020S03

Gear tooth contact pattern check is necessary to verify correct relationship between ring gear and drive pinion.
Hypoid gear sets which are not positioned properly in relation to one another may be noisy, or have short life, or both. With a pattern check, the most desirable contact for low noise level and long life can be assured.

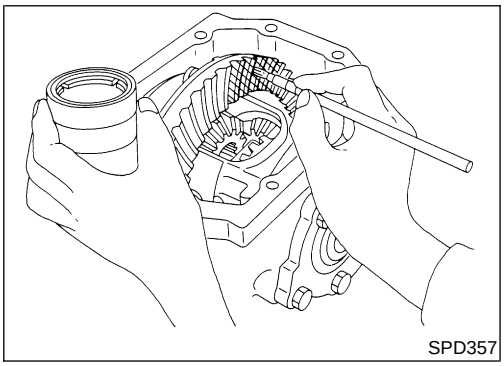
SPD357

1. Thoroughly clean ring gear and drive pinion teeth.
2. Sparingly apply a mixture of powdered ferric oxide and oil or equivalent to 3 or 4 teeth of ring gear drive side.

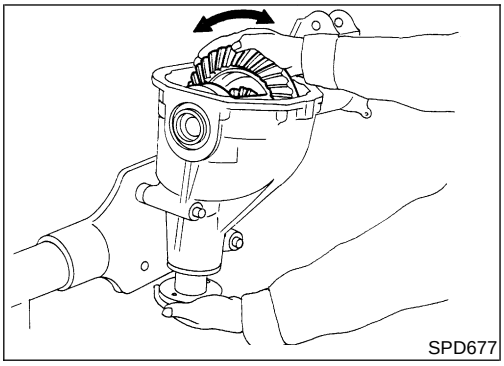
SPD677

3. Hold companion flange steady by hand and rotate the ring gear in both directions.

Usually the pattern will be correct if shims are correctly calculated and the backlash is correct. However, in rare cases, trial and error processes may be employed to obtain a correct pattern. The tooth pattern is the best indication of how well a differential has been set up.

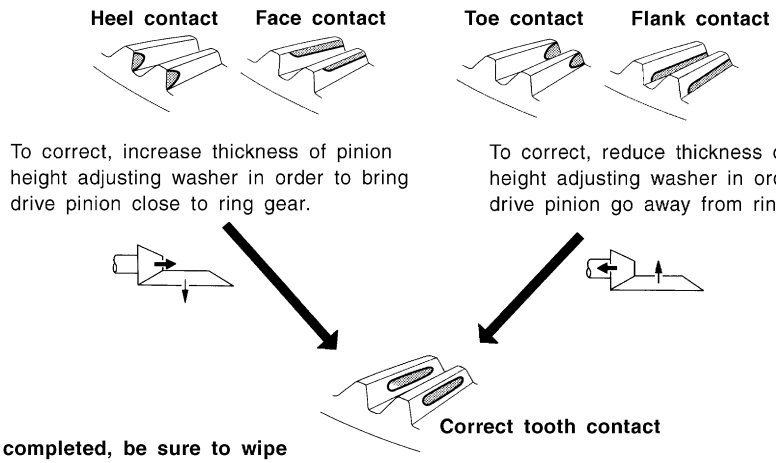

When adjustment is completed, be sure to wipe off completely the ferric oxide and oil or their equivalent.

SPD007-B

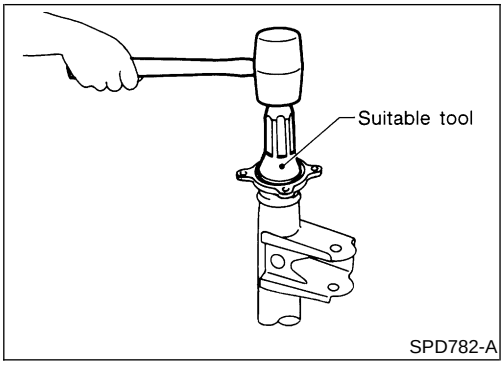

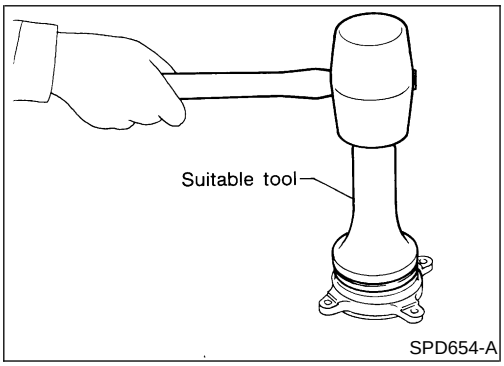

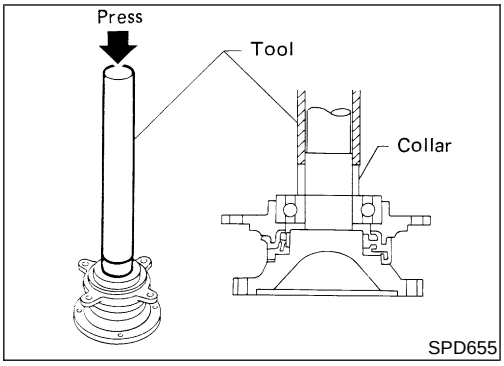

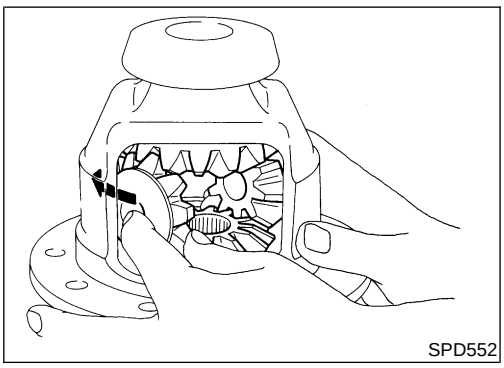

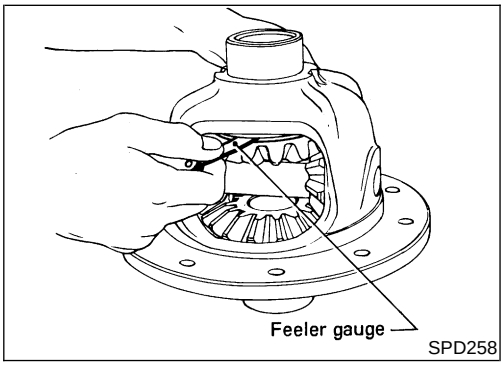

Assembly

NEPD0021

DIFFERENTIAL SIDE SHAFT

NEPD0021S01

1. Install oil seal and grease seal.

2. Install extension tube retainer, rear axle bearing and rear axle shaft bearing collar on differential side shaft.

DIFFERENTIAL CASE

NEPD0021S02

1. Install side gears, pinion mate gears and thrust washers into differential case.

2. Fit pinion mate shaft to differential case so that it meets lock pin holes.
3. Adjust backlash between side gear and pinion mate gear by selecting side gear thrust washer.
   Refer to “Side Gear Adjustment”, PD-38.

   Backlash between side gear and pinion mate gear (Clearance between side gear thrust washer and differential case):

   Less than 0.15 mm (0.0059 in)

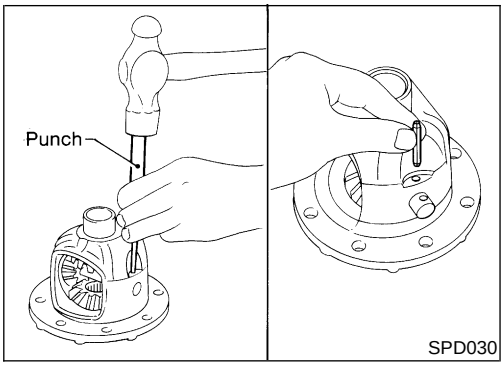

4. Install pinion mate shaft lock pin with a punch.

Make sure lock pin is flush with case.

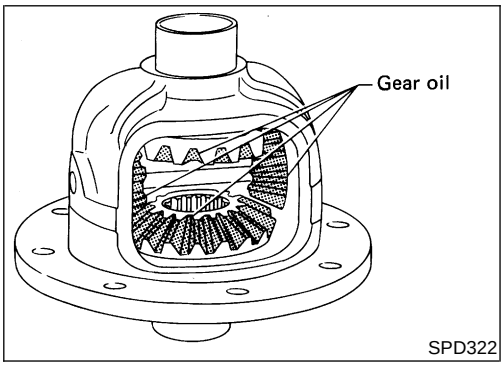

5. Apply gear oil to gear tooth surfaces and thrust surfaces and check to see they turn properly.

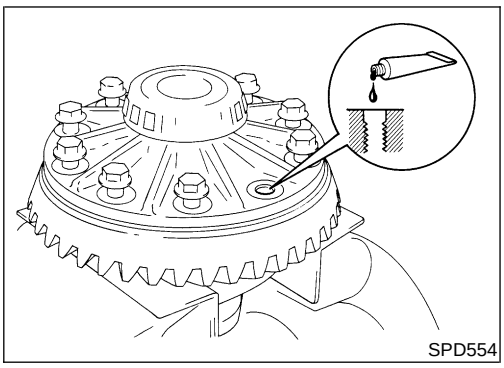

6. Install differential case assembly on ring gear.
7. Apply locking agent [Locktite (stud lock) or equivalent] to ring gear bolts, and install them.

Tighten bolts in a crisscross pattern.

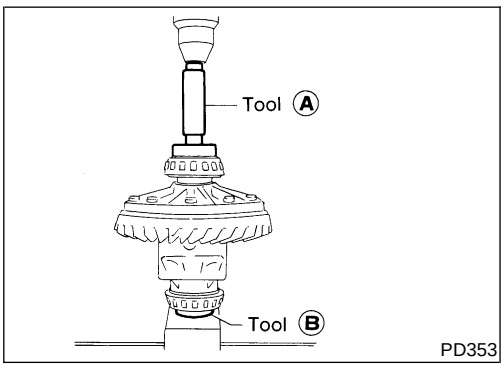

8. Press-fit side bearing inner cones on differential case with Tool.

Tool number:

A KV38100300 (J25523)

B ST33061000 (J8107-2)

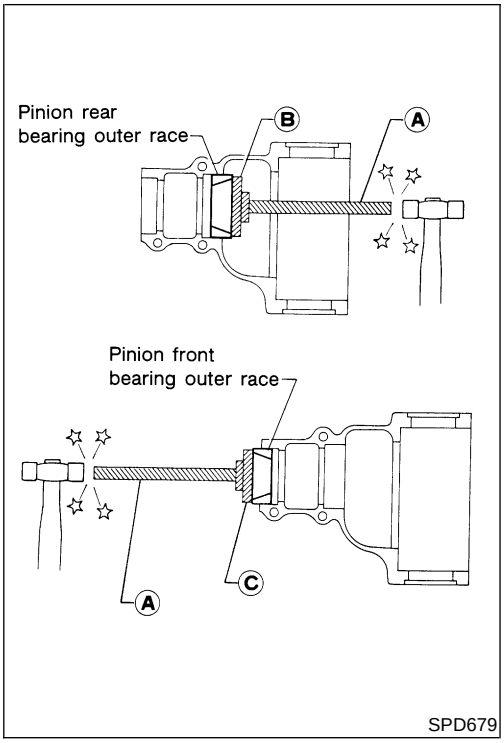

FINAL DRIVE HOUSING

NEPD0021S03

1. Press-fit front and rear bearing outer races with Tools.

Tool number:

A ST30611000 (J25742-1)
B ST30621000 (J25742-5)
C ST30613000 (J25742-3)

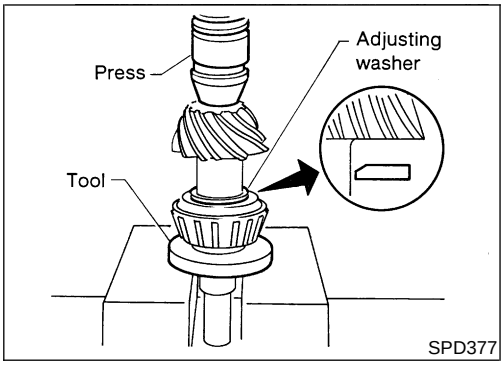

2. Select drive pinion height adjusting washer and pinion bearing adjusting washer. Refer to "PINION GEAR HEIGHT AND PINION BEARING PRELOAD", PD-27.
3. Install drive pinion height adjusting washer in drive pinion, and press-fit pinion rear bearing inner cone in it, using press and Tool.

Tool number:

ST30901000 (J26010-01)

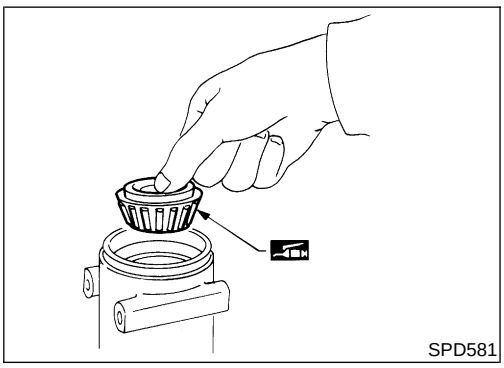

4. Place pinion front bearing inner cone in final drive housing.

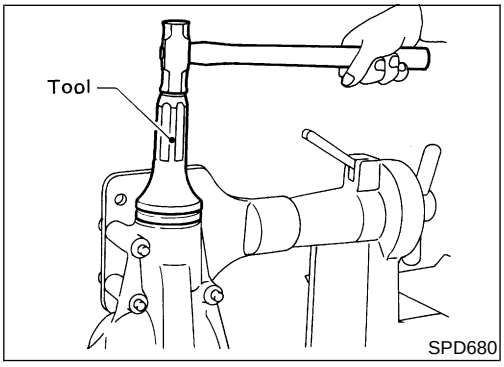

5. Apply multi-purpose grease to cavity at sealing lips of oil seal. Install front oil seal.

Tool number:

KV38100500 (J25273)

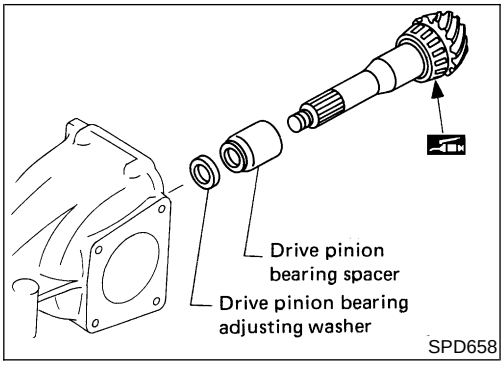

SPD658

6. Place drive pinion bearing spacer, drive pinion bearing adjusting washer and drive pinion in final drive housing.

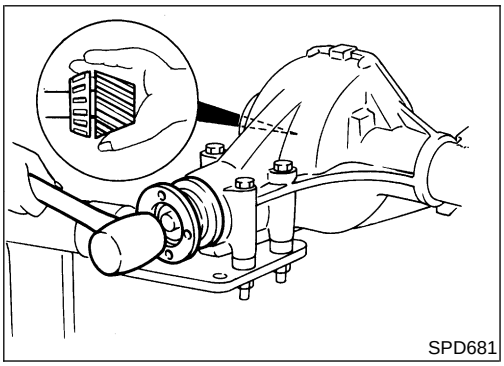
SPD681

7. Insert companion flange into drive pinion by tapping the companion flange with a soft hammer.

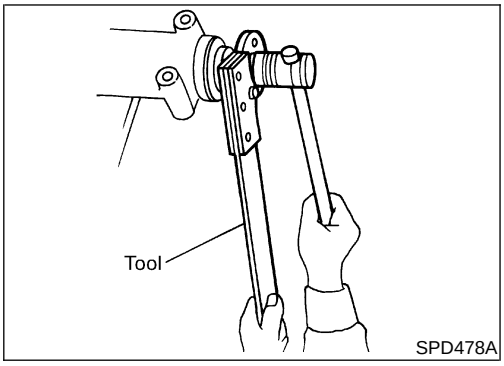

SPD478A

8. Tighten pinion nut to the specified torque.

The threaded portion of drive pinion and pinion nut should be free from oil or grease.

Tool number: KV38108300 (J-44195)

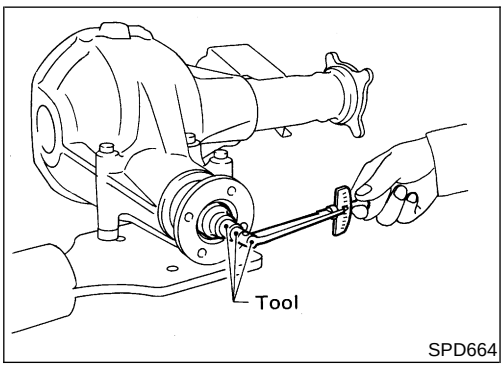

SPD664

9. Turn drive pinion in both directions several revolutions, and measure pinion bearing preload.

Tool number: ST3127S000 (J25765-A)

Pinion bearing preload:

1.1 - 1.4 N·m (11 - 14 kg-cm, 9.5 - 12.2 in-lb)

When pinion bearing preload is outside the specifications, replace pinion bearing adjusting washer and spacer with a different thickness.

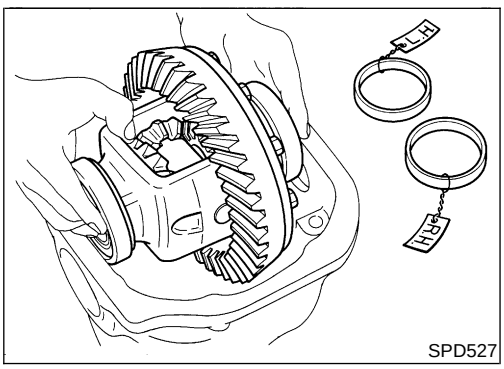

SPD527

10. Select side bearing adjusting washer.
Refer to "SIDE BEARING PRELOAD", PD-25.
11. Install differential case assembly with side bearing outer races into final drive housing.

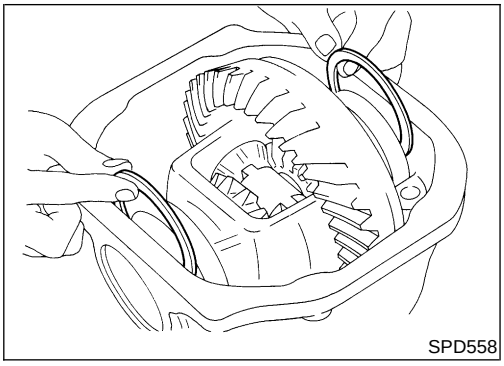
SPD558

12. Insert left and right side bearing adjusting washers in place between side bearings and final drive housing.

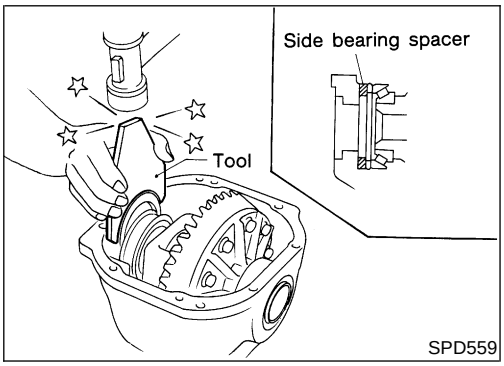

SPD559

13. Drive in side bearing spacer with Tool.
Tool number: KV38100600 (J25267)

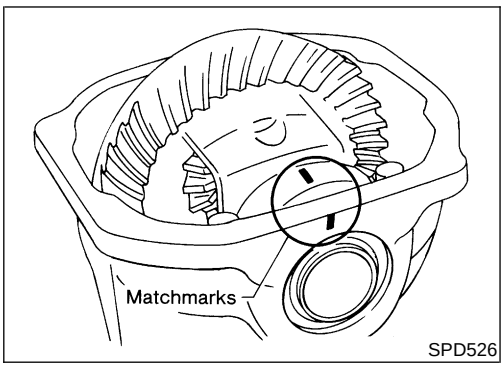

SPD526

14. Align mark on bearing cap with that on final drive housing and install bearing cap on final drive housing.

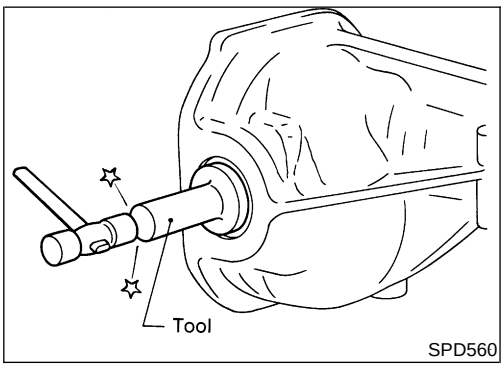

SPD560

15. Apply multi-purpose grease to cavity at sealing lips of oil seal. Install side oil seal.
Tool number: KV38100200 (J26233)

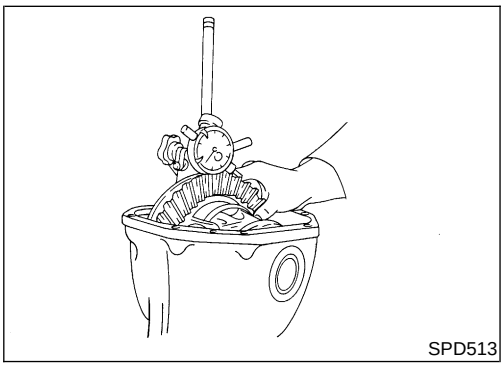
SPD513

16. Measure ring gear to drive pinion backlash with a dial indicator.
Ring gear-to-drive pinion backlash:
0.10 - 0.15 mm (0.0039 - 0.0059 in)

- If backlash is too small, decrease thickness of right shim and increase thickness of left shim by the same amount.
If backlash is too great, reverse the above procedure.

Never change the total amount of shims as it will change the bearing preload.

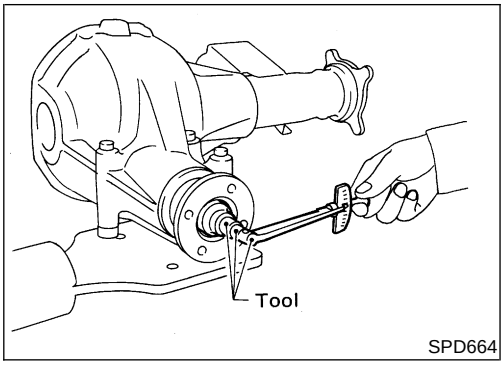

17. Check total preload with Tool.
When checking preload, turn drive pinion in both directions several times to set bearing rollers.
Tool number: ST3127S000 (J25765-A)
Total preload:
1.4 - 1.7 N·m (14 - 17 kg-cm, 12 - 15 in-lb)

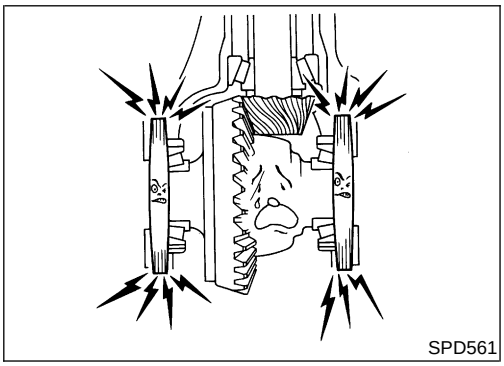

- If preload is too great, remove the same amount of shim from each side.
- If preload is too small, add the same amount of shim to each side.

Never add or remove a different number of shims for each side as it will change ring gear to drive pinion backlash.

18. Recheck ring gear to drive pinion backlash because increase or decrease in thickness of shims will cause change of ring gear-to-pinion backlash.

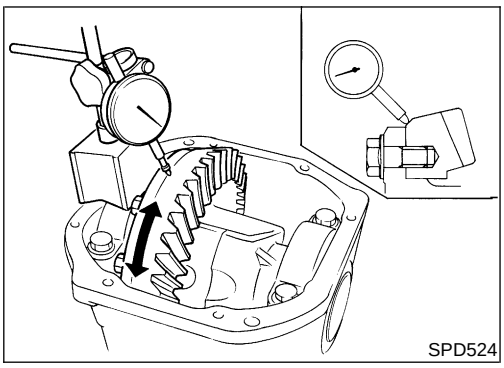

19. Check runout of ring gear with a dial indicator.
Runout limit:
0.05 mm (0.0020 in)

- If backlash varies excessively in different places, the variance may have resulted from foreign matter caught between the ring gear and the differential case.
- If the backlash varies greatly when the runout of the ring gear is within a specified range, the hypoid gear set or differential case should be replaced.

20. Check tooth contact. Refer to "TOOTH CONTACT", PD-31.
21. Install rear cover and gasket.
22. Install differential side shaft assembly.

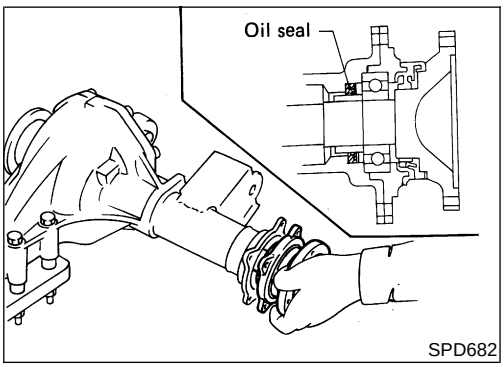

Service Data and Specifications (SDS)

R200A

General Specifications

=NEPD0022

Engine	VG33E		VG33ER
Vehicle grade	XE	SE	SC
Front final drive	R200A		
	2-pinion		
Gear ratio	4.636	4.900	4.363
Number of teeth (Ring gear/drive pinion)	51/11	49/10	48/11
Oil capacity (Approx.) ℓ (US pt, Imp pt)	1.5 (3-1/8, 3-5/8)		

Ring Gear Runout

NEPD0023

Ring gear runout limit mm (in)	0.05 (0.0020)

Side Gear Adjustment

NEPD0024

Side gear backlash (Clearance between side gear and differential case) mm (in)		Less than 0.15 (0.0059)
Available side gear thrust washers	Thickness mm (in)	Part number*
	0.75 (0.0295)	38424-N3110
	0.78 (0.0307)	38424-N3111
	0.81 (0.0319)	38424-N3112
	0.84 (0.0331)	38424-N3113
	0.87 (0.0343)	38424-N3114
	0.90 (0.0354)	38424-N3115
	0.93 (0.0366)	38424-N3116

*Always check with the Parts Department for the latest parts information.

Side Bearing Adjustment

NEPD0025

Differential carrier assembly turning resistance N (kg, lb)		34.3 - 39.2 (3.5 - 4.0, 7.7 - 8.8)
Available side bearing adjusting washers	Thickness mm (in)	Part number*
	2.00 (0.0787)	38453-N3100
	2.05 (0.0807)	38453-N3101
	2.10 (0.0827)	38453-N3102
	2.15 (0.0846)	38453-N3103
	2.20 (0.0866)	38453-N3104
	2.25 (0.0886)	38453-N3105
	2.30 (0.0906)	38453-N3106
	2.35 (0.0925)	38453-N3107
	2.40 (0.0945)	38453-N3108
	2.45 (0.0965)	38453-N3109
	2.50 (0.0984)	38453-N3110
	2.55 (0.1004)	38453-N3111
	2.60 (0.1024)	38453-N3112

*Always check with the Parts Department for the latest parts information.

Total Preload Adjustment

NEPD0026

Total preload N·m (kg-cm, in-lb)	1.4 - 1.7 (14 - 17, 12 - 15)
Ring gear to pinion backlash mm (in)	0.10 - 0.15 (0.0039 - 0.0059)

Drive Pinion Height Adjustment

NEPD0027

	Thickness mm (in)	Part number*
Available pinion height adjusting washers	3.09 (0.1217)	38154-P6017
	3.12 (0.1228)	38154-P6018
	3.15 (0.1240)	38154-P6019
	3.18 (0.1252)	38154-P6020
	3.21 (0.1264)	38154-P6021
	3.24 (0.1276)	38154-P6022
	3.27 (0.1287)	38154-P6023
	3.30 (0.1299)	38154-P6024
	3.33 (0.1311)	38154-P6025
	3.36 (0.1323)	38154-P6026
	3.39 (0.1335)	38154-P6027
	3.42 (0.1346)	38154-P6028
	3.45 (0.1358)	38154-P6029
	3.48 (0.1370)	38154-P6030
	3.51 (0.1382)	38154-P6031
	3.54 (0.1394)	38154-P6032
	3.57 (0.1406)	38154-P6033
	3.60 (0.1417)	38154-P6034
	3.63 (0.1429)	38154-P6035
	3.66 (0.1441)	38154-P6036

*Always check with the Parts Department for the latest parts information.

Drive Pinion Preload Adjustment

NEPD0028

Drive pinion bearing preload adjusting method		Adjusting washer and spacer
Drive pinion preload with front oil seal N·m (kg-cm, in-lb)		1.1 - 1.4 (11 - 14, 9.5 - 12.2)
	Thickness mm (in)	Part number*
Available drive pinion bearing preload adjusting washers	3.81 (0.1500)	38125-61001
	3.83 (0.1508)	38126-61001
	3.85 (0.1516)	38127-61001
	3.87 (0.1524)	38128-61001
	3.89 (0.1531)	38129-61001
	3.91 (0.1539)	38130-61001
	3.93 (0.1547)	38131-61001
	3.95 (0.1555)	38132-61001
	3.97 (0.1563)	38133-61001
	3.99 (0.1571)	38134-61001
	4.01 (0.1579)	38135-61001
	4.03 (0.1587)	38136-61001
	4.05 (0.1594)	38137-61001
	4.07 (0.1602)	38138-61001
	4.09 (0.1610)	38139-61001
	Length mm (in)	Part number*
Available drive pinion bearing preload adjusting spacers	54.50 (2.1457)	38165-B4000
	54.80 (2.1575)	38165-B4001
	55.10 (2.1693)	38165-B4002
	55.40 (2.1811)	38165-B4003
	55.70 (2.1929)	38165-B4004
	56.00 (2.2047)	38165-61001

*Always check with the Parts Department for the latest parts information.

Preparation

SPECIAL SERVICE TOOLS

NEPD0114

The actual shapes of Kent-Moore tools may differ from those of special service tools illustrated here.

Tool number (Kent-Moore No.) Tool name	Description	
ST3127S000 (See J25765-A) Preload gauge 1 GG91030000 (J25765) Torque wrench 2 HT62940000 (—) Socket adapter 3 HT62900000 (—) Socket adapter	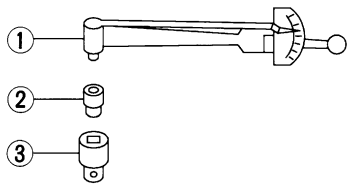 NT124	Measuring pinion bearing preload and total preload
KV38108300 (J44195) Companion flange wrench	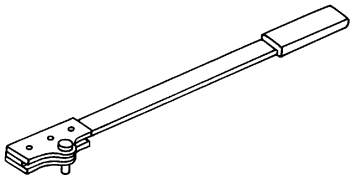 NT771	Removing and installing propeller shaft lock nut and drive pinion lock nut
ST3090S000 (—) Drive pinion rear inner race puller set 1 ST30031000 (J22912-01) Puller 2 ST30901000 (J26010-01) Base	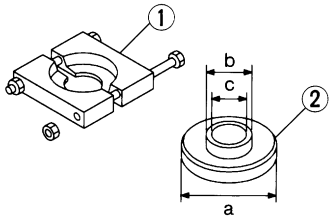 NT527	Removing and installing drive pinion rear inner cone **a: 79 mm (3.11 in) dia.** **b: 45 mm (1.77 in) dia.** **c: 35 mm (1.38 in) dia.**
ST3306S001 Differential side bearing puller set 1 ST33051001 (J22888-20) Body 2 ST33061000 (J8107-2) Adapter	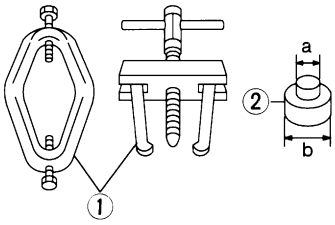 NT072	Removing and installing differential side bearing inner cone **a: 28.5 mm (1.122 in) dia.** **b: 38 mm (1.50 in) dia.**
ST33230000 (J25805-01) Differential side bearing drift	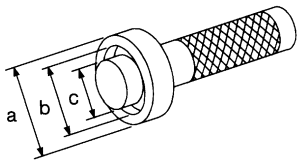 NT085	Installing side bearing inner cone **a: 51 mm (2.01 in) dia.** **b: 41 mm (1.61 in) dia.** **c: 28.5 mm (1.122 in) dia.**
ST33081000 (—) Side bearing puller adapter	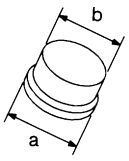 NT431	Installing side bearing inner cone **a: 43 mm (1.69 in) dia.** **b: 33.5 mm (1.319 in) dia.**

Tool number (Kent-Moore No.) Tool name	Description	
KV38100600 (J25267) Side bearing spacer drift	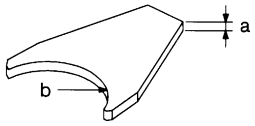 NT528	Installing side bearing spacer **a: 8 mm (0.31 in)** **b: R42.5 mm (1.673 in)**
ST30611000 (J25742-1) Drift	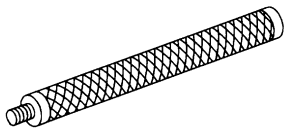 NT090	Installing pinion rear bearing outer race
ST30621000 (J25742-5) Drift	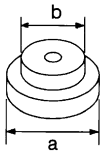 NT073	Installing pinion rear bearing outer race **a: 79 mm (3.11 in) dia.** **b: 59 mm (2.32 in) dia.**
ST30613000 (J25742-3) Drift	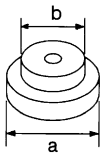 NT073	Installing pinion front bearing outer race **a: 72 mm (2.83 in) dia.** **b: 48 mm (1.89 in) dia.**
KV38100500 (J25273) Gear carrier front oil seal drift	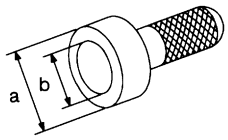 NT115	Installing front oil seal **a: 85 mm (3.35 in) dia.** **b: 60 mm (2.36 in) dia.**
(J34309) Differential shim selector	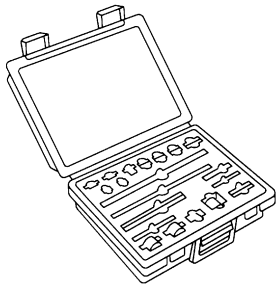 NT134	Adjusting bearing pre-load and gear height
(J25269-4) Side bearing discs (2 Req'd)	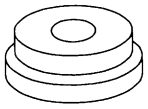 NT136	Selecting pinion height adjusting washer
(J8129) Spring gauge	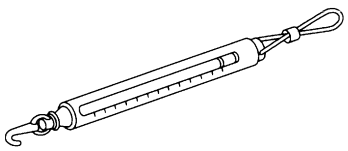 NT127	Measuring carrier turning torque

Preparation (Cont'd)

Tool number (Kent-Moore No.) Tool name	Description
KV381051S0 (—) Rear axle shaft dummy 1 KV38105110 (—) Torque wrench side 2 KV38105120 (—) Vise side	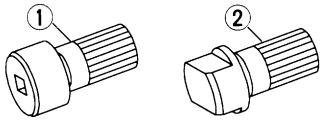 NT142 Checking differential torque on limited slip differential

Noise, Vibration and Harshness (NVH) Troubleshooting

NEPD0115

Refer to "NVH TROUBLESHOOTING CHART", PD-4.

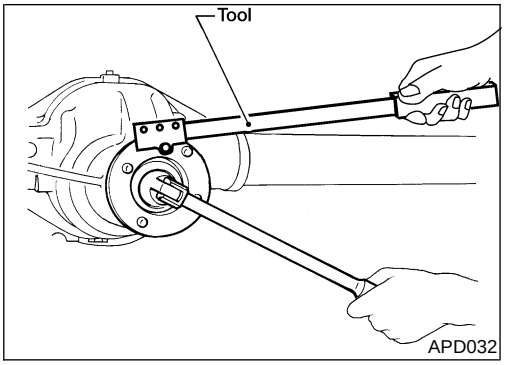

On-vehicle Service

FRONT OIL SEAL REPLACEMENT

=NEPD0124

1. Remove propeller shaft. Refer to “Removal and Installation”, PD-9.
2. Loosen drive pinion nut.

Tool number: KV38108300 (J-44195)

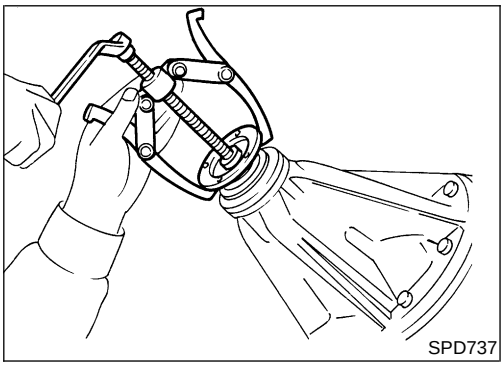

3. Remove companion flange.
4. Remove ABS sensor and sensor rotor.

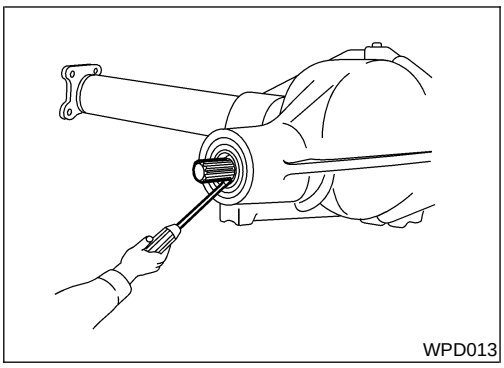

5. Remove front oil seal.

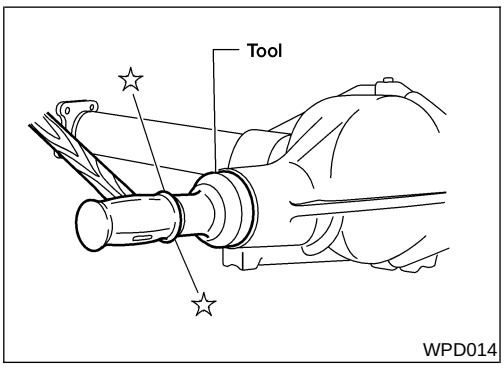

6. Apply multi-purpose grease to cavity at sealing lips of oil seal. Press front oil seal into carrier.

Tool number:
KV38100500 (J25273)

7. Install ABS sensor and sensor rotor.
8. Install companion flange and drive pinion nut.
9. Install rear propeller shaft.

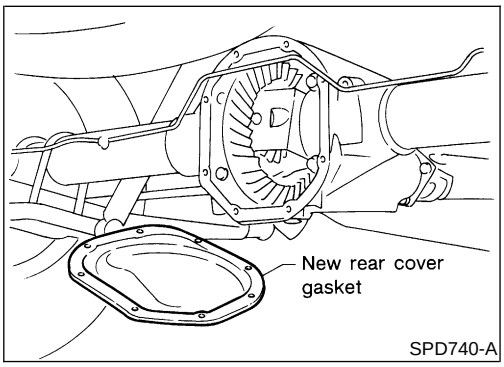

REAR COVER GASKET REPLACEMENT

NEPD0116

(Rear final drive: Model C200)

1. Drain gear oil.
2. Remove rear cover and rear cover gasket.
3. Install new rear cover gasket and rear cover.
4. Fill final drive with recommended gear oil.

Components

NEPD0117

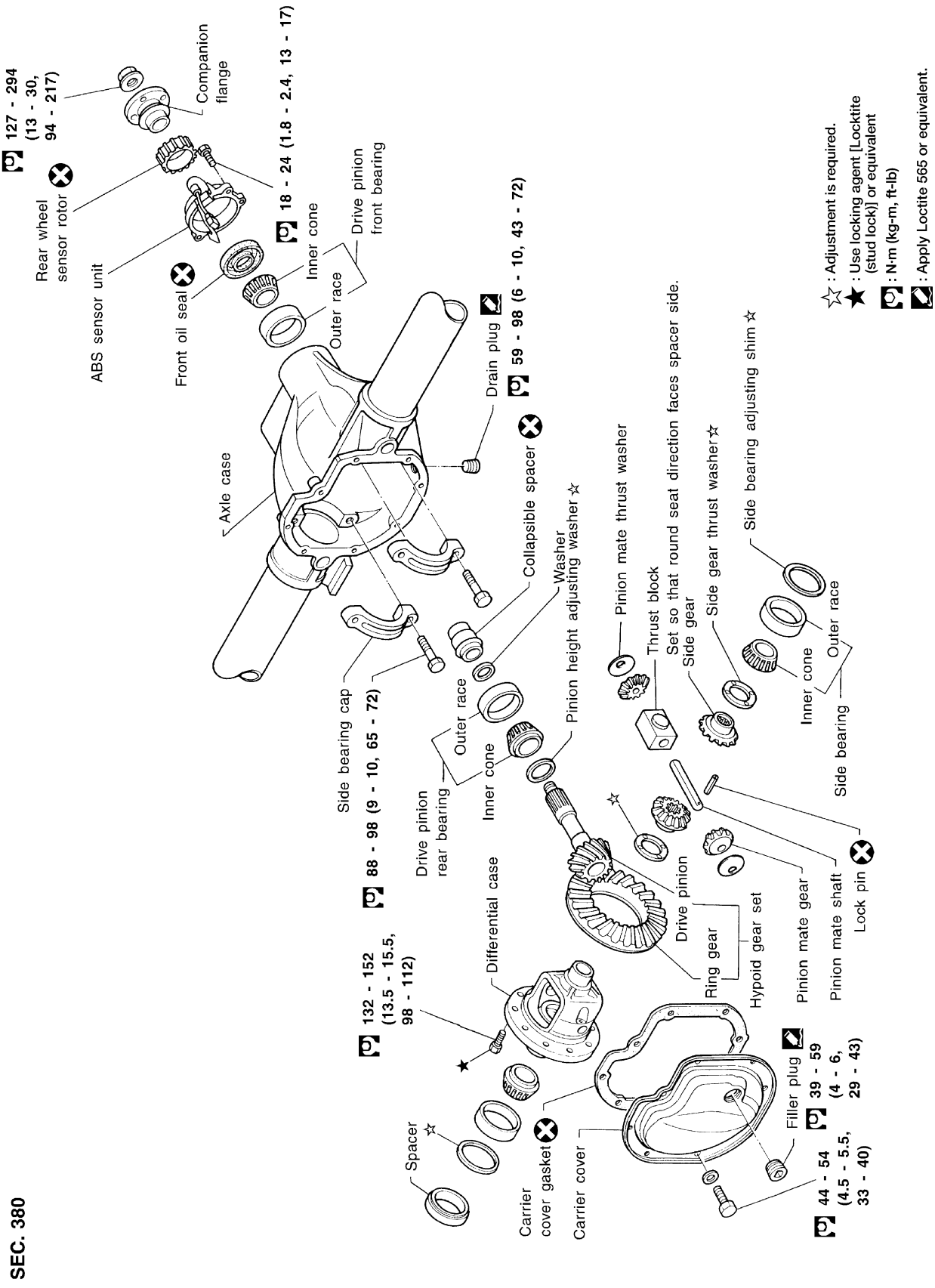

SEC. 380

WPD018

Removal and Installation

NEPD0118

REMOVAL

NEPD0118S01

- Remove propeller shaft. Refer to “Removal and Installation”, PD-9.
  Plug front end of transfer.
- Remove axle shaft.
  Refer ***AX-30***, “REAR AXLE”.

CAUTION:

- **Be careful not to damage spline, sleeve yoke and front oil seal when removing propeller shaft.**
- **Before removing the final drive assembly or rear axle assembly, disconnect the ABS sensor harness connector from the assembly and move it away from the final drive/ rear axle assembly area. Failure to do so may result in the sensor wires being damaged and the sensor becoming inoperative.**

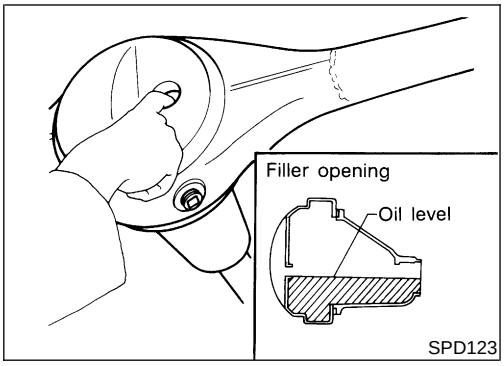

INSTALLATION

NEPD0118S02

- Fill final drive with recommended gear oil.

Disassembly

NEPD0119

PRE-INSPECTION

NEPD0119S01

Before disassembling final drive, perform the following inspection.

- Total preload

a) Turn drive pinion in both directions several times to set bearing rollers.

b) Check total preload with Tool.

Tool number: ST3127S000 (J25765-A)
Total preload:
1.2 - 2.3 N·m (12 - 23 kg-cm, 10 - 20 in-lb)

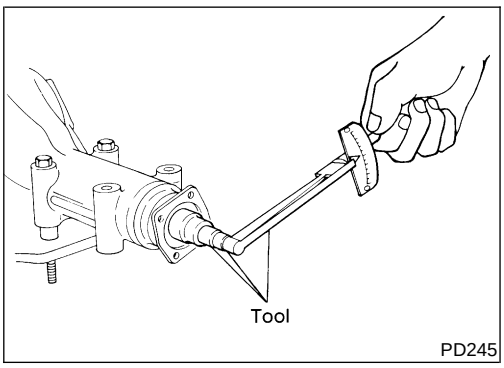

- Ring gear-to-drive pinion backlash.
  Check backlash of ring gear with a dial indicator at several points.

Ring gear-to-drive pinion backlash:
0.13 - 0.18 mm (0.0051 - 0.0071 in)

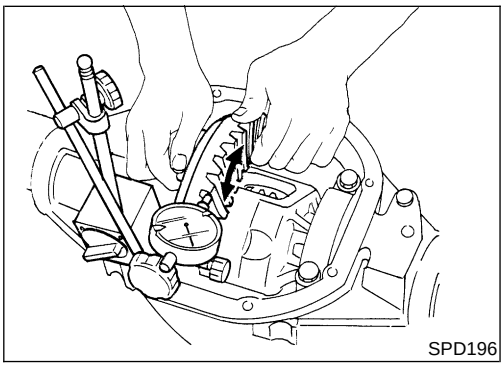

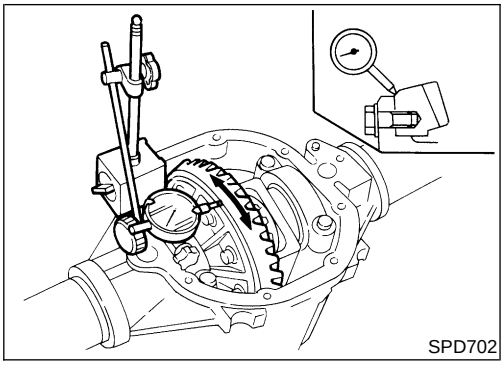
SPD702

- Ring gear runout
  Check runout of ring gear with a dial indicator.
  Runout limit: 0.05 mm (0.0020 in)

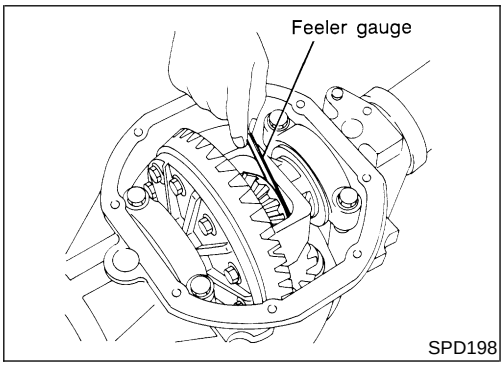

SPD198

- Tooth contact
  Check tooth contact. Refer to "TOOTH CONTACT", PD-56.
- Side gear-to-pinion mate gear backlash
  Measure clearance between side gear thrust washer and differential case with a feeler gauge.
  Clearance between side gear thrust washer and differential case:
  Less than 0.15 mm (0.0059 in)

DIFFERENTIAL CARRIER

NEPD0119S02

1. Remove rear cover and rear cover gasket.
2. Put match marks on one side of side bearing cap with paint or punch to ensure that it is replaced in proper position during reassembly.

Bearing caps are line-bored during manufacture and should be put back in their original places.

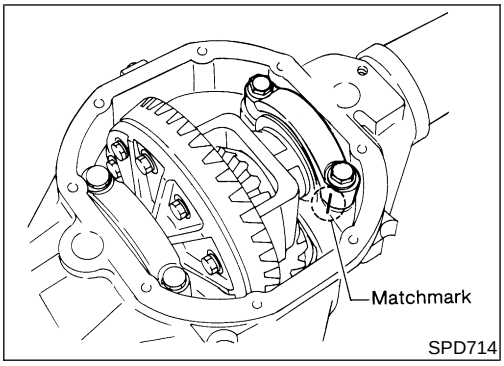

SPD714

3. Remove side bearing caps.

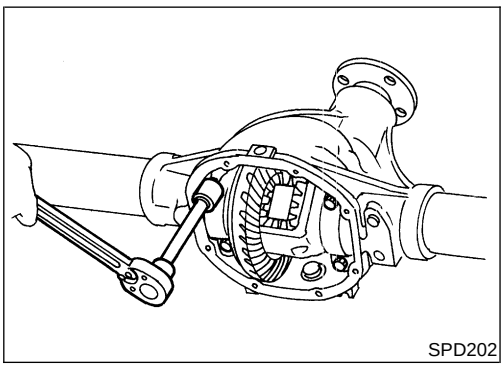
SPD202

4. Remove differential case assembly with pry bar.

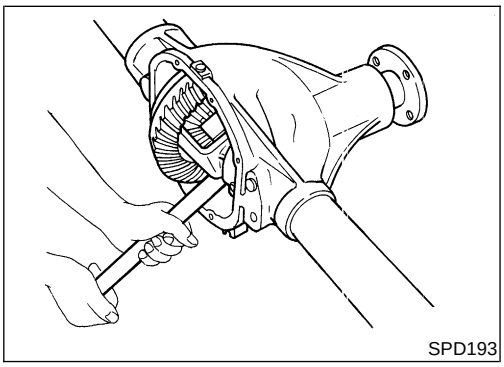
SPD193

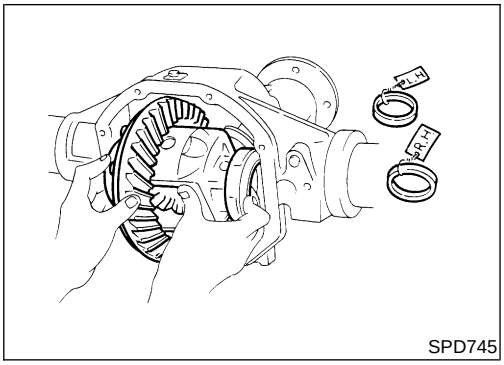

SPD745

Keep the side bearing outer races together with their respective inner cones — do not mix them up.

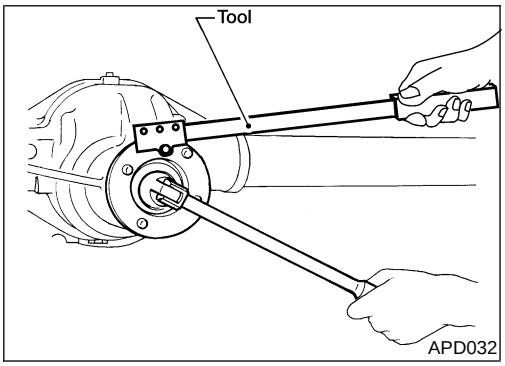

APD032

5. Remove pinion nut with Tool.
   Tool number: KV38108300 (J44195)

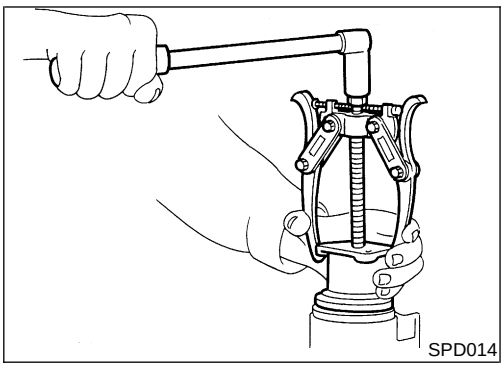
SPD014

6. Remove companion flange with puller.
7. Remove ABS sensor and sensor rotor.

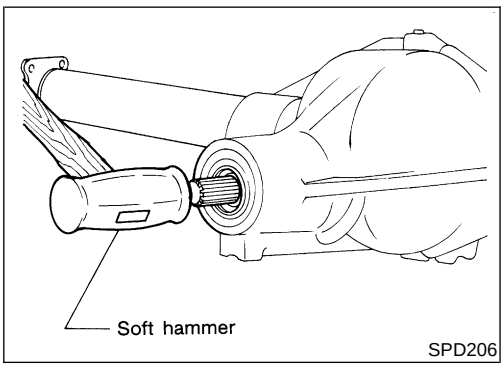

SPD206

8. Remove drive pinion with soft hammer.
9. Remove front oil seal and pinion front bearing inner cone.

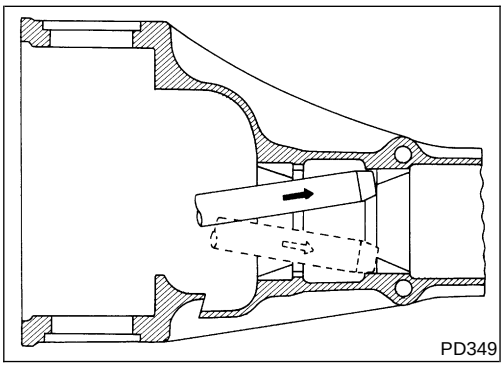
PD349

10. Remove pinion bearing outer races with a brass drift.

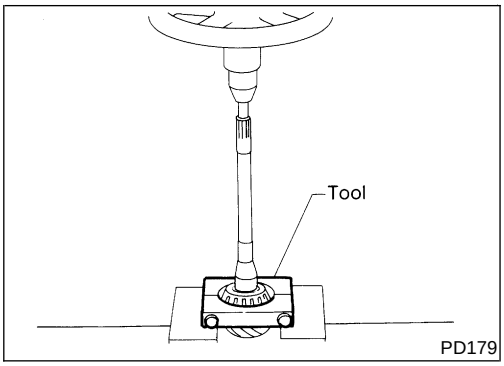

11. Remove pinion rear bearing inner cone and pinion height adjusting washer.
    Tool number: ST30031000 (J22912-01)

DIFFERENTIAL CASE

NEPD0119S03

1. Remove side bearing inner cones.
   To prevent damage to bearing, engage puller jaws in grooves.
   Tool numbers:
   A ST33051001 (J22888-20)
   B ST33061000 (J8107-2)

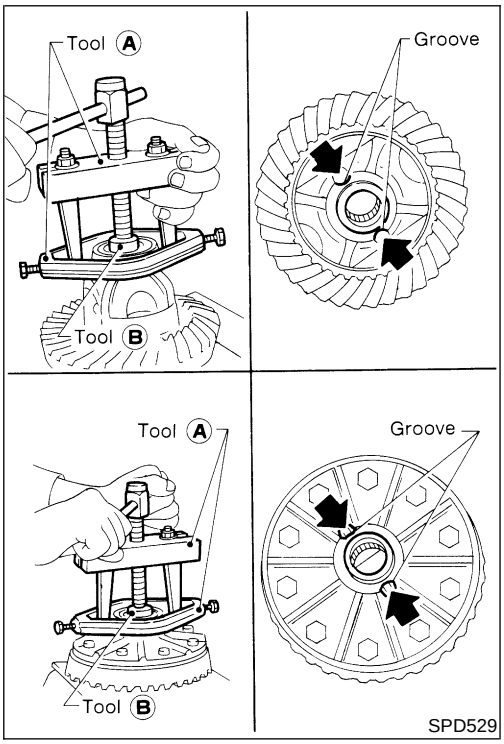

Be careful not to confuse the right-hand and left-hand parts.

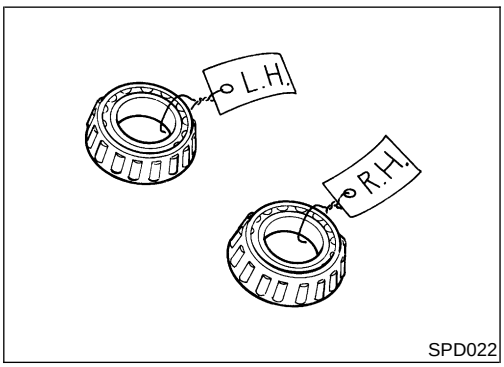

2. Loosen ring gear bolts in a crisscross fashion.
3. Tap ring gear off the differential case with a soft hammer.

Tap evenly all around to keep ring gear from binding.

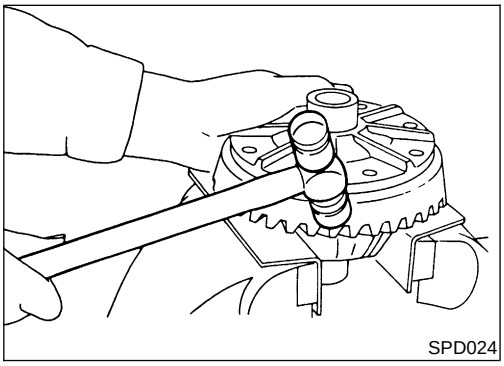

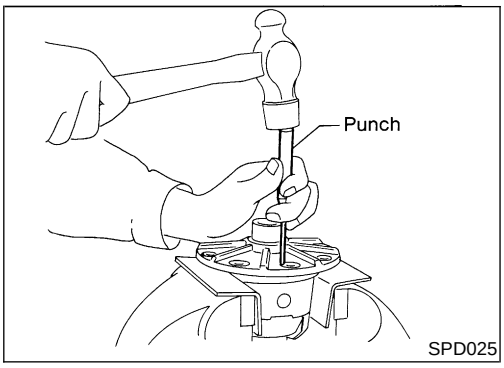

4. Punch off pinion mate shaft lock pin from ring gear side.

Lock pin is caulked at pinhole mouth on differential case.

Inspection

NEPD0120

RING GEAR AND DRIVE PINION

NEPD0120S01

Check gear teeth for scoring, cracking or chipping. If any damaged part is evident, replace ring gear and drive pinion as a set (hypoid gear set).

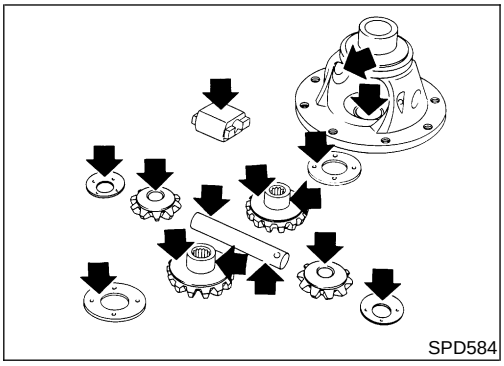

DIFFERENTIAL CASE ASSEMBLY

NEPD0120S02

Check mating surfaces of differential case, side gears, pinion mate gears, pinion mate shaft, thrust block and thrust washers.

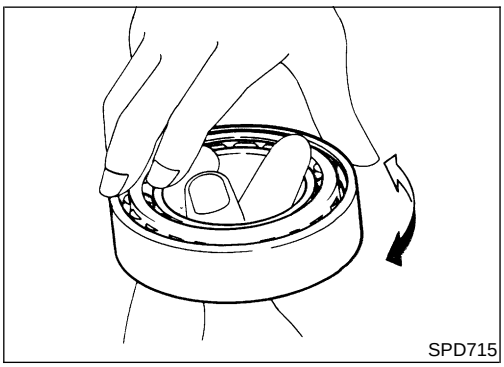

BEARING

NEPD0120S03

1. Thoroughly clean bearing.
2. Check bearings for wear, scratches, pitting or flaking.
   Check tapered roller bearing for smooth rotation. If damaged, replace outer race and inner cone as a set.

Adjustment

NEPD0121

For quiet and reliable final drive operation, the following five adjustments must be made correctly.

1. Side bearing preload. Refer to "SIDE BEARING PRELOAD", PD-50.
2. Pinion gear height. Refer to "PINION GEAR HEIGHT AND PINION BEARING PRELOAD", PD-51.
3. Pinion bearing preload. Refer to "PINION GEAR HEIGHT AND PINION BEARING PRELOAD", PD-51.
4. Ring gear-to-pinion backlash. Refer to "Total Preload Adjustment", PD-62.

5. Ring and pinion gear tooth contact pattern. Refer to "TOOTH CONTACT", PD-56.

SIDE BEARING PRELOAD

NEPD0121S01

A selection of carrier side bearing preload shims is required for successful completion of this procedure.

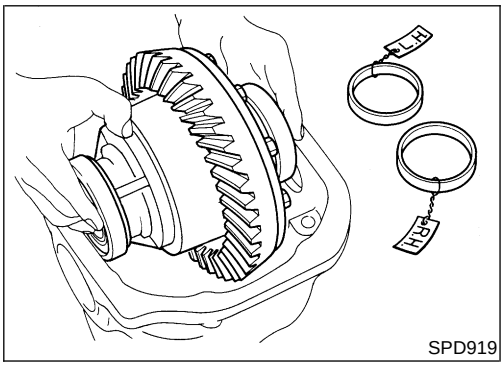

SPD919

1. Make sure all parts are clean. Make sure, also, the bearings are well lubricated with light oil or type "DEXRON™" automatic transmission fluid.
2. Place the differential carrier, with side bearings and bearing races installed, into the final drive housing.

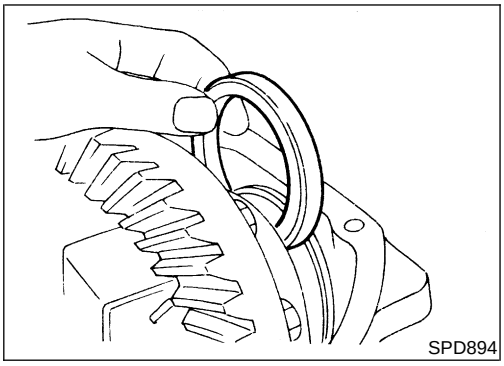
SPD894

3. Put the side bearing spacer in place.

CAUTION:

Side bearing spacer is placed on either the right or left depending upon final drive gear ratio. Be sure to replace it on the correct side.

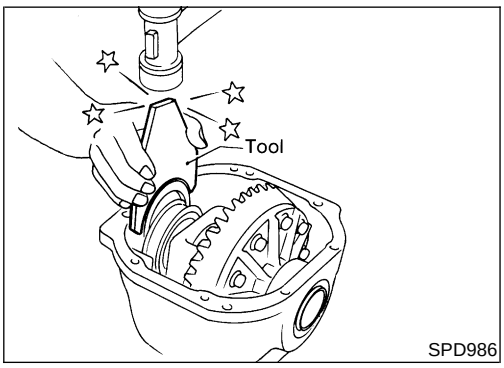

SPD986

4. Use Tool to place original carrier side bearing preload shims on the carrier end, opposite the ring gear.

Tool number: KV38100600 (J25267)

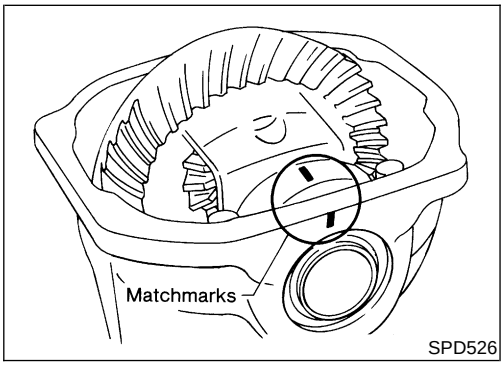

SPD526

5. Install the side bearing caps in their correct locations and torque the bearing cap retaining bolts.

Specification:

88 - 98 N·m (9.0 - 10.0 kg-m, 65 - 72 ft-lb)

6. Turn the carrier several times to seat the bearings.

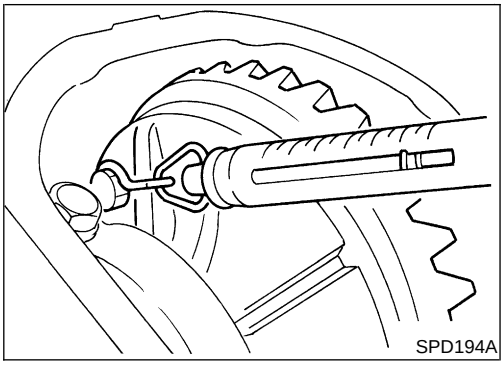
SPD194A

7. Measure the turning torque of the carrier at the ring gear retaining bolts with a spring gauge, J8129.

Specification:

34.3 - 39.2 N (3.5 - 4.0 kg, 7.7 - 8.8 lb) of pulling force at the ring gear bolt

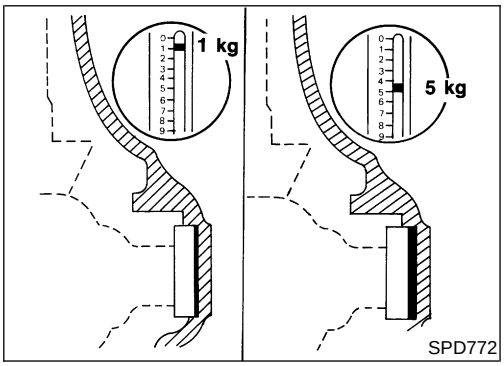

SPD772

8. If the turning torque is not within the specifications, correct the torque as follows:
- If the turning torque is less than the specified range, install washers of greater thickness.
- If the turning torque is greater than the specification, install thinner washers.
- Refer to "Side Bearing Adjustment", PD-62, for washer dimensions and part numbers.
9. Record the total amount of washer thickness required for the correct carrier side bearing preload.

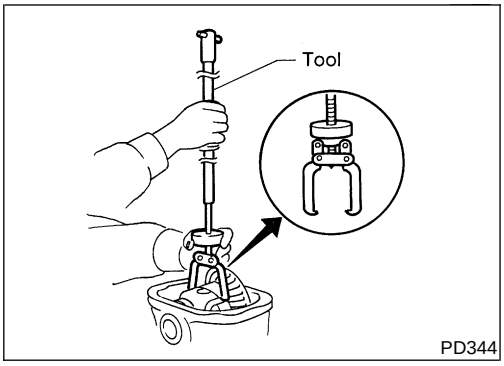

PD344

10. Remove the carrier from the final drive housing. Save the selected preload washers for later use during the assembly of the final drive unit.

PINION GEAR HEIGHT AND PINION BEARING PRELOAD

NEPD0121S02

1. Make sure all parts are clean and that the bearings are well lubricated.
2. Assemble the pinion gear bearings into the pinion preload shim selector Tool, J34309.

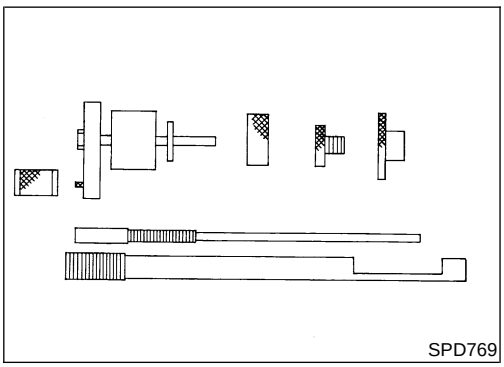
SPD769

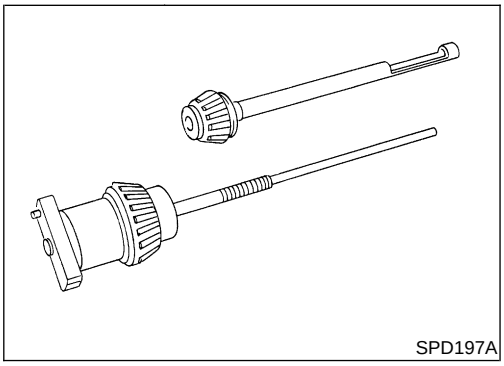
SPD197A

- **Front pinion bearing** — make sure the J34309-3 front pinion bearing seat is secured tightly against the J34309-2 gauge anvil. Then turn the front pinion bearing pilot, J34309-5, to secure the bearing in its proper position.
- **Rear pinion bearing** — the rear pinion bearing pilot, J34309-8, is used to center the rear pinion bearing only. The rear pinion bearing locking seat, J34309-4, is used to lock the bearing to the assembly.

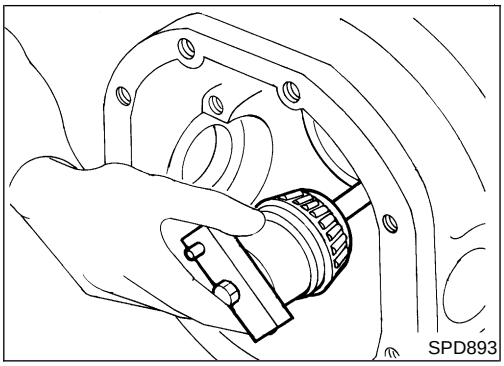
SPD893

3. Install the pinion rear bearing inner cone into the final drive housing. Then place the pinion preload shim selector Tool, J34309-1, on gauge screw assembly.

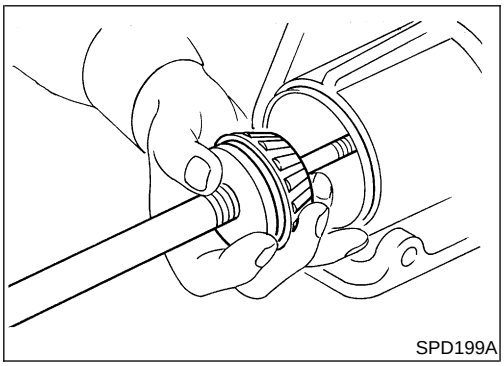
SPD199A

4. Assemble the front pinion bearing inner cone and the J34309-2 gauge anvil. Assemble them together with the J34309-1 gauge screw in the final drive housing. Make sure that the pinion height gauge plate, J34309-16, will turn a full 360 degrees. Tighten the two sections together by hand.

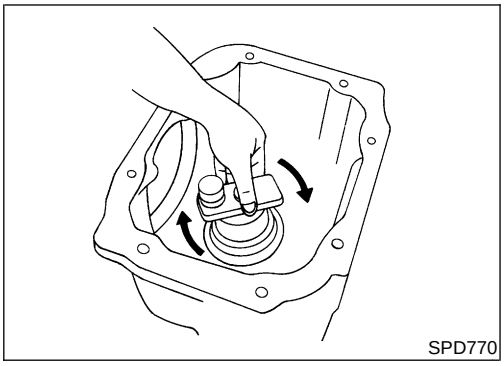
SPD770

5. Turn the assembly several times to seat the bearings.

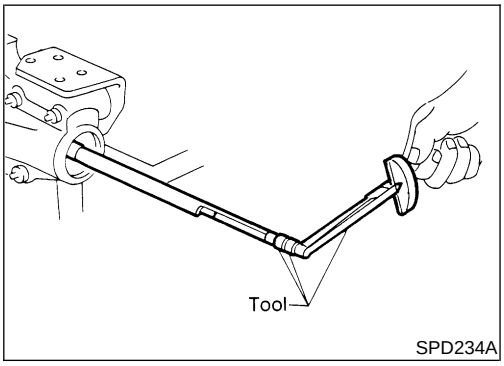

SPD234A

6. Measure the turning torque at the end of the J34309-2 gauge anvil using Tool.

Tool number: ST3127S000 (J25765-A)

Turning torque specification:

1.0 - 1.3 N·m (10 - 13 kg-cm, 8.7 - 11.3 in-lb)

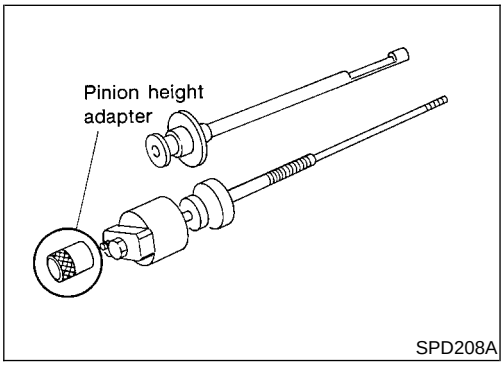

SPD208A

7. Place the J34309-11 pinion height adapter onto the gauge plate and tighten it by hand.

CAUTION:

Make sure all machined surfaces are clean.

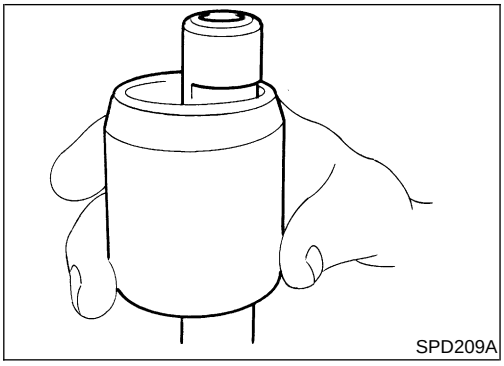
SPD209A

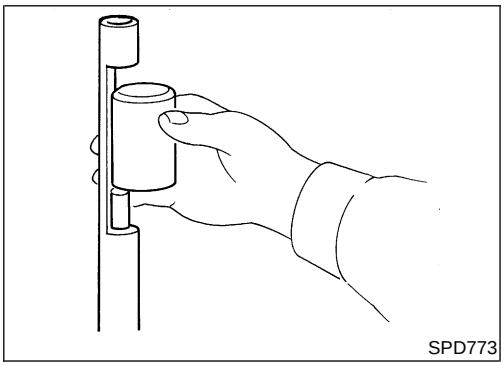
SPD773

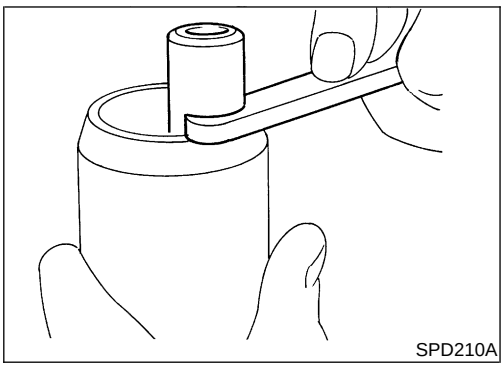
SPD210A

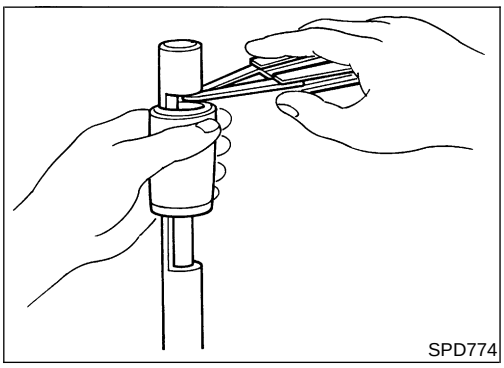
SPD774

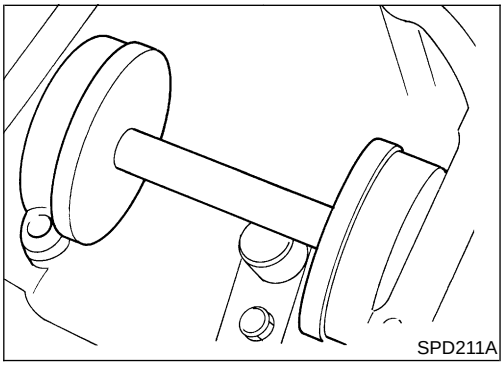
SPD211A

PINION BEARING PRELOAD WASHER SELECTION

8. Place the solid pinion bearing spacer, small end first, over the J34309-2 gauge anvil and seat the small end squarely against the tip of the J34309-1 gauge screw in the tool recessed portion.

9. Select the correct thickness of pinion bearing preload adjusting washer using a standard gauge of 3.5 mm (0.138 in) and J34309-101 feeler gauge. The exact measure is the thickness of the adjusting washer required. Select the correct washer.

Drive pinion bearing preload adjusting washer:

Refer to "Drive Pinion Preload Adjustment", PD-63.

10. Set the selected, correct pinion bearing preload adjusting washer aside for use when assembling the pinion gear and bearings into the final drive.

PINION HEIGHT ADJUSTING WASHER SELECTION

11. Now, position the side bearing discs, J25269-4, and arbor firmly into the side bearing bores.
Install the side bearing caps and tighten the cap bolts to proper torque.

Adjustment (Cont'd)

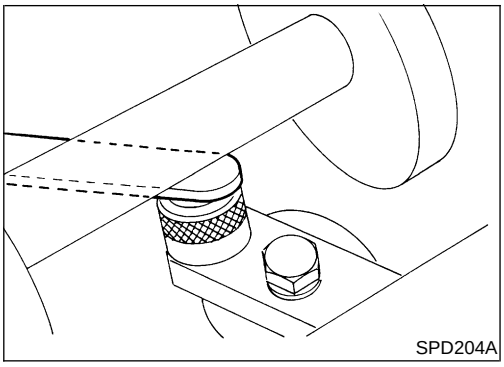
SPD204A

12. Select the correct standard pinion height adjusting washer thickness. Select by using a standard gauge of 3 mm (0.12 in) and J34309-101 feeler gauge. Measure the distance between the J34309-11 pinion height adapter including the standard gauge and the arbor.
13. Write down the exact measurement (the value of feeler gauge).

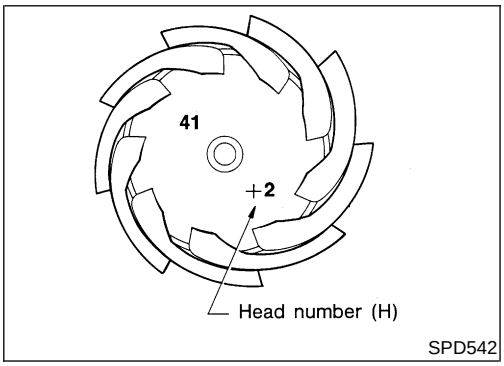

SPD542

14. Correct the pinion height washer size by referring to the "pinion head number".
There are two numbers painted on the pinion gear. The first one refers to the pinion and ring gear as a matched set. This number should be the same as the number on the ring gear. The second number is the "pinion head height number". It refers to the ideal pinion height from standard for quietest operation. Use the following chart to determine the correct pinion height washer.

Use the following chart to determine the correct pinion height washer:

Pinion head height number	Add or remove from the standard pinion height washer thickness measurement
−6	Add 0.06 mm (0.0024 in)
−5	Add 0.05 mm (0.0020 in)
−4	Add 0.04 mm (0.0016 in)
−3	Add 0.03 mm (0.0012 in)
−2	Add 0.02 mm (0.0008 in)
−1	Add 0.01 mm (0.0004 in)
0	Use the selected washer thickness
+1	Subtract 0.01 mm (0.0004 in)
+2	Subtract 0.02 mm (0.0008 in)
+3	Subtract 0.03 mm (0.0012 in)
+4	Subtract 0.04 mm (0.0016 in)
+5	Subtract 0.05 mm (0.0020 in)
+6	Subtract 0.06 mm (0.0024 in)

15. Select the correct pinion height washer.
Drive pinion height adjusting washer:
Refer to "Drive Pinion Height Adjustment", PD-63.

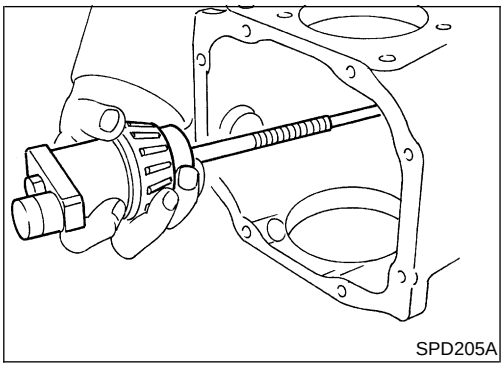
SPD205A

16. Remove the J34309 pinion preload shim selector Tool from the final drive housing. Then disassemble to retrieve the pinion bearings.

TOOTH CONTACT

=NEPD0121S03

Checking gear tooth contact pattern is necessary to verify correct relationship between ring gear and drive pinion.
Hypoid gear set which is not positioned properly may be noisy, or have short life or both. With the checking or gear tooth contact pattern, the most desirable contact for low noise level and long life can be assured.

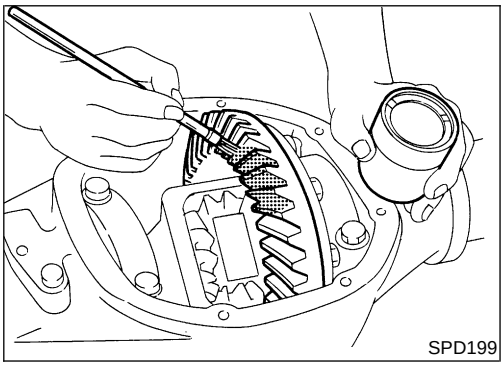
SPD199

1. Thoroughly clean ring gear and drive pinion teeth.
2. Sparingly apply a mixture of powdered ferric oxide and oil or equivalent to 3 or 4 teeth of ring gear drive side.

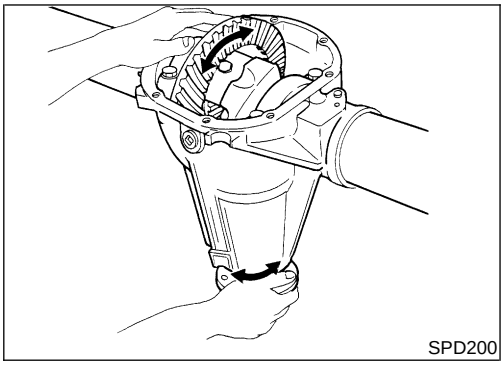
SPD200

3. Hold companion flange steady and rotate the ring gear in both directions.

Usually the pattern will be correct if shims are correctly calculated and the backlash is correct. However, in rare cases, trial and error processes may be employed to obtain a correct pattern. The tooth pattern is the best indication of how well a differential has been set up.

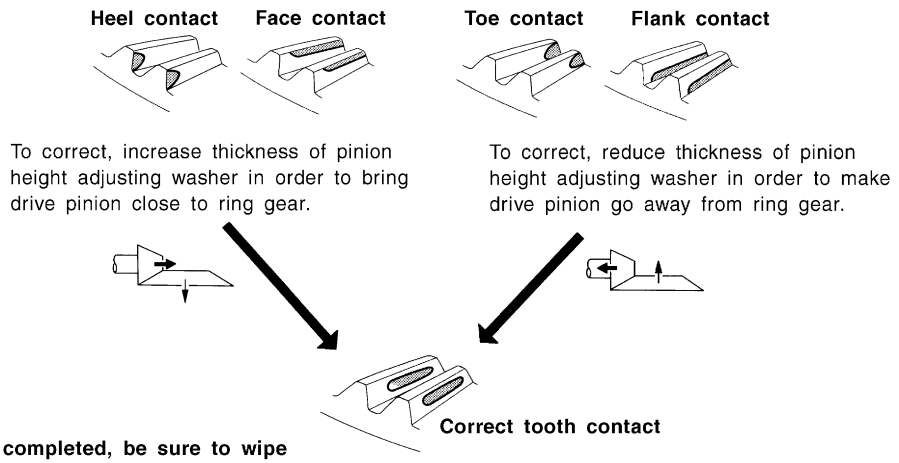

When adjustment is completed, be sure to wipe off completely the ferric oxide and oil or their equivalent.

SPD007-B

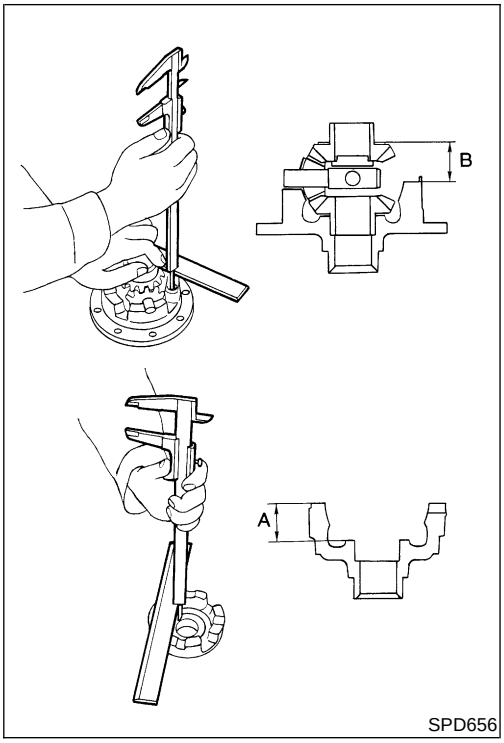

Assembly

NEPD0122

DIFFERENTIAL CASE

NEPD0122S01

1. Measure clearance between side gear thrust washer and differential case.

   Clearance between side gear thrust washer and differential case (A – B):

   Less than 0.15 mm (0.0059 in)

   The clearance can be adjusted with side gear thrust washer. Refer to “Side Gear Adjustment”, PD-62.
2. Apply gear oil to gear tooth surfaces and thrust surfaces and check to see that they turn properly.

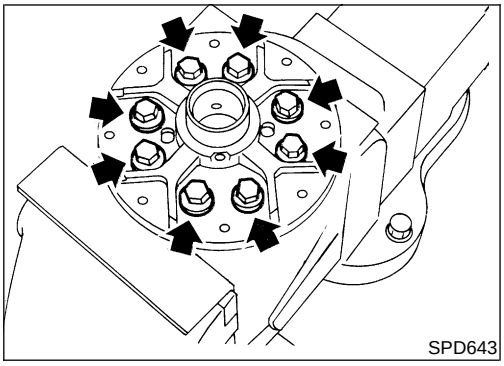

3. Install differential case LH and RH.

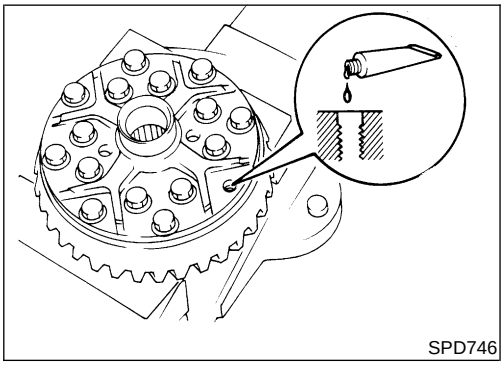

4. Place differential case on ring gear.
5. Apply locking agent [Locktite (stud lock) or equivalent] to ring gear bolts, and install them.
   Tighten bolts in a crisscross pattern.

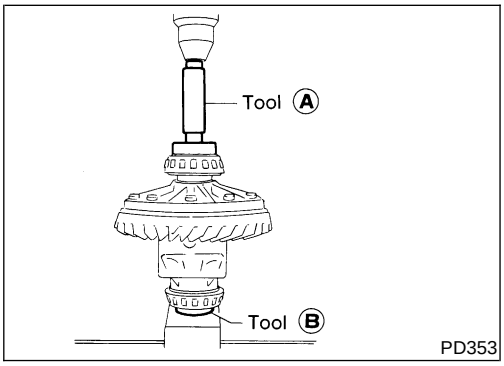

6. Press-fit side bearing inner cones on differential case with Tool.

   Tool numbers:

   A ST33230000 (J25805-01)

   B ST33061000 (J8107-2)

DIFFERENTIAL CARRIER

NEPD0122S02

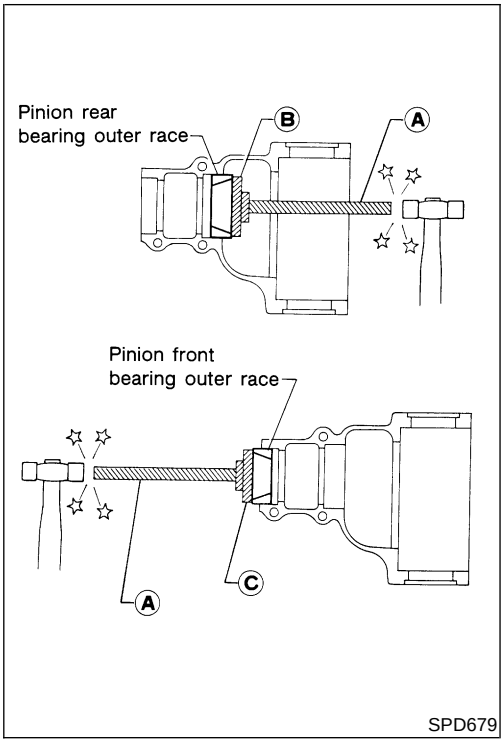

1. Press-fit front and rear bearing outer races with Tools.

Tool numbers:

A ST30611000 (J25742-1)
B ST30621000 (J25742-5)
C ST30613000 (J25742-3)

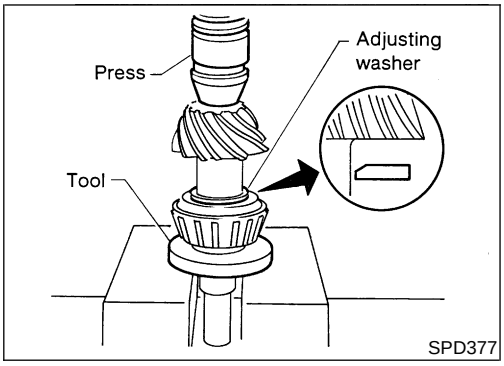

2. Select pinion height adjusting washer. Refer to "PINION GEAR HEIGHT AND PINION BEARING PRELOAD", PD-51.
3. Install pinion height adjusting washer in drive pinion, and press-fit rear bearing inner cone in it, with press and Tool.

Tool number: ST30901000 (J26010-01)

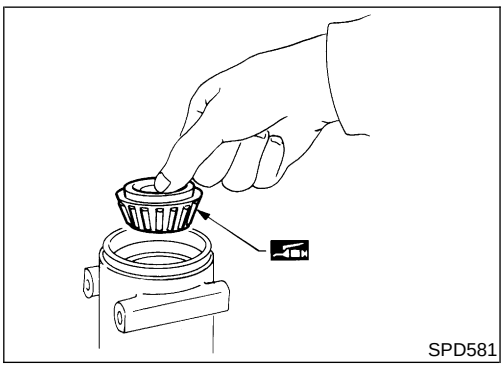

4. Place pinion front bearing inner cone in gear carrier.

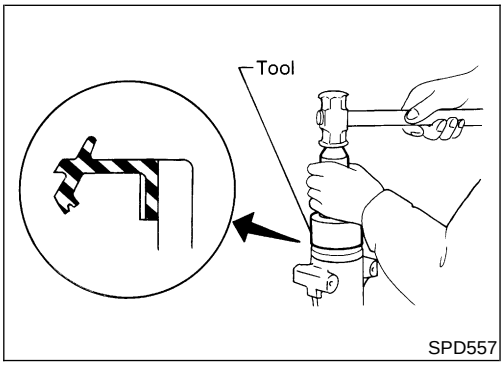

5. Apply multi-purpose grease to cavity at sealing lips of oil seal. Install front oil seal.

Tool number: KV38100500 (J25273)

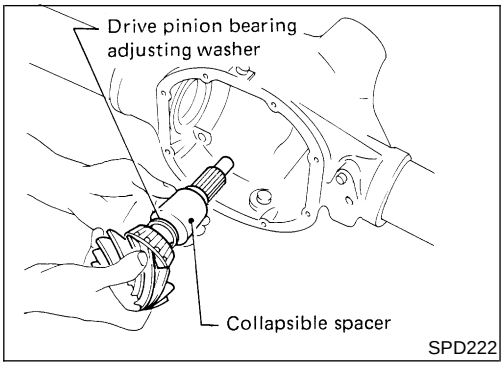

6. Place drive pinion bearing spacer, drive pinion bearing adjusting washer and drive pinion in gear carrier.

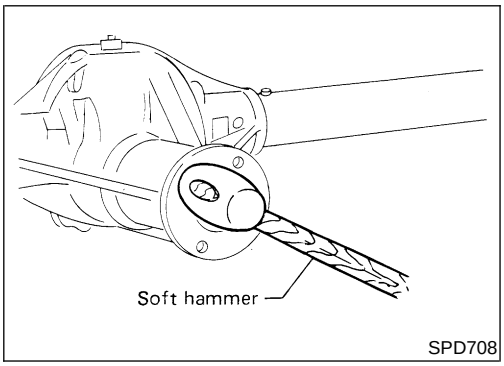

7. Install ABS sensor, sensor rotor, and companion flange onto drive pinion. Tap the companion flange with a soft hammer until fully seated.

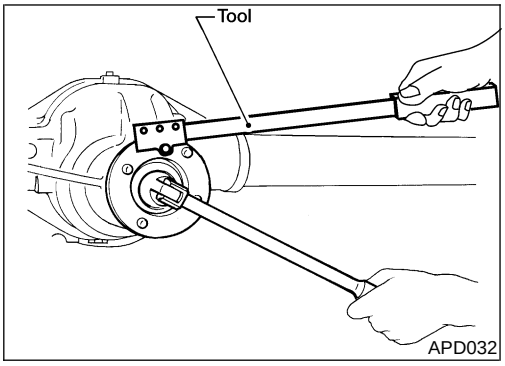

8. Tighten pinion nut to 127 N·m (13 kg-m, 94 ft-lb).
The threaded portion of drive pinion and pinion nut should be free from oil or grease.
Tool number: KV38108300 (J44195)

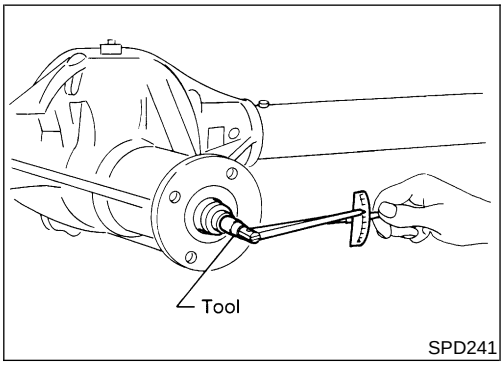

9. Tighten the pinion nut by very small degrees until the specified preload is achieved. When checking the preload, turn the drive pinion in both directions several times to set the bearing rollers.
Tool number: ST3127S000 (J25765-A)
Pinion bearing preload:
1.1 - 1.7 N·m (11 - 17 kg-cm, 9.5 - 14.8 in-lb)
This procedure will have to be repeated if:
- **Maximum preload is achieved before the minimum pinion nut torque is reached.**
- **Minimum preload is not achieved before maximum pinion nut torque is reached.**

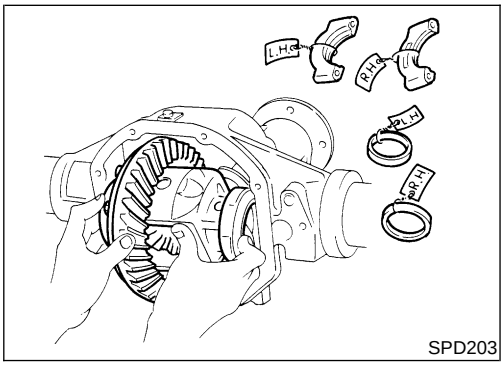

10. Select side bearing adjusting washer.
Refer to "SIDE BEARING PRELOAD", PD-50.
11. Install differential case assembly with side bearing outer races into gear carrier.

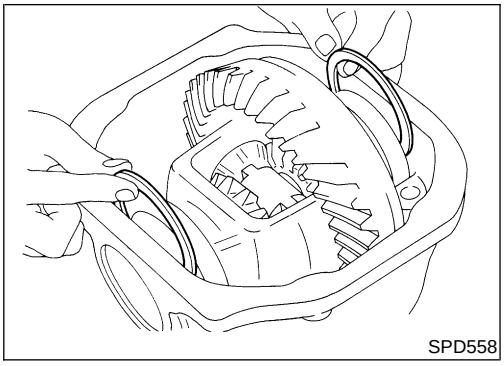
SPD558

12. Insert left and right side bearing adjusting washers in place between side bearing and carrier.

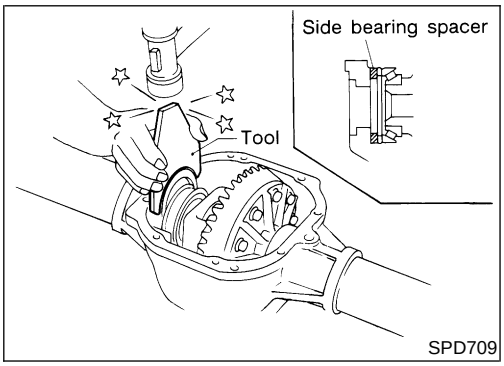

SPD709

13. Drive in side bearing spacer with Tool.
Tool number: KV38100600 (J25267)

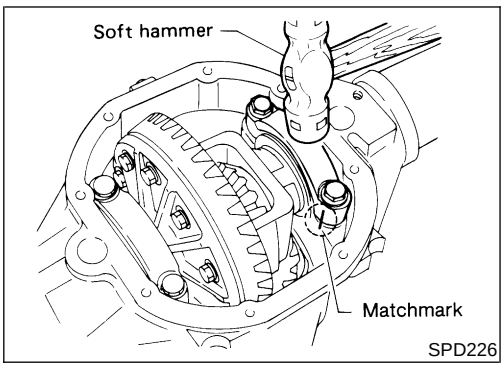

SPD226

14. Align mark on bearing cap with that on gear carrier and install bearing cap on gear carrier.

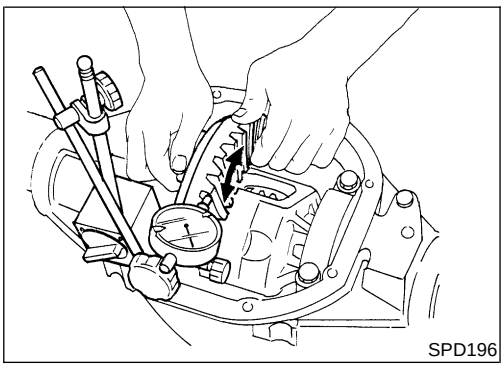
SPD196

15. Measure ring gear-to-drive pinion backlash with a dial indicator.
Ring gear-to-drive pinion backlash:
0.13 - 0.18 mm (0.0051 - 0.0071 in)

- If backlash is too small, decrease thickness of right shim and increase thickness of left shim by the same amount.
If backlash is too great, reverse the above procedure.

Never change the total amount of shims as it will change the bearing preload.

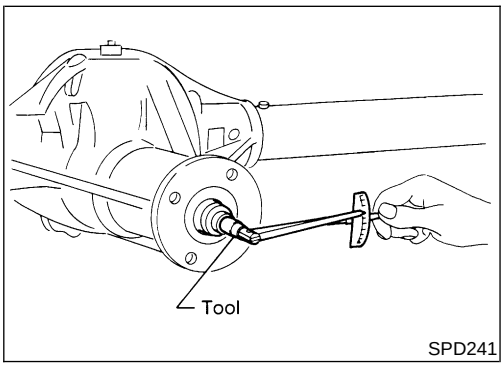

SPD241

16. Check total preload with Tool.
When checking preload, turn drive pinion in both directions several times to seat bearing rollers correctly.
Total preload:
1.2 - 2.3 N·m (12 - 23 kg-cm, 10 - 20 in-lb)
Tool number: ST3127S000 (J25765-A)

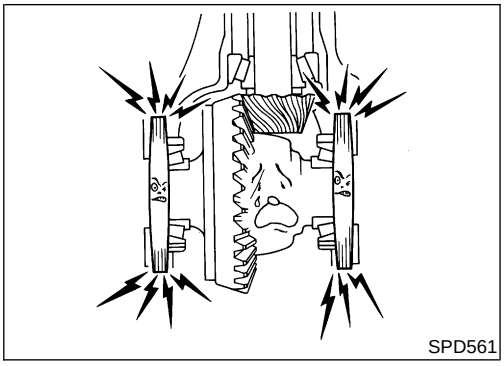
SPD561

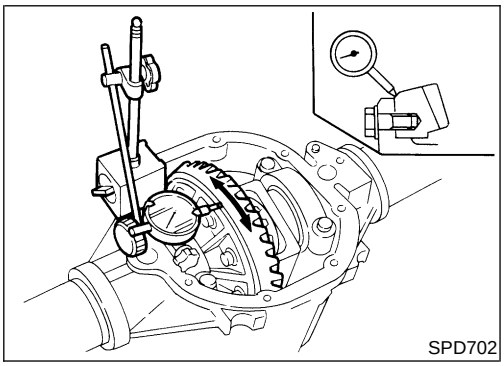
SPD702

- If preload is too great, remove the same amount of shim from each side.
- If preload is too small, add the same amount of shim to each side.

Never add or remove a different number of shims for each side as it will change ring gear-to-drive pinion backlash.

17. Recheck ring gear-to-drive pinion backlash because increase or decrease in thickness of shims will cause change of ring gear-to-pinion backlash.

18. Check runout of ring gear with a dial indicator.
    Runout limit: 0.05 mm (0.0020 in)
- If backlash varies excessively in different places, the variance may have resulted from foreign matter caught between the ring gear and the differential case.
- If the backlash varies greatly when the runout of the ring gear is within a specified range, the hypoid gear set or differential case should be replaced.

19. Check tooth contact.
    Refer to "TOOTH CONTACT", PD-56.
20. Install rear cover and gasket.

Service Data and Specifications (SDS)

C200

General Specifications

=NEPD0123

NEPD0123S01

Engine	KA24DE			
Body	Standard wheelbase		Long wheelbase	
Transmission	A/T	M/T	A/T	M/T
Rear final drive	Standard			
	C200			
	2-pinion			
Gear ratio	4.111	3.700	4.625	3.900
Number of teeth (Ring gear/drive pinion)	37/9	37/10	37/8	39/10
Oil capacity (Approx.) ℓ (US pt, lmp pt)	1.3 (2-3/4, 2-1/4)			

Ring Gear Runout

NEPD0123S02

Ring gear runout limit mm (in)	0.05 (0.0020)

Side Gear Adjustment

NEPD0123S03

Side gear backlash (Clearance between side gear and differential case) mm (in)		Less than 0.15 (0.0059)
Available side gear thrust washers	Thickness mm (in)	Part number*
	0.75 (0.0295)	38424-N3110
	0.78 (0.0307)	38424-N3111
	0.81 (0.0319)	38424-N3112
	0.84 (0.0331)	38424-N3113
	0.87 (0.0343)	38424-N3114
	0.90 (0.0354)	38424-N3115
	0.93 (0.0366)	38424-N3116

*Always check with the Parts Department for the latest parts information.

Side Bearing Adjustment

NEPD0123S04

Differential carrier assembly turning resistance N (kg, lb)		34.3 - 39.2 (3.5 - 4.0, 7.7 - 8.8)
Available side bearing adjusting washers	Thickness mm (in)	Part number*
	2.00 (0.0787)	38453-N3100
	2.05 (0.0807)	38453-N3101
	2.10 (0.0827)	38453-N3102
	2.15 (0.0846)	38453-N3103
	2.20 (0.0866)	38453-N3104
	2.25 (0.0886)	38453-N3105
	2.30 (0.0906)	38453-N3106
	2.35 (0.0925)	38453-N3107
	2.40 (0.0945)	38453-N3108
	2.45 (0.0965)	38453-N3109
	2.50 (0.0984)	38453-N3110
	2.55 (0.1004)	38453-N3111
	2.60 (0.1024)	38453-N3112

*Always check with the Parts Department for the latest parts information.

Total Preload Adjustment

NEPD0123S05

Total preload N·m (kg-cm, in-lb)	1.2 - 2.3 (12 - 23, 10 - 20)
Ring gear-to-pinion backlash mm (in)	0.13 - 0.18 (0.0051 - 0.0071)

Drive Pinion Height Adjustment

NEPD0123S06

	Thickness mm (in)	Part number*
Available pinion height adjusting washers	3.09 (0.1217)	38154-P6017
	3.12 (0.1228)	38154-P6018
	3.15 (0.1240)	38154-P6019
	3.18 (0.1252)	38154-P6020
	3.21 (0.1264)	38154-P6021
	3.24 (0.1276)	38154-P6022
	3.27 (0.1287)	38154-P6023
	3.30 (0.1299)	38154-P6024
	3.33 (0.1311)	38154-P6025
	3.36 (0.1323)	38154-P6026
	3.39 (0.1335)	38154-P6027
	3.42 (0.1346)	38154-P6028
	3.45 (0.1358)	38154-P6029
	3.48 (0.1370)	38154-P6030
	3.51 (0.1382)	38154-P6031
	3.54 (0.1394)	38154-P6032
	3.57 (0.1406)	38154-P6033
	3.60 (0.1417)	38154-P6034
	3.63 (0.1429)	38154-P6035
	3.66 (0.1441)	38154-P6036

*Always check with the Parts Department for the latest parts information.

Drive Pinion Preload Adjustment

NEPD0123S07

Drive pinion bearing preload adjusting method	Collapsible spacer
Drive pinion preload with front oil seal N·m (kg-cm, in-lb)	1.1 - 1.7 (11 - 17, 9.5 - 15)
Drive pinion preload without front oil seal N·m (kg-cm, in-lb)	1.0 - 1.6 (10 - 16, 8.7 - 14)

Preparation

SPECIAL SERVICE TOOLS

NEPD0029

The actual shapes of Kent-Moore tools may differ from those of special service tools illustrated here.

Tool number (Kent-Moore No.) Tool name	Description	
ST3127S000 (See J25765-A) Preload gauge 1 GG91030000 (J25765) Torque wrench 2 HT62940000 (—) Socket adapter 3 HT62900000 (—) Socket adapter	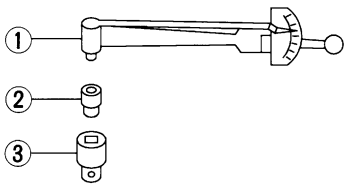 NT124	Measuring pinion bearing preload and total preload
ST06340000 (J24310, J34310) Differential attachment	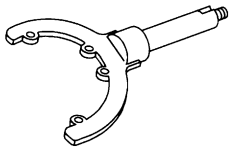 NT140	Mounting final drive
ST32580000 (J34312) Differential side bearing adjusting nut wrench	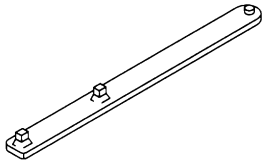 NT141	Adjusting side bearing preload and backlash (ring gear-drive pinion)
KV38108300 (J-44195) Companion flange wrench	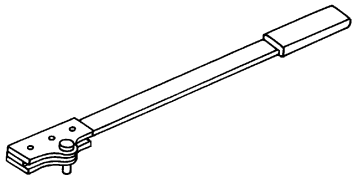 NT771	Removing and installing propeller shaft lock nut, and drive pinion lock nut
ST3090S000 (—) Drive pinion rear inner race puller set 1 ST30031000 (J22912-01) Puller 2 ST30901000 (J26010-01) Base	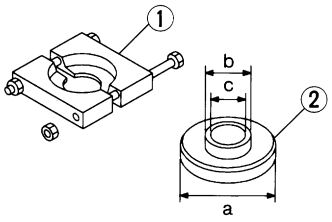 NT527	Removing and installing drive pinion rear inner cone **a: 79 mm (3.11 in) dia.** **b: 45 mm (1.77 in) dia.** **c: 35 mm (1.38 in) dia.**
ST3306S001 Differential side bearing puller set 1 ST33051001 (J22888-20) Body 2 ST33061000 (J8107-2) Adapter	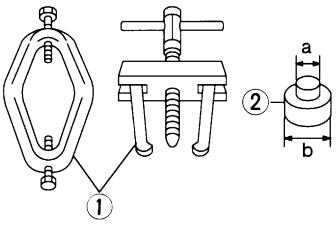 NT072	Removing and installing differential side bearing inner cone **a: 28.5 mm (1.122 in) dia.** **b: 38 mm (1.50 in) dia.**

Tool number (Kent-Moore No.) Tool name	Description	
ST33190000 (J25523) Differential side bearing drift	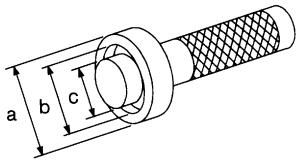 NT085	Installing side bearing inner cone **a: 52 mm (2.05 in) dia.** **b: 45.5 mm (1.791 in) dia.** **c: 34 mm (1.34 in) dia.**
ST33081000 (—) Side bearing puller adapter	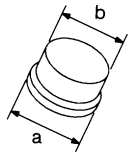 NT431	Installing side bearing inner cone **a: 43 mm (1.69 in) dia.** **b: 33.5 mm (1.319 in) dia.**
ST30611000 (J25742-1) Drift	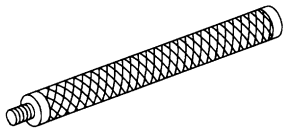 NT090	Installing pinion rear bearing outer race (Use with ST30621000 or ST30613000)
ST30621000 (J25742-5) Drift	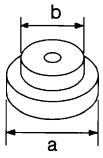 NT073	Installing pinion rear bearing outer race **a: 79 mm (3.11 in) dia.** **b: 59 mm (2.32 in) dia.**
ST30613000 (J25742-3) Drift	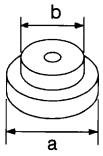 NT073	Installing pinion front bearing outer race (Use with ST30611000) **a: 72 mm (2.83 in) dia.** **b: 48 mm (1.89 in) dia.**
KV381025S0 (—) Oil seal fitting tool 1 ST30720000 (J25405) Drift bar 2 KV38102510 (—) Drift	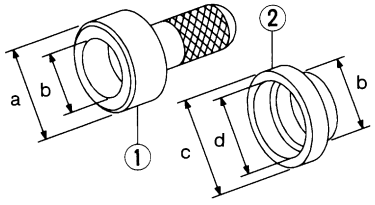 NT525	Installing front oil seal **a: 77 mm (3.03 in) dia.** **b: 55 mm (2.17 in) dia.** **c: 71 mm (2.80 in) dia.** **d: 65 mm (2.56 in) dia.**
(J34309) Differential shim selector	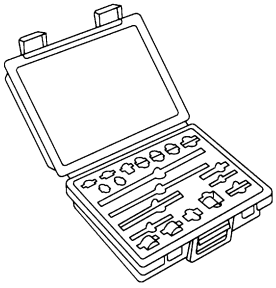 NT134	Adjusting bearing pre-load and gear height

Preparation (Cont'd)

Tool number (Kent-Moore No.) Tool name	Description	
(J25269-18) Side bearing discs (2 Req'd)	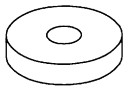 NT135	Selecting pinion height adjusting washer
KV381052S0 (—) Rear axle shaft dummy 1 KV38105210 (—) Torque wrench side 2 KV38105220 (—) Vise side	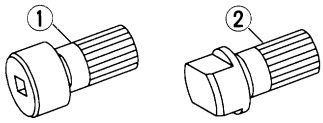 NT142	Checking differential torque on limited slip differential
KV38100500 (J25273) Gear carrier front oil seal drift	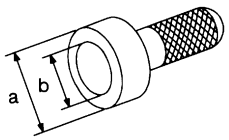 NT115	Installing front oil seal **a: 85 mm (3.35 in) dia.** **b: 60 mm (2.36 in) dia.**

Noise, Vibration and Harshness (NVH) Troubleshooting

NEPD0051

Refer to "NVH TROUBLESHOOTING CHART", PD-4.

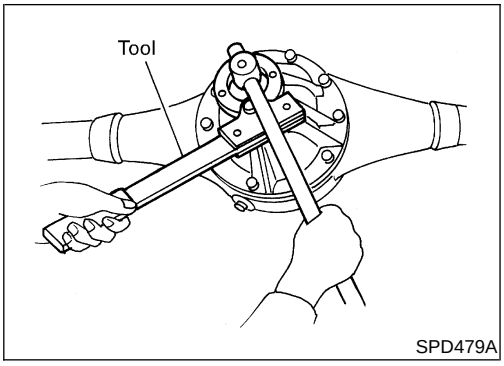

On-vehicle Service

FRONT OIL SEAL REPLACEMENT

=NEPD0030

1. Remove propeller shaft. Refer to “Removal and Installation”, PD-9.
2. Loosen drive pinion nut.
   Tool number: KV38108300 (J-44195)

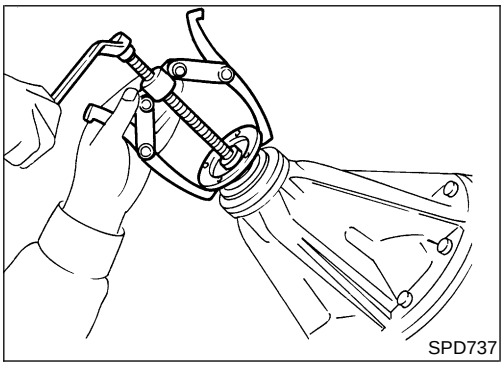

3. Remove companion flange.
4. Remove ABS sensor and sensor rotor (2WD models).

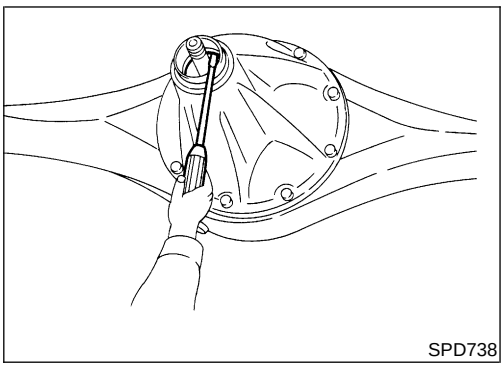

5. Remove front oil seal.

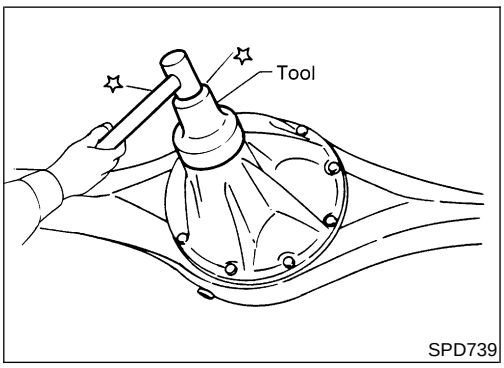

6. Apply multi-purpose grease to cavity at sealing lips of oil seal. Press front oil seal into carrier.
   Tool number:
   KV38100500 (J25273)
7. Install ABS sensor and sensor rotor (2WD models).
8. Install companion flange and drive pinion nut.
9. Install rear propeller shaft.

Components

NEPD0031

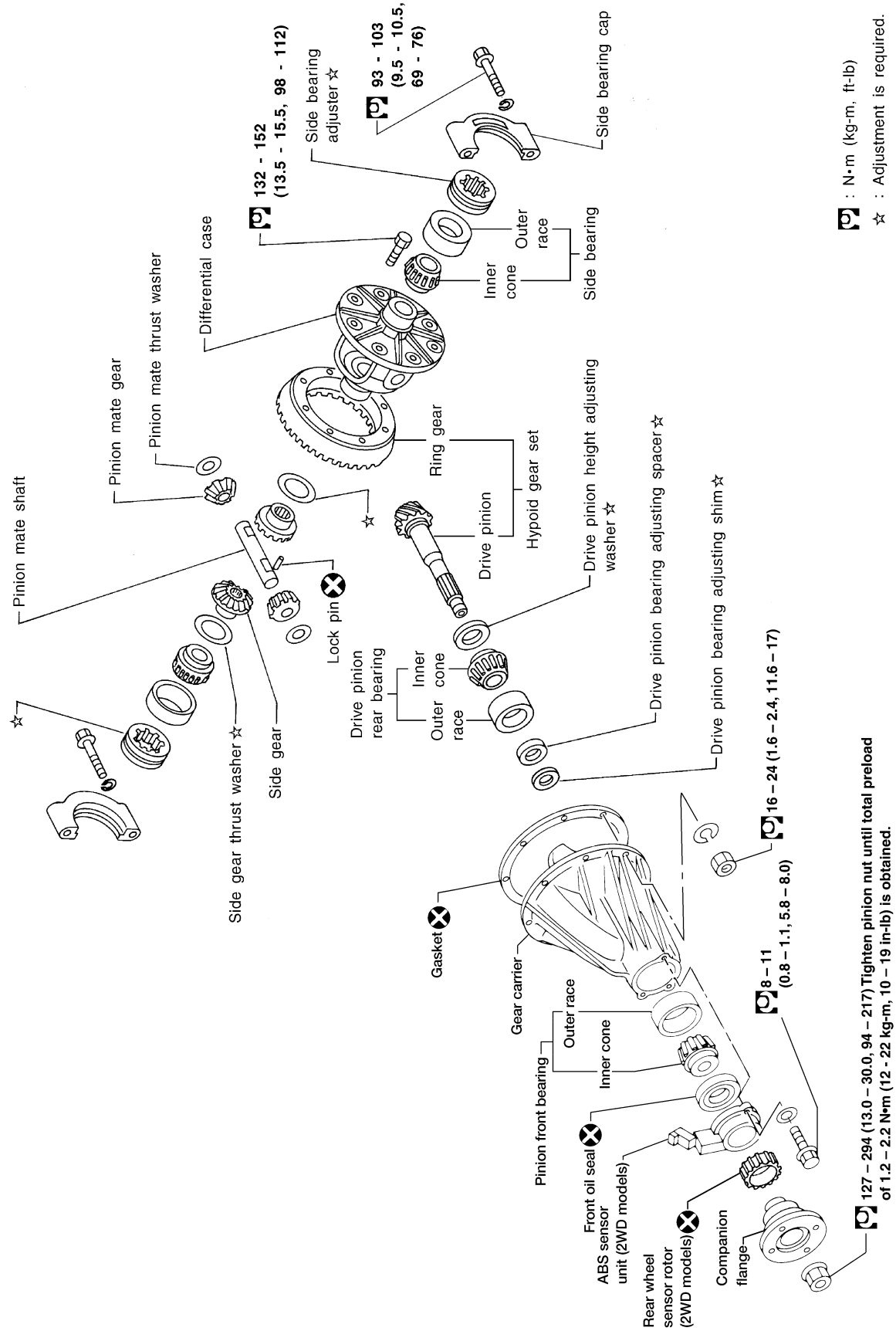

SEC. 380

WPD010

Removal and Installation

NEPD0032

REMOVAL

NEPD0032S01

- Remove rear propeller shaft. Refer to “Removal and Installation”, PD-9.
  Plug front end of transfer.
- Remove axle shaft.
  Refer to ***AX-30***, “REMOVAL”.
- Remove rear final drive mounting bolts.

CAUTION:

Be careful not to damage spline, sleeve yoke and front oil seal when removing propeller shaft.

Before removing the final drive assembly or rear axle assembly, disconnect the ABS sensor harness connector from the assembly and move it away from the final drive/rear axle assembly area. Failure to do so may result in the sensor wires being damaged and the sensor becoming inoperative.

INSTALLATION

NEPD0032S02

- Fill final drive with recommended gear oil.

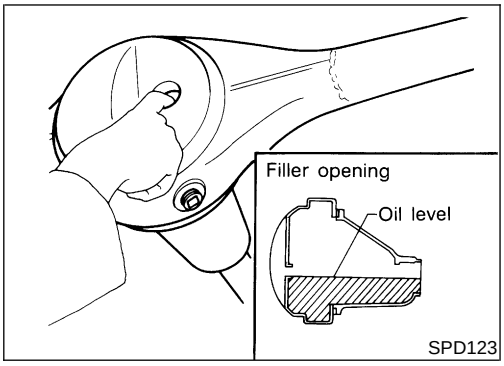

SPD123

- Pay attention to the direction of gasket.

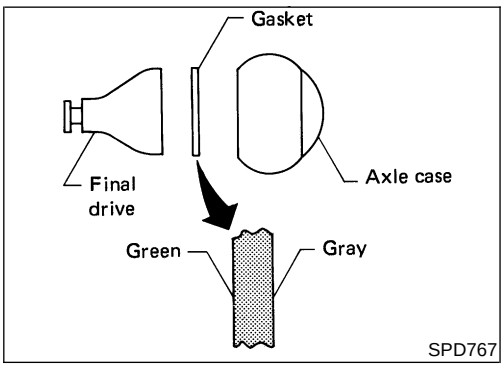

SPD767

Disassembly

NEPD0033

PRE-INSPECTION

NEPD0033S01

Before disassembling final drive, perform the following inspection.

- Total preload

a) Turn drive pinion in both directions several times to seat bearing rollers correctly.

b) Check total preload with Tool.

Tool number: ST3127S000 (J25765-A)

Total preload:

1.7 - 2.5 N·m (17 - 25 kg-cm, 15 - 22 in-lb)

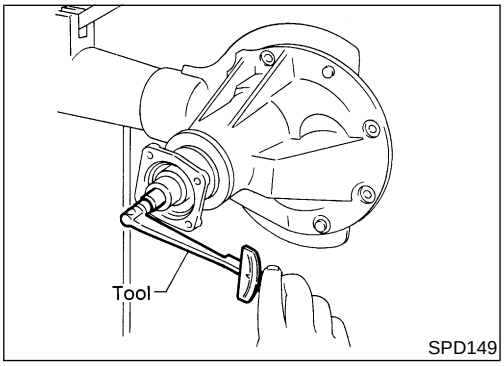

SPD149

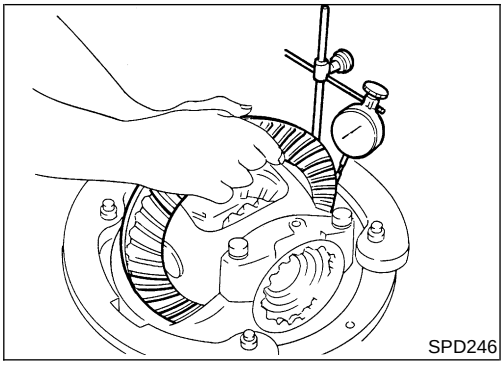
SPD246

- Ring gear to drive pinion backlash
  Check backlash of ring gear with a dial indicator at several points.
  Ring gear-to-drive pinion backlash:
  0.13 - 0.18 mm (0.0051 - 0.0071 in)

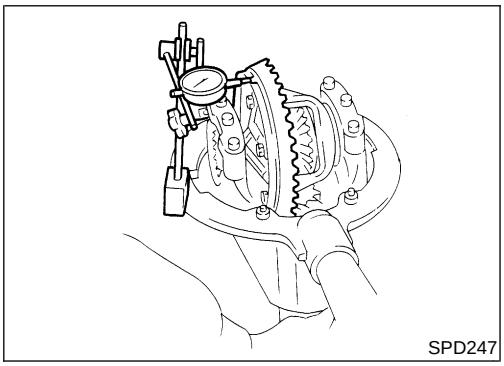
SPD247

- Ring gear runout
  Check runout of ring gear with a dial indicator.
  Runout limit:
  0.08 mm (0.0031 in)

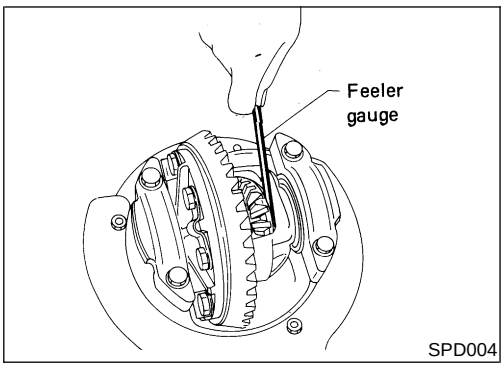

SPD004

- Tooth contact
  Check tooth contact. Refer to "TOOTH CONTACT", PD-83.
- Side gear to pinion mate gear backlash
  Measure clearance between side gear thrust washer and differential case with a feeler gauge.
  Clearance between side gear thrust washer and differential case:
  0.10 - 0.20 mm (0.0039 - 0.0079 in)

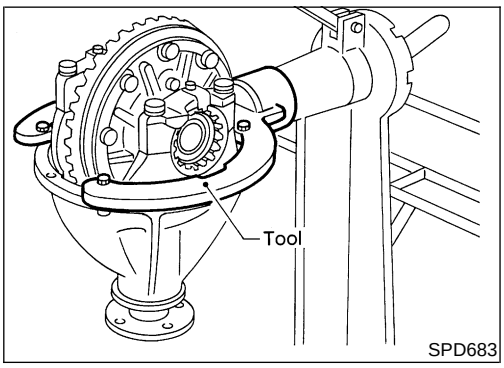

SPD683

DIFFERENTIAL CARRIER

NEPD0033S02

1. Mount final drive assembly on Tool.
   Tool number:
   ST06340000 (J24310, J34310)

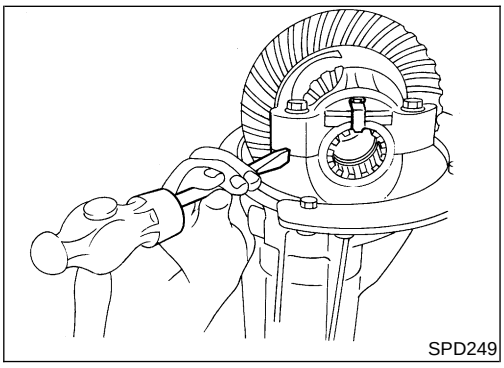
SPD249

2. Put match marks on one side of side bearing cap with paint or punch to ensure that it is replaced in proper position during reassembly.

Bearing caps are line-bored during manufacture and should be put back in their original places.

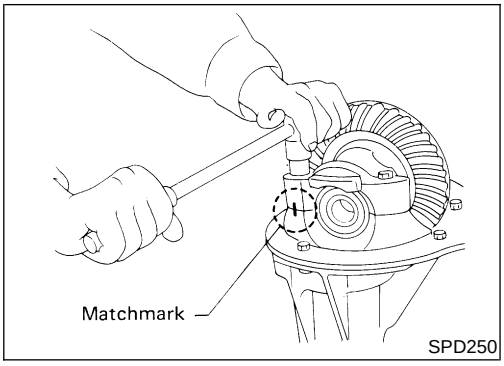

SPD250

3. Remove side lock fingers and side bearing caps.

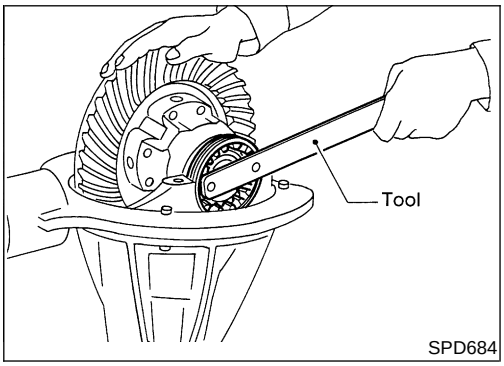

SPD684

4. Remove side bearing adjuster with Tool.
   Tool number: ST32580000 (J34312)

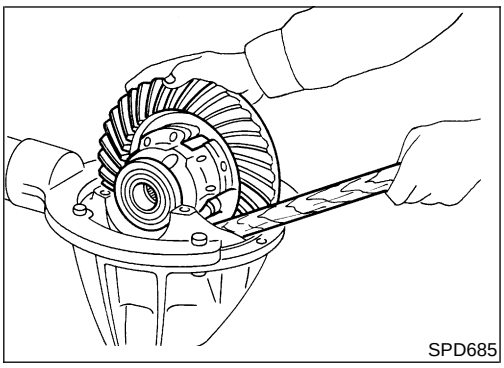
SPD685

5. Remove differential case assembly with a pry bar.

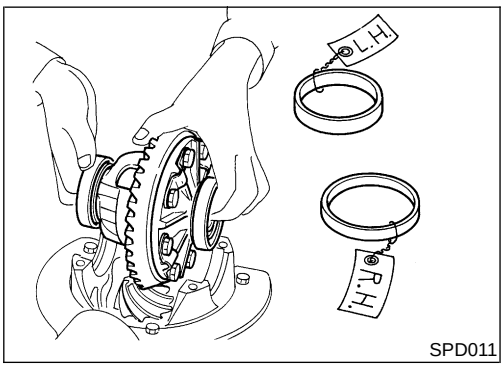

SPD011

Keep the side bearing outer races together with their respective inner cones — do not mix them up.

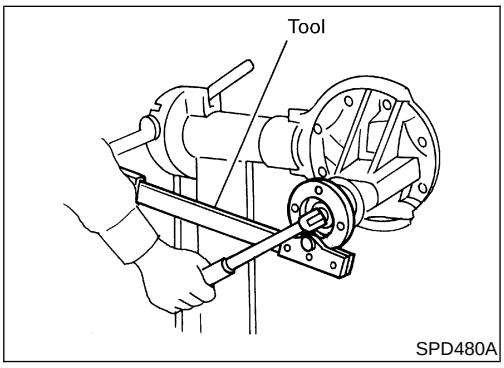

SPD480A

6. Remove drive pinion nut with Tool.
   Tool number: KV38108300 (J-44195)
7. Remove companion flange with puller.
8. Remove ABS sensor and sensor rotor (2WD models).

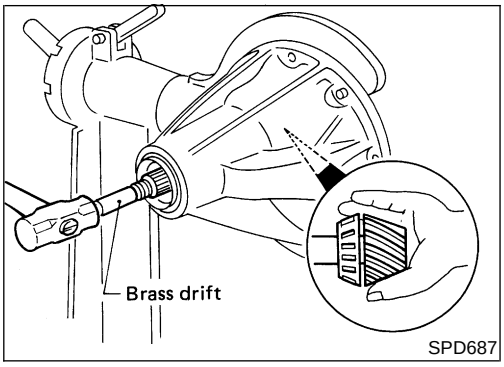

9. Take out drive pinion together with pinion rear bearing inner cone, drive pinion bearing spacer and pinion bearing adjusting shim.

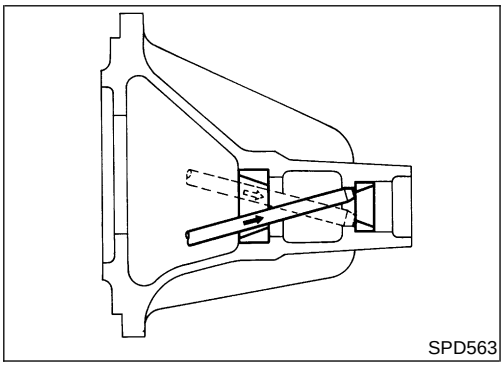

10. Remove front oil seal and pinion front bearing inner cone.
11. Remove pinion bearing outer races with a brass drift.

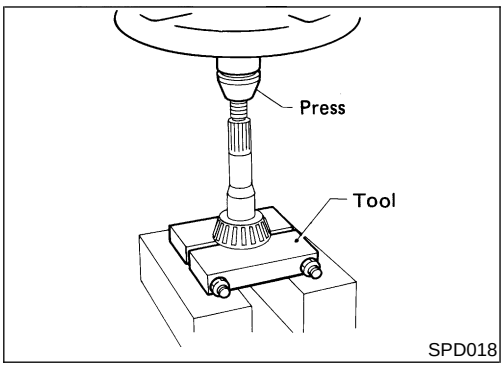

12. Remove pinion rear bearing inner cone and drive pinion adjusting washer.
    Tool number: ST30031000 (J22912-01)

DIFFERENTIAL CASE

NEPD0033S03

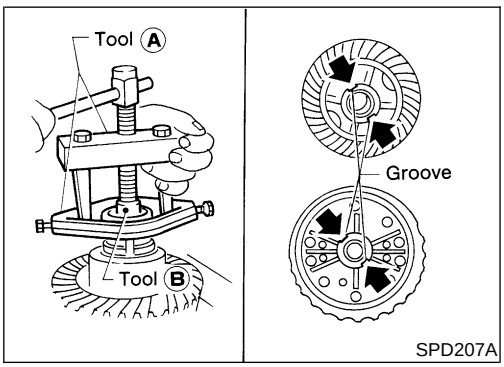

1. Remove side bearing inner cones.
   To prevent damage to bearing, engage puller jaws in groove.
   Tool number:
   A ST33051001 (J22888-20)
   B ST33061000 (J8107-2)

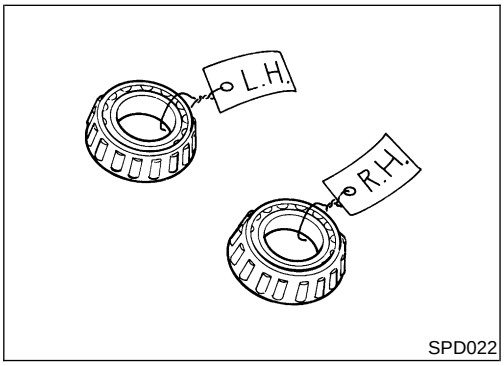

Be careful not to confuse the left-hand and right-hand parts. Keep bearing and bearing race for each side together.

2. Loosen ring gear bolts in a crisscross pattern.

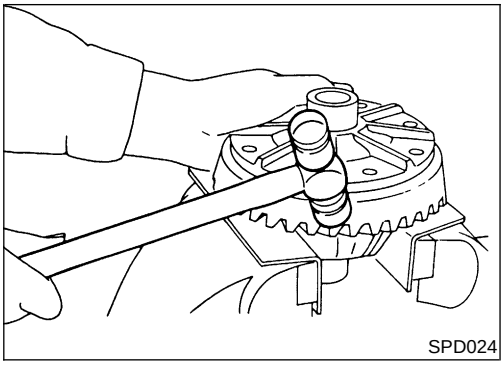
SPD024

3. Tap ring gear off differential case with a soft hammer.

Tap evenly all around to keep ring gear from binding.

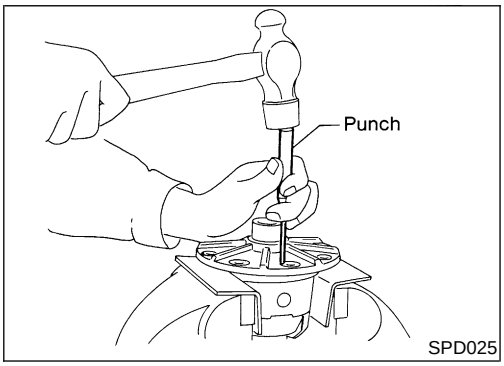

SPD025

4. Drive out pinion mate shaft lock pin, with punch from ring gear side.

Lock pin is caulked at pinhole mouth on differential case.

Inspection

RING GEAR AND DRIVE PINION

NEPD0034

NEPD0034S01

Check gear teeth for scoring, cracking or chipping.
If any damaged part is evident, replace ring gear and drive pinion as a set (hypoid gear set).

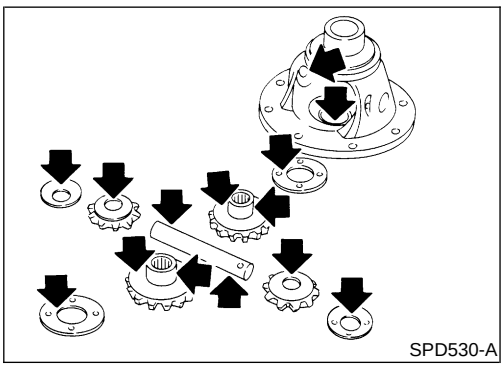
SPD530-A

DIFFERENTIAL CASE ASSEMBLY

NEPD0034S02

Check mating surfaces of differential case, side gears, pinion mate gears, pinion mate shaft, and thrust washers.

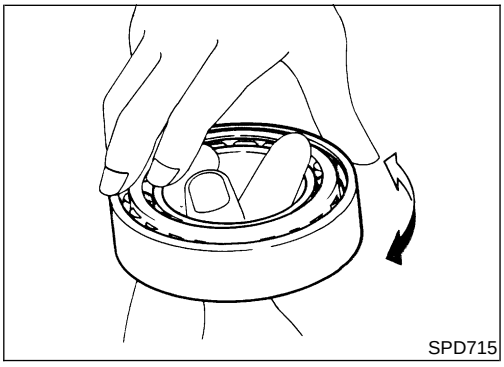
SPD715

BEARING

NEPD0034S03

1. Thoroughly clean bearing.
2. Check bearings for wear, scratches, pitting or flaking. Check tapered roller bearing for smooth rotation. If damaged, replace outer race and inner cone as a set.

Limited Slip Differential

PREPARATION FOR DISASSEMBLY

NEPD0035

CAUTION:
Do not run engine when only one wheel (rear) is off the ground.

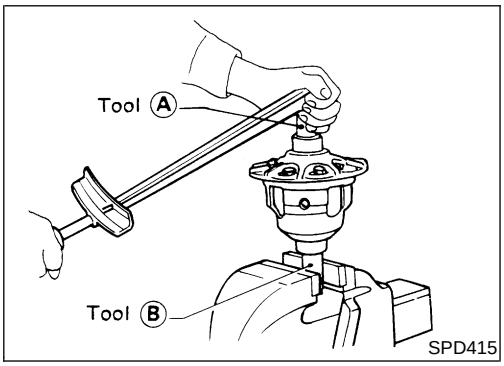

Checking Differential Torque

NEPD0035S01

Measure differential torque with Tool.
If it is not within the specifications, inspect components of limited slip differential.

Differential torque:
187 - 245N·m (19 - 25 kg-m, 138 - 180 ft-lb)
Tool number: A KV38105210 (—)
Tool number: B KV38105220 (—)

DISASSEMBLY

NEPD0036

No. of discs and plates (One side)

Model	H233B
Friction disc	5
Friction plate	6
Spring plate	2

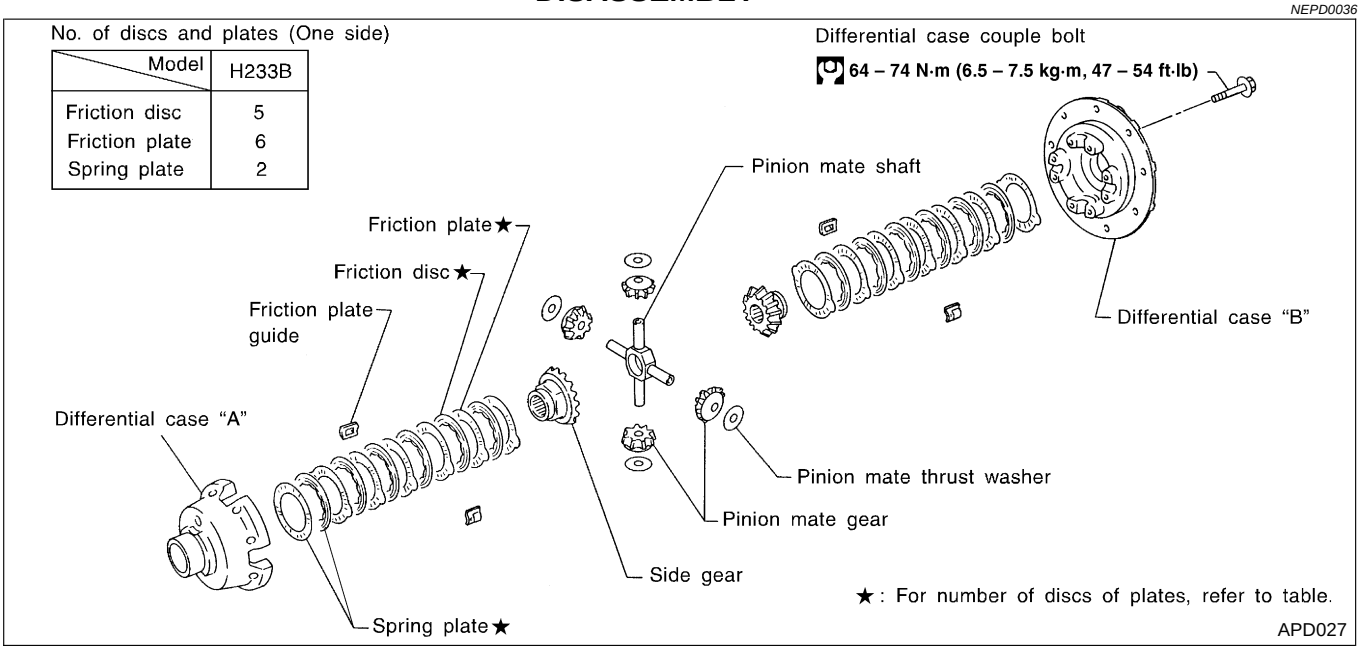

CAUTION:
Do not run engine when one wheel (rear) is off the ground.

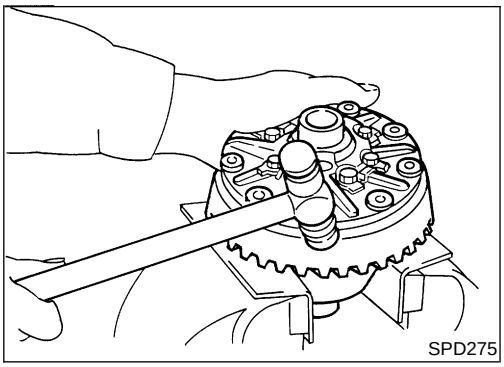
SPD275

1. Remove side bearing inner cone with Tool.
2. Loosen ring gear bolts in a crisscross pattern.
3. Tap ring gear off gear case with a soft hammer.

Tap evenly all around to keep ring gear from binding.

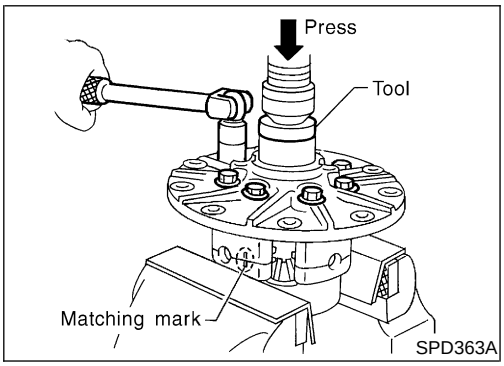

SPD363A

4. Remove couple bolts on differential cases A and B with a press.

Tool number: ST33081000 (—)

5. Separate differential case A and B.
   Draw out component parts (discs and plates, etc).

Put marks on gears and pressure rings so that they can be reinstalled in their original positions from which they were removed.

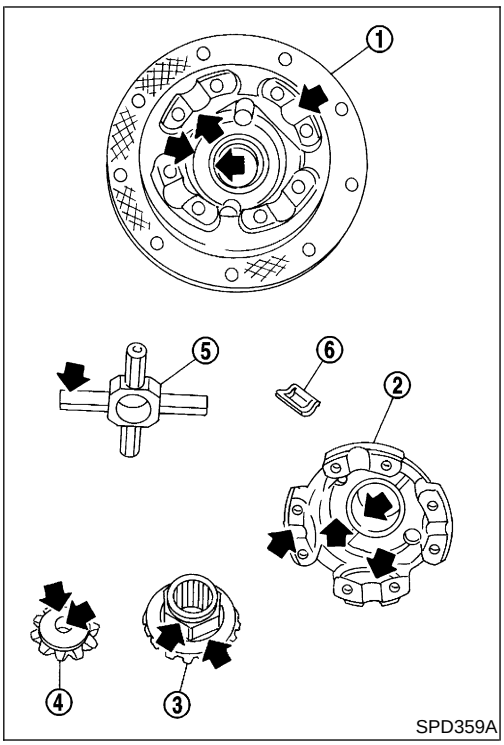

SPD359A

INSPECTION

Contact Surfaces

NEPD0037

NEPD0037S01

1. Clean the disassembled parts in suitable solvent and blow dry with compressed air.
2. If following surfaces are found with burrs or scratches, smooth with oil stone.
   1 Differential case B
   2 Differential case A
   3 Side gear
   4 Pinion mate gear
   5 Pinion mate shaft
   6 Friction plate guide

Disc and Plate

NEPD0037S02

1. Clean the discs and plates in suitable solvent and blow dry with compressed air.
2. Inspect discs and plates for wear, nicks and burrs.

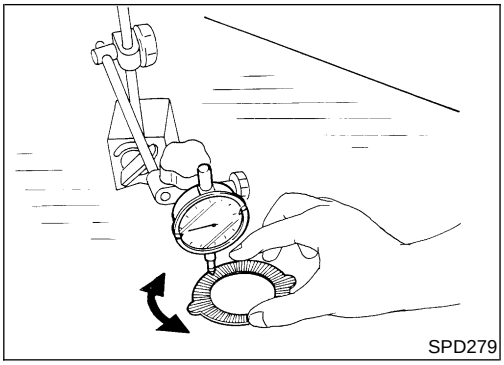
SPD279

3. Check friction discs or plates for warpage.

Allowable warpage:

0.08 mm (0.0031 in)

If it exceeds limits, replace with a new plate to eliminate possibility of clutch slippage or sticking.

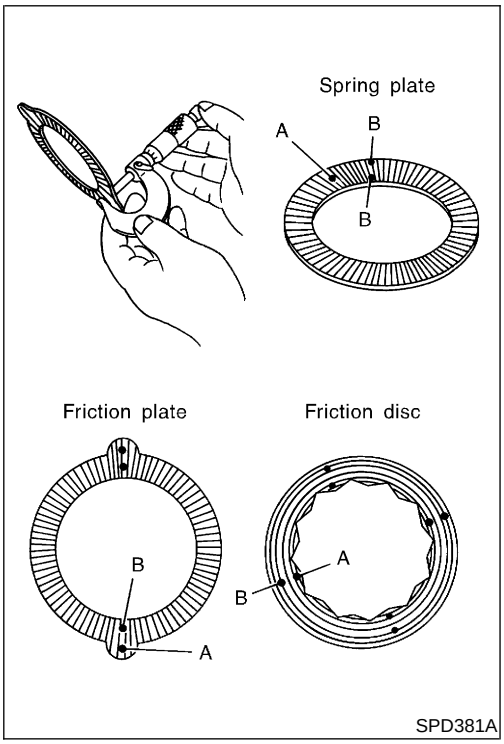

SPD381A

4. Measure frictional surfaces and projected portions of friction disc, friction plate, spring plate, and determine each part's differences to see if the specified wear limit has been exceeded.

If any part has worn beyond the wear limit, and deformed or fatigued, replace it with a new one that is the same thickness as the projected portion.

Wear limit:

0.1 mm (0.004 in) or less

A − B = Wear limit mm (in)

● Measuring points:
A: Projected portion
B: Frictional surface

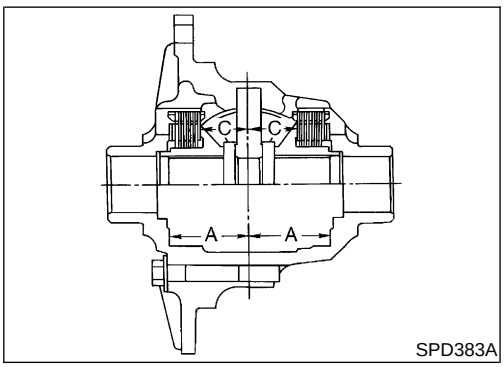

SPD383A

ADJUSTMENT

NEPD0038

Friction Disc and Friction Plate End Play

NEPD0038S01

End play of friction disc and friction plate can be calculated by using following equation and should be adjusted within following range. Adjustment can be made by selecting friction disc having two different thicknesses.

End play E:

0.05 - 0.15 mm (0.0020 - 0.0059 in)

E = A − (B + C)

A: Length of differential case contact surface to differential case inner bottom.
B: Total thickness of friction discs, friction plates, spring disc and spring plate in differential case on one side.
C: Length of differential case contact surface to back side of side gear.

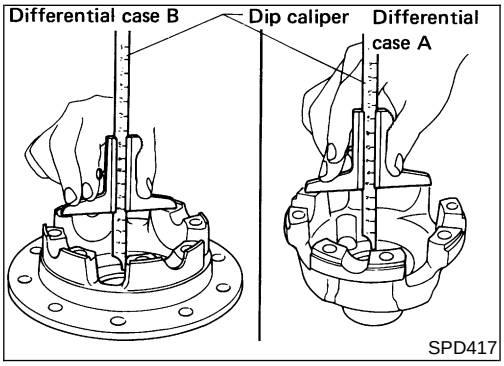

SPD417

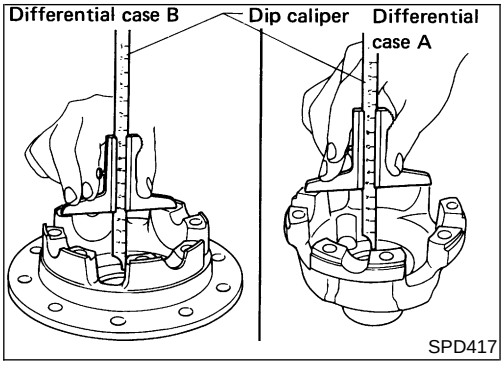

1. Measure values of "A".
   Standard length A:
   49.50 - 49.55 mm (1.9488 - 1.9508 in)

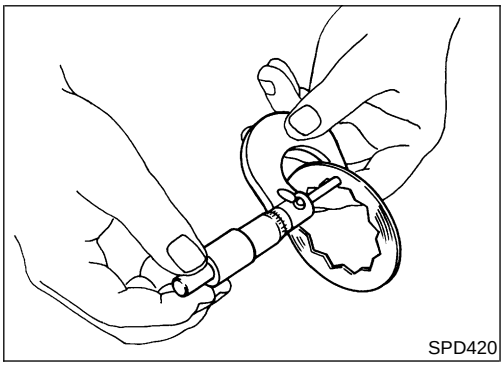

2. Measure thickness of each disc and plate.
   Total thickness "B":
   19.24 - 20.26 mm (0.7575 - 0.7976 in)
   No. of discs and plates (One side):
   Friction disc 5
   Friction plate 6
   Spring plate 2

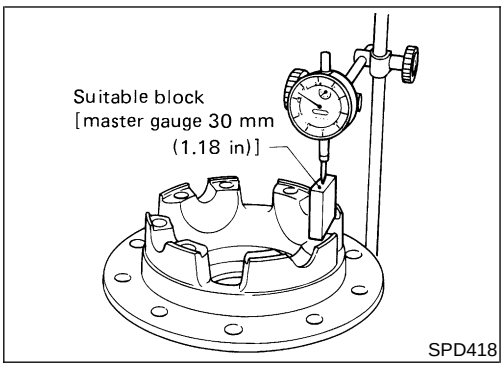

3. Measure values of "C".
   a. Attach a dial indicator to the base plate.
   b. Place differential case B on the base plate, and install a master gauge on case B.
   Then adjust the dial indicator scale to zero with its tip on the master gauge.

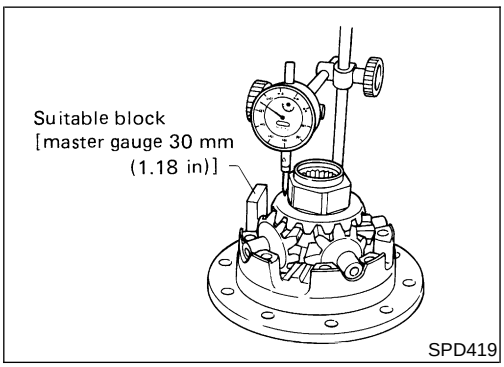

   c. Install pinion mate gears, side gears and pinion mate shaft in differential case B.
   d. Set dial indicator tip on the side gear, and read the indication.
   Example:
   E = A − D = A − (B + C) = 0.05 to 0.15 mm
   A = 49.52 mm
   B = 19.45 mm
   C = 29.7 mm
   D = B + C
   49.15 (D) = 19.45 (B) + 29.7 (C)
   E = A − D
   0.37 (E) = 49.52 (A) − 49.15 (D)

From the above equation, end play of 0.37 mm exceeds the specified range of 0.05 to 0.15 mm.
Select suitable discs and plates to adjust correctly.

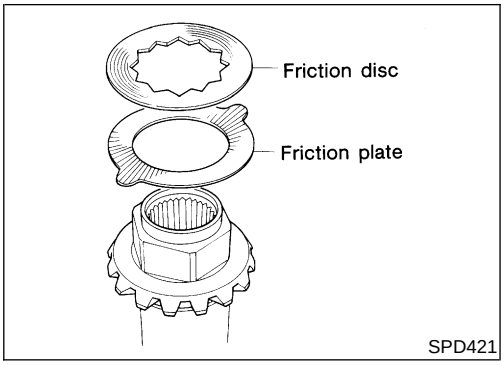

ASSEMBLY

NEPD0039

Prior to assembling discs and plates, properly lubricate them by dipping them in limited slip differential oil. Refer to ***MA-13***, "RECOMMENDED FLUIDS AND LUBRICANTS".

1. Alternately position specified number of friction plates and friction discs on rear of side gear.

Always position a friction plate first on rear of side gear.

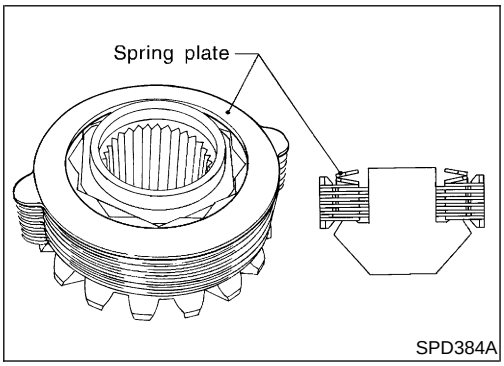

2. Install spring plate.

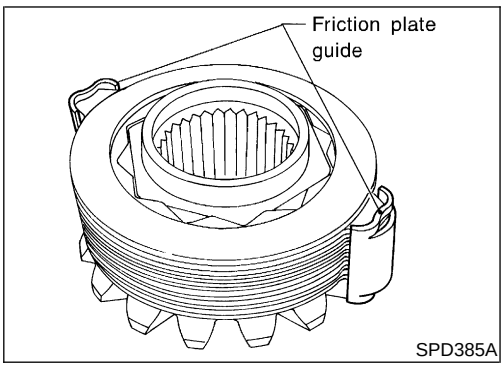

3. Install friction plate guides.

Correctly align the raised portions of friction plates, and apply grease to inner surfaces of friction plate guides to prevent them from falling.

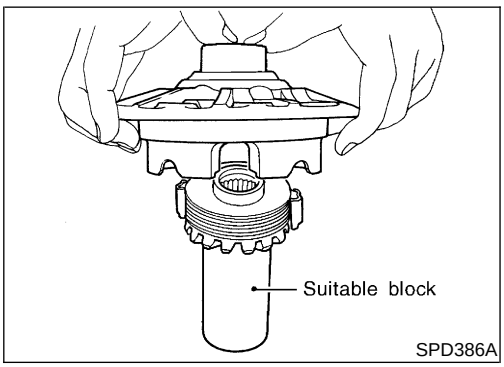

4. Install differential case B over side gear, discs, plates and friction plate guide assembly.

- **Install differential case B while supporting friction plate guides with your middle finger inserted through oil hole in differential case.**
- **Be careful not to detach spring disc from the hexagonal part of the side gear.**

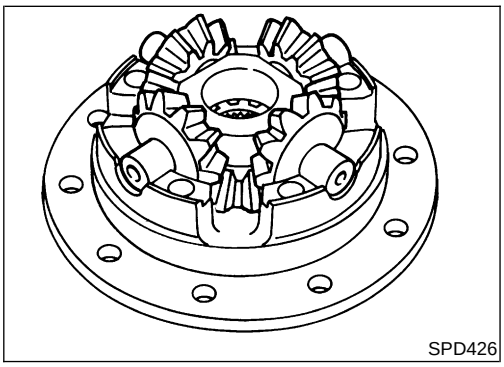

5. Install pinion mate gears and pinion mate thrust washers on pinion mate shaft, then install pinion mate shaft in differential case B.

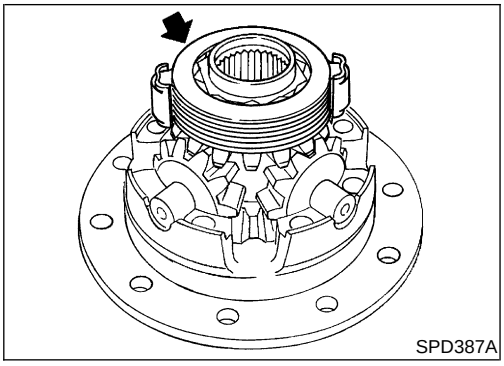
SPD387A

6. Install side gear to pinion mate gears.
7. Install each disc and plate.

Use same procedures as outlined in steps 1 through 4 above.

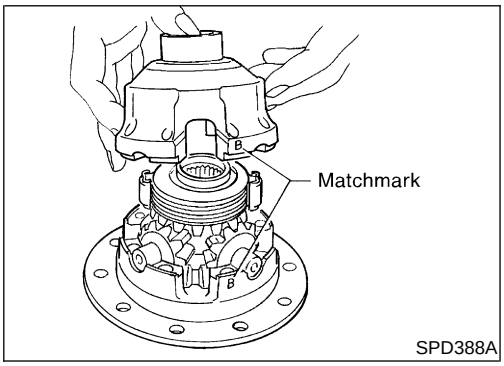

SPD388A

8. Install differential case A.

Position differential cases A and B by correctly aligning marks stamped on cases.

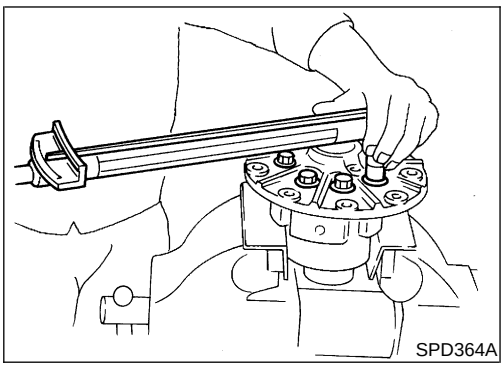
SPD364A

9. Tighten differential case couple bolts.
10. Place ring gear on differential case and tighten ring gear bolts.

Tighten bolts in a crisscross pattern.
Then bend up lock straps to lock the bolts in place.

11. Install side bearing inner cone.
12. Check differential torque.

Adjustment

NEPD0040

For quiet and reliable final drive operation, the following five adjustments must be made correctly:

1. Side bearing preload. Refer to "Total Preload Adjustment", PD-89.
2. Pinion gear height. Refer to "PINION GEAR HEIGHT", PD-80.
3. Pinion bearing preload. Refer to "Drive Pinion Preload Adjustment", PD-90.
4. Ring gear-to-pinion backlash. Refer to "Total Preload Adjustment", PD-89.
5. Ring and pinion gear tooth contact pattern. Refer to "TOOTH CONTACT", PD-83.

PINION GEAR HEIGHT

NEPD0040S01

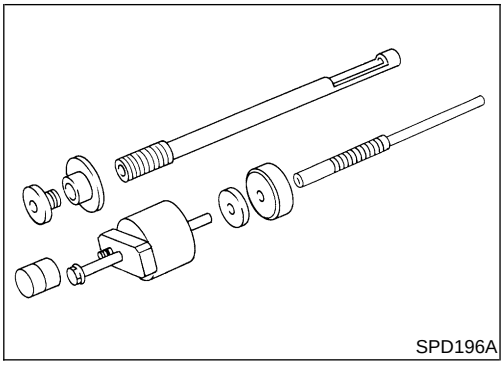
SPD196A

1. Make sure all parts are clean and that the bearings are well lubricated.
2. Assemble the pinion gear bearings into the pinion pre-load shim selector tool, J34309.

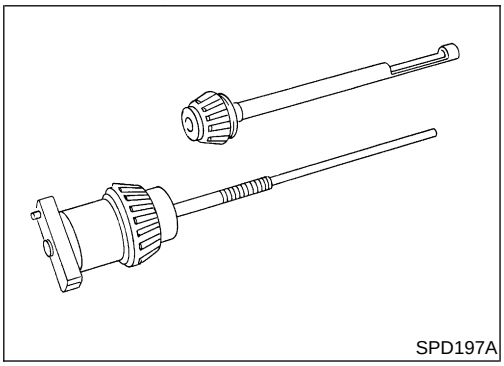
SPD197A

- **Rear Pinion Bearing** — the rear pinion bearing pilot, J34309-8, is used to center the rear pinion bearing only. The rear pinion bearing locking seat, J34309-4, is used to lock the bearing to the assembly.
- **Front Pinion Bearing** — make sure the J34309-3, front pinion bearing seat is secured tightly against the J34309-2 gauge anvil. Then turn the front pinion bearing pilot, J34309-5, to secure the bearing in its proper position.

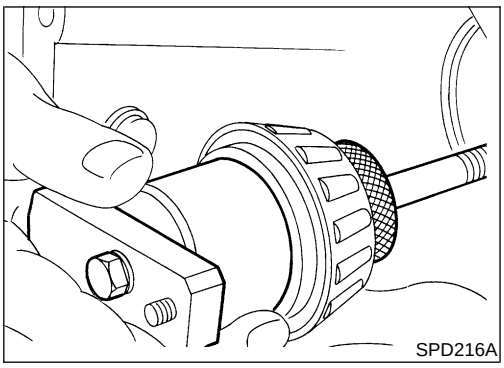
SPD216A

3. Place the pinion preload shim selector tool gauge screw assembly, J34309-1, with the pinion rear bearing inner cone installed, into the final drive housing.

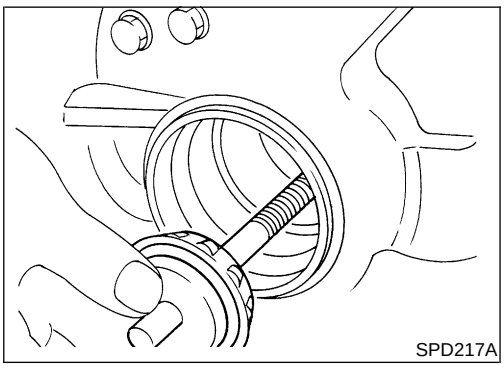
SPD217A

4. Install the J34309-2 gauge anvil with the front pinion bearing into the final drive housing and assemble it to the J34309-1 gauge screw. Make sure that the J34309-16 gauge plate will turn a full 360 degrees, and tighten the two sections by hand to set bearing preload.
5. Turn the assembly several times to seat the bearings.

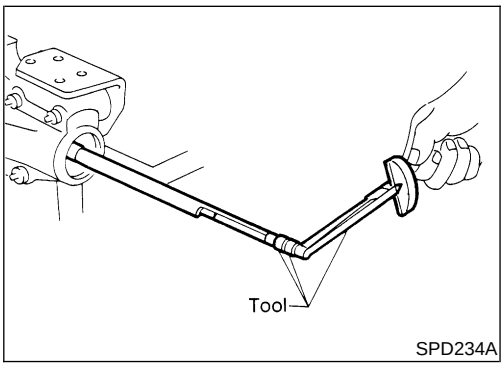

SPD234A

6. Measure the turning torque at the end of the J34309-2 gauge anvil using torque wrench J25765-A.

Turning torque specification:

0.4 - 0.9 N·m (4 - 9 kg-cm, 3.5 - 7.8 in-lb)

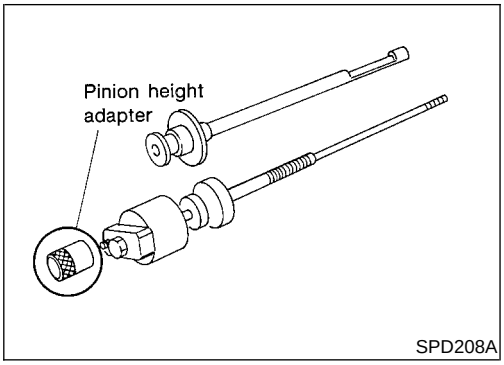

SPD208A

7. Place the J34309-12 "H233B" pinion height adapter onto the gauge plate and tighten it by hand.

CAUTION:
Make sure all machined surfaces are clean.

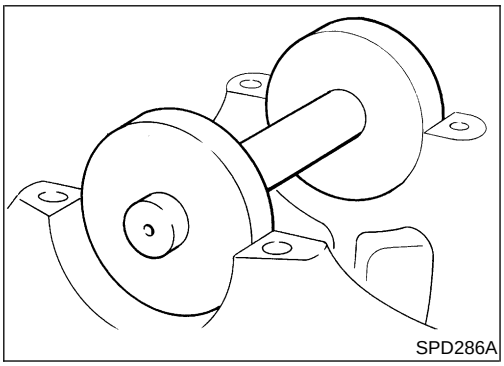
SPD286A

PINION HEIGHT ADJUSTING WASHER SELECTION

8. Position the J25269-18 side bearing discs and the arbor into the side bearing bores.

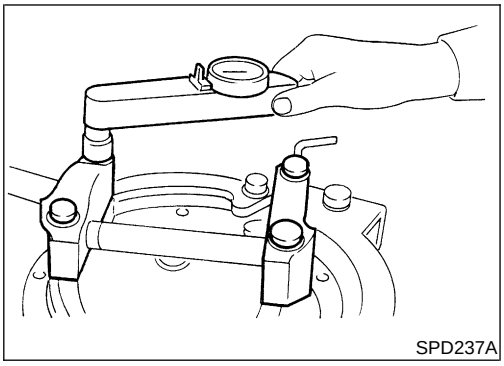
SPD237A

9. Install the bearing caps and torque the bolts.
   Specification:
   93 - 103 N·m (9.5 - 10.5 kg-m, 69 - 76 ft-lb)

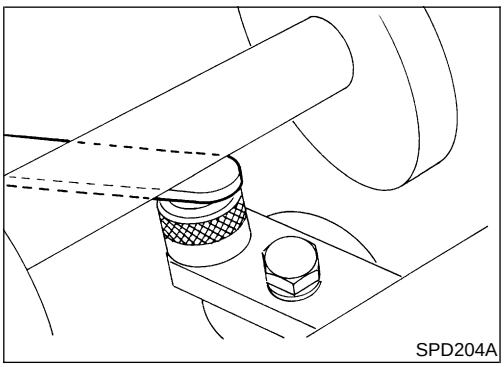
SPD204A

10. Select the correct standard pinion height adjusting washer thickness using a standard gauge of 2.5, 3.0, or 3.5 mm (0.098, 0.118, or 0.138 in) and the J34309-101 feeler gauge. Measure the distance between the J34309-12 "H233B" pinion height adapter and the arbor.
11. Write down the exact total measurement.

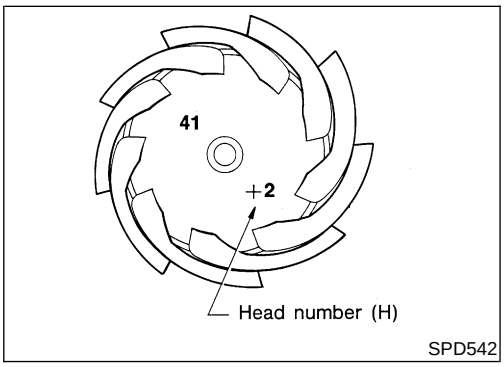

SPD542

12. Correct the pinion height washer size by referring to the "pinion head height number".

There are two numbers painted on the pinion gear. The first one refers to the pinion and ring gear as a matched set and should be the same as the number on the ring gear. The second number is the "pinion head height number", and it refers to the ideal pinion height from standard for the quietest operation. Use the following chart to determine the correct pinion height washer. Refer to "Drive Pinion Height Adjustment", PD-89.

Pinion Head Height Number	Add or Remove from the Selected Standard Pinion Height Washer Thickness Measurement
−6	Add 0.06 mm (0.0024 in)
−5	Add 0.05 mm (0.0020 in)
−4	Add 0.04 mm (0.0016 in)
−3	Add 0.03 mm (0.0012 in)
−2	Add 0.02 mm (0.0008 in)
−1	Add 0.01 mm (0.0004 in)
0	Use the selected washer thickness
+1	Subtract 0.01 mm (0.0004 in)
+2	Subtract 0.02 mm (0.0008 in)
+3	Subtract 0.03 mm (0.0012 in)
+4	Subtract 0.04 mm (0.0016 in)
+5	Subtract 0.05 mm (0.0020 in)
+6	Subtract 0.06 mm (0.0024 in)

13. Select the correct pinion height washer.
    Drive pinion height adjustment:
    Refer to "Drive Pinion Height Adjustment", PD-89.

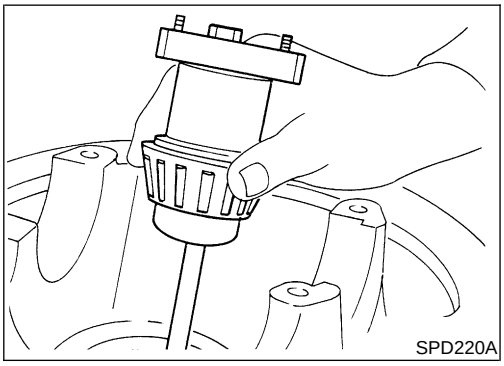
SPD220A

14. Remove the J34309 pinion preload shim selector tool from the final drive housing and disassemble to retrieve the pinion bearings.

TOOTH CONTACT

=NEPD0040S02

Gear tooth contact pattern check is necessary to verify correct relationship between ring gear and drive pinion.
Hypoid gear sets which are not positioned properly in relation to one another may be noisy, or have short life, or both. With a pattern check, the most desirable contact for low noise level and long life can be assured.

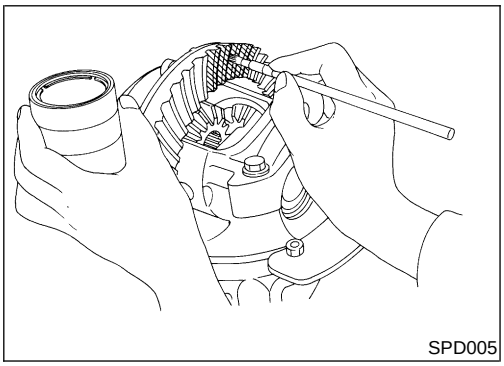
SPD005

1. Thoroughly clean ring gear and drive pinion teeth.
2. Sparingly apply a mixture of powdered ferric oxide and oil or equivalent to 3 or 4 teeth of ring gear drive side.

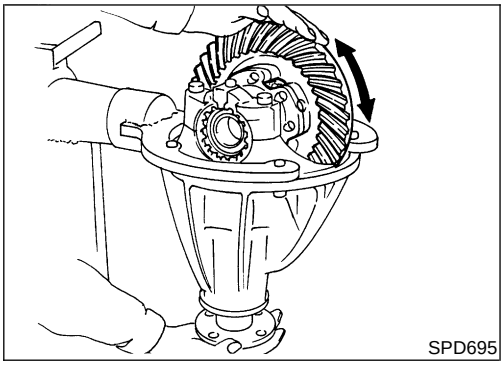
SPD695

3. Hold companion flange steady by hand and rotate the ring gear in both directions.

Usually the pattern will be correct if shims are correctly calculated and the backlash is correct. However, in rare cases, trial and error processes may be employed to obtain a correct pattern. The tooth pattern is the best indication of how well a differential has been set up.

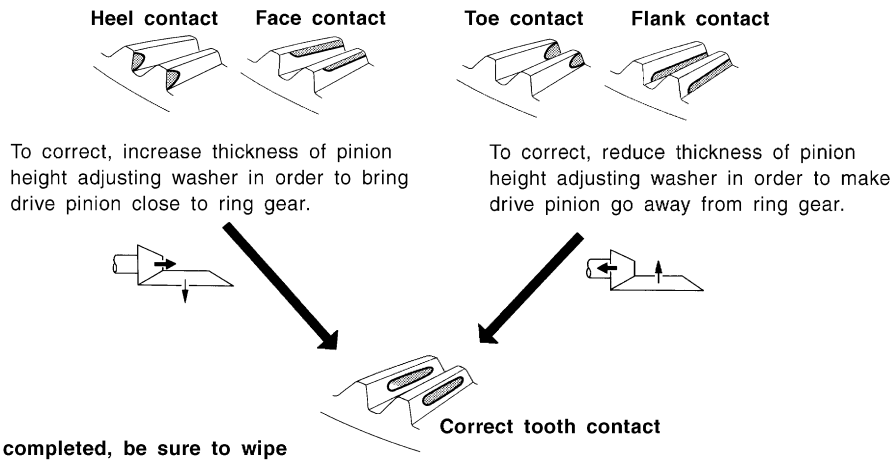

When adjustment is completed, be sure to wipe off completely the ferric oxide and oil or their equivalent.

SPD007-B

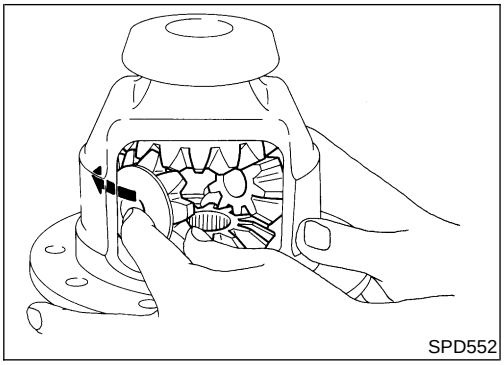
SPD552

Assembly

NEPD0041

DIFFERENTIAL CASE

NEPD0041S01

1. Install side gears, pinion mate gears and thrust washers into differential case.
   The clearance can be adjusted with side gear thrust washer. Refer to “Side Gear Adjustment”, PD-88.

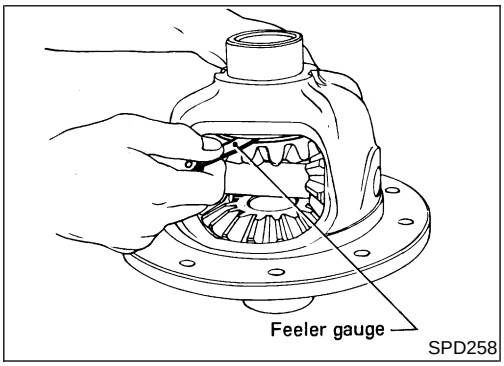

SPD258

2. Fit pinion mate shaft to differential case so that it meets lock pinholes.
3. Adjust backlash between side gear and pinion mate gear by selecting side gear thrust washer.

   Backlash between side gear and pinion mate gear (Clearance between side gear thrust washer and differential case:

   0.10 – 0.20 mm (0.0039 – 0.0079 in)

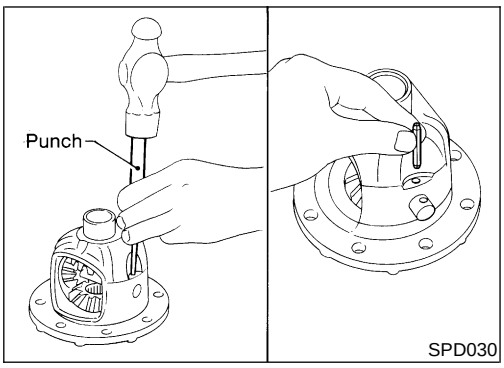

SPD030

4. Install pinion mate shaft lock pin with a punch.

   Make sure lock pin is flush with case.

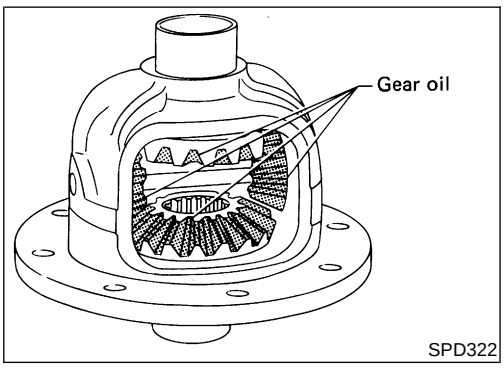

SPD322

5. Apply gear oil to gear tooth surfaces and thrust surfaces and check to see that they turn properly.
6. Install differential case assembly on ring gear.
   Tighten bolts in a crisscross pattern.

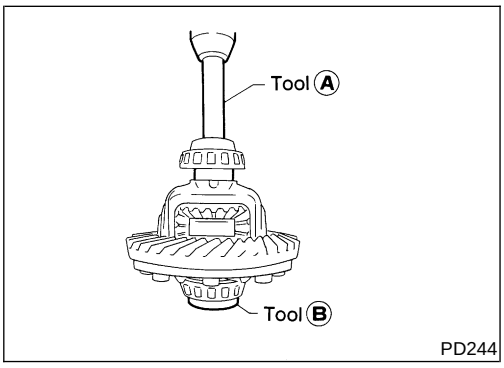

PD244

7. Press-fit side bearing inner cones on differential case with Tool.

   Tool number:

   A ST33190000 (J25523)

   B ST33081000 (—)

DIFFERENTIAL CARRIER

NEPD0041S02

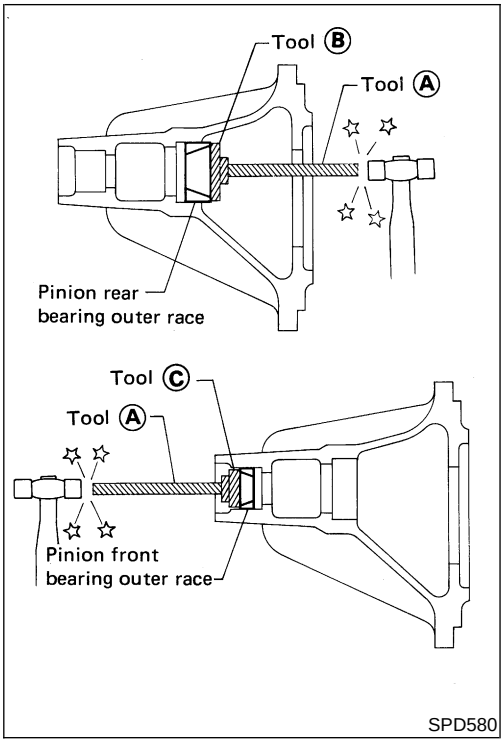

1. Press-fit front and rear bearing outer races with Tools.
   Tool number:
   A ST30611000 (J25742-1)
   B ST30621000 (J25742-5)
   C ST30613000 (J25742-3)

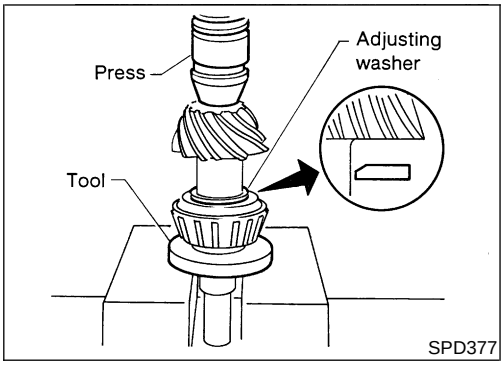

2. Select drive pinion height adjusting washer. Refer to "Drive Pinion Height Adjustment", PD-89.
3. Install drive pinion adjusting washer in drive pinion, and press-fit pinion rear bearing inner cone in it, with press and Tool.
   Tool number:
   ST30901000 (J26010-01)

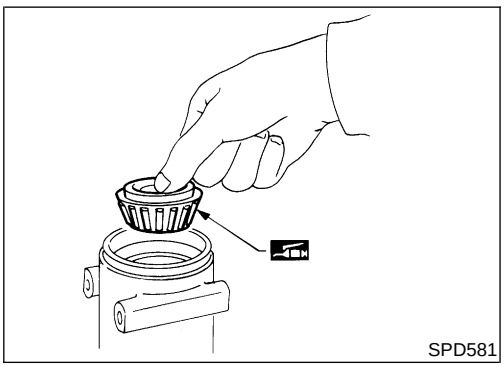

4. Place pinion front bearing inner cone in gear carrier.

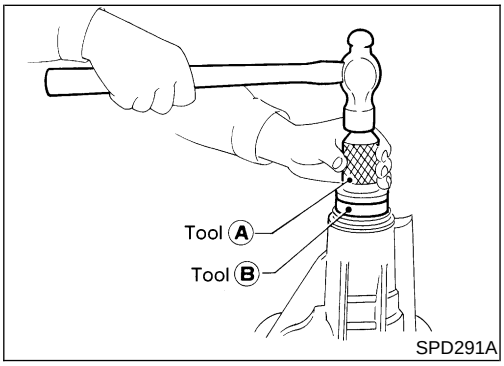

5. Apply multi-purpose grease to cavity at sealing lips of oil seal. Install front oil seal.
   Tool number:
   A ST30720000 (J25405)
   B KV38102510 (—)

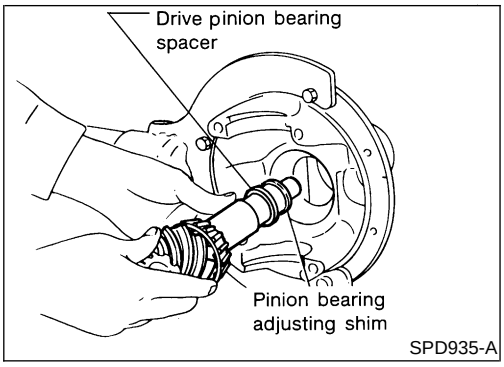

6. Install drive pinion bearing spacer, pinion bearing adjusting shim and drive pinion in gear carrier.

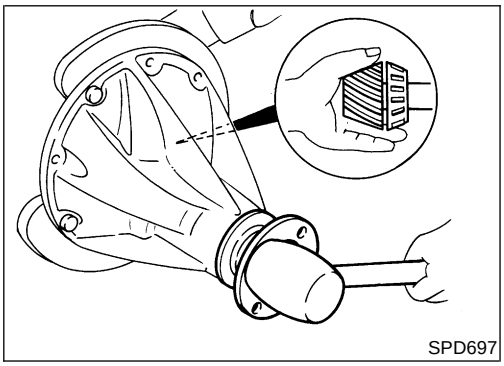

7. Install ABS sensor and sensor rotor (2WD models), then companion flange onto drive pinion. Tap the companion flange with a soft hammer until fully seated.

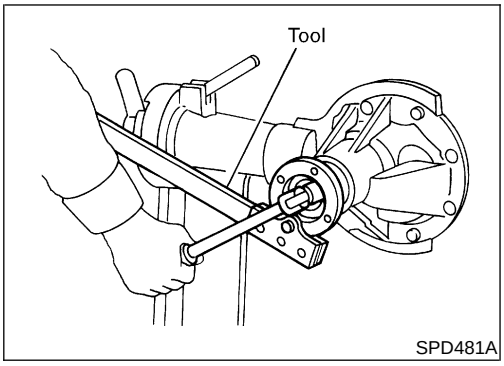

8. Tighten pinion nut to the specified torque.

The threaded portion of drive pinion and pinion nut should be free from oil or grease.

Tool number: KV38108300 (J-44195)

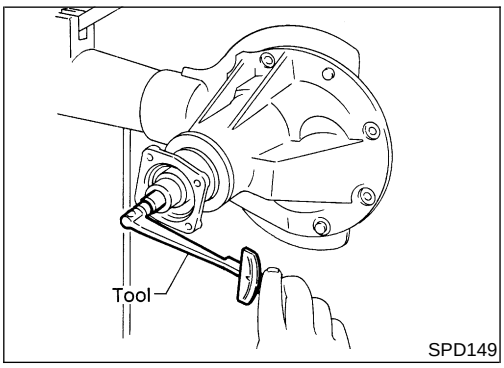

9. Turn drive pinion in both directions several times, and measure pinion bearing preload.

Tool number: ST3127S000 (J25765-A)

Pinion bearing preload (With front oil seal):

1.4 - 1.7 N·m (14 - 17 kg-cm, 12 - 15 in-lb)

Pinion bearing preload (Without front oil seal):

1.2 - 1.5 N·m (12 - 15 kg-cm, 10 - 13 in-lb)

If preload is out of specification, adjust the thickness of spacer and shim combination by replacing shim and spacer with thinner one.

- Start from the combination of thickest spacer and shim.
- Combine each spacer and shim thickness one by one until the correct specification are achieved.

Drive pinion bearing preload adjusting spacer and shim:

Refer to "Drive Pinion Preload Adjustment", PD-90.

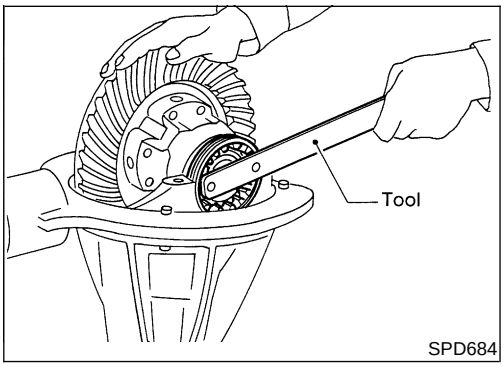

10. Install differential case assembly with side bearing outer races into gear carrier.
11. Position side bearing adjusters on gear carrier with threads properly engaged; screw in adjusters lightly at this stage of assembly.

Tool number: ST32580000 (J34312)

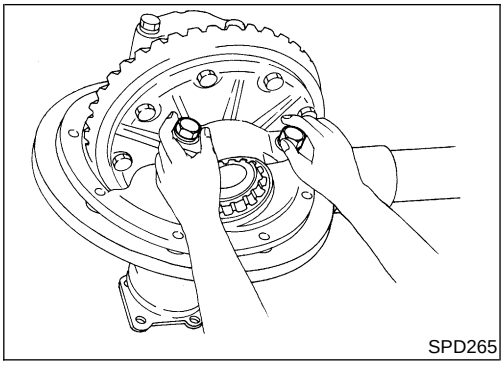
SPD265

12. Align mark on bearing cap with that on gear carrier and install bearing cap on gear carrier.
- Do not tighten at this point. This allows further tightening of side bearing adjusters.

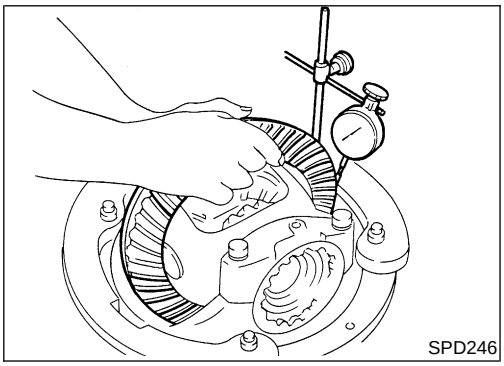
SPD246

13. Tighten both right and left side bearing adjusters alternately and measure ring gear backlash and total preload at the same time. Adjust right and left side bearing adjusters by tightening them alternately so that proper ring gear backlash and total preload can be obtained.

Ring gear-to-drive pinion backlash:
0.13 - 0.18 mm (0.0051 - 0.0071 in)

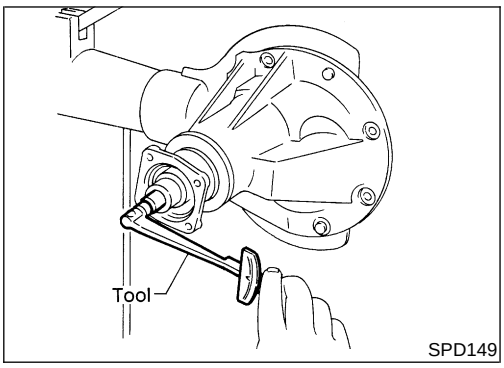

SPD149

- **When checking preload, turn drive pinion in both directions several times to set bearing rollers.**

Tool number: ST3127S000 (J25765-A)
Total preload:
1.7 - 2.5 N·m (17 - 25 kg-cm, 15 - 22 in-lb)

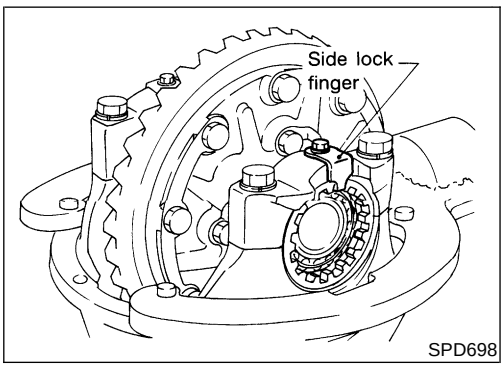

SPD698

14. Tighten side bearing cap bolts.
15. Install side lock finger in place to prevent rotation during operation.

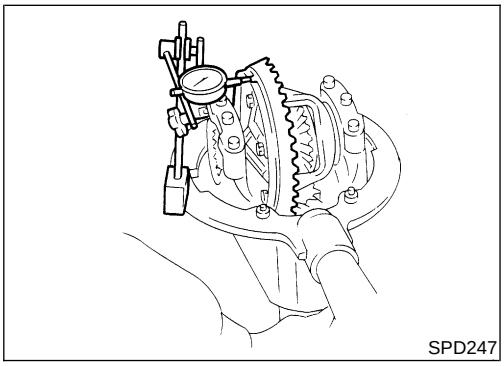
SPD247

16. Check runout of ring gear with a dial indicator.

Runout limit: 0.08 mm (0.0031 in)

- If backlash varies excessively in different places, the variance may have resulted from foreign matter caught between the ring gear and the differential case.
- If the backlash varies greatly when the runout of the ring gear is within a specified range, the hypoid gear set or differential case should be replaced.

17. Check tooth contact. Refer to "TOOTH CONTACT", PD-83.

Service Data and Specifications (SDS)

H233B

General Specifications

=NEPD0042

2WD Model

NEPD0042S02

Engine	VG33E		VG33ER	
Vehicle grade	XE, SE		SC	
Rear final drive	Standard	Optional*	Standard	Optional*
	H233B			
	2-pinion	LSD	2-pinion	LSD
Gear ratio	4.636		4.363	
Number of teeth (Ring gear/drive pinion)	51/11		48/11	
Oil capacity (Approx.) ℓ (US pt, Imp pt)	2.8 (5-7/8, 4-7/8)			

*: Standard on Canada models.

4WD Model

NEPD0042S03

Engine	VG33E				VG33ER	
Vehicle grade	XE		SE		SC	
Rear final drive	Standard	Optional	Standard	Optional*	Standard	Optional*
	H233B					
	2-pinion	LSD	2-pinion	LSD	2-pinion	LSD
Gear ratio	4.636		4.900		4.363	
Number of teeth (Ring gear/drive pinion)	51/11		49/10		48/11	
Oil capacity (Approx.) ℓ (US pt, Imp pt)	2.8 (5-7/8, 4-7/8)					

*: Standard on Canada models.

Ring Gear Runout

NEPD0043

Ring gear runout limit mm (in)	0.08 (0.0031)

Side Gear Adjustment

NEPD0044

Side gear backlash (Clearance between side gear and differential case) mm (in)		0.10 - 0.20 (0.0039 - 0.0079)
Available side gear thrust washers	Thickness mm (in)	Part number*
	1.75 (0.0689) 1.80 (0.0709) 1.85 (0.0728)	38424-T5000 38424-T5001 38424-T5002

*Always check with the Parts Department for the latest parts information.

Differential Torque Adjustment (LSD Models)

NEPD0045

Differential torque N·m (kg-m, ft-lb)		187 - 245 (19 - 25, 138 - 180)
Number of discs and plates (One side)	Friction disc	5
	Friction plate	6
	Spring plate	2
Wear limit of plate and disc mm (in)		0.1 (0.004)
Allowable warpage of friction disc and plate mm (in)		0.08 (0.0031)

	Plate name	Thickness mm (in)	Part number*
Available discs and plates	Friction disc	1.48 - 1.52 (0.0583 - 0.0598) 1.38 - 1.42 (0.0543 - 0.0559) 1.58 - 1.62 (0.0622 - 0.0638)	38433-C6002 (Standard type) 38433-C6004 (Adjusting type) 38433-C6003 (Adjusting type)
	Friction plate	1.48 - 1.52 (0.0583 - 0.0598)	38432-C6001
	Spring plate	1.48 - 1.52 (0.0583 - 0.0598)	38435-S9200

*Always check with the Parts Department for the latest parts information.

Total Preload Adjustment

NEPD0046

Total preload N·m (kg-cm, in-lb)	1.7 - 2.5 (17 - 25, 15 - 22)
Ring gear to pinion backlash mm (in)	0.13 - 0.18 (0.0051 - 0.0071)
Side bearing adjusting method	Side adjuster

Drive Pinion Height Adjustment

NEPD0047

	Thickness mm (in)	Part number*
Available pinion height adjust washers	2.58 (0.1016)	38151-01J00
	2.61 (0.1028)	38151-01J01
	2.64 (0.1039)	38151-01J02
	2.67 (0.1051)	38151-01J03
	2.70 (0.1063)	38151-01J04
	2.73 (0.1075)	38151-01J05
	2.76 (0.1087)	38151-01J06
	2.79 (0.1098)	38151-01J07
	2.82 (0.1110)	38151-01J08
	2.85 (0.1122)	38151-01J09
	2.88 (0.1134)	38151-01J10
	2.91 (0.1146)	38151-01J11
	2.94 (0.1157)	38151-01J12
	2.97 (0.1169)	38151-01J13
	3.00 (0.1181)	38151-01J14
	3.03 (0.1193)	38151-01J15
	3.06 (0.1205)	38151-01J16
	3.09 (0.1217)	38151-01J17
	3.12 (0.1228)	38151-01J18
	3.15 (0.1240)	38151-01J19
	3.18 (0.1252)	38151-01J60
	3.21 (0.1264)	38151-01J61
	3.24 (0.1276)	38151-01J62
	3.27 (0.1287)	38151-01J63
	3.30 (0.1299)	38151-01J64
	3.33 (0.1311)	38151-01J65
	3.36 (0.1323)	38151-01J66
	3.39 (0.1335)	38151-01J67
	3.42 (0.1346)	38151-01J68
	3.45 (0.1358)	38151-01J69
	3.48 (0.1370)	38151-01J70
	3.51 (0.1382)	38151-01J71
	3.54 (0.1394)	38151-01J72
	3.57 (0.1406)	38151-01J73
	3.60 (0.1417)	38151-01J74
	3.63 (0.1429)	38151-01J75
	3.66 (0.1441)	38151-01J76

*Always check with the Parts Department for the latest parts information.

Drive Pinion Preload Adjustment

NEPD0048

Drive pinion bearing preload adjusting method		Adjusting shim and spacer
Drive pinion preload without front oil seal N·m (kg-cm, in-lb)		1.4 - 1.7 (14 - 17, 12 - 15)
Available front drive pinion bearing adjusting shims	Thickness mm (in)	Part number*
	2.31 (0.0909)	38125-82100
	2.33 (0.0917)	38126-82100
	2.35 (0.0925)	38127-82100
	2.37 (0.0933)	38128-82100
	2.39 (0.0941)	38129-82100
	2.41 (0.0949)	38130-82100
	2.43 (0.0957)	38131-82100
	2.45 (0.0965)	38132-82100
	2.47 (0.0972)	38133-82100
	2.49 (0.0980)	38134-82100
	2.51 (0.0988)	38135-82100
	2.53 (0.0996)	38136-82100
	2.55 (0.1004)	38137-82100
	2.57 (0.1012)	38138-82100
	2.59 (0.1020)	38139-82100
Available drive pinion bearing adjusting spacers	Thickness mm (in)	Part number*
	4.50 (0.1772)	38165-76000
	4.75 (0.1870)	38166-76000
	5.00 (0.1969)	38167-76000
	5.25 (0.2067)	38166-01J00
	5.50 (0.2165)	38166-01J10

*Always check with the Parts Department for the latest parts information.

FRONT & REAR AXLE

SECTION AX

CONTENTS

FRONT AXLE 2
Precautions 2
PRECAUTIONS 2
Preparation 2
SPECIAL SERVICE TOOLS 2
COMMERCIAL SERVICE TOOLS 3
Noise, Vibration and Harshness (NVH) Troubleshooting 4
NVH TROUBLESHOOTING CHART 4
On-vehicle Service 4
FRONT AXLE PARTS 4
FRONT WHEEL BEARING 5
DRIVE SHAFT 7
Components 8
Auto-lock Free-running Hub 10
DESCRIPTION 10
REMOVAL AND INSTALLATION 10
INSPECTION 11
TROUBLE DIAGNOSIS FOR NOISE 11
Wheel Hub and Rotor Disc 12
REMOVAL AND INSTALLATION 12
DISASSEMBLY 13
INSPECTION 13
ASSEMBLY 13
Knuckle Spindle 14
REMOVAL 14
INSPECTION 15
INSTALLATION 16
Drive Shaft 16
COMPONENTS 16
REMOVAL 17
DISASSEMBLY 18
INSPECTION 19
ASSEMBLY 20
INSTALLATION 22
Service Data and Specifications (SDS) 22
WHEEL BEARING (FRONT) 22
DRIVE SHAFT (4WD MODELS) 23
REAR AXLE 25
Precautions 25
PRECAUTIONS 25
Preparation 25
SPECIAL SERVICE TOOLS 25
COMMERCIAL SERVICE TOOLS 25
Noise, Vibration and Harshness (NVH) Troubleshooting 27
On-vehicle Service 27
REAR AXLE PARTS 27
REAR WHEEL BEARING 28
Components 29
Removal 30
Inspection 33
AXLE SHAFT 33
WHEEL BEARING 33
AXLE CASE 33
Installation 34
2WD MODELS 34
4WD MODELS 36
Service Data and Specifications (SDS) 38
WHEEL BEARING (REAR) 38

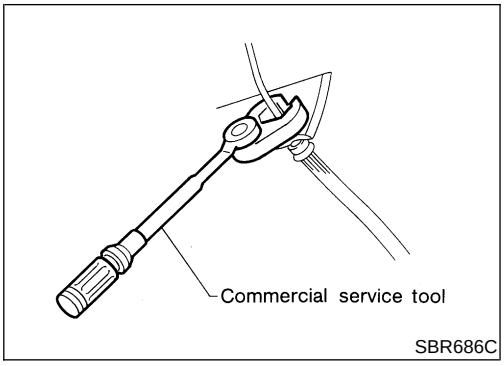

SBR686C

Precautions

PRECAUTIONS

NEAX0001

- **When installing rubber parts, final tightening must be carried out under unladen condition* with tires on ground.**
  ***: Fuel, radiator coolant and engine oil full. Spare tire, jack, hand tools and mats in designated positions.**
- **Use flare nut wrench when removing and installing brake tubes.**
- **After installing removed suspension parts, check wheel alignment and adjust if necessary.**
- **Always torque brake lines when installing.**

CAUTION:

- **The ZF100 type (wheel side) joint assembly has two types of boot material; one is made of rubber and the other is made of plastic.**
- **Do not disassemble the joint assembly with the plastic boot. If the boot or joint is damaged, replace the drive shaft assembly.**

Preparation

SPECIAL SERVICE TOOLS

NEAX0002

The actual shapes of Kent-Moore tools may differ from those of special service tools illustrated here.

Tool number (Kent-Moore No.) Tool name	Description	
ST29020001 (J24319-01) Gear arm puller	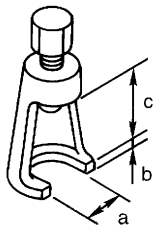 NT694	Removing ball joint for knuckle spindle **a: 34 mm (1.34 in)** **b: 6.5 mm (0.256 in)** **c: 61.5 mm (2.421 in)**
HT72520000 (J25730-B) Ball joint remover	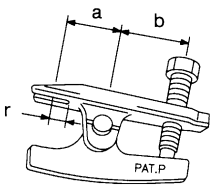 NT546	Removing tie-rod outer end **a: 33 mm (1.30 in)** **b: 50 mm (1.97 in)** **r: R11.5 mm (0.453 in)**
KV401021S0 (—) Bearing race drift	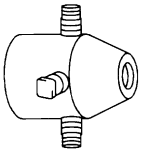 NT153	Installing wheel bearing outer race

Tool number (Kent-Moore No.) Tool name	Description	
KV40105400 (J36001) Wheel bearing lock nut wrench	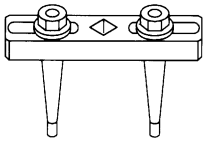 NT154	Removing and installing wheel bearing lock nut (4WD models only)

COMMERCIAL SERVICE TOOLS

NEAX0003

Tool name	Description	
1 Flare nut crowfoot 2 Torque wrench	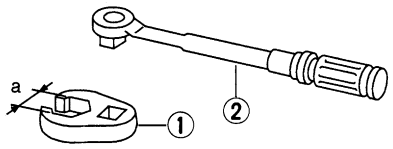 NT360	Removing and installing each brake piping **a: 10 mm (0.39 in)**

Noise, Vibration and Harshness (NVH) Troubleshooting

=NEAX0004

NVH TROUBLESHOOTING CHART

NEAX0004S01

Use the chart below to help you find the cause of the symptom. If necessary, repair or replace these parts.

Reference page			—	AX-19	—	AX-8, 29	—	AX-5, 28	Refer to NVH, ***PD-4***	Refer to NVH, ***PD-4***	Refer to DRIVE SHAFT in this chart.	Refer to AXLE in this chart.	Refer to NVH, ***SU-3***	Refer to NVH, ***SU-3***	Refer to NVH, ***SU-3***	Refer to NVH, ***BR-8***	Refer to NVH, ***ST-5***
Possible cause and SUSPECTED PARTS			Excessive joint angle	Joint sliding resistance	Imbalance	Improper installation, looseness	Parts interference	Wheel bearing damage	PROPELLER SHAFT	DIFFERENTIAL	DRIVE SHAFT	AXLE	SUSPENSION	TIRES	ROAD WHEEL	BRAKES	STEERING
Symptom	DRIVE SHAFT	Noise, Vibration	×	×					×	×		×	×	×	×	×	×
		Shake	×		×				×			×	×	×	×	×	×
	AXLE	Noise				×	×		×	×	×		×	×	×	×	×
		Shake				×	×		×		×		×	×	×	×	×
		Vibration				×	×		×		×		×	×			×
		Shimmy				×	×						×	×	×	×	×
		Judder				×							×	×	×	×	×
		Poor quality ride or handling				×	×	×					×	×	×		

×: Applicable

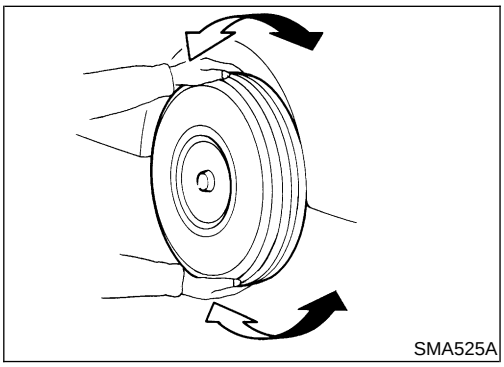
SMA525A

On-vehicle Service

FRONT AXLE PARTS

NEAX0005

Check front axle parts for excessive play, cracks, wear and other damage.

- Shake each front wheel to check for excessive play.
  If looseness is noted, adjust wheel bearing end play, then check ball joint end play.
- Make sure that the cotter pin is inserted.
- Retighten all nuts and bolts to the specified torque.

: Refer to *SU-20*, “FRONT SUSPENSION”.

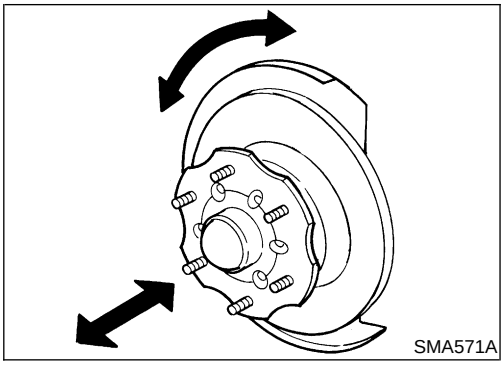
SMA571A

FRONT WHEEL BEARING

NEAX0006

- Check that wheel bearings operate smoothly.
- Check axial end play.

  Axial end play: 0 mm (0 in)
- Adjust wheel bearing preload if there is any axial end play or wheel bearing does not turn smoothly.

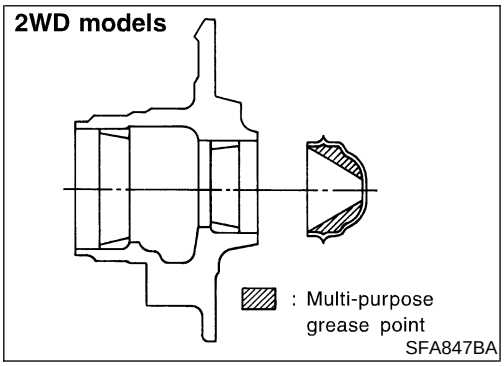

SFA847BA

Preload Adjustment (2WD models)

NEAX0006S01

Adjust wheel bearing preload after wheel bearing has been replaced or front axle has been reassembled.

1. Before adjustment, thoroughly clean all parts to prevent dirt entry.
2. Apply multi-purpose grease sparingly to the following parts:
- Threaded area of spindle
- Contact surface between lock washer and outer wheel bearing
- Hub cap (as shown at left) **18 - 22 g (0.63 - 0.78 oz)**
- Grease seal lip

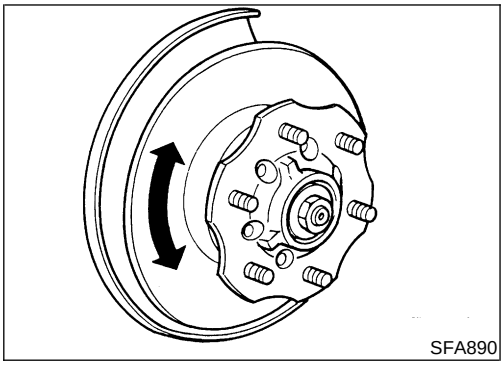
SFA890

3. Tighten wheel bearing lock nut to the specified torque.

   : 34 - 39 N·m (3.5 - 4.0 kg-m, 25 - 29 ft-lb)
4. Turn wheel hub several times in both directions to seat wheel bearing correctly.
5. Again tighten wheel bearing lock nut to the specified torque.

   : 34 - 39 N·m (3.5 - 4.0 kg-m, 25 - 29 ft-lb)

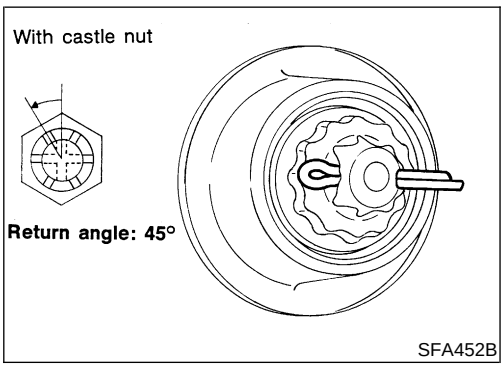

SFA452B

6. Turn wheel bearing lock nut back 45 degrees.
7. Fit adjusting cap and new cotter pin. Align cotter pin slot by loosening nut 15 degrees or less.

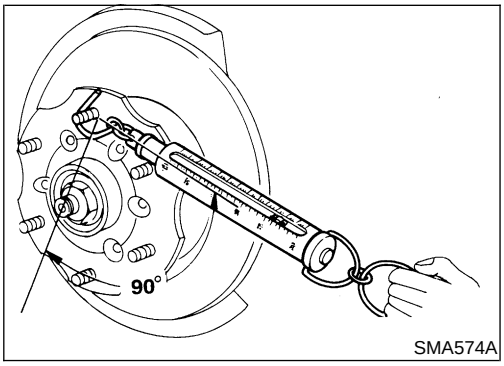

SMA574A

8. Measure wheel bearing preload and axial end play.

   Axial end play: 0 mm (0 in)

   Wheel bearing preload

   (As measured at wheel hub bolt):

   New grease seal

   9.8 - 28.4 N (1.0 - 2.9 kg, 2.2 - 6.4 lb)

   Used grease seal

   9.8 - 23.5 N (1.0 - 2.4 kg, 2.2 - 5.3 lb)

Repeat above procedures until correct bearing preload is obtained.

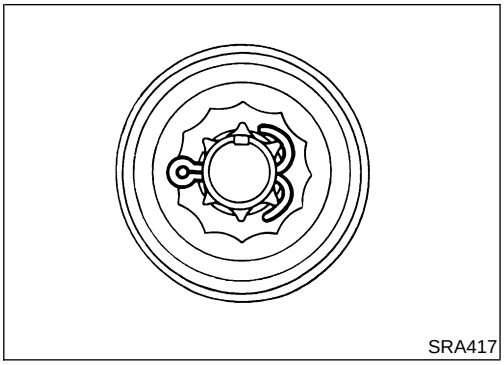
SRA417

9. Spread cotter pin.
10. Install hub cap.

Preload Adjustment (4WD models)

NEAX0006S02

Adjust wheel bearing preload after wheel bearing has been replaced or front axle has been reassembled.

Adjust wheel bearing preload as follows:

1. Before adjustment, thoroughly clean all parts to prevent dirt entry.

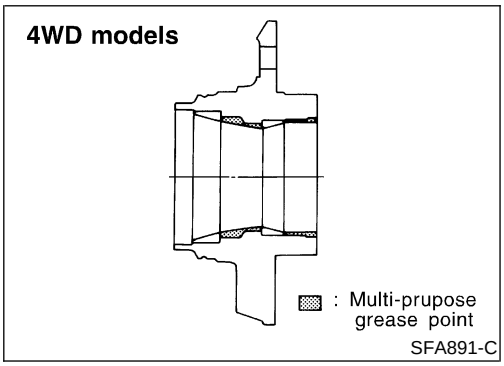

SFA891-C

2. Apply multi-purpose grease sparingly to the following parts:
- Threaded portion of spindle
- Contact surface between wheel bearing washer and outer wheel bearing
- Grease seal lip
- Wheel hub (as shown at left) **18 - 23 g (0.63 - 0.81 oz)**

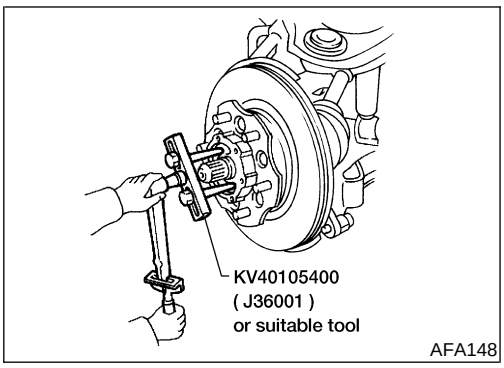

AFA148

3. Tighten wheel bearing lock nut with Tool.
   : 78 - 98 N·m (8 - 10 kg-m, 58 - 72 ft-lb)
4. Turn wheel hub several times in both directions.
5. Loosen wheel bearing lock nut so that torque becomes 0 N·m (0 kg-m, 0 ft-lb).
6. Retighten wheel bearing lock nut with Tool.
   : 0.5 - 1.5 N·m (0.05 - 0.15 kg-m, 4.3 - 13.0 in-lb)

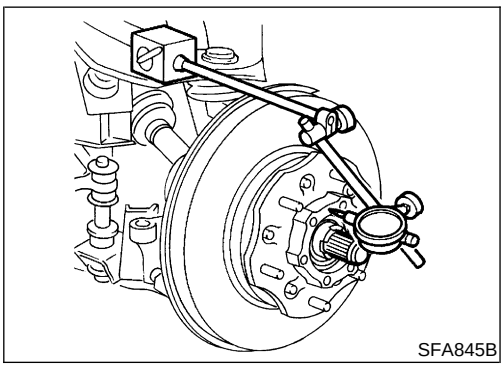
SFA845B

7. Turn wheel hub several times in both directions.
8. Retighten wheel bearing lock nut with Tool.
   : 0.5 - 1.5 N·m (0.05 - 0.15 kg-m, 4.3 - 13.0 in-lb)
9. Measure wheel bearing axial end play.
   Axial end play: 0 mm (0 in)

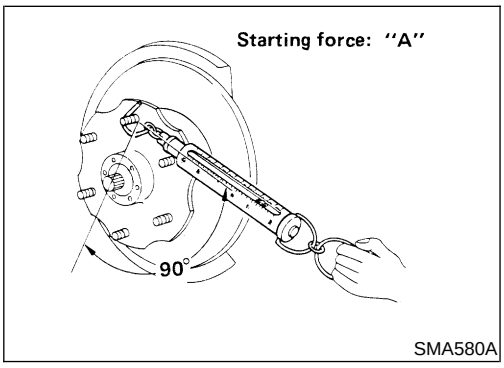

SMA580A

10. Measure starting force "A" at wheel hub bolt.

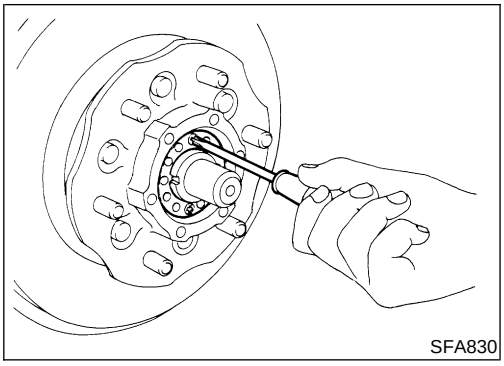
SFA830

11. Install lock washer by tightening the lock nut within 15 to 30 degrees to align screw holes.
12. Turn wheel hub several times in both directions to seat wheel bearing correctly.
13. Measure starting force "B" at wheel hub bolt. Refer to step 10.
14. Wheel bearing preload "C" can be calculated as shown below.

    C = B − A

    Wheel bearing preload "C":

    7.06 - 20.99 N (0.72 - 2.14 kg, 1.59 - 4.72 lb)
15. If wheel bearing preload "C" is outside specifications, remove lock washer. Tighten or loosen lock nut within ±15 degrees (Refer to step 11 above). Install lock washer, then repeat steps 12, 13 and 14.
16. Repeat above procedures until correct axial end play and wheel bearing preload are obtained.
17. Tighten screws.

    : 1.2 - 1.8 N·m (0.12 - 0.18 kg-m, 10.4 - 15.6 in-lb)
18. Install free-running hub.
19. Tighten bolts.

    : 25 - 34 N·m (2.5 - 3.5 kg-m, 18 - 25 ft-lb)

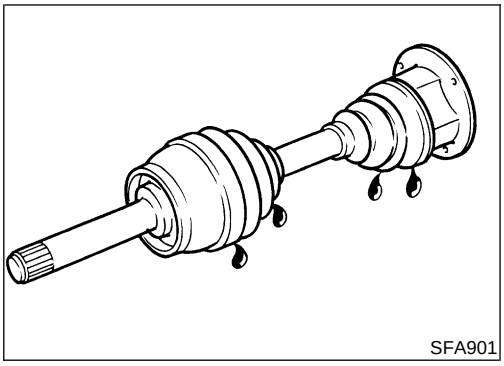
SFA901

DRIVE SHAFT

NEAX0007

- Check for grease leakage and damage.

CAUTION:

- **The ZF100 type (wheel side) joint assembly has two types of boot material; one is made of rubber and the other is made of plastic.**
- **Do not disassemble the joint assembly with the plastic boot. If the boot or joint is damaged, replace the drive shaft assembly.**

Components

NEAX0008

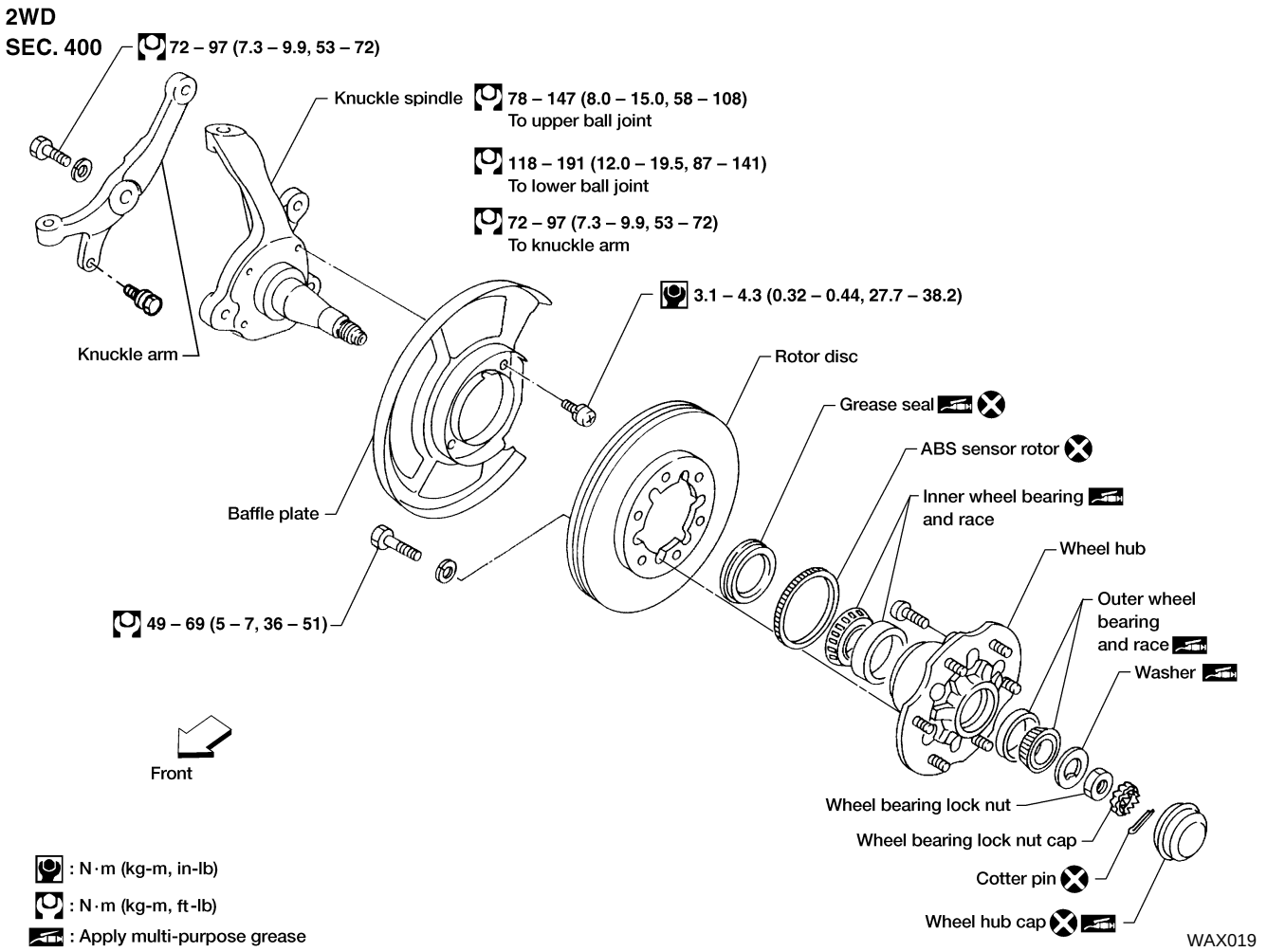

4WD
SEC. 391 • 400

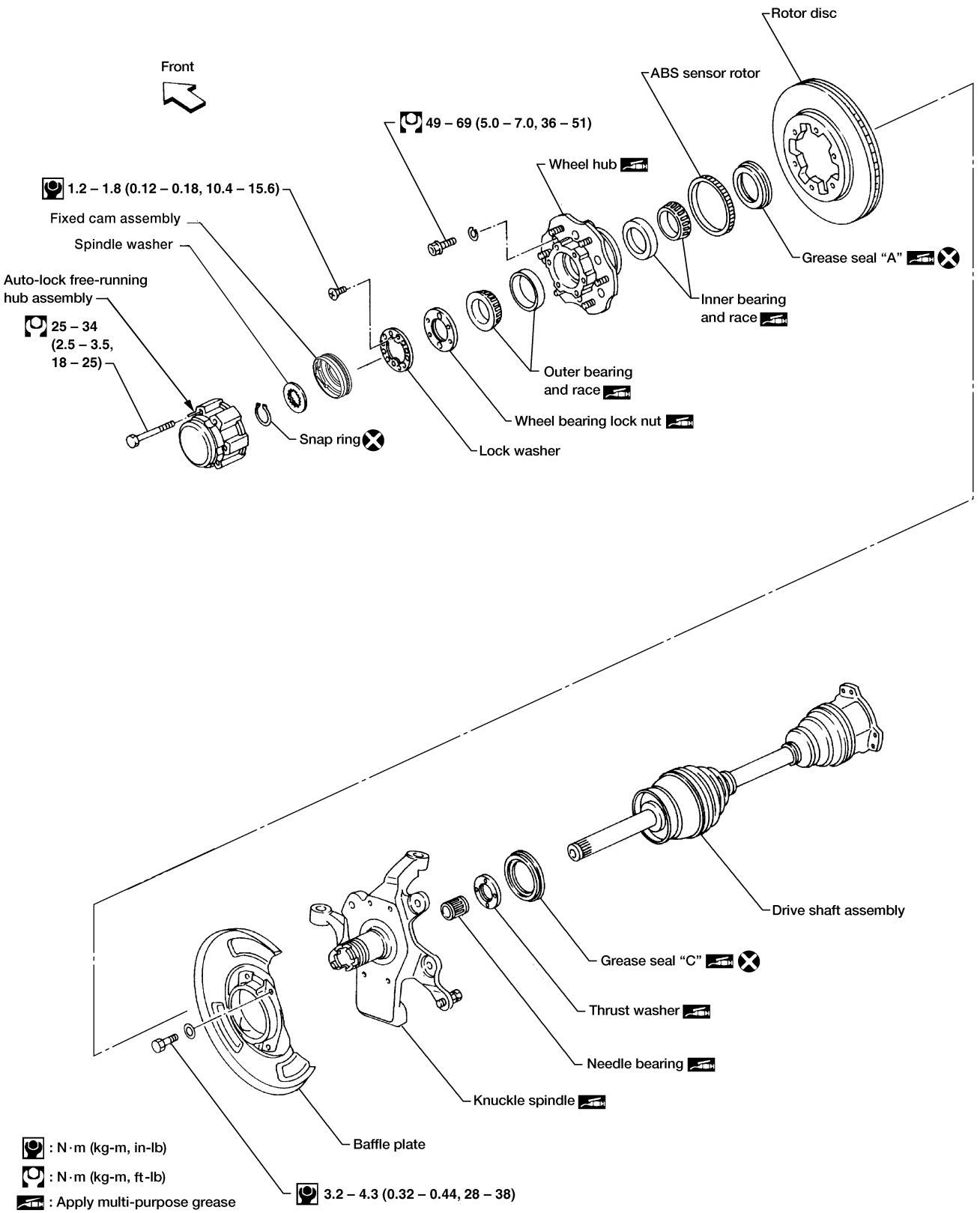

WAX018

Auto-lock Free-running Hub

DESCRIPTION

NEAX0041

Auto-lock free-running hubs are locked by placing the transfer case into the 4WD mode and moving the vehicle. They are unlocked by placing the transfer case into 2WD mode and moving the vehicle in reverse gear **in a straight line** for at least 2–3 meters (7–10 feet).

In most cases, the “ratcheting” noise sometimes heard in auto-lock free-running hubs occurs when one hub is locked and the opposite hub is unlocked. The noise is heard in the side opposite to the locked hub. For example, if the noise is heard at the left front wheel, the **right** front hub is still locked and is not unlocking. This condition may be caused by a mechanical condition in one of the hubs or by incorrect operation on the part of the vehicle driver, for example by not backing up in a straight line to unlock the hubs, by not backing up enough, or by shifting into 4WD at too high a vehicle speed, etc.

The ratcheting noise does not necessarily cause damage to the good hub. If the noise is caused by incorrect operation, counsel the driver of the vehicle. If replacement is necessary, replace only the defective parts. It is not necessary to replace auto-lock free-running hubs in pairs.

Use the trouble diagnosis chart to isolate the cause of the noise. Refer to “TROUBLE DIAGNOSIS FOR NOISE”, AX-11.

REMOVAL AND INSTALLATION

NEAX0011

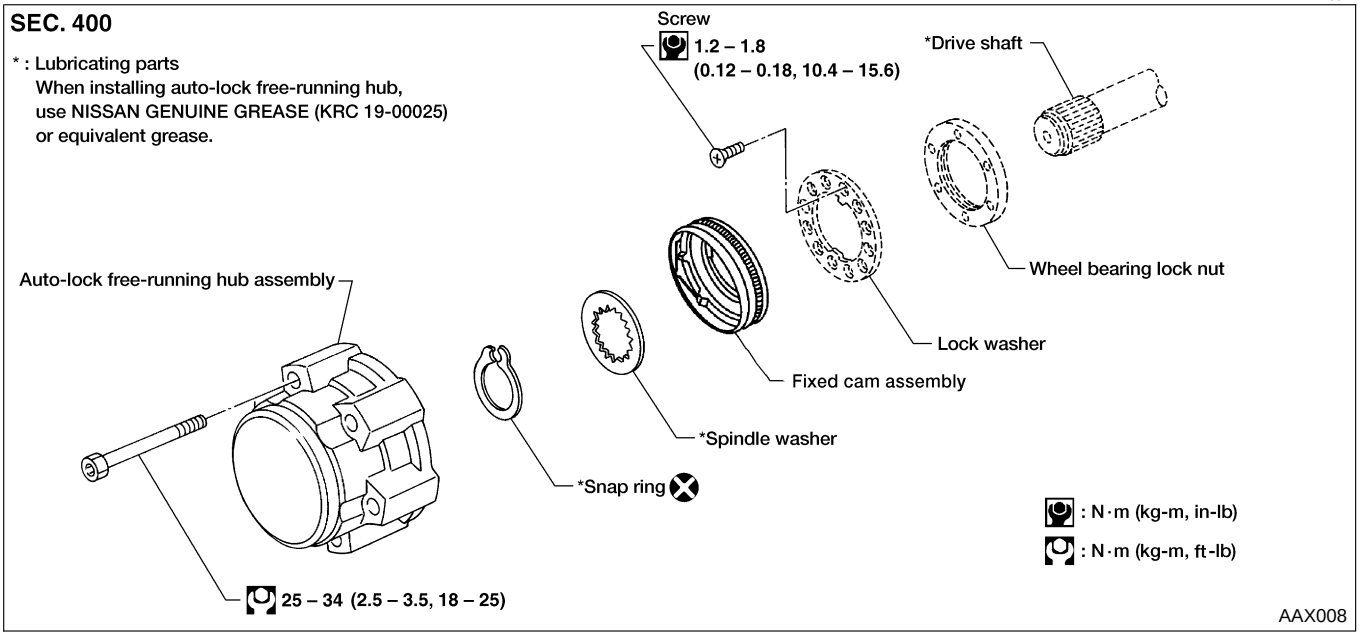

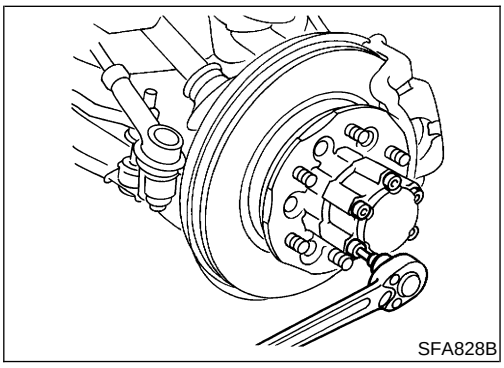

1. Remove auto-lock free-running hub assembly.

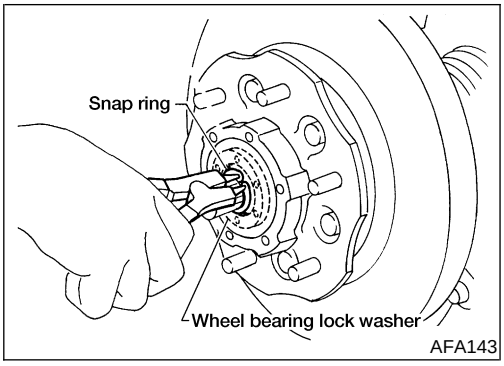

2. Remove snap ring.
3. Remove spindle washer and fixed cam assembly.
4. Install fixed cam assembly.
   Be sure to align the tabs of the fixed cam assembly to the notches of the knuckle.
5. Place the spindle washer and then the snap ring over the axle shaft positioning them between the 2 locking grooves.
6. While supporting the axle shaft behind the knuckle, use an appropriate sized deep socket to securely seat the snap ring into the inner locking groove.

CAUTION:
Visually verify that the snap ring is fully seated into the locking groove.

7. After installing auto-lock free-running hub, check operation.

During installation, apply recommended grease to the parts shown in the above illustration.

INSPECTION

NEAX0042

1. Check axle axial end play. Refer to "INSTALLATION", AX-22.
2. Inspect fixed cam (thrust washer) assembly. If this part shows evidence of galling or heat damage—usually caused by too little axle axial end play—replace as necessary. Check axle axial end play if this part is replaced. Refer to "INSTALLATION", AX-22.
3. Inspect hub assembly. Hold inner splines on a finger and spin the outer body. If the hub shows signs of damage, or if there is excessive metallic clicking when the hub is spun, replace with a new one.

NOTE:
New hubs are greased during manufacture. No additional grease is required.
New hubs are supplied with fixed cam assemblies

CAUTION:
Any hub, the original or a new one, should go onto the axle freely by hand and fit flush against its seat. If it does not fit flush, do not pull the hub into place by tightening the bolts. The hub is possibly misaligned inside and tightening the bolts will cause damage. Remove the hub and turn to align correctly before continuing.

4. Once repair is complete, test drive to check for correct operation and the absence of noise.

TROUBLE DIAGNOSIS FOR NOISE

NEAX0043

Symptom	Possible cause	Repair order
Ratchet noise in hub after shifting the transfer case into 4WD at speeds higher than 40 km/h (25 mph).	1. Shifting into 4WD at higher speeds is difficult and may cause damage to transfer case	1. Stop the vehicle or decrease speed to less than 40 km/h (25 mph). Return the transfer case lever to the 2H position once, then re-shift to the 4H position. Move forward until the hubs lock.
Ratchet noise in hub after shifting or attempting to shift the transfer case into 4WD at speeds less than 40 km/h (25 mph).	1. Transfer case was not fully engaged or shifting was stopped halfway so that only one hub locked	1. Make sure the 4WD lamp on the dash is ″ON″ when shifting into 4WD. Slow or stop the vehicle. Shift into 2H, then back to 4H. Move forward until the hubs lock.
Ratchet noise in hub after shifting the transfer case into 4WD on snowy or muddy roads or on slopes.	1. If the rear wheels slip during the hub locking operation, noise can occur in the hubs	1. Reduce engine speed and drive forward slowly. The hubs will lock evenly and the noise will stop.

Auto-lock Free-running Hub (Cont'd)

Symptom	Possible cause	Repair order
Ratchet noise in hub after shifting the transfer case into 2WD and backing up to unlock the hubs.	1. The hubs may not be fully released	1. Stop the vehicle, make sure the transfer case lever is fully in the 2H position, then back up slowly in a straight line at least 2-3 meters (7-10 feet).
Ratchet noise in hub when driving in extremely cold weather.	1. The viscosity of differential oil grows higher in extreme cold, increasing the possibility that one hub may lock. A lower viscosity differential fluid may be required for extreme cold temperatures. See owner's manual	1. Shift the transfer case into 4H and drive the vehicle for 10 minutes or more to warm the differential oil. Then shift to 2WD and back up in a straight line for at least 2-3 meters (7-10 feet) to disengage the hubs.
Continual ratchet noise in one wheel when moving forward.	1. A hub may be mechanically locked either by damage or misinstallation	1. Remove hubs and inspect. Refer to "INSPECTION", AX-11. Pay special attention to the hub **opposite** the noisy side. The ratcheting does not necessarily cause damage to the good hub.

Wheel Hub and Rotor Disc

REMOVAL AND INSTALLATION

NEAX0012

CAUTION:

If equipped with ABS, disconnect the ABS wheel sensor from the assembly before removing the front axle assembly. Then move it away from the front axle assembly area. Failure to do so may result in damage to the sensor wires and the sensor becoming inoperative.

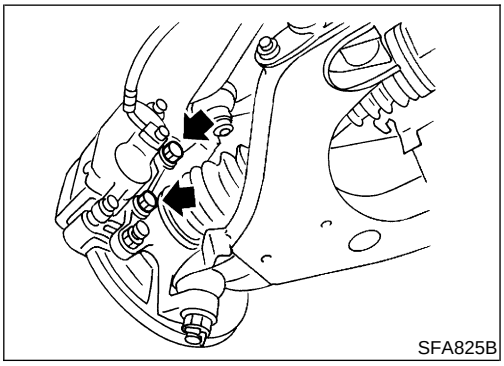

SFA825B

1. Remove free-running hub assembly (4WD models). Refer to "Auto-lock Free-running Hub", AX-10.
2. Remove brake caliper assembly without disconnecting hydraulic line.

Brake hose need not be disconnected from brake caliper. In this case, suspend caliper assembly with wire so as not to stretch brake hose.
Be careful not to depress brake pedal, or piston will pop out. Make sure brake hose is not twisted.

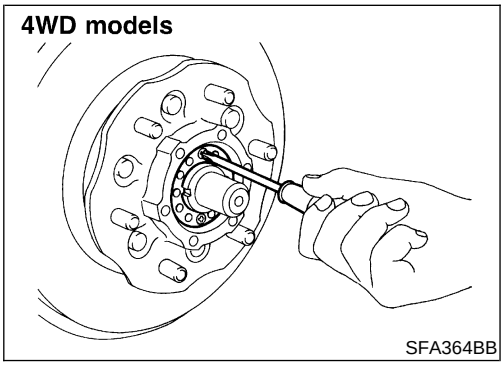

SFA364BB

3. Remove lock washer (4WD models).

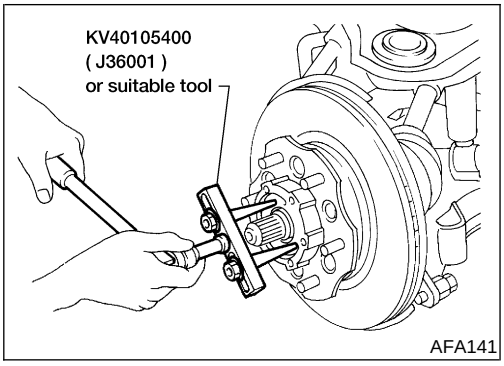

4. Remove wheel bearing lock nut.
   2WD: With suitable tool
   4WD: With Tool

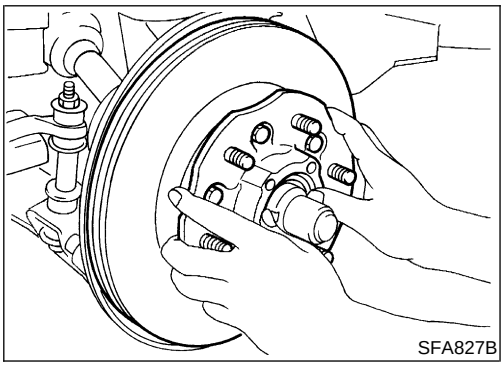

5. Remove wheel hub and wheel bearings.

Be careful not to drop outer bearing.

6. After installing wheel hub and wheel bearings, adjust wheel bearing preload.
   Refer to "Preload Adjustment (2WD models)" and "Preload Adjustment (4WD models)", AX-5, 6.

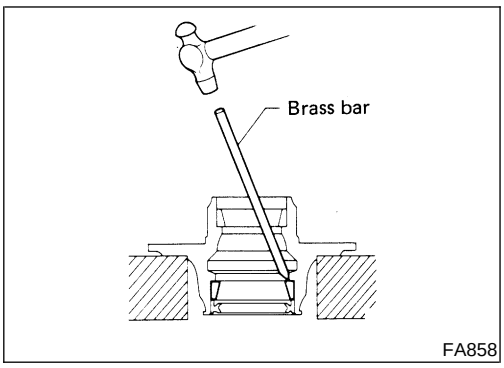

DISASSEMBLY

NEAX0013

- Remove grease seal and bearing races with suitable brass bar.

INSPECTION

NEAX0014

Thoroughly clean wheel bearings and wheel hub.

Wheel Bearings

NEAX0014S01

- Make sure wheel bearings roll freely and are free from noise, cracks, pitting and wear.

Wheel Hub

NEAX0014S02

- Check wheel hub for cracks by using a magnetic exploration or dyeing test.

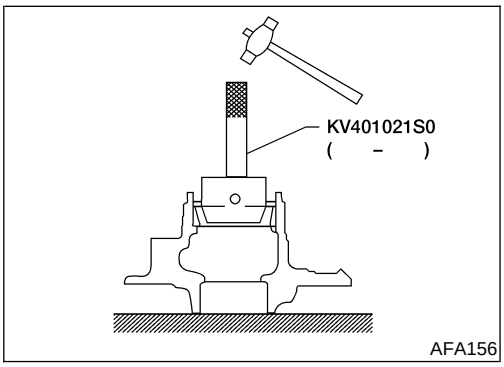

ASSEMBLY

NEAX0015

1. Install bearing races with Tool until it is fully seated in hub.

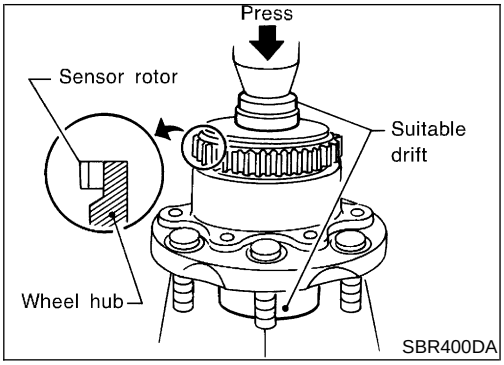

2. Install the sensor rotor using suitable drift and press.
   Always replace sensor rotor with new one.
   Pay attention to the direction of front sensor rotor as shown in figure.

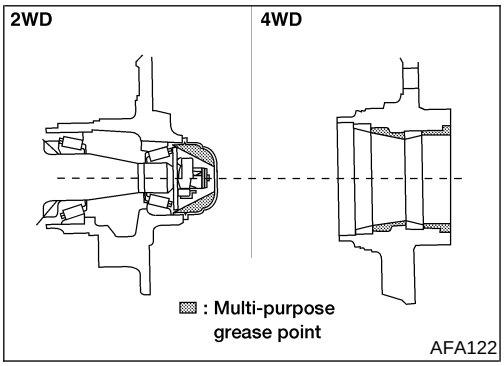

3. Pack multi-purpose grease in wheel hub and hub cap (2WD models).

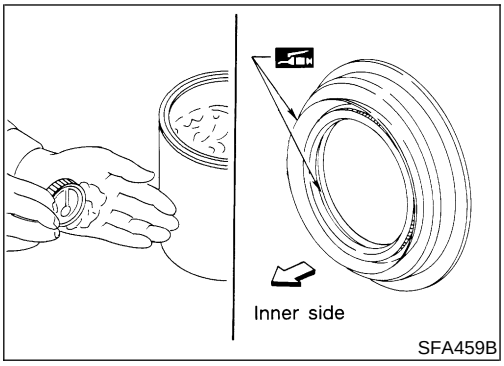

4. Apply multi-purpose grease to each bearing cone.
5. Pack grease seal lip with multi-purpose grease, then install it into wheel hub with suitable drift.

Knuckle Spindle

REMOVAL

NEAX0016

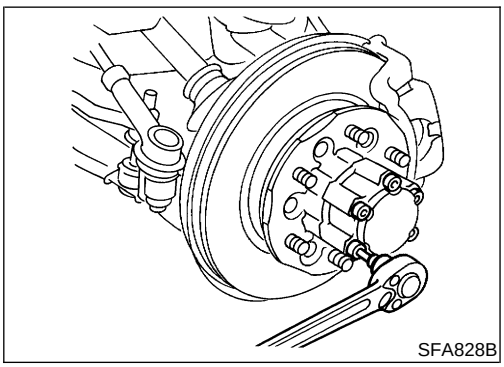

1. Remove free-running hub assembly (4WD models).
   Refer to "Auto-lock Free-running Hub", AX-10.
2. Remove wheel hub and rotor disc.
   Refer to "Wheel Hub and Rotor Disc", AX-12.

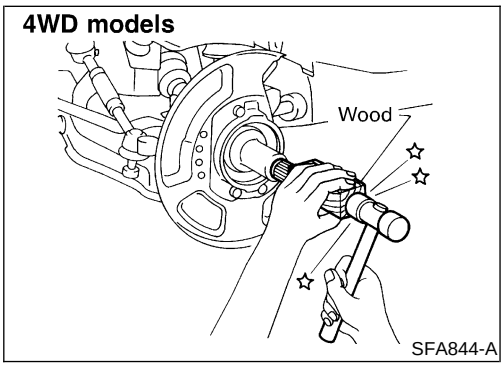

3. Separate drive shaft from knuckle spindle by slightly tapping drive shaft end (4WD models).

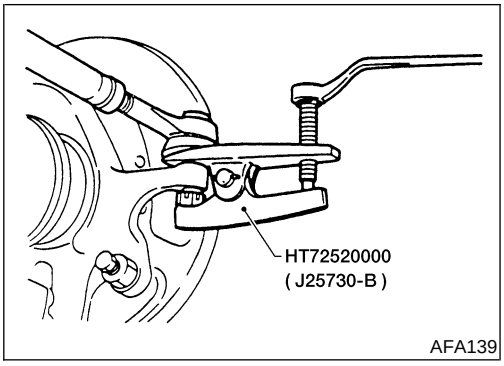

AFA139

4. Separate tie-rod from knuckle spindle with Tool.

Install stud nut conversely on stud bolt so as not to damage stud bolt.

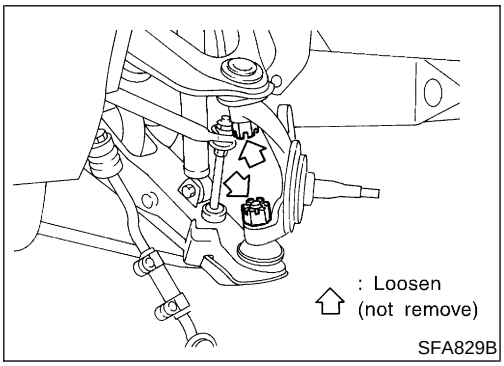

SFA829B

5. Separate knuckle spindle from ball joints.

a. Loosen (do not remove) upper and lower ball joint tightening nuts.

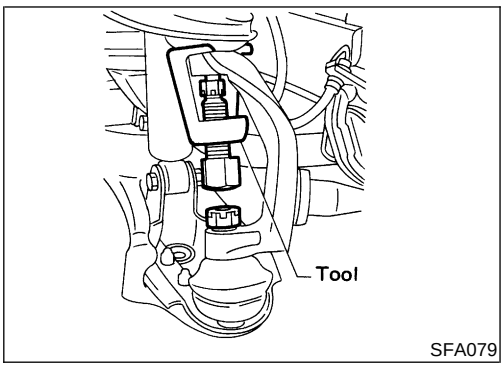

SFA079

b. Separate knuckle spindle from upper and lower ball joint studs with Tool.
During above operation, never remove ball joint nuts which are loosened in step (a) above.

Tool:
2WD
ST29020001 (J24319-01)
4WD
HT72520000 (J25730-B)

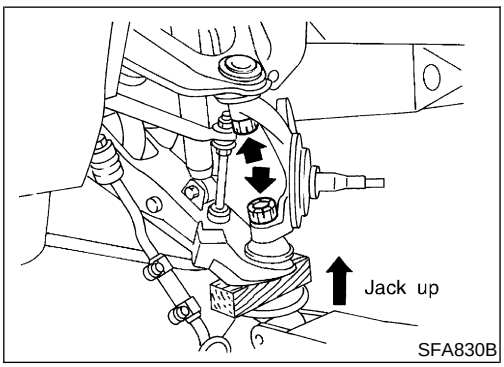

SFA830B

c. Remove ball joint tightening nuts.
Support lower link with jack.

d. Remove knuckle spindle from upper and lower links.

INSPECTION

NEAX0017

Knuckle Spindle

NEAX0017S01

- Check knuckle spindle for deformation, cracks and other damage by using a magnetic exploration or dyeing test.

Bearing Spacer (2WD models)

NEAX0017S02

- Check bearing spacer for damage.

Needle Bearing (4WD models)

NEAX0017S03

- Check needle bearing for wear, scratches, pitting, flaking and burn marks.

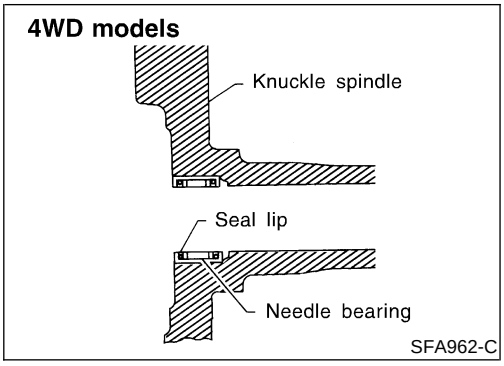

INSTALLATION

NEAX0018

1. Install needle bearing into knuckle spindle (4WD models).

Make sure that needle bearing is facing in the proper direction.
Apply multi-purpose grease.

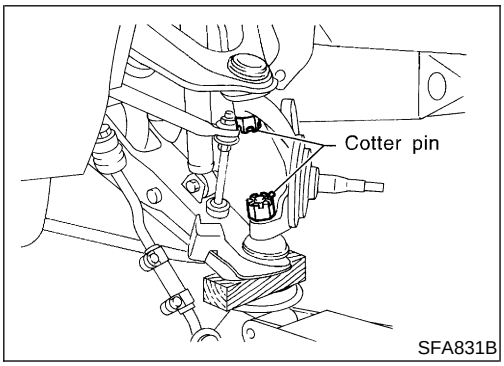

2. Install knuckle spindle to upper and lower ball joints with lower link jacked up.

CAUTION:
Make sure that oil and grease do not come into contact with tapered areas of ball joint, knuckle spindle and threads of ball joint.

3. Connect tie-rod to knuckle spindle.
4. Install wheel hub and rotor disc. Refer to "Wheel Hub and Rotor Disc", AX-12.

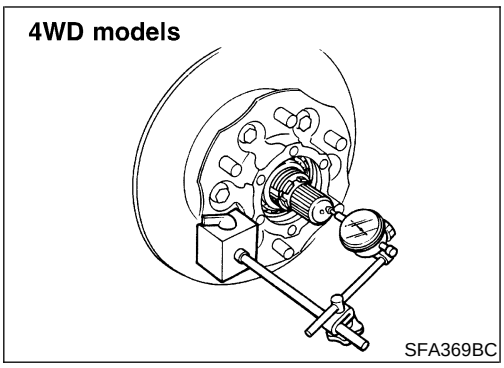

5. After installing knuckle spindle, adjust wheel bearing preload. Refer to "Preload Adjustment (2WD models)" and "Preload Adjustment (4WD models)", AX-5, 6.
6. After installing drive shaft, check drive shaft axial end play. **Do not reuse snap ring once it has been removed.** Refer to "Drive Shaft", AX-16.
7. Install free-running hub assembly (4WD models). Refer to "Auto-lock Free-running Hub", AX-10.

Drive Shaft

COMPONENTS

NEAX0019

CAUTION:

- **The ZF100 type (wheel side) joint assembly has two types of boot material; one is made of rubber and the other is made of plastic.**
- **Do not disassemble the joint assembly with the plastic boot. If the boot or joint is damaged, replace the drive shaft assembly.**

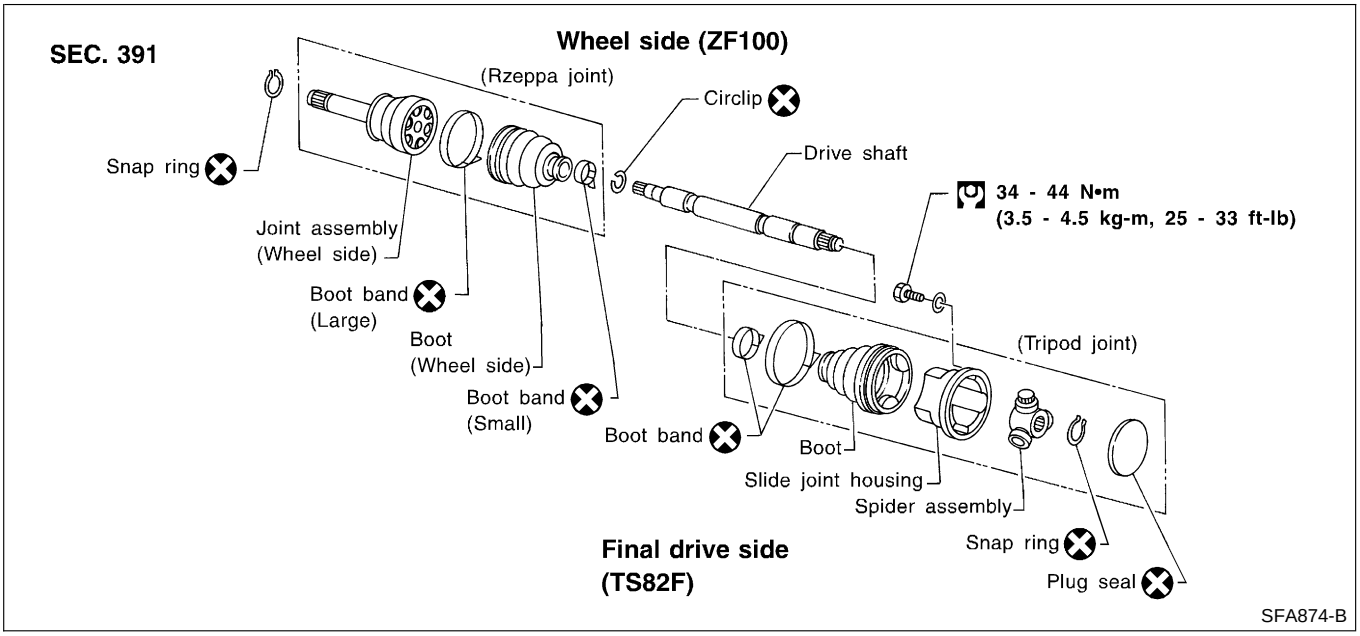

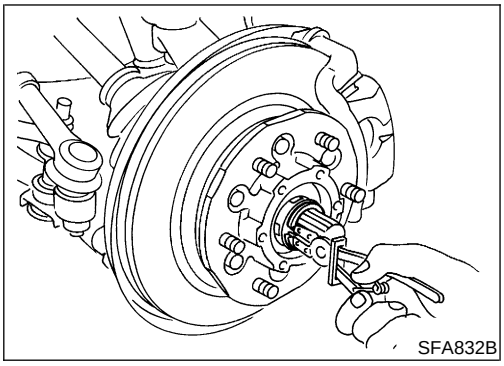

REMOVAL

NEAX0020

1. Remove free-running hub or drive flange and snap ring. Refer to "Auto-lock Free-running Hub", AX-10.
2. Remove torsion bar spring. Refer to ***SU-14***, "Torsion Bar Spring".
3. Remove shock absorber lower bolt.
4. Remove lower link bolts.

Support lower link with jack.

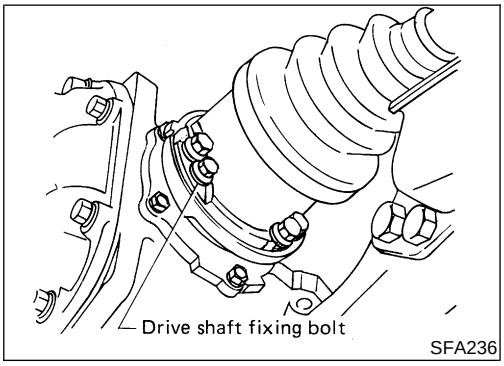

5. Remove drive shaft to final drive bolts.

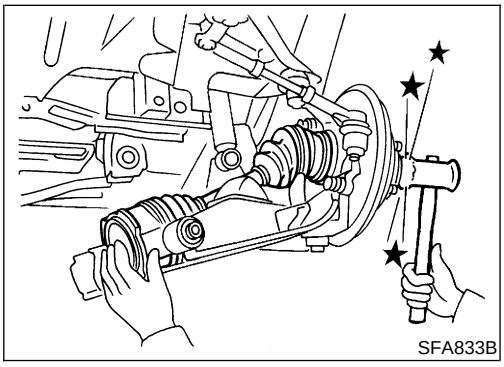

6. Separate drive shaft from knuckle spindle by slightly tapping end of drive shaft.

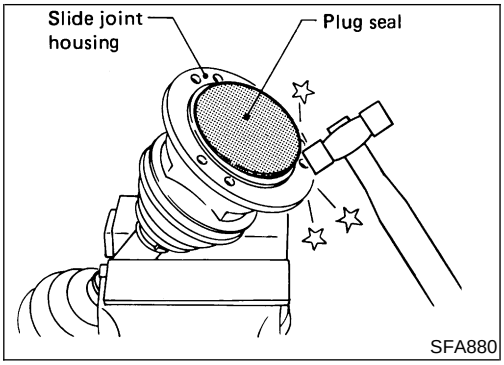

DISASSEMBLY

NEAX0021

Final Drive Side (TS82F)

NEAX0021S01

1. Remove plug seal from slide joint housing by lightly tapping around slide joint housing.
2. Remove boot bands.

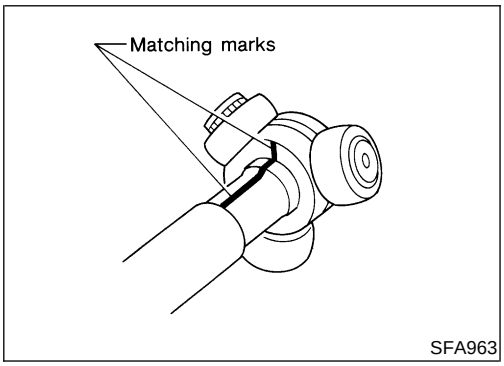

3. Move boot and slide joint housing toward wheel side, and apply matching marks.

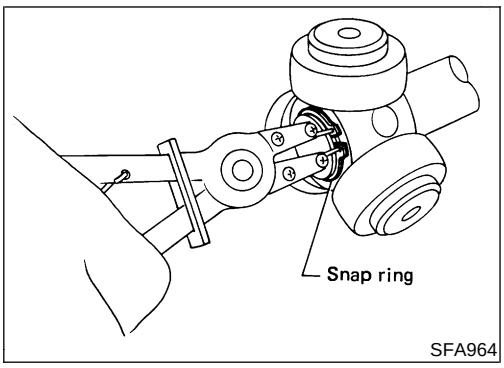

4. Remove snap ring.

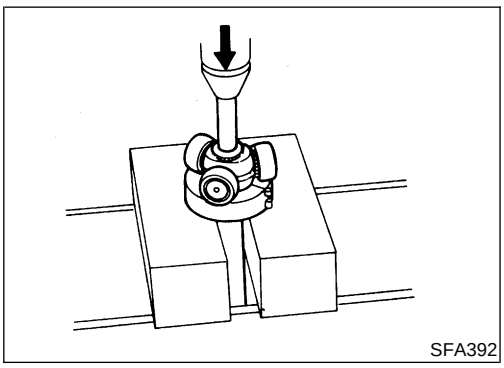

5. Detach spider assembly with press.

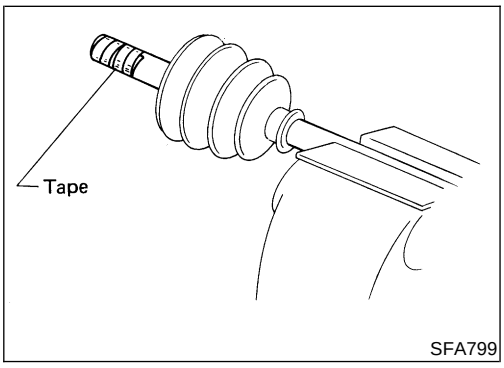

6. Draw out boot.

Cover drive shaft serration with tape to prevent damaging the boot.

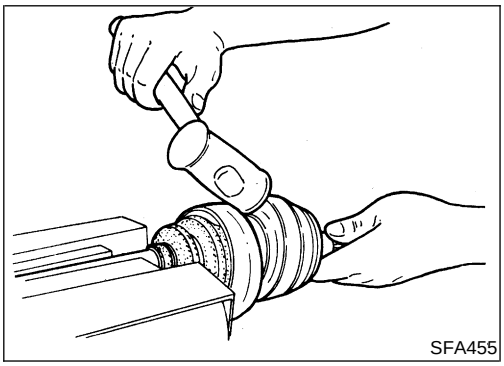
SFA455

Wheel Side (ZF100)

NEAX0021S02

CAUTION:

- **The ZF100 type (wheel side) joint assembly has two types of boot material; one is made of rubber and the other is made of plastic.**
- **Do not disassemble the joint assembly with the plastic boot. If the boot or joint is damaged, replace the drive shaft assembly.**

The procedures for the joint with the rubber boot are as follows:

- Before separating joint assembly, put matching marks on drive shaft and joint assembly.
- Separate joint assembly with suitable tool.
  Be careful not to damage threads on drive shaft.
- Remove boot bands.

INSPECTION

NEAX0022

Thoroughly clean all parts in cleaning solvent, and dry with compressed air. Check parts for evidence of deformation and other damage.

Drive Shaft

NEAX0022S01

Replace drive shaft if it is twisted, cracked or bent.

Boot

NEAX0022S02

Check boot for fatigue, cracks and wear. Replace boot and boot bands with new.

Joint Assembly (Final drive side)

NEAX0022S03

- Replace any parts of double offset joint which show signs of scorching, rust, wear or excessive play.
- Check serration for deformation. Replace if necessary.
- Check slide joint housing for any damage. Replace if necessary.

Joint Assembly (Wheel side)

NEAX0022S04

CAUTION:

- **The ZF100 type (wheel side) joint assembly has two types of boot material; one is made of rubber and the other is made of plastic.**

- **Do not disassemble the joint assembly with the plastic boot. If the boot or joint is damaged, replace the drive shaft assembly.**

Replace joint assembly if it is deformed or damaged.

ASSEMBLY

NEAX0023

- **After drive shaft has been assembled, ensure that it moves smoothly over its entire range without binding.**
- **Use NISSAN Genuine Grease or equivalent after every overhaul.**

Final Drive Side (TS82F)

NEAX0023S01

1. Install new small boot band, boot and side joint housing to drive shaft.

Cover drive shaft serration with tape to prevent damaging boot during installation.

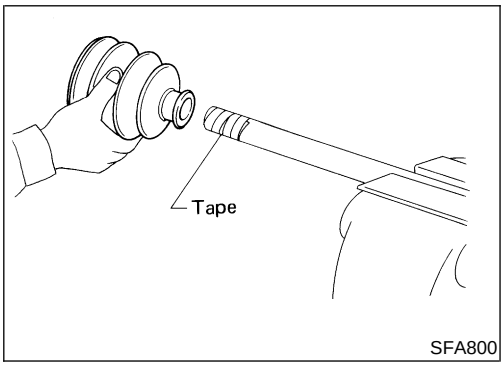

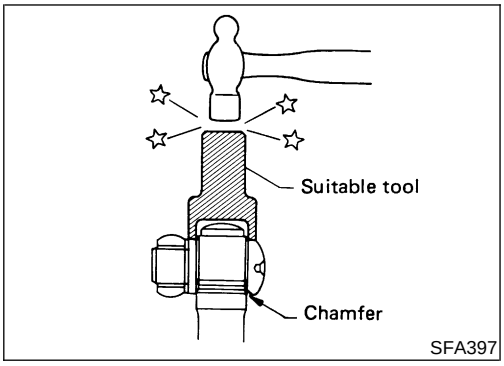

2. Install spider assembly securely, making sure marks are properly aligned.

- **Press-fit with spider assembly serration chamfer facing shaft.**

3. Install new snap ring.

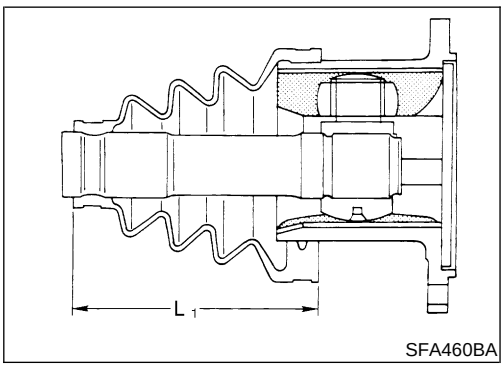

4. Pack with grease.

Specified amount of grease:
95 - 105 g (3.35 - 3.70 oz)

5. Make sure that the boot is properly installed on the drive shaft groove. Set the boot so that it does not swell or deform when its length is "L_1".

Length "L_1": 95 - 97 mm (3.74 - 3.82 in)

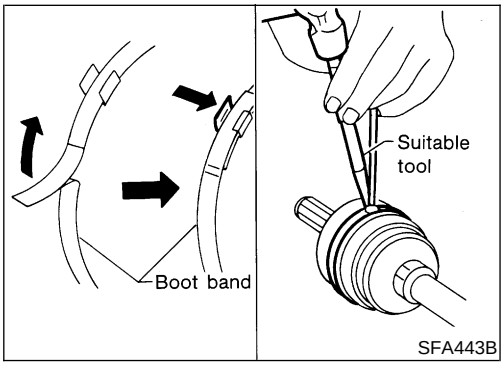

6. Lock new large boot band securely with a suitable tool, then lock new small boot band.
7. Install new plug seal to slide joint housing by lightly tapping it.

Apply suitable sealant to mating surface of plug seal.

Wheel Side (ZF100)

NEAX0023S02

CAUTION:

- **The ZF100 type (wheel side) joint assembly has two types of boot material; one is made of rubber and the other is made of plastic.**
- **Do not disassemble the joint assembly with the plastic boot. If the boot or joint is damaged, replace the drive shaft assembly.**

The procedures for the joint with the rubber boot are as follows:

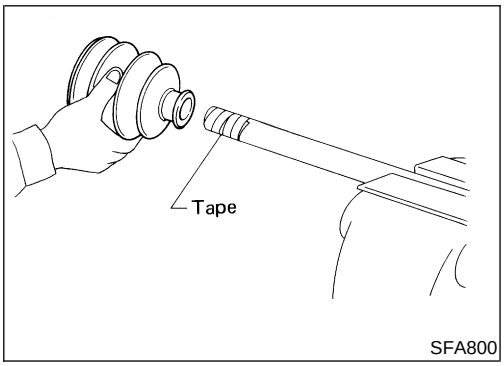

1. Install new small boot band and boot on drive shaft.

Cover drive shaft serration with tape to prevent damaging boot during installation.

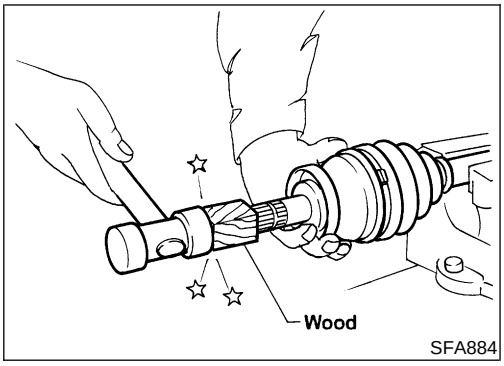

2. Set joint assembly onto drive shaft by lightly tapping it. Install joint assembly securely, ensuring that marks which were made during disassembly are properly aligned.

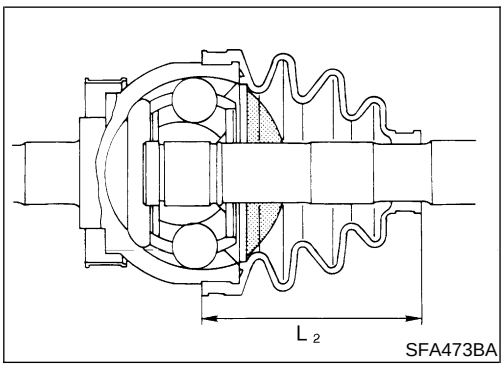

3. Pack drive shaft with specified amount of grease.

Specified amount of grease:
115 - 125 g (4.06 - 4.41 oz)

4. Make sure that the boot is properly installed on the drive shaft groove. Set the boot so that it does not swell or deform when its length is "L_2".

Length "L_2": 96 - 98 mm (3.78 - 3.86 in)

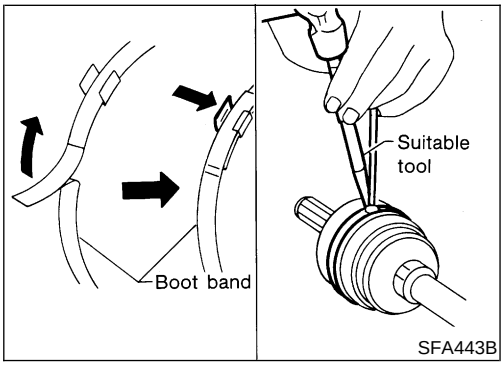

5. Lock new large boot band securely with a suitable tool, then lock new small boot band.

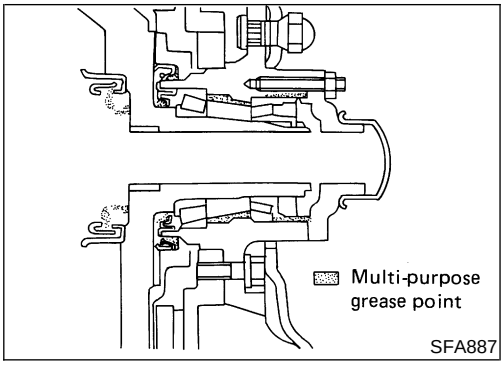

INSTALLATION

NEAX0024

1. Apply multi-purpose grease.

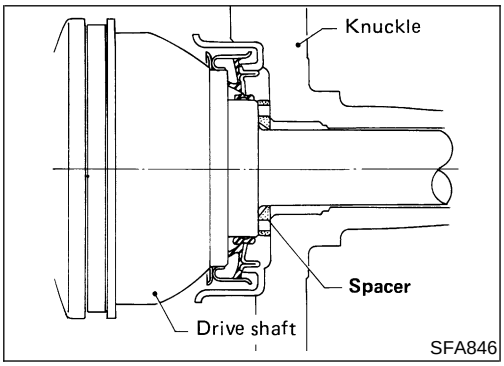

2. Install bearing spacer onto drive shaft.

Make sure that the bearing spacer is facing in the proper direction.

3. After installing wheel hub and wheel bearing, adjust wheel bearing preload. Refer to "FRONT WHEEL BEARING", AX-5, 6.

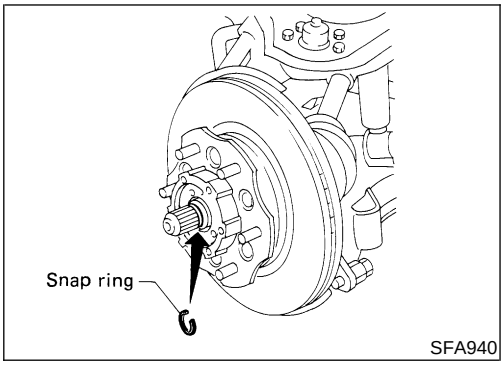

4. When installing drive shaft, adjust drive shaft axial end play by selecting a suitable snap ring.

a. Temporarily install new snap ring on drive shaft in the same thickness as the one that was removed.

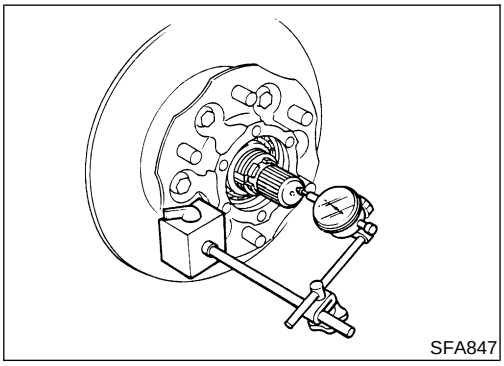

b. Set dial gauge on drive shaft end.

c. Measure axial end play of drive shaft.

Axial end play:
0.45 mm (0.0177 in) or less

d. If axial end play is not within the specified limit, select another snap ring.

1.1 mm (0.043 in) **1.3 mm (0.051 in)** **1.5 mm (0.059 in)** **1.7 mm (0.067 in)**	**1.9 mm (0.075 in)** **2.1 mm (0.083 in)** **2.3 mm (0.091 in)**

Service Data and Specifications (SDS)

WHEEL BEARING (FRONT)
2WD Models

NEAX0025

NEAX0025S01

Wheel bearing axial end play mm (in)		0 (0)
Wheel bearing lock nut	Tightening torque N·m (kg-m, ft-lb)	34 - 39 (3.5 - 4.0, 25 - 29)
	Return angle degree	45° - 60°

Wheel bearing starting torque	At wheel hub bolt With new grease seal N (kg, lb)	9.8 - 28.4 (1.0 - 2.9, 2.2 - 6.4)
	With used grease seal N (kg, lb)	9.8 - 23.5 (1.0 - 2.4, 2.2 - 5.3)

4WD Models

NEAX0025S02

Wheel bearing lock nut	Tightening torque N·m (kg-m, ft-lb)	78 - 98 (8 - 10, 58 - 72)
	Retightening torque after loosening wheel bearing lock nut N·m (kg-m, ft-lb)	0.5 - 1.5 (0.05 - 0.15, 0.4 - 1.1)
	Axial end play mm (in)	0 (0)
	Starting force at wheel hub bolt N (kg, lb)	A
	Turning angle degree	15° - 30°
	Starting force at wheel hub bolt N (kg, lb)	B
Wheel bearing preload at wheel hub bolt N (kg, lb)	B − A	7.06 - 20.99 (0.72 - 2.14, 1.59 - 4.72)

DRIVE SHAFT (4WD MODELS)

NEAX0026

Drive shaft joint type	Final drive side		TS82F
	Wheel side		ZF100*
	Fixed joint axial end play limit mm (in)		1 (0.04)
Diameter mm (in)	Wheel side (D_1)		29.0 (1.142)
Grease	Quality		Nissan genuine grease or equivalent
	Capacity g (oz)	Final drive side	95 - 105 (3.35 - 3.70)
		Wheel side	115 - 125 (4.06 - 4.41)
Boot length mm (in)	Final drive side (L_1)		95 - 97 (3.74 - 3.82)
	Wheel side (L_2)		96 - 98 (3.78 - 3.86)

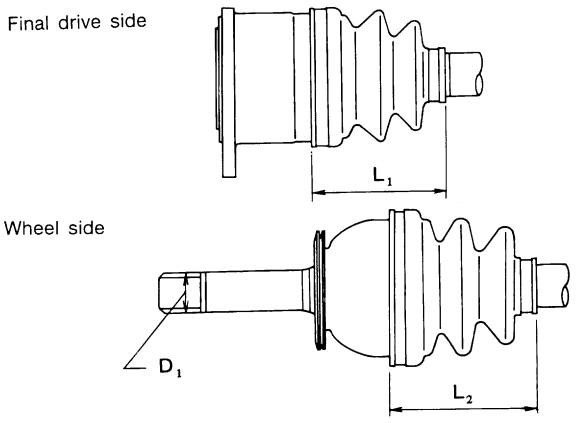

SFA877A

*: The ZF100 type (wheel side) joint assembly has two types of boot material; one is made of rubber and the other is made of plastic. Do not disassemble the joint assembly with the plastic boot. If the boot or joint is damaged, replace the drive shaft assembly.

Drive Shaft Axial End Play

NEAX0026S01

Drive shaft axial end play mm (in)	0.45 (0.0177) or less

Drive shaft end snap ring

NEAX0026S02

Thickness mm (in)	Part No.*

Service Data and Specifications (SDS) (Cont'd)

1.1 (0.043)	39253-88G10
1.3 (0.051)	39253-88G11
1.5 (0.059)	39253-88G12
1.7 (0.067)	39253-88G13
1.9 (0.075)	39253-88G14
2.1 (0.083)	39253-88G15
2.3 (0.091)	39253-88G16

*: Always check with the Parts Department for the latest parts information.

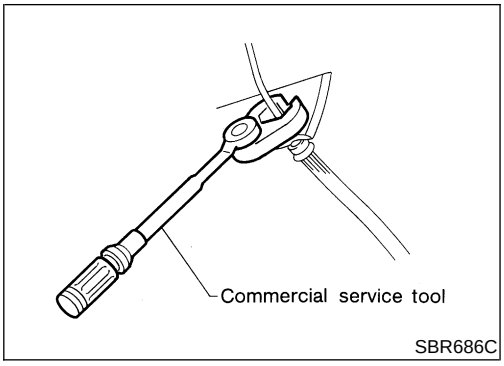

SBR686C

Precautions

PRECAUTIONS

NEAX0027

- **When installing rubber parts, final tightening must be carried out under unladen condition* with tires on ground.**
  ***: Fuel, radiator coolant and engine oil full. Spare tire, jack, hand tools and mats in designated positions.**
- **Use flare nut wrench when removing and installing brake tubes.**
- **After installing removed suspension parts, check wheel alignment and adjust if necessary.**
- **Always torque brake lines when installing.**

Preparation

SPECIAL SERVICE TOOLS

NEAX0028

The actual shapes of Kent-Moore tools may differ from those of special service tools illustrated here.

Tool number (Kent-Moore No.) Tool name	Description	
KV40101000 (J25604-01) Axle stand	 NT159	Removing rear axle shaft
ST36230000 (J25840-A) Sliding hammer	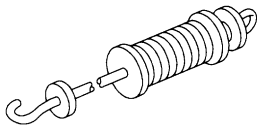 NT126	Removing rear axle shaft
(J45073) Rear axle bearing removal kit	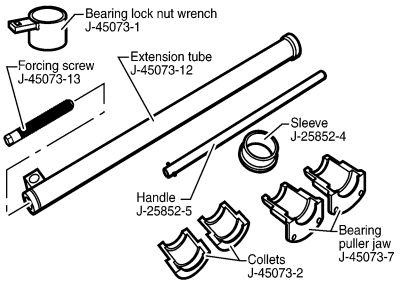 LAX034	Removing wheel bearing, oil seal, wheel bearing lock nut, and ABS sensor rotor
ST37840000 (—) Rear axle shaft guide	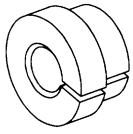 NT162	Installing rear axle shaft

COMMERCIAL SERVICE TOOLS

NEAX0029

Tool name	Description	
1 Flare nut crowfoot 2 Torque wrench	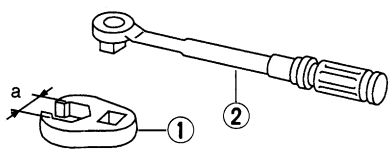 NT360	Removing and installing each brake piping **a: 10 mm (0.39 in)**

Preparation (Cont'd)

Tool name	Description	
Bearing cage oil seal drift	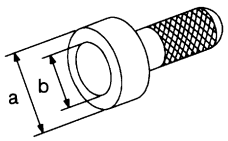 NT115	Installing oil seal **a: 74 mm (2.91 in) dia.** **b: 68 mm (2.68 in) dia.**
Rear axle oil seal drift	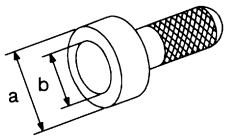 NT115	Installing oil seal **a: 54.5 mm (2.15 in.)** **b: 34.5 mm (1.36 in.)**

Noise, Vibration and Harshness (NVH) Troubleshooting

=NEAX0030

Refer to “Noise, Vibration and Harshness (NVH) Troubleshooting”, “FRONT AXLE”, AX-4.

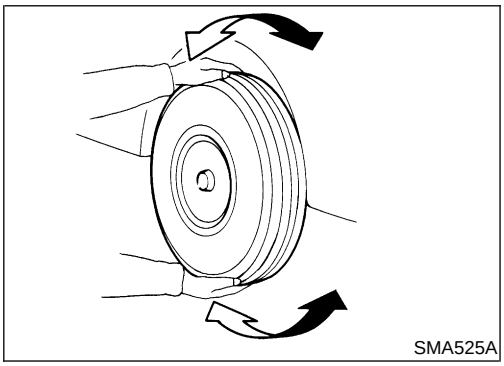
SMA525A

On-vehicle Service

REAR AXLE PARTS

NEAX0031

Check rear axle parts for excessive play, wear and damage.

- Shake each rear wheel to check for excessive play.

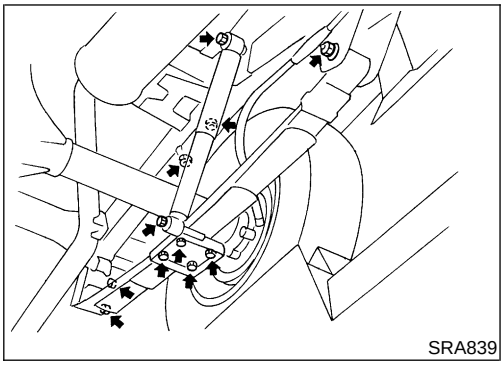
SRA839

- Retighten all nuts and bolts to the specified torque.
  : Refer to *SU-28*, “Removal and Installation”.

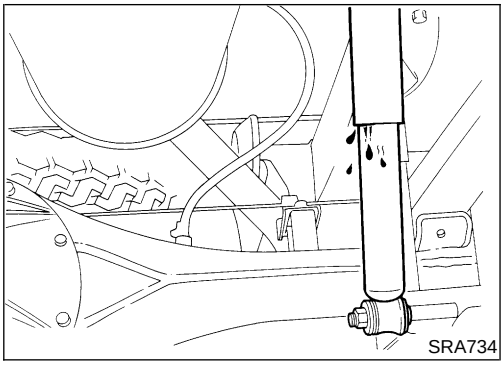
SRA734

- Check shock absorber for oil leakage and other damage.
- Check shock absorber bushing for excessive wear and other damage.

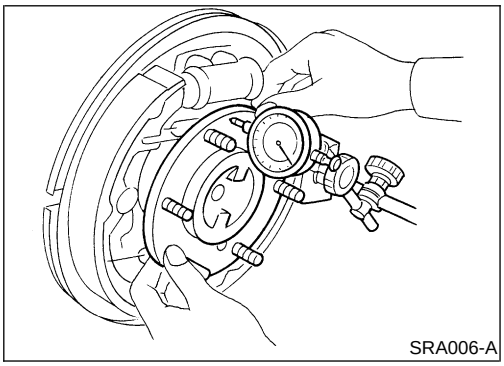
SRA006-A

REAR WHEEL BEARING

NEAX0032

- Check that wheel bearings operate smoothly.
- Check axial end play.

Axial end play:

Refer to "WHEEL BEARING (REAR)", AX-38.

Components

NEAX0033

SEC. 430
2WD models

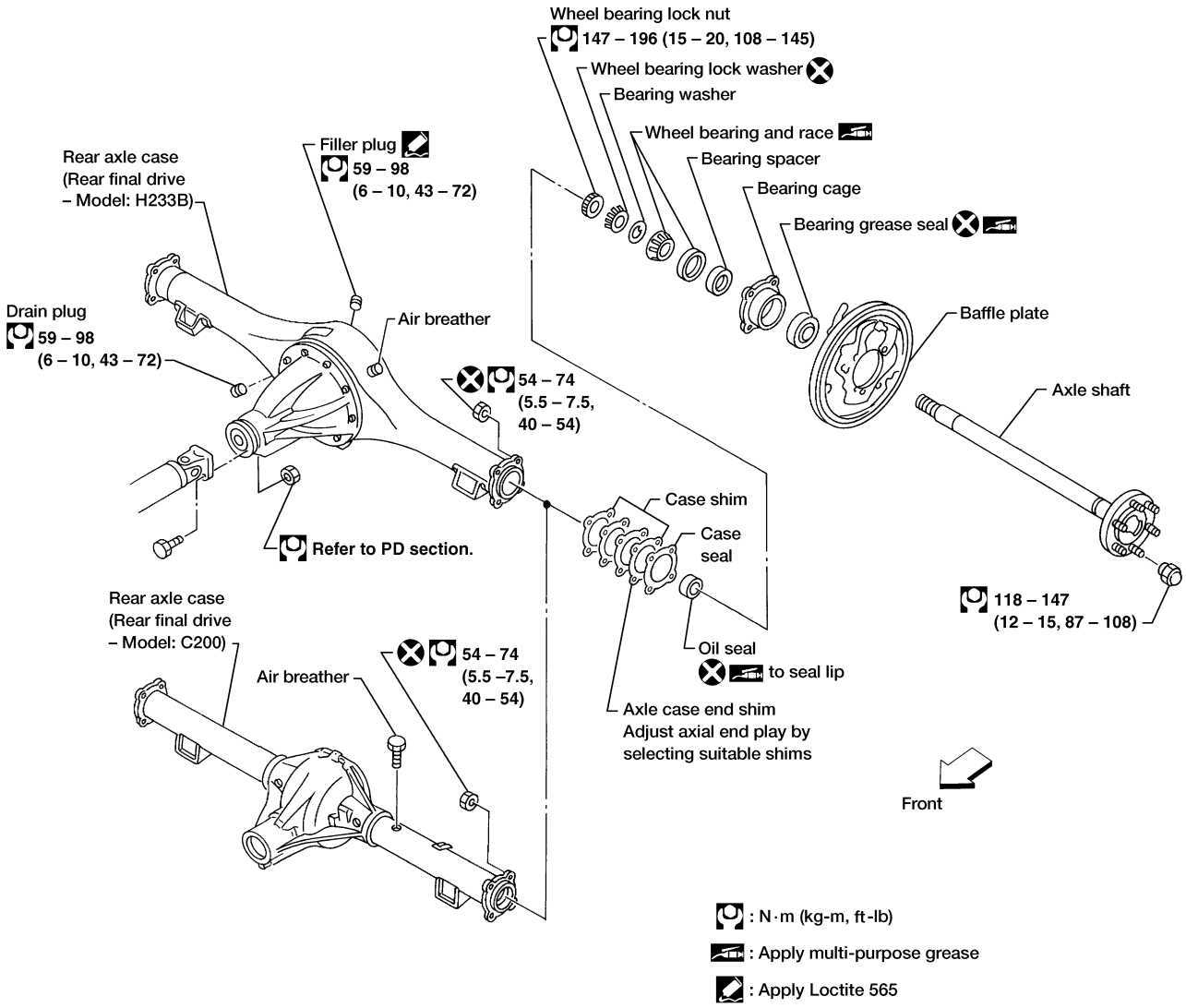

Components (Cont'd)

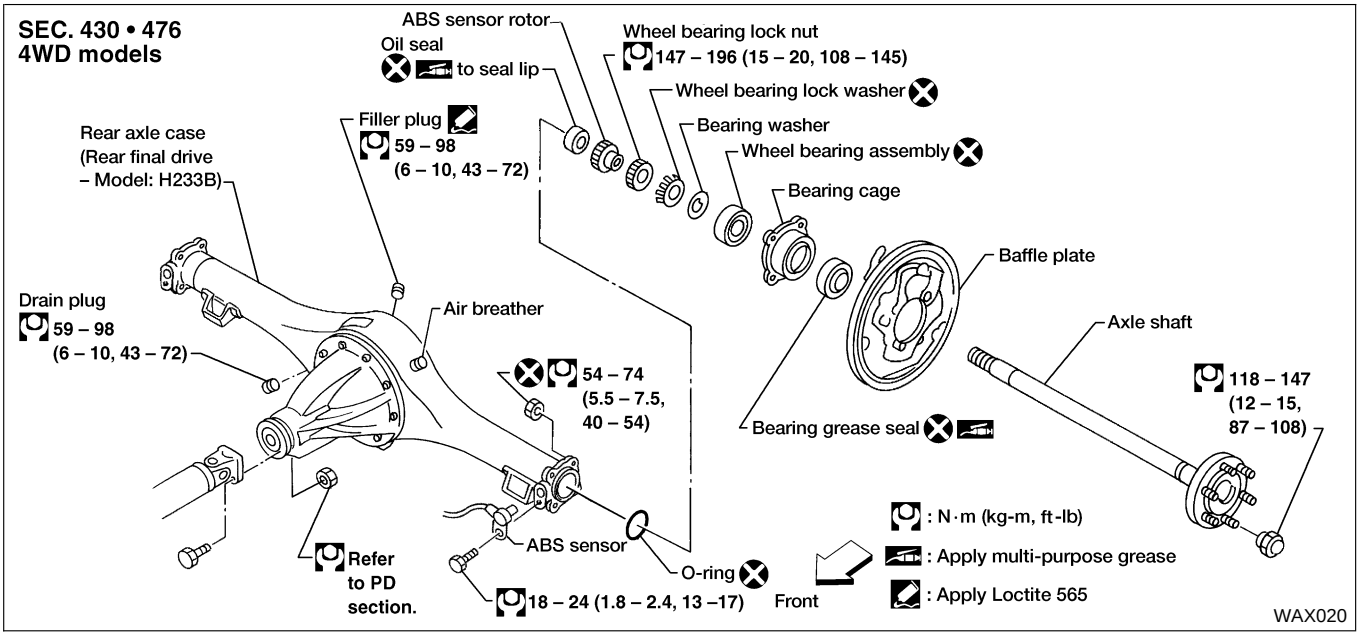

Removal

NEAX0034

- **Before removing the rear axle, disconnect the ABS wheel sensor from the assembly. Then move it away from the axle. Failure to do so may result in damage to the sensor wires and the sensor becoming inoperative.**
- **Wheel bearing does not require maintenance.**
- If growling noise is emitted from wheel bearing during operation, replace wheel bearing assembly.
- If the wheel bearing assembly is removed, it must be replaced. The old assembly must not be re-used.

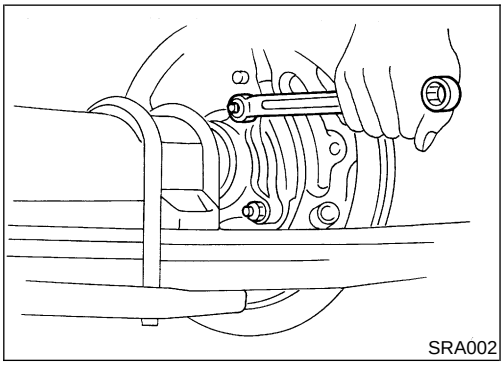

1. Disconnect parking brake cable and brake tube.
2. Remove nuts securing wheel bearing cage with baffle plate.

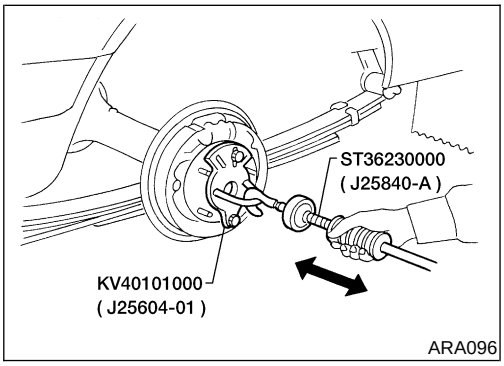

3. Draw out axle shaft with Tool.

When drawing out axle shaft, be careful not to damage oil seal.

4. Remove case shim and case seal (2WD models).
5. Remove O-ring (4WD models).
6. Remove the oil seal.

Do not reuse oil seal once it is removed.
Always install a new oil seal.

7. Remove ABS sensor rotor with Tool (4WD models).

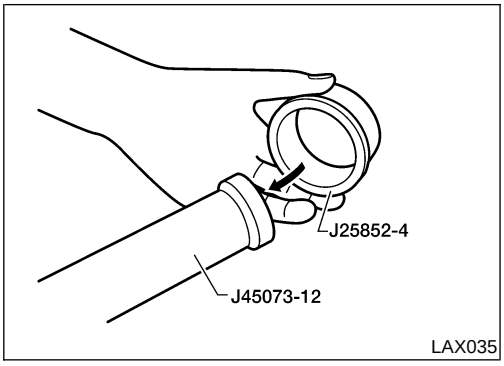

a. Slide the sleeve over the extension tube.

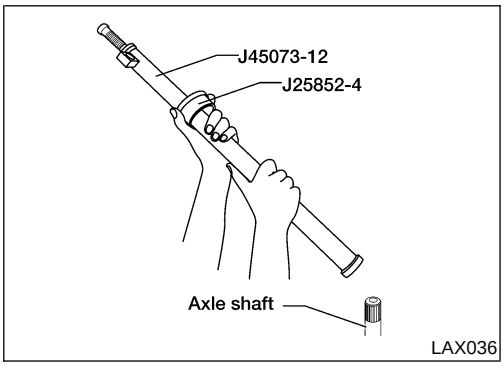

b. Slide the extension tube with sleeve over the axle shaft.

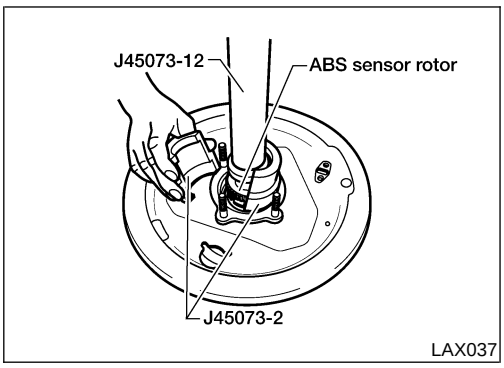

c. Install the two halves of the collet around the ABS sensor rotor making sure the lower lip of each collet is slid under the ABS sensor rotor edge.

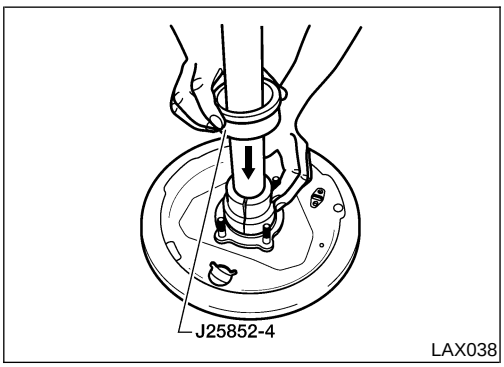

d. Slide the sleeve over the collet.

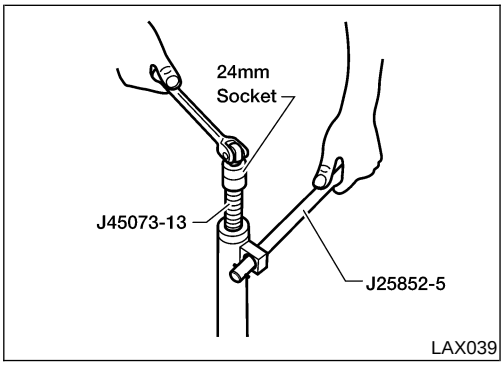

e. Tighten the forcing screw in the extension tube until the ABS sensor rotor is removed.

CAUTION:

Do not use an impact wrench to tighten the forcing screw.

f. Remove the Tool and ABS sensor rotor from the axle shaft.

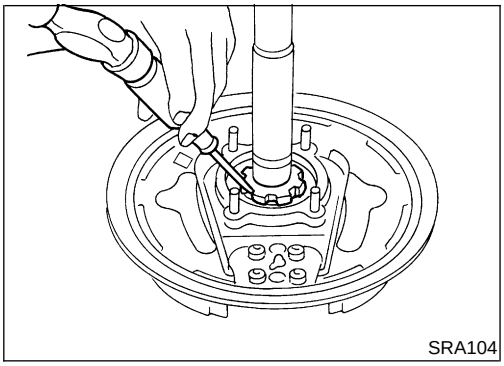
SRA104

8. Unbend the lock washer tabs with a suitable tool.

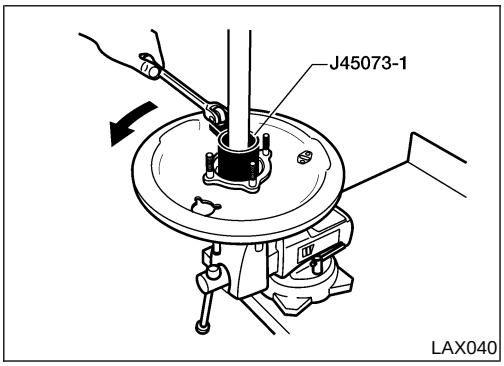

LAX040

9. Remove the wheel bearing lock nut with Tool.
10. Remove wheel bearing together with bearing cage and baffle plate from axle shaft with Tool.

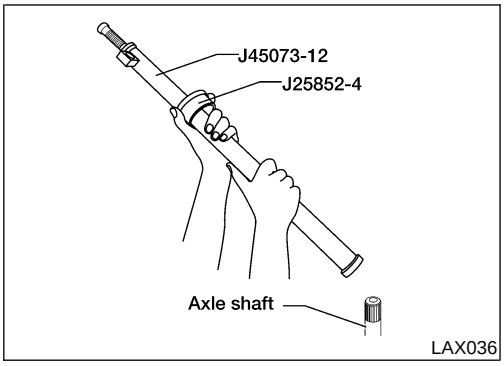

LAX036

a. Slide the extension tube with sleeve over the axle shaft.

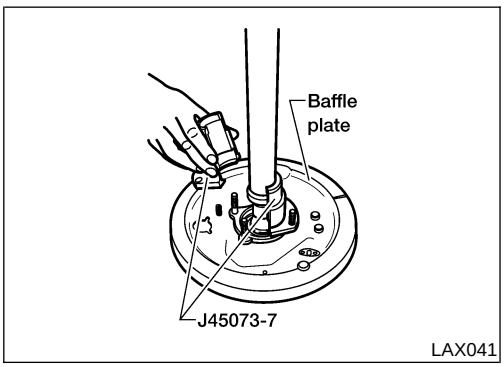

LAX041

b. Install the two halves of the bearing puller jaw over the baffle plate studs.

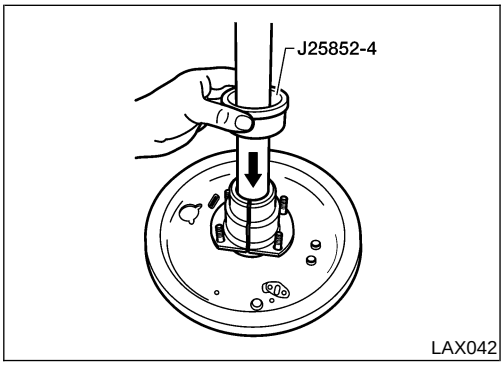

LAX042

c. Slide the sleeve down over the bearing puller jaw halves.

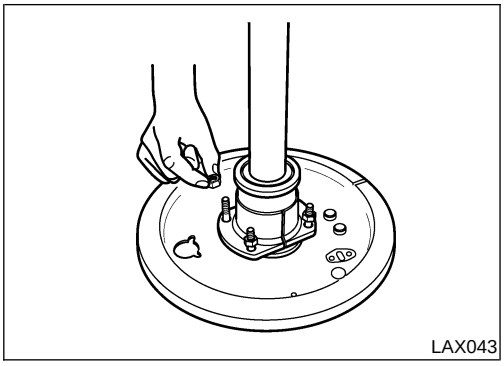
LAX043

d. Install a nut on each baffle plate stud.

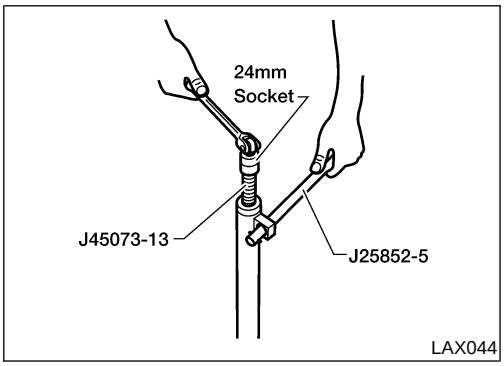

LAX044

e. Tighten the forcing screw in the extension tube until the baffle plate, cage and bearing are pulled free.

11. Remove grease seal in bearing cage with suitable bar.

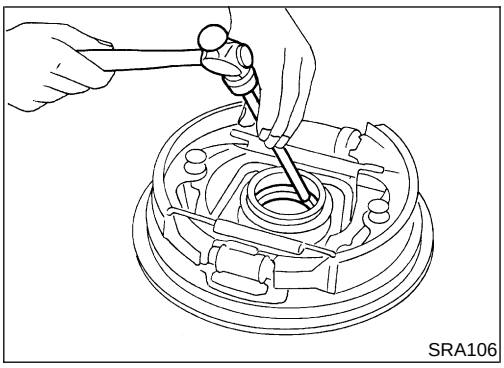
SRA106

12. Remove wheel bearing outer race with a brass drift (2WD models).

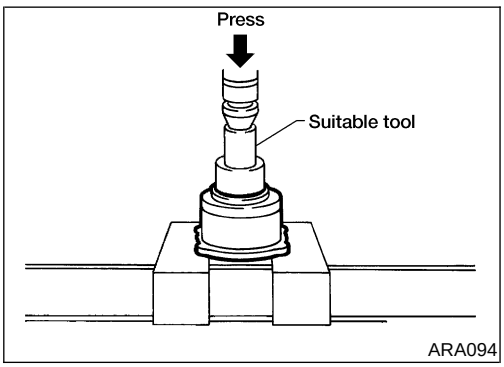

ARA094

13. Remove wheel bearing assembly from bearing cage (4WD models).

Inspection

NEAX0035

AXLE SHAFT

NEAX0035S01

- Check axle shaft for straightness, cracks, damage, wear and distortion. Replace if necessary.

WHEEL BEARING

NEAX0035S02

- Make sure wheel bearing rolls freely and is free from noise, cracks, pitting and wear.

AXLE CASE

NEAX0035S03

- Check axle case for yield, deformation and cracks. Replace if necessary.

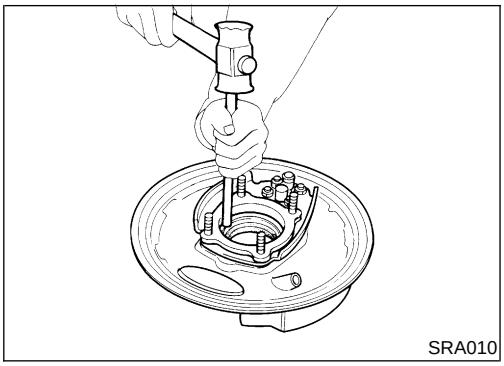
SRA010

Installation

NEAX0036

2WD MODELS

NEAX0036S03

1. Install wheel bearing outer race with a brass drift.
2. Install a new grease seal in bearing cage.

After installing new grease seal, coat sealing lip with multi-purpose grease.

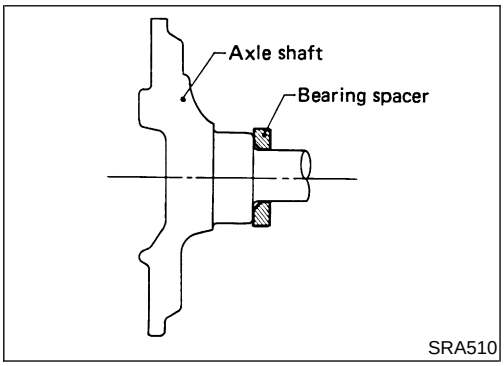

SRA510

3. Install bearing spacer with chamfer side facing axle shaft flange.

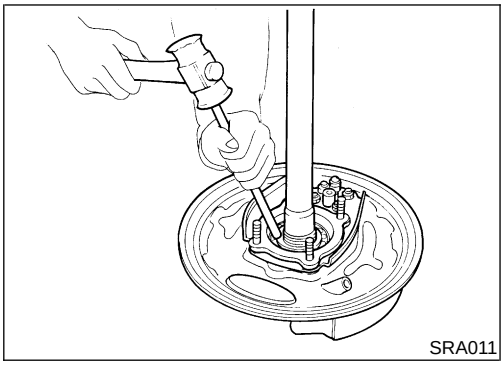
SRA011

4. Install wheel bearing inner race with a brass drift.
5. Coat each bearing cone with multi-purpose grease.

Specified amount of grease:
8 - 12 g (0.28 - 0.42 oz)

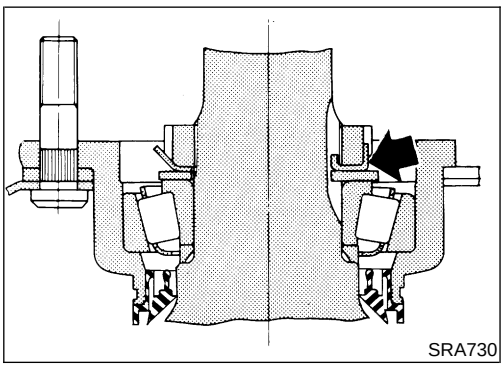
SRA730

6. Install plain washer and a new wheel bearing lock washer.

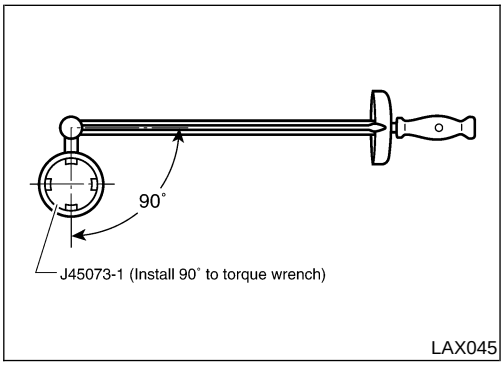

LAX045

7. Tighten wheel bearing lock nut to specified torque.

: 147 - 196 N·m (15 - 20 kg-m, 108 - 145 ft-lb)

Fit wheel bearing lock washer lip in wheel bearing lock nut groove correctly by tightening lock nut. Be sure to bend it up.

CAUTION:

When tightening the wheel bearing lock nut, the lock nut wrench is installed on the torque wrench at a 90° degree angle as shown.

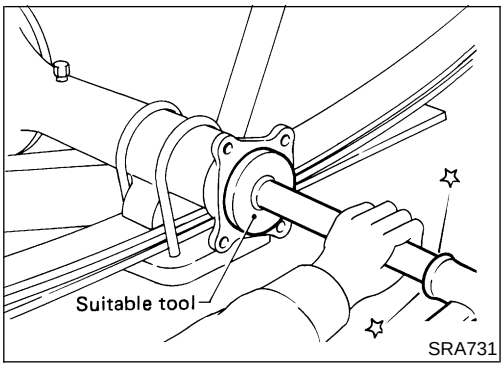

8. Install a new oil seal with suitable tool.
After installing new oil seal, coat sealing lip with multi-purpose grease.

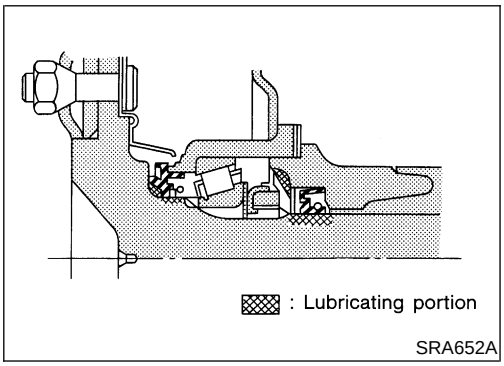

9. Apply recess of axle case end with multi-purpose grease.
10. Apply gear oil to the spline of axle shaft. Coat seal surface of axle shaft with multi-purpose grease (as shown left).

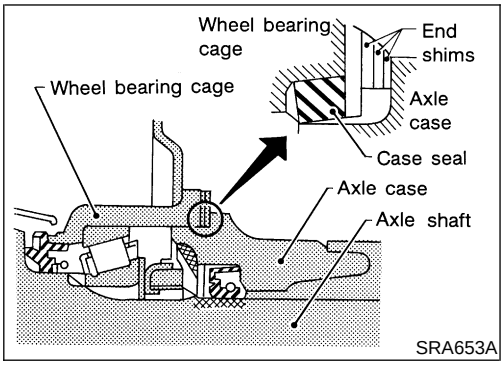

11. Adjust axial end play.

a. Select end shims.

Standard thickness including seal: 1.5 mm (0.059 in)

Axle case end shim: Refer to "WHEEL BEARING (REAR)", AX-38.

Do not insert end shims between case seal and bearing cage.

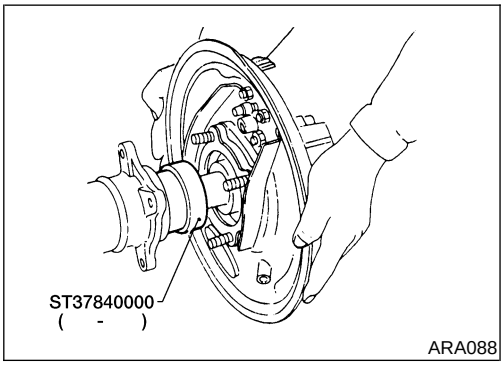

b. Insert axle shaft with Tool as a guide.
When inserting axle shaft, be careful not to damage oil seal.

c. Measure end play of axle shaft.
Axial end play:

Servicing only one side of axle shaft
0.02 - 0.15 mm (0.0008 - 0.0059 in)

Servicing both side axle shafts
On first axle shaft (right or left) adjust axial end play
0.30 - 0.90 mm (0.0118 - 0.0354 in)
After servicing second axle shaft, total end play
0.02 - 0.15 mm (0.0008 - 0.0059 in)

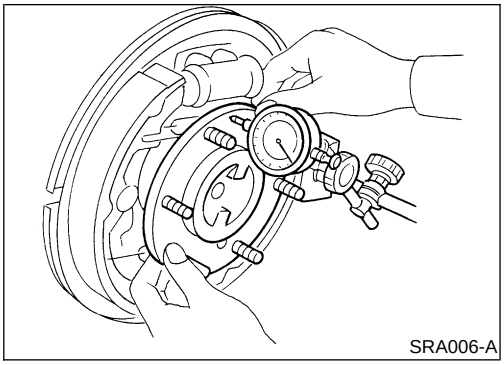
SRA006-A

d. If axial end play is not within the specified limit, reselect axle case end shims.
While adjusting axial end play, be careful not to damage oil seal.

4WD MODELS

NEAX0036S04

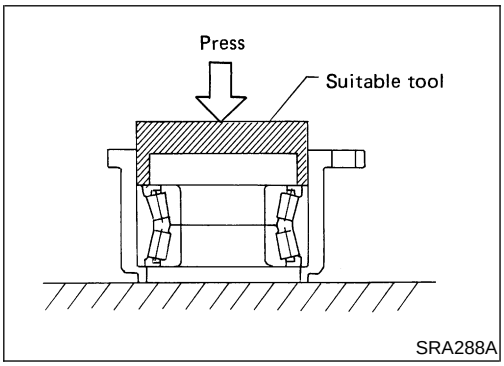

SRA288A

1. Press new wheel bearing until it bottoms end face of bearing cage.
Maximum load P:
78 kN (8 ton, 8.8 US ton, 7.9 Imp ton)

Always press outer race of wheel bearing during installation.

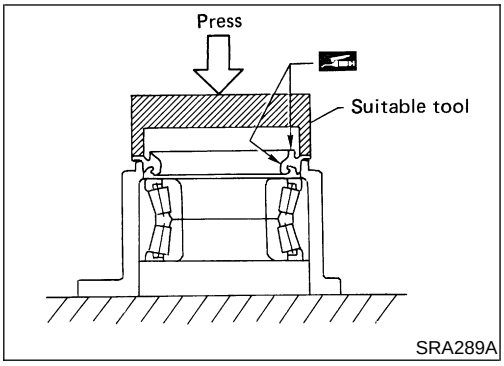

SRA289A

2. Press new grease seal until it bottoms end face of bearing cage.

After installing new grease seal, coat sealing lip with multi-purpose grease.

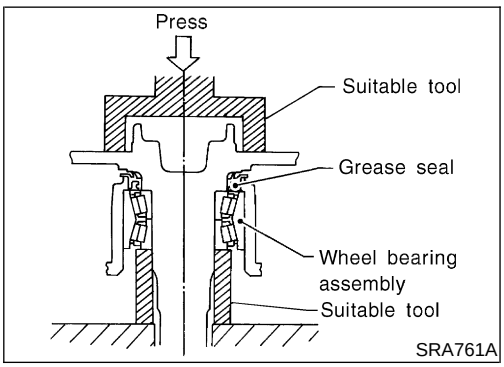

SRA761A

3. Press axle shaft into inner race of wheel bearing.
Maximum load P:
47.1 kN (4.8 ton, 5.3 US ton, 4.72 Imp ton)

Be careful not to damage or deform grease seal.

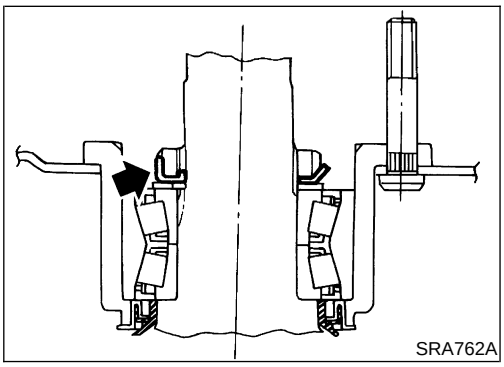
SRA762A

4. Install plain washer and a new wheel bearing lock washer.

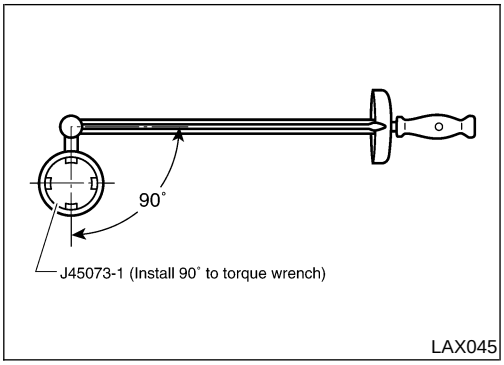

5. Tighten wheel bearing lock nut to specified torque.

: 147 - 196 N·m (15 - 20 kg-m, 108 - 145 ft-lb)

Fit wheel bearing lock washer lip in wheel bearing lock nut groove correctly by tightening lock nut. Be sure to bend it up.

CAUTION:

When tightening the wheel bearing lock nut, the lock nut wrench is installed on the torque wrench at a 90° degree angle as shown.

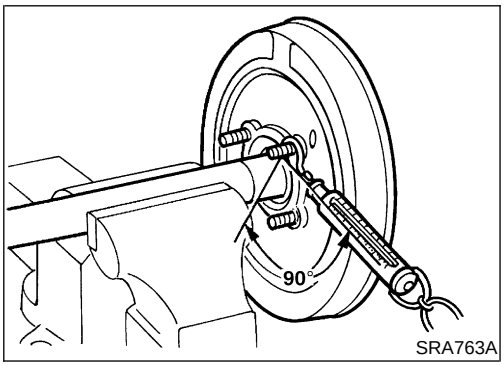

6. Check wheel bearing preload.

a. Turn bearing cage (with respect to axle shaft) two or three times. It must turn smoothly.

b. Attach spring gauge to bearing cage bolt (as shown at left) and pull it at a speed of 10 rpm to measure preload.

Spring gauge indication:

6.9 - 48.1 N (0.7 - 4.9 kg, 1.5 - 10.8 lb)

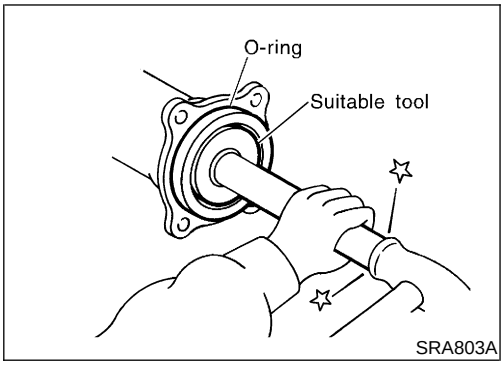

7. Install new oil seal to rear axle housing using a suitable tool.

After installing new oil seal, coat sealing lip with multi-purpose grease.

8. Install new O-ring to rear axle housing.

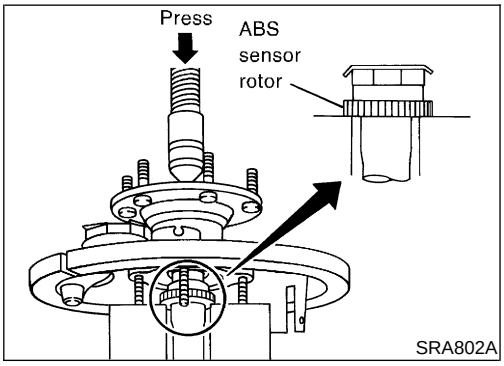

9. Press ABS sensor rotor onto axle shaft until it contacts wheel bearing lock nut.

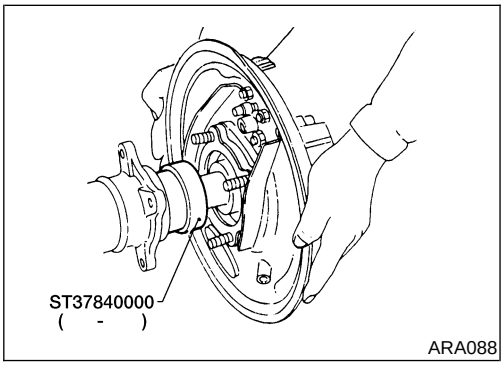

10. Position axle shafts in rear axle housing with Tool as a guide.

Be careful not to damage oil seal.

Installation (Cont'd)

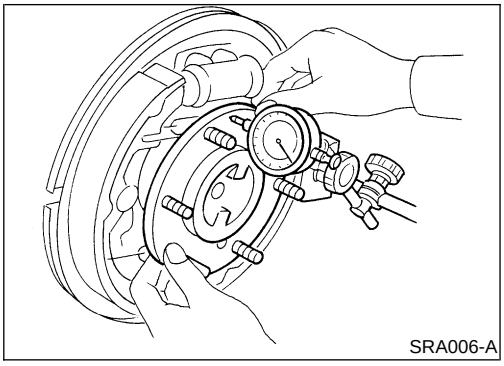
SRA006-A

11. Check axial end play.
a. Check that wheel bearings operate smoothly.
b. Check axial end play.

Axial end play:
0 mm (0 in)

Service Data and Specifications (SDS)

WHEEL BEARING (REAR)
2WD Models

NEAX0037

NEAX0037S03

Total end play mm (in)	0.02 - 0.15 (0.0008 - 0.0059)	
Available rear axle case end shims	Thickness mm (in)	Part number*
	0.05 (0.0020)	43086-P0110
	0.07 (0.0028)	43087-P0110
	0.10 (0.0039)	43088-P0110
	0.15 (0.0059)	43086-B9500
	0.20 (0.0079)	43089-P0110
	0.50 (0.0197)	43090-P0110
	1.00 (0.0394)	43036-01G00

*: Always check with the Parts Department for the latest parts information.

4WD Models

NEAX0037S04

Total end play mm (in)	0 (0)
Wheel bearing preload at bearing cage bolt N (kg, lb)	6.9 - 48.1 (0.7 - 4.9, 1.5 - 10.8)

FRONT & REAR SUSPENSION

SECTION SU

CONTENTS

FRONT SUSPENSION 2
- Precautions 2
  - PRECAUTIONS 2
- Preparation 2
  - SPECIAL SERVICE TOOLS 2
  - COMMERCIAL SERVICE TOOLS 2
- Noise, Vibration and Harshness (NVH) Troubleshooting 3
  - NVH TROUBLESHOOTING CHART 3
- Components 4
  - 2WD KA24DE MODELS 4
  - 2WD VG33E AND VG33ER MODELS 5
  - 4WD MODELS 6
- On-vehicle Service 7
  - FRONT SUSPENSION PARTS 7
  - FRONT WHEEL ALIGNMENT 7
- Components 12
  - 2WD KA24DE MODELS 12
  - 2WD AND 4WD VG33E AND VG33ER MODELS 13
- Shock Absorber 14
  - REMOVAL AND INSTALLATION 14
  - INSPECTION 14
- Torsion Bar Spring 14
  - REMOVAL 14
  - INSPECTION 15
  - INSTALLATION AND ADJUSTMENT 15
- Stabilizer Bar 17
  - REMOVAL 17
  - INSPECTION 17
  - INSTALLATION 17
- Upper Link 17
  - REMOVAL 17
  - INSTALLATION 18
  - DISASSEMBLY 18
  - INSPECTION 18
  - ASSEMBLY 18
- Tension Rod 18
  - REMOVAL AND INSTALLATION 18
  - INSPECTION 19
- Lower Link 19
  - REMOVAL AND INSTALLATION 19
  - INSPECTION 20
- Upper Ball Joint and Lower Ball Joint 20
  - REMOVAL AND INSTALLATION 20
  - INSPECTION 20
- Service Data and Specifications (SDS) 20
  - GENERAL SPECIFICATIONS (FRONT) 20
  - WHEEL RUNOUT AVERAGE* 20
  - UPPER BALL JOINT 20
  - LOWER BALL JOINT 21
  - WHEEL ALIGNMENT (UNLADEN*1) 21

REAR SUSPENSION 24
- Precautions 24
  - PRECAUTIONS 24
- Preparation 24
  - COMMERCIAL SERVICE TOOLS 24
- Noise, Vibration and Harshness (NVH) Troubleshooting 25
- Components 25
  - 2WD KA24DE MODELS 25
  - 2WD VG33E AND VG33ER MODELS 26
  - 4WD MODELS 27
- On-vehicle Service 27
  - REAR SUSPENSION PARTS 27
- Removal and Installation 28
- Shock Absorber 28
  - REMOVAL AND INSTALLATION 28
  - INSPECTION 29
- Leaf Spring 29
  - REMOVAL 29
  - INSPECTION 29
  - INSTALLATION 30
- Stabilizer Bar 30
  - REMOVAL 30
  - INSPECTION 30
  - INSTALLATION 30
- Service Data and Specifications (SDS) 31
  - GENERAL SPECIFICATIONS (REAR) 31

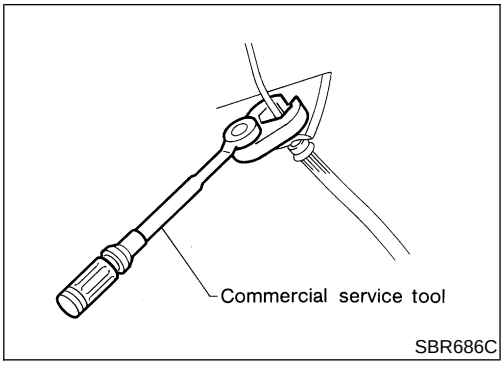

SBR686C

Precautions

PRECAUTIONS

NESU0001

- **When installing rubber parts, final tightening must be carried out under unladen condition* with tires on ground.**
  ***: Fuel, radiator coolant and engine oil full. Spare tire, jack, hand tools and mats in designated positions.**
- **Use flare nut wrench when removing and installing brake tubes.**
- **After installing removed suspension parts, check wheel alignment and adjust if necessary.**
- **Always torque brake lines when installing.**

Preparation

SPECIAL SERVICE TOOLS

NESU0002

The actual shapes of Kent-Moore tools may differ from those of special service tools illustrated here.

Tool number (Kent-Moore No.) Tool name	Description	
ST29020001 (J24319-01) Gear arm puller	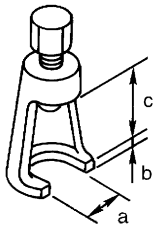 NT694	Removing ball joint for knuckle spindle **a: 34 mm (1.34 in)** **b: 6.5 mm (0.256 in)** **c: 61.5 mm (2.421 in)**
HT72520000 (J25730-B) Ball joint remover	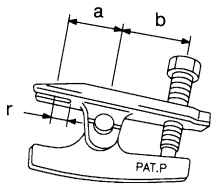 NT546	Removing tie-rod outer end **a: 33 mm (1.30 in)** **b: 50 mm (1.97 in)** **r: R11.5 mm (0.453 in)**
KV40106800 (—) Lower link bushing puller	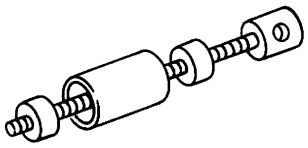 NT685	Removing and installing lower link bushing

COMMERCIAL SERVICE TOOLS

NESU0003

Tool name	Description	
1 Flare nut crowfoot 2 Torque wrench	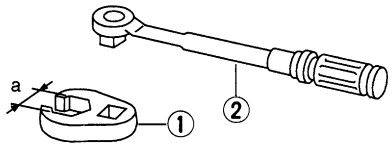 NT360	Removing and installing each brake piping **a: 10 mm (0.39 in)**

Noise, Vibration and Harshness (NVH) Troubleshooting

=NESU0004

NVH TROUBLESHOOTING CHART

NESU0004S01

Use the chart below to help you find the cause of the symptom. If necessary, repair or replace these parts.

Symptom			Improper installation, looseness	Shock absorber deformation, damage or deflection	Bushing or mounting deterioration	Parts interference	Spring fatigue	Suspension looseness	Incorrect wheel alignment	Stabilizer bar fatigue	Out-of-round	Imbalance	Incorrect air pressure	Uneven tire wear	Deformation or damage	Non-uniformity	Incorrect tire size	PROPELLER SHAFT	DIFFERENTIAL	DRIVE SHAFT	AXLE	SUSPENSION	TIRES	ROAD WHEEL	BRAKES	STEERING
Reference page			SU-4, 25	SU-14, 28	SU-25	—	SU-25	SU-12, 28	SU-7	SU-17	SU-7	—	—	—	—	—	—	Refer to ***PD-4***, NVH.	Refer to ***PD-4***, NVH.	Refer to ***AX-4***, NVH.	Refer to ***AX-4***, NVH.	Refer to SUSPENSION in this chart.	Refer to TIRES in this chart.	Refer to ROAD WHEEL in this chart.	Refer to ***BR-8***, NVH.	Refer to ***ST-5***, NVH.
Symptom	SUSPENSION	Noise	×	×	×	×	×	×										×	×	×	×		×	×	×	×
		Shake	×	×	×	×		×										×		×	×		×	×	×	×
		Vibration	×	×	×	×	×											×		×	×		×			×
		Shimmy	×	×	×	×			×												×		×	×	×	×
		Judder	×	×	×																×		×	×	×	×
		Poor quality ride or handling	×	×	×	×	×		×	×											×		×	×		
	TIRES	Noise	×								×	×	×	×	×	×		×	×	×	×	×		×	×	×
		Shake	×								×	×	×	×	×		×	×		×	×	×		×	×	×
		Vibration											×				×	×		×	×	×				×
		Shimmy	×								×	×	×	×	×	×	×				×	×		×	×	×
		Judder	×								×	×	×	×	×		×				×	×		×	×	×
		Poor quality ride or handling	×								×	×	×	×	×		×				×	×		×		
	ROAD WHEEL	Noise	×								×	×			×			×	×	×	×	×	×		×	×
		Shake	×								×	×			×			×		×	×	×	×		×	×
		Shimmy, Judder	×								×	×			×						×	×	×		×	×
		Poor quality ride or handling	×								×	×			×						×	×	×			

×: Applicable

Components

NESU0005

2WD KA24DE MODELS

NESU0005S04

SEC. 400•401

When installing rubber parts, final tightening must be carried out under unladen condition* with tires on ground.

*** Fuel, radiator coolant and engine oil full. Spare tire, jack, hand tools and mats in designated positions.**

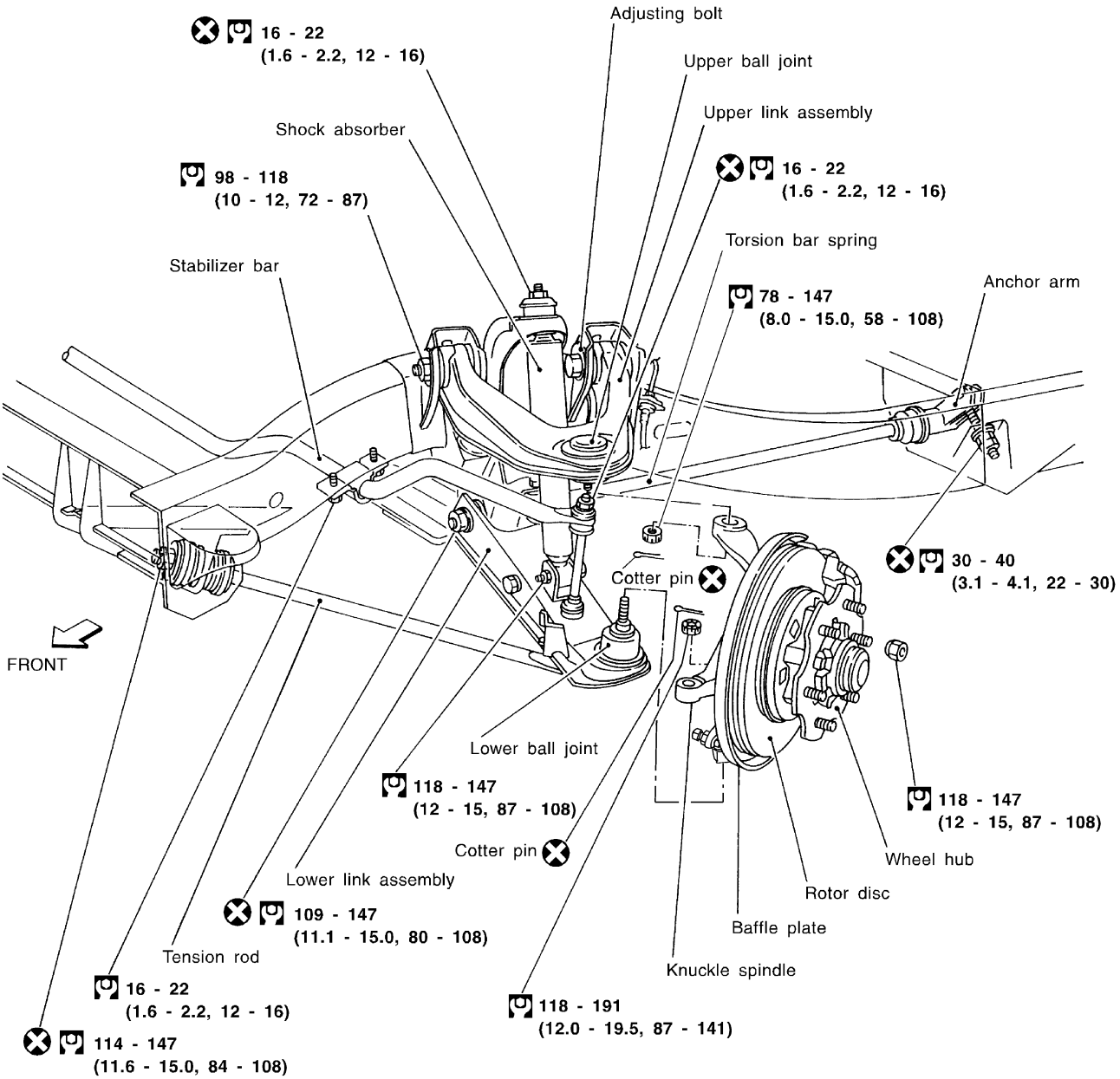

: N•m (kg-m, ft-lb)

WSU015

2WD VG33E AND VG33ER MODELS

NESU0005S03

SEC. 391•400•401

When installing rubber parts, final tightening must be carried out under unladen condition* with tires on ground.

*** Fuel, radiator coolant and engine oil full. Spare tire, jack, hand tools and mats in designated positions.**

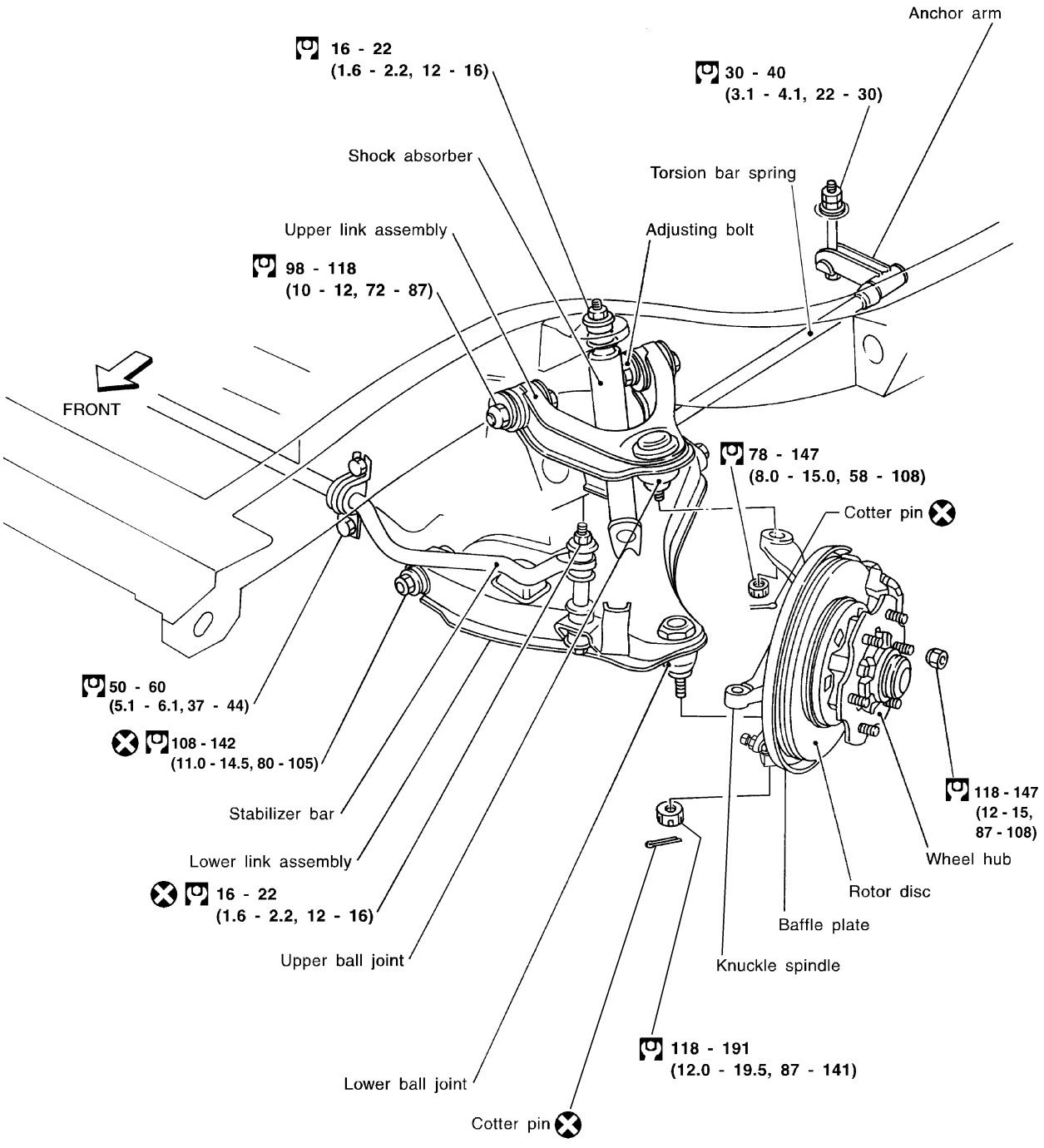

: N•m (kg-m, ft-lb)

WSU013

Components (Cont'd)

4WD MODELS

NESU0005S02

SEC. 391•400•401

When installing rubber parts, final tightening must be carried out under unladen condition* with tires on ground.

*** Fuel, radiator coolant and engine oil full. Spare tire, jack, hand tools and mats in designated positions.**

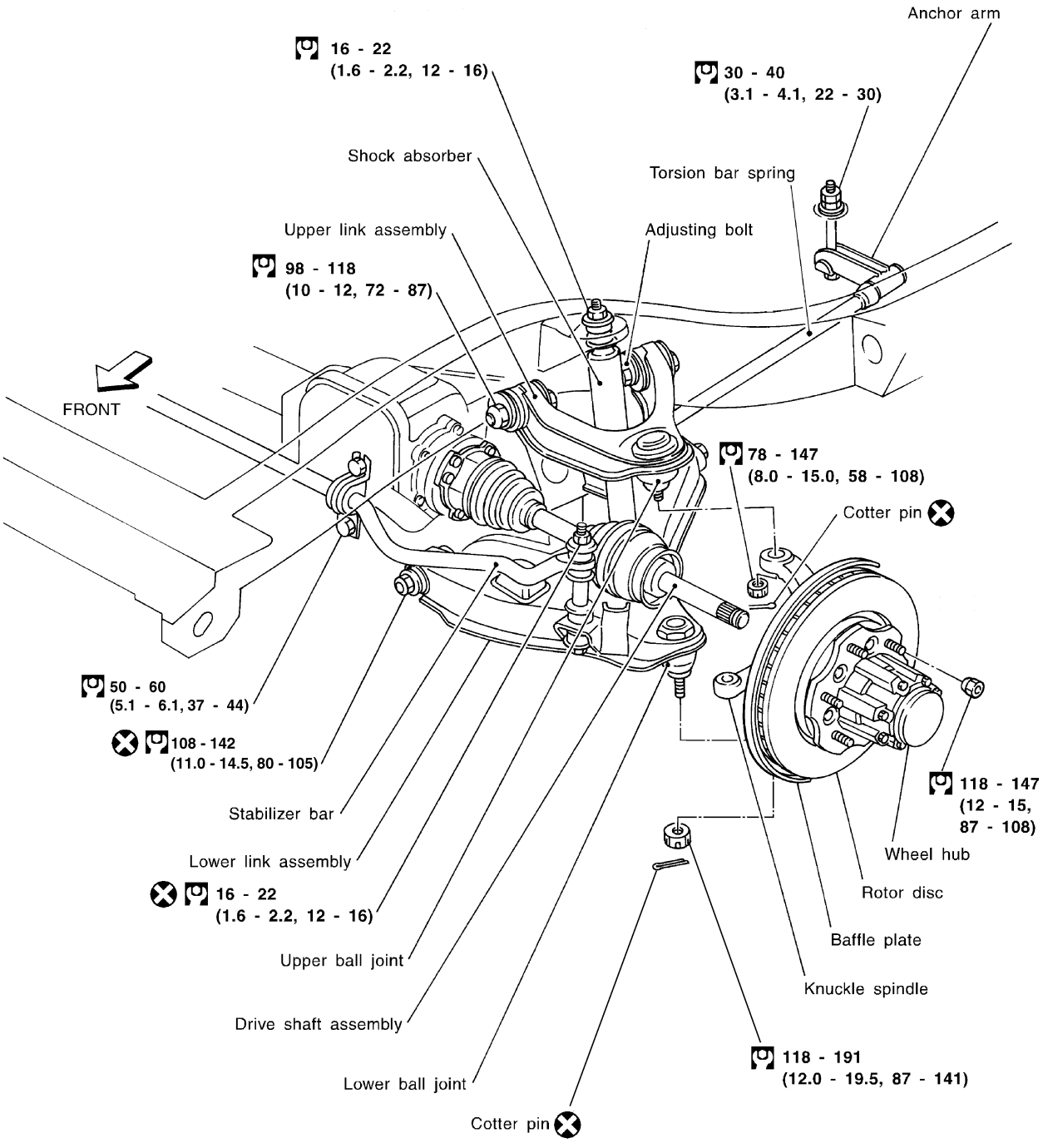

: N•m (kg-m, ft-lb)

WSU014

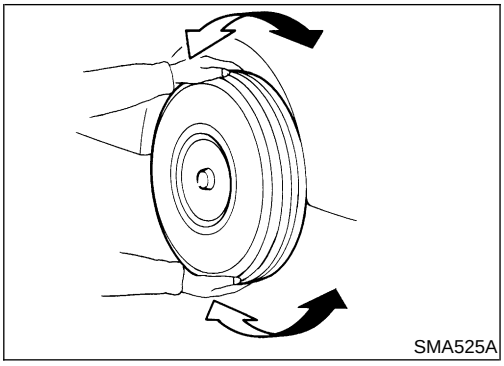
SMA525A

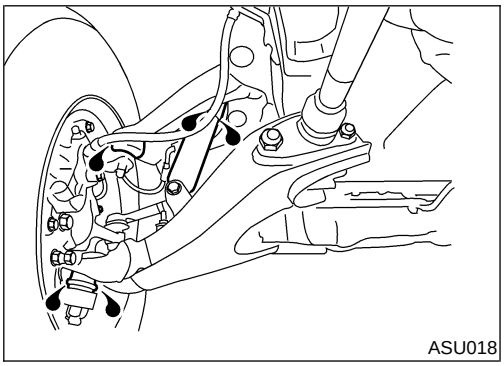
ASU018

On-vehicle Service

FRONT SUSPENSION PARTS

NESU0006

Check front suspension parts for excessive play, cracks, wear and other damage.

- Shake each front wheel to check for excessive play.
  If looseness is noted, adjust wheel bearing end play, then check ball joint end play. Refer to “INSPECTION”, SU-20.
- Make sure that the cotter pin is inserted.
- Retighten all nuts and bolts to the specified torque.
  : Refer to “FRONT SUSPENSION”, SU-12.
- Check shock absorber for oil leakage and other damage.
- Check suspension ball joint for grease leakage and ball joint dust cover for cracks and other damage.

FRONT WHEEL ALIGNMENT

NESU0007

Before checking front wheel alignment, make a preliminary inspection (Unladen*).
*: Fuel, radiator coolant and engine oil full. Spare tire, jack, hand tools and mats in designated positions.

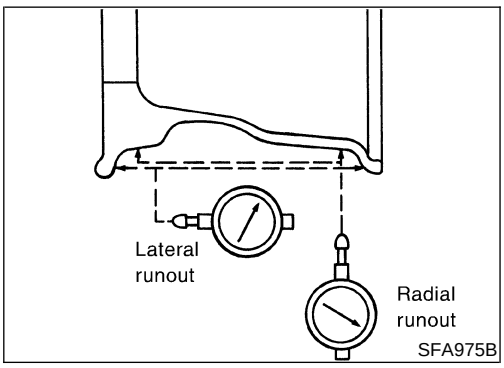

SFA975B

Preliminary Inspection

NESU0007S01

1. Check tires for wear and proper inflation.
2. Check wheels for deformation, cracks and other damage.
   If deformed, remove wheel and check wheel runout.
   a. Remove tire from wheel and mount on a tire balance machine.
   b. Set dial indicator as shown in the illustration.
   Wheel runout (Dial indicator value):
   Refer to “WHEEL RUNOUT AVERAGE”, SU-20.
3. Check front wheel bearings for looseness.
4. Check front suspension for looseness.
5. Check steering linkage for looseness.
6. Check that front shock absorbers work properly by using the standard bounce test.

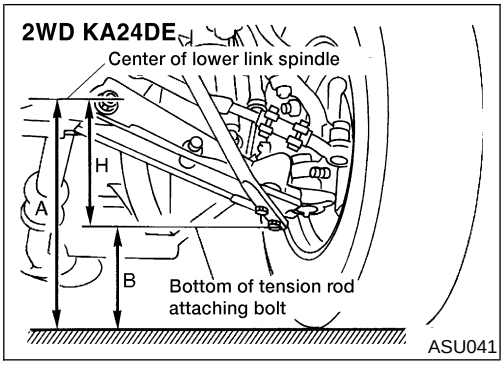

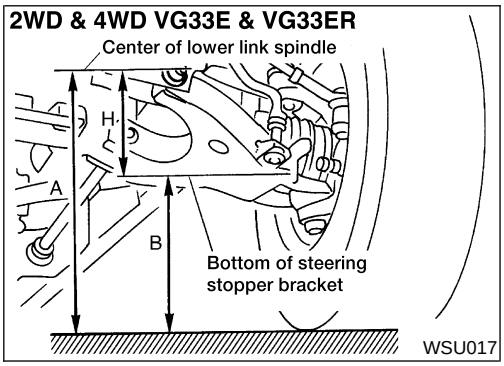

7. Check vehicle posture (Unladen): H = A − B mm (in)

   Refer to "2WD KA24DE Models", SU-21, "2WD VG33E and VG33ER Models", SU-22, or "4WD Models", SU-22.

a. Exercise the front suspension by bouncing the front of the vehicle 4 or 5 times to ensure that the vehicle is in a neutral height attitude.

b. Measure wheel alignment.

   Refer to "2WD KA24DE Models", SU-21, "2WD VG33E and VG33ER Models", SU-22, or "4WD Models", SU-22.

c. If wheel alignment is not as specified, adjust vehicle posture.

   Refer to "2WD KA24DE Models", SU-21, "2WD VG33E and VG33ER Models", SU-22, or "4WD Models", SU-22.

d. Adjust wheel alignment.

   Refer to "2WD KA24DE Models", SU-21, "2WD VG33E and VG33ER Models", SU-22, or "4WD Models", SU-22.

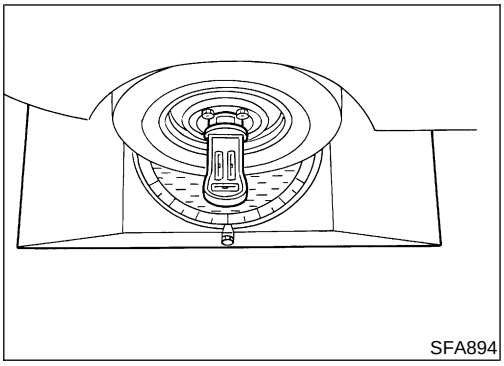

Camber, Caster and Kingpin Inclination

NESU0007S02

Before checking camber, caster or kingpin inclination, move vehicle up and down on turning radius gauge to minimize friction. Ensure that the vehicle is in correct posture.

- Measure camber, caster and kingpin inclination of both right and left wheels with a suitable alignment gauge and adjust in accordance with the following procedures.

  Camber, Caster and Kingpin inclination:

  Refer to "2WD KA24DE Models", SU-21, "2WD VG33E and VG33ER Models", SU-22, or "4WD Models", SU-22.

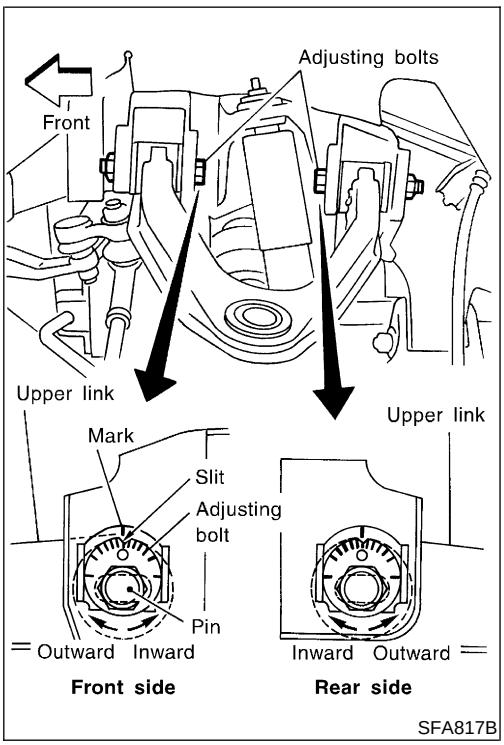

- In the following two cases, temporarily tighten the adjusting bolts while aligning the matching marks with the slits as shown in the figure at the left and measure the camber, caster and kingpin inclination:

a) When replacing the upper link or other suspension parts with new ones

b) When matching marks were not painted on adjusting bolts before suspension disassembly procedures

- If matching marks were already painted during suspension disassembly, align the matching marks with the slits, then temporarily tighten the adjusting bolts. Measure the camber, caster and kingpin inclination.

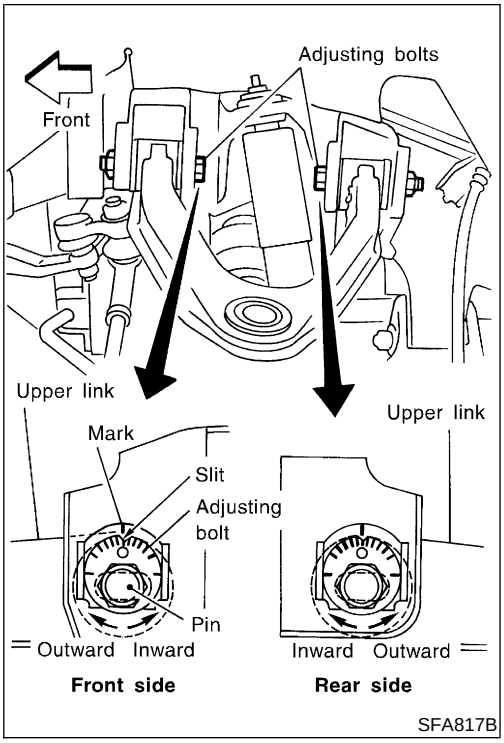

Adjustment

NESU0007S03

1. Both camber and caster angles are adjusted by adjusting bolts.

- If the kingpin inclination is outside specifications, check the front suspension parts for wear or damage. Replace faulty parts with new ones.

2. From the measured value, read the coordinate (or: graduation) at the intersecting point in the graph.

a. If the coordinate (or: graduation) at the intersecting point is positive, move the pin outward by turning the corresponding adjusting bolt by the indicated graduation.

b. If the coordinate (or: graduation) at the intersecting point is negative, move the pin inward by turning the corresponding adjusting bolt by the indicated graduation.
After properly moving the pin(s), tighten the front and rear adjusting bolts to specifications.

3. Re-measure to ensure that the camber and caster are within specified tolerances.
[Example]

a. Measured values corresponding with the two values indicated below: (See chart for 4WD model.)
Camber angle: −0°06′ (−0.10°)
Caster angle: 2°10′ (2.17°)

b. Apply the above two values to the graph and determine point "A".

c. The coordinate (or: graduation) indicates that both the front and rear adjusting bolts must be turned outward by 3 graduations.
Turn the adjusting bolts by the amount corresponding with the 3 graduations.

2WD

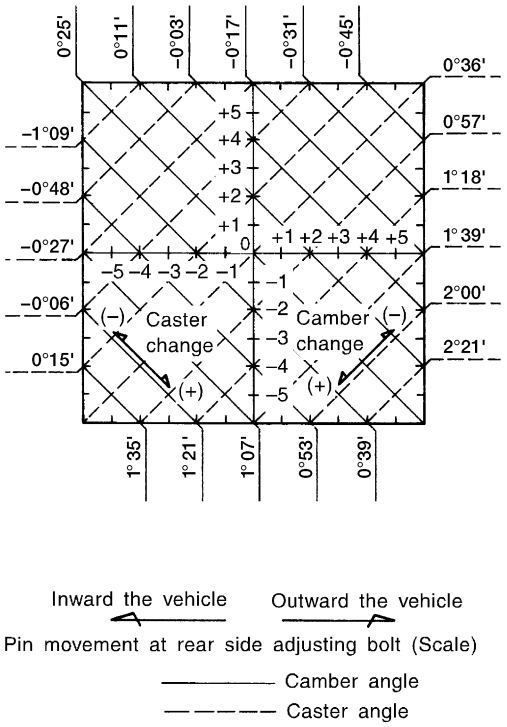

4WD

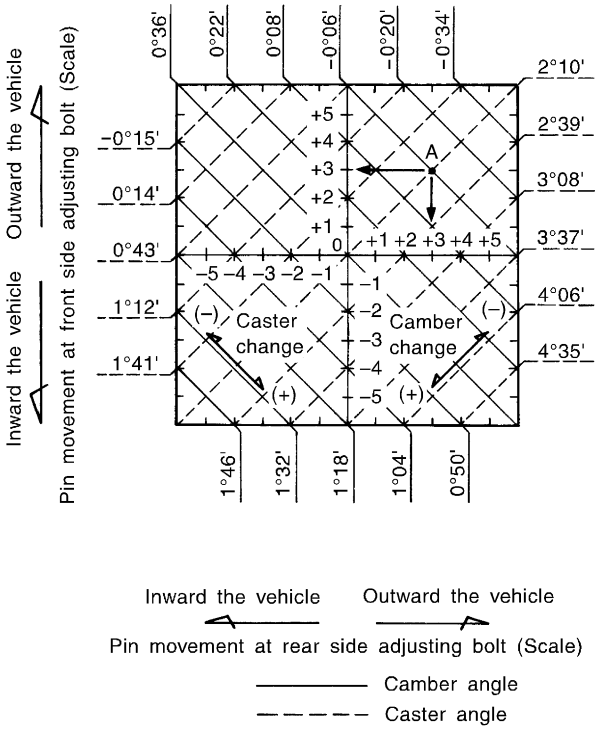

AFA147

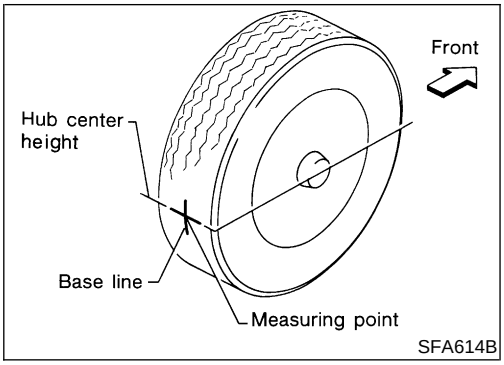

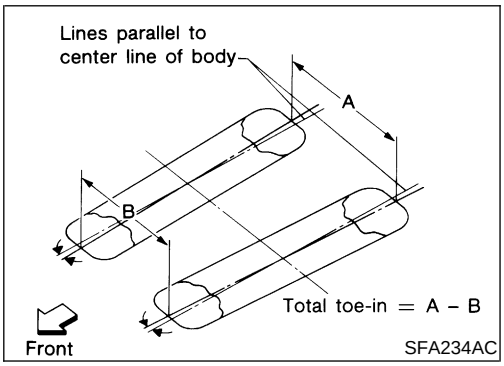

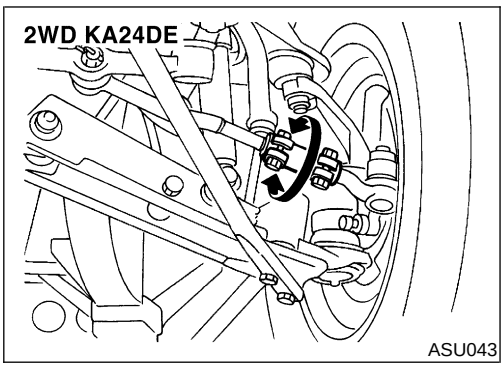

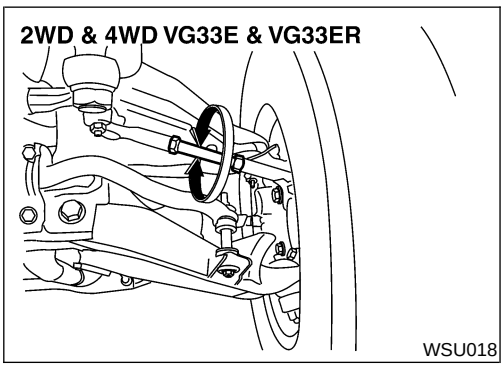

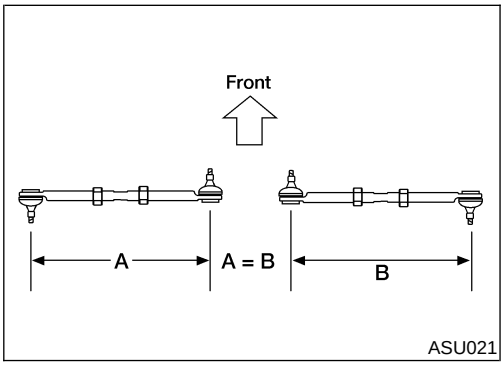

Toe-in

NESU0007S04

Measure toe-in using the following procedure.

WARNING:

- **Always perform the following procedure on a flat surface.**
- **Make sure that no one is in front of the vehicle before pushing it.**

1. Bounce front of vehicle up and down to stabilize the posture.
2. Push the vehicle straight ahead about 5 m (16 ft).
3. Put a mark on base line of the tread (rear side) of both tires at the same height of hub center. This mark is a measuring point.
4. Measure distance "A" (rear side).
5. Push the vehicle slowly ahead to rotate the wheels 180 degrees (1/2 turn).

- **If the wheels have rotated more than 180 degrees (1/2 turn), try the above procedure again from the beginning. Never push vehicle backward.**

6. Measure distance "B" (front side).

Total toe-in:

Refer to "2WD KA24DE Models", SU-21, "2WD VG33E and VG33ER Models", SU-22, or "4WD Models", SU-22.

7. Adjust toe-in by varying the length of both steering tie-rods.

a. Loosen clamp bolts or lock nuts.

b. Adjust toe-in by turning both the left and right tie-rod tubes equal amounts.

Make sure that the tie-rod bars are screwed into the tie-rod tube more than 35 mm (1.38 in) KA24DE, 22mm (0.87 in) 2WD and 4WD VG33E and VG33ER.
Make sure that the tie-rods are the same length.

Standard length (A = B):
2WD KA24DE models
343.9 mm (13.54 in)
2WD and 4WD VG33E and VG33ER models
297.6 mm (11.72 in)

c. Tighten clamp bolts or lock nuts, then torque them.

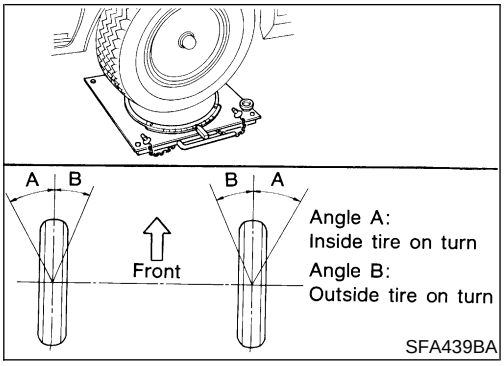

Front Wheel Turning Angle

NESU0007S05

1. Set wheels in straight-ahead position. Then move vehicle forward until front wheels rest properly on turning radius gauge.
2. Rotate steering wheel all the way right and left; measure turning angle.

- On power steering models, turn steering wheel to full lock and apply force (at circumference of steering wheel) of 98 to 147 N (10 to 15 kg, 22 to 33 lb) with engine at idle.

- **Do not hold the steering wheel at full lock for more than 15 seconds.**

Wheel turning angle (Full turn):

Refer to "2WD KA24DE Models", SU-21, "2WD VG33E and VG33ER Models", SU-22, or "4WD Models", SU-22.

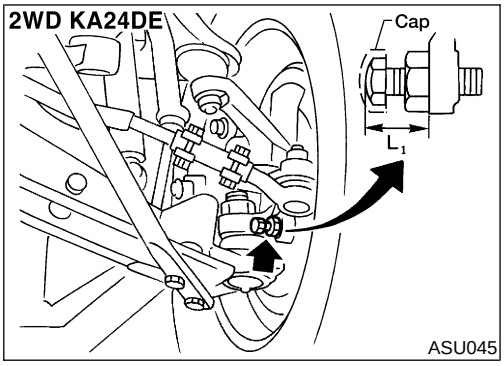

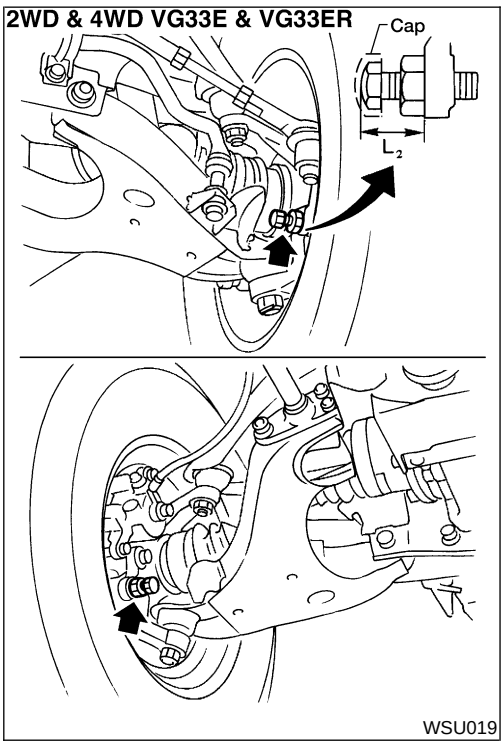

3. Adjust stopper bolt if necessary.

Standard length "L_1" (2WD KA24DE models):
20 mm (0.79 in)
(Length before cap is mounted)
Standard length "L_2" (2WD and 4WD VG33E and VG33ER models):
Except P265/70R15 tire:
26.5 mm (1.043 in)
(Length before cap is mounted)
P265/70R15 tire:
30.0 mm (1.2 in)
(Length before cap is mounted)

Components

NESU0008

2WD KA24DE MODELS

NESU0008S06

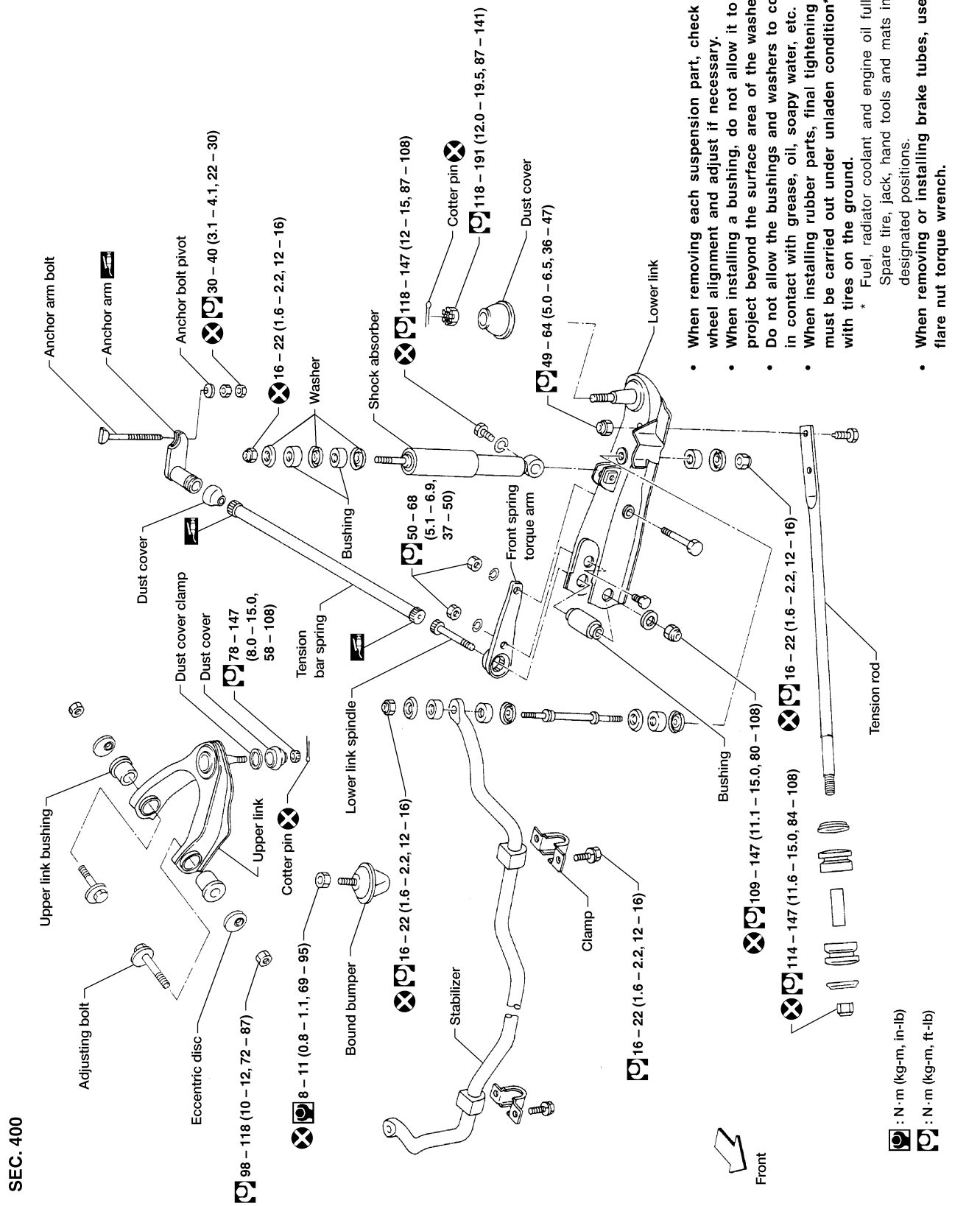

- **When removing each suspension part, check wheel alignment and adjust if necessary.**
- **When installing a bushing, do not allow it to project beyond the surface area of the washer.**
- **Do not allow the bushings and washers to come in contact with grease, oil, soapy water, etc.**
- **When installing rubber parts, final tightening must be carried out under unladen condition* with tires on the ground.**

  * Fuel, radiator coolant and engine oil full. Spare tire, jack, hand tools and mats in designated positions.
- **When removing or installing brake tubes, use flare nut torque wrench.**

SEC. 400

AFA150

2WD AND 4WD VG33E AND VG33ER MODELS

NESU0008S07

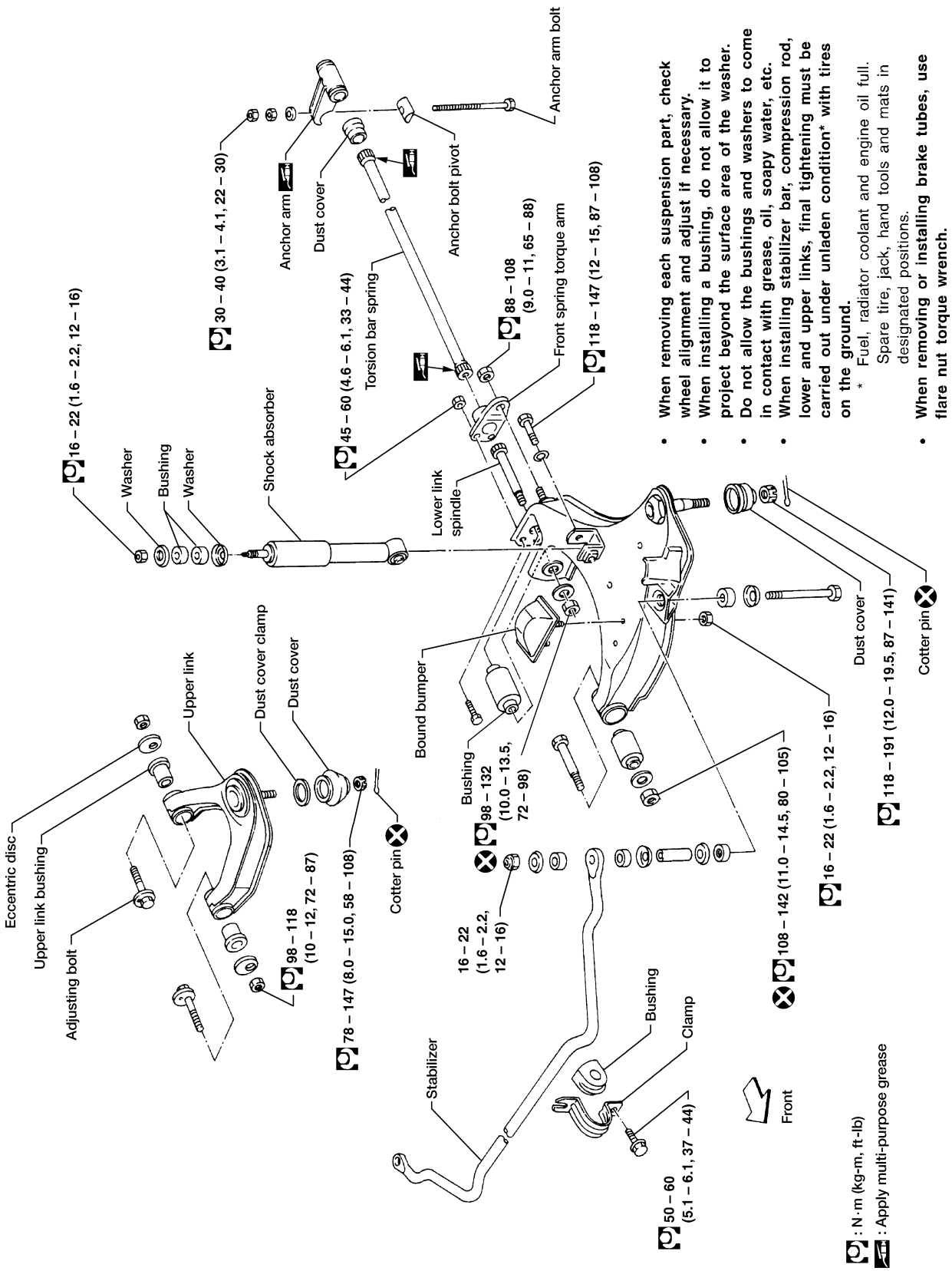

- **When removing each suspension part, check wheel alignment and adjust if necessary.**
- **When installing a bushing, do not allow it to project beyond the surface area of the washer.**
- **Do not allow the bushings and washers to come in contact with grease, oil, soapy water, etc.**
- **When installing stabilizer bar, compression rod, lower and upper links, final tightening must be carried out under unladen condition* with tires on the ground.**
  * Fuel, radiator coolant and engine oil full. Spare tire, jack, hand tools and mats in designated positions.
- **When removing or installing brake tubes, use flare nut torque wrench.**

SEC. 401

WSU010

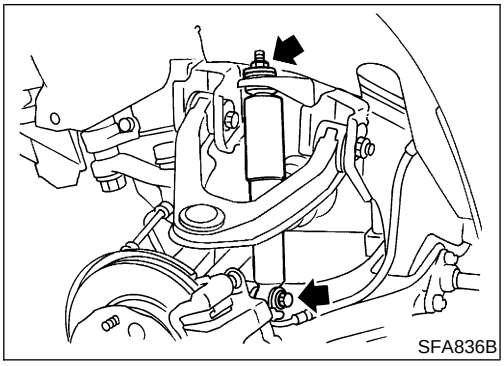
SFA836B

Shock Absorber

REMOVAL AND INSTALLATION

NESU0009

1. Support lower link with jack.
2. Remove bolt and nut that hold shock absorber.
3. Tighten upper nut and lower bolt to specification. Refer to “Components” SU-12.

INSPECTION

NESU0010

Except for nonmetallic parts, clean all parts with suitable solvent and dry with compressed air.

Use compressed air to blow dirt and dust off of nonmetallic parts.

- Check for oil leakage and cracks. Replace if necessary.
- Check piston rod for cracks, deformation and other damage. Replace if necessary.
- Check rubber parts for wear, cracks, damage and deformation. Replace if necessary.

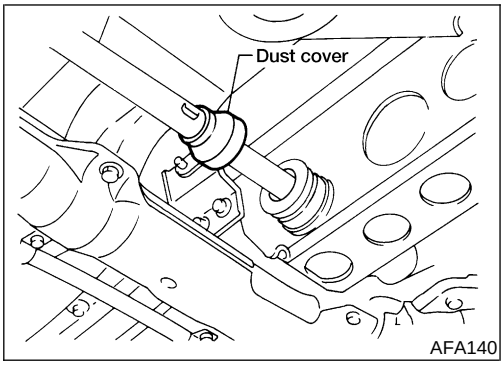

AFA140

Torsion Bar Spring

REMOVAL

NESU0011

1. Move dust cover.

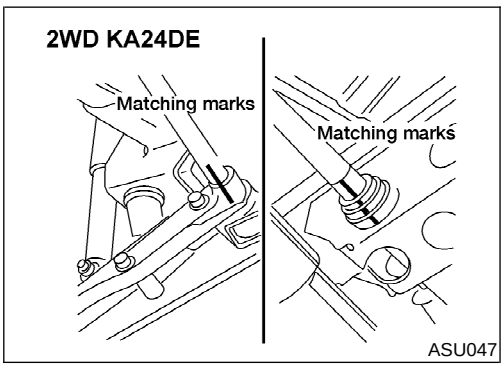

ASU047

2. Paint matching marks on the torsion bar spring and the corresponding arm.

Always use paint to place the matching mark; do not scribe the affected parts.

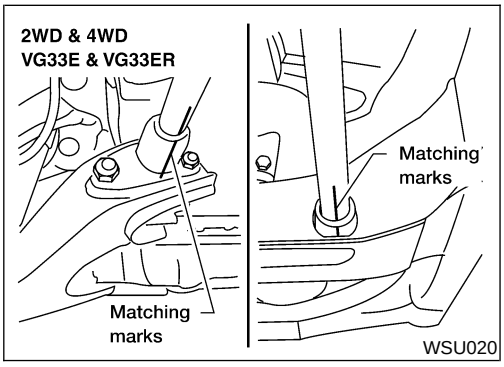

WSU020

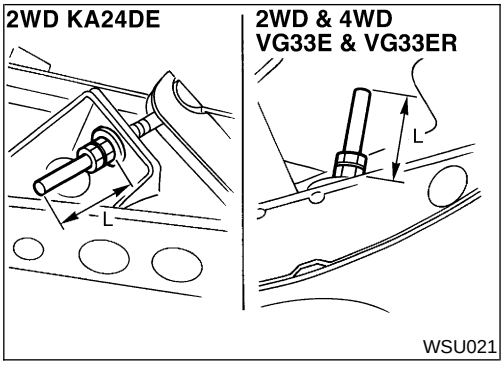

3. Measure anchor bolt protrusion "L" and remove the lock nut and adjusting nut.

Standard length "L" = 68 mm (2.68 in)

Before removing the nuts, ensure that twisting force is eliminated from the torsion bar springs.

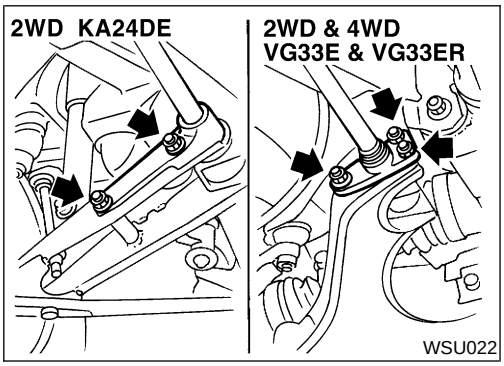

4. Remove torsion bar spring.

- Remove torque arm fixing nuts, then withdraw torsion bar spring forward with torque arm.

INSPECTION

NESU0012

- Check torsion bar spring for wear, twist, bend and other damage.
- Check serrations of each part for cracks, wear, twist and other damage.
- Check dust cover for cracks.

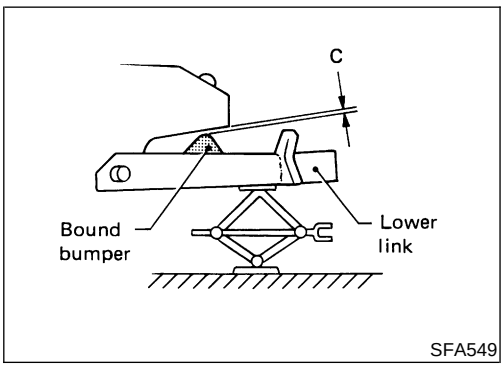

INSTALLATION AND ADJUSTMENT

NESU0013

Adjustment of anchor arm adjusting nut is in tightening direction only.
Do not adjust by loosening anchor arm adjusting nut.

1. Coat multi-purpose grease on the serration of torsion bar spring.
2. Place lower link in the position where bound bumper clearance "C" is 0.

Clearance "C": 0 mm (0 in)

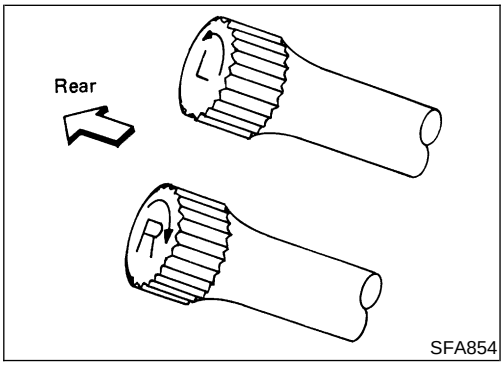

3. Install torsion bar spring with torque arm.

Be sure to install right and left torsion bar springs correctly.

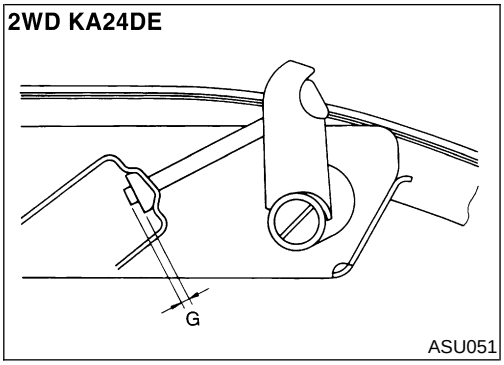

4. While aligning the anchor arm with the matching mark, install the anchor arm to the torsion bar spring.
If a new torsion bar spring or anchor arm is installed, adjust anchor arm length to the dimension indicated in the figure at the left.

Standard length "G":
2WD KA24DE models
6 - 18 mm (0.24 - 0.71 in)
2WD and 4WD VG33E and VG33ER models
25 - 39 mm (0.98 - 1.54 in)

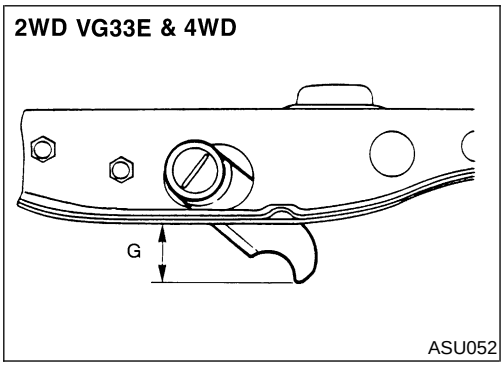

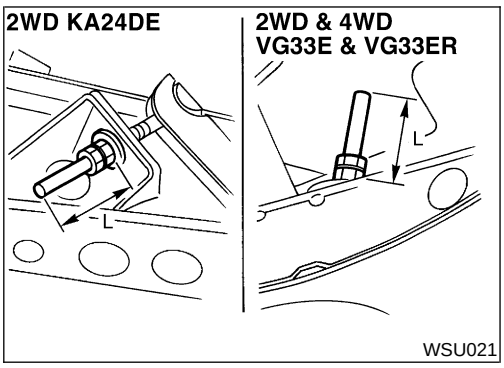

5. Tighten the adjusting nut so the torsion bar length corresponds with dimension "L" previously measured during torsion bar removal. Tighten the lock nut to specifications.
If a new torsion bar spring or anchor arm is installed, tighten the adjusting nut to the dimension indicated in the figure at the left, then tighten the lock nut to specifications.

Standard length "L": 68 mm (2.68 in)

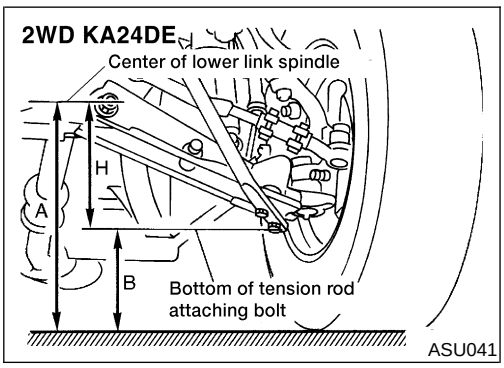

6. Bounce vehicle with tires on ground (Unladen) to eliminate friction of suspension.
7. Measure vehicle posture "H".
a. Exercise the front suspension by bouncing the front of the vehicle 4 or 5 times to ensure that the vehicle is in a neutral height attitude.
b. Measure vehicle posture ... Dimension "H".

H = A − B mm (in) "Unladen"
Refer to "2WD KA24DE Models", SU-21, "2WD VG33E and VG33ER Models", SU-22, or "4WD Models", SU-22.

8. If height of the vehicle is not within allowable limit, adjust vehicle posture.

Refer to "2WD KA24DE Models", SU-21, "2WD VG33E and VG33ER Models", SU-22, or "4WD Models", SU-22.

9. Check wheel alignment if necessary.

Refer to "2WD KA24DE Models", SU-21, ""2WD VG33E and VG33ER Models"", SU-22, or "4WD Models", SU-22.

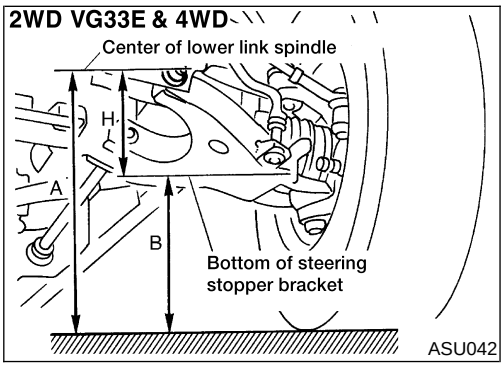

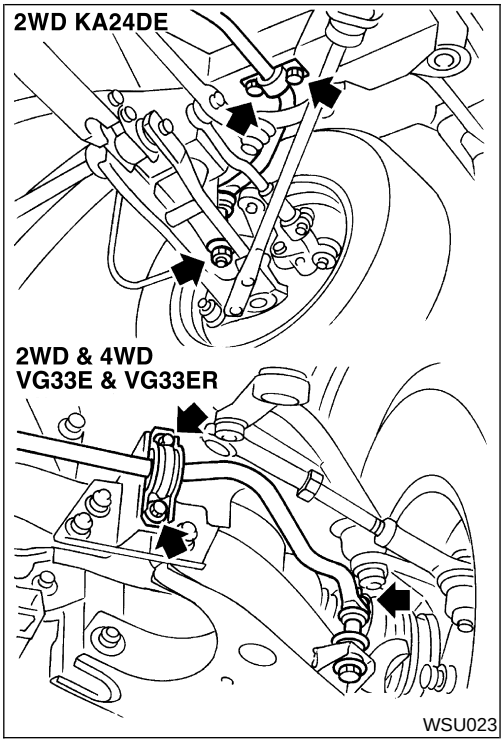

Stabilizer Bar

REMOVAL

NESU0014

- Remove stabilizer bar connecting bolts and clamp bolts.

INSPECTION

NESU0015

- Check stabilizer bar for twist and deformation.
  Replace if necessary.
- Check rubber bushing for cracks, wear and deterioration.
  Replace if necessary.

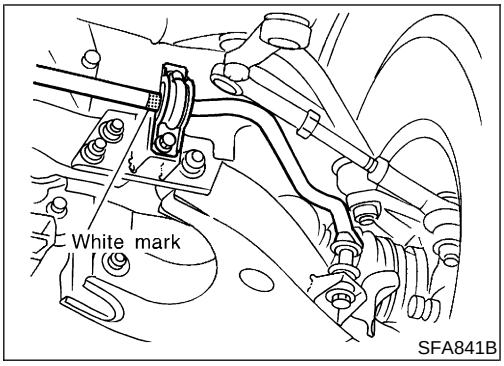

INSTALLATION

NESU0016

- Install bushing outside of white mark painted on stabilizer.
- Refer to “Components”, SU-12.

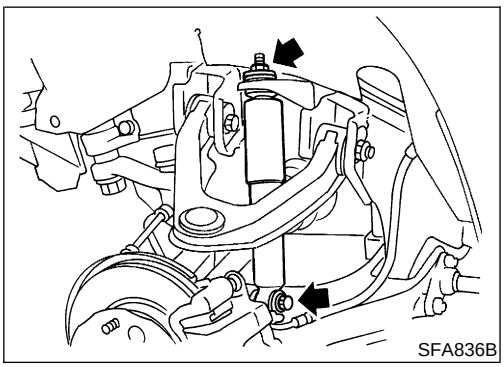

Upper Link

REMOVAL

NESU0017

1. Remove shock absorber. Refer to “Shock Absorber”, SU-14.
2. Separate upper ball joint stud from knuckle spindle.
   Support lower link with jack.
   Refer to ***AX-14***, “Knuckle Spindle”.

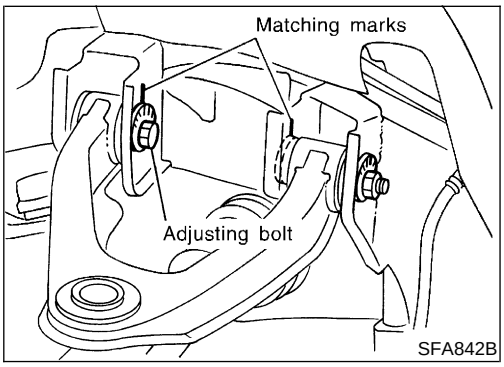

3. Put matching marks on adjusting bolts and remove adjusting bolts.

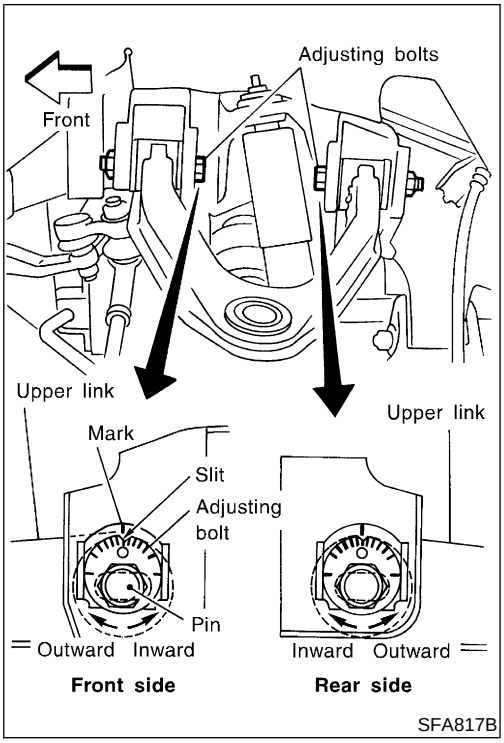

INSTALLATION

NESU0018

1. While aligning the adjusting bolts with the matching marks, install the upper link.
   If a new upper link or any other suspension part is installed, align the matching mark with the slit as indicated in the figure at the left, then install the upper link.
   Refer to "FRONT WHEEL ALIGNMENT", SU-7.
2. Install shock absorber.
3. Tighten adjusting bolts under unladen condition (fuel, radiator coolant, and engine oil full; with spare tire, jack, hand tools, and mats in designated positions) with tires on ground.
4. After installing, check wheel alignment. Adjust if necessary. Refer to "FRONT WHEEL ALIGNMENT", SU-7.

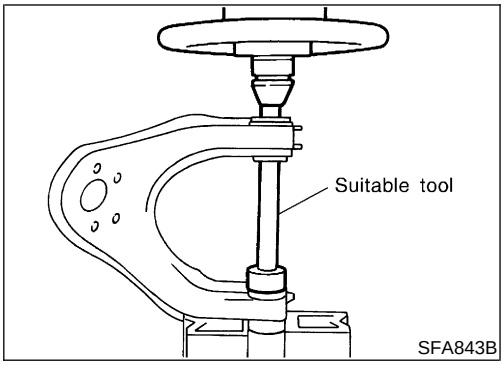

DISASSEMBLY

NESU0019

- Press out upper link bushings.

INSPECTION

NESU0020

- Check adjusting bolts and rubber bushings for damage. Replace if necessary.
- Check upper link for deformation and cracks. Replace if necessary.

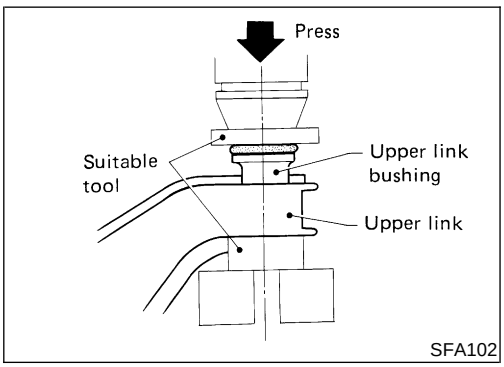

ASSEMBLY

NESU0021

1. Apply soapsuds to rubber bushing.
2. Press upper link bushing.

Press bushing so that the flange of bushing securely contacts the end surface of the upper link collar.

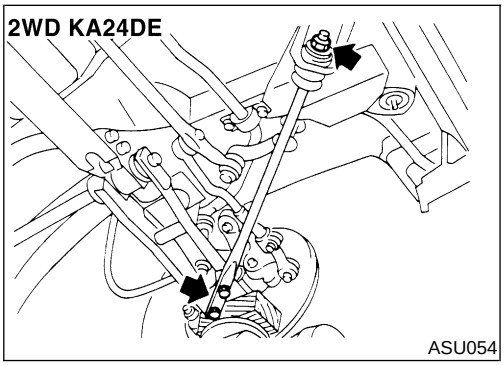

Tension Rod

REMOVAL AND INSTALLATION

NESU0055

1. Remove fixing nuts on lower link and frame.
   Support lower link with jack.

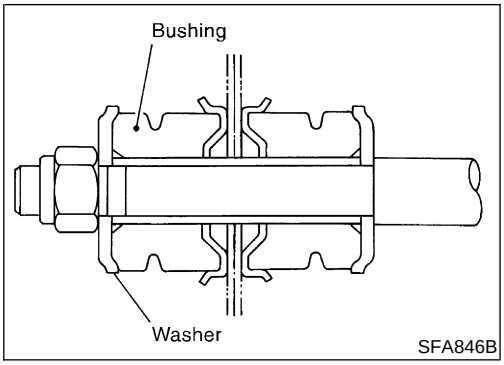

2. Install tension rod.
Make sure that the bushings and washers are installed properly.

INSPECTION

NESU0056

- Check tension rod for deformation and cracks. Replace if necessary.
- Check rubber bushings for damage. Replace if necessary.

Lower Link

REMOVAL AND INSTALLATION

NESU0024

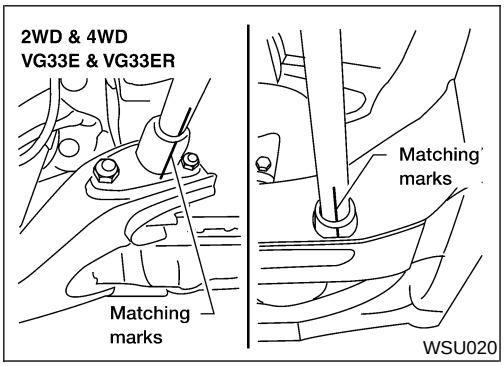

1. Remove torsion bar spring. Refer to "REMOVAL", SU-14.

Make matching marks and measure dimension "L" when loosening adjusting nut until there is no tension on torsion bar spring.

Standard length "L": 68 mm (2.68 in)

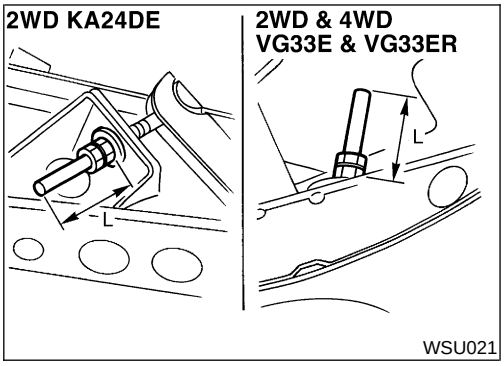

2. Remove shock absorber lower fixing bolt.
3. Remove stabilizer bar connecting bolt.
4. Separate drive shaft from front final drive (4WD models). Refer to ***AX-17***, "Drive Shaft".
5. Separate lower link ball joint from knuckle spindle. Refer to ***AX-14***,"Knuckle Spindle".

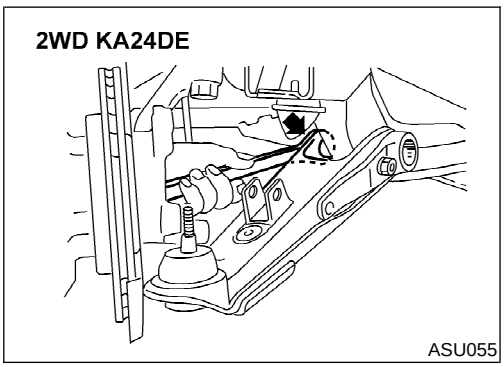

6. Remove front lower link fixing nut.

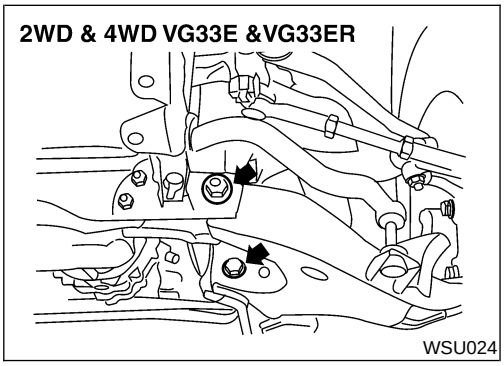

Lower Link (Cont'd)

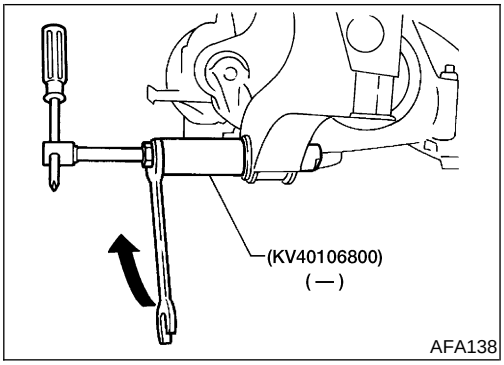

AFA138

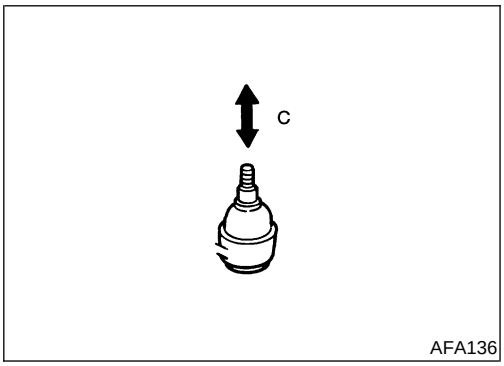

AFA136

7. Remove bushing of lower link spindle from frame with Tool.
8. After installing lower link, adjust wheel alignment and vehicle height. Refer to "FRONT WHEEL ALIGNMENT", SU-7.

INSPECTION

NESU0025

Lower Link and Lower Link Spindle

NESU0025S01

- Check for deformation and cracks. Replace if necessary.

Lower Link Bushing

NESU0025S02

- Check for distortion and damage. Replace if necessary.

Upper Ball Joint and Lower Ball Joint

REMOVAL AND INSTALLATION

NESU0026

- Separate knuckle spindle from upper and lower links. Refer to ***AX-14***, "Knuckle Spindle".

INSPECTION

NESU0027

- Check joints for play. If ball is worn and play in axial direction is excessive or joint is hard to swing, replace as a upper link or lower link.

  Axial end play "C":

  Upper link

  0 mm (0 in)

  Lower link

  2WD KA24DE models 1.3 mm (0.051 in) or less

  2WD and 4WD VG33E and VG33ER models 0.2 mm (0.008 in) or less

- Check dust cover for damage.
  Replace dust cover and dust cover clamp if necessary.

Service Data and Specifications (SDS)

GENERAL SPECIFICATIONS (FRONT)

NESU0028

Suspension type	Independent double wishbone torsion bar spring
Shock absorber type	Double-acting hydraulic
Stabilizer	Standard equipment

WHEEL RUNOUT AVERAGE*

NESU0029

Wheel type	Aluminum	Steel	
		Inside	Outside
Radial runout limit mm (in)	0.3 (0.012)	0.8 (0.031) or less	0.4 (0.016) or less
Lateral runout limit mm (in)	0.3 (0.012)	1.0 (0.039) or less	0.9 (0.035) or less

* Wheel runout average = (Outside runout value + Inside runout value) x 0.5

UPPER BALL JOINT

NESU0030

Vertical end play "C" mm (in)	0 (0)

LOWER BALL JOINT

NESU0031

Applied model	2WD	4WD
Vertical end play "C" mm (in)	1.3 (0.051) or less	0.2 (0.008) or less

WHEEL ALIGNMENT (UNLADEN*1)

NESU0032

2WD KA24DE Models

NESU0032S05

Camber Degree minute (Decimal degree)			Minimum		−0°05′ (−0.08°)
			Nominal		0°25′ (0.42°)
			Maximum		0°55′ (0.92°)
			Left and right difference		45′ (0.75°) or less
Caster Degree minute (Decimal degree)			Minimum		0°06′ (0.10°)
			Nominal		0°36′ (0.60°)
			Maximum		1°06′ (1.10°)
			Left and right difference		45′ (0.75°) or less
Kingpin inclination Degree minute (Decimal degree)			Minimum		8°35′ (8.58°)
			Nominal		9°05′ (9.08°)
			Maximum		9°35′ (9.58°)
Total toe-in	Distance (A − B) mm (in)		Radial tire	Minimum	2 (0.08)
				Nominal	3 (0.12)
				Maximum	4 (0.16)
	Angle (left plus right) Degree minute (Decimal degree)		Radial tire	Minimum	11′ (0.18°)
				Nominal	16′ (0.27°)
				Maximum	20′ (0.33°)
Wheel turning angle	Full turn*2				P225/70R15
		Inside Degree minute (Decimal degree)	Minimum		35°00′ (35.00°)
			Nominal		37°00′ (37.00°)
			Maximum		37°00′ (37.00°)
		Outside Degree minute (Decimal degree)	Minimum		31°36′ (31.60°)
			Nominal		33°36′ (33.60°)
			Maximum		33°36′ (33.60°)
Vehicle posture	Lower arm pivot height (H) mm (in)				111 - 115 (4.37 - 4.53)

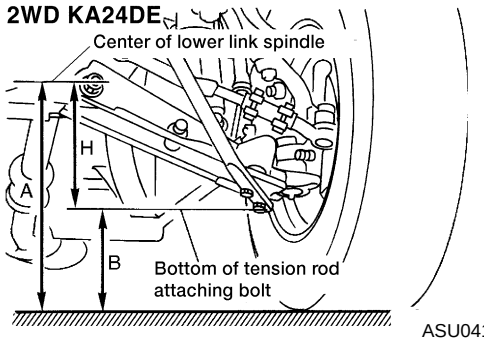

ASU041

*1: Fuel, radiator coolant and engine oil full. Spare tire, jack, hand tools and mats in designated positions.
*2: Wheel turning force (at circumference of steering wheel) of 98 to 147 N (10 to 15 kg, 22 to 33 lb) with engine idle.

2WD VG33E and VG33ER Models

NESU0032S03

Camber Degree minute (Decimal degree)			Minimum		0°03′ (0.05°)
			Nominal		0°33′ (0.55°)
			Maximum		1°03′ (1.05°)
			Left and right difference		45′ (0.75°) or less
Caster Degree minute (Decimal degree)			Minimum		2°04′ (2.07°)
			Nominal		2°34′ (2.57°)
			Maximum		3°04′ (3.07°)
			Left and right difference		45′ (0.75°) or less
Kingpin inclination Degree minute (Decimal degree)			Minimum		10°23′ (10.38°)
			Nominal		10°53′ (10.88°)
			Maximum		11°23′ (11.38°)
Total toe-in	Distance (A − B) mm (in)		Radial tire	Minimum	3 (0.12)
				Nominal	4 (0.16)
				Maximum	5 (0.20)
	Angle (left plus right) Degree minute (Decimal degree)		Radial tire	Minimum	15′ (0.25°)
				Nominal	20′ (0.33°)
				Maximum	25′ (0.42°)
Wheel turning angle	Full turn*2	Inside Degree minute (Decimal degree)			VG33E / VG33ER
			Minimum		31°00′ (31.00°) / 30°48′ (30.80°)
			Nominal		33°00′ (33.00°) / 32°48′ (32.80°)
			Maximum		33°00′ (33.00°) / 32°48′ (32.80°)
		Outside Degree minute (Decimal degree)	Minimum		29°00′ (29.00°) / 28°42′ (28.70°)
			Nominal		31°00′ (31.00°) / 30°42′ (30.70°)
			Maximum		31°00′ (31.00°) / 30°42′ (30.70°)
Vehicle posture	Lower arm pivot height (H) mm (in)				37.7 - 41.7 (1.484 - 1.642)

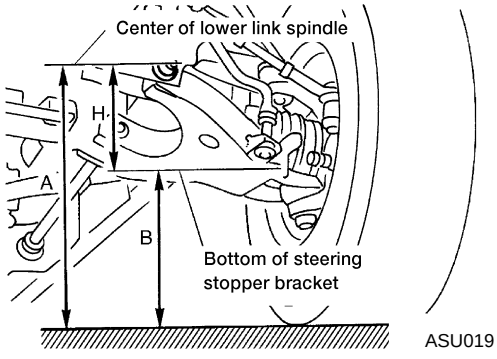

*1: Fuel, radiator coolant and engine oil full. Spare tire, jack, hand tools and mats in designated positions.
*2: Wheel turning force (at circumference of steering wheel) of 98 to 147 N (10 to 15 kg, 22 to 33 lb) with engine idle.

4WD Models

NESU0032S02

	VG33E	VG33ER

Camber Degree minute (Decimal degree)			Minimum		0°06′ (0.10°)	0°03′ (0.05°)
			Nominal		0°36′ (0.60°)	0°33′ (0.55°)
			Maximum		1°06′ (1.10°)	1°03′ (1.05°)
			Left and right difference		45′ (0.75°) or less	
Caster Degree minute (Decimal degree)			Minimum		1°40′ (1.67°)	2°04′ (2.07°)
			Nominal		2°10′ (2.17°)	2°34′ (2.57°)
			Maximum		2°40′ (2.67°)	3°04′ (3.07°)
			Left and right difference		45′ (0.75°) or less	
Kingpin inclination Degree minute (Decimal degree)			Minimum		10°18′ (10.30°)	
			Nominal		10°48′ (10.80°)	
			Maximum		11°18′ (11.30°)	
Total toe-in	Distance (A − B) mm (in)		Radial tire	Minimum	3 (0.12)	
				Nominal	4 (0.16)	
				Maximum	5 (0.20)	
	Angle (left plus right) Degree minute (Decimal degree)		Radial tire	Minimum	15′ (0.25°)	
				Nominal	20′ (0.33°)	
				Maximum	25′ (0.42°)	
Wheel turning angle	Full turn*2	Inside Degree minute (Decimal degree)	Minimum		31°00′ (31.00°)	30°48′ (30.80°)
			Nominal		33°00′ (33.00°)	32°48′ (32.80°)
			Maximum		33°00′ (33.00°)	32°48′ (32.80°)
		Outside Degree minute (Decimal degree)	Minimum		29°00′ (29.00°)	28°42′ (28.70°)
			Nominal		31°00′ (31.00°)	30°42′ (30.70°)
			Maximum		31°00′ (31.00°)	30°42′ (30.70°)
Vehicle posture	Lower arm pivot height (H) mm (in)				45.5 - 49.5 (1.791 - 1.949)	37.7 - 41.7 (1.484 - 1.642)

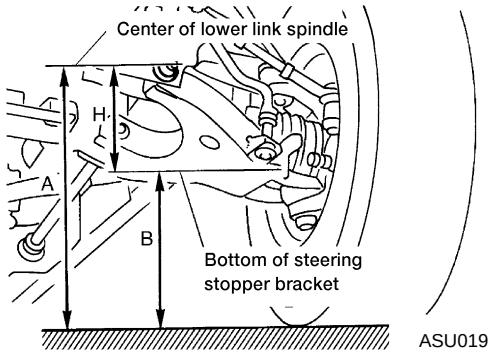

*1: Fuel, radiator coolant and engine oil full. Spare tire, jack, hand tools and mats in designated positions.
*2: Wheel turning force (at circumference of steering wheel) of 98 to 147 N (10 to 15 kg, 22 to 33 lb) with engine idle.

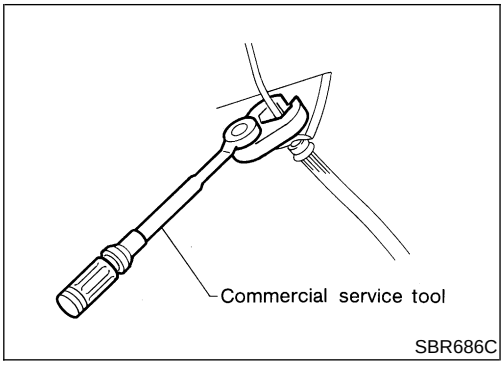

SBR686C

Precautions

PRECAUTIONS

NESU0033

- **When installing rubber parts, final tightening must be carried out under unladen condition* with tires on ground.**
  ***: Fuel, radiator coolant and engine oil full. Spare tire, jack, hand tools and mats in designated positions.**
- **Use flare nut wrench when removing and installing brake tubes.**
- **After installing removed suspension parts, check wheel alignment and adjust if necessary.**
- **Always torque brake lines when installing.**

Preparation

COMMERCIAL SERVICE TOOLS

NESU0035

Tool name	Description	
1 Flare nut crowfoot 2 Torque wrench	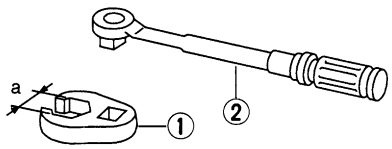 NT360	Removing and installing each brake piping **a: 10 mm (0.39 in)**

Noise, Vibration and Harshness (NVH) Troubleshooting

=NESU0036

Refer to “Noise, Vibration and Harshness (NVH) Troubleshooting”, SU-3.

Components

NESU0037

2WD KA24DE MODELS

NESU0037S05

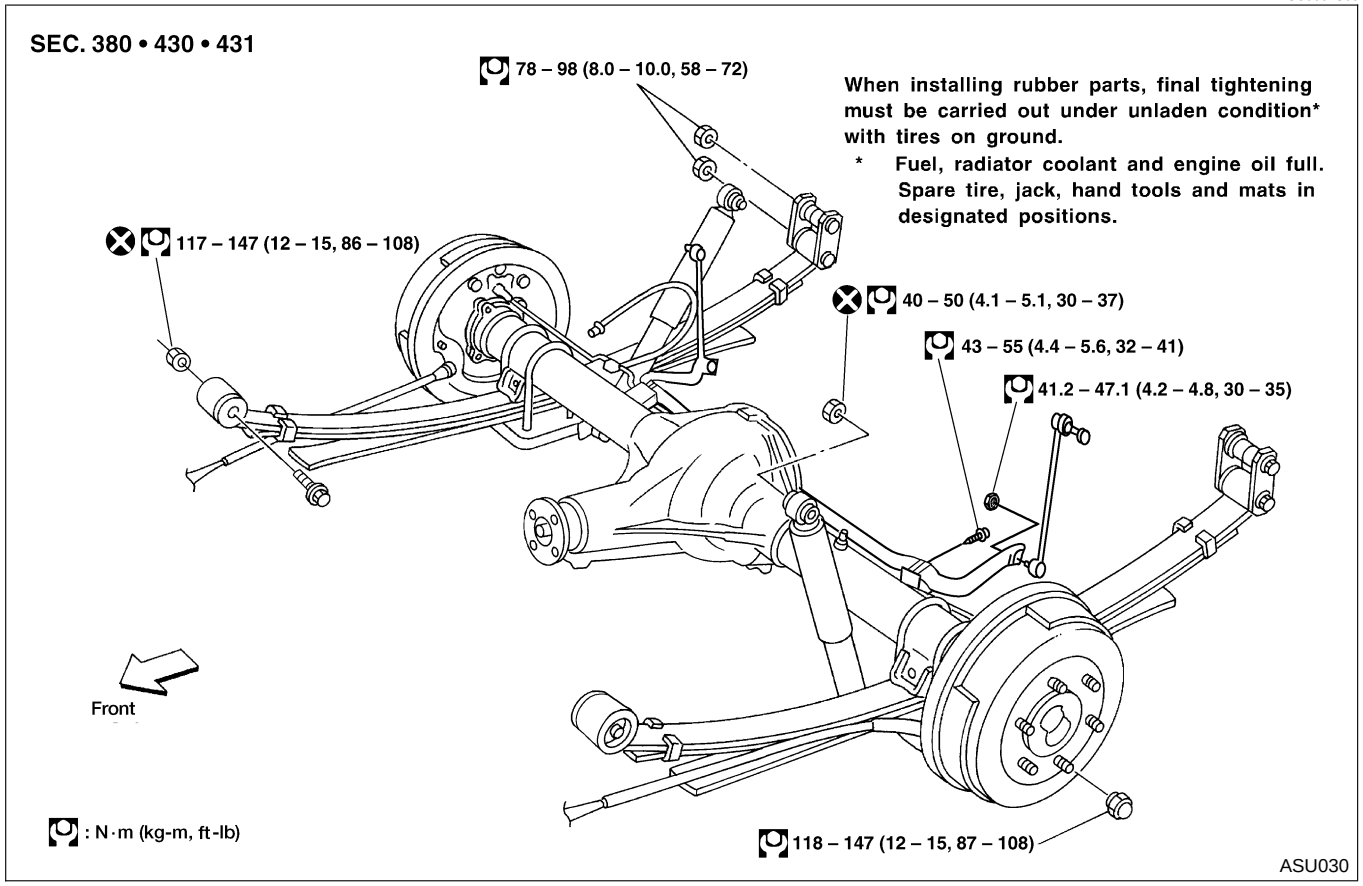

Components (Cont'd)

2WD VG33E AND VG33ER MODELS

NESU0037S03

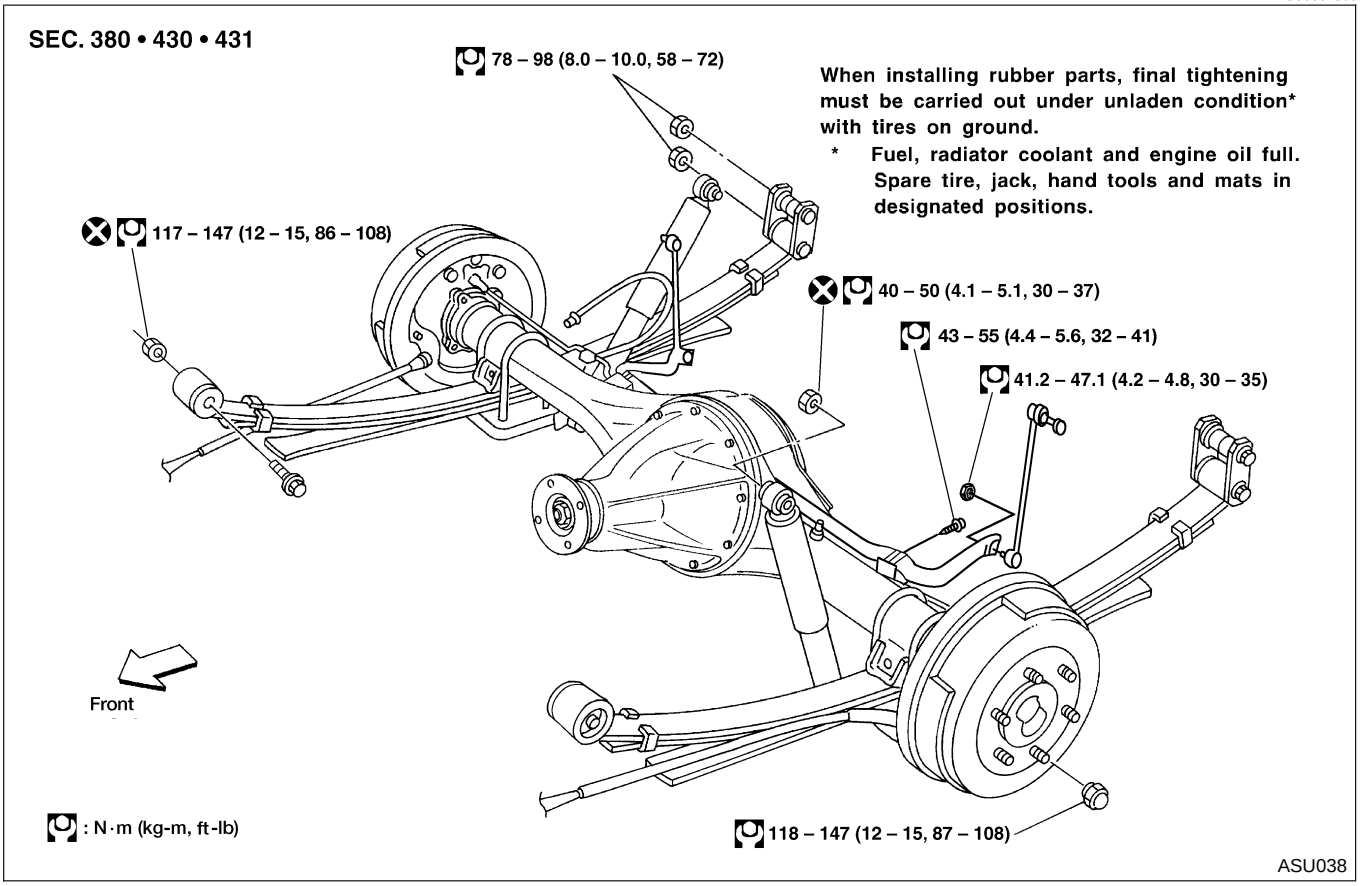

4WD MODELS

NESU0037S04

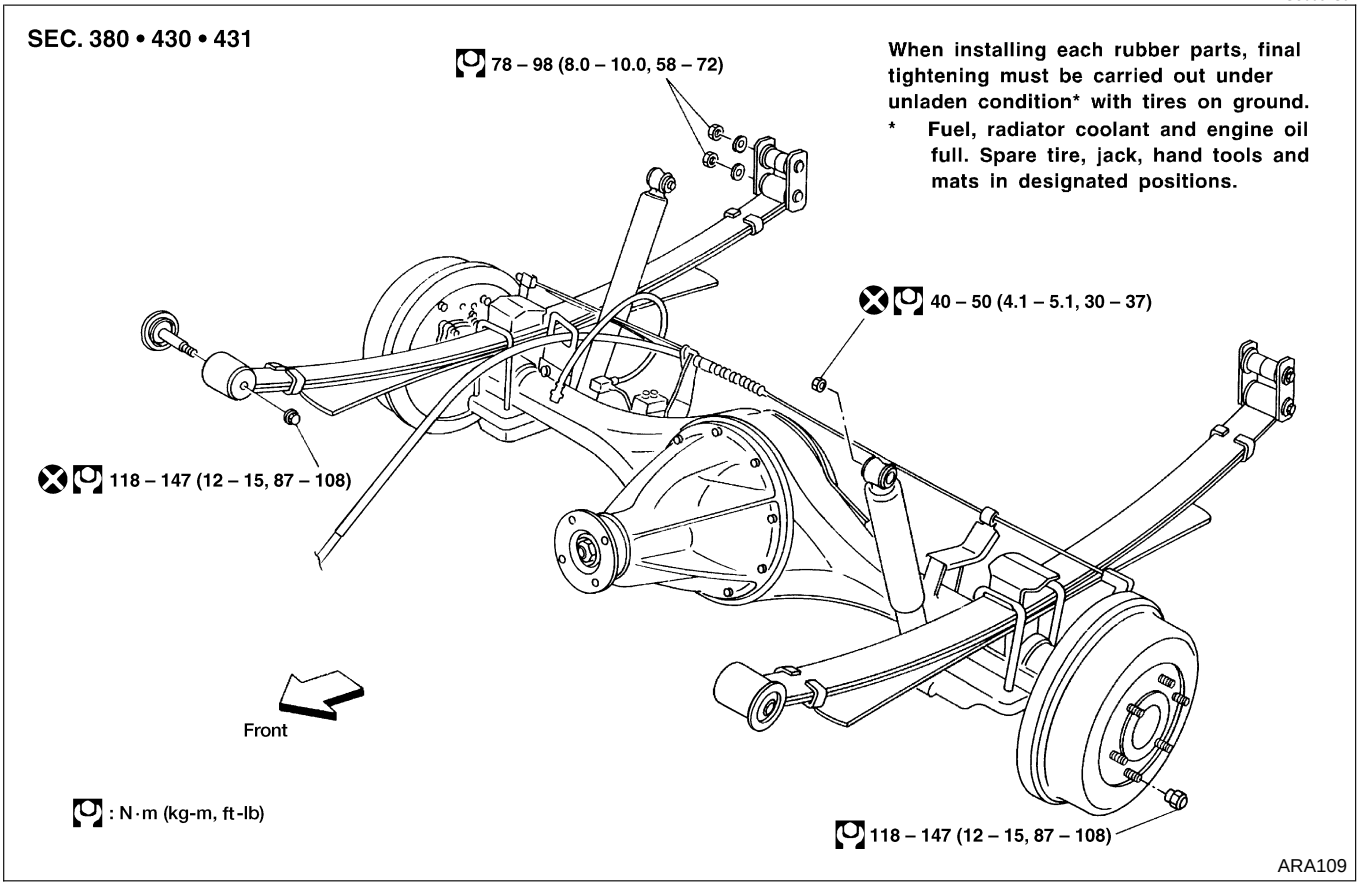

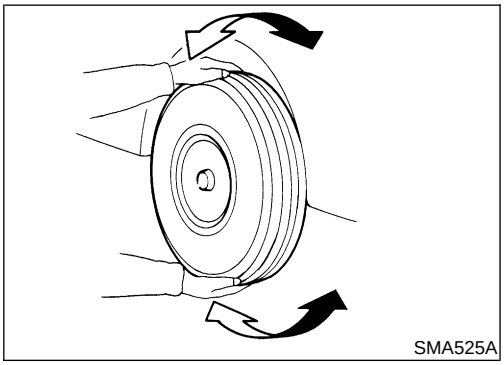
SMA525A

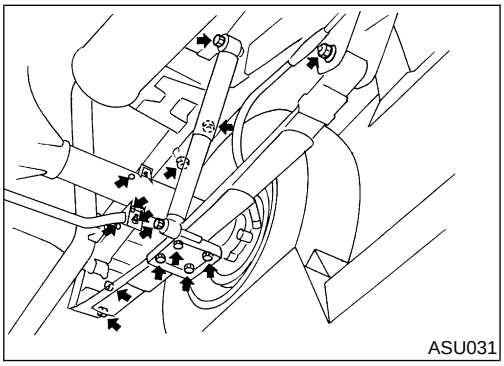
ASU031

On-vehicle Service

REAR SUSPENSION PARTS

NESU0038

Check rear suspension parts for excessive play, wear and damage.

- Shake each rear wheel to check for excessive play.

- Retighten all nuts and bolts to the specified torque.
  : Refer to "REMOVAL AND INSTALLATION", SU-28.

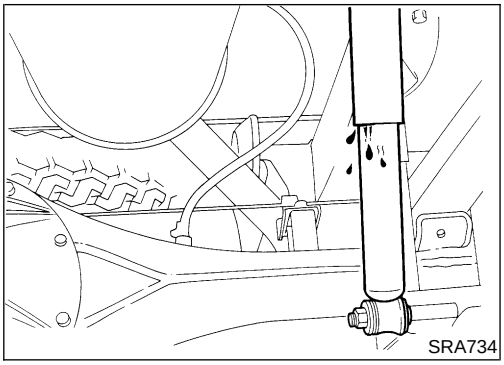
SRA734

- Check shock absorber for oil leakage and other damage.
- Check shock absorber bushing for excessive wear and other damage.

Removal and Installation

NESU0039

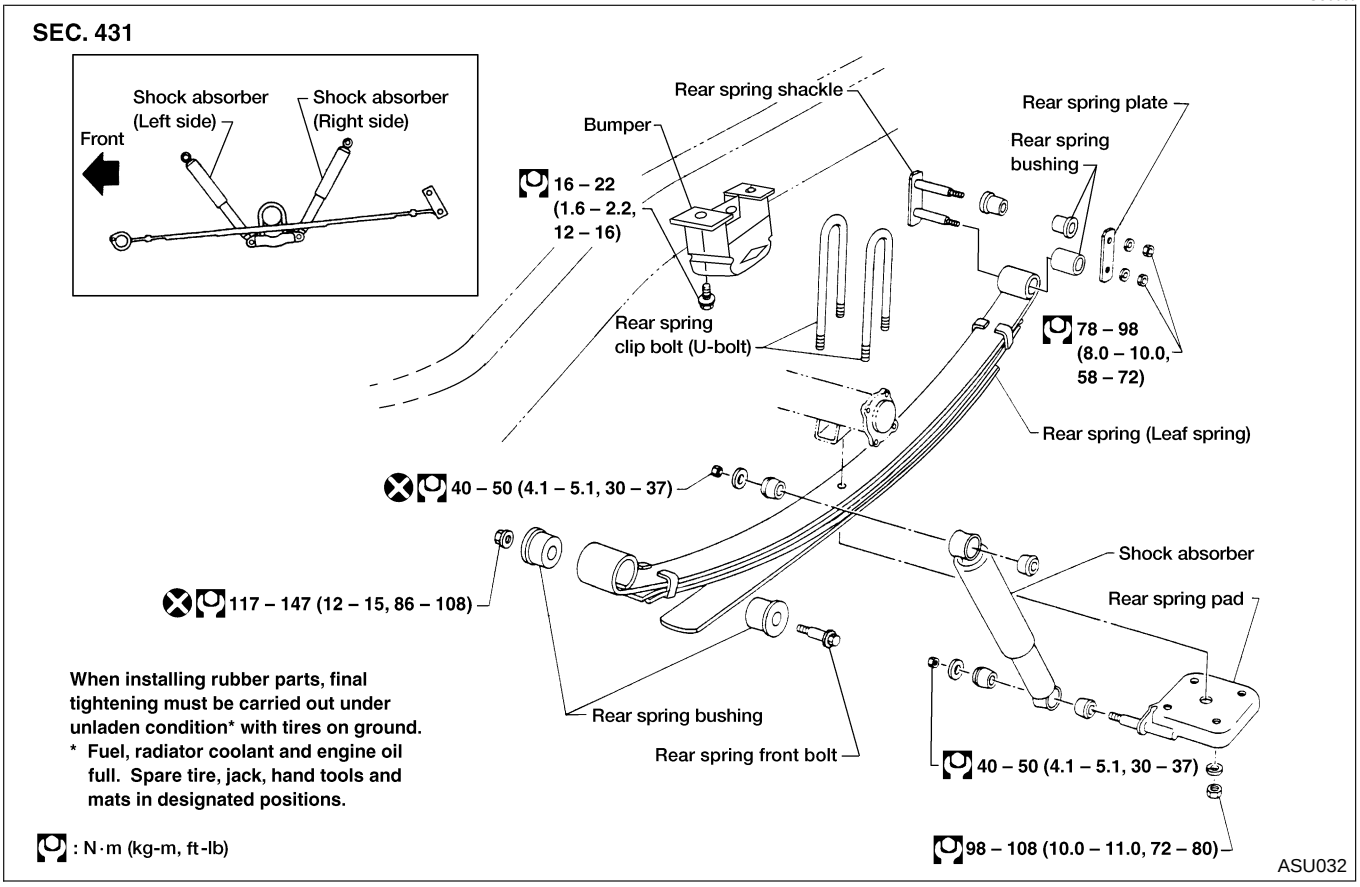

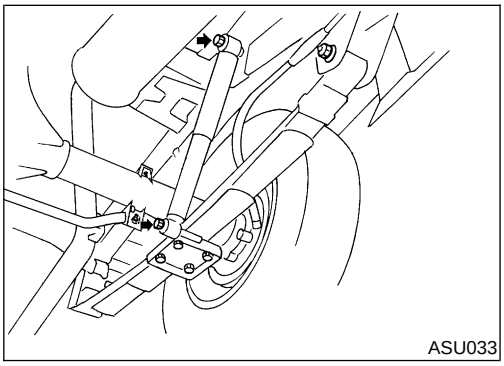
ASU033

Shock Absorber

REMOVAL AND INSTALLATION

NESU0040

- Remove shock absorber by disconnecting upper and lower end.
- To install, refer to "Components", SU-25.

INSPECTION

NESU0041

- If oil leakage, cracks and deformation occurs, replace shock absorber assembly.
- If rubber bushings are cracked and deformed, replace rubber bushings.

Leaf Spring

REMOVAL

NESU0042

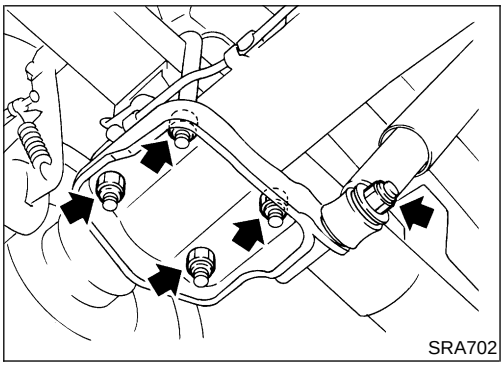
SRA702

1. Disconnect shock absorber lower end, and remove U-bolts.

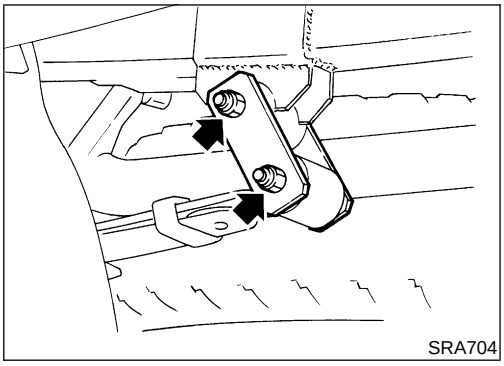
SRA704

2. Disconnect spring shackle.

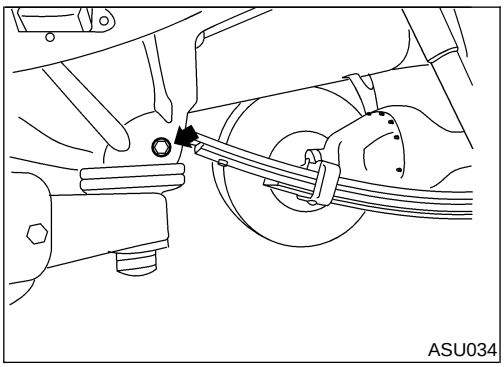
ASU034

3. Disconnect front pin.

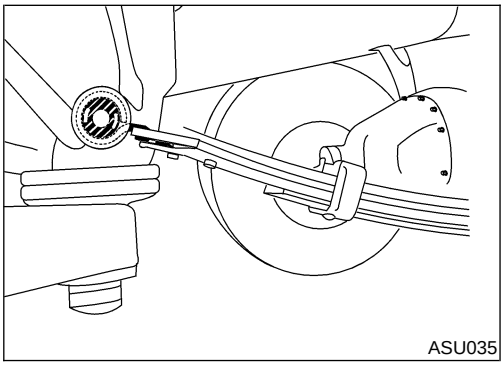
ASU035

INSPECTION

NESU0043

- Check leaf spring for cracks. Replace if necessary.
- Check front bracket and pin, shackle, U-bolts and spring pad for wear, cracks, straightness and damaged threads. Replace if necessary.
- Check all bushings for deformation and cracks. Replace if necessary.
  (4WD models: Rear spring front bushing)
  Make sure that front bushing is properly installed.

Leaf Spring (Cont'd)

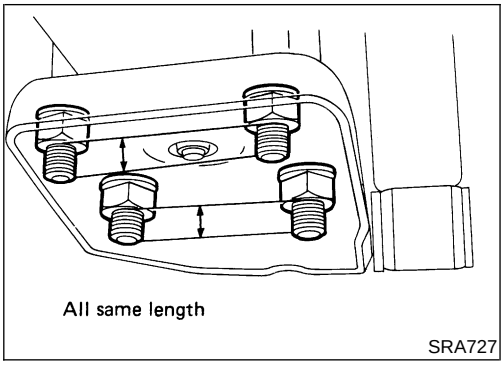

SRA727

INSTALLATION

NESU0044

1. Apply soapsuds to rubber bushing.
2. Install spring shackle and front pin, and finger tighten the nuts.
3. Install spring pad and nuts under leaf spring or axle case.
4. Tighten U-bolt mounting nuts diagonally.

Tighten U-bolts so that the lengths of all U-bolts under spring pad are the same.

5. Install shock absorber, and finger tighten the nuts.

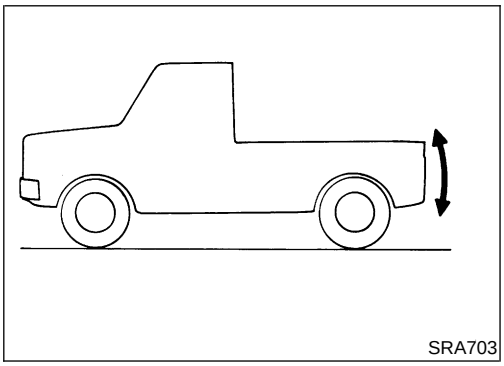
SRA703

6. Remove stands and bounce the vehicle to stabilize suspension. (Unladen)

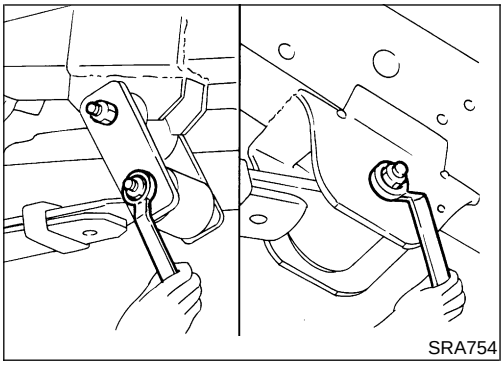
SRA754

7. Tighten spring shackle nuts, front pin nuts and shock absorber nuts.

When installing rubber parts, final tightening must be carried out under unladen condition* with tires on the ground.
*** Fuel, radiator coolant and engine oil full. Spare tire, jack, hand tools and mats in designated positions.**

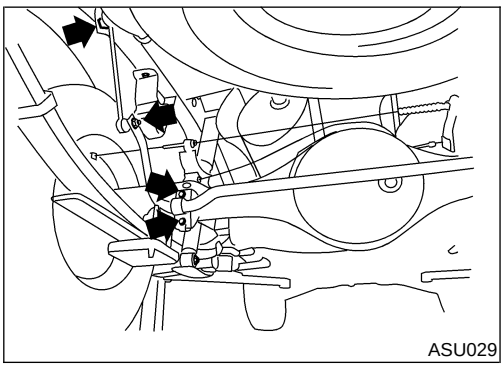
ASU029

Stabilizer Bar

REMOVAL

NESU0050

- Remove stabilizer bar connecting bolts and clamp bolts.

INSPECTION

NESU0051

- Check stabilizer bar for twist and deformation.
- Check rubber bushing for cracks, wear and deterioration. Replace if necessary.

INSTALLATION

NESU0052

- Install bushing outside of white mark painted on stabilizer.
- Refer to "Components", SU-25.

Service Data and Specifications (SDS)

GENERAL SPECIFICATIONS (REAR)

NESU0045

Suspension type	Rigid axle with semi-elliptic leaf spring
Shock absorber type	Double-acting hydraulic

NOTES

BRAKE SYSTEM

SECTION BR

CONTENTS

PRECAUTIONS 5
Supplemental Restraint System (SRS) ″AIR BAG″ and ″SEAT BELT PRE-TENSIONER″.....5
Precautions for Brake System.....5
Wiring Diagrams and Trouble Diagnosis.....6
PREPARATION 7
Special Service Tools 7
Commercial Service Tools 7
NOISE, VIBRATION AND HARSHNESS (NVH) TROUBLESHOOTING 8
NVH Troubleshooting Chart.....8
ON-VEHICLE SERVICE 9
Checking Brake Fluid Level.....9
Checking Brake Line 9
Changing Brake Fluid 9
Brake Burnishing Procedure.....10
Bleeding Brake System 11
BRAKE HYDRAULIC LINE.....12
Hydraulic Circuit.....12
Removal.....13
Inspection.....13
Installation.....13
PROPORTIONING VALVE (VG33E AND VG33ER) 14
Inspection.....14
Removal and Installation (Built-in type).....14
LOAD SENSING VALVE (KA24DE) 15
Inspection.....15
Removal and Installation 16
BRAKE PEDAL AND BRACKET.....17
Removal and Installation 17
Inspection.....17
Adjustment 18
MASTER CYLINDER.....19
Removal.....19
Disassembly.....19
Inspection.....20
Assembly 20
Installation.....21
BRAKE BOOSTER.....22
On-vehicle Service.....22
OPERATING CHECK 22
AIRTIGHT CHECK 22
Removal.....22
Inspection.....22
OUTPUT ROD LENGTH CHECK 22
Installation.....23
VACUUM PIPING.....24
Vacuum Hose 24
Removal and Installation 24
Inspection.....25
HOSES AND CONNECTORS 25
CHECK VALVE.....25
FRONT DISC BRAKE 26
Pad Replacement 26
Removal.....27
Disassembly.....28
Inspection.....28
CALIPER.....28
ROTOR.....28
Assembly 29
Installation.....29
REAR DRUM BRAKE 30
Components.....30
Removal.....31
Inspection.....32
WHEEL CYLINDER.....32
Wheel Cylinder Overhaul.....32
Inspection.....32
DRUM.....32
LINING.....32
Installation.....33
LT30A MODEL.....33
PARKING BRAKE CONTROL.....35
Components.....35
Removal and Installation 36
Inspection.....36
Adjustment 36

CONTENTS (Cont'd)

KA24DE

DESCRIPTION 37
- Purpose 37
- Operation 37
- ABS Hydraulic Circuit 37
- System Components 38
- System Description 38
  - REAR SENSOR 38
  - ABS CONTROL UNIT 38
- Removal and Installation 39
  - REAR SENSOR 39
  - ACTUATOR 39

TROUBLE DIAGNOSES 40
- How to Perform Trouble Diagnoses for Quick and Accurate Repair 40
  - INTRODUCTION 40
  - WORK FLOW 41
- Preliminary Check 42
- Component Parts and Harness Connector Location 45
- Schematic 46
- Wiring Diagram - ABS - 47
- Self-diagnosis 49
  - CHECKING THE NUMBER OF WARNING LAMP FLASHES 49
  - SELF-DIAGNOSIS PROCEDURE 1 49
  - SELF-DIAGNOSIS PROCEDURE 2 51
  - MALFUNCTION CODE/SYMPTOM CHART 52
- Main Power Supply and Ground Circuit Check 52

TROUBLE DIAGNOSES FOR SELF-DIAGNOSTIC ITEMS 56
- ABS Actuator ISO Solenoid Short or Open 56
  - MALFUNCTION CODE NO. 2 OR 7 56
- ABS Actuator ISO Blocked 57
  - MALFUNCTION CODE NO. 4 57
- ABS Actuator Dump Solenoid Short Circuit or Open 58
  - MALFUNCTION CODE NO. 3 OR 8 58
- Rear Sensor Open or Short 60
  - MALFUNCTION CODE NO. 9 OR 10 60
- Sensor Signal Erratic 60
  - MALFUNCTION CODE NO. 6 60
- ABS Control Unit 61
  - MALFUNCTION CODE NO. 13, 14 OR 15 61
- ABS Actuator 61
  - MALFUNCTION CODE NO. 5 61

TROUBLE DIAGNOSES FOR SYMPTOMS 62
- 1. Pedal Vibration or Noise 62
- 2. Long Stopping Distance 63
- 3. Unexpected Pedal Action 63
- 4. ABS Does Not Work 64
- 5. ABS Works Frequently 64
- Electrical Components Inspection 65
  - REAR SENSOR UNIT AND ACTUATOR 65

VG33E AND VG33ER (2WD)

DESCRIPTION 68
- Purpose 68
- Operation 68
- ABS Hydraulic Circuit 68
- System Components 69
- System Description 70
  - WHEEL SENSOR 70
  - ABS ACTUATOR AND ELECTRIC UNIT (CONTROL UNIT) 70
- Removal and Installation 71
  - FRONT WHEEL SENSORS 71
  - REAR WHEEL SENSOR 71
  - ABS ACTUATOR AND ELECTRIC UNIT 72

TROUBLE DIAGNOSES 73
- How to Perform Trouble Diagnoses for Quick and Accurate Repair 73
  - INTRODUCTION 73
  - WORK FLOW 74
- Preliminary Check 75
- Component Parts and Harness Connector Location 78
- Schematic 79
- Wiring Diagram - ABS - 80

ON BOARD DIAGNOSTIC SYSTEM DESCRIPTION 83
- Self-diagnosis 83
  - FUNCTION 83
  - SELF-DIAGNOSIS PROCEDURE 83
  - HOW TO READ SELF-DIAGNOSTIC RESULTS (MALFUNCTION CODES) 84
  - HOW TO ERASE SELF-DIAGNOSTIC RESULTS (MALFUNCTION CODES) 84
- CONSULT-II 85
  - CONSULT-II APPLICATION TO ABS 85
  - ECU (ABS CONTROL UNIT) PART NUMBER MODE 85
- CONSULT-II Inspection Procedure 86
  - SELF-DIAGNOSIS PROCEDURE 86
  - SELF-DIAGNOSTIC RESULTS MODE 87
  - DATA MONITOR PROCEDURE 88
  - ACTIVE TEST PROCEDURE 88
  - DATA MONITOR MODE 90
  - ACTIVE TEST MODE 91
- Ground Circuit Check 91
  - ABS ACTUATOR AND ELECTRIC UNIT GROUND 91

TROUBLE DIAGNOSIS - GENERAL DESCRIPTION 92
- Malfunction Code/Symptom Chart 92

TROUBLE DIAGNOSES FOR SELF-DIAGNOSTIC ITEMS 93
- Wheel Sensor or Rotor 93

CONTENTS (Cont'd)

MALFUNCTION CODE NO. 21, 22, 25, 26, 35, 36 OR 18 93
ABS Actuator Solenoid Valve and Solenoid Valve Relay 95
MALFUNCTION CODE NO. 41, 42, 45, 46, 55, 56 OR 63 95
Motor Relay or Motor 97
MALFUNCTION CODE NO. 61 97
Low Voltage 99
MALFUNCTION CODE NO. 57 99
Control Unit 101
MALFUNCTION CODE NO. 71 101
TROUBLE DIAGNOSES FOR SYMPTOMS 102
1. ABS Works Frequently 102
2. Unexpected Pedal Action 103
3. Long Stopping Distance 104
4. ABS Does Not Work 104
5. Pedal Vibration and Noise 105
6. Warning Lamp Does Not Come On When Ignition Switch Is Turned ON 105
7. Warning Lamp Stays On When Ignition Switch Is Turned On 107

VG33E AND VG33ER (4WD)

DESCRIPTION 110
Purpose 110
Operation 110
ABS Hydraulic Circuit 110
System Components 111
System Description 111
WHEEL SENSOR 111
CONTROL UNIT (BUILT-IN ABS ACTUATOR AND ELECTRIC UNIT) 111
ABS ACTUATOR AND ELECTRIC UNIT 112
G SENSOR 112
TROUBLE DIAGNOSIS - INTRODUCTION 113
How to Perform Trouble Diagnoses for Quick and Accurate Repair 113
INTRODUCTION 113
TROUBLE DIAGNOSIS - BASIC INSPECTION 114
Preliminary Check 114
Ground Circuit Check 117
ABS ACTUATOR AND ELECTRIC UNIT GROUND 117
Component Parts and Harness Connector Location 118
Schematic 119
Wiring Diagram - ABS - 120
ON BOARD DIAGNOSTIC SYSTEM DESCRIPTION 123
Self-diagnosis (Without CONSULT-II) 123
FUNCTION 123
SELF-DIAGNOSIS PROCEDURE 123
HOW TO READ SELF-DIAGNOSTIC RESULTS (MALFUNCTION CODES) 124
HOW TO ERASE SELF-DIAGNOSTIC RESULTS (MALFUNCTION CODES) 124
TROUBLE DIAGNOSIS - GENERAL DESCRIPTION 125
Malfunction Code Chart (Without CONSULT-II) 125
Symptom Chart 125
CONSULT-II 126
CONSULT-II APPLICATION TO ABS 126
ECU (ABS CONTROL UNIT) PART NUMBER MODE 126
CONSULT-II Inspection Procedure 127
SELF-DIAGNOSIS PROCEDURE 127
SELF-DIAGNOSTIC RESULTS MODE 128
DATA MONITOR PROCEDURE 129
ACTIVE TEST PROCEDURE 130
DATA MONITOR MODE 131
ACTIVE TEST MODE 131
TROUBLE DIAGNOSES FOR SELF-DIAGNOSTIC ITEMS 132
Wheel Sensor or Rotor 132
DIAGNOSTIC PROCEDURE 132
ABS Actuator Solenoid Valve or Solenoid Valve Relay 135
DIAGNOSTIC PROCEDURE 135
Motor Relay or Motor 137
DIAGNOSTIC PROCEDURE 137
Low Voltage 139
DIAGNOSTIC PROCEDURE 139
G Sensor and Circuit 141
DIAGNOSTIC PROCEDURE 141
Control Unit 143
DIAGNOSTIC PROCEDURE 143
TROUBLE DIAGNOSES FOR SYMPTOMS 144
1. ABS Works Frequently 144
2. Unexpected Pedal Action 144
3. Long Stopping Distance 146
4. ABS Does Not Work 146
5. Pedal Vibration and Noise 146
6. Warning Lamp Does Not Come On When Ignition Switch Is Turned On 147
7. Warning Lamp Stays On When Ignition Switch Is Turned On 148
REMOVAL AND INSTALLATION 152
Front Wheel Sensor 152
Rear Wheel Sensor 152
Front Sensor Rotor 153
REMOVAL 153
INSTALLATION 153
Rear Sensor Rotor 153
REMOVAL 153
INSTALLATION 153
G Sensor 153

CONTENTS (Cont'd)

ABS Actuator and Electric Unit.....154
REMOVAL.....154
INSTALLATION.....154

SERVICE DATA AND SPECIFICATIONS (SDS).....155
General Specifications.....155
Disc Brake 155
Drum Brake.....155
Brake Pedal 155
Parking Brake Control 156

Supplemental Restraint System (SRS) “AIR BAG” and “SEAT BELT PRE-TENSIONER”

NEBR0199

The Supplemental Restraint System such as “AIR BAG” and “SEAT BELT PRE-TENSIONER” used along with a seat belt, help to reduce the risk or severity of injury to the driver and front passenger in a frontal collision. The Supplemental Restraint System consists of air bag modules (located in the center of the steering wheel and in the instrument panel on the passenger side), seat belt pre-tensioners, a diagnosis sensor unit, warning lamp, wiring harness, and spiral cable.

The vehicle (except Crew Cab model) is equipped with a passenger air bag deactivation switch. Because no rear seat exists where a rear-facing child restraint can be placed, the switch is designed to turn off the passenger air bag so that a rear-facing child restraint can be used in the front passenger seat. The switch is located in the center of the instrument panel, near the ashtray. When the switch is turned to the ON position, the passenger air bag is enabled and could inflate in a frontal collision. When the switch is turned to the OFF position, the passenger air bag is disabled and will not inflate in a frontal collision. A passenger air bag OFF indicator on the instrument panel lights up when the passenger air bag is switched OFF. The driver air bag always remains enabled and is not affected by the passenger air bag deactivation switch.

Information necessary to service the system safely is included in the **RS section** of this Service Manual.

WARNING:

- **To avoid rendering the SRS inoperative, which could increase the risk of personal injury or death in the event of a collision which would result in air bag inflation, all maintenance should be performed by an authorized NISSAN dealer.**
- **Improper maintenance, including incorrect removal and installation of the SRS, can lead to personal injury caused by unintentional activation of the system. For removal of Spiral Cable and Air Bag Module, see the RS section.**
- **Do not use electrical test equipment on any circuit related to the SRS unless instructed to in this Service Manual. Spiral cable and wiring harnesses (except “SEAT BELT PRE-TENSIONER”) covered with yellow insulation either just before the harness connectors or for the complete harness are related to the SRS.**
- **The vehicle (except Crew Cab model) is equipped with a passenger air bag deactivation switch which can be operated by the customer. When the passenger air bag is switched OFF, the passenger air bag is disabled and will not inflate in a frontal collision. When the passenger air bag is switched ON, the passenger air bag is enabled and could inflate in a frontal collision. After SRS maintenance or repair, make sure the passenger air bag deactivation switch is in the same position (ON or OFF) as when the vehicle arrived for service.**

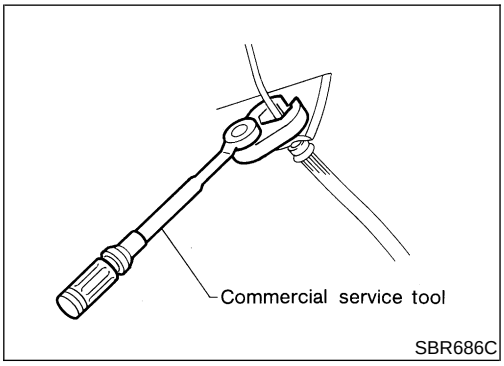

SBR686C

Precautions for Brake System

NEBR0200

- **Use brake fluid “DOT 3”.**
- **Never reuse drained brake fluid.**
- **Be careful not to splash brake fluid on painted areas; it may cause paint damage. If brake fluid is splashed on painted areas, wash it away with water immediately.**
- **To clean master cylinder parts, disc brake caliper parts or wheel cylinder parts, use clean brake fluid.**
- **Never use mineral oils such as gasoline or kerosene. They will ruin rubber parts of hydraulic system.**
- **Use flare nut wrench when removing and installing brake tubes.**
- **Always torque brake lines when installing.**
- **Burnish the brake contact surfaces after refinishing or replacing drums or rotors, after replacing pads or linings, or if a soft pedal occurs at very low mileage. Refer to “Brake Burnishing Procedure”, BR-10.**

WARNING:

- **Clean brakes with a vacuum dust collector to minimize risk of health hazard from powder caused by friction.**

Wiring Diagrams and Trouble Diagnosis

NEBR0201

When you read wiring diagrams, refer to the following:

- Refer to ***GI-11***, “HOW TO READ WIRING DIAGRAMS”.
- Refer to ***EL-9***, “POWER SUPPLY ROUTING” for power distribution circuit.

When you perform trouble diagnosis, refer to the following:

- Refer to ***GI-34***, “How to Follow Test Groups In Trouble Diagnoses”.
- Refer to ***GI-23***, “HOW TO PERFORM EFFICIENT DIAGNOSIS FOR AN ELECTRICAL INCIDENT”.

Special Service Tools

NEBR0202

The actual shapes of Kent-Moore tools may differ from those of special service tools illustrated here.

Tool number (Kent-Moore No.) Tool name	Description	
KV40106500 (J25852-B) Rear axle shaft bearing puller	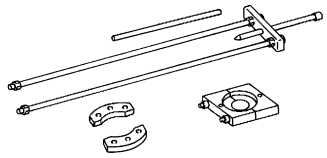 NT683	Removing wheel bearing and ABS sensor rotor

Commercial Service Tools

NEBR0203

Tool name	Description	
1 Flare nut crowfoot 2 Torque wrench	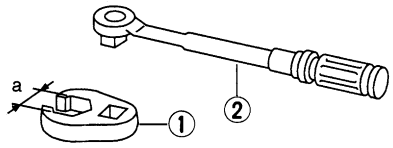 NT360	Removing and installing each brake piping **a: 10 mm (0.39 in)**
Brake fluid pressure gauge	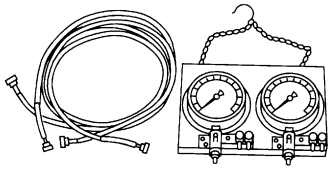 NT151	Measuring brake fluid pressure
Rear wheel sensor rotor drift	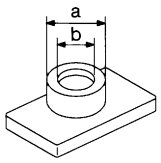 NT509	Installing rear wheel sensor rotor **a: 75 mm (2.95 in) dia.** **b: 63 mm (2.48 in) dia.**

NVH Troubleshooting Chart

NEBR0204S01

Use the chart below to help you find the cause of the symptom. If necessary, repair or replace these parts.

Reference page			BR-28, 32	BR-26, 32	BR-30	BR-26	—	—	BR-28	—	—	—	BR-29	BR-32	NVH, ***PD-4***.	NVH, ***PD-4***.	NVH, ***AX-4***.	NVH, ***AX-4***.	NVH, ***SU-3***.	NVH, ***SU-3***.	NVH, ***SU-3***.	NVH, ***ST-5***.
Possible cause and SUSPECTED PARTS			Linings or pads - damaged	Linings or pads - uneven wear	Return spring damaged	Shims damaged	Rotor or drum imbalance	Rotor or drum damage	Rotor or drum runout	Rotor or drum deformation	Rotor or drum deflection	Rotor or drum rust	Rotor thickness variation	Drum out of round	PROPELLER SHAFT	DIFFERENTIAL	DRIVE SHAFT	AXLE	SUSPENSION	TIRES	ROAD WHEEL	STEERING
Symp-tom	BRAKE	Noise	×	×	×	×									×	×	×	×	×	×	×	×
		Shake					×								×		×	×	×	×	×	×
		Shimmy, Judder					×	×	×	×	×	×	×	×				×	×	×	×	×

×: Applicable

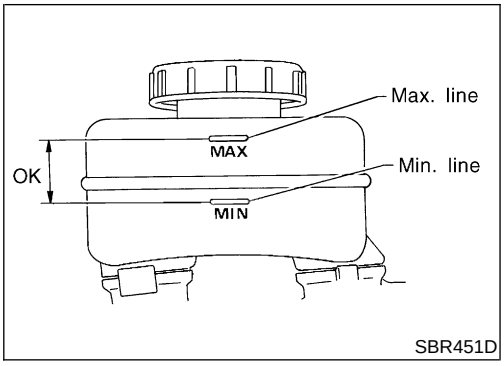

SBR451D

Checking Brake Fluid Level

NEBR0205

- Check fluid level in reservoir tank. It should be between MAX and MIN lines on reservoir tank.
- If fluid level is extremely low, check brake system.
- If the brake warning lamp comes on, check brake fluid level switch and parking brake switch.

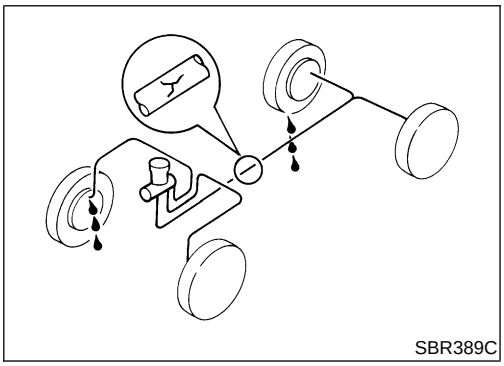
SBR389C

Checking Brake Line

NEBR0206

CAUTION:

If leakage occurs around joints, retighten or, if necessary, replace damaged parts.

1. Check brake lines (tubes and hoses) for cracks, deterioration and other damage. Replace any damaged parts.
2. Check for oil leakage by fully depressing brake pedal while engine is running.

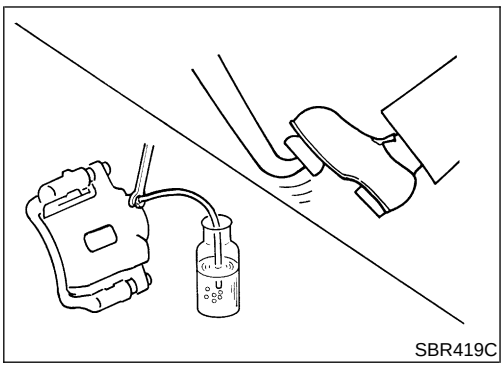
SBR419C

Changing Brake Fluid

NEBR0207

CAUTION:

- **Refill with new brake fluid “DOT 3”.**
- **Always keep fluid level higher than minimum line on reservoir tank.**
- **Never reuse drained brake fluid.**
- **Be careful not to splash brake fluid on painted areas; it may cause paint damage. If brake fluid is splashed on painted areas, wash it away with water immediately.**

1. Clean inside of reservoir tank, and refill with new brake fluid.
2. Connect a vinyl tube to each air bleeder valve.
3. Drain brake fluid from each air bleeder valve by depressing brake pedal.
4. Refill until brake fluid comes out of each air bleeder valve.
   Use same procedure as in bleeding hydraulic system to refill brake fluid.
   Refer to “Bleeding Brake System”, BR-11.

Brake Burnishing Procedure

=NEBR0249

Burnish the brake contact surfaces according to the following procedure after refinishing or replacing drums or rotors, after replacing pads or linings, or if a soft pedal occurs at very low mileage.

CAUTION:

Only perform this procedure under safe road and traffic conditions. Use extreme caution.

1. Drive the vehicle on a straight smooth road at 50 km/h (31 MPH).
2. Use medium brake pedal/foot effort to bring the vehicle to a complete stop from 50 km/h (31 MPH). Adjust brake pedal/foot pressure such that vehicle stopping time equals 3 to 5 seconds.
3. To cool the brake system, drive the vehicle at 50 km/h (31 MPH) for 1 minute without stopping.
4. Repeat steps 1 to 3, 10 times or more to complete the burnishing procedure.

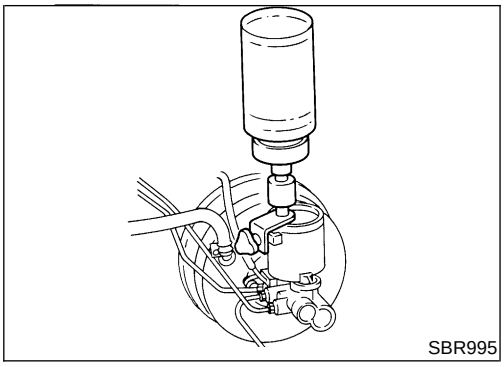
SBR995

Bleeding Brake System

=NEBR0208

CAUTION:

- **Carefully monitor brake fluid level at master cylinder during bleeding operation.**
- **If master cylinder is suspected to have air inside, bleed air from master cylinder first. Refer to “Installation”, BR-21.**
- **Fill reservoir with new brake fluid “DOT 3”. Make sure it is full at all times while bleeding air out of system.**
- **Place a container under master cylinder to avoid spillage of brake fluid.**
- **Turn ignition switch OFF and disconnect ABS actuator (KA24DE)/ABS actuator and electric unit (VG33E and VG33ER) connector or battery cable.**
- **Bleed air in the following order.**

1. LSV air bleeder (Models equipped with LSV)
2. Left rear brake
3. Right rear brake
4. Left front brake
5. Right front brake
6. ABS actuator (KA24DE) or ABS actuator and electric unit (VG33E and VG33ER)

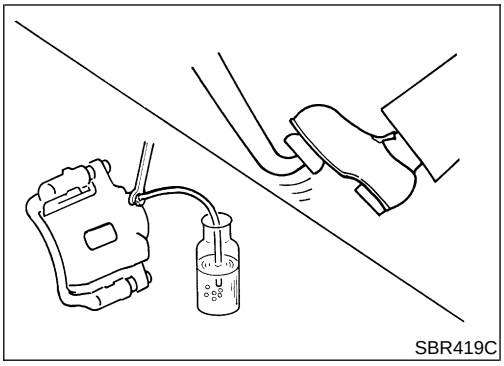
SBR419C

1. Connect a transparent vinyl tube to air bleeder valve.
2. Fully depress brake pedal several times.
3. With brake pedal depressed, open air bleeder valve to release air.
4. Close air bleeder valve.
5. Release brake pedal slowly.
6. Repeat steps 2. through 5. until clear brake fluid comes out of air bleeder valve.
7. Tighten air bleeder valve.

: 7 - 9 N·m (0.7 - 0.9 kg-m, 61 - 78 in-lb)

Hydraulic Circuit

NEBR0209

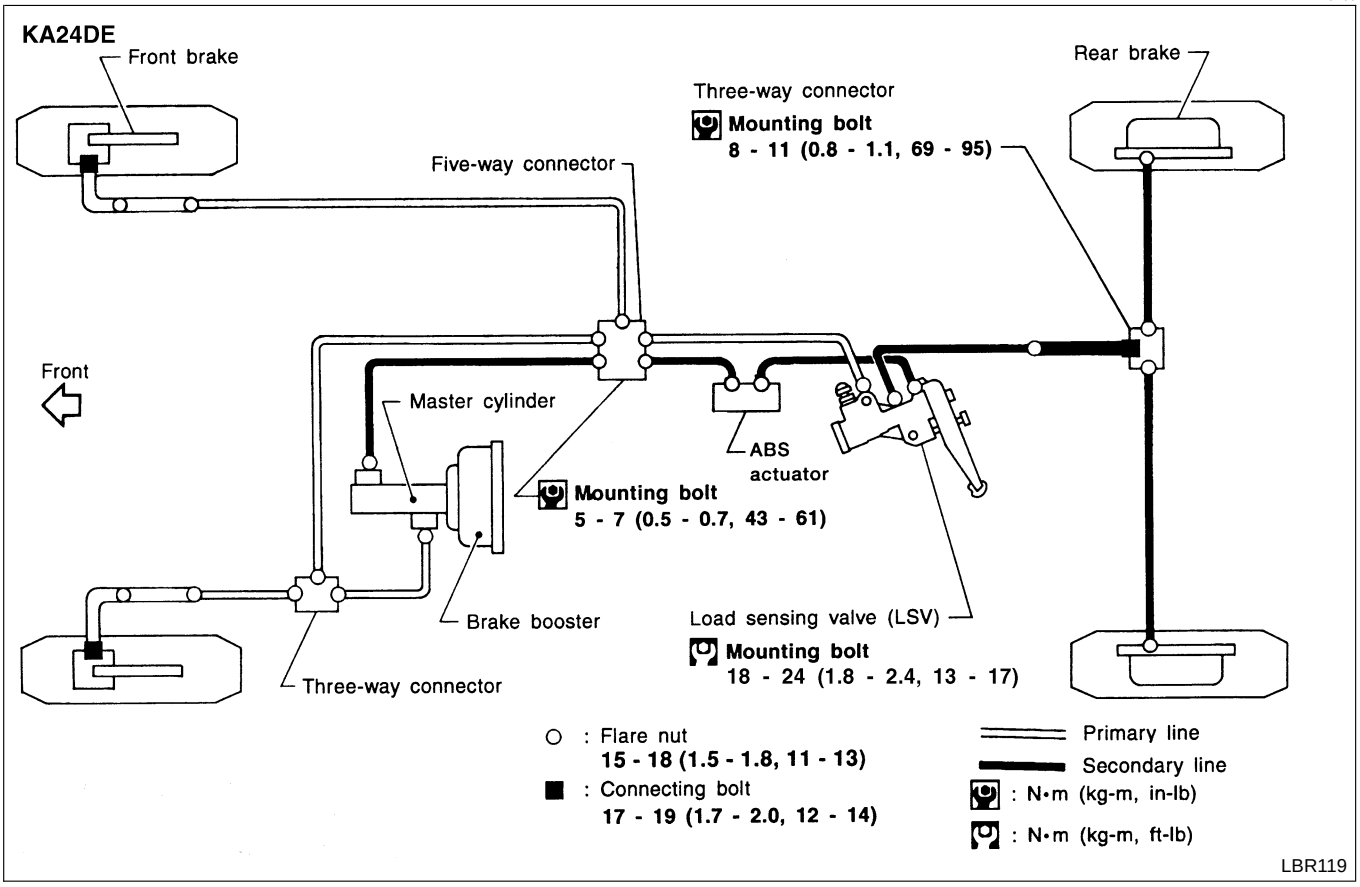

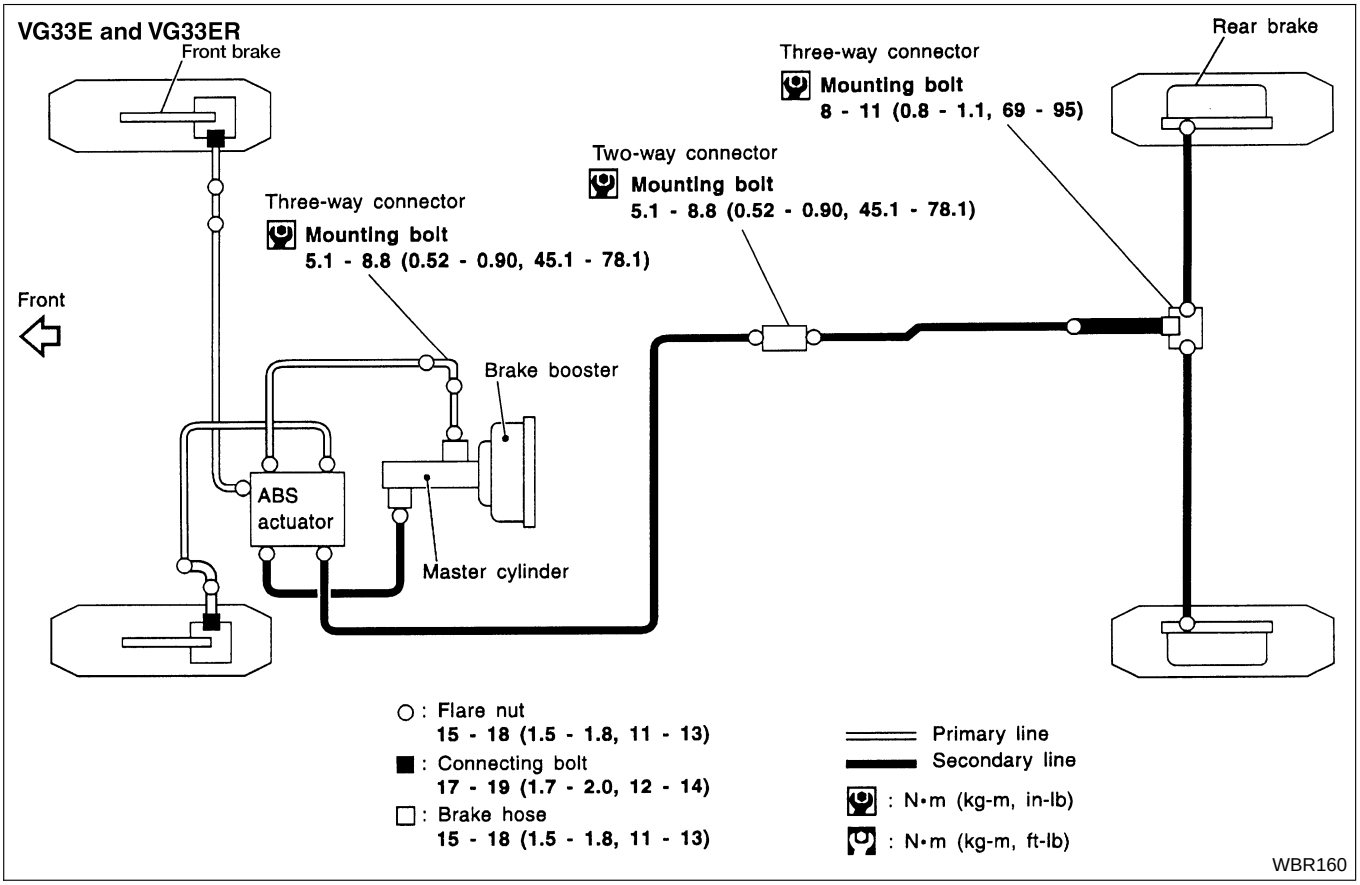

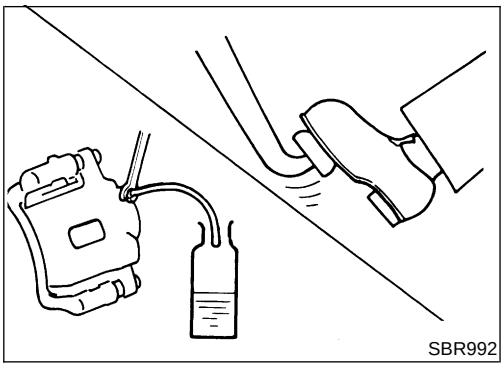
SBR992

Removal

NEBR0210

CAUTION:

- **Be careful not to splash brake fluid on painted areas; it may cause paint damage. If brake fluid is splashed on painted areas, wash it away with water immediately.**
- **All hoses must be free from excessive bending, twisting and pulling.**

1. Connect vinyl tube to air bleeder valve.
2. Drain brake fluid from each air bleeder valve by depressing brake pedal.
3. Remove flare nut connecting brake tube and hose, then withdraw lock spring.
4. Cover openings to prevent entrance of dirt whenever disconnecting brake line.

Inspection

NEBR0211

Check brake lines (tubes and hoses) for cracks, deterioration and other damage. Replace any damaged parts.

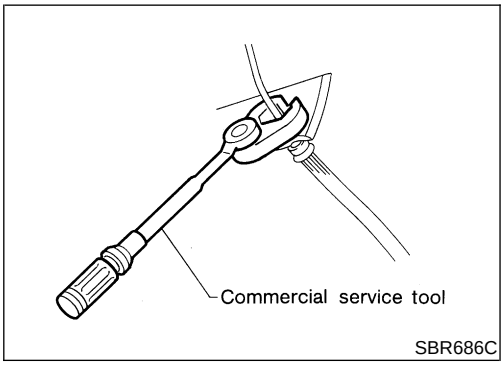

SBR686C

Installation

NEBR0212

CAUTION:

- **Refill with new brake fluid “DOT 3”.**
- **Never reuse drained brake fluid.**

1. Tighten all flare nuts and connecting bolts.
   Flare nut:
   : 15 - 18 N·m (1.5 - 1.8 kg-m, 11 - 13 ft-lb)
   Connecting bolt:
   : 17 - 19 N·m (1.7 - 2.0 kg-m, 12 - 14 ft-lb)
2. Refill until new brake fluid comes out of each air bleeder valve.
3. Bleed air. Refer to “Bleeding Brake System”, BR-11.

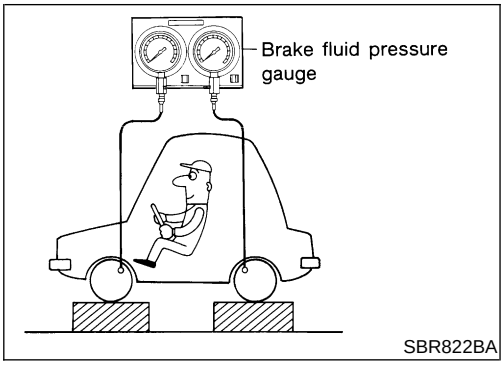

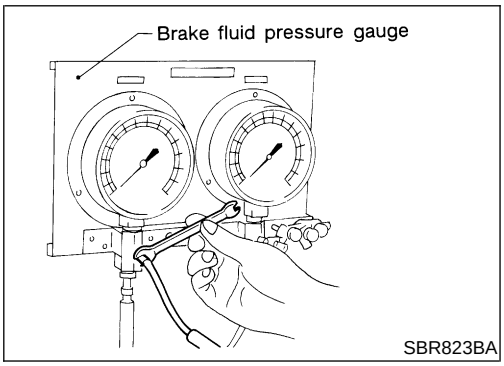

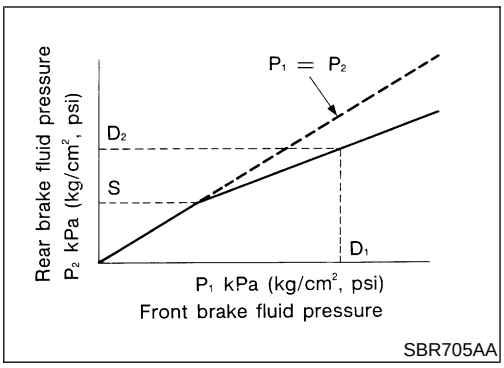

Inspection

NEBR0213

CAUTION:

- **Carefully monitor brake fluid level at master cylinder.**
- **Use new brake fluid “DOT 3”.**
- **Be careful not to splash brake fluid on painted areas; it may cause paint damage. If brake fluid is splashed on paint areas, wash it away with water immediately.**
- **Depress pedal slowly when raising front brake pressure.**
- **Check rear brake pressure 2 seconds after front brake pressure reaches specified value.**
- **Disconnect harness connectors from ABS actuator and electric unit before checking.**

1. Remove front LH tire.
2. Connect tool to air bleeders on front LH brake caliper and rear LH or RH brake wheel cylinder.
3. Install front LH tire.

Before installing front LH tire, confirm the tool is not touching the front LH wheel.

4. Bleed air from the tool.
5. Check fluid pressure by depressing brake pedal.

kPa (kg/cm^2, psi)

Applied pressure (Front brake) D_1	6,375 (65, 924)
Output pressure (Rear brake) D_2	3,432 - 3,825 (35 - 39, 498 - 555)

If output pressure is out of specifications, replace master cylinder assembly (built-in type).

6. Bleed air after disconnecting the tool. Refer to “Bleeding Brake System”, BR-11.
7. Install front LH tire.

Removal and Installation (Built-in type)

NEBR0214

Always replace together with master cylinder as an assembly.

- Refer to “MASTER CYLINDER”, BR-19.

Inspection

NEBR0278

CAUTION:

- **Carefully monitor brake fluid level at master cylinder.**
- **Use new brake fluid “DOT 3”.**
- **Be careful not to splash brake fluid on painted areas; it may cause paint damage. If brake fluid is splashed on paint areas, wash it away with water immediately.**
- **Depress pedal slowly when raising front brake pressure.**
- **Check rear brake pressure 2 seconds after front brake pressure reaches specified value.**
- **Disconnect harness connectors from ABS actuator and electric unit before checking.**

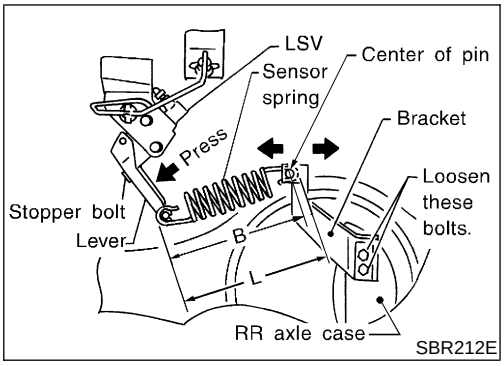

1. Park vehicle on a level surface with vehicle unloaded*.
   * Fuel, radiator coolant and engine oil full. Spare tire, jack, hand tools and mats in designated positions.
2. Press a lever to the stopper bolt, then adjust length “B” as follows:

Length “B”	Reference (Length “L”)
207.7 mm (8.18 in)	217.3 mm (8.56 in)

3. If length “B” is not within specification, adjust sensor spring length.

Removal and Installation

=NEBR0279

CAUTION:

- **Refill with new brake fluid “DOT 3”.**
- **Be careful not to splash brake fluid on painted areas; it may cause paint damage. If brake fluid is splashed on painted areas, wash it away with water immediately.**
- **Do not reuse load sensing valve once it is disassembled.**
- **Replace damaged load sensing valve as an assembly.**
- **When disassembling, apply multi-purpose grease to all rubbing areas.**

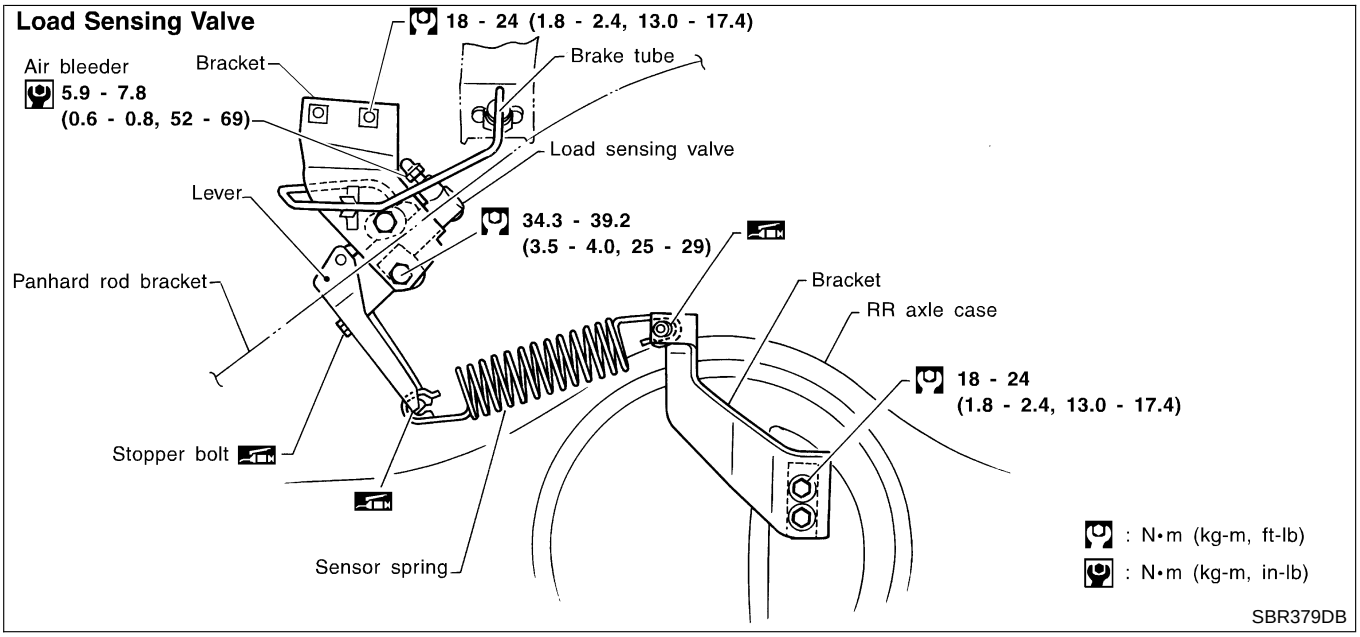

1. Tighten all flare nuts and mounting bolts.
   Flare nut:
   : 15 - 17 N·m (1.5 - 1.8 kg-m, 11 - 13 ft-lb)
2. Refill until new brake fluid comes out of each air bleeder valve.
3. Bleed air. Refer to “Bleeding Brake System”, BR-11.

Removal and Installation

NEBR0217

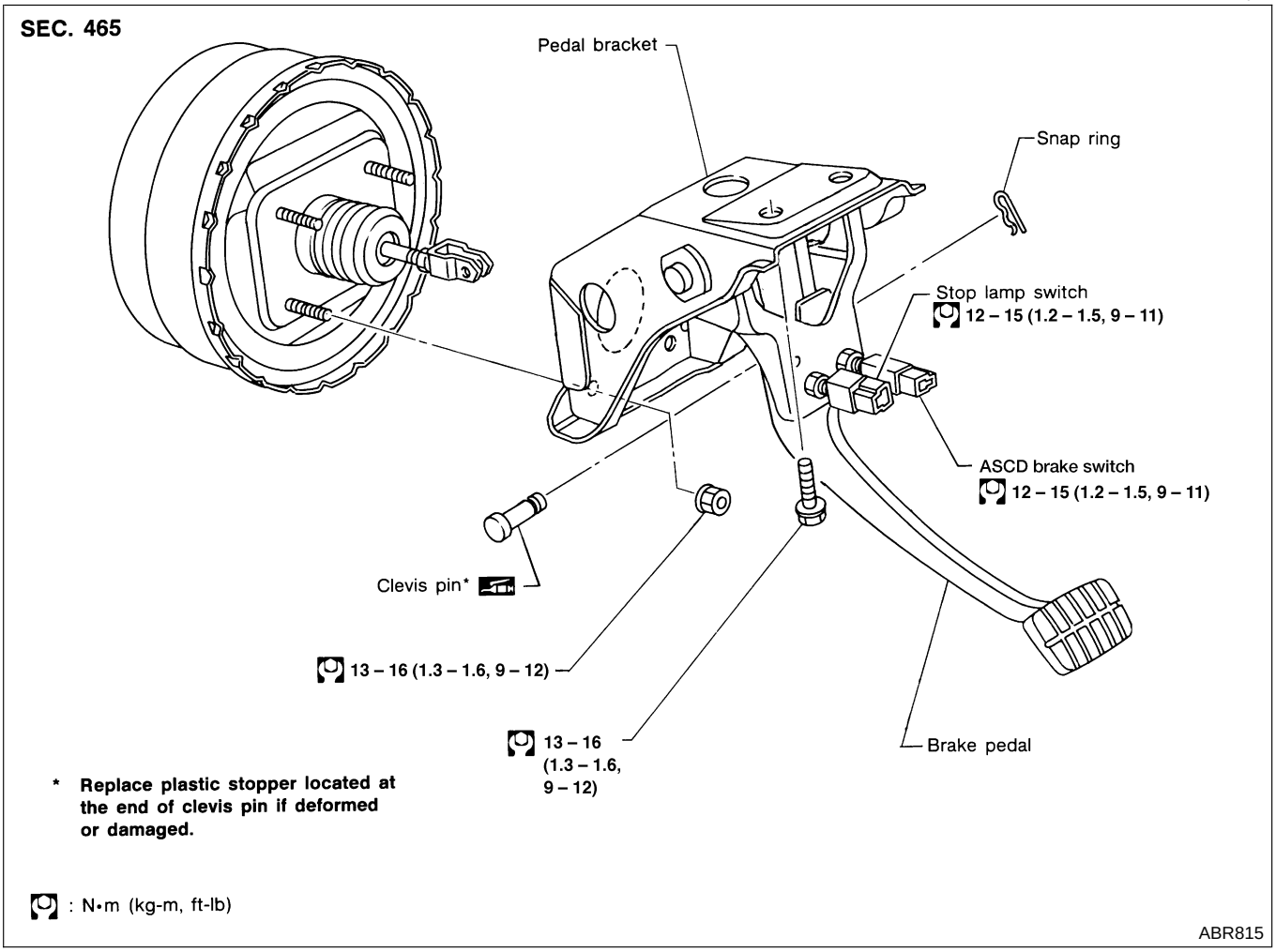

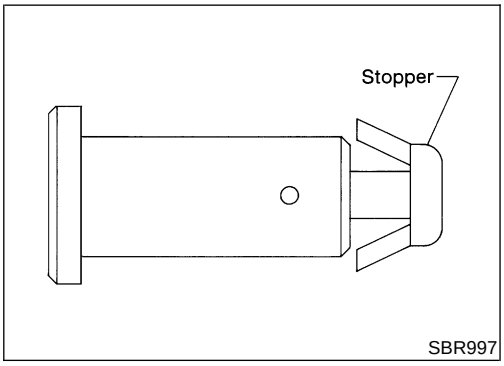

Inspection

NEBR0218

Check brake pedal for following items.

- Brake pedal bend
- Clevis pin deformation
- Crack of any welded portion
- Crack or deformation of clevis pin stopper

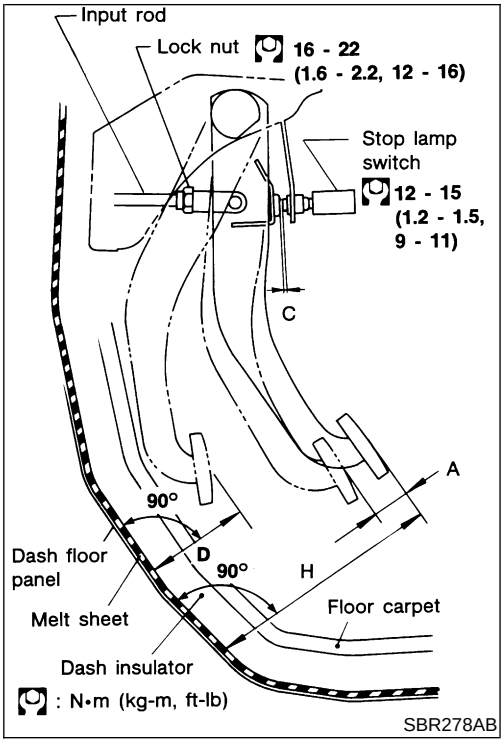

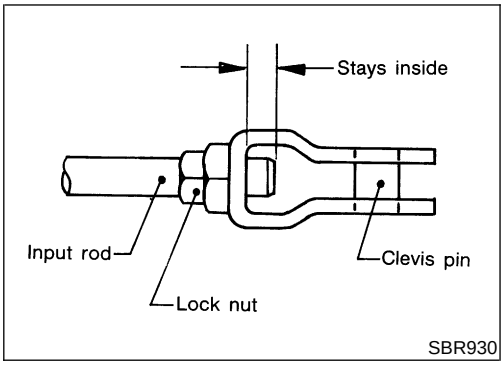

Adjustment

NEBR0219

Check brake pedal free height from metal panel.

H: Free height

Refer to “Brake Pedal”, BR-155.

D: Depressed height

Refer to “Brake Pedal”, BR-155.

Under force of 490 N (50 kg, 110 lb) with engine running

C_1, C_2: Clearance between pedal stopper and threaded end of stop lamp switch and ASCD switch

0.3 - 1.0 mm (0.012 - 0.039 in)

A: Pedal free play

1 - 3 mm (0.04 - 0.12 in)

If necessary, adjust brake pedal free height.

1. Loosen lock nut and adjust pedal free height by turning brake booster input rod. Then tighten lock nut.

Make sure that tip of input rod stays inside.

2. Loosen lock nut and adjust clearance “C” with stop lamp switch respectively, Then tighten lock nuts.
3. Check pedal free play.

Make sure that stop lamp is off when pedal is released.

4. Check brake pedal depressed height while engine is running. If lower than specification, check for leaks, air in system, or damage to components (master cylinder, wheel cylinder, etc). Then make necessary repairs.

Removal

NEBR0220

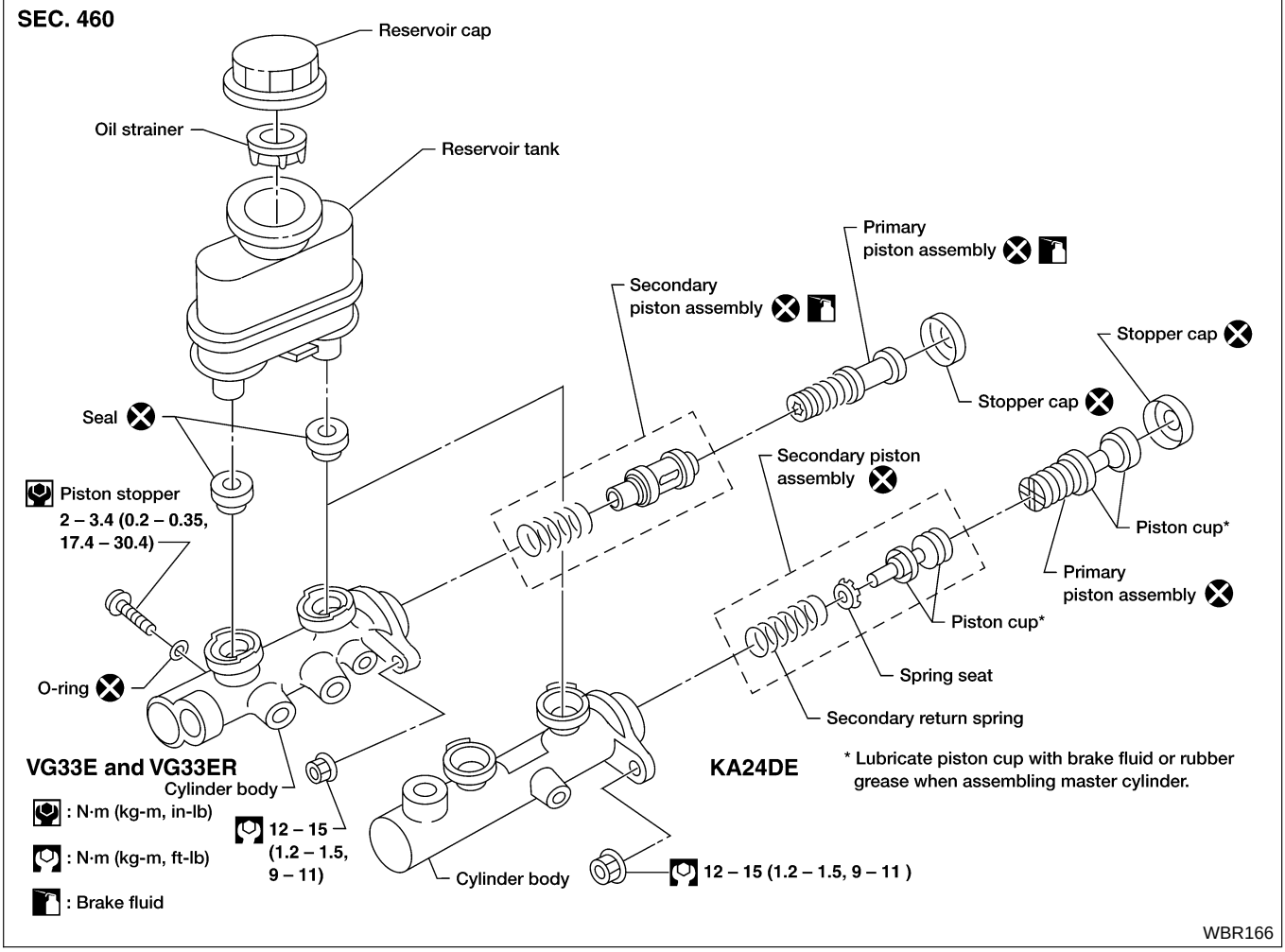

CAUTION:

- **Be careful not to splash brake fluid on painted areas; it may cause paint damage. If brake fluid is splashed on painted areas, wash it away with water immediately.**
- **In the case of brake fluid leakage from the master cylinder, disassemble the cylinder. Then check piston cups for deformation and scratches and replace necessary parts.**

1. Connect a vinyl tube to air bleeder valve.
2. Drain brake fluid from each air bleeder valve, depressing brake pedal to empty fluid from master cylinder.
3. Remove brake pipe flare nuts.
4. Remove master cylinder mounting nuts.

Disassembly

NEBR0221

1. Bend claws of stopper cap outward.

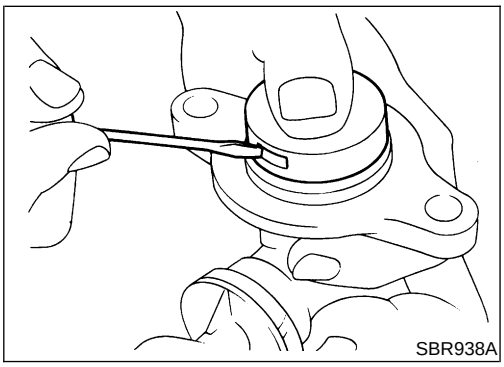

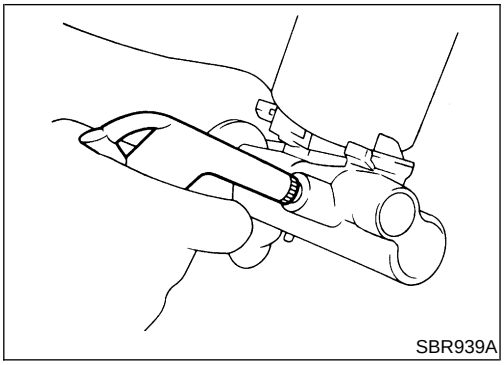
SBR939A

2. Remove piston assemblies.

If it is difficult to remove secondary piston assembly, gradually apply compressed air through fluid outlet.

3. Draw out reservoir tank.

Inspection

NEBR0222

Check master cylinder inner wall for pin holes and scratches. Replace if damaged.

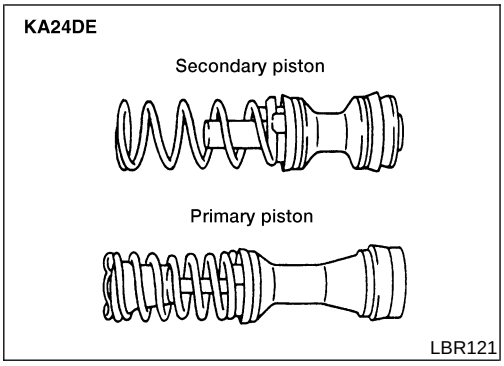

LBR121

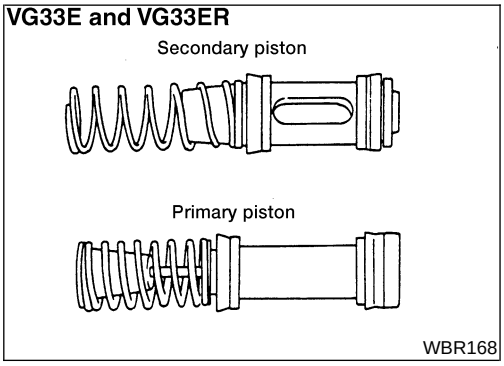

WBR168

Assembly

NEBR0223

1. Insert secondary piston assembly. Then insert primary piston assembly.

- **Pay attention to direction of piston cups in figure at left. Also, insert pistons squarely to avoid scratches on cylinder bore.**

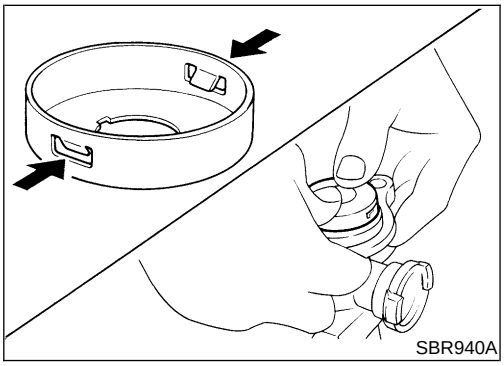
SBR940A

2. Install stopper cap.

Before installing stopper cap, ensure that claws are bent inward.

3. Push reservoir tank seals into cylinder body.
4. Push reservoir tank into cylinder body.

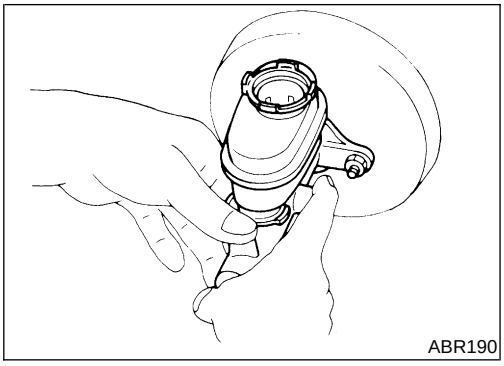
ABR190

Installation

NEBR0224

CAUTION:

- **Refill with new brake fluid “DOT 3”.**
- **Never reuse drained brake fluid.**

1. Place master cylinder onto brake booster and secure mounting nuts lightly.
2. Torque mounting nuts.
   : 12 - 15 N·m (1.2 - 1.5 kg-m, 9 - 11 ft-lb)
3. Fill reservoir tank with new brake fluid.
4. Plug all ports on master cylinder with fingers to prevent air suction while releasing brake pedal.
5. Have driver depress brake pedal slowly several times until no air comes out of master cylinder.
6. Fit brake lines to master cylinder.
7. Tighten flare nuts.
   : 15 - 17 N·m (1.5 - 1.8 kg-m, 11 - 13 ft-lb)
8. Bleed air from brake system. Refer to “Bleeding Brake System”, BR-11.

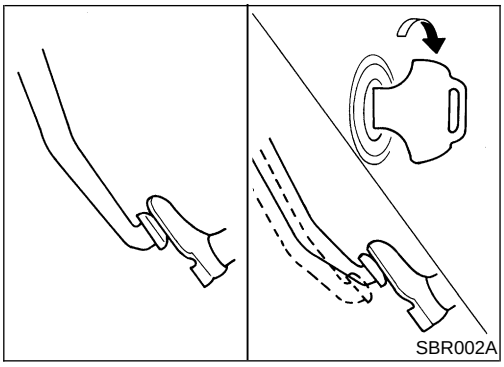
SBR002A

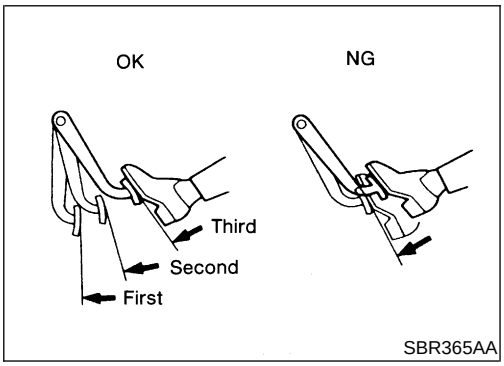

SBR365AA

On-vehicle Service

NEBR0225

OPERATING CHECK

NEBR0225S01

- Depress brake pedal several times with engine off. After exhausting vacuum, make sure there is no change in pedal stroke.
- Depress brake pedal, then start engine. If pedal goes down slightly, operation is normal.

AIRTIGHT CHECK

NEBR0225S02

- Start engine, and stop it after one or two minutes. Depress brake pedal several times slowly. Booster is airtight if pedal stroke is less each time.
- Depress brake pedal while engine is running, and stop engine with pedal depressed. The pedal stroke should not change after holding pedal down for **30 seconds.**

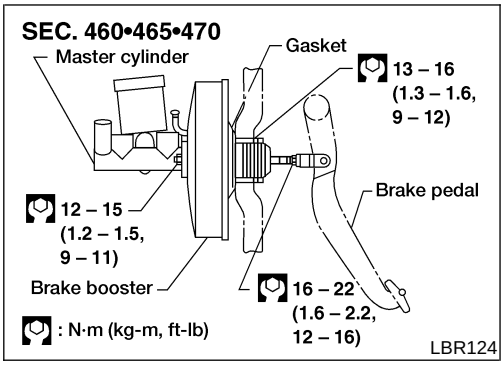

LBR124

Removal

NEBR0226

CAUTION:

- **Be careful not to splash brake fluid on painted areas; it may cause paint damage. If brake fluid is splashed on painted areas, wash it away with water immediately.**
- **Be careful not to deform or bend brake pipes during removal of booster.**

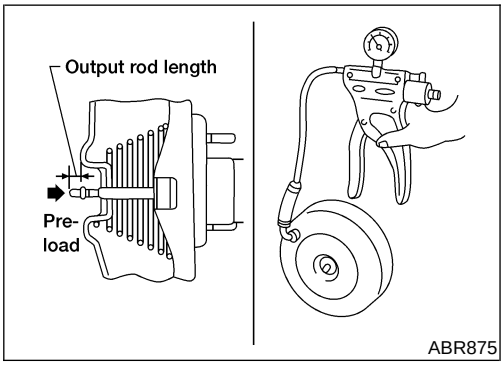

ABR875

Inspection

NEBR0227

OUTPUT ROD LENGTH CHECK

NEBR0227S01

1. Apply vacuum of −66.7 kPa (−500 mmHg, −19.69 inHg) to brake booster with a hand vacuum pump.
2. Add preload of 19.6 N (2.0 kg, 4.4 lb) to output rod length.
3. Check output rod length.

Specified length:

10.275 - 10.525 mm (0.4045 - 0.4144 in)

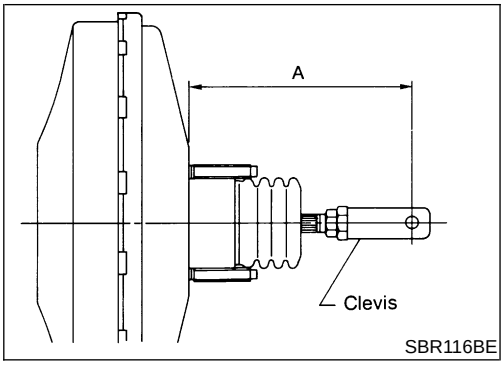

Installation

=NEBR0228

CAUTION:

- **Be careful not to deform or bend brake pipes during installation of booster.**
- **Replace clevis pin if damaged.**
- **Refill with new brake fluid “DOT 3”.**
- **Never reuse drained brake fluid.**
- **Take care not to damage brake booster mounting bolt thread when installing. Due to the narrow angle of installation, the threads can be damaged by the dash panel.**

A:

KA24DE

160 mm (6.30 in)

VG33E and VG33ER

165 mm (6.50 in)

1. Before fitting booster, temporarily adjust clevis to dimension shown.
2. Fit booster, then secure mounting nuts (brake pedal bracket to brake booster) lightly.
3. Connect brake pedal and booster input rod with clevis pin.
4. Secure mounting nuts.

   Specification: 13 - 16 N·m (1.3 - 1.6 kg-m, 9 - 12 ft-lb)
5. Install master cylinder. Refer to “Installation”, BR-21.
6. Adjust brake pedal height and free play. Refer to “Adjustment”, BR-18.
7. Secure lock nut for clevis.

   : 16 - 22 N·m (1.6 - 2.2 kg-m, 12 - 16 ft-lb)
8. Bleed air. Refer to “Bleeding Brake System”, BR-11.

Vacuum Hose

NEBR0229

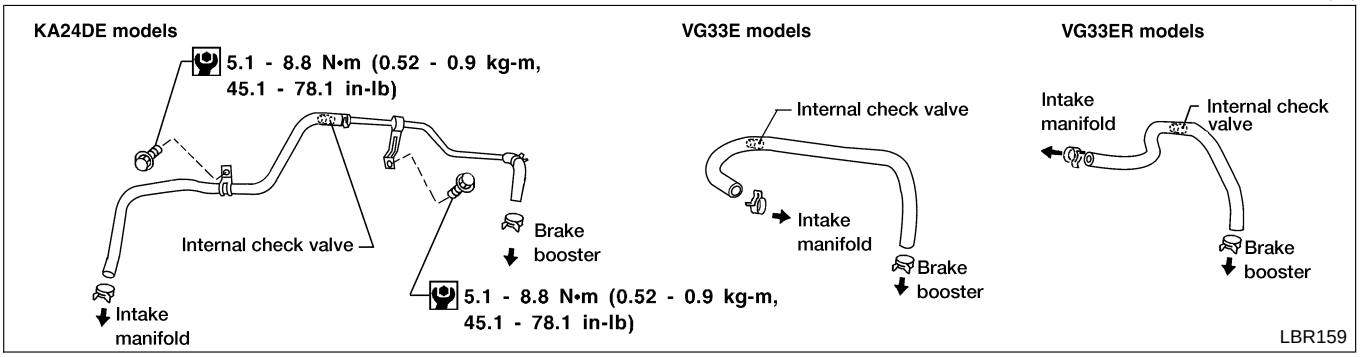

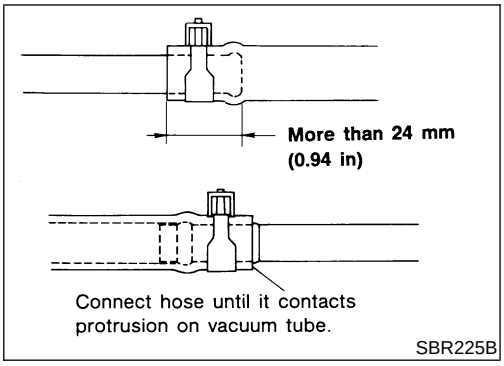

Removal and Installation

NEBR0230

CAUTION:

When installing vacuum hoses, pay attention to the following points.

- **Do not apply any oil or lubricants to vacuum hose with check valve.**
- **Insert vacuum tube into vacuum hose as shown.**
- **Install vacuum hose with internal check valve, paying attention to its direction.**

Inspection

=NEBR0231

HOSES AND CONNECTORS

NEBR0231S01

Check vacuum lines and connections for airtightness, improper attachment, chafing and deterioration.

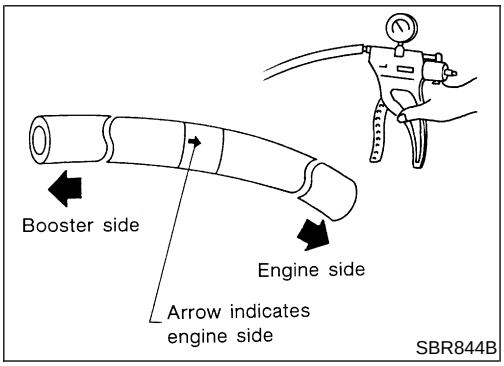

CHECK VALVE

NEBR0231S02

Check vacuum with a vacuum pump.

Connect to booster side	Vacuum should exist.
Connect to engine side	Vacuum should not exist.

Pad Replacement

NEBR0232

WARNING:

Clean brakes with a vacuum dust collector to minimize the hazard of airborne particles or other materials.

CAUTION:

- **When cylinder body is open, do not depress brake pedal, or piston will pop out.**
- **Be careful not to damage piston boot or get oil on rotor. Always replace shims when replacing pads.**
- **If shims are rusted or show peeling of the rubber coat, replace them with new shims.**
- **It is not necessary to remove connecting bolt except for disassembly or replacement of caliper assembly. In this case, suspend cylinder body with wire so as not to stretch brake hose.**
- **Burnish the brake contact surfaces after refinishing or replacing drums or rotors, after replacing pads or linings, or if a soft pedal occurs at very low mileage. Refer to "Brake Burnishing Procedure", BR-10.**

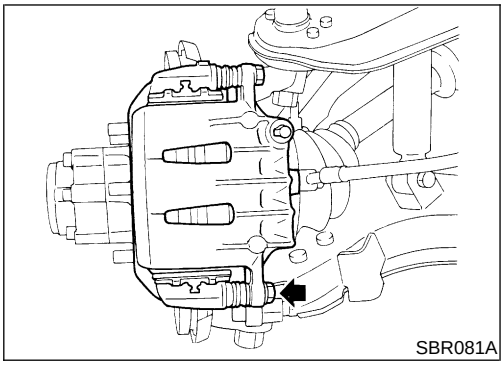
SBR081A

1. Remove master cylinder reservoir cap.
2. Remove lower pin bolt.

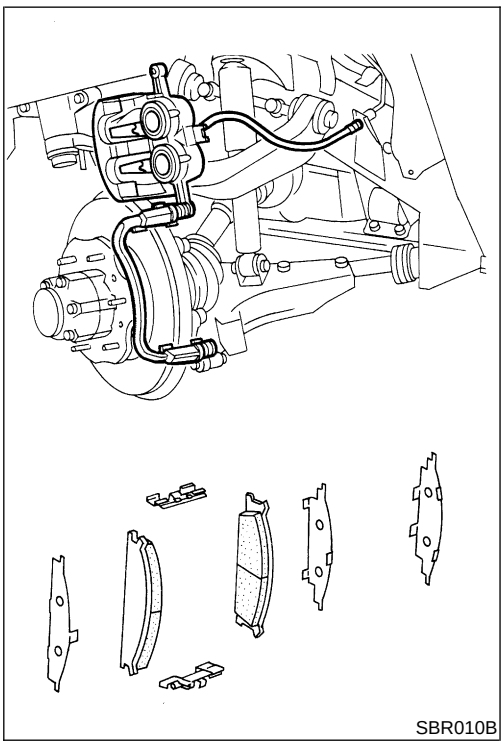
SBR010B

3. Open cylinder body upward. Then remove pad retainers, inner and outer shims and shim cover (if so equipped).

   Standard pad thickness:

   10 mm (0.39 in)

   Pad wear limit:

   2.0 mm (0.079 in)

- Carefully monitor brake fluid level because brake fluid will return to reservoir when pushing back piston.

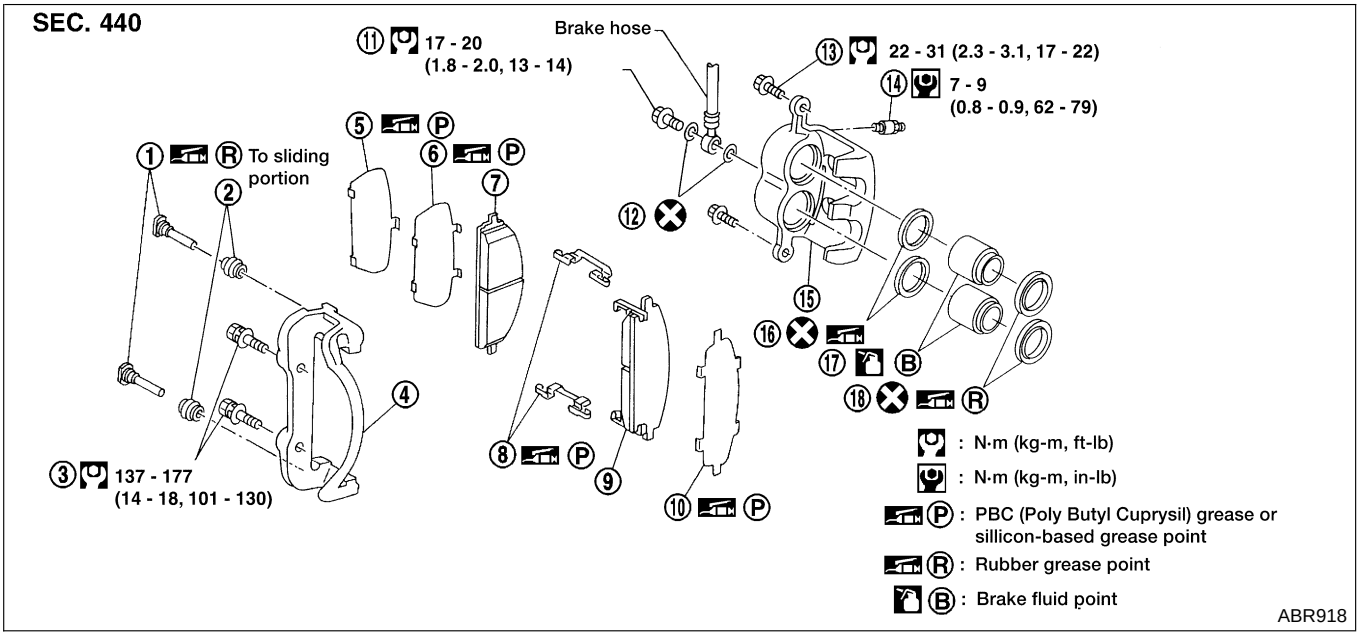

1. Main pin
2. Pin boot
3. Torque member fixing bolt
4. Torque member
5. Shim cover (if so equipped)
6. Inner shim
7. Inner pad
8. Pad retainer
9. Outer pad
10. Outer shim
11. Connecting bolt
12. Copper washer
13. Main pin bolt
14. Bleed valve
15. Cylinder body
16. Piston seal
17. Piston
18. Piston boot

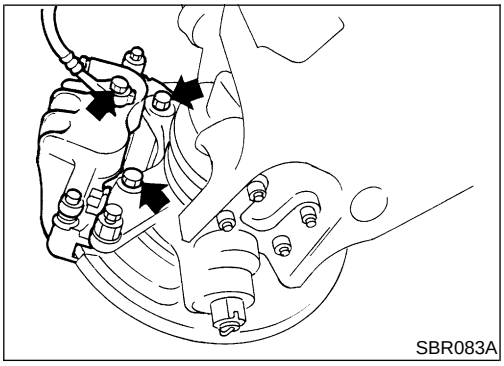

Removal

NEBR0233

WARNING:

Clean brake pads with a vacuum dust collector to minimize the hazard of airborne particles or other materials.

CAUTION:

Suspend caliper assembly with wire so as not to stretch brake hose.

Remove torque member fixing bolts and connecting bolt.

It is not necessary to remove connecting bolt except for disassembly or replacement of caliper assembly. In this case, suspend caliper assembly with wire so as not to stretch brake hose.

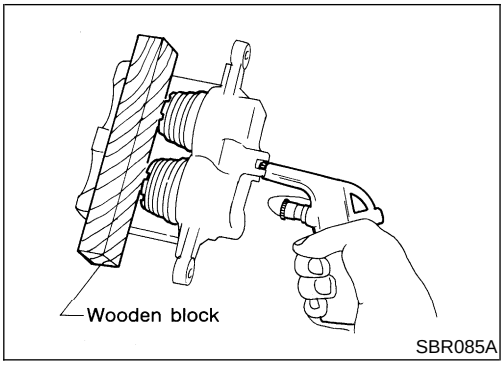

Disassembly

NEBR0234

WARNING:

Do not place your fingers in front of piston.

CAUTION:

- **Do not scratch or score cylinder wall.**
- **CL28VD type front disc brake uses plastic pistons. Handle them carefully.**

1. Push out piston and dust covers with compressed air. Use a wooden block so that both pistons come out evenly.
2. Remove piston seal with a suitable tool.

Inspection

NEBR0235

CALIPER

NEBR0235S01

Cylinder Body

NEBR0235S0101

- Check inside surface of cylinder for score, rust, wear, damage and presence of foreign objects. If any of the above conditions are observed, replace cylinder body.
- Minor damage from rust or foreign objects may be eliminated by polishing surface with a fine emery paper. Replace cylinder body if necessary.

CAUTION:

Use brake fluid to clean. Never use mineral oil.

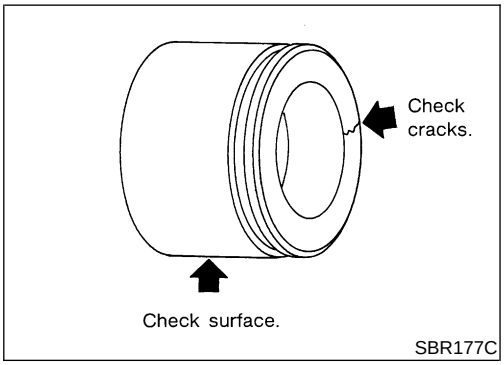

Piston

NEBR0235S0102

CAUTION:

Piston sliding surface is plated. Do not polish with emery paper even if rust or foreign objects are stuck to sliding surface.

Slide Pin, Pin Bolt and Pin Boot

NEBR0235S0103

Check for wear, cracks, rust and other damage. Replace if any of the above conditions are observed.

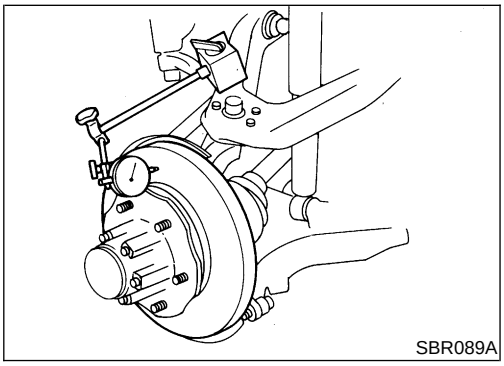

ROTOR

NEBR0235S02

Runout

NEBR0235S0201

1. Check runout using a dial indicator.

Make sure that wheel bearing axial end play is within the specifications before measuring. Refer to *AX-5*, "FRONT WHEEL BEARING".

Maximum runout:

0.07 mm (0.0028 in)

2. If the runout is out of specification, find minimum runout position as follows:

a. Remove nuts and rotor from wheel hub.
b. Shift the rotor one hole and secure rotor to wheel hub with nuts.
c. Measure runout.
d. Repeat steps a. to c. so that minimum runout position can be found.

3. If the runout is still out of specification, turn rotor with on-car brake lathe ("MAD, DL-8700", "AMMCO 700 and 705" or equivalent).

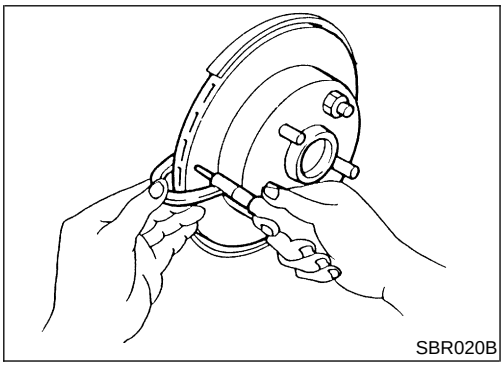
SBR020B

Thickness

NEBR0235S0202

Thickness variation (At least 8 positions):
Maximum 0.02 mm (0.0008 in)

If thickness variation exceeds the specification, turn rotor with on-car brake lathe.

Rotor repair limit:
24.0 mm (0.945 in)

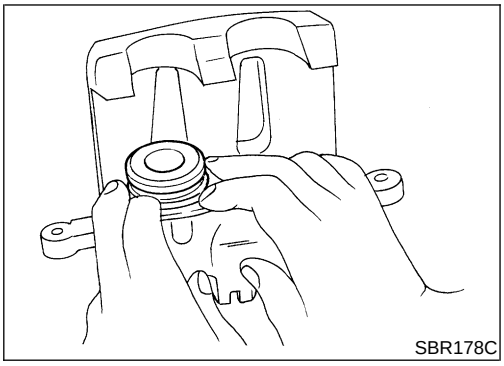
SBR178C

Assembly

NEBR0236

1. Insert piston seal into groove on cylinder body.
2. With piston boot fitted to piston, insert piston boot into groove on cylinder body and install piston.
3. Properly secure piston boot.

CAUTION:

- **Secure dust seal properly.**
- **Lubricate with new brake fluid before installing plastic pistons into cylinder body.**

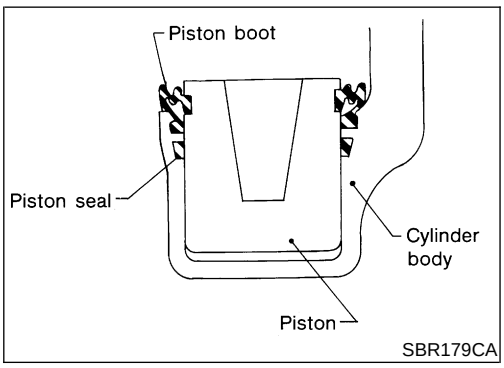

SBR179CA

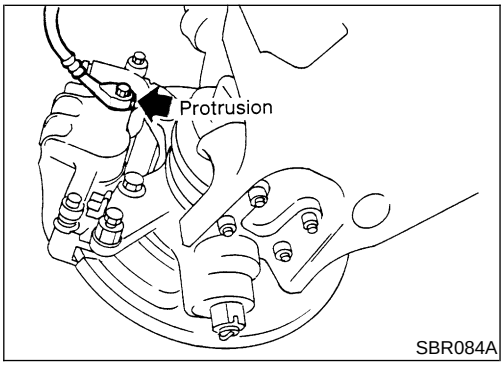

SBR084A

Installation

NEBR0237

CAUTION:

- **Refill with new brake fluid "DOT 3".**
- **Never reuse drained brake fluid.**

1. Install caliper assembly.
2. Install brake hose to caliper securely.
3. Install all parts and secure all bolts.
4. Bleed air. Refer to "Bleeding Brake System", BR-11.

Components

NEBR0239

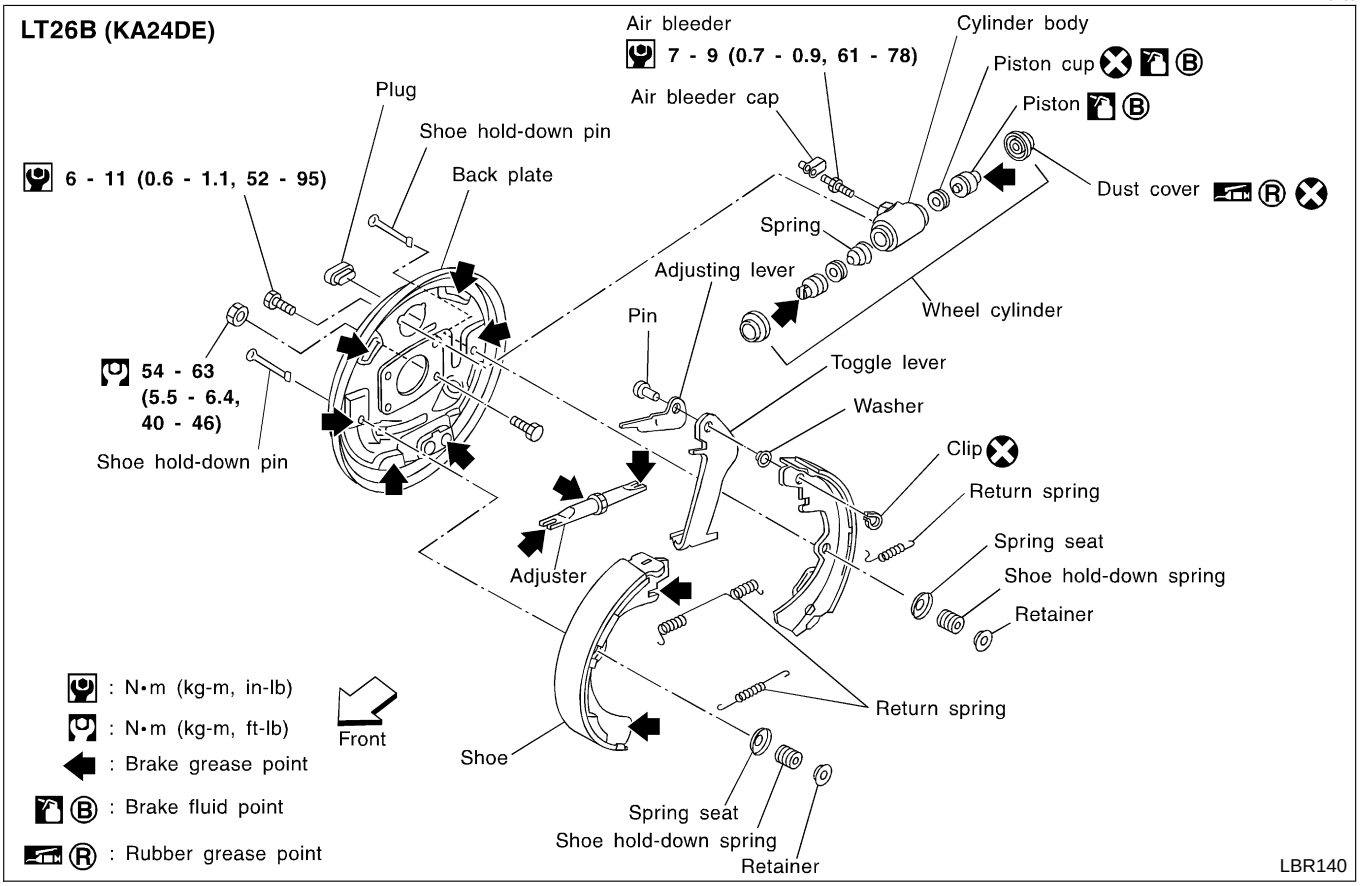

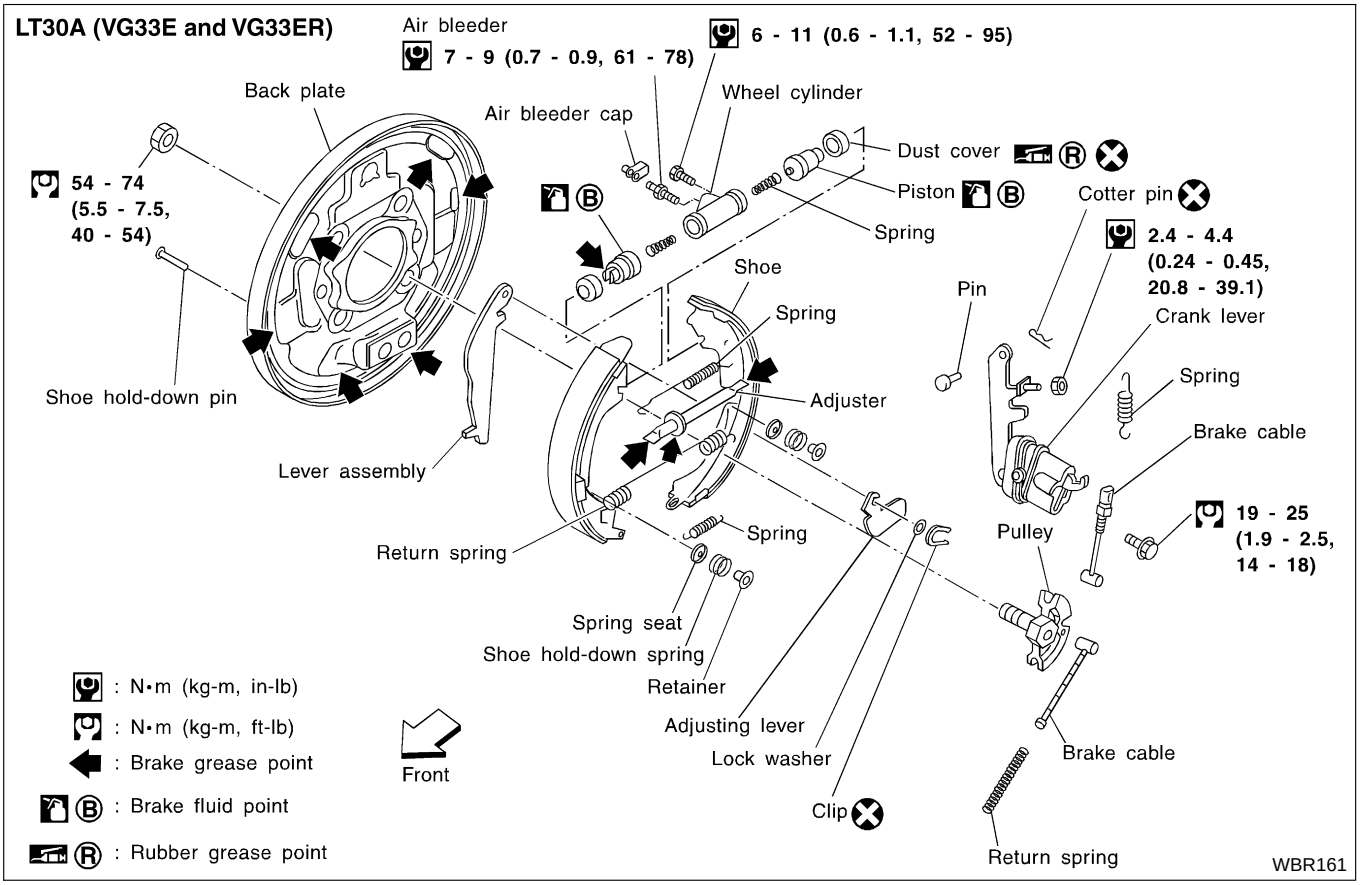

Removal

NEBR0240

WARNING:

Clean brake lining with a vacuum dust collector to minimize the hazard of airborne asbestos or other materials.

CAUTION:

Make sure parking brake lever is released completely.

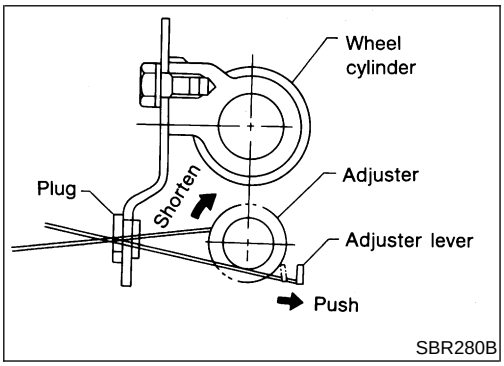

SBR280B

1. Release parking brake lever fully, then remove drum.
   If drum is hard to remove, the following procedures should be carried out.
a. **Remove plug. Then shorten adjuster to make clearance between brake shoe and drum.**

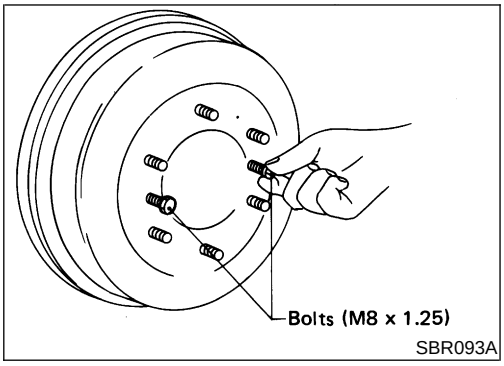

SBR093A

b. **Install two bolts as shown. Tighten the two bolts gradually.**

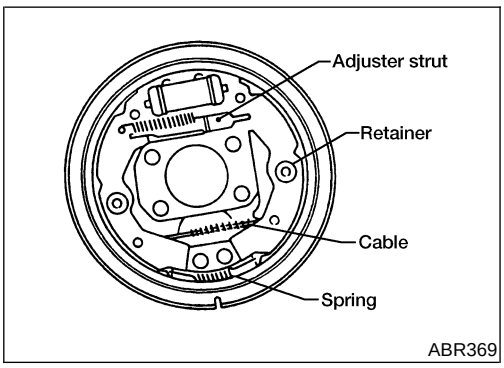

ABR369

2. After removing shoe hold pin by rotating push retainer, remove leading shoe then remove trailing shoe. Remove spring by rotating shoes in direction arrow.

- **Be careful not to damage wheel cylinder piston boots.**
- **Be careful not to damage parking brake cable when separating it.**

3. Remove adjuster.
4. Disconnect parking brake cable from toggle lever.

Be careful not to damage parking brake cable when separating it.

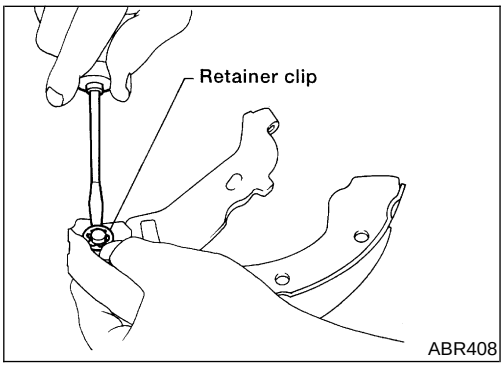

ABR408

5. Remove retainer ring with a suitable tool. Then separate toggle lever and brake shoe.

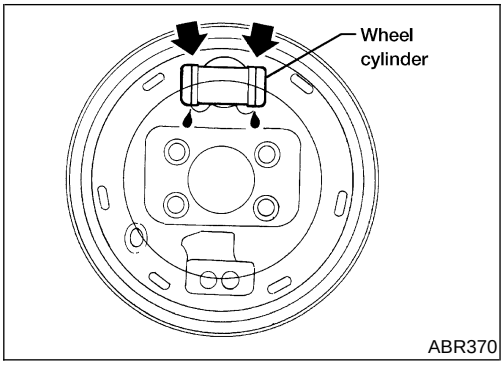

Inspection

NEBR0241

WHEEL CYLINDER

NEBR0241S01

- Check wheel cylinder for leakage.
- Check for wear, damage and loose conditions. Replace if any such condition exists.

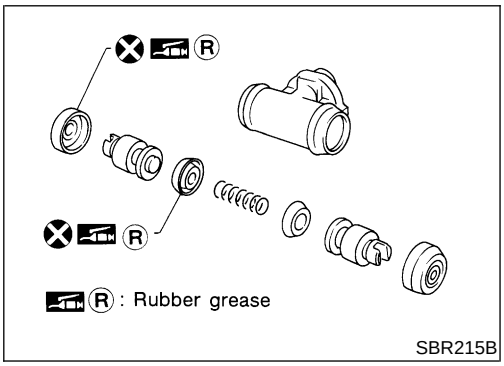

Wheel Cylinder Overhaul

NEBR0242

- Check all internal parts for wear, rust and damage. Replace if necessary.
- Pay attention not to scratch cylinder when installing pistons.

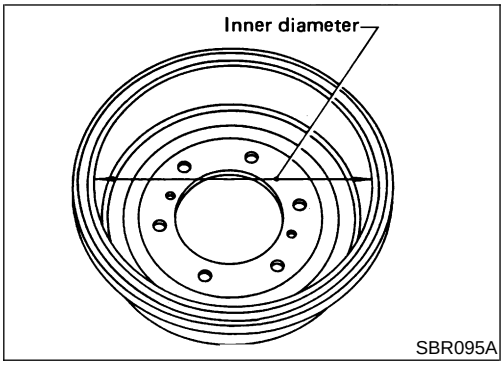

Inspection

NEBR0243

DRUM

NEBR0243S01

Maximum inner diameter (Repair limit):
LT26B 261.5 mm (10.30 in)
LT30A 296.5 mm (11.67 in)

- Contact surface should be fine finished with No. 120 to 150 emery paper.
- Using a drum lathe, lathe brake drum if it shows scoring, partial wear or stepped wear.
- After brake drum has been completely reconditioned or replaced, check drum and shoes for proper contact pattern.

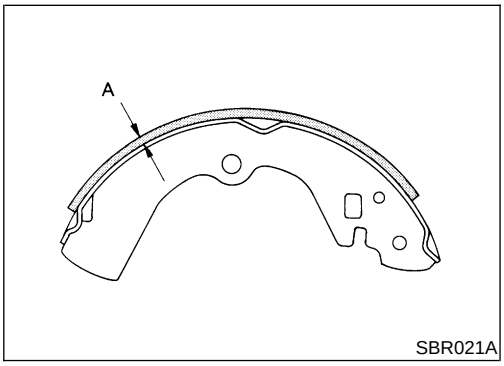

LINING

NEBR0243S02

Check lining thickness.

Standard lining thickness:
LT26B 5.5 mm (0.217)
LT30A 6.1 mm (0.240 in)
Lining wear limit (A):
LT26B 1.5 mm (0.059 in)
LT30A 1.5 mm (0.059 in)

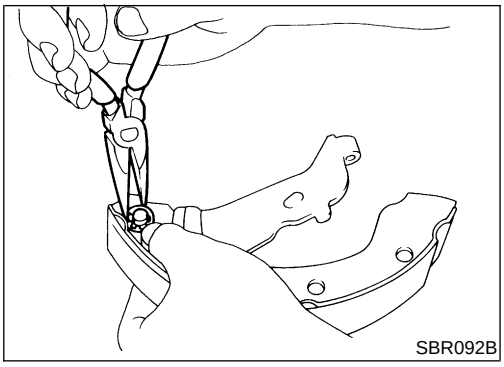
SBR092B

Installation

NEBR0244

1) **Always perform shoe clearance adjustment.**
2) **Burnish the brake contact surfaces after refinishing or replacing drums or rotors, after replacing pads or linings, or if a soft pedal occurs at very low mileage. Refer to "Brake Burnishing Procedure", BR-10.**
1. Fit toggle lever to brake shoe (trailing side) with retainer ring.

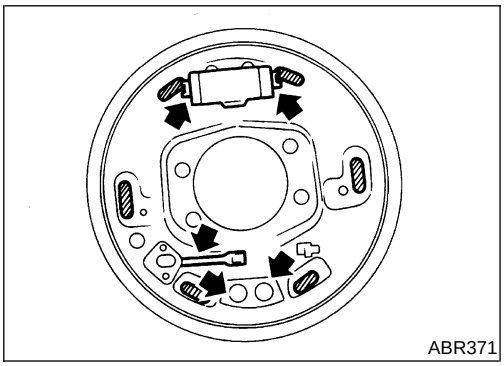
ABR371

2. Apply brake grease to the contact areas shown at left.

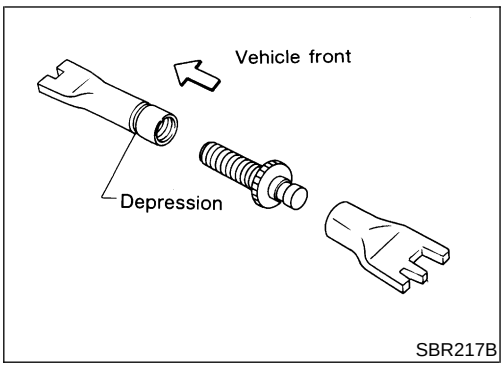

SBR217B

3. Shorten adjuster by rotating it.

- **Pay attention to direction of adjuster.**

Wheel	Screw	Depression
Left	Left-hand thread	Yes
Right	Right-hand thread	No

4. Connect parking brake cable to toggle lever.
5. Install all parts.

Be careful not to damage wheel cylinder piston boots.

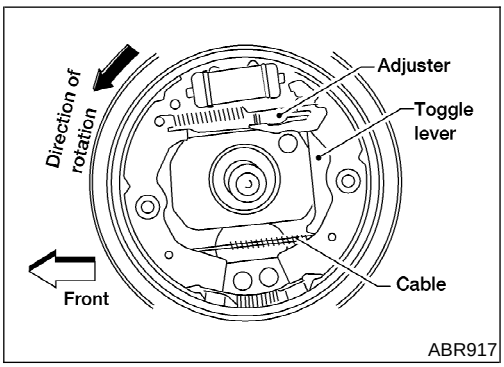

ABR917

6. Check all parts are installed properly.

- **After installation is completed, adjust shoe-to-drum clearance.**

7. Install brake drum.
8. When installing new wheel cylinder or overhauling wheel cylinder, bleed air. Refer to "Bleeding Brake System", BR-11.
9. Adjust parking brake. Refer to "Adjustment", BR-36.

- Install all the parts by referring to the following figures.

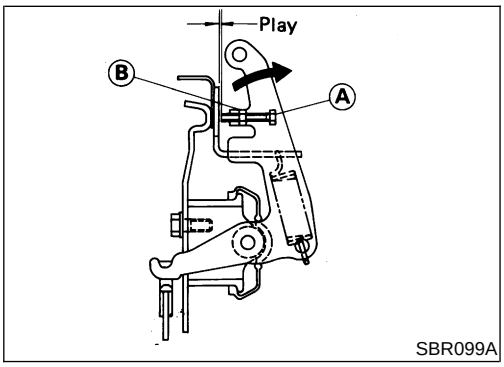

SBR099A

LT30A MODEL

NEBR0244S02

- After installing crank lever on back plate, make sure that there is no play between crank lever and back plate. If play exists, adjust bolt **A** and lock nut **B**.

Installation (Cont'd)

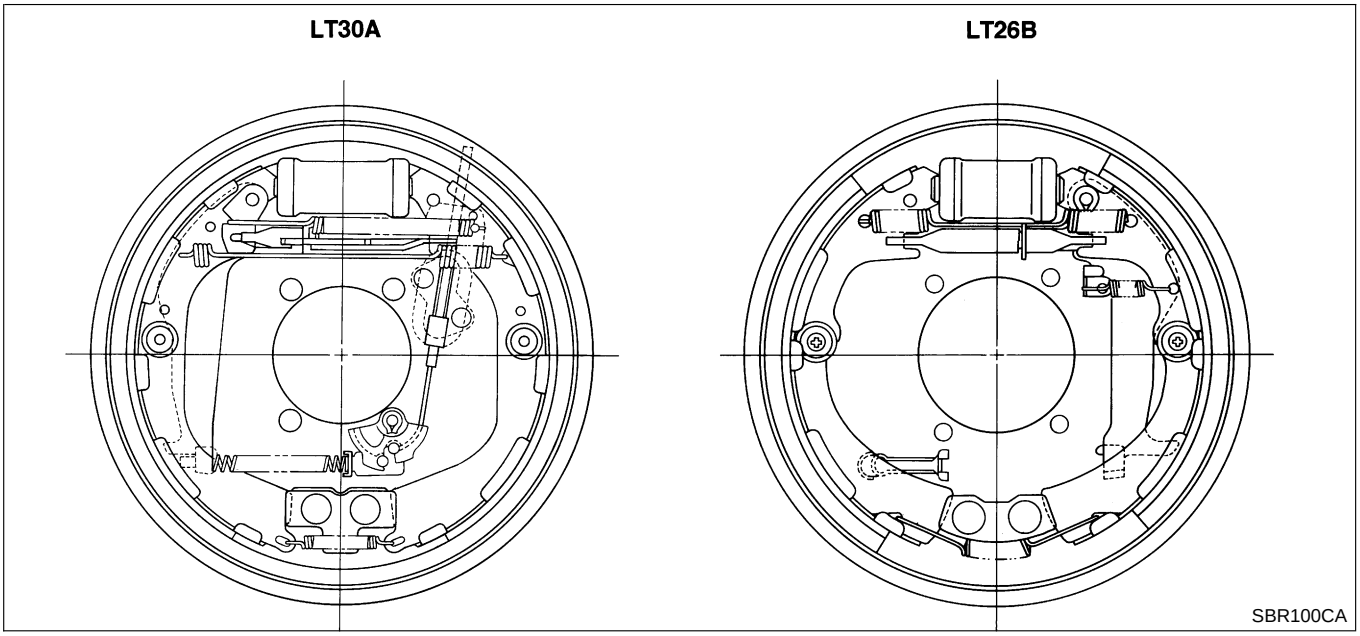

LH wheel

Components

NEBR0245

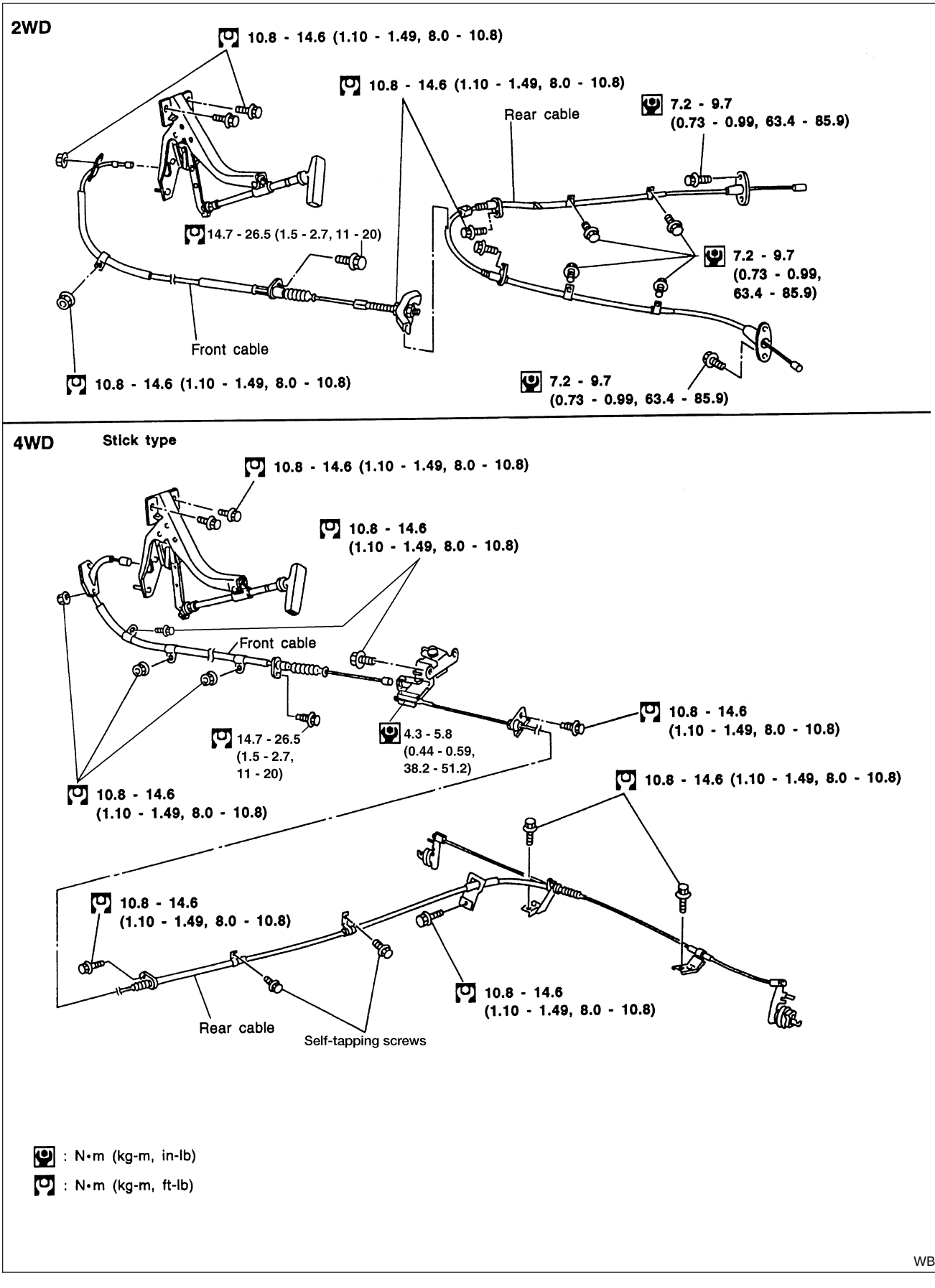

Removal and Installation

NEBR0246

- Be careful not to damage cable.
- Make sure there is no free play after installation.

Inspection

NEBR0247

1. Check control lever for wear and other damage. Replace if necessary.
2. Check wires for discontinuity and deterioration. Replace if necessary.
3. Check warning lamp and switch. Replace if necessary.
4. Check parts at each connecting portion and, if deformed or damaged, replace.

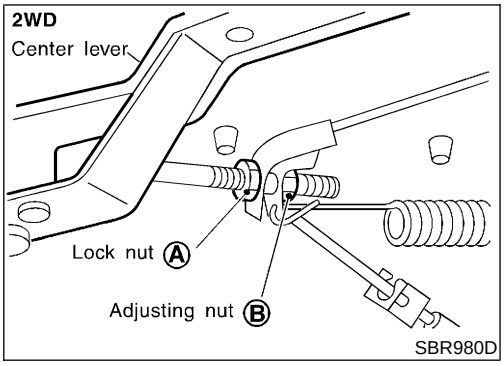

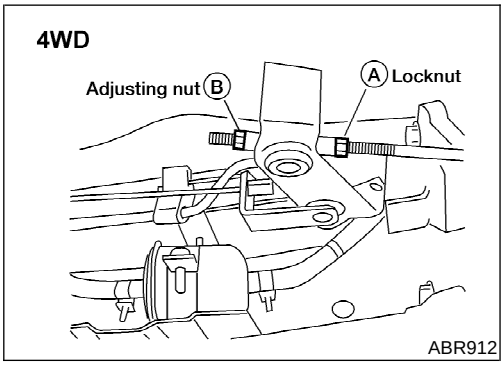

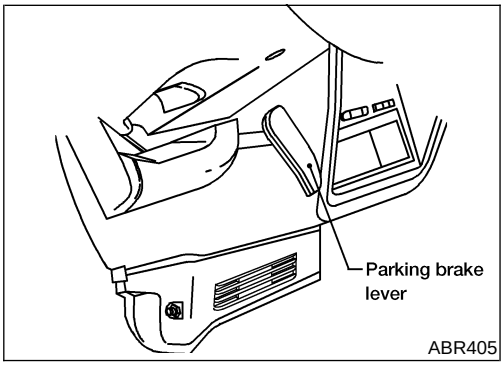

Adjustment

NEBR0248

Adjust parking as follows:

1. Fully release parking brake lever.
2. Loosen **A** and rotate **B** until parking brake pedal loosens.
3. Depress brake pedal several times until clicking sound does not occur from rear brakes.
4. Adjust clearance between rear brake shoe and drum.
5. Adjust parking brake lever stroke by rotating **B**.
6. Pull parking brake lever with specified force. Check lever stroke and ensure smooth operation.
7. Readjust clearance between rear brake shoe and drum.

Purpose

NEBR0252

The rear wheel anti-lock brake system (ABS) consists of electronic and hydraulic components. It controls rear braking force so locking of the rear wheels can be avoided.

1) Improves proper tracking performance through steering wheel operation during severe braking.
2) Eases obstacle avoidance through steering wheel operation during severe braking.
3) Improves vehicle stability.

Operation

NEBR0253

- When the vehicle speed is less than 10 km/h (6 MPH) this system does not work.
- The rear wheel anti-lock brake system (ABS) has a self-test function. The system turns on the ABS warning lamp for a few seconds each time the ignition switch is turned ON. After the engine is started, the ABS warning lamp turns off. The system performs a circuit check when the ignition switch is turned ON. After the engine is started, the ABS warning lamp turns off. If a malfunction is found during this check, the ABS warning lamp will stay on.
- While driving, a mechanical noise may be heard and a slight pedal pulsation may be felt during ABS operation. This is a normal condition.

ABS Hydraulic Circuit

NEBR0254

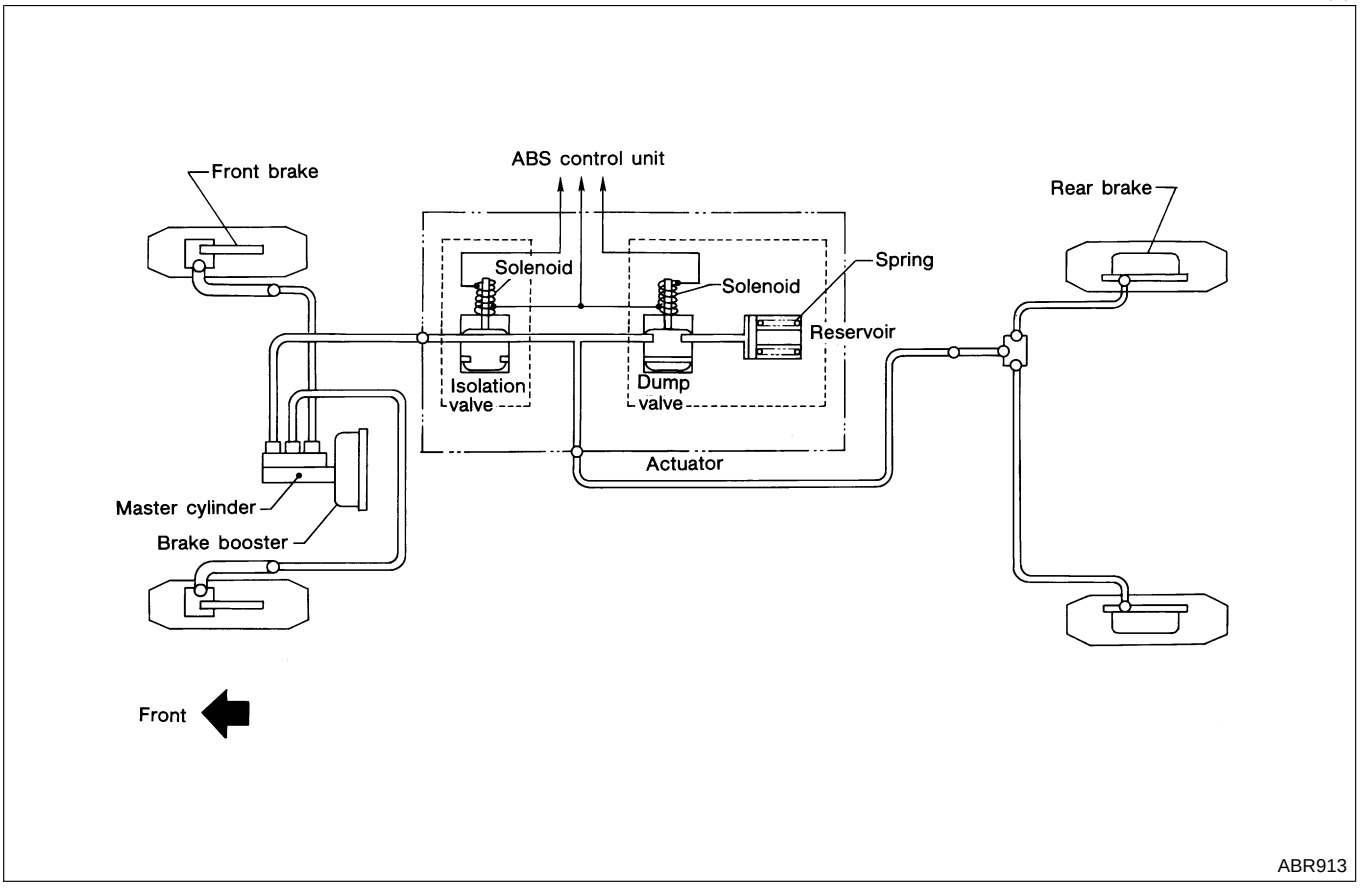

System Components

NEBR0255

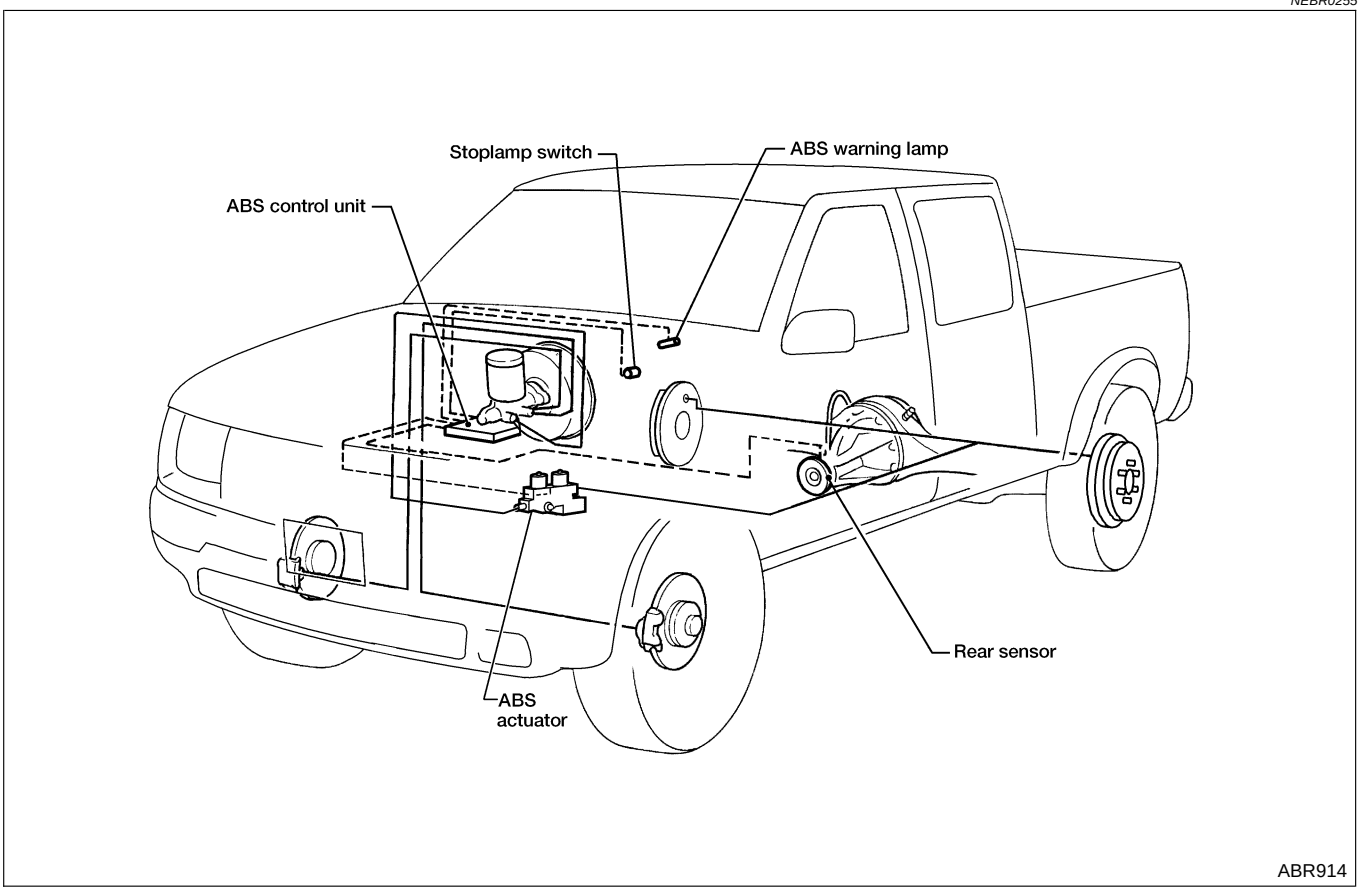

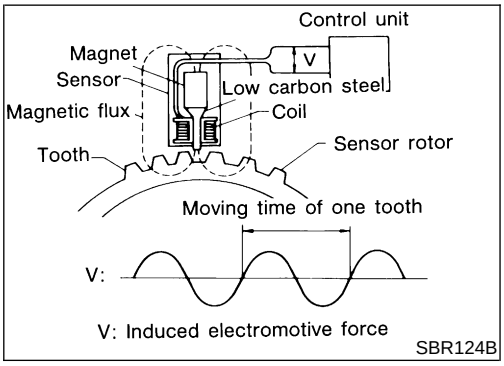

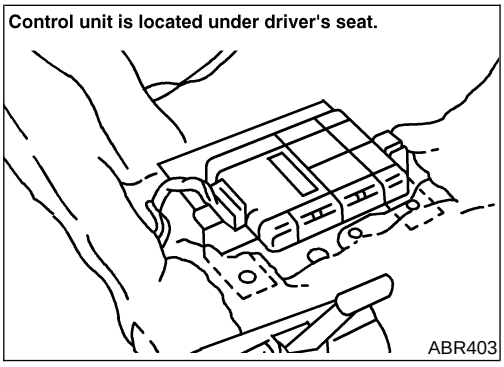

System Description

NEBR0256

REAR SENSOR

NEBR0256S01

The rear sensor unit consist of a gear-shaped sensor rotor and a sensor element. The element contains a bar magnet around which a coil is wound. The sensor rotor is installed at the companion flange of the rear axle housing and the sensor unit is installed on the rear axle housing. As the rear axle pinion rotates, the sensor generates a sine-wave pattern. The frequency and voltage increase as the rotating speed increases.

ABS CONTROL UNIT

NEBR0256S02

The ABS control unit computes the rear axle rotating speed by the signal current sent from the sensor unit. Then it supplies a DC current to the ABS actuator. If any electrical malfunction should be detected in the system, the control unit causes the warning lamp to light up. In this condition, the ABS system will be deactivated by the control unit, and the vehicle's brake system reverts to normal operation.

Removal and Installation

NEBR0257

CAUTION:

Be careful not to damage sensor edge and sensor rotor teeth. In case the final drive assembly needs to be removed, disconnect the ABS sensor from the assembly and move it away. Failure to do so may result in damage to the sensor wires making the sensor inoperative.

For final drive models using collapsible spacer (C200), bearing preload must be adjusted whenever companion flange is removed. Therefore, final drive overhaul is required.

REAR SENSOR

NEBR0257S01

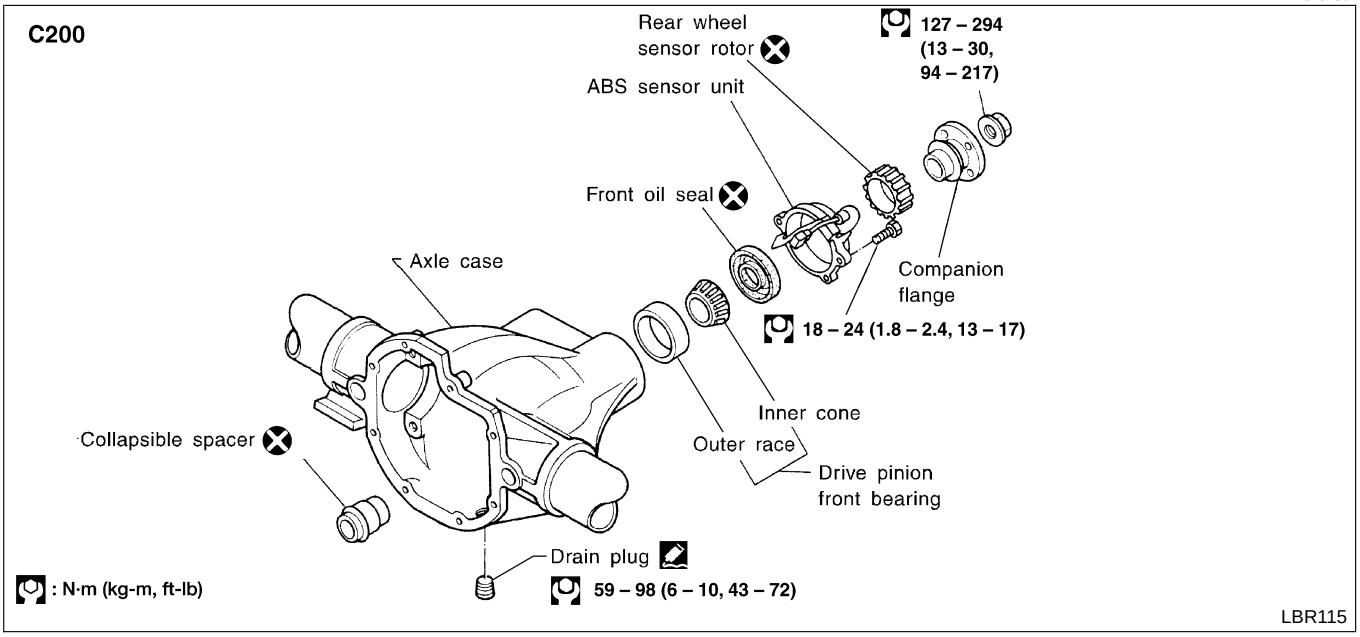

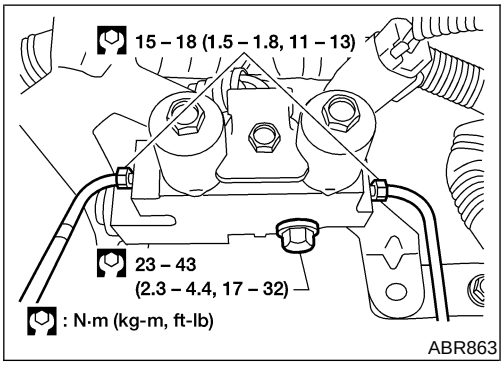

ACTUATOR

NEBR0257S02

Removal

NEBR0257S0201

1) Disconnect battery cable.
2) Drain brake fluid.
3) Disconnect connectors, brake pipes, and remove fixing bolts and flare nuts.

Installation

NEBR0257S0202

CAUTION:

After installation, refill brake fluid. Then bleed air. Refer to “Bleeding Brake System”, BR-11.

1) Connect pipes temporarily.
2) Secure fixing bolts.
3) Torque brake pipe flare nuts.
4) Connect connectors and battery cable.

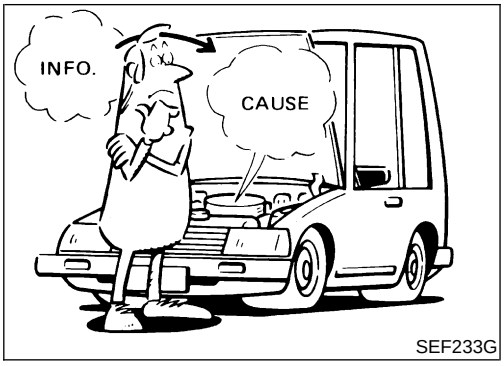

SEF233G

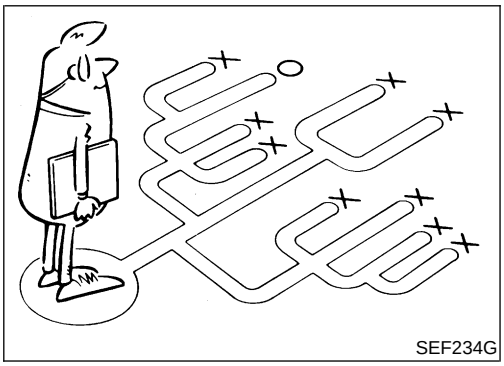
SEF234G

How to Perform Trouble Diagnoses for Quick and Accurate Repair

NEBR0258

INTRODUCTION

NEBR0258S01

The ABS system has an electronic control unit to control major functions. The control unit accepts input signals from sensors and instantly drives the actuators. It is essential that both kinds of signals are proper and stable. It is also important to check for conventional problems: such as air leaks in booster lines, lack of brake fluid, or other problems with the brake system.

It is much more difficult to diagnose a problem that occurs intermittently rather than continuously. Most intermittent problems are caused by poor electric connections or faulty wiring. In this case, careful checking of suspicious circuits may help prevent the replacement of good parts.

A visual check only may not find the cause of the problems, so a road test should be performed.

Before undertaking actual checks, take a few minutes to talk with a customer who approaches with an ABS complaint. The customer is a very good source of information on such problems; especially intermittent ones. By talking to the customer, find out what symptoms are present and under what conditions they occur. Start your diagnosis by looking for “conventional” problems first. This is one of the best ways to troubleshoot brake problems on an ABS controlled vehicle.

Also check related Service bulletins for information.

WORK FLOW

NEBR0258S02

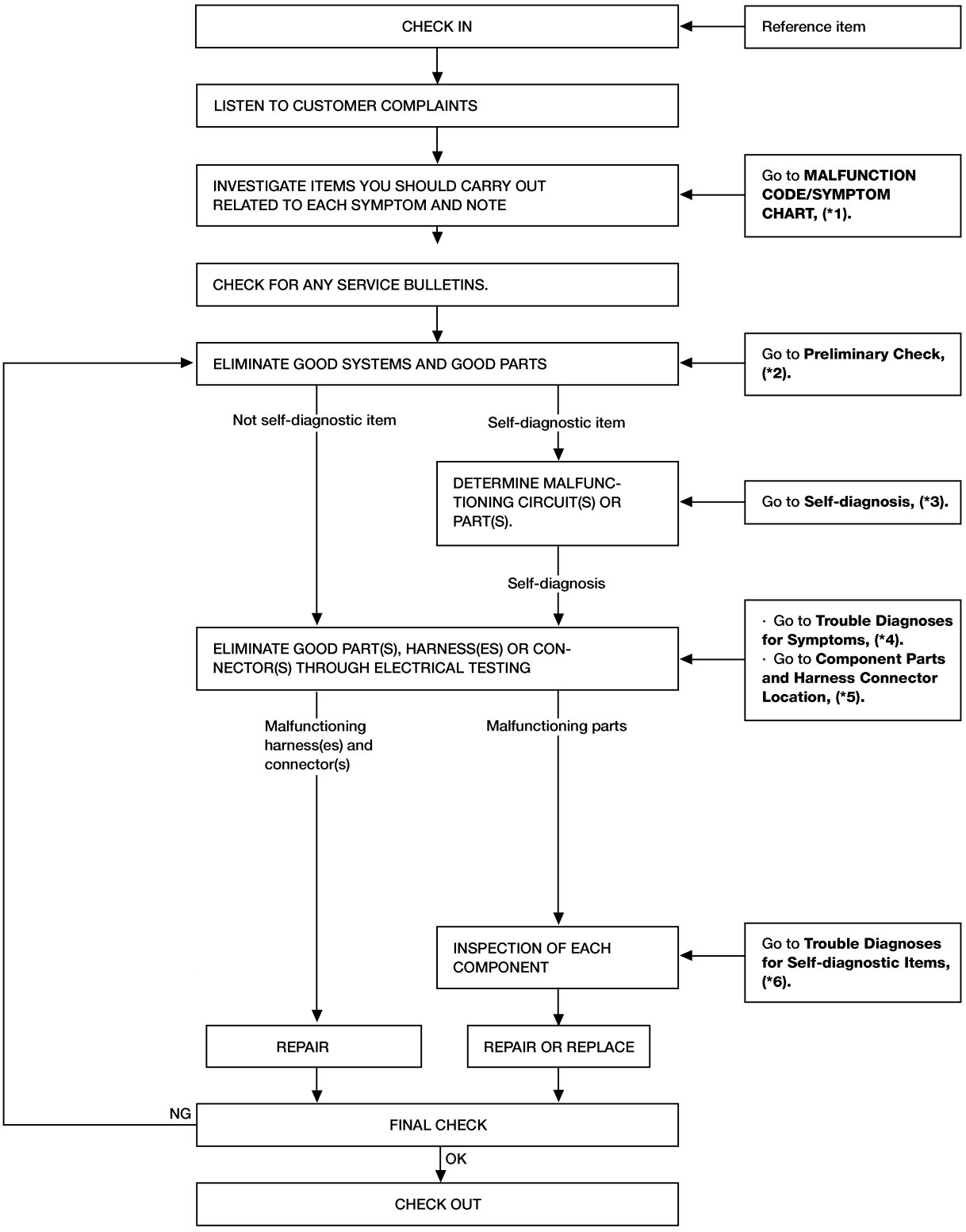

ABR839

*1: BR-52
*2: BR-42
*3: BR-49
*4: BR-62 - 64
*5: BR-45
*6: BR-56 - 61

Preliminary Check

NEBR0259

1	CHECK BRAKE FLUID	
Check brake fluid for contamination. **Has brake fluid been contaminated?**		
Yes	▶	Replace. GO TO 2.
No	▶	GO TO 2.

2	CHECK BRAKE FLUID LEVEL	
Check brake fluid level in reservoir tank. Low fluid level may indicate brake pad wear or leakage from brake line. 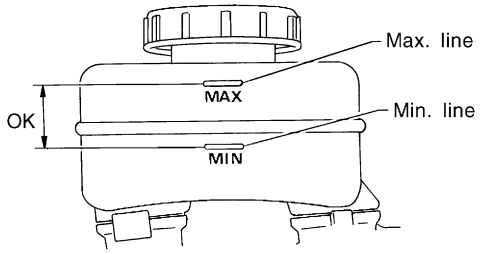 SBR451D **Is brake fluid filled between MAX and MIN lines on reservoir tank ?**		
Yes	▶	GO TO 3.
No	▶	Fill brake fluid. GO TO 3.

3	CHECK BRAKE LINE	
Check brake line for leakage. 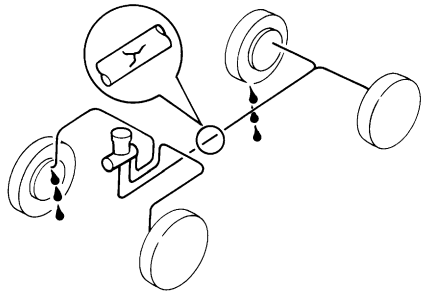 SBR389C **Is leakage present at or around brake lines, tubes or hoses or are any of these parts cracked or damaged?**		
Yes	▶	Repair. GO TO 4.
No	▶	GO TO 4.

4	CHECK BRAKE BOOSTER OPERATION

Check brake booster for operation and air tightness.
Refer to "On-vehicle Service", BR-22.

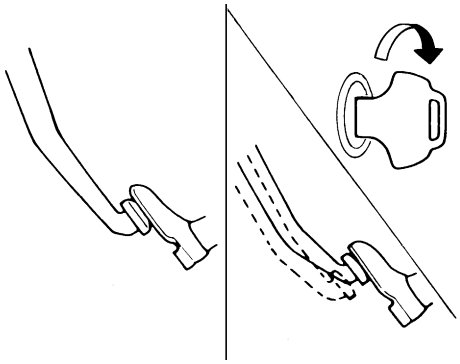

SBR058C

Is brake booster airtight and functioning properly?

Yes	▶	GO TO 5.
No	▶	Replace. GO TO 5.

5	CHECK BRAKE PAD AND ROTOR

Check brake pad and rotor.
Refer to "Pad Replacement", BR-26 and "ROTOR", 28.

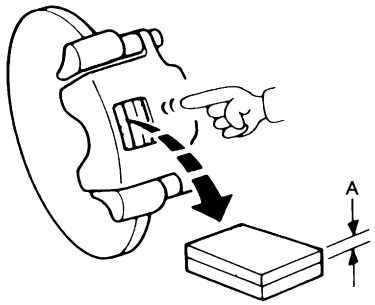

SBR059C

Are brake pads and rotors functioning properly?

Yes	▶	GO TO 6.
No	▶	Replace.

6	RECHECK BRAKE FLUID LEVEL

Check brake fluid level in reservoir tank again.

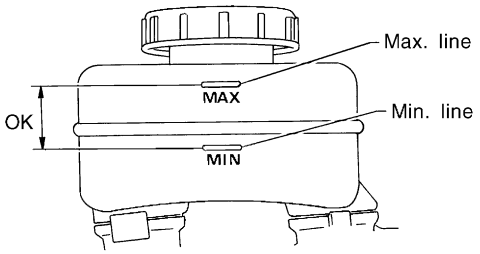

SBR451D

Is brake fluid filled between MAX and MIN lines on reservoir tank ?

Yes	▶	GO TO 7.
No	▶	Fill brake fluid.

7	CHECK WARNING LAMP ACTIVATION

Check warning lamp activation.

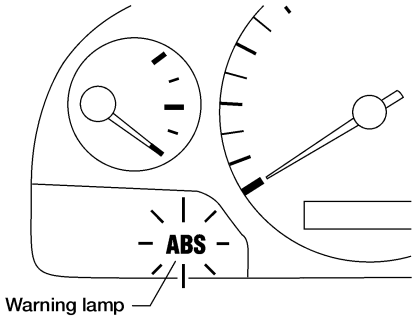

ABR838

Does warning lamp turn on when ignition switch is turned ON?

Yes	▶	GO TO 8.
No	▶	Check fuse, warning lamp bulb and warning lamp circuit.

8	CHECK WARNING LAMP DEACTIVATION

Check warning lamp for deactivation after engine is started.

Does warning lamp turn off when engine is started?

Yes	▶	GO TO 9.
No	▶	Go to "Self-diagnosis", BR-49.

9	DRIVE VEHICLE

Drive vehicle at speeds over 30 km/h (19 MPH) for at least one minute.

Does warning lamp remain off after vehicle has been driven at 30 km/h (19 MPH) for at least one minute?

Yes	▶	**INSPECTION END**
No	▶	Go to "Self-diagnosis", BR-49.

Component Parts and Harness Connector Location

NEBR0260

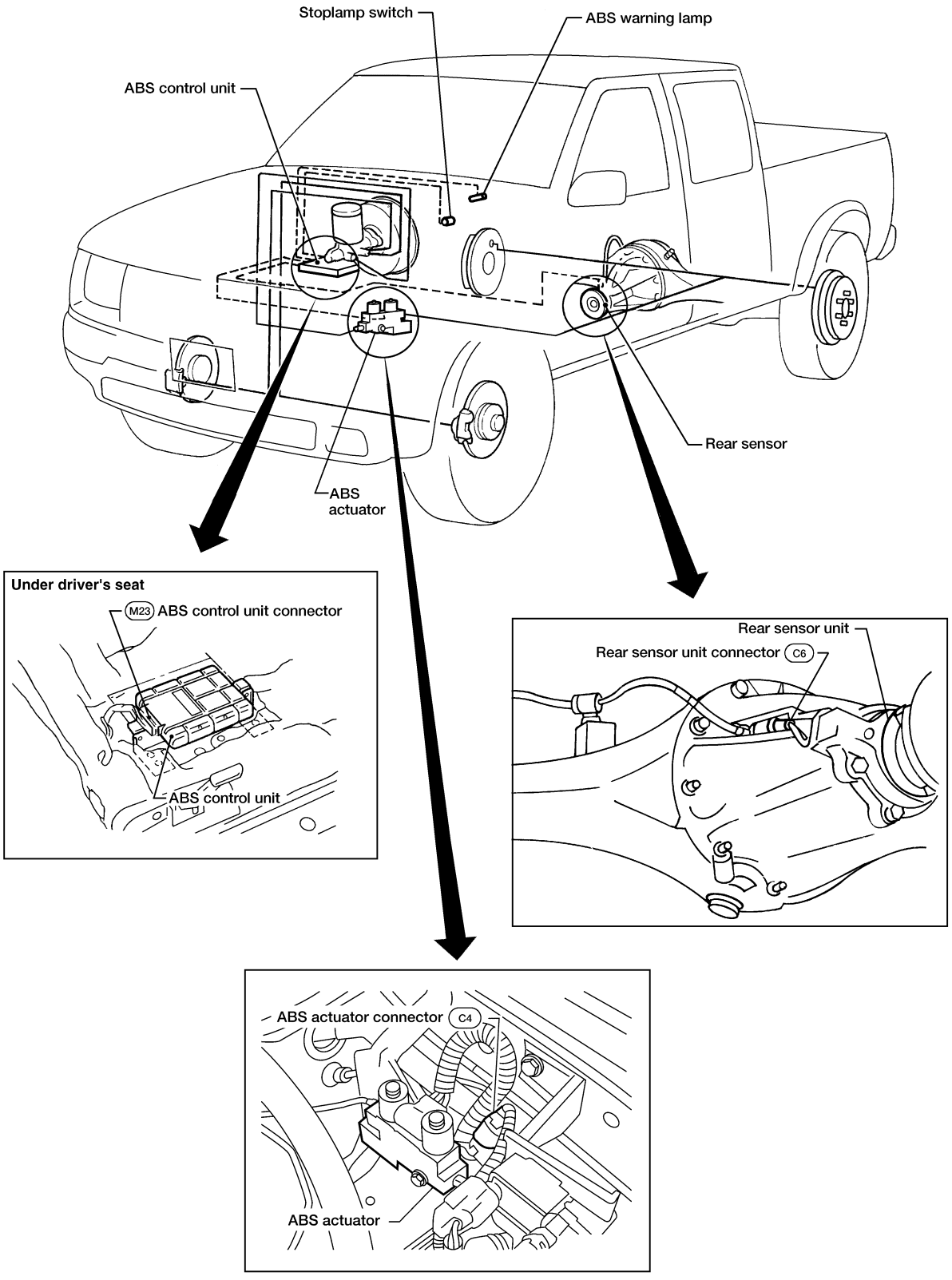

ABR855

Schematic

NEBR0261

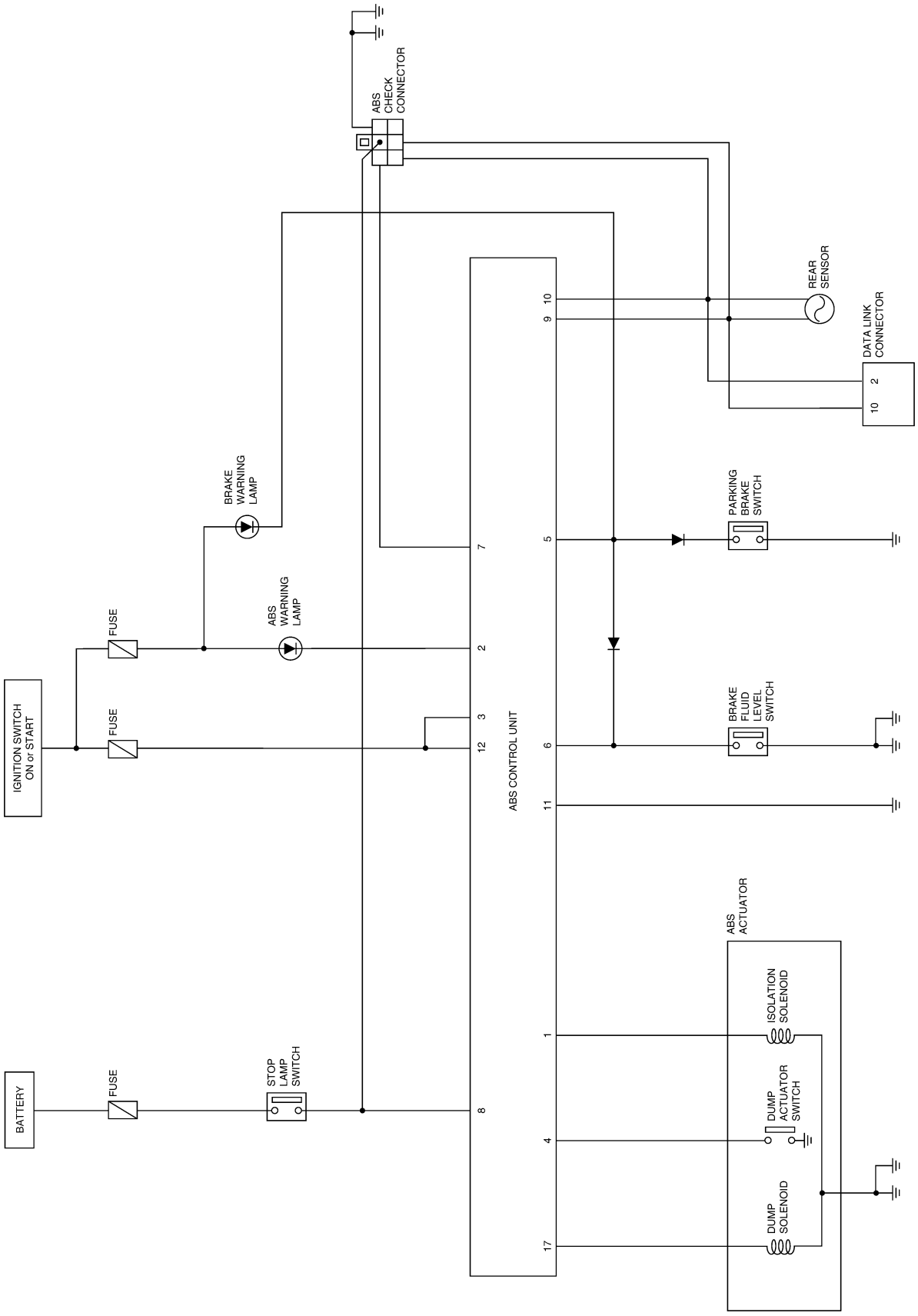

Wiring Diagram — ABS —

NEBR0262

BR-ABS-01

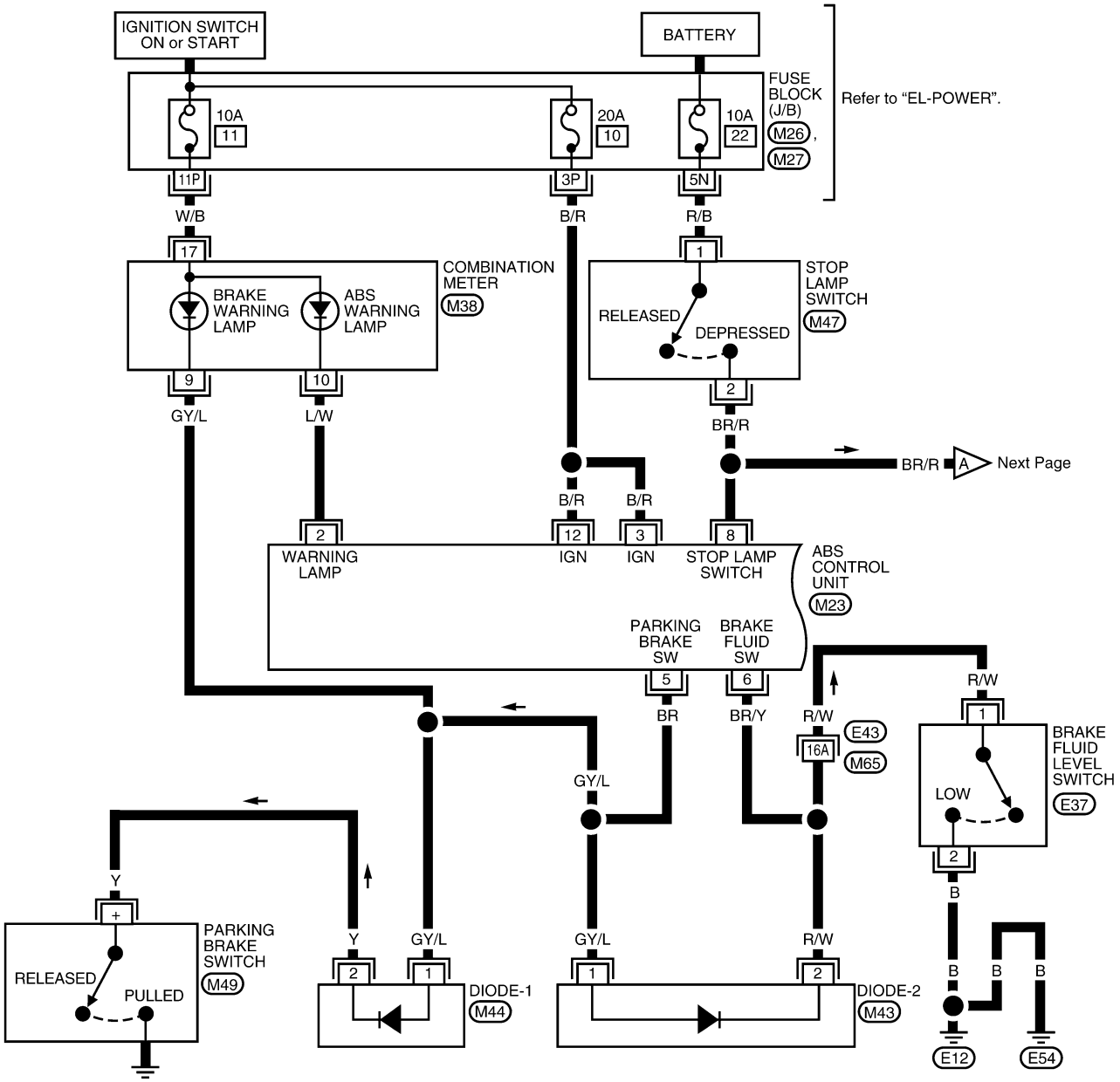

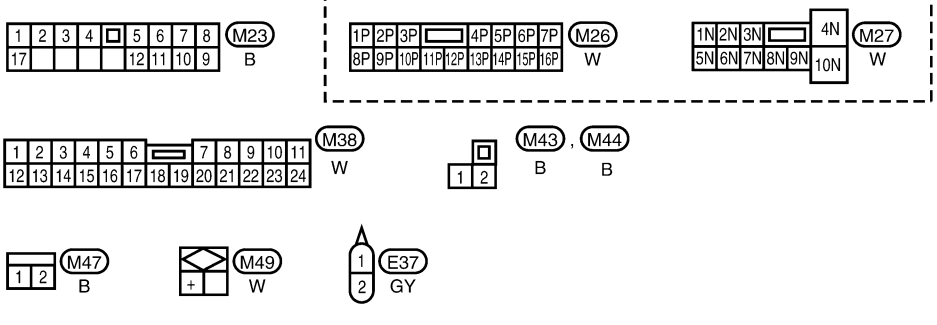

Refer to the following.
M65, E43 - SUPER MULTIPLE JUNCTION (SMJ)

WBR364

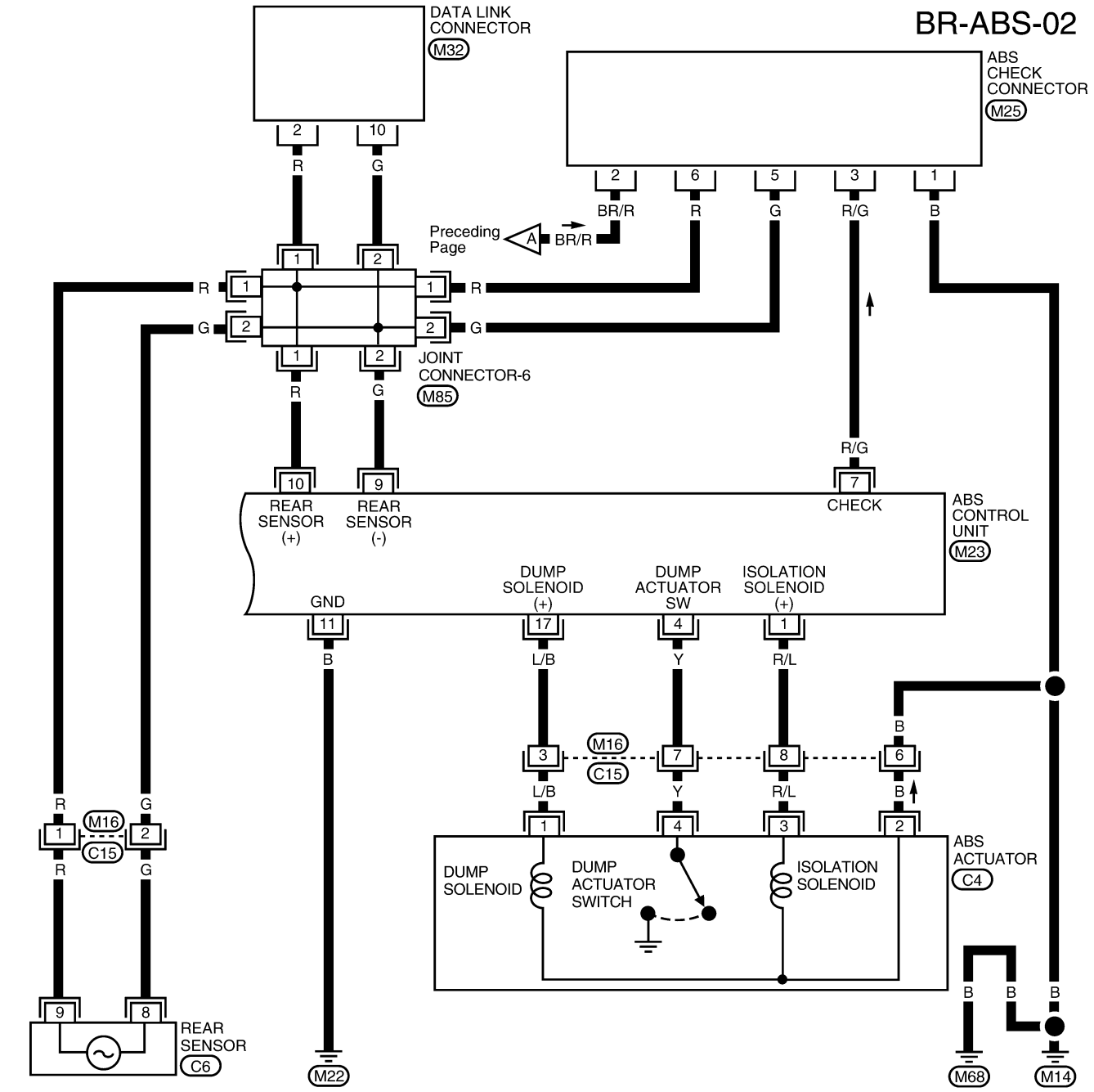
BR-ABS-02
DATA LINK CONNECTOR
M32
ABS CHECK CONNECTOR
M25
Preceding Page
A
BR/R
JOINT CONNECTOR-6
M85
REAR SENSOR (+)
REAR SENSOR (-)
CHECK
ABS CONTROL UNIT
M23
GND
DUMP SOLENOID (+)
DUMP ACTUATOR SW
ISOLATION SOLENOID (+)
M16
C15
DUMP SOLENOID
DUMP ACTUATOR SWITCH
ISOLATION SOLENOID
ABS ACTUATOR
C4
REAR SENSOR
C6
M22
M68
M14

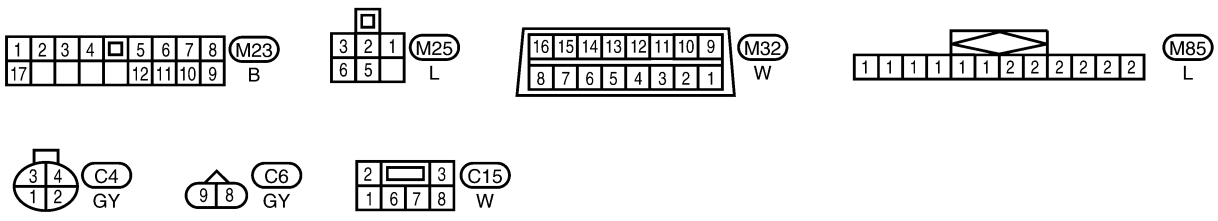
M23
B
M25
L
M32
W
M85
L
C4
GY
C6
GY
C15
W

LBR094

Self-diagnosis

NEBR0263

CHECKING THE NUMBER OF WARNING LAMP FLASHES

NEBR0263S01

When a problem occurs in ABS, the ABS warning lamp on the instrument panel turns on. As shown in the table, the control unit performs self-diagnosis.
To obtain satisfactory self-diagnosing results, the vehicle must be driven above 40 km/h (25 MPH) for at least one minute before the self-diagnosis is performed. After the vehicle has been stopped, with the engine still running, the number of ABS warning lamp flashes are counted by grounding the check terminal, thereby identifying the malfunction code(s).
If more than two parts or units malfunction at the same time, the ABS warning lamp will flash to indicate one of the malfunctioning parts or units. After the part or unit has been repaired, the ABS warning lamp will then flash to indicate the other part or unit that is malfunctioning.

SELF-DIAGNOSIS PROCEDURE 1

NEBR0263S02

1	INSPECTION START

1. Turn ignition switch ON.
2. Check warning lamp activation.
   When ignition switch is turned on, warning lamp should turn on.

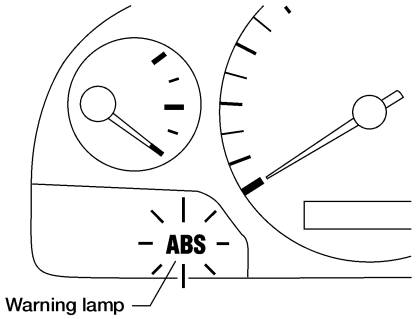

ABR838

Does warning lamp turn on?

Yes	▶	GO TO 2.
No	▶	Go to “Main Power Supply and Ground Circuit Check”, BR-52.

2	CHECK WARNING LAMP OPERATION

Check if warning lamp deactivates after a few seconds.

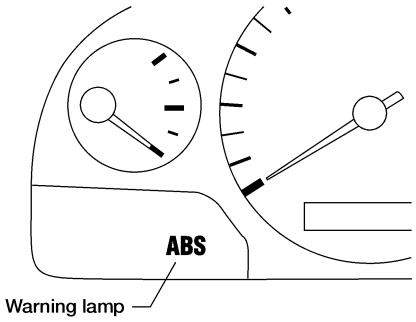

ABR837

Warning lamp should deactivate after a few seconds.

OK	▶	GO TO 3.
NG	▶	Go to “SELF DIAGNOSIS PROCEDURE 2”, BR-51.

3	ROAD TEST	
Drive vehicle above 40 km/h (25 MPH) for at least one minute. 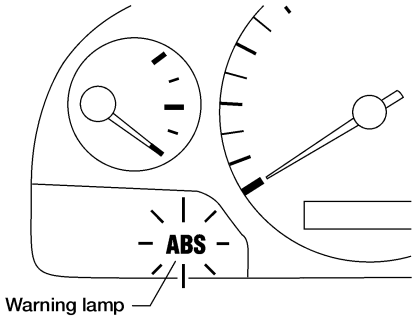 ABR838 **Does warning lamp activate again?**		
Yes	▶	Go to "SELF DIAGNOSIS PROCEDURE 2", BR-51.
No	▶	GO TO 4.

4	CHECK ACTUATOR	
1. Stop engine. 2. Turn ignition switch ON. Check actuator clicking noise when warning lamp deactivates. 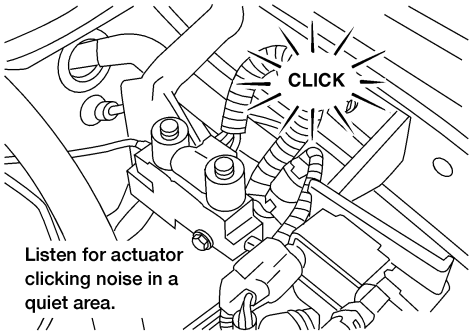 ABR854 **Actuator should make clicking noise when warning lamp deactivates.**		
OK	▶	**INSPECTION END**
NG	▶	Check actuator. Refer to "Electrical Components Inspection", BR-65.

SELF-DIAGNOSIS PROCEDURE 2

NEBR0263S03

1	CHECK FOR MALFUNCTION CODE	
1. Start engine. 2. Ground the ABS check connector M25 terminal 3. 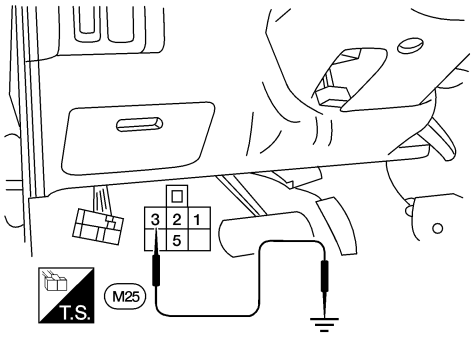 ABR696 3. Observe the warning lamp. 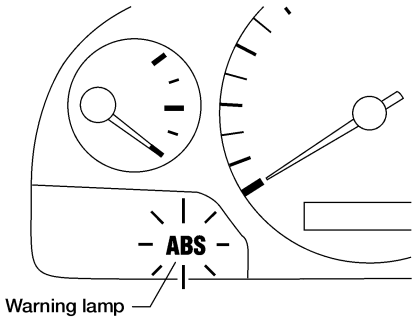 ABR838 **Is the warning lamp flashing?**		
Yes	▶	Count the number of flashes. Refer to the "MALFUNCTION CODE/SYMPTOM CHART", BR-52.
No	▶	Check the brake fluid level. Go to the "Main Power Supply and Ground Circuit Check", BR-52. If OK, replace ABS control unit.

MALFUNCTION CODE/SYMPTOM CHART

=NEBR0263S04

Code No./Symptom (No. of warning lamp flashes)	Malfunctioning part	Diagnostic Procedure
2	Actuator ISO solenoid (open-circuit)	BR-56
7	Actuator DUMP solenoid (open-circuit)	BR-56
4	Actuator DUMP solenoid (short-circuit)	BR-57
3	Actuator dump solenoid (open-circuit)	BR-58
8	Actuator dump solenoid (short-circuit)	BR-58
9	Rear sensor (open-circuit)	BR-60
10	Rear sensor (short-circuit)	BR-60
6	Sensor signal (erratic)	BR-60
13	Control	BR-61
14		
15		
16	None (system OK)	None
5	ABS actuator	BR-61
Pedal vibration or noise	—	BR-62
Long stopping distance	—	BR-63
Brake pedal stroke is large	—	BR-63
ABS does not work	—	BR-64
ABS works frequently	—	BR-64

Main Power Supply and Ground Circuit Check

NEBR0264

1 CHECK WARNING LAMP POWER SUPPLY

1. Confirm battery voltage is 12V.
2. Disconnect ABS control unit connector.
3. Turn ignition switch ON.

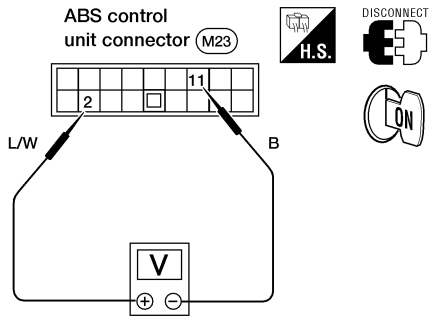

LBR126

Do approx. 12 volts exist between ABS control unit connector M23 terminals 2 and 11?

Yes	▶	GO TO 2.
No	▶	GO TO 5.

2	CHECK ABS CONTROL UNIT POWER SUPPLY

1. Turn ignition switch ON.
2. Do approx. 12 volts exist between ABS control unit connector M23 terminals (3, 12) and 11?

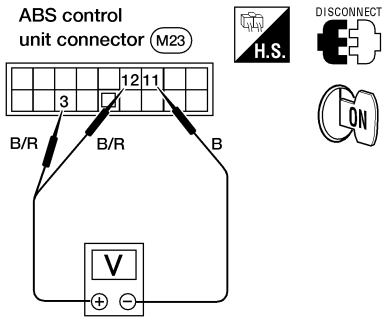

Approx. 12 volts should exist.

OK	▶	GO TO 3.
NG	▶	GO TO 5.

3	CHECK STOP LAMP SWITCH POWER SUPPLY

1. Depress brake pedal.
2. Do approx. 12 volts exist between ABS control unit connector M23 terminals 8 and 11?

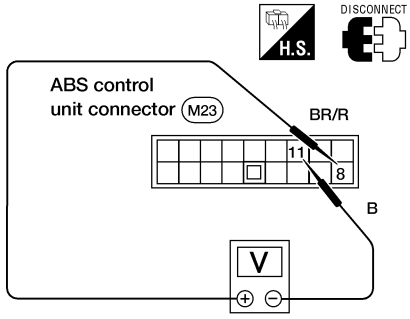

Approx. 12 volts should exist.

OK	▶	GO TO 4.
NG	▶	Adjust stop lamp switch, if necessary. Replace stop lamp switch or repair harness or connectors, if necessary.

4	CHECK PARKING BRAKE SWITCH POWER SUPPLY

1. Confirm that brake fluid level is adequate.
   If necessary, refill it.
2. Start engine.
3. Do approx. 12 volts exist between ABS control unit connector M23 terminals 5 and 11 without the parking brake applied? Do approx. 0 volts exist with the parking brake applied?

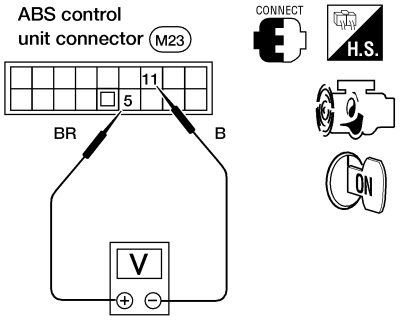

ABR628

Yes or No?

Yes	▶	**INSPECTION END**
No	▶	Adjust parking brake switch, if necessary. Replace parking brake switch, or repair harness or connectors, if necessary.

5	CHECK FUSE

Check 10A fuse No. 11. For fuse layout refer to ***EL-9***, "POWER SUPPLY ROUTING".

Is fuse OK?

Yes	▶	GO TO 6.
No	▶	GO TO 7.

6	CHECK GROUND CIRCUIT

Check harness for continuity between ABS control unit connector M23 terminal 11 and ground.

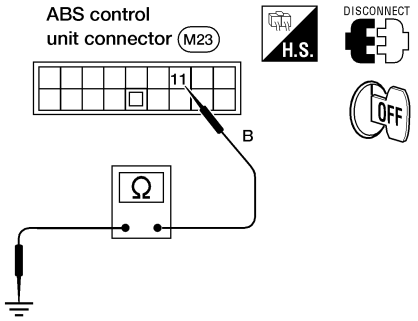

ABR626

Does continuity exist?

Yes	▶	Check warning lamp and replace if necessary. If OK, check repair harness or connectors.
No	▶	Check and repair harness or connector between ABS control unit connector M23 terminal 11 and ground.

7	REPLACE FUSE	
Replace fuse. **Does the fuse blow out when the ignition switch is turned ON?**		
Yes	▶	Check and repair harness between ABS control unit connector M23 terminals (3, 12) and fuse block connector M26 terminal 3P (for fuse block details refer to ***EL-9***, "POWER SUPPLY ROUTING".
No	▶	**INSPECTION END**

ABS Actuator ISO Solenoid Short or Open

NEBR0265

MALFUNCTION CODE NO. 2 OR 7

NEBR0265S01

1	CHECK ISO SOLENOID CIRCUITS

Disconnect battery cable ground connection.
1. Disconnect ABS control unit connector.
2. Check resistance between ABS control unit connector M23 terminals 1 and 11.

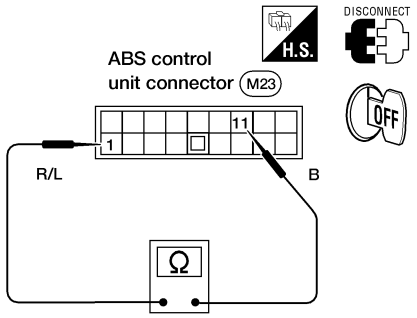

ABR629

Resistance should be approx. 4Ω

OK	▶	Replace ABS control unit.
NG	▶	GO TO 2.

2	CHECK ABS CONTROL UNIT GROUND CIRCUIT

Check ABS control unit ground circuit. Refer to “Main Power Supply and Ground Circuit Check”, BR-52.

OK or NG

OK	▶	GO TO 3.
NG	▶	Repair harness or connectors.

3	CHECK ABS ACTUATOR GROUND CIRCUIT

Check harness continuity between ABS actuator connector C4 terminal 2 and ground.

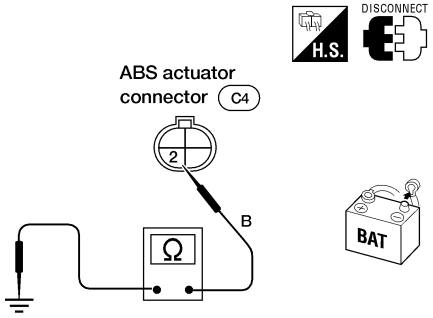

ABR630

Does continuity exist?

Yes	▶	GO TO 4.
No	▶	Repair ABS actuator harness or connectors.

4	CHECK ISO SOLENOID	
Check resistance between ABS actuator connector C4 terminals 2 and 3. 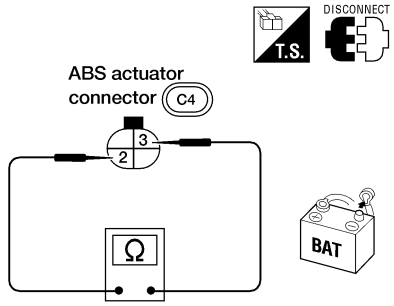 ABR631 **Resistance should be approx. 4Ω**		
OK	▶	Repair harness and connectors between the ISO solenoid and ABS control unit.
NG	▶	Replace ABS actuator.

ABS Actuator ISO Blocked
MALFUNCTION CODE NO. 4

NEBR0266

NEBR0266S01

1	CHECK ABS ACTUATOR SWITCH	
Disconnect battery cable ground connection. 1. Disconnect ABS control unit connector. 2. Check for continuity between ABS control unit connector M23 terminal 4 and ground. 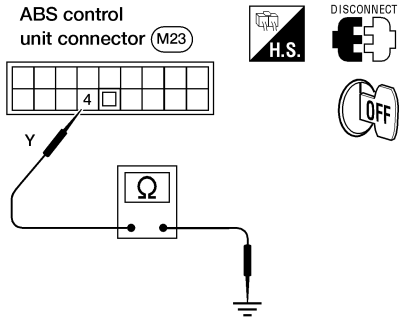 ABR632 **Continuity should not exist.**		
OK	▶	Replace ABS control unit.
NG	▶	GO TO 2.

2	CHECK ABS ACTUATOR CIRCUIT	
1. Disconnect ABS actuator connector. 2. Check for continuity between ABS actuator connector C4 terminal 4 and ground. 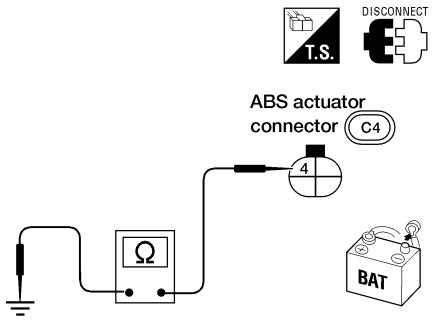 ABR787 **Continuity should not exist.**		
OK	▶	Repair harness or connectors between ABS control unit and ABS actuator.
NG	▶	Replace ABS actuator.

ABS Actuator Dump Solenoid Short Circuit or Open

NEBR0267

MALFUNCTION CODE NO. 3 OR 8

NEBR0267S01

1	CHECK DUMP SOLENOID	
Disconnect battery cable ground connection. 1. Disconnect ABS control unit connector. 2. Check resistance between ABS control unit connector M23 terminals 11 and 17. 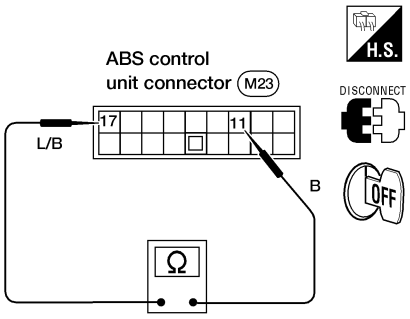 ABR634 **Resistance should be approx. 1.5Ω**		
OK	▶	Replace ABS control unit.
NG	▶	GO TO 2.

2	CHECK ABS CONTROL UNIT GROUND CIRCUIT	
Refer to "Main Power Supply and Ground Circuit Check", BR-52. **OK or NG**		
OK	▶	GO TO 3.
NG	▶	Repair harness or connectors.

3	CHECK ABS ACTUATOR GROUND CIRCUIT	
Check harness continuity between ABS actuator connector C4 terminal 2 and ground. 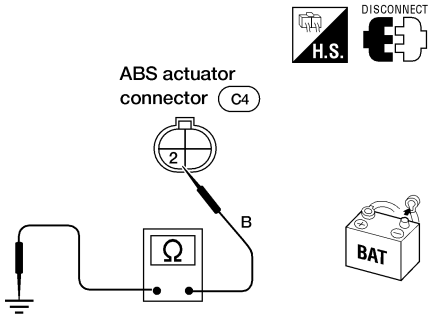 ABR635 **Continuity should exist.**		
OK	▶	GO TO 4.
NG	▶	Repair harness or connectors.

4	CHECK DUMP SOLENOID	
1. Disconnect ABS actuator connector. 2. Check resistance between ABS actuator connector C4 terminals 1 and 2. 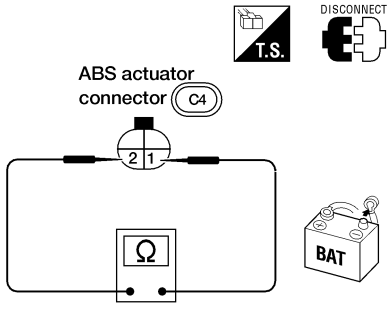 ABR636 **Resistance should be approx. 1.5Ω**		
OK	▶	Repair harness or connectors between ABS control unit and ABS actuator.
NG	▶	Replace ABS actuator.

Rear Sensor Open or Short

=NEBR0268

MALFUNCTION CODE NO. 9 OR 10

NEBR0268S01

1	CHECK REAR SENSOR CIRCUIT	
Disconnect battery cable ground connection. 1. Disconnect ABS control unit connector. 2. Check resistance between ABS control unit connector M23 terminals 9 and 10. 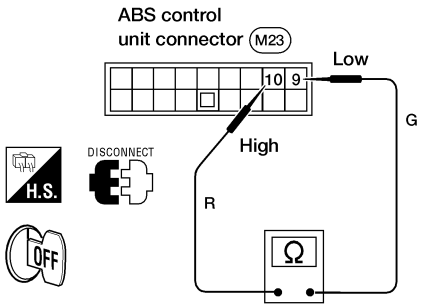 ABR637 **Resistance should be 1.05 - 1.35 kΩ**		
OK	▶	Replace ABS control unit.
NG	▶	GO TO 2.

2	CHECK REAR SENSOR	
Disconnect rear sensor connector C6 and check resistance between terminals 8 and 9. 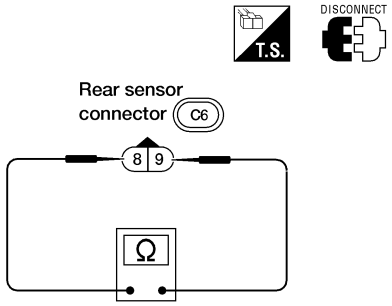 ABR638 **Resistance should be 1.05 - 1.35 kΩ**		
OK	▶	Repair harness or connectors between ABS control unit and rear sensor.
NG	▶	Replace rear sensor unit.

Sensor Signal Erratic

NEBR0269

MALFUNCTION CODE NO. 6

NEBR0269S01

1	CHECK REAR SENSOR ROTOR TOOTH CONDITION	
1. Remove propeller shaft. 2. Remove companion flange, refer to ***PD-45***, " Disassembly". 3. Check rotor on companion flange. **OK or NG**		
OK	▶	Replace ABS control unit.
NG	▶	Replace rear sensor rotor with companion flange.

ABS Control Unit

=NEBR0270

MALFUNCTION CODE NO. 13, 14 OR 15

NEBR0270S01

There has been an ABS control unit malfunction.
Replace ABS control unit.

ABS Actuator

NEBR0271

MALFUNCTION CODE NO. 5

NEBR0271S01

1	CHECK BRAKE SYSTEM	
Overhaul both rear brakes. 1. Refer to “SELF-DIAGNOSIS PROCEDURE 1”, BR-49 2. Check if ABS system is OK. **OK or NG**		
OK	▶	**INSPECTION END**
NG	▶	GO TO 2.

2	CHECK FOR MALFUNCTION CODES	
Does warning lamp still flash malfunction code No. 5? **Yes or No**		
Yes	▶	Replace ABS actuator.
No	▶	Inspect ABS system, referring to warning flashes.

1. Pedal Vibration or Noise

NEBR0272

1	INSPECTION START
Pedal vibration and noise inspection Brake pedal 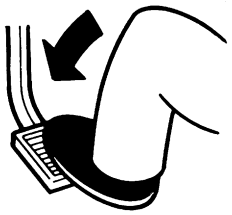 SAT797A	
▶	GO TO 2.

2	CHECK SYMPTOM
1. Apply brake. 2. Start engine. **Does the symptom appear only when engine is started?**	
Yes ▶	Carry out “Self-diagnosis”. Refer to BR-49.
No ▶	Go to Test No. 3, “3. Unexpected Pedal Action”, BR-64.

NOTE:
ABS may operate and cause vibration under any of the following conditions.

- Applying brake gradually when shifting or operating clutch.
- Low friction (slippery) road.
- High speed cornering.
- Driving over bumps and potholes.
- Engine speed is over 5,000 rpm with vehicle stopped.

2. Long Stopping Distance

=NEBR0273

1	CHECK MECHANICAL BRAKE SYSTEM PERFORMANCE	
Disconnect ABS actuator connector and check whether stopping distance is still long. **Does brake system function properly when brake pedal is depressed?**		
Yes	▶	Perform “Preliminary Check”, BR-42 and “Bleeding Brake System”, BR-11 (if necessary).
No	▶	Go to Test No. 3, “3. Unexpected Pedal Action”, BR-64.

NOTE:
Stopping distance may be longer for vehicles without ABS when road condition is slippery.

3. Unexpected Pedal Action

NEBR0274

1	CHECK BRAKE PEDAL STROKE	
Check brake pedal stroke. 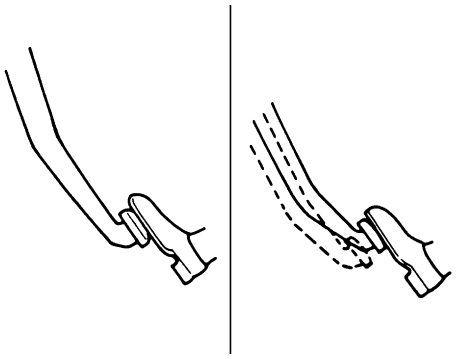 SBR540A **Is brake pedal stroke excessively large?**		
Yes	▶	Perform “Preliminary Check”, refer to BR-42.
No	▶	GO TO 2.

2	CHECK MECHANICAL BRAKE SYSTEM PERFORMANCE	
Disconnect ABS actuator connector and check whether brake is effective. **Does brake system function properly when brake pedal is depressed?**		
Yes	▶	GO TO 3.
No	▶	Perform “Preliminary Check”, refer to BR-42.

3	CHECK WARNING LAMP INDICATION	
Ensure warning lamp remains off while driving. 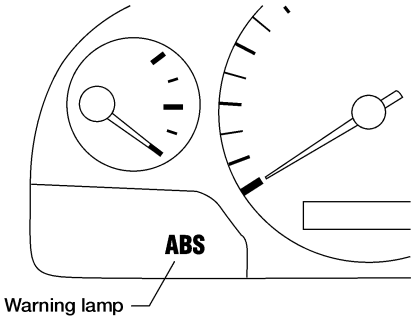 ABR837 **Is warning lamp turned off?**		
Yes	▶	GO TO 4.
No	▶	Carry out "Self-diagnosis", refer to BR-49.

4	CHECK REAR SENSOR	
1. Check rear sensor connector for terminal damage or loose connection. 2. Perform rear sensor check. Refer to Test No. 2, "MALFUNCTION CODE NO. 9 OR 10", BR-60. **Is rear sensor OK?**		
Yes	▶	Check ABS actuator terminals for damage or the connection of ABS actuator harness connector. Reconnect ABS actuator harness connector. Then retest.
No	▶	Repair or replace as necessary.

4. ABS Does Not Work

NEBR0275

1	CHECK WARNING LAMP INDICATION	
Does the ABS warning lamp activate? **Yes or No**		
Yes	▶	Carry out "Self-diagnosis". Refer to BR-49.
No	▶	Go to "SELF-DIAGNOSIS PROCEDURE 1", BR-49.

NOTE:
ABS does not work when vehicle speed is under 10 km/h (6 MPH).

5. ABS Works Frequently

NEBR0276

1	CHECK BRAKE FLUID PRESSURE	
Check brake fluid pressure distribution. Refer to "Inspection", BR-14. **Is brake fluid pressure distribution normal?**		
Yes	▶	GO TO 2.
No	▶	Repair. Then perform "Preliminary Check", refer to BR-42.

2	CHECK WHEEL SENSOR	
1. Check rear sensor connector for terminal damage or loose connections. 2. Refer to "Rear Sensor Open or Short", BR-60. **Is rear sensor OK?**		
Yes	▶	Check ABS actuator terminals for damage or the connection of ABS actuator harness connector. Reconnect ABS actuator harness connector. Then retest.
No	▶	Repair or replace as necessary.

Electrical Components Inspection

NEBR0277

REAR SENSOR UNIT AND ACTUATOR

NEBR0277S01

1	CHECK REAR SENSOR SIGNAL	
1. Raise vehicle. Confirm it is safe to rotate rear wheels. 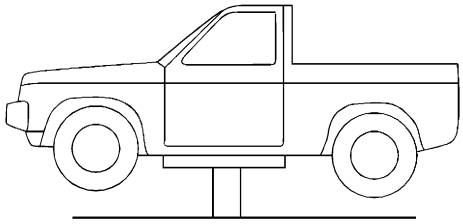 SBR373D 2. Start engine and rotate rear wheels with transmission in D position or first gear position. 3. Check rear sensor voltage between ABS control unit connector M23 terminals 9 and 10 with voltmeter set to AC voltage scale. 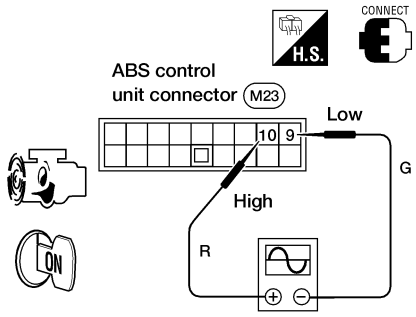 ABR639 **NOTE:** **A/T at 850 rpm** **NOTE:** **M/T at 700 rpm** **Voltage should be 0.4V or higher.**		
OK	▶	GO TO 2.
NG	▶	GO TO 4.

2	CHECK ABS ACTUATOR OPERATION

Refer to "SELF-DIAGNOSIS PROCEDURE 2", BR-51. Clicking noise sounds should be heard from ABS actuator when the ignition switch is turned ON.

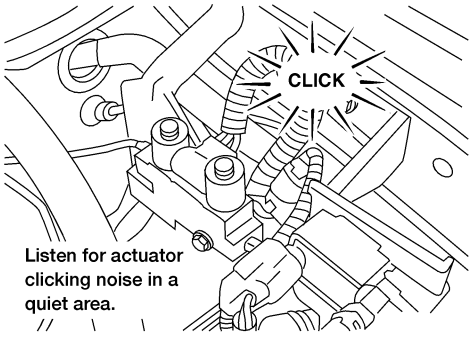

ABR854

Was clicking noise heard?

Yes	▶	GO TO 3.
No	▶	GO TO 5.

3	CHECK ABS OPERATION

1. Perform ABS check in a safe place without obstacles in the vicinity.
2. Drive the vehicle for more than one minute at speeds over 40 km/h (25 MPH), then check that the ABS warning lamp does not light. After this, check for proper operation.
3. Check if ordinary braking occurs, and also check that the rear wheels do not lock when abrupt braking causes the front wheels to lock.

OK or NG

OK	▶	The ABS system is functioning normally.
NG	▶	Replace ABS actuator.

4	CHECK REAR SENSOR ROTOR

Check the rear sensor rotor for the following points.
- Tooth condition
- Proper installation on the companion flange
- Deformation
- Wear
- Looseness

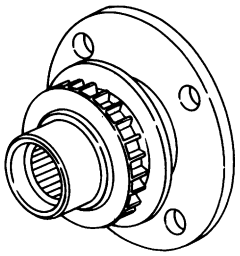

ABR870

OK or NG

OK	▶	Replace rear sensor unit.
NG	▶	Replace rear sensor rotor with companion flange.

5	CHECK PULSING VOLTAGE FROM ABS CONTROL UNIT

Using a suitable digital voltmeter
1. Check pulsing voltage for ISO solenoid between ABS control unit connector M23 terminals 11 and 17.
2. Also check pulsing voltage for DUMP solenoid between ABS control unit connector M23 terminals 11 and 1.
Pulsing voltage appears when ABS lamp goes off after ignition is turned on.

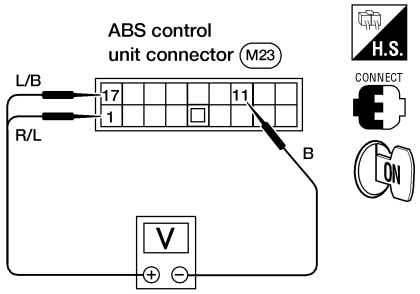

ABR640

Voltage: 0.3 - 3.5V for approx. 13 msec

OK or NG

OK	▶	Replace ABS actuator.
NG	▶	Replace ABS control unit.

Purpose

NEBR0146

The anti-lock brake system (ABS) consists of electronic and hydraulic components. It allows for control of braking force so locking of the wheels can be avoided.
The ABS:

1) Improves proper tracking performance through steering wheel operation.
2) Eases obstacle avoidance through steering wheel operation.
3) Improves vehicle stability.

Operation

NEBR0147

- When the vehicle speed is less than 10 km/h (6 MPH) this system does not work.
- The anti-lock brake system (ABS) has a self-test function. The system turns on the ABS warning lamp for 1 second each time the ignition switch is turned ON. After the engine is started, the ABS warning lamp turns off. The system performs a test the first time the vehicle reaches 6 km/h (4 MPH). A mechanical noise may be heard as the ABS performs this self-test. This is a normal part of the self-test feature. If a malfunction is found during this check, the ABS warning lamp will stay on.
- While driving, a mechanical noise may be heard during ABS operation. This is a normal condition.

ABS Hydraulic Circuit

NEBR0148

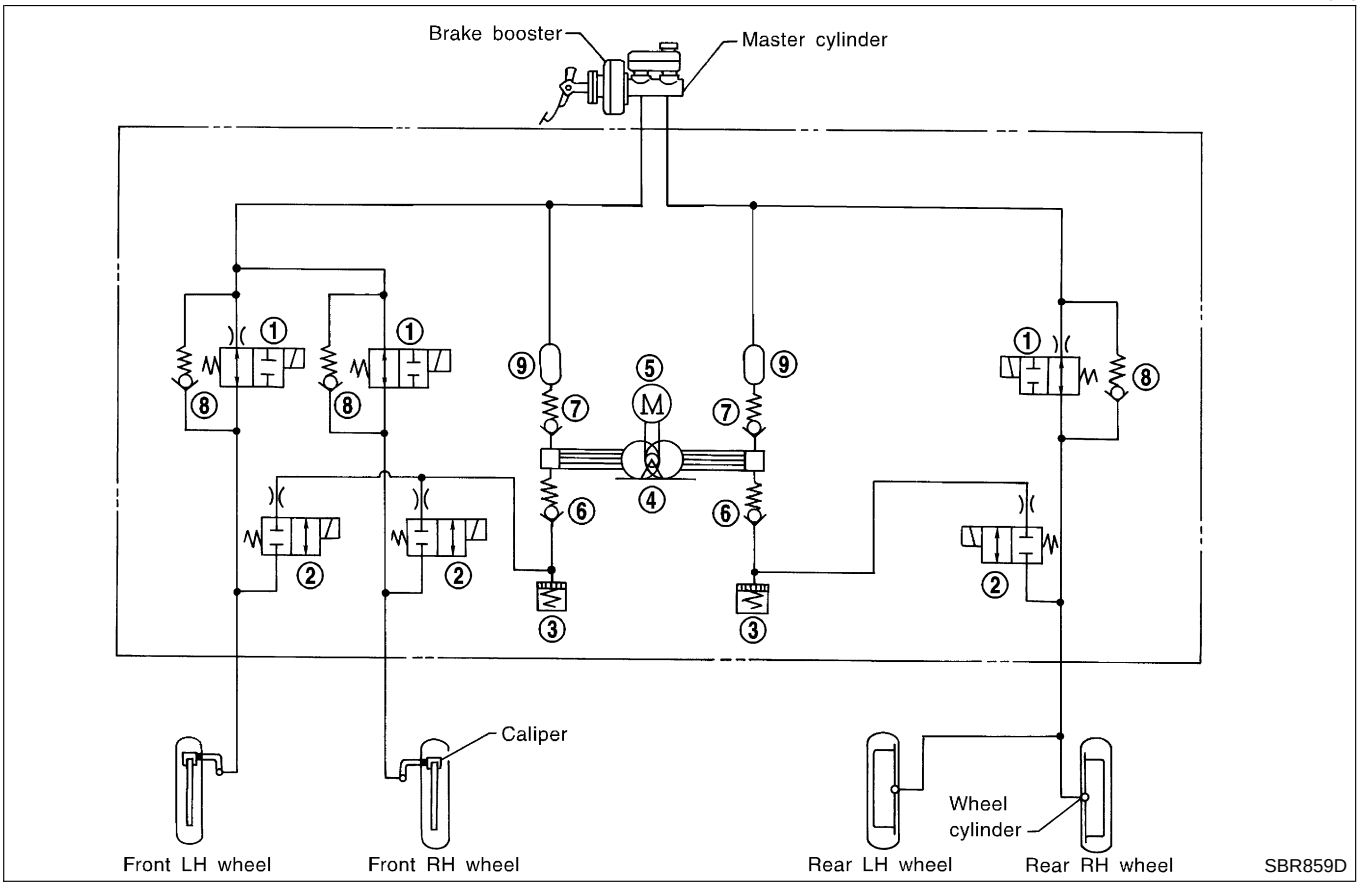

1. Inlet solenoid valve
2. Outlet solenoid valve
3. Reservoir
4. Pump
5. Motor
6. Inlet valve
7. Outlet valve
8. Bypass check valve
9. Damper

System Components

NEBR0149

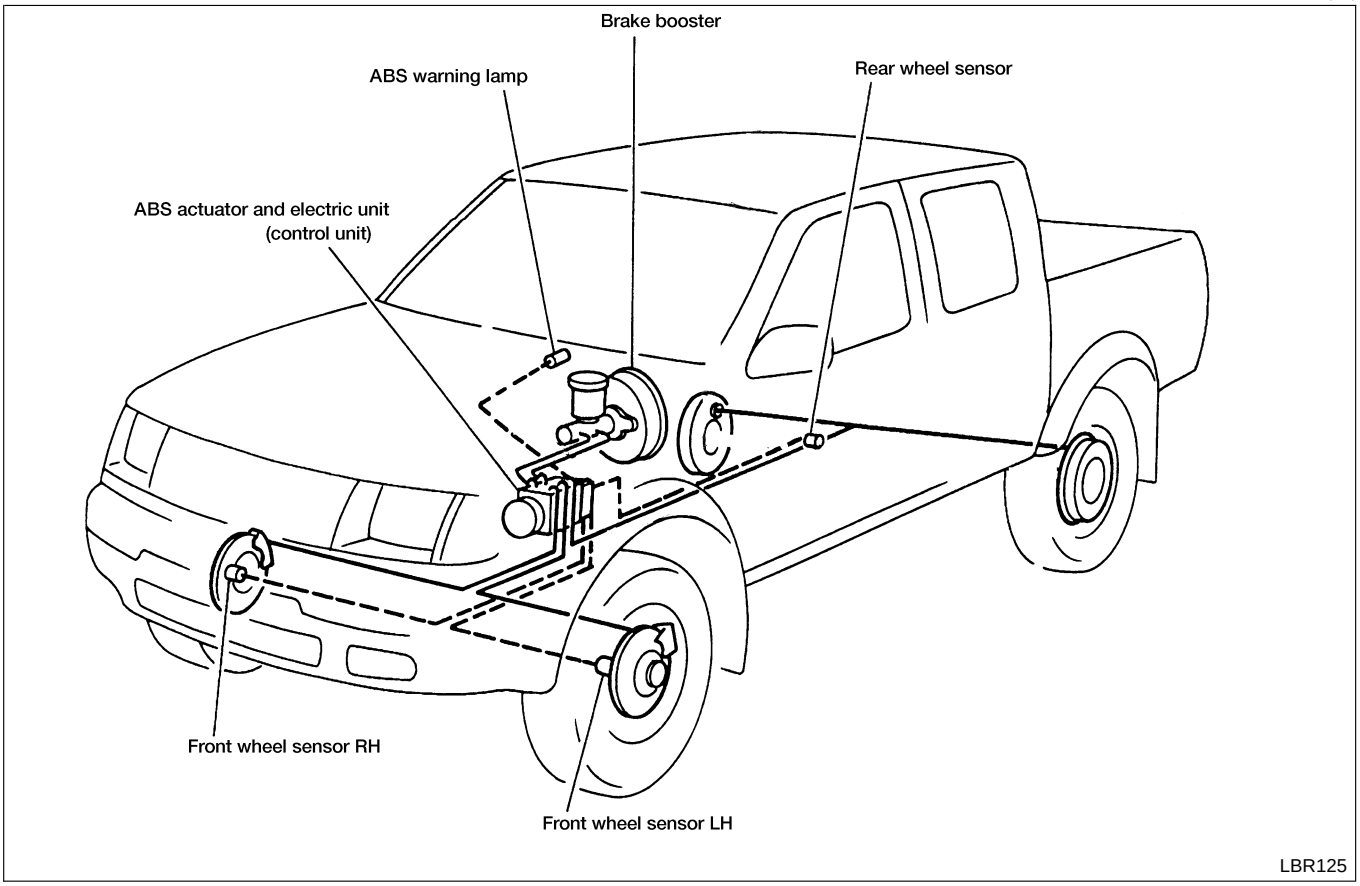

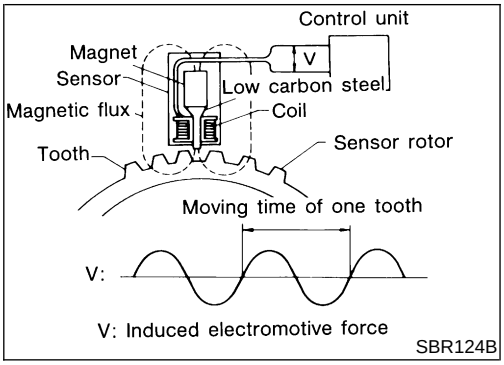

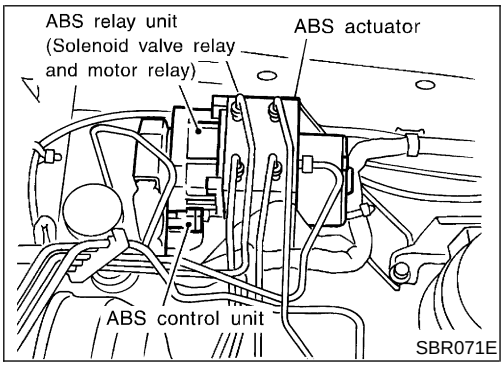

System Description

=NEBR0150

WHEEL SENSOR

NEBR0150S01

The sensor unit consists of a gear-shaped sensor rotor and a sensor element. The element contains a bar magnet around which a coil is wound. The front sensors are installed on the back of the brake rotors and the rear sensor is installed on the differential. As the wheel rotates, the sensor generates a sine-wave pattern. The frequency and voltage increase(s) as the rotating speed increases.

ABS ACTUATOR AND ELECTRIC UNIT (CONTROL UNIT)

NEBR0150S02

The ABS actuator and electric unit (control unit) computes the wheel rotating speed by the signal current sent from the sensor. Then it supplies a DC current to the actuator solenoid valve. It also controls ON-OFF operation of the valve relay and motor relay. If any electrical malfunction should be detected in the system, the control unit causes the warning lamp to light up. In this condition, the ABS will be deactivated by the control unit, and the vehicle's brake system reverts to normal operation.

The ABS actuator and electric unit (control unit) contains:

- An electric motor and pump
- Two relays
- Six solenoid valves, each inlet and outlet for
  — LH front
  — RH front
  — Rear
- ABS control unit

This component controls the hydraulic circuit and increases, holds or decreases hydraulic pressure to all or individual wheels. The ABS actuator and electric unit is serviced as an assembly.

ABS Actuator Operation

NEBR0150S0201

		Inlet solenoid valve	Outlet solenoid valve	
Normal brake operation		OFF (Open)	OFF (Closed)	Master cylinder brake fluid pressure is directly transmitted to caliper via the inlet solenoid valve.
ABS operation	Pressure hold	ON (Closed)	OFF (Closed)	Hydraulic circuit is shut off to hold the caliper brake fluid pressure.
	Pressure decrease	ON (Closed)	ON (Open)	Caliper and wheel cylinder brake fluid is sent to reservoir via the outlet solenoid valve. Then it is pushed up to the master cylinder by pump.
	Pressure increase	OFF (Open)	OFF (Closed)	Master cylinder brake fluid pressure is transmitted to caliper.

Removal and Installation

=NEBR0174

FRONT WHEEL SENSORS

NEBR0174S01

CAUTION:

Be careful not to damage sensor edge and sensor rotor teeth. When removing the front wheel hub or rear axle shaft assembly, disconnect and remove the ABS wheel sensor from the assembly and move it away.

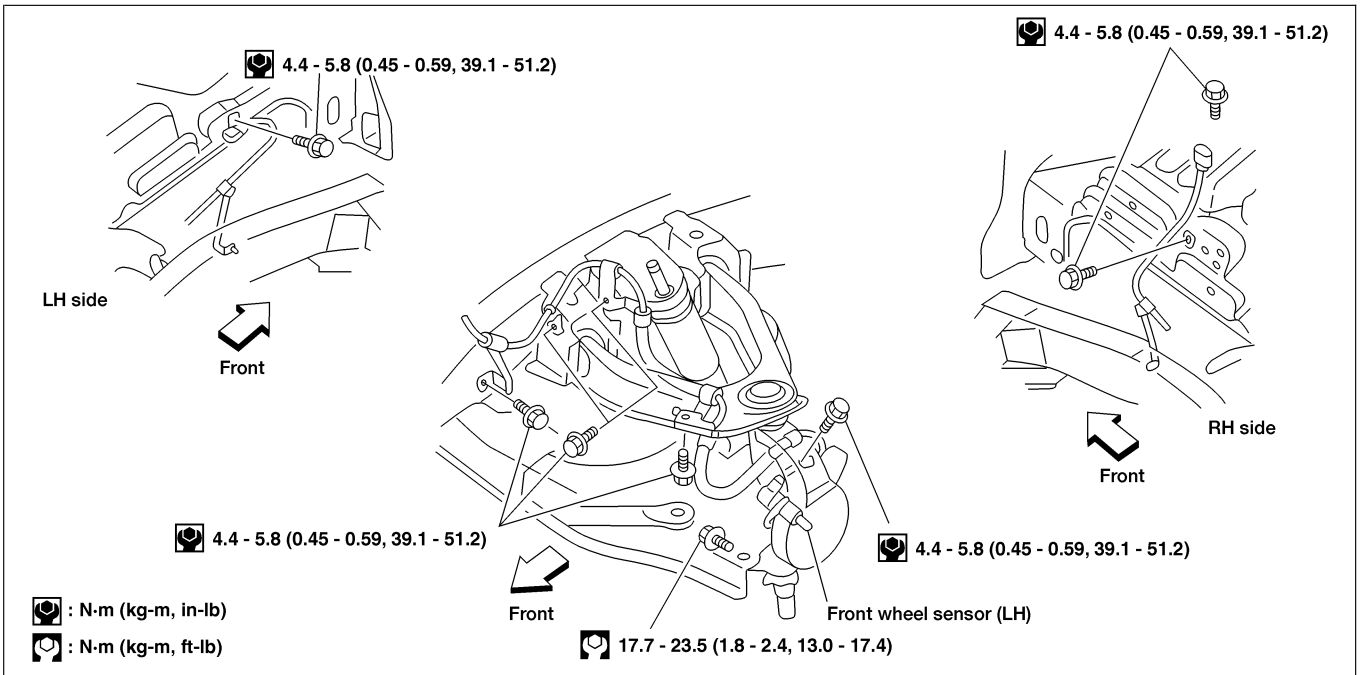

ABR869

REAR WHEEL SENSOR

NEBR0174S02

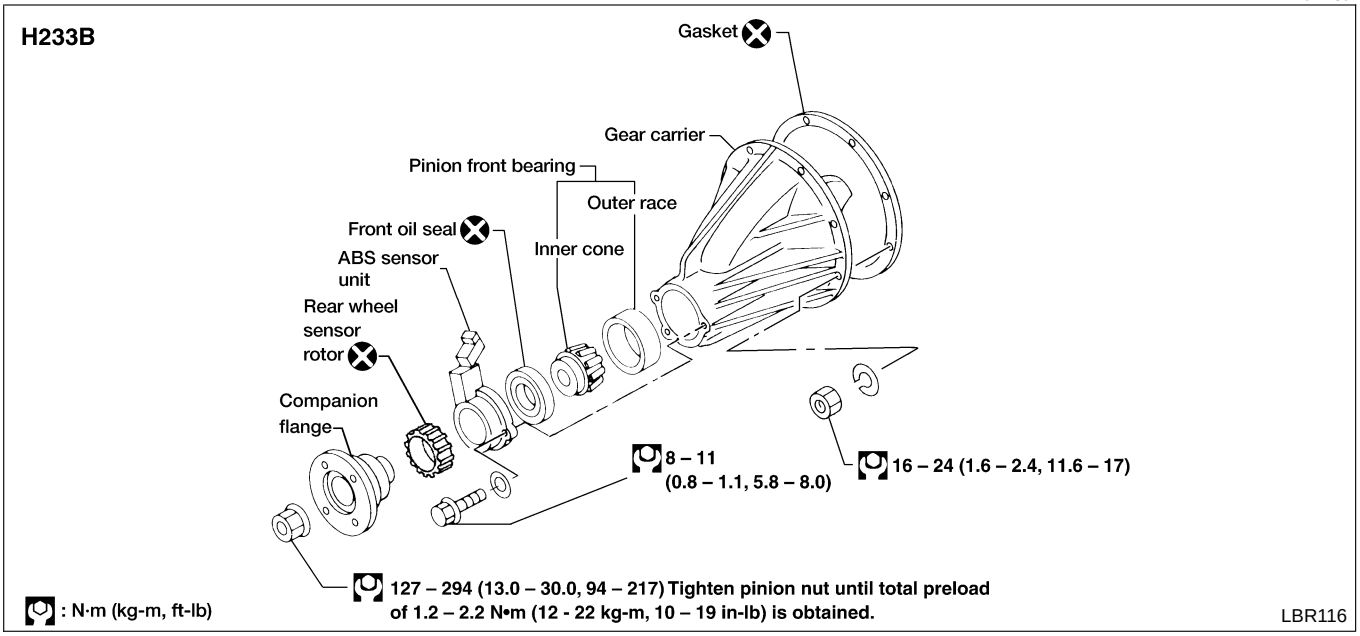

LBR116

ABS ACTUATOR AND ELECTRIC UNIT

NEBR0174S04

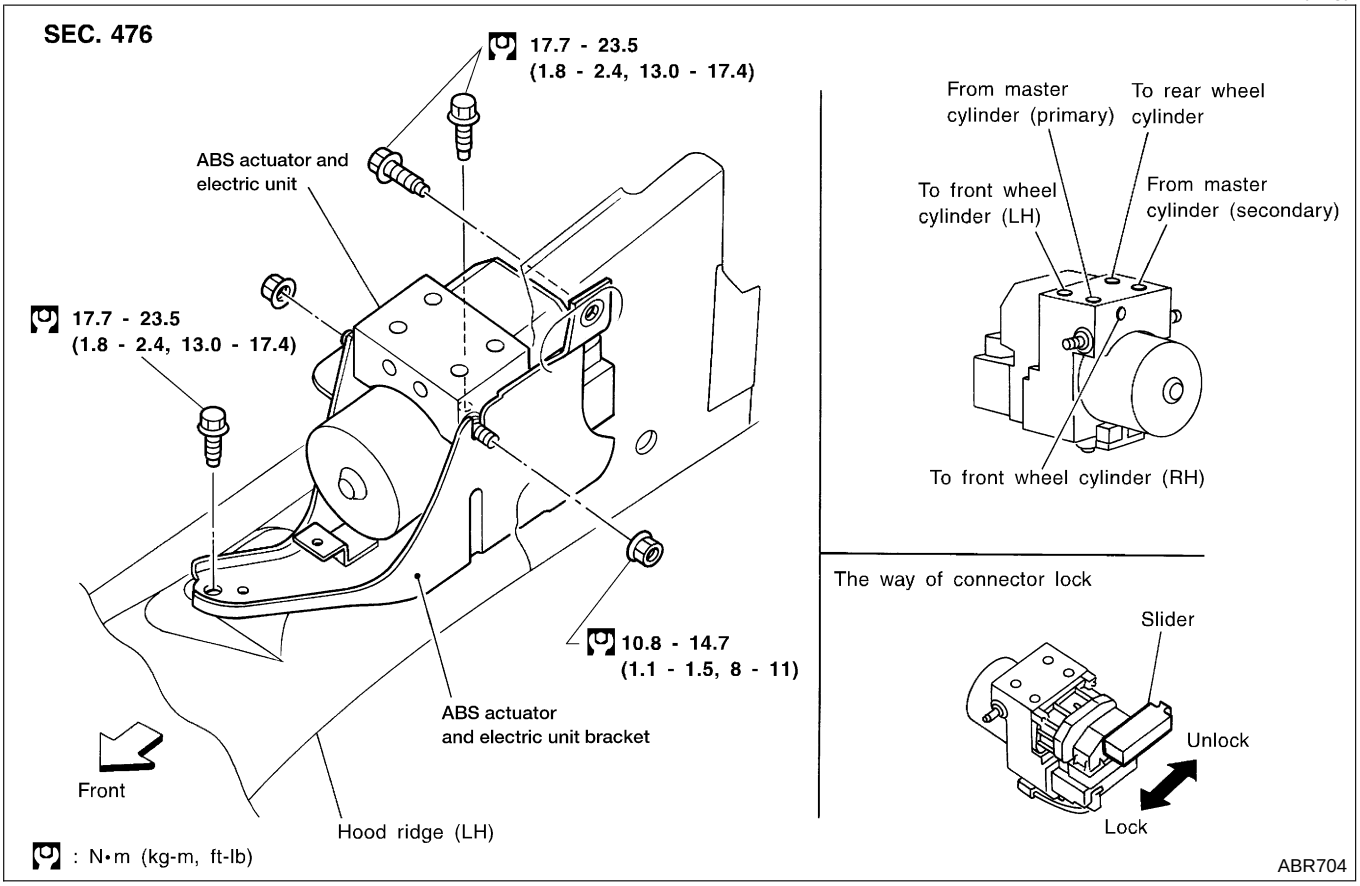

Removal

NEBR0174S0402

1) Disconnect battery cable.
2) Drain brake fluid. Refer to "Changing Brake Fluid", BR-9.
3) Disconnect ABS actuator and electric unit (control unit connector) and brake pipes.
4) Remove mounting bracket fixing bolts and nuts.

Installation

NEBR0174S0403

CAUTION:

After installation, refill brake fluid. Then bleed air. Refer to "Bleeding Brake System", BR-11.

1) Connect brake pipes temporarily.
2) Tighten fixing bolts and nuts.
3) Tighten brake pipes.
4) Connect connector and battery cable.

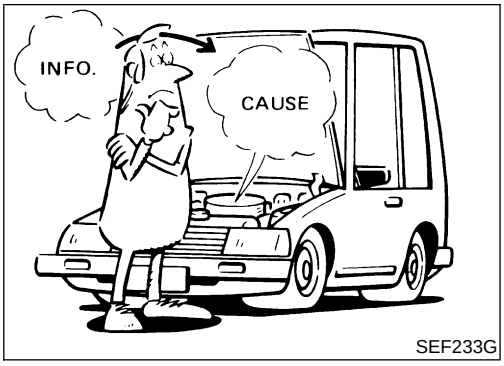

SEF233G

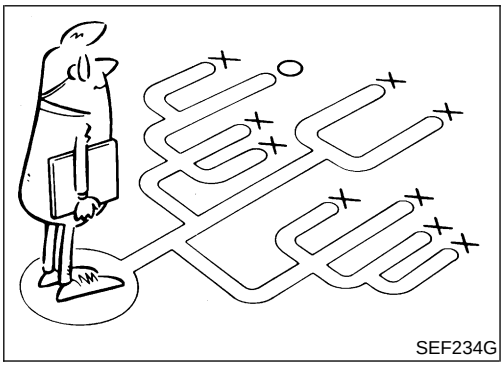
SEF234G

How to Perform Trouble Diagnoses for Quick and Accurate Repair

NEBR0176

INTRODUCTION

NEBR0176S01

The ABS system has an electronic control unit to control major functions. The control unit accepts input signals from sensors and instantly drives the actuators. It is essential that both kinds of signals are proper and stable. It is also important to check for conventional problems such as air leaks in booster lines, lack of brake fluid, or other problems with the brake system.

It is much more difficult to diagnose a problem that occurs intermittently rather than continuously. Most intermittent problems are caused by poor electric connection or faulty wiring. In this case, careful checking of suspicious circuits may help prevent the replacement of good parts.

A visual check only may not find the cause of the problems, so a road test should be performed.

Before undertaking actual checks, take a few minutes to talk with a customer who approaches with an ABS complaint. The customer is a very good source of information on such problems; especially intermittent ones. Through the talks with the customer, find out what symptoms are present and under what conditions they occur. Start your diagnosis by looking for “conventional” problems first. This is one of the best ways to troubleshoot brake problems on an ABS controlled vehicle.

Also check related Service bulletins for information.

WORK FLOW

NEBR0176S02

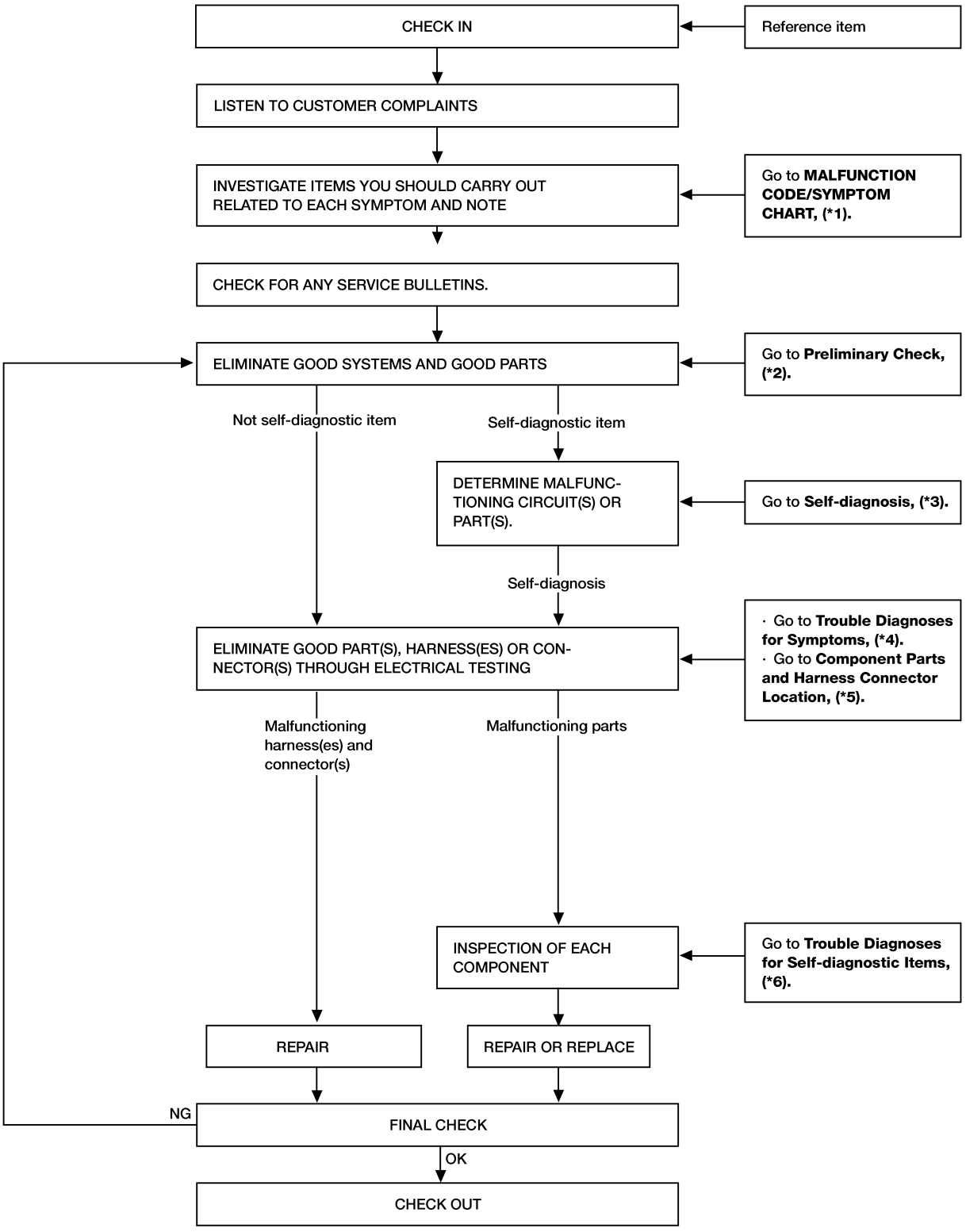

ABR839

*1: BR-92
*2: BR-75
*3: BR-83
*4: BR-102 - 107
*5: BR-78
*6: BR-93 - 107

Preliminary Check

NEBR0177

1	CHECK BRAKE FLUID	
Check brake fluid for contamination. **Has brake fluid been contaminated?**		
Yes	▶	Replace. GO TO 2.
No	▶	GO TO 2.

2	CHECK BRAKE FLUID LEVEL	
Check brake fluid level in reservoir tank. Low fluid level may indicate brake pad wear or leakage from brake line. 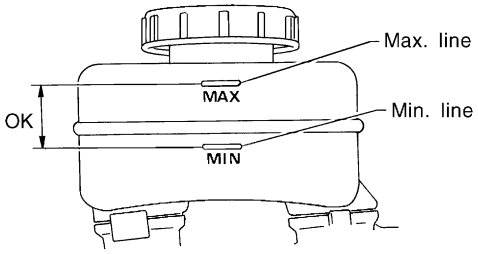 SBR451D **Is brake fluid filled between MAX and MIN lines on reservoir tank?**		
Yes	▶	GO TO 3.
No	▶	Fill brake fluid. GO TO 3.

3	CHECK BRAKE LINE	
Check brake line for leakage. 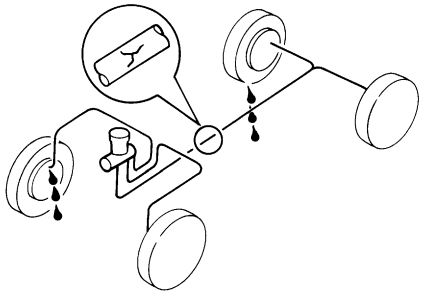 SBR389C **Is leakage present at or around brake lines, tubes or hoses or are any of these parts cracked or damaged?**		
Yes	▶	Repair. GO TO 4.
No	▶	GO TO 4.

4	CHECK BRAKE BOOSTER OPERATION

Check brake booster for operation and air tightness.
Refer to "On-vehicle Service", BR-22.

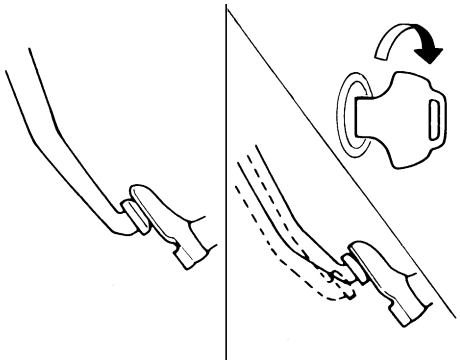

SBR058C

Is brake booster airtight and functioning properly?

Yes	▶	GO TO 5.
No	▶	Replace. GO TO 5.

5	CHECK BRAKE PAD AND ROTOR

Check brake pad and rotor.
Refer to "Pad Replacement", BR-26 and "ROTOR", 28.

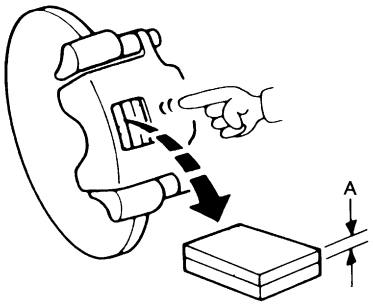

SBR059C

Are brake pads and rotors functioning properly?

Yes	▶	GO TO 6.
No	▶	Replace.

6	RECHECK BRAKE FLUID LEVEL

Check brake fluid level in reservoir tank again.

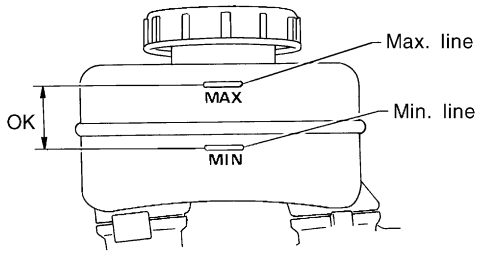

SBR451D

Is brake fluid filled between MAX and MIN lines on reservoir tank?

Yes	▶	GO TO 7.
No	▶	Fill brake fluid.

7	CHECK WARNING LAMP ACTIVATION

Check warning lamp activation.

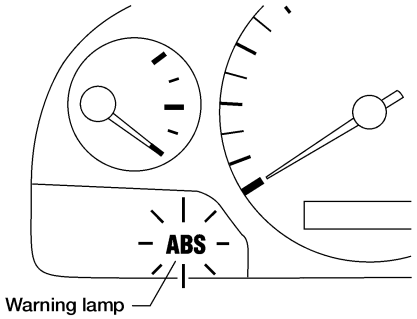

ABR838

Does warning lamp turn on when ignition switch is turned ON?

Yes	▶	GO TO 8.
No	▶	Check fuse, warning lamp bulb and warning lamp circuit.

8	CHECK WARNING LAMP DEACTIVATION

Check warning lamp for deactivation after engine is started.

Does warning lamp turn off when engine is started?

Yes	▶	GO TO 9.
No	▶	Go to "Self-diagnosis", BR-83.

9	DRIVE VEHICLE

Drive vehicle at speeds over 30 km/h (19 MPH) for at least one minute.

Does warning lamp remain off after vehicle has been driven at 30 km/h (19 MPH) for at least one minute?

Yes	▶	**INSPECTION END**
No	▶	Go to "Self-diagnosis", BR-83.

Component Parts and Harness Connector Location

NEBR0178

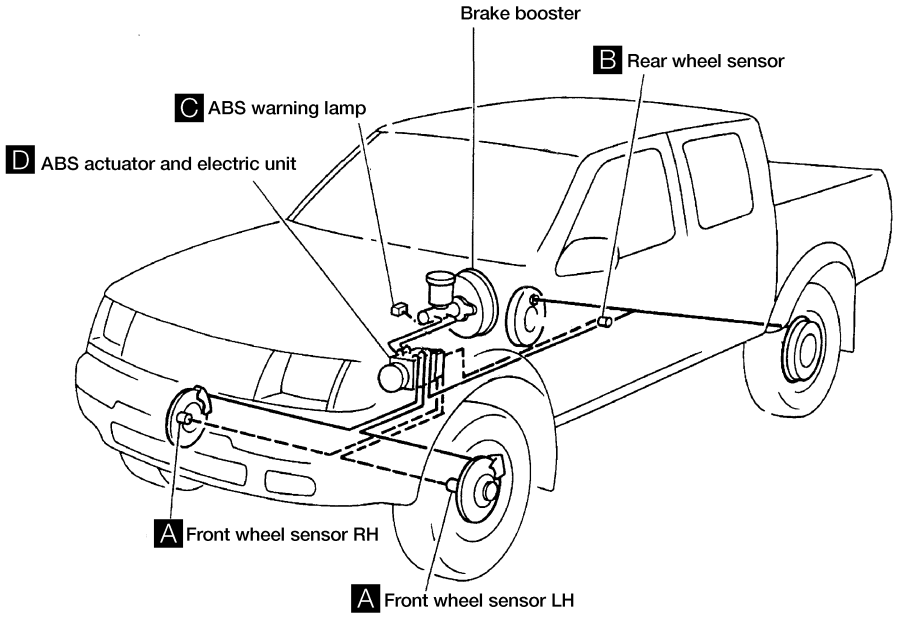

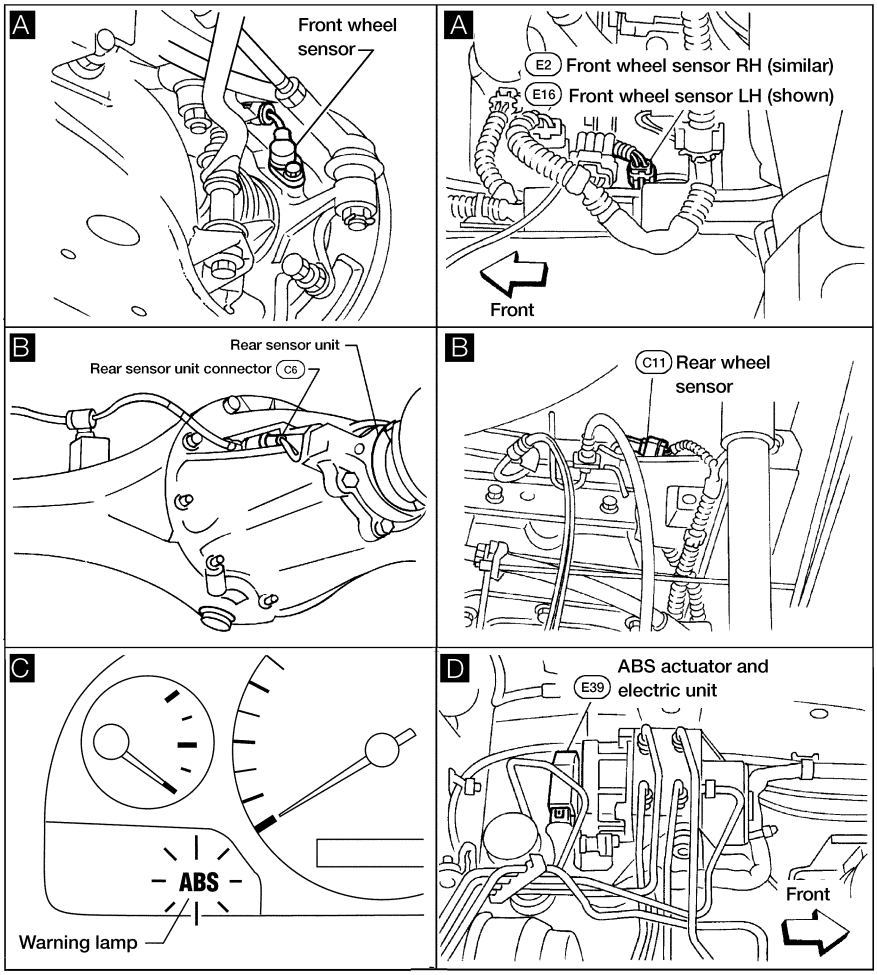

WBR331

Schematic

NEBR0152

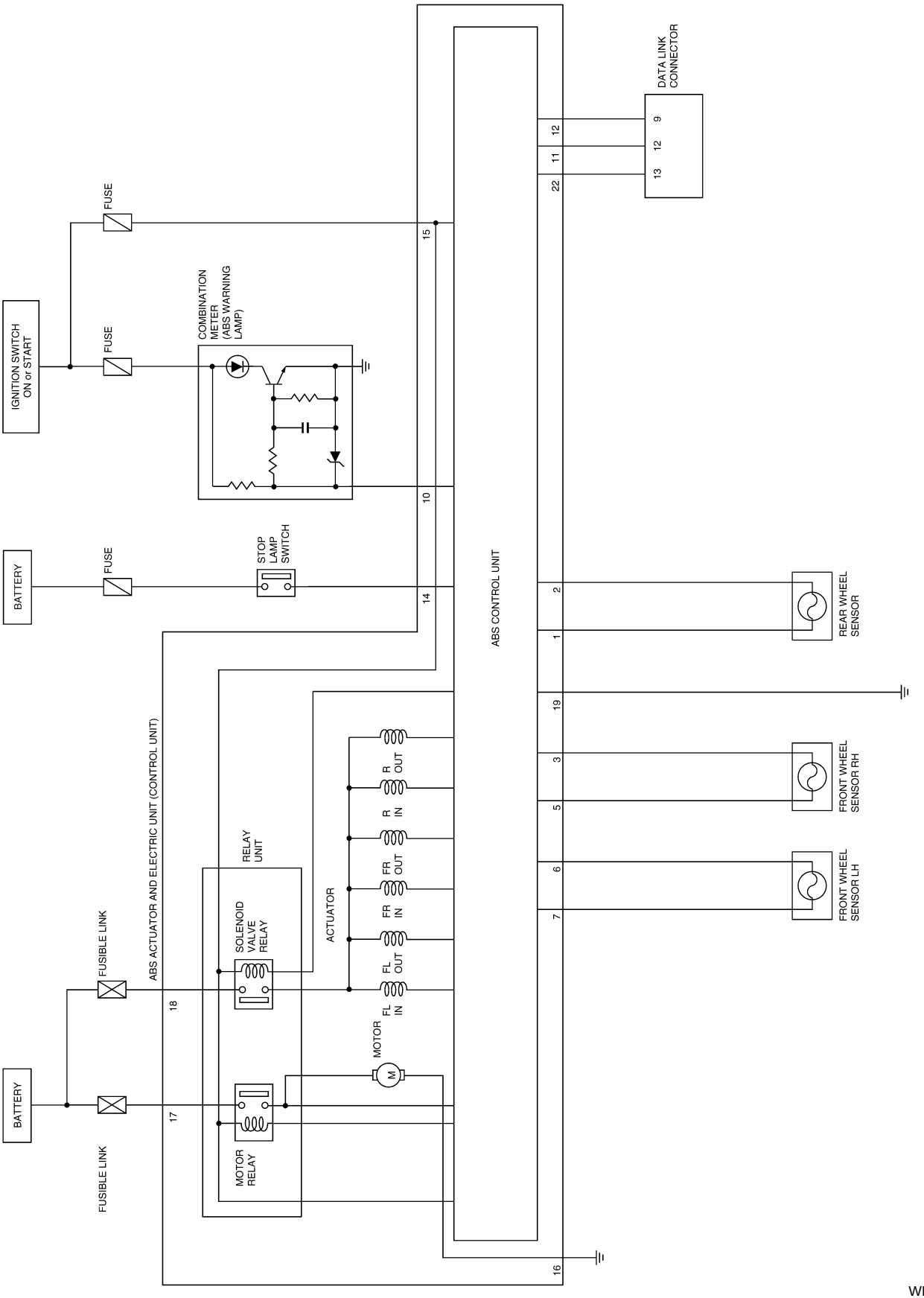

WBR369

Wiring Diagram — ABS —

NEBR0153

BR-ABS-03

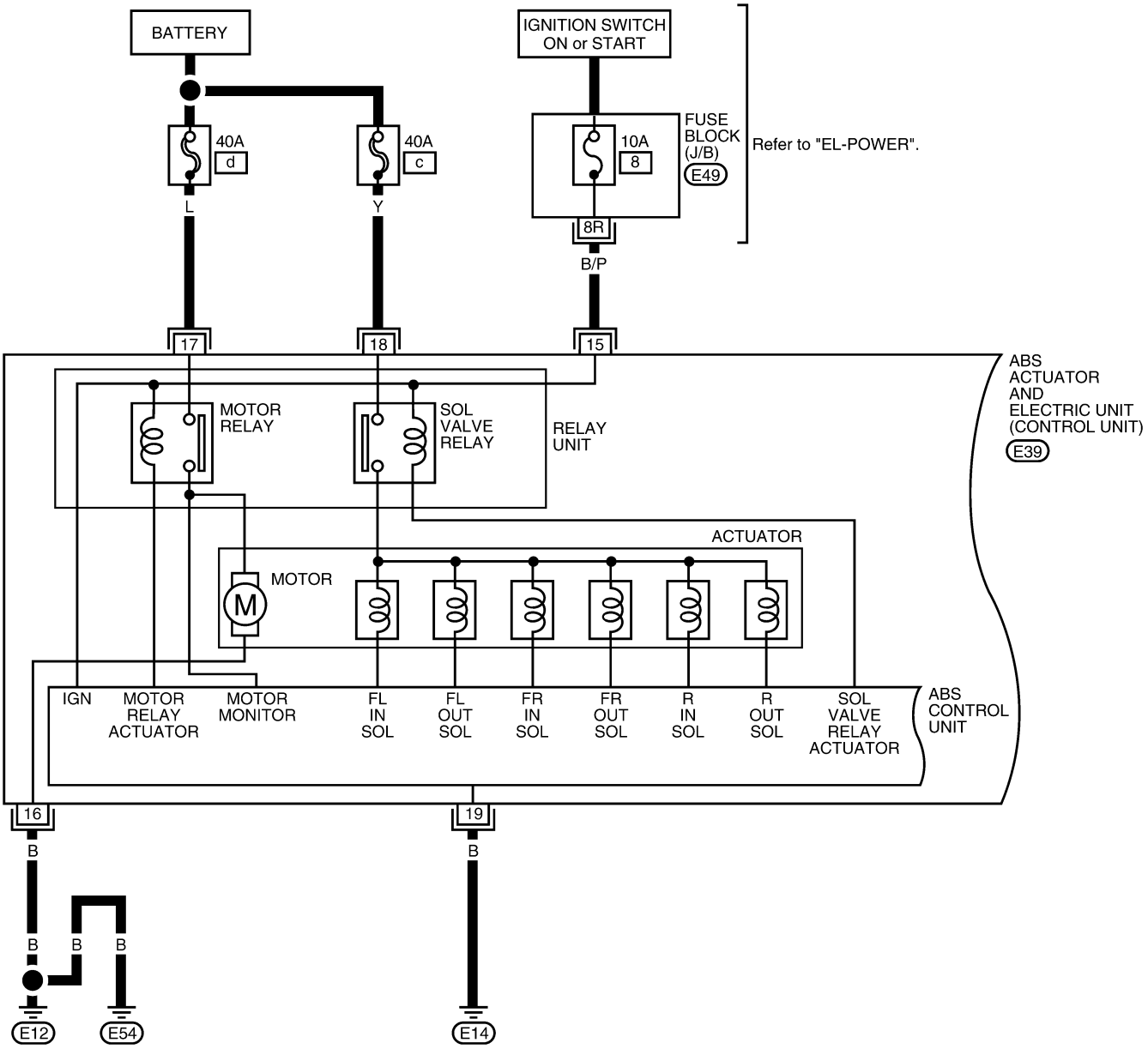

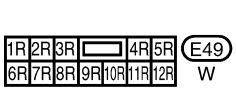

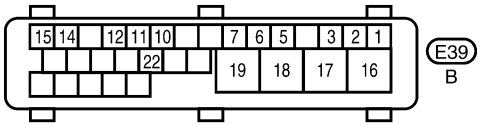

LBR096

BR-ABS-04

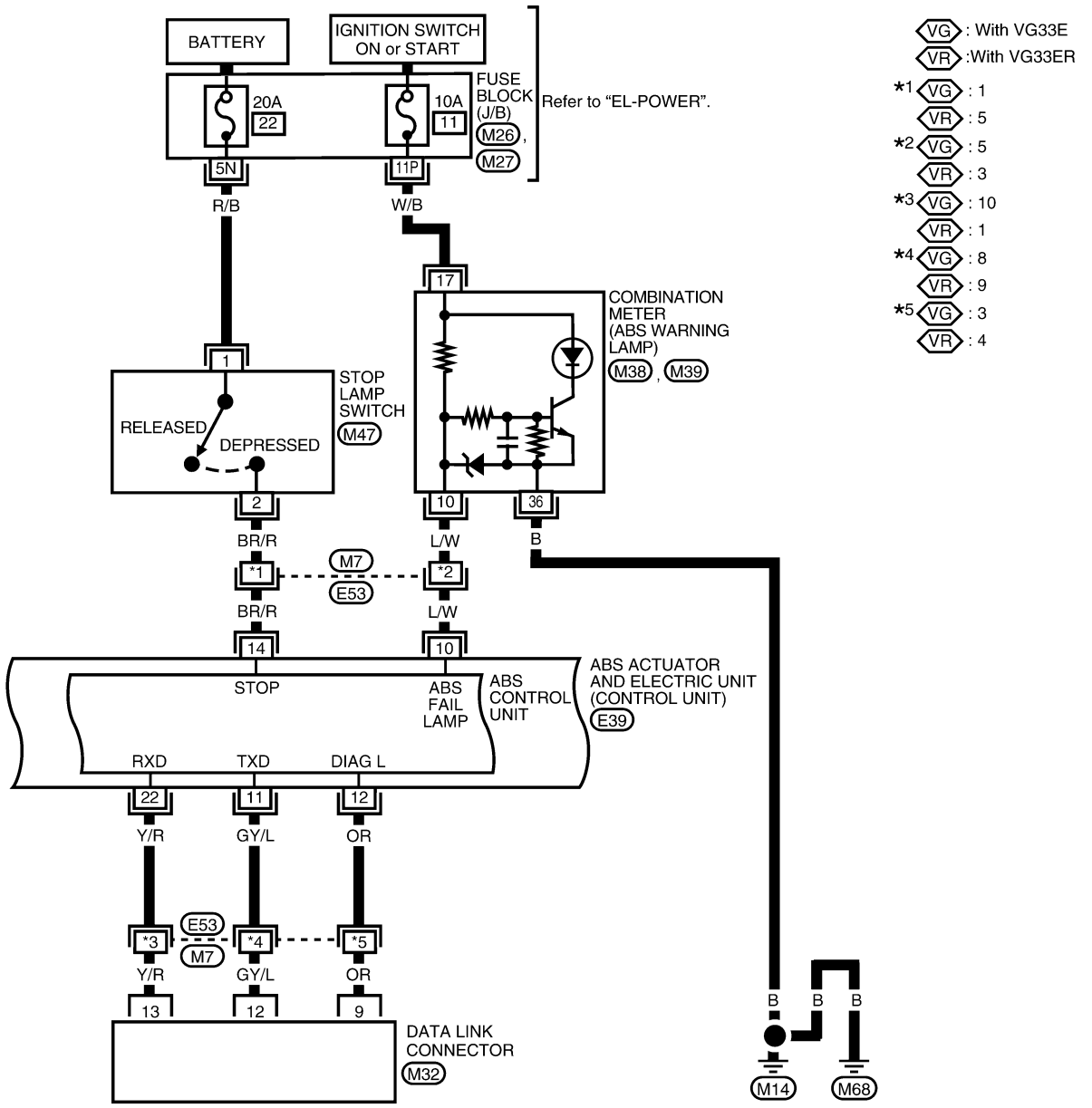

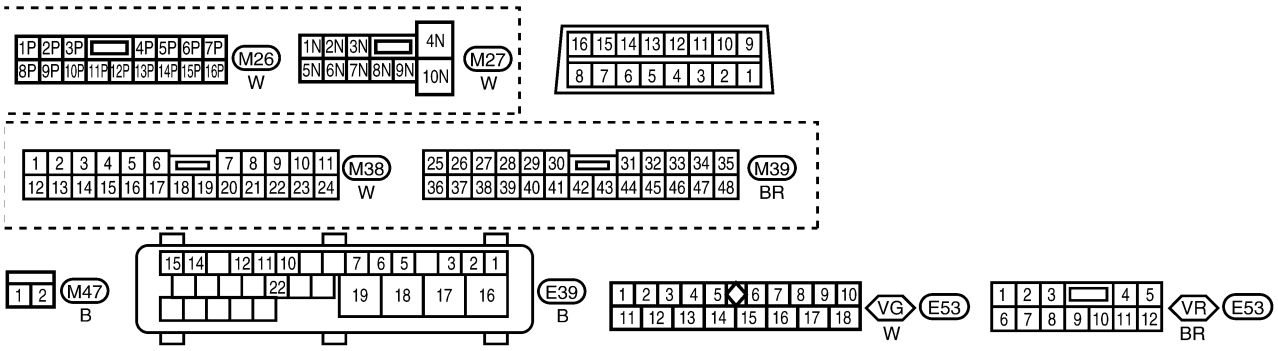

WBR370

BR-ABS-05

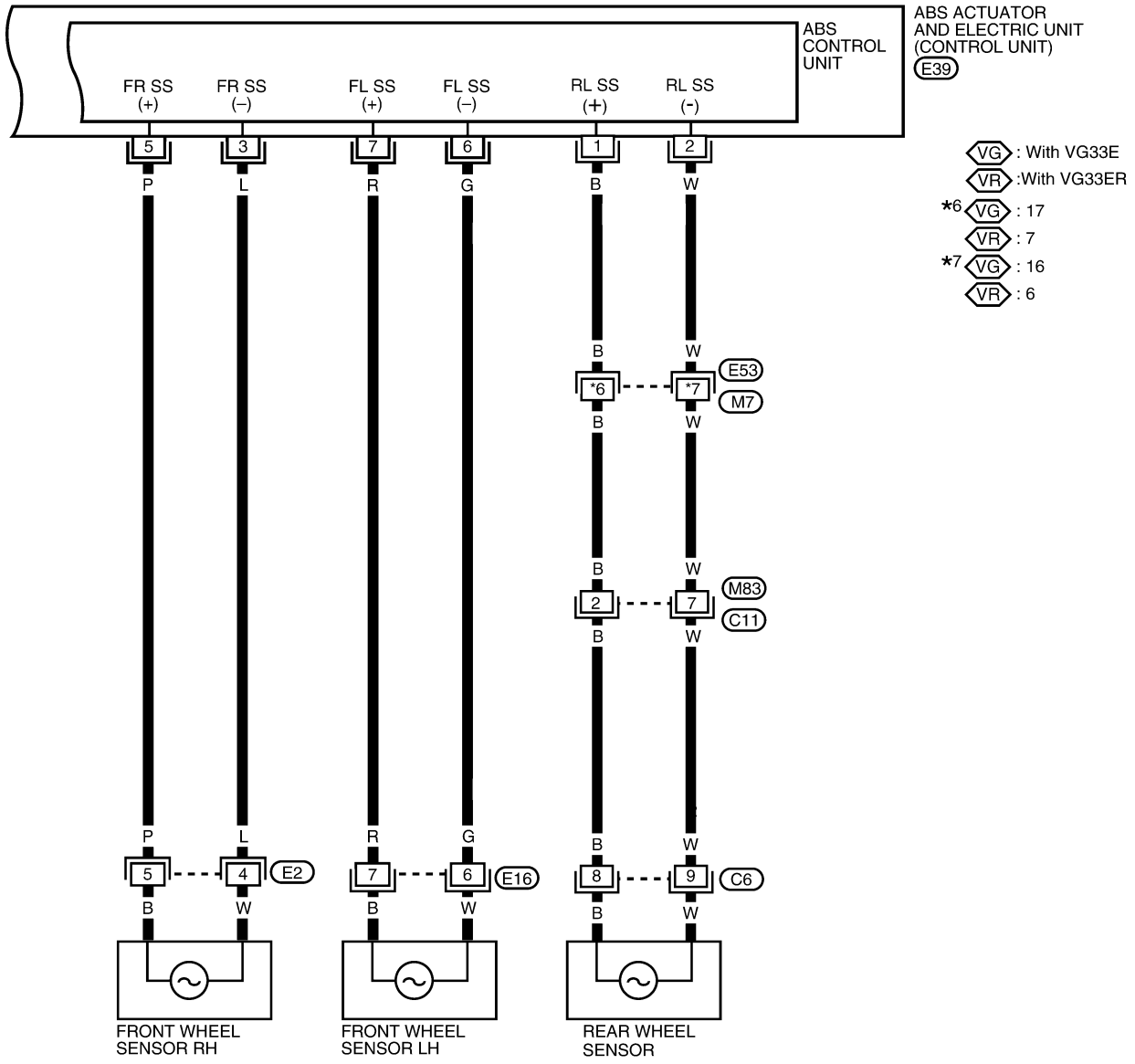

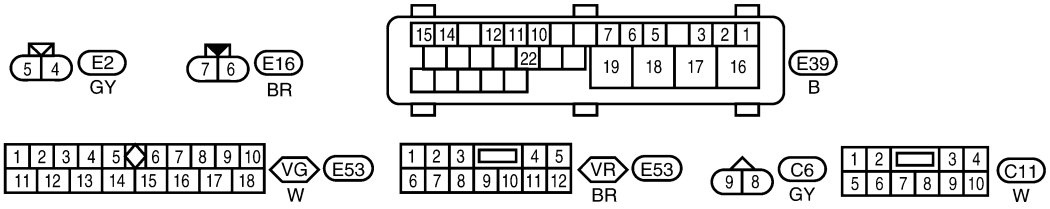

WBR163

Self-diagnosis

NEBR0154

FUNCTION

NEBR0154S01

- When a problem occurs in the ABS, the warning lamp on the instrument panel comes on. To start the self-diagnostic results mode, ground the self-diagnostic (check) terminal located on data link connector. The location of the malfunction is indicated by the warning lamp flashing.

SELF-DIAGNOSIS PROCEDURE

NEBR0154S02

1. Drive vehicle over 30 km/h (19 MPH) for at least one minute.
2. Turn ignition switch OFF.

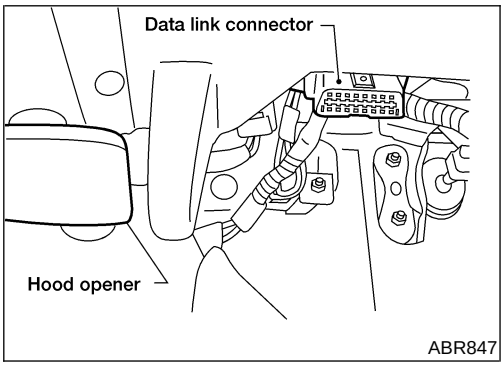

ABR847

3. Ground terminal 9 of data link connector with a suitable harness.
4. Turn ignition switch ON while grounding terminal 9.
   Do not depress brake pedal.

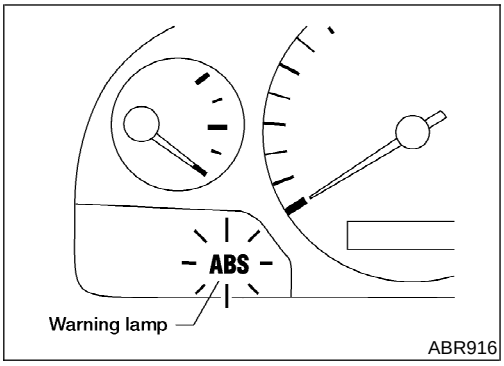

ABR916

5. After 3.0 seconds, the warning lamp starts flashing to indicate the malfunction code No. (See NOTE.)
6. Verify the location of the malfunction with the “Malfunction Code/Symptom Chart”, refer to BR-92. Then make the necessary repairs following the diagnostic procedures.
7. After the malfunctions are repaired, erase the malfunction codes stored in the control unit. Refer to “HOW TO ERASE SELF-DIAGNOSTIC RESULTS (MALFUNCTION CODES)”, BR-84.
8. Rerun the self-diagnostic results mode to verify that the malfunction codes have been erased.

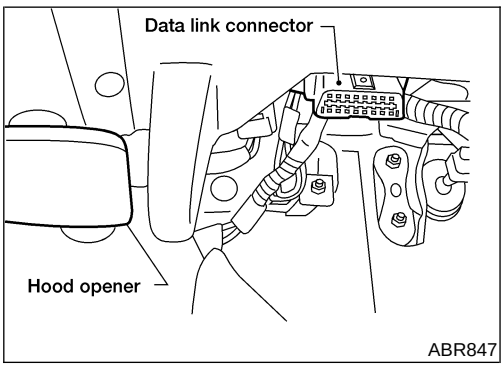

ABR847

9. Disconnect the check terminal from the ground. The self-diagnostic results mode is now complete.
10. Check warning lamp for deactivation after driving vehicle over 30 km/h (19 MPH) for at least one minute.
11. After making certain that warning lamp does not come on, test the ABS in a safe area to verify that it functions properly.

NOTE:
The indication terminates after 5 minutes.
However, when the ignition switch is turned from OFF to ON, the indication starts flashing again.

HOW TO READ SELF-DIAGNOSTIC RESULTS (MALFUNCTION CODES)

=NEBR0154S03

1. Determine the code No. by counting the number of times the warning lamp flashes on and off.
2. When several malfunctions occur at one time, up to three code numbers can be stored; the latest malfunction will be indicated first.
3. The indication begins with the start code 12. After that a maximum of three code numbers appear in the order of the latest one first. The indication then returns to the start code 12 to repeat (the indication will stay on for five minutes at the most).
4. The malfunction code is given in the "Malfunction Code/ Symptom Chart", refer to BR-92.

Example: Code No. 32 REAR SENSOR SHORT-CIRCUIT

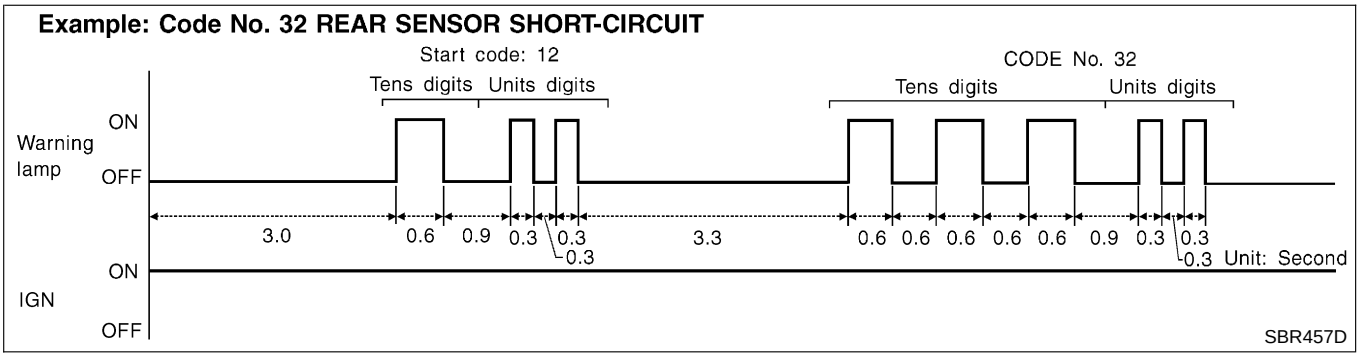

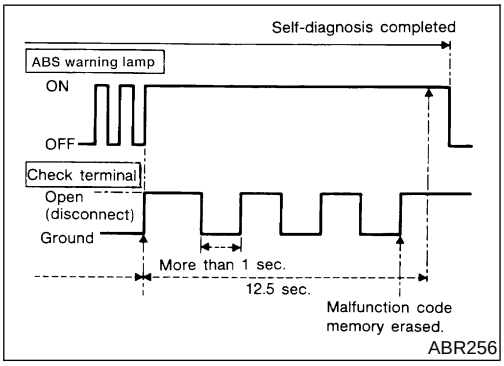

HOW TO ERASE SELF-DIAGNOSTIC RESULTS (MALFUNCTION CODES)

NEBR0154S04

1. Disconnect the check terminal from ground (ABS warning lamp will stay lit).
2. Within 12.5 seconds, ground the check terminal three times. Each terminal ground must last more than 1 second. The ABS warning lamp goes out after the erase operation has been completed.
3. Perform self-diagnosis again. Refer to "Self-diagnosis", BR-83. Only the start code should appear, no malfunction codes.

CONSULT-II

=NEBR0155

CONSULT-II APPLICATION TO ABS

NEBR0155S01

ITEM	SELF-DIAGNOSTIC RESULTS	DATA MONITOR	ACTIVE TEST
Front right wheel sensor	X	X	—
Front left wheel sensor	X	X	—
Rear wheel sensor	X	X	—
ABS sensor	X	—	—
Stop lamp switch	—	×	—
Front right inlet solenoid valve	X	X	X
Front right outlet solenoid valve	X	X	X
Front left inlet solenoid valve	X	X	X
Front left outlet solenoid valve	X	X	X
Rear inlet solenoid valve	X	X	X
Rear outlet solenoid valve	X	X	X
Actuator solenoid valve relay	X	X	—
Actuator motor relay (ABS MOTOR is shown on the Data Monitor screen.)	X	X	X
ABS warning lamp	—	X	—
Battery voltage	X	X	—
ABS operating signal	—	X	X

X : Applicable
—: Not applicable

ECU (ABS CONTROL UNIT) PART NUMBER MODE

NEBR0155S02

Ignore the ECU part number displayed in the ECU PART NUMBER MODE. Refer to Parts Catalog to order the ECU.

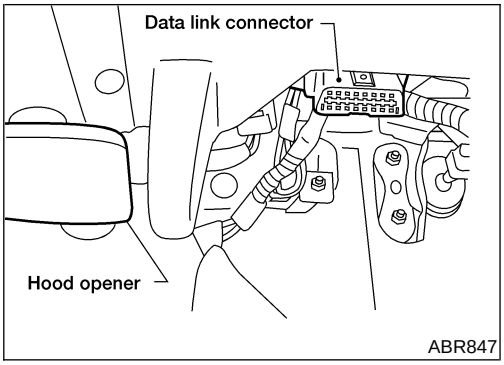

ABR847

CONSULT-II Inspection Procedure

=NEBR0156

SELF-DIAGNOSIS PROCEDURE

NEBR0156S01

1. Turn ignition switch OFF.
2. Connect CONSULT-II to data link connector.
3. Start engine.
4. Drive vehicle over 30 km/h (19 MPH) for at least one minute.

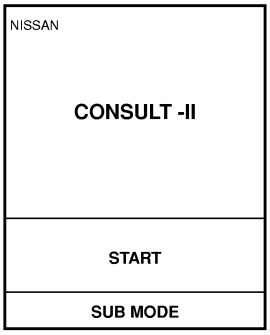

PBR455D

5. Stop vehicle with engine running and touch “START” on CONSULT-II screen.

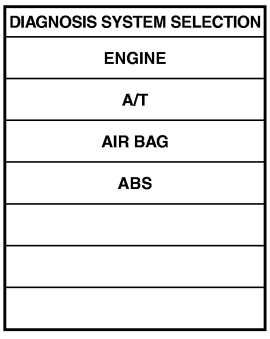

PBR385C

6. Touch “ABS”.

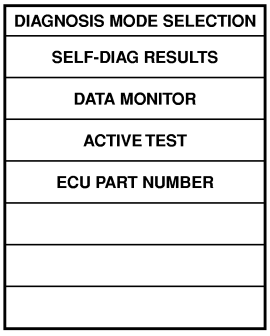

PST412B

7. Touch “SELF-DIAG RESULTS”.

- The screen shows the detected malfunction and how many times the ignition switch has been turned ON since the malfunction.

8. Make the necessary repairs following the diagnostic procedures.

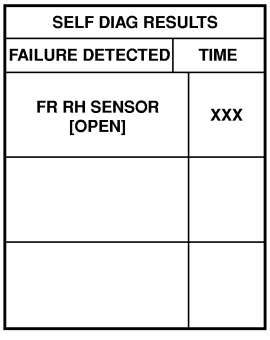

PBR950C

9. After the malfunctions are repaired, erase the self-diagnostic results stored in the control unit by touching “ERASE”.
10. Check warning lamp for deactivation after driving vehicle over 30 km/h (19 MPH) for at least one minute.
11. Test the ABS in a safe area to verify that it functions properly.

NOTE:
“SELF-DIAG RESULTS” screen shows the detected malfunction and how many times the ignition switch has been turned since the malfunction.

SELF-DIAGNOSTIC RESULTS MODE

NEBR0156S02

Diagnostic item	Diagnostic item is detected when ...	Reference Page
FR RH SENSOR★ [OPEN]	• Circuit for front right wheel sensor is open. (An abnormally high input voltage is entered.)	BR-93
FR LH SENSOR★ [OPEN]	• Circuit for front left wheel sensor is open. (An abnormally high input voltage is entered.)	BR-93
RR SENSOR★ [OPEN]	• Circuit for rear sensor is open. (An abnormally high input voltage is entered.)	BR-93
FR RH SENSOR★ [SHORT]	• Circuit for front right wheel sensor is shorted. (An abnormally low input voltage is entered.)	BR-93
FR LH SENSOR★ [SHORT]	• Circuit for front left wheel sensor is shorted. (An abnormally low input voltage is entered.)	BR-93
RR SENSOR★ [SHORT]	• Circuit for rear sensor is shorted. (An abnormally low input voltage is entered.)	BR-93
ABS SENSOR★ [ABNORMAL SIGNAL]	• Teeth damage on sensor rotor or improper installation of wheel sensor. (Abnormal wheel sensor signal is entered.)	BR-93
FR RH IN ABS SOL [OPEN, SHORT]	• Circuit for front right inlet solenoid valve is open. (An abnormally low output voltage is entered.)	BR-95
FR LH IN ABS SOL [OPEN, SHORT]	• Circuit for front left inlet solenoid valve is open. (An abnormally low output voltage is entered.)	BR-95
FR RH OUT ABS SOL [OPEN, SHORT]	• Circuit for front right outlet solenoid valve is open. (An abnormally low output voltage is entered.)	BR-95
FR LH OUT ABS SOL [OPEN, SHORT]	• Circuit for front left outlet solenoid valve is open. (An abnormally low output voltage is entered.)	BR-95
RR IN ABS SOL [OPEN, SHORT]	• Circuit for rear right inlet solenoid valve is shorted. (An abnormally high output voltage is entered.)	BR-95
RR OUT ABS SOL [OPEN, SHORT]	• Circuit for rear left inlet solenoid valve is shorted. (An abnormally high output voltage is entered.)	BR-95
ABS ACTUATOR RELAY [ABNORMAL]	• Actuator solenoid valve relay is ON, even if control unit sends off signal. • Actuator solenoid valve relay is OFF, even if control unit sends on signal.	BR-95
ABS MOTOR RELAY [ABNORMAL]	• Circuit for ABS motor relay is open or shorted. • Circuit for actuator motor is open or shorted. • Actuator motor relay is stuck.	BR-97
BATTERY VOLT [VB-LOW]	• Power source voltage supplied to ABS control unit is abnormally low.	BR-99
CONTROL UNIT	• Function of calculation in ABS control unit has failed.	BR-101

★: If one or more wheels spin on a rough or slippery road for 40 seconds or more, the ABS warning lamp will illuminate. This does not indicate a malfunction. Only in the case of the short-circuit (Code Nos. 26, 22, 32 and 36), after repair the ABS warning lamp also illuminates when the ignition switch is turned ON. In this case, drive the vehicle at speeds greater than 30 km/h (19 MPH) for approximately 1 minute as specified in "SELF-DIAGNOSIS PROCEDURE", BR-83. Check to ensure that the ABS warning lamp goes out while the vehicle is being driven.

CONSULT-II Inspection Procedure (Cont'd)

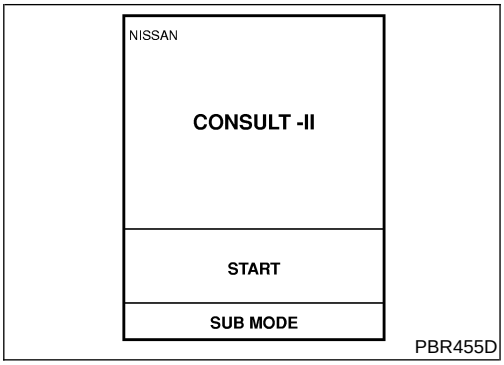

PBR455D

DATA MONITOR PROCEDURE

NEBR0156S03

1. Turn ignition switch OFF.
2. Connect CONSULT-II to data link connector.
3. Turn ignition switch ON.
4. Touch "START" on CONSULT-II screen.

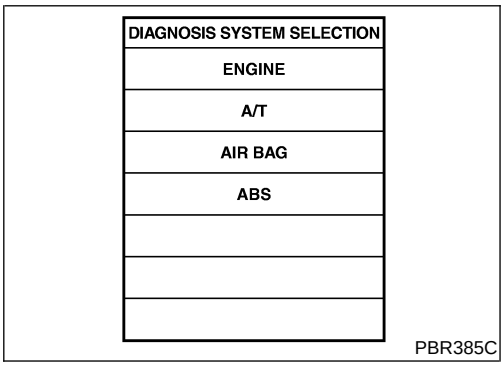

PBR385C

5. Touch "ABS".

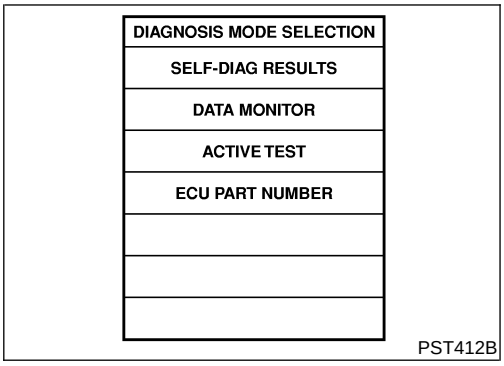

PST412B

6. Touch "DATA MONITOR".

ACTIVE TEST PROCEDURE

NEBR0156S04

- When conducting Active test, vehicle must be stationary.
- When ABS warning lamp stays on, never conduct Active test.

1. Turn ignition switch OFF.
2. Connect CONSULT-II to data link connector.
3. Start engine.
4. Touch "START" on CONSULT-II screen.

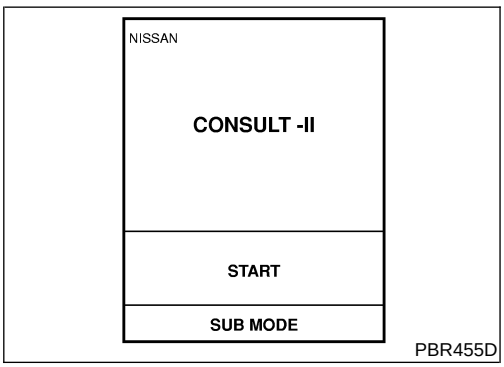

PBR455D

5. Touch "ABS".

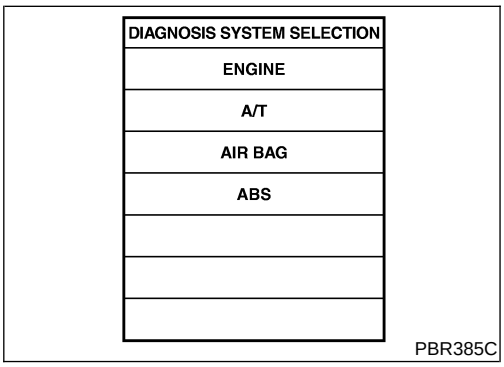

PBR385C

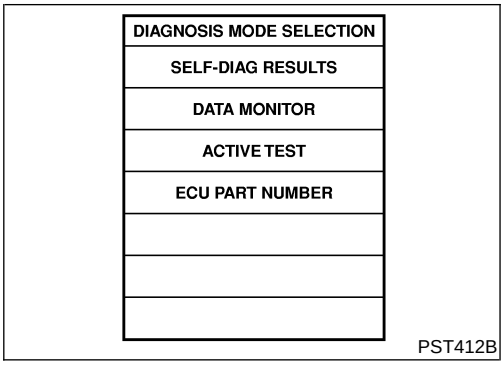

6. Touch "ACTIVE TEST".

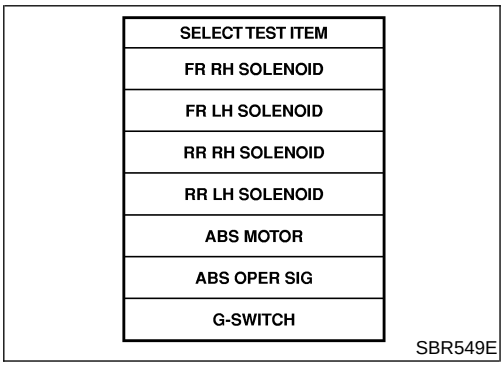

7. Select active test item by touching screen.

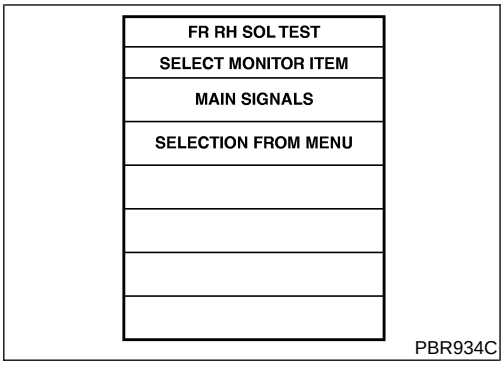

8. Touch "START".
9. Carry out the active test by touching screen key.

CONSULT-II Inspection Procedure (Cont'd)

DATA MONITOR MODE

=NEBR0156S05

MONITOR ITEM	CONDITION	SPECIFICATION
FR RH SENSOR FR LH SENSOR RR SENSOR	Drive vehicle. (Each wheel is rotating.)	Wheel speed signal (Almost the same speed as speedometer.)
STOP LAMP SWITCH	Brake is depressed.	Depress the pedal: ON Release the pedal: OFF
FR RH IN SOL FR RH OUT SOL FR LH IN SOL FR LH OUT SOL RR IN SOL RR OUT SOL	1. Drive vehicle at speeds over 30 km/h (19 MPH) for at least 1 minute. 2. Engine is running.	Operating conditions for each solenoid valve are indicated. ABS is not operating: OFF
MOTOR RELAY		ABS is not operating: OFF ABS is operating: ON
ACTUATOR RELAY	Ignition switch is ON or engine is running.	Ignition switch ON (Engine stops): OFF Engine running: ON
WARNING LAMP		ABS warning lamp is turned on: ON ABS warning lamp is turned off: OFF
BATTERY VOLT		Power supply voltage for control unit

ACTIVE TEST MODE

=NEBR0156S06

TEST ITEM	CONDITION	JUDGEMENT		
FR RH SOLENOID FR LH SOLENOID RR SOLENOID		Brake fluid pressure control operation		
	Engine is running.		IN SOL	OUT SOL
		UP (Increase):	OFF	OFF
		KEEP (Hold):	ON	OFF
		DOWN (Decrease):	ON	ON
ABS MOTOR		ABS actuator motor ON: Motor runs (ABS motor relay ON) OFF: Motor stops (ABS motor relay OFF)		

NOTE:
Active test will automatically stop ten seconds after the test starts. (TEST IS STOPPED monitor shows ON.)

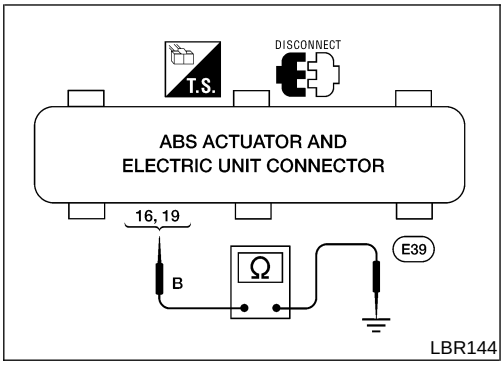

Ground Circuit Check

ABS ACTUATOR AND ELECTRIC UNIT GROUND

NEBR0179

NEBR0179S01

- Check resistance between ABS actuator and electric unit connector terminals (16, 19) and ground.

  Resistance: approximately 0Ω

Malfunction Code/Symptom Chart

NEBR0191S01

Code No. (No. of warning lamp flashes)	Malfunctioning part	Reference Page
45	Actuator front left outlet solenoid valve	BR-95
46	Actuator front left inlet solenoid valve	BR-95
41	Actuator front right outlet solenoid valve	BR-95
42	Actuator front right inlet solenoid valve	BR-95
55	Actuator rear outlet solenoid valve	BR-95
56	Actuator rear inlet solenoid valve	BR-95
25 ★1	Front left sensor (open-circuit)	BR-93
26 ★1	Front left sensor (short-circuit)	BR-93
21 ★1	Front right sensor (open-circuit)	BR-93
22 ★1	Front right sensor (short-circuit)	BR-93
35 ★1	Rear sensor (open-circuit)	BR-93
36 ★1	Rear sensor (short-circuit)	BR-93
18 ★1	Sensor rotor	BR-93
61 ★3	Actuator motor or motor relay	BR-97
63	Solenoid valve relay	BR-95
57 ★2	Power supply (Low voltage)	BR-99
71	Control unit	BR-101
Warning lamp stays on when ignition switch is turned ON.	Control unit power supply circuit Warning lamp bulb circuit Control unit or control unit connector Solenoid valve relay stuck Power supply for solenoid valve relay coil	BR-107
Warning lamp does not come on When ignition switch is turned ON.	Fuse, warning lamp bulb or warning lamp circuit Control unit	BR-105
Pedal vibration and noise	—	BR-105
Long stopping distance	—	BR-104
Unexpected pedal action	—	BR-103
ABS does not work	—	BR-104
ABS works frequently	—	BR-102

★1: If one or more wheels spin on a rough or slippery road for 40 seconds or more, the ABS warning lamp will illuminate. This does not indicate a malfunction. Only in the case of the short-circuit (Code Nos. 26, 22, 32 and 36), after repair the ABS warning lamp also illuminates when the ignition switch is turned ON. In this case, drive the vehicle at speeds greater than 30 km/h (19 MPH) for approximately 1 minute as specified in “SELF-DIAGNOSIS PROCEDURE”, BR-83. Check to ensure that the ABS warning lamp goes out while the vehicle is being driven.

★2: The trouble code “57”, which refers to a low power supply voltage, does not indicate that the ABS control unit is malfunctioning. Do not replace the ABS control unit with a new one.

★3: The trouble code “61” can sometimes appear when the ABS motor is not properly grounded. If it appears, be sure to check the condition of the ABS motor ground circuit connection.

Wheel Sensor or Rotor

NEBR0184

MALFUNCTION CODE NO. 21, 22, 25, 26, 35, 36 OR 18

NEBR0184S01

NOTE:
Wheel position should be distinguished by code No. except code No. 18 (sensor rotor).

1	INSPECTION START

Wheel sensor inspection

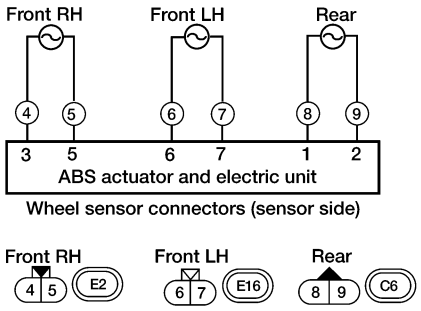

WBR178

▶	GO TO 2.

2	CHECK CONNECTOR

1. Disconnect connectors from ABS actuator and electric unit and wheel sensor of malfunction code No. Check terminals for damage or loose connection. Then reconnect connectors.
2. Carry out “Self-diagnosis” again. Refer to BR-83.

Does warning lamp activate again?

Yes	▶	GO TO 3.
No	▶	**INSPECTION END**

3	CHECK WHEEL SENSOR ELECTRICAL

1. Disconnect ABS actuator and electric unit connector.
2. Check resistance between ABS actuator and electric unit connector E39 terminals.
   Code No. 21 or 22 (Front RH wheel)
   Terminals 3 and 5
   Code No. 25 or 26 (Front LH wheel)
   Terminals 6 and 7
   Code No. 35 or 36 (Rear wheel)
   Terminals 1 and 2

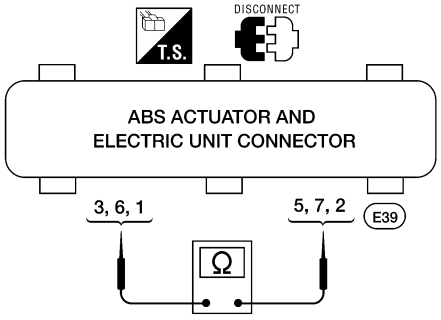

LBR136

Resistance:
Front 1.28 - 1.92 kΩ
Rear 1.05 - 1.35 kΩ

Are front and rear resistance values within specifications?

Yes	▶	GO TO 5.
No	▶	GO TO 4.

4	CHECK WHEEL SENSOR

Check each sensor for resistance.

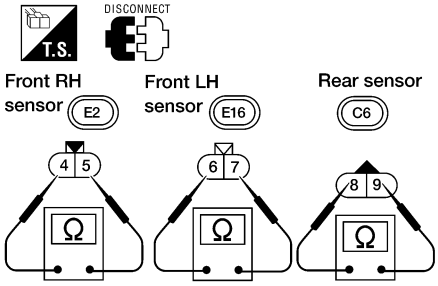

WBR179

Resistance:
Front 1.28 - 1.92 kΩ
Rear 1.05 - 1.35 kΩ

Are front and rear sensor resistance values within specifications?

Yes	▶	**Check the following.** If NG, repair harness or connectors. ● Harness connectors E2, E16, E39, C6 ● Harness for open or short between wheel sensor connectors and ABS actuator and electric unit
No	▶	Replace wheel sensor.

5	CHECK TIRE

Check for inflation pressure, wear and size of each tire. (See NOTE)

Are tire pressure and size correct and is tire wear within specifications?

Yes	▶	GO TO 6.
No	▶	Adjust tire pressure or replace tire(s). (See NOTE)

6	CHECK WHEEL BEARING

Check wheel bearing axial end play. (See NOTE)

Is wheel bearing axial end play within specifications? Refer to *AX-5*, "FRONT WHEEL BEARING" and *AX-28*, "REAR WHEEL BEARING".

Yes	▶	GO TO 7.
No	▶	Check wheel bearing. Refer to ***AX-5***, "FRONT WHEEL BEARING" and ***AX-28***, "REAR WHEEL BEARING".

7	CHECK SENSOR ROTOR

Check sensor rotor for teeth damage. (See NOTE)

Is sensor rotor free from damage?

Yes	▶	Check ABS actuator and electric unit pin terminals for damage or the connection of ABS actuator and electric unit harness connector. Reconnect ABS actuator and electric unit harness connector. Then retest.
No	▶	Replace sensor rotor. (See NOTE)

ABS Actuator Solenoid Valve and Solenoid Valve Relay

NEBR0185

MALFUNCTION CODE NO. 41, 42, 45, 46, 55, 56 OR 63

NEBR0185S01

1	INSPECTION START

Solenoid valve relay inspection

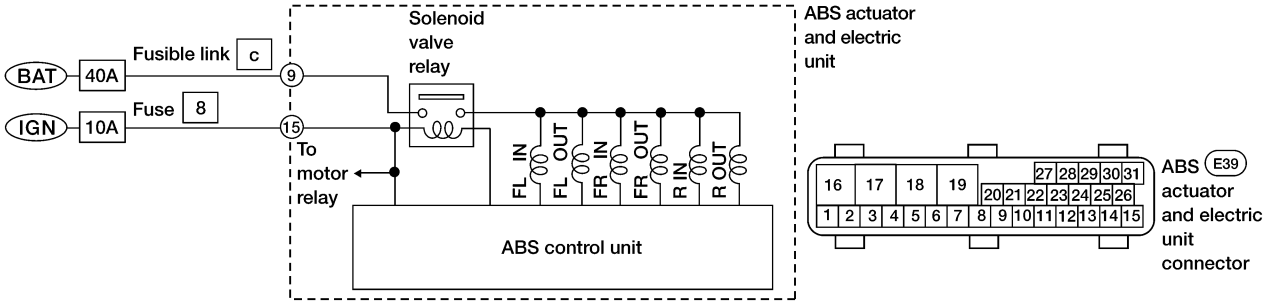

WBR169

	▶	GO TO 2.

2	CHECK FUSE	
Check 20A fuse 41. For fuse layout, refer to ***EL-9***, “POWER SUPPLY ROUTING”.		
Is fusible link OK?		
Yes	▶	GO TO 3.
No	▶	GO TO 6.

3	CHECK CONNECTOR	
1. Disconnect connector from ABS actuator and electric unit. Check terminals for damage or loose connection. Then reconnect connector. 2. Carry out self-diagnosis again.		
Does warning lamp activate again?		
Yes	▶	GO TO 4.
No	▶	**INSPECTION END**

4	CHECK ABS ACTUATOR AND ELECTRIC UNIT GROUND CIRCUIT	
Refer to “ABS ACTUATOR AND ELECTRIC UNIT GROUND”, BR-91.		
Is ground circuit OK?		
Yes	▶	GO TO 5.
No	▶	Repair harness or connector.

5	CHECK SOLENOID VALVE POWER SUPPLY CIRCUIT

1. Disconnect ABS actuator and electric unit connector.
2. Check voltage between ABS actuator and electric unit connector E39 (body side) terminal 18 and ground.

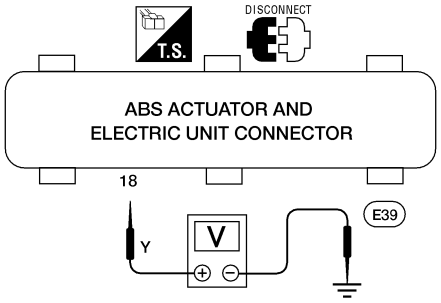

ABR646

Does battery voltage exist?

Yes	▶	Replace ABS actuator and electric unit.
No	▶	**Check the following.** If NG, repair harness or connectors. ● Harness connector E39 ● Harness for open or short between ABS actuator and electric unit and fuse

6	REPLACE FUSE

Replace fuse.

Does the fuse blow out when ignition switch is turned ON?

Yes	▶	GO TO 7.
No	▶	**INSPECTION END**

7	CHECK SOLENOID VALVE RELAY POWER SUPPLY CIRCUIT FOR SHORT

1. Disconnect battery cable and ABS actuator and electric unit connector.
2. Check continuity between ABS actuator and electric unit connector E39 (body side) terminal 18 and ground.

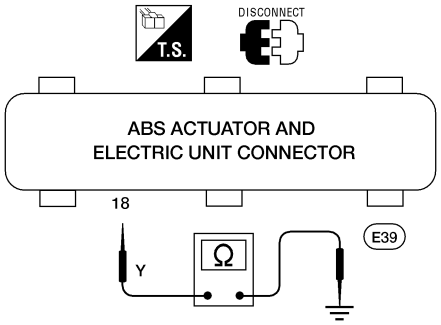

ABR647

Continuity should not exist.

Does continuity exist?

Yes	▶	**Check the following.** If NG, repair harness or connector. ● Harness connector E39 ● Harness for open or short between ABS actuator and electric unit and fuse
No	▶	Replace ABS actuator and electric unit.

Motor Relay or Motor

NEBR0186

MALFUNCTION CODE NO. 61

NEBR0186S01

1	INSPECTION START

ABS motor relay inspection

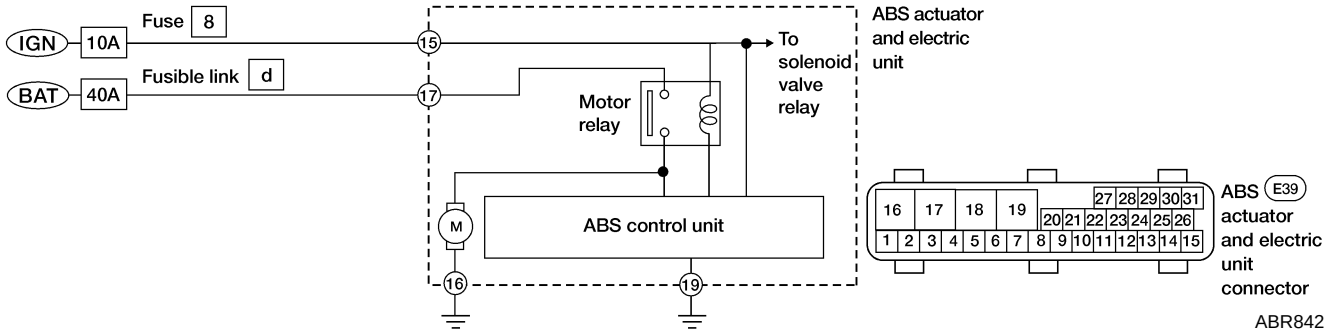

	▶	GO TO 2.

2	CHECK FUSIBLE LINK	
Check 40A fusible link **d**. For fusible link layout, refer to ***EL-9***, "POWER SUPPLY ROUTING".		
Is fusible link OK?		
Yes	▶	GO TO 3.
No	▶	GO TO 6.

3	CHECK CONNECTOR	
1. Disconnect ABS actuator and electric unit connector. Check terminals for damage or loose connection. Then reconnect connector. 2. Carry out self-diagnosis again.		
Does warning lamp activate again?		
Yes	▶	GO TO 4.
No	▶	**INSPECTION END**

4	CHECK ABS ACTUATOR AND ELECTRIC UNIT GROUND CIRCUIT	
Refer to "ABS ACTUATOR AND ELECTRIC UNIT GROUND", BR-91.		
Is ground circuit OK?		
Yes	▶	GO TO 5.
No	▶	Repair harness or connector.

5	CHECK MOTOR RELAY POWER SUPPLY CIRCUIT

1. Disconnect ABS actuator and electric unit connector.
2. Check voltage between ABS actuator and electric unit connector E39 terminal 17 and ground.

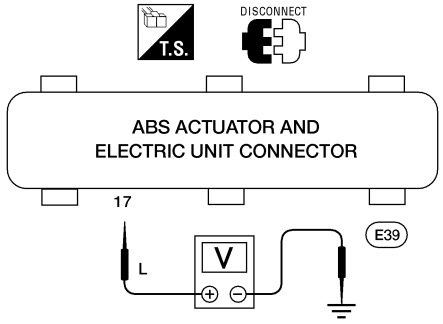

ABR649

Does battery voltage exist?

Yes	▶	Replace ABS actuator and electric unit.
No	▶	**Check the following.** If NG, repair harness or connector. ● Harness connector E39 ● Harness for open or short between ABS actuator and electric unit and fusible link

6	REPLACE FUSIBLE LINK

Replace fusible link.

Does the fusible link blow out when ignition switch is turned ON?

Yes	▶	GO TO 7.
No	▶	**INSPECTION END**

7	CHECK ABS ACTUATOR MOTOR POWER SUPPLY CIRCUIT FOR SHORT

1. Disconnect battery cable and ABS actuator and electric unit connector.
2. Check continuity between ABS actuator and electric unit connector E39 terminal 17 and ground.

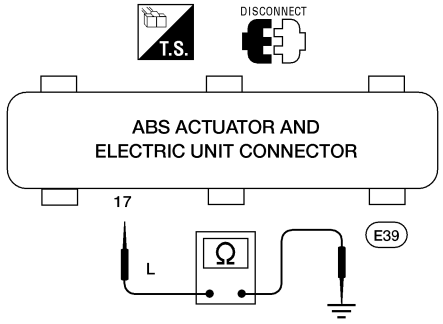

ABR650

Continuity should not exist.

Does continuity exist?

Yes	▶	**Check the following.** If NG, repair harness or connector. ● Harness connector E39 ● Harness for open or short between ABS actuator and electric unit and fusible link
No	▶	Replace ABS actuator and electric unit.

Low Voltage

NEBR0187

MALFUNCTION CODE NO. 57

NEBR0187S01

1	INSPECTION START	
ABS actuator and electric unit power supply and ground circuit inspection 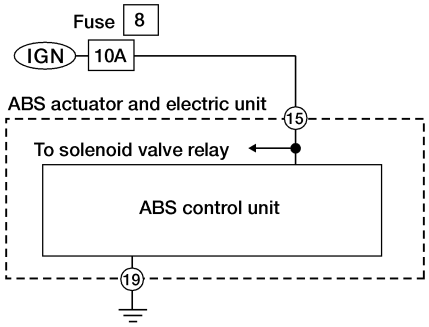 LBR135		
	▶	GO TO 2.

2	CHECK FUSE	
Check 10A fuse No. 8. For fuse layout, refer to ***EL-9***, “POWER SUPPLY ROUTING”. **Is fuse OK?**		
Yes	▶	GO TO 3.
No	▶	GO TO 6.

3	CHECK CONNECTOR	
1. Disconnect ABS actuator and electric unit connector. Check terminals for damage or loose connections. Then reconnect connector. 2. Carry out “Self-diagnosis” again. Refer to BR-83. **Does warning lamp activate again?**		
Yes	▶	GO TO 4.
No	▶	**INSPECTION END**

4	CHECK ABS ACTUATOR AND ELECTRIC UNIT GROUND CIRCUIT	
Refer to “ABS ACTUATOR AND ELECTRIC UNIT GROUND”, BR-91. **Is ground circuit OK?**		
Yes	▶	GO TO 5.
No	▶	Repair harness or connector.

5	CHECK ABS ACTUATOR AND ELECTRIC UNIT POWER SUPPLY CIRCUIT

1. Disconnect ABS actuator and electric unit connector.
2. Check voltage between ABS actuator and electric unit connector E39 terminal 15 and ground.

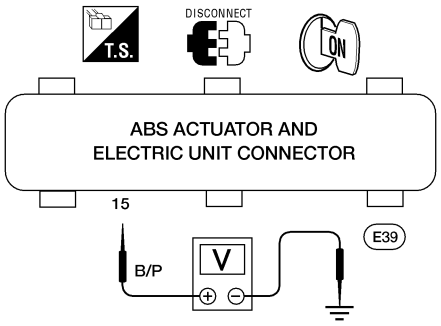

ABR652

Does battery voltage exist when ignition switch is turned ON?

Yes	▶	Replace ABS actuator and electric unit.
No	▶	**Check the following.** If NG, repair harness or connector. ● Harness connector E39 ● Harness for open or short between ABS actuator and electric unit and fuse

6	REPLACE FUSE

Replace fuse.

Does the fuse blow out when ignition switch is turned ON?

Yes	▶	GO TO 7.
No	▶	**INSPECTION END**

7	CHECK ABS ACTUATOR AND ELECTRIC UNIT POWER SUPPLY CIRCUIT FOR SHORT

1. Disconnect battery cable and ABS actuator and electric unit connector.
2. Check continuity between ABS actuator and electric unit connector E39 terminal 15 and ground.

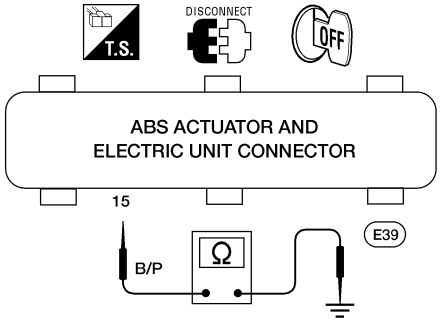

ABR775

Continuity should not exist.

Does continuity exist?

Yes	▶	**Check the following.** If NG, repair harness or connector. ● Harness connector E39 ● Harness for open or short between ABS actuator and electric unit and fuse
No	▶	Replace ABS actuator and electric unit.

Control Unit

=NEBR0189

MALFUNCTION CODE NO. 71

NEBR0189S01

1	INSPECTION START

ABS actuator and electric unit power supply and ground circuit inspection

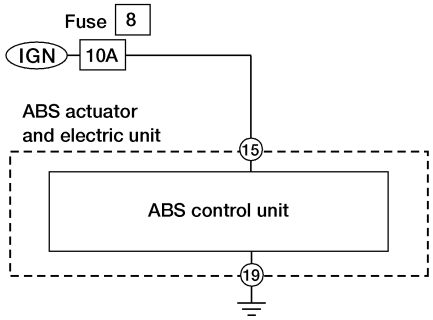

LBR132

	▶	GO TO 2.

2	CHECK CONNECTOR

1. Disconnect ABS actuator and electric unit connector.
   Check terminals for damage or loose connection. Then reconnect connector.
2. Carry out “Self-diagnosis” again. Refer to BR-83.

Does warning lamp activate again?

Yes	▶	GO TO 3.
No	▶	**INSPECTION END**

3	CHECK ABS ACTUATOR AND ELECTRIC UNIT POWER SUPPLY CIRCUIT

Check voltage. Refer to “MALFUNCTION CODE NO. 57”, BR-99.

Does battery voltage exist when ignition switch is turned ON?

Yes	▶	GO TO 4.
No	▶	Repair.

4	CHECK WARNING LAMP INDICATION

Does warning lamp indicate code No. 71 again?

Yes or No

Yes	▶	Replace ABS actuator and electric unit.
No	▶	Inspect the system according to the code No.

1. ABS Works Frequently

NEBR0192

1	CHECK BRAKE FLUID PRESSURE	
Check brake fluid pressure distribution. Refer to “PROPORTIONING VALVE (VG33E and VG33ER)”, BR-14. **Is brake fluid pressure distribution normal?**		
Yes	▶	GO TO 2.
No	▶	Repair. Then perform “Preliminary Check”. Refer to BR-75.

2	CHECK WHEEL SENSOR	
1. Check wheel sensor connector for terminal damage or loose connections. 2. Perform wheel sensor mechanical check. Refer to “Wheel Sensor or Rotor”, BR-93. **Is wheel sensor mechanism OK?**		
Yes	▶	GO TO 3.
No	▶	Repair.

3	CHECK FRONT AXLE	
Check front axles for excessive looseness. Refer to ***AX-5***, “Front Wheel Bearing”. **Is front axle installed properly?**		
Yes	▶	Go to Test No. 3, “2. Unexpected Pedal Action”, BR-103.
No	▶	Repair.

2. Unexpected Pedal Action

=NEBR0193

1	CHECK BRAKE PEDAL STROKE	
Check brake pedal stroke. 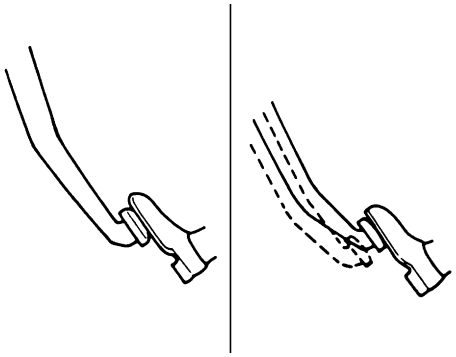 SBR540A **Is brake pedal stroke excessively large?**		
Yes	▶	Perform “Preliminary Check”, refer to BR-75.
No	▶	GO TO 2.

2	CHECK MECHANICAL BRAKE SYSTEM PERFORMANCE	
Disconnect ABS actuator and electric unit connector and check whether brake is effective. **Does brake system function properly when brake pedal is depressed?**		
Yes	▶	GO TO 3.
No	▶	Perform “Preliminary Check”, refer to BR-75.

3	CHECK WARNING LAMP INDICATION	
Ensure warning lamp remains off while driving. 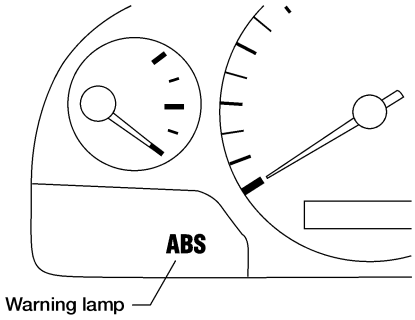 ABR837 **Is warning lamp turned off?**		
Yes	▶	GO TO 4.
No	▶	Perform “Self-diagnosis”, refer to BR-83.

4	CHECK WHEEL SENSOR	
1. Check wheel sensor connector for terminal damage or loose connection. 2. Perform wheel sensor mechanical check. Refer to Test No. 7, “Wheel Sensor or Rotor”, BR-93. **Is wheel sensor mechanism OK?**		
Yes	▶	Check ABS actuator and electric unit pin terminals for damage or the connection of ABS actuator and electric unit harness connector. Reconnect ABS actuator and electric unit harness connector. Then retest.
No	▶	Repair.

3. Long Stopping Distance

NEBR0194

1	CHECK MECHANICAL BRAKE SYSTEM PERFORMANCE	
Disconnect ABS actuator and electric unit connector and check whether stopping distance is still long. **Does brake system function properly when brake pedal is depressed?**		
Yes	▶	Perform Preliminary Check and air bleeding (if necessary).
No	▶	Go to Test No. 3, “2. Unexpected Pedal Action”, BR-103.

NOTE:
Stopping distance may be longer for vehicles without ABS when road condition is slippery.

4. ABS Does Not Work

NEBR0195

1	CHECK WARNING LAMP INDICATION	
Does the ABS warning lamp activate? **Yes or No**		
Yes	▶	Carry out “Self-diagnosis”. Refer to BR-83, 86.
No	▶	Go to Test No. 3, “2. Unexpected Pedal Action”, BR-103.

NOTE:
ABS does not work when vehicle speed is under 10 km/h (6 MPH).

5. Pedal Vibration and Noise

=NEBR0196

1	INSPECTION START
Pedal vibration and noise inspection Brake pedal 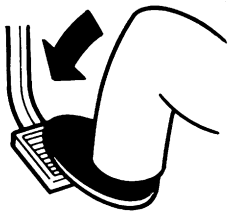 SAT797A	
▶	GO TO 2.

2	CHECK SYMPTOM
1. Apply brake. 2. Start engine. **Does the symptom appear only when engine is started?**	
Yes ▶	Carry out “Self-diagnosis”. Refer to BR-83.
No ▶	Go to Test No. 3, “2. Unexpected Pedal Action”, BR-103.

NOTE:
ABS may operate and cause vibration under any of the following conditions.

- Applying brake gradually when shifting or operating clutch.
- Low friction (slippery) road.
- High speed cornering.
- Driving over bumps and potholes.
- Engine speed is over 5,000 rpm with vehicle stopped.

6. Warning Lamp Does Not Come On When Ignition Switch Is Turned ON

NEBR0197

1	INSPECTION START
Warning lamp circuit inspection 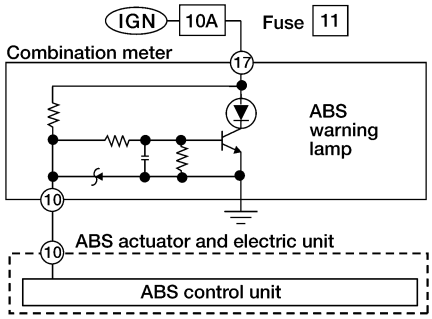 WBR371	
▶	GO TO 2.

2	CHECK FUSE	
Check 10A fuse No. 11. For fuse layout, refer to ***EL-9***, "POWER SUPPLY ROUTING". **Is fuse OK?**		
Yes	▶	GO TO 3.
No	▶	Replace fuse.

3	CHECK WARNING LAMP ACTIVATE	
Disconnect ABS actuator and electric unit connector. 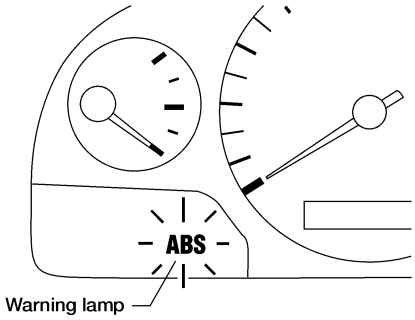 ABR838 **Does the warning lamp activate?**		
Yes	▶	Replace ABS actuator and electric unit.
No	▶	GO TO 4.

4	CHECK HARNESS FOR SHORT	
1. Disconnect ABS actuator and electric unit connector E39 and combination meter connector M38. 2. Check continuity between ABS actuator and electric unit connector E39 terminal 17 and ground. 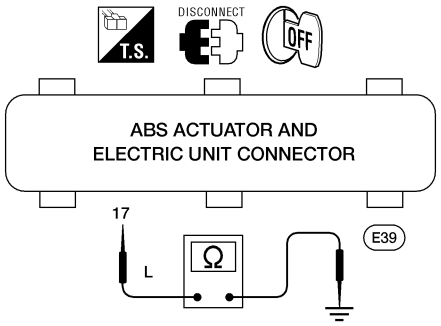 LBR130 **Continuity should not exist.** **Does continuity exist?**		
Yes	▶	Repair harness or connectors.
No	▶	**Check combination meter.** Refer to ***EL-84***, "WARNING LAMPS".

7. Warning Lamp Stays On When Ignition Switch Is Turned On

=NEBR0198

1	INSPECTION START

ABS control unit inspection

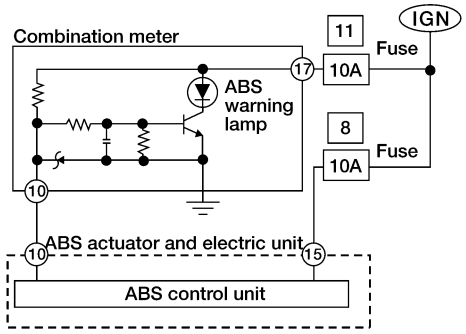

WBR372

▶ GO TO 2.

2	CHECK FUSE

Check 10A fuse No. 8. For fuse layout, refer to ***EL-9***, "POWER SUPPLY ROUTING".

Is fuse OK?

Yes	▶	GO TO 3.
No	▶	GO TO 8.

3	CHECK HARNESS CONNECTOR

Check ABS actuator and electric unit pin terminals for damage or bad connection of ABS actuator and electric unit harness connector. Reconnect ABS actuator and electric unit harness connector. Then retest.

Does warning lamp stay on when ignition switch is turned ON?

Yes	▶	GO TO 4.
No	▶	**INSPECTION END**

4	CHECK ABS ACTUATOR AND ELECTRIC UNIT GROUND CIRCUIT

Refer to "Ground Circuit Check", BR-91.

Is ground circuit OK?

Yes	▶	GO TO 5.
No	▶	Repair harness or connector.

5	CHECK ABS ACTUATOR AND ELECTRIC UNIT POWER SUPPLY CIRCUIT

1. Disconnect ABS actuator and electric unit connector.
2. Check voltage between ABS actuator and electric unit connector E39 terminal 15 and ground.

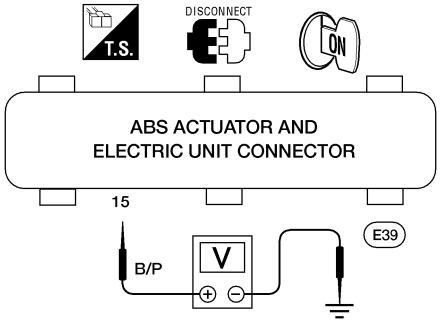

ABR652

Does battery voltage exist when ignition switch is turned ON?

Yes	▶	GO TO 6.
No	▶	**Check the following.** If NG, repair harness or connector. ● Harness connector E39 ● Harness for open or short between ABS actuator and electric unit and fuse No. 8

6	CHECK WARNING LAMP

1. Disconnect ABS actuator and electric unit connector.
   Connect suitable wire between ABS actuator and electric unit connector E39 terminal 10 and ground.

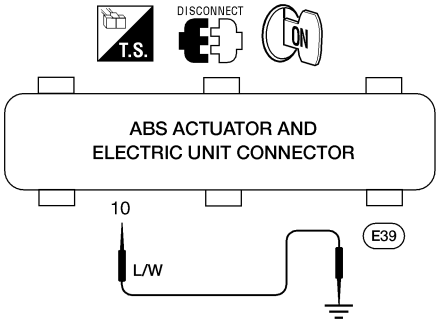

LBR133

Does the warning lamp deactivate?

Yes	▶	Replace ABS actuator and electric unit.
No	▶	GO TO 7.

7	CHECK ABS WARNING LAMP CONTROL CIRCUIT FOR OPEN

1. Disconnect combination meter connector M38.
2. Check continuity between combination meter harness connector M38 terminal 10 and ABS actuator and electric unit harness connector E39 terminal 10.

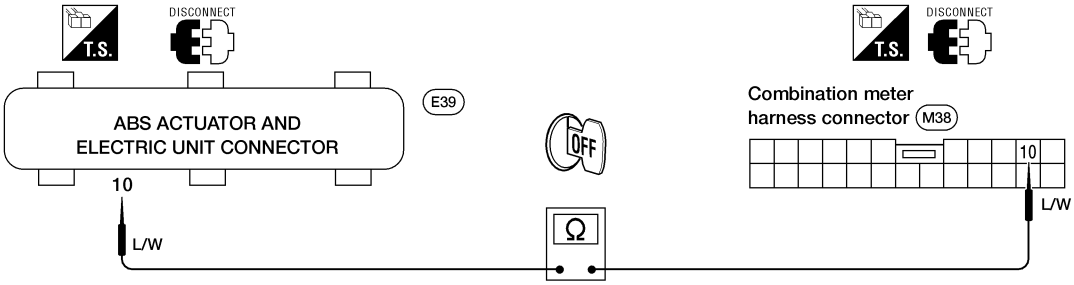

LBR134

Continuity should exist.

Does continuity exist?

Yes	▶	**Check combination meter.** Refer to ***EL-84***, "WARNING LAMPS".
No	▶	**Check the following.** If NG, repair harness or connector. ● Harness connectors M38, E39 ● Harness for open or short between ABS actuator and electric unit and fuse No. 11

8	REPLACE FUSE

Replace fuse.

Does the fuse blow out when ignition switch is turned ON?

Yes	▶	GO TO 9.
No	▶	**INSPECTION END**

9	CHECK ABS ACTUATOR AND ELECTRIC UNIT POWER SUPPLY CIRCUIT FOR SHORT

1. Disconnect battery cable and ABS actuator and electric unit connector.
2. Check continuity between ABS actuator and electric unit harness connector E39 terminal 15 and ground.

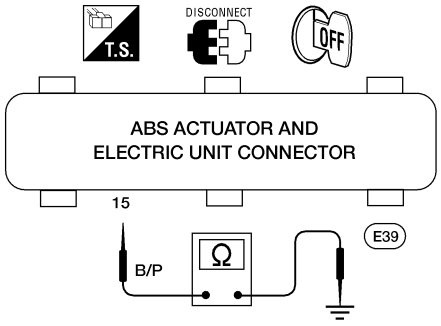

ABR775

Continuity should not exist.

Does continuity exist?

Yes	▶	**Check the following.** If NG, repair harness or connector. ● Harness connector E39 ● Harness for open or short between ABS actuator and electric unit and fuse No. 8
No	▶	Replace ABS actuator and electric unit.

Purpose

NEBR0280

The anti-lock brake system (ABS) consists of electronic and hydraulic components. It allows for control of braking force so locking of the wheels can be avoided.

1) Improves proper tracking performance through steering wheel operation.
2) Eases obstacle avoidance through steering wheel operation.
3) Improves vehicle stability.

Operation

NEBR0281

- When the vehicle speed is less than 10 km/h (6 MPH) this system does not work.
- The anti-lock brake system (ABS) has a self-test function. The system turns on the ABS warning lamp for 1 second each time the ignition switch is turned ON. After the engine is started, the ABS warning lamp turns off. The system performs a test the first time the vehicle reaches 6 km/h (4 MPH). A mechanical noise may be heard as the ABS performs this self-test. This is a normal part of the self-test feature. If a malfunction is found during this check, the ABS warning lamp will stay on.
- While driving, a mechanical noise may be heard during ABS operation. This is a normal condition.

ABS Hydraulic Circuit

NEBR0282

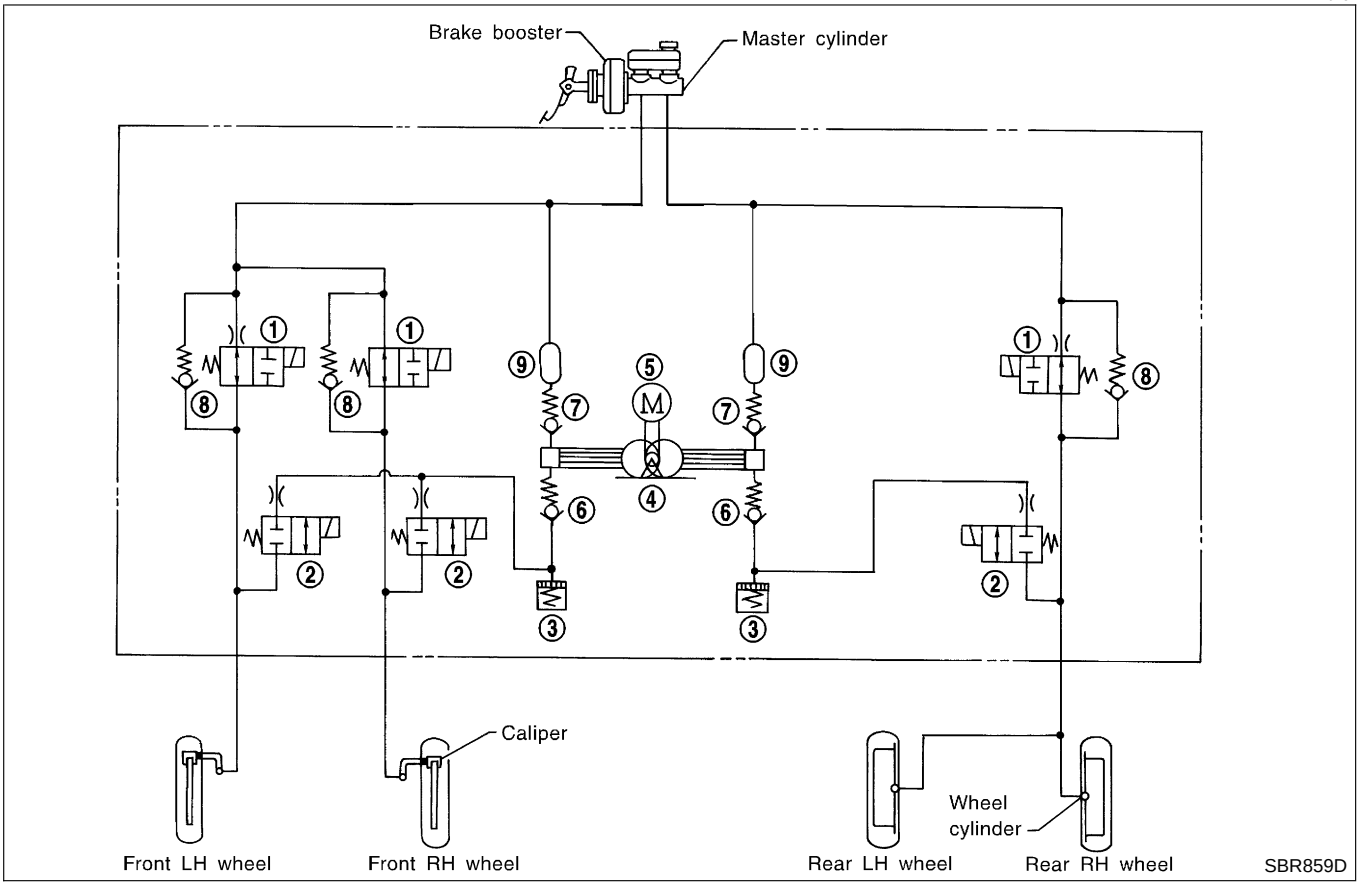

1. Inlet solenoid valve
2. Outlet solenoid valve
3. Pump
4. Motor
5. Bypass check valve
6. Damper
7. Solenoid valve relay actuator
8. Bypass check valve
9. Damper

System Components

NEBR0283

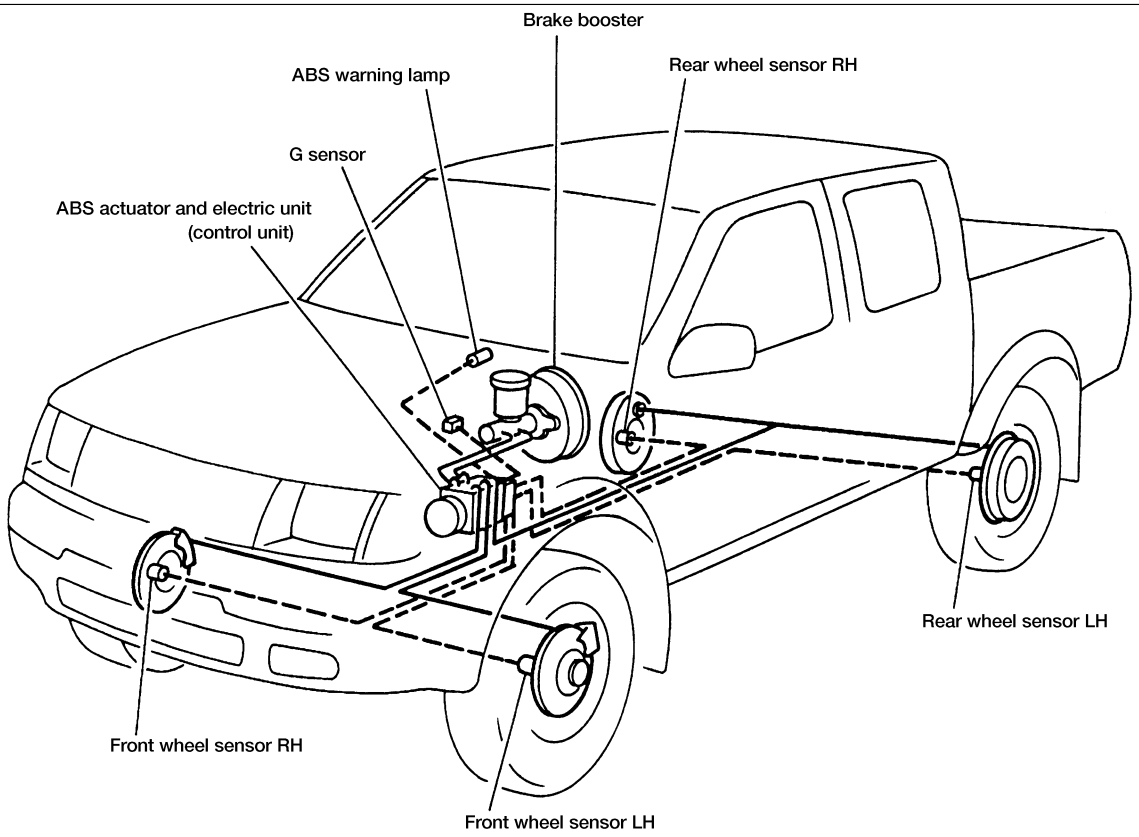

ABR809

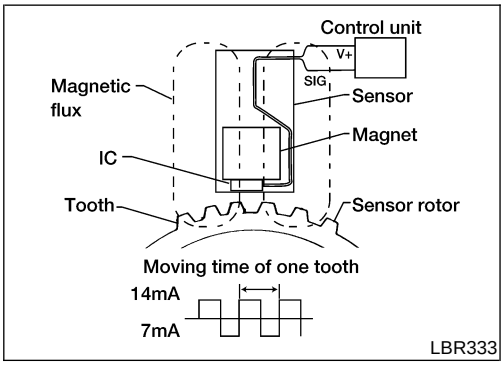

LBR333

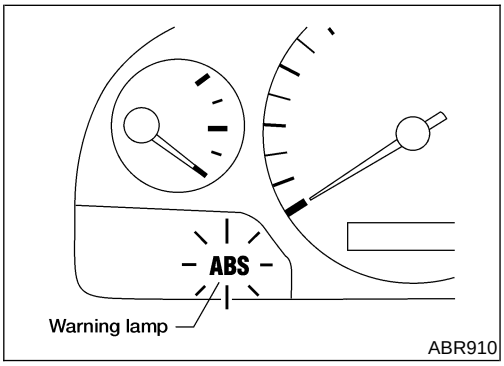

ABR910

System Description

NEBR0284

WHEEL SENSOR

NEBR0284S01

The sensor units consist of a gear-shaped sensor rotor and a sensor element. The front sensors are installed on the back of the front brake rotors. A rear sensor is installed at each rear brake drum. As the wheel rotates, the sensor generates a square-wave pattern. The frequency increases as the rotating speed increases.

CONTROL UNIT (BUILT-IN ABS ACTUATOR AND ELECTRIC UNIT)

NEBR0284S02

The control unit computes the wheel rotating speed by the signal current sent from the sensor. Then it supplies a DC current to the actuator solenoid valve. It also controls ON-OFF operation of the valve relay and motor relay. If any electrical malfunction should be detected in the system, the control unit causes the warning lamp to light up. In this condition, the ABS will be deactivated by the control unit, and the vehicle brake system reverts to normal operation. For control unit layout, refer to “ABS ACTUATOR AND ELECTRIC UNIT”, BR-112.

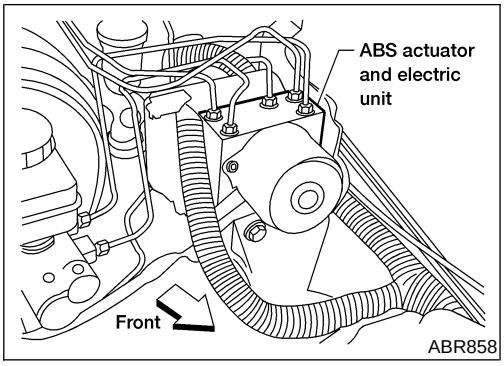

ABS ACTUATOR AND ELECTRIC UNIT

NEBR0284S03

The ABS actuator and electric unit contains:

- An electric motor and pump
- Two relays
- Six solenoid valves, each inlet and outlet for
  — LH front
  — RH front
  — Rear
- ABS control unit

This component controls the hydraulic circuit and increases, holds or decreases hydraulic pressure to all or individual wheels. The ABS actuator and electric unit is serviced as an assembly.

ABS Actuator Operation

NEBR0284S0301

		Inlet solenoid valve	Outlet solenoid valve	
Normal brake operation		OFF (Open)	OFF (Closed)	Master cylinder brake fluid pressure is directly transmitted to caliper via the inlet solenoid valve.
ABS operation	Pressure hold	ON (Closed)	OFF (Closed)	Hydraulic circuit is shut off to hold the caliper brake fluid pressure.
	Pressure decrease	ON (Closed)	ON (Open)	Caliper brake fluid is sent to reservoir via the outlet solenoid valve. Then it is pushed up to the master cylinder by pump.
	Pressure increase	OFF (Open)	OFF (Closed)	Master cylinder brake fluid pressure is transmitted to caliper.

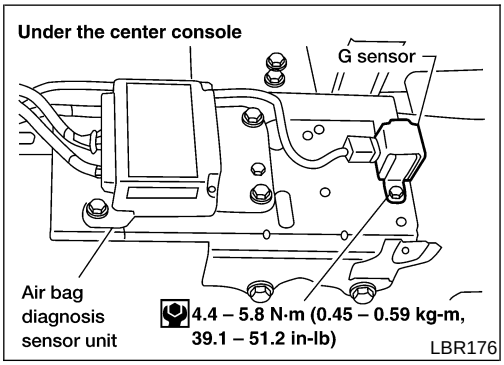

G SENSOR

NEBR0284S04

The G sensor senses deceleration during braking to determine whether the vehicle is being driven on a high μ road (asphalt road, etc.) or a low μ road (snow-covered road, etc.). It then sends a signal to the ABS control unit.

This signal is received by the ABS control unit as a variable voltage signal. The input voltage varies from 1.3V ±0.125V during a hard deceleration condition, to 2.5V ±0.125V with the vehicle stopped and to 3.7V ±0.125V during a hard deceleration in reverse.

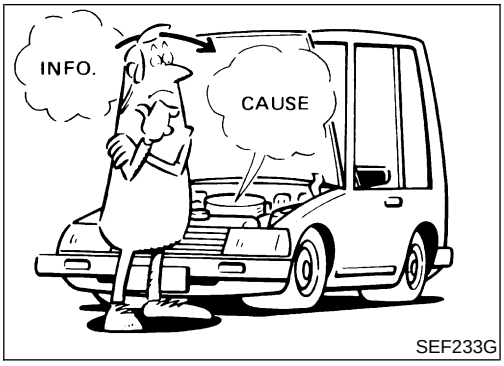

SEF233G

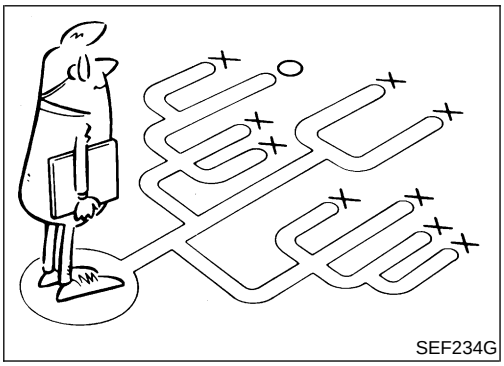
SEF234G

How to Perform Trouble Diagnoses for Quick and Accurate Repair

NEBR0285

INTRODUCTION

NEBR0285S01

The ABS system has an electronic control unit to control major functions. The control unit accepts input signals from sensors and instantly drives the actuators. It is essential that both kinds of signals are proper and stable. It is also important to check for conventional problems: such as air leaks in booster lines, lack of brake fluid, or other problems with the brake system.

It is much more difficult to diagnose a problem that occurs intermittently rather than continuously. Most intermittent problems are caused by poor electric connections or faulty wiring. In this case, careful checking of suspicious circuits may help prevent the replacement of good parts.

A visual check only may not find the cause of the problems, so a road test should be performed.

Before undertaking actual checks, take a few minutes to talk with a customer who approaches with an ABS complaint. The customer is a very good source of information on such problems; especially intermittent ones. By talking to the customer, find out what symptoms are present and under what conditions they occur. Start your diagnosis by looking for “conventional” problems first. This is one of the best ways to troubleshoot brake problems on an ABS controlled vehicle.

Also check related Service bulletins for information.

Preliminary Check

NEBR0286

1	CHECK BRAKE FLUID	
Check brake fluid for contamination. **Has brake fluid been contaminated?**		
Yes	▶	Replace. GO TO 2.
No	▶	GO TO 2.

2	CHECK BRAKE FLUID LEVEL	
Check brake fluid level in reservoir tank. Low fluid level may indicate brake pad wear or leakage from brake line. 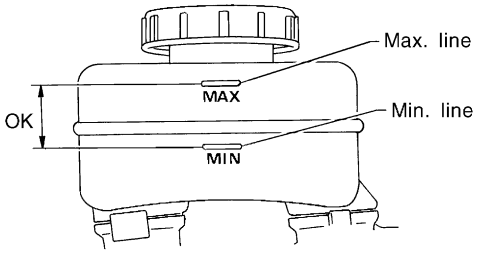 SBR451D **Is brake fluid filled between MAX and MIN lines on reservoir tank ?**		
Yes	▶	GO TO 3.
No	▶	Fill up brake fluid. GO TO 3.

3	CHECK BRAKE LINE	
Check brake line for leakage. 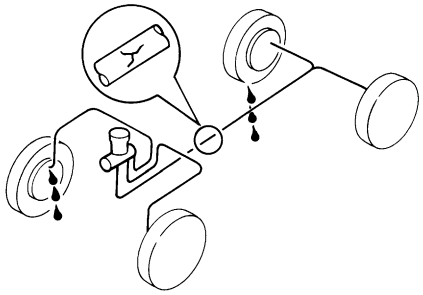 SBR389C **Is leakage present at or around brake lines, tubes or hoses or are any of these parts cracked or damaged?**		
Yes	▶	Repair. GO TO 4.
No	▶	GO TO 4.

4	CHECK BRAKE BOOSTER OPERATION

Check brake booster for operation and air tightness.
Refer to "On-vehicle Service", BR-22.

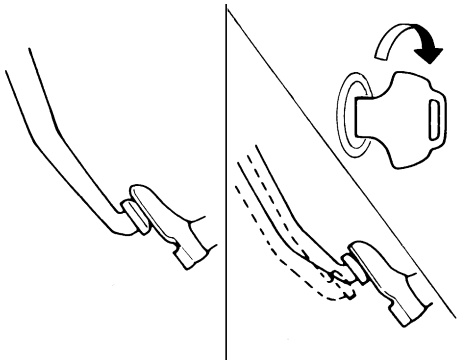

SBR058C

Is brake booster airtight and functioning properly?

Yes	▶	GO TO 5.
No	▶	Replace. GO TO 5.

5	CHECK BRAKE PAD AND ROTOR

Check brake pad and rotor.
Refer to "Pad Replacement", BR-26 and "ROTOR", 28.

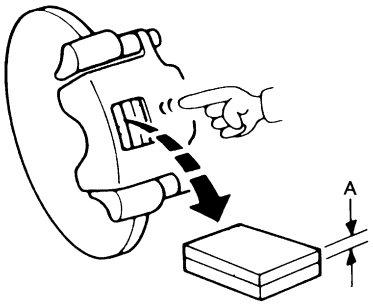

SBR059C

Are brake pads and rotors functioning properly?

Yes	▶	GO TO 6.
No	▶	Replace.

6	RECHECK BRAKE FLUID LEVEL

Check brake fluid level in reservoir tank again.

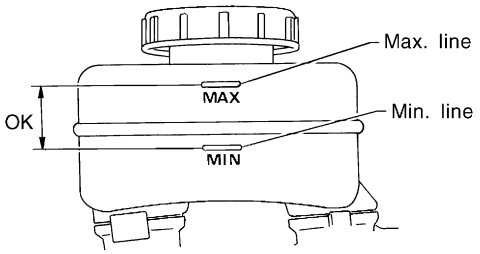

SBR451D

Is brake fluid filled between MAX and MIN lines on reservoir tank ?

Yes	▶	GO TO 7.
No	▶	Fill up brake fluid.

7	CHECK WARNING LAMP ACTIVATION

Check warning lamp activation.

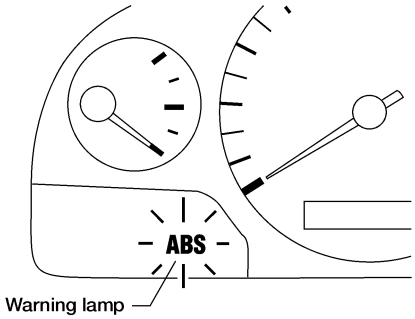

ABR838

Does warning lamp turn on when ignition switch is turned ON?

Yes	▶	GO TO 8.
No	▶	Check fuse, warning lamp bulb and warning lamp circuit.

8	CHECK WARNING LAMP DEACTIVATION

Check warning lamp for deactivation after engine is started.

Does warning lamp turn off when engine is started?

Yes	▶	GO TO 9.
No	▶	Go to "Self-diagnosis", BR-123.

9	DRIVE VEHICLE

Drive vehicle at speeds over 30 km/h (19 MPH) for at least one minute.

Does warning lamp remain off after vehicle has been driven at 30 km/h (19 MPH) for at least one minute?

Yes	▶	**INSPECTION END**
No	▶	Go to "Self-diagnosis", BR-123.

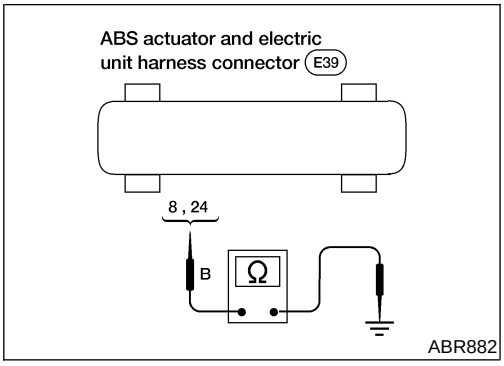

Ground Circuit Check

=NEBR0287

ABS ACTUATOR AND ELECTRIC UNIT GROUND

NEBR0287S01

- Check continuity between ABS actuator and electric unit connector terminals and ground.

Continuity should exist.

Component Parts and Harness Connector Location

NEBR0288

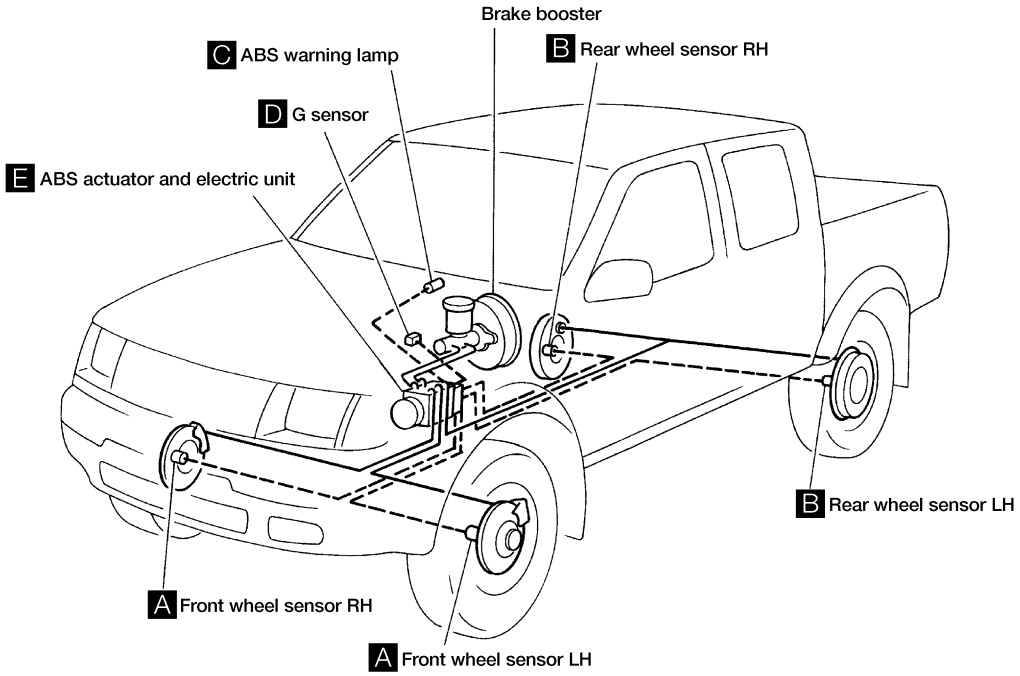

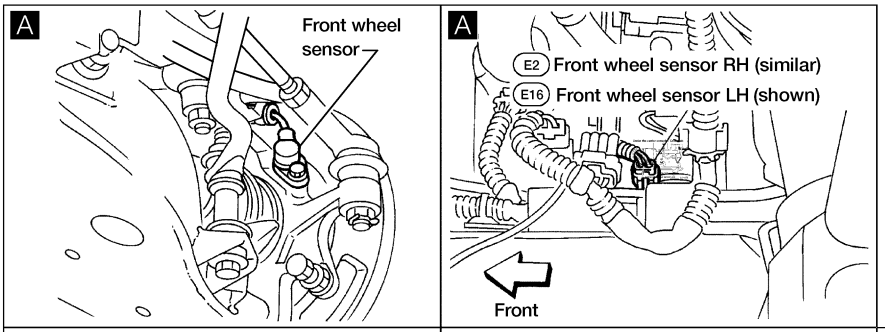

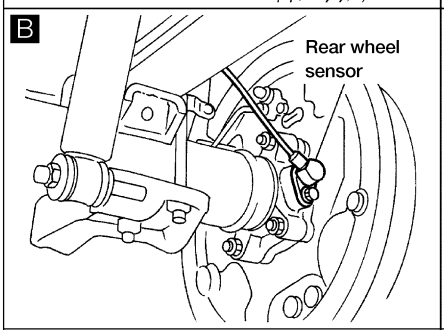

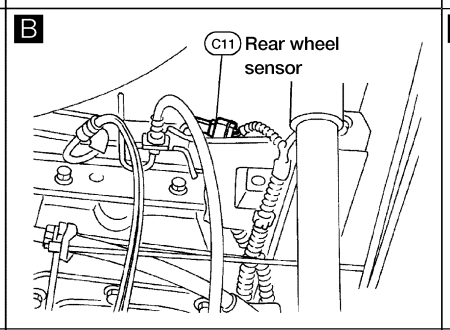

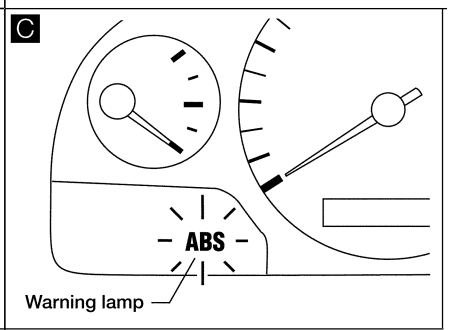

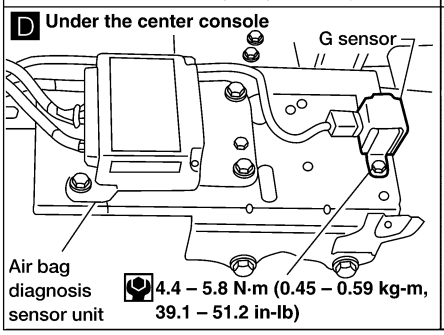

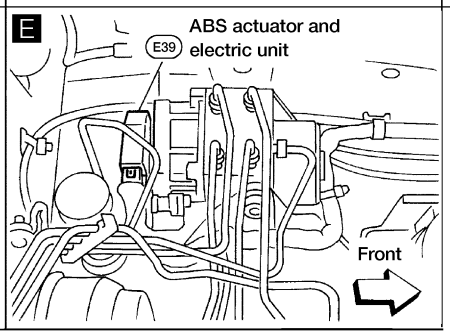

WBR334

Schematic

NEBR0289

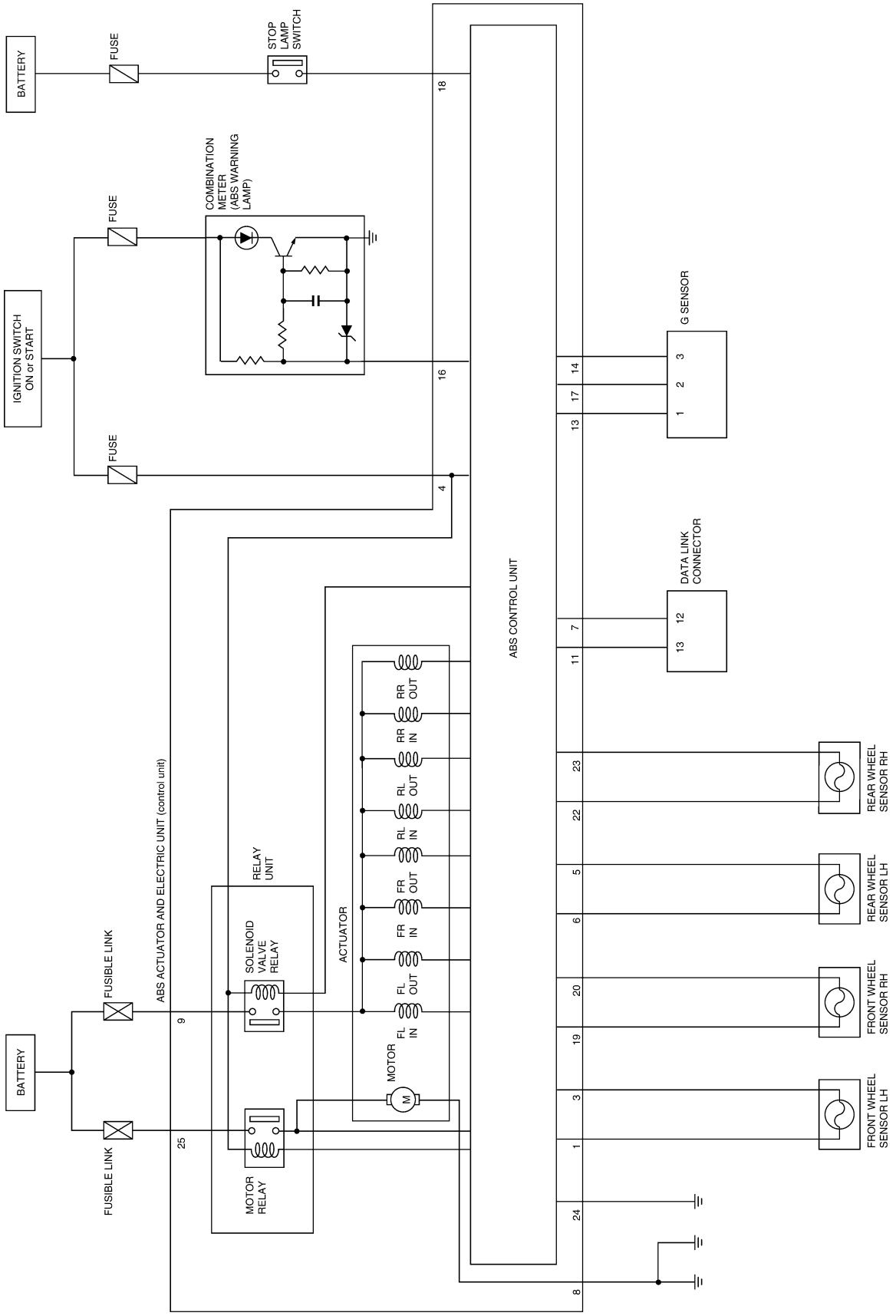

WBR373

Wiring Diagram — ABS —

NEBR0290

BR-ABS-06

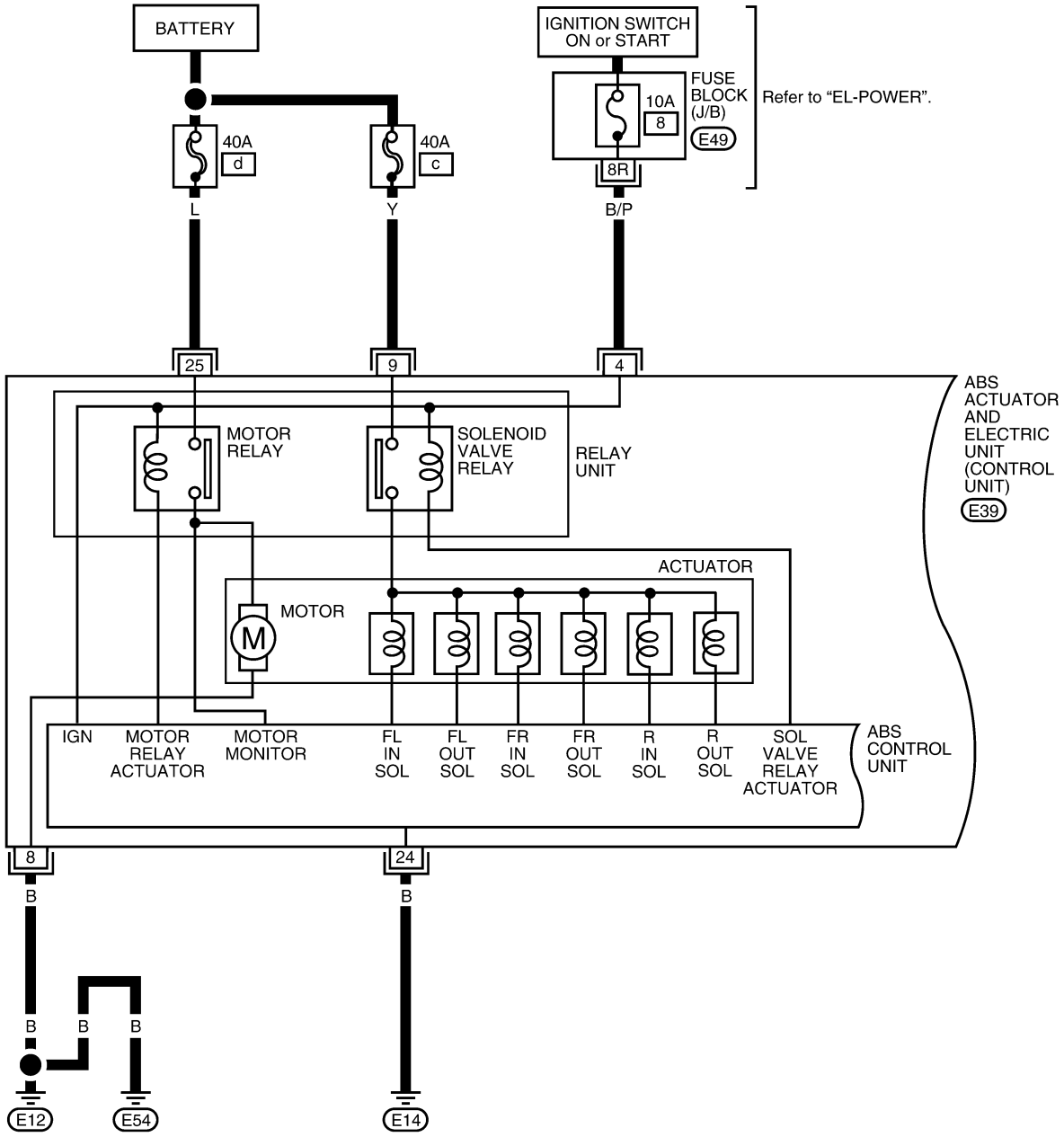

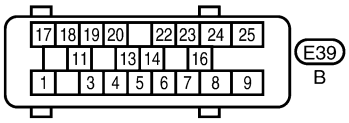



WBR335

BR-ABS-07

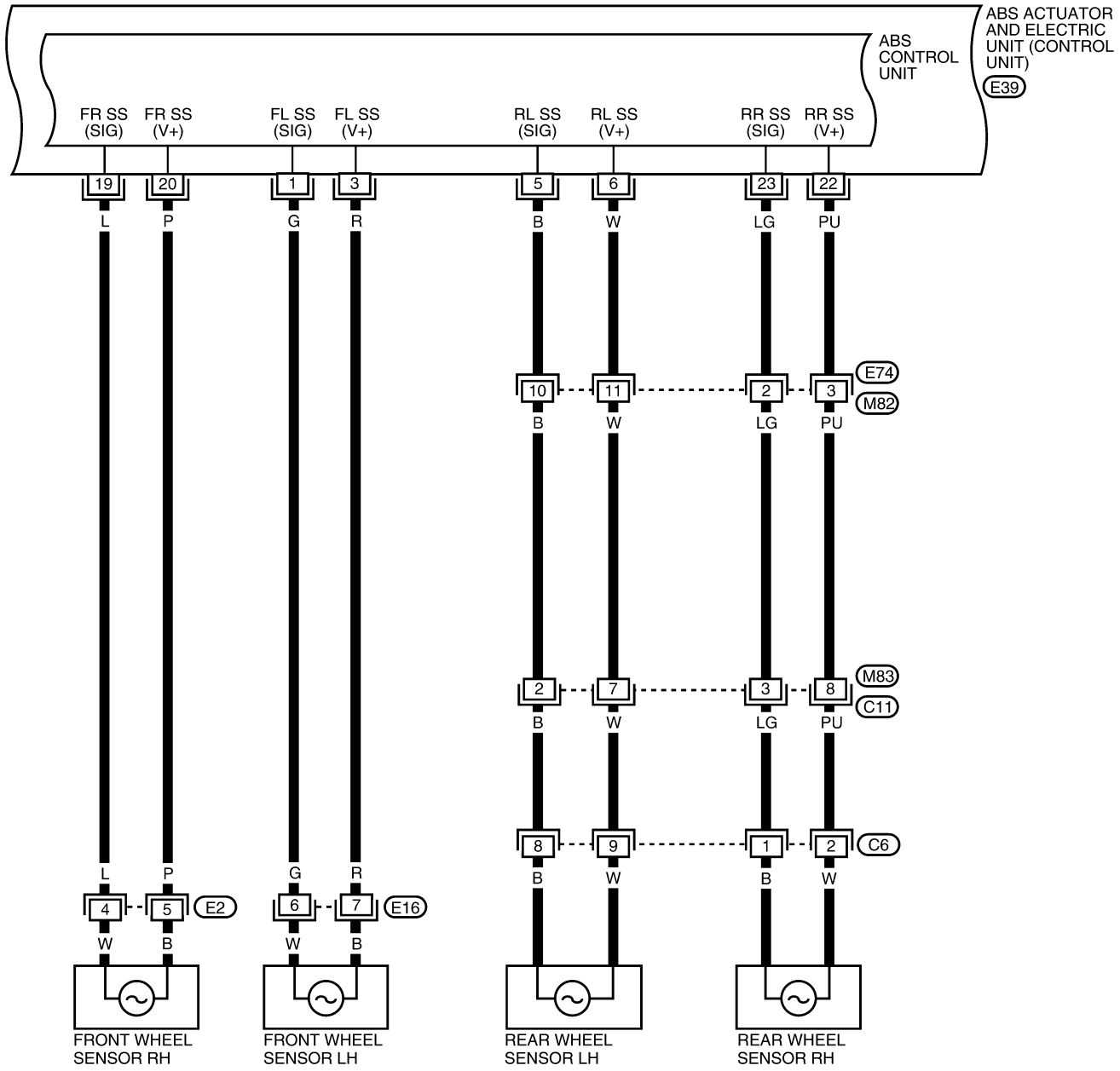

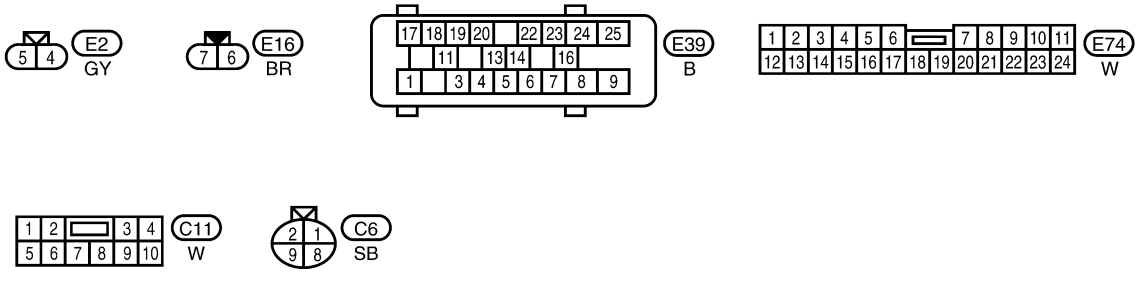

WBR191

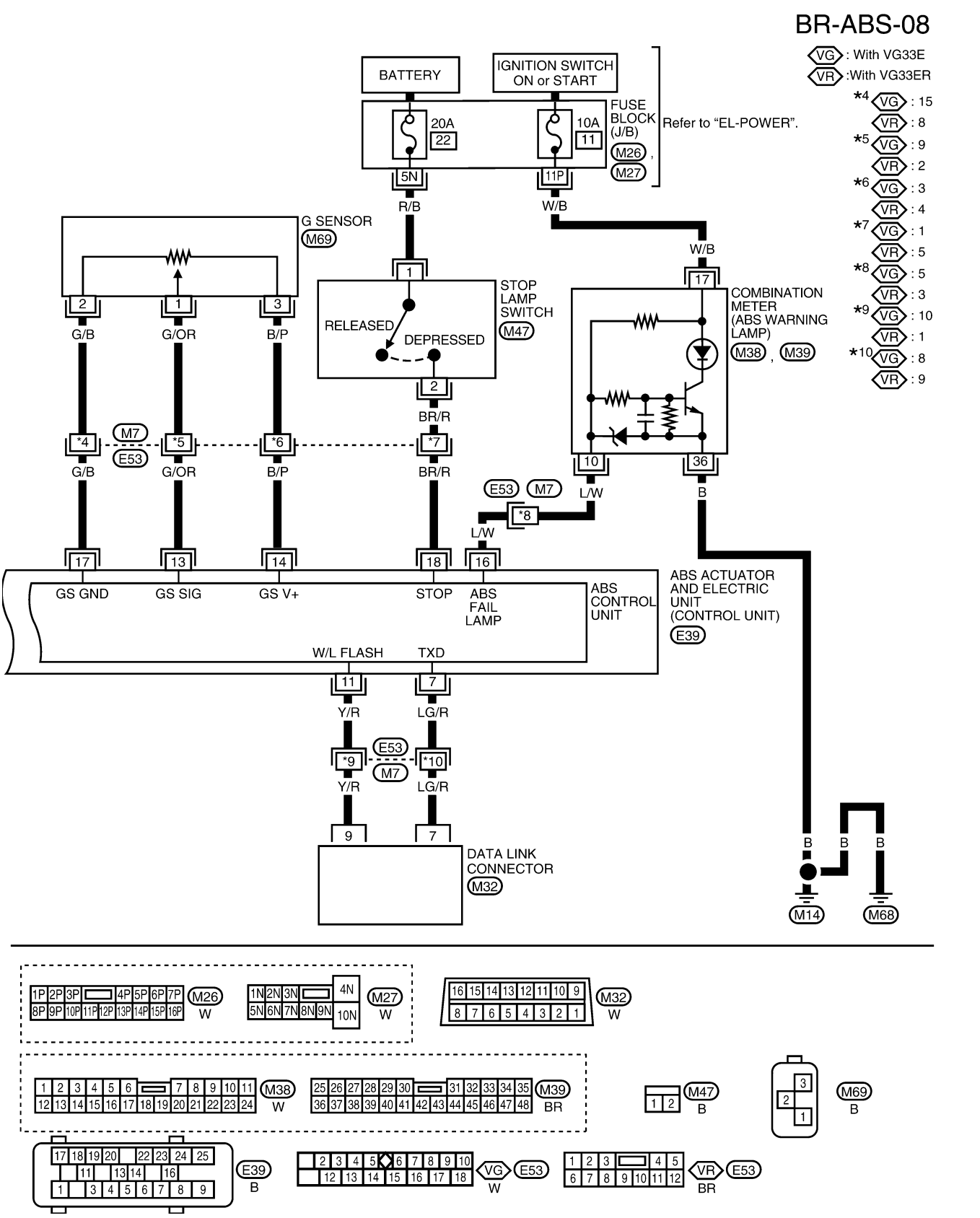
BR-ABS-08
VG : With VG33E
VR :With VG33ER
*4 VG : 15
VR : 8
*5 VG : 9
VR : 2
*6 VG : 3
VR : 4
*7 VG : 1
VR : 5
*8 VG : 5
VR : 3
*9 VG : 10
VR : 1
*10 VG : 8
VR : 9
BATTERY
IGNITION SWITCH ON or START
FUSE BLOCK (J/B) M26, M27
Refer to "EL-POWER".
20A 22
10A 11
5N
11P
R/B
W/B
G SENSOR M69
STOP LAMP SWITCH M47
RELEASED
DEPRESSED
BR/R
COMBINATION METER (ABS WARNING LAMP) M38, M39
G/B
G/OR
B/P
M7
E53
L/W
B
ABS CONTROL UNIT
GS GND
GS SIG
GS V+
STOP
ABS FAIL LAMP
W/L FLASH
TXD
ABS ACTUATOR AND ELECTRIC UNIT (CONTROL UNIT) E39
Y/R
LG/R
DATA LINK CONNECTOR M32
M14
M68
M26 W
M27 W
M32 W
M38 W
M39 BR
M47 B
M69 B
E39 B
VG W
VR BR

WBR374

Self-diagnosis (Without CONSULT-II)

NEBR0292

FUNCTION

NEBR0292S01

- When a problem occurs in the ABS, the warning lamp on the instrument panel comes on. [To start the self-diagnostic results mode, ground the self-diagnostic (check) terminal 9 located on the data link connector. The location of the malfunction is indicated by the warning lamp flashing]

SELF-DIAGNOSIS PROCEDURE

NEBR0292S02

1. Drive vehicle over 30 km/h (19 MPH) for at least one minute.
2. Turn ignition switch OFF.

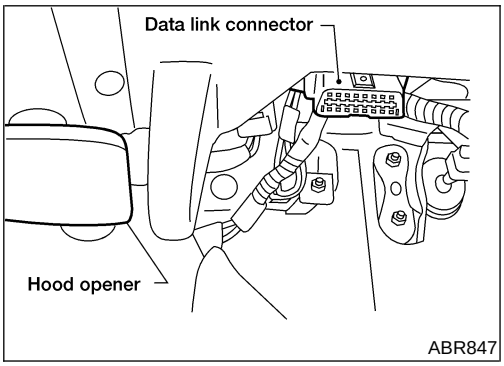

ABR847

3. Ground terminal 9 of data link connector with a suitable harness.
4. Turn ignition switch ON while grounding terminal 9.
   Do not depress brake pedal.

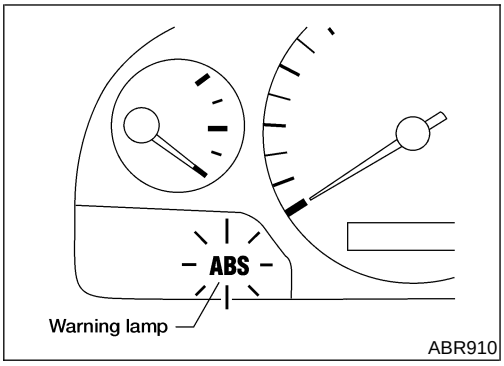

ABR910

5. After 3.0 seconds, the warning lamp starts flashing to indicate the malfunction code No. (See NOTE.)
6. Verify the location of the malfunction with the “Malfunction Code/Symptom Chart”. Refer to BR-125. Then make the necessary repairs following the diagnostic procedures.
7. After the malfunctions are repaired, erase the malfunction codes stored in the control unit. Refer to “HOW TO ERASE SELF-DIAGNOSTIC RESULTS (MALFUNCTION CODES)”, BR-124.
8. Rerun the self-diagnostic results mode to verify that the malfunction codes have been erased.

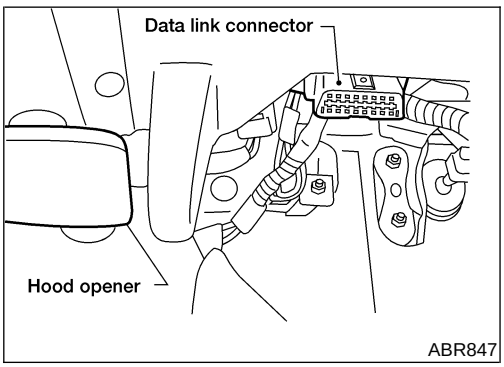

ABR847

9. Disconnect the data link connector terminal from the ground. The self-diagnostic results mode is now complete.
10. Check warning lamp for deactivation after driving vehicle over 30 km/h (19 MPH) for at least one minute.
11. After making certain that warning lamp does not come on, test the ABS in a safe area to verify that it functions properly.

NOTE:
The indication terminates after 5 minutes.
However, when the ignition switch is turned from OFF to ON, the indication starts flashing again.

HOW TO READ SELF-DIAGNOSTIC RESULTS (MALFUNCTION CODES)

=NEBR0292S03

1. Determine the code No. by counting the number of times the warning lamp flashes on and off.
2. When several malfunctions occur at one time, up to three code numbers can be stored; the latest malfunction will be indicated first.
3. The indication begins with the start code 12. After that a maximum of three code numbers appear in the order of the lowest to highest. The indication then returns to the start code 12 to repeat (the indication will stay on for five minutes at the most).
4. The "Malfunction Code/Symptom Chart" is given on page BR-125.

Example: Code No. 32 REAR SENSOR SHORT-CIRCUIT

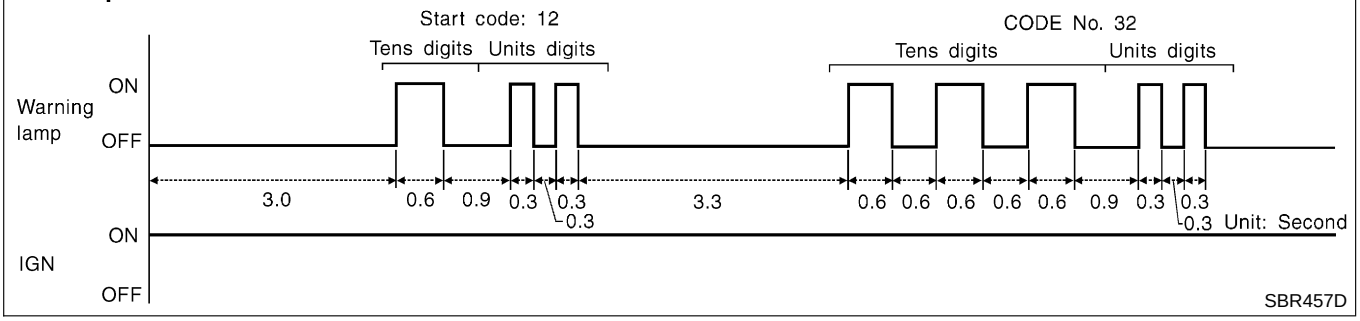

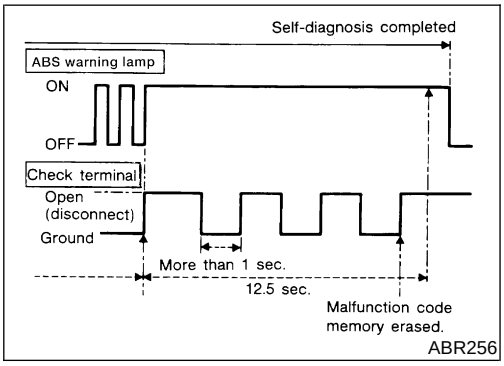

HOW TO ERASE SELF-DIAGNOSTIC RESULTS (MALFUNCTION CODES)

NEBR0292S04

1. Disconnect the check terminal from ground (ABS warning lamp will stay lit).
2. Within 12.5 seconds, ground the check terminal three times. Each terminal ground must last more than 1 second. The ABS warning lamp goes out after the erase operation has been completed.
3. Perform self-diagnosis again. Refer to "Self-diagnosis", BR-123. Only the startcode should appear, no malfunction codes.

Malfunction Code Chart (Without CONSULT-II)

NEBR0293

Code No. (No. of warning lamp flashes)	Malfunctioning part	Reference Page
12	Self-diagnosis could not detect any malfunctions.	—
17 ★1	G sensor and circuit	BR-141
18 ★1	Sensor rotor or abnormal tire size	BR-132
21 ★1	Front right sensor	BR-132
25 ★1	Front left sensor	BR-132
31 ★1	Rear right sensor	BR-132
35 ★1	Rear left sensor	BR-132
57 ★2	Abnormal battery voltage (High or low voltage)	BR-139
61 ★3	Actuator motor or motor relay	BR-137
63	Solenoid valve relay	BR-135
71	Control unit or Actuator solenoid valve	BR-135, 143

★1: If one or more wheels spin on a rough or slippery road for 40 seconds or more, the ABS warning lamp will illuminate. This does not indicate a malfunction. Only in the case of the short-circuit (Code Nos. 25, 21, 31 and 35), after repair the ABS warning lamp also illuminates when the ignition switch is turned ON. In this case, drive the vehicle at speeds greater than 30 km/h (19 MPH) for approximately 1 minute as specified in “SELF-DIAGNOSIS PROCEDURE”, BR-123. Check to ensure that the ABS warning lamp goes out while the vehicle is being driven.

★2: The trouble code “57”, which refers to a low power supply voltage, does not indicate that the ABS control unit is malfunctioning. Do not replace the ABS control unit with a new one.

★3: The trouble code “61” can sometimes appear when the ABS motor is not properly grounded. If it appears, be sure to check the condition of the ABS motor ground circuit connection.

Symptom Chart

NEBR0310

Symptom	Malfunctioning part	Reference Page
ABS works frequently	—	BR-144
Unexpected pedal action	—	BR-144
Long stopping distance	—	BR-146
ABS does not work	—	BR-146
Pedal vibration and noise	—	BR-146
Warning lamp does not come on when ignition switch is turned ON.	Fuse, warning lamp bulb or warning lamp circuit Control unit	BR-147
Warning lamp stays on when ignition switch is turned ON.	Control unit power supply circuit Warning lamp bulb circuit Control unit or control unit connector Solenoid valve relay stuck Power supply for solenoid valve relay coil	BR-148

CONSULT-II

=NEBR0294

CONSULT-II APPLICATION TO ABS

NEBR0294S01

ITEM	SELF-DIAGNOSTIC RESULTS	DATA MONITOR	ACTIVE TEST
Front right wheel sensor	×	×	—
Front left wheel sensor	×	×	—
Rear right wheel sensor	×	×	—
Rear left wheel sensor	×	×	—
G switch (G sensor)	×	×	×
ABS sensor	×	—	—
Stop lamp switch	—	×	—
Front right inlet solenoid valve	×	×	×
Front right outlet solenoid valve	×	×	×
Front left inlet solenoid valve	×	×	×
Front left outlet solenoid valve	×	×	×
Rear right inlet solenoid valve	×	×	×
Rear right outlet solenoid valve	×	×	×
Rear left inlet solenoid valve	×	×	×
Rear left outlet solenoid valve	×	×	×
Actuator solenoid valve relay	×	×	—
Actuator motor relay (ABS MOTOR RELAY is shown on the Data Monitor screen.)	×	×	×
ABS warning lamp	—	×	—
Battery voltage	×	×	—
Control unit	×	—	—
ABS operating signal	—	×	×

×: Applicable
—: Not applicable

ECU (ABS CONTROL UNIT) PART NUMBER MODE

NEBR0294S02

Ignore the ECU part number displayed in the ECU PART NUMBER MODE. Refer to parts catalog to order the ECU.

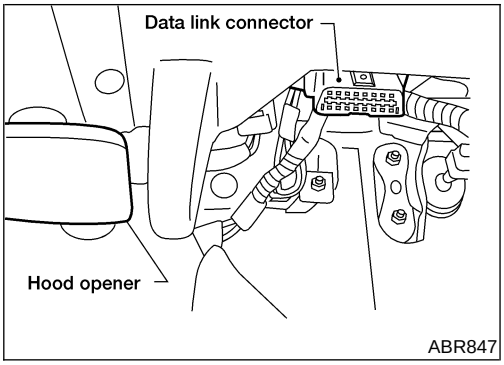

ABR847

CONSULT-II Inspection Procedure

=NEBR0295

SELF-DIAGNOSIS PROCEDURE

NEBR0295S01

1. Turn ignition switch OFF.
2. Connect CONSULT-II to data link connector.
3. Start engine.
4. Drive vehicle over 30 km/h (19 MPH) for at least one minute.

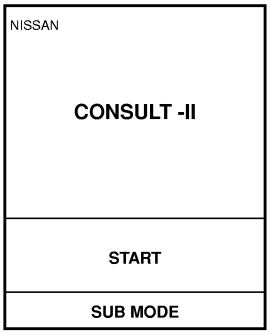

PBR455D

5. Stop vehicle with engine running and touch “START” on CONSULT-II screen.

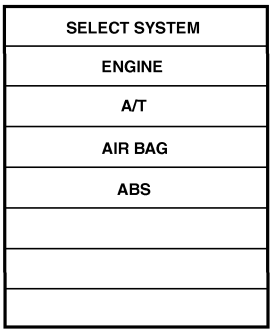

WBR110

6. Touch “ABS”.

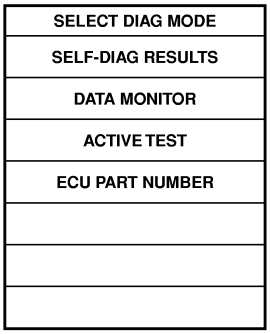

SBR636E

7. Touch “SELF-DIAG RESULTS”.
- The screen shows the detected malfunction and how many times the ignition switch has been turned ON since the malfunction.

8. Make the necessary repairs following the diagnostic procedures.

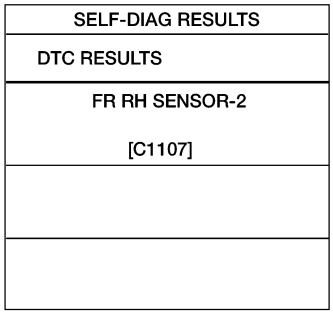

LBR378

9. After the malfunctions are repaired, erase the self-diagnostic results stored in the control unit by touching “ERASE”.
10. Check warning lamp for deactivation after driving vehicle over 30 km/h (19 MPH) for at least one minute.
11. Test the ABS in a safe area to verify that it functions properly.

CONSULT-II Inspection Procedure (Cont'd)

SELF-DIAGNOSTIC RESULTS MODE

=NEBR0295S02

Diagnostic item	Diagnosed condition	Diagnostic item is detected when ...	Reference Page
FR RH SENSOR-2★1 [C1107]	Open	• Circuit for front right wheel sensor is open. (An abnormally high input voltage is entered.)	BR-132
FR LH SENSOR-2★1 [C1108]	Open	• Circuit for front left wheel sensor is open. (An abnormally high input voltage is entered.)	BR-132
RR RH SENSOR-2★1 [C1105]	Open	• Circuit for rear right sensor is open. (An abnormally high input voltage is entered.)	BR-132
RR LH SENSOR-2★1 [C1106]	Open	• Circuit for rear left sensor is open. (An abnormally high input voltage is entered.)	BR-132
FR RH SENSOR-1★1 [C1103]	Short	• Circuit for front right wheel sensor is shorted. (An abnormally low input voltage is entered.)	BR-132
FR LH SENSOR-1★1 [C1104]	Short	• Circuit for front left wheel sensor is shorted. (An abnormally low input voltage is entered.)	BR-132
RR RH SENSOR-1★1 [C1101]	Short	• Circuit for rear right sensor is shorted. (An abnormally low input voltage is entered.)	BR-132
RR LH SENSOR-1★1 [C1102]	Short	• Circuit for rear left sensor is shorted. (An abnormally low input voltage is entered.)	BR-132
ABS SENSOR★1 [C1115]	Abnormal signal	• Teeth damage on sensor rotor or improper installation of wheel sensor. (Abnormal wheel sensor signal is entered.)	BR-132
MAIN RELAY [C1114]	Abnormal	• Actuator solenoid valve relay is ON, even if control unit sends off signal. • Actuator solenoid valve relay is OFF, even if control unit sends on signal.	BR-135
PUMP MOTOR [C1111]	Abnormal	• Circuit for ABS motor relay is open or shorted. • Circuit for actuator motor is open or shorted. • Actuator motor relay is stuck.	BR-137
BATTERY VOLTAGE [ABNORMAL] [C1109]	High or low	• Power source voltage supplied to ABS control unit is abnormally low.	BR-139
CONTROLLER FAILURE [C1110]	Control unit	• Function of calculation in ABS control unit has failed.	BR-143
	Solenoid valve open/ short	• Circuit for solenoid valve is open or shorted. (An abnormally high or low output voltage is entered.)	BR-135
G-SENSOR [C1113]★2	Abnormal signal	• G sensor circuit is open or shorted.	BR-141
ABNORMAL TIRE SIZE [C1112]	Abnormal	• Sensor rotor damaged or incorrect tire size.	BR-132

★1: If one or more wheels spin on a rough or slippery road for 40 seconds or more, the ABS warning lamp will illuminate. This does not indicate a malfunction. Only in the case of the short-circuit (Code Nos. C1101, C1102, C1103 and C1104), after repair the ABS warning lamp also illuminates when the ignition switch is turned ON. In this case, drive the vehicle at speeds greater than 30 km/h (19 MPH) for approx. 1 minute as specified in "SELF-DIAGNOSIS PROCEDURE", BR-123. Check to ensure that the ABS warning lamp goes out.

DATA MONITOR PROCEDURE

=NEBR0295S03

1. Turn ignition switch OFF.
2. Connect CONSULT-II to data link connector.
3. Turn ignition switch ON.
4. Touch "START" on CONSULT-II screen.

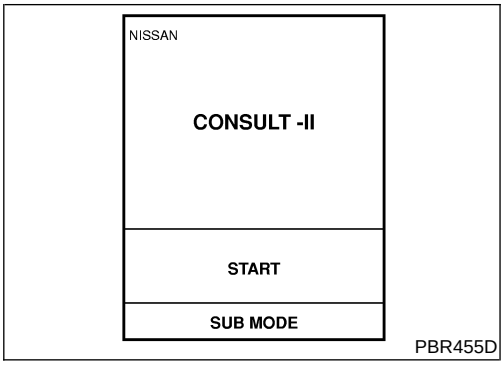

PBR455D

5. Touch "ABS".

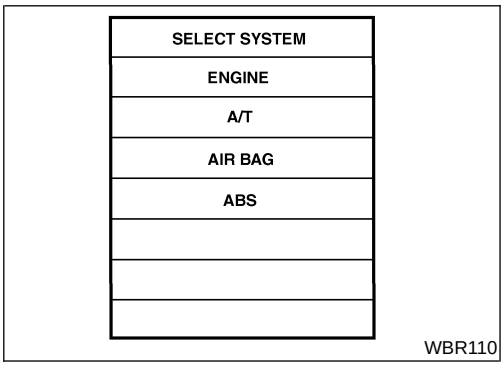

WBR110

6. Touch "DATA MONITOR".

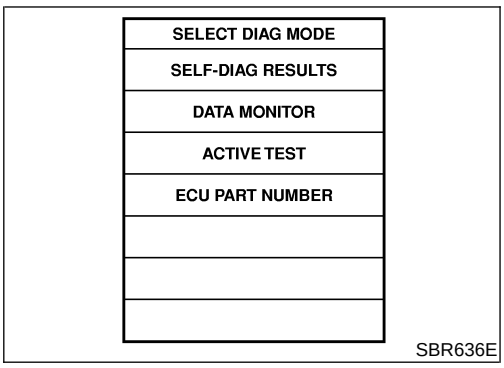

SBR636E

7. Touch "SETTING" on "SELECT MONITOR ITEM" screen.

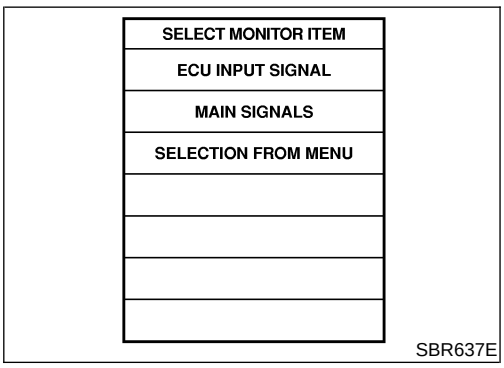

SBR637E

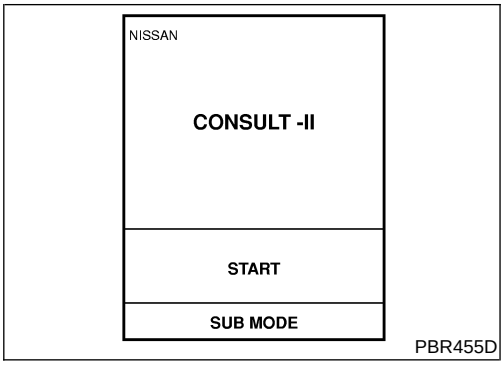

PBR455D

ACTIVE TEST PROCEDURE

=NEBR0295S04

- When conducting Active test, vehicle must be stationary.
- When ABS warning lamp stays on, never conduct Active test.

1. Turn ignition switch OFF.
2. Connect CONSULT-II to data link connector.
3. Start engine.
4. Touch "START" on CONSULT-II screen.

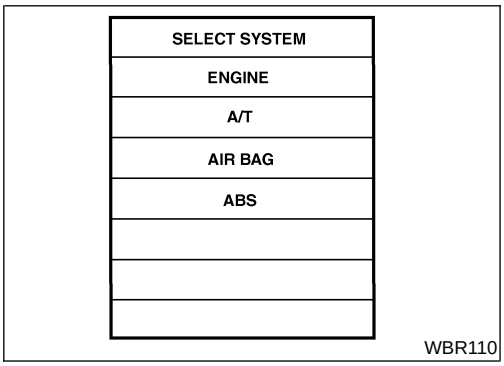

WBR110

5. Touch "ABS".

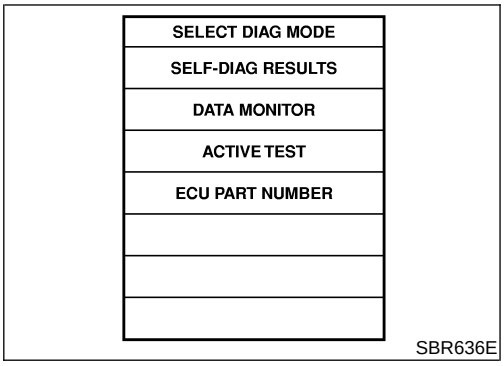

SBR636E

6. Touch "ACTIVE TEST".

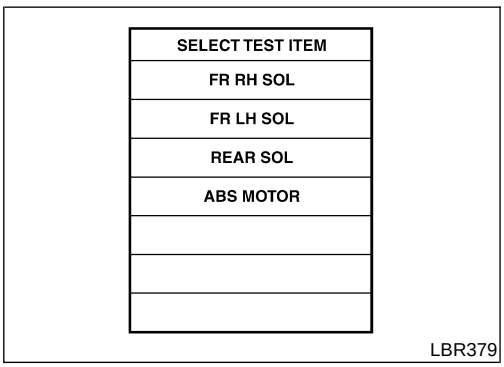

LBR379

7. Select active test item by touching screen.

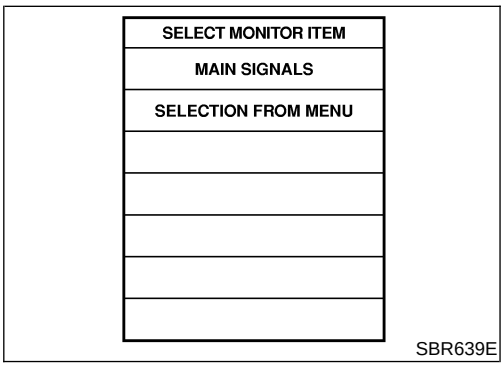

SBR639E

8. Touch "START".
9. Carry out the active test by touching screen key.

DATA MONITOR MODE

=NEBR0295S05

MONITOR ITEM	CONDITION	SPECIFICATION
FR RH SENSOR FR LH SENSOR RR RH SENSOR RR LH SENSOR	Drive vehicle. (Each wheel is rotating.)	Wheel speed signal (Almost the same speed as speedometer.)
STOP LAMP SW	Brake is depressed.	Depress the pedal: ON Release the pedal: OFF
DECEL G-SEN	Vehicle is driven. Vehicle is stopped. Brake is applied.	During sudden braking while driving on high μ roads (asphalt roads, etc.): OFF While vehicle is stopped or during constant-speed driving: ON
FR RH IN SOL FR RH OUT SOL FR LH IN SOL FR LH OUT SOL RR RH IN SOL RR RH OUT SOL RR LH IN SOL RR LH OUT SOL	1. Drive vehicle at speeds over 30 km/h (19 MPH) for at least 1 minute. 2. Engine is running.	Operating conditions for each solenoid valve are indicated. ABS is not operating: OFF
MOTOR RELAY		ABS is not operating: OFF ABS is operating: ON
WARNING LAMP	Ignition switch is ON or engine is running.	ABS warning lamp is turned on: ON ABS warning lamp is turned off: OFF
BATTERY VOLT		Power supply voltage for control unit

ACTIVE TEST MODE

NEBR0295S06

TEST ITEM	CONDITION	JUDGEMENT		
FR RH SOL FR LH SOL RR RH SOL RR LH SOL	Engine is running.	Brake fluid pressure control operation		
			IN SOL	OUT SOL
		UP (Increase):	OFF	OFF
		KEEP (Hold):	ON	OFF
		DOWN (Decrease):	ON	ON
ABS MOTOR		ABS actuator motor ON: Motor runs (ABS motor relay ON) OFF: Motor stops (ABS motor relay OFF)		

NOTE:
Active test will automatically stop ten seconds after the test starts. (TEST IS STOPPED is displayed.)

Wheel Sensor or Rotor

DIAGNOSTIC PROCEDURE

NEBR0296

With CONSULT-II: Malfunction code No. C1101, C1102, C1103, C1104, C1105, C1106, C1107, C1108, C1112 or C1115
Without CONSULT-II: Malfunction code No. 21, 25, 31, 35, or 18

NOTE:
Wheel position should be distinguished by code No. except code No. 18 (sensor rotor).

1	INSPECTION START

Wheel sensor inspection

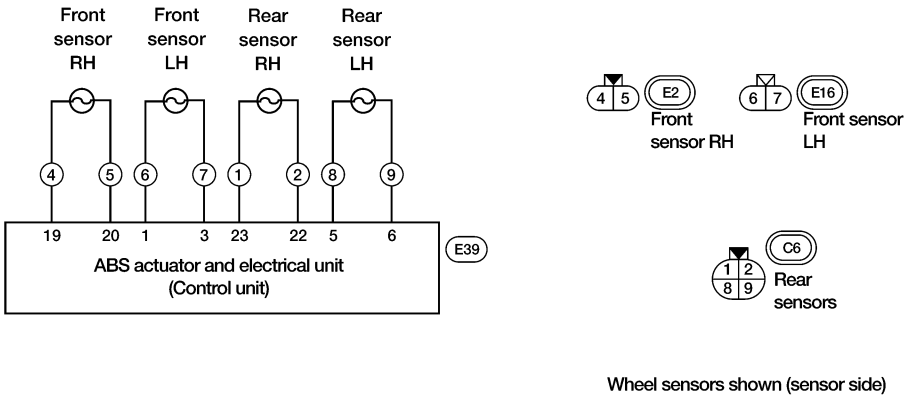

WBR352

	▶	GO TO 2.

2	CHECK CONNECTOR	
1. Disconnect connectors from ABS actuator and electric unit and wheel sensor of malfunction code No. Check terminals for damage or loose connection. Then reconnect connectors. 2. Carry out “Self-diagnosis” again. Refer to BR-123. **Does warning lamp activate again?**		
Yes	▶	GO TO 3.
No	▶	**INSPECTION END**

3	CHECK TIRE	
Check for inflation pressure, wear and size of each tire. (See NOTE) **Are tire pressure and size correct and is tire wear within specifications?**		
Yes	▶	GO TO 4.
No	▶	Adjust tire pressure or replace tire(s). (See NOTE)

4	CHECK WHEEL BEARING	
Check wheel bearing axial end play. (See NOTE) **Is wheel bearing axial end play within specifications? Refer to *AX-5*, "FRONT AXLE" and *AX-28*, "REAR AXLE".**		
Yes	▶	GO TO 5.
No	▶	Check wheel bearing. Refer to ***AX-13***, "FRONT AXLE" and ***AX-33***, "REAR AXLE".

5 CHECK WIRING HARNESS SHORT

1. Disconnect ABS actuator and electric unit connector E39 and ABS sensor connectors E2, E16, and C6.
2. Check resistance between indicated wiring harness connectors/terminals and ground
   Front RH wheel
   Connector E2, terminals 4 and 5
   Front LH wheel
   Connector E16, terminals 6 and 7
   Rear RH wheel
   Connector C6, terminals 1 and 2
   Rear LH wheel
   Connector C6, terminals 8 and 9

Front wheel sensor RH harness connector

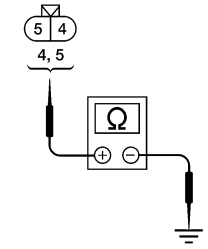

Front wheel sensor LH harness connector

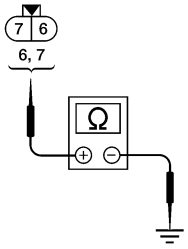

Rear wheel sensor LH/RH harness connector

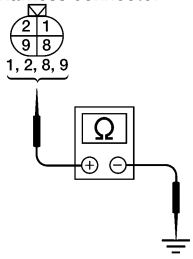

Terminals			Continuity
(+)		(-)	
Connector	Terminal (Wire color)		
E2	4 (L)	Ground	No
E2	5 (P)	Ground	No
E16	6 (G)	Ground	No
E16	7 (R)	Ground	No
C6	1 (LG)	Ground	No
C6	2 (PU)	Ground	No
C6	8 (B)	Ground	No
C6	9 (W)	Ground	No

LBR336

0Ω:NG
∞Ω:OK

Are resistance values OK?

Yes	▶	GO TO 6.
No	▶	Repair/replace harness or connectors.

6	CHECK WIRING HARNESS OPEN

1. Disconnect ABS actuator and electric unit connector E39 and ABS sensor connectors E2, E16 and C6.
2. Check resistance of wiring harness between indicated connectors and terminals.
   Front RH wheel
   Connector E39, terminal 19 and connector E2, terminal 4
   Connector E39, terminal 20 and connector E2, terminal 5
   Front LH wheel
   Connector E39, terminal 1 and connector E16, terminal 6
   Connector E39, terminal 3 and connector E16, terminal 7
   Rear RH wheel
   Connector E39, terminal 23 and connector C6, terminal 1
   Connector E39, terminal 22 and connector C6, terminal 2
   Rear LH wheel
   Connector E39, terminal 5 and connector C6, terminal 8
   Connector E39, terminal 6 and connector C6, terminal 9

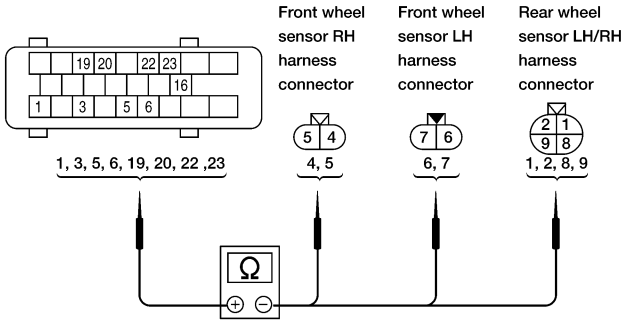

Terminals				Continuity
(+)		(-)		
Connector	Terminal (Wire color)	Connector	Terminal (Wire color)	
E39	1 (G)	E16	6 (G)	Yes
E39	3 (R)	E16	7 (R)	Yes
E39	19 (L)	E2	4 (L)	Yes
E39	20 (P)	E2	5 (P)	Yes
E39	23 (LG)	C6	1 (LG)	Yes
E39	22 (PU)	C6	2 (PU)	Yes
E39	5 (B)	C6	8 (B)	Yes
E39	6 (W)	C6	9 (W)	Yes

LBR337

0Ω:OK
∞Ω:NG

Are resistance values OK?

Yes	▶	GO TO 7.
No	▶	Repair/replace harness or connectors.

7	CHECK SENSOR ROTOR

Check sensor rotor for teeth damage. (See NOTE)

Is sensor rotor free from damage?

Yes	▶	1. Check ABS actuator and electric unit pin terminals for damage or the connection of ABS actuator and electric unit harness connector. Reconnect ABS actuator and electric unit harness connector. Then retest. 2. If retest is NG, replace wheel speed sensor.
No	▶	Replace sensor rotor. (See NOTE)

ABS Actuator Solenoid Valve or Solenoid Valve Relay

DIAGNOSTIC PROCEDURE

=NEBR0297

With CONSULT-II: Malfunction code No. C1110 or C1114
Malfunction code No. 63 or 71

1	INSPECTION START

Solenoid valve relay inspection

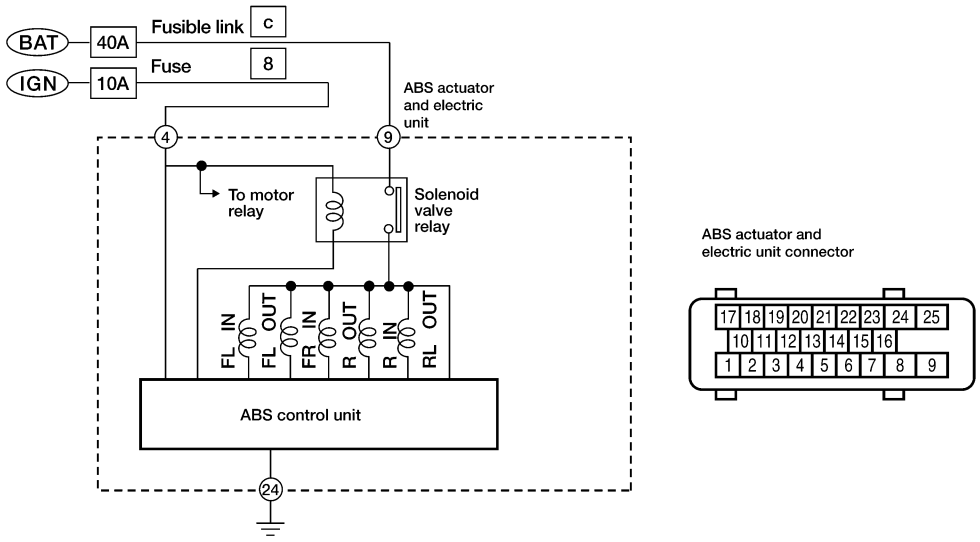

WBR338

▶ GO TO 2.

2	CHECK FUSIBLE LINK

Check 40A fusible link **c**. For fusible link layout, refer to ***EL-9***, “POWER SUPPLY ROUTING”.

Is fusible link OK?

Yes	▶	GO TO 3.
No	▶	GO TO 6.

3	CHECK CONNECTOR

1. Disconnect connector from ABS actuator and electric unit. Check terminals for damage or loose connection. Then reconnect connector.
2. Carry out “Self-diagnosis” again. Refer to BR-123.

Does warning lamp activate again?

Yes	▶	GO TO 4.
No	▶	**INSPECTION END**

4	CHECK ABS ACTUATOR AND ELECTRIC UNIT GROUND CIRCUIT

Refer to “Ground Circuit Check”, BR-117.

Is ground circuit OK?

Yes	▶	GO TO 5.
No	▶	Repair harness or connector.

5	CHECK SOLENOID VALVE POWER SUPPLY CIRCUIT

1. Disconnect ABS actuator and electric unit connector.
2. Check voltage between ABS actuator and electric unit connector E39 terminal 9 and ground.

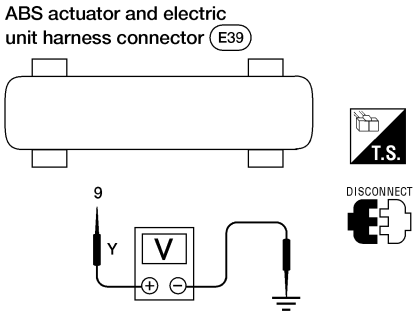

ABR887

Does battery voltage exist?

Yes	▶	Replace ABS actuator and electric unit.
No	▶	**Check the following.** If NG, repair harness or connectors. ● Harness connector E39 ● Harness for open or short between ABS actuator and electric unit and fusible link

6	REPLACE FUSIBLE LINK

Replace fusible link.

Does the fuse blow out when ignition switch is turned ON?

Yes	▶	GO TO 7.
No	▶	**INSPECTION END**

7	CHECK SOLENOID VALVE RELAY POWER SUPPLY CIRCUIT FOR SHORT

1. Disconnect battery cable and ABS actuator and electric unit connector.
2. Check continuity between ABS actuator and electric unit connector E39 terminal 9 and ground.

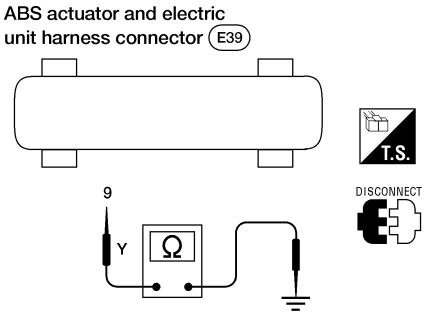

ABR888

Continuity should not exist.

Does continuity exist?

Yes	▶	**Check the following.** If NG, repair harness or connector. ● Harness connector E39 ● Harness for open or short between ABS actuator and electric unit and fusible link
No	▶	Replace ABS actuator and electric unit.

Motor Relay or Motor

DIAGNOSTIC PROCEDURE

=NEBR0298

With CONSULT-II: Malfunction code No. C1111
Malfunction code No. 61

1	INSPECTION START

ABS motor relay inspection

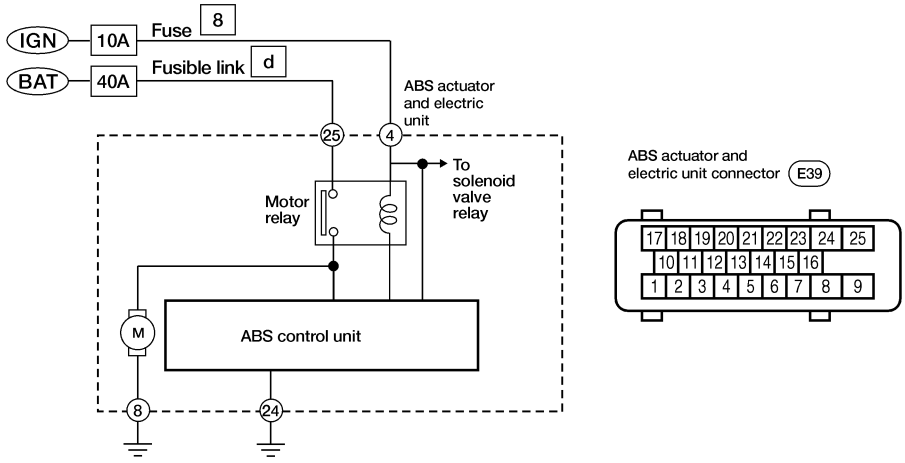

ABR889

▶ GO TO 2.

2	CHECK FUSIBLE LINK

Check 40A fusible link **d**. For fusible link layout, refer to ***EL-9***, "POWER SUPPLY ROUTING".

Is fusible link OK?

Yes	▶	GO TO 3.
No	▶	GO TO 6.

3	CHECK CONNECTOR

1. Disconnect ABS actuator and electric unit connector. Check terminals for damage or loose connection. Then reconnect connector.
2. Carry out "Self-diagnosis" again. Refer to BR-123.

Does warning lamp activate again?

Yes	▶	GO TO 4.
No	▶	**INSPECTION END**

4	CHECK ABS ACTUATOR AND ELECTRIC UNIT GROUND CIRCUIT

Refer to "Ground Circuit Check", BR-117.

Is ground circuit OK?

Yes	▶	GO TO 5.
No	▶	Repair harness or connector.

5	CHECK MOTOR RELAY POWER SUPPLY CIRCUIT

1. Disconnect ABS actuator and electric unit connector.
2. Check voltage between ABS actuator and electric unit connector E39 terminal 25 and ground.

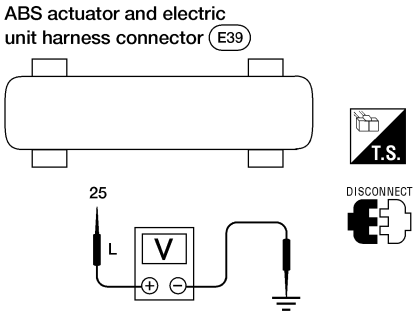

ABR890

Does battery voltage exist?

Yes	▶	Replace ABS actuator and electric unit.
No	▶	**Check the following.** If NG, repair harness or connector. ● Harness connector E39 ● Harness for open or short between ABS actuator and electric unit and fusible link

6	REPLACE FUSIBLE LINK

Replace fusible link.

Does the fusible link blow out when ignition switch is turned ON?

Yes	▶	GO TO 7.
No	▶	**INSPECTION END**

7	CHECK ABS ACTUATOR MOTOR POWER SUPPLY CIRCUIT FOR SHORT

1. Disconnect battery cable and ABS actuator and electric unit connector.
2. Check continuity between ABS actuator and electric unit connector E39 terminal 25 and ground.

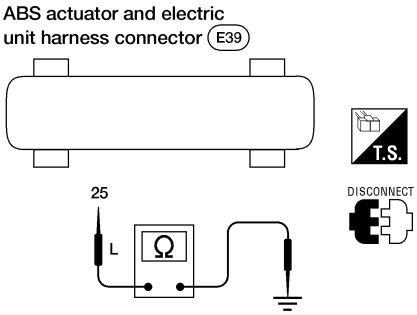

ABR891

Continuity should not exist.

Does continuity exist?

Yes	▶	**Check the following.** If NG, repair harness or connector. ● Harness connector E39 ● Harness for open or short between ABS actuator and electric unit and fusible link
No	▶	Replace ABS actuator and electric unit.

Low Voltage

DIAGNOSTIC PROCEDURE

NEBR0299

With CONSULT-II: Malfunction code No. C1109
Malfunction code No. 57

1	INSPECTION START

ABS actuator and electric unit power supply and ground circuit inspection

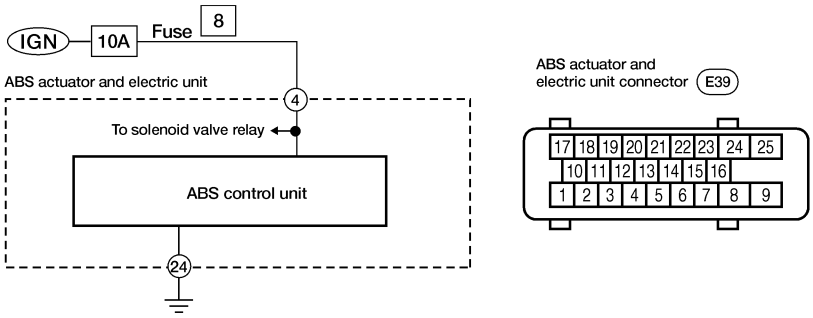

ABR892

▶ GO TO 2.

2	CHECK FUSE

Check 10A fuse No. 8. For fuse layout, refer to ***EL-9***, "POWER SUPPLY ROUTING".

Is fuse OK?

Yes	▶	GO TO 3.
No	▶	GO TO 6.

3	CHECK CONNECTOR

1. Disconnect ABS actuator and electric unit connector. Check terminals for damage or loose connections. Then reconnect connector.
2. Carry out "Self-diagnosis" again. Refer to BR-123.

Does warning lamp activate again?

Yes	▶	GO TO 4.
No	▶	**INSPECTION END**

4	CHECK ABS ACTUATOR AND ELECTRIC UNIT GROUND CIRCUIT

Refer to "Ground Circuit Check", BR-117.

Is ground circuit OK?

Yes	▶	GO TO 5.
No	▶	Repair harness or connector.

5	CHECK ABS ACTUATOR AND ELECTRIC UNIT POWER SUPPLY CIRCUIT

1. Disconnect ABS actuator and electric unit connector.
2. Check voltage between ABS actuator and electric unit connector E39 terminal 4 and ground.

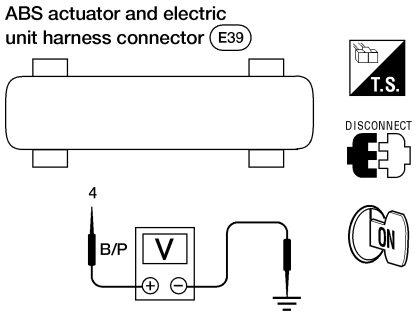

ABR893

Does battery voltage exist when ignition switch is turned ON?

Yes	▶	Replace ABS actuator and electric unit.
No	▶	**Check the following.** If NG, repair harness or connector. ● Harness connector E39 ● Harness for open or short between ABS actuator and electric unit and fuse

6	REPLACE FUSE

Replace fuse.

Does the fuse blow out when ignition switch is turned ON?

Yes	▶	GO TO 7.
No	▶	**INSPECTION END**

7	CHECK ABS ACTUATOR AND ELECTRIC UNIT POWER SUPPLY CIRCUIT FOR SHORT

1. Disconnect battery cable and ABS actuator and electric unit connector.
2. Check continuity between ABS actuator and electric unit connector E39 terminal 4 and ground.

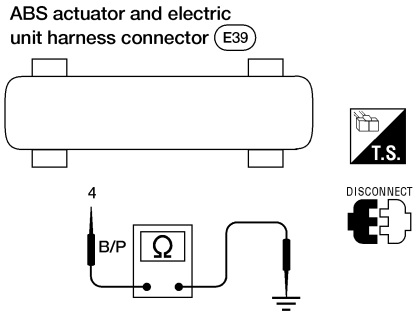

ABR894

Continuity should not exist.

Does continuity exist?

Yes	▶	**Check the following.** If NG, repair harness or connector. ● Harness connector E39 ● Harness for open or short between ABS actuator and electric unit and fuse
No	▶	Replace ABS actuator and electric unit.

G Sensor and Circuit

DIAGNOSTIC PROCEDURE

NEBR0300

With CONSULT-II: Malfunction code No. C1113
Malfunction code No. 17

1	INSPECTION START

G sensor inspection

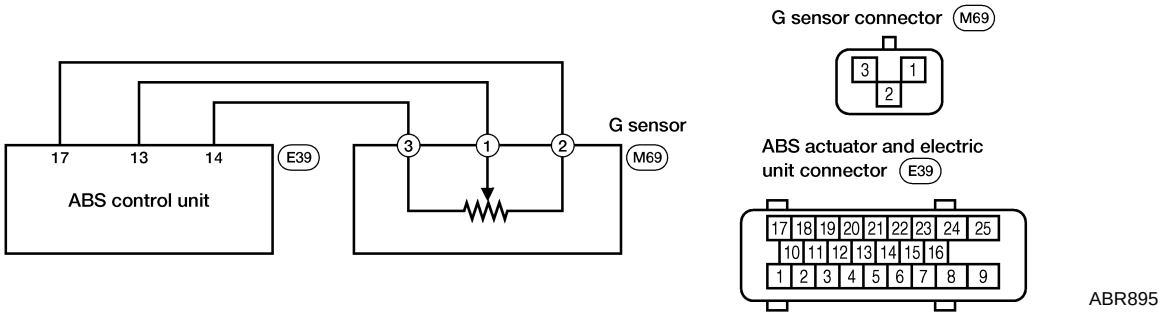

ABR895

▶ GO TO 2.

2	CHECK G SENSOR POWER

1. Turn ignition switch OFF and disconnect G sensor harness connector.
2. Turn ignition switch ON.
3. Check voltage between G sensor harness connector M69 terminal 3 and ground.

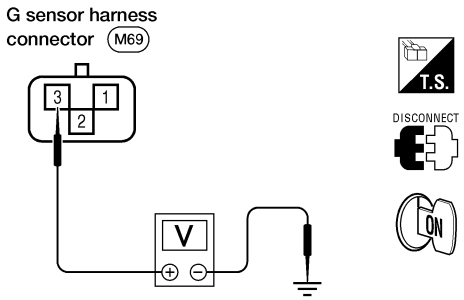

ABR896

Do approx. 5V exist?

Yes	▶	GO TO 3.
No	▶	GO TO 4.

3	CHECK G SENSOR

1. Turn ignition switch OFF.
2. Remove G sensor from bracket.
3. Reconnect harness connector to G sensor and hold sensor in same attitude/position as when installed in vehicle.
- Check voltage between G sensor connector M69 terminal 1 and ground for the following tests.

There should be approx. 2.5V.

4. Turn sensor 90° with connector point up.
- There should be approx. 3.7V.

5. Turn sensor 180° with connector pointing down.
- There should be approx. 1.3V.

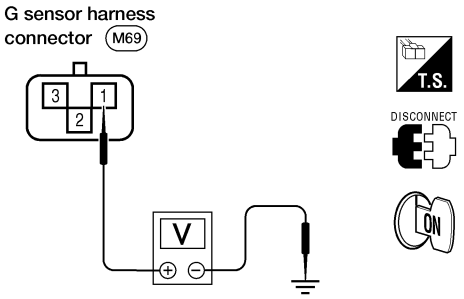

ABR897

Were the voltage readings correct for steps 3, 4 and 5?

Yes	▶	GO TO 4.
No	▶	Replace G Sensor.

4	CHECK G SENSOR CIRCUIT

1. Disconnect ABS actuator and electric unit connector.
2. Check continuity from G sensor connector M69 terminal 3 to ABS actuator and electric unit connector E39 terminal 14.
3. Check continuity from G sensor connector M69 terminal 1 to ABS actuator and electric unit connector E39 terminal 13.
4. Check continuity from G sensor connector M69 terminal 2 to ABS actuator and electric unit connector E39 terminal 17.

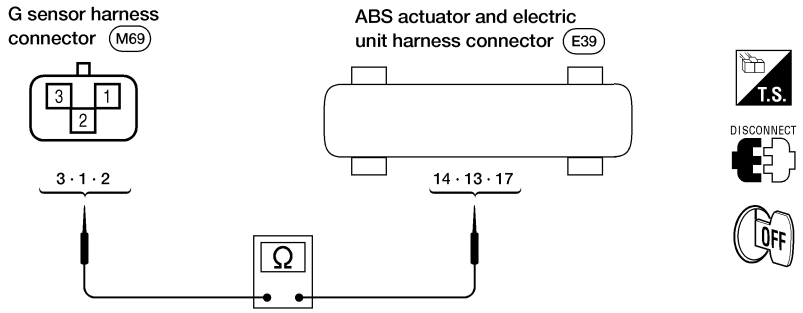

ABR898

Does continuity exist?

Yes	▶	Replace ABS actuator and electric unit.
No	▶	Repair harness or connector.

Control Unit

DIAGNOSTIC PROCEDURE

=NEBR0301

With CONSULT-II: Malfunction code No. C1110
Malfunction code No. 71

1	INSPECTION START

ABS actuator and electric unit power supply and ground circuit inspection

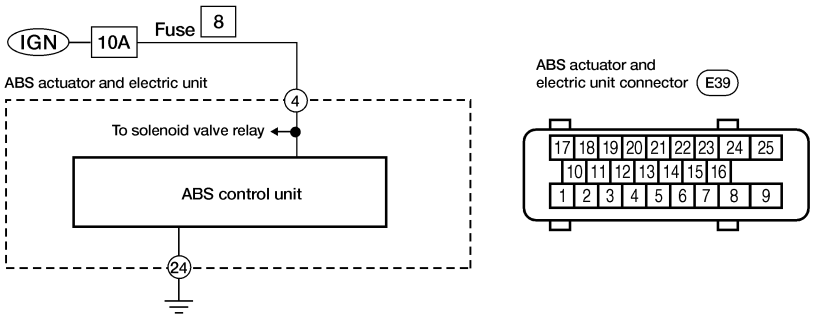

ABR899

▶ GO TO 2.

2	CHECK CONNECTOR

1. Disconnect ABS actuator and electric unit connector.
   Check terminals for damage or loose connection. Then reconnect connector.
2. Carry out self-diagnosis again.

Does warning lamp activate again?

Yes	▶	GO TO 3.
No	▶	**INSPECTION END**

3	CHECK ABS ACTUATOR AND ELECTRIC UNIT POWER SUPPLY CIRCUIT

Check voltage. Refer to Test No. 5, “Low Voltage”, BR-139.

Does battery voltage exist when ignition switch is turned ON?

Yes	▶	GO TO 4.
No	▶	Repair.

4	CHECK WARNING LAMP INDICATION

Does warning lamp indicate code No. 71 again?

Yes or No

Yes	▶	Replace ABS actuator and electric unit.
No	▶	Inspect the system according to the code No.

1. ABS Works Frequently

NEBR0302

1	CHECK BRAKE FLUID PRESSURE	
Check brake fluid pressure distribution. **Is brake fluid pressure distribution normal?**		
Yes	▶	GO TO 2.
No	▶	Repair. Then perform “Preliminary Check”. Refer to BR-114.

2	CHECK WHEEL SENSOR	
1. Check wheel sensor connector for terminal damage or loose connections. 2. Perform wheel sensor mechanical check. Refer to Test No. 7, “Wheel Sensor or Rotor”, BR-132. **Is wheel sensor mechanism OK?**		
Yes	▶	GO TO 3.
No	▶	Repair.

3	CHECK FRONT AXLE	
Check front axles for excessive looseness. Refer to ***AX-5***, “FRONT WHEEL BEARING”. **Is front axle installed properly?**		
Yes	▶	Go to Test No. 3, “2. Unexpected Pedal Action”, BR-144.
No	▶	Repair.

2. Unexpected Pedal Action

NEBR0303

1	CHECK BRAKE PEDAL STROKE	
Check brake pedal stroke. 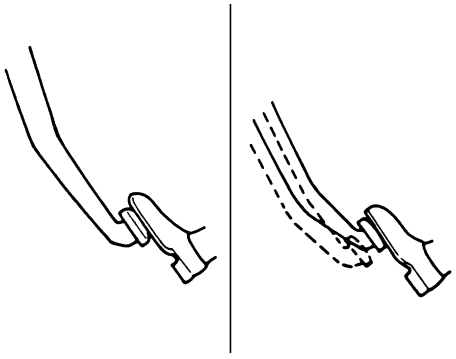 SBR540A **Is brake pedal stroke excessively large?**		
Yes	▶	Perform “Preliminary Check”. Refer to BR-114.
No	▶	GO TO 2.

2	CHECK MECHANICAL BRAKE SYSTEM PERFORMANCE	
Disconnect ABS actuator and electric unit connector and check whether brake is effective. **Does brake system function properly when brake pedal is depressed?**		
Yes	▶	GO TO 3.
No	▶	Perform "Preliminary Check". Refer to BR-114.

3	CHECK WARNING LAMP INDICATION	
Ensure warning lamp remains off while driving. 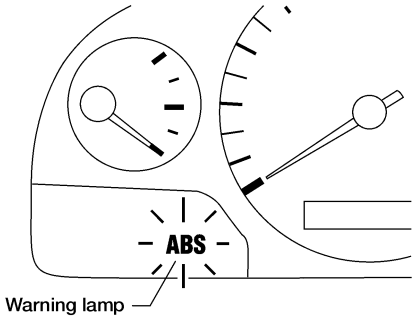 ABR838 **Is warning lamp turned off?**		
Yes	▶	GO TO 4.
No	▶	Carry out "Self-diagnosis". Refer to BR-123.

4	CHECK WHEEL SENSOR	
1. Check wheel sensor connector for terminal damage or loose connection. 2. Perform wheel sensor mechanical check. Refer to Test No. 7, "Wheel Sensor or Rotor", BR-132. **Is wheel sensor mechanism OK?**		
Yes	▶	Check ABS actuator and electric unit pin terminals for damage or the connection of ABS actuator and electric unit harness connector. Reconnect ABS actuator and electric unit harness connector. Then retest.
No	▶	Repair.

3. Long Stopping Distance

=NEBR0304

1	CHECK MECHANICAL BRAKE SYSTEM PERFORMANCE	
Disconnect ABS actuator and electric unit connector and check whether stopping distance is still long. **Does brake system function properly when brake pedal is depressed?**		
Yes	▶	Perform “Preliminary Check”, BR-114 and air bleeding (if necessary).
No	▶	Go to Test No 3, “2. Unexpected Pedal Action”, BR-144.

NOTE:
Stopping distance may be longer for vehicles without ABS when road condition is slippery.

4. ABS Does Not Work

NEBR0305

1	CHECK WARNING LAMP INDICATION	
Does the ABS warning lamp activate? **Yes or No**		
Yes	▶	Carry out “Self-diagnosis”. Refer to BR-123.
No	▶	Go to Test No. 3, “2. Unexpected Pedal Action”, BR-144.

NOTE:
ABS does not work when vehicle speed is under 10 km/h (6 MPH).

5. Pedal Vibration and Noise

NEBR0306

1	INSPECTION START	
Pedal vibration and noise inspection Brake pedal 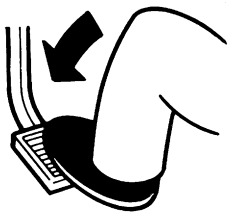 SAT797A **NOTE:** ABS may operate and cause vibration under any of the following conditions. ● Applying brake gradually when shifting or operating clutch. ● Low friction (slippery) road. ● High speed cornering. ● Driving over bumps and pot holes. ● Engine speed is over 5,000 rpm with vehicle stopped.		
	▶	GO TO 2.

2	CHECK SYMPTOM	
1. Apply brake. 2. Start engine. **Does the symptom appear only when engine is started?**		
Yes	▶	Carry out "Self-diagnosis". Refer to BR-123.
No	▶	Go to Test No. 3, "2. Unexpected Pedal Action", BR-144.

6. Warning Lamp Does Not Come On When Ignition Switch Is Turned On

NEBR0307

1	INSPECTION START	
Warning lamp circuit inspection		
	▶	GO TO 2.

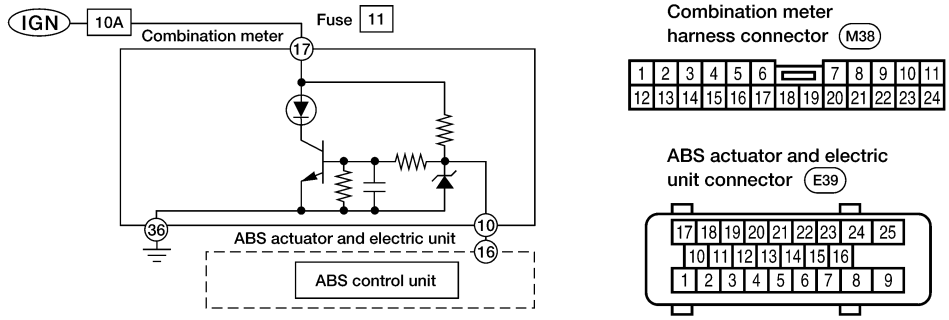

WBR375

2	CHECK FUSE	
Check 10A fuse No. 11. For fuse layout, refer to ***EL-9***, "POWER SUPPLY ROUTING". **Is fuse OK?**		
Yes	▶	GO TO 3.
No	▶	Replace fuse.

3	CHECK WARNING LAMP ACTIVATE	
Disconnect ABS actuator and electric unit connector.		
Does the warning lamp activate?		
Yes	▶	Replace ABS actuator and electric unit.
No	▶	GO TO 4.

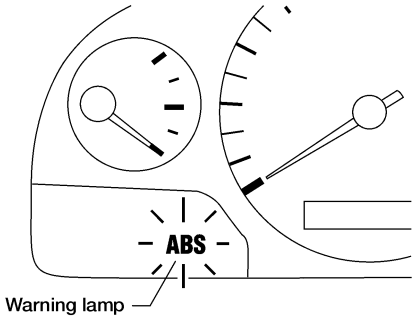

ABR838

4	CHECK HARNESS FOR SHORT

1. Disconnect ABS actuator and electric unit connector E39 and combination meter connector M38.
2. Check continuity between ABS actuator and electric unit connector E39 (body side) terminal 16 (L/W) and ground.

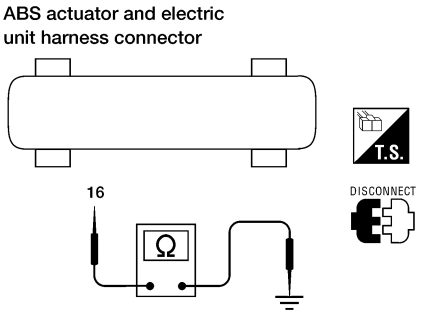

LBR152

Continuity should not exist.

Does continuity exist?

Yes	▶	Repair harness or connectors.
No	▶	**Check combination meter.** Refer to ***EL-84***, "WARNING LAMPS".

7. Warning Lamp Stays On When Ignition Switch Is Turned On

NEBR0308

1	INSPECTION START

ABS control unit inspection

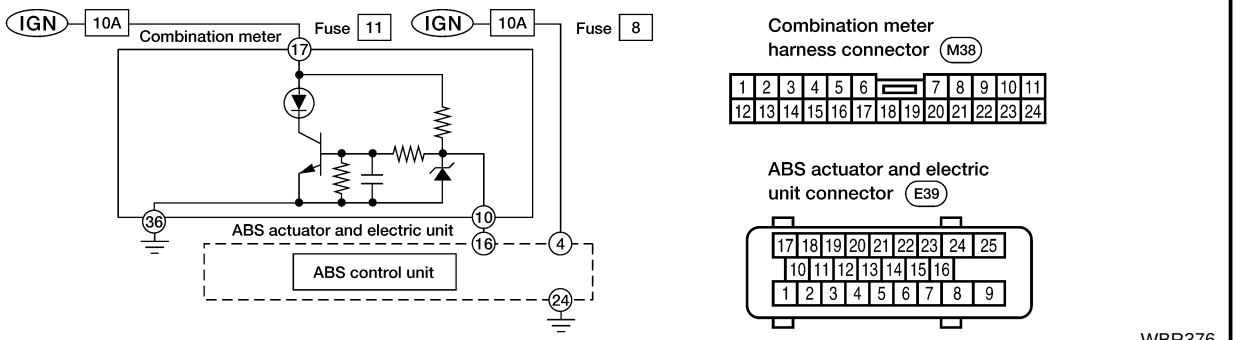

WBR376

	▶	GO TO 2.

2	CHECK FUSE

Check 10A fuse No. 8. For fuse layout, refer to ***EL-9***, "POWER SUPPLY ROUTING".

Is fuse OK?

Yes	▶	GO TO 3.
No	▶	GO TO 8.

3	CHECK HARNESS CONNECTOR	
Check ABS actuator and electric unit pin terminals for damage or bad connection of ABS actuator and electric unit harness connector. Reconnect ABS actuator and electric unit harness connector. Then retest. **Does warning lamp stay on when ignition switch is turned ON?**		
Yes	▶	GO TO 4.
No	▶	**INSPECTION END**

4	CHECK ABS ACTUATOR AND ELECTRIC UNIT GROUND CIRCUIT	
Refer to "Ground Circuit Check", BR-117. **Is ground circuit OK?**		
Yes	▶	GO TO 5.
No	▶	Repair harness or connector.

5	CHECK ABS ACTUATOR AND ELECTRIC UNIT POWER SUPPLY CIRCUIT	
1. Disconnect ABS actuator and electric unit connector. 2. Check voltage between ABS actuator and electric unit connector E39 terminal 4 (B/P) and ground.		
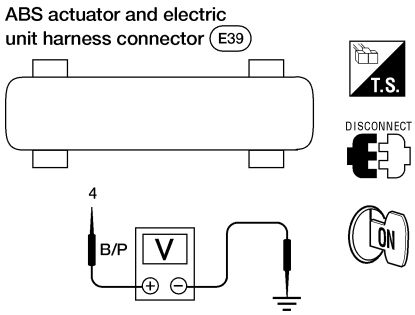 ABR893		
Does battery voltage exist when ignition switch is turned ON?		
Yes	▶	GO TO 6.
No	▶	**Check the following.** If NG, repair harness or connector. ● Harness connector E39 ● Harness for open or short between ABS actuator and electric unit and fuse

6	CHECK WARNING LAMP

1. Disconnect ABS actuator and electric unit connector.
2. Connect suitable wire between ABS actuator and electric unit connector E39 terminal 16 (L/W) and ground.

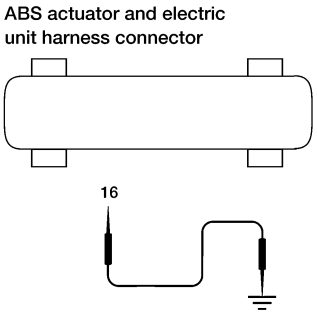

LBR154

Does the warning lamp deactivate?

Yes	▶	Replace ABS actuator and electric unit.
No	▶	GO TO 7.

7	CHECK ABS WARNING LAMP CONTROL CIRCUIT FOR OPEN

1. Disconnect combination meter connector M38.
2. Check continuity between combination meter connector M38 (body side) terminal 10 (L/W) and ABS actuator and electric unit connector E39 (body side) terminal 16 (L/W).
   NOTE:
   Connect positive lead of multimeter to combination meter connector M38 (body side) terminal 10 (L/W) and negative lead to ABS actuator and electric unit connector E39 (body side) terminal 16 (L/W).

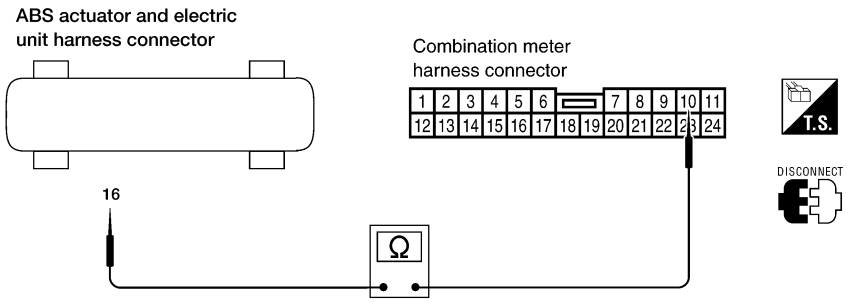

LBR155

Continuity should exist.

Does continuity exist?

Yes	▶	**Check combination meter.** Refer to ***EL-84***, "WARNING LAMPS".
No	▶	Repair harness or connectors.

8	REPLACE FUSE

Replace fuse.

Does the fuse blow out when ignition switch is turned ON?

Yes	▶	GO TO 9.
No	▶	**INSPECTION END**

9	CHECK ABS ACTUATOR AND ELECTRIC UNIT POWER SUPPLY CIRCUIT FOR SHORT

1. Disconnect battery cable and ABS actuator and electric unit connector.
2. Check continuity between ABS actuator and electric unit connector E39 (body side) terminal 4 and ground.

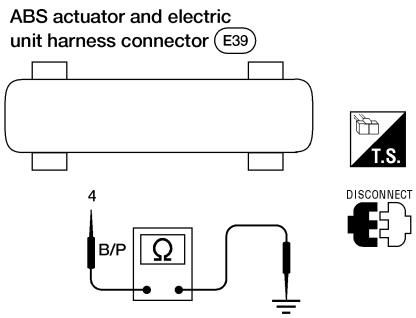

ABR894

Continuity should not exist.

Does continuity exist?

Yes	▶	**Check the following.** If NG, repair harness or connector. ● Harness connector E39 ● Harness for open or short between ABS actuator and electric unit and fuse
No	▶	Replace ABS actuator and electric unit.

CAUTION:

Be careful not to damage sensor edge and sensor rotor teeth. When removing the front or rear wheel hub assembly, disconnect the ABS wheel sensor from the assembly and move it away.

Front Wheel Sensor

NEBR0309S01

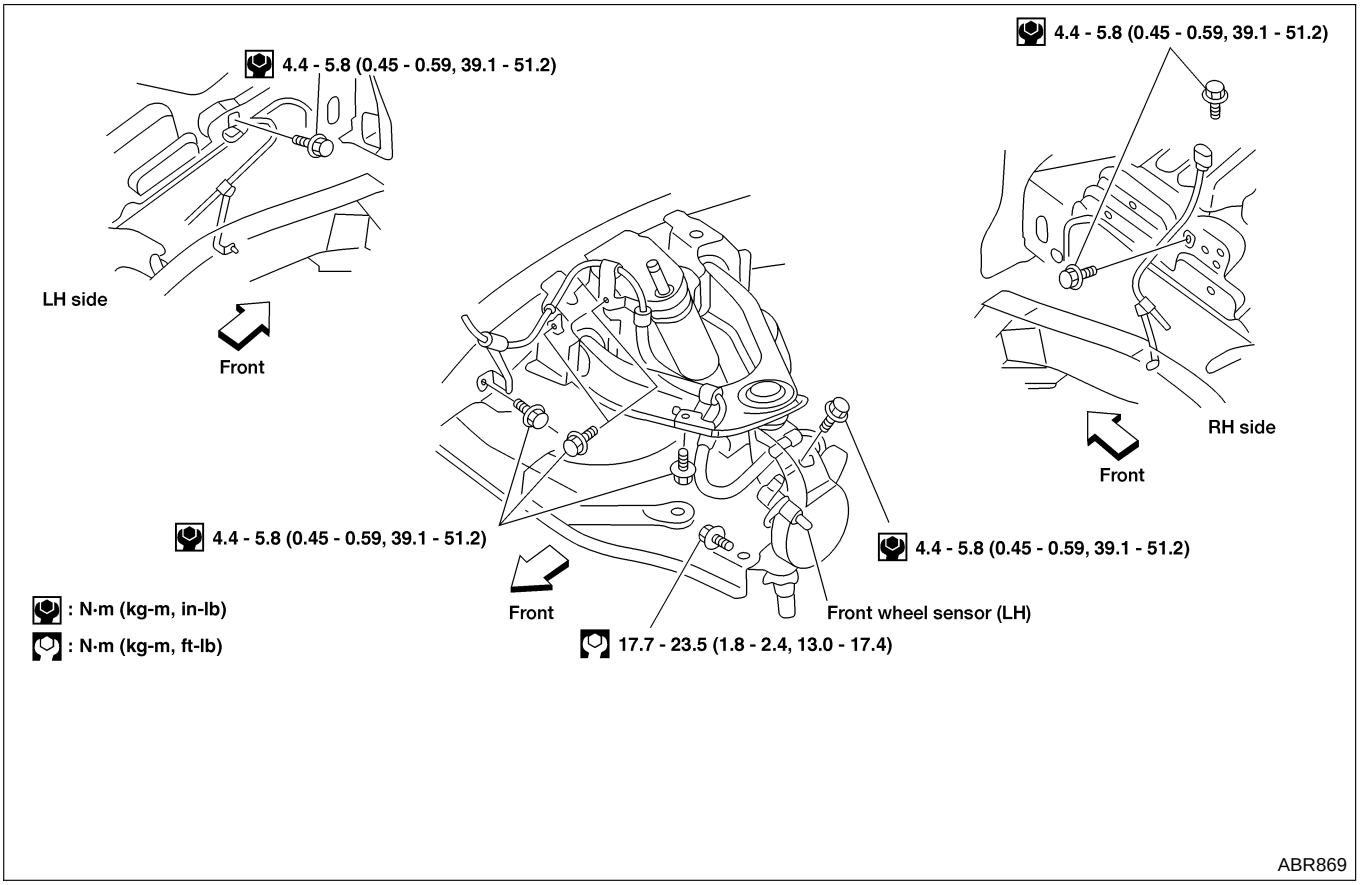

ABR869

Rear Wheel Sensor

NEBR0309S02

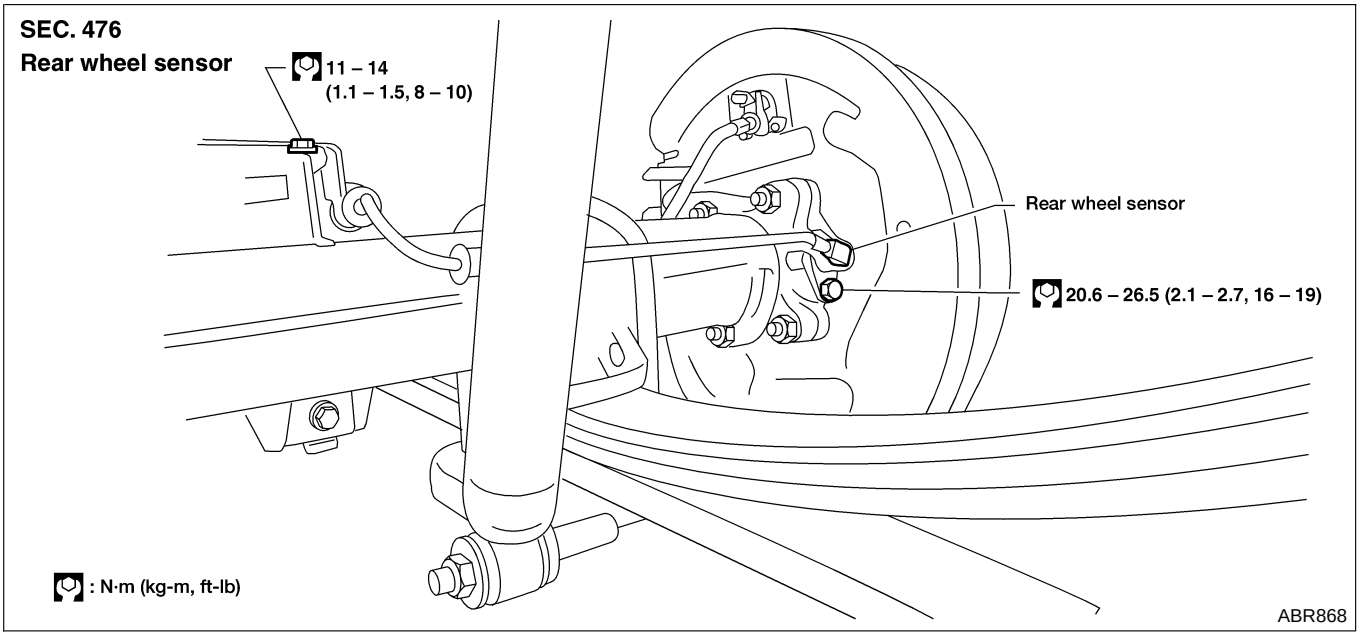

ABR868

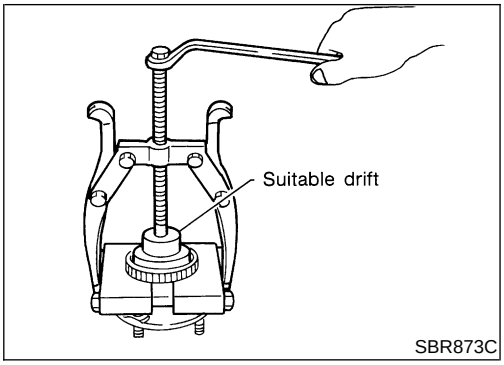

Front Sensor Rotor

NEBR0309S03

REMOVAL

NEBR0309S0301

1. Remove the front wheel hub. Refer to ***AX-12***, "REMOVAL AND INSTALLATION".
2. Remove the sensor rotor using suitable puller, drift and bearing replacer.

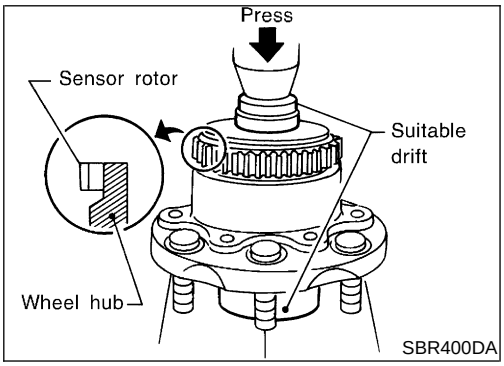

INSTALLATION

NEBR0309S0302

Install the sensor rotor using suitable drift and press.

- Always replace sensor rotor with new one.
- Pay attention to the direction of front sensor rotor as shown in figure.

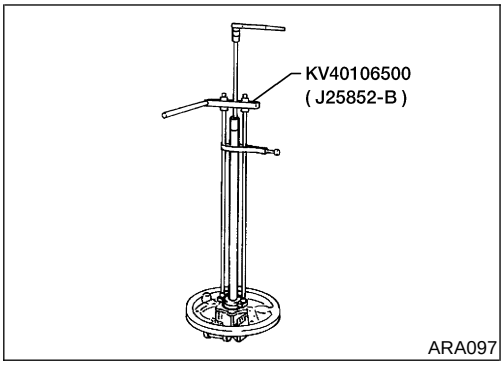

Rear Sensor Rotor

NEBR0309S04

REMOVAL

NEBR0309S0401

- Remove the sensor rotor using Tool.

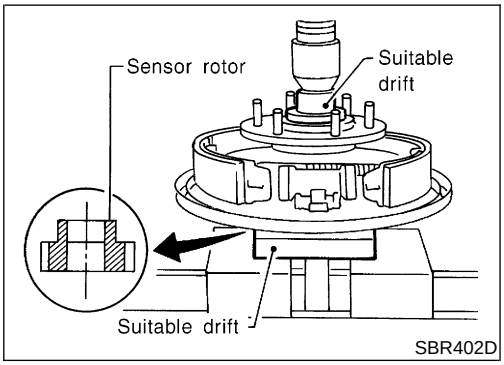

INSTALLATION

NEBR0309S0402

Install the sensor rotor using suitable drift and press.

- Always replace sensor rotor with new one.
- Pay attention to the direction of front sensor rotor as shown in figure.

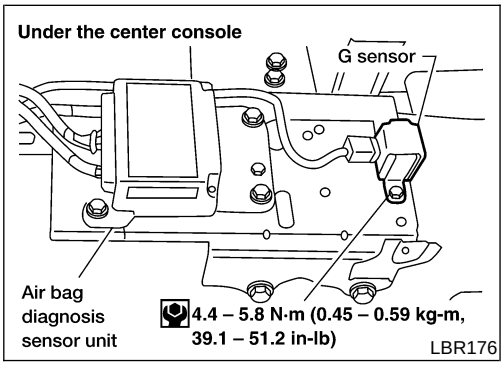

G Sensor

NEBR0309S06

Always replace G sensor if bumped, deformed or dropped from a height of 30 cm (11.8 in) or more. Otherwise, performance characteristics of G sensor will be changed, which in turn changes ABS control performance characteristics. Install G sensor with arrow pointing toward front of vehicle.

ABS Actuator and Electric Unit

=NEBR0309S07

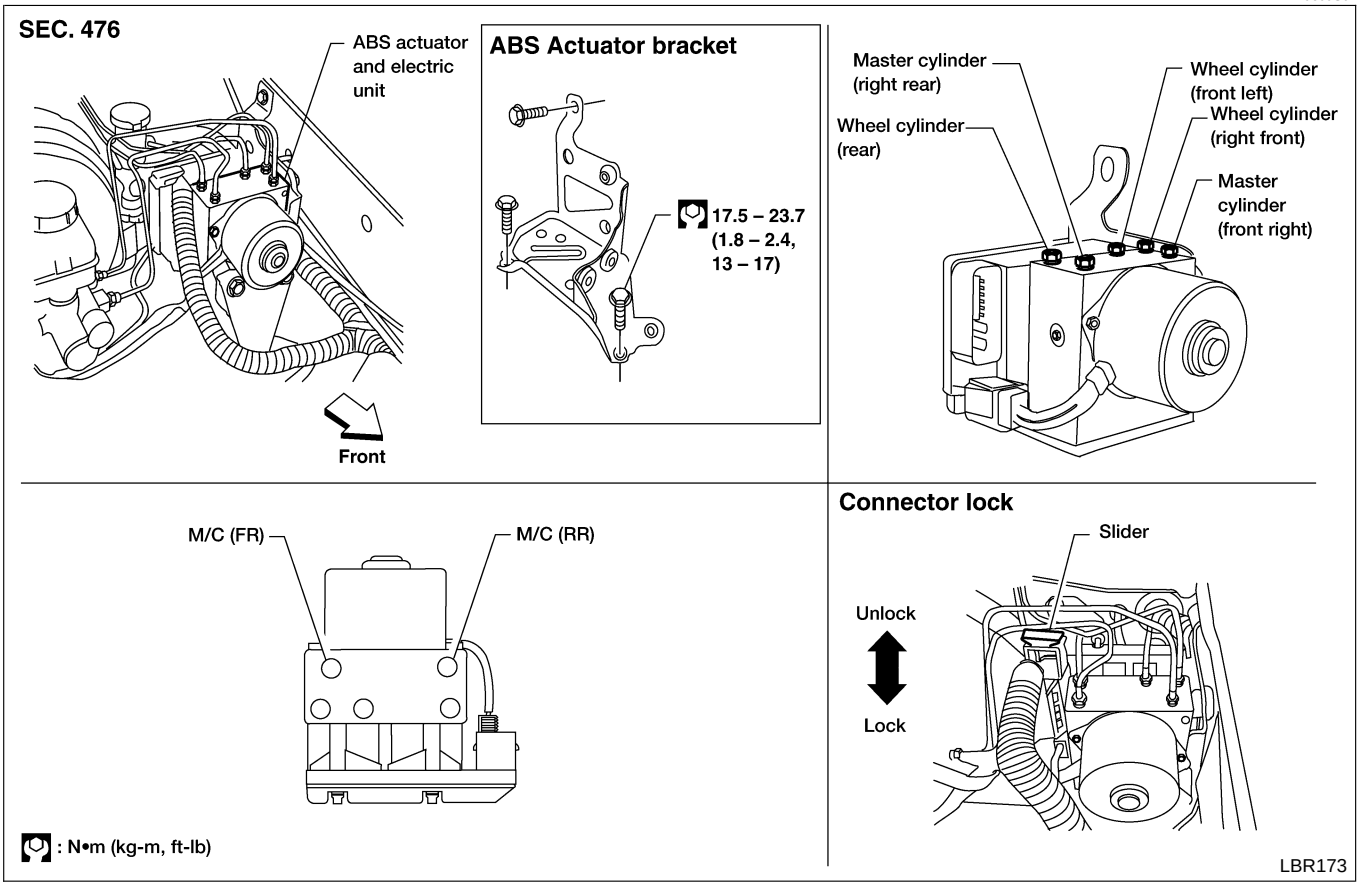

REMOVAL

NEBR0309S0701

1. Disconnect battery cable.
2. Drain brake fluid. Refer to “Changing Brake Fluid”, BR-9.
3. Remove mounting bracket fixing bolts and nuts.
4. Disconnect connector, brake pipes and remove fixing nuts and actuator ground cable.

INSTALLATION

NEBR0309S0702

CAUTION:

After installation, refill brake fluid. Then bleed air. Refer to “Bleeding Brake System”, BR-11.

1. Tighten actuator ground cable.

Place ground cable at a notch of mounting bracket.

2. Connect brake pipes temporarily.
3. Tighten fixing bolts and nuts.
4. Tighten brake pipes.
5. Connect connector and battery cable.

General Specifications

NEBR0080

Unit: mm (in)

Applied model		KA24DE	VG33E and VG33ER
Front brake	Brake model	CL28VD	
	Cylinder bore diameter × number of pistons	42.8 (1.685) x 2	
	Pad Length × width × thickness	146.6 x 48.5 x 10 (5.77 x 1.909 x 0.39)	
	Rotor outer diameter × thickness	260 x 26 (10.2 x 1.02)	277 x 26 (10.9 x 1.02)
Rear brake	Brake model	LT26B	LT30A
	Cylinder bore diameter	22.22 (7/8)	20.64 (13/16)
	Lining length × width × thickness	249.6 x 50 x 5.5 (9.83 x 1.97 x 0.217	296 × 50 × 6.1 (11.65 × 1.97 × 0.240)
	Drum inner diameter	260.0 (10.23)	295.0 (11.61)
Master cylinder	Bore diameter	25.40 (1)	
Control valve	Valve model	Linkage type load sensing valve	Proportioning valve within master cylinder
	Split point kPa (kg/cm^2, psi) × reducing ratio	(Variable) x 0.23	2,452 (25,356) × 0.3
Brake booster	Booster model	M195T	M230t
	Diaphragm diameter	Pri: 205 (8.07) Sec: 180 (7.09)	Pri: 230 (9.06) Sec: 230 (9.06)
Recommended brake fluid		DOT 3	

Disc Brake

NEBR0081

Unit: mm (in)

Brake model		CL28VD
Pad wear limit	Minimum thickness	2.0 (0.079)
Rotor repair limit	Minimum thickness	24.0 (0.945)

Drum Brake

NEBR0082

Unit: mm (in)

Brake model		LT26B	LT30A
Lining wear limit	Minimum thickness	1.5 (0.059)	
Drum repair limit	Maximum inner diameter	261.5 (10.30)	296.5 (11.67)
	Out-of-round limit	0.03 (0.0012)	

Brake Pedal

NEBR0083

Unit: mm (in)

Transmission		M/T	A/T
Free height “H”*		191 - 201 (7.52 - 7.91)	201 - 211 (7.91 - 8.31)
Depressed height “D” [under force of 490 N (50 kg, 110 lb) with engine running]		105 (4.13)	115 (4.53)
Clearance “C” between pedal stopper and threaded end of stop lamp switch or ASCD switch		0.3 - 1.0 (0.012 - 0.039)	
Pedal free play	At pedal pad	1.0 - 3.0 (0.039 - 0.118)	

*: Measured from surface of metal floor to pedal pad

Parking Brake Control

NEBR0084

Unit: notch

Control Type	Stick lever
Lever stroke [under force of 196 N (20 kg, 44 lb)]	10 - 12
Lever stroke when warning switch comes on	1

STEERING SYSTEM

SECTION ST

CONTENTS

PRECAUTIONS 2
Supplemental Restraint System (SRS) ″AIR BAG″ and ″SEAT BELT PRE-TENSIONER″ 2
Precautions for Steering System 2
PREPARATION 3
Special Service Tools 3
POWER STEERING 3
NOISE, VIBRATION AND HARSHNESS (NVH) TROUBLESHOOTING 5
NVH Troubleshooting Chart 5
ON-VEHICLE SERVICE 6
Steering System 6
Checking Steering Wheel Play 6
Checking Neutral Position on Steering Wheel 7
PRE-CHECKING 7
CHECKING 7
Checking Front Wheel Turning Angle 7
Checking and Adjusting Drive Belts 7
Checking Fluid Level 7
Checking Fluid Leakage 8
Bleeding Hydraulic System 8
Checking Steering Wheel Turning Force 9
Checking Hydraulic System 9
STEERING WHEEL AND STEERING COLUMN 11
Components 11
Removal and Installation 11
STEERING WHEEL 11
STEERING COLUMN 12
Disassembly and Assembly 13
Inspection 14
TILT MECHANISM 14
POWER STEERING GEAR (MODEL: D600) 15
Description 15
Removal and Installation 15
Inspection and Adjustment 16
TURNING TORQUE MEASUREMENT 16
POWER STEERING OIL PUMP 18
Components 18
Pre-disassembly Inspection 18
Disassembly 18
Inspection 19
Assembly 19
STEERING LINKAGE 21
Components 21
Removal and Installation 21
Disassembly and Assembly 22
IDLER ARM ASSEMBLY 22
CROSS ROD AND TIE-ROD 22
Inspection 23
BALL JOINT AND SWIVEL JOINT 23
IDLER ARM ASSEMBLY 23
CROSS ROD AND TIE-ROD 23
FIXING LOCATION 23
SERVICE DATA AND SPECIFICATIONS (SDS) 24
General Specifications 24
Steering Wheel 24
Steering Column 24
Power Steering Gear 24
MODEL: D600 24
Steering Linkage 25

Supplemental Restraint System (SRS) “AIR BAG” and “SEAT BELT PRE-TENSIONER”

NEST0051

The Supplemental Restraint System such as “AIR BAG” and “SEAT BELT PRE-TENSIONER” used along with a seat belt, helps to reduce the risk or severity of injury to the driver and front passenger in a frontal collision. The Supplemental Restraint System consists of air bag modules (located in the center of the steering wheel and in the instrument panel on the passenger side), seat belt pre-tensioners, a diagnosis sensor unit, warning lamp, wiring harness, and spiral cable.

The vehicle (except Crew Cab model) is equipped with a passenger air bag deactivation switch. Because no rear seat exists where a rear-facing child restraint can be placed, the switch is designed to turn off the passenger air bag so that a rear-facing child restraint can be used in the front passenger seat. The switch is located in the center of the instrument panel, near the ashtray. When the switch is turned to the ON position, the passenger air bag is enabled and could inflate in a frontal collision. When the switch is turned to the OFF position, the passenger air bag is disabled and will not inflate in a frontal collision. A passenger air bag OFF indicator on the instrument panel lights up when the passenger air bag is switched OFF. The driver air bag always remains enabled and is not affected by the passenger air bag deactivation switch.

Information necessary to service the system safely is included in the **RS section** of this Service Manual.

WARNING:

- **To avoid rendering the SRS inoperative, which could increase the risk of personal injury or death in the event of a collision which would result in air bag inflation, all maintenance should be performed by an authorized NISSAN dealer.**
- **Improper maintenance, including incorrect removal and installation of the SRS, can lead to personal injury caused by unintentional activation of the system. For removal of Spiral Cable and Air Bag Module, see the RS section.**
- **Do not use electrical test equipment on any circuit related to the SRS unless instructed to in this Service Manual. Spiral cable and wiring harnesses (except “SEAT BELT PRE-TENSIONER”) covered with yellow insulation either just before the harness connectors or for the complete harness are related to the SRS.**
- **The vehicle (except Crew Cab model) is equipped with a passenger air bag deactivation switch which can be operated by the customer. When the passenger air bag is switched OFF, the passenger air bag is disabled and will not inflate in a frontal collision. When the passenger air bag is switched ON, the passenger air bag is enabled and could inflate in a frontal collision. After SRS maintenance or repair, make sure the passenger air bag deactivation switch is in the same position (ON or OFF) as when the vehicle arrived for service.**

Precautions for Steering System

NEST0002

- **Before disassembly, thoroughly clean the outside of the unit.**
- **Disassembly should be done in a clean work area. It is important to prevent the internal parts from becoming contaminated by dirt or other foreign matter.**
- **For easier and proper assembly, place disassembled parts in order on a parts rack.**
- **Use nylon cloths or paper towels to clean the parts; common shop rags can leave lint that might interfere with their operation.**
- **Before inspection or reassembly, carefully clean all parts with a general purpose, non-flammable solvent.**
- **Before assembly, apply a coat of recommended power steering fluid* to hydraulic parts. Petroleum jelly may be applied to O-rings and seals. Do not use any grease.**
- **Replace all gaskets, seals and O-rings. Avoid damaging O-rings, seals and gaskets during installation. Perform functional tests whenever designated.**

***: Genuine NISSAN PSF II or equivalent. Refer to *MA-13*, “RECOMMENDED FLUIDS AND LUBRICANTS”.**

Special Service Tools

NEST0003

POWER STEERING

NEST0003S02

The actual shape of Kent-Moore tools may differ from those of special service tools illustrated here.

Tool number (Kent-Moore No.) Tool name	Description	
(J-44615) Air bag master key set	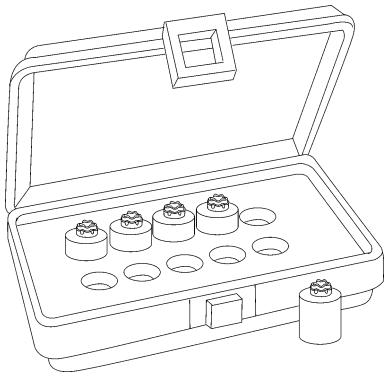 LRS194	Removing and installing accessory air bag locking bolts
ST27180001 (J25726-A) Steering wheel puller	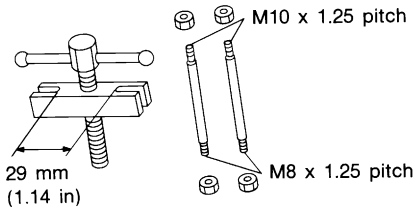 NT544	Removing steering wheel
HT72520000 (J25730-B) Ball joint remover	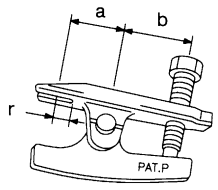 NT546	Removing ball joint and swivel joint **a: 33 mm (1.30 in)** **b: 50 mm (1.97 in)** **r: R11.5 mm (0.453 in)**
ST29020001 (J24319-01) Steering gear arm puller	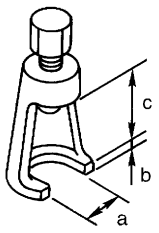 NT694	Removing pitman arm **a: 34 mm (1.34 in)** **b: 6.5 mm (0.256 in)** **c: 61.5 mm (2.421 in)**
KV48100700 (J26364) Torque adapter	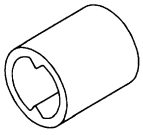 NT169	Adjusting worm bearing preload

Special Service Tools (Cont'd)

Tool number (Kent-Moore No.) Tool name	Description	
ST3127S000 (see J25765-A) 1: GG91030000 (J25765-A) Torque wrench 2: HT62940000 (—) Socket adapter 3: HT62900000 (—) Socket adapter	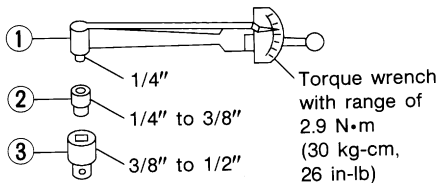 NT541	Measuring turning torque
KV48100301 (—) Strut & steering gearbox attachment	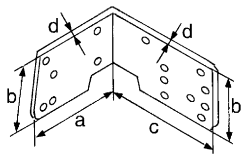 NT688	Steering gear installation. **a: 162 mm (6.38 in)** **b: 110 mm (4.33 in)** **c: 190 mm (7.48 in)** **d: 9 mm (0.35 in)**
KV48103500 (J26357 or J26357-10) Pressure gauge	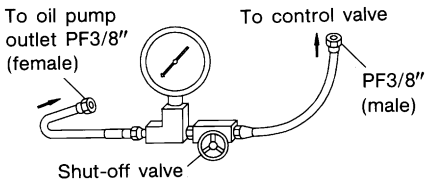 NT547	Measuring oil pressure
KV48102500 (—) Pressure gauge adapter	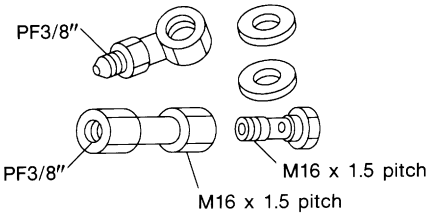 NT542	Measuring oil pressure (Use with KV48103500)
KV481009S0 (—) Oil seal drift set 1: KV48100910 (—) Drift 2: KV48100920 (J26367) Adapter 3: KV48100930 (J26367) Adapter	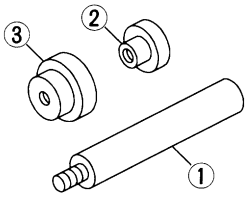 NT174	Installing oil seal
(J44372) 5–60 Pound pull gauge	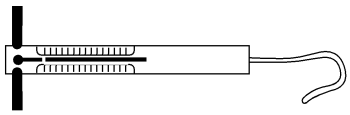	Measuring steering wheel turning force

NVH Troubleshooting Chart

NEST0004S01

Reference page			ST-7	ST-8	ST-23	ST-23	ST-23	ST-8	ST-6	ST-9	Refer to ***MA-16***, ***MA-25***	—	ST-14	ST-14	ST-11	ST-21	Refer to ***PD-4***, NVH.	Refer to ***PD-4***, NVH.	Refer to ***AX-4***, NVH.	Refer to ***AX-4***, NVH.	Refer to ***SU-3***, NVH.	Refer to ***SU-3***, NVH.	Refer to ***SU-3***, NVH.	Refer to ***BR-8***, NVH.
SUSPECTED PARTS (Possible cause)			Fluid level	Air in hydraulic system	Tie-rod ball joint swinging force	Tie-rod ball joint rotating torque	Tie-rod ball joint end play	Steering gear fluid leakage	Steering wheel play	Steering gear turning force	Drive belt looseness	Improper steering wheel	Improper installation or looseness of tilt lock lever (if equipped)	Steering column deformation or damage	Improper installation or looseness of steering column	Steering linkage looseness	PROPELLER SHAFT	DIFFERENTIAL	DRIVE SHAFT	AXLE	SUSPENSION	TIRES	ROAD WHEEL	BRAKES
Symptom	STEERING	Noise	X	X	X	X	X	X	X	X	X						X	X	X	X	X	X	X	X
		Shake										X	X				X		X	X	X	X	X	X
		Vibration										X	X	X	X		X		X	X	X	X		
		Shimmy										X	X			X				X	X	X	X	X
		Judder														X				X	X	X	X	X

X: Applicable

Steering System

NEST0005

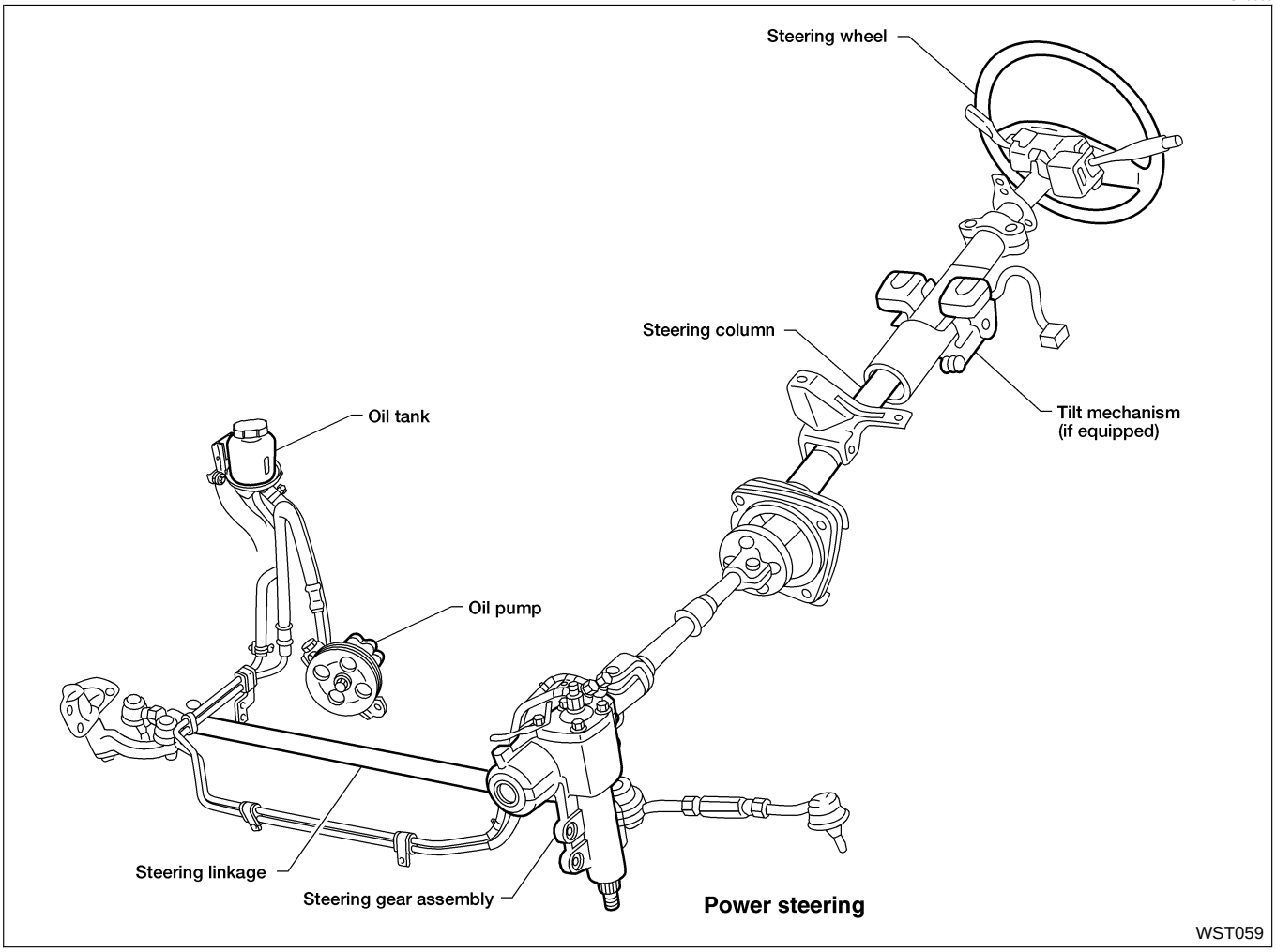

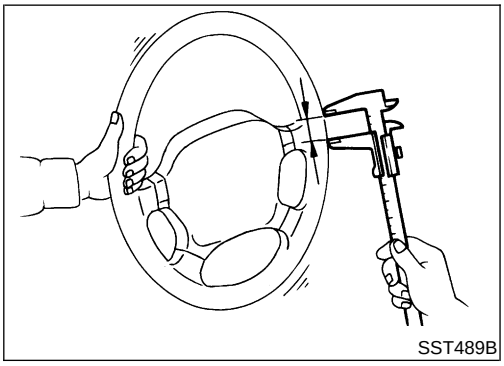

Checking Steering Wheel Play

NEST0006

- Place wheels in straight ahead position and check steering wheel play.

  Steering wheel play:

  35 mm (1.38 in) or less

- If steering wheel play is not within specification, check the following for loose or worn components.

a) Steering column. Refer to “STEERING COLUMN”, ST-12.
b) Front suspension and axle. Refer to ***AX-4***, “Front Axle Parts” and ***SU-7***, “Front Suspension Parts”.
c) Steering gear. Refer to “Description”, ST-15.

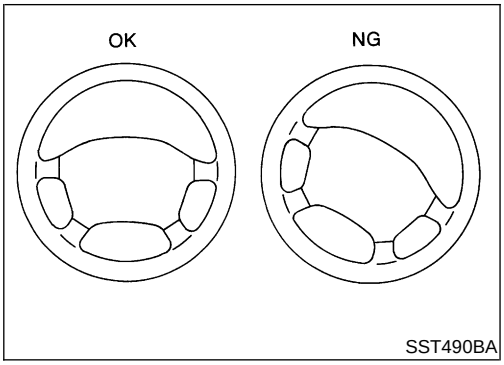

Checking Neutral Position on Steering Wheel

NEST0007

PRE-CHECKING

NEST0007S01

- Make sure that wheel alignment is correct.

  Wheel alignment:

  Refer to *SU-21*, "Wheel Alignment (Unladen*1)".
- Verify that the steering gear is centered before removing the steering wheel.

CHECKING

NEST0007S02

1. Check that the steering wheel is in the neutral position when driving straight ahead.
2. If it is not in the neutral position, remove the steering wheel and reinstall it correctly.
3. If the neutral position is still not correct:

a. Loosen tie-rod lock nuts.

b. Move tie-rods, in opposite direction, the same amount on both left and right sides.
This will compensate for error in the neutral position.

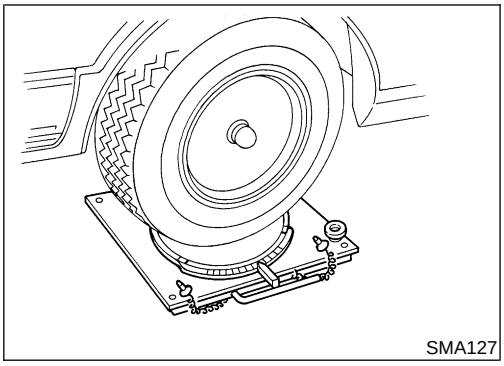

Checking Front Wheel Turning Angle

NEST0008

1. Rotate steering wheel fully right, then left; measure turning angle.

   Turning angle of full turns:

   Refer to *SU-11*, "Front Wheel Turning Angle".
2. If it is not within specification, check stopper bolt adjustment. Refer to ***SU-11***, "Front Wheel Turning Angle".

Checking and Adjusting Drive Belts

NEST0009

Refer to ***MA-16***, "Checking Drive Belts" (KA24DE) or ***MA-25***, "Checking Drive Belts" (VG33E and VG33ER).

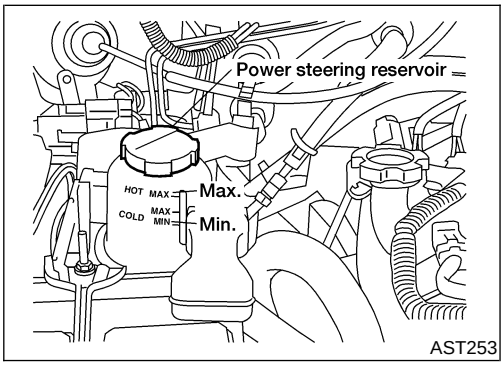

Checking Fluid Level

NEST0010

Check fluid level with engine off.
Check fluid level referring to the scale on the reservoir tank..
Use "HOT" range for fluid temperatures of 50 to 80°C (122 to 176°F). Use "COLD" range for fluid temperatures of 0 to 30°C (32 to 86°F).

CAUTION:

- **Do not overfill.**
- **Recommended fluid is Genuine NISSAN PSF II or equivalent. Refer to *MA-13*, "RECOMMENDED FLUIDS AND LUBRICANTS".**

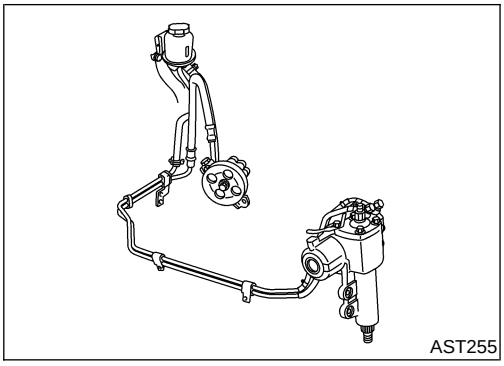
AST255

Checking Fluid Leakage

NEST0011

Check lines for improper attachment, leaks, cracks, damage, chafing and deterioration.

1. Run engine between idle speed and 1,000 rpm.

- **Make sure temperature of fluid in reservoir tank rises to 60 to 80°C (140 to 176°F).**

2. Turn steering wheel right-to-left several times.
3. Hold steering wheel at each “lock” position for 5 seconds and carefully check for fluid leakage.

CAUTION:

Do not hold steering wheel at lock position for more than 15 seconds.

4. If fluid leakage from any line is noticed, loosen flare nut and then retighten.

Do not overtighten connector as this can damage O-ring, washer and connector.

5. If fluid leakage from power steering pump is noticed, check power steering pump. Refer to “Pre-disassembly Inspection”, ST-18.
6. If fluid leakage from power steering gear is noticed, check power steering gear. Refer to “Inspection and Adjustment”, ST-16.

Bleeding Hydraulic System

NEST0012

1. Raise front end of vehicle until wheels are clear of the ground.

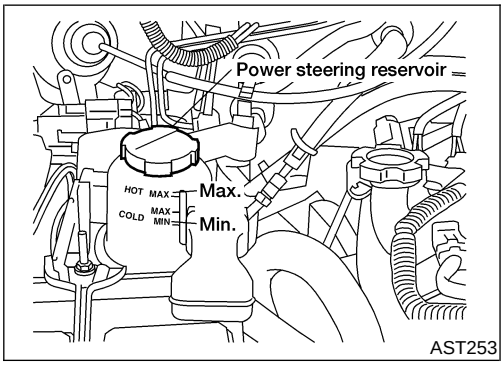

AST253

2. Add fluid to reservoir tank to specified level. Quickly turn steering wheel fully to right and left and lightly touch steering stoppers.
   Repeat steering wheel operation until fluid level no longer decreases.
3. Start engine.
   Repeat step 2 above.

- Incomplete air bleeding will cause the following to occur:

a) Air bubbles in reservoir tank
b) Clicking noise in power steering pump
c) Excessive buzzing in power steering pump

When this happens, bleed air again.

Fluid noise may occur in the valve or power steering pump. This is common when the vehicle is stationary or while turning the steering wheel slowly. This does not affect the performance or durability of the system.

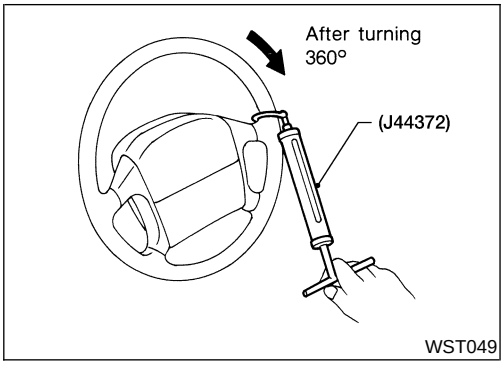

Checking Steering Wheel Turning Force

NEST0013

1. Park vehicle on a level, dry surface and set parking brake.
2. Start engine and run at idle speed or 1,000 rpm.
3. Bring power steering fluid up to adequate operating temperature. [Make sure temperature of fluid is approximately 60 to 80°C (140 to 176°F).]

Tires need to be inflated to normal pressure.

4. Check steering wheel turning force when steering wheel has been turned 360° from neutral position.

Steering wheel turning force:
39 N (4 kg, 9 lb) or less

5. If steering wheel turning force is out of specification, check the following:

a. Hydraulic system. Refer to “Checking Hydraulic System”, ST-9.
b. Steering column. Refer to “Inspection”, ST-14.
c. Front suspension and axle. Refer to ***AX-4***, “Front Axle Parts” and ***SU-7***, “Front Suspension Parts”.
d. Steering gear turning torque. Refer to “TURNING TORQUE MEASUREMENT”, ST-16.

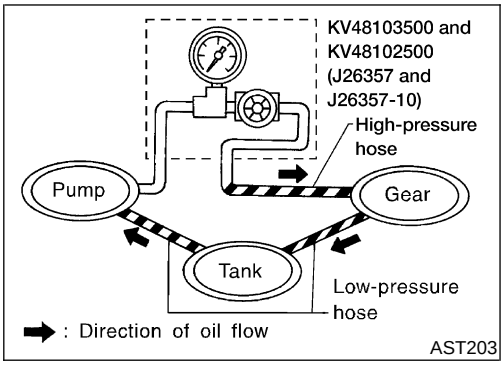

Checking Hydraulic System

NEST0014

Before starting, check belt tension, driving pulley and tire pressure.

1. Set Tool. Open shut-off valve, then bleed air. Refer to “Bleeding Hydraulic System”, ST-8.
2. Run engine at idle speed or 1,000 rpm.

- **Make sure fluid temperature in reservoir tank rises to 60 to 80°C (140 to 176°F).**

WARNING:
Warm up engine with shut-off valve fully opened. If engine is started with shut-off valve closed, fluid pressure in the power steering pump increases to maximum. This will raise fluid temperature abnormally.

3. Check pressure with steering wheel fully turned to left and right positions while idling at 1,000 rpm.

CAUTION:
Do not hold the steering wheel at full lock position for more than 15 seconds.

Power steering pump maximum operating pressure:
7,649 - 8,238 kPa (78 - 84 kg/cm^2, 1,109 - 1,194 psi) at idling

- If pressure reaches maximum operating pressure, system is OK.
- If pressure increases above maximum operating pressure, check power steering pump flow control valve. Refer to “Components”, ST-18.

4. If power steering pressure is below the maximum operating pressure, slowly close shut-off valve and check pressure again.

CAUTION:
Do not close shut-off valve for more than 15 seconds.

- If pressure increases to maximum operating pressure, gear is damaged. Refer to “Removal and Installation”, ST-15.
- If pressure remains below maximum operating pressure, pump

is damaged. Refer to "Components", ST-18.

5. After checking hydraulic system, remove Tool and add fluid as necessary. Completely bleed air out of system. Refer to "Bleeding Hydraulic System", ST-8.

Components

NEST0015

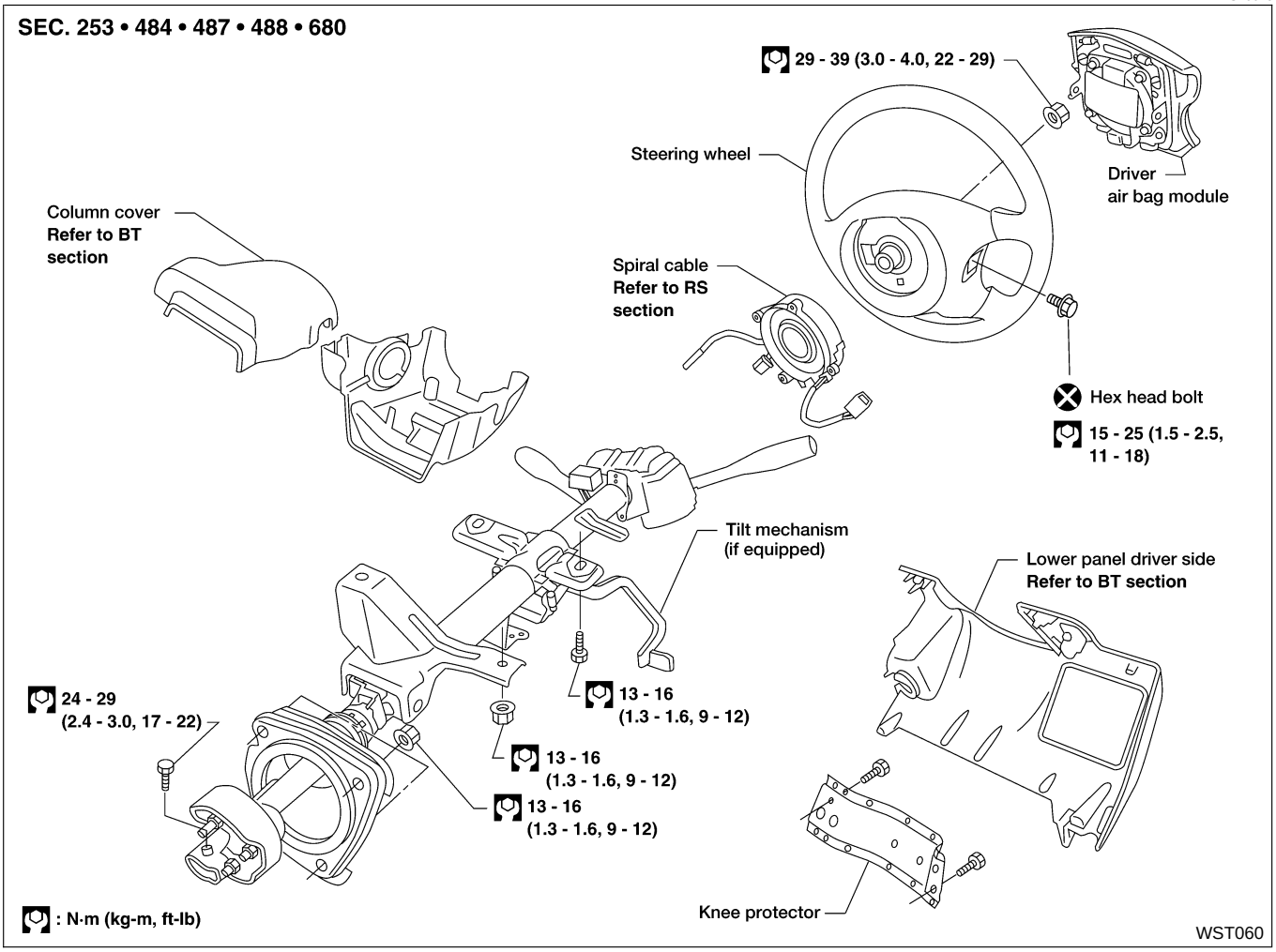

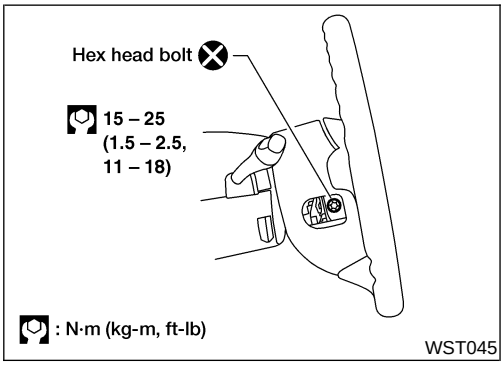

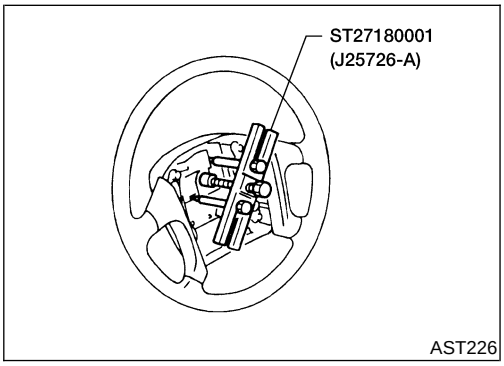

Removal and Installation

NEST0016

STEERING WHEEL

NEST0016S01

1. Remove air bag module and spiral cable. Refer to ***RS-20***, “Driver Air Bag Module and Spiral Cable”.
2. Disconnect horn connector and remove steering wheel nut.
3. Remove steering wheel using Tool.

- For installation, Refer to ***RS-20***, “Driver Air Bag Module and Spiral Cable”.

STEERING COLUMN

NEST0016S02

Removal

NEST0016S0201

CAUTION:

- **The rotation of the spiral cable (SRS "AIR BAG" component part) is limited. If the steering gear must be removed, set the front wheels in the straight-ahead direction.**
  Do not rotate the steering column while the steering gear is removed.
- **Remove the steering wheel before removing the steering lower joint to avoid damaging the SRS spiral cable. Refer to "STEERING WHEEL", ST-11.**

1. Remove steering wheel, refer to "STEERING WHEEL", ST-11.
2. Remove steering column covers.
3. Remove instrument lower panel. Disconnect security lamp indicator.
4. Disconnect combination switch electrical connectors and air bag harness connector.
5. Remove knee protector.
6. Disconnect ignition switch and shift lock solenoid connectors.
7. Disconnect shift cable.
8. Remove bolt from lower joint.
9. Remove two steering column bolts and remove steering column.

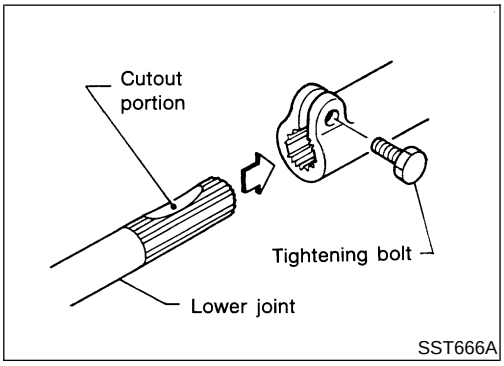

Installation

NEST0016S0202

- When installing steering column, finger-tighten all lower bracket and clamp retaining bolts; then tighten them securely. Make sure that undue stress is not applied to steering column.
- When fitting steering lower joint, be sure tightening bolt faces cutout portion.
- Align spiral cable correctly when installing steering wheel. Refer to ***RS-20***, "Driver Air Bag Module and Spiral Cable".

CAUTION:

After installation, turn steering wheel to make sure it moves smoothly. Ensure the number of turns from the straight forward position to left and right locks are the same. Be sure that the steering wheel is in a neutral position when driving straight ahead.

Disassembly and Assembly

NEST0017

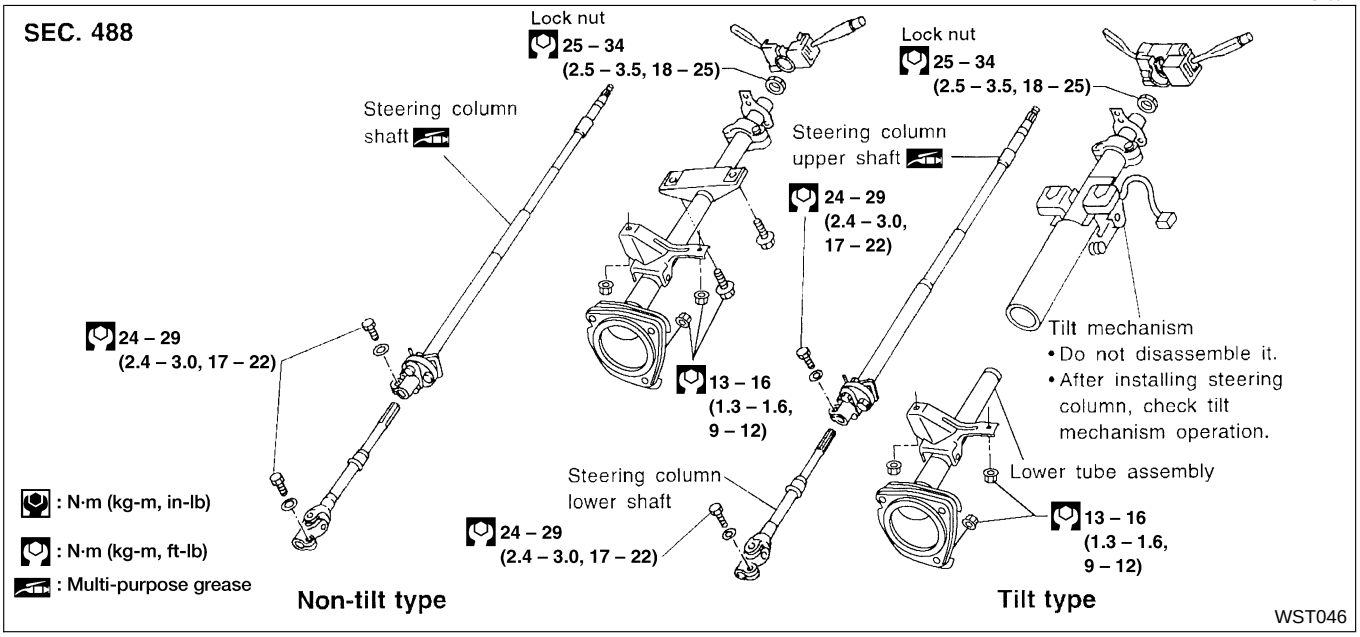

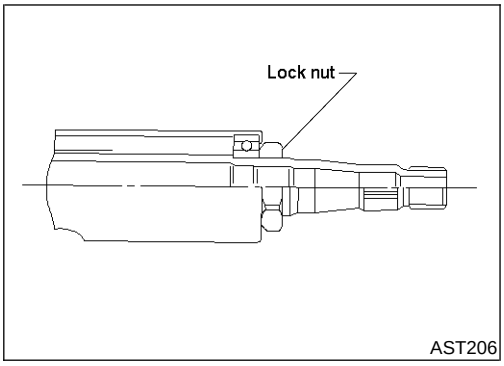

- When disassembling and assembling, unlock steering lock with key.
- Install lock nut on steering column shaft and tighten the nut to specification.

  : 25 - 34 N·m (2.5 - 3.5 kg-m, 18 - 25 ft. lb)

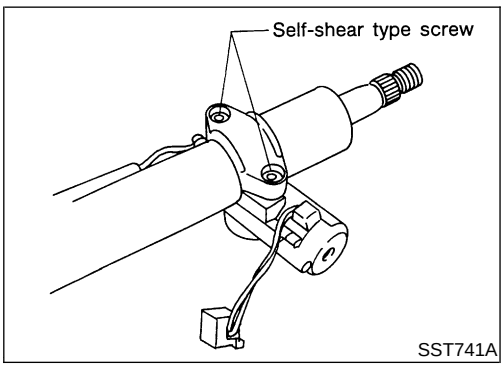

- Steering lock

a) Break self-shear type screws using a drill or other appropriate tool.

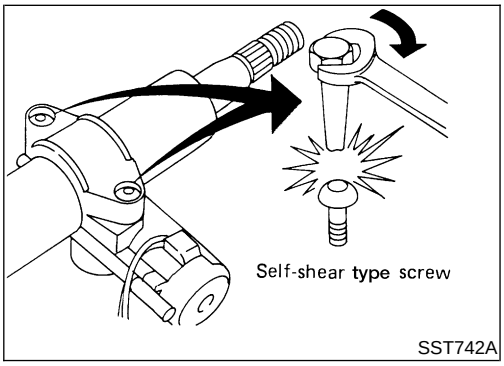

b) Install self-shear type screws, then tighten until heads break off.

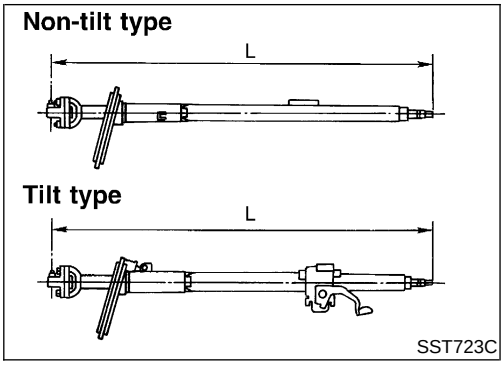

Inspection

NEST0018

- If steering wheel does not turn smoothly, check the steering column as follows and replace damaged parts.

a) Check column bearings for damage and unevenness. Lubricate with recommended multi-purpose grease or replace steering column as an assembly, if necessary.

b) Check jacket tube for deformation and breakage. Replace if necessary.

- If the vehicle is involved in a light collision, check dimension “L”. If it is not within specification, replace steering column as an assembly.

Column length “L”:

863.1 - 864.7 mm (33.980 - 34.043 in)

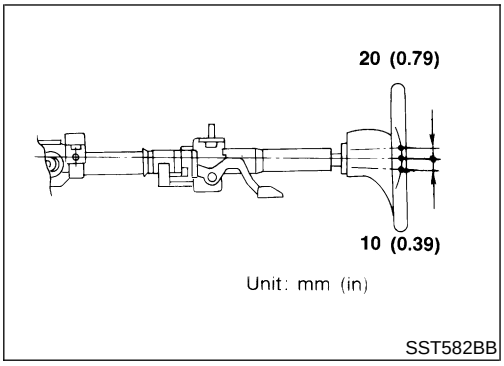

TILT MECHANISM

NEST0018S01

After installing steering column, check tilt mechanism operation (if equipped).

Description

NEST0059

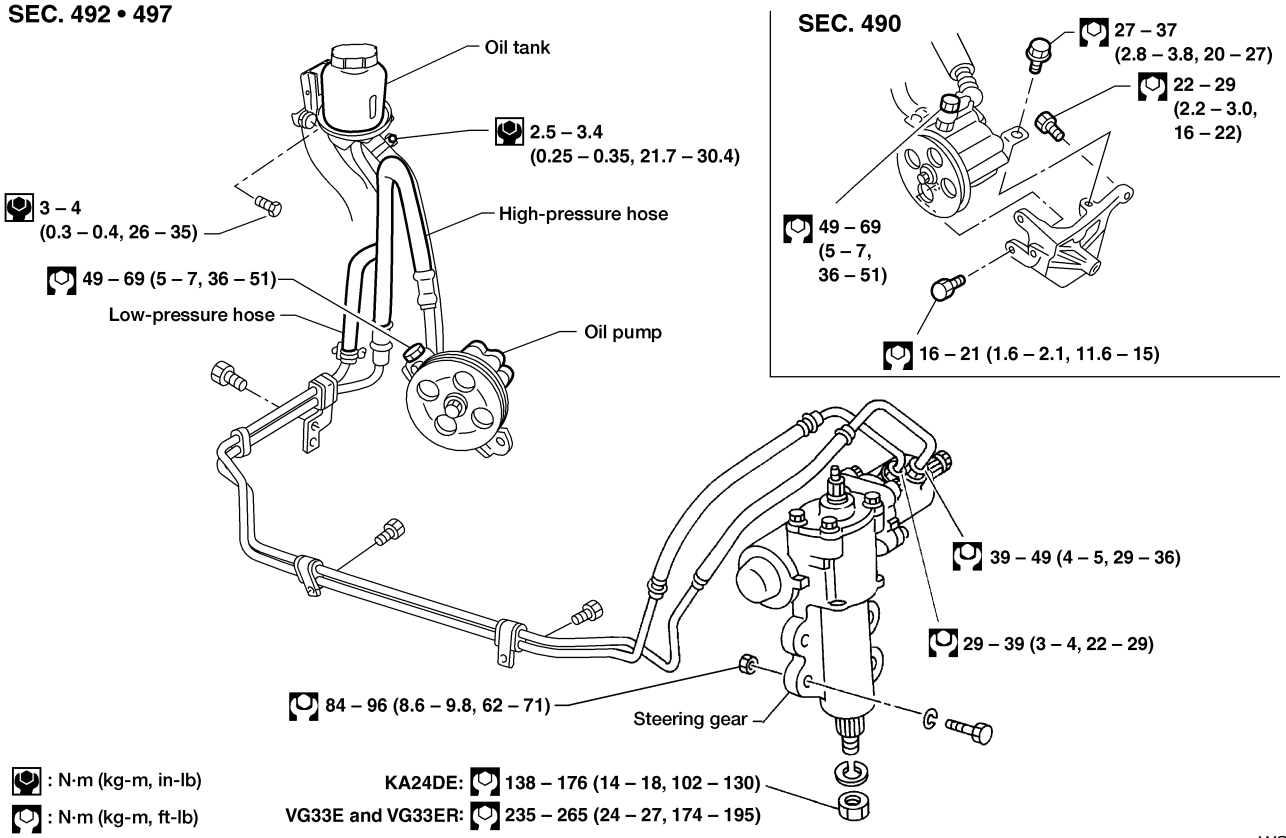

CAUTION:

- **Parts which can be disassembled are strictly limited. Never disassemble parts other than those specified.**
- **Disassemble in as clean a place as possible.**
- **Clean your hands before disassembly.**
- **Do not use rags; use nylon cloths or paper towels.**
- **Follow the procedures and cautions indicated in the Service Manual.**

Removal and Installation

NEST0061

Before removal, clean gear housing and oil pump exteriors using a steam cleaner, then dry with compressed air.

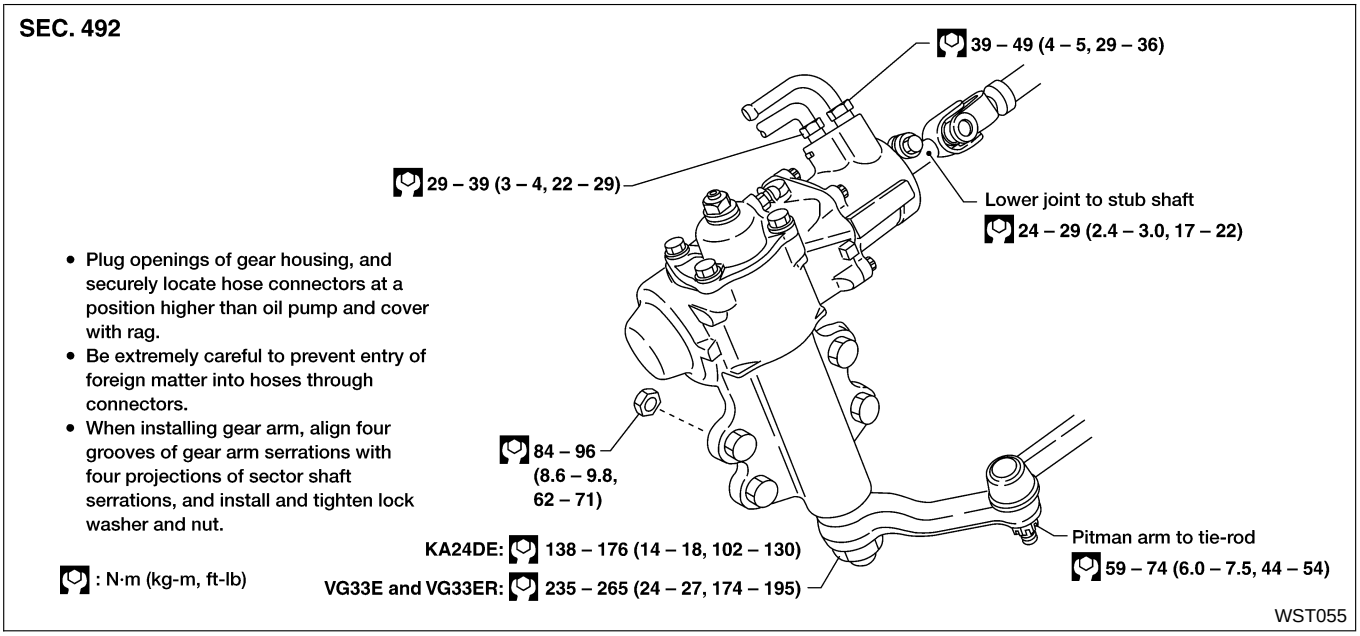

Inspection and Adjustment

NEST0062

Before replacing power steering, make sure there is no oil leakage around sealing portion and check steering turning torque as follows:

Check sealing portion.

- Sector shaft cover O-ring
- Sector shaft U-packing
- Sector shaft oil seal
- Rear housing O-ring
- Gear housing O-ring

TURNING TORQUE MEASUREMENT

NEST0062S01

1. Measure turning torque at 360° position.

a. Install steering gear on Tool.

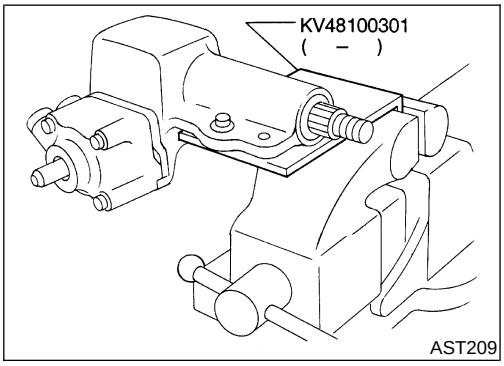

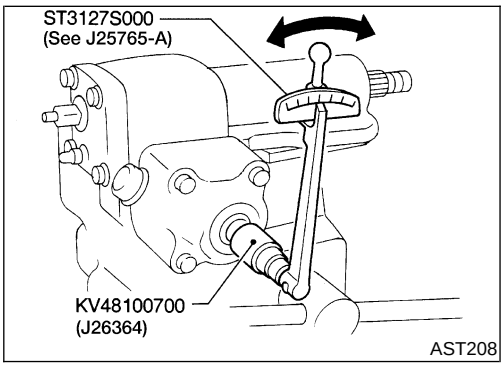

b. Turn stub shaft all the way to right and left several times.

c. Measure turning torque at 360° position from straight-ahead position with Tools.

Turning torque at 360°:
0.20 - 0.90 N·m (2.0 - 9.2 kg-cm, 1.8 - 8.0 in-lb)

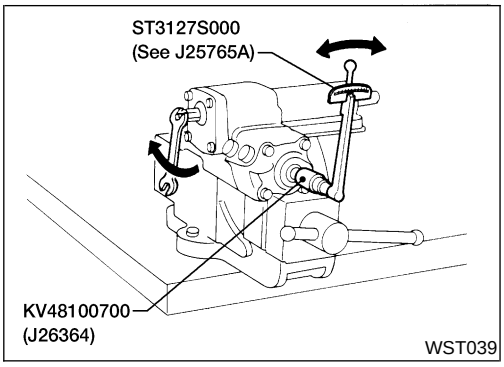

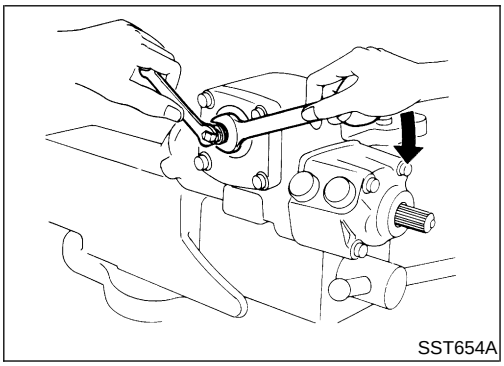

d. Measure turning torque at straight-ahead position.

Straight-ahead position is a position where stub shaft is turned 1.93 turns (two full turns and 50°) from lock position.

Turning torque at straight-ahead position:
0.45 - 0.80 N·m (4.6 - 8.2 kg-cm, 4.0 - 7.1 in-lb)
higher than turning torque at 360°

Maximum turning torque:
1.7 N·m (17.3 kg-cm, 15.0 in-lb)

If turning torque is not within specifications, adjust by turning sector shaft adjusting screw.

2. Tighten adjusting screw lock nut with tools.

Components

NEST0036

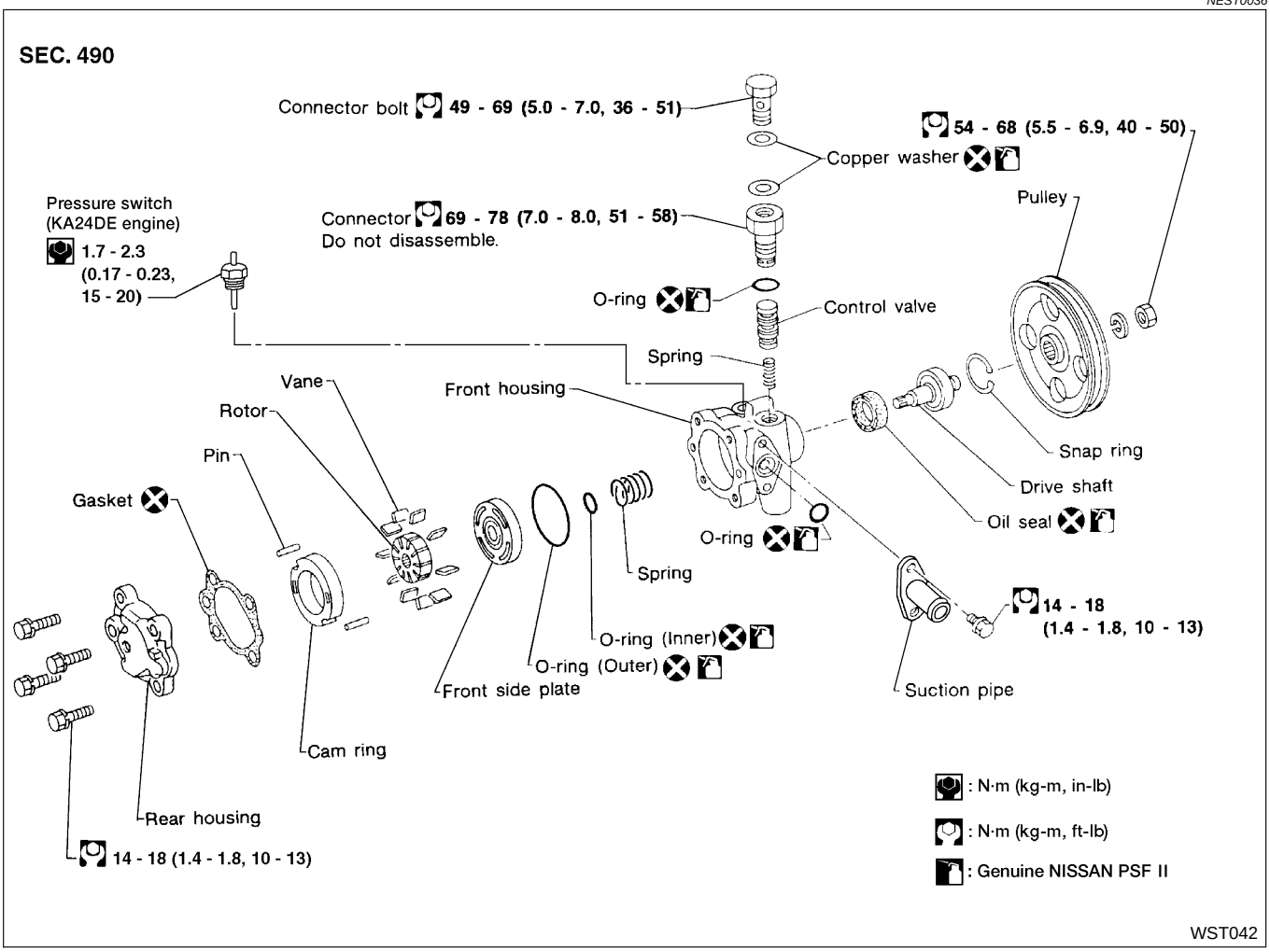

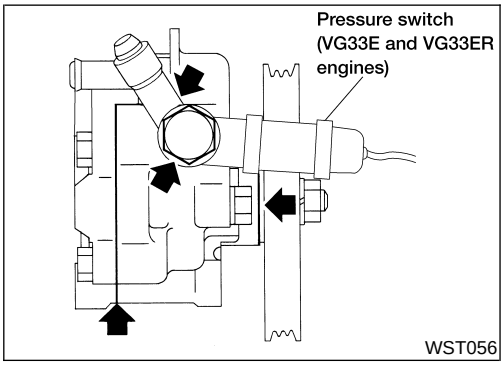

Pre-disassembly Inspection

NEST0037

Disassemble the power steering oil pump only if the following items are found.

- Oil leak from any point shown in the figure.
- Deformed or damaged pulley.
- Poor performance.

Disassembly

NEST0038

CAUTION:

- **Parts which can be disassembled are strictly limited. Never disassemble parts other than those specified.**
- **Disassemble in as clean a place as possible.**
- **Clean your hands before disassembly.**
- **Do not use rags; use nylon cloths or paper towels.**
- **When disassembling and reassembling, do not let foreign matter enter or contact the parts.**

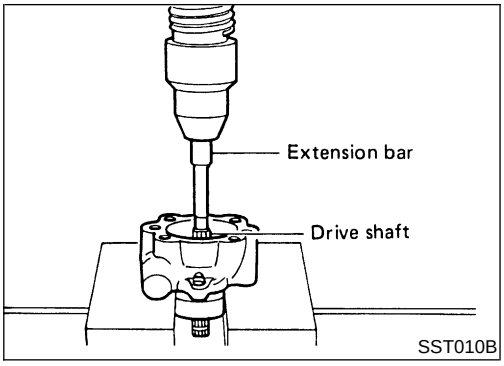

1) Remove snap ring, then draw drive shaft out.
- **Be careful not to drop drive shaft.**

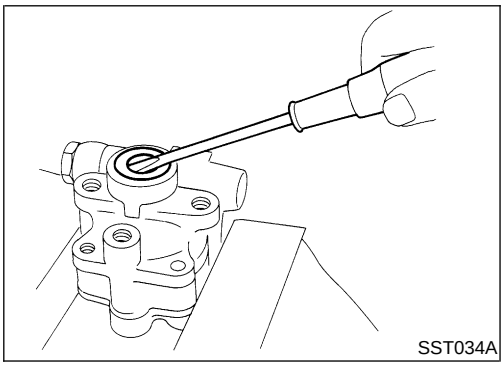

2) Remove oil seal.
- **Be careful not to damage front housing.**

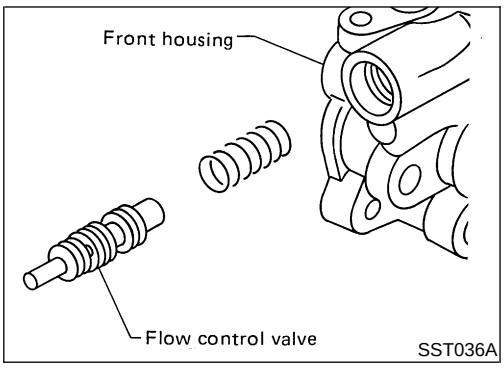

3) Remove connector and flow control valve with spring.
- **Be careful not to drop control valve.**

Inspection

NEST0039

- If pulley is cracked or deformed, replace it.
- If fluid leak is found around the pulley shaft, replace the oil seal.

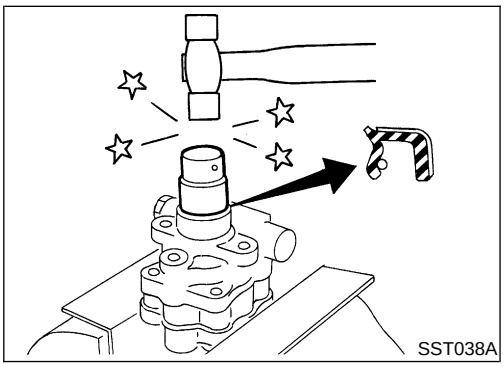

Assembly

NEST0040

Assemble oil pump, noting the following instructions.
- Make sure O-rings and oil seal are properly installed.
- Always install new O-rings and oil seal.
- Be careful of oil seal direction.
- Cam ring, rotor and vanes must be replaced as a set if necessary.
- When assembling, coat each part with Genuine NISSAN PSF II or equivalent.

Assembly (Cont'd)

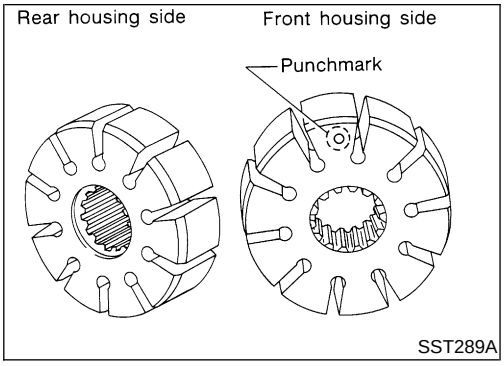

- Pay attention to the direction of rotor.

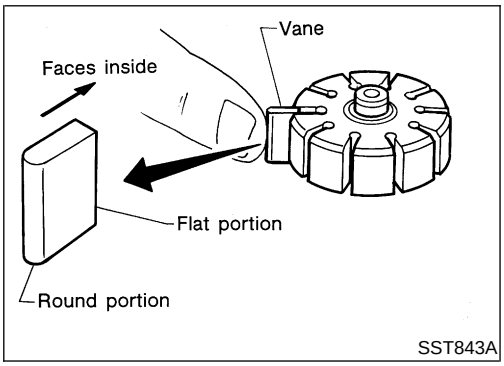

- When assembling vanes to rotor, rounded surfaces of vanes must face cam ring side.

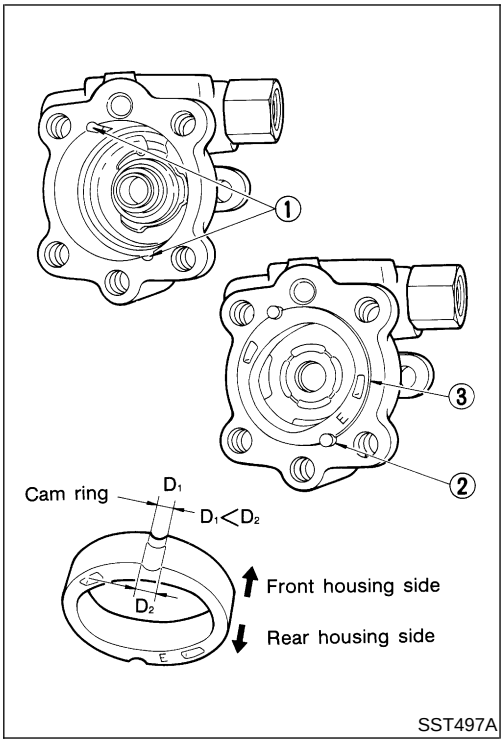

- Insert pin 2 into pin groove 1 of front housing and front side plate. Then install cam ring 3 as shown at left.

  Cam ring:

  D_1 is less than D_2

Components

NEST0041

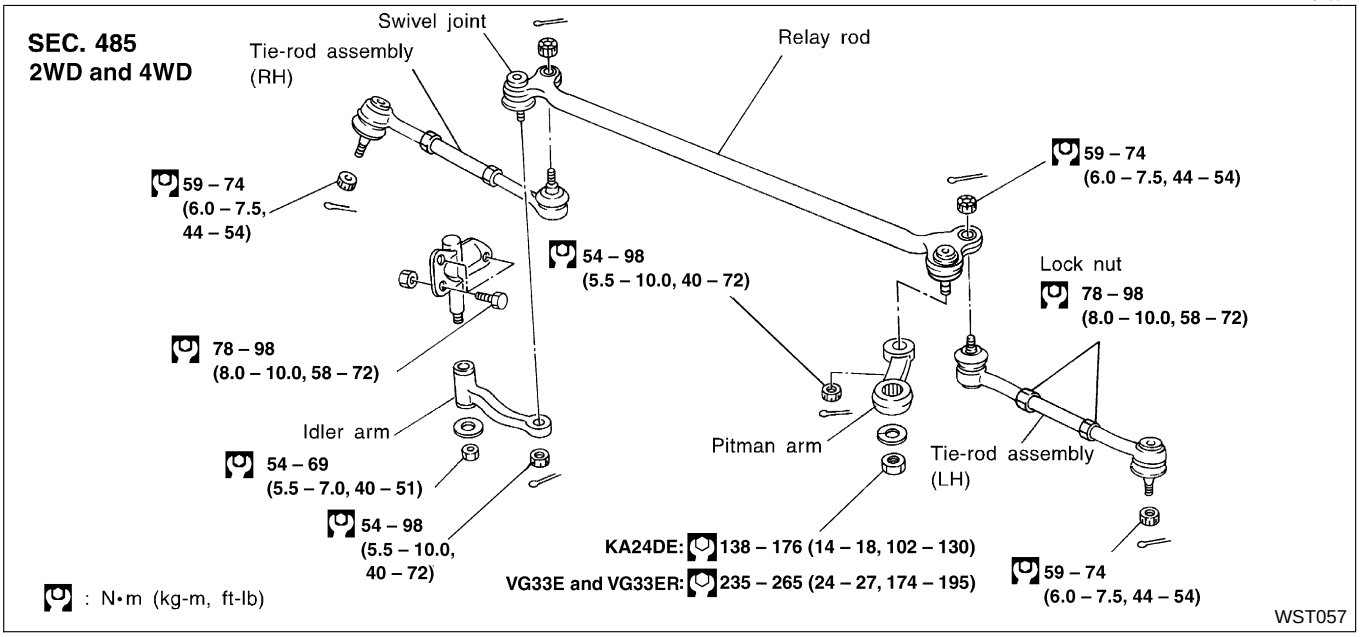

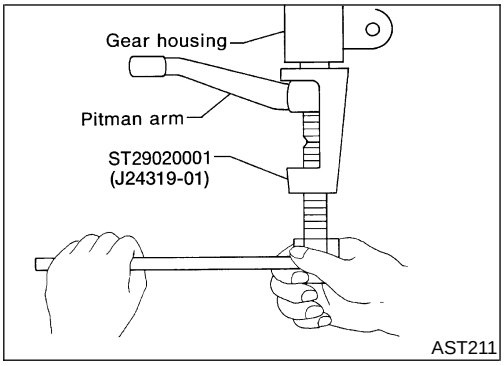

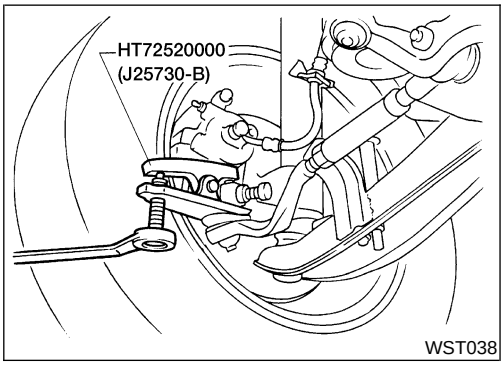

Removal and Installation

NEST0042

Remove pitman arm with Tool.

Remove tie-rod from knuckle arm with Tool.

2WD and 4WD

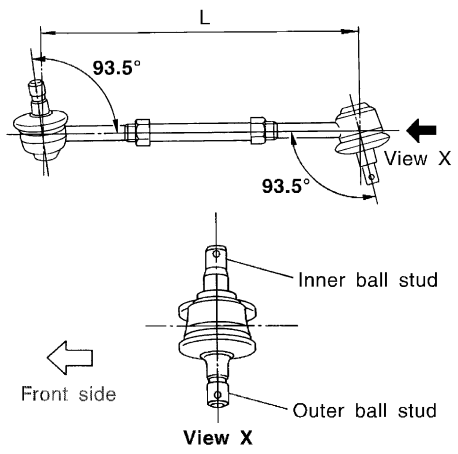

AST250

Disassembly and Assembly

NEST0043

IDLER ARM ASSEMBLY

NEST0043S01

- Apply coat of multi-purpose grease to bushing.
- Press bushing into idler body, and insert shaft of idler bracket carefully until bushing protrudes.

CROSS ROD AND TIE-ROD

NEST0043S02

1. When tie-rod ball joints and tie-rod bar are separated, adjust tie-rod length correctly.
   Adjustment should be done between ball stud centers.
2. Lock tie-rod clamp nut so that ball joint on outer ball stud is as follows with respect to that on inner ball stud.

L: Standard length

2WD KA24DE: 343.9 mm (13.54 in)

2WD and 4WD VG33E and VG33ER: 297.6 mm (11.72 in)

CAUTION:

Make sure that tie-rod bars are screwed into tie-rod tube more than 35 mm (1.38 in) 2WD KA24DE, 22 mm (0.87 in) 2WD and 4WD VG33E and VG33ER.

Ball joint

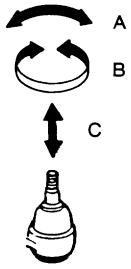

SST827C

Swivel joint

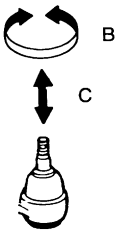

SFA817A

Inspection

=NEST0044

BALL JOINT AND SWIVEL JOINT

NEST0044S01

1. Check joints for play. If ball or swivel stud is worn and play in axial direction is excessive or joint is hard to swing, replace as a complete unit.

Swinging force (Measure point: Cotter pin hole) “A”:
Ball joint
15.7 - 147.1 N (1.6 - 15.0 kg, 3.5 - 33.1 lb)
Rotating torque “B”:
Ball joint
0.5 - 4.9 N·m (5 - 50 kg-cm, 4.3 - 43.4 in-lb)
Swivel joint
1.0 - 5.9 N·m (10 - 60 kg-cm, 8.7 - 52.1 in-lb)
Axial end play “C”:
Ball joint and swivel joint
0 mm (0 in)

2. Check condition of dust cover. If it is cracked excessively, replace as a complete unit.

CAUTION:
Be careful not to apply grease or oil to taper of joint.

IDLER ARM ASSEMBLY

NEST0044S02

- Check rubber bushing of idler arm for breakage, wear or play, and if necessary replace.
- Lubricate idler arm assembly with multi-purpose grease, if necessary.

CROSS ROD AND TIE-ROD

NEST0044S03

Check tie-rod and cross rod for breakage, bends and cracks, and replace with a new one if necessary.

FIXING LOCATION

NEST0044S04

- Check fixing location (nuts and cotter pins) for looseness, play or breakage.
- When looseness or play is found, check for wear on tapered portion of joints, gear arm or idler arm.
- When reassembling each joint, use new cotter pins.

General Specifications

NEST0045

Engine	KA24DE	VG33E and VG33ER
Steering column type (Collapsible)	Tilt or Non-tilt	
	2WD, 4WD	
Steering gear type	D600	
Turns of steering wheel on the vehicle (Lock-to-lock)	3.7	3.4
Steering gear ratio	16.5	17.0

Steering Wheel

NEST0046

Unit: mm (in)

Steering wheel axial play	0 (0)
Steering wheel play	35 (1.38) or less

Steering Column

NEST0047

Unit: mm (in)

Dimension “L”	863.1 - 864.7 (33.980 - 34.043)

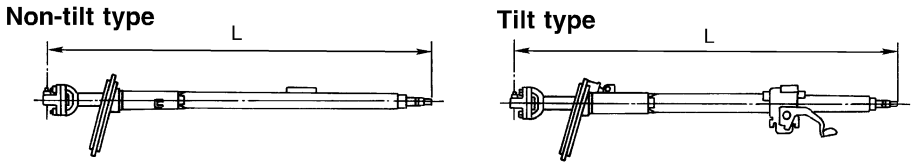

SST841C

Power Steering Gear

NEST0049

MODEL: D600

NEST0049S03

Steering wheel turning force (at 360° from neutral position and circumference of steering wheel)		39 N (4 kg, 9 lb) or less
Oil pump pressure		7,649 - 8,238 kPa (78 - 84 kg/cm^2, 1,109 - 1,194 psi) at idling
Fluid capacity		Approximately 1,000 - 1,100 mℓ (35.2 - 38.7 Imp fl oz)
Normal operating temperature		60 - 80 °C (140 - 176 °F)
Steering gear turning torque	360° position from straight-ahead position	0.20 - 0.90 N·m (2.0 - 9.2 kg-cm, 1.8 - 8.0 in-lb)
	Straight-ahead position (As compared with steering wheel turned 360°)	0.45 - 0.80 N·m (4.6 - 8.2 kg-cm, 4.0 - 7.1 in-lb) higher
	Maximum turning torque	1.7 N·m (17.3 kg-cm, 15.0 in-lb)
Backlash at pitman arm top end (in straight- ahead position)		0 - 0.1 mm (0 - 0.004 in)
End play (at sector shaft end in neutral position)		0.1 mm (0.004 in) or less

Steering Linkage

NEST0050

Applied model		2WD, 4WD
Relay-rod swivel joint	Rotating torque	1.0 - 5.9 N·m (10 - 60 kg-cm, 8.7 - 52.1 in-lb)
	Axial end play	0 mm (0 in)
Tie-rod & relay-rod ball joint	Swinging force at cotter pin hole	15.7 - 147.1 N (1.6 - 15.0 kg, 3.5 - 33.1 lb)
	Rotating torque	0.5 - 4.9 N·m (5 - 50 kg-cm, 4.3 - 43.4 in-lb)
	Axial end play	0 mm (0 in)
Tie-rod standard length (L)	2WD KA24DE	297.6 mm (11.72 in)
	2WD and 4WD VG33E and VG33ER	343.9 mm (13.54 in)

2WD and 4WD

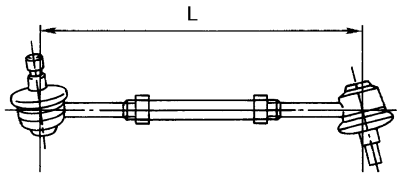

AST251

NOTES

RESTRAINT SYSTEM

SECTION RS

CONTENTS

SEAT BELTS 3
Precautions 3
SUPPLEMENTAL RESTRAINT SYSTEM (SRS) "AIR BAG" AND "SEAT BELT PRE-TENSIONER" 3
PRECAUTIONS FOR SEAT BELT SERVICE 3
AFTER A COLLISION 3
Front Seat Belt 5
REMOVAL AND INSTALLATION 5
Rear Seat Belt 7
REMOVAL AND INSTALLATION 7
Seat Belt Inspection 9
AFTER A COLLISION 9
PRELIMINARY CHECKS 9
SEAT BELT RETRACTOR ON-VEHICLE CHECK 10
SEAT BELT RETRACTOR OFF-VEHICLE CHECK 11
Tether Anchor Plate 12
REMOVAL AND INSTALLATION 12
SUPPLEMENTAL RESTRAINT SYSTEM (SRS) 13
Precautions 13
SUPPLEMENTAL RESTRAINT SYSTEM (SRS) "AIR BAG" AND "SEAT BELT PRE-TENSIONER" 13
PRECAUTIONS FOR SRS "AIR BAG" AND "SEAT BELT PRE-TENSIONER" SERVICE 13
AFTER A COLLISION 14
WIRING DIAGRAMS AND TROUBLE DIAGNOSIS 14
Preparation 15
SPECIAL SERVICE TOOLS 15
Description 16
PASSENGER AIR BAG DEACTIVATION SWITCH 16
SRS Component Parts Location 17
Maintenance Items 18
Diagnosis Sensor Unit 19
REMOVAL AND INSTALLATION 19
Seat Belt Pre-tensioner 20
REMOVAL AND INSTALLATION 20
Driver Air Bag Module and Spiral Cable 20
REMOVAL AND INSTALLATION 20
REMOVAL 20
INSTALLATION 22
Front Passenger Air Bag Module 23
REMOVAL 23
INSTALLATION 25
Passenger Air Bag Deactivation Switch 25
REMOVAL 25
INSTALLATION 26
Passenger Air Bag Deactivation Switch Lock Cylinder 26
REMOVAL 26
INSTALLATION 26
Passenger Air Bag Deactivation Switch Indicator 27
REMOVAL 27
INSTALLATION 27
Disposal of Air Bag Module and Seat Belt Pre-tensioner 27
CHECKING DEPLOYMENT TOOL 28
DEPLOYMENT PROCEDURES FOR AIR BAG MODULE (OUTSIDE OF VEHICLE) 28
DEPLOYMENT OF AIR BAG MODULE AND SEAT BELT PRE-TENSIONER WHILE MOUNTED IN VEHICLE 32
DISPOSING OF AIR BAG MODULE AND SEAT BELT PRE-TENSIONER 32
Trouble Diagnoses Introduction 33
DIAGNOSIS FUNCTION 33
DIAGNOSIS MODE FOR CONSULT-II 33
(H) HOW TO CHANGE SELF-DIAGNOSIS MODE WITH CONSULT-II 35
(X) HOW TO CHANGE SELF-DIAGNOSIS MODE WITHOUT CONSULT-II 35
HOW TO ERASE SELF-DIAGNOSIS RESULTS 36
How to Perform Trouble Diagnoses for Quick and Accurate Repair 37
INFORMATION FROM CUSTOMER 37
PRELIMINARY CHECK 37
WORK FLOW 38
Circuit Diagram 39
Wiring Diagram - SRS - 40
Passenger Air Bag Deactivation Switch Indicator Operation Check 42
SRS Operation Check 43
DIAGNOSTIC PROCEDURE 1 43
(H) Trouble Diagnoses with CONSULT-II 43

CONTENTS (Cont'd)

DIAGNOSTIC PROCEDURE 2 43
DIAGNOSTIC PROCEDURE 3 48
DIAGNOSTIC PROCEDURE 4 (CONTINUED FROM DIAGNOSTIC PROCEDURE 2) 49
DIAGNOSTIC PROCEDURE 5 50
⊗ Trouble Diagnoses without CONSULT-II 54
DIAGNOSTIC PROCEDURE 6 54
DIAGNOSTIC PROCEDURE 7 58
DIAGNOSTIC PROCEDURE 8 (CONTINUED FROM DIAGNOSTIC PROCEDURE 6) 59
Trouble Diagnoses: "AIR BAG" Warning Lamp Does Not Turn Off 60
DIAGNOSTIC PROCEDURE 9 60
Trouble Diagnoses: "AIR BAG" Warning Lamp Does Not Turn On 62
DIAGNOSTIC PROCEDURE 10 62
Collision Diagnosis 63
SRS INSPECTION 63

Precautions

SUPPLEMENTAL RESTRAINT SYSTEM (SRS) “AIR BAG” AND “SEAT BELT PRE-TENSIONER”

NERS0001

The Supplemental Restraint System such as “AIR BAG” and “SEAT BELT PRE-TENSIONER” used along with a seat belt, helps to reduce the risk or severity of injury to the driver and front passenger in a frontal collision. The Supplemental Restraint System consists of air bag modules (located in the center of the steering wheel and in the instrument panel on the passenger side), seat belt pre-tensioners, a diagnosis sensor unit, warning lamp, wiring harness, and spiral cable.

The vehicle (except Crew Cab model) is equipped with a passenger air bag deactivation switch. Because no rear seat exists where a rear-facing child restraint can be placed, the switch is designed to turn off the passenger air bag so that a rear-facing child restraint can be used in the front passenger seat. The switch is located in the center of the instrument panel, near the ashtray. When the switch is turned to the ON position, the passenger air bag is enabled and could inflate in a frontal collision. When the switch is turned to the OFF position, the passenger air bag is disabled and will not inflate in a frontal collision. A passenger air bag OFF indicator on the instrument panel lights up when the passenger air bag is switched OFF. The driver air bag always remains enabled and is not affected by the passenger air bag deactivation switch.

WARNING:

- **To avoid rendering the SRS inoperative, which could increase the risk of personal injury or death in the event of a collision which would result in air bag inflation, all maintenance should be performed by an authorized NISSAN dealer.**
- **Improper maintenance, including incorrect removal and installation of the SRS, can lead to personal injury caused by unintentional activation of the system.**
- **Do not use electrical test equipment on any circuit related to the SRS unless instructed to in this Service Manual. Spiral cable and wiring harnesses (except “SEAT BELT PRE-TENSIONER”) covered with yellow insulation either just before the harness connectors or for the complete harness are related to the SRS.**
- **The vehicle (except Crew Cab model) is equipped with a passenger air bag deactivation switch which can be operated by the customer. When the passenger air bag is switched OFF, the passenger air bag is disabled and will not inflate in a frontal collision. When the passenger air bag is switched ON, the passenger air bag is enabled and could inflate in a frontal collision. After SRS maintenance or repair, make sure the passenger air bag deactivation switch is in the same position (ON or OFF) as when the vehicle arrived for service.**

PRECAUTIONS FOR SEAT BELT SERVICE

NERS0002

CAUTION:

- **Before removing the seat belt pre-tensioner assembly, turn the ignition switch OFF, disconnect both battery cables and wait at least 3 minutes.**
- **After replacing or reinstalling seat belt pre-tensioner assembly, or reconnecting seat belt pre-tensioner assembly connector, ensure entire SRS operates properly. Refer to “SRS Operation Check”, RS-43.**
- **Do not disassemble buckle or seat belt assembly.**
- **Do not reuse seat belt anchor bolts after removal. Replace with new ones.**
- **Never oil tongue and buckle.**
- **If any component (including anchor bolts) of seat belt assembly is questionable, do not repair. Replace the whole seat belt assembly.**
- **If webbing is cut, frayed, or damaged, replace seat belt assembly.**
- **When replacing seat belt assembly, use a genuine NISSAN seat belt assembly.**

AFTER A COLLISION

NERS0044

WARNING:

Inspect all seat belt assemblies including retractors, buckles and attaching hardware after any collision.

NISSAN recommends that all seat belt assemblies in use during a collision be replaced unless the collision was minor and the belts show no damage and continue to operate properly. Failure to do so could result in serious personal injury in an accident. Seat belt assemblies not in use during a collision should also be replaced if either damage or improper operation is noted. Seat belt assemblies which are equipped with pre-tensioners should be replaced even if the seat belts are not in use during a frontal collision in which the air bags are deployed.

Precautions (Cont'd)

Replace any seat belt assembly if:

- The seat belt was in use at the time of a collision (except after minor collisions when the belts, retractors and buckles show no damage and continue to operate properly).
- The seat belt was damaged in an accident (i.e., torn webbing, bent retractor or guide, etc.).
- The seat belt attaching point was damaged in an accident. Inspect the seat belt attaching area for damage or distortion and repair as necessary before installing a new seat belt assembly.
- Anchor bolts are deformed or worn out.
- The seat belt assembly is equipped with a pre-tensioner, even if the seat belt is not in use during a collision in which the air bags are deployed.

Front Seat Belt

REMOVAL AND INSTALLATION

=NERS0003

NERS0003S01

Bucket Seats

Slide the seat all the way forward and tilt the seatback toward the front.

1. Remove buckle. For driver side, disconnect seat belt switch connector.
2. Remove floor anchor bolts.
3. Remove adjuster cover and upper guide loop anchor bolt.
4. Remove center pillar lower and upper garnishes. Refer to ***BT-24***, “SIDE AND FLOOR TRIM”.
5. Remove two adjuster bolts and adjuster assembly.
6. Remove retractor anchor bolt and screw.
7. Remove retractor.
8. Disconnect seat belt pre-tensioner connector.

SEC. 868

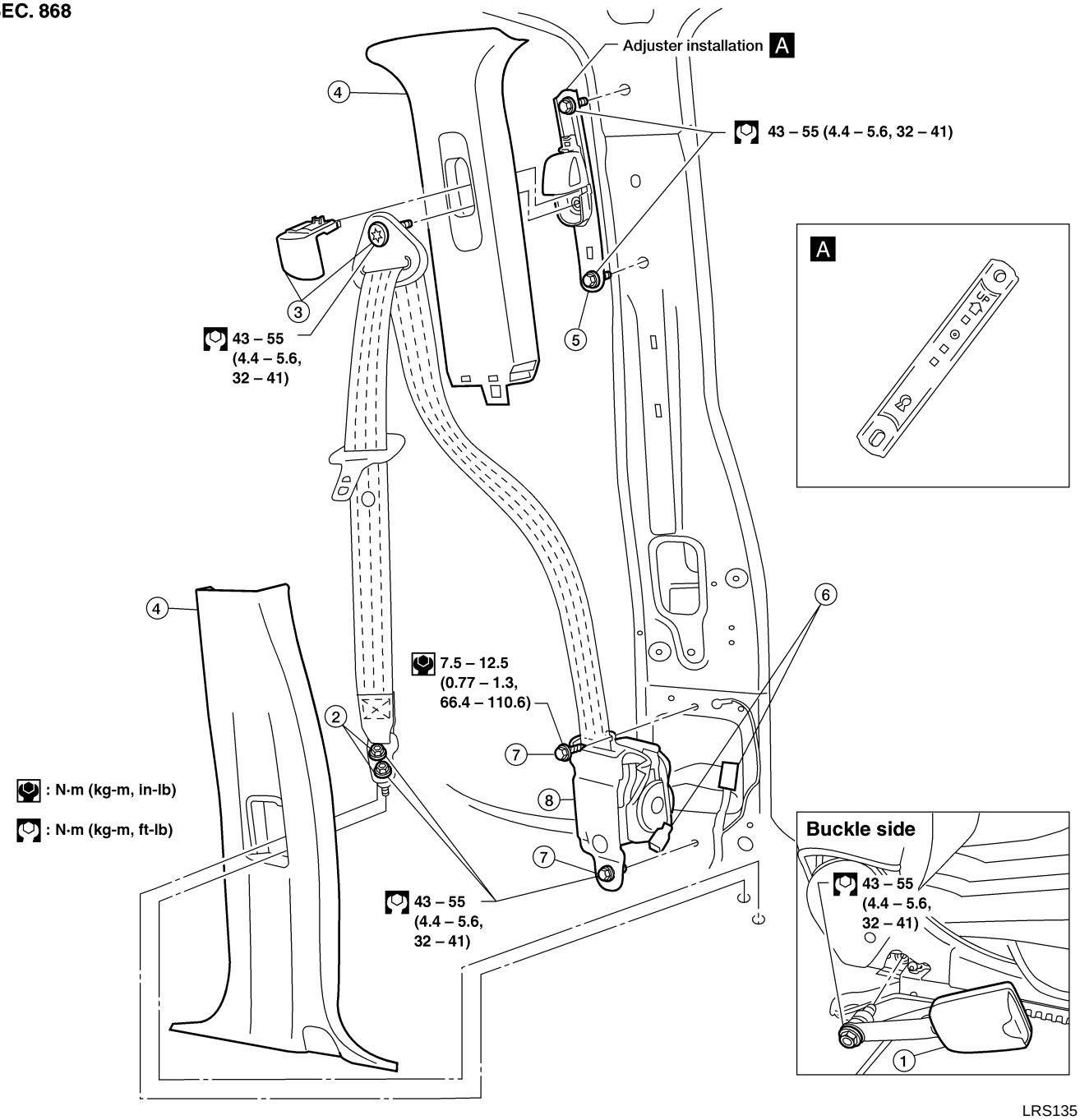

LRS135

Front Seat Belt (Cont'd)

Front Center Seat Belt (Bench and Split Bench Seats)

=NERS0003S02

Bench seat shown, split bench similar

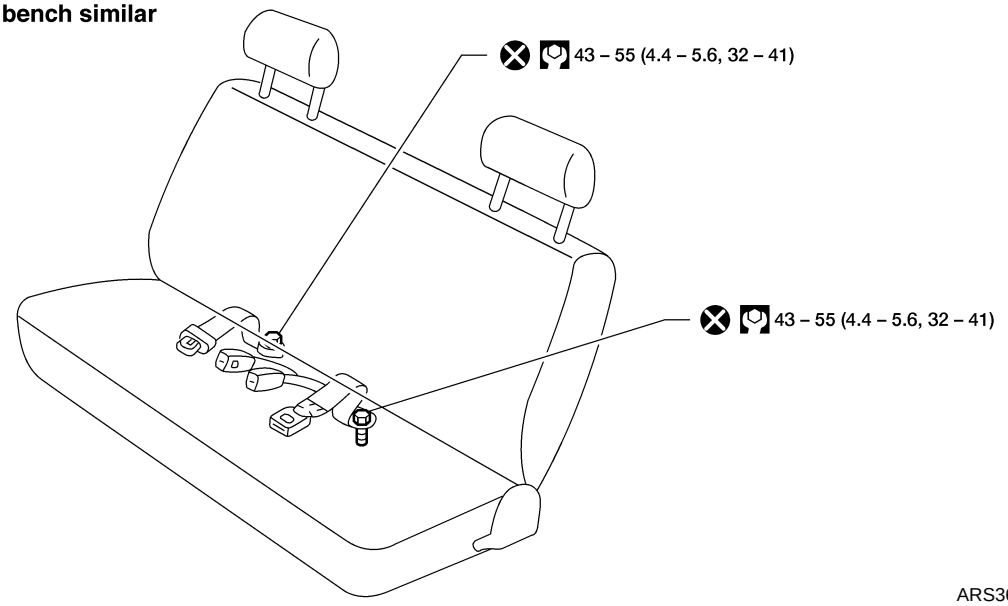

: N·m (kg-m, ft-lb)

ARS363

Rear Seat Belt

REMOVAL AND INSTALLATION

=NERS0004

King Cab Models

NERS0004S01

1. Remove underseat storage.
2. Remove buckle.
3. Remove seat belt anchor bolt.

SEC. 869

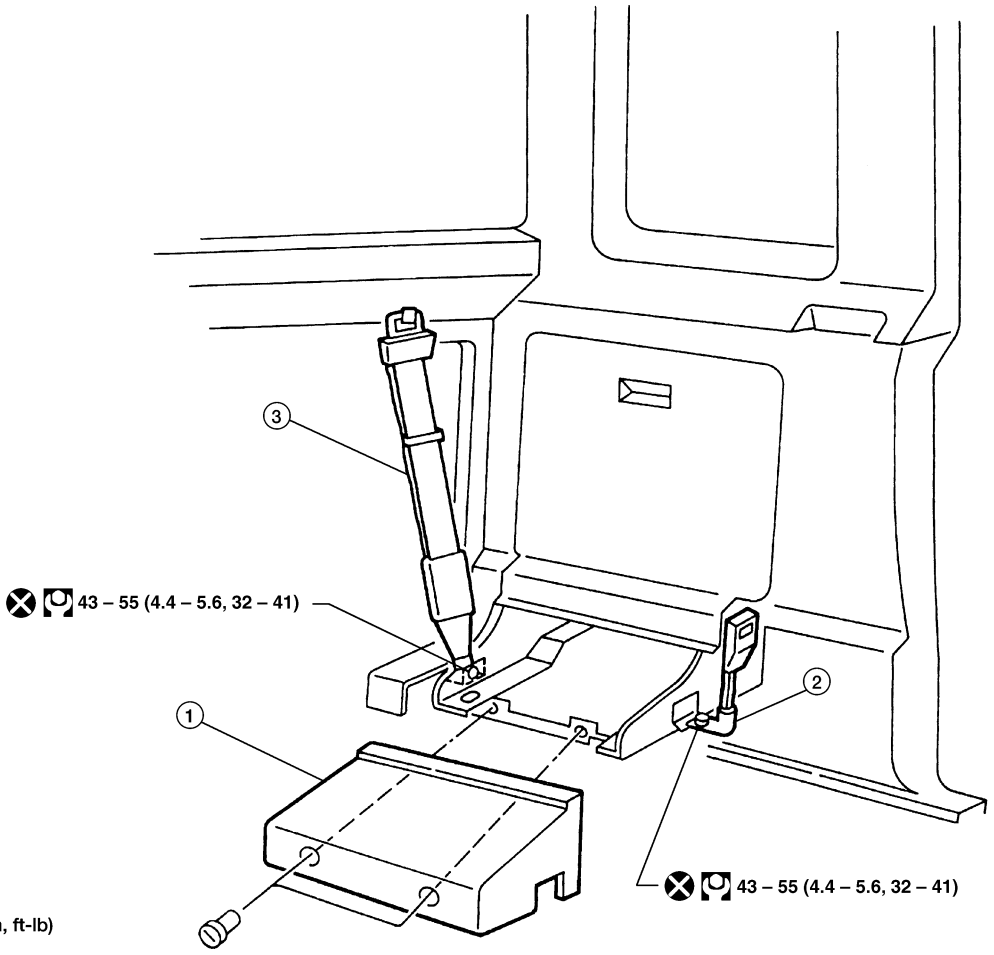

Rear Seat Belt (Cont'd)

Crew Cab Models

=NERS0004S02

1. Remove lower seat belt anchor bolt.
2. Remove shoulder anchor cover.
3. Remove shoulder anchor bolt.
4. Remove retractor bolt.
5. Remove retractor.
6. Remove anchor bolts.
7. Remove seat belt assembly.

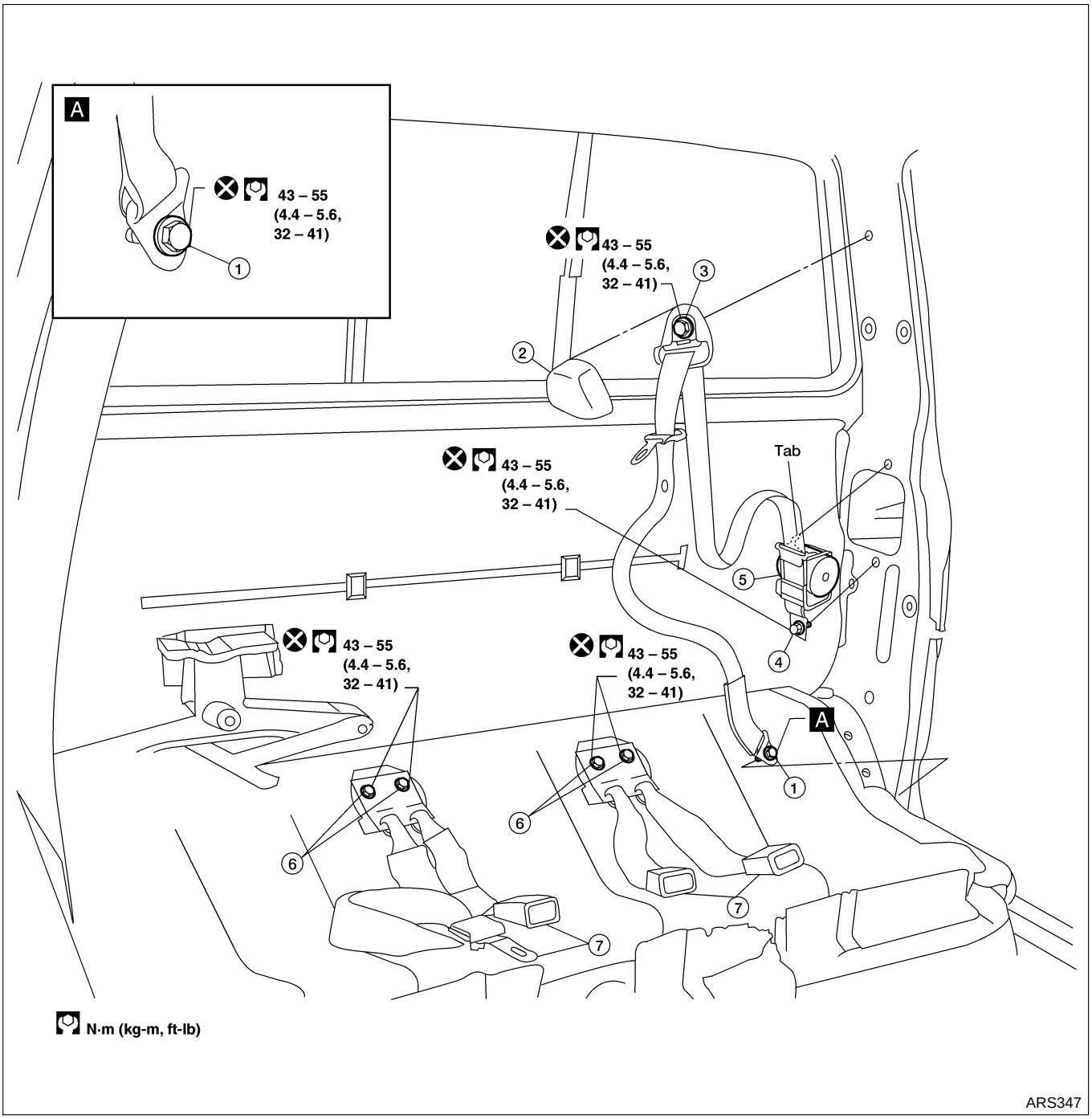

Seat Belt Inspection

=NERS0029

AFTER A COLLISION

NERS0029S01

WARNING:

Inspect all seat belt assemblies including retractors and attaching hardware after any collision. NISSAN recommends that all seat belt assemblies in use during a collision be replaced unless the collision was minor and the belts show no damage and continue to operate properly. Failure to do so could result in serious personal injury in an accident. Seat belt assemblies not in use during a collision should also be replaced if either damage or improper operation is noted. Seat belt assemblies which are equipped with pre-tensioners should be replaced even if the seat belts are not in use during a frontal collision in which the air bags are deployed.

Replace any seat belt assembly or anchor bolt if:

- The seat belt was in use at the time of a collision (except after minor collisions when the belts, retractors and buckles show no damage and continue to operate properly.)
- The seat belt was damaged in an accident (i.e. torn webbing, bent retractor or guide, etc.).
- The seat belt attaching point was damaged in an accident. Inspect the seat belt attaching area for damage or distortion and repair as necessary before installing a new seat belt assembly.
- The seat belt assembly is equipped with a pre-tensioner, even if the seat belt is not in use during a collision in which the air bags are deployed.

PRELIMINARY CHECKS

NERS0029S02

1. Check the seat belt warning lamp/chime for proper operation as follows:

a. Switch ignition ON. With driver seat belt unfastened, the seat belt warning lamp should illuminate. Also, the seat belt warning chime should sound for about seven seconds.

b. Fasten driver seat belt. The seat belt warning lamp should go out and the chime (if sounding) should stop.

c. If the “AIR BAG” warning lamp is blinking, conduct self-diagnosis using CONSULT-II and “AIR BAG” warning lamp. Refer to “SRS Operation Check”, RS-43.

2. Check that the seat belt retractor, seat belt anchor and buckle bolts are securely attached.

3. Check the shoulder seat belt guide and shoulder belt height adjuster for front seats. Ensure guide swivels freely and that belt lays flat and does not bind in guide. Ensure height adjuster operates properly and holds securely.

4. Check retractor operation:

a. Fully extend the seat belt webbing and check for twists, tears or other damage.

b. Allow the seat belt to retract. Ensure that belt returns smoothly and completely into the retractor.
If the seat belt does not return smoothly, wipe the inside of the loops with a clean paper cloth etc. Dirt built up in the loops of the upper anchors can cause the seat belts to retract slowly.

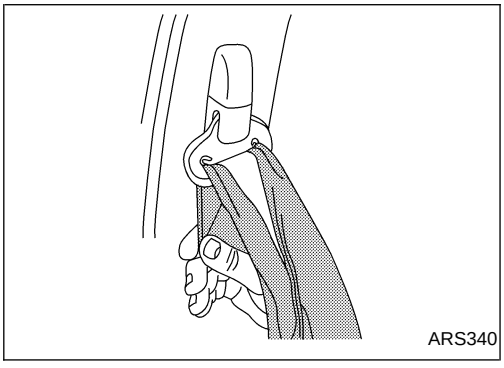
ARS340

c. Fasten the seat belt. Pull firmly on belt and buckle to ensure belt remains latched. Unfasten seat belt. Ensure belt releases freely and buckle button returns to original position.

5. For non-retractable seat belts, check that the seat belts are accessible. Check seat belt webbing for twists, tears or other damage. Fasten the seat belt. Pull firmly on belt and buckle to ensure belt remains latched. Unfasten seat belts. Ensure belt releases freely and buckle button returns to original position.

6. Repeat steps above as necessary to check the other seat belts.

SEAT BELT RETRACTOR ON-VEHICLE CHECK

=NERS0029S03

Emergency Locking Retractors (ELR) and Automatic Locking Retractors (ALR)

NERS0029S0301

NOTE:

All seat belt retractors are of the Emergency Locking (ELR) type. In an emergency (sudden stop) the retractor will lock and prevent the belt from extending any further. All outboard 3-point type seat belt retractors except the driver seat belt also have an Automatic Locking (ALR) mode. The ALR mode (also called child restraint mode) is used when installing child seats in outboard seating positions. The ALR mode is activated when the seat belt is fully extended. When the belt is then retracted partially, the ALR mode automatically locks the seat belt in a specific position so the belt cannot be extended any further. To cancel the ALR mode, allow the seat belt to fully wind back into the retractor.

Check the seat belt retractors using the following test(s) to determine if a retractor assembly is operating properly.

ELR Function Stationary Check

NERS0029S0302

Grasp the shoulder belt and pull forward quickly. The retractor should lock and prevent the belt from extending further.

ALR Function Stationary Check

NERS0029S0304

1. Pull out entire length of seat belt from retractor until a click is heard.
2. Retract the belt partially. A clicking noise should be heard as the belt retracts, indicating that the retractor is in the Automatic Locking (ALR) mode.
3. Grasp the seat belt and try to pull out of retractor. The belt must lock and not extend any further. If NG, replace the retractor assembly.
4. Allow the entire length of the belt to retract to cancel the automatic locking mode.

ELR Function Moving Check (all outboard seating positions)

NERS0029S0303

WARNING:

Perform the following test in a safe, open area clear of other vehicles and obstructions (for example, a large, empty parking lot). Road surface must be paved and dry. DO NOT perform the following test on wet roads, gravel roads, public streets or highways. This could result in an accident and serious personal injury. The driver and passenger must be prepared to brace themselves in the event the retractor does not lock.

1. Fasten driver seat belt. Buckle a passenger into the seat for the belt that is to be tested.
2. Proceed to the designated safe area.
3. Drive the vehicle at approximately 16 km/h (10 mph). Notify any passengers of a pending sudden stop and the driver and passenger must be prepared to brace themselves in the event the retractor does not lock. Apply brakes firmly and make a very hard stop.

During stop, seat belts should lock and not extend. If the seat belt retractor assembly does not lock, perform the retractor off-vehicle check.

SEAT BELT RETRACTOR OFF-VEHICLE CHECK

=NERS0029S04

1. Remove the seat belt retractor assembly.
2. Slowly pull out belt while tilting the retractor assembly forward from the mounted position as shown in the illustration.

15 degrees or less tilt: Belt can be pulled out.

35 degrees or more tilt: Belt locks and cannot be pulled out.

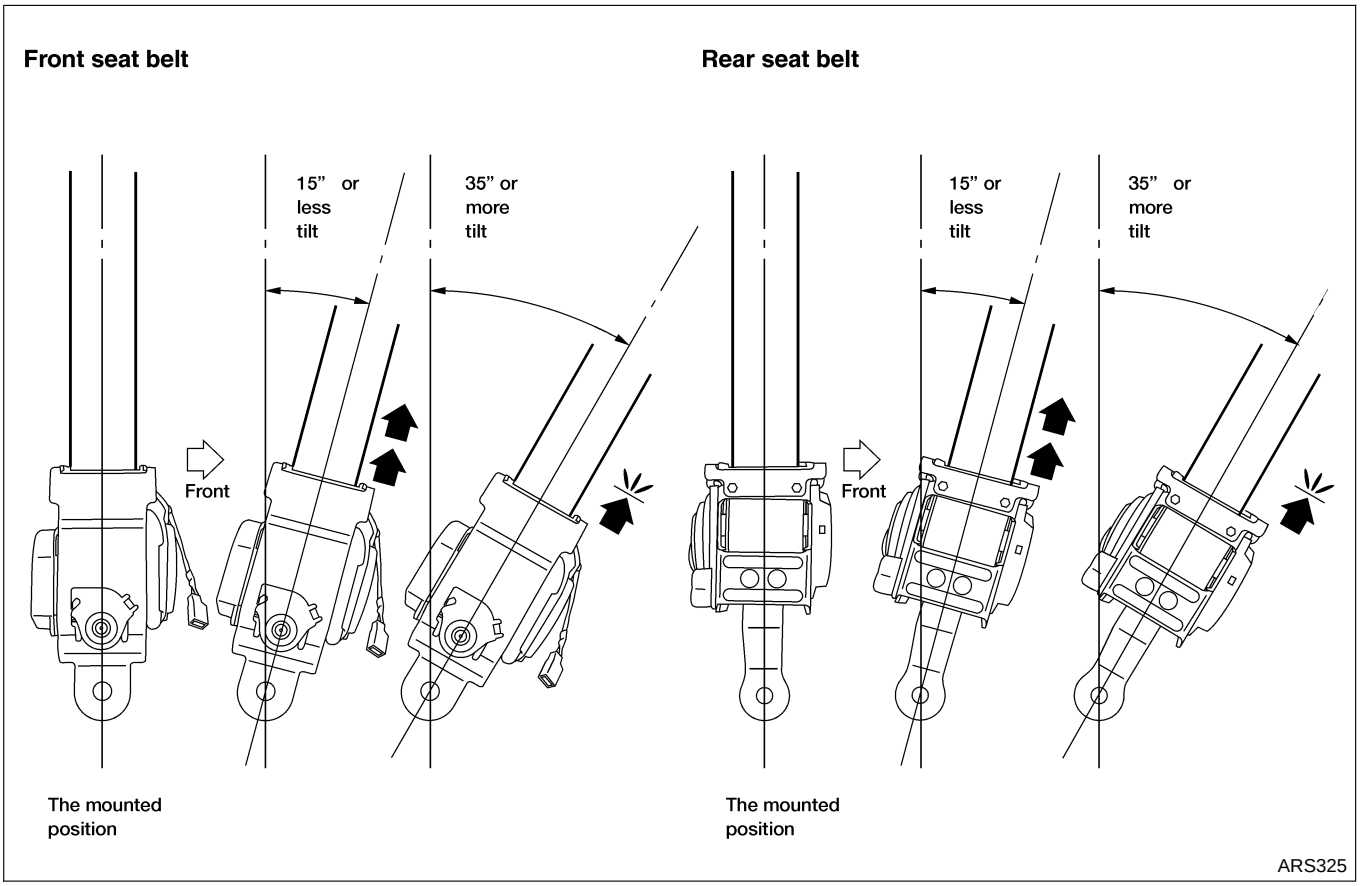

If NG, replace the retractor assembly.

Tether Anchor Plate

NERS0053

REMOVAL AND INSTALLATION

NERS0053S01

King Cab Models

NERS0053S0101

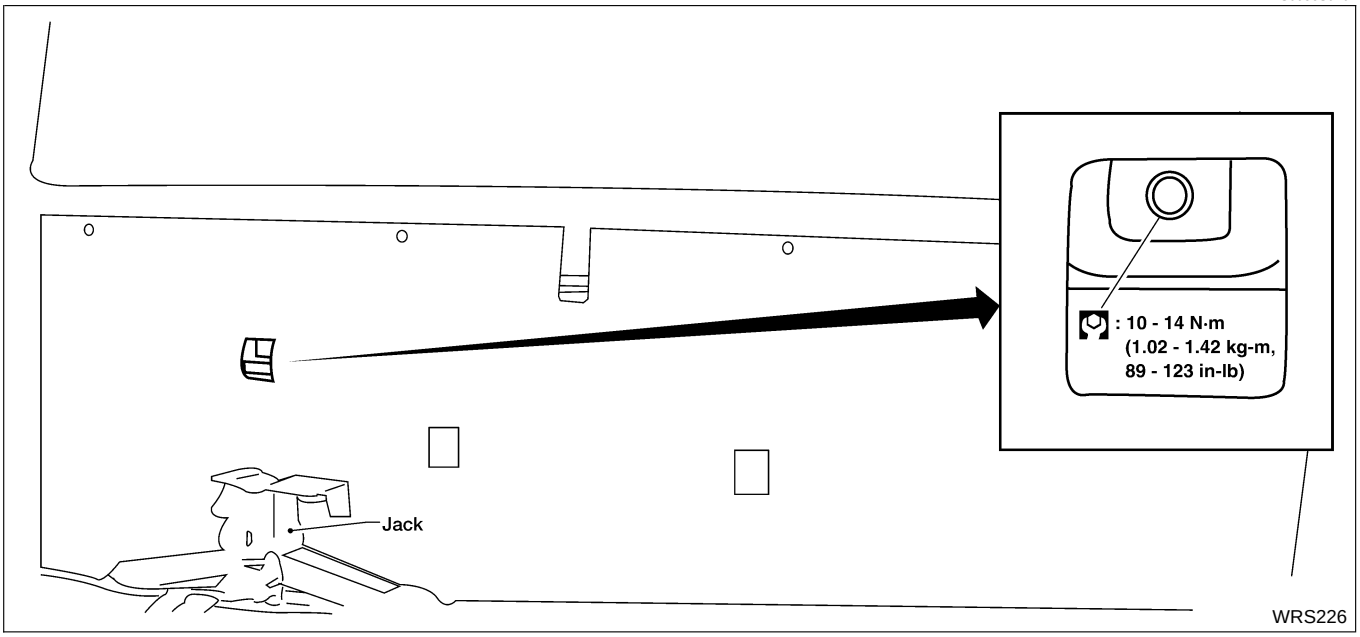

CAUTION:

Replace anchor bolts if they are deformed or worn out.

Crew Cab Models

NERS0053S0102

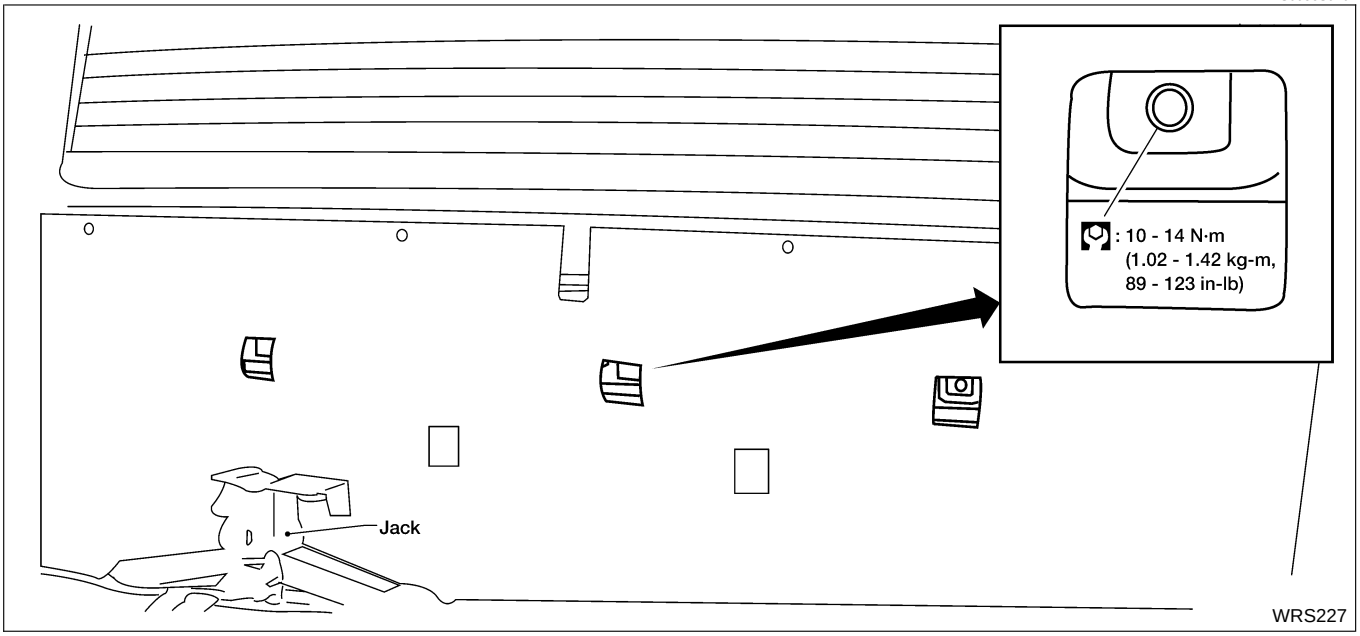

CAUTION:

Replace anchor bolts if they are deformed or worn out.

Precautions

SUPPLEMENTAL RESTRAINT SYSTEM (SRS) “AIR BAG” AND “SEAT BELT PRE-TENSIONER”

NERS0005

The Supplemental Restraint System such as “AIR BAG” and “SEAT BELT PRE-TENSIONER” used along with a seat belt, helps to reduce the risk or severity of injury to the driver and front passenger in a frontal collision. The Supplemental Restraint System consists of air bag modules (located in the center of the steering wheel and in the instrument panel on the passenger side), seat belt pre-tensioners, a diagnosis sensor unit, warning lamp, wiring harness, and spiral cable.

The vehicle (except Crew Cab model) is equipped with a passenger air bag deactivation switch. Because no rear seat exists where a rear-facing child restraint can be placed, the switch is designed to turn off the passenger air bag so that a rear-facing child restraint can be used in the front passenger seat. The switch is located in the center of the instrument panel, near the ashtray. When the switch is turned to the ON position, the passenger air bag is enabled and could inflate in a frontal collision. When the switch is turned to the OFF position, the passenger air bag is disabled and will not inflate in a frontal collision. A passenger air bag OFF indicator on the instrument panel lights up when the passenger air bag is switched OFF. The driver air bag always remains enabled and is not affected by the passenger air bag deactivation switch.

WARNING:

- **To avoid rendering the SRS inoperative, which could increase the risk of personal injury or death in the event of a collision which would result in air bag inflation, all maintenance should be performed by an authorized NISSAN dealer.**
- **Improper maintenance, including incorrect removal and installation of the SRS, can lead to personal injury caused by unintentional activation of the system.**
- **Do not use electrical test equipment on any circuit related to the SRS unless instructed to in this Service Manual. Spiral cable and wiring harnesses (except “SEAT BELT PRE-TENSIONER”) covered with yellow insulation either just before the harness connectors or for the complete harness are related to the SRS.**
- **The vehicle (except Crew Cab model) is equipped with a passenger air bag deactivation switch which can be operated by the customer. When the passenger air bag is switched OFF, the passenger air bag is disabled and will not inflate in a frontal collision. When the passenger air bag is switched ON, the passenger air bag is enabled and could inflate in a frontal collision. After SRS maintenance or repair, make sure the passenger air bag deactivation switch is in the same position (ON or OFF) as when the vehicle arrived for service.**

PRECAUTIONS FOR SRS “AIR BAG” AND “SEAT BELT PRE-TENSIONER” SERVICE

NERS0006

- Do not use a circuit tester to check SRS circuits unless instructed to in this Service Manual.
- Before servicing the SRS, turn ignition switch OFF, disconnect both battery cables and wait at least 3 minutes.
  For approximately 3 minutes after the cables are removed, it is still possible for the air bags and seat belt pre-tensioners to deploy. Therefore, do not work on any SRS connectors or wires until at least 3 minutes have passed.
- Air bag diagnosis sensor unit must always be installed with forward mark “⇐” pointing toward the front of the vehicle for proper operation. Also check air bag diagnosis sensor unit for deformities, dents, cracks and rust before installation and replace as required.
- The spiral cable must be aligned in the neutral position since its rotations are limited. Do not rotate steering column while steering gear is removed to avoid damaging spiral cable.
- Handle air bag module carefully. Always place it with the pad side facing upward.
- Conduct Self-diagnosis to check entire SRS for proper function after replacing any components. Refer to “SRS Operation Check”, “TROUBLE DIAGNOSES — Supplemental Restraint System (SRS)”, RS-43.
- After air bag inflates, the instrument panel assembly should be replaced if damaged.

AFTER A COLLISION

=NERS0045

WARNING:

Inspect all seat belt assemblies including retractors, buckles and attaching hardware after any collision.

NISSAN recommends that all seat belt assemblies in use during a collision be replaced unless the collision was minor and the belts show no damage and continue to operate properly. Failure to do so could result in serious personal injury in an accident. Seat belt assemblies not in use during a collision should also be replaced if either damage or improper operation is noted. Seat belt assemblies which are equipped with pre-tensioners should be replaced even if the seat belts are not in use during a frontal collision in which the air bags are deployed.

Replace any seat belt assembly if:

- The seat belt was in use at the time of a collision (except after minor collisions when the belts, retractors and buckles show no damage and continue to operate properly).
- The seat belt was damaged in an accident (i.e., torn webbing, bent retractor or guide, etc.).
- The seat belt attaching point was damaged in an accident. Inspect the seat belt attaching area for damage or distortion and repair as necessary before installing a new seat belt assembly.
- Anchor bolts are deformed or worn out.
- The seat belt assembly is equipped with a pre-tensioner, even if the seat belt is not in use during a collision in which the air bags are deployed.

WIRING DIAGRAMS AND TROUBLE DIAGNOSIS

NERS0007

When you read wiring diagrams, refer to the following:

- ***GI-11***, "HOW TO READ WIRING DIAGRAMS"
- ***EL-9***, "POWER SUPPLY ROUTING" for power distribution circuit

When you perform trouble diagnosis, refer to the following:

- ***GI-34***, "How to Follow Test Groups In Trouble Diagnoses"
- ***GI-23***, "HOW TO PERFORM EFFICIENT DIAGNOSIS FOR AN ELECTRICAL INCIDENT"

Preparation

SPECIAL SERVICE TOOLS

=NERS0008

The actual shapes of Kent-Moore tools may differ from those of special service tools illustrated here.

Tool number (Kent-Moore No.) Tool name	Description	
KV991072S0 (J38381-KIT) Air bag deployment kit KV99106400 (J38381) Deployment tool	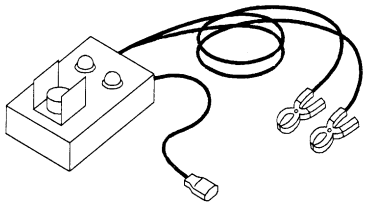 NT357	Disposing of air bag module and seat belt pre-tensioner
KV991065S0 (J38381-30) Deployment tool adapters	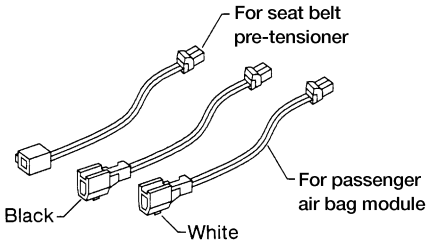 ARS269	
KV99105300 (J41246) Air bag module bracket	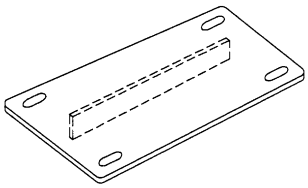 NT354	Anchoring air bag module
KV99109000 (J44230) Deployment tool adapter	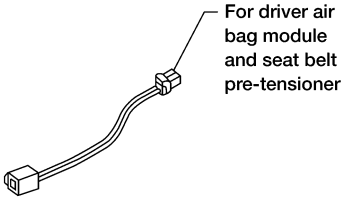 LRS138	
(J-42057) Air bag master key set	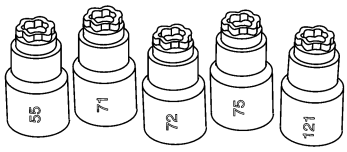 LRS210	Removing and installing accessory air bag locking bolts

*: Special tool or commercial equivalent

Description

NERS0009

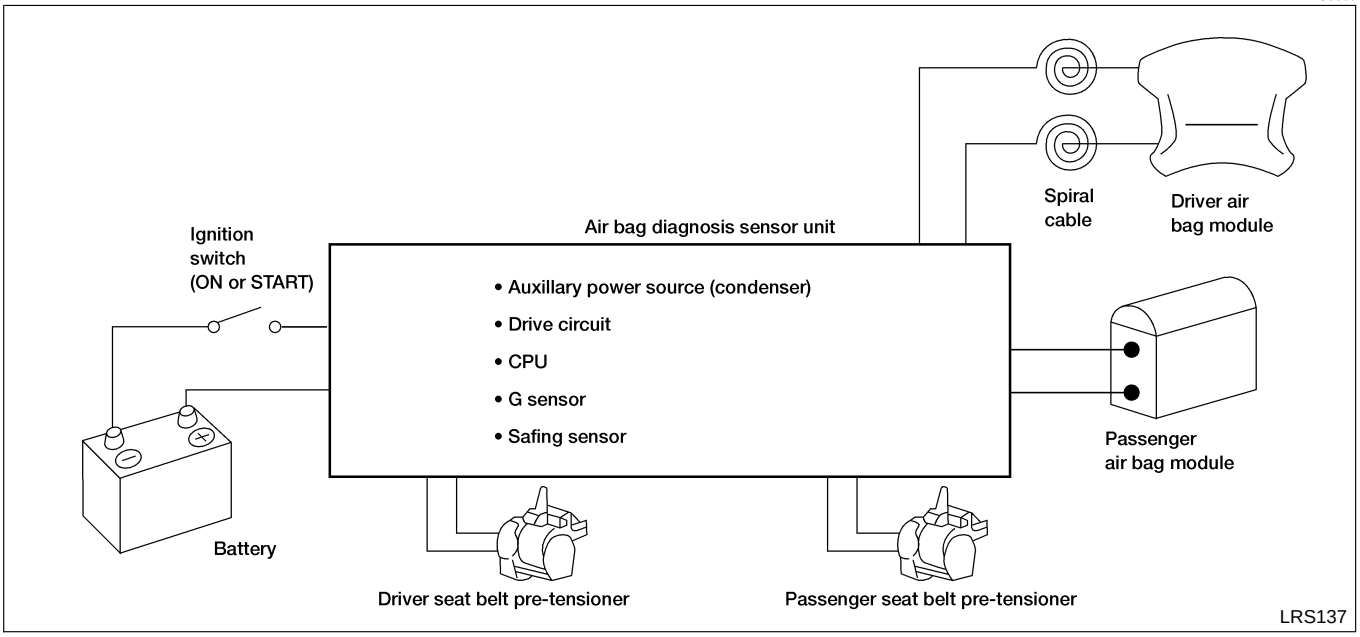

The air bags and seat belt pre-tensioners deploy if the air bag diagnosis sensor unit activates while the ignition switch is in the ON or START position.
The air bag diagnosis sensor unit will deploy the air bags and the seat belt pre-tensioners if the G sensor activates simultaneously with the safing sensor while the ignition switch is ON.

Ignition	Diagnosis sensor unit		Driver air bag	Passenger air bag	Driver seat belt pre-tensioner	Passenger seat belt pre-tensioner
	G sensor	Safing sensor				
ON	ON	ON	Deploy			
ON	—	ON	Deploy			
ON	ON	ON	Deploy			

PASSENGER AIR BAG DEACTIVATION SWITCH

NERS0009S03

The vehicle is equipped with a passenger air bag deactivation switch which can be operated by the customer. When the switch is turned to the ON position, the passenger air bag is enabled and could inflate in a frontal collision. When the switch is turned to the OFF position, the passenger air bag is disabled and will not inflate in a frontal collision.
After turning the ignition switch ON, the passenger air bag deactivation switch indicator on the instrument panel illuminates for bulb check. The indicator will remain illuminated if the passenger air bag deactivation switch is in the OFF position. If the passenger air bag deactivation switch is in the ON position, the indicator will turn off after about 7 seconds.
After SRS maintenance or repair, make sure the passenger air bag deactivation switch is in the same position (ON or OFF) as when the vehicle arrived for service.

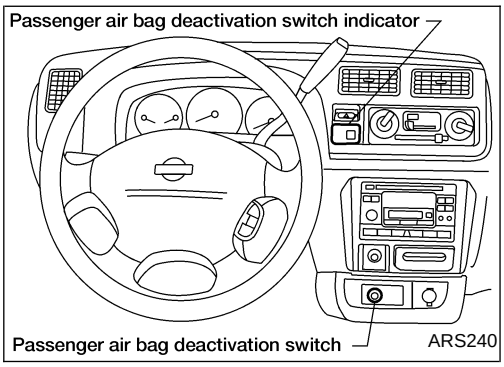

IGN OFF → ON

NERS0009S0301

Passenger air bag deactivation switch position	Passenger air bag deactivation switch indicator	Passenger air bag deployment
ON	Turns off within 7 seconds	Enabled
OFF	Remains illuminated	Disabled

SRS Component Parts Location

NERS0010

SEC. 240 • 253 • 484 • 680

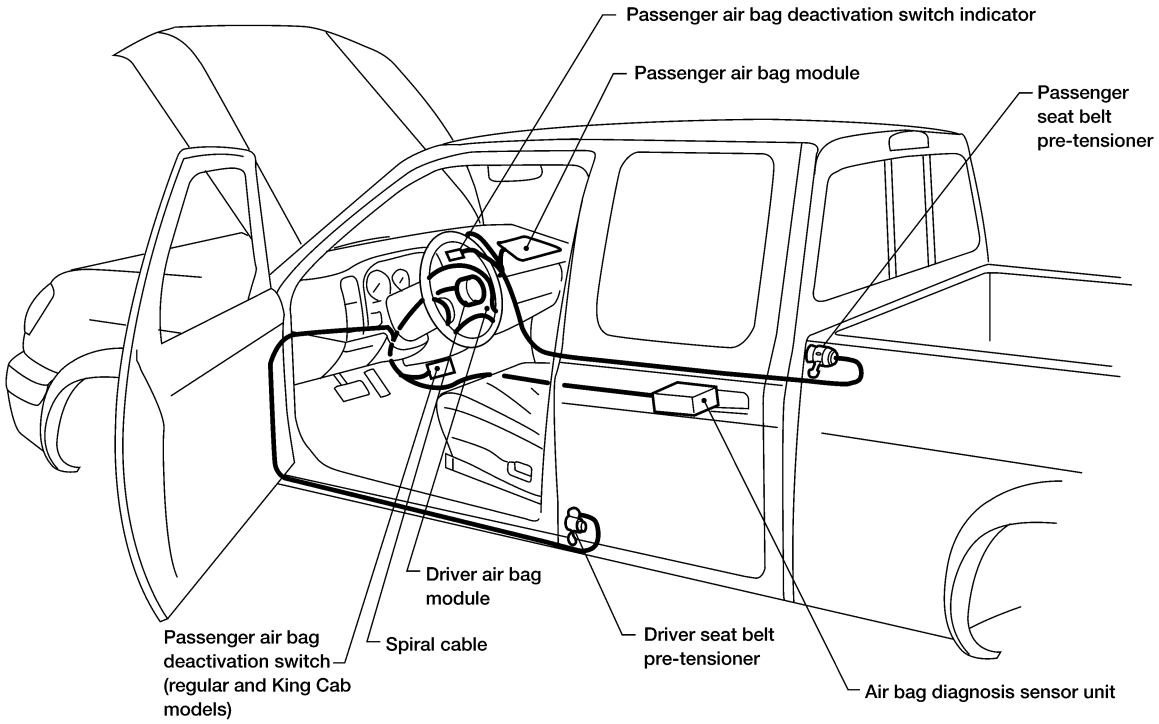

LRS171

Maintenance Items

NERS0011

CAUTION:
Do not use electrical test equipment to check any SRS circuit.

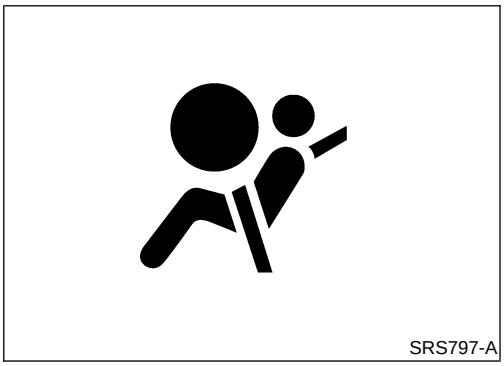
SRS797-A

1. Check “AIR BAG” warning lamp operation
   After turning ignition switch ON, “AIR BAG” and “SEAT BELT” warning lamps illuminate. The “AIR BAG” warning lamp will turn off after about 7 seconds if no malfunction is detected.
   If any of the following “AIR BAG” warning lamp conditions occur, immediately check the air bag or seat belt pre-tensioner system. Refer to “SRS Operation Check”, RS-43 for details.

- The “AIR BAG” warning lamp does not illuminate when the ignition switch is turned ON.
- The “AIR BAG” warning lamp does not turn off about 7 seconds after the ignition switch is turned ON.
- The “AIR BAG” warning lamp blinks after illuminating for about 7 seconds after the ignition switch is turned ON.

2. Visually check SRS components

a. Air bag diagnosis sensor unit

- Check air bag diagnosis sensor unit and bracket for dents, cracks and deformities.
- Check connectors for damage and terminals for deformities.

b. Air bag modules, steering wheel and instrument panel

- Remove driver air bag module from steering wheel. Check harness cover and connectors for damage, terminals for deformities and harness for binding.
- Install driver air bag module to steering wheel to check fit or alignment with the wheel.
- Check steering wheel for excessive free play.
- Remove passenger air bag module. Check harness cover and connectors for damage, terminals for deformities and harness for binding. Check the bracket for deformities and rust.
- Install passenger air bag module in instrument panel to check fit or alignment with the instrument panel.

c. Spiral cable

- Check spiral cable for dents, cracks and deformities.
- Check connectors and protective tape for damage.
- Check steering wheel for noise, binding and heavy operation.

d. Seat belt pre-tensioner

- Check harness cover and connectors for damage, terminals for deformities and harness for binding.
- Check belts for damage and anchors for loose mounting.
- Check retractor for smooth operation.
- Perform Self-diagnosis for seat belt pre-tensioner using “AIR BAG” warning lamp or CONSULT-II. Refer to “SRS Operation Check”, RS-43.

e. Passenger air bag deactivation switch

- Check passenger air bag deactivation switch for damage.

- Check harness for binding, connector for damage and terminals for deformities.

f. Main harness and air bag harness

- Check connectors for poor connections, damage, and terminals for deformities.
- Check harnesses for binding, chafing and cuts.

CAUTION:
Replace previously used special bolts and ground bolt with new ones.

Diagnosis Sensor Unit

REMOVAL AND INSTALLATION

NERS0012

CAUTION:

- **Before servicing SRS, turn the ignition switch off, disconnect both battery cables and wait for at least 3 minutes.**
- **The special bolts are coated with bonding agent while the other bolt is for ground. Do not reuse bolts after removal; replace with new ones.**
- **Check air bag diagnosis sensor unit for proper installation.**
- **Check air bag diagnosis sensor unit to ensure it is free of deformities, dents, cracks and rust. If there are any visible signs of damage, replace it with a new one.**
- **Check air bag diagnosis sensor unit brackets to ensure they are free of deformities or rust.**
- **Replace air bag diagnosis sensor unit if it has been dropped or has sustained an impact.**
- **After replacement, perform self-diagnosis for SRS. Refer to "SRS Operation Check", RS-43.**

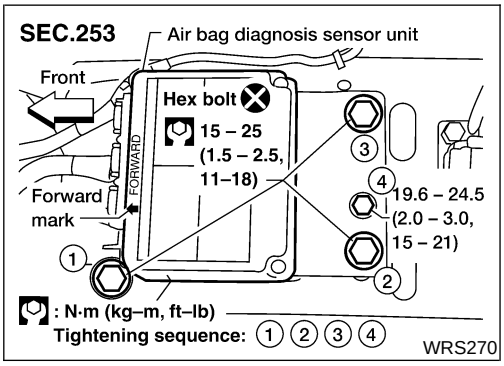

1. Disconnect driver and passenger air bag module connectors and seat belt pre-tensioner connectors.
2. Remove console box. Refer to ***BT-20***, "INSTRUMENT PANEL ASSEMBLY".
3. Disconnect air bag diagnosis sensor unit connector.
4. Remove ground bolt and also remove special bolts from air bag diagnosis sensor unit.
   Then remove the air bag diagnosis sensor unit.

NOTE:

- **To install, reverse the removal procedure and tighten new bolts in the sequence indicated in the illustration.**

CAUTION:
Air bag diagnosis sensor unit must always be installed with forward mark "⇐" pointing toward the front of the vehicle for proper operation. Also check air bag diagnosis sensor unit for deformities, dents, cracks and rust before installation and replace as required.

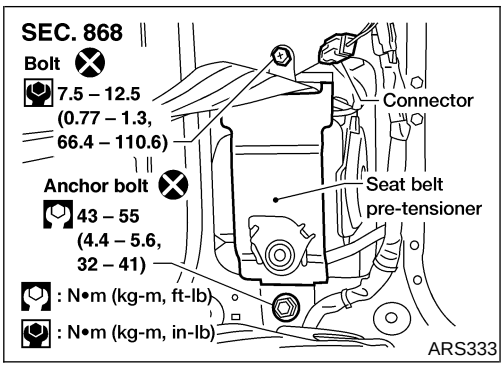

Seat Belt Pre-tensioner

REMOVAL AND INSTALLATION

NERS0040

CAUTION:

- **Before servicing SRS, turn the ignition switch OFF, disconnect both battery cables and wait at least 3 minutes.**
- **Do not use old bolts and nuts after removal; replace with new ones.**
- **Check seat belt pre-tensioner for proper installation.**
- **After replacement of seat belt pre-tensioner, check SRS function and perform self-diagnosis for SRS. Refer to "SRS Operation Check", RS-43.**
- **Do not attempt to disassemble air bag diagnosis sensor unit or seat belt pre-tensioner.**
- **Replace air bag diagnosis sensor unit or seat belt pre-tensioner if it has been dropped or sustained an impact.**
- **Do not expose seat belt pre-tensioner to temperatures exceeding 80°C (176°F).**

For removal of seat belt pre-tensioner, refer to "Front Seat Belt", RS-5.

NOTE:
To install, reverse removal procedure.

Driver Air Bag Module and Spiral Cable

REMOVAL AND INSTALLATION

NERS0013

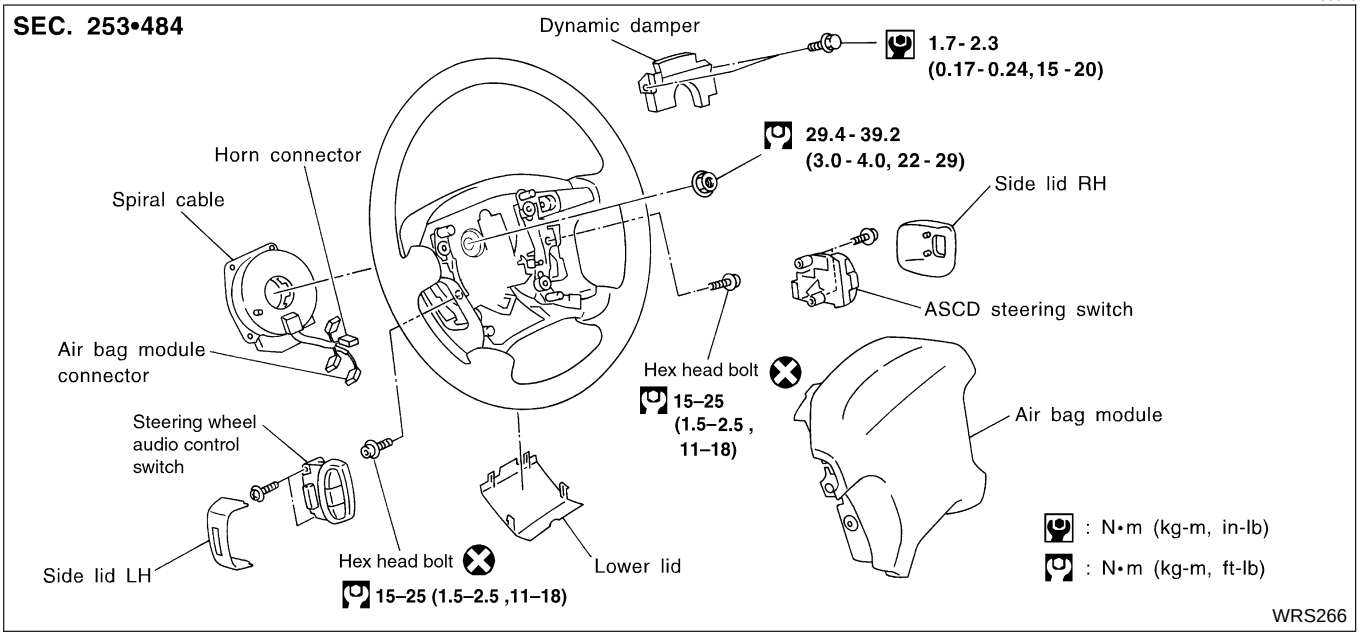

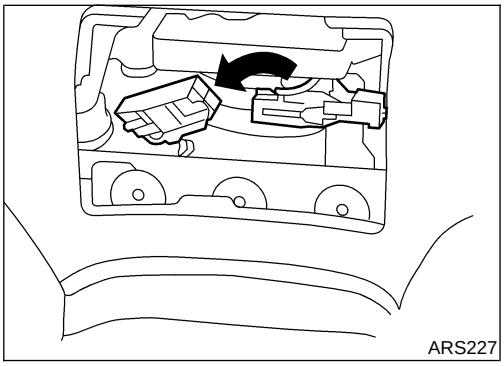

REMOVAL

NERS0014

CAUTION:

- **Before servicing SRS, turn the ignition switch OFF, disconnect both battery cables and wait at least 3 minutes.**
- **Always work from the side of an air bag module.**

1. Remove lower lid from steering wheel and disconnect driver air bag module connector.

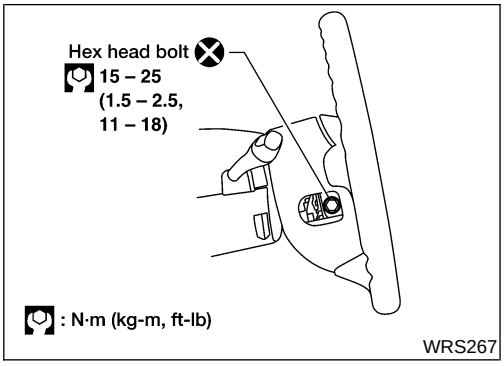

WRS267

2. Remove side lids. Remove the hex head bolts.

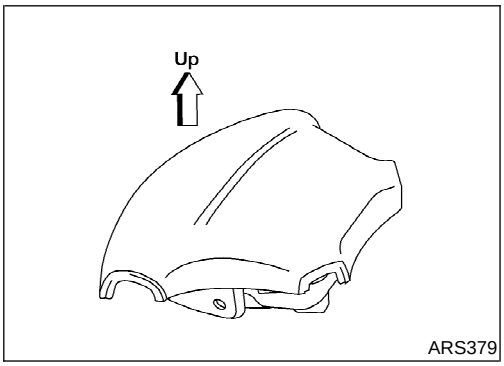

ARS379

CAUTION:
- **Always place air bag module with pad side facing upward.**
- **Do not attempt to disassemble air bag module.**
- **The special bolts are coated with bonding agent. Do not use old bolts after removal; replace with new ones.**
- **Do not insert any foreign objects (screwdriver, etc.) into air bag module connector.**



SBF814E

- **Do not drop or impact air bag module. If any portion is deformed or cracked, replace the module.**
- **Do not expose the air bag module to temperatures exceeding 90°C (194°F).**
- **Do not allow oil, grease or water to come in contact with the air bag module.**

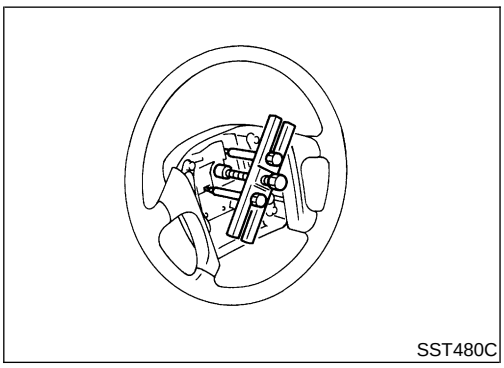
SST480C

3. Set steering wheel in the neutral position.
4. Disconnect spiral cable connector from steering wheel subharness and remove nut.
5. Using steering wheel puller, remove steering wheel. Be careful not to over-tighten puller bolt on steering wheel.

CAUTION:
- **Do not tap or bump the steering wheel.**

6. Remove steering column covers, instrument panel lower LH and knee protector.
7. Disconnect spiral cable connector from air bag harness.

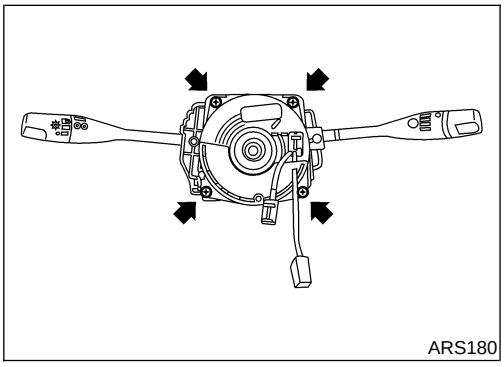
ARS180

8. Remove the four spiral cable retaining screws. Remove the spiral cable.

CAUTION:
- **Do not attempt to disassemble spiral cable.**
- **Do not apply lubricant to the spiral cable.**

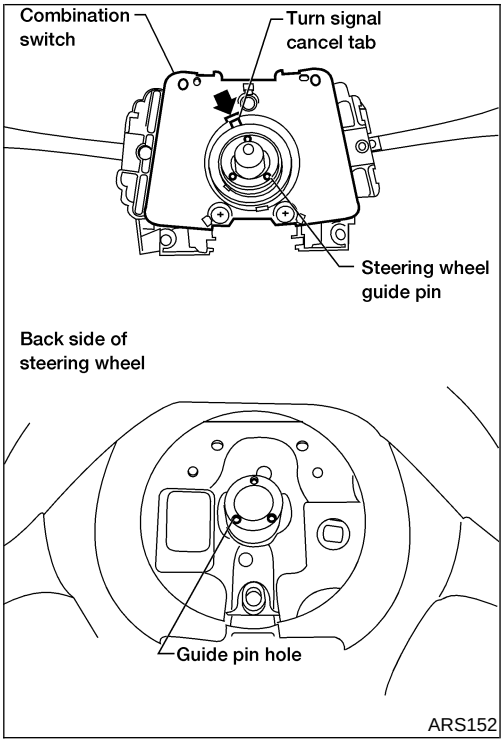

INSTALLATION

NERS0015

1. Set the front wheels in the straight-ahead position.
2. Align the turn signal cancel tab with the notch of the combination switch as shown.

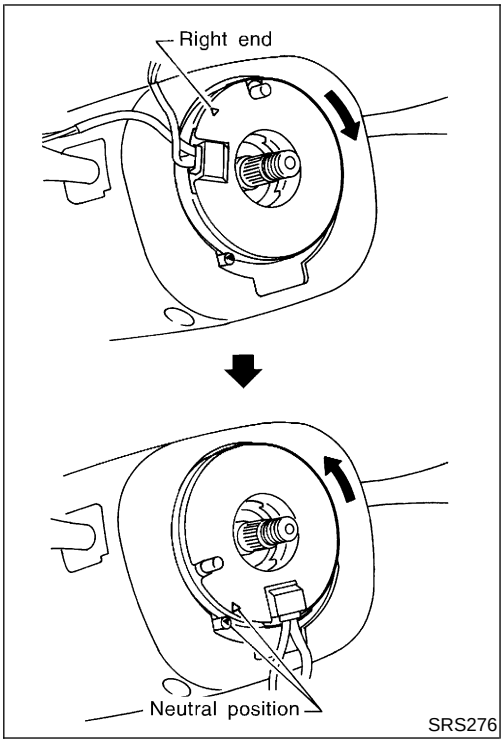

3. Rotate the spiral cable fully clockwise until tight.
4. Rotate the spiral cable counterclockwise approximately 2.25 turns and align white pin with arrow on housing.

- **When the spiral cable is centered, white pin is aligned with arrow on housing and yellow wheel shows in window.**

CAUTION:

- **The spiral cable may snap during steering operation if the spiral cable is installed in an improper position.**
- **Also, with the steering linkage disconnected, the cable may snap by turning the steering wheel beyond the limited number of turns. The spiral cable can be turned counterclockwise approximately 2.25 turns. Always perform SRS self-diagnosis after installing the air bag module. Refer to "SRS Operation Check", RS-43.**

5. Connect spiral cable to air bag harness and tighten screws. Install steering column covers.

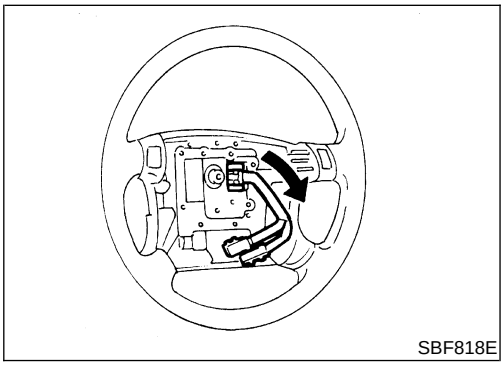

6. Install steering wheel, setting spiral cable pin guide, and pull spiral cable connectors through.
7. Install dynamic damper.
8. Tighten steering wheel nut.

: 29 - 39 N·m (3.0 - 4.0 kg-m, 22 - 29 ft-lb)

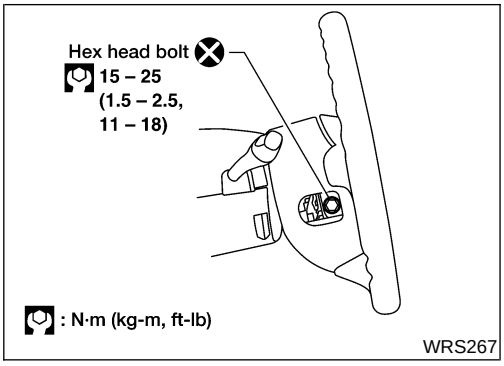

9. Position driver air bag module and install two new hex head bolts.
10. Connect driver air bag module connector.
11. Install all lids and steering switches.
12. Connect both battery cables.
13. Conduct self-diagnosis to ensure entire SRS operates properly. (Use CONSULT-II or "AIR BAG" warning lamp check.) Turn the steering wheel fully to the right and left to check that the spiral cable is set in the neutral position.
14. If "AIR BAG" warning lamp blinks (in User mode), it shows the spiral cable may be snapped due to its improper position. Perform Self-diagnosis again. (Use CONSULT-II or "AIR BAG" warning lamp check.) If a malfunction is detected, replace the spiral cable with a new one.

NOTE:

- **After replacement, perform self-diagnosis for SRS. Refer to "SRS Operation Check", RS-43.**

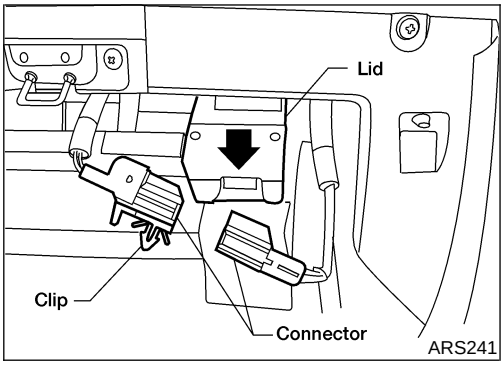

Front Passenger Air Bag Module

REMOVAL

NERS0016

CAUTION:

- **Before servicing SRS, turn the ignition switch OFF, disconnect both battery cables and wait for at least 3 minutes.**
- **Always work from the side of an air bag module.**

1. Open glove box assembly.
2. Open lid of instrument panel lower passenger side, inside glove box.
3. Remove passenger air bag module connector clip from lid.
4. Disconnect passenger air bag module connector from air bag harness connector.
5. Remove glove box. Refer to ***BT-20***, "INSTRUMENT PANEL ASSEMBLY".

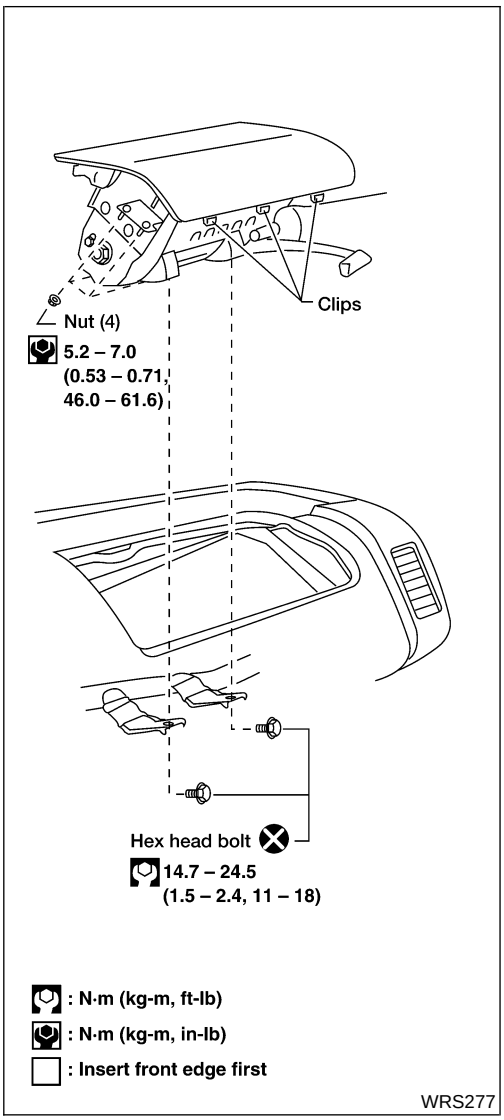

6. Remove two hex head bolts.
7. Remove four mounting nuts.
8. Remove passenger air bag module by releasing the clips from the top of the instrument panel.

- **The air bag module is heavy and should be supported using both hands during removal.**

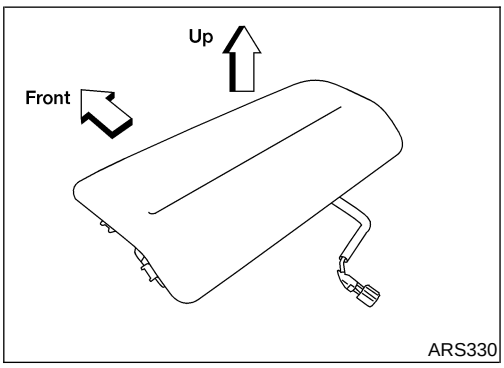

CAUTION:

- **Always place air bag module with pad side facing upward.**
- **Do not attempt to disassemble air bag module.**
- **The special bolts are coated with a bonding agent. Do not use old bolts after removal; replace with new coated bolts.**
- **Do not insert any foreign objects (screwdriver, etc.) into air bag module connector.**



- **Do not drop or impact air bag module. If any portion is deformed or cracked, replace the module.**
- **Do not expose the air bag module to temperatures exceeding 90°C (194°F).**
- **Do not allow oil, grease or water to come in contact with the air bag module.**
- **After air bag inflates, the instrument panel assembly should be replaced if damaged.**

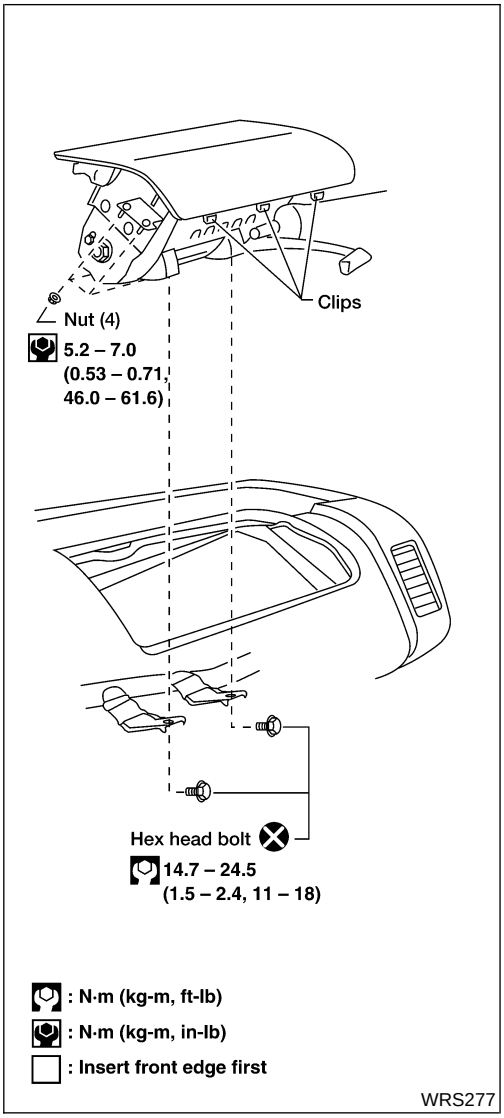

INSTALLATION

NERS0017

CAUTION:

- **Always work from the side of an air bag module.**

1. Install passenger air bag module in instrument panel.
1) Insert front edge of passenger air bag module first to ease installation.
- Ensure harness is not caught between passenger air bag module and support bracket.
2) Install four mounting nuts.
3) Install two new hex head bolts.
2. Install glove box. Refer to ***BT-20***, "INSTRUMENT PANEL ASSEMBLY".

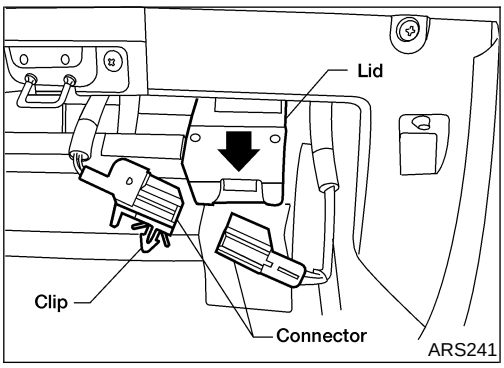

3. Connect passenger air bag module connector to air bag harness connector.
4. Attach passenger air bag module connector clip to lid.
5. Close lid and glove box.
6. Connect both battery cables.
7. Conduct self-diagnosis to ensure entire SRS operates properly. (Use CONSULT-II or "AIR BAG" warning lamp check.)

NOTE:

- **After replacement, perform self-diagnosis for SRS. Refer to "SRS Operation Check", RS-43.**

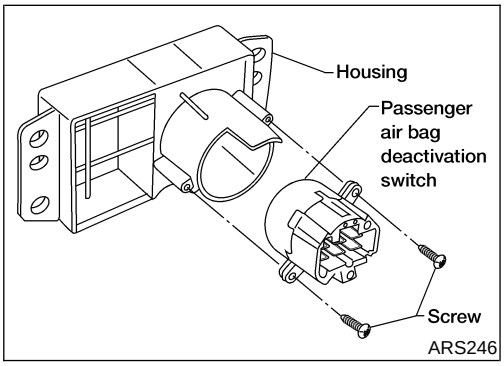

Passenger Air Bag Deactivation Switch

REMOVAL

NERS0046

- **Before servicing SRS, turn the ignition switch OFF, disconnect both battery cables and wait for at least 3 minutes.**

1. Detach instrument stay cover lower center from instrument panel. Refer to ***BT-20***, "Removal and Installation".
2. Disconnect passenger air bag deactivation switch harness connector and cigarette lighter harness connector.
3. Remove instrument stay cover lower center.

4. Remove two screws and remove passenger air bag deactivation switch.

INSTALLATION

NERS0047

CAUTION:

Passenger air bag deactivation switch is keyed for proper installation. Improper positioning of the switch will result in damage to the switch.

NOTE:

- **Be sure that the passenger air bag deactivation switch and lock cylinder are in the same position as during removal for proper engagement.**
- **To install, reverse removal procedure.**
- **After replacement, perform self-diagnosis for SRS. Refer to "SRS Operation Check", RS-43.**

Passenger Air Bag Deactivation Switch Lock Cylinder

REMOVAL

NERS0048

- **Before servicing SRS, turn ignition switch OFF, disconnect both battery cables and wait for at least 3 minutes.**

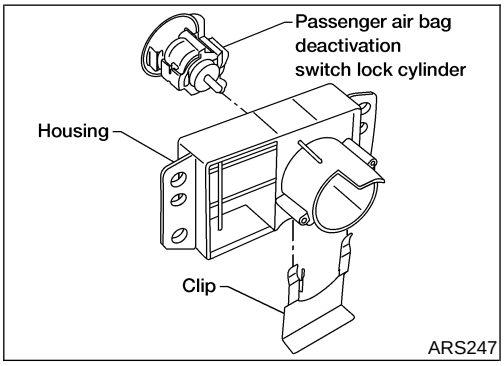

1. Detach instrument stay cover lower center from instrument panel. Refer to ***BT-20***, "Removal and Installation".
2. Disconnect passenger air bag deactivation switch harness connector and cigarette lighter harness connector.
3. Remove instrument stay cover lower center.
4. Remove four screws and housing from instrument stay cover lower center.
5. Remove clip from bottom of housing.
6. Remove passenger air bag deactivation switch lock cylinder from front of housing.

INSTALLATION

NERS0049

NOTE:

- **Be sure that the passenger air bag deactivation switch and lock cylinder are in the same position as during removal for proper engagement.**
- **To install, reverse removal procedure.**
- **After replacement, perform self-diagnosis for SRS. Refer to "SRS Operation Check", RS-43.**

Passenger Air Bag Deactivation Switch Indicator

REMOVAL

NERS0050

- **Before servicing SRS, turn ignition switch OFF, disconnect both battery cables and wait for at least 3 minutes.**

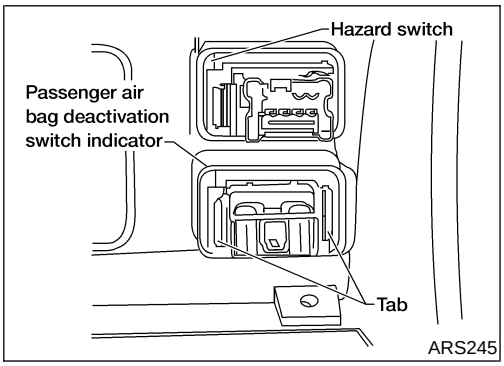

1. Remove meter cover. Refer to ***BT-20***, "Removal and Installation".
2. Release passenger air bag deactivation switch indicator tabs from back side of meter cover.
3. Remove passenger air bag deactivation switch indicator from front side of meter cover.

INSTALLATION

NERS0051

NOTE:

- **To install, reverse removal procedure.**
- **After replacement, perform self-diagnosis for SRS. Refer to "SRS Operation Check", RS-43.**

Disposal of Air Bag Module and Seat Belt Pre-tensioner

NERS0018

- Before disposing of air bag modules and seat belt pre-tensioners, or vehicles equipped with such systems, deploy the systems. If such systems have already been deployed due to an accident, dispose of as indicated in "DISPOSING OF AIR BAG MODULE AND SEAT BELT PRE-TENSIONER", RS-32.
- When deploying air bag module or seat belt pre-tensioner, always use the Special Service Tool; Deployment tool KV99106400 (Kent-Moore No. J38381).
- When deploying air bag module or seat belt pre-tensioner, stand at least 5 m (16 ft) away from the deployment component.
- When deploying air bag module or seat belt pre-tensioner, a fairly loud noise is made, followed by smoke being released. The smoke is not poisonous, however, be careful not to inhale smoke as it irritates the throat and can cause choking.
- Only activate one air bag module or seat belt pre-tensioner at a time.
- Due to heat, leave air bag module unattended for more than 30 minutes after deployment. Leave seat belt pre-tensioner unattended for more than 10 minutes after deployment.
- Be sure to wear gloves when handling a deployed air bag module or seat belt pre-tensioner.
- Never apply water to a deployed air bag module or seat belt pre-tensioner.
- Wash your hands clean after finishing work.
- Place the vehicle outdoors with an open space of at least 6 m (20 ft) on all sides when deploying air bag module or seat belt pre-tensioner while mounted in vehicle.
- Use a voltmeter to make sure the vehicle battery is fully charged.
- Do not dispose of the air bag module or seat belt pre-tensioner un-deployed.

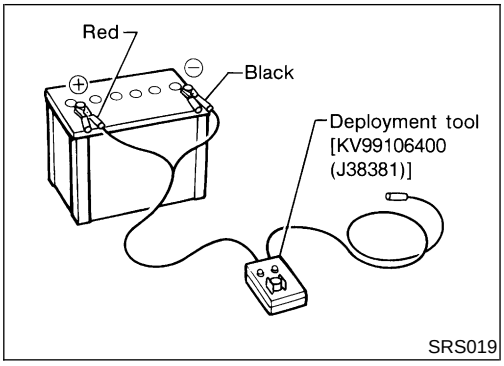

SRS019

CHECKING DEPLOYMENT TOOL

NERS0018S01

Connecting to Battery

NERS0018S0101

CAUTION:

The battery must show voltage of 9.6V or more.

Remove the battery from the vehicle and place it on dry wood blocks approximately 5 m (16 ft) away from the vehicle.

- Wait 3 minutes after the vehicle battery is disconnected before proceeding.
- Connect red clip of deployment tool [SST: KV99106400 (J38381)] to battery positive terminal and black clip to negative terminal.

CAUTION:

Make sure the polarity is correct. The right side lamp on the deployment tool [SST: KV99106400 (J38381)], marked "DEPLOYMENT TOOL POWER", should glow with a green light. If the right side lamp glows red, reverse the connections to the battery.

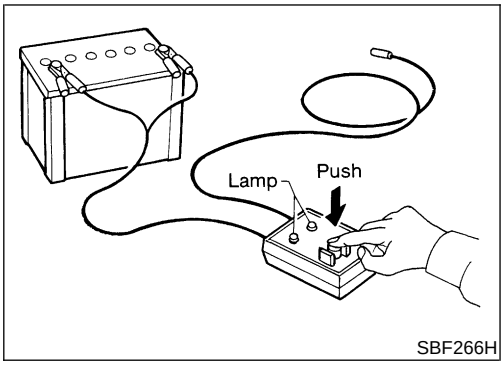

SBF266H

Deployment Tool Check

NERS0018S0102

Press the deployment tool [SST: KV99106400 (J38381)] switch to the ON position. The left side lamp on the deployment tool [SST: KV99106400 (J38381)], marked "AIR BAG CONNECTOR VOLTAGE", should illuminate. If it does not illuminate, replace the tool.

Air Bag Deployment Tool Lamp Illumination Chart (Battery connected)

NERS0018S0103

Switch operation	Left side lamp, green* "AIR BAG CONNECTOR VOLTAGE"	Right side lamp, green* "DEPLOYMENT TOOL POWER"
OFF	OFF	ON
ON	ON	ON

*: If this lamp glows red, the tool is connected to the battery incorrectly. Reverse the connections and make sure the lamp glows green.

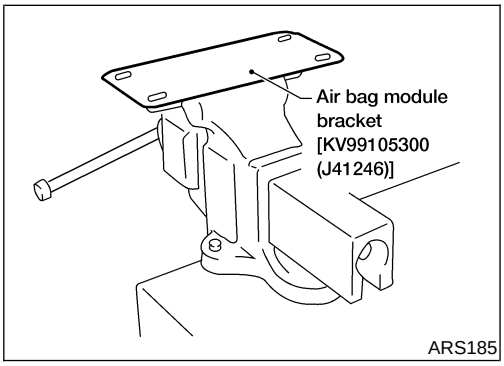

ARS185

DEPLOYMENT PROCEDURES FOR AIR BAG MODULE (OUTSIDE OF VEHICLE)

NERS0018S02

Unless the vehicle is being scrapped, deploying the air bag modules in the vehicle is not recommended. This may cause damage to the vehicle interior.

Anchor air bag module bracket [KV99105300 (J41246)] in a vise secured to a firm foundation during deployment.

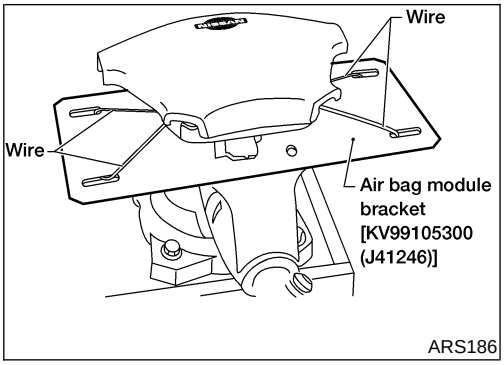

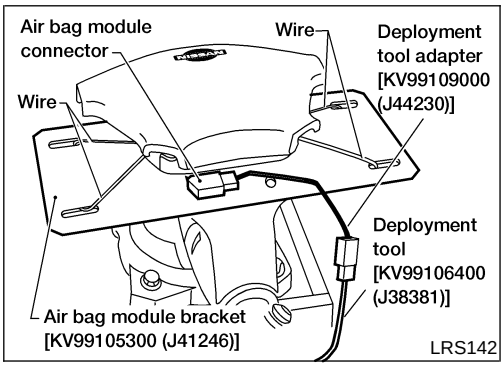

Deployment of Driver Air Bag Module (Outside of vehicle)

NERS0018S0201

1. Using wire, secure driver air bag module to air bag module bracket [SST: KV99105300 (J41246)] at two places.

CAUTION:
If a gap exists between driver air bag module and air bag module bracket, use a piece of wood inserted in the gap to stabilize the air bag module.
Use wire of at least 1 mm (0.04 in) diameter.

2. Firmly secure air bag module bracket [SST: KV99105300 (J41246)] with driver air bag module attached, in a vise.
3. Connect deployment tool adapter [SST: KV99109000 (J44230)] to deployment tool [SST: KV99106400 (J383810)] and driver air bag module connector.
4. Connect red clip of deployment tool [SST: KV99106400 (J38381)] to battery positive terminal and black clip to negative terminal.
5. The right side lamp on the deployment tool [SST: KV99106400 (J38381)], marked "DEPLOYMENT TOOL POWER", should glow green, not red.
6. Press the button on the deployment tool [SST: KV99106400 (J38381)]. The left side lamp on the deployment tool [SST: KV99106400 (J38381)], marked "AIR BAG CONNECTOR VOLTAGE", will illuminate and the air bag module will deploy.

CAUTION:
When deploying the air bag module, stand at least 5 m (16 ft) away from the air bag module.

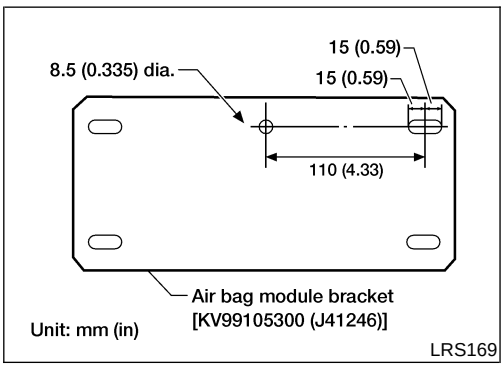

Deployment of Passenger Air Bag Module (Outside of vehicle)

NERS0018S0202

1. Make an 8.5 mm (0.335 in) diameter hole in air bag module bracket [SST: KV99105300 (J41246)] at the position shown in figure at left.

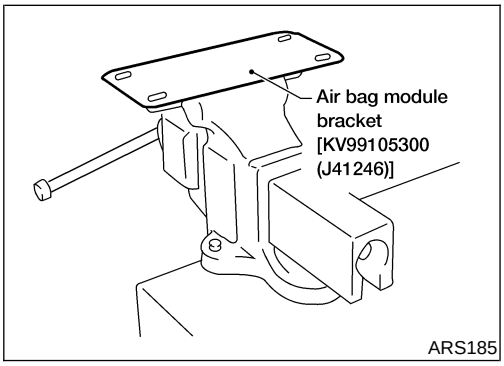

2. Firmly secure air bag module bracket [SST: KV99105300 (J41246)] in a vise.

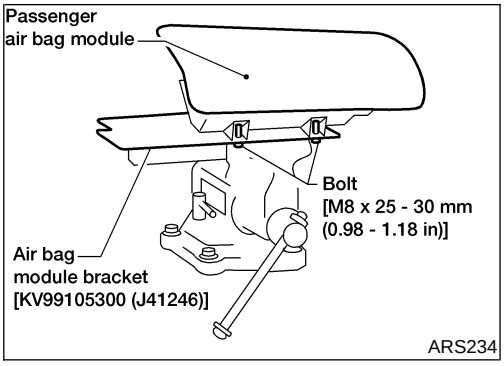

3. Match the two holes in air bag module bracket [SST: KV99105300 (J41246)] (held in vise) and passenger air bag module and fix them with two bolts [M8 x 25 - 30 mm (0.98 - 1.18 in)].

CAUTION:

If a gap exists between passenger air bag module and air bag module bracket, use a piece of wood inserted in the gap to stabilize the air bag module.

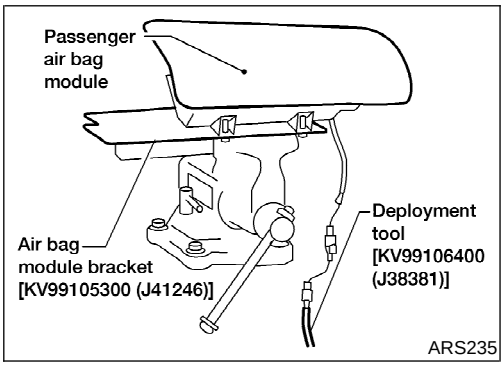

4. Connect deployment tool adapter [SST: KV991065S0 (J38381-30)] to deployment tool [SST: KV99106400 (J38381)] connector and passenger air bag module connector.

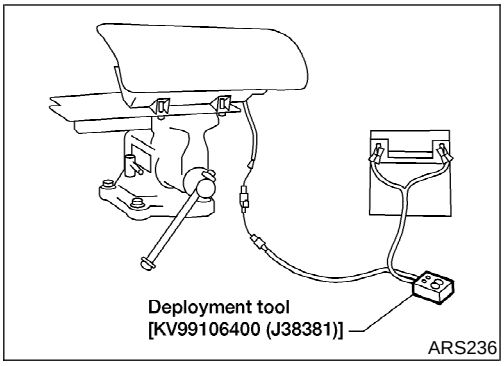

5. Connect red clip of deployment tool [SST: KV99106400 (J38381)] to battery positive terminal and black clip to negative terminal.
6. The right side lamp on the deployment tool [SST: KV99106400 (J38381)], marked "DEPLOYMENT TOOL POWER", should glow green, not red.
7. Press the button on the deployment tool [SST: KV99106400 (J38381)]. The left side lamp on the deployment tool [SST: KV99106400 (J38381)], marked "AIR BAG CONNECTOR VOLTAGE", will illuminate and the air bag module will deploy.

CAUTION:

- **When deploying the air bag module, stand at least 5 m (16 ft) away from the air bag module.**

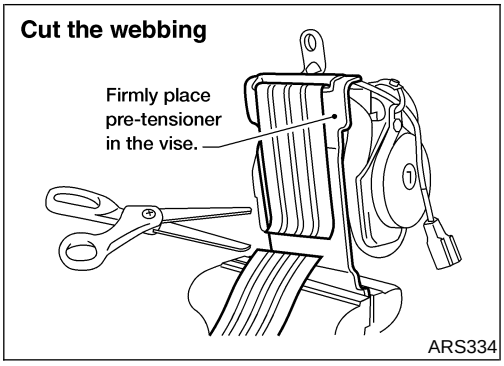

Deployment of Seat Belt Pre-tensioner (Outside of vehicle)

=NERS0018S0203

1. Firmly anchor seat belt pre-tensioner in a vise, then cut webbing off.

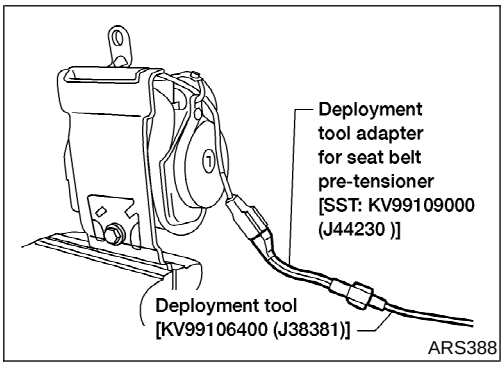

2. Connect deployment tool adapter [SST: KV99109000 (J44230)] to deployment tool [SST: KV99106400 (J38381)] connector and seat belt pre-tensioner connector.

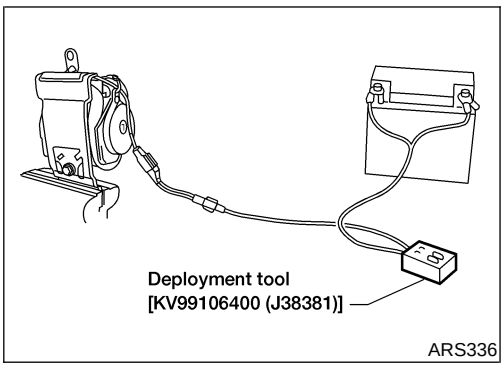

3. Connect red clip of deployment tool [SST: KV99106400 (J38381)] to battery positive terminal and black clip to negative terminal.
4. The right side lamp on the deployment tool [SST: KV99106400 (J38381)], marked "DEPLOYMENT TOOL POWER", should glow green, not red.
5. Press the button on the deployment tool [SST: KV99106400 (J38381)]. The left side lamp on the deployment tool [SST: KV99106400 (J38381)], marked "AIR BAG CONNECTOR VOLTAGE", will illuminate and the seat belt pre-tensioner will deploy.

CAUTION:

- **When deploying the seat belt pre-tensioner, stand at least 5 m (16 ft) away from the seat belt pre-tensioner.**

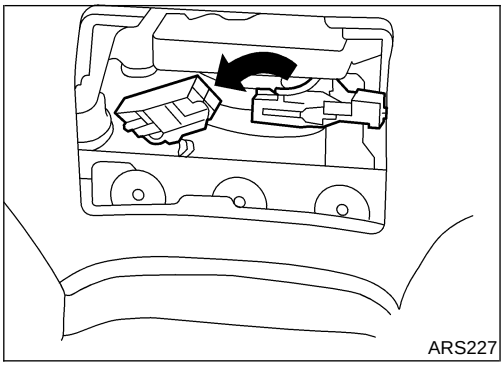
ARS227

DEPLOYMENT OF AIR BAG MODULE AND SEAT BELT PRE-TENSIONER WHILE MOUNTED IN VEHICLE

=NERS0018S03

When disposing of a vehicle, deploy air bag modules and seat belt pre-tensioners while they are mounted in vehicle.

CAUTION:

When deploying air bag module or seat belt pre-tensioner, ensure vehicle is empty.

1. Disconnect both battery cables and wait 3 minutes.
2. Disconnect air bag module connector or seat belt pre-tensioner connector.
3. Connect deployment tool [SST: KV99106400 (SST: J38381)] to air bag module.
   For passenger air bag module, use deployment tool adapter [SST: KV991065S0 (J38381–30)] to attach air bag module to deployment tool [SST: KV99106400 (J38381)] connector. For seat belt pre-tensioner and driver air bag module, use deployment tool adapter [SST: KV99109000 (J44230)] to attach seat belt pre-tensioner and driver air bag module to deployment tool [SST: KV99106400 (J38381)] connector.

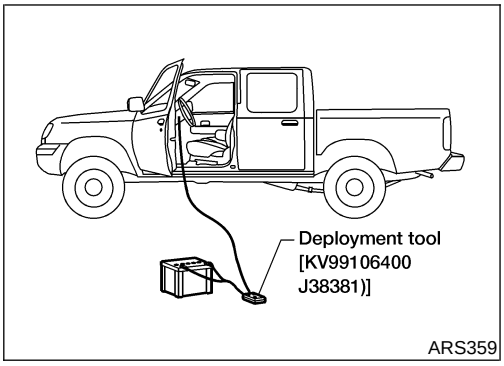

ARS359

4. Connect red clip of deployment tool [SST: KV99106400 (J38381)] to battery positive terminal and black clip to negative terminal.
5. The right side lamp on the deployment tool [SST: KV99106400 (J38381)], marked "DEPLOYMENT TOOL POWER", should glow green, not red.
6. Press the button on the deployment tool [SST: KV99106400 (J38381)]. The left side lamp on the deployment tool [SST: KV99106400 (J38381)], marked "AIR BAG CONNECTOR VOLTAGE", will illuminate and the air bag module or seat belt pre-tensioner will deploy.

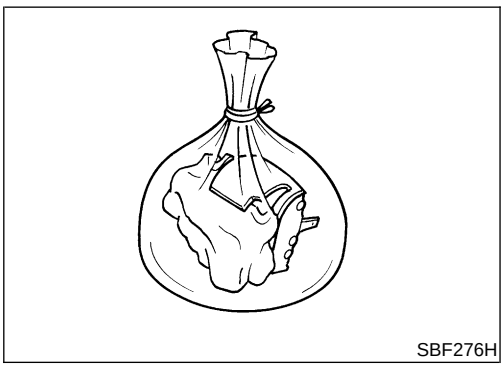
SBF276H

DISPOSING OF AIR BAG MODULE AND SEAT BELT PRE-TENSIONER

NERS0018S04

Deployed air bag modules and seat belt pre-tensioners are very hot. Before disposing of air bag modules and seat belt pre-tensioners, wait at least 30 minutes and 10 minutes, respectively. Seal them in a plastic bag before disposal.

CAUTION:

- **Never apply water to a deployed air bag module or seat belt pre-tensioner.**
- **Be sure to wear gloves when handling a deployed air bag module or seat belt pre-tensioner.**
- **No poisonous gas is produced upon air bag module or seat belt pre-tensioner deployment. However, be careful not to inhale gas since it irritates the throat and can cause choking.**
- **Do not attempt to disassemble air bag module or seat belt pre-tensioner.**
- **Air bag module or seat belt pre-tensioner cannot be reused.**
- **Wash your hands clean after finishing work.**

Trouble Diagnoses Introduction

=NERS0030

CAUTION:

- **Do not use electrical test equipment on any circuit related to the SRS unless instructed to in this Service Manual. Spiral cable and wiring harnesses covered with yellow insulation tape either just before the harness connectors or for the complete harness are related to the SRS.**
- **Do not attempt to repair, splice or modify the SRS wiring harness. If the harness is damaged, replace it with a new one.**
- **Keep ground portion clean.**

DIAGNOSIS FUNCTION

NERS0030S01

The SRS self-diagnosis results can be read by using "AIR BAG" warning lamp and/or CONSULT-II. The reading of these results is accomplished using one of two modes — "User mode" and "Diagnosis mode".
The User mode is exclusively prepared for the customer (driver). This mode warns the driver of a system malfunction through the operation of the "AIR BAG" warning lamp.
The Diagnosis mode allows the technician to locate and inspect the malfunctioning part.
The mode applications for the "AIR BAG" warning lamp and CONSULT-II are as follows:

	User mode	Diagnosis mode	Display type
"AIR BAG" warning lamp	X	X	ON-OFF operation
CONSULT-II	—	X	Monitoring

NOTE:
Seat belt pre-tensioner malfunction is indicated by "AIR BAG" warning lamp.

DIAGNOSIS MODE FOR CONSULT-II

NERS0030S02

- "SELF-DIAG [CURRENT]"
  A current Self-diagnosis result (also indicated by the number of warning lamp flashes in the Diagnosis mode) is displayed on the CONSULT-II screen in real time. This refers to a malfunctioning part requiring repairs.
- "SELF-DIAG [PAST]"
  Diagnosis results previously stored in the memory are displayed on the CONSULT-II screen. The stored results are not erased until memory erasing is executed.
- "TROUBLE DIAG RECORD"
  With TROUBLE DIAG RECORD, diagnosis results previously erased by a reset operation can be displayed on the CONSULT-II screen.
- "ECU DISCRIMINATED NO."
  The diagnosis sensor unit for each vehicle model is assigned with its own, individual classification number. This number will be displayed on the CONSULT-II screen, as shown. When replacing the diagnosis sensor unit, refer to the part number for the compatibility. After installation, replacement with a correct unit can be checked by confirming this classification number on the CONSULT-II screen.

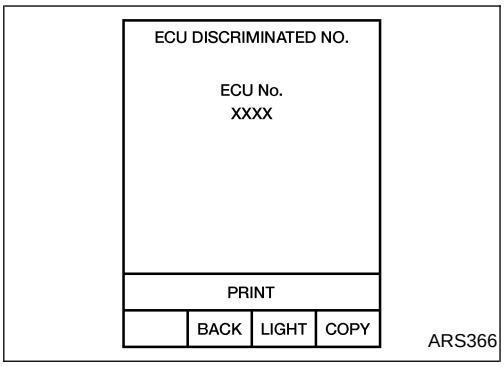

Model	ECU Part No.	ECU Discriminated No.
Regular Cab King Cab	28556 9Z715	A602
	28556 9Z815	A605

Crew Cab	28556 9Z410	A603
	28556 9Z510	A604

HOW TO CHANGE SELF-DIAGNOSIS MODE WITH CONSULT-II

=NERS0030S03

From User Mode to Diagnosis Mode

NERS0030S0301

After selecting "AIR BAG" on the "SELECT SYSTEM" screen, User mode automatically changes to Diagnosis mode.

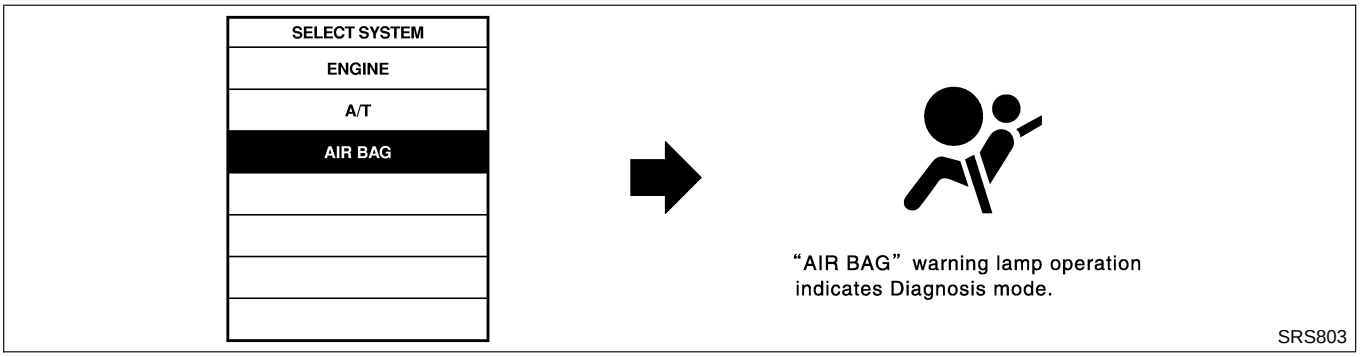

From Diagnosis Mode to User Mode

NERS0030S0303

To return to User mode from Diagnosis mode, touch "BACK" key of CONSULT-II until "SELECT SYSTEM" appears, Diagnosis mode automatically changes to User mode.



HOW TO CHANGE SELF-DIAGNOSIS MODE WITHOUT CONSULT-II

NERS0030S05

From User Mode to Diagnosis Mode

NERS0030S0501

Diagnosis mode activates only when a malfunction is detected, by turning ignition switch as follows:

1) Turn ignition switch "ON".
2) After "AIR BAG" warning lamp lights for 7 seconds, turn ignition switch "OFF" within 1 second.
3) Wait more than 3 seconds.
4) Repeat steps 1 to 3 three times.
5) Turn ignition switch "ON".

SRS will not enter Diagnosis mode if no malfunction is detected.

From Diagnosis Mode to User Mode

NERS0030S0502

After a malfunction is repaired, switch the ignition "OFF" for at least one second, then back "ON". Diagnosis mode is returned to User mode.

If switching Diagnosis mode to User mode is required while malfunction is being detected, by turning ignition switch as follows:

1) Turn ignition switch "ON".
2) After "AIR BAG" warning lamp lights for 7 seconds, turn ignition switch "OFF" within 1 second.
3) Wait more than 3 seconds.
4) Repeat steps 1 to 3 three times.
5) Turn ignition switch "ON".

HOW TO ERASE SELF-DIAGNOSIS RESULTS

=NERS0030S04

With CONSULT-II

NERS0030S0401

- "SELF-DIAG [CURRENT]"
  A current self-diagnosis result is displayed on the CONSULT-II screen in real time.
  After the malfunction is repaired completely, no malfunction is detected on "SELF-DIAG [CURRENT]".
- "SELF-DIAG [PAST]"
  Return to the "SELF-DIAG [CURRENT]" CONSULT-II screen by pushing "BACK" key of CONSULT-II and select "SELF-DIAG [CURRENT]" in SELECT DIAG MODE. Touch "ERASE" in "SELF-DIAG [CURRENT]" mode.

NOTE:
If the memory of the malfunction in "SELF-DIAG [PAST]" is not erased, the User mode shows the system malfunction by the operation of the warning lamp even if the malfunction is repaired completely.

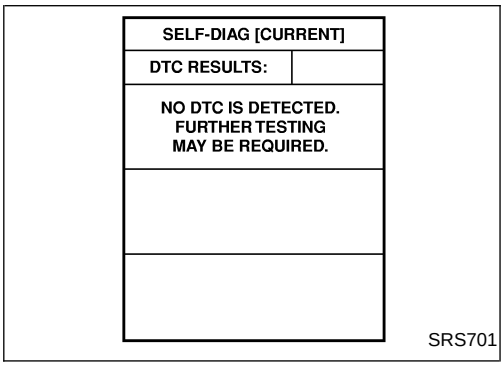

- "TROUBLE DIAG RECORD"
  The memory of "TROUBLE DIAG RECORD" cannot be erased.

Without CONSULT-II

NERS0030S0402

After a malfunction is repaired, switch the ignition "OFF" for at least one second, then back "ON". Diagnosis mode returns to the User mode. At that time, the self-diagnostic result is cleared.

How to Perform Trouble Diagnoses for Quick and Accurate Repair

=NERS0031

A good understanding of the malfunction conditions can make troubleshooting faster and more accurate. In general, each customer feels differently about a malfunction. It is important to fully understand the symptoms or conditions for a customer complaint.

INFORMATION FROM CUSTOMER

NERS0031S01

WHAT ..... Vehicle model
WHEN ..... Date, Frequencies
WHERE ..... Road conditions
HOW ..... Operating conditions, Symptoms

PRELIMINARY CHECK

NERS0031S02

Check that the following parts are in good order.

- Battery, refer to ***SC-4***, “BATTERY”
- Fuse
- System component-to-harness connections

WORK FLOW

=NERS0031S03

NOTE:

Seat belt pre-tensioner malfunction is indicated by "AIR BAG" warning lamp.

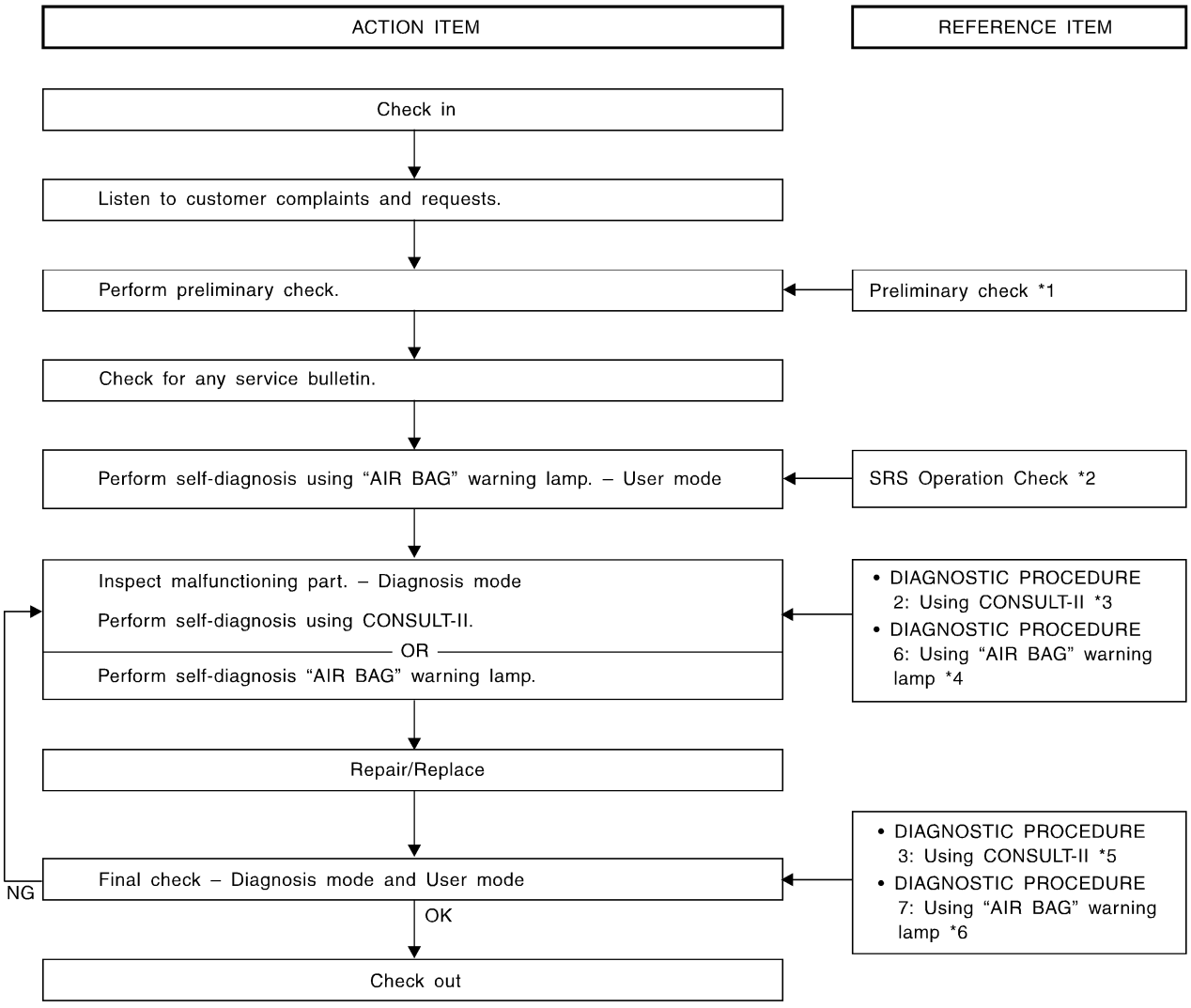

SRS799

*1: RS-37
*2: RS-43
*3: RS-43
*4: RS-54
*5: RS-48
*6: RS-58

Circuit Diagram

NERS0020

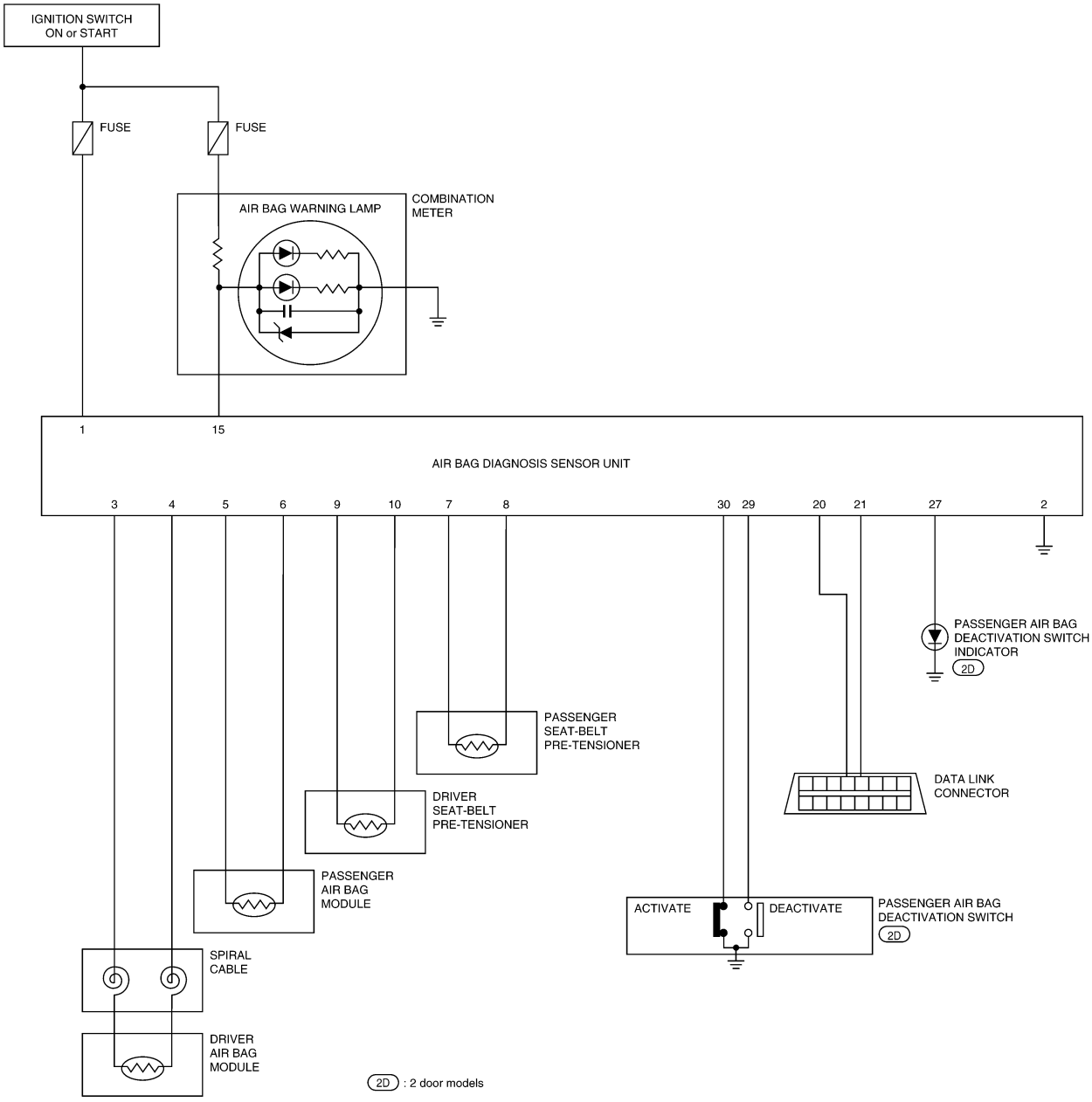

WRS203

Wiring Diagram — SRS —

NERS0021

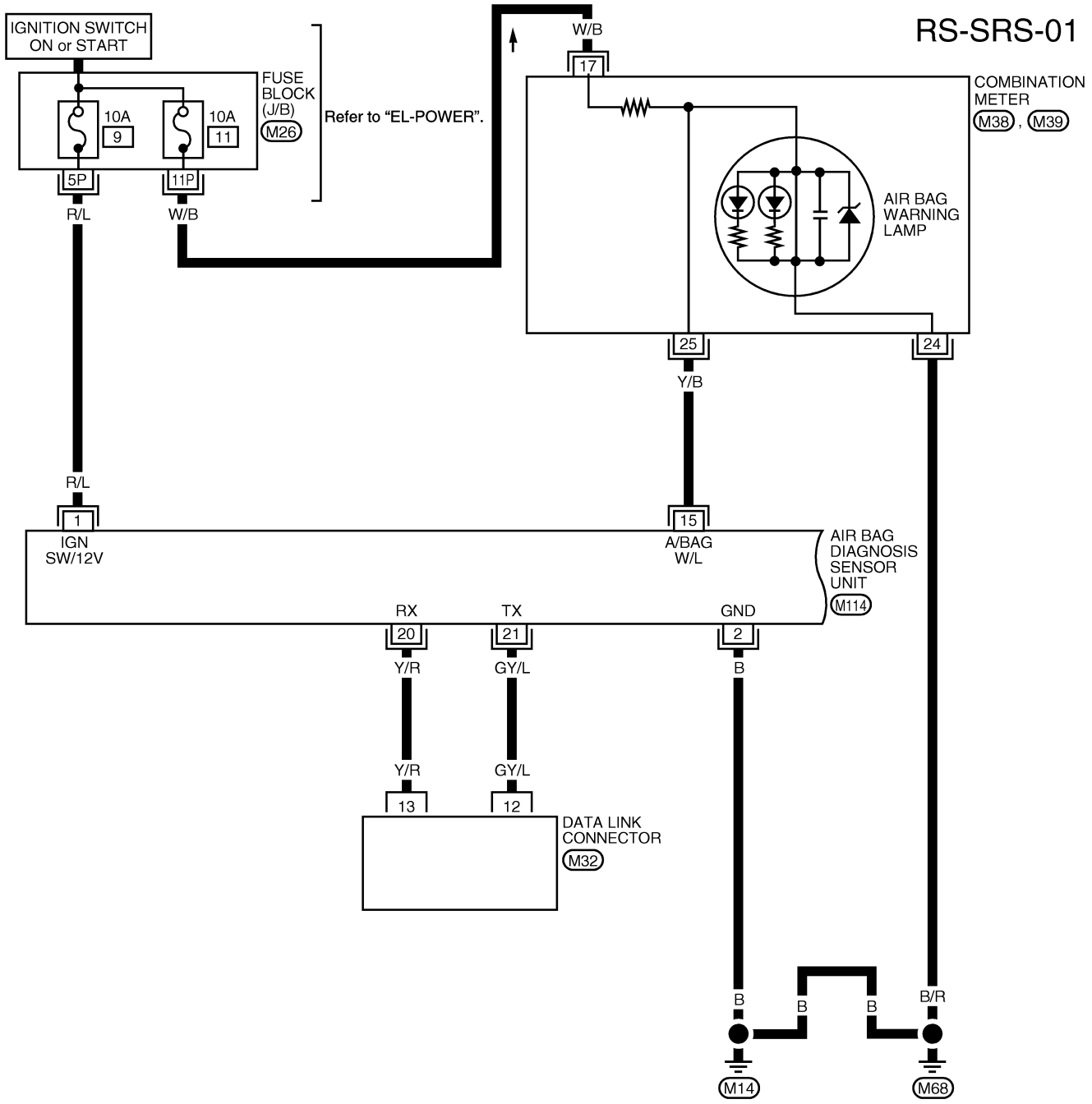



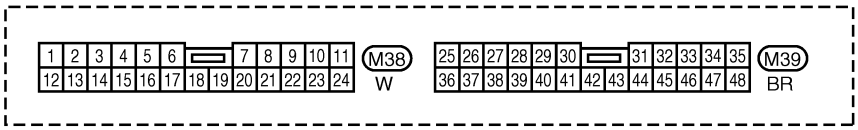

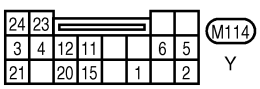

LRS112

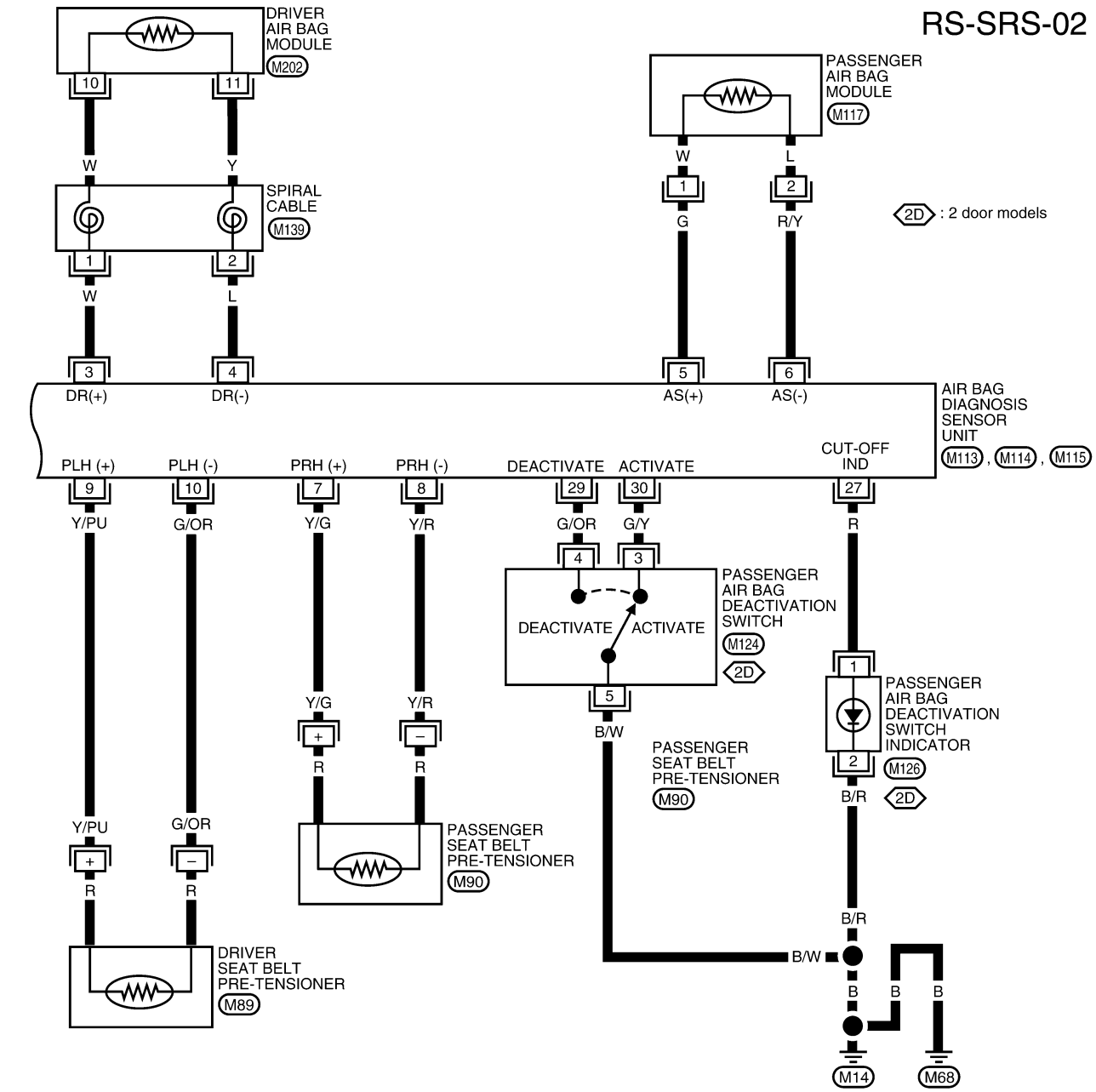

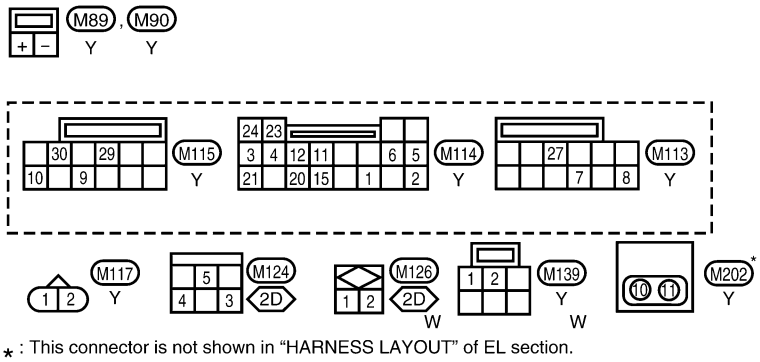

* : This connector is not shown in "HARNESS LAYOUT" of EL section.

WRS279

Passenger Air Bag Deactivation Switch Indicator Operation Check

NERS0052

1 INDICATOR OPERATION CHECK

Check passenger air bag deactivation switch indicator operation when turning ignition switch ON with passenger air bag deactivation switch in ON and OFF positions.

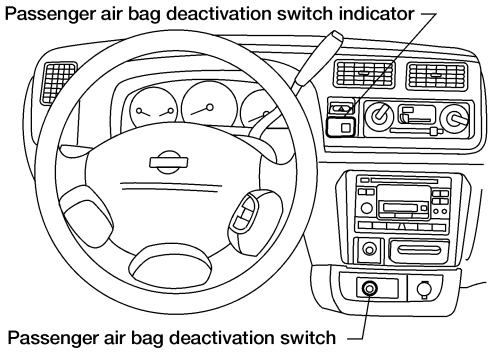

ARS240

Passenger air bag deactivation switch position	Passenger air bag deactivation switch indicator
ON	Turns off within 7 seconds
OFF	Remains illuminated

ARS365

OK or NG

OK	▶	Passenger air bag deactivation switch indicator operation is OK. Conduct “SRS Operation Check”. Refer to “SRS Operation Check”, RS-43.
NG	▶	GO TO 2.

2 PERFORM SELF-DIAGNOSIS

Perform self-diagnosis using “AIR BAG” warning lamp in User mode. Refer to “SRS Operation Check”, RS-43.
NOTE:
The passenger air bag deactivation switch indicator can only be self-diagnosed when a malfunction occurs and indicator illumination does not correspond to switch position.

OK or NG

OK	▶	Replace passenger air bag deactivation including the key cylinder. Conduct “Passenger Air Bag Deactivation Switch Indicator Operation Check” as a final check.
NG	▶	Perform self-diagnosis using CONSULT-II or “AIR BAG” warning lamp in Diagnosis mode. Refer to “SRS Operation Check”, RS-43 or “DIAGNOSTIC PROCEDURE 6”, RS-54 respectively. If the passenger air bag deactivation switch indicator remains illuminated with the passenger air bag deactivation switch ON, leave passenger air bag deactivation switch in ON position during diagnosis. If the passenger air bag deactivation switch indicator does not illuminate with the passenger air bag deactivation switch OFF, leave the passenger air bag deactivation switch in the OFF position during diagnosis.

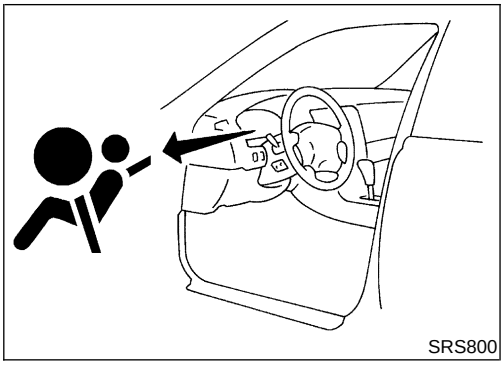
SRS800

SRS Operation Check

NERS0022

DIAGNOSTIC PROCEDURE 1

NERS0022S01

Checking Air Bag Operation by Using "AIR BAG" Warning Lamp — User Mode

NERS0022S0101

1. After turning ignition switch from "OFF" to "ON", "AIR BAG" warning lamp operates.
2. Compare "AIR BAG" warning lamp operation to the chart below.

"AIR BAG" warning lamp operation — User mode —	SRS condition	Reference item
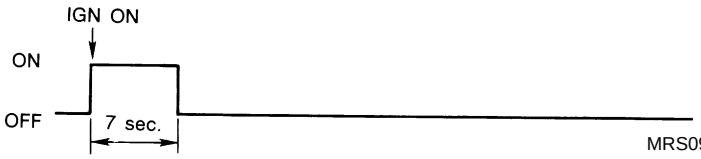 MRS095A	No malfunction is detected. No further action is necessary.	—
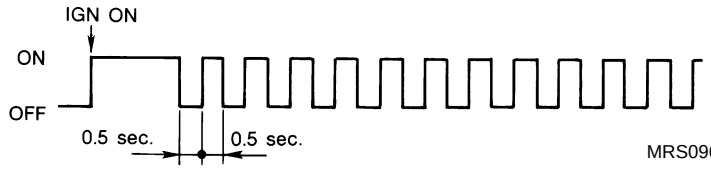 MRS096A	The system is malfunctioning and needs to be repaired as indicated.	Go to "DIAGNOSTIC PROCEDURE 2", RS-43 or "DIAGNOSTIC PROCEDURE 6" RS-54.
 MRS097A	Air bag is deployed. Seat belt pre-tensioner is deployed.	Go to "Collision Diagnosis", RS-63.
	Air bag fuse, diagnosis sensor unit or harness is malfunctioning and needs to be repaired.	Go to "DIAGNOSTIC PROCEDURE 9", RS-60.
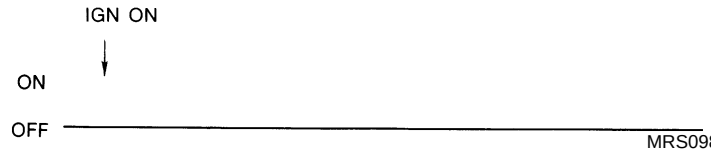 MRS098A	One of the following has occurred and needs to be repaired. ● Meter fuse is blown. ● "AIR BAG" warning lamp circuit has open or short. ● Diagnosis sensor unit is malfunctioning.	Go to "DIAGNOSTIC PROCEDURE 10", RS-62.

Trouble Diagnoses with CONSULT-II

NERS0023

DIAGNOSTIC PROCEDURE 2

NERS0023S01

Inspecting SRS malfunctioning parts by using CONSULT-II — Diagnosis mode

1. Turn ignition switch "OFF".
2. Connect "CONSULT-II" to data link connector.

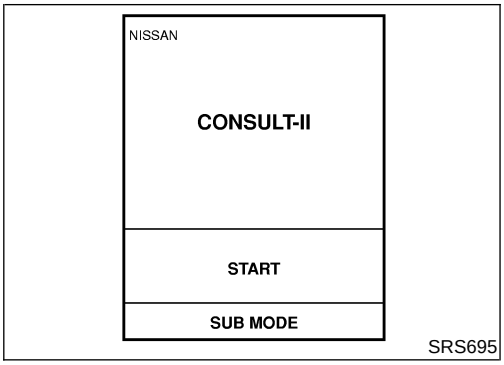

SRS695

3. Turn ignition switch "ON".
4. Touch "START".

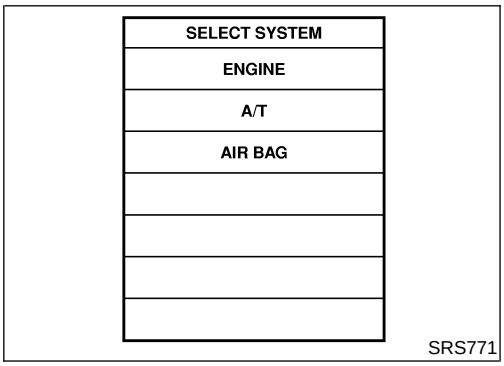

SRS771

5. Touch "AIR BAG".

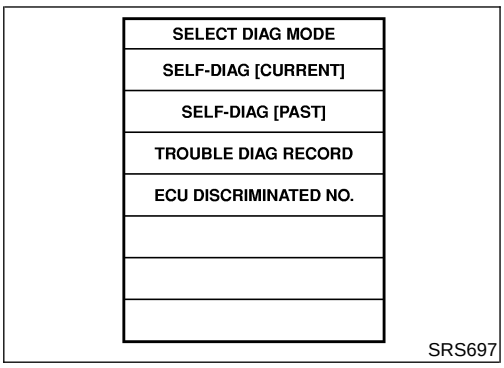

SRS697

6. Touch "SELF-DIAG [CURRENT]".

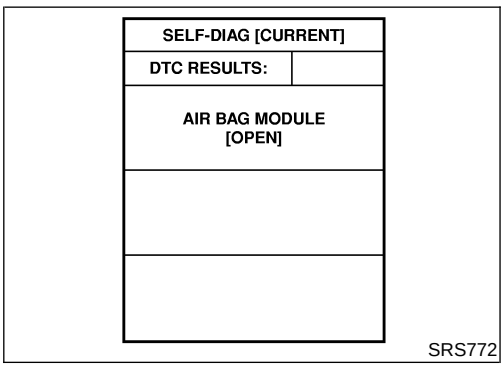

SRS772

7. Diagnostic codes are displayed on "SELF-DIAG [CURRENT]".

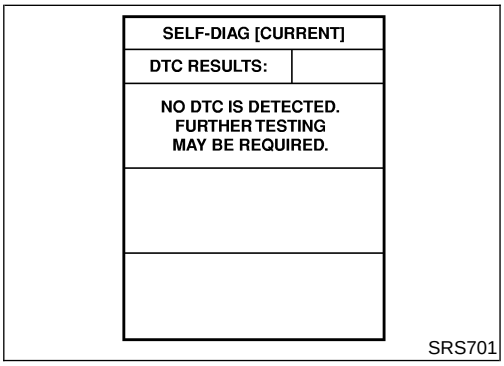

SRS701

If no malfunction is detected on "SELF-DIAG [CURRENT]" even though malfunction is detected in "SRS Operation Check", check the battery voltage.
If the battery voltage is less than 9V, charge the battery. Then go to "DIAGNOSTIC PROCEDURE 3", RS-48.
If the battery voltage is OK, refer to "DIAGNOSTIC PROCEDURE 4 (CONTINUE FROM DIAGNOSTIC PROCEDURE 2)", RS-49, to diagnose the following cases:

- Self-diagnostic result "SELF-DIAG [PAST]" (previously stored in the memory) might not be erased after repair.
- The SRS system malfunctions intermittently.

8. Touch "COPY".
9. Compare diagnostic codes to "CONSULT-II Diagnostic Code Chart". Refer to "CONSULT-II Diagnostic Code Chart ('SELF-DIAG [CURRENT]')", RS-46.
10. Touch "BACK" key of CONSULT-II until "SELECT SYSTEM" appears in order to return to User mode from Diagnosis mode.
11. Turn ignition switch "OFF", then turn off and disconnect CONSULT-II, and disconnect both battery cables.
12. Repair the system as outlined by the "Repair order" in "CONSULT-II Diagnostic Code Chart", that corresponds to the self-diagnostic result. For replacement procedure of component parts, refer to the applicable Removal and Installation procedure.
13. After repairing the system, refer to "DIAGNOSTIC PROCEDURE 3", RS-48 for final checking.

CONSULT-II Diagnostic Code Chart ("SELF-DIAG [CURRENT]")

=NERS0023S0101

Self-diagnosis result	Explanation		Repair order ***"Recheck SRS at each replacement."**
NO DTC IS DETECTED.	When malfunction is indicated by the "AIR BAG" warning lamp in User mode	• Low battery voltage (Less than 9V) • Self-diagnosis result " SELF-DIAG [PAST]" (previously stored in the memory) might not have been erased after repair. • Intermittent malfunction has been detected in the past.	• Go to "DIAGNOSTIC PROCEDURE 3", RS-48 after charging battery. • Go to "DIAGNOSTIC PROCEDURE 4", RS-49.
	• No malfunction is detected.		• Go to "DIAGNOSTIC PROCEDURE 3", RS-48.
AIRBAG MODULE [OPEN]	• Driver air bag module circuit is open (including the spiral cable).		1. Visually check wiring harness connections. 2. Replace harness if it has visible damage. 3. Replace spiral cable. 4. Replace driver air bag module. (Before disposing of it, it must be deployed.) 5. Replace air bag diagnosis sensor unit. 6. Replace the related harness.
AIRBAG MODULE [VB-SHORT]	• Driver air bag module circuit is shorted to some power supply circuit (including the spiral cable).		
AIRBAG MODULE [GND-SHORT]	• Driver air bag module circuit is shorted to ground (including the spiral cable).		
AIRBAG MODULE [SHORT]	• Driver air bag module circuits are shorted to each other.		
ASSIST A/B MODULE [OPEN]	• Passenger air bag module circuit is open.		1. Visually check wiring harness connections. 2. Replace harness if it has visible damage. 3. Replace passenger air bag module. (Before disposing of it, it must be deployed.) 4. Replace air bag diagnosis sensor unit. 5. Replace the related harness.
ASSIST A/B MODULE [VB-SHORT]	• Passenger air bag module circuit is shorted to some power supply circuit.		
ASSIST A/B MODULE [GND-SHORT]	• Passenger air bag module circuit is shorted to ground.		
ASSIST A/B MODULE [SHORT]	• Passenger air bag module circuits are shorted to each other.		
PRE-TEN FRONT LH [OPEN/VB-SHORT]	• The circuit for the driver seat belt pre-tensioner is open or shorted to some power supply circuit.		1. Visually check wiring harness connections. 2. Replace harness if it has visible damage. 3. Replace the driver's seat belt. (Before disposing of it, it must be deployed.) 4. Replace air bag diagnosis sensor unit. 5. Replace the related harness.
PRE-TEN FRONT LH [GND-SHORT]	• The circuit for the driver seat belt pre-tensioner is shorted to ground.		
PRE-TEN FRONT RH [OPEN/VB-SHORT]	• The circuit for the passenger seat belt pre-tensioner is open or shorted to some power supply circuit.		1. Visually check wiring harness connections. 2. Replace harness if it has visible damage. 3. Replace the front passenger's seat belt. (Before disposing of it, it must be deployed.) 4. Replace air bag diagnosis sensor unit. 5. Replace the related harness.
PRE-TEN FRONT RH [GND-SHORT]	• The circuit for the passenger seat belt pre-tensioner is shorted to ground.		

Self-diagnosis result	Explanation	Repair order ***"Recheck SRS at each replacement."**
CONTROL UNIT	• Air bag diagnosis sensor unit is malfunctioning.	1. Visually check wiring harness connections. 2. Replace harness if it has visible damage. 3. Replace air bag diagnosis sensor unit. 4. Replace the related harness.
Code B4 or PASS A/B DEACT SW	• Activate terminal is open.	1. Visually check wiring harness connections. 2. Replace harness if it has visible damage. 3. Replace passenger air bag deactivation switch. (The key cylinder of passenger air bag deactivation switch does not have to be replaced.) 4. Replace air bag diagnosis sensor unit. 5. Replace the related harness.
	• Activate terminal is shorted to ground.	
	• Deactivate terminal is open.	
	• Deactivate terminal is shorted to ground.	
	• Activate terminal and deactivate terminal are shorted to each other.	
Code B5 or PASS A/B DEACT SW INDICATOR	• Passenger air bag deactivation switch indicator circuit is open.	1. Visually check wiring harness connections. 2. Replace harness if it has visible damage. 3. Replace passenger air bag deactivation switch indicator. 4. Replace air bag diagnosis sensor unit. 5. Replace the related harness.
	• Passenger air bag deactivation switch indicator circuit is shorted to some power supply circuit.	
	• Passenger air bag deactivation switch indicator circuit is shorted to ground.	
INDEFINITE FAILURES [AIR BAGS]	• Passenger air bag deactivation switch status is not identified.	1. Visually check wiring harness connections. 2. Replace harness if it has visible damage. 3. Replace passenger air bag deactivation switch. 4. Replace air bag diagnosis sensor unit. 5. Replace the related harness.

*: Follow the procedures in numerical order when repairing malfunctioning parts. Confirm whether malfunction is eliminated using the "AIR BAG" warning lamp (in User mode) or CONSULT-II each time repair is finished. If malfunction is still observed, proceed to the next step. When malfunction is eliminated, further repair work is not required.

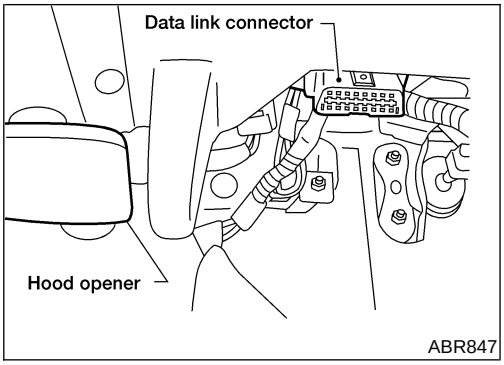

ABR847

DIAGNOSTIC PROCEDURE 3

=NERS0023S02

Final checking after repairing SRS by using CONSULT-II — Diagnosis mode

1. After repairing SRS, connect both battery cables.
2. Connect CONSULT-II to data link connector.
3. Turn ignition switch ON.

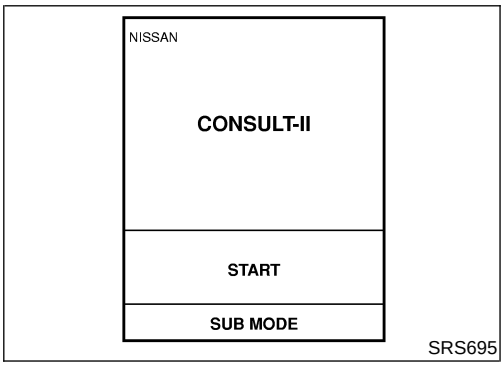

SRS695

4. Touch "START".

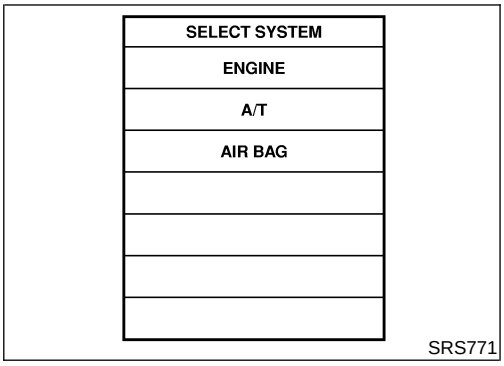

SRS771

5. Touch "AIR BAG".

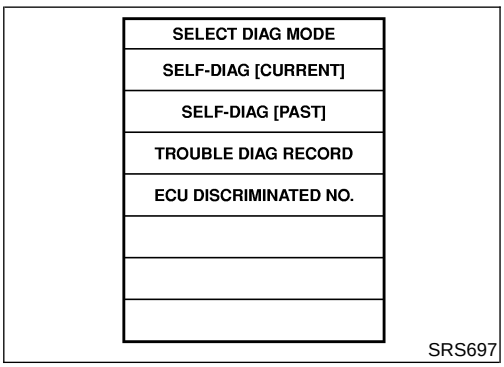

SRS697

6. Touch "SELF-DIAG [CURRENT]".

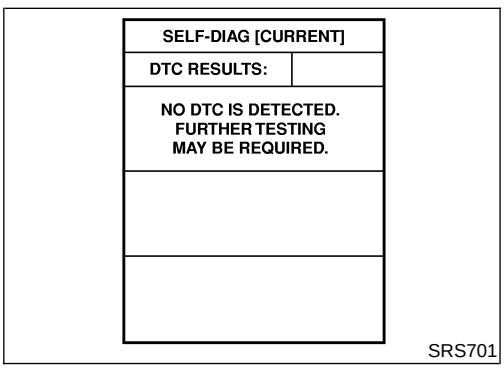

SRS701

7. If no malfunction is detected on "SELF-DIAG [CURRENT]", repair of SRS is completed. Refer to step 8.
   If any malfunction was detected on "SELF-DIAG [CURRENT]", the malfunctioning part is not repaired completely or another malfunctioning part is detected. Refer to "DIAGNOSTIC PROCEDURE 2", RS-43 and repair malfunctioning part completely.

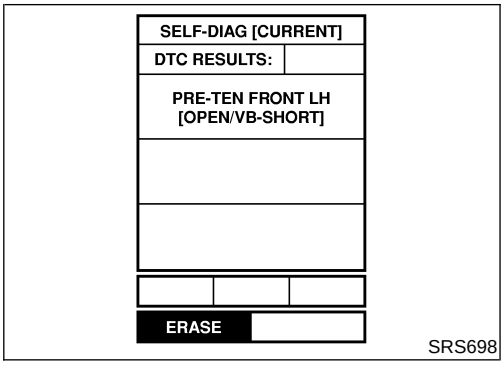

8. Touch "ERASE".

NOTE:
Touch "ERASE" to clear the memory of the malfunction ("SELF-DIAG [PAST]").
If the memory of the malfunction in "SELF-DIAG [PAST]" is not erased, the User mode shows the system malfunction by the operation of the "AIR BAG" warning lamp even if the malfunction is repaired completely.

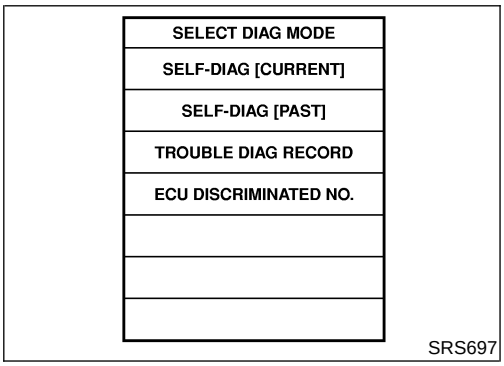

9. Touch "BACK" key of CONSULT-II to "SELECT DIAG MODE" screen. Touch "SELF-DIAG [PAST]".

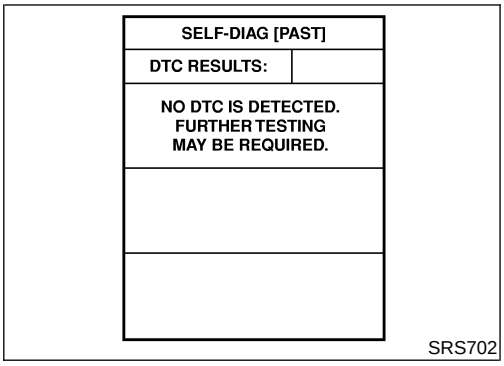

10. Check that no malfunction is detected on "SELF-DIAG [PAST]".
11. Touch "BACK" key of CONSULT-II until "SELECT SYSTEM" appears in order to return to User mode from Diagnosis mode.
12. Turn ignition switch OFF, then turn off and disconnect CONSULT-II.
13. Go to "SRS Operation Check", RS-43 to check SRS operation by using "AIR BAG" warning lamp with User mode.

DIAGNOSTIC PROCEDURE 4 (CONTINUED FROM DIAGNOSTIC PROCEDURE 2)

NERS0023S03

Inspecting SRS malfunction record

1	CHECK FOR PROBLEM CODE THAT MIGHT NOT HAVE BEEN ERASED AFTER PREVIOUS REPAIR	
Is it the first time for maintenance of SRS? **Yes or No**		
Yes	▶	Go to "DIAGNOSTIC PROCEDURE 5", RS-50.
No	▶	Self-diagnosis result "SELF-DIAG [PAST]" (previously stored in the memory) might not have been erased after repair. Go to "DIAGNOSTIC PROCEDURE 3", step 8, RS-48.

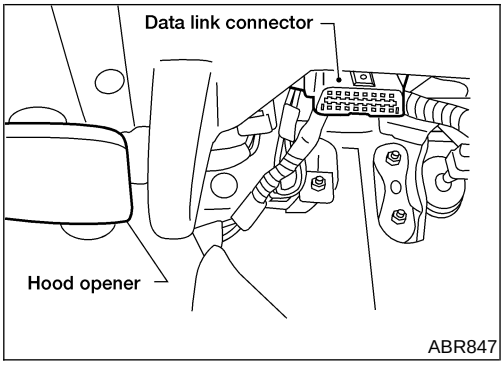

ABR847

DIAGNOSTIC PROCEDURE 5

NERS0023S04

Inspecting SRS intermittent malfunction by using CONSULT-II — Diagnosis mode

1. Turn ignition switch OFF.
2. Connect CONSULT-II to data link connector.
3. Turn ignition switch ON.

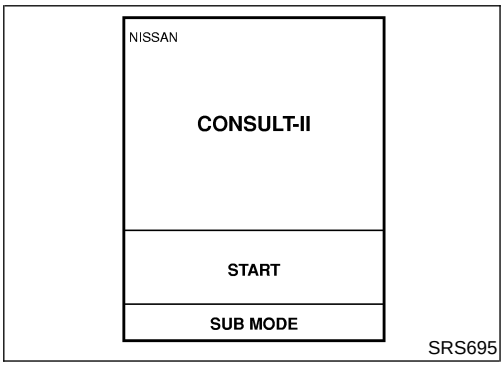

SRS695

4. Touch "START".

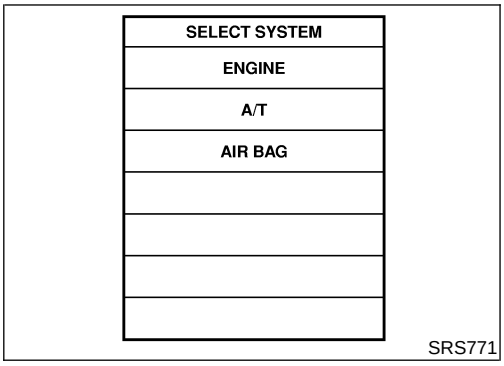

SRS771

5. Touch "AIR BAG".

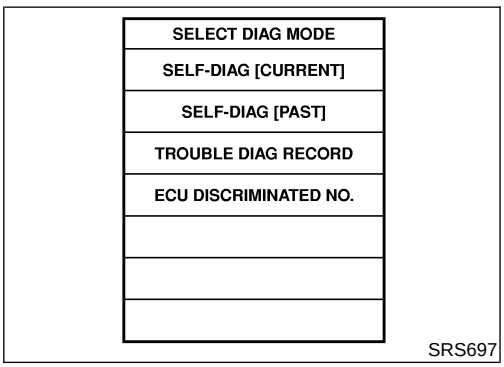

SRS697

6. Touch "SELF-DIAG [PAST]".

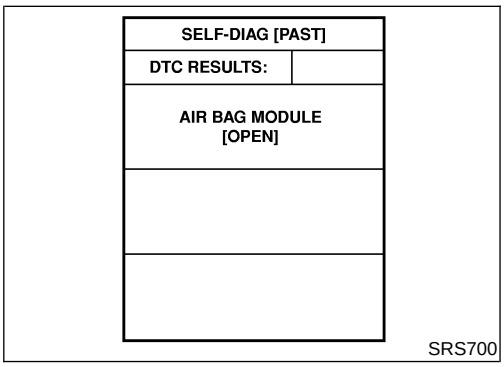

SRS700

7. If self-diagnosis result is displayed on "SELF-DIAG [PAST]", go to step 10.

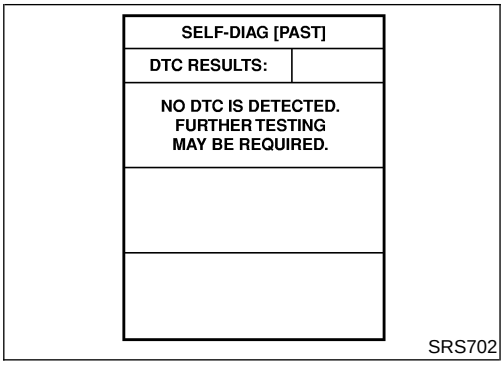

If no malfunction is detected on "SELF-DIAG [PAST]", touch "BACK" and go back to "SELECT DIAG MODE".

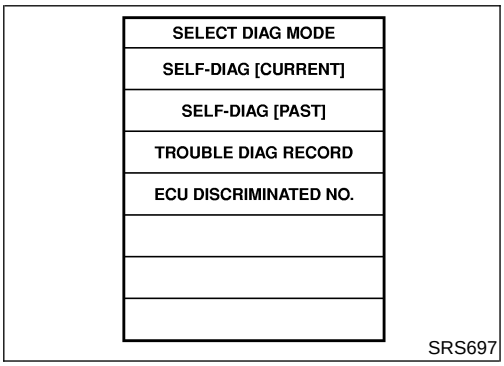

8. Touch "TROUBLE DIAG RECORD".

NOTE:
With "TROUBLE DIAG RECORD", self-diagnosis results previously erased by a reset operation can be displayed.

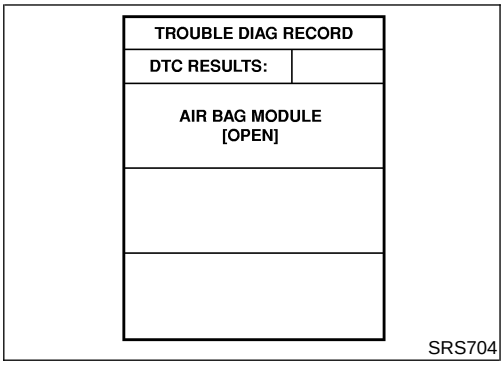

9. Self-diagnosis result is displayed on "TROUBLE DIAG RECORD".
10. Touch "PRINT".
11. Compare self-diagnosis result to "Intermittent Malfunction Diagnostic Code Chart", RS-52.
12. Touch "BACK" key of CONSULT-II until "SELECT SYSTEM" appears.
13. Turn ignition switch OFF, then turn off and disconnect CONSULT-II, and both battery cables.
14. Repair the system as outlined by the repair order that corresponds to the self-diagnosis result in "Intermittent Malfunction Diagnostic Code Chart", RS-52. For replacement procedure of component parts, refer to RS-19.
15. Go to "DIAGNOSTIC PROCEDURE 3", RS-48 for final checking.

Intermittent Malfunction Diagnostic Code Chart (SELF-DIAG [PAST] or TROUBLE DIAG RECORD)

=NERS0023S0401

Self-diagnosis result	Explanation		Repair order*
NO DTC IS DETECTED.	When malfunction is indicated by the "AIR BAG" warning lamp in User mode	• Low battery voltage (Less than 9V)	• Go to "DIAGNOSTIC PROCEDURE 3", RS-48 after charging battery.
	• No malfunction is detected.		• Go to "DIAGNOSTIC PROCEDURE 3", RS-48.
AIRBAG MODULE [OPEN]	• Driver air bag module circuit is open. (including the spiral cable)		1. Visually check the wiring harness connection. 2. Replace the harness if it has visible damage. 3. If the harness check result is OK, replace driver air bag module (Before disposal of it, it must be deployed.), diagnosis sensor unit and spiral cable.
AIRBAG MODULE [VB-SHORT]	• Driver air bag module circuit is shorted to some power supply circuit. (including the spiral cable)		
AIRBAG MODULE [GND-SHORT]	• Driver air bag module circuit is shorted to ground. (including the spiral cable)		
AIRBAG MODULE [SHORT]	• Driver air bag module circuits are shorted to each other.		
ASSIST A/B MODULE [VB-SHORT]	• Front passenger air bag module circuit is shorted to some power supply circuit.		1. Visually check the wiring harness connection. 2. Replace the harness if it has visible damage. 3. If the harness check result is OK, replace front passenger air bag module (Before disposal of it, it must be deployed.), and diagnosis sensor unit.
ASSIST A/B MODULE [OPEN]	• Front passenger air bag module circuit is open.		
ASSIST A/B MODULE [GND-SHORT]	• Front passenger air bag module circuit is shorted to ground.		
ASSIST A/B MODULE [SHORT]	• Front passenger air bag module circuits are shorted to each other.		
PRE-TEN FRONT LH [OPEN/VB-SHORT]	• The circuit for driver seat belt pre-tensioner is open or shorted to some power supply circuit.		1. Visually check the wiring harness connections. 2. Replace the harness if it has visible damage. 3. If the harness check is OK, replace the diagnosis sensor unit and driver seat belt. (Before disposing the driver seat belt pre-tensioner, it must be deployed.)
PRE-TEN FRONT LH [GND-SHORT]	• The circuit for driver seat belt pre-tensioner is shorted to ground.		
PRE-TEN FRONT RH [OPEN/VB-SHORT]	• The circuit for passenger seat belt pre-tensioner is open or shorted to some power supply circuit.		1. Visually check the wiring harness connections. 2. Replace the harness if it has visible damage. 3. If the harness check is OK, replace the diagnosis sensor unit and front passenger seat belt. (Before disposing the passenger seat belt pre-tensioner, it must be deployed.)
PRE-TEN FRONT RH [GND-SHORT]	• The circuit for passenger seat belt pre-tensioner is shorted to ground.		
CONTROL UNIT	• Diagnosis sensor unit is malfunctioning.		1. Visually check the wiring harness connection. 2. Replace the harness if it has visible damage. 3. If the harness check is OK, replace the diagnosis sensor unit.

Self-diagnosis result	Explanation	Repair order*
Code B4 or PASS A/B DEACT SW	• Activate terminal is open.	1. Visually check wiring harness connections. 2. Replace harness if it has visible damage. 3. If the harness visual check result is OK, replace passenger air bag deactivation switch. (The key cylinder of passenger air bag deactivation switch does not have to be replaced.)
	• Activate terminal is shorted to ground.	
	• Deactivate terminal is open.	
	• Deactivate terminal is shorted to ground.	
	• Activate terminal and deactivate terminal are shorted to each other.	
Code B5 or PASS A/B DEACT SW INDICATOR	• Passenger air bag deactivation switch indicator circuit is open.	1. Visually check wiring harness connections. 2. Replace harness if it has visible damage. 3. If the harness visual check result is OK, replace passenger air bag deactivation switch indicator.
	• Passenger air bag deactivation switch indicator circuit is shorted to some power supply circuit.	
	• Passenger air bag deactivation switch indicator circuit is shorted to ground.	
INDEFINITE FAILURES [AIR BAGS]	• Passenger air bag deactivation switch status is not identified.	1. Visually check wiring harness connections. 2. Replace harness if it has visible damage. 3. If the harness visual check result is OK, replace passenger air bag deactivation switch and air bag diagnosis sensor unit.

*: Intermittent malfunction areas cannot be easily located. For this reason, perform the procedures outlined under the repair order, then make the final system check.

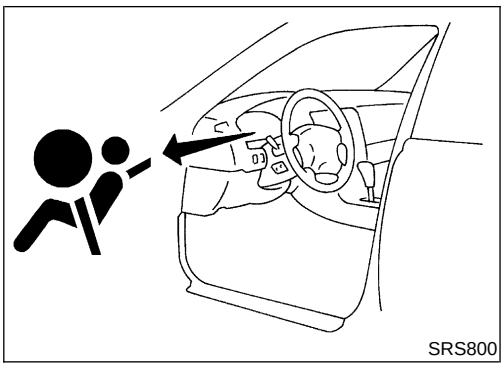
SRS800

Trouble Diagnoses without CONSULT-II

=NERS0024

DIAGNOSTIC PROCEDURE 6

NERS0024S01

Inspecting SRS malfunctioning parts by using "AIR BAG" warning lamp — Diagnosis mode

NOTE:
SRS will not enter Diagnosis mode if no malfunction is detected in User mode.

1. Turn ignition switch "ON".
2. After "AIR BAG" warning lamp lights for 7 seconds, turn ignition switch "OFF" within 1 second.
3. Wait more than 3 seconds.
4. Repeat steps 1 to 3 three times.
5. Turn ignition switch "ON".
   SRS is now in Diagnosis mode.
6. "AIR BAG" warning lamp operates in Diagnosis mode as follows:

NOTE:
If SRS does not enter Diagnosis mode even though malfunction is detected in User mode, check the battery voltage.
If the battery voltage is less than 9V, charge the battery. Then refer to "DIAGNOSTIC PROCEDURE 7", RS-58.
If the battery voltage is OK, replace the diagnosis sensor unit.

No.	"AIR BAG" warning lamp flash pattern — Diagnosis mode —		SRS condition
1	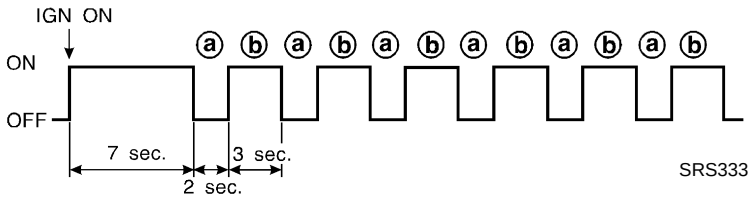 SRS333	**a** through **b** are repeated.	• Diagnosis results (previously stored in the memory) might not be erased after repair. • Intermittent malfunction has been detected in the past. Go to "DIAGNOSTIC PROCEDURE 8", RS-59.
2	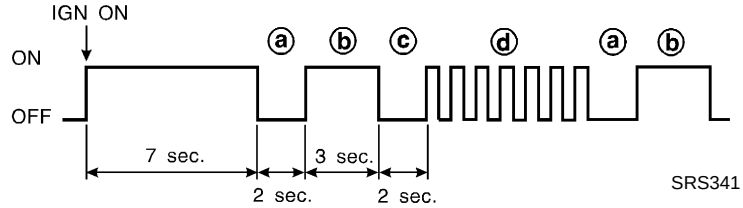 SRS341	**a** through **d** are repeated. **b** — Driver and passenger air bag and seat belt pre-tensioner marker (For identifying driver air bag, passenger air bag and/or seat belt pre-tensioners malfunctioning) **d** — Indicates malfunctioning part. The number of flash varies with malfunctioning part (0.5 sec. ON and 0.5 sec. OFF is counted as one flash.)	The system is malfunctioning and needs to be repaired.

7. Malfunctioning part is indicated by the number of flashes (part **d**). Compare the number of flashes to "Air Bag Warning Lamp Flash Code Chart". Refer to "Air Bag Warning Lamp Flash Code Chart (Diagnosis Mode)", RS-56, and locate malfunctioning part.
8. Turn ignition switch "OFF", and disconnect both battery cables.

9. Repair the system as outlined by the "Repair order" in "Warning Lamp Flash Code Chart" that corresponds to the flash code. For replacement procedure of component parts, refer to the applicable Removal and Installation procedure.
10. After repairing the system, refer to "DIAGNOSTIC PROCEDURE 7", RS-58.

Air Bag Warning Lamp Flash Code Chart (Diagnosis Mode)

=NERS0024S0101

Warning lamp	Flash code **d** (# of flashes)	Explanation	Repair order ***Recheck SRS at each replacement.**
"AIR BAG" warning lamp	0	• Self-diagnosis result (previously stored in the memory) might not have been erased after repair. • Intermittent malfunction has been detected in the past.	Go to "DIAGNOSTIC PROCEDURE 8", RS-59.
	1	The driver seat belt pre-tensioner circuit is malfunctioning.	1. Visually check wiring harness connections. 2. Replace harness if it has visible damage. 3. Replace driver seat belt pre-tensioner. (Before disposing, it must be deactivated.) 4. Replace air bag diagnosis sensor unit. 5. Replace the related harness.
	2	The driver air bag module circuit is malfunctioning.	1. Visually check wiring harness connections. 2. Replace harness if it has visible damage. 3. Replace spiral cable. 4. Replace driver air bag module. (Before disposing of it, it must be deployed.) 5. Replace air bag diagnosis sensor unit. 6. Replace the related harness.
	3	The passenger seat belt pre-tensioner circuit is malfunctioning.	1. Visually check wiring harness connections. 2. Replace harness if it has visible damage. 3. Replace passenger seat belt pre-tensioner. (Before disposing of it, it must be deactivated.) 4. Replace air bag diagnosis sensor unit. 5. Replace the related harness.
	7	The air bag diagnosis sensor unit is malfunctioning.	1. Visually check wiring harness connections. 2. Replace harness if it has visible damage. 3. Replace air bag diagnosis sensor unit. 4. Replace the related harness.
	8	The passenger air bag module circuit is malfunctioning.	1. Visually check wiring harness connections. 2. Replace harness if it has visible damage. 3. Replace passenger air bag module. (Before disposing of it, it must be deployed.) 4. Replace air bag diagnosis sensor unit. 5. Replace the related harness.
	9	Passenger air bag deactivation switch is not identified.	1. Visually check wiring harness connections. 2. Replace harness if it has visible damage. 3. Replace passenger air bag deactivation switch. (The key cylinder of the deactivation switch does not have to be replaced.) 4. Replace air bag diagnosis sensor unit. 5. Replace the related harness.

Warning lamp	Flash code **d** (# of flashes)	Explanation	Repair order ***Recheck SRS at each replacement.**
"AIR BAG" warning lamp	10	Passenger air bag deactivation switch is malfunctioning.	1. Visually check wiring harness connections. 2. Replace harness if it has visible damage. 3. Replace passenger air bag deactivation switch. (The key cylinder of the deactivation switch does not have to be replaced.) 4. Replace air bag diagnosis sensor unit. 5. Replace the related harness.
	11	Passenger air bag deactivation switch indicator is malfunctioning.	1. Visually check wiring harness connections. 2. Replace harness if it has visible damage. 3. Replace passenger air bag deactivation switch indicator. 4. Replace air bag diagnosis sensor unit. 5. Replace the related harness.

* Follow the procedures in numerical order when repairing malfunctioning parts. Confirm whether malfunction is eliminated using the "AIR BAG" warning lamp (in User mode) or CONSULT-II each time repair is finished. If malfunction is still observed, proceed to the next step. When malfunction is eliminated, further repair work is not required.

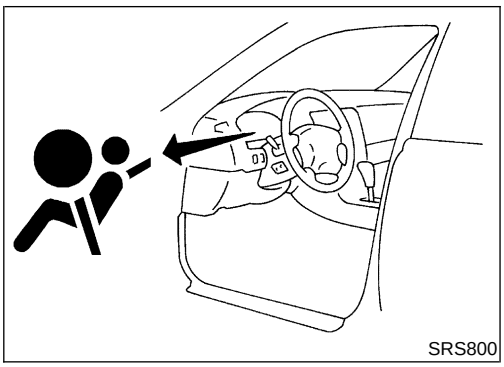
SRS800

DIAGNOSTIC PROCEDURE 7

=NERS0024S02

Final checking after repairing SRS by using "AIR BAG" warning lamp — Diagnosis mode and User mode

1. After repairing SRS connect both battery cables.
2. Open driver's door.
3. Turn ignition switch from "OFF" to "ON".
4. "AIR BAG" warning lamp operates in Diagnosis mode as follows:

No.	"AIR BAG" warning lamp flash pattern — Diagnosis mode —		SRS condition
1	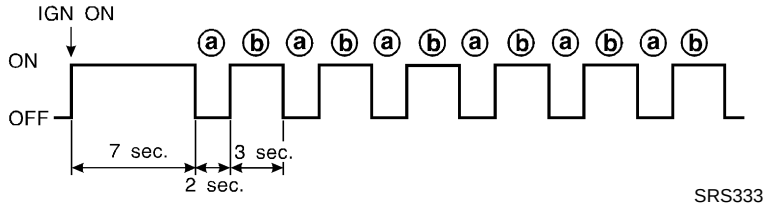 SRS333	**a** through **b** are repeated.	No malfunction is detected or repair is completed. No further action is necessary.
2	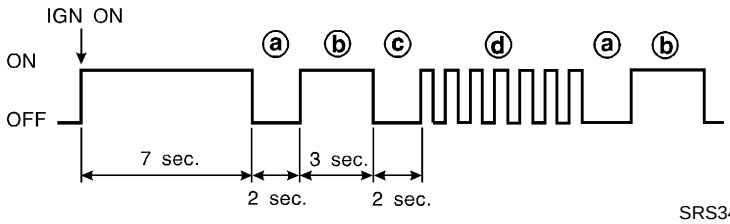 SRS341	**a** through **d** are repeated. **b** — Driver and passenger air bag and seat belt pre-tensioner marker (For identifying driver air bag, passenger air bag and/or seat belt pre-tensioners malfunctioning) **d** — Indicates malfunctioning part. The number of flashes varies with malfunctioning part (0.5 sec. ON and 0.5 sec. OFF is counted as one flash.)	The system is malfunctioning and needs to be repaired.

NOTE:
When diagnosis sensor unit is replaced with new one, "AIR BAG" warning lamp will operate in User mode. Checking "AIR BAG" warning lamp operation in Diagnosis mode is not required. Go to step 6.

5. If "AIR BAG" warning lamp operates as shown in No. 1 in chart above, turn ignition switch "OFF" to reset from Diagnosis mode to User mode and to erase the memory of the malfunction. Then go to step 6.
   If "AIR BAG" warning lamp operates as shown in No. 2 or No. 3 in chart above, the malfunctioning part is not repaired completely, or another malfunctioning part is detected. Refer to "DIAGNOSTIC PROCEDURE 6", RS-54, and repair malfunctioning part completely.
6. Turn ignition switch "ON". "AIR BAG" warning lamp operates in User mode. Compare "AIR BAG" warning lamp operation to the chart below.

NOTE:
If switching Diagnosis mode to User mode is required while malfunction is being detected, by turning ignition switch as follows:

1) Turn ignition switch "ON".
2) After "AIR BAG" warning lamp lights for 7 seconds, turn ignition switch "OFF" within 1 second.
3) Wait more than 3 seconds.
4) Repeat steps 1 to 3 three times.

5) Turn ignition switch "ON".
SRS is now in User mode.

"AIR BAG" warning lamp operation — User mode —	SRS condition	Reference item
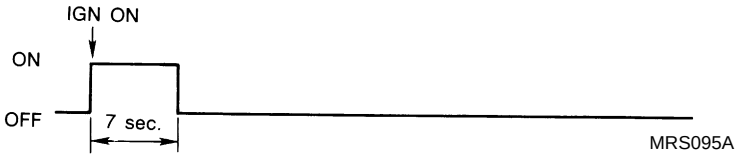 MRS095A	No malfunction is detected. No further action is necessary.	—
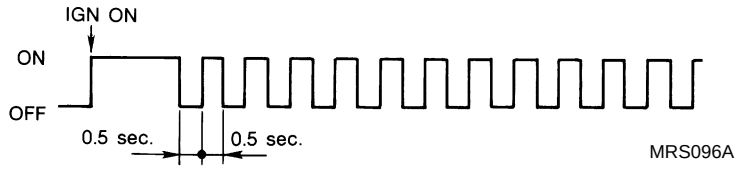 MRS096A	The system is malfunctioning and needs to be repaired as indicated.	Go to "DIAGNOSTIC PROCEDURE 6", RS-54.
 MRS097A	Air bag is deployed. Seat belt pre-tensioner is deployed.	Go to "COLLISION DIAGNOSIS", RS-63.
	Air bag fuse, diagnosis sensor unit or harness is malfunctioning and needs to be repaired.	Go to "DIAGNOSTIC PROCEDURE 9", RS-60.
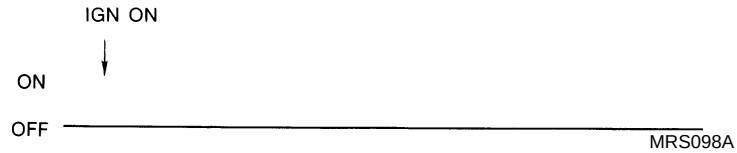 MRS098A	One of the following has occurred and needs to be repaired. ● Meter fuse is blown. ● "AIR BAG" warning lamp circuit has open or short. ● Diagnosis sensor unit is malfunctioning.	Go to "DIAGNOSTIC PROCEDURE 10", RS-62.

DIAGNOSTIC PROCEDURE 8 (CONTINUED FROM DIAGNOSTIC PROCEDURE 6)

NERS0024S03

Inspecting SRS malfunction record

1	CHECK FOR PROBLEM CODE THAT MIGHT NOT HAVE BEEN ERASED AFTER PREVIOUS REPAIR	
Is it the first time for maintenance of SRS? **Yes or No**		
Yes	▶	Go to "DIAGNOSTIC PROCEDURE 5", RS-50. (Further inspection cannot be performed without CONSULT-II.)
No	▶	Self-diagnosis result (previously stored in the memory) might not have been erased after repair. Go to "DIAGNOSTIC PROCEDURE 7", step 5, RS-58.

Trouble Diagnoses: “AIR BAG” Warning Lamp Does Not Turn Off

=NERS0025

DIAGNOSTIC PROCEDURE 9

NERS0025S01

1	CHECK FOR DEPLOYMENT OF AIR BAG MODULE	
Is air bag module deployed?		
Yes or No		
Yes	▶	Refer to “Collision Diagnosis”, RS-63.
No	▶	GO TO 2.

2	CHECK AIR BAG FUSE	
Is air bag fuse OK?		
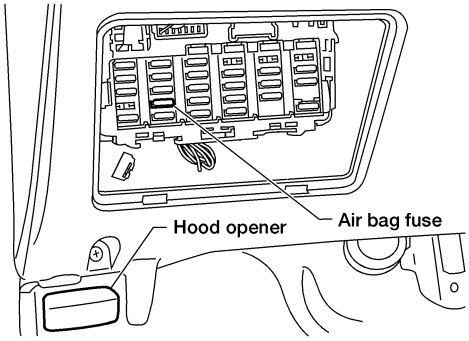 ARS349		
OK or NG		
OK	▶	GO TO 4.
NG	▶	GO TO 3.

3	CHECK AIR BAG FUSE AGAIN	
Replace air bag fuse and turn ignition switch ON.		
Does air bag fuse blow again?		
Yes	▶	Repair main harness.
No	▶	**INSPECTION END**

4	CHECK AIR BAG DIAGNOSIS SENSOR UNIT

1. Turn ignition switch OFF.
2. Connect CONSULT-II.
3. Turn ignition switch ON.
4. Touch "START" on CONSULT-II screen.

Is "AIRBAG" displayed on CONSULT-II?

SELECT DIAG MODE
SELF-DIAG [CURRENT]
SELF-DIAG [PAST]
TROUBLE DIAG RECORD
ECU DISCRIMINATED NO.

SRS697

Yes or No

Yes	▶	GO TO 5.
No	▶	Visually check wiring harness connection of air bag diagnosis sensor unit. If harness connection check result is OK, replace air bag diagnosis sensor unit.

5	CHECK HARNESS CONNECTION

Are harness connections between "AIR BAG" warning lamp and air bag diagnosis sensor unit OK?

OK or NG

OK	▶	Replace air bag diagnosis sensor unit.
NG	▶	Connect combination meter, air bag diagnosis sensor unit and inline harness connectors properly. If "AIR BAG" warning lamp still does not go off, repair main harness.

Trouble Diagnoses: “AIR BAG” Warning Lamp Does Not Turn On

=NERS0026

DIAGNOSTIC PROCEDURE 10

NERS0026S01

1	CHECK “AIR BAG” WARNING LAMP FUSE

Is meter fuse OK?

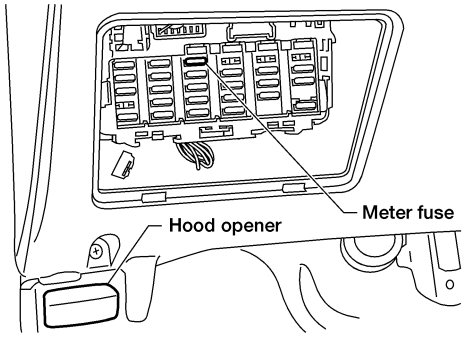

ARS350

OK or NG

OK	▶	GO TO 3.
NG	▶	GO TO 2.

2	CHECK “AIR BAG” WARNING LAMP FUSE AGAIN

Replace meter fuse and turn ignition switch ON.

Does meter fuse blow again?

Yes	▶	Repair main harness.
No	▶	**INSPECTION END**

3	CHECK AIR BAG WARNING LAMP LED

Is “AIR BAG” warning lamp LED OK?

OK or NG

OK	▶	GO TO 4.
NG	▶	Replace “AIR BAG” warning lamp LED.

4	CHECK HARNESS CONNECTION BETWEEN AIR BAG DIAGNOSIS SENSOR UNIT AND “AIR BAG” WARNING LAMP

Disconnect air bag diagnosis sensor unit harness connector and turn ignition switch ON.

Does “AIR BAG” warning lamp turn on?

Yes	▶	Replace air bag diagnosis sensor unit.
No	▶	Check the ground circuit of “AIR BAG” warning lamp.

Collision Diagnosis

NERS0028

To repair the SRS, perform the following steps.

When SRS is activated in a collision:

1) Replace the diagnosis sensor unit.
2) Remove the air bag modules and seat belt pre-tensioner assemblies.
3) Check the SRS components using the table shown below:

- Replace any SRS components showing visible signs of damage (dents, cracks and deformation).

4) Install new air bag modules and seat belt pre-tensioner assemblies.
5) Conduct self-diagnosis using CONSULT-II or “AIR BAG” warning lamp. Refer to “SRS Operation Check”, RS-43. Ensure entire SRS operates properly.

When SRS is not activated in a collision:

1) Check the SRS components using the table shown below:

- Replace any SRS components showing visible signs of damage (dents, cracks and deformation).

2) Conduct self-diagnosis using CONSULT-II or “AIR BAG” warning lamp. Refer to “SRS Operation Check”, RS-43. Ensure entire SRS operates properly.

SRS INSPECTION

NERS0028S01

Part	SRS is activated	SRS is NOT activated
Air bag module (driver and passenger side)	REPLACE Install with new bolts coated with bonding agent.	1. Remove air bag module. Check harness cover and connectors for damage, terminals for deformities, and harness for binding. 2. a. Install driver air bag module into the steering wheel to check fit and alignment with the wheel. b. Install passenger air bag module into the instrument panel to check fit with the instrument panel. 3. No damage found, reinstall with new bolts coated with bonding agent. 4. If damaged—REPLACE. Install air bag modules with new bolts coated with bonding agent. Air bag must be deployed before discarding.
Seat belt pre-tensioner assembly	REPLACE Install seat belt pre-tensioner with new bolts.	1. Remove seat belt pre-tensioners. Check harness cover and connectors for damage, terminals for deformities, and harness for binding. 2. Check belts for damage and anchors for loose mounting. 3. Check retractor for smooth operation. 4. If no damage is found, reinstall seat belt pre-tensioner assembly. 5. If damaged—REPLACE. Install the seat belt pre-tensioners with new bolts coated with bonding agent. Seat belt pre-tensioners must be deployed before discarding.
Diagnosis sensor unit	REPLACE Install with new bolts coated with bonding agent.	1. Check case for dents, cracks or deformities. 2. Check connectors for damage, and terminals for deformities. 3. If no damage is found, reinstall with new bolts and ground bolt coated with bonding agent. 4. If damaged—REPLACE. Install diagnosis sensor unit with new bolts and ground bolt coated with bonding agent.
Steering wheel	1. Visually check steering wheel for deformities. 2. Install air bag module to check fit or alignment with steering wheel. 3. Check steering wheel for excessive free play. 4. If no damage is found, reinstall with new bolts. 5. If damaged—REPLACE.	
Spiral cable	1. Visually check spiral cable and combination switch for damage. 2. Check connectors and protective tape for damage. 3. Check steering wheel for noise, binding or heavy operation. 4. If no damage is found, reinstall with new bolts. 5. If damaged—REPLACE.	
Harness and Connectors	1. Check connectors for poor connection, damage, and terminals for deformities. 2. Check harness for binding, chafing, cuts, or deformities. 3. If no damage is found, reinstall the harness and connectors. 4. Damaged—REPLACE damaged harness. Do not attempt to repair, splice or modify any SRS harness.	

Part	SRS is activated	SRS is NOT activated
Passenger air bag deactivation switch and indicator	1. Visually check passenger air bag deactivation switch and indicator for dents, cracks and deformities. 2. Check the harness and connectors for damage, and terminals for deformities. 3. If damaged—REPLACE. **WARNING:** **After SRS maintenance or repair, make sure the passenger air bag deactivation switch is in the same position (ON or OFF) as when the vehicle arrived for service.**	
Instrument panel	1. When passenger air bag inflates, check the following points for bending, deformities and cracks: ● Opening portion for passenger air bag 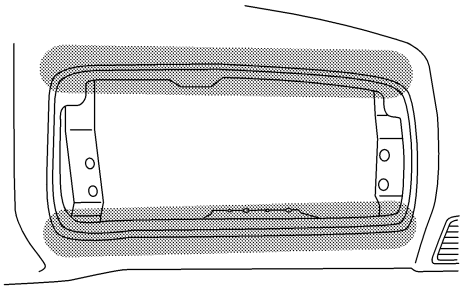 : Check points ● Passenger air bag module brackets **Back face of instrument panel** 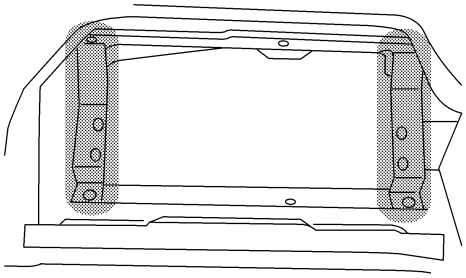 : Check points ● The portions securing the instrument panel 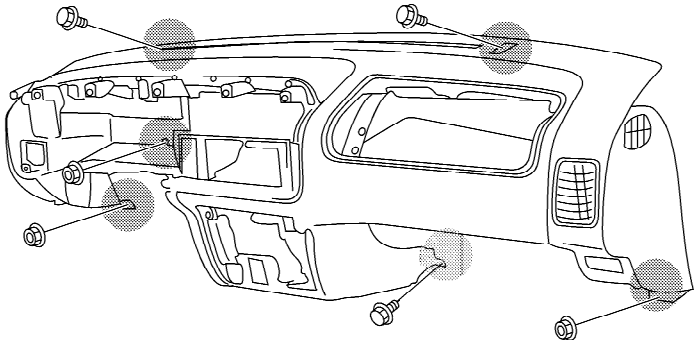 2. If no damage is found, reinstall the instrument panel. 3. If damaged — REPLACE the instrument panel with new nuts and bolts.	

BODY & TRIM

SECTION BT

CONTENTS

PRECAUTIONS 2
- Service Notice....2
- Supplemental Restraint System (SRS) ″AIR BAG″ and ″SEAT BELT PRE-TENSIONER″....2

PREPARATION 3
- Special Service Tools 3
- Commercial Service Tools 3

SQUEAK AND RATTLE TROUBLE DIAGNOSES....4
- Work Flow....4
  - CUSTOMER INTERVIEW 4
  - DUPLICATE THE NOISE AND TEST DRIVE 5
  - CHECK RELATED SERVICE BULLETINS 5
  - LOCATE THE NOISE AND IDENTIFY THE ROOT CAUSE 5
  - REPAIR THE CAUSE....5
  - CONFIRM THE REPAIR....6
- Generic Squeak and Rattle Troubleshooting 6
  - INSTRUMENT PANEL....6
  - CENTER CONSOLE 6
  - DOORS....6
  - TRUNK 7
  - SUNROOF AND HEADLINER....7
  - SEATS....7
  - UNDERHOOD 7
- Diagnostic Worksheet....8

CLIP AND FASTENER....10
- Description....10

BODY FRONT END....12
- Removal and Installation 12
  - FRONT BUMPER ASSEMBLY 12

BODY REAR END AND OPENER....15
- Removal and Installation 15
  - REAR BUMPER ASSEMBLY 15

FRONT DOOR 18
- Overhaul 18

REAR DOOR 19
- Overhaul 19

INSTRUMENT PANEL ASSEMBLY 20
- Removal and Installation 20

SIDE AND FLOOR TRIM....24
- Removal and Installation 24
  - BODY SIDE TRIM 24

DOOR TRIM....30
- Removal and Installation 30

ROOF TRIM 32
- Removal and Installation 32
  - KING CAB SHOWN, REGULAR CAB SIMILAR 32
  - CREW CAB....34

EXTERIOR 35
- Removal and Installation 35

FRONT SEAT 41
- Removal and Installation 41

REAR SEAT....44
- Removal and Installation 44

SUNROOF....46
- Removal and Installation 46

WINDSHIELD AND WINDOWS 47
- Removal and Installation 47
  - REMOVAL....47
  - INSTALLATION....47
  - WINDSHIELD 48
  - SIDE WINDOW....48
  - BACK WINDOW 49

REAR VIEW MIRROR 50
- Removal....50
- Installation....50

DOOR MIRROR....51
- Removal and Installation 51

CAB AND REAR BODY....52
- Body Mounting....52

BODY (ALIGNMENT) 53
- Alignment....53
  - ENGINE COMPARTMENT....54
  - UNDERBODY....56

Service Notice

NEBT0001

- When removing or installing various parts, place a cloth or padding on the vehicle body to prevent scratches.
- Handle trim, molding, instruments, grille, etc. carefully during removing or installing. Be careful not to soil or damage them.
- Apply sealing compound where necessary when installing parts.
- When applying sealing compound, be careful that the sealing compound does not protrude from parts.
- When replacing any metal parts (for example body outer panel, members, etc.), be sure to take rust prevention measures.

Supplemental Restraint System (SRS) “AIR BAG” and “SEAT BELT PRE-TENSIONER”

NEBT0002

The Supplemental Restraint System such as “AIR BAG” and “SEAT BELT PRE-TENSIONER”, used along with a seat belt, helps to reduce the risk or severity of injury to the driver and front passenger in a frontal collision. The Supplemental Restraint System consists of air bag modules (located in the center of the steering wheel and in the instrument panel on the passenger side), seat belt pre-tensioners, a diagnosis sensor unit, warning lamp, wiring harness, and spiral cable.

The vehicle (except Crew Cab model) is equipped with a passenger air bag deactivation switch. Because no rear seat exists where a rear-facing child restraint can be placed, the switch is designed to turn off the passenger air bag so that a rear-facing child restraint can be used in the front passenger seat. The switch is located in the center of the instrument panel, near the ashtray. When the switch is turned to the ON position, the passenger air bag is enabled and could inflate in a frontal collision. When the switch is turned to the OFF position, the passenger air bag is disabled and will not inflate in a frontal collision. A passenger air bag OFF indicator on the instrument panel lights up when the passenger air bag is switched OFF. The driver air bag always remains enabled and is not affected by the passenger air bag deactivation switch.

Information necessary to service the system safely is included in the **RS section** of this Service Manual.

WARNING:

- **To avoid rendering the SRS inoperative, which could increase the risk of personal injury or death in the event of a collision which would result in air bag inflation, all maintenance should be performed by an authorized NISSAN dealer.**
- **Improper maintenance, including incorrect removal and installation of the SRS, can lead to personal injury caused by unintentional activation of the system. For removal of Spiral Cable and Air Bag Module, see the RS section.**
- **Do not use electrical test equipment on any circuit related to the SRS unless instructed to in this Service Manual. Spiral cable and wiring harnesses (except “SEAT BELT PRE-TENSIONER”) covered with yellow insulation either just before the harness connectors or for the complete harness, are related to the SRS.**
- **The vehicle (except Crew Cab model) is equipped with a passenger air bag deactivation switch which can be operated by the customer. When the passenger air bag is switched OFF, the passenger air bag is disabled and will not inflate in a frontal collision. When the passenger air bag is switched ON, the passenger air bag is enabled and could inflate in a frontal collision. After SRS maintenance or repair, make sure the passenger air bag deactivation switch is in the same position (ON or OFF) as when the vehicle arrived for service.**

Special Service Tools

NEBT0027

The actual shapes of Kent-Moore tools may differ from those of special service tools illustrated here.

Tool number (Kent-Moore No.) Tool name	Description
(J-39570) Chassis Ear	Locating the noise 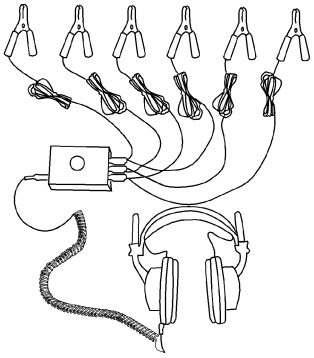 ABT465
(J-43980) Nissan Squeak and Rattle Kit	Locating the noise 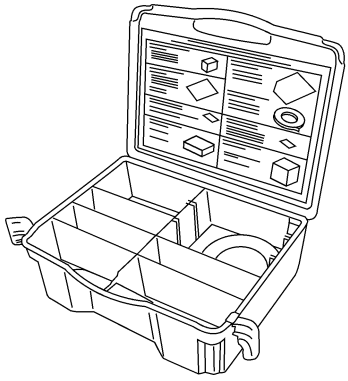 ABT474

Commercial Service Tools

NEBT0028

Tool number (Kent-Moore No.) Tool name	Description
(J-39565) Engine Ear	Locating the noise 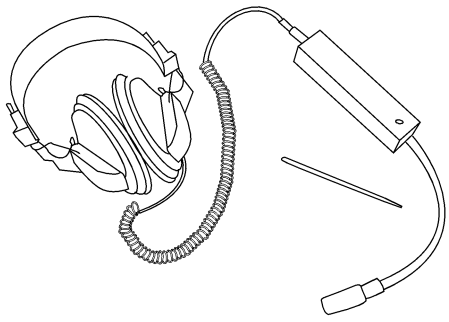 ABT466

Work Flow

NEBT0026S01

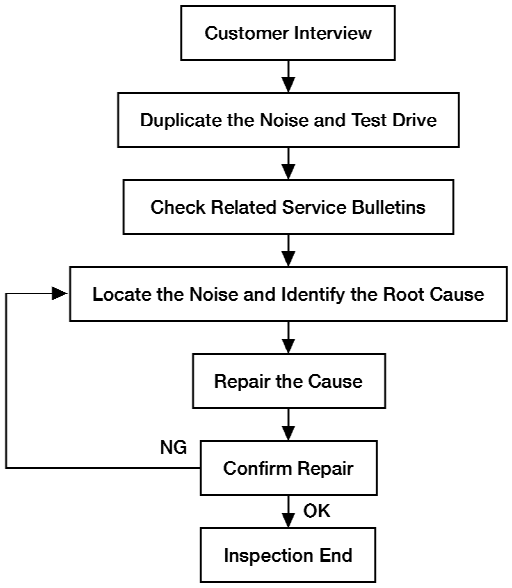

ABT488

CUSTOMER INTERVIEW

NEBT0026S0101

Interview the costumer, if possible, to determine the conditions that exist when the noise occurs. Use the Diagnostic Worksheet during the interview to document the facts and conditions when the noise occurs and any customers comments; refer to “Diagnostic Worksheet”, BT-8. This information is necessary to duplicate the conditions that exist when the noise occurs

- The customer may not be able to provide a detail description or location of the noise. Attempt to obtain all the facts and conditions that exist when the noise occurs (or does not occur).
- If there is more than one noise in the vehicle , be sure to diagnose and repair the noise that the costumer is concerned about. This can be accomplished by test driving the vehicle with the costumer.
- After identifying the type of noise, isolate the noise in terms of its characteristics. The noise characteristics are provided so the customer, service adviser and technician are all speaking the same language when defining the noise.
- Squeak-(Like tennis shoes on a clean floor)

Squeak characteristics include the light contact / fast movement / brought on by road conditions / hard surfaces = higher pitch noise / softer surfaces = lower pitch noises / edge to surface = chirping.

- Creak-(Like walking on an old wooden floor)

Creak characteristics include firm contact / slow movement / twisting with a rotational movement / pitch dependent on materials / often brought on by activity.

- Rattle-(Like shaking a baby rattle)

Rattle characteristics include the fast repeated contact / vibration or similar movement / loose parts / missing clip or fastener / incorrect clearance.

- Knock-(Like a knock on a door)

Knock characteristics include hollow sound / something repeating / often brought on by driver action.

- Tick-(Like a clock second hand)

Tick characteristics include light contact of light material / loose components / can be caused by driver action on road conditions .

- Thump-(Heavy, muffled knock noise)

Thump characteristics include softer knock / dead sound often brought on by activity.

- Buzz-(Like a bumble bee)

Buzz characteristics include high frequency rattle / firm contact

- Often the degree of acceptable noise level will vary depending upon the person. A noise that you may judge as acceptable may be very irritating to the costumer.
- Weather conditions, especially humidity and temperature, may have a great effect on noise level.

DUPLICATE THE NOISE AND TEST DRIVE

NEBT0026S0102

If possible, drive the vehicle with the customer until the noise is duplicated. Note any additional information on the Diagnostic Worksheet regarding the conditions or locations of the noise. This information can be used to duplicate the same conditions when you confirm the repair.

If the noise can be duplicated easily during the test drive, to help identify the source of the noise, try to duplicate the noise with the vehicle stopped by doing one or all of the following:

1) Close a door.
2) Tap or push / pull around the area where the noise appears to be coming from.
3) Rev the engine.
4) Use a floor jack to recreate vehicle "twist".
5) At idle, apply engine load (electric load, half-clutch on M/T model, drive position on A/T model).
6) Raise the vehicle on a hoist and hit a tire with rubber hammer.

- Drive the vehicle and attempt to duplicate the conditions the customer states exist when the noise occurs.
- If it is difficult to duplicate the noise, drive the vehicle slowly on an undulating or rough road to stress the vehicle body.

CHECK RELATED SERVICE BULLETINS

NEBT0026S0103

After verifying the customer concern or symptom, check ASSIST for Technical Service Bulletins (TSBs) related to that concern or symptom.

If a TSB relates to the symptom, follow the procedure to repair the noise.

LOCATE THE NOISE AND IDENTIFY THE ROOT CAUSE

NEBT0026S0104

1. Narrow down the noise to a general area. To help pinpoint the source of the noise, use a listening tool (Chassis Ear : J-39570, Engine Ear : J-39565 and mechanics stethoscope).
2. Narrow down the noise to a more specific area and identify the cause of the noise by:

- Removing the components in the area that you suspect the noise is coming from.

Do not use too much force when removing clips and fasteners, otherwise clips and fasteners can be broken or lost during the repair, resulting in the creation of new noise.

- Tapping or pushing/pulling the component that you suspect is causing the noise.

Do not tap or push/pull the component with excessive force, otherwise the noise will be eliminated only temporarily.

- Feeling for a vibration with your hand by touching the component(s) that you suspect is (are) causing the noise.
- Placing a piece of paper between components that you suspect are causing the noise.
- Looking for loose components and contact marks.

Refer to Generic Squeak and Rattle Troubleshooting,

REPAIR THE CAUSE

NEBT0026S0106

- If the cause is a loose component, tighten the component securely.
- If the cause is insufficient clearance between components:

− Separate components by repositioning or loosening and retightening the component, if possible.
− insulate components with a suitable insulator such as urethane pads, foam blocks, felt cloth tape or urethane tape. A Nissan Squeak and Rattle Kit (J-43980) is available through your authorized Nissan Parts Department.

CAUTION:

Do not use excessive force as many components are constructed of plastic and may be damaged. Always check with the Parts Department for the latest parts information.

The following material are contained in the Nissan Squeak and Rattle Kit (J-43980) Each item can be ordered separately as needed.

URETHANE PADS (1.5 mm thick)

insulates connectors, harness, etc.

76268–9E005: 100 x 135 mm / 76884–71L01: 60 x 85 mm / 76884–71L02: 15 x 25 mm

INSULATOR (foam blocks)

Insulates components from contact. Can be used to fill space behind a panel.

73982–9E000: 45 mm thick, 50 x 50 mm / 73982–50Y00: 10 mm thick, 50 x 50 mm

INSULATOR (Light foam block)

80845–71L00: 30 mm thick, 30 x 50 mm

FELT CLOTH TAPE

Used to insulate where movement does not occur. Ideal for instrument panel applications.

68370–4B000: 15 x 25 mm pad / 68239–13E00: 5 mm wide tape roll

The following materials, not found in the kit, can also be used to repair squeaks and rattles.

UHMW (TEFLON) TAPE

Insulates where slight movement is present. Ideal for instrument panel applications.

SILICONE GREASE

Used in place of UHMW tape that will be visible or not fit.

Note: Will only last a few months.

SILICONE SPRAY

Use when grease cannot be applied.

DUCT TAPE

Use to eliminate movement.

CONFIRM THE REPAIR

NEBT0026S0107

Confirm that the cause of a noise is repaired by test driving the vehicle. Operate the vehicle under the same conditions as when the noise originally occurred. Refer to the notes on the Diagnostic Worksheet.

Generic Squeak and Rattle Troubleshooting

NEBT0026S03

INSTRUMENT PANEL

NEBT0026S0301

Most incidents are caused by contact and movement between:

1. The lid A and instrument panel
2. Acrylic lens and combination meter housing
3. Instrument panel to front pillar garnish
4. Instrument panel to windshield
5. Instrument panel mounting pins
6. Wiring harness behind the combination meter
7. A/C defroster duct and duct joint

These incidents can usually be located by tapping or moving the components to duplicate the noise or by pressing on the components while driving to stop the noise. Most of these incidents can be repaired by applying felt cloth tape or silicon spray (in hard to reach areas). Urethane pads can be used to insulate wiring harness.

CAUTION:

Do not use silicone spray to isolate a squeak or rattle. If you saturate the area with silicone, you will not be able to recheck the repair.

CENTER CONSOLE

NEBT0026S0302

Components to pay attention to include:

1. Shifter assembly cover to finisher
2. A/C control unit and cluster lid C
3. Wiring harness behind audio and A/C control unit

The instrument panel repair and isolation procedures also apply to center console.

DOORS

NEBT0026S0303

Pay attention to the:

1. Finisher an inner panel making a slapping noise
2. Inside handle escutcheon to door finisher
3. Wiring harnesses tapping
4. Door striker out of alignment causing a popping noise on starts and stops

Tapping or moving the components or pressing on them while driving to duplicate the conditions can isolate many of these incidents. You can usually insulate the areas with felt cloth or insulator foam blocks from the Nissan Squeak and Rattle Kit (J-43980) to repair the noise.

TRUNK

NEBT0026S0304

Trunk noises are often caused by a loose jack or loose items put into the trunk by the owner.
In addition look for:

1. Trunk lid bumpers out of adjustment
2. Trunk lid striker out of adjustment
3. The trunk lid torsion bars knocking together
4. A loose license plate or bracket

Most of these incidents can be repaired by adjusting, securing, or insulating the items(s) or components(s) causing the noise.

SUNROOF AND HEADLINER

NEBT0026S0305

Noises in the sunroof and headliner area can often be traced to one of the following:

1. Sunroof lid, rail, linkage or seals making a rattle or light knocking noise
2. Sunvisor shaft shaking in the holder
3. Front or rear windshield touching headliner and squeaking

Again, pressing on the components to stop the noise while duplicating the conditions can isolate most of these incidents. Repairs usually consist of insulating with felt cloth tape.

SEATS

NEBT0026S0306

When isolating seat noises it's important to note the position the seat in and the load placed on the seat when the noise is present.
These conditions should be duplicated when verifying and isolating the cause of the noise.
Causes of seat noise include:

1. Headrest rods and holders
2. A squeak between the seat pad cushion and frame
3. The rear seat back lock and bracket

These noises can be isolated by moving or pressing on the suspected components while duplicating the conditions under which the noise occurs. Most of these incidents can be repaired by repositioning the component or applying urethane tape to the contact area.

UNDERHOOD

NEBT0026S0307

Some interior noises may be caused by components under the hood or on the engine wall. The noise is then transmitted into the passenger compartment.
Causes of transmitted underhood noises include:

1. Any components mounted to the engine wall
2. Components that pass thru the engine wall
3. Engine wall mounts and connectors
4. Loose radiator mounting pins
5. Hood bumpers out of adjustment
6. Hood striker out of adjustment

These noises can be difficult to isolate since they can not be reached from the interior of the vehicle. The best method is to secure, move or insulate one component at a time and test drive the vehicle. Also, engine RPM or load can be changed to isolate the noise.
Repair can usually be made by moving, adjusting, securing, or insulating the component causing the noise.

Diagnostic Worksheet

NEBT0026S04

SQUEAK & RATTLE DIAGNOSTIC WORKSHEET

Dear Nissan Customer:
We are concerned about your satisfaction with your Nissan vehicle. Repairing a squeak or rattle sometimes can be very difficult. To help us fix your Nissan right the first time, please take a moment to note the area of the vehicle where the squeak or rattle occurs and under what conditions. You may be asked to take a test drive with a service advisor or technician to ensure we confirm the noise you are hearing.

I. WHERE DOESTHE NOISE COME FROM? (circle the area of the vehicle)

The illustrations are for reference only, and may not reflect the actual configuration of your vehicle.

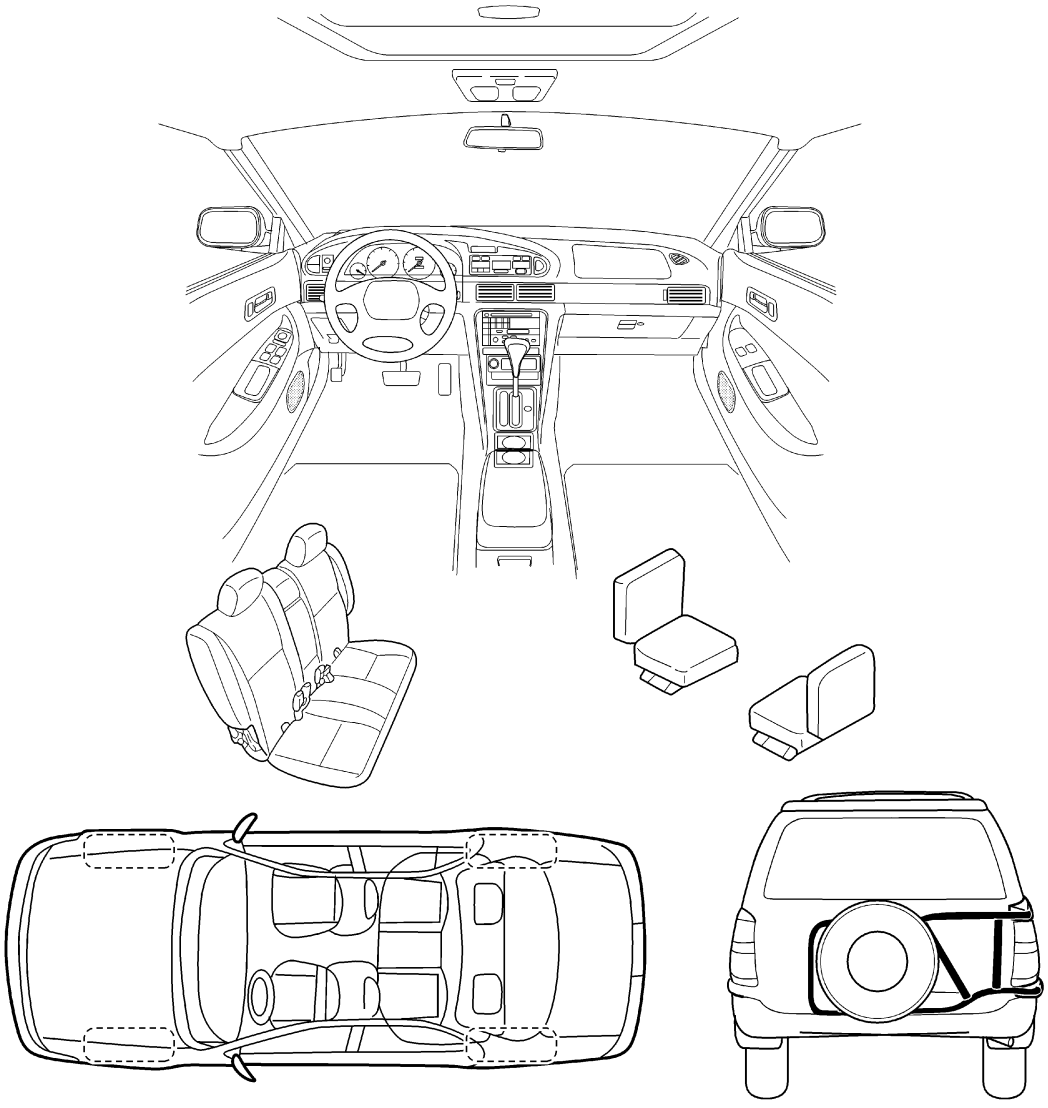

Continue to the back of the worksheet and briefly describe the location of the noise or rattle. In addition, please indicate the conditions which are present when the noise occurs.

ABT468

SQUEAK & RATTLE DIAGNOSTIC WORKSHEET- page 2

Briefly describe the location where the noise occurs:

_____

_____

II. WHEN DOES IT OCCUR? (check the boxes that apply)

❑ anytime
❑ 1st time in the morning
❑ only when it is cold outside
❑ only when it is hot outside
❑ after sitting out in the sun
❑ when it is raining or wet
❑ dry or dusty conditions
❑ other: _____

III. WHEN DRIVING:

❑ through driveways
❑ over rough roads
❑ over speed bumps
❑ only at about ____ mph
❑ on acceleration
❑ coming to a stop
❑ on turns : left, right or either (circle)
❑ with passengers or cargo
❑ other: _____
❑ after driving ____ miles or ____ minutes

IV. WHAT TYPE OF NOISE?

❑ squeak (like tennis shoes on a clean floor)
❑ creak (like walking on an old wooden floor)
❑ rattle (like shaking a baby rattle)
❑ knock (like a knock on a door)
❑ tick (like a clock second hand)
❑ thump (heavy, muffled knock noise)
❑ buzz (like a bumble bee)

TO BE COMPLETED BY DEALERSHIP PERSONNEL
Test Drive Notes:

_____

_____

	YES	NO	Initials of person performing
Vehicle test driven with customer	❑	❑	_____
- Noise verified on test drive	❑	❑	
- Noise source located and repaired	❑	❑	_____
- Follow up test drive performed to confirm repair	❑	❑	_____

VIN: _____ Customer Name: _____

W.O. #: _____ Date: _____

This form must be attached to Work Order

ABT469

Description

NEBT0003

- Clips and fasteners in BT section correspond to the following numbers and symbols.
- Replace any clips and/or fasteners which are damaged during removal or installation.

Symbol No.	Shapes	Removal & Installation
C101 	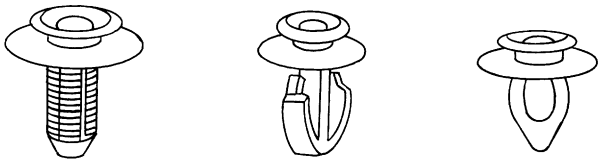 SBF302H	**Removal:** Remove by bending up with flat-bladed screwdrivers or clip remover. 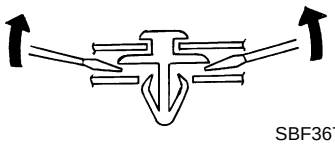 SBF367BA
C103 	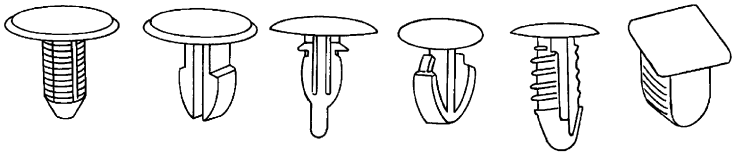 SBT095	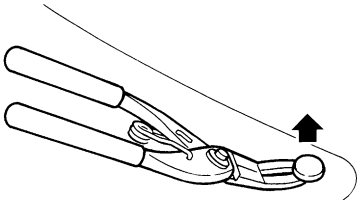 **Removal:** Remove with a clip remover. SBF423H
C203 	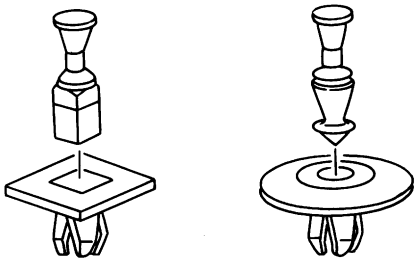 SBF258G	Push center pin to catching position. (Do not remove center pin by hitting it.) Push Push 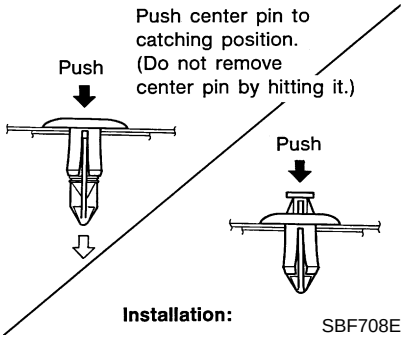 **Installation:** SBF708E
CE103 	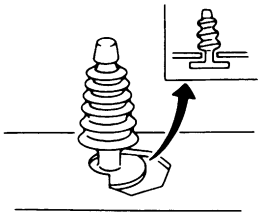 SBF104B	**Removal:** 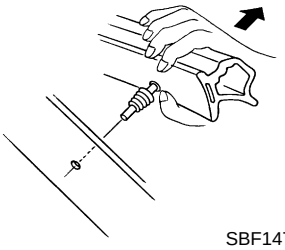 SBF147B

Symbol No.	Shapes	Removal & Installation
CG104	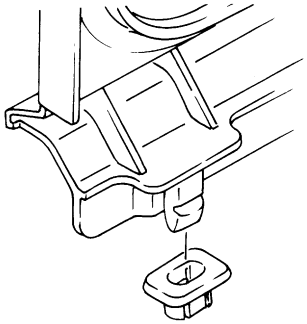 SBF351C	**Removal:** **Remove by bending up with flat-bladed screwdrivers.** 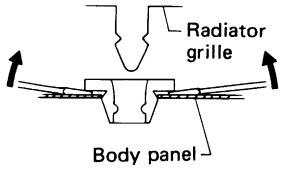 SBF352C
CE114	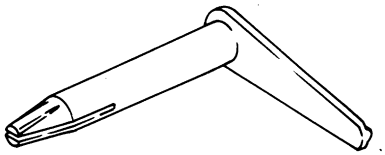 SBF353C	—
CG101 	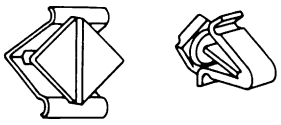 SBF145B	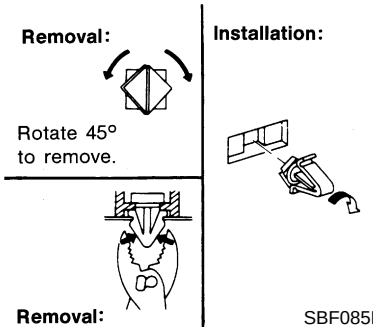 SBF085B
CR103	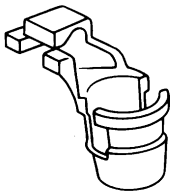 SBF768B	**Removal:** Holder portion of clip must be spread out to remove rod. 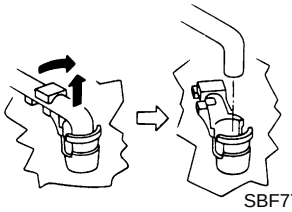 SBF770B
CS101 	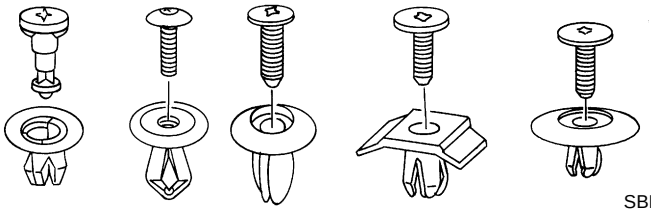 SBF078B	**Removal:** 1. Screw out with a Phillips screwdriver. 2. Remove female portion with flat-bladed screwdriver. 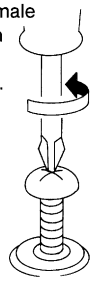 SBF992G

Removal and Installation

NEBT0004

- When removing or installing hood, place a cloth or other padding on hood. This prevents vehicle body from being scratched.
- Bumper fascia is made of plastic. Do not use excessive force and be sure to keep oil away from it.
- Hood adjustment: Adjust at hinge portion.
- Hood lock adjustment: After adjusting, check hood lock control operation. Apply a coat of grease to hood lock engaging mechanism.
- Hood opener: Do not attempt to bend cable forcibly. Doing so increases effort required to unlock hood.

FRONT BUMPER ASSEMBLY

NEBT0004S01

1. Remove push pins securing the fascia to the reinforcement. A
2. Remove screws securing the fascia to the fender. B
3. Remove bolts securing left and right bumper stays. C
4. Remove the push pins securing the fascia to the frame.
5. Remove the fascia.
6. Remove the frame crossbar.
7. Remove the front bumper assembly.
8. Remove the fascia reinforcement.

SEC. 261 • 620 • 650

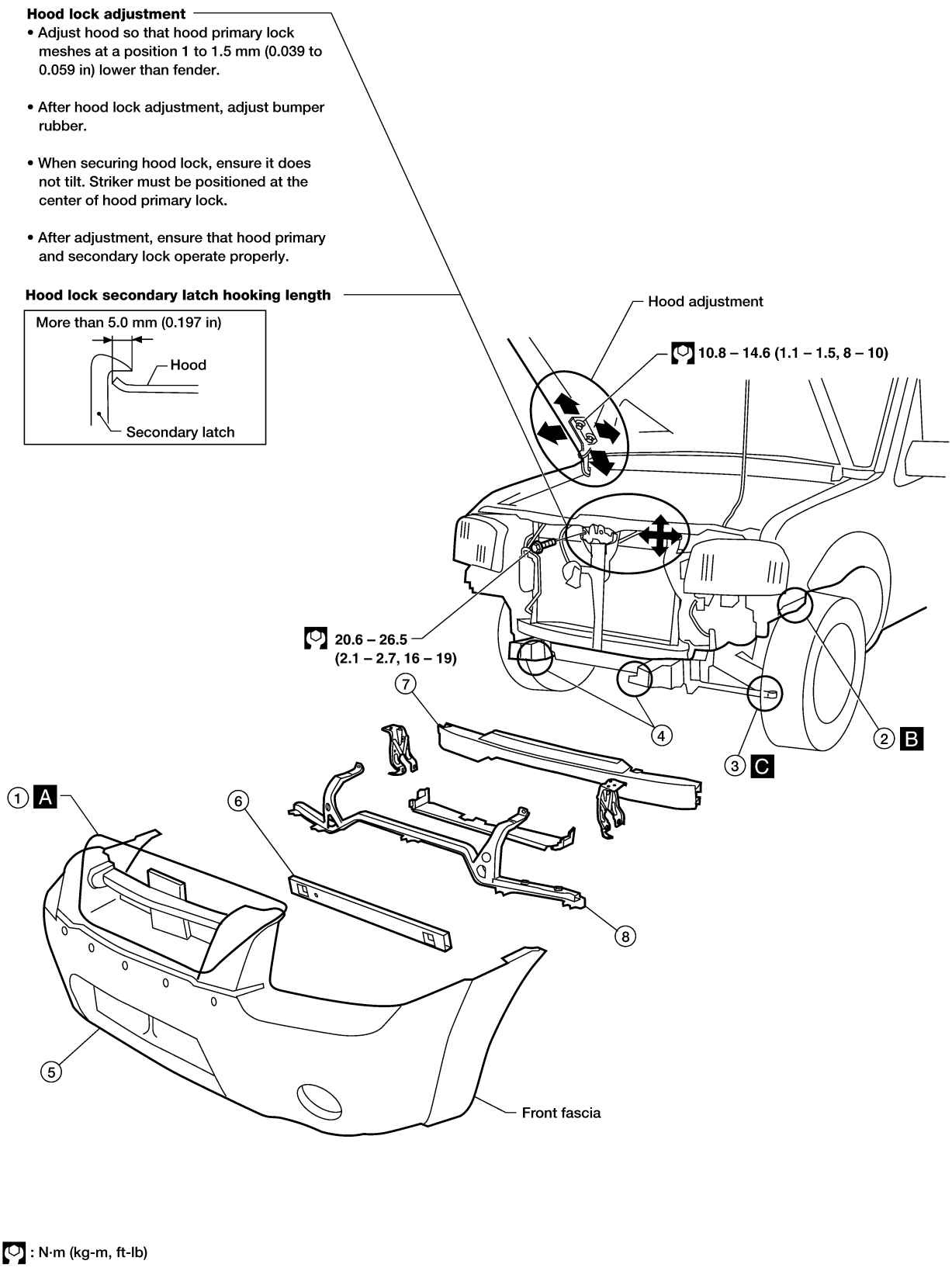

: N·m (kg-m, ft-lb)

WBT097

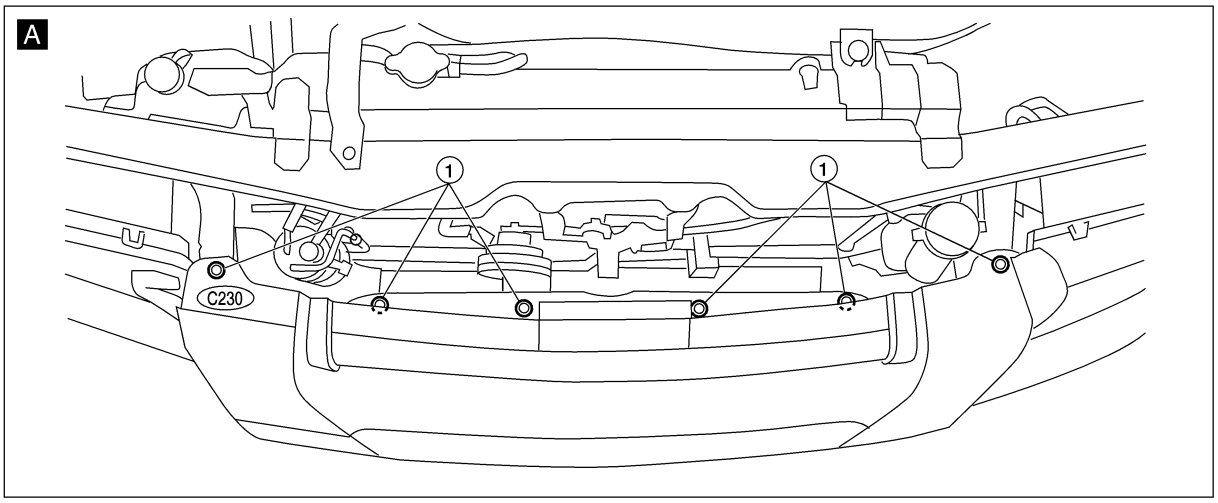

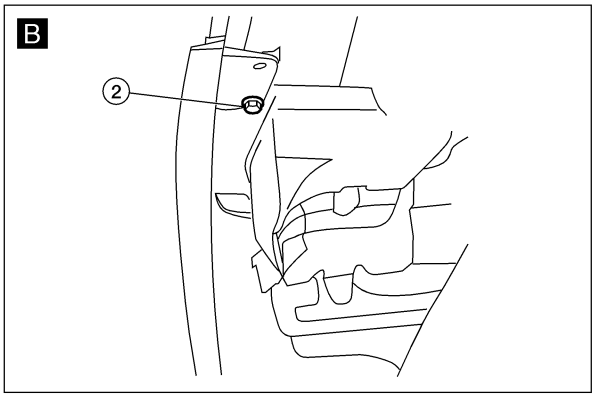

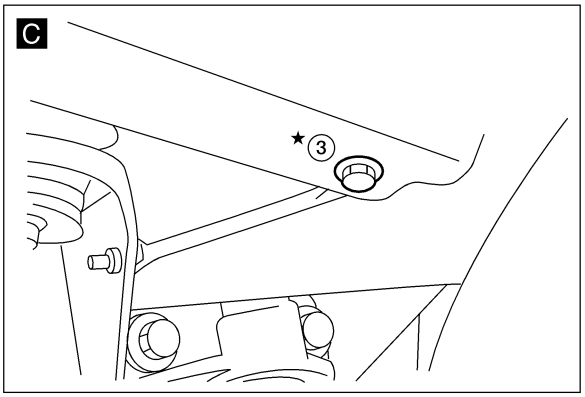

: N·m (kg-m, ft-lb)

★ : Bumper assembly mounting bolts

WBT098

Removal and Installation

NEBT0005

- Adjustment: Adjust at hinge portion for proper fit.
- Lock system adjustment: Adjust striker so that it is in the center of the lock. After adjustment, check trunk lid lock operation.
- After installation, make sure that rear gate opens smoothly.

REAR BUMPER ASSEMBLY

NEBT0005S01

Remove connectors securing license plate lamps.

1. Remove nuts securing bumper side stay. A or G
2. Remove bumper assembly.

SEC. 930A • 940A

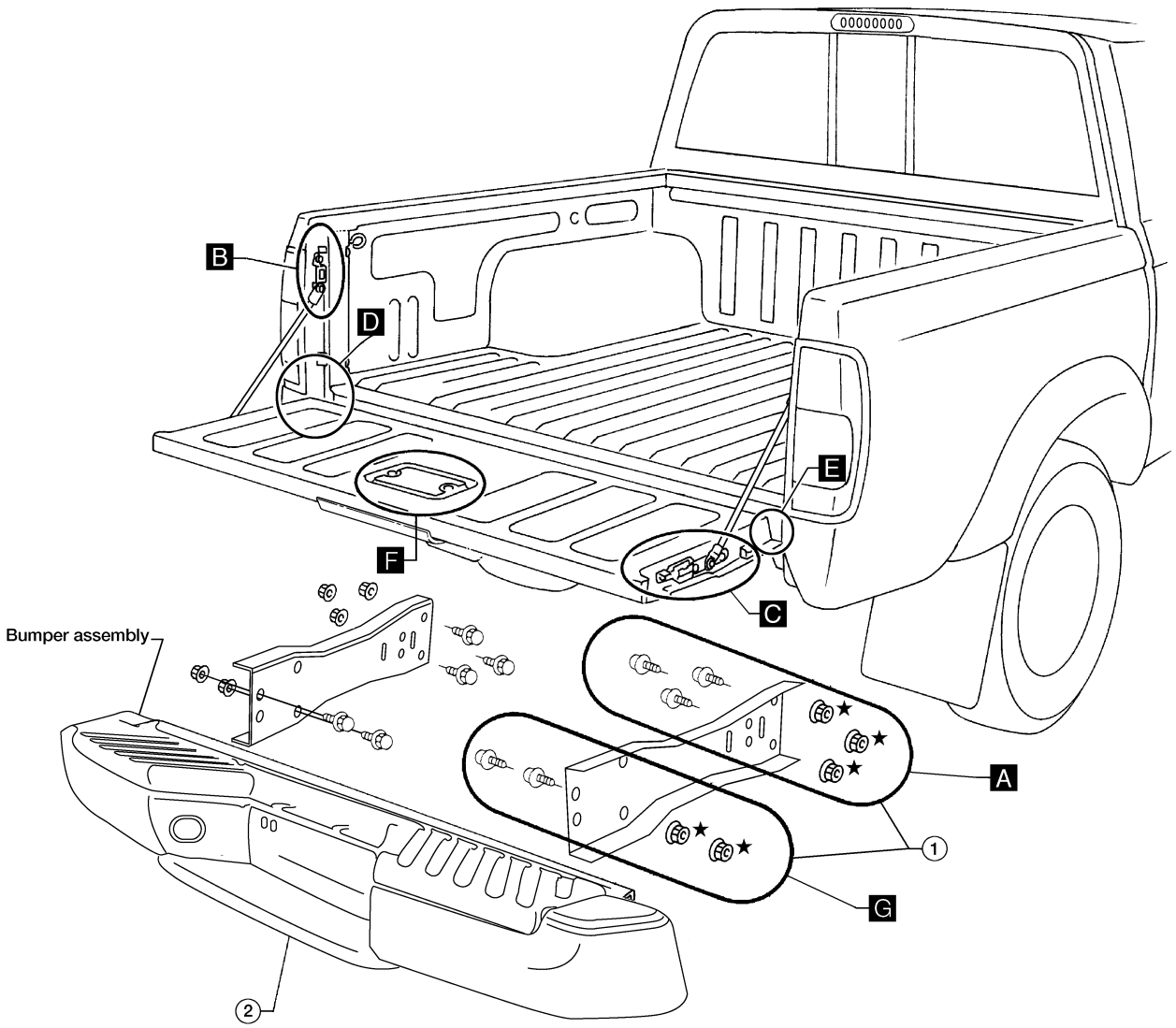

: N·m (kg-m, ft-lb)

A :68 – 78 (6.9 – 8.0, 50 – 58)

B :13 – 16 (1.3 – 1.6, 9 – 12)
21 – 26 (2.1 – 2.7, 15 – 20)

C :13 – 16 (1.3 – 1.6, 9 – 12)

D :21 – 26 (2.1 – 2.7, 15 – 20)

E :21 – 26 (2.1 – 2.7, 15 – 20)

G :68 – 78 (6.9 – 8.0, 50 – 58)

★ : Bumper assembly mounting nuts

WBT087

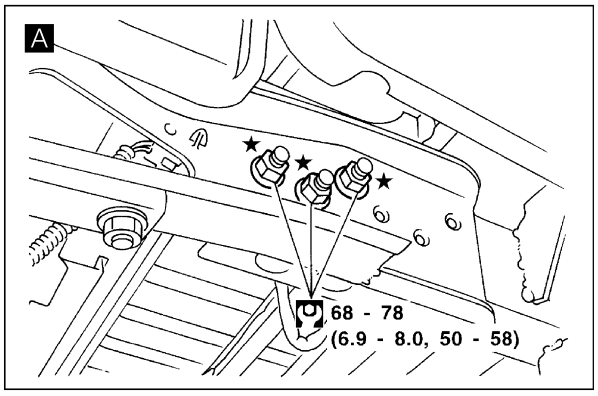

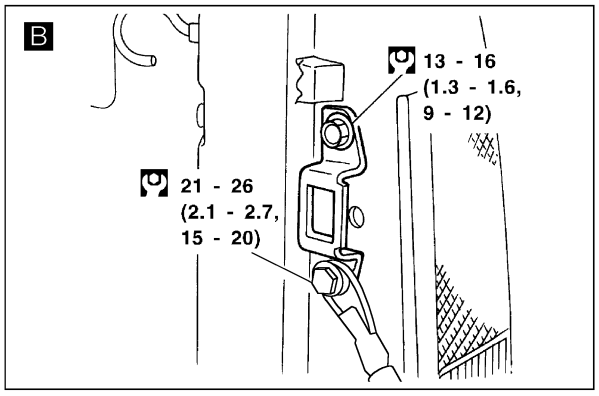

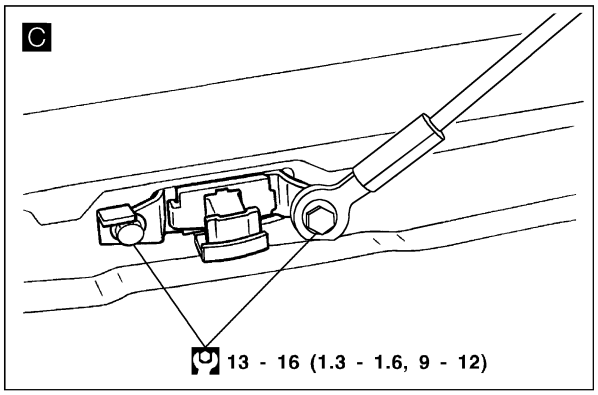

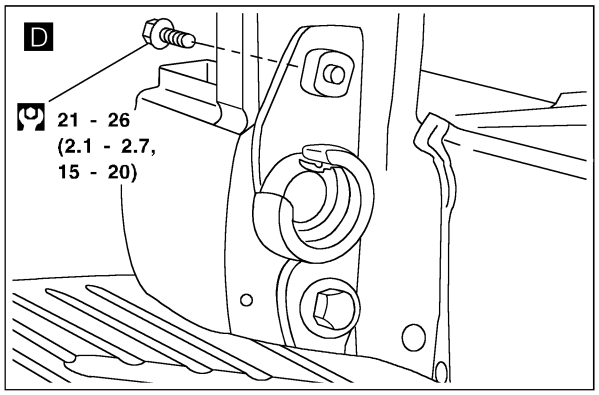

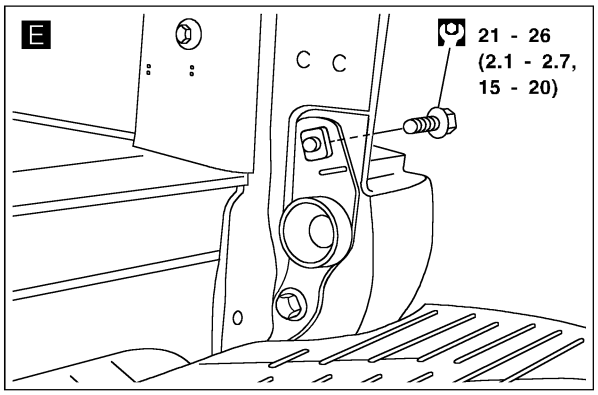

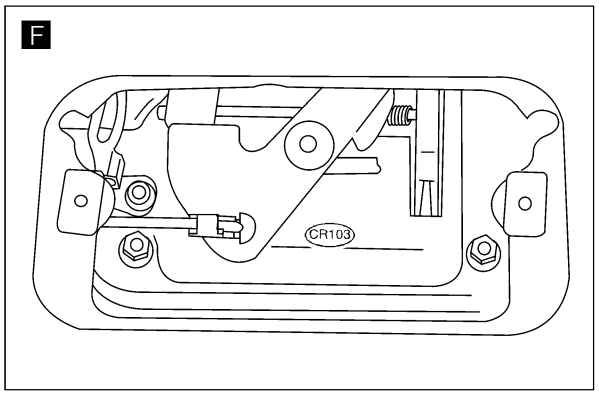

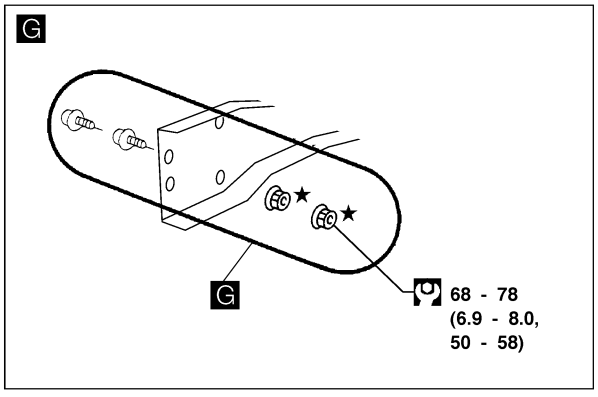

: N•m (kg-m, ft-lb)
★ : Bumper assembly mounting bolts and nuts

WBT088

Overhaul

NEBT0006

- For removal of door trim, refer to “Removal and Installation”, BT-30.
- After adjusting door or door lock, check door lock operation.

SEC. 800•803•805

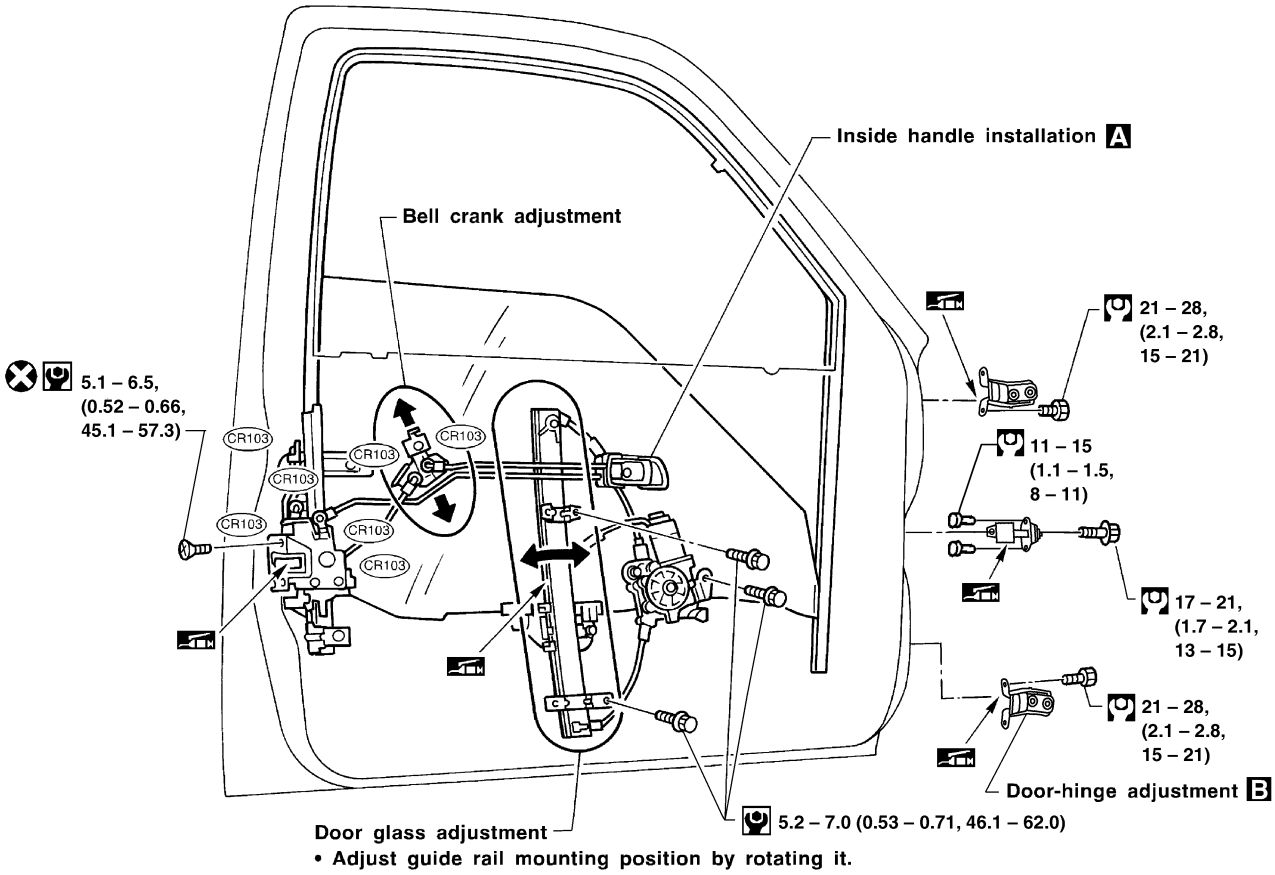

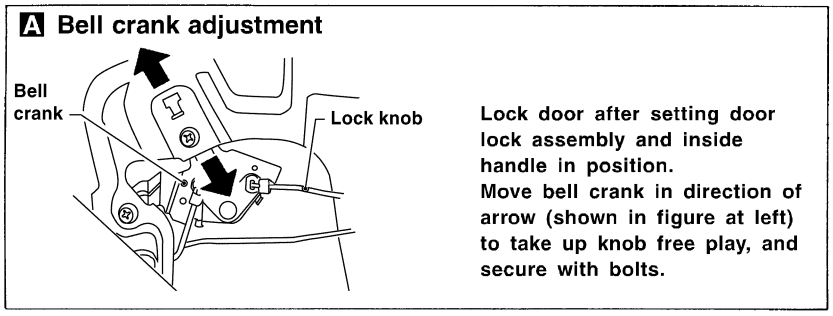

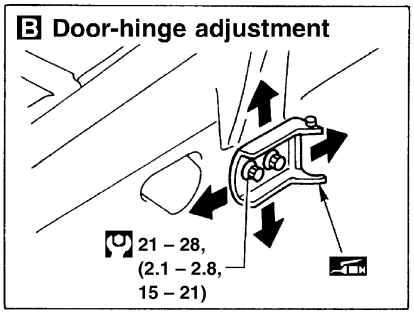

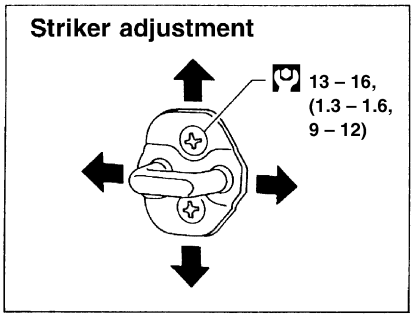

: N·m (kg-m, in-lb)

: N·m (kg-m, ft-lb)

: Grease-up point (Do not apply too much grease as it will drip)

WBT109

Overhaul

NEBT0023

SEC. 820 • 823 • 825

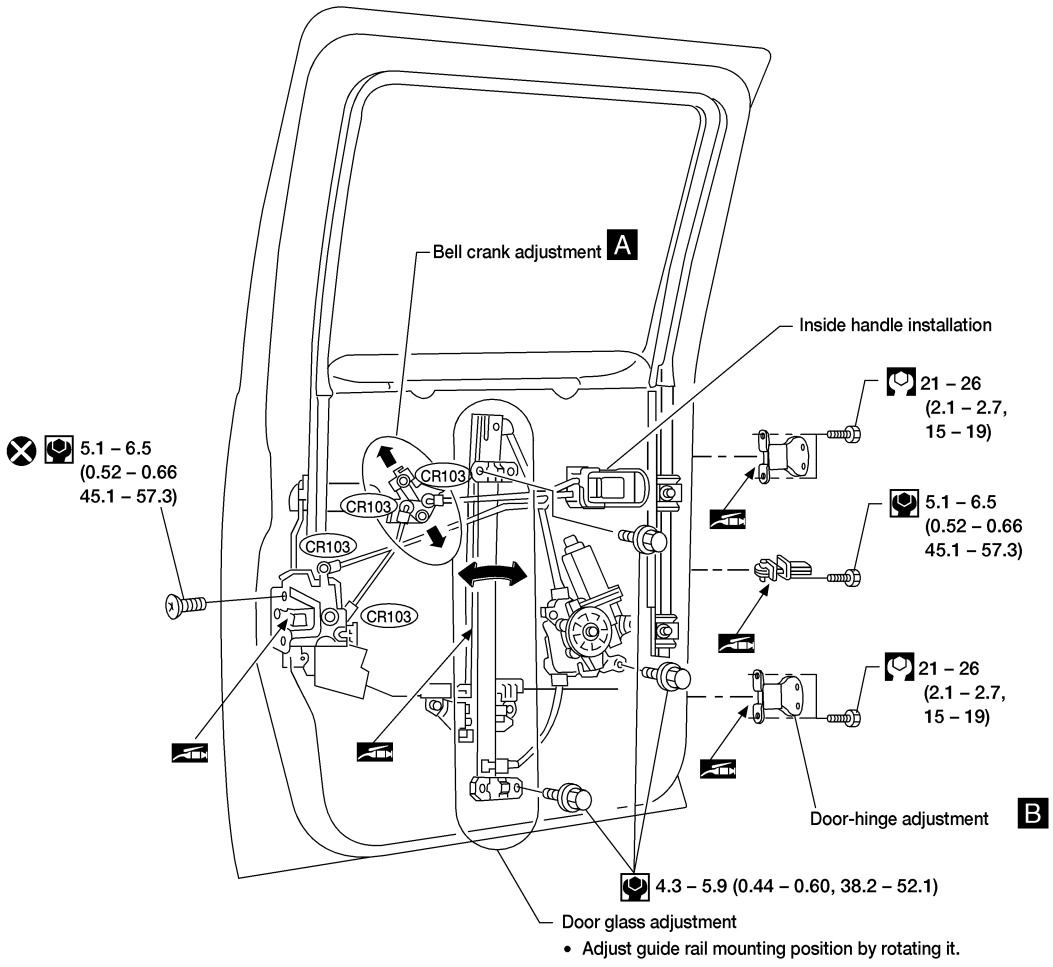

A Bell crank adjustment

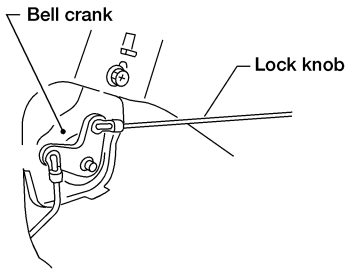

Lock door after setting door lock assembly and inside handle in position. Move bell crank in direction of arrow (shown in figure at left) to take up knob free play, and secure with bolts.

B Door-hinge adjustment

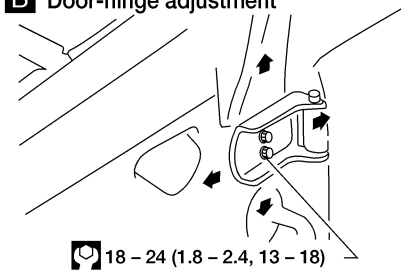

Striker adjustment

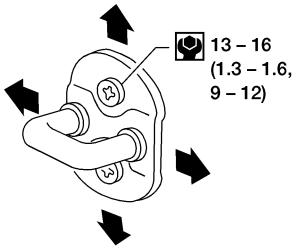

: N·m (kg-m, in-lb)
: N·m (kg-m, ft-lb)
: Grease-up point (Do not apply too much grease as it will drip)

WBT110

Removal and Installation

NEBT0008

CAUTION:

- **Disconnect both terminals from battery in advance.**
- **Disconnect air bag module connectors in advance.**
- **Be careful not to scratch finishers and other parts.**
- **Never tamper with or force air bag lid open, as this may adversely affect air bag performance.**

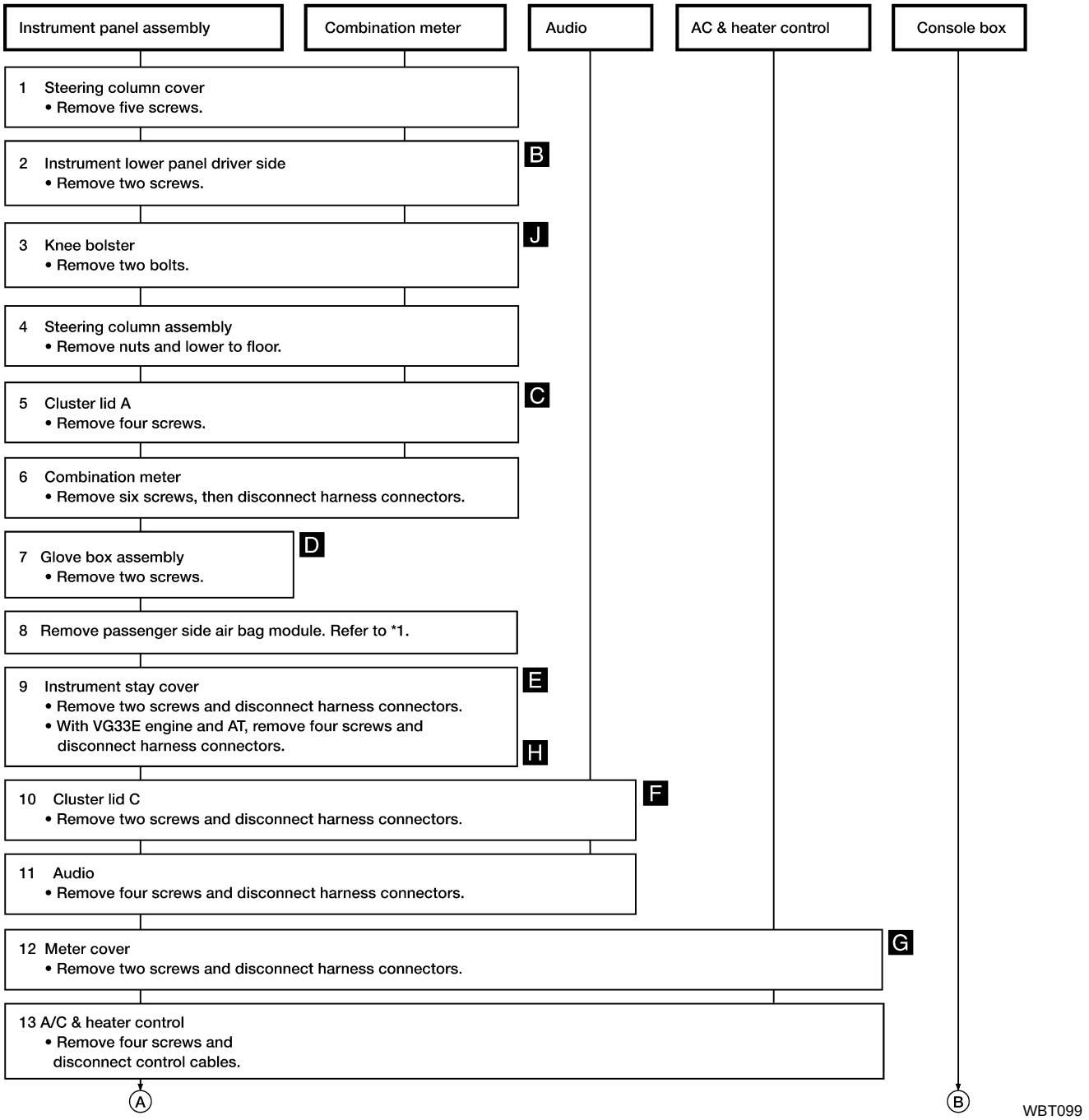

*1 ***RS-23***

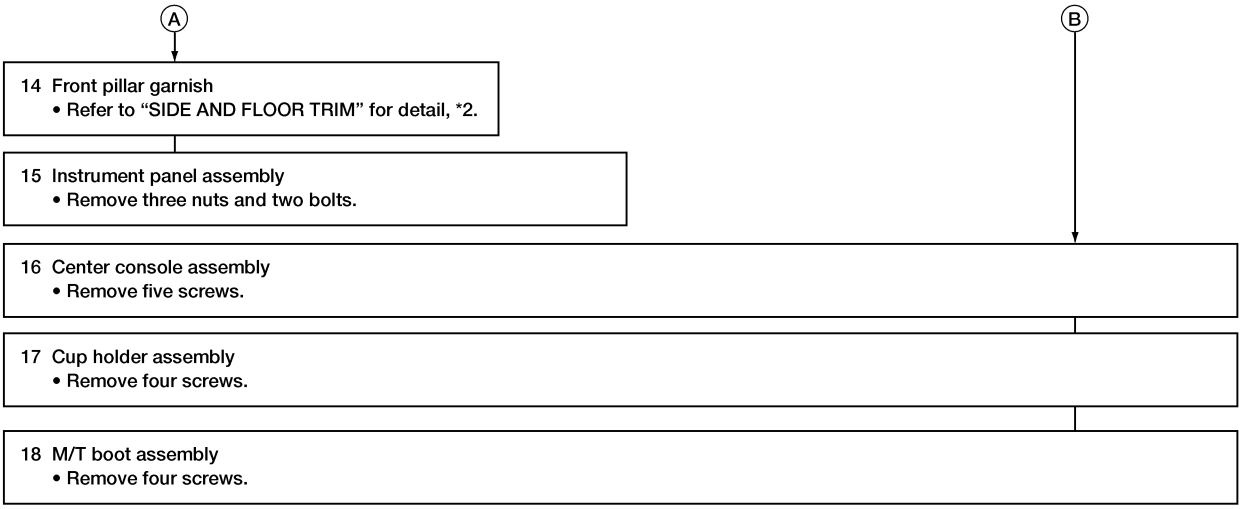

WBT100

*2 BT-24

SEC. 272 • 280 • 680 • 685 • 969

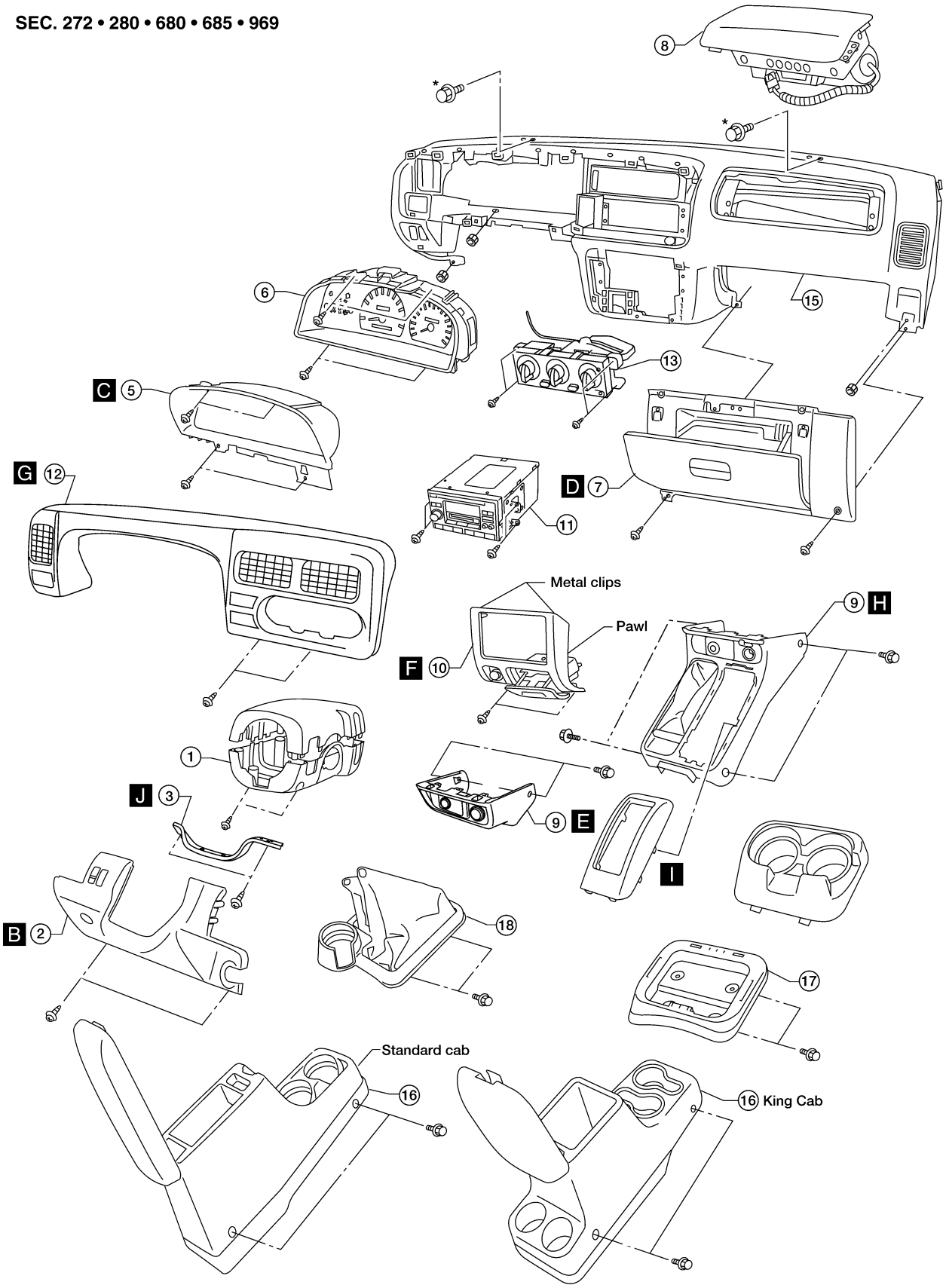

*: Instrument panel assembly mounting bolts and nuts.

WBT089

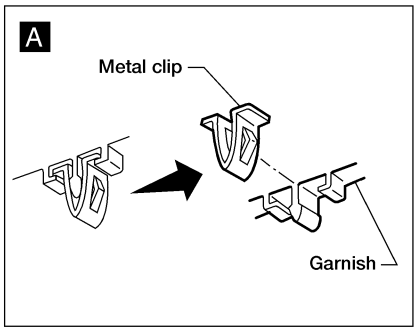
A
Metal clip
Garnish

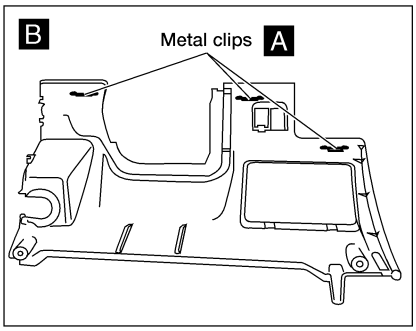
B
Metal clips A

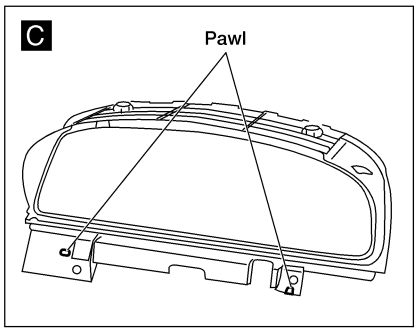
C
Pawl

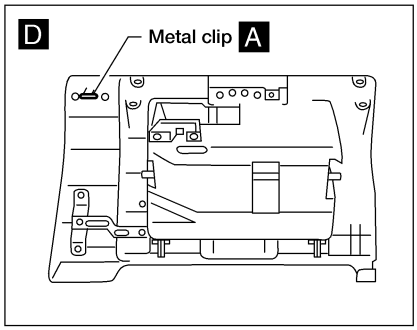
D
Metal clip A

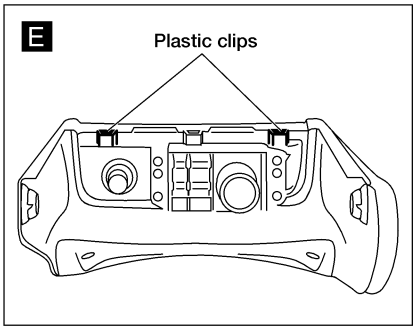
E
Plastic clips

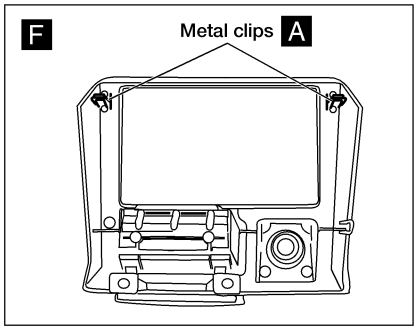
F
Metal clips A

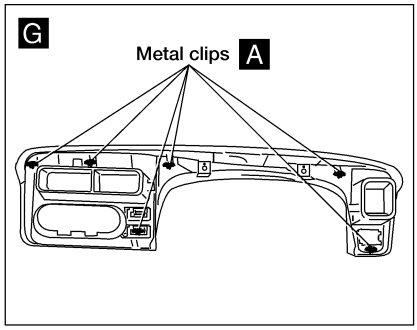
G
Metal clips A

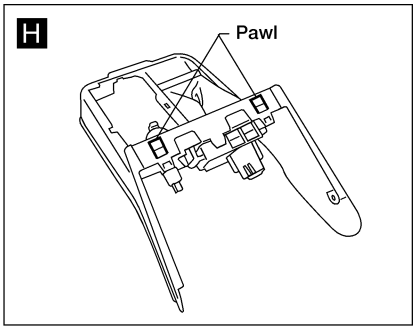
H
Pawl

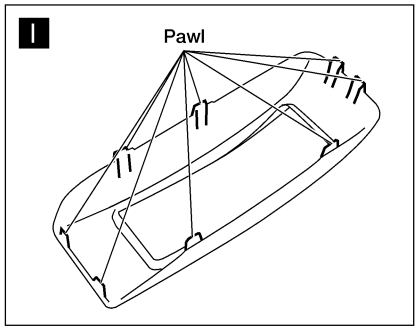
I
Pawl

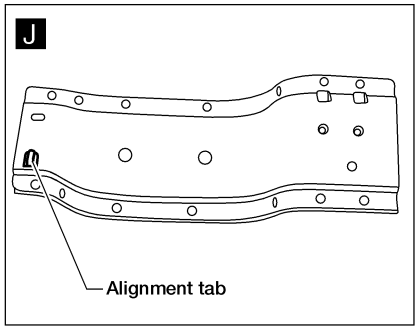
J
Alignment tab

WBT090

Removal and Installation

NEBT0009

CAUTION:
Wrap the tip of flat-bladed screwdriver with a cloth when removing metal clips from garnishes.

BODY SIDE TRIM

NEBT0009S01

King Cab Model

NEBT0009S0101

1. Remove front and jump seats. Refer to “Removal and Installation”, BT-41 and 44.
2. Remove kicking plates.
3. Remove dash side lower finishers. D
4. Remove body side welts.
5. Remove front pillar garnishes. C
6. Remove jack cover. F
7. Remove lower rear pillar garnishes. E
8. Remove seat belt upper guide loop. Refer to ***RS-5*** “Front Seat Belt”, and ***RS-7*** “Rear Seat Belt”.
9. Remove upper rear pillar garnishes. B

Regular Cab Model

NEBT0009S0102

1. Remove front seats. Refer to “Removal and Installation”, BT-41.
2. Remove kicking plates.
3. Remove dash side lower finishers. D
4. Remove body side welts.
5. Remove front pillar garnishes. C
6. Remove seat belt upper guide loop. Refer to ***RS-5*** “Front Seat Belt”.
7. Remove upper rear garnishes.

SEC. 745 • 769 • 799
King Cab shown Standard Cab similar

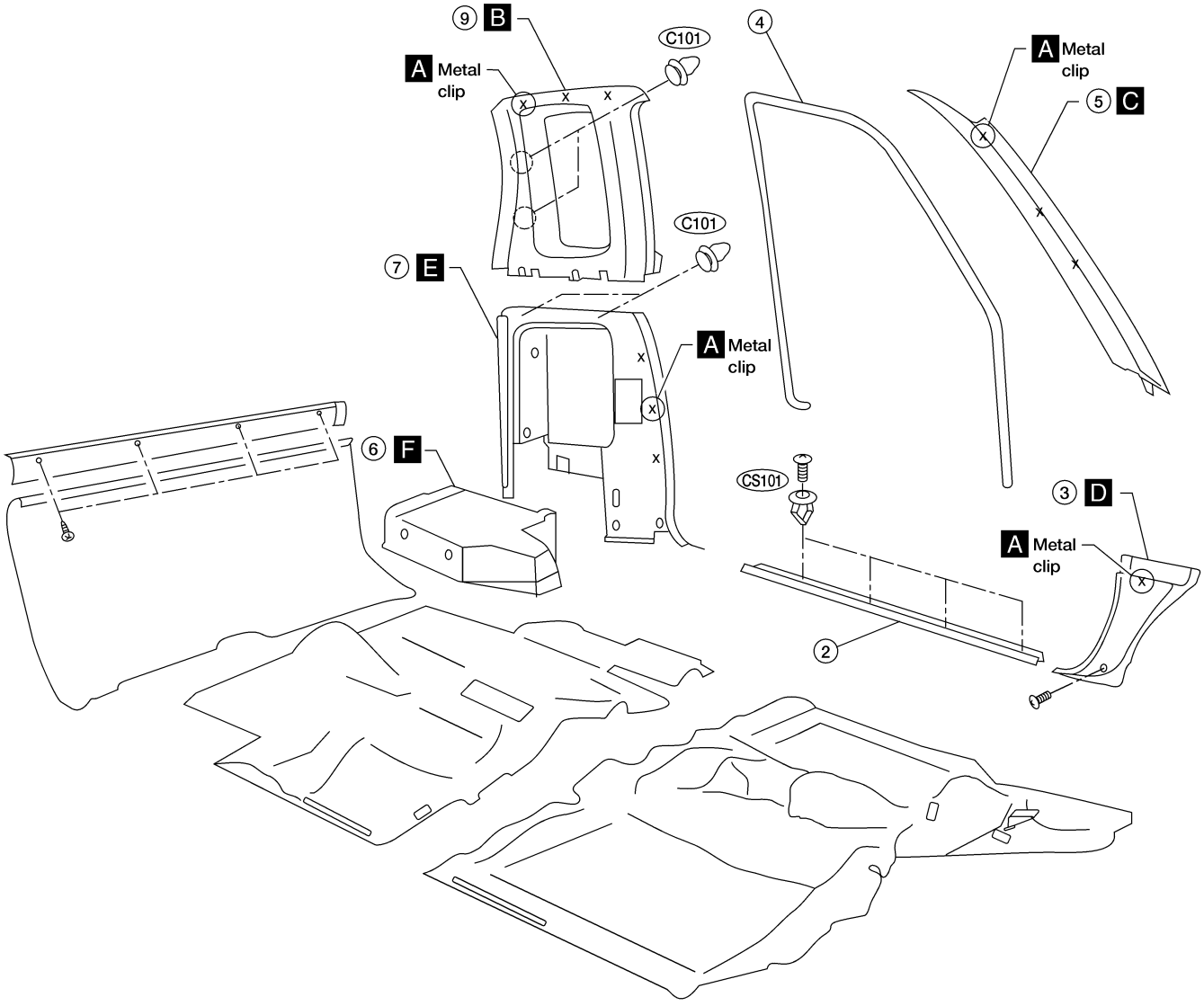

King Cab shown Standard Cab similar

A

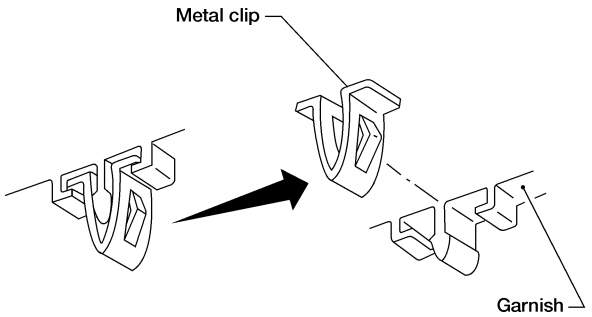

B

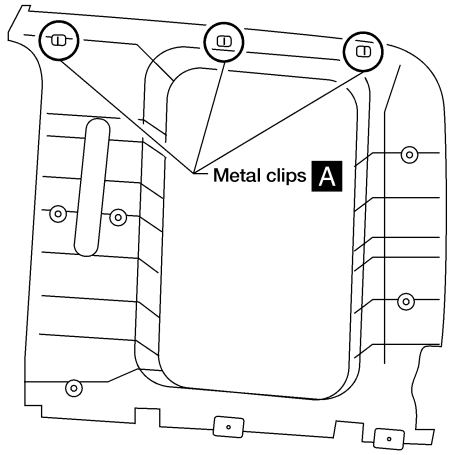

C

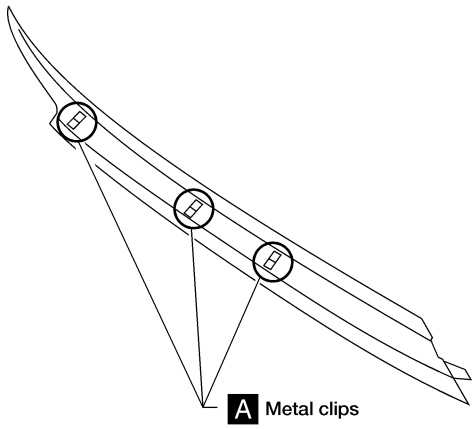

D

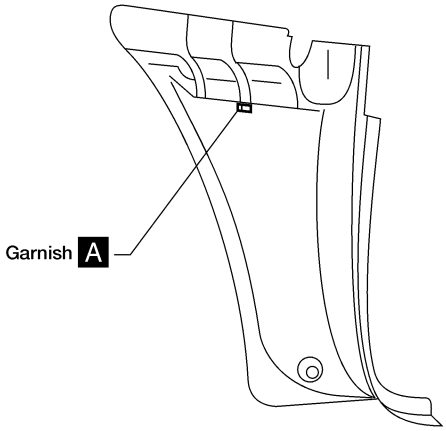

E

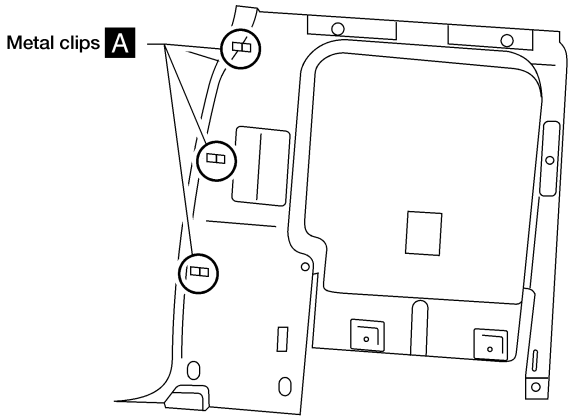

F

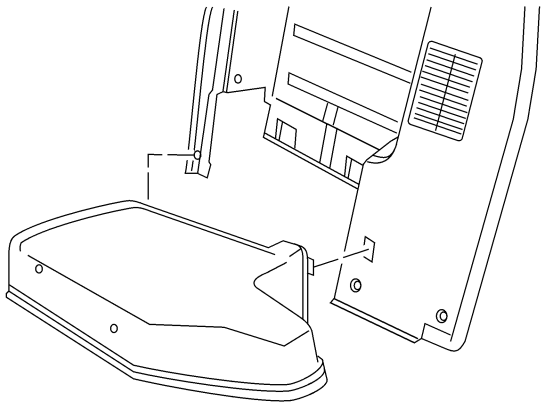

ABT340

Crew Cab

NEBT0009S0103

1. Remove front and rear seats. Refer to "Removal and Installation", BT-41 and 44.
2. Remove kicking plates.
3. Remove dash side lower finishers. C
4. Remove body side welts.
5. Remove front pillar garnishes. B
6. Remove seat belt upper guide loop on B pillar. Refer to ***RS-5*** "Front Seat Belt".
7. Remove lower and upper B pillar garnishes. D E
8. Remove seat belt upper guide loop on C pillar. Refer to ***RS-7***, "Rear Seat Belt".
9. Remove lower and upper C pillar garnishes. F G

SEC. 745 • 769 • 799
Crew Cab

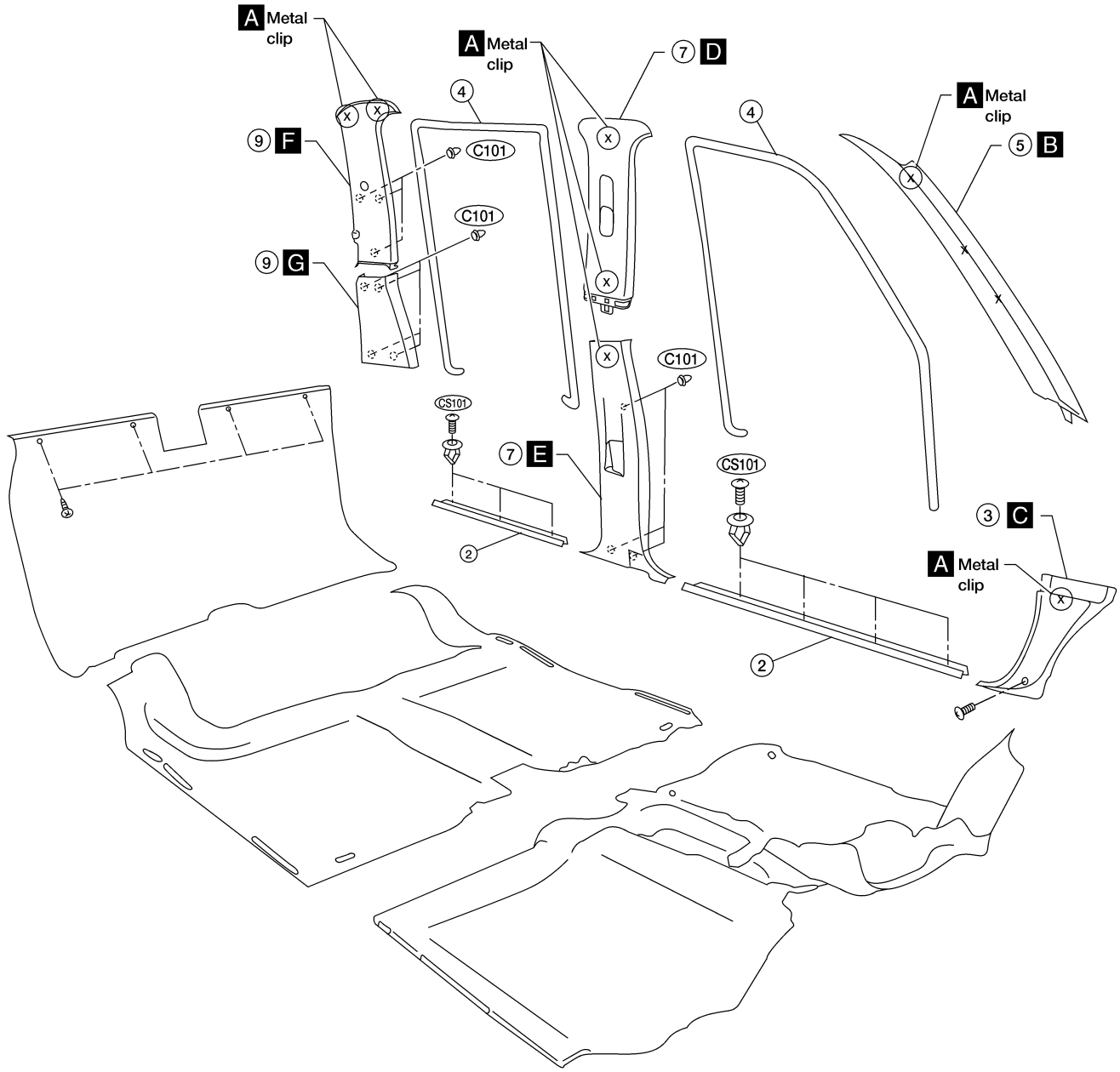

ABT430

A

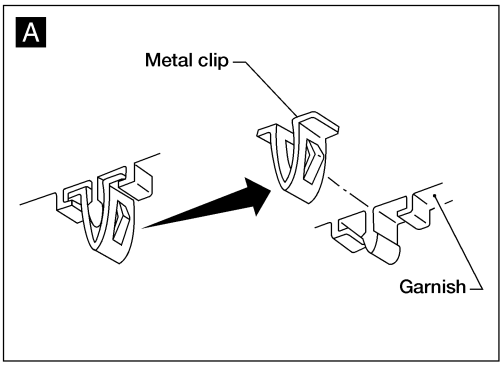

B

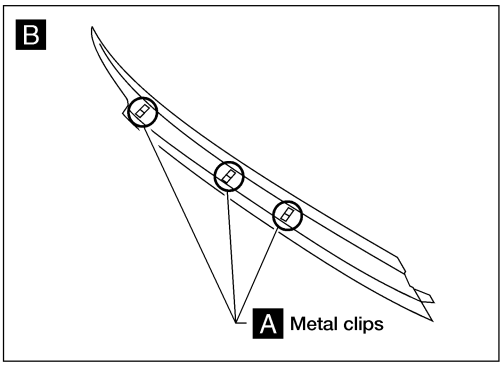

C

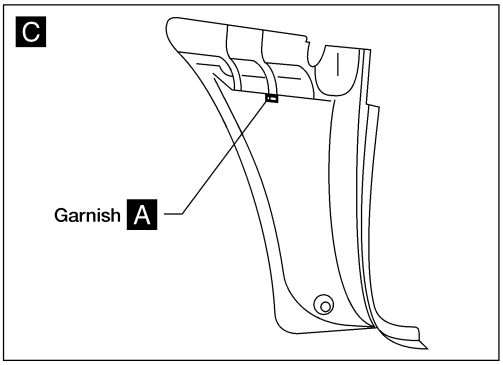

D

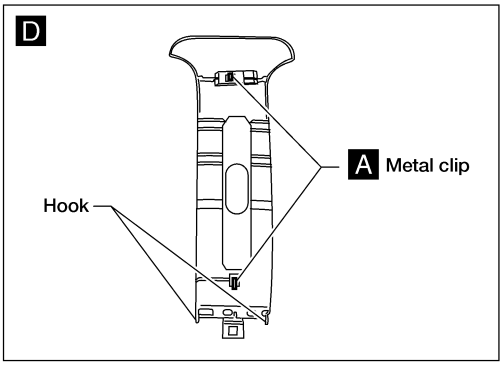

E

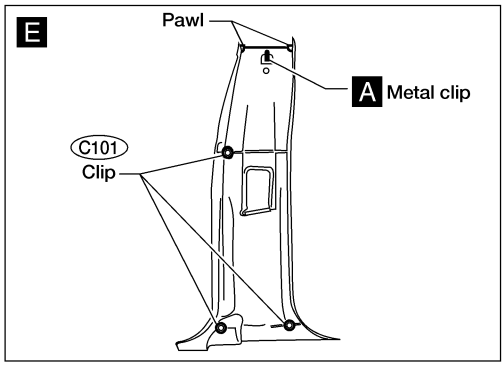

F

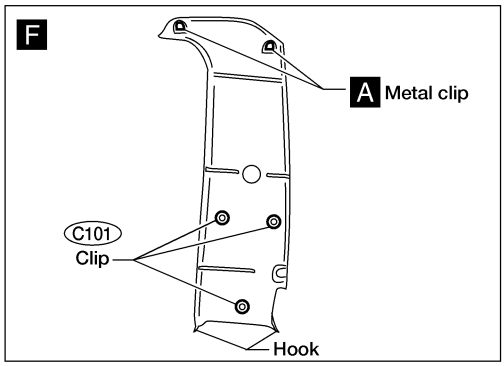

G

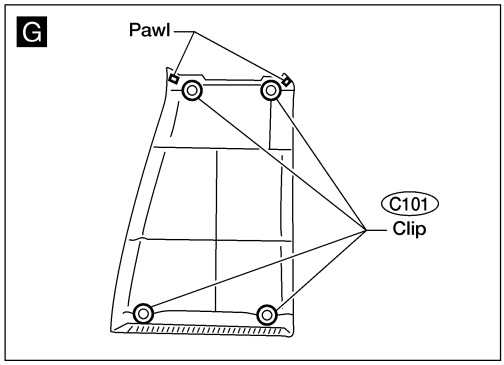

ABT431

Removal and Installation

NEBT0010

Door trim (Formed type)

Remove manual window regulator handle, if equipped.

1. Remove inside handle escutcheon. A
2. Remove door armrest. B
3. Remove power window switch, then disconnect the connector. C
4. Remove screw securing door pull handle. D
5. Remove two screws.
6. Remove clips securing door finisher.
7. Lift out door finisher.

Formed type (without power windows)

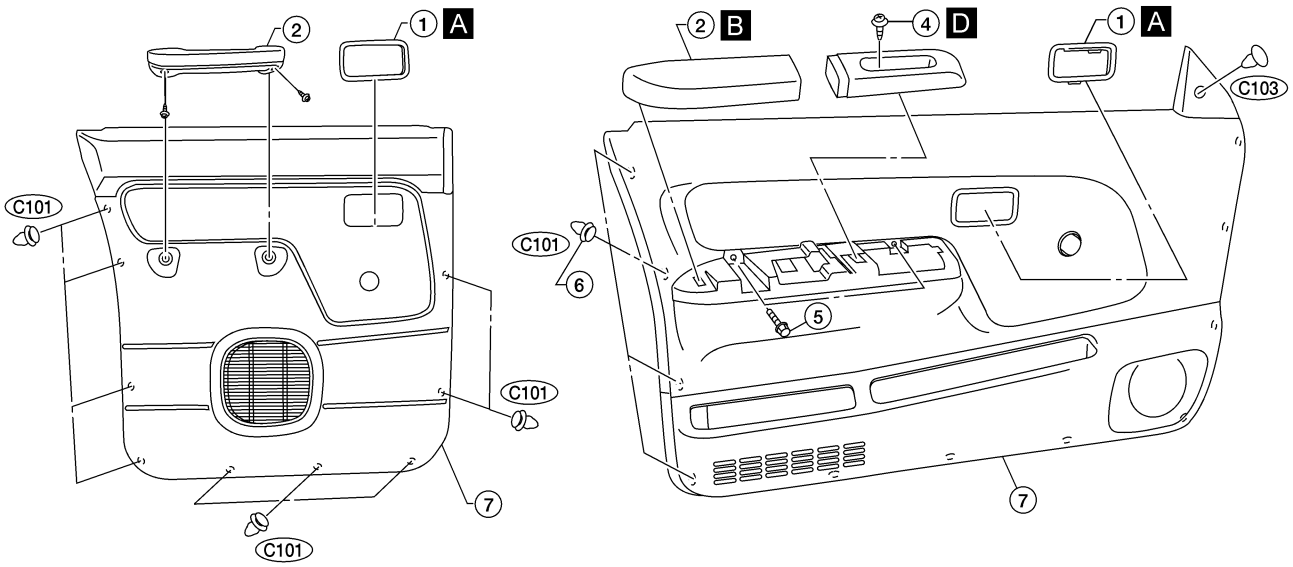

Formed type (with power windows)

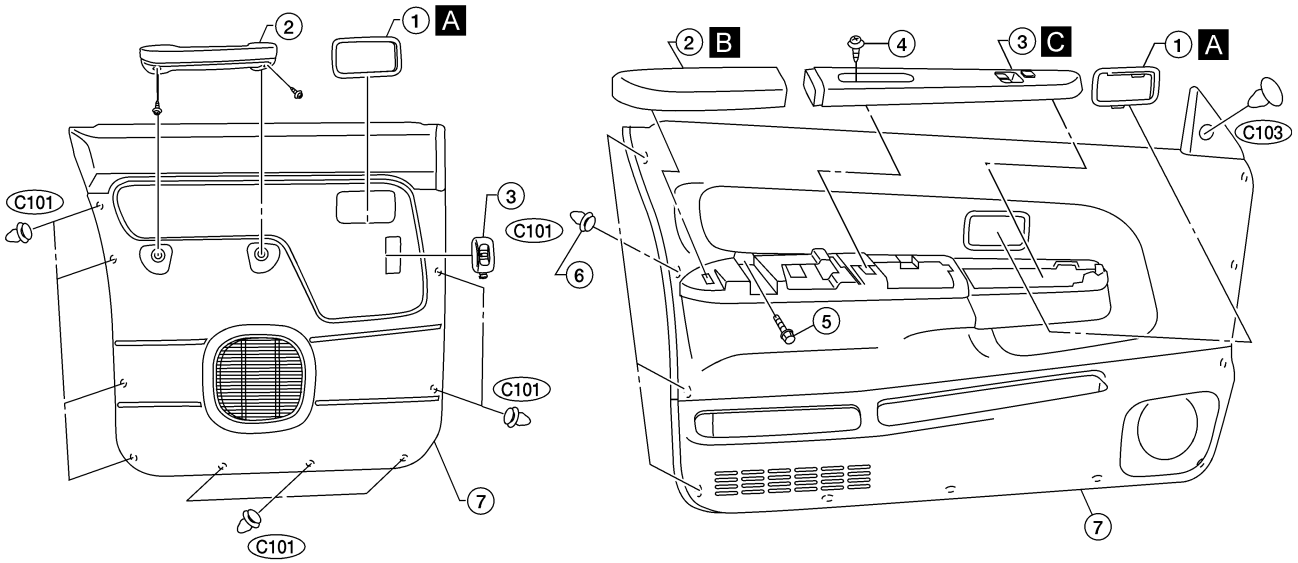

ABT470

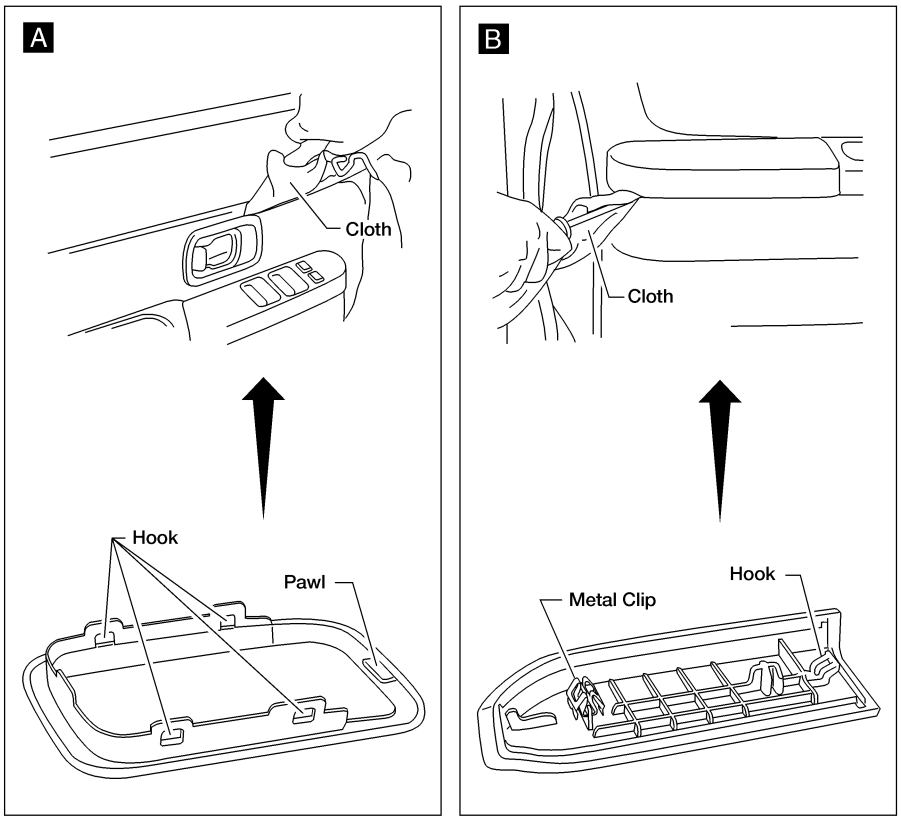
A
Cloth
Hook
Pawl
B
Cloth
Hook
Metal Clip

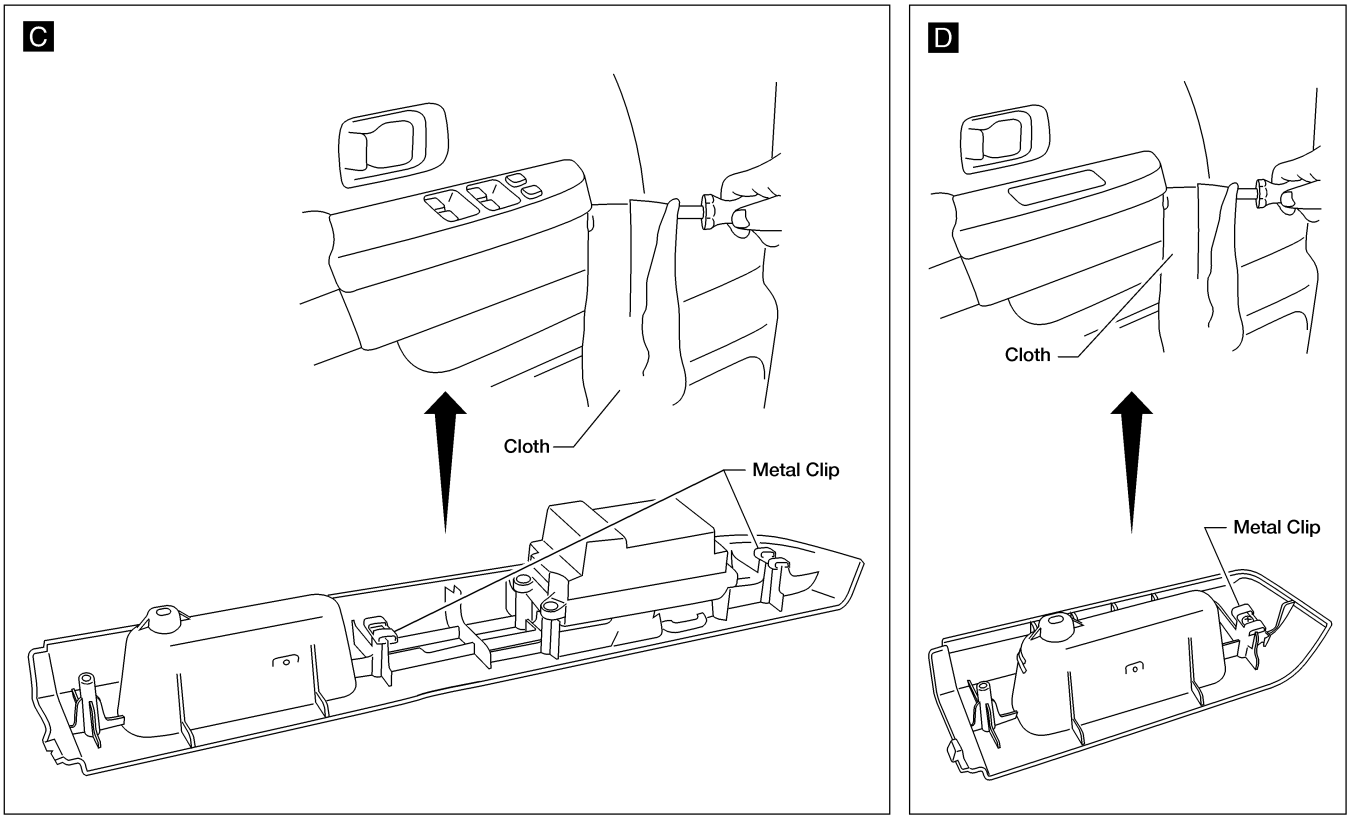
C
Cloth
Metal Clip
D
Cloth
Metal Clip

ABT299

Removal and Installation

NEBT0011

NEBT0011S02

KING CAB SHOWN, REGULAR CAB SIMILAR

1. Remove front and jump seats if equipped. Refer to “Removal and Installation”, BT-41 and 44.
2. Remove front seat belt. Refer to ***RS-5***, “Front Seat Belt”.
3. Remove body side trim. Refer to “Side and Floor Trim”, BT-24.
4. Remove sun visors.
5. Remove interior lamp assembly. A
6. Remove coat hook. B
7. Remove assist grip if equipped. C
8. Remove sunroof if equipped, refer to “SUNROOF”, BT-46.
9. Remove clips securing headlining.
10. Remove headlining.

SEC. 264 • 738 • 964

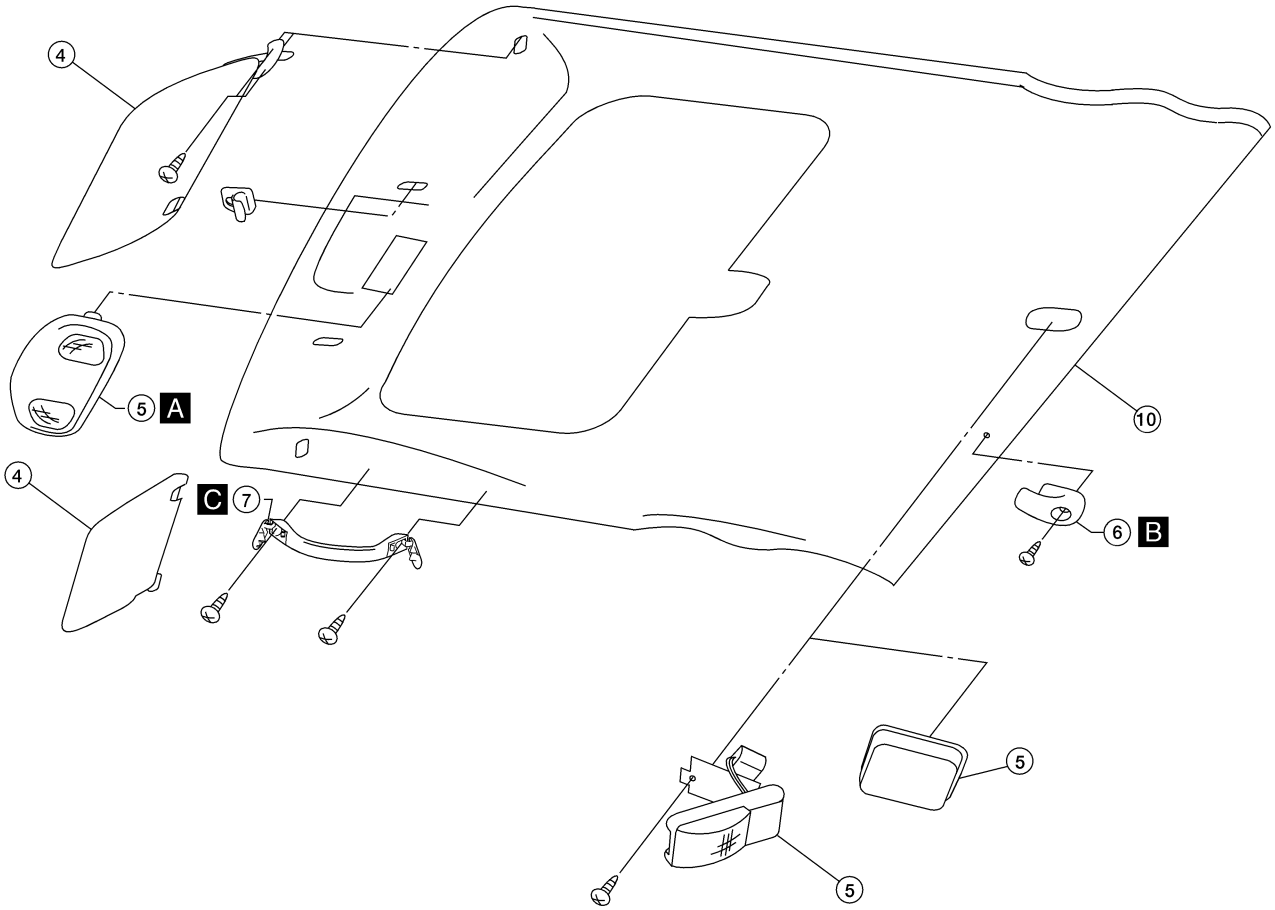

ABT490

A

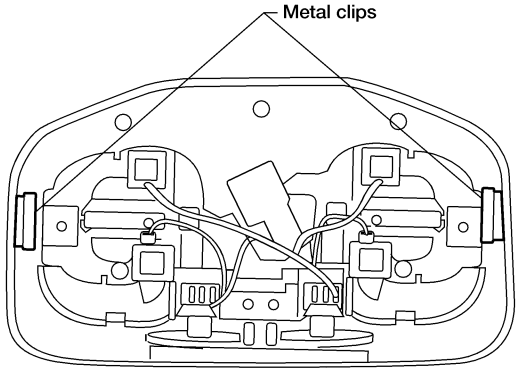

B

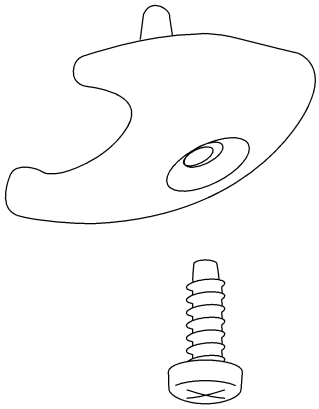

C

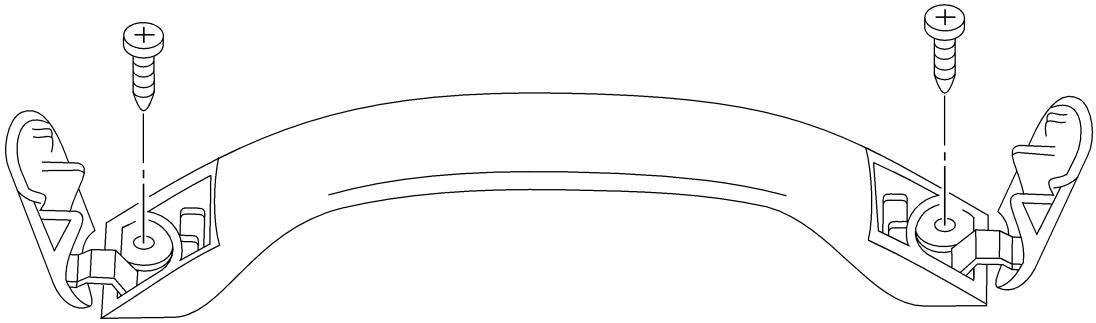

ABT402

Removal and Installation (Cont'd)

CREW CAB

=NEBT0011S03

1. Remove front and rear seats. Refer to "Removal and Installation", BT-41 and 44.
2. Remove front seat belts. Refer to ***RS-5***, "Front Seat Belt".
3. Remove body side trim. Refer to "Removal and Installation", BT-24.
4. Remove sun visors.
5. Remove interior lamp assembly. A
6. Remove assist grips.
7. Remove sunroof welt.
8. Remove headlining.

SEC. 738•963•964•970

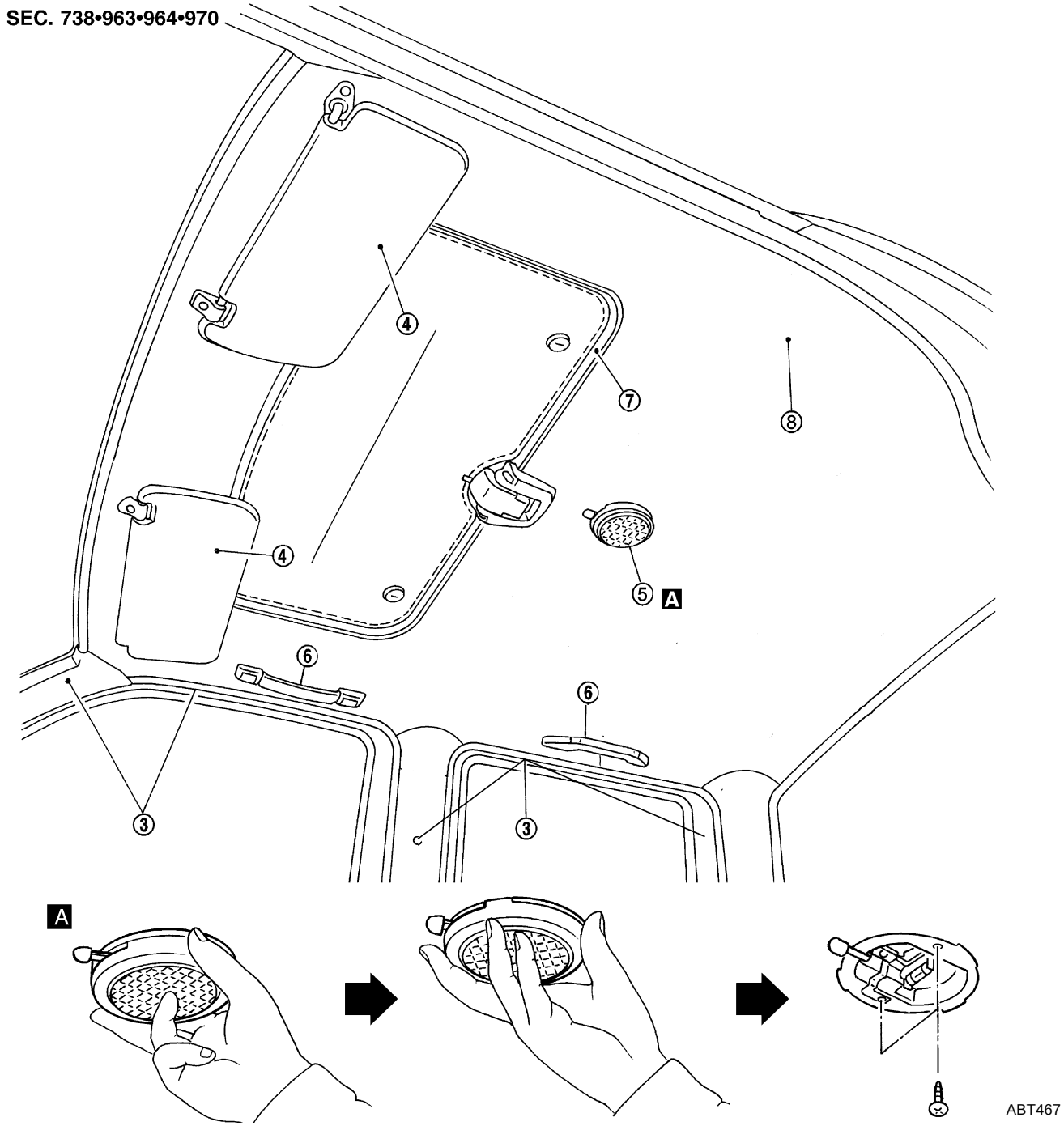

Removal and Installation

NEBT0013

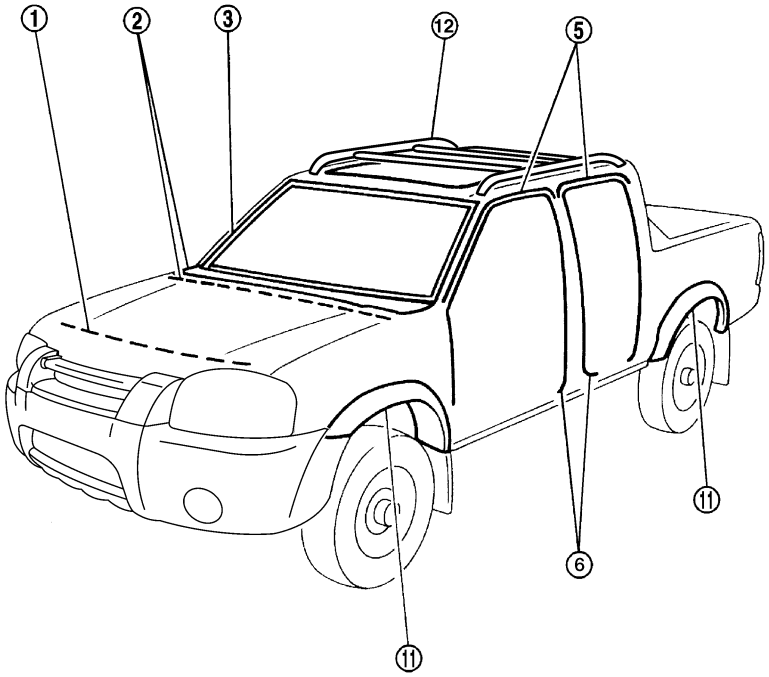

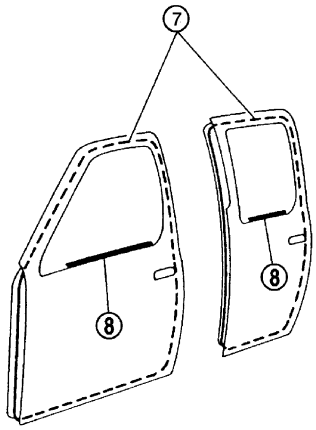

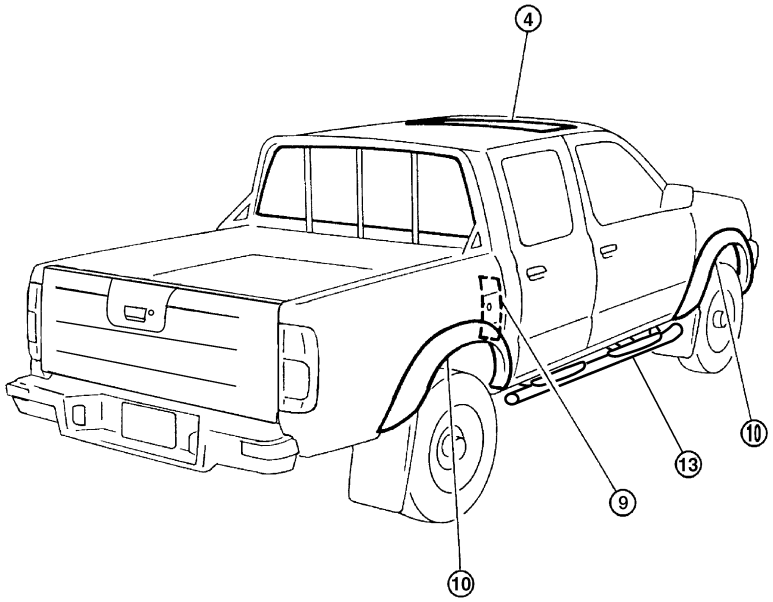

WBT138

① **Hood front sealing rubber**

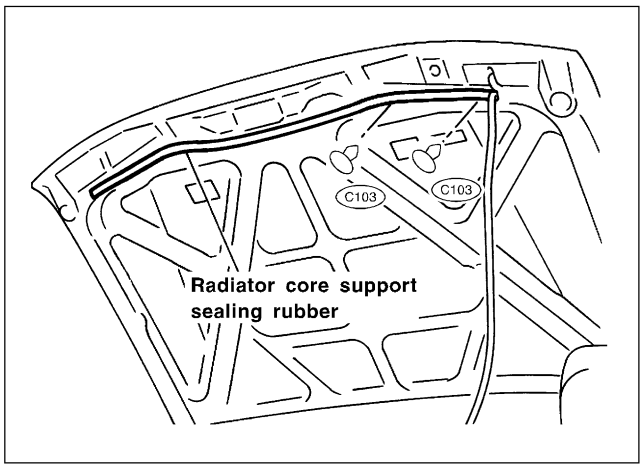

② **Cowl top seal and cowl top grille**

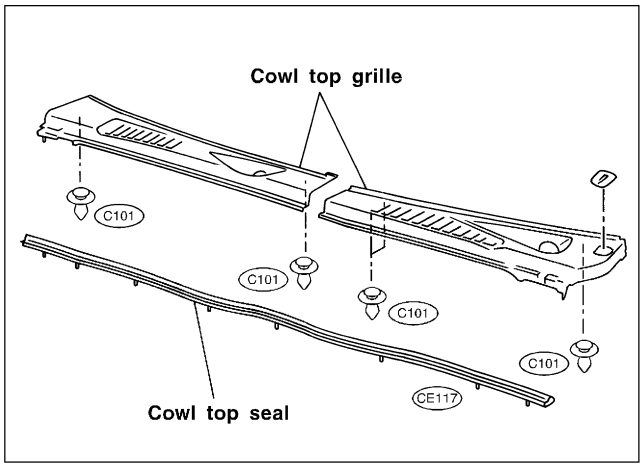

③ **Windshield side molding**

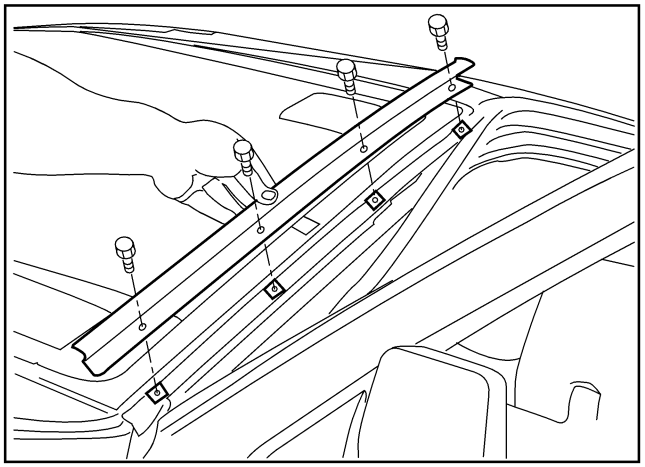

④ **Sunroof weatherstrip and lid protector**

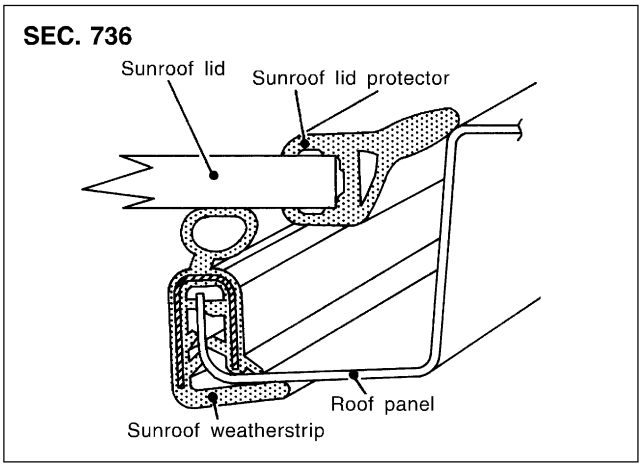

WBT092

⑤ **Drip weatherstrip**

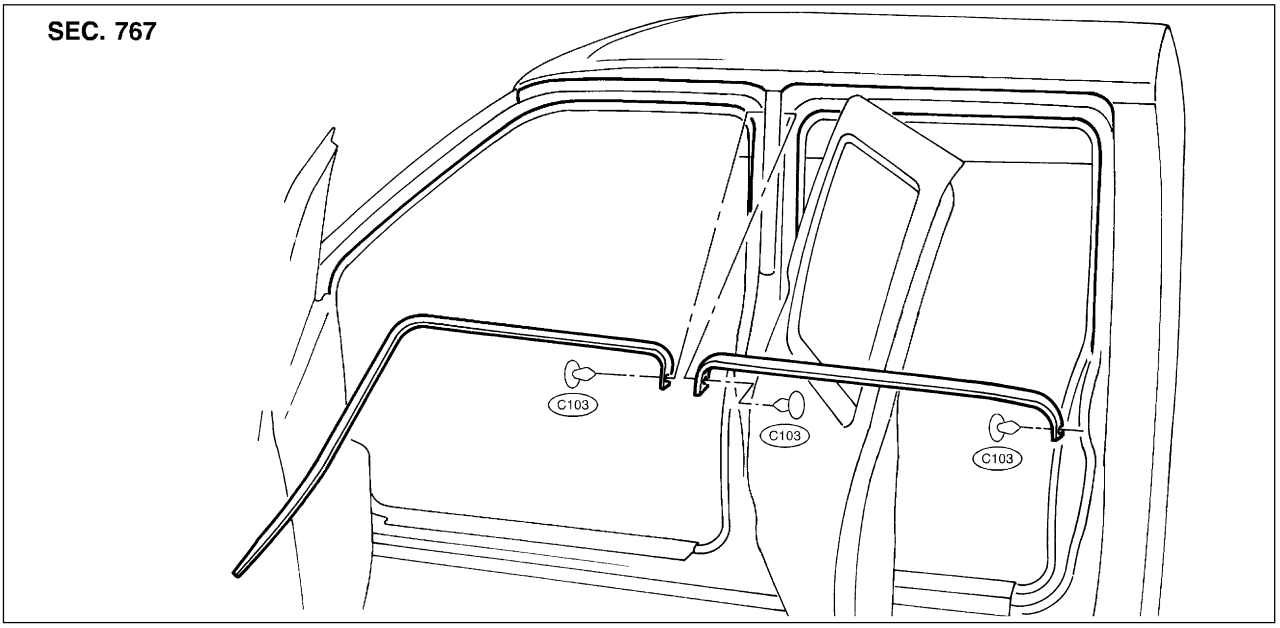

⑥ **Body side welt**

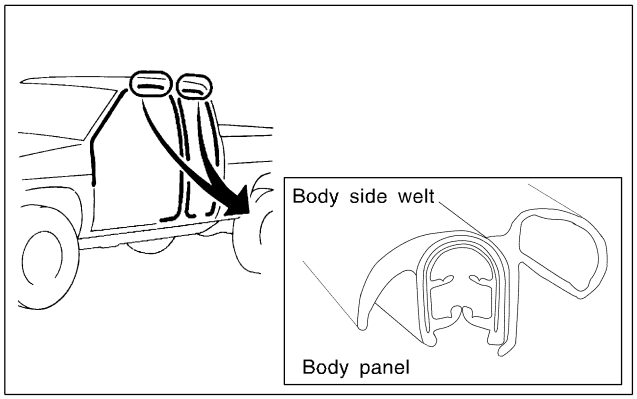

⑦ **Door weatherstrip**

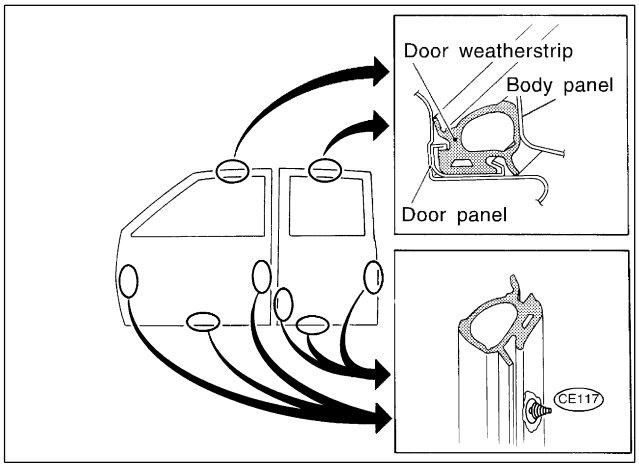

⑧ **Door outside molding**

Front door
SEC. 800

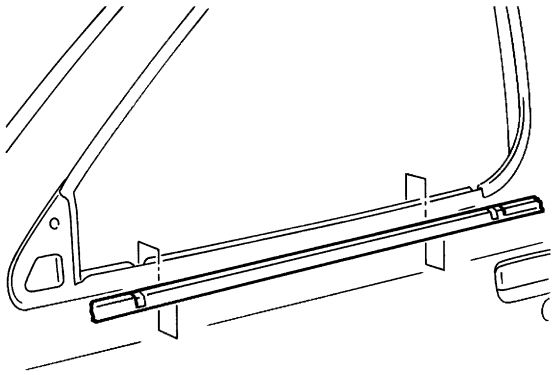

Rear door
SEC. 820

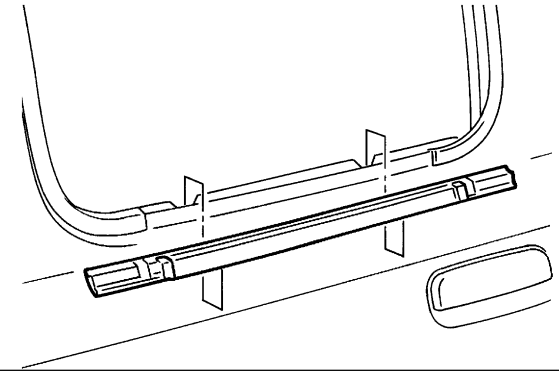

WBT093

⑨ Drafter duct

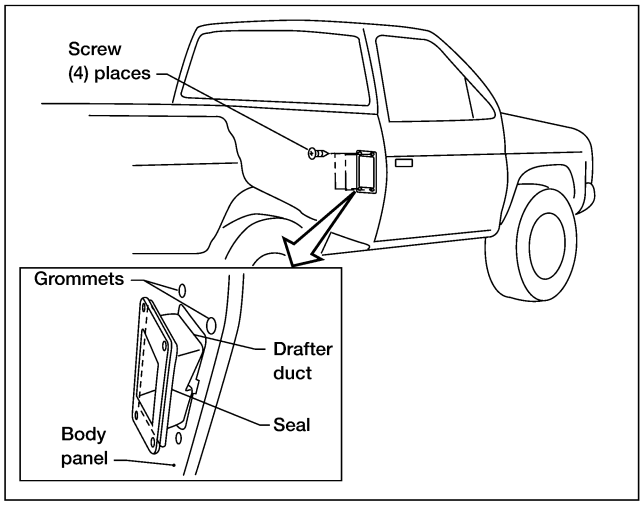

⑩ ⑪ Over fender

SEC. 630
Front

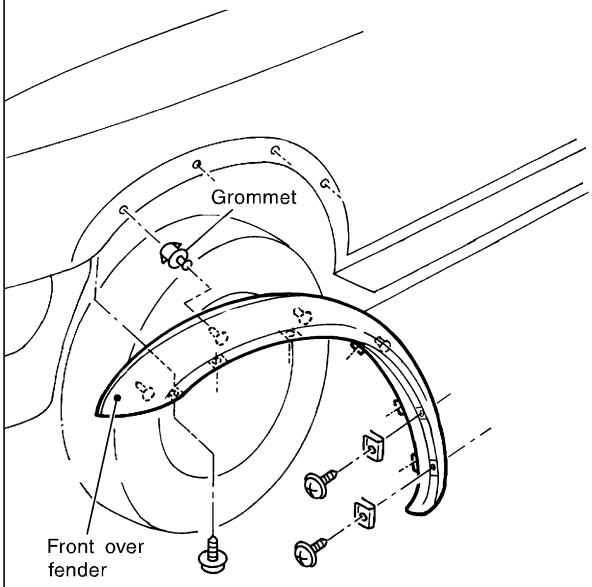

4WD

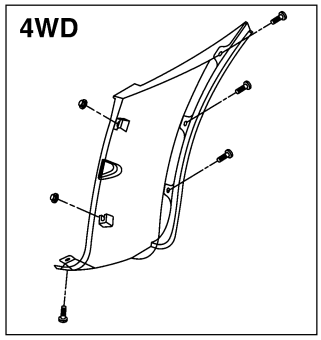

: Clip C101

SEC. 780
Rear

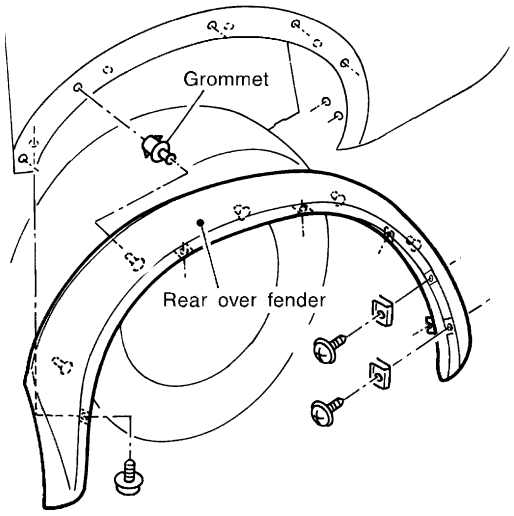

: Clip C101

WBT135

⑫ Roof rack

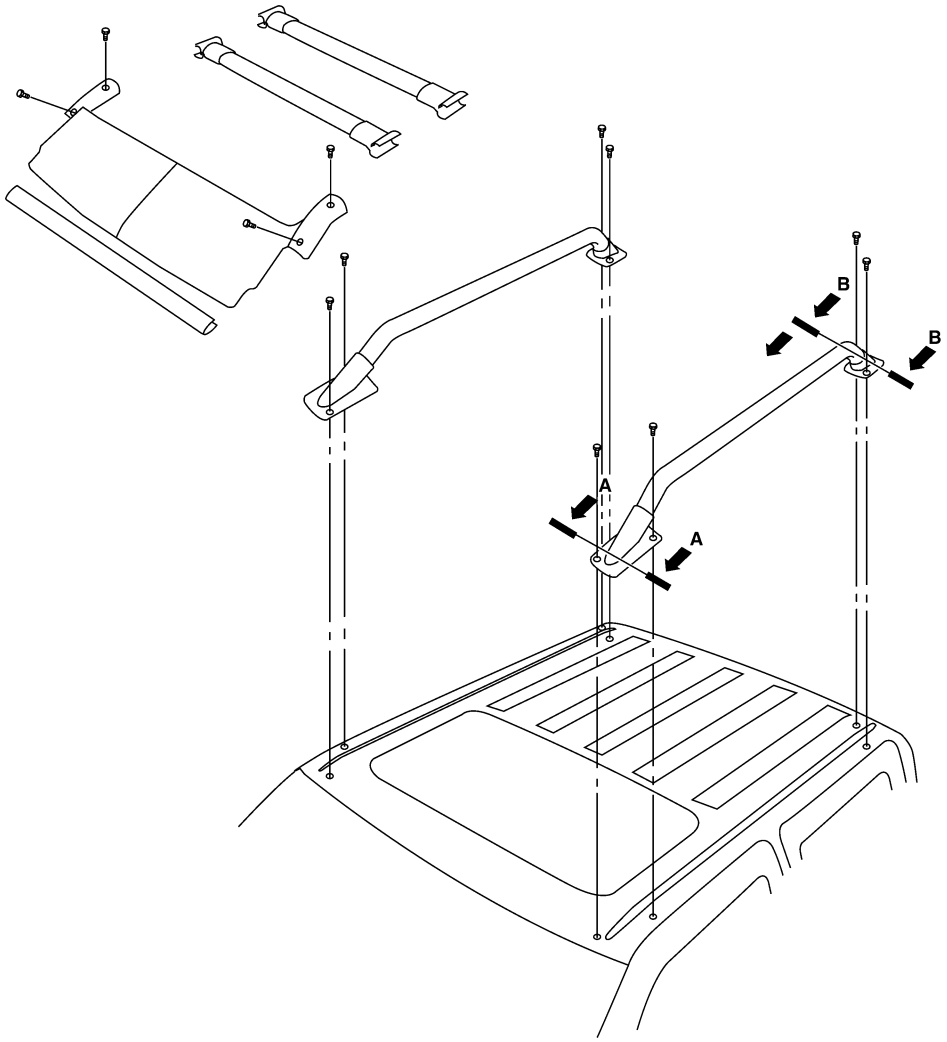

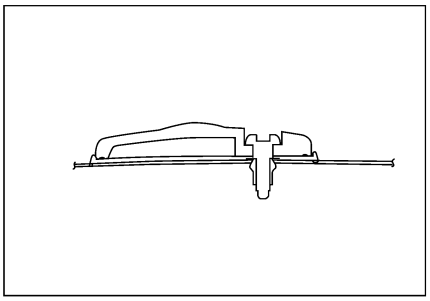

A-A

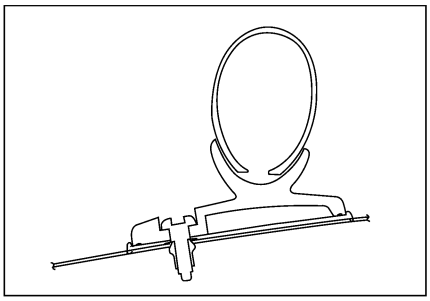

B-B

WBT136

⑬ Side step

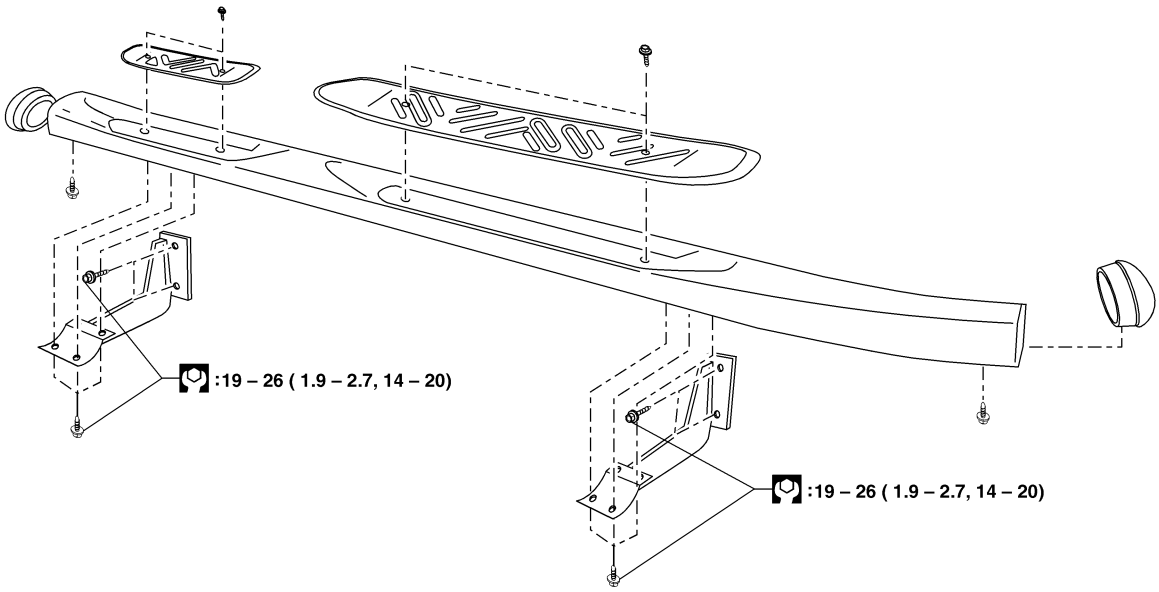

WBT137

: N·m (kg-m, ft-lb)

Removal and Installation

NEBT0014

- When removing and installing the seat trim, carefully handle it to keep dirt out and avoid damage.

SEC. 868•870

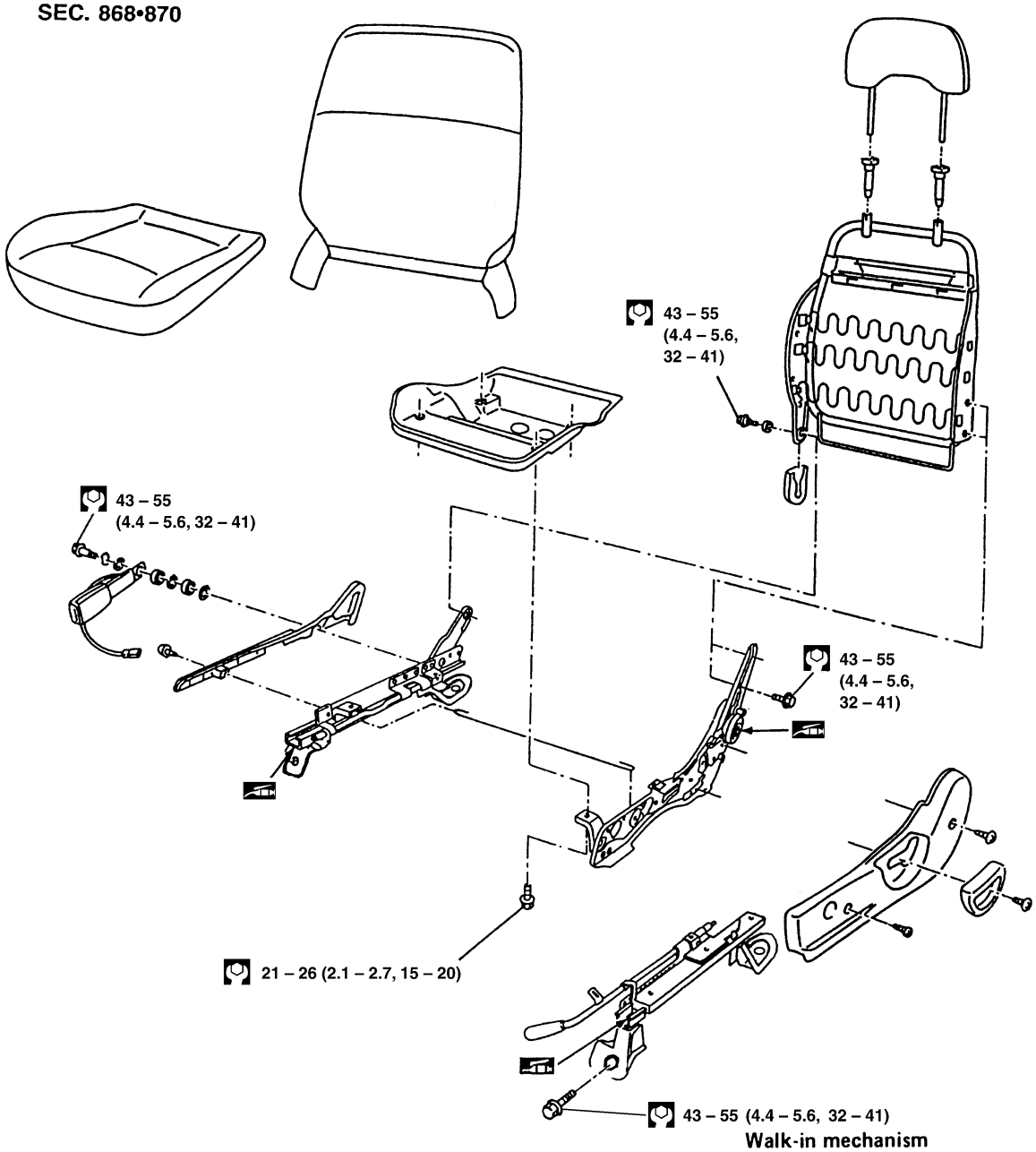

: N·m (kg-m, ft-lb)
: Grease-up point
(Do not apply too much grease as it will drip)

Walk-in mechanism

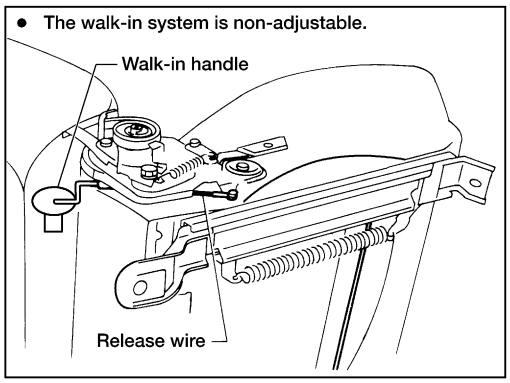

WBT129

SEC. 868 • 870

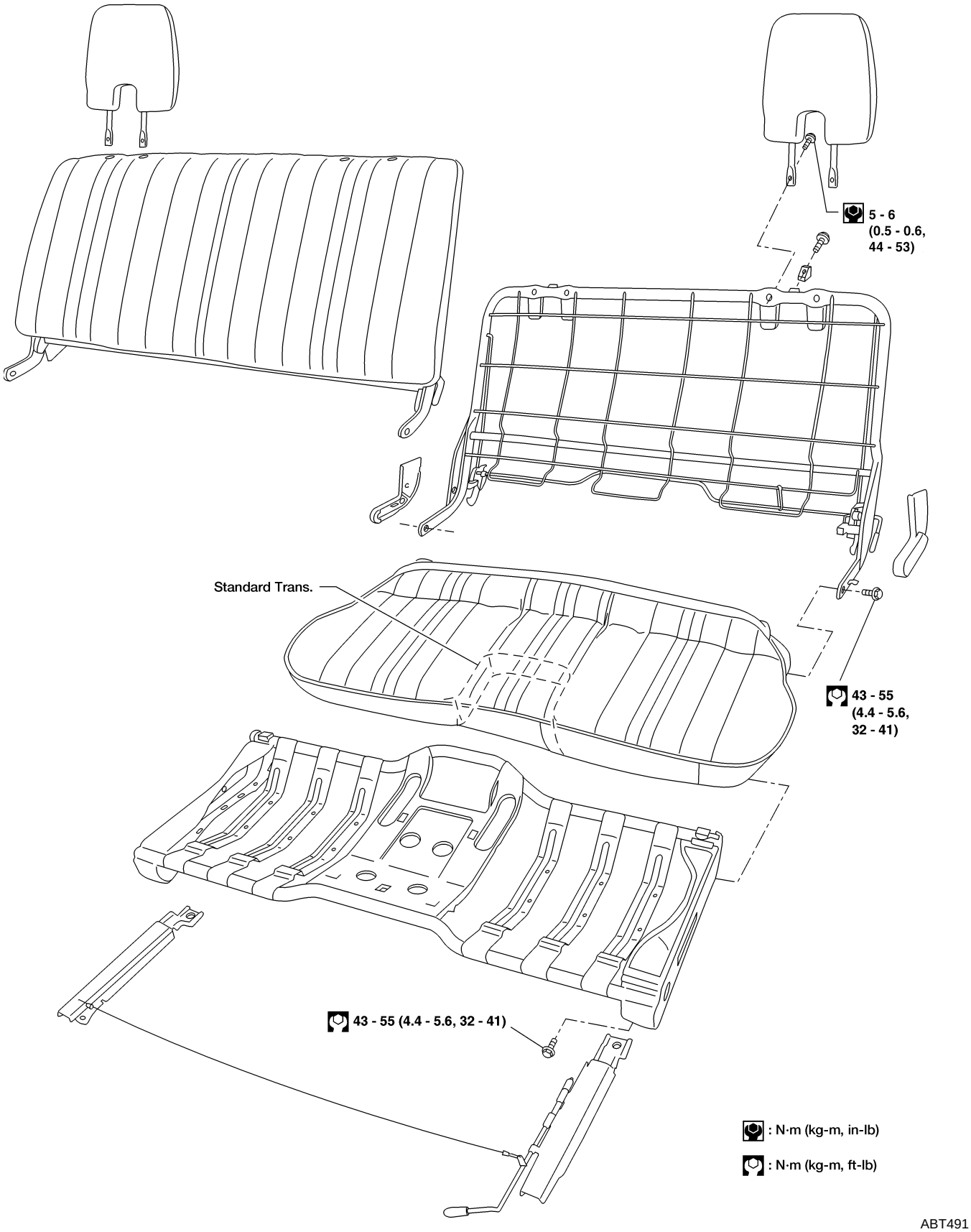

ABT491

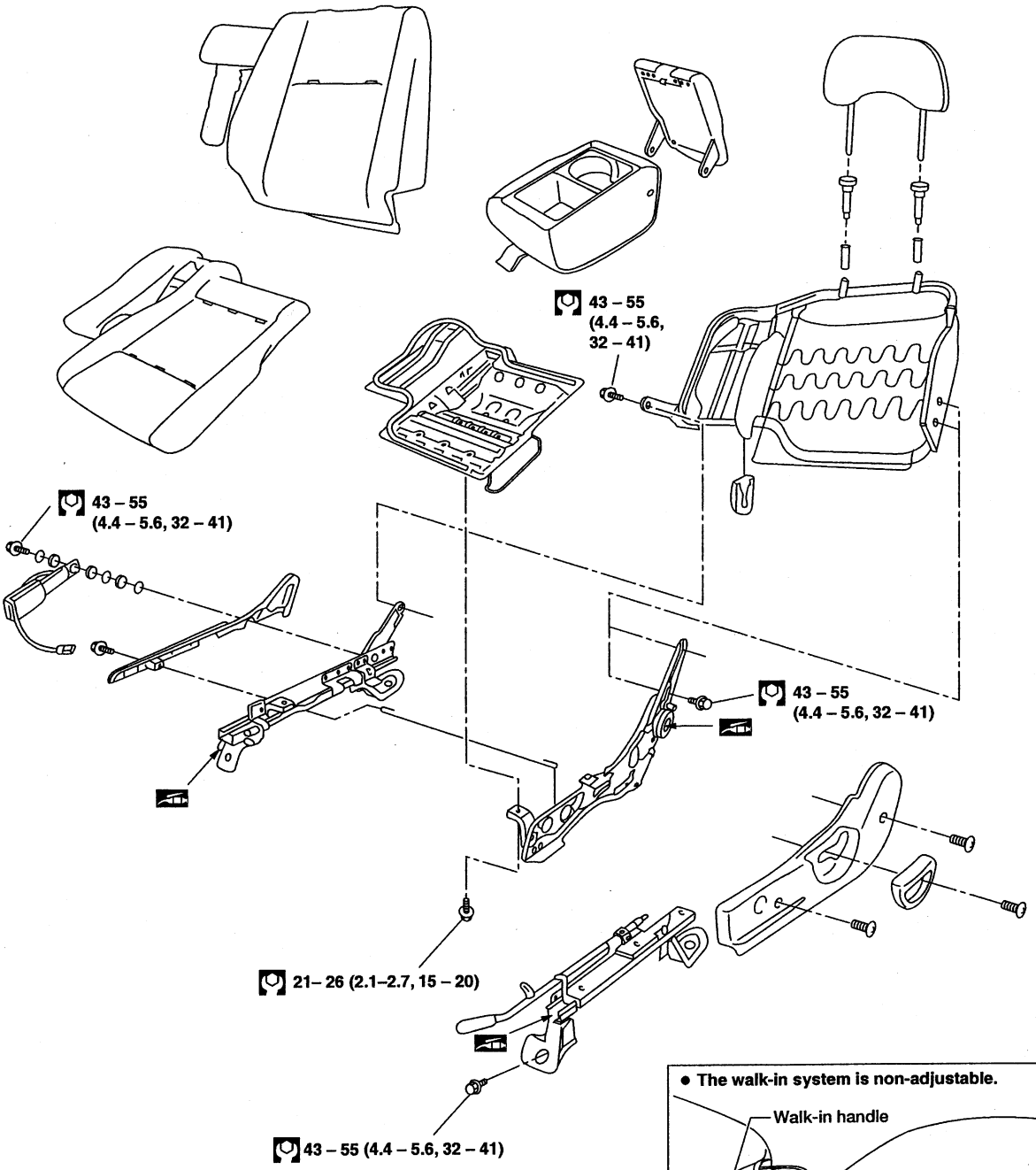

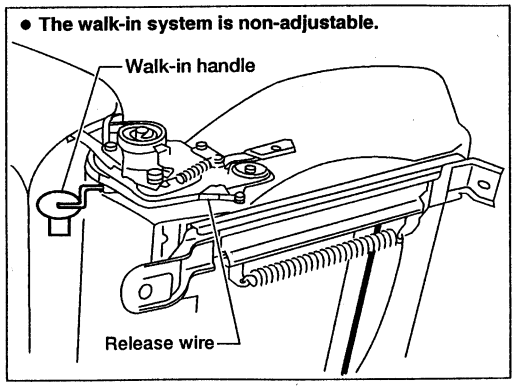

: N·m (kg-m, ft-lb)
: Grease-up point
(Do not apply too much grease as it will drip.)

WBT130

Removal and Installation

NEBT0015

SEC. 880

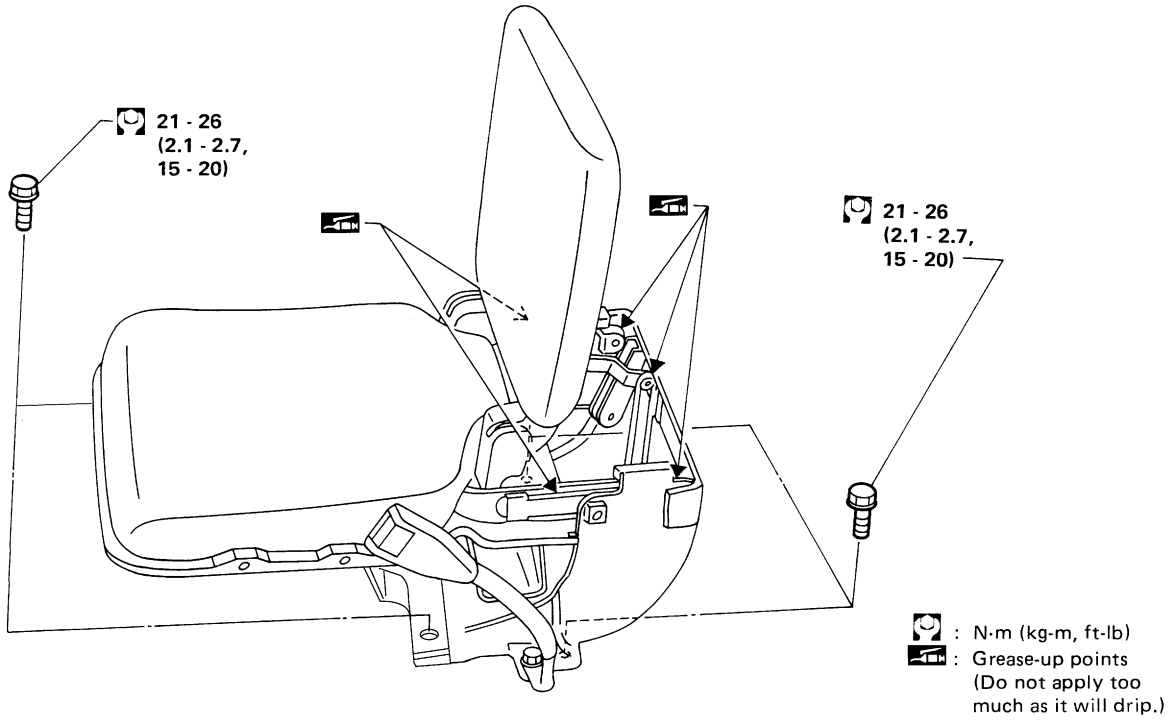

ABT322

SEC. 868 • 870

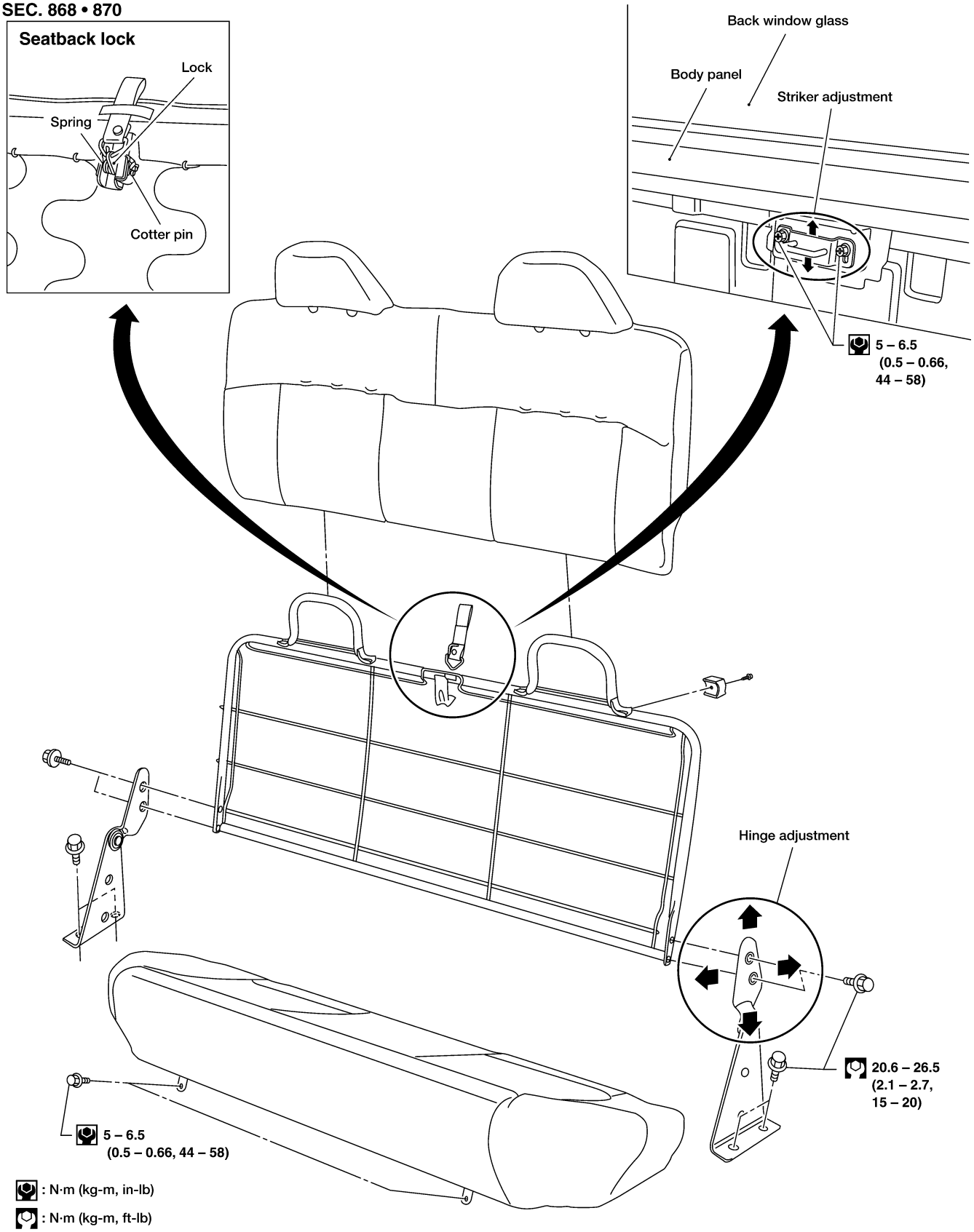

WBT139

Removal and Installation

NEBT0016

Roof rack must be removed before sunroof removal.

SEC. 736

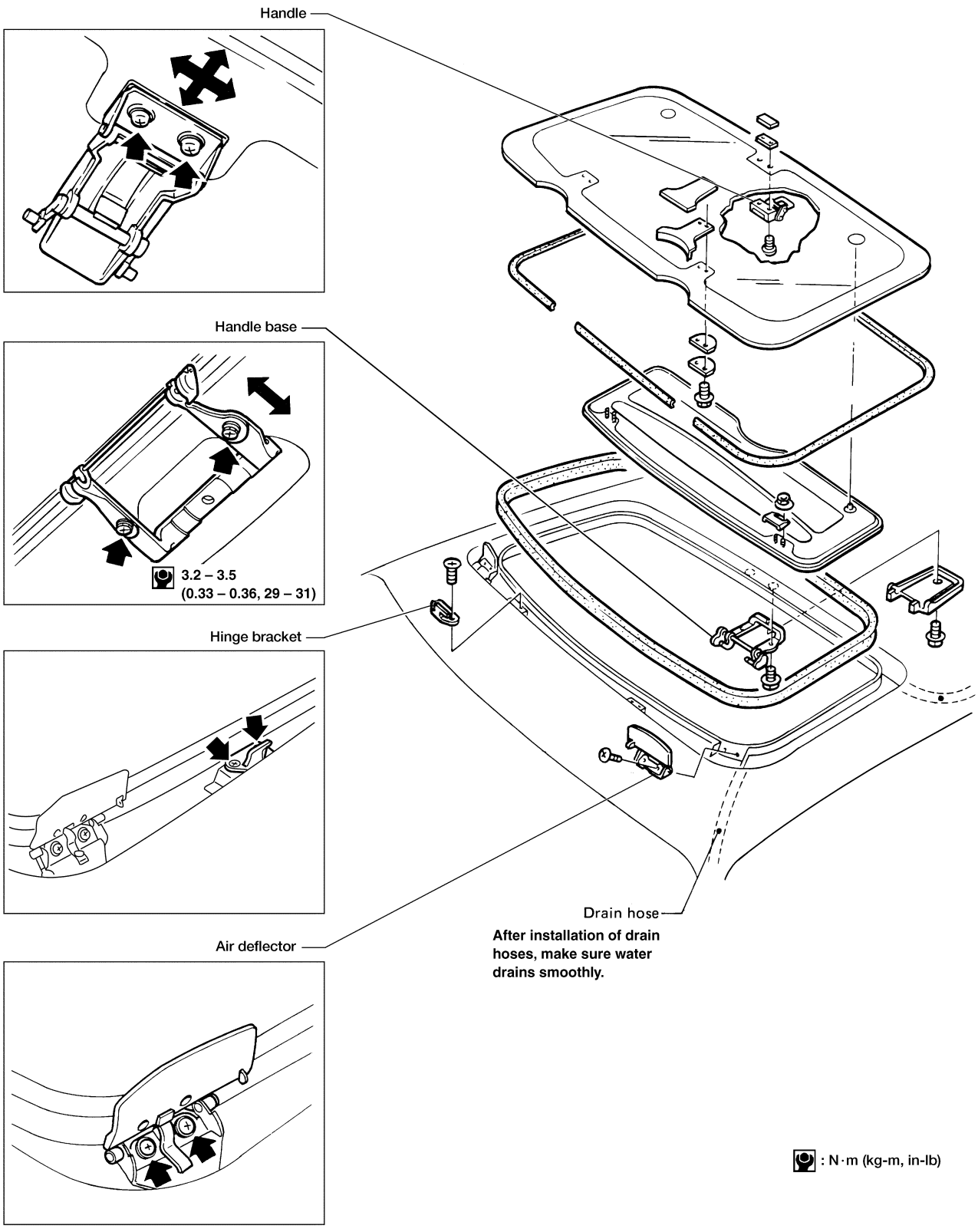

ABT326

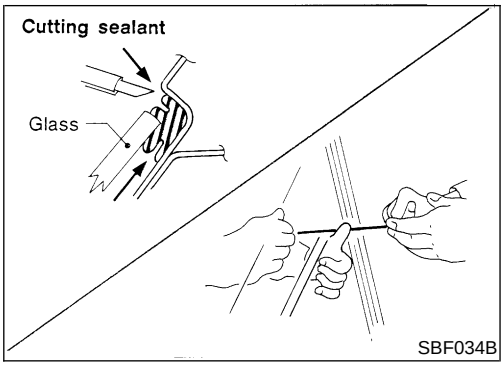

Removal and Installation

NEBT0017

REMOVAL

NEBT0017S01

After removing moldings, remove glass using piano wire or power cutting tool and an inflatable pump bag.

WARNING:

When cutting the glass from the vehicle, always wear safety glasses and heavy gloves to help prevent glass splinters from entering your eyes or cutting your hands.

CAUTION:

- **Be careful not to scratch the glass when removing.**
- **Do not set or stand the glass on its edge. Small chips may develop into cracks.**

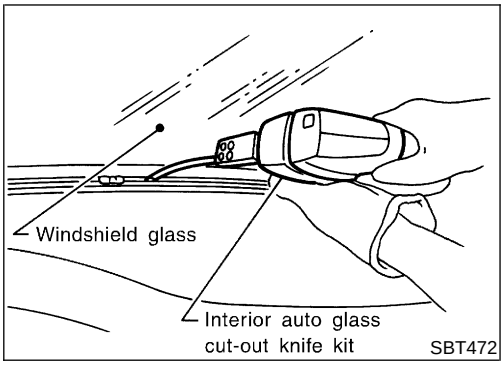

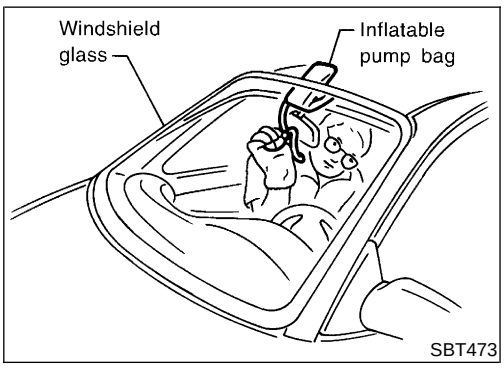

INSTALLATION

NEBT0017S02

- **Use genuine NISSAN Urethane Adhesive Kit or equivalent and follow the instructions furnished with it.**
- **While the urethane adhesive is curing, open a door window. This will prevent the glass from being forced out by passenger compartment air pressure when a door is closed.**
- **The molding must be installed securely so that it is in position and leaves no gap.**
- **Inform the customer that the vehicle should remain stationary until the urethane adhesive has completely cured (preferably 24 hours). Curing time varies with temperature and humidity.**

WARNING:

- **Keep heat and open flames away as primers and adhesive are flammable.**
- **The materials contained in the kit are harmful if swallowed, and may irritate skin and eyes. Avoid contact with the skin and eyes.**
- **Use in an open, well ventilated location. Avoid breathing the vapors. They can be harmful if inhaled. If affected by vapor inhalation, immediately move to an area with fresh air.**
- **Driving the vehicle before the urethane adhesive has completely cured may affect the performance of the windshield in case of an accident.**

CAUTION:

- **Do not use an adhesive which is past its usable term. Shelf life of this product is limited to six months after the date of manufacture. Carefully adhere to the expiration or manufacture date printed on the box.**
- **Keep primers and adhesive in a cool, dry place. Ideally, they should be stored in a refrigerator.**

- **Do not leave primers or adhesive cartridge unattended with their caps open or off.**
- **The vehicle should not be driven for at least 24 hours or until the urethane adhesive has completely cured. Curing time varies depending on temperature and humidities. The curing time will increase under higher temperatures and lower humidities.**

WINDSHIELD

NEBT0017S03

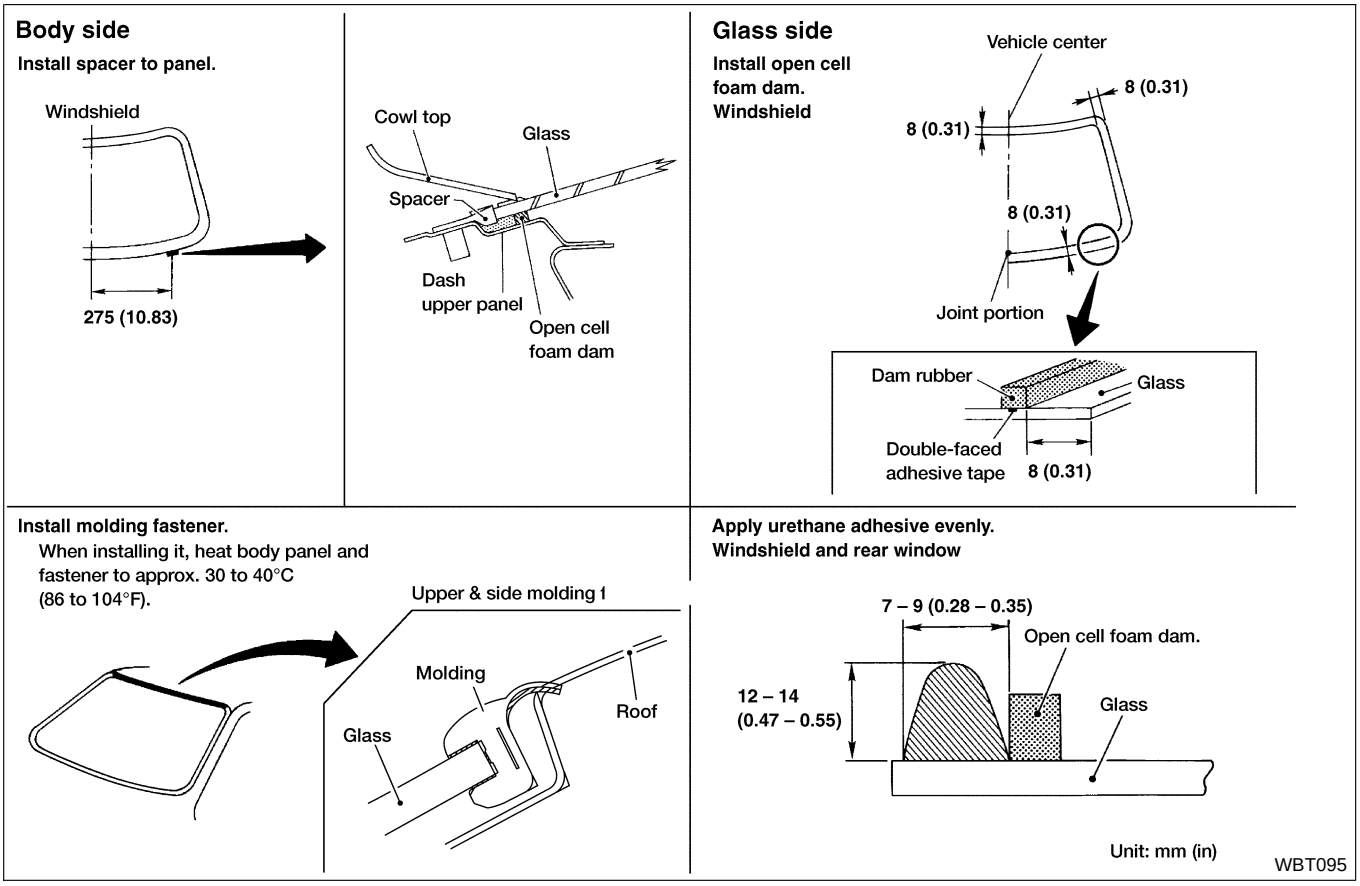

WBT095

SIDE WINDOW

NEBT0017S04

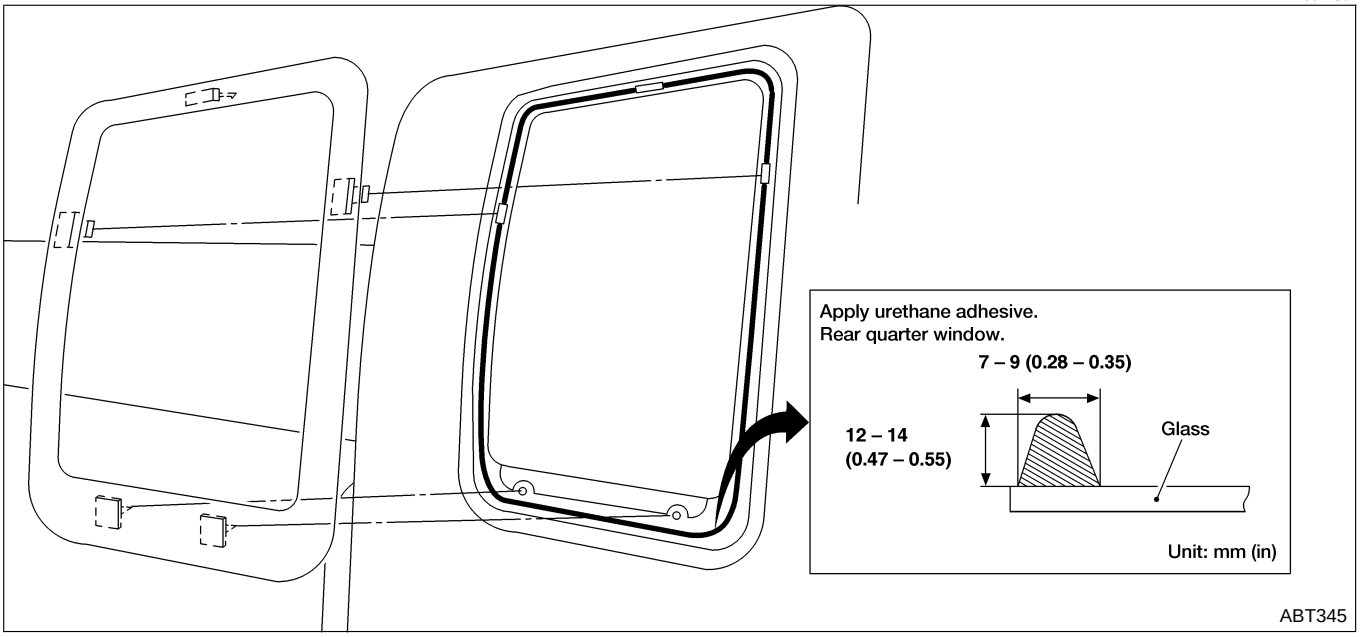

ABT345

BACK WINDOW

NEBT0017S05

- Window glass is held in place by urethane adhesive.

SEC. 797

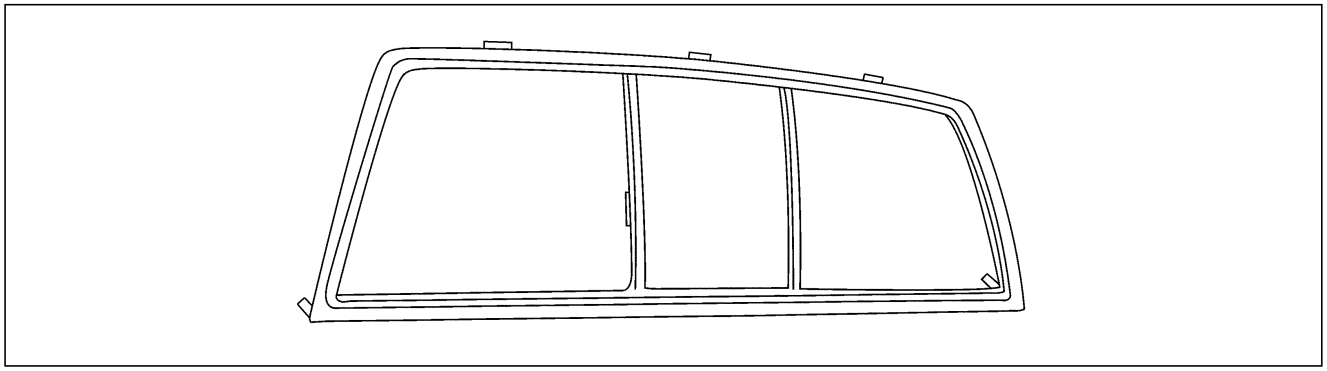

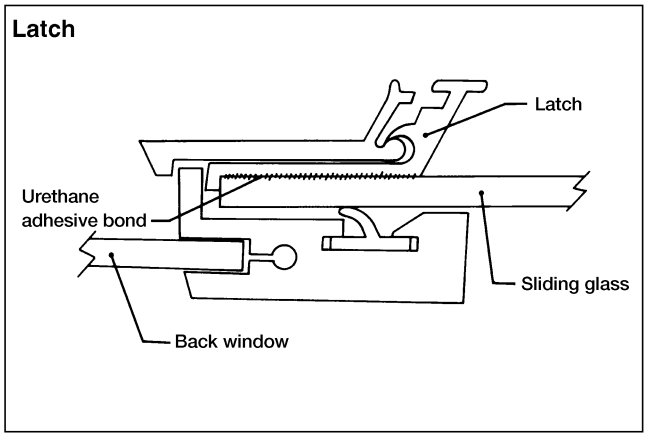

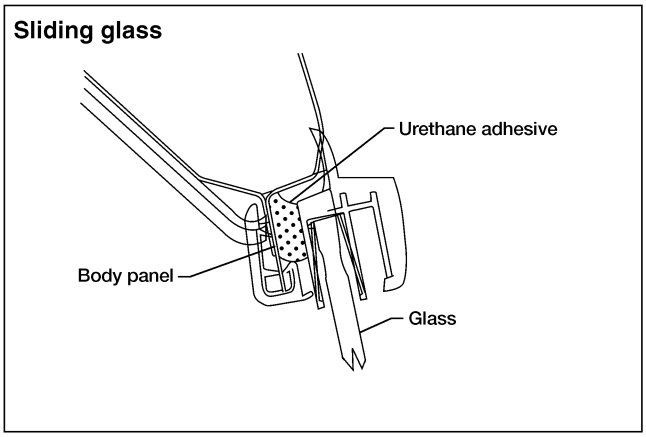

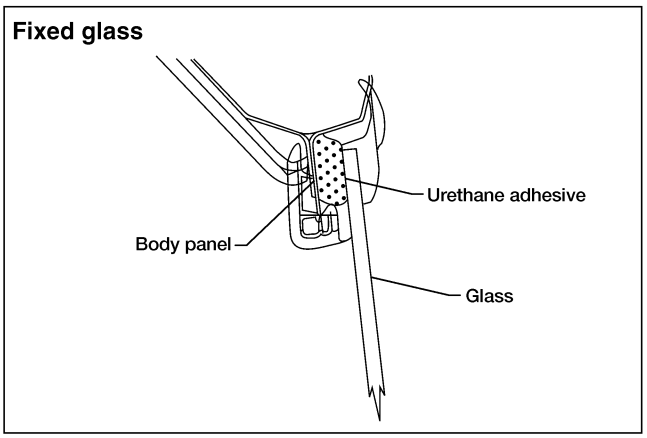

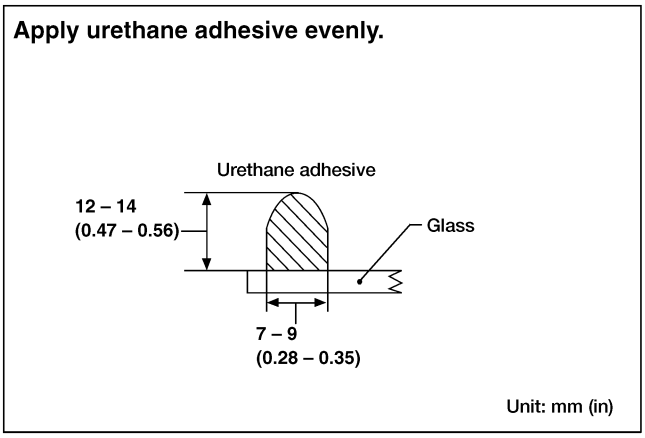

ABT335

Repairing Water Leaks for Windshield, Side Window and Back Window

NEBT0017S0501

Leaks can be repaired without removing and reinstalling glass.

If water is leaking between urethane adhesive material and body or glass, determine the extent of leakage. This can be done by applying water to the windshield or side window area while pushing glass outward.

To stop the leak, apply primer (if necessary) and then urethane adhesive to the leak point.

Removal

NEBT0018

Remove rearview mirror by deflecting spring with screwdriver as shown in the figure.

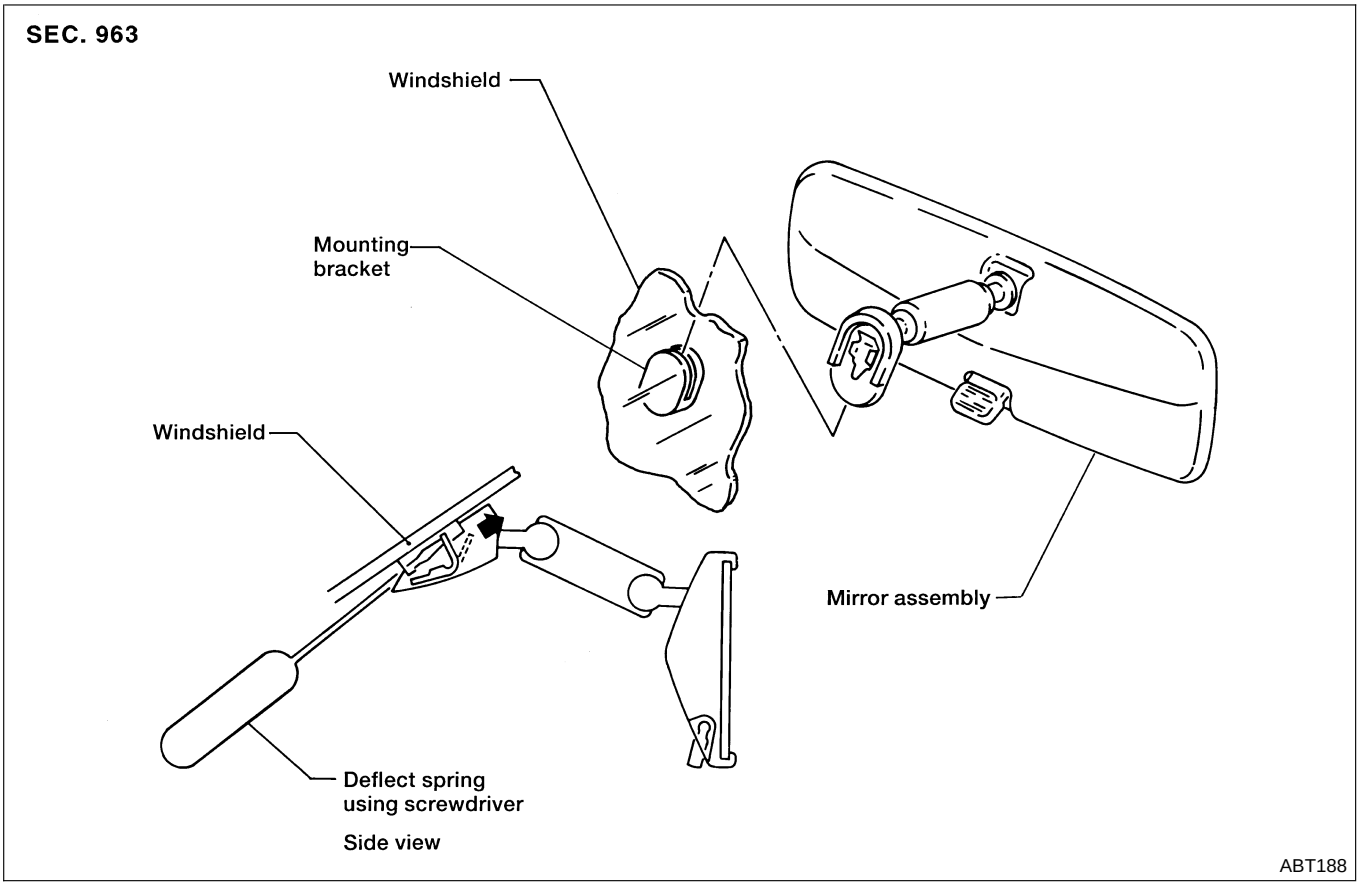

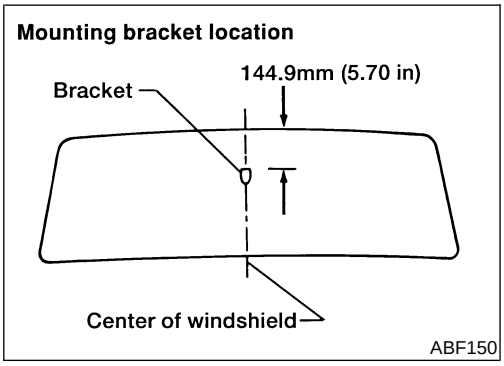

Installation

NEBT0019

1. Install mounting bracket as follows:

a. Determine mounting bracket position on windshield by measuring from top of windshield to top of mounting bracket as shown in the figure.

b. Mark location on outside of windshield with wax pencil or equivalent.

c. Clean attaching point on inside of windshield with an alcohol-saturated paper towel.

d. Sand bonding surface of mounting bracket with sandpaper (No. 320 or No. 360).

e. Clean bonding surface of mounting bracket with an alcohol-saturated paper towel.

f. Apply Loctite Adhesive 11067-2 or equivalent to bonding surface of mounting bracket.

g. Install mounting bracket at premarked position and press mounting bracket against glass for 30 to 60 seconds.

h. After five minutes, wipe off excess adhesive with an alcohol-moistened paper towel.

2. Install rearview mirror.

Removal and Installation

NEBT0020

CAUTION:
Be careful not to scratch door rearview mirror body.
★ For Wiring Diagram, refer to *EL-145*" POWER DOOR MIRROR".

1. Remove door trim or inner cover from front corner of door. Refer to "Removal and Installation", BT-30.
2. Disconnect door mirror harness connector.
3. Remove bolts securing door mirror, then remove door mirror assembly.

SEC. 963

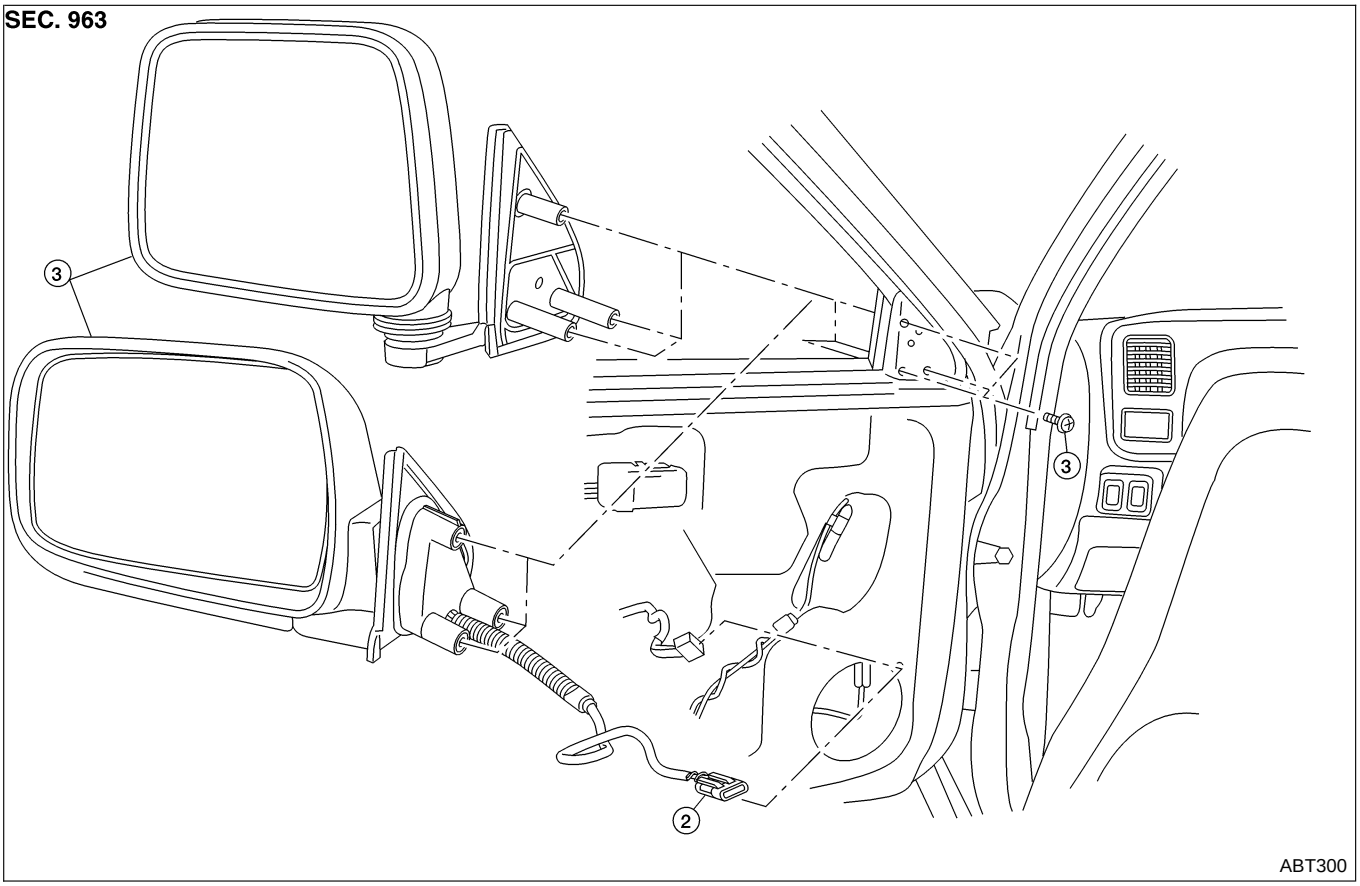

Body Mounting

NEBT0021

When removing, be sure to replace bolts and nuts (sealant applied bolts or self-lock nuts are used for all mounting).

SEC. 930

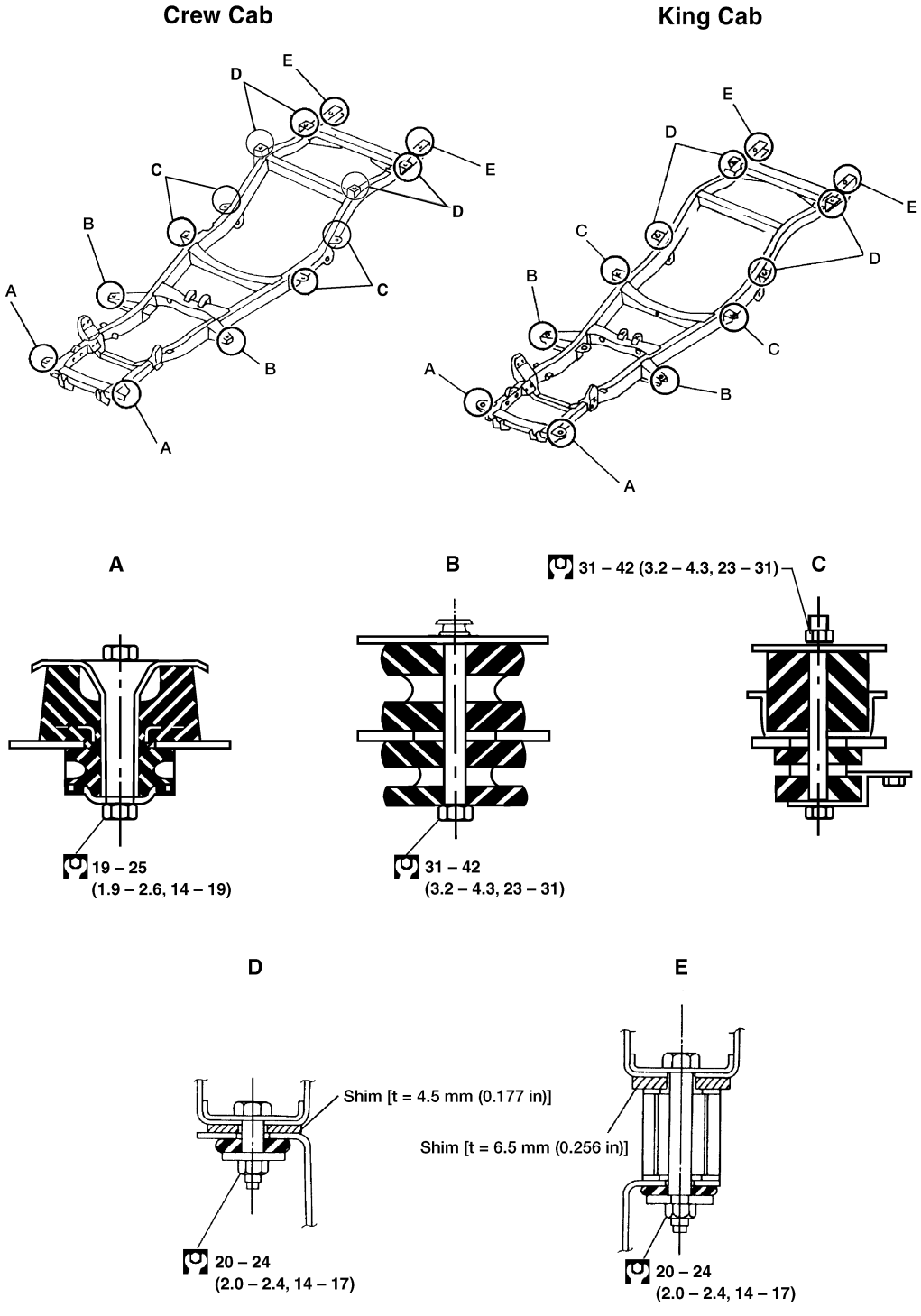

: N·m (kg-m, ft-lb)

WBT140

Alignment

NEBT0022

- All dimensions indicated in the figures are actual.
- When using a tracking gauge, adjust both pointers to equal length, then check pointers and the gauge to make sure there is no free play.
- When a measuring tape is used, check to be sure there is no elongation, twisting or bending.
- Measurements should be taken at the center of the mounting holes.
- An asterisk (*) following the value at the measuring point indicates that the measuring point on the other side is symmetrically the same value.
- The coordinates of the measurement points are the distances measured from the standard line of “X”, “Y” and “Z”.

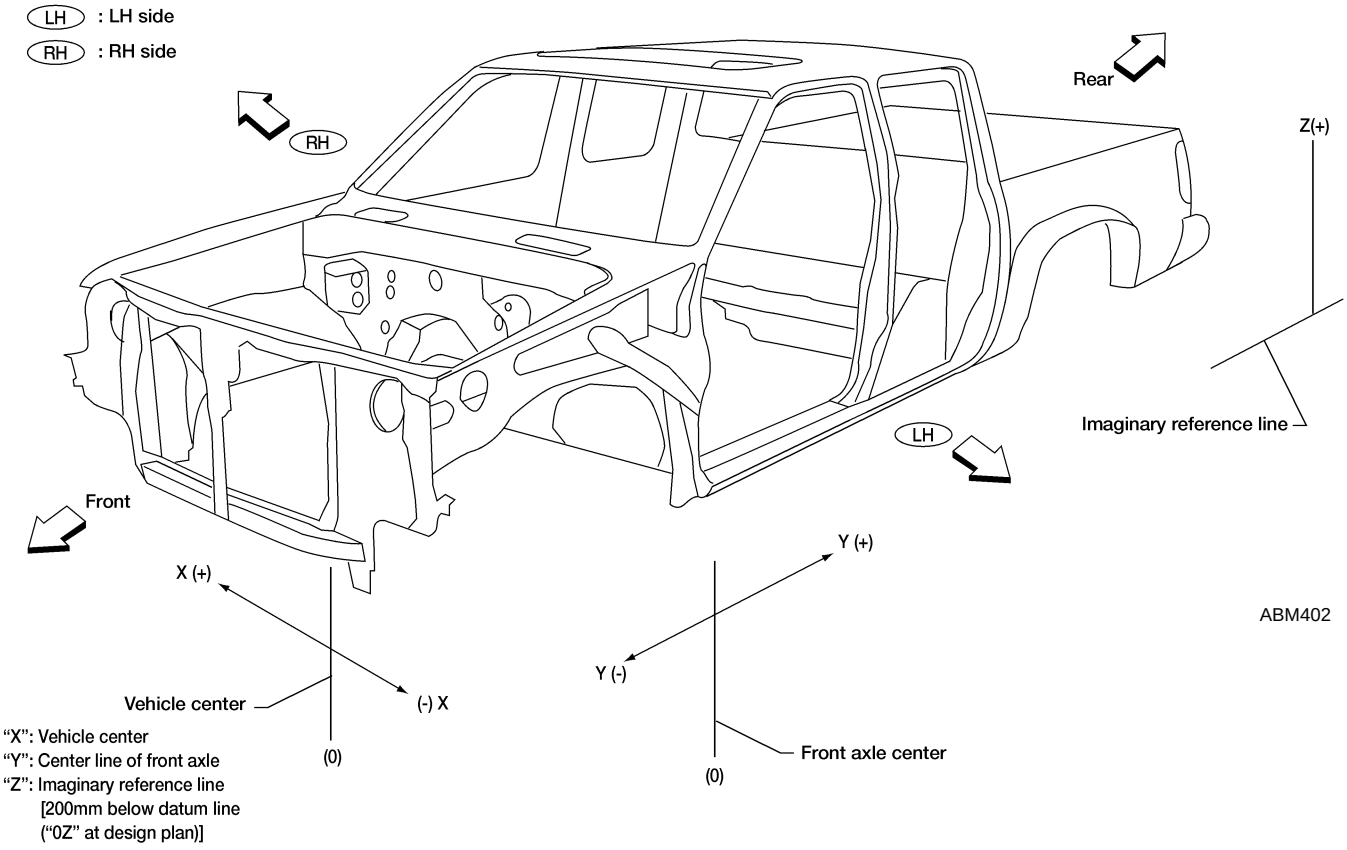

“X”: Vehicle center
“Y”: Center line of front axle
“Z”: Imaginary reference line
[200mm below datum line
(“0Z” at design plan)]

ENGINE COMPARTMENT

Measurement

NEBT0022S01

NEBT0022S0103

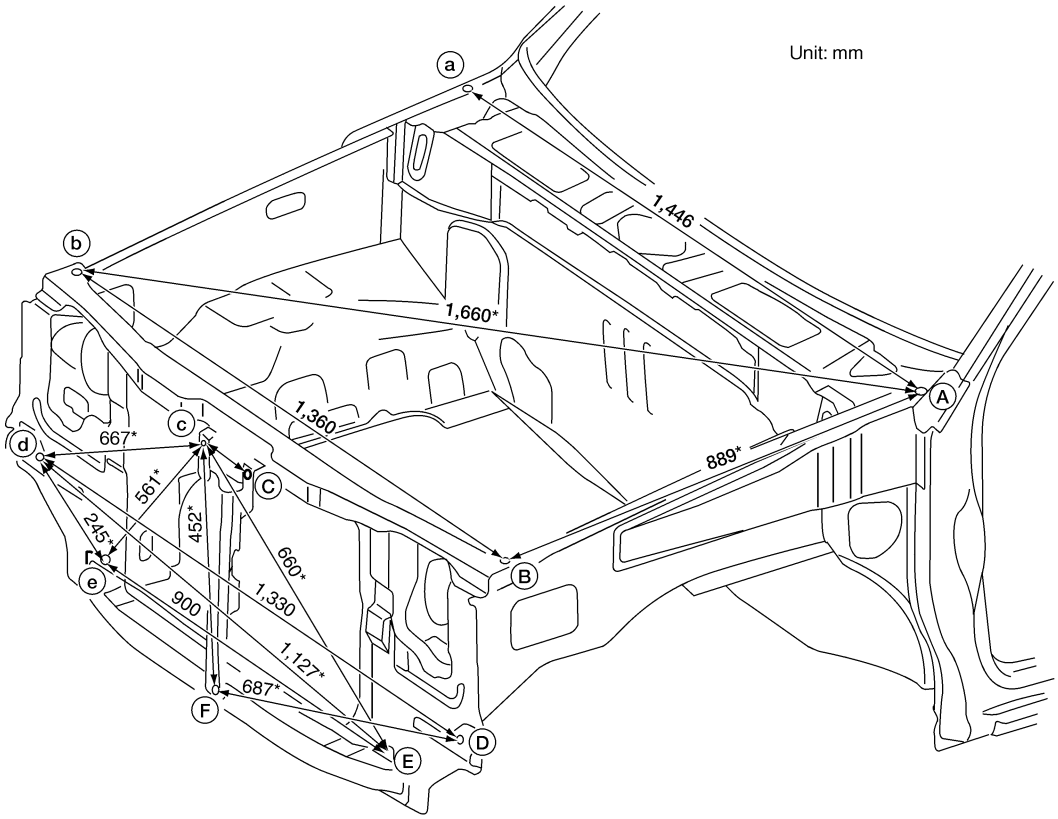

ABM374

Figure marked with * indicate symmetrically identical dimensions on both right-hand and left-hand sides of the vehicle.

Measurement Points

NEBT0022S0104

Front fender : Ⓐ

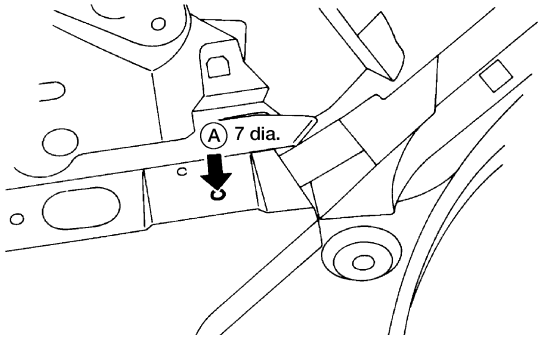

Front fender : Ⓑ

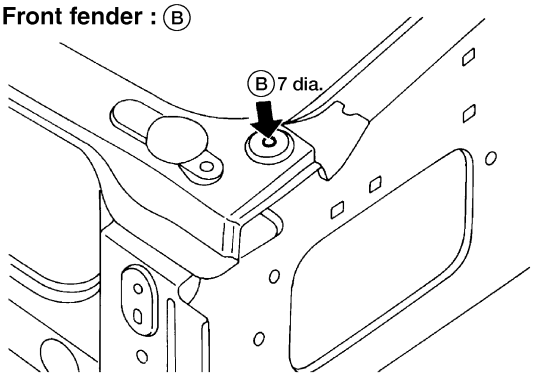

Hood lock : Ⓒ ⓒ

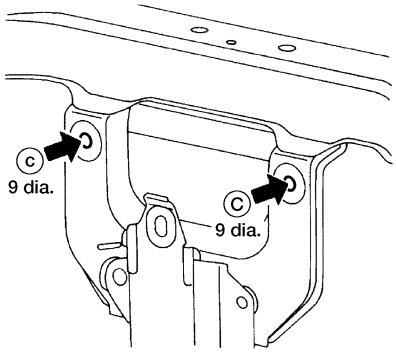

Radiator core support side : Ⓓ

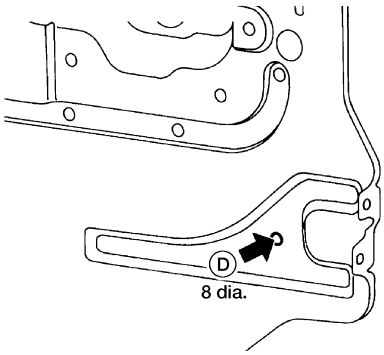

Radiator core support lower : Ⓔ

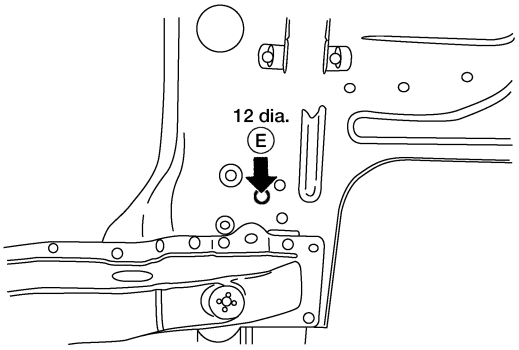

Hood lock stay : Ⓕ

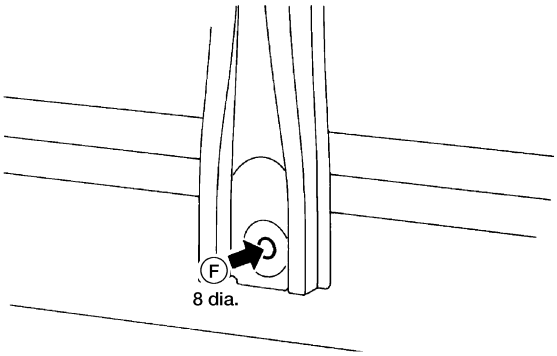

Unit: mm

ABT314

UNDERBODY

Measurement — 2WD·4WD Models

NEBT0022S02

NEBT0022S0205

Unit:mm

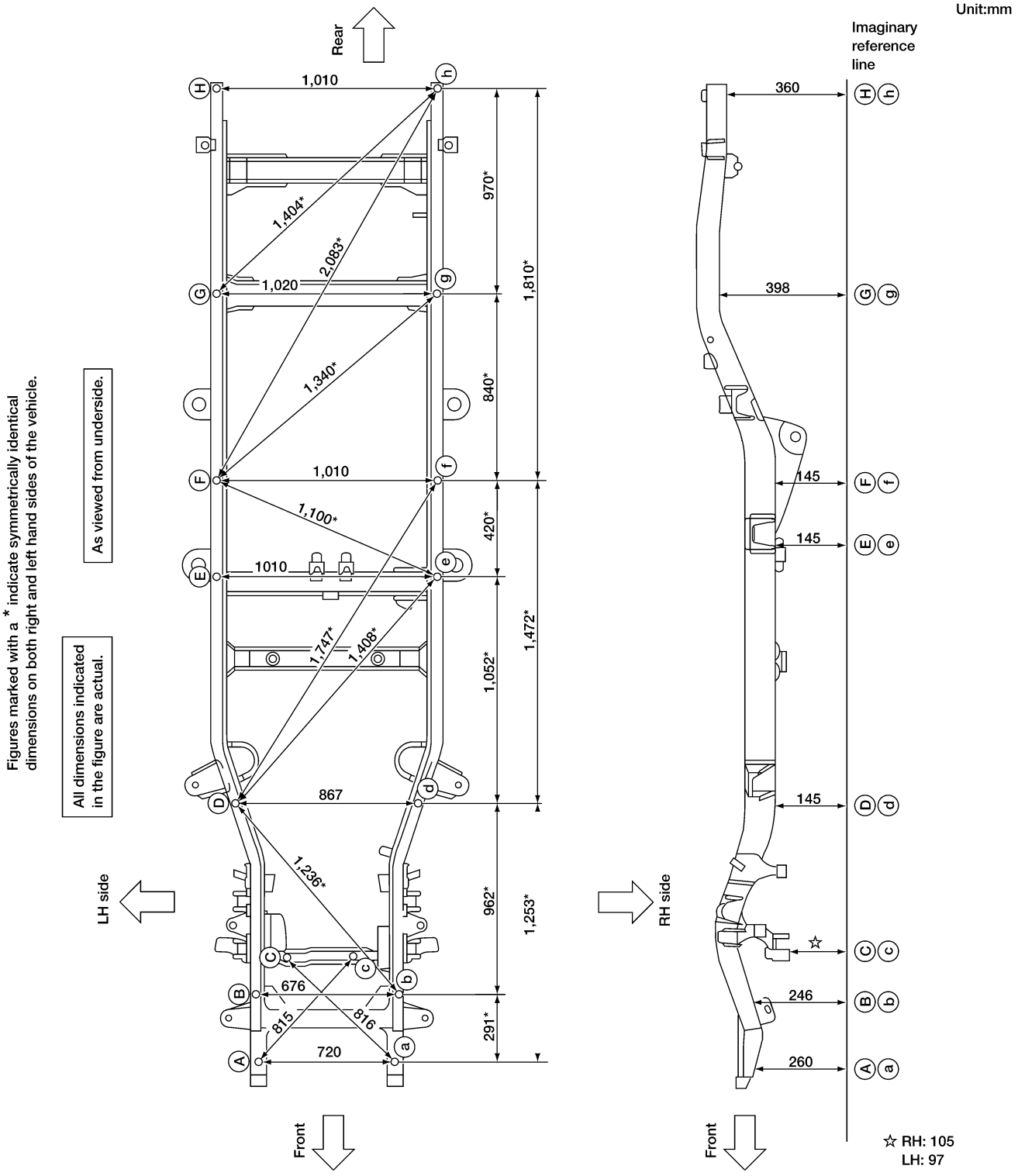

WBT131

Measurement Points — 2WD·4WD Models

NEBT0022S0206

Unit: mm

Frame: Ⓐ Ⓑ Ⓒ

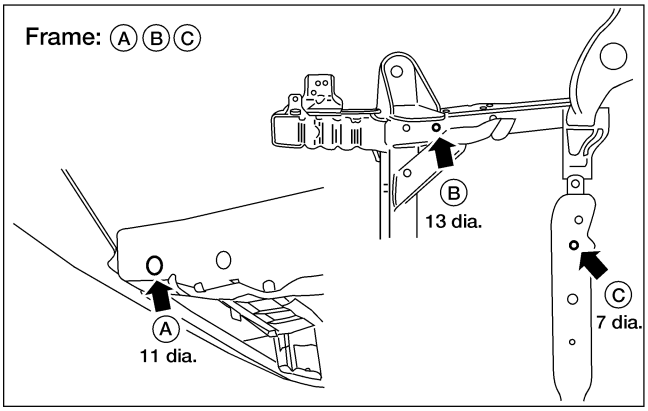

Frame: Ⓓ

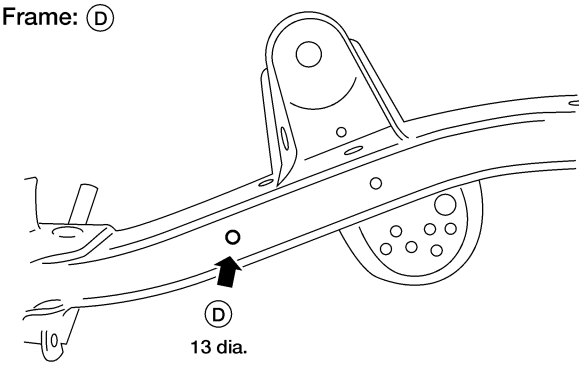

Frame: Ⓔ

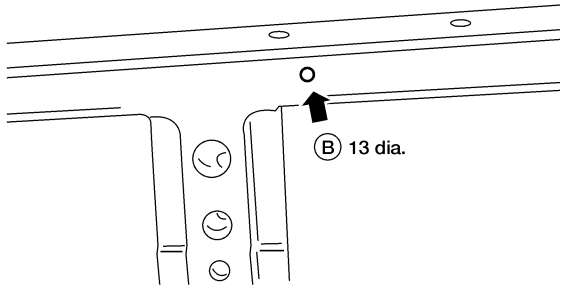

Frame: Ⓕ

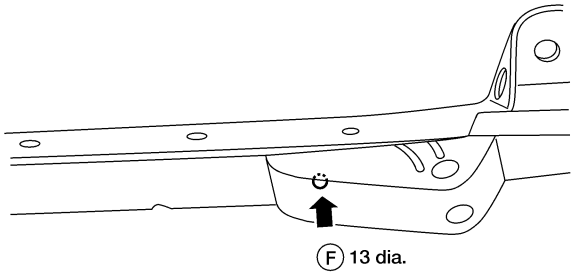

Bump rubber mount: Ⓖ

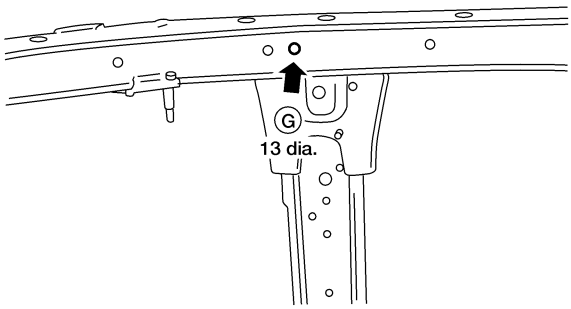

Frame: Ⓗ

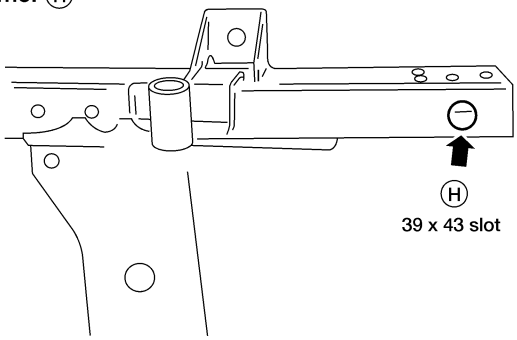

Unit: mm

Coordinates:	Ⓐ, ⓐ	Ⓑ, ⓑ	Ⓒ, ⓒ	Ⓓ, ⓓ	Ⓔ, ⓔ	Ⓕ, ⓕ	Ⓖ, ⓖ	Ⓗ, ⓗ
	X: 360 Y: -700 Z: 260	X: 338 Y: -409 Z: -129	X: 200 Y: -129 Z: RH 105 LH 97	X: 433.7 Y: 550 Z: 145.4	X: 505 Y: 1600 Z: 145	X: 510 Y: 2020 Z: 145	X: 510 Y: 2860 Z: 398	X: 505 Y: 3830 Z: 360

ABT476

NOTES

HEATER & AIR CONDITIONER

SECTION HA

CONTENTS

PRECAUTIONS 2
Supplemental Restraint System (SRS) ″AIR BAG″ and ″SEAT BELT PRE-TENSIONER″....2
Precautions for Working with HFC-134a (R-134a) 3
Contaminated Refrigerant....3
General Refrigerant Precautions....3
Precautions for Leak Detection Dye....4
A/C Identification Label....4
Precautions for Refrigerant Connection....4
Precautions for Servicing Compressor....8
Precautions for Service Equipment....8
Wiring Diagrams and Trouble Diagnosis....11
PREPARATION 12
Special Service Tools 12
HFC-134a (R-134a) Service Tools and Equipment....13
Commercial Service Tool....16
DESCRIPTION....17
Refrigeration System 17
Control Operation 18
Discharge Air Flow....19
Component Layout 20
TROUBLE DIAGNOSES....21
Component Location....21
Wiring Diagram - Heater - 25
Wiring Diagram - A/C - 26
How to Perform Trouble Diagnoses for Quick and Accurate Repair....28
Symptom Table 28
Operational Check....29
Blower Motor....31
Mode Door 38
Intake Door Motor....40
Magnet Clutch....43
Insufficient Cooling 55
Insufficient Heating 63
Noise....65
SERVICE PROCEDURE....66
HFC-134a (R-134a) Service Procedure 66
Maintenance of Lubricant Quantity in Compressor 68
Compressor 72
Magnet Clutch....74
Thermal Protector....78
Refrigerant Lines 79
Checking for Refrigerant Leaks....81
Electronic Refrigerant Leak Detector 81
Fluorescent Dye Leak Detector....84
Belt....85
IACV-FICD Solenoid Valve....85
Heater Core 86
Evaporator Core 87
SERVICE DATA AND SPECIFICATIONS (SDS) 88
Manual 88

Supplemental Restraint System (SRS) “AIR BAG” and “SEAT BELT PRE-TENSIONER”

NEHA0060

The Supplemental Restraint System such as “AIR BAG” and “SEAT BELT PRE-TENSIONER” used along with a seat belt, helps to reduce the risk or severity of injury to the driver and front passenger in a frontal collision. The Supplemental Restraint System consists of air bag modules (located in the center of the steering wheel and in the instrument panel on the passenger side), seat belt pre-tensioners, a diagnosis sensor unit, warning lamp, wiring harness, and spiral cable.

The vehicle (except Crew Cab model) is equipped with a passenger air bag deactivation switch. Because no rear seat exists where a rear-facing child restraint can be placed, the switch is designed to turn off the passenger air bag so that a rear-facing child restraint can be used in the front passenger seat. The switch is located in the center of the instrument panel, near the ashtray. When the switch is turned to the ON position, the passenger air bag is enabled and could inflate in a frontal collision. When the switch is turned to the OFF position, the passenger air bag is disabled and will not inflate in a frontal collision. A passenger air bag OFF indicator on the instrument panel lights up when the passenger air bag is switched OFF. The driver air bag always remains enabled and is not affected by the passenger air bag deactivation switch.

Information necessary to service the system safely is included in the **RS section** of this Service Manual.

WARNING:

- **To avoid rendering the SRS inoperative, which could increase the risk of personal injury or death in the event of a collision which would result in air bag inflation, all maintenance should be performed by an authorized NISSAN dealer.**
- **Improper maintenance, including incorrect removal and installation of the SRS, can lead to personal injury caused by unintentional activation of the system. For removal of Spiral Cable and Air Bag Module, see the RS section.**
- **Do not use electrical test equipment on any circuit related to the SRS unless instructed to in this Service Manual. Spiral cable and wiring harnesses (except “SEAT BELT PRE-TENSIONER”) covered with yellow insulation either just before the harness connectors or for the complete harness are related to the SRS.**
- **The vehicle (except Crew Cab model) is equipped with a passenger air bag deactivation switch which can be operated by the customer. When the passenger air bag is switched OFF, the passenger air bag is disabled and will not inflate in a frontal collision. When the passenger air bag is switched ON, the passenger air bag is enabled and could inflate in a frontal collision. After SRS maintenance or repair, make sure the passenger air bag deactivation switch is in the same position (ON or OFF) as when the vehicle arrived for service.**

Precautions for Working with HFC-134a (R-134a)

=NEHA0061

WARNING:

- **CFC-12 (R-12) refrigerant and HFC-134a (R-134a) refrigerant are not compatible. If the refrigerants are mixed, compressor failure is likely to occur. Refer to HA-3, "Contaminated Refrigerant". To determine the purity of HFC-134a (R-134a) in the vehicle and recovery tank, use Refrigerant Recovery/Recycling Recharging equipment (ACR4) (J-39500–NI) and Refrigerant Identifier.**
- **Use only specified lubricant for the HFC-134a (R-134a) A/C system and HFC-134a (R-134a) components. If lubricant other than that specified is used, compressor failure is likely to occur.**
- **The specified HFC-134a (R-134a) lubricant rapidly absorbs moisture from the atmosphere. The following handling precautions must be observed:**

a) When removing refrigerant components from a vehicle, immediately cap (seal) the component to minimize the entry of moisture from the atmosphere.

b) When installing refrigerant components to a vehicle, do not remove the caps (unseal) until just before connecting the components. Connect all refrigerant loop components as quickly as possible to minimize the entry of moisture into system.

c) Only use the specified lubricant from a sealed container. Immediately reseal containers of lubricant. Without proper sealing, lubricant will become moisture saturated and should not be used.

d) Avoid breathing A/C refrigerant and lubricant vapor or mist. Exposure may irritate eyes, nose and throat. Remove R-134a from the A/C system, using certified service equipment meeting requirements of SAE J2210 (R-134a recycling equipment), or J2209 (R-134a recovery equipment). If accidental system discharge occurs, ventilate work area before resuming service. Additional health and safety information may be obtained from refrigerant and lubricant manufacturers.

e) Do not allow lubricant (Nissan A/C System Oil Type R) to come in contact with styrofoam parts. Damage may result.

Contaminated Refrigerant

NEHA0267

If a refrigerant other than pure R-134a is identified in a vehicle, your options are:

- Explain to the customer that environmental regulations prohibit the release of contaminated refrigerant into the atmosphere.
- Explain that recovery of the contaminated refrigerant could damage your service equipment and refrigerant supply.
- Suggest the customer return the vehicle to the location of previous service where the contamination may have occurred.
- If you choose to perform the repair, recover the refrigerant using only dedicated equipment and containers. **Do not recover contaminated refrigerant into your existing service equipment.** If your facility does not have dedicated recovery equipment, you may contact a local refrigerant product retailer for available service. This refrigerant must be disposed of in accordance with all federal and local regulations. In addition, replacement of all refrigerant system components on the vehicle is recommended.
- If the vehicle is within the warranty period, the air conditioner warranty is void. Please contact Nissan Customer Affairs for further assistance.

General Refrigerant Precautions

NEHA0062

WARNING:

- **Do not release refrigerant into the air. Use approved recovery/recycling equipment to capture the refrigerant every time an air conditioning system is discharged.**
- **Always wear eye and hand protection (goggles and gloves) when working with any refrigerant or air conditioning system.**
- **Do not store or heat refrigerant containers above 52°C (125°F).**
- **Do not heat a refrigerant container with an open flame; if container warming is required, place the bottom of the container in a warm pail of water.**
- **Do not intentionally drop, puncture, or incinerate refrigerant containers.**
- **Keep refrigerant away from open flames: poisonous gas will be produced if refrigerant burns.**
- **Refrigerant will displace oxygen, therefore be certain to work in well ventilated areas to prevent suffocation.**
- **Do not pressure test or leak test HFC-134a (R-134a) service equipment and/or vehicle air conditioning systems with compressed air during repair. Some mixtures of air and R-134a have been**

shown to be combustible at elevated pressures. These mixtures, if ignited, may cause injury or property damage. Additional health and safety information may be obtained from refrigerant manufacturers.

Precautions for Leak Detection Dye

NEHA0292

- The A/C system contains a fluorescent leak detection dye used for locating refrigerant leaks. An ultraviolet (UV) lamp is required to illuminate the dye when inspecting for leaks.
- Always wear fluorescence enhancing UV safety glasses to protect your eyes and enhance the visibility of the fluorescent dye.
- A compressor shaft seal should not be repaired because of dye seepage. The compressor shaft seal should only be repaired after confirming the leak with an electronic refrigerant leak detector (J-41995).
- Always remove any dye from the leak area after repairs are complete to avoid a misdiagnosis during a future service.
- Do not allow dye to come into contact with painted body panels or interior components. If dye is spilled, clean immediately with the approved dye cleaner. Fluorescent dye left on a surface for an extended period of time **cannot be removed**.
- Do not spray the fluorescent dye cleaning agent on hot surfaces (engine exhaust manifold, etc.).
- Do not use more than one refrigerant dye bottle (1/4 ounce /7.4 cc) per A/C system.
- Leak detection dyes for R-134a and R12 A/C systems are different. Do not use R-134a leak detection dye in R-12 A/C system or R-12 leak detection dye in R-134a A/C systems or A/C system damage may result.
- The fluorescent properties of the dye will remain for over three (3) years unless a compressor failure occurs.

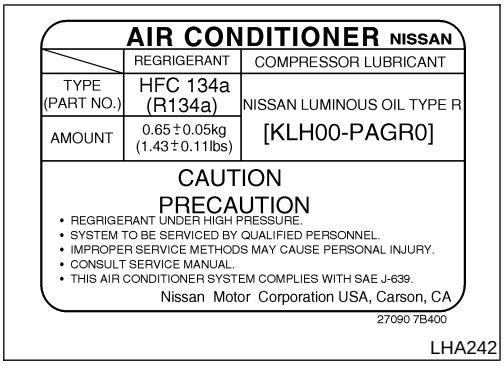

LHA242

A/C Identification Label

NEHA0293

Vehicles with factory installed fluorescent dye have this identification label on the underside of hood.

NOTE:
Vehicles with factory installed fluorescent dye have a green label.

Precautions for Refrigerant Connection

NEHA0063

A new type refrigerant connection has been introduced to all refrigerant lines except the following portion.

- Thermal expansion valve connections.

FEATURES OF NEW TYPE REFRIGERANT CONNECTION

NEHA0063S01

- The O-ring is relocated in a groove for proper installation. This eliminates the chance of the O-ring being caught in, or damaged by, the mating part. The sealing direction of the O-ring is now set vertically in relation to the contacting surface of the mating part to improve sealing characteristics.
- The reaction force of the O-ring will not occur in the direction that causes the joint to pull out, thereby facilitating piping connections.

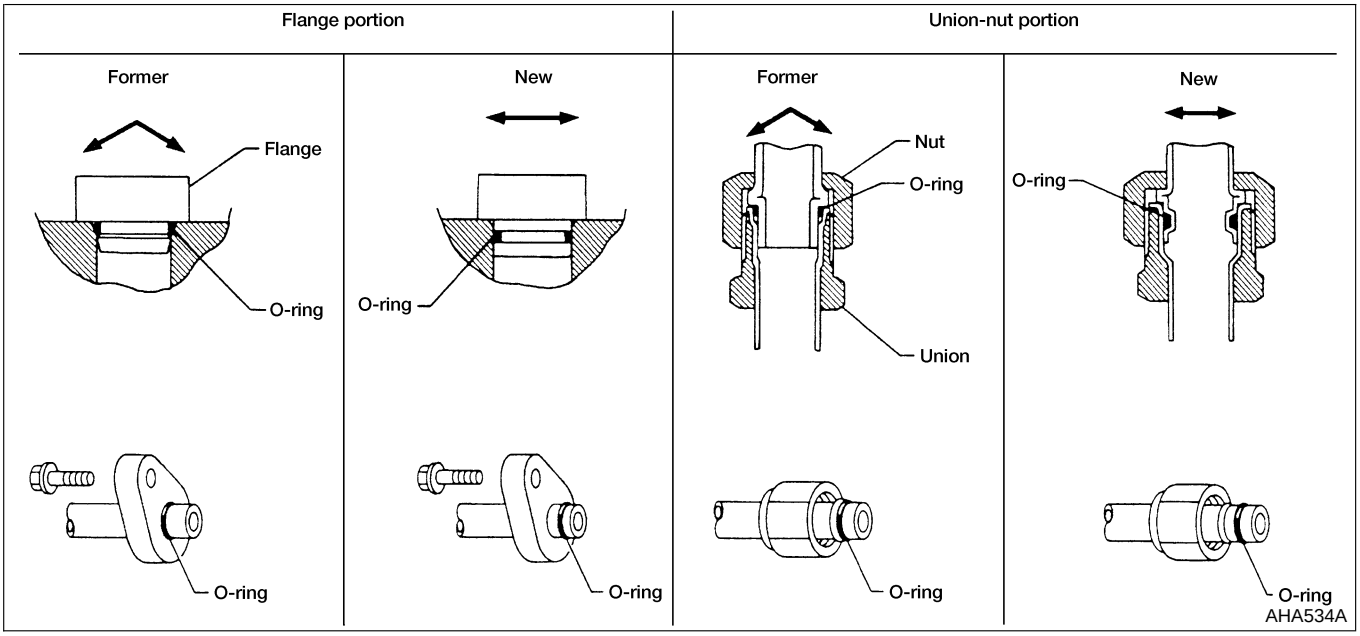
Flange portion
Union-nut portion
Former
New
Former
New
Flange
O-ring
O-ring
Nut
O-ring
Union
O-ring
O-ring
O-ring
O-ring
O-ring
O-ring
AHA534A

O-RING AND REFRIGERANT CONNECTION

=NEHA0063S02

KA24DE Models

NEHA0063S0203

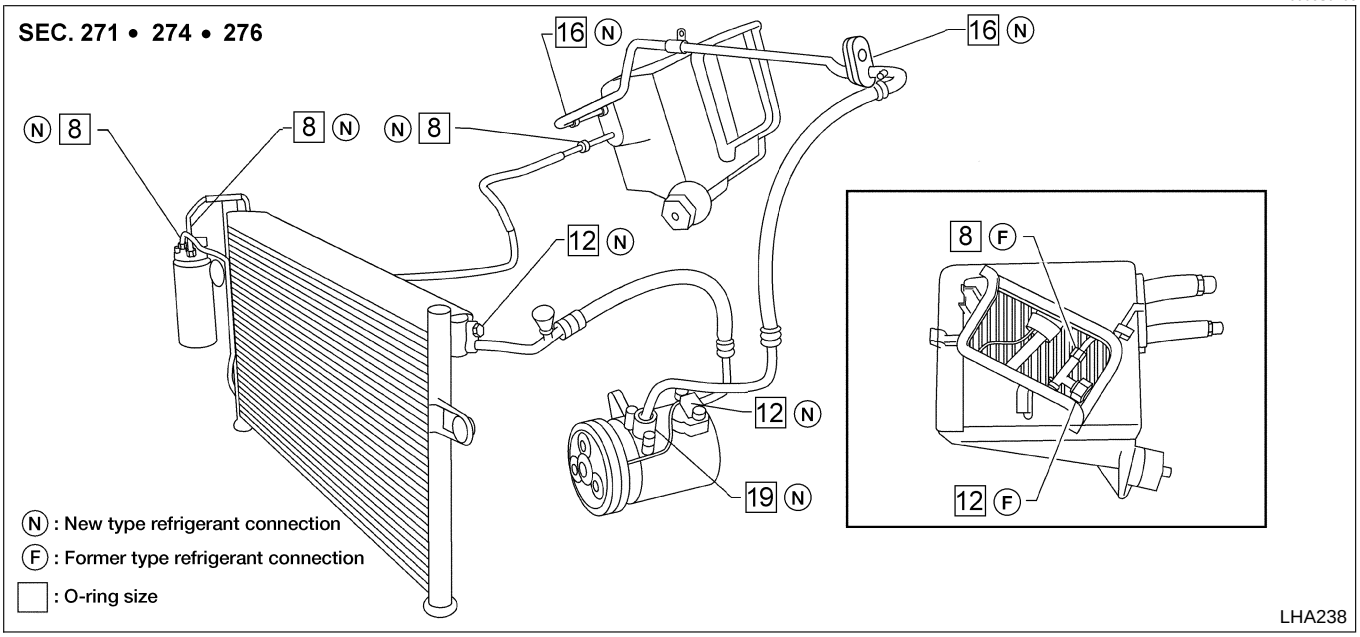

VG33E and VG33ER Models

NEHA0063S0202

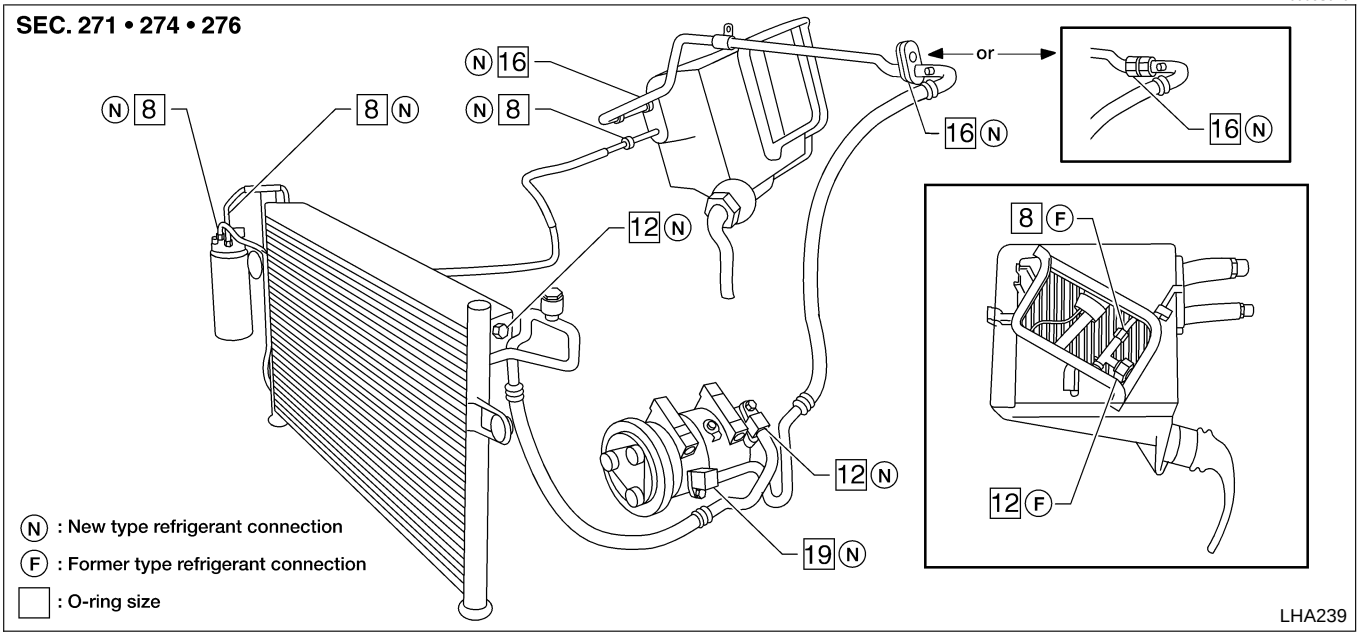

CAUTION:

Refrigerant connections in some systems use different O-ring configurations. Do not confuse O-rings since they are not interchangeable. If a wrong O-ring is installed, refrigerant will leak at, or around, the connection.

O-Ring Part Numbers and Specifications

=NEHA0063S0201

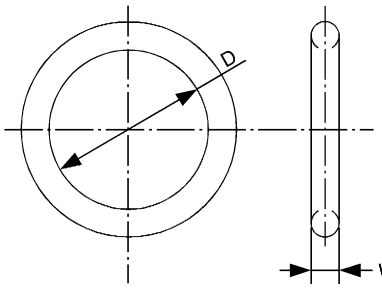

SHA814E

Connection type	O-ring size	Part No.*	D mm (in)	W mm (in)
New	8	92471 N8210	6.8 (0.268)	1.85 (0.0728)
Former		92470 N8200	6.07 (0.23990)	1.78 (0.0701)
New	12	92472 N8210	10.9 (0.429)	2.43 (0.0957)
Former		92475 71L00	11.0 (0.433)	2.4 (0.094)
New	16	92473 N8210	13.6 (0.535)	2.43 (0.0957)
New	19	92474-N8210	16.5 (0.650)	2.43 (0.0957)

*: Always check with the Parts Department for the latest parts information.

WARNING:

Make sure all refrigerant is discharged into the recycling equipment and the pressure in the system is less than atmospheric pressure. Then gradually loosen the discharge side hose fitting and remove it.

CAUTION:

When replacing or cleaning refrigerant cycle components, observe the following.

- **When the compressor is removed, store it in the same position as it is when mounted on the car. Failure to do so will cause lubricant to enter the low pressure chamber.**
- **When connecting tubes, always use a torque wrench and a back-up wrench.**
- **After disconnecting tubes, immediately plug all openings to prevent entry of dirt and moisture.**
- **When installing an air conditioner in the vehicle, connect the pipes as the final stage of the operation. Do not remove the seal caps of pipes and other components until just before required for connection.**
- **Allow components stored in cool areas to warm to working area temperature before removing seal caps. This prevents condensation from forming inside A/C components.**
- **Thoroughly remove moisture from the refrigeration system before charging the refrigerant.**
- **Always replace used O-rings.**
- **When connecting tube, apply lubricant to circle of the O-rings shown in illustration. Be careful not to apply lubricant to threaded portion.**
  Lubricant name: NISSAN A/C System Lubricant Type R
  Part number: KLH00-PAGR0
- **O-ring must be closely attached to inflated portion of tube.**
- **After inserting tube into union until O-ring is no longer visible, tighten nut to specified torque.**
- **After connecting line, conduct leak test and make sure that there is no leakage. When the gas leaking point is found, disconnect that line and replace the O-ring. Then tighten connections of seal seat to the specified torque.**

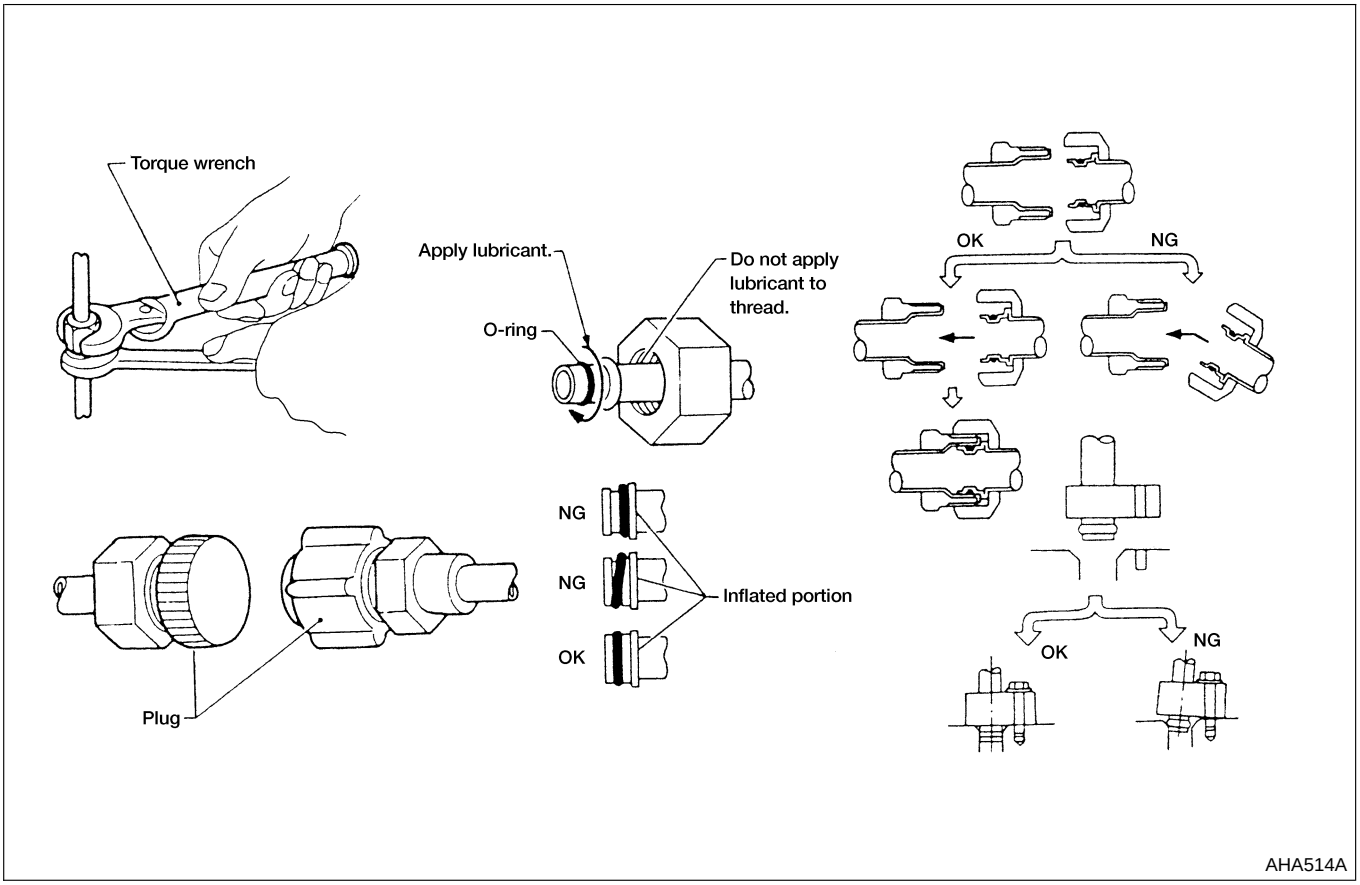

Precautions for Servicing Compressor

NEHA0064

- **Plug all openings to prevent moisture and foreign matter from entering.**
- **Do not keep the compressor in the upside down position or laid on its side for more than 10 minutes.**
- **When replacing or repairing compressor, follow "Maintenance of Lubricant Quantity in Compressor" exactly. Refer to "Maintenance of Lubricant Quantity in Compressor", HA-68.**
- **Keep friction surfaces between clutch and pulley clean. If the surface is contaminated, with lubricant, wipe it off by using a clean waste cloth moistened with thinner.**
- **After compressor service operation, turn the compressor shaft by hand more than five turns in both directions. This will equally distribute lubricant inside the compressor. After the compressor is installed, let the engine idle and operate the compressor for one hour.**
- **After replacing the compressor magnet clutch, apply voltage to the new one and check for normal operation.**

Precautions for Service Equipment

NEHA0065

RECOVERY/RECYCLING EQUIPMENT

NEHA0065S01

Follow the manufacturer's instructions for machine operation and machine maintenance. Never introduce any refrigerant other than that specified into the machine.

ELECTRONIC LEAK DETECTOR

NEHA0065S02

Follow the manufacturer's instructions for tester operation and tester maintenance.

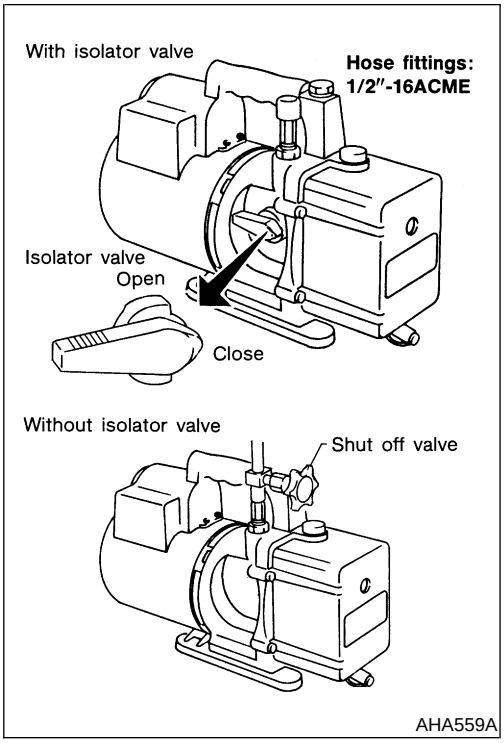

AHA559A

VACUUM PUMP

NEHA0065S03

The lubricant contained inside the vacuum pump is not compatible with the specified lubricant for HFC-134a (R-134a) A/C systems. The vent side of the vacuum pump is exposed to atmospheric pressure. So the vacuum pump lubricant may migrate out of the pump into the service hose. This is possible when the pump is switched off after evacuation (vacuuming) and hose is connected to it.

To prevent this migration, use a manual valve situated near the hose-to-pump connection, as follows.

- Usually vacuum pumps have a manual isolator valve as part of the pump. Close this valve to isolate the service hose from the pump.
- For pumps without an isolator, use a hose equipped with a manual shut-off valve near the pump end. Close the valve to isolate the hose from the pump.
- If the hose has an automatic shut off valve, disconnect the hose from the pump: when the hose is connected, the valve is open and lubricating oil may migrate.

Some one-way valves open when vacuum is applied and close under a no vacuum condition. Such valves may restrict the pump's ability to pull a deep vacuum and are not recommended.

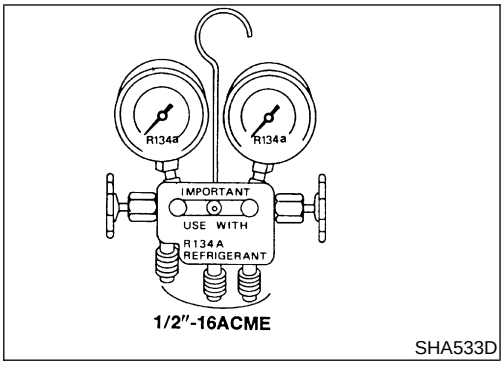

SHA533D

MANIFOLD GAUGE SET

NEHA0065S04

Be certain that the gauge face indicates R-134a or 134a. Make sure the gauge set has 1/2″-16 ACME threaded connections for service hoses. Confirm the set has been used only with refrigerant HFC-134a (R-134a) along with specified lubricant.

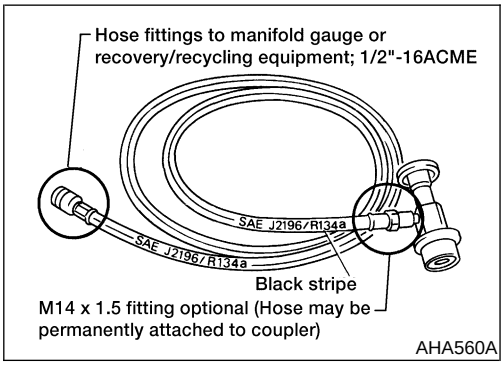

AHA560A

SERVICE HOSES

NEHA0065S05

Be certain that the service hoses display the markings described (colored hose with black stripe). All hoses must include positive shut off devices (either manual or automatic) near the end of the hoses opposite the manifold gauge.

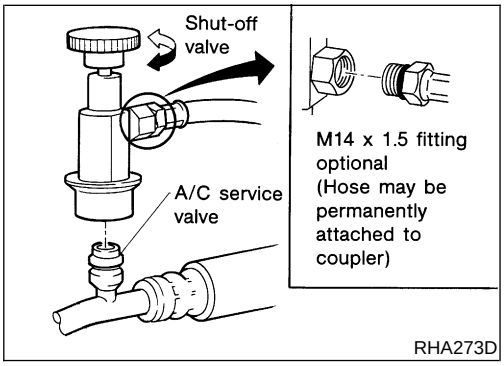

RHA273D

SERVICE COUPLERS

NEHA0065S06

Never attempt to connect HFC-134a (R-134a) service couplers to an CFC-12 (R-12) A/C system. The HFC-134a (R-134a) couplers will not properly connect to the CFC-12 (R-12) system. However, if an improper connection is attempted, discharging and contamination may occur.

Shut-off valve rotation	A/C service valve
Clockwise	Open
Counterclockwise	Close

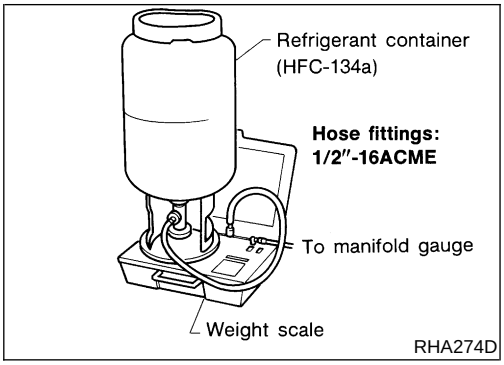

REFRIGERANT WEIGHT SCALE

NEHA0065S07

Verify that no refrigerant other than HFC-134a (R-134a) and specified lubricants have been used with the scale. If the scale controls refrigerant flow electronically, the hose fitting must be 1/2″-16 ACME.

CALIBRATING ACR4 WEIGHT SCALE

NEHA0065S10

Calibrate the scale every 3 months.

To calibrate the weight scale on the ACR4 (J-39500–NI):

1. Press **Shift/Reset** and **Enter** at the same time.
2. Press **8787. "A1"** will be displayed.
3. Remove all weight from the scale.
4. Press **0**, then press **Enter. "0.00"** will be displayed and changed to **"A2"**.
5. Place a known weight (dumbbell or similar weight), between 10 and 19 lbs., on the center of the weight scale.
6. Enter the known weight using 4 digits (Example 10 lbs = 10.00, 10.5 lbs = 10.50).
7. Press **Enter** — the display returns to the vacuum mode.
8. Press **Shift/Reset** and **Enter** at the same time.
9. Press **6** — the known weight on the scale is displayed.
10. Remove the known weight from the scale. "0.00" will be displayed.
11. Press **Shift/Reset** to return the ACR4 to the program mode.

CHARGING CYLINDER

NEHA0065S08

Using a charging cylinder is not recommended. Refrigerant may be vented into air from cylinder's top valve when filling the cylinder with refrigerant. Also, the accuracy of the cylinder is generally less than that of an electronic scale or of quality recycle/recharge equipment.

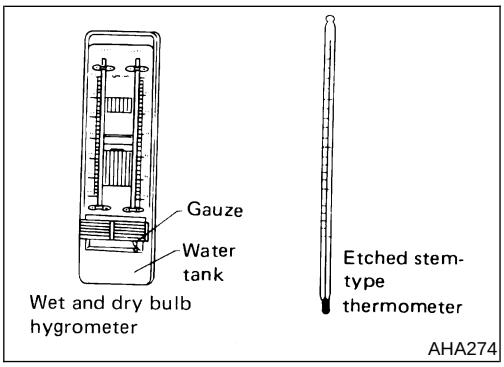

THERMOMETER AND HYGROMETER

NEHA0065S09

An etched stem-type thermometer and a hygrometer can be used to check the air conditioning system performance. A hygrometer is used because the air conditioning performance depends on the humidity.

Wiring Diagrams and Trouble Diagnosis

NEHA0066

When you read wiring diagrams, refer to the following:

- Refer to ***GI-11***, “HOW TO READ WIRING DIAGRAMS”.
- Refer to ***EL-9***, “POWER SUPPLY ROUTING” .

When you perform trouble diagnosis, refer to the following:

- Refer to ***GI-34***, “How to Follow Test Groups in Trouble Diagnoses”.
- Refer to ***GI-23***, “HOW TO PERFORM EFFICIENT DIAGNOSIS FOR AN ELECTRICAL INCIDENT”.

Special Service Tools

=NEHA0286

The actual shapes of Kent-Moore tools may differ from those of special service tools illustrated here.

Tool number (Kent-Moore No.) Tool name	Description	
KV99231260 (J-38874) Clutch disc wrench	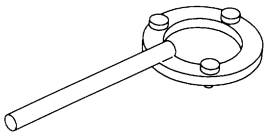 NT204	Removing shaft nut and clutch disc
KV99232340 (J-38874) Clutch disc puller	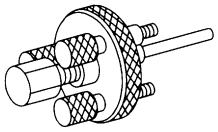 NT206	Removing clutch disc
KV99234330 (J-39024) Pulley installer	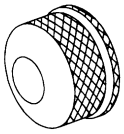 NT207	Installing pulley
KV99233130 (J-39023) Pulley puller	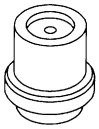 NT208	Removing pulley

HFC-134a (R-134a) Service Tools and Equipment

=NEHA0068

Never mix HFC-134a (R-134a) refrigerant and/or its specified lubricant with CFC-12 (R-12) refrigerant and/or its lubricant.
Separate and non-interchangeable service equipment must be used for handling each type of refrigerant/lubricant.
Refrigerant container fittings, service hose fittings and service equipment fittings (equipment which handles refrigerant and/or lubricant) are different between CFC-12 (R-12) and HFC-134a (R-134a). This is to avoid mixed use of the refrigerants/lubricant.
Adapters that convert one size fitting to another must never be used: refrigerant/lubricant contamination will occur and compressor failure will result.

Tool number (Kent-Moore No.) Tool name	Description	
HFC-134a (R-134a) refrigerant	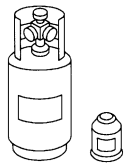 NT196	Container color: Light blue Container marking: HFC-134a (R-134a) Fitting size: Thread size ● large container 1/2″-16 ACME
KLH00-PAGR0 (—) NISSAN A/C System Lubricant Type R	 NT197	Type: Polyalkylene glycol oil (PAG), type R Application: HFC-134a (R-134a) vane rotary compressors (NISSAN only) Lubricity: 40 mℓ (1.4 US fl oz, 1.4 Imp fl oz)
(J-39500-NI) Recovery/Recycling Recharging equipment (ACR4)	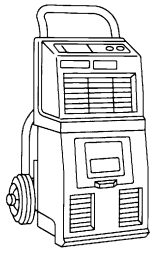 NT195	Function: Refrigerant Recovery and Recycling and Recharging
(J-41995) Electrical leak detector	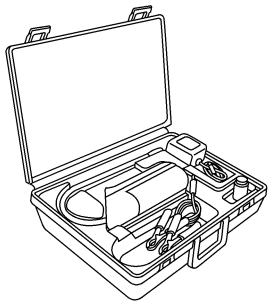 AHA281A	Power supply: ● DC 12 V (Cigarette lighter) Function: Checks for refrigerant leaks.

HFC-134a (R-134a) Service Tools and Equipment (Cont'd)

Tool number (Kent-Moore No.) Tool name	Description	
(J-43926) Refrigerant dye leak detection kit Kit includes: (J-42220) UV lamp and UV safety glasses (J-41459) Refrigerant dye injector (J-41447) qty. 24 R-134a refrigerant dye (J-43872) Refrigerant dye cleaner	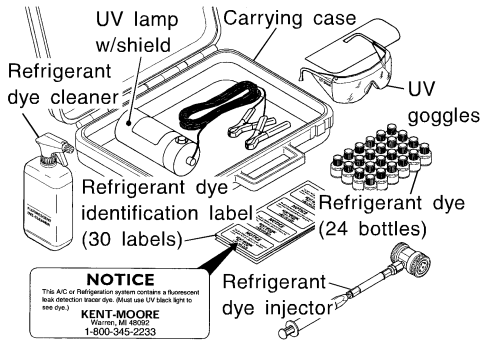 SHA437F	Power supply: DC 12V (Battery terminal)
(J-42220) Fluorescent dye leak detector	 LHA177	Power supply: DC 12V (Battery terminal) For checking refrigerant leak when fluorescent dye is installed in A/C system. Includes: UV lamp and UV safety glasses
(J-41447) R134a Fluorescent Leak Detection Dye (Box of 24, 1/4 ounce bottles)	Dye 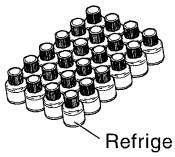 SHA439F	Application: For R-134a PAG oil Container: 1/4 ounce (7.4 cc) bottle (Includes self-adhesive dye identification labels for affixing to vehicle after charging system with dye.)
(J-41459) R134a Dye Injector Use with J-41447, 1/4 ounce bottle	Dye injector 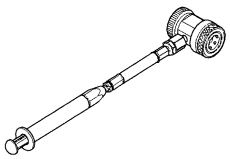 SHA440F	For injecting 1/4 ounce of Fluorescent Leak Detection Dye into A/C system.
(J-43872) Dye cleaner	 SHA441F	For cleaning dye spills.
(J-39183) Manifold gauge set (with hoses and couplers)	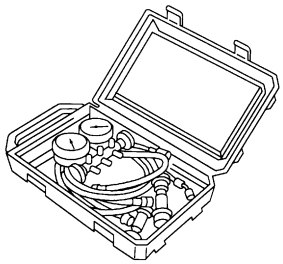 NT199	Identification: • The gauge face indicates R-134a. Fitting size: Thread size • 1/2″-16 ACME

Tool number (Kent-Moore No.) Tool name	Description	
Service hoses ● High side hose (J-39501-72) ● Low side hose (J-39502-72) ● Utility hose (J-39476-72)	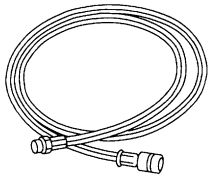 NT201	Hose color: ● Low hose: Blue with black stripe ● High hose: Red with black stripe ● Utility hose: Yellow with black stripe or green with black stripe Hose fitting to gauge: ● 1/2″-16 ACME
Service couplers ● High side coupler (J-39500-20) ● Low side coupler (J-39500-24)	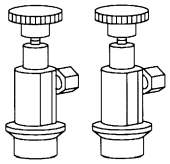 NT202	Hose fitting to service hose: ● M14 x 1.5 fitting is optional or permanently attached.
(J-39650) Refrigerant weight scale	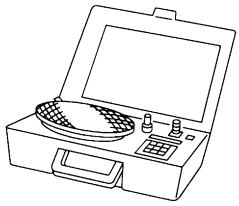 NT200	For measuring of refrigerant Fitting size: Thread size ● 1/2″-16 ACME
(J-39649) Vacuum pump (Including the isolator valve)	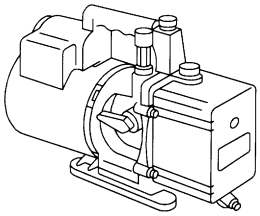 NT203	Capacity: ● Air displacement: 4 CFM ● Micron rating: 20 microns ● Oil capacity: 482 g (17 oz) Fitting size: Thread size ● 1/2″-16 ACME

Commercial Service Tool

=NEHA0067

Tool name	Description	Note
Refrigerant Identifier Equipment	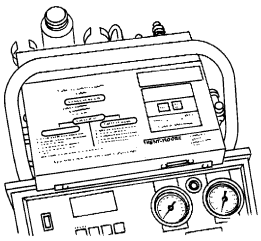 NT765	Checking refrigerant purity and for system contamination

For details of handling methods, refer to the Instruction Manual attached to the service tool.

Refrigeration System

REFRIGERATION CYCLE

NEHA0069

Refrigerant Flow

NEHA0069S01

The refrigerant flows in the standard pattern. Refrigerant flows through the compressor, condenser, liquid tank, expansion valve, evaporator, and back to the compressor. The refrigerant evaporation through the evaporator coil is controlled by an externally equalized expansion valve, located inside the evaporator case.

Freeze Protection

NEHA0069S02

The compressor cycles on and off to maintain the evaporator temperature within a specified range. When the evaporator coil temperature falls below a specified point, the thermo control amplifier interrupts the compressor operation. When the evaporator coil temperature rises above the specification, the thermo control amplifier allows compressor operation.

Refrigerant System Protection

NEHA0069S03

Dual Pressure Switch (KA24DE Models) or Triple Pressure Switch (VG33E and VG33ER Models)

NEHA0069S0301

The refrigerant system is protected against excessively high or low pressure. The protection is effected by either a dual pressure switch or a triple pressure switch located on the liquid tank. If the pressure falls out of specifications, the switch opens to interrupt compressor operation.

Pressure Relief Valve

NEHA0069S0302

The refrigerant system is also protected by a pressure relief valve located on the flexible high pressure hose near the compressor. When the pressure of refrigerant in the system increases to an abnormal level [more than 3,727 kPa (38 kg/cm^2, 540 psi)], the release port on the pressure relief valve automatically opens and releases refrigerant into the atmosphere.

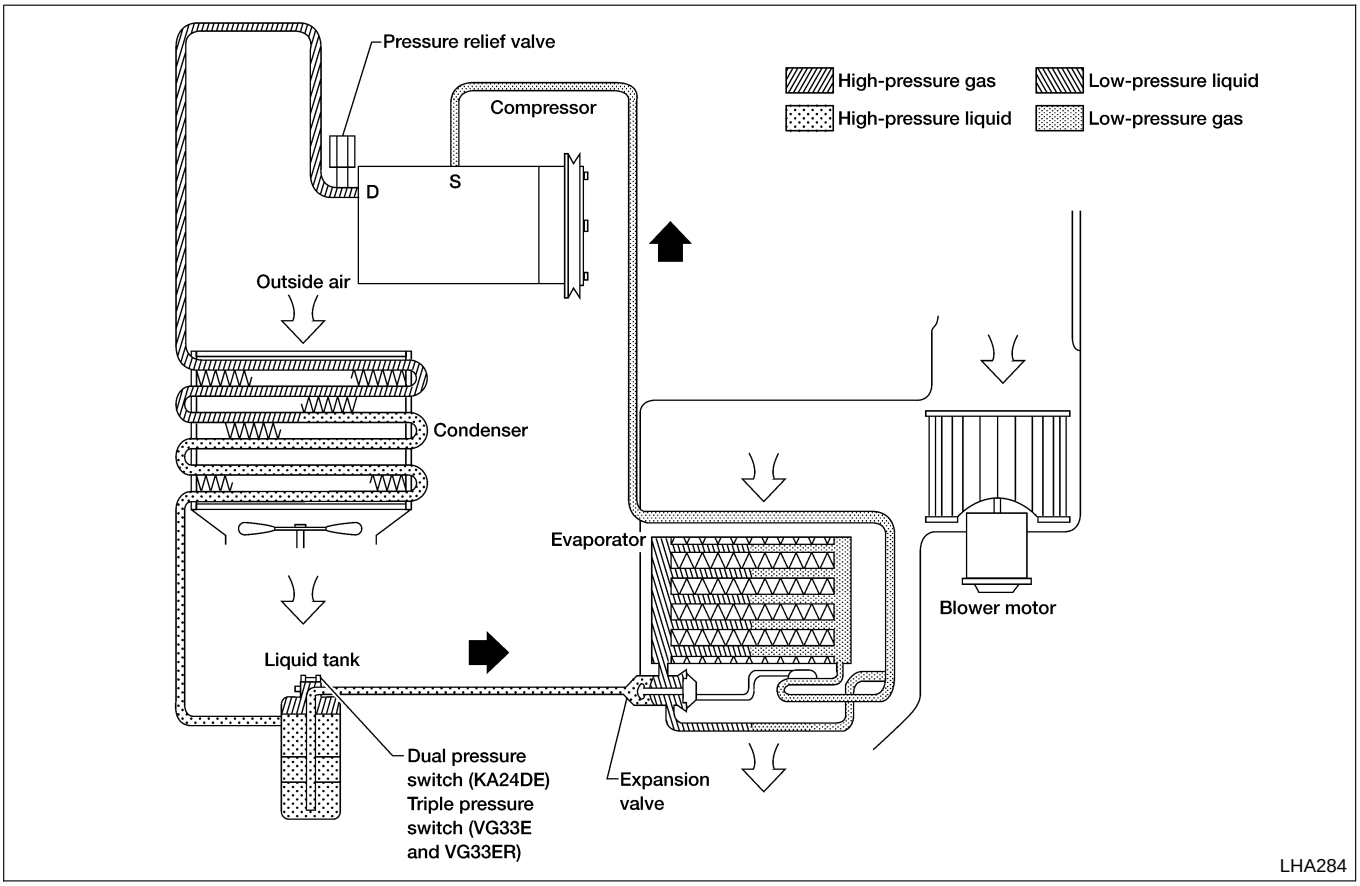

Control Operation

NEHA0072

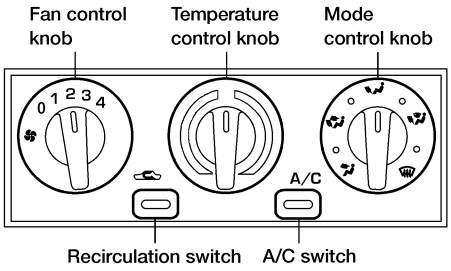

AHA488A

FAN CONTROL KNOB

NEHA0072S01

This knob turns the fan ON and OFF, and controls fan speed.

MODE CONTROL KNOB

NEHA0072S03

This knob controls the direction of air flow through the front discharge outlets.

TEMPERATURE CONTROL KNOB

NEHA0072S04

This knob allows adjustment of the outlet air temperature.

RECIRCULATION (REC) SWITCH

NEHA0072S05

OFF position: Outside air is drawn into the passenger compartment.
ON position: Interior air is recirculated inside the vehicle. The indicator lamp will also light.

AIR CONDITIONER SWITCH

NEHA0072S06

The air conditioner switch controls the A/C system. When the switch is depressed with the fan ON, the A/C relay is activated by the ECM allowing compressor operation. The indicator lamp will also light.
The air conditioner cooling function operates only when the engine is running and ambient air temperature is above 2°C (35°F).

Discharge Air Flow

NEHA0073

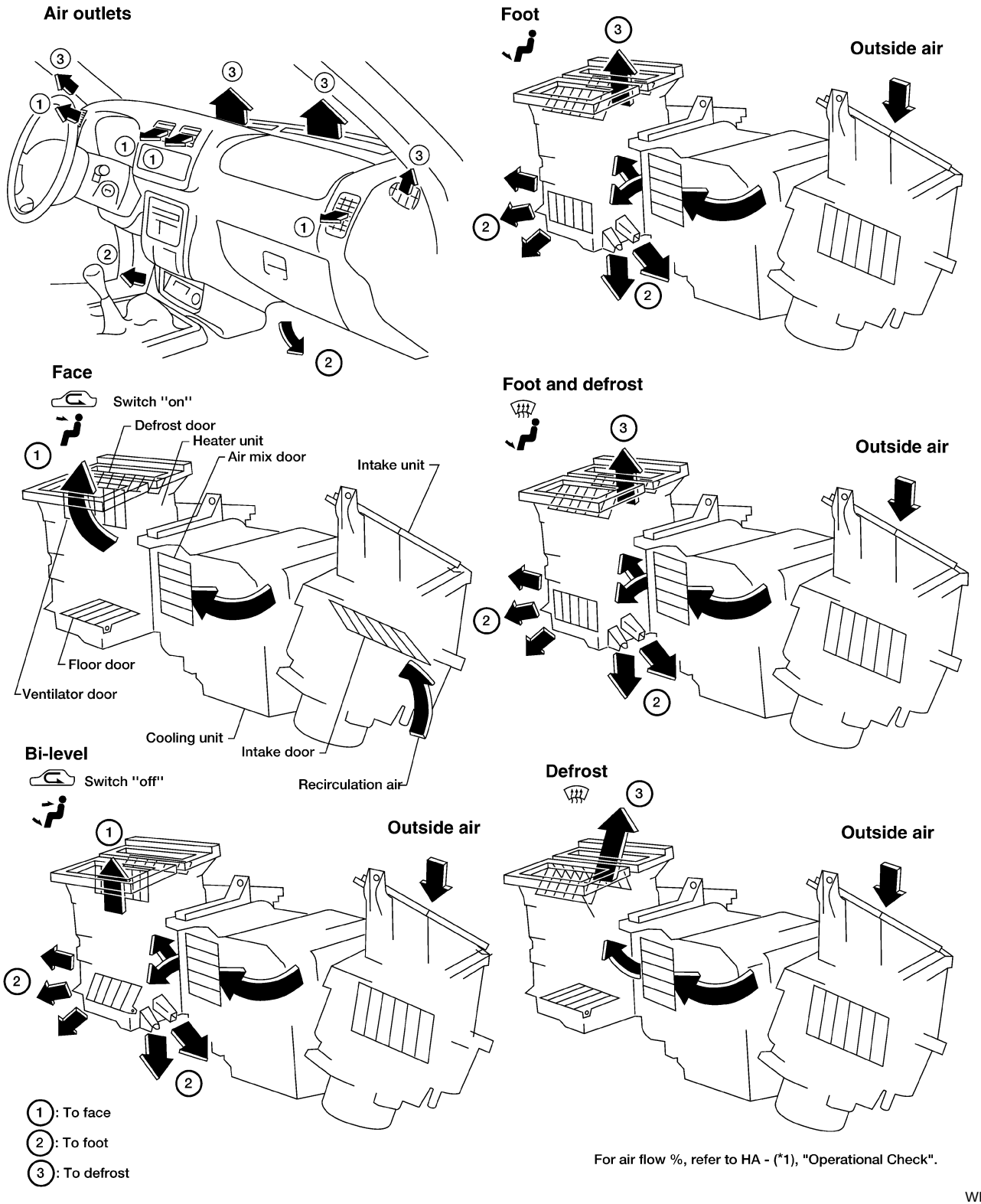

For air flow %, refer to HA - (*1), "Operational Check".

WHA293

*1 HA-29

Component Layout

NEHA0272

SEC. 270 • 271 • 272 • 273 • 685

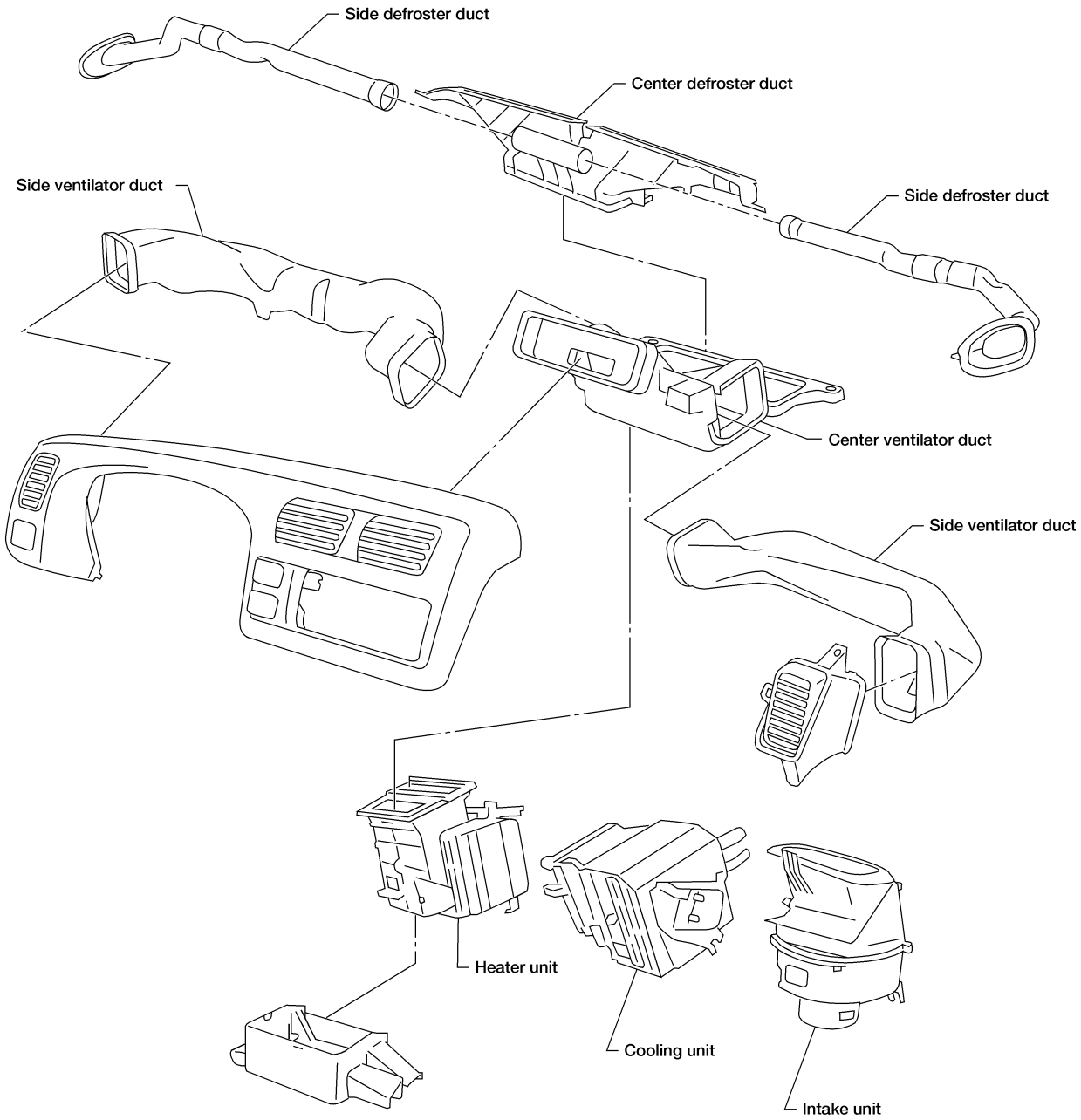

AHA123A

Component Location

NEHA0085

NEHA0085S01

NEHA0085S0101

ENGINE COMPARTMENT
KA24DE Models

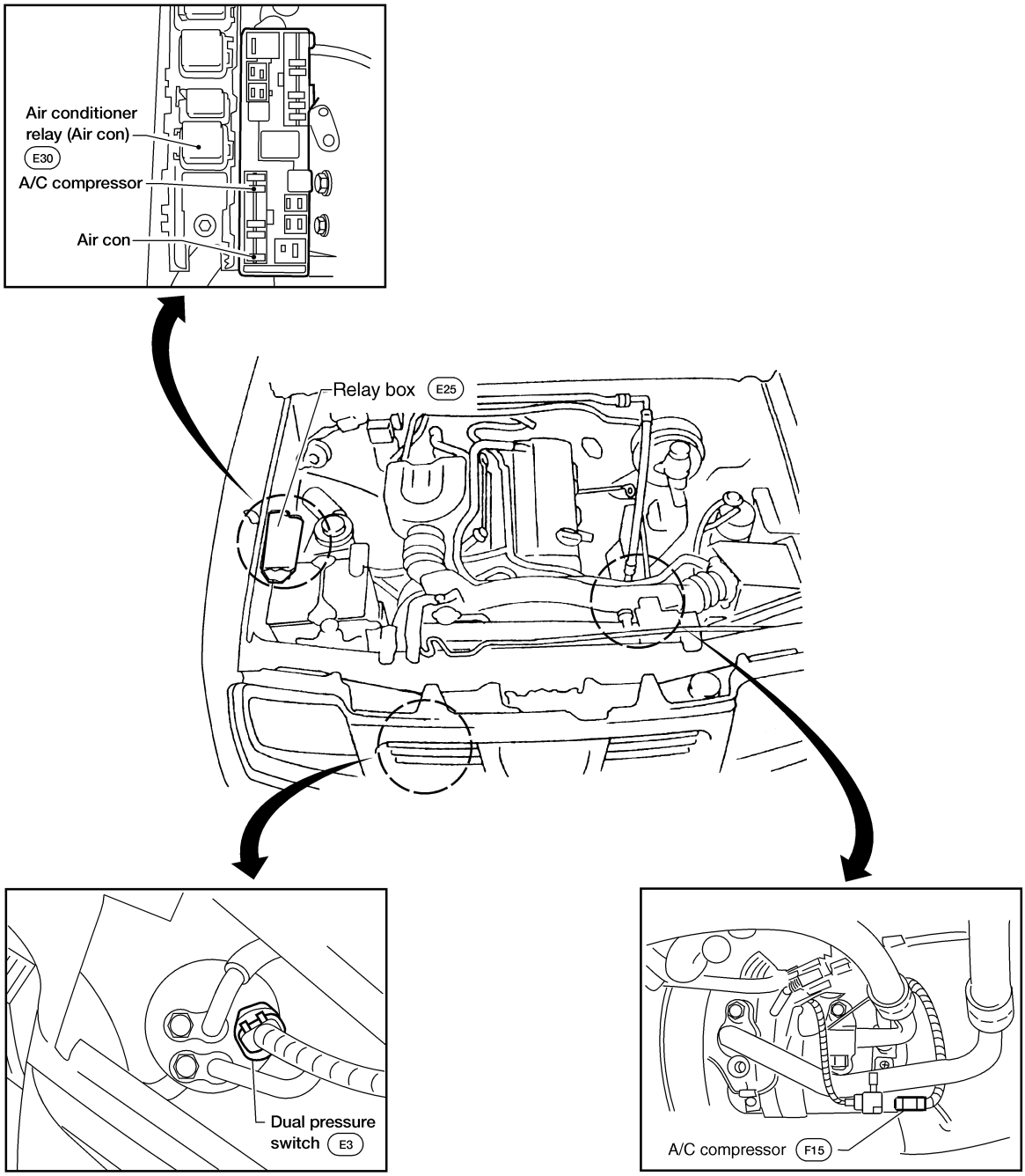

AHA452A

Component Location (Cont'd)

ENGINE COMPARTMENT
VG33E Models

NEHA0085S05

=NEHA0085S0501

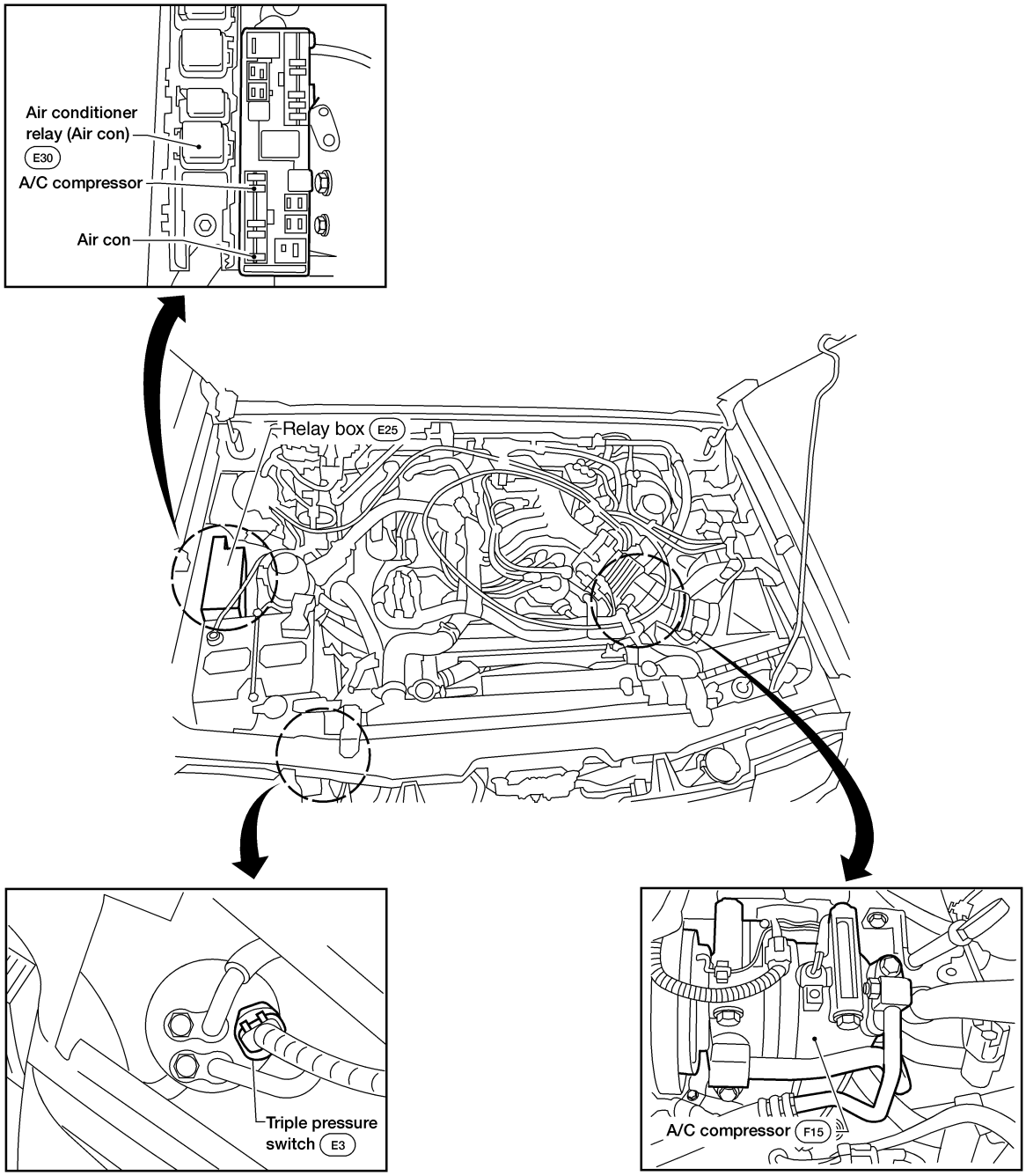

AHA453A

ENGINE COMPARTMENT
VG33ER Models

NEHA0085S06

=NEHA0085S0601

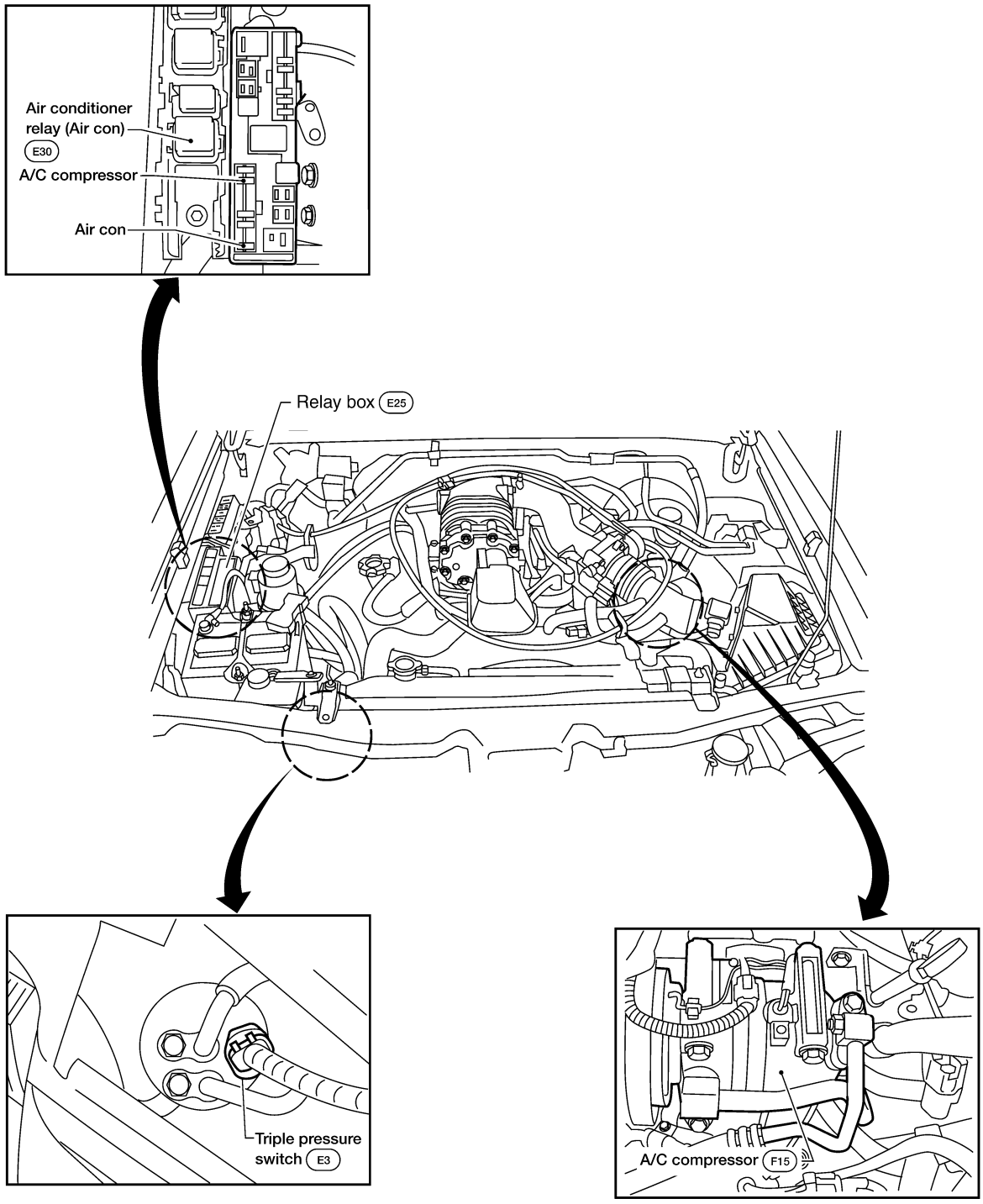

WHA273

Component Location (Cont'd)

PASSENGER COMPARTMENT

NEHA0085S02

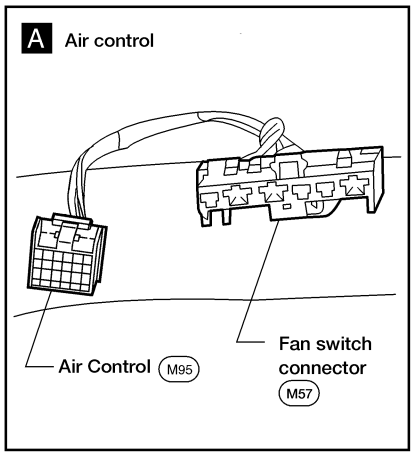

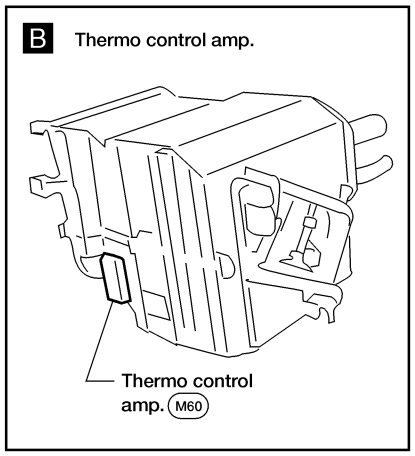

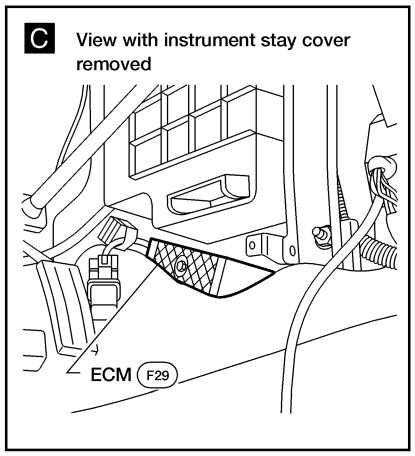

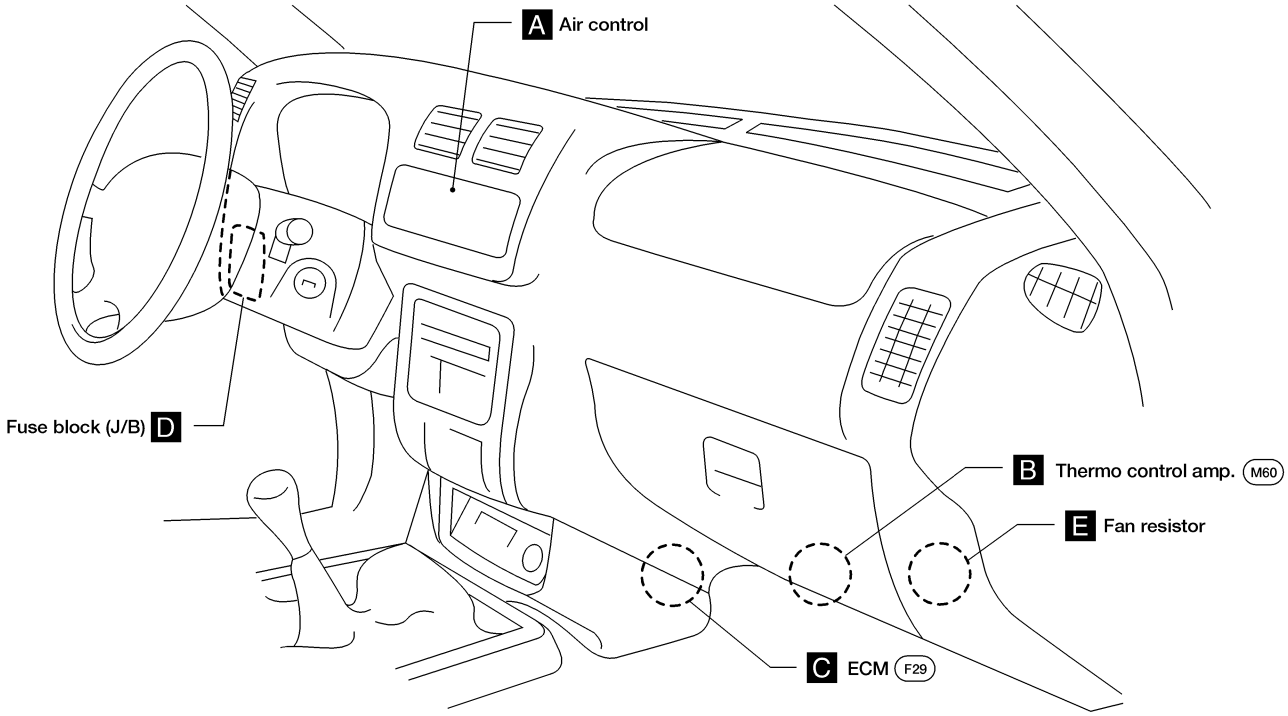

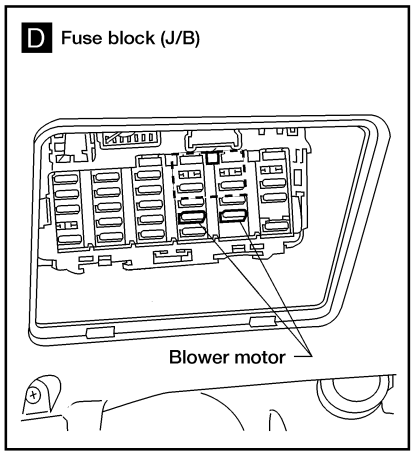

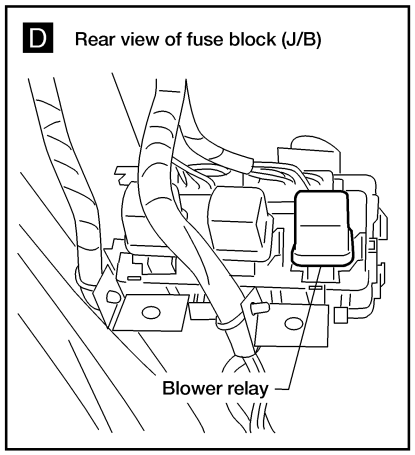

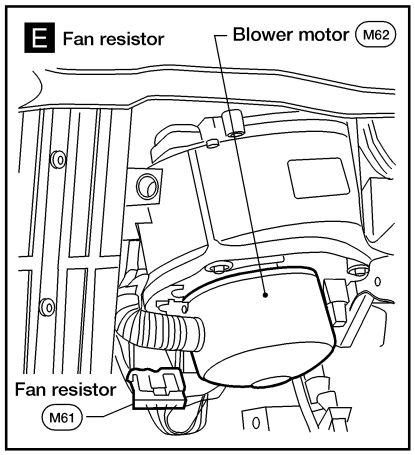

LHA231

Wiring Diagram — Heater —

NEHA0288

HA-HEATER-01

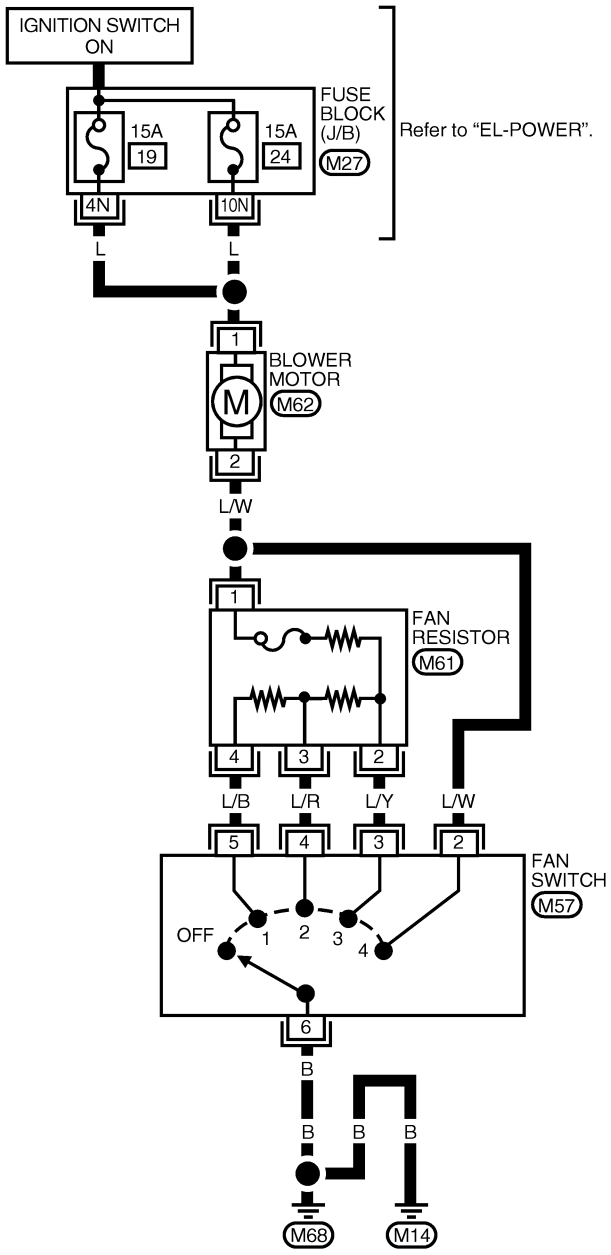

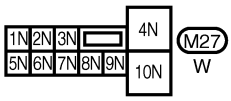

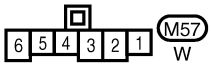

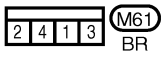

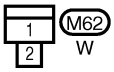

AHA447A

Wiring Diagram — A/C —

NEHA0274

HA-A/C-01

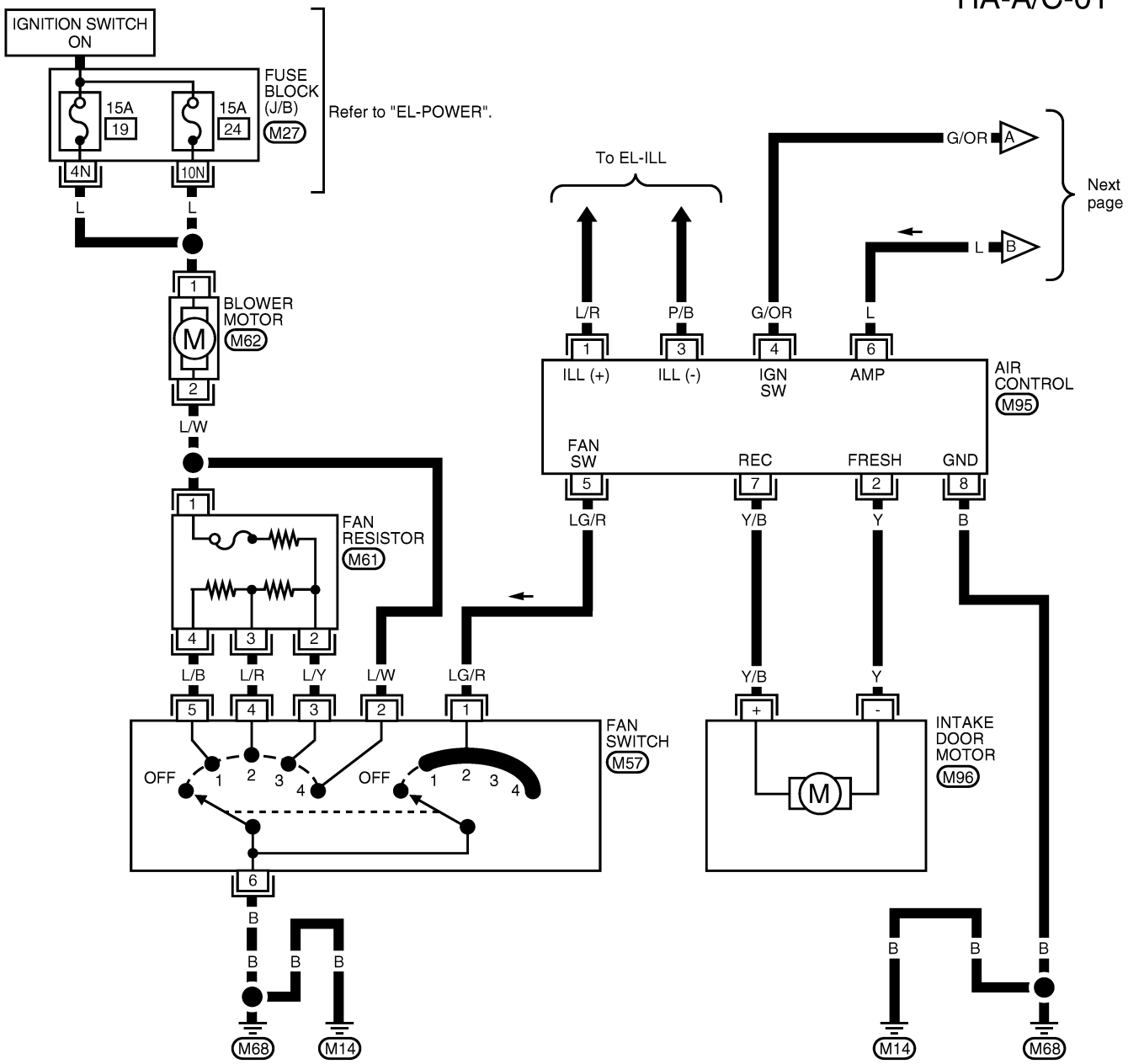

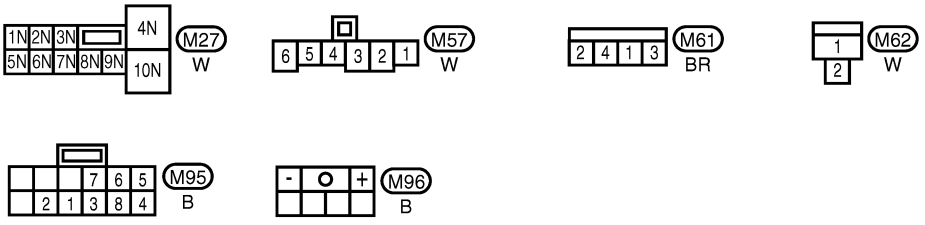

LHA219

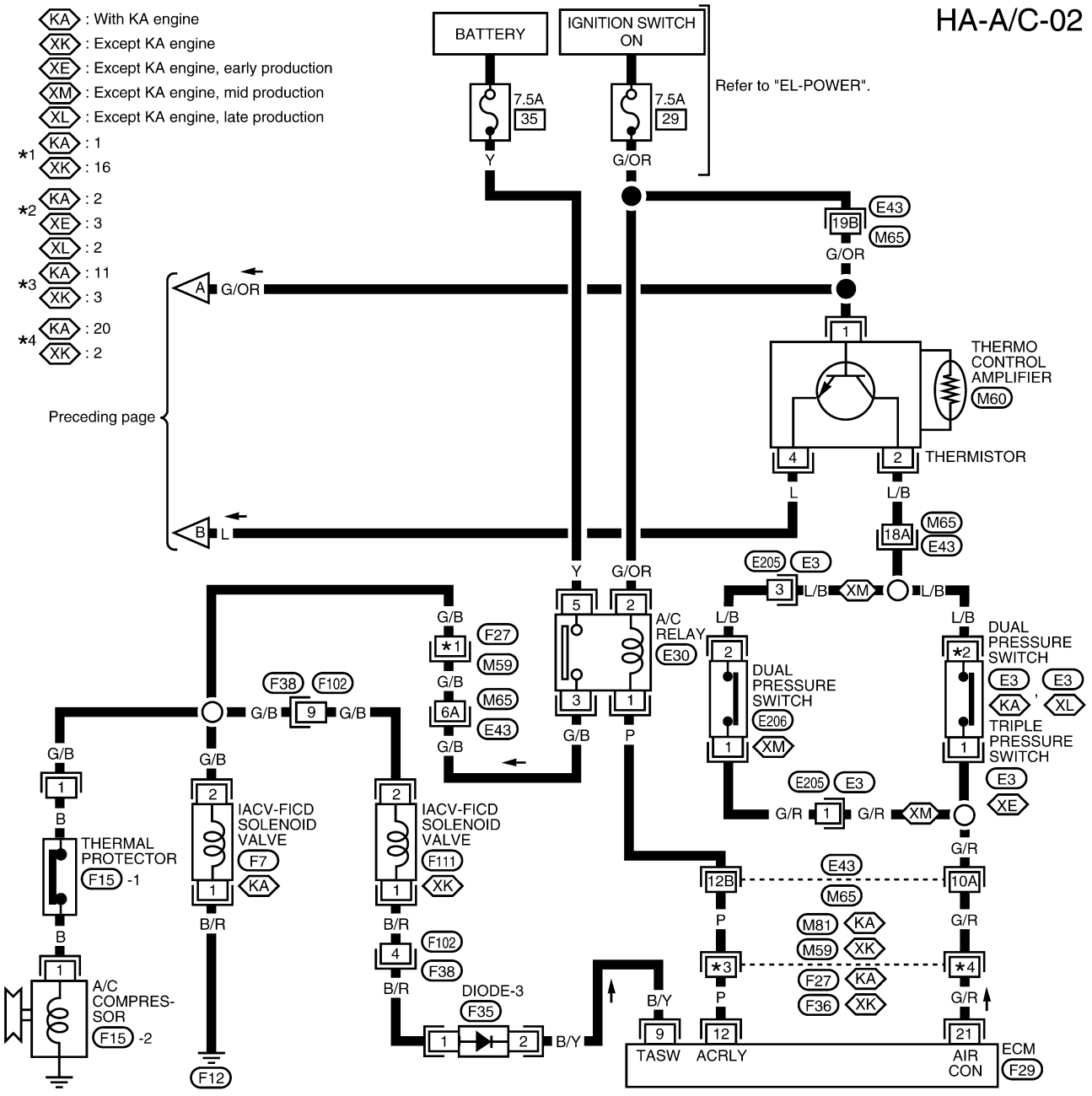

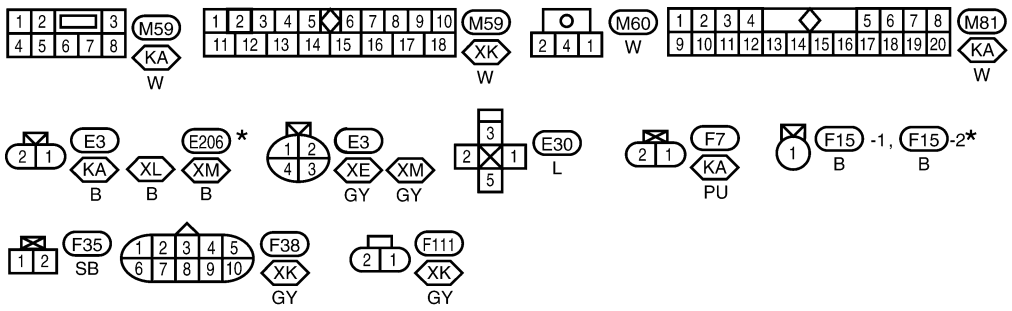

Refer to the following.
M65, E43 - SUPER MULTIPLE JUNCTION (SMJ)
F29 - ELECTRICAL UNITS

*: This connector is not shown in "HARNESS LAYOUT" of EL section.

WHA335

How to Perform Trouble Diagnoses for Quick and Accurate Repair

NEHA0075

WORK FLOW

NEHA0075S01

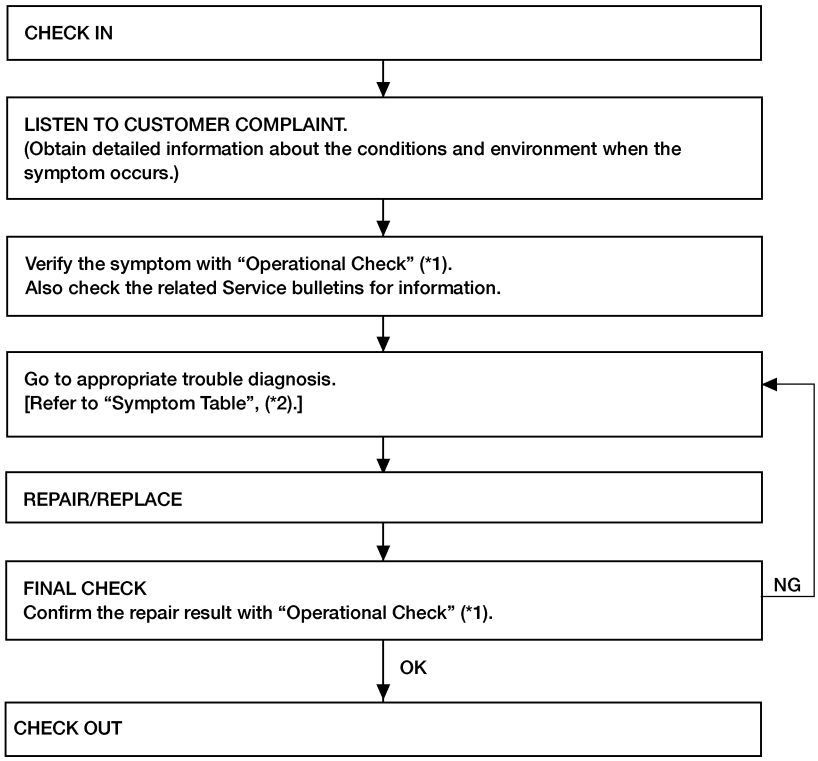

LHA244

*1: HA-29 *2: HA-28

Symptom Table

NEHA0235

Symptom	Reference page	
• Blower motor does not rotate.	• Go to “TROUBLE DIAGNOSIS PROCEDURE FOR BLOWER MOTOR”.	HA-31
• Mode door does not change positions.	• Go to “TROUBLE DIAGNOSIS PROCEDURE FOR MODE DOOR”.	HA-38
• Intake door position does not change.	• Go to “TROUBLE DIAGNOSIS PROCEDURE FOR INTAKE DOOR”.	HA-40
• Magnet clutch does not engage when A/C switch and fan switch are ON.	• Go to “TROUBLE DIAGNOSIS PROCEDURE FOR MAGNET CLUTCH ”.	HA-43
• Insufficient cooling	• Go to “TROUBLE DIAGNOSIS PROCEDURE FOR INSUFFICIENT COOLING”.	HA-55
• Insufficient heating	• Go to “TROUBLE DIAGNOSIS PROCEDURE FOR INSUFFICIENT HEATING”.	HA-63
• Noise	• Go to “TROUBLE DIAGNOSIS PROCEDURE FOR NOISE”.	HA-65

Operational Check

=NEHA0076

The purpose of the operational check is to confirm that the system operates as it should. The systems which are checked are the blower, mode (discharge air), intake air (recirculation), temperature decrease, temperature increase, and A/C compressor.

CONDITIONS:

NEHA0076S01

Engine running at normal operating temperature.

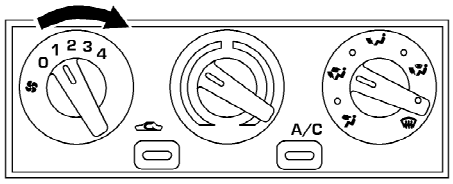

AHA496A

PROCEDURE:

NEHA0076S02

1. Check Blower Motor

NEHA0076S0208

1) Turn fan control knob to 1-speed.
   Blower should operate on 1-speed.
2) Then turn fan control knob to 2-speed, and continue checking blower speed until all four speeds are checked.
3) Leave blower on 4-speed.

If NG, go to “TROUBLE DIAGNOSIS PROCEDURE FOR BLOWER MOTOR”, HA-31.
If OK, continue with the check.

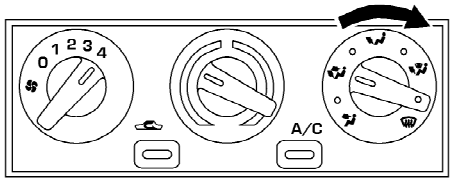

AHA497A

2. Check Discharge Air

NEHA0076S0202

1) Turn mode control knob to each mode position.
2) Confirm that discharge air comes out according to the air distribution table at left.
   Refer to “Discharge Air Flow”, HA-19.

If NG, go to “TROUBLE DIAGNOSIS PROCEDURE FOR MODE DOOR”, HA-38.
If OK, continue with next check.

Discharge air flow

Switch mode/ indicator	Air outlet/distribution		
	Face	Foot	Defrost
	100%	—	—
	60%	40%	—
	—	80%	20%
	—	60%	40%
	—	—	100%

AHA983

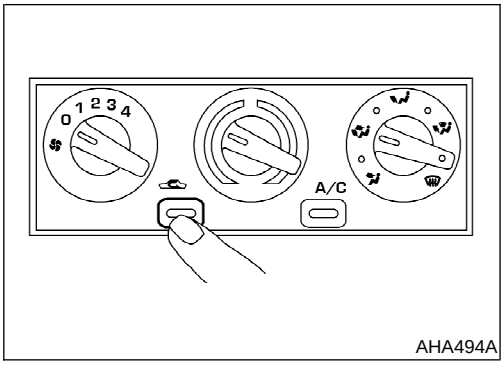

AHA494A

3. Check Recirculation

NEHA0076S0203

1) Press recirculation switch.
   Recirculation indicator should light.
2) Listen for intake door position to change (you should hear blower sound change slightly).

If NG, go to "TROUBLE DIAGNOSIS PROCEDURE FOR INTAKE DOOR", HA-40.
If OK, continue with next check.

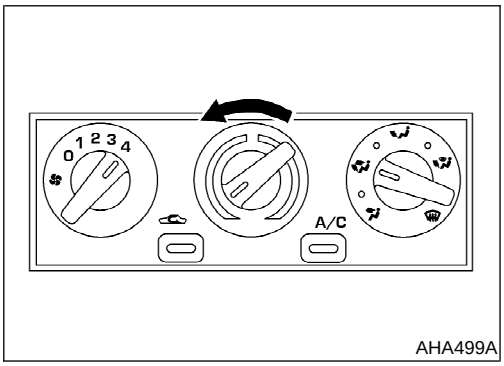

AHA499A

4. Check Temperature Decrease

NEHA0076S0204

1) Turn temperature control knob to full cold.
2) Check for cold air at discharge air outlets.

If NG, go to "TROUBLE DIAGNOSIS PROCEDURE FOR INSUFFICIENT COOLING", HA-55.
If OK, continue with next check.

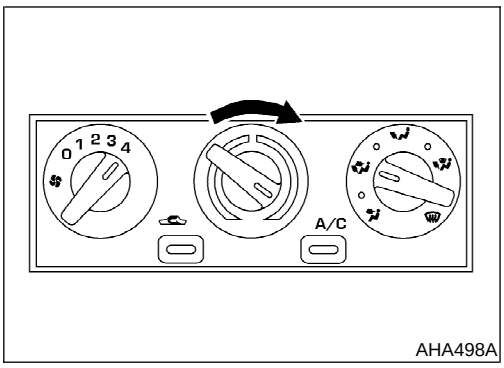

AHA498A

5. Check Temperature Increase

NEHA0076S0205

1) Turn temperature control knob to full hot.
2) Check for hot air at discharge air outlets.

If NG, go to "TROUBLE DIAGNOSIS PROCEDURE FOR INSUFFICIENT HEATING", HA-63.
If OK, continue with next check.

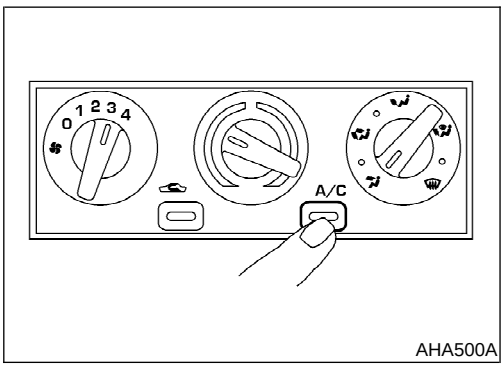

AHA500A

6. Check A/C Switch

NEHA0076S0206

1) Turn fan control knob to the desired (1 to 4 speed) position.
2) Push the A/C switch to turn ON the air conditioner.
   The indicator lamp should come on when air conditioner is ON.
3) Confirm that the compressor clutch engages (audio or visual inspection).
4) Check for cold air at the appropriate discharge air outlets.

If NG, go to "TROUBLE DIAGNOSIS PROCEDURE FOR MAGNET CLUTCH", HA-43.
If OK, continue with next check.
If all operational checks are OK (symptom cannot be duplicated), go to ***GI-24***, "Incident Simulation Tests", and perform tests as outlined to simulate driving conditions environment. If symptom appears, refer to "Symptom Table", HA-28 and perform applicable trouble diagnoses procedures.

Blower Motor

TROUBLE DIAGNOSIS PROCEDURE FOR BLOWER MOTOR

=NEHA0138

Symptom:

- **Blower motor does not rotate.**

Inspection Flow

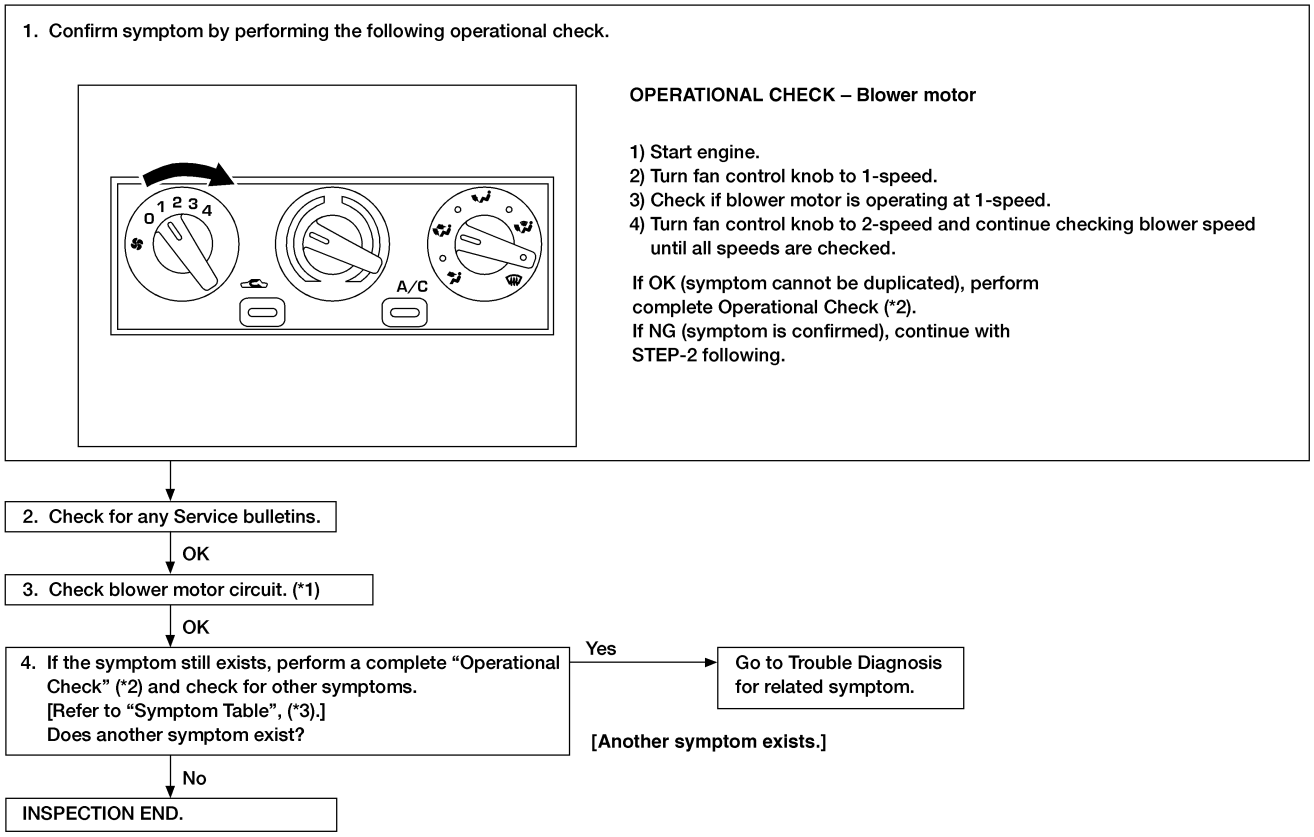

LHA245

*1: HA-32 *2: HA-29 *3: HA-28

BLOWER MOTOR CIRCUIT

=NEHA0089

SYMPTOM:

- **Blower motor does not rotate.**

1	DIAGNOSTIC PROCEDURE	
Check if blower motor rotates properly at each fan speed.		
Does not rotate at any speed	▶	GO TO 2.
Does not rotate at 1-3 speed	▶	GO TO 6.
Does not rotate at 4 speed	▶	GO TO 7.

2	CHECK FUSES	
Check 15A fuse [No. 19, located in the fuse block (J/B)] and 15A fuse [No. 24, located in the fuse block (J/B)]. For fuse layout, refer to ***EL-9***, "POWER SUPPLY ROUTING".		
Are fuses OK?		
OK	▶	GO TO 3.
NG	▶	GO TO 9.

3	CHECK BLOWER MOTOR POWER SUPPLY CIRCUIT	
1. Disconnect blower motor harness connector. 2. Check voltage between blower motor harness connector M62 terminal 1 and ground.		
Does battery voltage exist?		
Yes	▶	GO TO 4.
No	▶	**Check the following.** If NG, repair harness or connector. ● Harness for open or short between blower motor and fuse block (J/B). ● Harness connectors M27 and M62

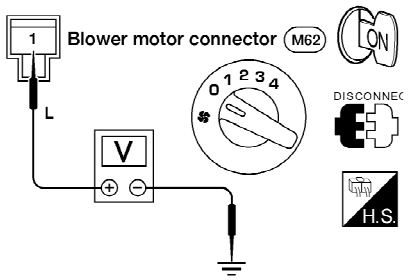

AHA485A

4	CHECK BLOWER MOTOR GROUND CIRCUIT

1. Disconnect blower motor harness connector.
2. Turn fan control knob to 4-speed.
3. Check continuity between blower motor harness connector M62 terminal 2 and ground.

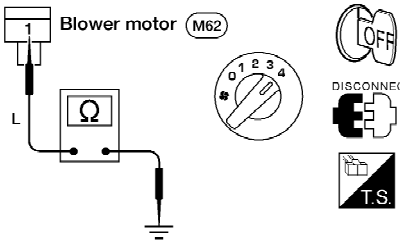

AHA460A

Continuity should exist.

OK or NG

OK	▶	GO TO 5.
NG	▶	**Check the following. If NG, repair harness or connector.** ● Harness for open or short between blower motor and fuse block (J/B). ● Harness connectors M27 and M62

5	CHECK BLOWER MOTOR

1. Disconnect blower motor harness connector.
2. Apply 12 volts to blower motor terminal 1 and ground to blower motor terminal 2.

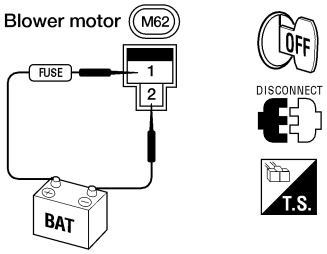

AHA455A

Does blower motor rotate?

Yes	▶	Reconnect blower motor connector and go to "TROUBLE DIAGNOSIS PROCEDURE FOR BLOWER MOTOR", HA-31.
No	▶	Replace blower motor.

6 CHECK FAN RESISTOR

1. Disconnect fan resistor harness connector M61.
2. Check resistance between fan resistor terminals.

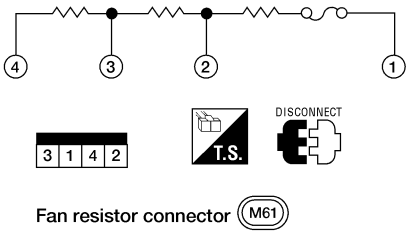

AHA458A

Terminal No.		Resistance (Ω)
(+)	(–)	
1	2	Approx. 0.2-0.3
	3	Approx. 0.8-1.0
	4	Approx. 2.0-2.4

AHA459A

OK or NG

OK	▶	GO TO 7.
NG	▶	Replace fan resistor.

7	CHECK FAN SWITCH

Disconnect fan switch harness connector M57 and check continuity between terminals at each fan switch position.

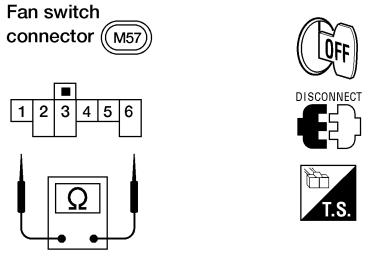

AHA456A

Terminal	Position				
	OFF	1	2	3	4
1		○	○	○	○
2					○
3				○	
4			○		
5		○			
6		○	○	○	○

AHA457A

OK or NG

OK	▶	GO TO 8.
NG	▶	Replace fan switch.

8	CHECK FAN SWITCH GROUND

1. Disconnect fan switch harness connector M57.
2. Check continuity between fan switch harness connector terminal 6 and ground.

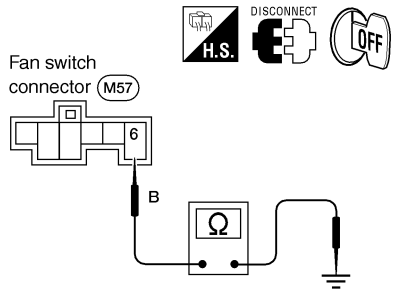

AHA078A

Continuity should exist.

OK or NG

OK	▶	**Check the following.** If NG, repair harness or connectors. ● Harness connectors M57, M61 and M62 ● Harness for open or short between blower motor and fan switch, fan resistor
NG	▶	Repair harness or connector.

9	REPLACE FUSE	
1. Replace fuse(s). 2. Activate the blower motor system. **Do the fuses blow when the front blower motor is activated?**		
Yes	▶	GO TO 10.
No	▶	**INSPECTION END**

10	CHECK BLOWER MOTOR POWER SUPPLY CIRCUIT FOR A SHORT	
1. Disconnect battery cable and blower motor harness connector M62. 2. Check continuity between front blower motor harness terminal 1 and ground. 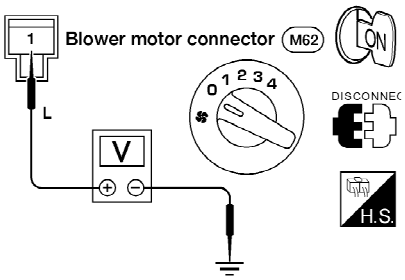 AHA485A **Continuity should not exist.** **Does continuity exist?**		
Yes	▶	**Check the following. If NG, repair harness or connector.** Harness connectors M27 and M62 Harness for open or short between blower motor and fuse block (J/B).
No	▶	Check front blower motor. Refer to "Blower Motor", HA-37. If necessary, clear intake unit. If OK, replace front blower motor.

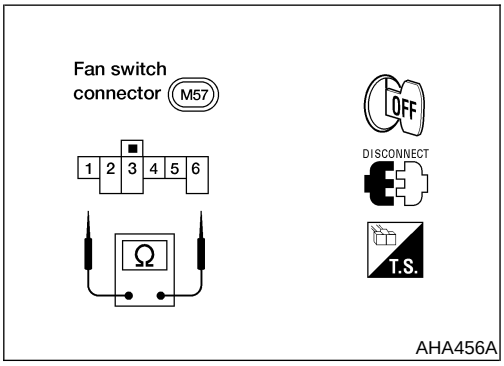

AHA456A

Terminal	Position				
	OFF	1	2	3	4
1		○	○	○	○
2					○
3				○	
4			○		
5		○			
6		○	○	○	○

AHA457A

ELECTRICAL COMPONENTS INSPECTION

NEHA0246

Fan Switch

NEHA0246S01

Check continuity between terminals at each switch position.

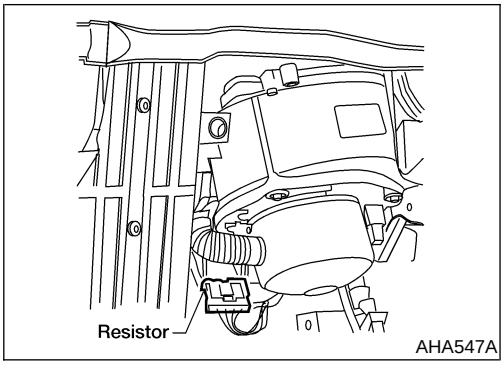

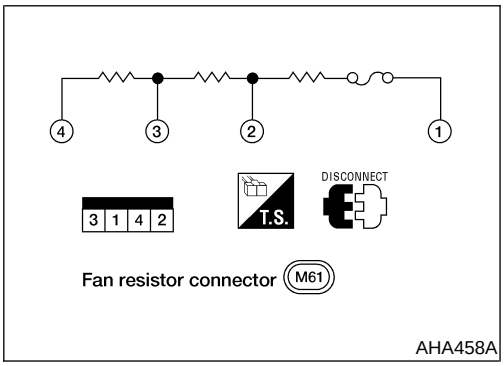

Blower Motor

NEHA0246S02

Confirm smooth rotation of the blower motor.

- Check that there are no foreign particles inside the intake unit.

Fan Resistor

NEHA0246S04

Terminal No.		Resistance Ω (Approx.)
(+)	(–)	
1	2	0.2 - 0.3
	3	0.8 - 1.0
	4	2.0 - 2.4

Check resistance between terminals.

Mode Door

TROUBLE DIAGNOSIS PROCEDURE FOR MODE DOOR

=NEHA0240

Symptom:

- **Mode door does not change.**

Inspection Flow

1. Confirm symptom by performing the following operational check.

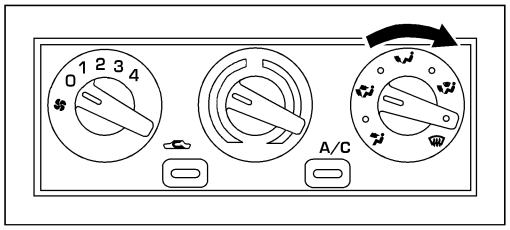

OPERATIONAL CHECK – Discharge air.

1) Turn mode control knob.

Discharge air flow

Mode control knob	Air outlet/distribution		
	Face	Foot	Defroster
	100%	–	–
	60%	40%	–
	–	80%	20%
	–	60%	40%
	–	–	100%

2) Confirm that discharge air comes out according to the air distribution table at left.
Refer to “Discharge Air Flow” in “DESCRIPTION” (*1).

NOTE:
Confirm that the compressor clutch is engaged (visual inspection) and intake door position is at FRESH when the DEF ( ) or D/F ( ) button is pressed.
If OK (symptom cannot be duplicated), perform complete operational check (*3).
If NG (symptom is confirmed), continue with STEP-2 following.

2. Check for any service bulletins.

3. Check mode door control linkage adjustment. (*2)

OK

If the symptom still exists, perform a complete operational check (*3) and check for other symptoms.
[Refer to symptom table, (*4).]
Does another symptom exist?

No → INSPECTION END

Yes → Go to Trouble Diagnosis for related symptom.

[Another symptom exists.]

AHA480A

*1: HA-19
*2: HA-39
*3: HA-29
*4: HA-28

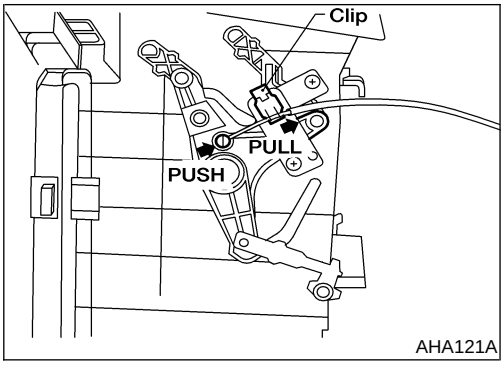

MODE DOOR CONTROL LINKAGE ADJUSTMENT

NEHA0242

Mode door control linkage

- Turn mode door control knob to position.
- Set side link in DEF mode.
- Pull on outer cable in direction of arrow and then clamp it.
- **After positioning mode door control cable, check that it operates properly.**

Intake Door Motor

TROUBLE DIAGNOSIS PROCEDURE FOR INTAKE DOOR

=NEHA0135

Symptom:

- **Intake door position does not change in VENT, B/L or FOOT mode.**

Inspection Flow

1. Confirm symptom by performing the following operational check.

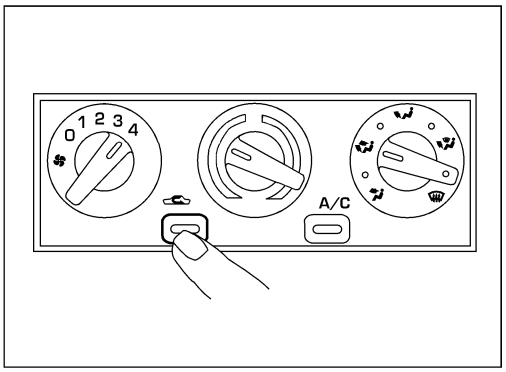

OPERATIONAL CHECK – Recirculation

1) Start engine.
2) Turn fan control knob to 4-speed.
3) Press RECIRC switch.
   Recirculation indicator should light.
4) Listen for intake door position change (you should hear blower sound change slightly).

NOTE:
Confirm that the RECIRCULATION (REC) switch is canceled in the DEF ( ) and D/F ( ) mode.
If OK (symptom cannot be duplicated), perform complete operational check (*2).
If NG (symptom is confirmed), continue with STEP-2 following.

2. Check for any service bulletins.

3. Check intake door motor. (*1)

OK

If the symptom still exists, perform a complete operational check (*2) and check for other symptoms.
[Refer to symptom table, (*3).]
Does another symptom exist?

Yes → Go to Trouble Diagnosis for related symptom.

[Another symptom exists.]

If OK → INSPECTION END

AHA481A

*1: HA-42 *2: HA-29 *3: HA-28

INTAKE DOOR CIRCUIT

=NEHA0299

SYMPTOM:

- Intake door does not operate.

1	CHECK POWER FOR INTAKE DOOR MOTOR

1. Disconnect intake door motor harness connector.
2. Turn ignition switch ON.
3. Check voltage between intake door motor harness connector M96 terminals + (Y/B), – (Y) and ground as shown.

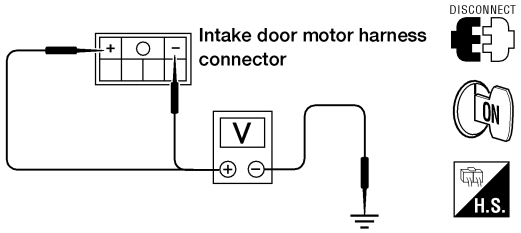

RECIRC switch	Terminal No. (+)	Terminal No. (–)	Voltage V
OFF (FRE)	(+)	Body ground	12
	(-)		0
ON (REC)	(+)		0
	(-)		12

LHA268

OK or NG

OK	▶	GO TO 3.
NG	▶	GO TO 2.

2	CHECK INTAKE DOOR CIRCUIT

1. Turn ignition switch OFF.
2. Disconnect air control harness connector.
3. Check continuity between air control harness connector M95 terminals 2 (Y/B), 7 (Y) and intake door motor harness connector M96 terminals + (Y/B), – (Y).

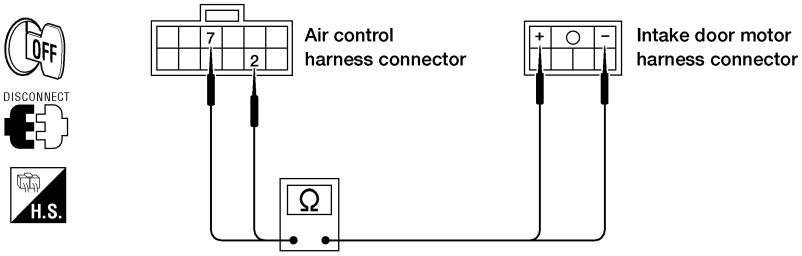

Continuity should exist.

LHA269

NOTE:
Mode control knob should be in position.

OK or NG

OK	▶	Check harness for open or short.
NG	▶	Replace air control.

3	CHECK INTAKE DOOR MOTOR

1. Reconnect intake door motor connector M96.
2. Turn ignition switch ON.
3. Observe intake door operation when the RECIRC switch is turned ON and OFF.
4. Intake door should change position.

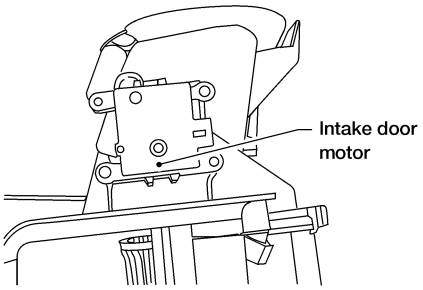

AHA523A

OK or NG

OK	▶	Check harness and connectors for open or short.
NG	▶	Replace intake door motor.

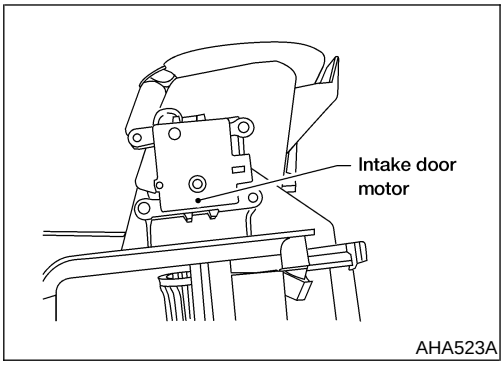

AHA523A

CONTROL LINKAGE ADJUSTMENT

NEHA0294

Intake Door Motor

NEHA0294S01

1. Install intake door motor on intake unit.
   Ensure that the intake door motor lever is fitted into the slit portion of the intake door link.
2. Connect the intake door motor harness connector before installing the intake door motor.
3. Turn ignition switch on and press the recirculation switch.
4. Turn the mode control knob to VENT, B/L or FOOT mode.
5. Check that intake door motor operates properly when RECIRCULATION switch is turned ON and OFF.

Magnet Clutch

TROUBLE DIAGNOSIS PROCEDURE FOR MAGNET CLUTCH

=NEHA0119

Symptom:

- **Magnet clutch does not engage when A/C switch and fan switch are ON.**

Inspection Flow

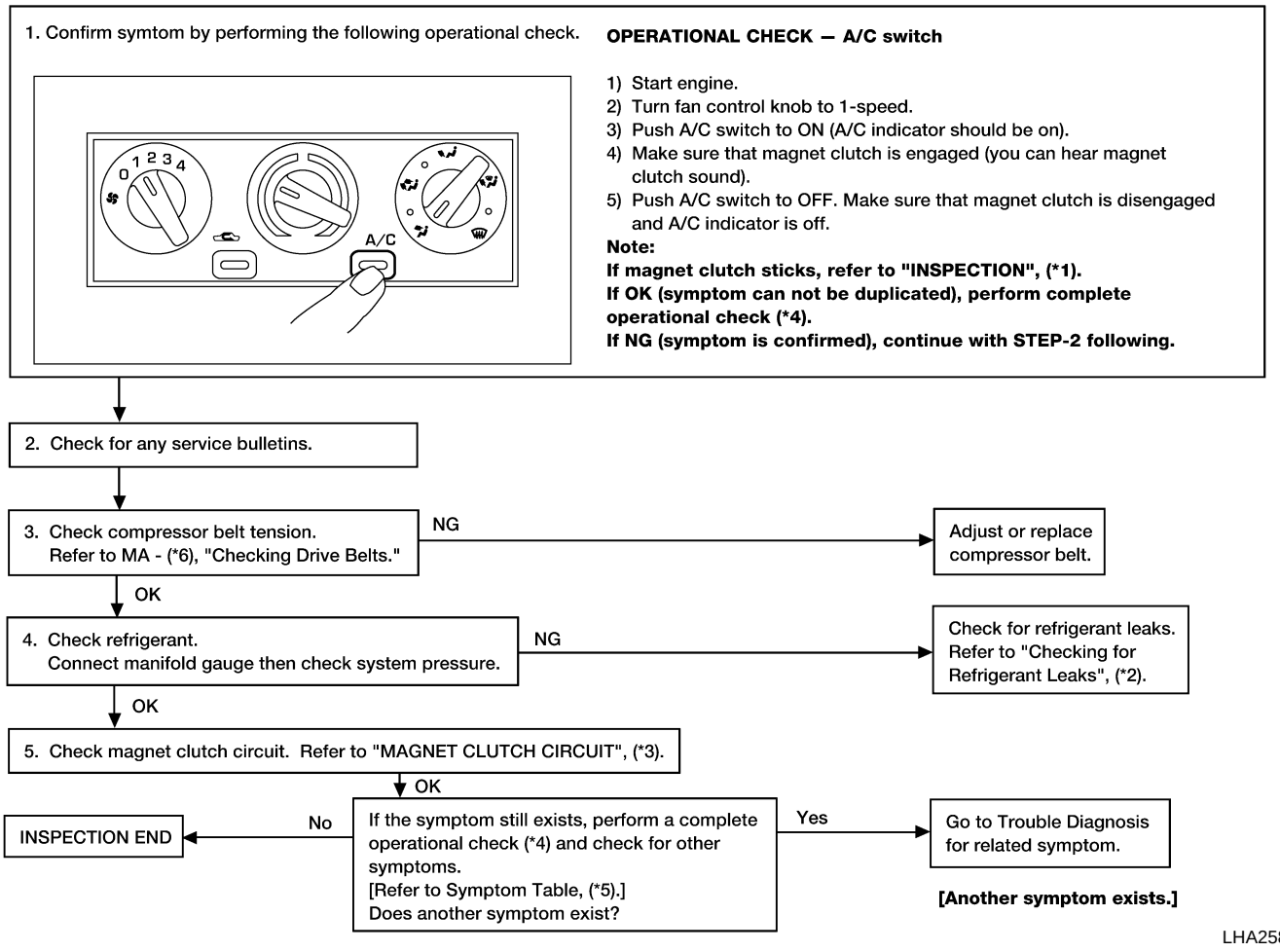

*1: HA-76
*2: HA-81
*3: HA-44
*4: HA-29
*5: HA-28
*6: ***MA-16*** (KA24DE models) or ***MA-25*** (VG33E and VG33ER models)

MAGNET CLUTCH CIRCUIT

=NEHA0091

SYMPTOM:

- **Magnet clutch does not engage when A/C switch and fan switch are ON.**

1	CHECK A/C COMPRESSOR POWER SUPPLY CIRCUIT

1. Disconnect A/C compressor harness connector F15–2.
2. Press the A/C switch ON.
3. Does approx. 12 volts exist between A/C compressor connector F15–2 terminal 1 (B) and ground?

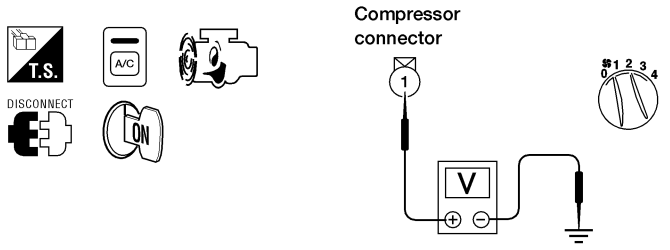

Battery voltage should exist.

WHA232

Yes or No

Yes	▶	GO TO 2.
No	▶	GO TO 3.

2	CHECK A/C COMPRESSOR GROUND

Check continuity between A/C compressor connector F15–2 terminal 1 and ground.

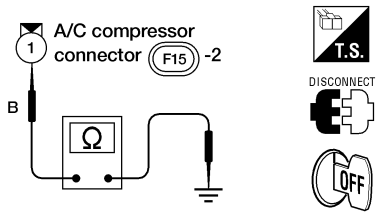

AHA466A

Continuity should exist.

OK or NG

OK	▶	Refer to "TROUBLE DIAGNOSIS PROCEDURE FOR MAGNET CLUTCH," HA-43.
NG	▶	• Check thermal protector. Refer to "Thermal Protector", HA-53. • Check magnet clutch coil. If NG, replace magnet clutch. Refer to "Magnet Clutch Mounting", HA-74.

3	CHECK CIRCUIT CONTINUITY

1. Disconnect A/C relay.
2. Check circuit continuity between A/C relay connector E30 terminal 3 and A/C compressor connector F15–2 terminal 1.

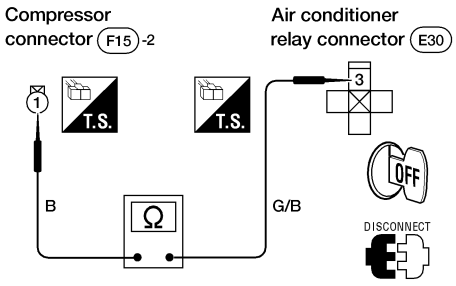

AHA084A

Continuity should exist.

3. Also, check harness for short.

OK or NG

OK	▶	GO TO 4.
NG	▶	Repair harness or connector.

4	CHECK A/C RELAY POWER SUPPLY CIRCUIT

1. Disconnect A/C relay.
2. Does approx. 12 volts exist between A/C relay connector E30 terminals 2, 5 and ground?

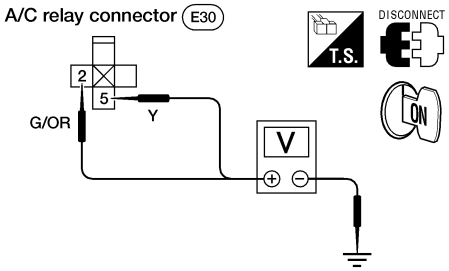

AHA467A

Yes or No

Yes	▶	GO TO 5.
No	▶	GO TO 13.

5	CHECK A/C RELAY

Refer to "A/C Relay", HA-52.

OK or NG

OK	▶	GO TO 6.
NG	▶	Replace A/C relay.

6	CHECK A/C RELAY GROUND CONTROL CIRCUIT

1. Reconnect A/C relay.
2. Engine running and A/C ON.
3. Does approx. 12 volts exist between ECM harness connector F29 terminal 12 (P) and ground?

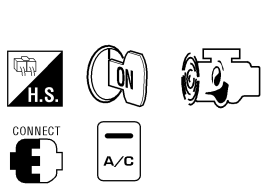

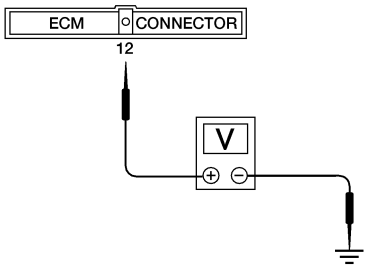

Battery voltage should exist.

LHA234

Yes or No

Yes	▶	GO TO 7.
No	▶	**Check the following. If NG, repair harness or connectors.** Harness connectors E30 and F29 Harness for open or short between A/C relay and ECM

7	CHECK ECM OUTPUT VOLTAGE

Does approx. 5 volts exist between thermo control amp. harness connector M60 terminal 2 and ground?

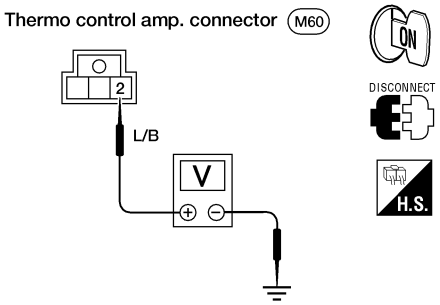

AHA089A

Yes or No

Yes	▶	GO TO 16.
No	▶	GO TO 8.

8	CHECK CIRCUIT CONTINUITY

1. Disconnect dual pressure switch (KA24DE models) or triple pressure switch (VG33E and VG33ER models) harness connector E3.
2. Check voltage from dual pressure switch E3 terminal 1 (G/R) to ground (KA24DE models) or from triple pressure switch E3 terminal 1 (G/R) to ground (VG33E and VG33ER models).

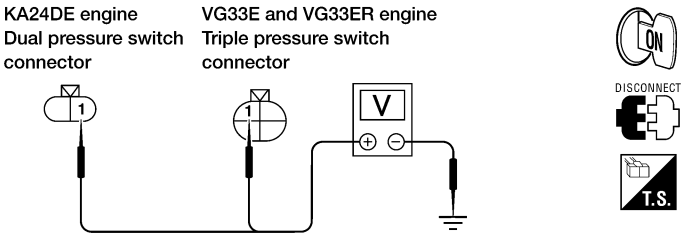

LHA275

Do approx. 5 volts exist?

3. Also, check harness for short.

Yes or No

Yes (KA24DE models)	▶	GO TO 9.
Yes (VG33E and VG33ER models)	▶	GO TO 11.
No	▶	Repair harness or connector.

9	CHECK DUAL PRESSURE SWITCH (KA24DE MODELS)

Refer to "Dual Pressure Switch (KA24DE Models)", HA-52.

OK or NG

OK	▶	GO TO 10.
NG	▶	Replace dual pressure switch.

10	CHECK CIRCUIT CONTINUITY

1. Disconnect dual pressure switch harness connector E3.
2. Check circuit continuity between thermo control amp. harness connector M60 terminal 2 and dual pressure switch connector E3 terminal 2.

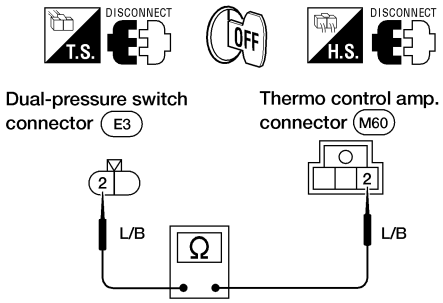

AHA267A

Continuity should exist.

3. Also check circuit continuity between dual pressure switch connector E3 terminal 1 and ECM connector F29 terminal 21.

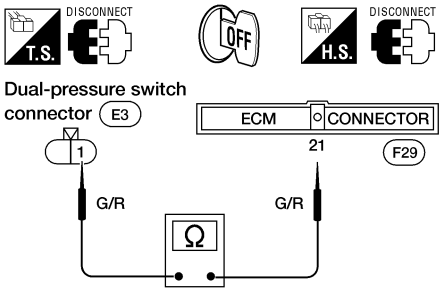

AHA268A

Continuity should exist.

OK or NG

OK	▶	Check ECM. Refer to ***EC-39***, "Description".
NG	▶	Repair harness or connector.

11	CHECK TRIPLE PRESSURE SWITCH (VG33E AND VG33ER MODELS)

Refer to "Triple Pressure Switch (VG33E and VG33ER Models)", HA-53.

OK or NG

OK	▶	GO TO 12.
NG	▶	Replace triple pressure switch.

12	CHECK CIRCUIT CONTINUITY

1. Disconnect triple pressure switch harness connector E3.
2. Check circuit continuity between thermo control amp. harness connector M60 terminal 2 and triple pressure switch harness connector E3 terminal 3.

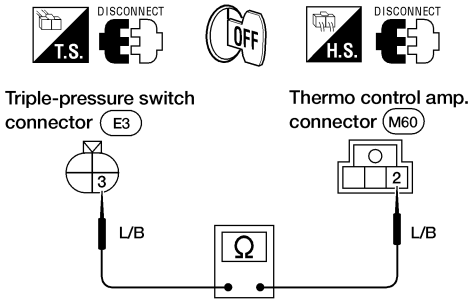

AHA271A

Continuity should exist.

3. Also check circuit continuity between triple pressure switch connector E3 terminal 1 and ECM connector F29 terminal 21.

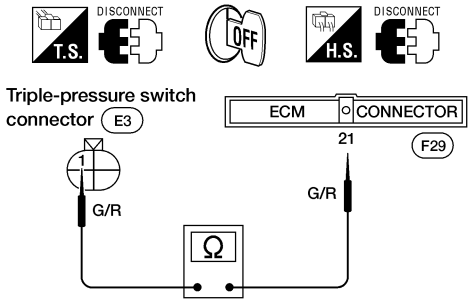

AHA272A

Continuity should exist.

OK or NG

OK	▶	Check ECM. Refer to ***EC-639*** (VG33E models) or ***EC-1240*** (VG33ER models), "Description".
NG	▶	Repair harness or connector.

13	CHECK FUSES

Check 7.5A fuse (No. 29, located in the fuse and fusible link box) and 7.5A fuse (No. 35, located in the fuse and fusible link box). For fuse layout, refer to ***EL-9***, "POWER SUPPLY ROUTING".

Are fuses OK?

OK	▶	**Check the following.** If NG, repair harness or connectors. ● Harness for open or short between fuse block and A/C relay ● Harness connectors M55, M60 and E30
NG	▶	GO TO 14.

14	REPLACE FUSE

Replace fuse.

Does fuse blow when A/C is activated?

Yes	▶	GO TO 15.
No	▶	**INSPECTION END**

15	CHECK A/C RELAY POWER SUPPLY CIRCUITS FOR SHORT

1. Disconnect battery cable and A/C relay.
2. Check for continuity on A/C relay connector E30 terminals (2, 5) to ground.

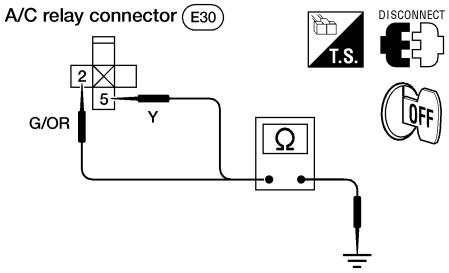

AHA470A

Continuity should not exist.

OK or NG

OK	▶	**Check the following.** If NG, repair harness or connectors. ● Harness connectors M55, M60 and E30. ● Harness for open or short between fuse and fusible link box and A/C relay, A/C switch, or thermo control amplifier.
NG	▶	Repair harness or connector.

16	THERMO CONTROL AMP. GROUND CIRCUIT

1. Turn ignition switch OFF, A/C switch ON and fan switch ON.
2. Disconnect thermo control amp. connector M60.
3. Check continuity between thermo control amp. connector M60 terminal 4 (L) and ground.

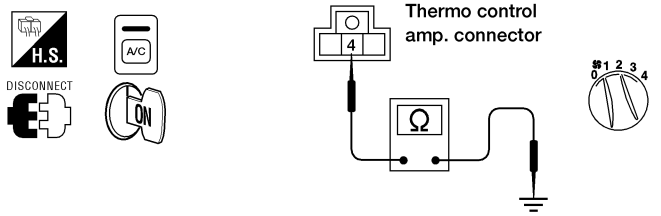

Continuity should exist.

LHA233

OK or NG

OK	▶	GO TO 13.
NG	▶	GO TO 17.

17	CHECK FAN SWITCH

1. Disconnect fan switch connector M57.
2. Turn fan control knob to ON (any speed position except OFF).
3. Check continuity between fan switch terminals 1 and 6.

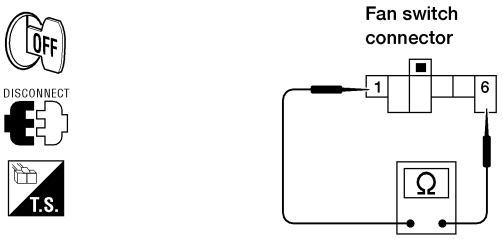

Continuity should exist.

LHA235

OK or NG

OK	▶	**Check the following.** If NG, repair harness or connectors. ● Harness connectors M57 and M95. ● Harness for open or short between fan switch and A/C switch. ● If OK, replace air control.
NG	▶	Replace fan switch.

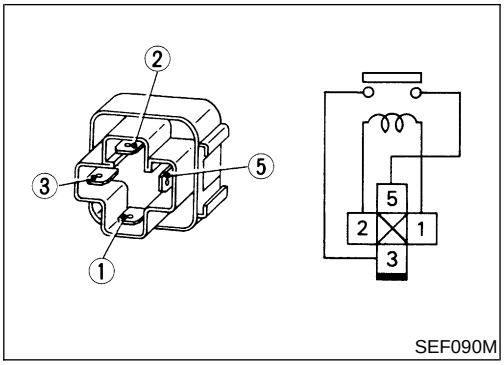

SEF090M

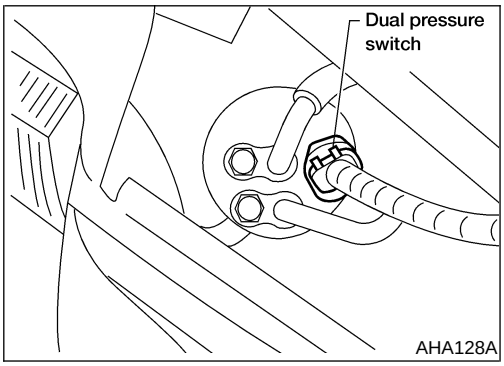

AHA128A

ELECTRICAL COMPONENTS INSPECTION

=NEHA0092

A/C Relay

NEHA0092S07

Check continuity between terminals 3 and 5.

Conditions	Continuity
12V direct current supply between terminals 1 and 2	Yes
No current supply	No

If NG, replace relay.

Dual Pressure Switch (KA24DE Models)

NEHA0092S09

Check continuity between terminals.

	Terminals	High-pressure side line pressure kPa (kg/cm^2, psi)	Operation	Continuity
Low-pressure side	1 - 2	Increasing to 157 - 216 (1.6 - 2.2, 23 - 31)	ON	Yes
		Decreasing to 157 - 196 (1.6 - 2.0, 23 - 28)	OFF	No
High-pressure side		Increasing to 2,648 - 2,844 (27 - 29, 384 - 412)	OFF	No
		Decreasing to 1,373 - 1,765 (14 - 18, 199 - 256)	ON	Yes

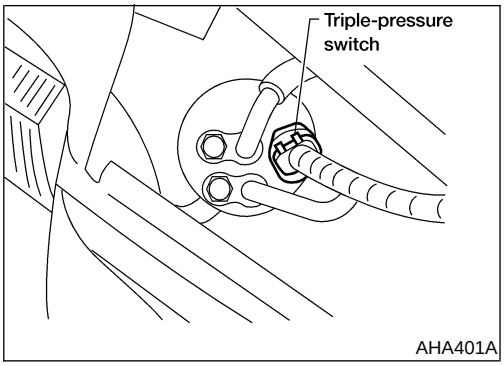

Triple Pressure Switch (VG33E and VG33ER Models)

=NEHA0092S10

Check continuity between terminals 1 and 3.

	Terminals	High-pressure side line pressure kPa (kg/cm^2, psi)	Operation	Continuity
Low-pressure side	1 - 3	Increasing to 157 - 226 (1.6 - 2.3, 23 - 31)	ON	Yes
		Decreasing to 152.0 - 201.0 (1.55 - 2.05, 22.0 - 29.2)	OFF	No
Medium-pressure side	2 - 4	Increasing to 1,422 - 1,618 (14.5 - 16.5, 206 - 235)	ON	Yes
		Decreasing to 1,128 - 1,422 (11.5 - 14.5, 164 - 206)	OFF	No
High-pressure side	1 - 3	Decreasing to 1,667 - 2,059 (17 - 21, 242 - 299)	ON	Yes
		Increasing to 2,648 - 2,844 (27 - 29, 384 - 412)	OFF	No

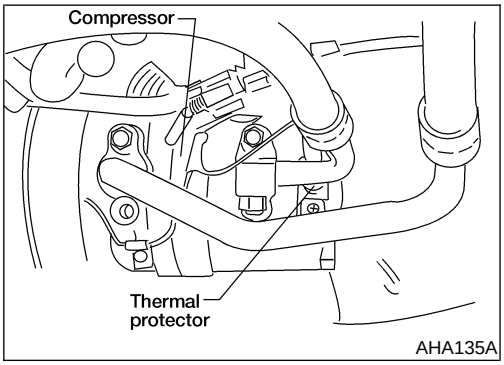

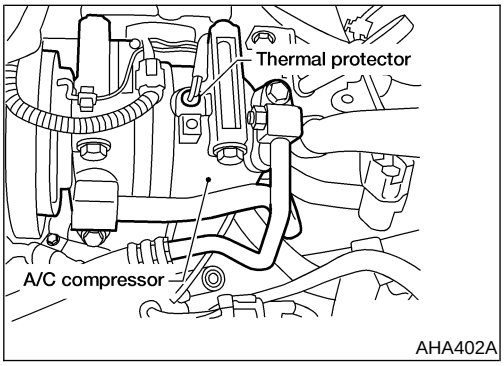

Thermal Protector

KA24DE Models

NEHA0092S11

NEHA0092S1101

Temperature of compressor °C (°F)	Operation
Increasing to approx. 145 - 155 (293 - 311)	Turn OFF
Decreasing to approx. 130 - 140 (266 - 284)	Turn ON

VG33E and VG33ER Models

NEHA0092S1102

Temperature of compressor °C (°F)	Operation
Increasing to approx. 145 - 155 (293 - 311)	Turn OFF
Decreasing to approx. 130 - 140 (266 - 284)	Turn ON

Magnet Clutch (Cont'd)

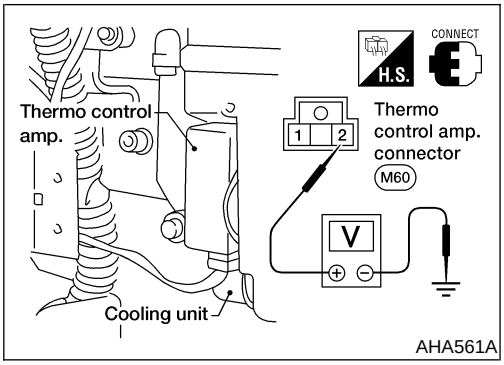

Thermo Control Amp.

NEHA0092S12

1) Run engine and operate A/C system.
2) Connect the voltmeter from harness side.
3) Check the thermo control amp. operation as shown in the table.

Evaporator outlet air temperature °C (°F)	Thermo amp. operation	Tester (Approx.)
Decreasing to 2.5 - 3.5 (37 - 38)	Turn OFF	12V
Increasing to 4.0 - 5.0 (39 - 41)	Turn ON	0V

Insufficient Cooling

TROUBLE DIAGNOSIS PROCEDURE FOR INSUFFICIENT COOLING

=NEHA0150

Symptom:

- **Insufficient cooling**

Inspection Flow

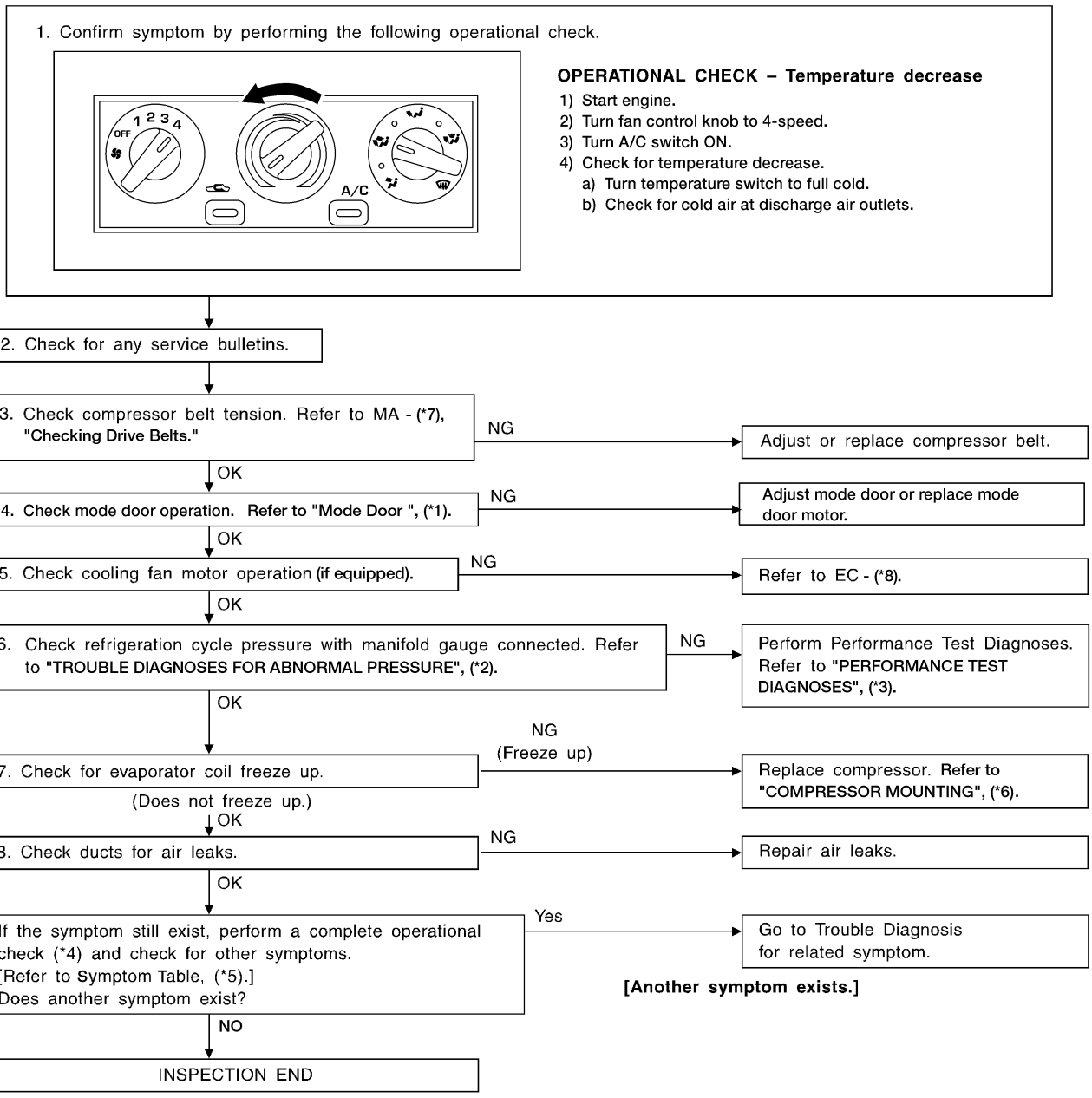

WHA292

*1: HA-38
*2: HA-59
*3: HA-56
*4: HA-29
*5: HA-28
*6: HA-72
*7: ***MA-16*** (KA24DE models) or ***MA-25*** (VG33E and VG33ER models)
*8: ***EC-574*** (KA24DE models), ***EC-1072*** (VG33E models with electric cooling fan), ***EC-1084*** (VG33E models without electric cooling fan) or ***EC-1670*** (VG33ER models)

PERFORMANCE TEST DIAGNOSES

=NEHA0295

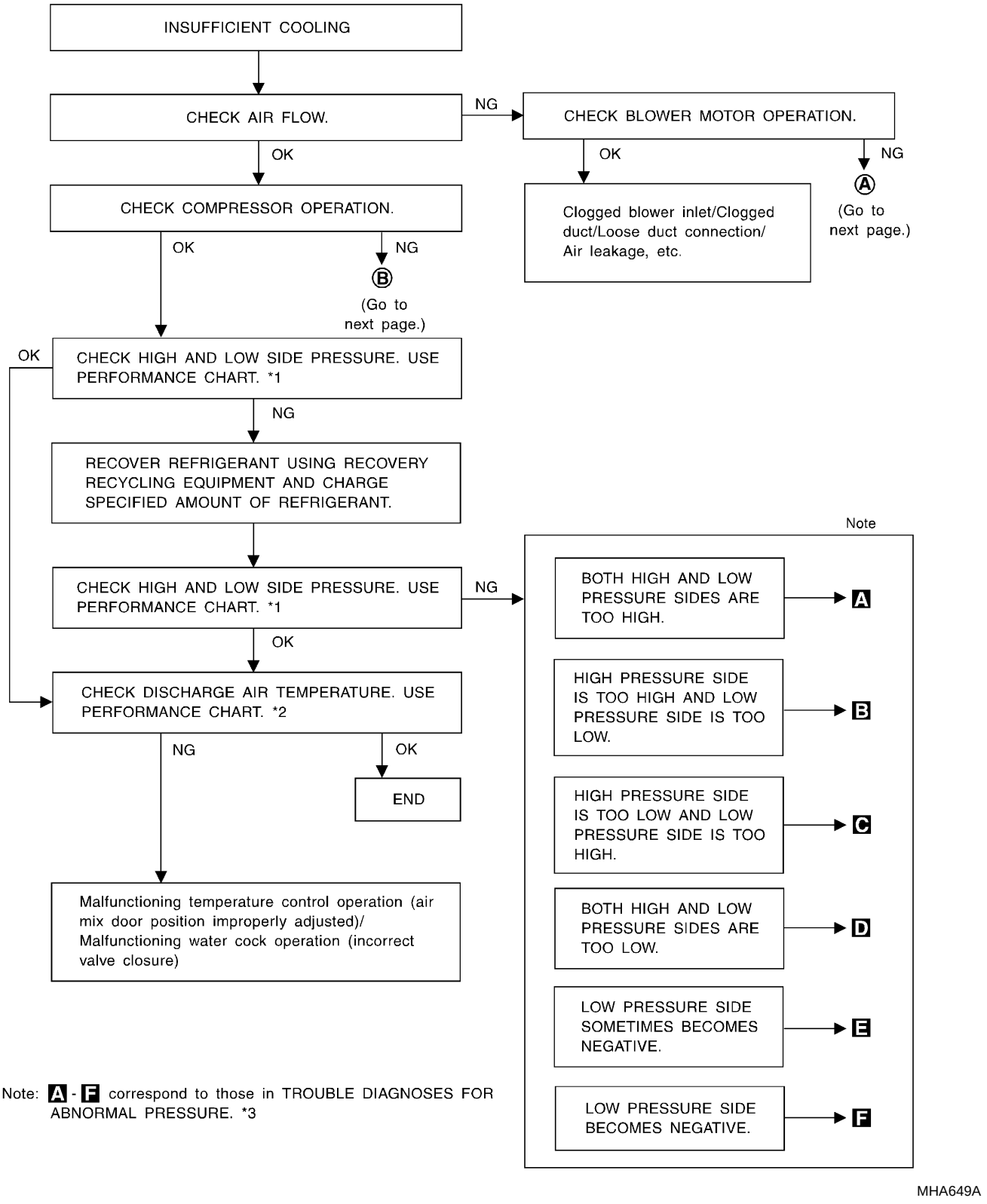

Note: A - F correspond to those in TROUBLE DIAGNOSES FOR ABNORMAL PRESSURE. *3

MHA649A

*1: HA-58 *2: HA-58 *3: HA-59

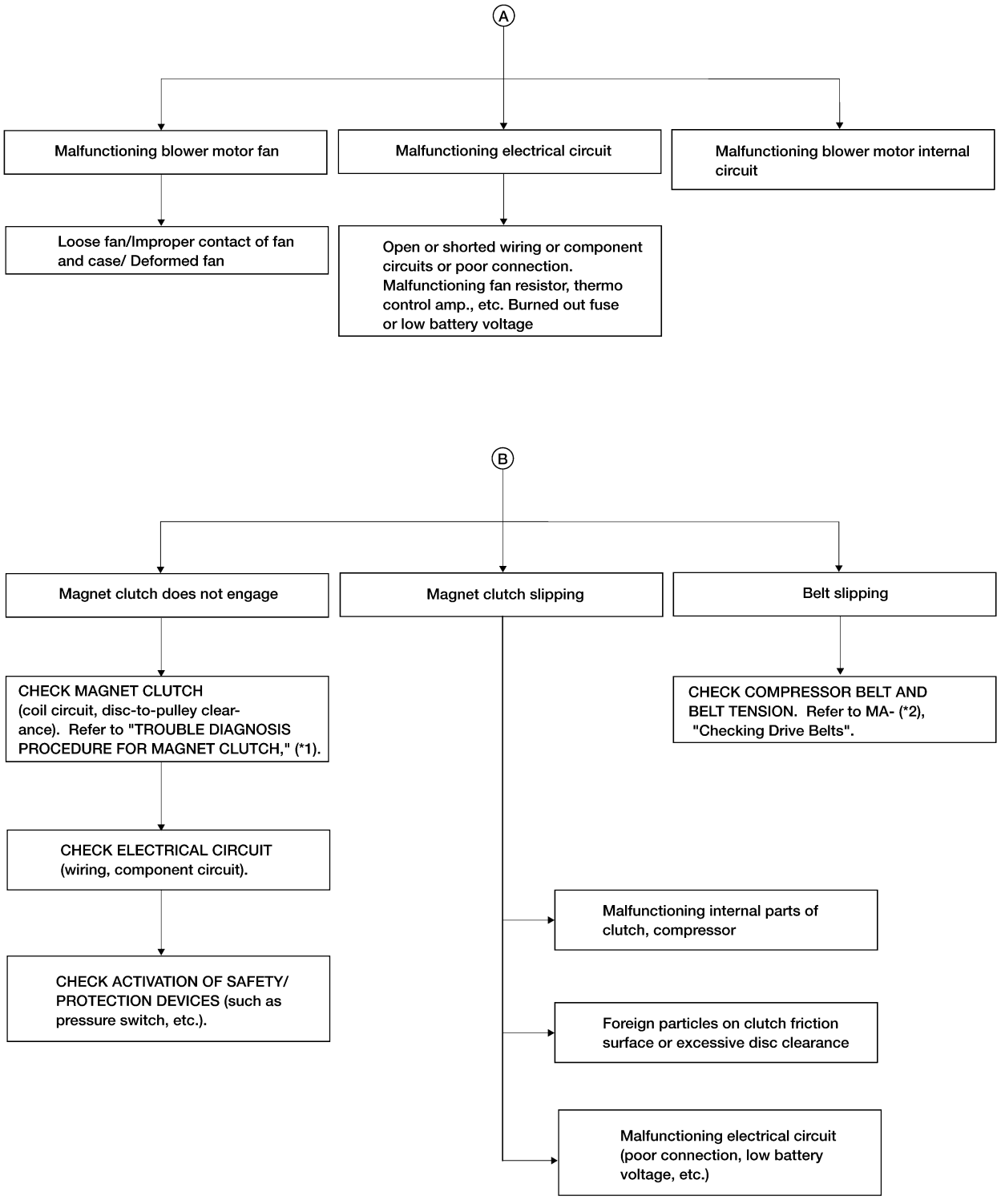

LHA260

*1: HA-43

*2: ***MA-16*** (KA24DE models) or ***MA-25*** (VG33E and VG33ER models)

Insufficient Cooling (Cont'd)

PERFORMANCE CHART

=NEHA0082

Test Condition

NEHA0082S07

Testing must be performed as follows:

Vehicle location	Indoors or in the shade (in a well-ventilated place)
Doors	Closed
Door windows	Open
Hood	Open
TEMP. switch	Max. COLD
Mode switch	(Ventilation) set
REC switch	(Recirculation) set
(blower) speed	4-speed
Engine speed	1,500 rpm
Operate the air conditioning system for 10 minutes before taking measurements.	

Test Reading

NEHA0082S06

Recirculating-to-Discharge Air Temperature Table

NEHA0082S0601

Inside air (Recirculating air) at blower assembly inlet		Discharge air temperature at center ventilator °C (°F)
Relative humidity %	Air temperature °C (°F)	
50 - 60	20 (68)	6.6 - 8.3 (44 - 47)
	25 (77)	10.4 - 12.4 (51 - 54)
	30 (86)	14.2 - 16.7 (58 - 62)
	35 (95)	18.2 - 21 (65 - 70)
	40 (104)	22.0 - 25.2 (72 - 77)
60 - 70	20 (68)	8.3 - 9.8 (47 - 50)
	25 (77)	12.4 - 14.4 (54 - 58)
	30 (86)	16.7 - 18.9 (62 - 66)
	35 (95)	21.0 - 23.6 (70 - 74)
	40 (104)	25.2 - 28.1 (77 - 83)

Ambient Air Temperature-to-Operating Pressure Table

=NEHA0082S0602

Ambient air		High-pressure (Discharge side) kPa (kg/cm^2, psi)	Low-pressure (Suction side) kPa (kg/cm^2, psi)
Relative humidity %	Air temperature °C (°F)		
50 - 70	20 (68)	961 - 1,187 (9.8 - 12.1, 139 - 172)	108 - 157 (1.1 - 1.6, 16 - 23)
	25 (77)	1,295 - 1,599 (13.2 - 16.3, 186 - 228)	161.8 - 215.8 (1.65 - 2.2, 23.5 - 31.3)
	30 (86)	1,285 - 1,599 (13.1 - 16.0, 186 - 228)	167 - 216 (1.7 - 2.2, 24 - 31)
	35 (95)	1,520 - 1,863 (15.5 - 19.0, 220 - 279)	235 - 284 (2.4 - 2.9, 34 - 41)
	40 (104)	1,765 - 2,158 (18 - 22, 256 - 313)	289.3 - 353.1 (2.95 - 3.6, 41.9 - 51.2)

TROUBLE DIAGNOSES FOR ABNORMAL PRESSURE

NEHA0278

Whenever system's high and/or low side pressure is abnormal, diagnose using a manifold gauge. The marker above the gauge scale in the following tables indicates the standard (normal) pressure range. Since the standard (normal) pressure, however, differs from vehicle to vehicle, refer to "Ambient Air Temperature-to-Operating Pressure Table", HA-59.

Both High and Low-pressure Sides are Too High.

NEHA0278S01

Gauge indication	Refrigerant cycle	Probable cause	Corrective action
Both high and low-pressure sides are too high. A 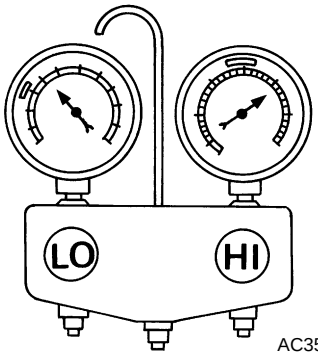 AC359A	• Pressure is reduced soon after water is splashed on condenser.	Excessive refrigerant charge in refrigeration cycle	Reduce refrigerant until specified pressure is obtained.
	Air suction by cooling fan is insufficient.	Insufficient condenser cooling performance ↓ 1. Condenser fins are clogged. 2. Improper fan rotation of cooling fan	• Clean condenser. • Check and repair cooling fan as necessary.
	• Low-pressure pipe is not cold. • When compressor is stopped high-pressure value quickly drops by approximately 196 kPa (2 kg/cm^2, 28 psi). It then decreases gradually thereafter.	Poor heat exchange in condenser (After compressor operation stops, high pressure decreases too slowly.) ↓ Air in refrigeration cycle	Evacuate repeatedly and recharge system.
	Engine tends to overheat.	Engine cooling systems malfunction.	Check and repair each engine cooling system.
	• An area of the low-pressure pipe is colder than areas near the evaporator outlet. • Plates are sometimes covered with frost.	• Excessive liquid refrigerant on low-pressure side • Excessive refrigerant discharge flow • Expansion valve is open a little compared with the specification. ↓ 1. Improper thermal valve installation 2. Improper expansion valve adjustment	Replace expansion valve.

Insufficient Cooling (Cont'd)

High-pressure Side is Too High and Low-pressure Side is Too Low.

NEHA0278S02

Gauge indication	Refrigerant cycle	Probable cause	Corrective action
High-pressure side is too high and low-pressure side is too low. **B** 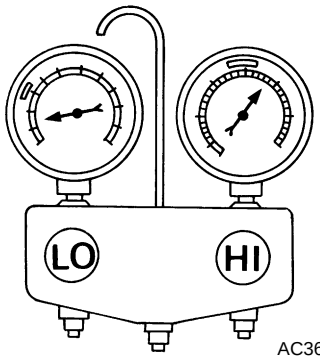 AC360A	Upper side of condenser and high-pressure side are hot, however, liquid tank is not so hot.	High-pressure tube or parts located between compressor and condenser are clogged or crushed.	● Check and repair or replace malfunctioning parts. ● Check lubricant for contamination.

High-pressure Side is Too Low and Low-pressure Side is Too High.

NEHA0278S03

Gauge indication	Refrigerant cycle	Probable cause	Corrective action
High-pressure side is too low and low-pressure side is too high. **C** 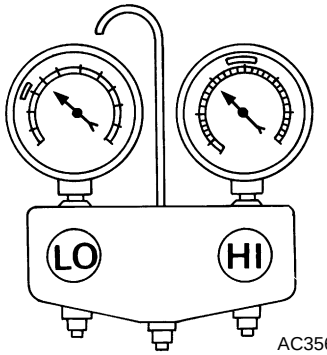 AC356A	High and low-pressure sides become equal soon after compressor operation stops.	Compressor pressure operation is improper. ↓ Damaged inside compressor packings	Replace compressor.
	No temperature difference between high and low-pressure sides	Compressor pressure operation is improper. ↓ Damaged inside compressor packings.	Replace compressor.

Both High- and Low-pressure Sides are Too Low.

NEHA0278S04

Gauge indication	Refrigerant cycle	Probable cause	Corrective action
Both high- and low-pressure sides are too low. D 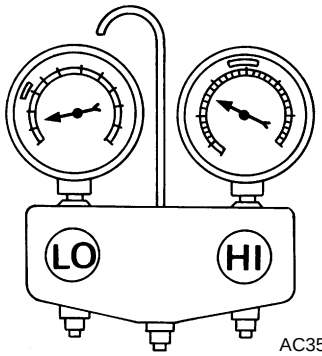 AC353A	• There is a big temperature difference between receiver drier outlet and inlet. Outlet temperature is extremely low. • Liquid tank inlet and expansion valve are frosted.	Compressor discharge capacity does not change. (Compressor stroke is set at maximum.)	• Replace liquid tank. • Check lubricant for contamination.
	• Temperature of expansion valve inlet is extremely low as compared with areas near liquid tank. • Expansion valve inlet may be frosted. • Temperature difference occurs somewhere in high-pressure side	High-pressure pipe located between receiver drier and expansion valve is clogged.	• Check and repair malfunctioning parts. • Check lubricant for contamination.
	• Expansion valve and liquid tank are warm or only cool when touched.	Low refrigerant charge ↓ Leaking fittings or components	Check refrigerant for leaks. Refer to "Checking for Refrigerant Leaks", HA-81.
	There is a big temperature difference between expansion valve inlet and outlet while the valve itself is frosted.	Expansion valve closes a little compared with the specification. ↓ 1. Improper expansion valve adjustment 2. Malfunctioning thermal valve 3. Outlet and inlet may be clogged.	• Remove foreign particles by using compressed air. • Check lubricant for contamination.
	An area of the low-pressure pipe is colder than areas near the evaporator outlet.	Low-pressure pipe is clogged or crushed.	• Check and repair malfunctioning parts. • Check lubricant for contamination.
	Air flow volume is not enough or is too low.	Evaporator is frozen. ↓ Compressor discharge capacity does not change. (Compressor stroke is set at maximum length.)	• Check thermo control amp. operation. • Replace compressor.

Insufficient Cooling (Cont'd)

Low-pressure Side Sometimes Becomes Negative.

NEHA0278S05

Gauge indication	Refrigerant cycle	Probable cause	Corrective action
Low-pressure side sometimes becomes negative. E 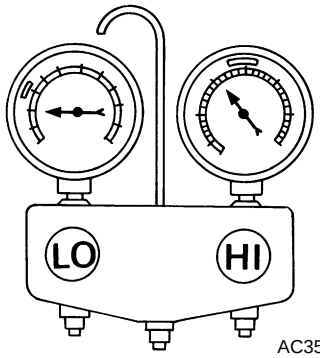 AC354A	● Air conditioning system does not function and does not cyclically cool the compartment air. ● The system constantly functions for a certain period of time after compressor is stopped and restarted.	Refrigerant does not discharge cyclically. ↓ Moisture is frozen at expansion valve outlet and inlet. ↓ Water is mixed with refrigerant.	● Drain water from refrigerant or replace refrigerant. ● Replace liquid tank.

Low-pressure Side Becomes Negative.

NEHA0278S06

Gauge indication	Refrigerant cycle	Probable cause	Corrective action
Low-pressure side becomes negative. F 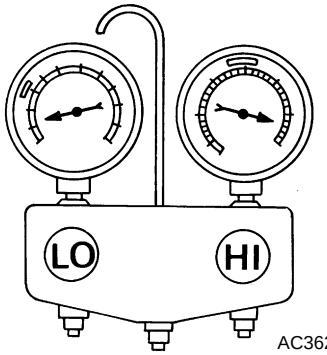 AC362A	Liquid tank or front/rear side of expansion valve's pipe is frosted or dewed.	High-pressure side is closed and refrigerant does not flow. ↓ Expansion valve or liquid tank is frosted.	Leave the system at rest until no frost is present. Start it again to check whether or not the problem is caused by water or foreign particles. ● If water is the cause, initially cooling is okay. Then the water freezes causing a blockage. Drain water from refrigerant or replace refrigerant. ● If due to foreign particles, remove expansion valve and remove particles with dry and compressed air (not shop air). ● If either of the above methods cannot correct the problem, replace expansion valve. ● Replace liquid tank. ● Check lubricant for contamination.

Insufficient Heating

TROUBLE DIAGNOSIS PROCEDURE FOR INSUFFICIENT HEATING

=NEHA0140

Symptom:

- **Insufficient heating**

Inspection Flow

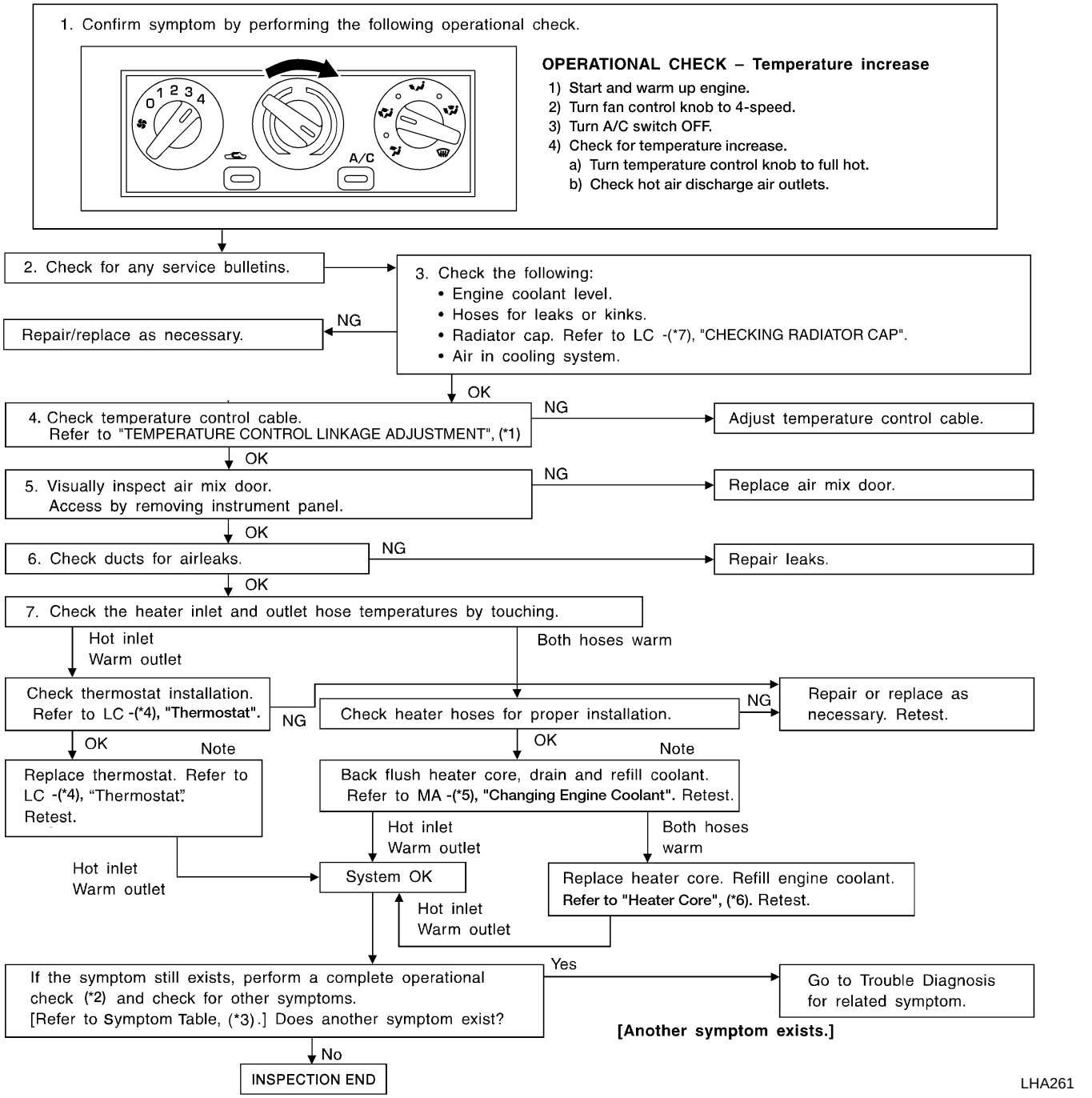

LHA261

*1: HA-64
*2: HA-29
*3: HA-28
*4: ***LC-13*** (KA24DE models) or ***LC-30*** (VG33E and VG33ER models)
*5: ***MA-17*** (KA24DE models) or ***MA-27*** (VG33E and VG33ER models)
*6: HA-86
*7 ***LC-12*** (KA24DE models) or ***LC-28*** (VG33E and VG33ER models)

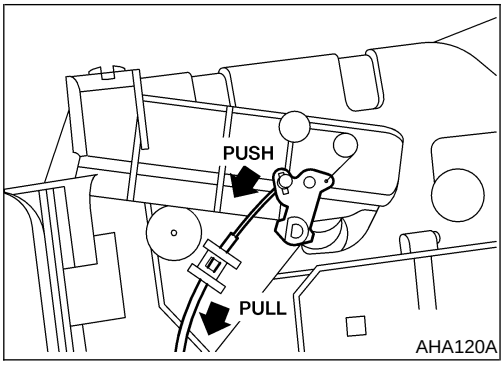

TEMPERATURE CONTROL LINKAGE ADJUSTMENT

NEHA0279

Temperature Control Cable

- **When adjusting ventilator door rod and defrost door rod, first disconnect mode control cable from side link. Reconnect and readjust mode control cable.**
- Turn temperature control knob to max. COLD position. Set air mix door lever in full hot mode. Pull on outer cable in direction of arrow and then clamp it.
- **After positioning temperature control cable, check that it operates properly.**

Noise

TROUBLE DIAGNOSIS PROCEDURE FOR NOISE

=NEHA0080

Symptom:

- **Noise**

Inspection Flow

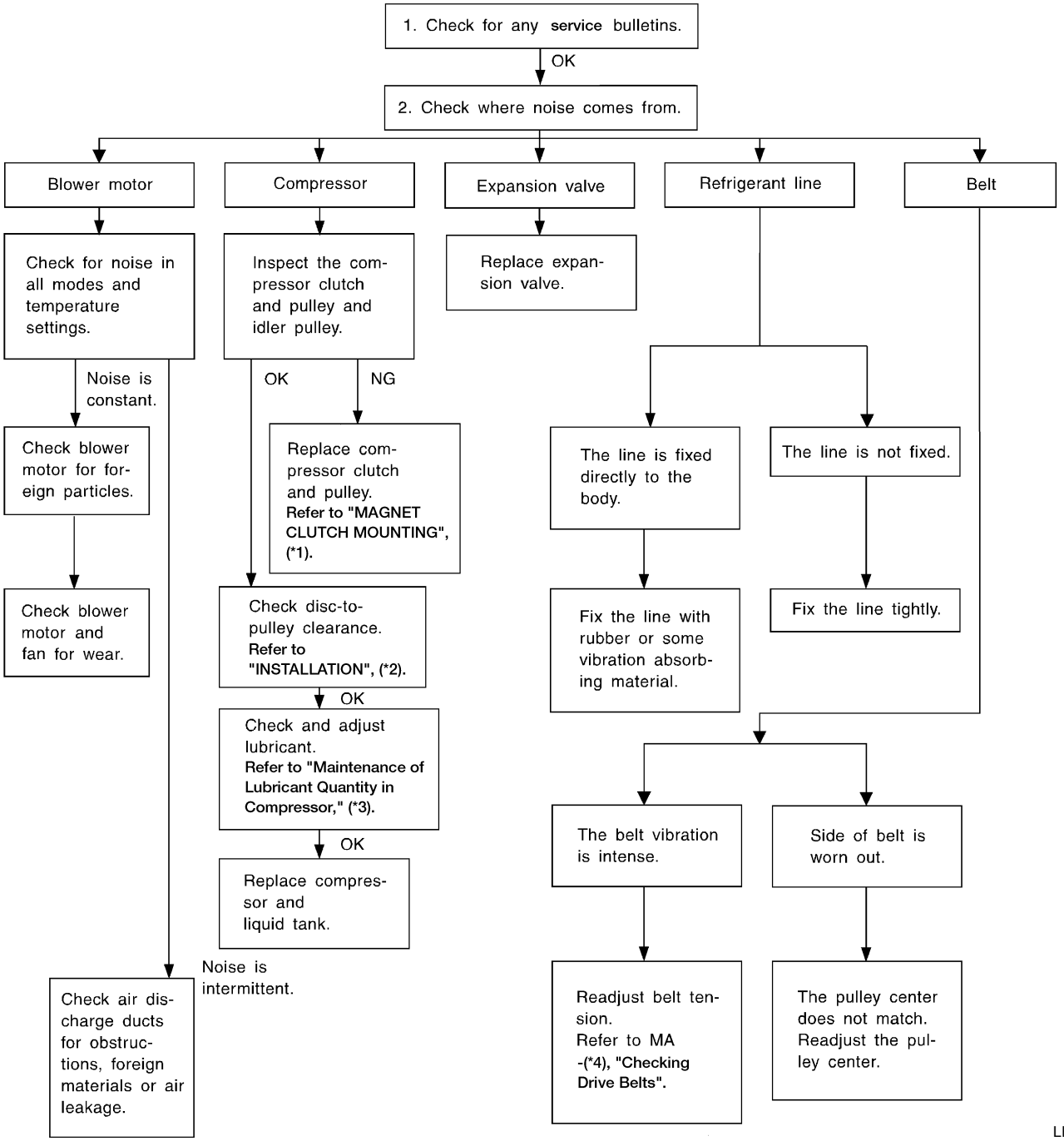

LHA262

*1: HA-74
*2: HA-77
*3: HA-68
*4: ***MA-16*** (KA24DE models) or ***MA-25*** (VG33E and VG33ER models)

HFC-134a (R-134a) Service Procedure

NEHA0094

SETTING OF SERVICE TOOLS AND EQUIPMENT

NEHA0094S01

WARNING:

Avoid breathing A/C refrigerant and lubricant vapor or mist. Exposure may irritate eyes, nose and throat. Remove R-134a form the A/C system using certified service equipment meeting requirements of SAE J2210 (R-134a recycling equipment) or J2209 (R-134a recovery equipment). If accidental system discharge occurs, ventilate work area before resuming service. Additional health and safety information may be obtained from refrigerant and lubricant manufacturers.

Discharging Refrigerant

NEHA0094S0101

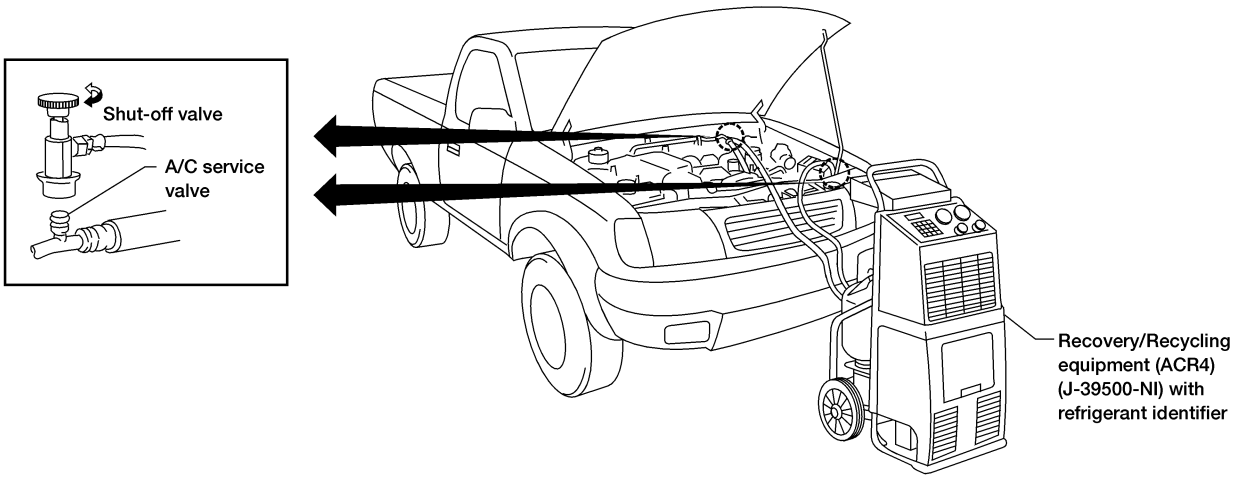

AHA508A

Evacuating System and Charging Refrigerant

NEHA0094S0103

Preferred (Best) method

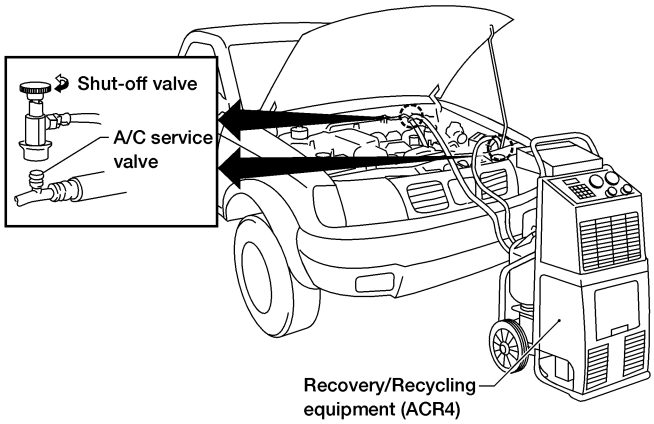

Alternate (Second Base) method

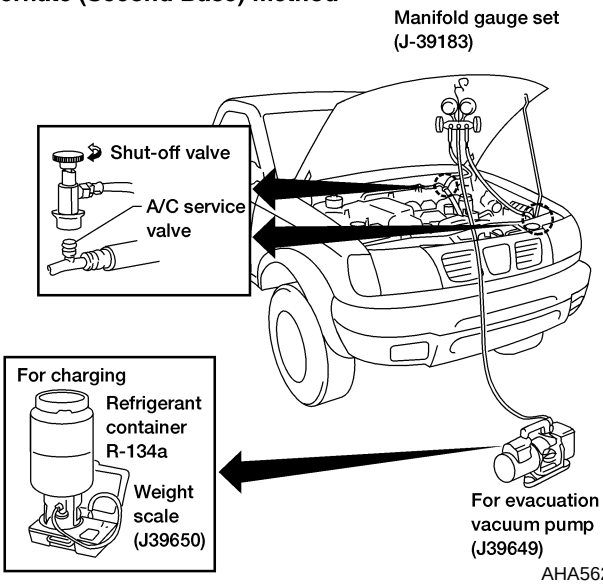

AHA562A

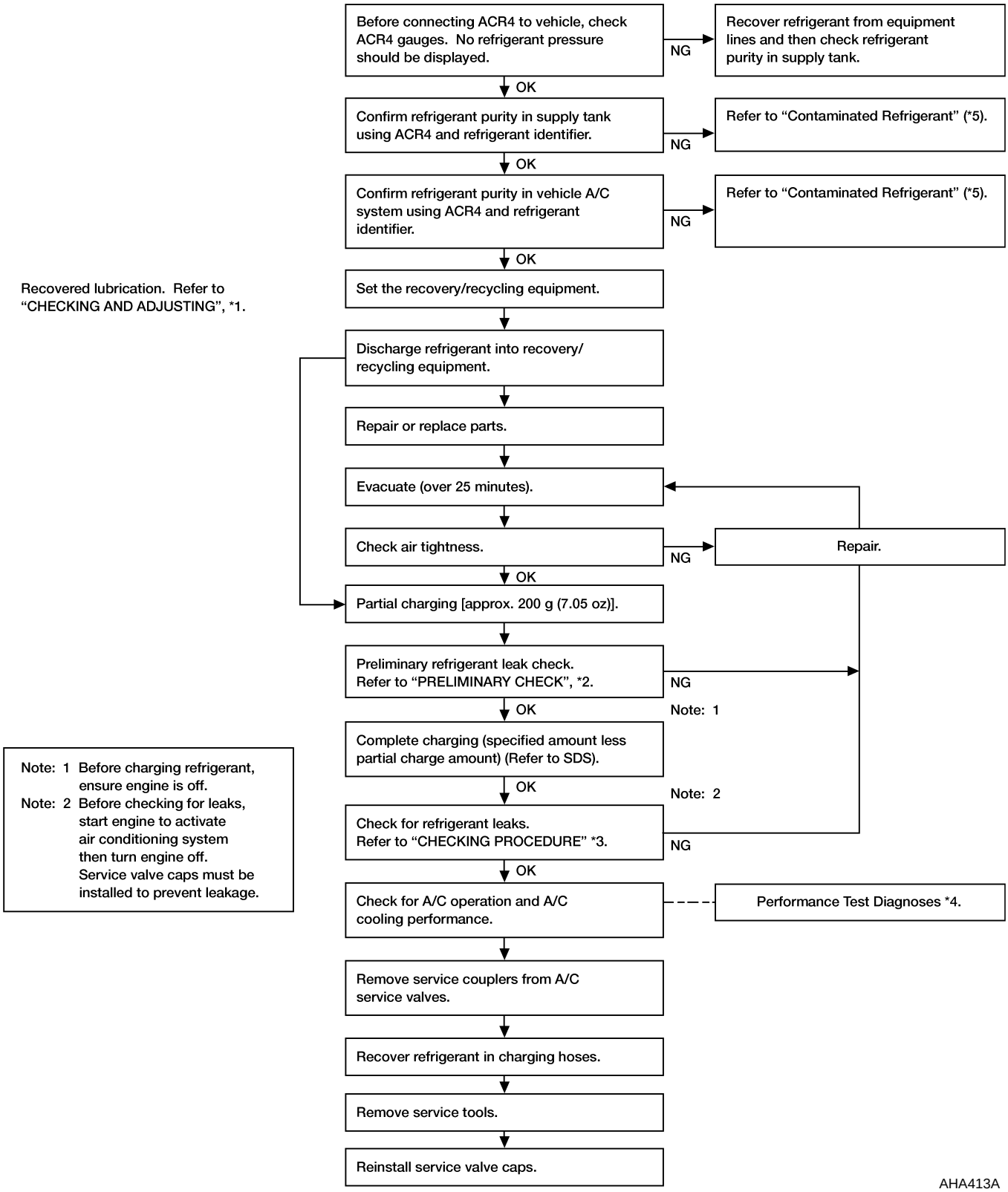

*1 HA-68
*2 HA-81
*3 HA-82
*4 HA-56
*5 HA-3

Maintenance of Lubricant Quantity in Compressor

NEHA0095

The lubricant in the compressor circulates through the system with the refrigerant. Add lubricant to compressor when replacing any component or after a large gas leakage occurred. It is important to maintain the specified amount.
If lubricant quantity is not maintained properly, the following malfunctions may result:

- Lack of lubricant: May lead to a seized compressor
- Excessive lubricant: Inadequate cooling (thermal exchange interference)

LUBRICANT

NEHA0095S01

Name: NISSAN A/C System Lubricant Type R
Part number: KLH00-PAGR0

CHECKING AND ADJUSTING

NEHA0095S02

Adjust the lubricant quantity according to the flowchart shown below.

1	LUBRICANT RETURN OPERATION	
Can lubricant return operation be performed? ● A/C system works properly. ● There is no evidence of a large amount of lubricant leakage.		
Yes or No		
Yes	▶	GO TO 2.
No	▶	GO TO 3.

2	PERFORM LUBRICANT RETURN OPERATION, PROCEEDING AS FOLLOWS	
1. Start engine, and set the following conditions: ● **Test condition** **Engine speed: Idling to 1,200 rpm** **A/C switch: ON** **RECIRCULATION switch: OFF** **Fan speed: Max. position** **Temp. control: Optional [Set so that intake air temperature is 25 to 30°C (77 to 86°F).]** 2. Perform lubricant return operation for about 10 minutes. 3. Stop engine. **CAUTION:** **If excessive lubricant leakage is noted, do not perform the lubricant return operation.**		
	▶	GO TO 3.

3	CHECK COMPRESSOR	
Should the compressor be replaced?		
Yes or No		
Yes	▶	Refer to “Lubricant Adjusting Procedure for Compressor Replacement”, HA-70.
No	▶	GO TO 4.

4	CHECK ANY PART	
Is there any part to be replaced? (Evaporator, condenser, liquid tank or in case there is evidence of a large amount of lubricant leakage.)		
Yes or No		
Yes	▶	Refer to "Lubricant Adjusting Procedure for Components Replacement Except Compressor", HA-70.
No	▶	Perform "PERFORMANCE TEST DIAGNOSES", HA-56.

Lubricant Adjusting Procedure for Components Replacement Except Compressor

=NEHA0095S0201

After replacing any of the following major components, add the correct amount of lubricant to the system.

Amount of lubricant to be added

Part replaced	Lubricant to be added to system	Remarks
	Amount of lubricant mℓ (US fl oz, Imp fl oz)	
Evaporator	75 (2.5, 2.6)	—
Condenser	75 (2.5, 2.6)	—
Liquid tank	5 (0.2, 0.2)	Add if compressor is not replaced. *1
In case of refrigerant leak	30 (1.0, 1.1)	Large leak
	—	Small leak *2

*1: If compressor is replaced, addition of lubricant is included in the flow chart.

*2: If refrigerant leak is small, no addition of lubricant is needed.

Lubricant Adjusting Procedure for Compressor Replacement

NEHA0095S0202

1) Before connecting ACR4 to vehicle, check ACR4 gauges. No refrigerant pressure should be displayed, recover refrigerant from equipment lines and then check refrigerant purity.
2) Confirm refrigerant purity in supply tank using ACR4 and refrigerant identifier.
3) Confirm refrigerant purity in vehicle A/C system using ACR4 and refrigerant identifier.
4) Discharge refrigerant into the refrigerant recovery/recycling equipment. Measure lubricant discharged into the recovery/recycling equipment.
5) Drain the lubricant from the old (removed) compressor into a graduated container and record the amount of lubricant drained.
6) Drain the lubricant from the new compressor into a separate, clean container.
7) Measure an amount of new lubricant installed equal to amount drained from old compressor. Add this lubricant to new compressor through the suction port opening.
8) Measure an amount of new lubricant equal to the amount recovered during discharging. Add this lubricant to new compressor through the suction port opening.
9) If the liquid tank also needs to be replaced, add an additional 5 mℓ (0.2 US fl oz, 0.2 Imp fl oz) of lubricant at this time.
   Do not add this 5 mℓ (0.2 US fl oz, 0.2 Imp fl oz) of lubricant if only replacing the compressor.

Lubricant adjusting procedure for compressor replacement

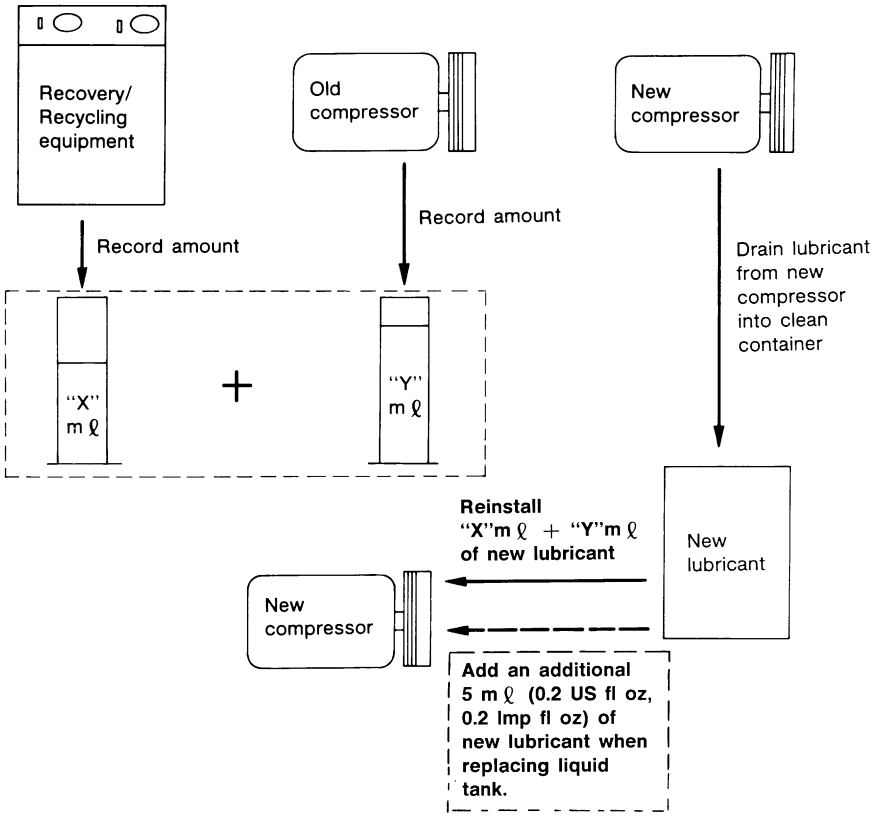

RHA065DD

Compressor

COMPRESSOR MOUNTING

KA24DE Models

NEHA0096

NEHA0096S01

SEC. 274•275

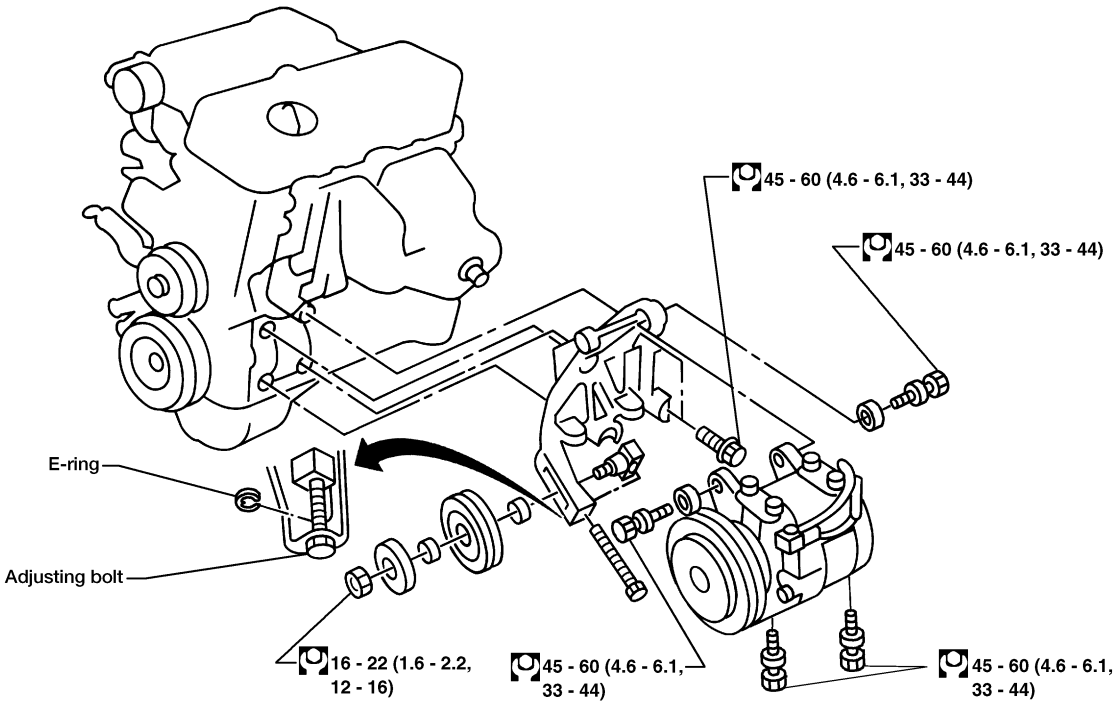

: N·m (kg-m, ft-lb)

LHA236

VG33E and VG33ER Models

NEHA0096S02

SEC. 274 · 275

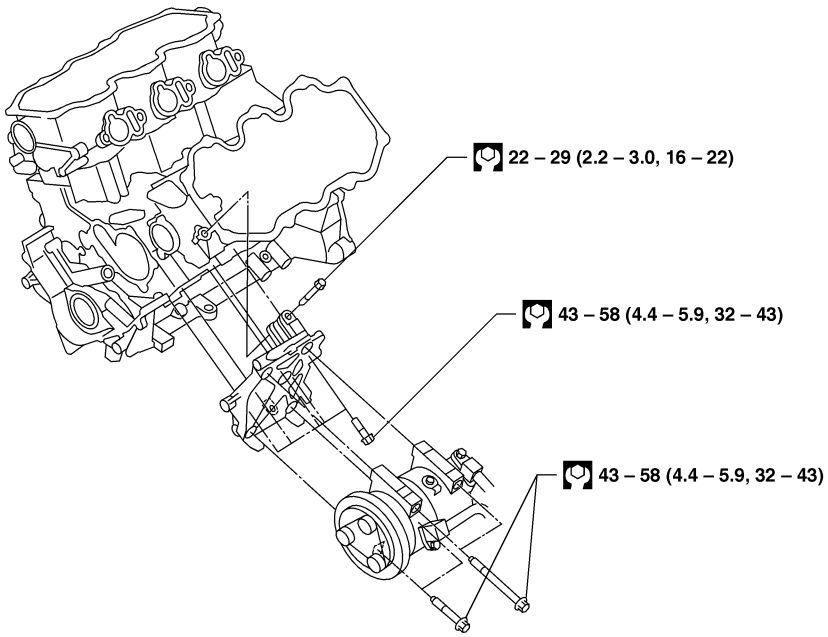

: N·m (kg-m, ft-lb)

LHA237

Magnet Clutch

MAGNET CLUTCH MOUNTING

KA24DE Models

NEHA0098

NEHA0098S04

SEC. 274

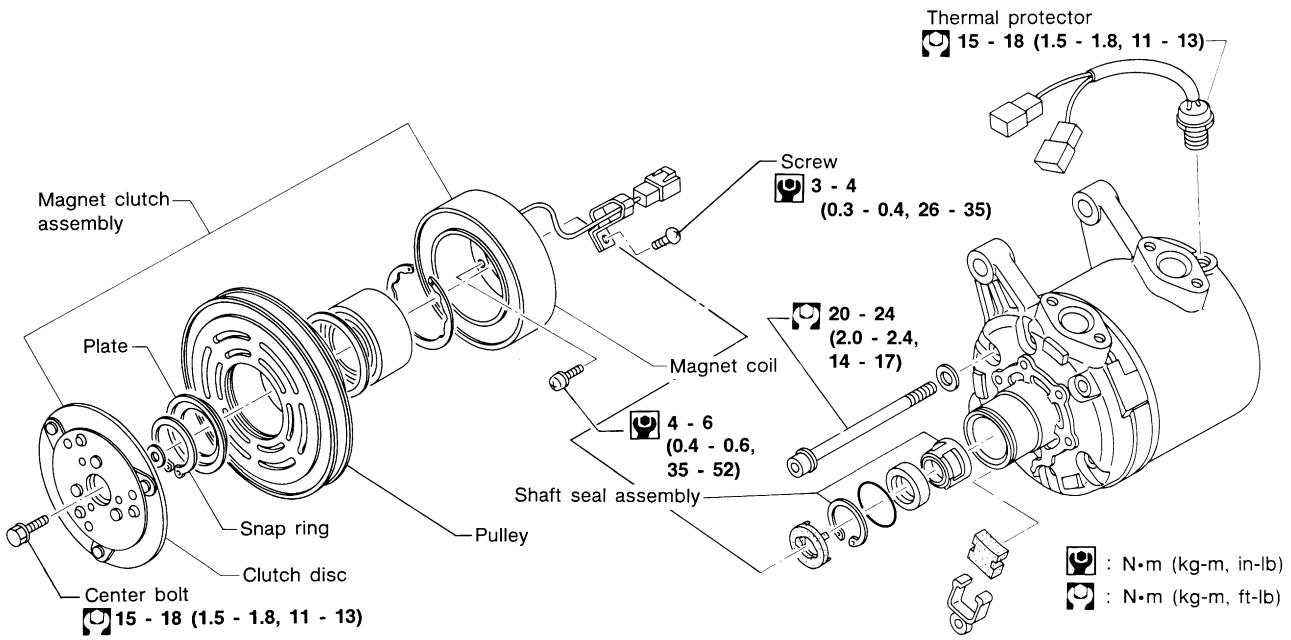

AHA510A

VG33E and VG33ER Models

NEHA0098S05

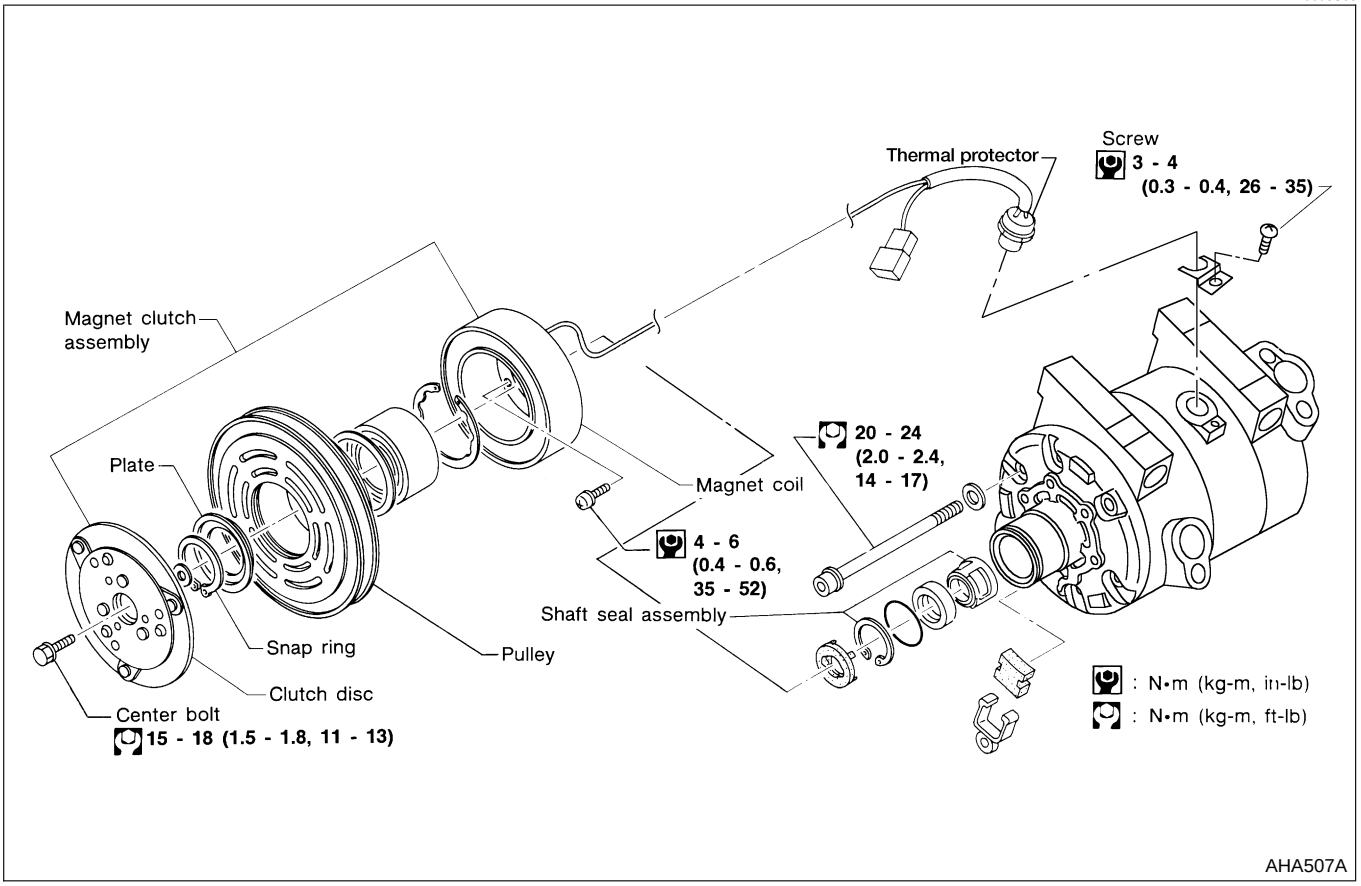

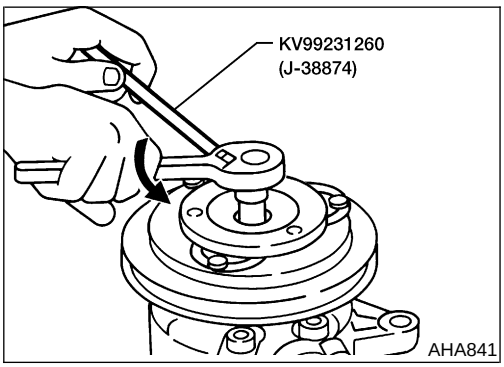

REMOVAL

NEHA0280

- When removing center bolt, hold clutch disc with clutch disc wrench.

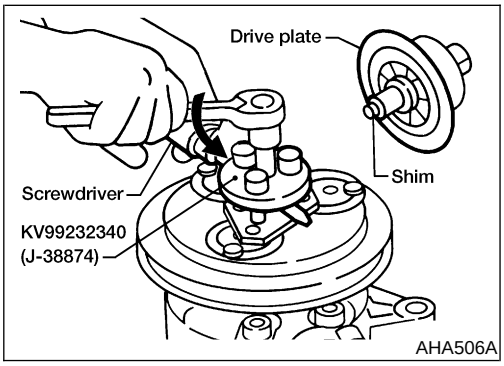

- Remove the drive plate using the clutch disc puller.
  Insert holder's three pins into the drive plate. Rotate the holder clockwise to hook it onto the plate. Then, tighten the center bolt to remove the drive plate.
  While tightening the center bolt, insert a round bar (screwdriver, etc.) between two of the pins (as shown in the figure) to prevent drive plate rotation. After removing the drive plate, remove the shims from either the drive shaft or the drive plate.

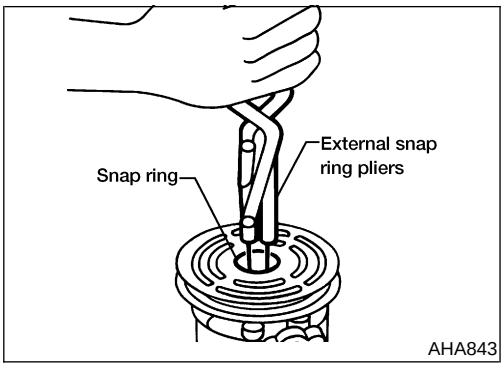

- Remove the snap ring using external snap ring pliers.

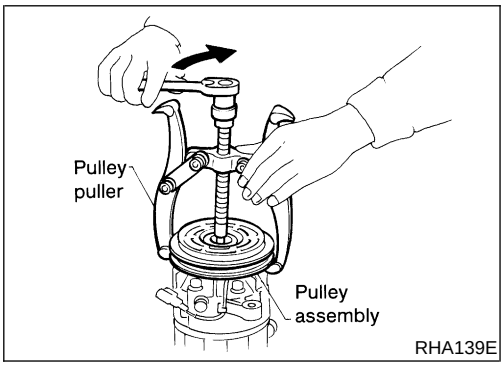

- For pulley removal use pulley puller.
  Use a commercially available pulley puller. Position the center of the puller on the end of the drive shaft. Remove the pulley assembly with the puller.
  For Pressed Pulleys:
  To prevent deformation of the pulley groove, the puller claws should be hooked under (not into) the pulley groove.
- Remove the field coil harness clip using a screwdriver.

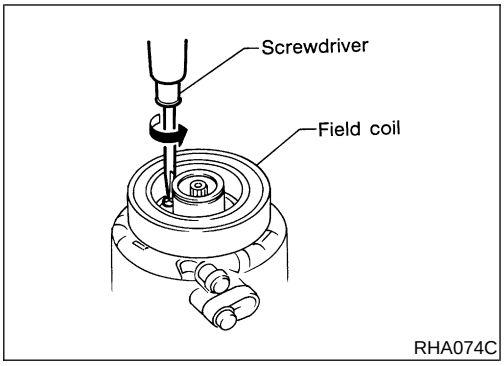

- Remove the three field coil fixing screws and remove the field coil.

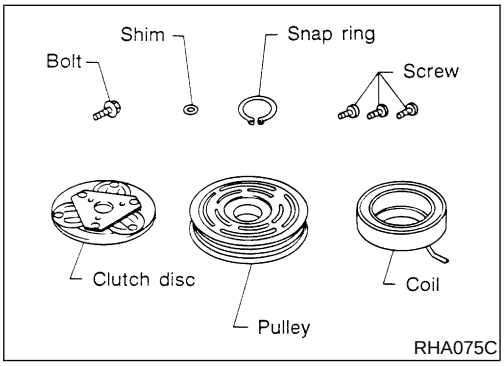

INSPECTION

NEHA0281

Clutch Disc

NEHA0281S01

If the contact surface shows signs of damage due to excessive heat, replace clutch disc and pulley.

Pulley

NEHA0281S02

Check the appearance of the pulley assembly. If contact surface of pulley shows signs of excessive grooving, replace clutch disc and pulley. The contact surfaces of the pulley assembly should be cleaned with a suitable solvent before reinstallation.

Coil

NEHA0281S03

Check coil for loose connection or cracked insulation.

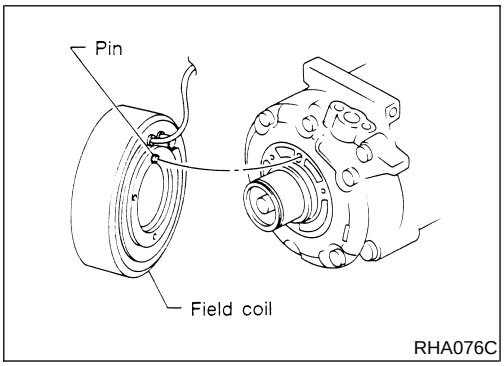

INSTALLATION

NEHA0282

- Install the field coil.
- **Be sure to align the coil's pin with the hole in the compressor's front head.**
- Install the field coil harness clip using a screwdriver.

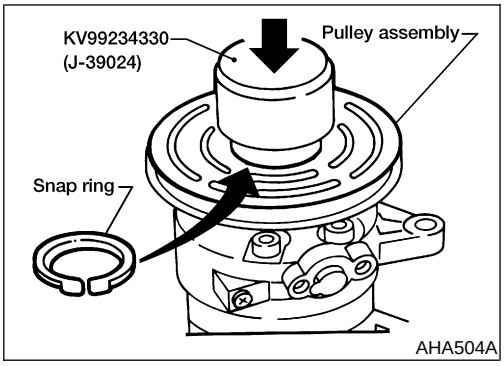

- Install the pulley assembly using the installer and a hand press, and then install the snap ring using snap ring pliers.

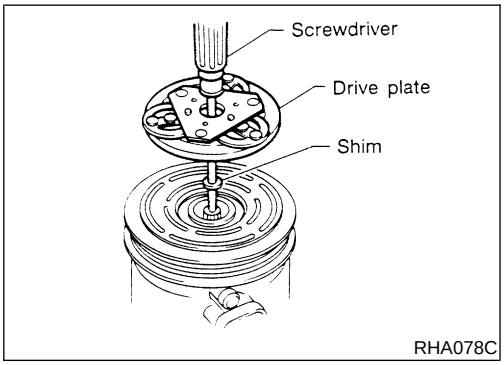

- Install the drive plate on the drive shaft, together with the original shim(s). Press the drive plate down by hand.

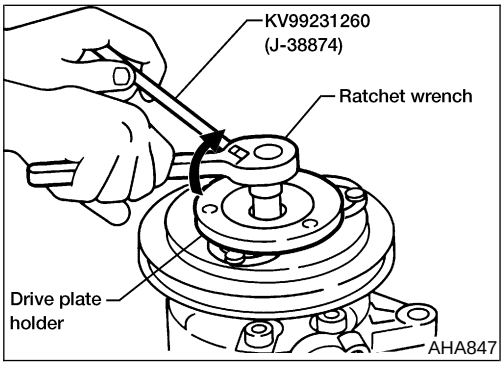

- Using the holder to prevent drive plate rotation, tighten the bolt to 12 to 15 N·m (1.2 to 1.5 kg-m, 9 to 11 ft-lb) torque.
- **After tightening the bolt, check that the pulley rotates smoothly.**

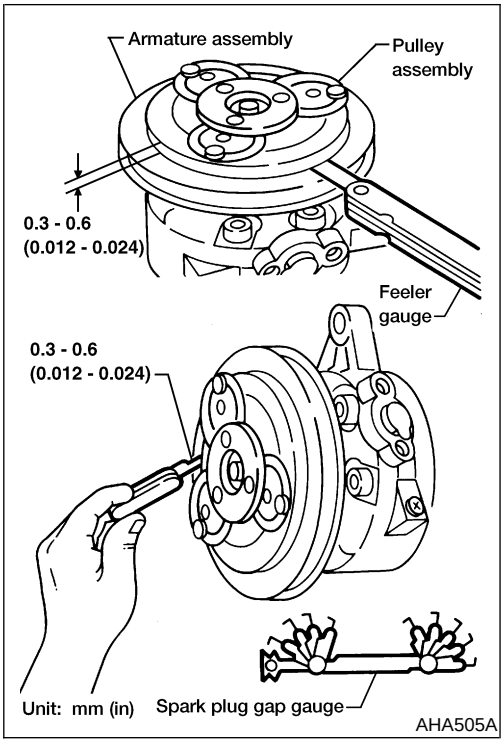

- Check clearance all the way around the clutch disc.

  Disc-to-pulley clearance:

  0.3 - 0.6 mm (0.012 - 0.024 in)

  If the specified clearance is not obtained, replace adjusting spacer and recheck.

Break-in Operation

NEHA0282S01

When replacing magnet clutch assembly, always conduct the break-in operation. This is done by engaging and disengaging the clutch about 30 times. Break-in operation raises the level of transmitted torque.

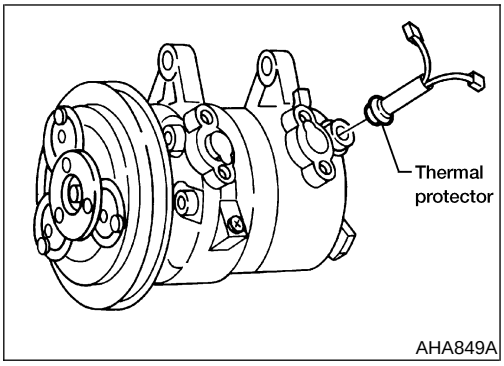

Thermal Protector

INSPECTION

NEHA0284

- When servicing, do not allow foreign matter to get into compressor.
- Check continuity between two terminals.

Refrigerant Lines

REMOVAL AND INSTALLATION

KA24DE Models

NEHA0101

NEHA0101S02

SEC. 271 • 274 • 276

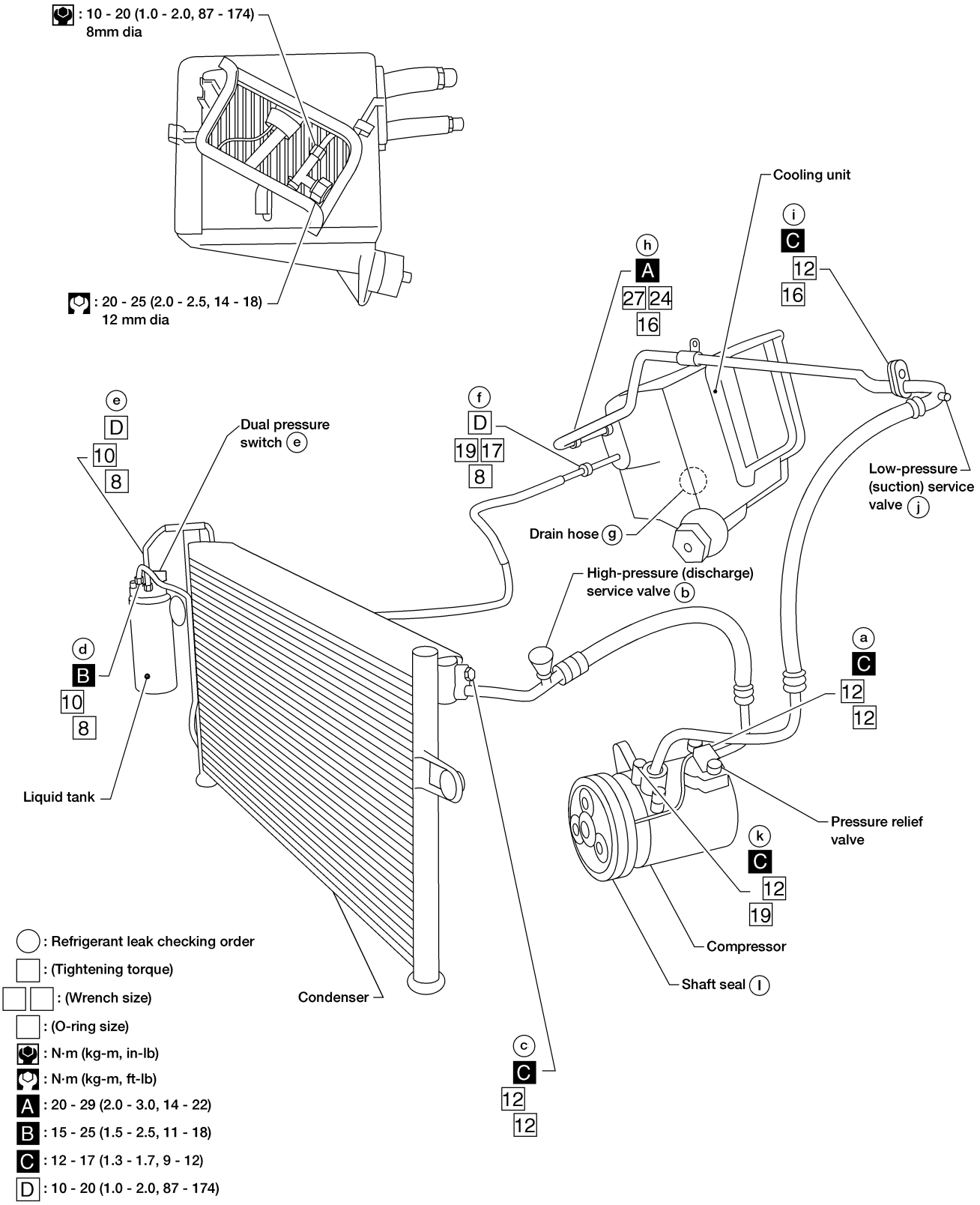

WHA286

VG33E and VG33ER Models

NEHA0101S03

SEC. 271 • 274 • 276

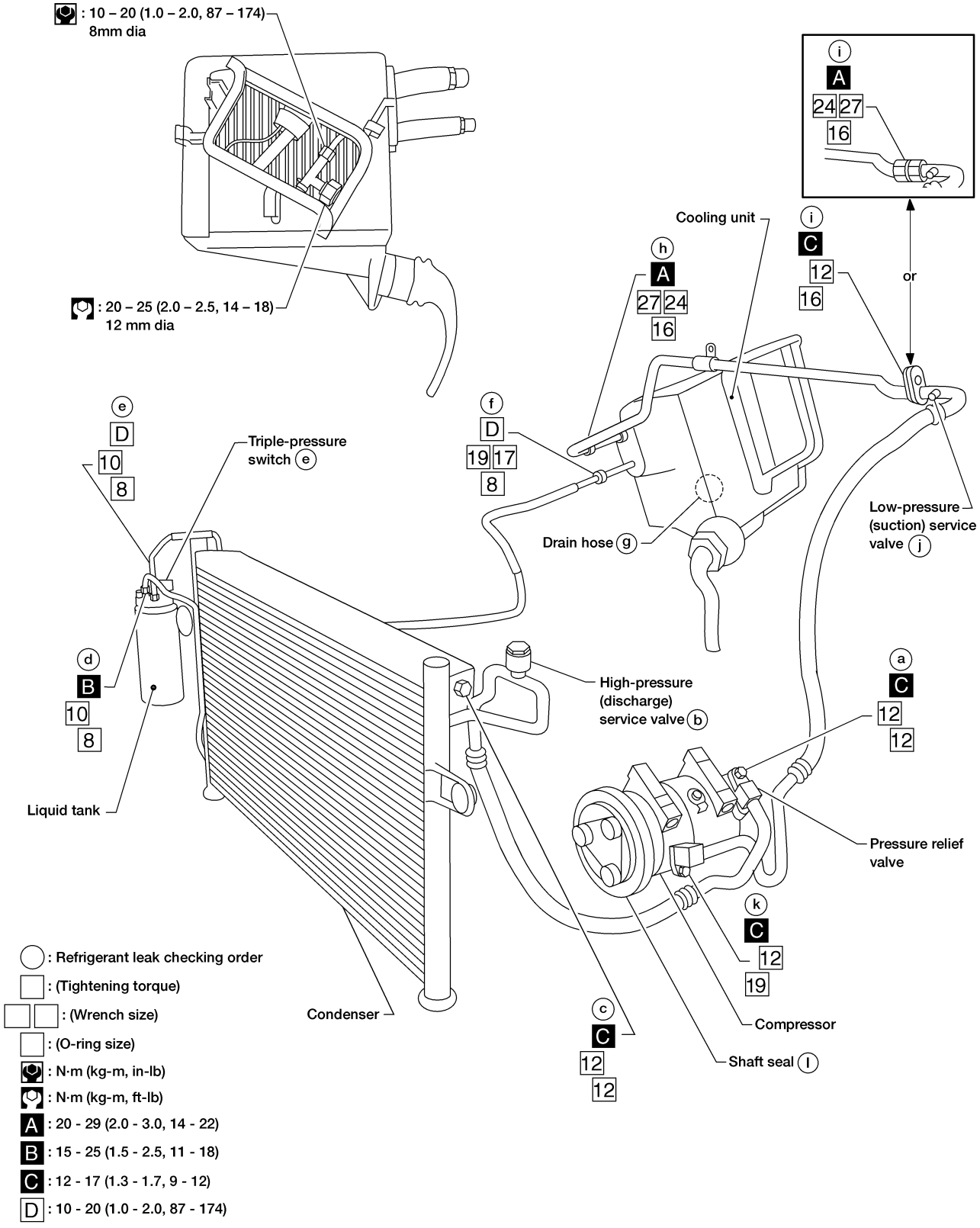

WHA287

Checking for Refrigerant Leaks

NEHA0296

PRELIMINARY CHECK

NEHA0296S01

- Perform a visual inspection of all refrigeration parts, fittings, hoses and components for signs of A/C lubricant leakage, damage and corrosion. A/C lubricant leakage may indicate an area of refrigerant leakage. Allow extra inspection time in these areas when using either an electronic refrigerant leak detector or fluorescent dye leak detector.
- If dye is observed, confirm the leak with an electronic refrigerant leak detector. It is possible a prior leak was repaired and not properly cleaned.
- When searching for leaks, do not stop when one leak is found but continue to check for additional leaks at all system components and connections.
- When searching for refrigerant leaks using an electronic leak detector, move the probe along the suspected leak area at 25 - 50 mm (1 - 2 in)/sec. and no further than 6 mm (1/4 in) from the component.

NOTE:
Moving the electronic leak detector probe slower and closer to the suspected leak area will improve the chances of finding a leak.

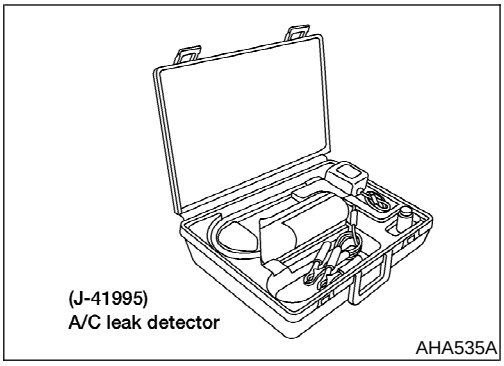

Electronic Refrigerant Leak Detector

NEHA0297

PRECAUTIONS FOR HANDLING LEAK DETECTOR

NEHA0297S01

When performing a refrigerant leak check, use a J-41995 A/C leak detector or equivalent. Ensure that the instrument is calibrated and set properly per the operating instructions.
The leak detector is a delicate device. In order to use the leak detector properly, read the operating instructions and perform any specified maintenance.

- **Other gases in the work area or substances on the A/C components, for example, anti-freeze, windshield washer fluid, solvents and lubricants, may falsely trigger the leak detector. Make sure the surfaces to be checked are clean. Clean with a dry cloth or blow off with shop air.**
- **Do not allow the sensor tip of the detector to contact any substance. This can also cause false readings and may damage the detector.**

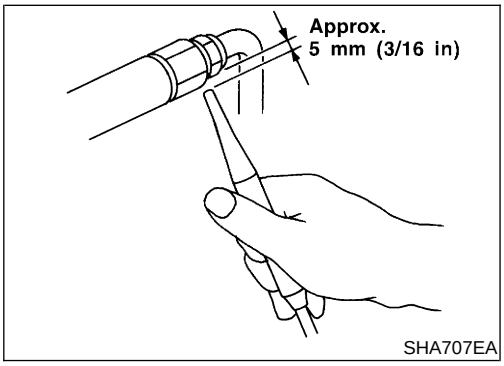

1. Position probe approximately 5 mm (3/16 in) away from point to be checked.

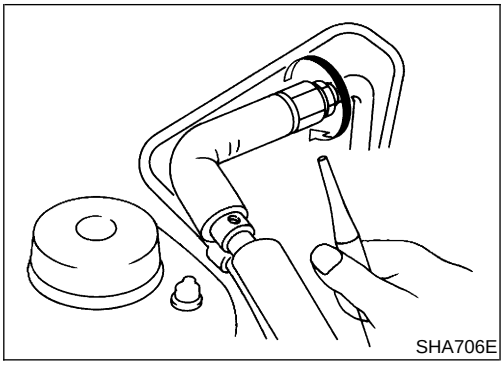
SHA706E

2. When testing, circle each fitting completely with probe.

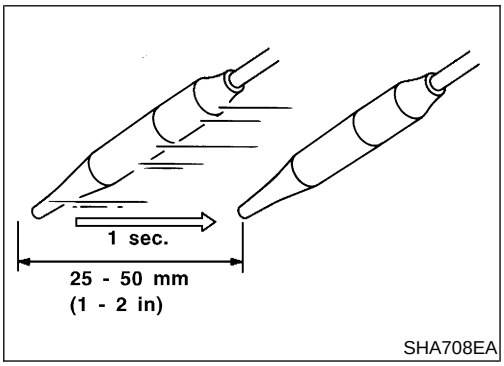

SHA708EA

3. Move probe along component approximately 25 - 50 mm (1 - 2 in)/sec.

CHECKING PROCEDURE

NEHA0297S02

To prevent inaccurate or false readings, make sure there is no refrigerant vapor, shop chemicals or smoke in the vicinity of the vehicle. Perform the leak test in a calm area (low air/wind movement) so that the leaking refrigerant is not dispersed.

1. Turn engine off.
2. Connect a suitable A/C manifold gauge set to the A/C service ports.
3. Check if the A/C refrigerant pressure is at least 345 kPa (3.52 kg/cm^2, 50 psi) above 16°C (61°F). If less than specification, recover/evacuate and recharge the system with the specified amount of refrigerant. Refer to "HFC-134a (R-134a) Service Procedure", HA-66.

NOTE:
At temperatures below 16°C (61°F), leaks may not be detected since the system may not reach 345 kPa (3.52 kg/cm^2, 50 psi).

4. Conduct the leak test from the high side (compressor discharge **a** to evaporator **f**) to the low side (evaporator drain hose **g** to compressor suction **k**). Refer to "Refrigerant Lines", HA-79. Perform a leak check for the following areas carefully. Clean the component to be checked and move the leak detector probe completely around the connection/component.

- **Compressor**
  Check the fitting of high and low pressure hoses, relief valve and shaft seal.
- **Liquid tank**
  Check the pressure switch, tube fitting, weld seams and the fusible plug mounts.
- **Service valves**
  Check all around the service valves. Ensure service valve caps are secured on the service valves (to prevent leaks).

NOTE:
After removing A/C manifold gauge set from service valves, wipe any residue from valves to prevent any false readings by leak detector.

- **Cooling unit (Evaporator)**
  With engine OFF, turn blower fan on "High" for at least 15 seconds to dissipate any refrigerant trace in the cooling unit. Wait a minimum of 10 minutes accumulation time (refer to the manufacturer's recommended procedure for actual wait time) before inserting the leak detector probe into the drain hose. (Keep the probe inserted for at least ten seconds.) Use caution not to contaminate the probe tip with water or dirt that may be in the drain hose.

5. If a leak detector detects a leak, verify at least once by blowing compressed air into area of suspected leak, then repeat check as outlined above.
6. Do not stop when one leak is found. Continue to check for additional leaks at all system components and connection.
   If no leaks are found, perform steps 7 through 10.
7. Start engine.
8. Set the heater A/C control as follows:

a. A/C switch ON
b. Face mode
c. Recirculation switch ON
d. Max cold temperature
e. Fan speed high

9. Run engine at 1,500 rpm for at least 2 minutes.
10. Turn engine off and perform leak check again following steps 4 through 6 above.

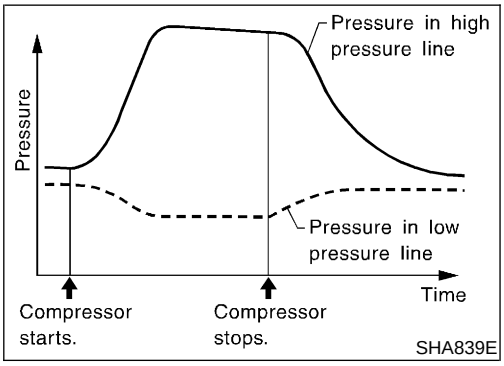

Refrigerant leaks should be checked immediately after stopping the engine. Begin with the leak detector at the compressor. The pressure on the high pressure side will gradually drop after refrigerant circulation stops and pressure on the low pressure side will gradually rise, as shown in the graph. Some leaks are more easily detected when pressure is high.

11. Before connecting ACR4 to vehicle, check ACR4 gauges. No refrigerant pressure should be displayed. If pressure is displayed, recover refrigerant from equipment lines and then check refrigerant purity.
12. Confirm refrigerant purity in supply tank using ACR4 and refrigerant identifier. Refer to "Contaminated Refrigerant", HA-3.
13. Confirm refrigerant purity in vehicle A/C system using ACR4 and refrigerant identifier. Refer to "Contaminated Refrigerant", HA-3.
14. Discharge A/C system using approved refrigerant recovery equipment. Refer to "Discharging Refrigerant", HA-66. Repair the leaking fitting or component as necessary.
15. Evacuate and recharge A/C system. Refer to "Evacuating System and Charging Refrigerant", HA-66. Perform the leak test to confirm no refrigerant leaks.
16. Conduct A/C performance test to ensure system works properly.

Fluorescent Dye Leak Detector

NEHA0298

PRECAUTIONS FOR FLUORESCENT DYE LEAK DETECTION

NEHA0298S01

- The fluorescent dye leak detector is not a replacement for an electronic refrigerant leak detector. The fluorescent dye leak detector should be used in conjunction with an electronic refrigerant leak detector (J-41995) to pinpoint refrigerant leaks.
- For your safety and your customer's satisfaction, read and follow all manufacturer's operating instructions and precautions prior to performing the work.
- Refer to "Precautions for Leak Detection Dye", HA-4.

CHECKING SYSTEM FOR LEAKS USING THE FLUORESCENT LEAK DETECTOR

NEHA0298S02

1. Check A/C system for leaks using the UV lamp and safety glasses (J-42220) in a low sunlight area (area without windows preferable). Illuminate all components, fittings and lines. The dye will appear as a bright green/yellow area at the point of leakage. Fluorescent dye observed at the evaporator drain opening indicates an evaporator core assembly (tubes, core or TXV) leak.
2. If the suspected area is difficult to see, use an adjustable mirror or wipe the area with a clean shop rag or cloth, then check the cloth with the UV lamp for dye residue.
3. Confirm any suspected leaks with an approved electronic refrigerant leak detector.
4. After the leak is repaired, remove any residual dye using dye cleaner (J-43872) to prevent future misdiagnosis.
5. Perform a system performance check and verify the leak repair with an approved electronic refrigerant leak detector.

DYE INJECTION

NEHA0298S03

(This procedure is only necessary when re-charging the system or when the compressor has seized and was replaced.)
Refer to "Precautions for Leak Detection Dye", HA-4.

1. Check A/C system static (at rest) Pressure. Pressure must be at least 345 kPa (3.52 kg/cm^2, 50 psi).
2. Pour one bottle (1/4 ounce /7.4 cc) of the A/C refrigerant dye into the injector tool (J-41459).
3. Connect the injector tool to the A/C LOW PRESSURE side service fitting.
4. Start engine and switch A/C ON.
5. When the A/C operating (compressor running), inject one bottle (1/4 ounce /7.4 cc) of fluorescent dye through the low-pressure service valve using dye injector tool J-41459 (refer to the manufacturer's operating instructions).
6. With the engine still running, disconnect the injector tool from the service fitting.

CAUTION:
Be careful not to allow dye to spray or drip when disconnecting the injector from the system.

NOTE:
If repairing the A/C system or replacing a component, pour the dye directly into the open system connection and proceed with the service procedures.

7. Operate the A/C system for a minimum of 20 minutes to mix

the dye with the system oil. Depending on the leak size, operating conditions and location of the leak, it may take from minutes to days for the dye to penetrate a leak and become visible.

Belt

TENSION ADJUSTMENT

NEHA0103

- **Refer to *MA-16* (KA24DE models) or *MA-25* (VG33E models or VG33ER models), "Checking Drive Belts".**

IACV-FICD Solenoid Valve

INSPECTION

NEHA0104

- **Refer to *EC-609* (KA24DE models), *EC-1210* (VG33E models) or *EC-1813* (VG33ER models), "Component Description".**

Heater Core

NEHA0171

SEC. 270

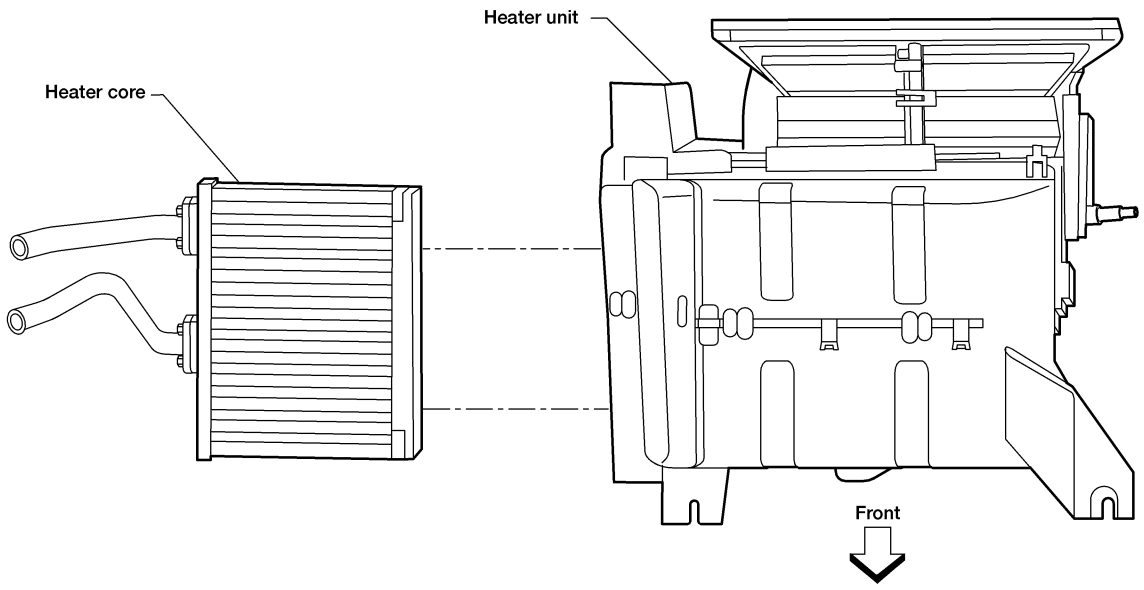

AHA563A

REMOVAL

NEHA0171S01

1. Drain cooling system. Refer to ***MA-17*** (KA24DE models) or ***MA-27*** (VG33E and VG33ER models), “Changing Engine Coolant”.
2. Disconnect the two heater hoses from the engine compartment side.
3. Remove the cooling unit. Refer to “Evaporator Core”, HA-87.
4. Remove the steering member assembly. Refer to ***BT-20***, “Removal and Installation”.
5. Remove the heater unit.
6. Remove the heater core.

INSTALLATION

NEHA0171S02

Installation is the reverse order of removal. Inspect system for coolant leaks. Refer to ***MA-17*** (KA24DE models) or ***MA-27*** (VG33E and VG33ER models), “Changing Engine Coolant”.

Evaporator Core

NEHA0172

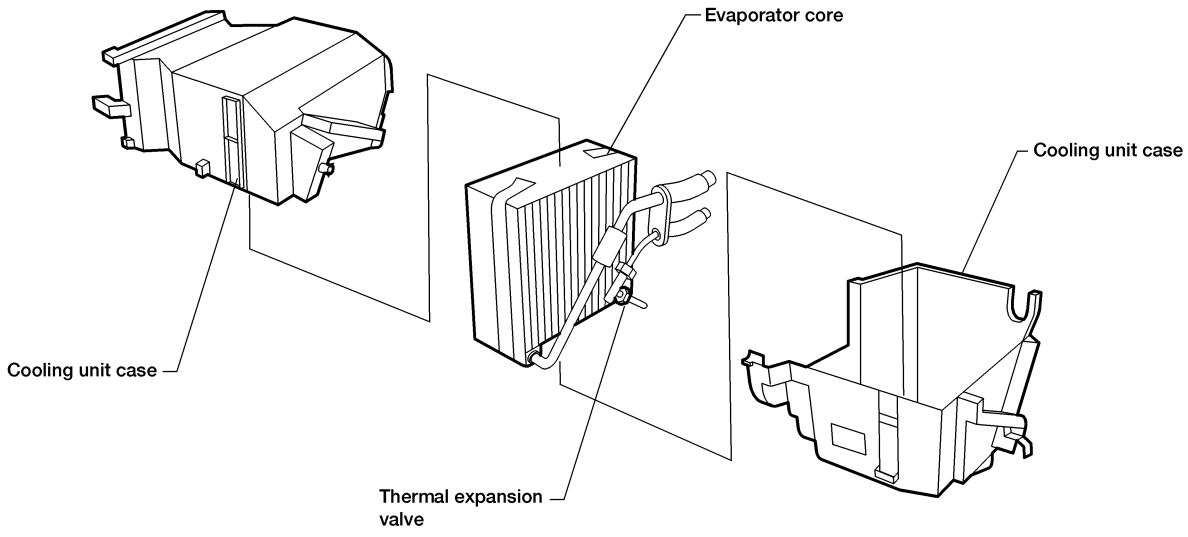

AHA536A

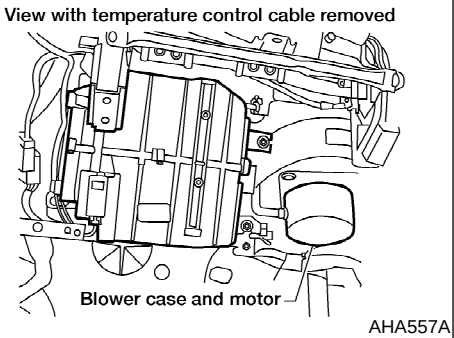

AHA557A

REMOVAL

NEHA0172S01

1. Discharge the A/C system. Refer to “Discharging Refrigerant”, HA-66.
2. Disconnect the two evaporator core refrigerant lines from the engine compartment side.
- Cap the refrigerant lines to prevent moisture from entering the system.
3. Remove the glove box and mating trim. Refer to ***BT-20***, “Removal and Installation”.
4. Disconnect the thermal amp. connector.
5. Remove the cooling unit.
6. Separate the cooling unit case, and remove the evaporator.

INSTALLATION

NEHA0172S02

Installation is the reverse order of removal.

Recharge the A/C system.

Inspect system for refrigerant leaks. Refer to “Checking for Refrigerant Leaks”, HA-81.

Manual

GENERAL SPECIFICATIONS

=NEHA0169

Compressor

NEHA0169S01

Model	DKV-14C
Type	Vane rotary
Displacement cm^3 (cu in)/rev.	140 (8.54)
Direction of rotation	Clockwise (Viewed from drive end)
Drive belt	A type

Lubricant

NEHA0169S02

Model		ZEXEL make DKV-14C
Name		Nissan A/C System Lubricant PAG Type R
Part No.*		KLH00–PAGR0
Capacity mℓ (US fl oz, Imp fl oz)	Total in system	200 (6.8, 7.0)
	Compressor (Service Part) charging amount	200 (6.8, 7.0)

*: Always check with the Parts Department for the latest parts information.

Refrigerant

NEHA0169S03

Type		R-134a
Capacity	kg (lb)	0.60 - 0.70 (1.32 - 1.54)
	g (oz)	600 - 700 (21.16 - 24.69)

INSPECTION AND ADJUSTMENT

NEHA0170

Engine Idling Speed (When A/C is ON)

NEHA0170S01

- Refer to ***EC-59*** (KA24DE models), ***EC-662*** (VG33E models) or ***EC-1262*** (VG33ER models), "Idle Speed/Ignition Timing/Idle Mixture Ratio Adjustment".

Belt Tension

NEHA0170S02

- Refer to ***MA-16*** (KA24DE models) or ***MA-25*** (VG33E models or VG33ER models), "Checking Drive Belts".

Magnet Clutch

NEHA0170S03

Model	DKV-14C
Clutch disc-pulley clearance mm (in)	0.3 - 0.6 (0.012 - 0.024)

STARTING & CHARGING SYSTEM

SECTION SC

CONTENTS

PRECAUTIONS 2
Supplemental Restraint System (SRS) ″AIR BAG″ and ″SEAT BELT PRE-TENSIONER″ 2
Wiring Diagrams and Trouble Diagnosis 2
PREPARATION 3
Special Service Tool 3
BATTERY 4
How to Handle Battery 4
METHODS OF PREVENTING OVER-DISCHARGE 4
CHECKING ELECTROLYTE LEVEL 4
SPECIFIC GRAVITY CHECK 6
CHARGING THE BATTERY 7
Trouble Diagnoses with Battery/Starting/Charging System Tester 7
DIAGNOSTIC RESULT ITEM CHART 9
STARTING SYSTEM 10
System Description 10
KA24DE M/T MODELS 10
KA24DE A/T MODELS 11
VG33E AND VG33ER M/T MODELS 12
VG33E AND VG33ER A/T MODELS 13
Wiring Diagram - START - 14
KA24DE M/T MODELS 14
KA24DE A/T MODELS 15
VG33E AND VG33ER M/T MODELS 16
VG33E A/T MODELS 17
VG33ER A/T MODELS 18
Trouble Diagnoses with Battery/Starting/Charging System Tester 19
DIAGNOSTIC RESULT ITEM CHART 20
WORK FLOW 21
DIAGNOSTIC PROCEDURE 1 22
DIAGNOSTIC PROCEDURE 2 24
MINIMUM SPECIFICATION OF CRANKING VOLTAGE REFERENCING COOLANT TEMPERATURE 25
Construction 26
KA24DE MODELS 26
VG33E AND VG33ER MODELS 27
Removal and Installation 28
KA24DE MODELS 28
VG33E AND VG33ER MODELS 28
Pinion/Clutch Check 28
CHARGING SYSTEM 29
System Description 29
Wiring Diagram - CHARGE - 30
KA24DE MODELS 30
VG33E AND VG33ER MODELS 31
Trouble Diagnoses with Battery/Starting/Charging System Tester 32
DIAGNOSTIC RESULT ITEM CHART 34
WORK FLOW 35
DIAGNOSTIC PROCEDURE 1 36
DIAGNOSTIC PROCEDURE 2 37
DIAGNOSTIC PROCEDURE 3 38
MALFUNCTION INDICATOR 39
Construction 39
KA24DE MODELS 39
VG33E AND VG33ER MODELS 40
Removal and Installation 41
KA24DE MODELS 41
VG33E AND VG33ER MODELS 41
SERVICE DATA AND SPECIFICATIONS (SDS) 42
Battery 42
Starter 42
Generator 42

Supplemental Restraint System (SRS) “AIR BAG” and “SEAT BELT PRE-TENSIONER”

NESC0001

The Supplemental Restraint System such as “AIR BAG” and “SEAT BELT PRE-TENSIONER” used along with a seat belt, help to reduce the risk or severity of injury to the driver and front passenger in a frontal collision. The Supplemental Restraint System consists of air bag modules (located in the center of the steering wheel and in the instrument panel on the passenger side), seat belt pre-tensioners, a diagnosis sensor unit, warning lamp, wiring harness, and spiral cable.

The vehicle (except Crew Cab model) is equipped with a passenger air bag deactivation switch. Because no rear seat exists where a rear-facing child restraint can be placed, the switch is designed to turn off the passenger air bag so that a rear-facing child restraint can be used in the front passenger seat. The switch is located in the center of the instrument panel, near the ashtray. When the switch is turned to the ON position, the passenger air bag is enabled and could inflate in a frontal collision. When the switch is turned to the OFF position, the passenger air bag is disabled and will not inflate in a frontal collision. A passenger air bag OFF indicator on the instrument panel lights up when the passenger air bag is switched OFF. The driver air bag always remains enabled and is not affected by the passenger air bag deactivation switch.

Information necessary to service the system safely is included in the **RS section** of this Service Manual.

WARNING:

- **To avoid rendering the SRS inoperative, which could increase the risk of personal injury or death in the event of a collision which would result in air bag inflation, all maintenance should be performed by an authorized NISSAN dealer.**
- **Improper maintenance, including incorrect removal and installation of the SRS, can lead to personal injury caused by unintentional activation of the system. For removal of Spiral Cable and Air Bag Module, see the RS section.**
- **Do not use electrical test equipment on any circuit related to the SRS unless instructed to in this Service Manual. Spiral cable and wiring harnesses (except “SEAT BELT PRE-TENSIONER”) covered with yellow insulation either just before the harness connectors or for the complete harness are related to the SRS.**
- **The vehicle (except Crew Cab model) is equipped with a passenger air bag deactivation switch which can be operated by the customer. When the passenger air bag is switched OFF, the passenger air bag is disabled and will not inflate in a frontal collision. When the passenger air bag is switched ON, the passenger air bag is enabled and could inflate in a frontal collision. After SRS maintenance or repair, make sure the passenger air bag deactivation switch is in the same position (ON or OFF) as when the vehicle arrived for service.**

Wiring Diagrams and Trouble Diagnosis

NESC0002

When you read wiring diagrams, refer to the following:

- ***GI-11***, “HOW TO READ WIRING DIAGRAMS”
- ***EL-9***, “POWER SUPPLY ROUTING” for power distribution circuit

When you perform trouble diagnosis, refer to the following:

- ***GI-34***, “How to Follow Test Groups in Trouble Diagnoses”
- ***GI-23***, “HOW TO PERFORM EFFICIENT DIAGNOSIS FOR AN ELECTRICAL INCIDENT”

Special Service Tool

NESC0022

Tool number Tool name	Description
J-44373 Model 620 Battery/Starting/Charging system tester	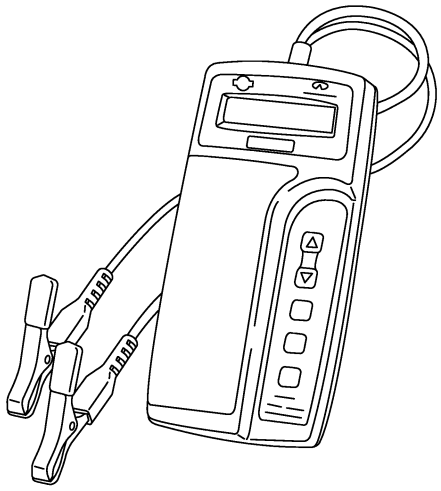 SEL403X

How to Handle Battery

NESC0003

CAUTION:

- **If it becomes necessary to start the engine with a booster battery and jumper cables, use a 12-volt booster battery.**
- **After connecting battery cables, ensure that they are tightly clamped to battery terminals for good contact.**
- **Never add distilled water through the hole used to check specific gravity.**

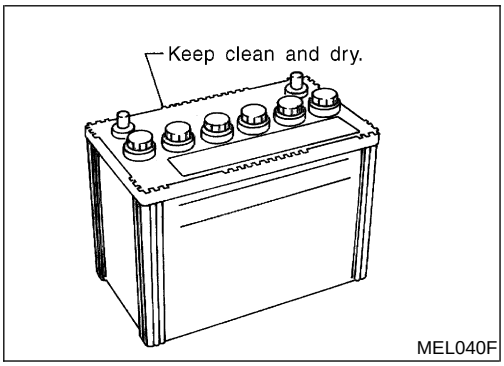

METHODS OF PREVENTING OVER-DISCHARGE

NESC0003S01

The following precautions must be taken to prevent over-discharging a battery.

- The battery surface (particularly its top) should always be kept clean and dry.
- The terminal connections should be clean and tight.
- At every routine maintenance, check the electrolyte level. This also applies to batteries designated as “low maintenance” and “maintenance-free”.

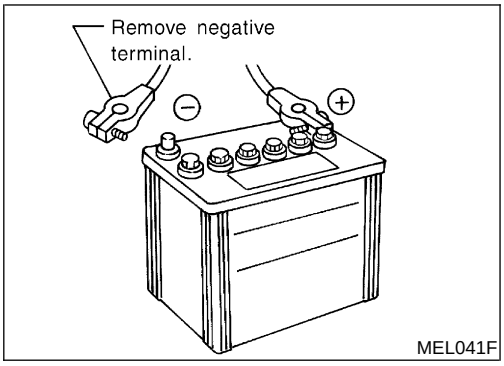

- When the vehicle is not going to be used over a long period of time, disconnect the negative battery terminal. (If the vehicle has an extended storage switch, turn it off.)

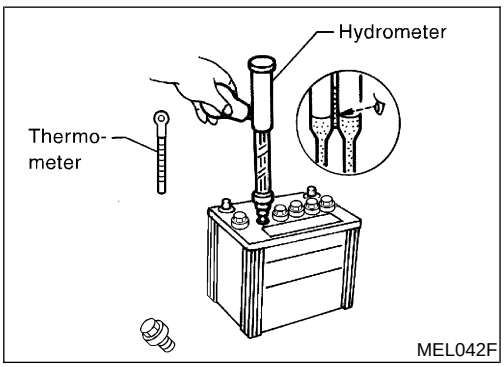

- Check the charge condition of the battery. Periodically check the specific gravity of the electrolyte. Keep a close check on charge condition to prevent over-discharge.

CHECKING ELECTROLYTE LEVEL

NESC0003S02

WARNING:

Do not allow battery fluid to come in contact with skin, eyes, fabrics, or painted surfaces. After touching a battery, do not touch or rub your eyes until you have thoroughly washed your hands. If acid contacts eyes, skin or clothing, immediately flush with water for 15 minutes and seek medical attention.

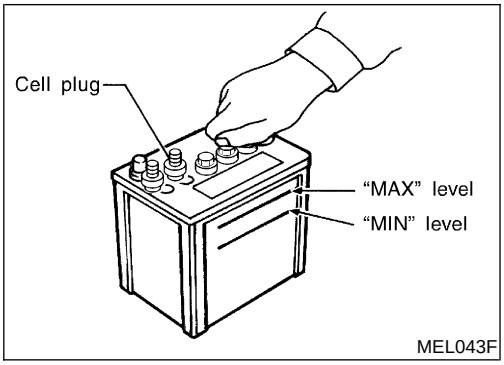

- Remove the cell plug using a suitable tool.
- Add distilled water up to the MAX level.

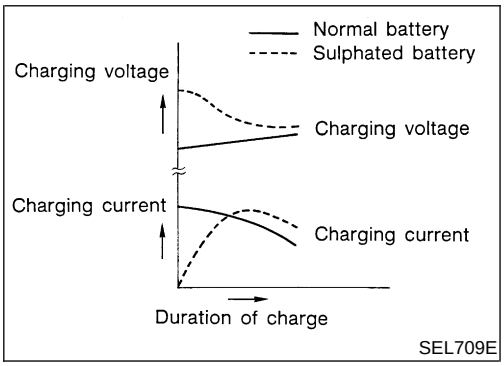

Sulphation

NESC0003S0201

A battery will be completely discharged if it is left unattended for a long time and the specific gravity will become less than 1.100. This may result in sulphation on the cell plates.
To determine if a battery has been "sulphated", note its voltage and current when charging it. As shown in the figure, less current and higher voltage are observed in the initial stage of charging sulphated batteries.
A sulphated battery may sometimes be brought back into service by means of a long, slow charge, 12 hours or more, followed by a battery capacity test.

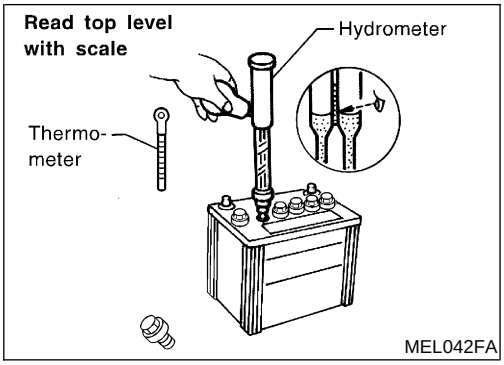

SPECIFIC GRAVITY CHECK

=NESC0003S03

1. Read hydrometer and thermometer indications at eye level.

2. Use the chart below to correct your hydrometer reading according to electrolyte temperature.

Hydrometer Temperature Correction

NESC0003S0301

Battery electrolyte temperature °C (°F)	Add to specific gravity reading
71 (160)	0.032
66 (150)	0.028
60 (140)	0.024
54 (129)	0.020
49 (120)	0.016
43 (110)	0.012
38 (100)	0.008
32 (90)	0.004
27 (80)	0
21 (70)	−0.004
16 (60)	−0.008
10 (50)	−0.012
4 (39)	−0.016
−1 (30)	−0.020
−7 (20)	−0.024
−12 (10)	−0.028
−18 (0)	−0.032

Corrected specific gravity	Approximate charge condition
1.260 - 1.280	Fully charged
1.230 - 1.250	3/4 charged
1.200 - 1.220	1/2 charged
1.170 - 1.190	1/4 charged
1.140 - 1.160	Almost discharged
1.110 - 1.130	Completely discharged

CHARGING THE BATTERY

=NESC0003S04

CAUTION:

- **Do not "quick charge" a fully discharged battery.**
- **Keep the battery away from open flame while it is being charged.**
- **When connecting the charger, connect the leads first, then turn on the charger. Do not turn on the charger first, as this may cause a spark.**
- **If battery electrolyte temperature rises above 60°C (140°F), stop charging. Always charge battery at a temperature below 60°C (140°F).**

Charging Rates

NESC0003S0401

Amps	Time
50	1 hour
25	2 hours
10	5 hours
5	10 hours

Do not charge at more than 50 ampere rate.

NOTE:

The ammeter reading on your battery charger will automatically decrease as the battery charges. This indicates that the voltage of the battery is increasing normally as the state of charge improves. The charging amps indicated above refer to initial charge rate.

- If, after charging, the specific gravity of any two cells varies more than .050, the battery should be replaced.

Trouble Diagnoses with Battery/Starting/Charging System Tester

NESC0019

CAUTION:

When working with batteries, always wear appropriate eye protection.

NOTE:

- To ensure a complete and thorough diagnosis, the battery, starter and generator test segments must be done as a set from start to finish.
- If battery surface charge is detected while testing, the tester will prompt you to turn on the headlights to remove the surface charge.
- If necessary, the tester will prompt you to determine if the battery temperature is above or below 0°C (32°F). Choose the appropriate selection by pressing the up or down arrow button, then press "ENTER" to make the selection.

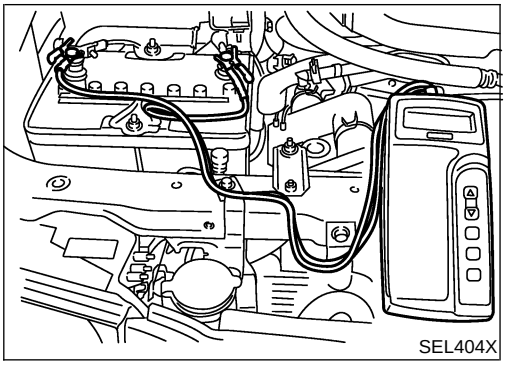
SEL404X

1. Turn off all loads on the vehicle electrical system. Clean or repair as necessary.
2. Visually inspect the battery, battery terminals and cable ends with ignition switch in "OFF" position.

NOTE:
The contact surface between the battery terminals, cable ends and tester leads must be clean for a valid test. A poor connection will prevent testing and a "CHECK CONNECTION" message will appear during the test procedures. If this occurs, clean the battery post and terminals, reconnect them and restart the test.

3. Connect the red tester lead clamp to the positive battery terminal, and the black to the negative terminal.

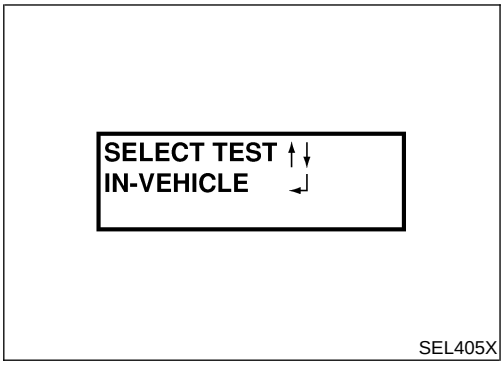

SEL405X

4. The tester will turn on automatically. Using the arrow keys, select "IN-VEHICLE" on the tester and then press the "ENTER" key.

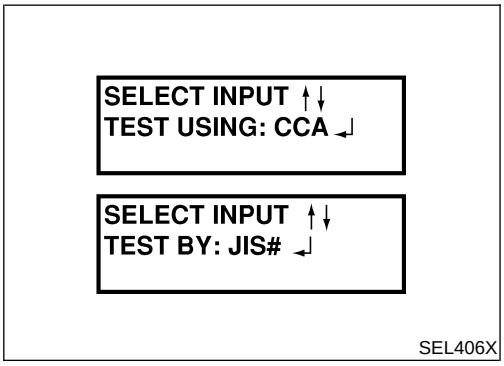

SEL406X

5. Locate the battery type and rating stamped or written on the top case of the battery to be tested.

NOTE:
The battery type and rating will have either of the following.

CCA: Cold Cranking Amps (490 CCA, 550 CCA, etc.)
JIS: Japanese Industrial Standard.
Battery is stamped with a number such as:
80D26L: 80 (rank of output), D (physical size-depth), 26 (width in cm). The last character L (post configuration) is not input into the tester.
The tester requires the rating for the battery be entered exactly as it is written or stamped on the battery. Do not attempt a CCA conversion for JIS stamped batteries. JIS must be input directly.

6. Using the arrow and "ENTER" keys alternately, select the battery type and rating.

NOTE:
The tester lists five choices; CCA, JIS, IEC, DIN, and EN. Only use CCA or JIS.

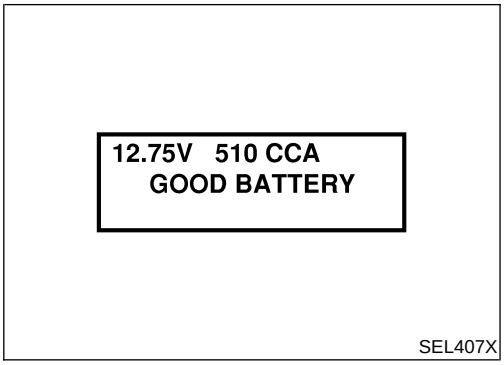

7. Press "ENTER" to begin the test. Diagnosis results are displayed on the tester. Refer to "DIAGNOSTIC RESULT ITEM CHART", SC-9.

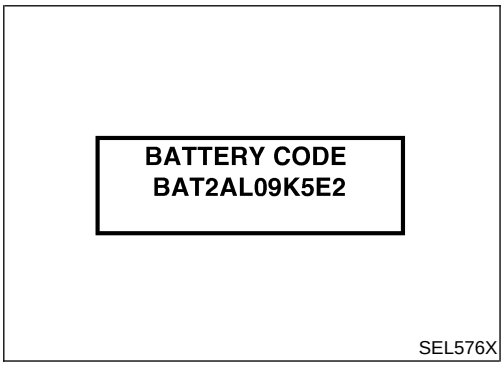

8. Press "ENTER", then test output code is displayed. Record the test output code on the repair order.
9. Toggle back to the "DIAGNOSTIC SCREEN" for test results.

NOTE:

- If necessary, the tester will ask the user to determine if the battery has just been charged. Choose the appropriate selection by pressing the up or down arrow button and then press the "ENTER" button to make the selection.
- When testing a battery installed in a vehicle that has recently been driven, select "BEFORE CHARGE".
- If the battery has just been slow charged due to a "CHARGE & RETEST" decision by the tester, and the tester asks the user "BEFORE CHARGE/AFTER CHARGE", select "AFTER CHARGE".

DIAGNOSTIC RESULT ITEM CHART

NESC0019S01

Diagnostic item	Service procedure
GOOD BATTERY	Battery is OK. Refer to "Trouble Diagnoses", SC-19.
REPLACE BATTERY	Replace battery. Before replacing battery, clean the battery cable clamps and battery posts. Perform battery test again with Battery/Starting/Charging system tester. If second test result is "Replace Battery", then do so. Perform battery test again to confirm repair.
BAD CELL-REPLACE	Replace the battery. Perform battery test again with Battery/Starting/Charging system tester to confirm repair.
GOOD-RECHARGE	Perform the slow battery charging procedure. (Initial rate of charge is 10A for 12 hours.) Perform battery test again with Battery/Starting/Charging system tester.
CHARGE & RETEST	Perform the slow battery charging. (Initial rate of charge is 10A for 12 hours.) Perform battery test again with Battery/Starting/Charging system tester to confirm repair. **NOTE:** **If the tester asks the user "BEFORE CHARGE/AFTER CHARGE", select "AFTER CHARGE".**

System Description

NESC0004

KA24DE M/T MODELS

NESC0004S07

Power is supplied at all times

- through 40A fusible link (letter **e**, located in the fuse and fusible link box)
- to ignition switch terminal B.

With the ignition switch in the START position, power is supplied

- through ignition switch terminal ST
- to clutch interlock relay terminal 5.

With the ignition switch in the ON or START position, power is supplied

- through 10A fuse [No. 11, located in the fuse block (J/B)]
- to clutch interlock relay terminal 2.

Ground is supplied

- to clutch interlock relay terminal 1
- through clutch interlock switch terminal 1
- through clutch interlock switch terminal 2
- through body grounds M14 and M68.

The clutch interlock relay is energized and power is supplied

- through clutch interlock relay terminal 3
- to starter motor windings terminal S.

The starter motor plunger closes and provides a closed circuit between the battery and the starter motor. The starter motor is grounded to the cylinder block. With power and ground supplied, the starter motor operates.

KA24DE A/T MODELS

=NESC0004S06

Power is supplied at all times

- through 40A fusible link (letter **e**, located in the fuse and fusible link box)
- to ignition switch terminal B.

With the ignition switch in the START position, power is supplied

- through ignition switch terminal ST
- to park/neutral position (PNP) relay terminal 5.

With the ignition switch in the ON or START position, power is supplied

- through 10A fuse [No. 11, located in the fuse block (J/B)]
- to PNP switch terminal 1.

With the selector lever in the P or N position, power is supplied

- through PNP switch terminal 2
- to PNP relay terminal 2.

Ground is supplied

- to PNP relay terminal 1
- through body grounds E12 and E54.

The PNP relay is energized and power is supplied

- through PNP relay terminal 3
- to starter motor windings terminal S.

The starter motor plunger closes and provides a closed circuit between the battery and the starter motor. The starter motor is grounded to the cylinder block. With power and ground supplied, the starter motor operates.

System Description (Cont'd)

VG33E AND VG33ER M/T MODELS

=NESC0004S02

Power is supplied at all times

- through 40A fusible link (letter **e**, located in the fuse and fusible link box)
- to ignition switch terminal B.

With the ignition switch in the START position, power is supplied

- through ignition switch terminal ST
- to clutch interlock relay terminal 5.

With the ignition switch in the ON or START position, power is supplied

- through 10A fuse [No. 11, located in the fuse block (J/B)]
- to clutch interlock relay terminal 2 and
- through 10A fuse [No. 5, located in the fuse block (J/B)]
- to vehicle security relay terminal 2 (models with vehicle security).

If the vehicle security system is not triggered (models with vehicle security) and clutch pedal is depressed, ground is supplied

- to clutch interlock relay terminal 1
- through vehicle security relay terminals 3, 4 (models with vehicle security) and
- through clutch interlock switch terminal 1
- through clutch interlock switch terminal 2
- through body grounds M14 and M68.

The clutch interlock relay is energized and power is supplied

- through clutch interlock relay terminal 3
- to starter motor windings terminal S.

The starter motor plunger closes and provides a closed circuit between the battery and the starter motor. The starter motor is grounded to the cylinder block. With power and ground supplied, the starter motor operates. If the vehicle security system is triggered (models with vehicle security), ground is supplied to vehicle security relay terminal 1 through smart entrance control unit terminal 40, disengaging the clutch interlock relay and preventing starter motor operation.

VG33E AND VG33ER A/T MODELS

=NESC0004S03

Power is supplied at all times

- through 40A fusible link (letter **e**, located in the fuse and fusible link box)
- to ignition switch terminal B.

With the ignition switch in the START position, power is supplied

- through ignition switch terminal ST
- to park/neutral position (PNP) relay terminal 5.

With the ignition switch in the ON or START position, power is supplied

- through 7.5A fuse [No. 12, located in the fuse block (J/B)]
- to PNP switch terminal 1 and
- through 10A fuse [No. 5, located in the fuse block (J/B)]
- to vehicle security relay terminal 2 (models with vehicle security).

With the selector lever in the P or N position, power is supplied

- through PNP switch terminal 2
- to PNP relay terminal 2.

If the vehicle security system is not triggered (models with vehicle security), ground is supplied

- to PNP relay terminal 1
- through body grounds E12 and E54 (VG33E models without vehicle security) or
- through body grounds M14 and M68 (VG33ER models without vehicle security) or
- through vehicle security relay terminals 3, 4 (models with vehicle security) and
- through body grounds M14 and M68.

The PNP relay is energized and power is supplied

- through PNP relay terminal 3
- to starter motor windings terminal S.

The starter motor plunger closes and provides a closed circuit between the battery and the starter motor. The starter motor is grounded to the cylinder block. With power and ground supplied, the starter motor operates. If the vehicle security system is triggered (models with vehicle security), ground is supplied to vehicle security relay terminal 1 through smart entrance control unit terminal 40, disengaging the PNP relay and preventing starter motor operation.

Wiring Diagram — START —

NESC0005

KA24DE M/T MODELS

NESC0005S05

SC-START-01

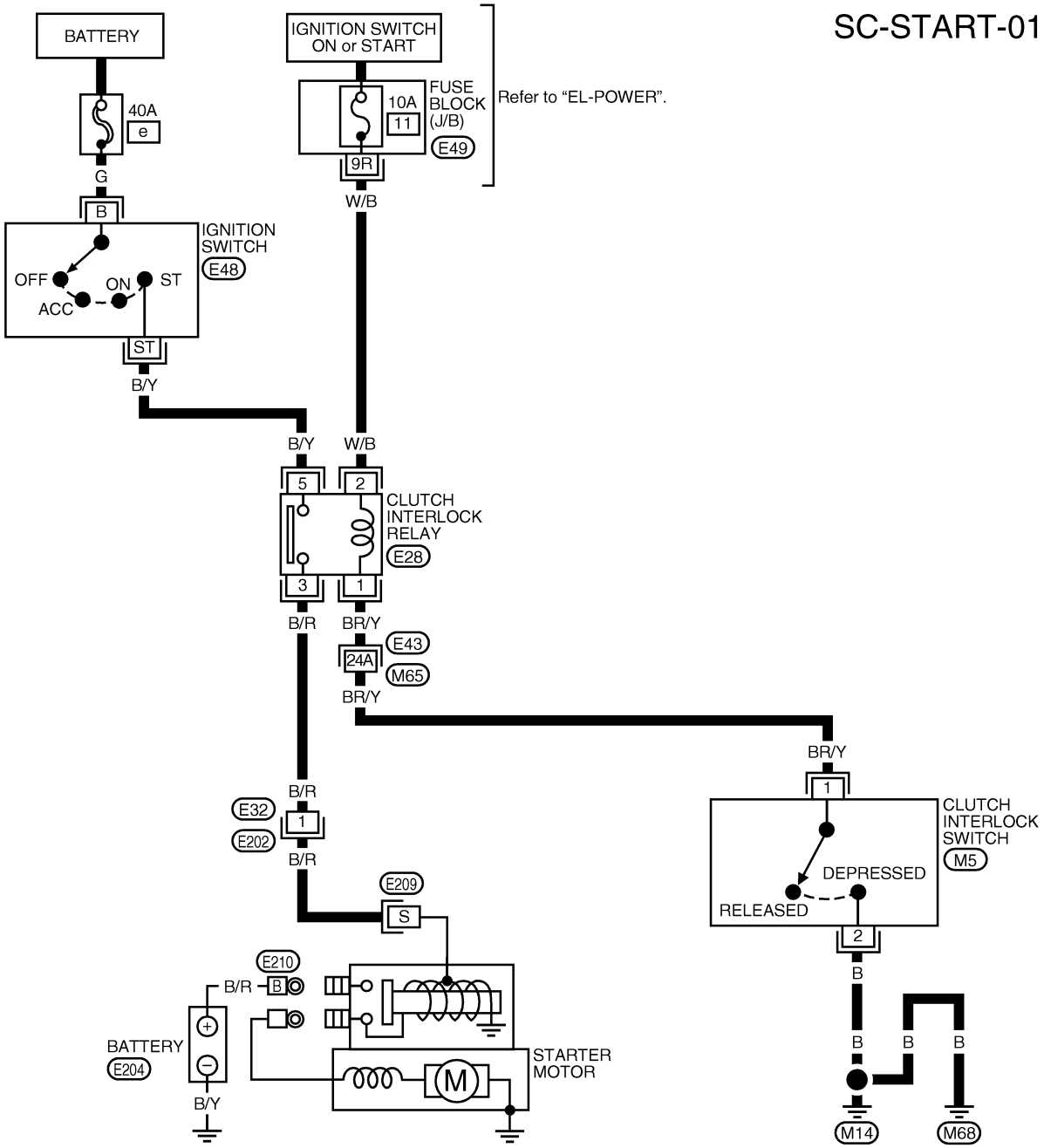

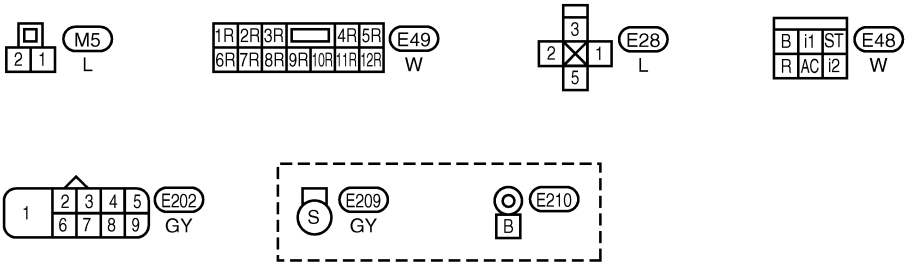

Refer to the following.
M65 , E43 -SUPER MULTIPLE JUNCTION (SMJ)

LSC026

KA24DE A/T MODELS

NESC0005S06

SC-START-02

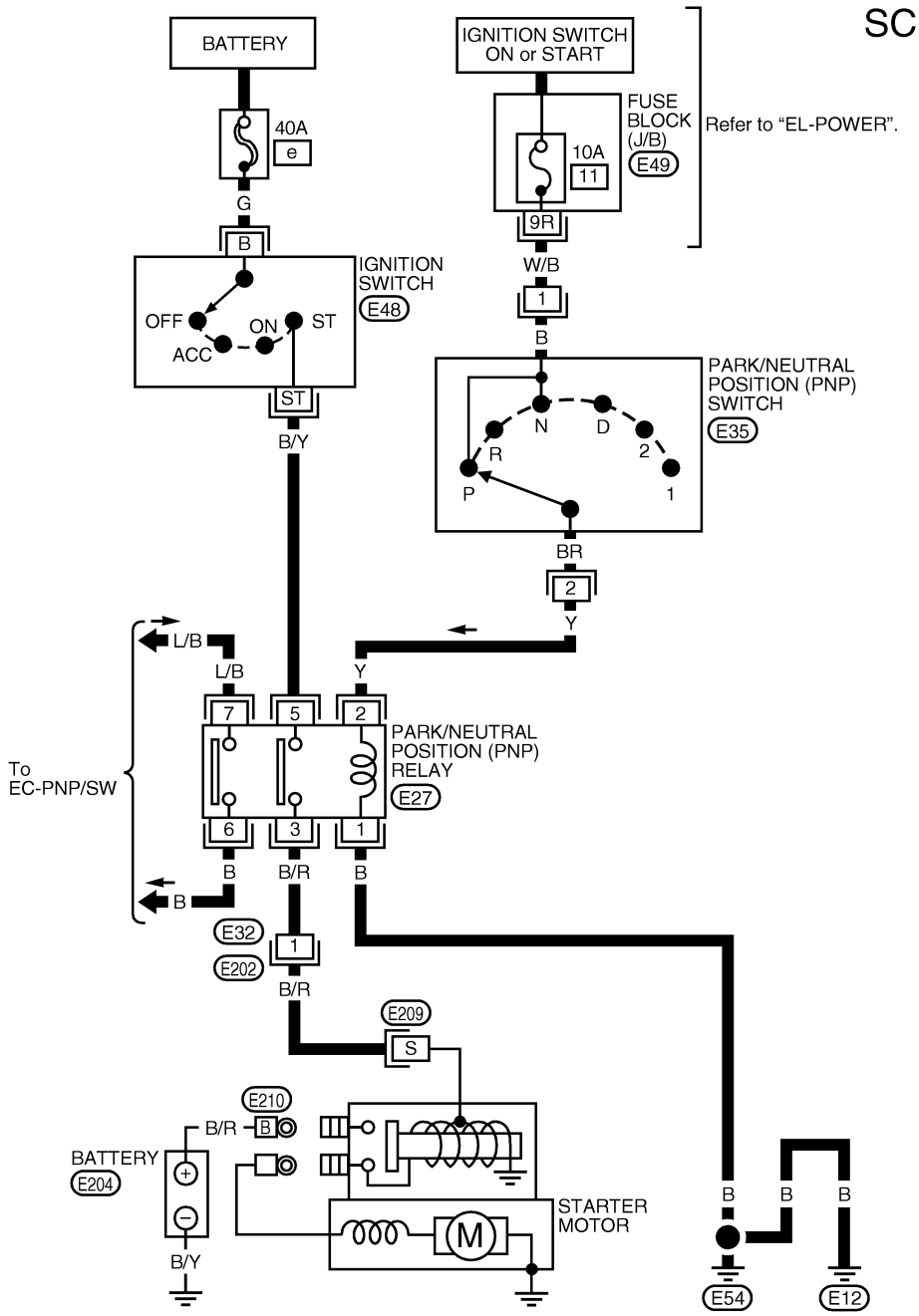

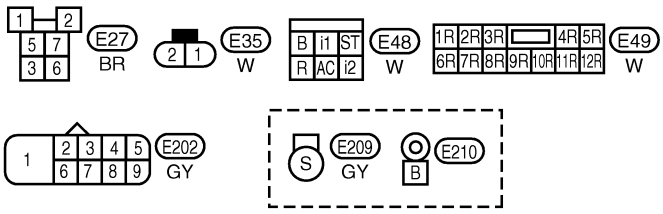

LSC031

Wiring Diagram — START — (Cont'd)

VG33E AND VG33ER M/T MODELS

NESC0005S03

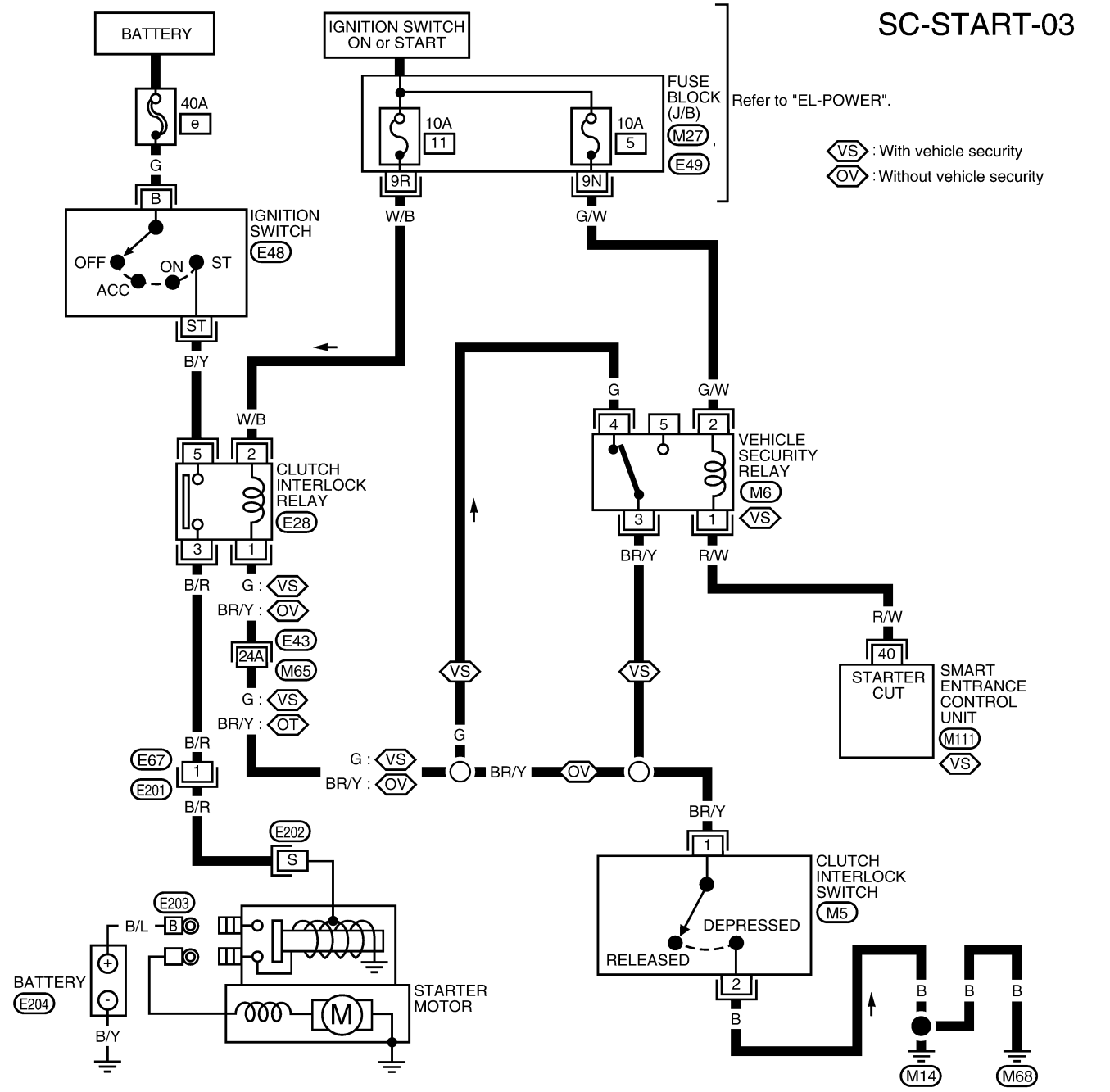

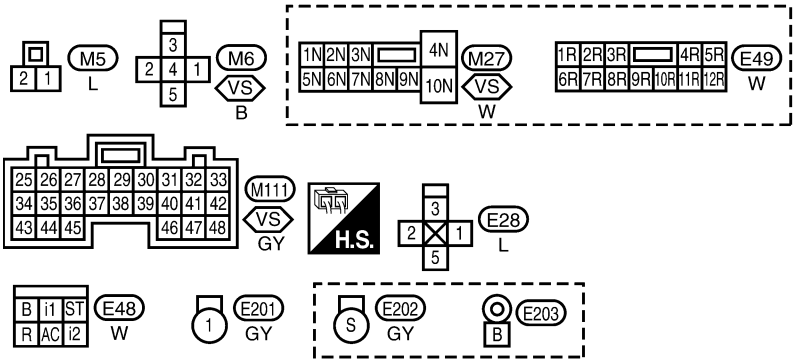

Refer to the following.
M65 , E43 -SUPER MULTIPLE JUNCTION (SMJ)

LSC032

VG33E A/T MODELS

NESC0005S04

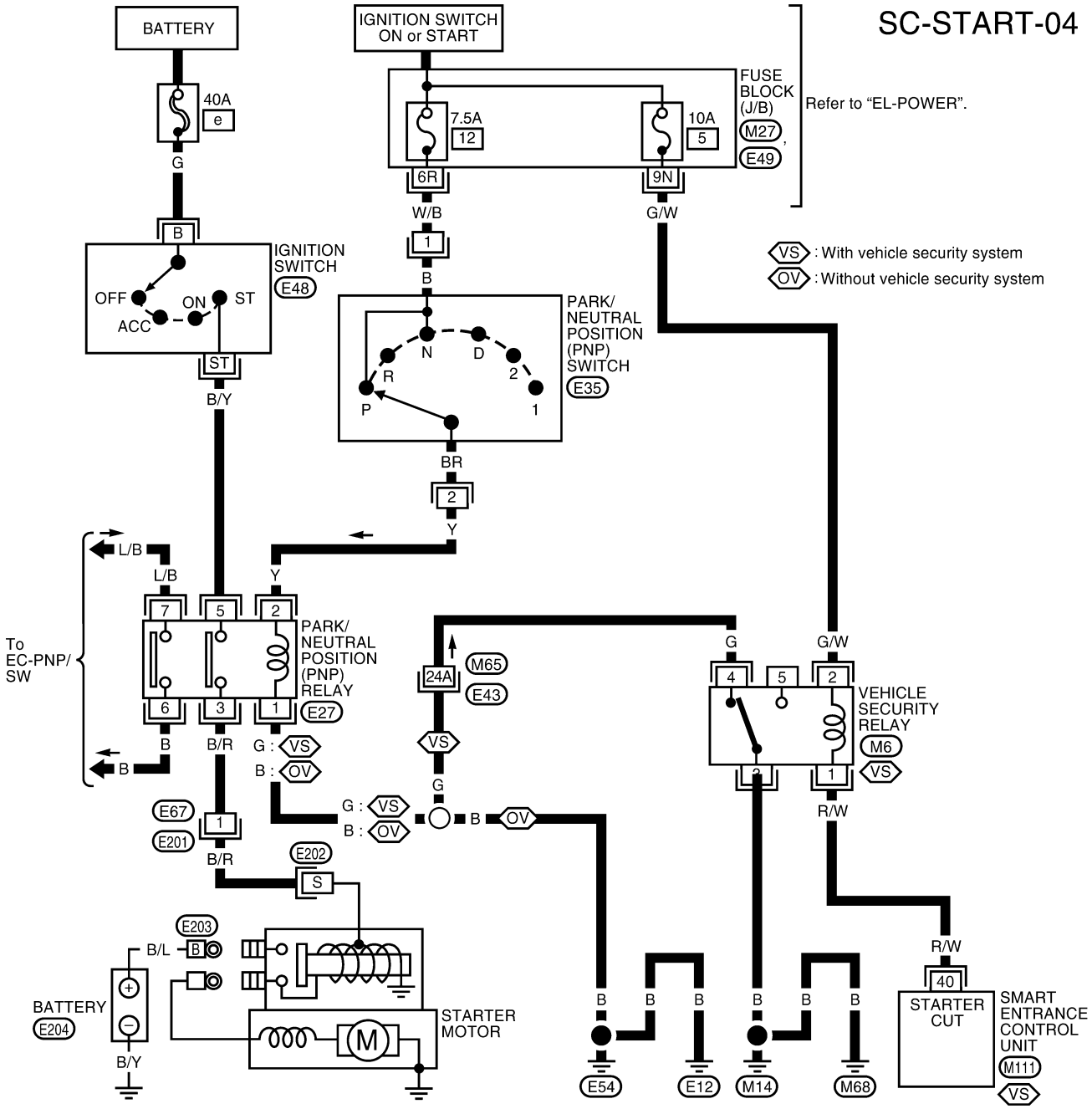

Refer to the following.
M65 , E43 - SUPER MULTIPLE JUNCTION (SMJ)

WSC074

VG33ER A/T MODELS

NESC0005S07

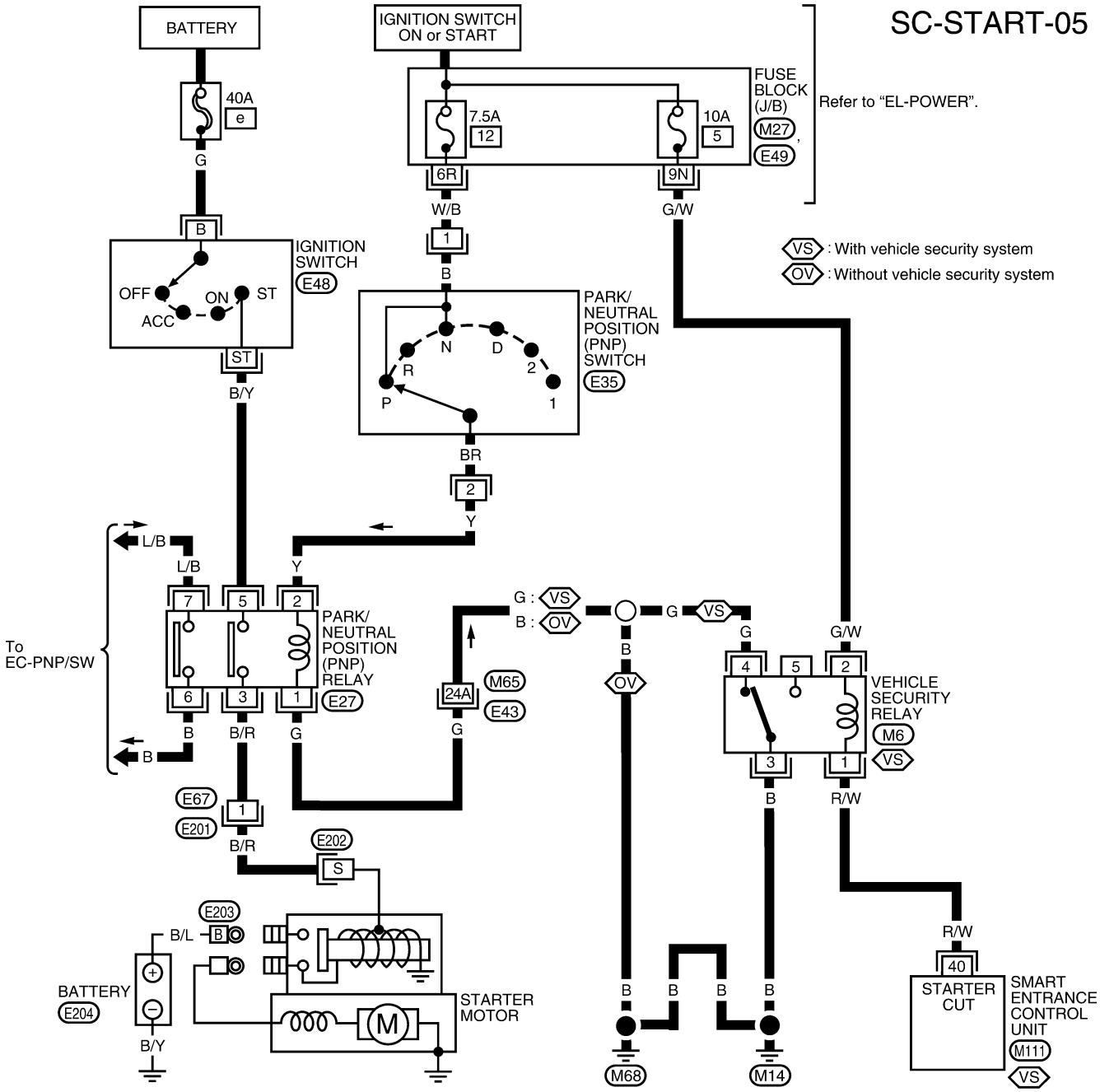

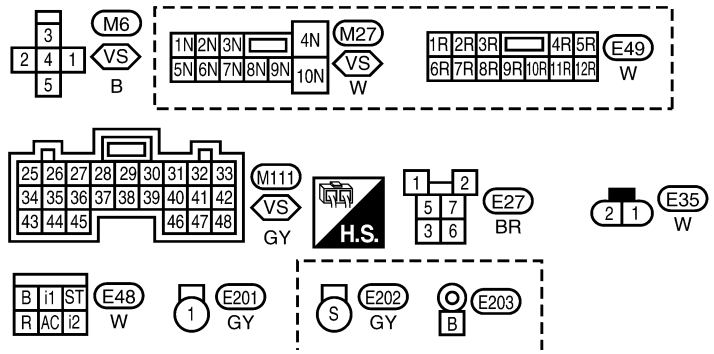

Refer to the following.
M65, E43 - SUPER MULTIPLE JUNCTION (SMJ)

LSC055

Trouble Diagnoses with Battery/Starting/Charging System Tester

NESC0020

NOTE:
To ensure a complete and thorough diagnosis, the battery, starter and generator test segments must be done as a set from start to finish.

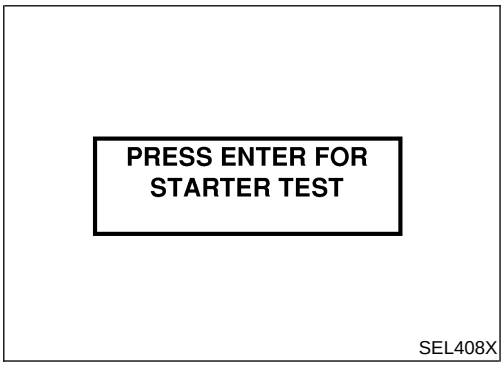

SEL408X

1. Turn off all loads on the vehicle electrical system.
2. Perform battery test with Battery/Starting/Charging system tester. Refer to “Trouble Diagnoses with Battery/Starting/Charging System Tester”, SC-7.
3. Press “ENTER” to begin the starting system test.

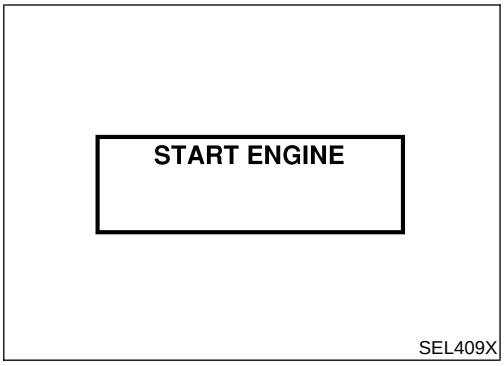

SEL409X

4. Start the engine.

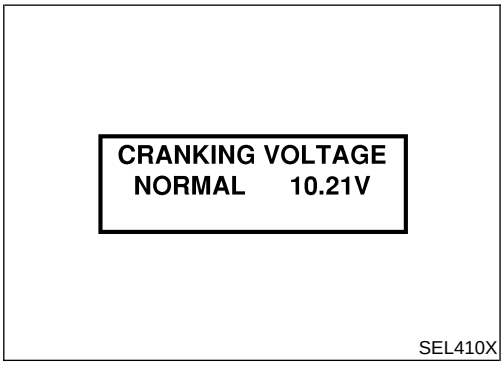

SEL410X

5. Diagnosis result is displayed on the tester. Refer to “DIAGNOSTIC RESULT ITEM CHART”, SC-20.

NOTE:
- If the starter performs normally but the engine does not start, perform engine diagnosis.
- For intermittent “NO CRANK” or “NO STARTER OPERATION” incidents, refer to “DIAGNOSTIC PROCEDURE 2”, SC-24.

Trouble Diagnoses with Battery/Starting/Charging System Tester (Cont'd)

DIAGNOSTIC RESULT ITEM CHART

NESC0020S01

Diagnostic item	Service procedure
CRANKING VOLTAGE NORMAL	Go to "WORK FLOW", SC-21.
CRANKING VOLTAGE LOW	Go to "WORK FLOW", SC-21.
CHARGE BATTERY	Perform the slow battery charging procedure. (Initial rate of charge is 10A for 12 hours.) Perform battery test again with Battery/Starting/Charging system tester. Refer to "Trouble Diagnoses with Battery/Starting/Charging System Tester", SC-7.
REPLACE BATTERY	Before replacing battery, clean the battery cable clamps and battery posts. Perform battery test again with Battery/Starting/Charging system tester. Refer to "Trouble Diagnoses with Battery/Starting/Charging System Tester", SC-7. If second test result is "REPLACE BATTERY", then do so. Perform battery test again to confirm repair.

WORK FLOW

NESC0020S02

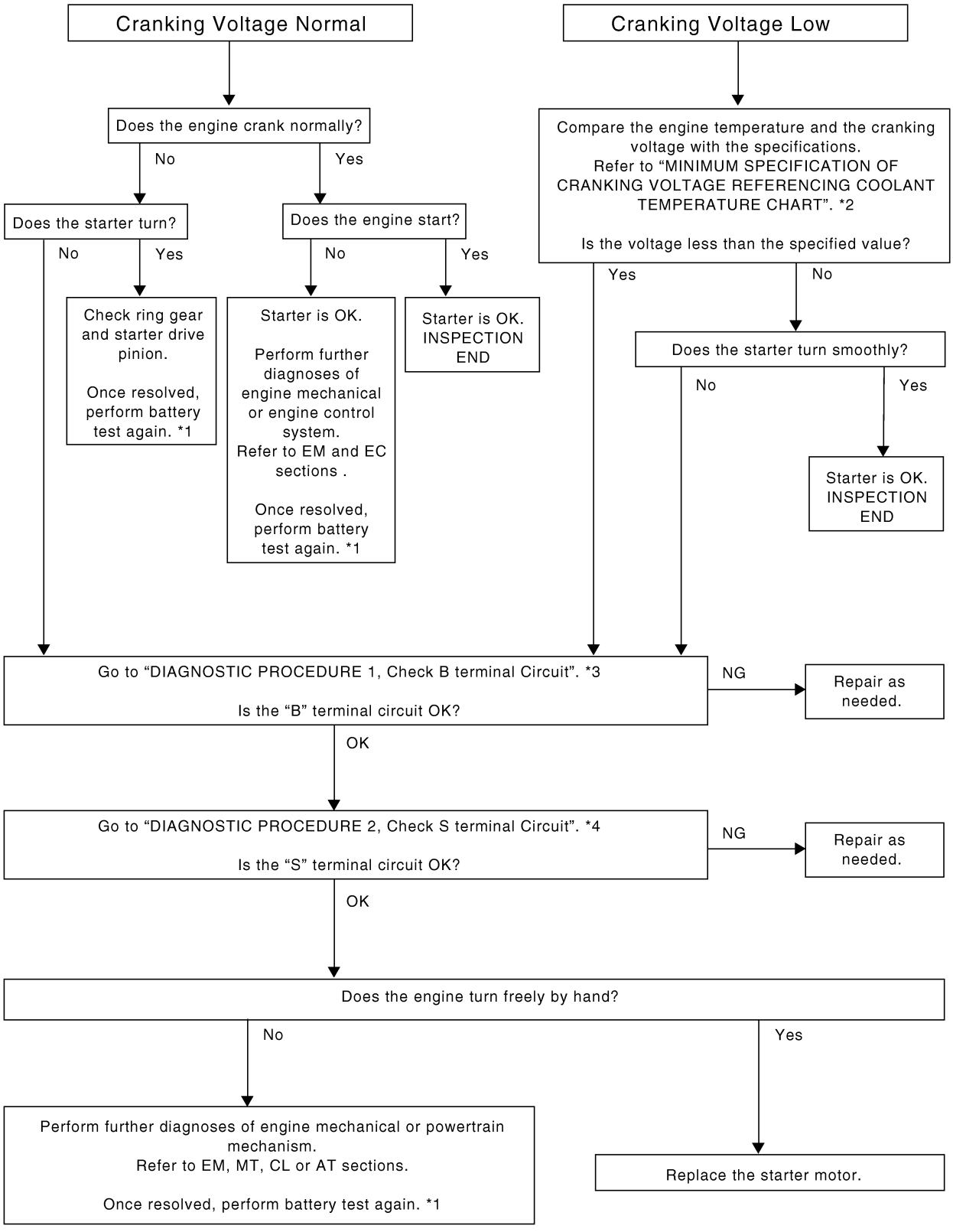

SEL411X

*1 SC-7 *3 SC-22 *4 SC-24
*2 SC-25

DIAGNOSTIC PROCEDURE 1
Check "B" Terminal Circuit

NESC0020S03

NESC0020S0301

1	CHECK POWER SUPPLY FOR STARTER MOTOR "B" TERMINAL

1. Remove the fuel pump fuse.
2. Crank or start the engine (where possible) until the fuel pressure is released.
3. Turn the ignition switch OFF.
4. Check that the starter motor terminal "B" [E210, (B/R) for KA24DE models or E203, (B/L) for VG33E and VG33ER models] connection is clean and tight.
5. Check voltage between starter motor terminal "B" [E210, (B/R) for KA24DE models or E203, (B/L) for VG33E and VG33ER models] and ground using a digital circuit tester.

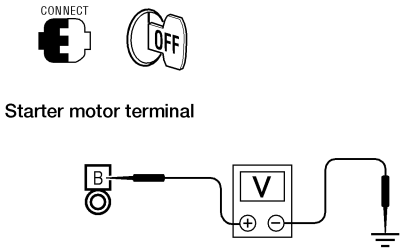

Battery voltage should exist.

LSC037

OK or NG

OK	▶	GO TO 2.
NG	▶	Check harness between the battery and the starter motor for open circuit.

2	CHECK BATTERY CABLE CONNECTION QUALITY (VOLTAGE DROP TEST)

1. Check voltage between starter motor terminal "B" [E210, (B/R) for KA24DE models or E203, (B/L) for VG33E and VG33ER models] and battery positive terminal using a digital circuit tester.

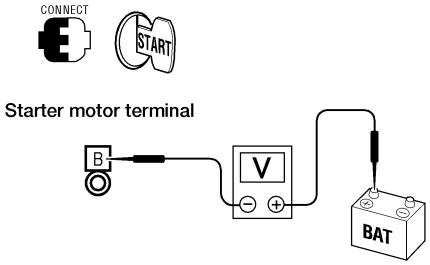

When the ignition switch is in START position,
Voltage: Less than 0.5V

LSC038

OK or NG

OK	▶	GO TO 3.
NG	▶	Check harness between the battery and the starter motor for poor continuity.

3	CHECK STARTER MOTOR GROUND CIRCUIT (VOLTAGE DROP TEST)	
1. Check voltage between starter motor case and battery negative terminal using a digital circuit tester.		
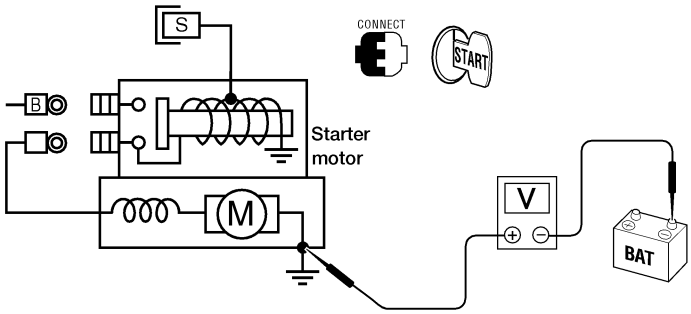		When the ignition switch is in START position, **Voltage: Less than 0.2V** LSC039
OK or NG		
OK	▶	Starter motor "B" terminal circuit is OK. Further inspection necessary. Refer to "WORK FLOW", SC-21.
NG	▶	Check the starter motor case and ground for poor continuity.

DIAGNOSTIC PROCEDURE 2
Check "S" Terminal Circuit

=NESC0020S04

NESC0020S0401

1	CHECK POWER SUPPLY FOR STARTER MOTOR "S" TERMINAL

1. Remove the fuel pump fuse.
2. Crank or start the engine (where possible) until the fuel pressure is released.
3. Turn the ignition OFF.
4. Disconnect starter motor terminal "S" [E209 (B/R) for KA24DE models or E202 (B/R) for VG33E and VG33ER models] connector.
5. Check voltage between starter motor terminal "S" [E209, (B/R) for KA24DE models or E202, (B/R) for VG33E and VG33ER models] and ground using a digital circuit tester.

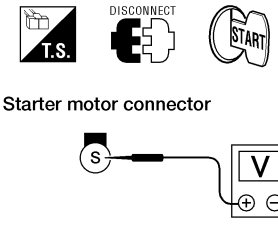

When the ignition switch is in START position,
Battery voltage should exist.

LSC040

OK or NG

OK	▶	GO TO 2.
NG	▶	**Check the following.** ● 40A fusible link (letter **e**, located in fuse and fusible link box) ● Clutch interlock relay (MT models) ● Park/neutral position relay (AT models) ● Harness for open or short

2	CHECK "S" TERMINAL CONNECTION QUALITY (VOLTAGE DROP TEST)

1. Connect starter motor terminal "S" [E209, (B/R) for KA24DE models or E202, (B/R) for VG33E and VG33ER models] connector.
2. Check voltage between starter motor terminal "S" [E209, (B/R) for KA24DE models or E202, (B/R) for VG33E and VG33ER models] and battery positive terminal using a digital tester.

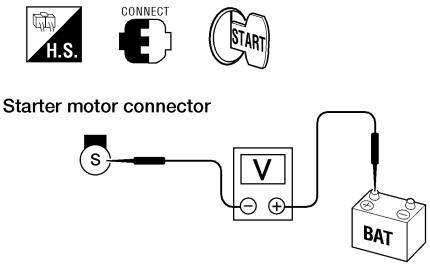

When the ignition switch is in START position,
Voltage: Less than 1V

LSC041

OK or NG

OK	▶	Starter motor "S" terminal circuit is OK. Further inspection necessary. Refer to "WORK FLOW", SC-21.
NG	▶	Check harness between the battery and the starter motor "S" terminal for poor continuity.

MINIMUM SPECIFICATION OF CRANKING VOLTAGE REFERENCING COOLANT TEMPERATURE

NESC0020S05

Engine coolant temperature	Voltage V	
	KA24DE	VG33E and VG33ER
−30°C to −20°C (−22°F to −4°F)	8.0	8.6
−19°C to −10°C (−2°F to 14°F)	9.0	9.3
−9°C to 0°C (16°F to 32°F)	9.9	9.5
More than 1°C (More than 34°F)	10.2	10.2

Construction

=NESC0006

KA24DE MODELS

NESC0006S03

SEC. 233
M000T60082ZC

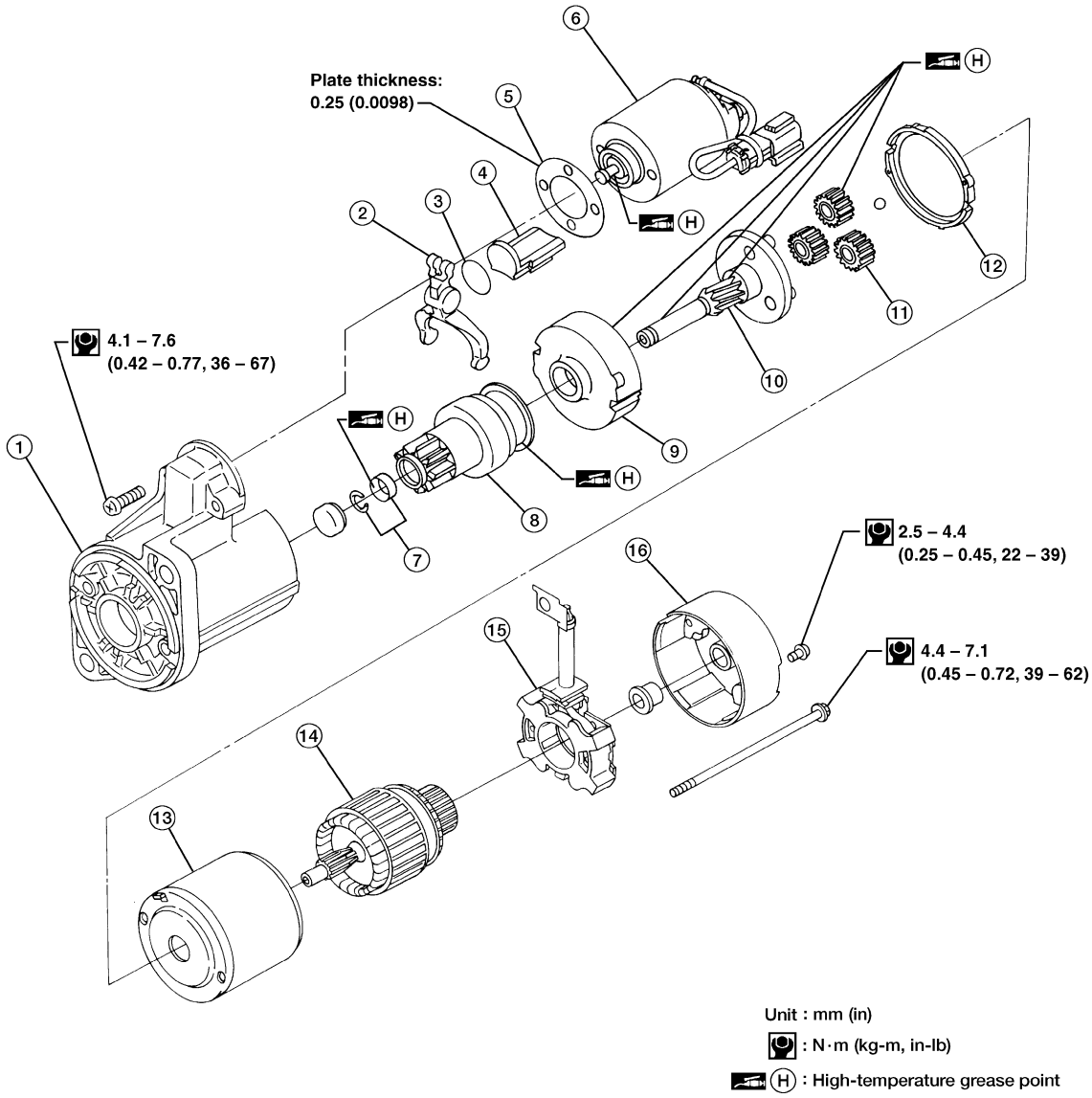

1. Gear case
2. Shift lever
3. Plate
4. Packing
5. Adjusting plate
6. Magnetic switch assembly
7. Pinion stopper set
8. Pinion assembly
9. Internal gear
10. Pinion shaft
11. Planetary gear
12. Packing
13. Yoke
14. Armature
15. Brush holder assembly
16. Rear cover

VG33E AND VG33ER MODELS

=NESC0006S02

SEC. 233
M000T60187ZC

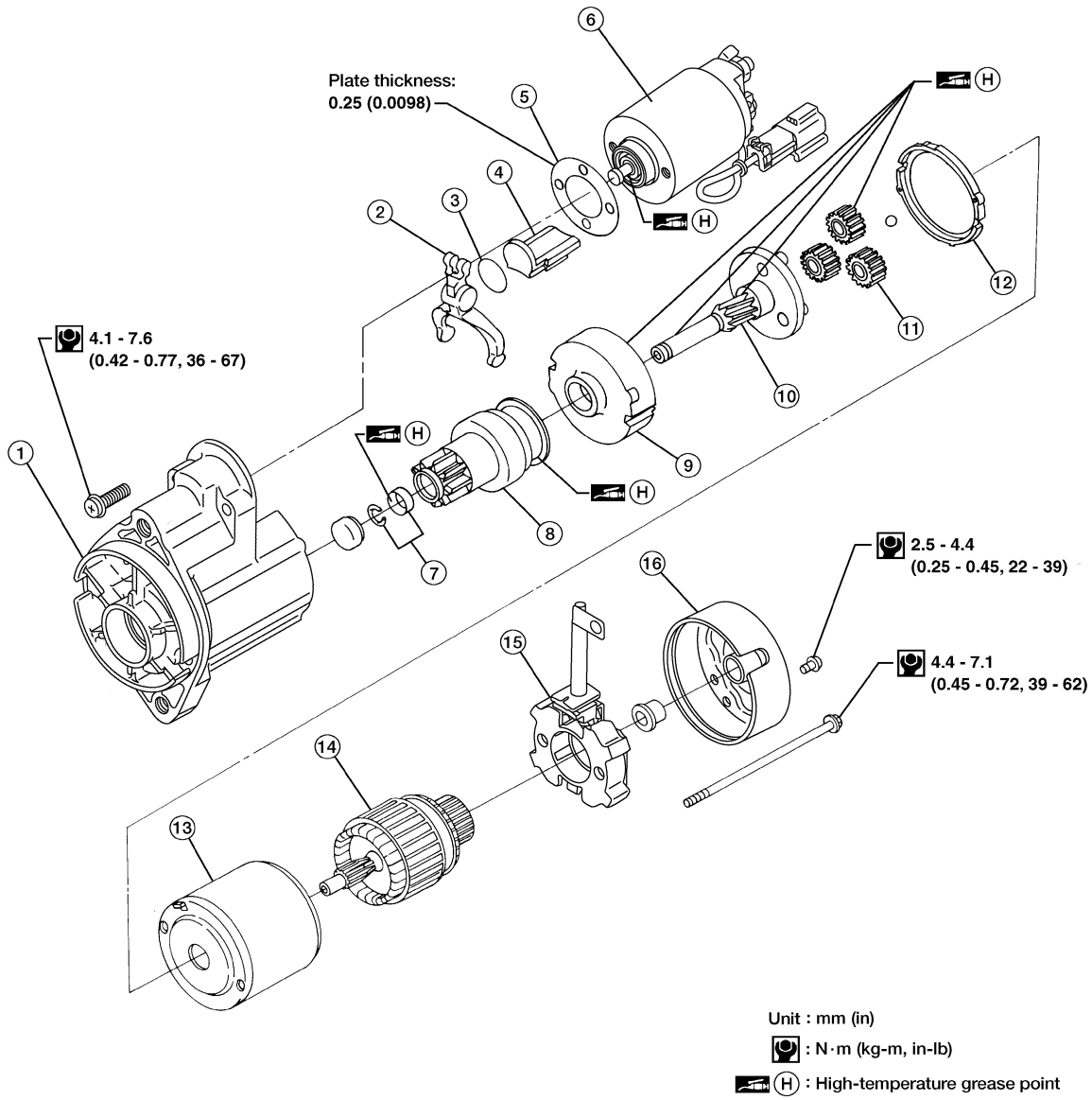

1. Gear case
2. Shift lever
3. Plate
4. Packing
5. Adjusting plate
6. Magnetic switch assembly
7. Pinion stopper set
8. Pinion assembly
9. Internal gear
10. Pinion shaft
11. Planetary gear
12. Packing
13. Yoke
14. Armature
15. Brush holder assembly
16. Rear cover

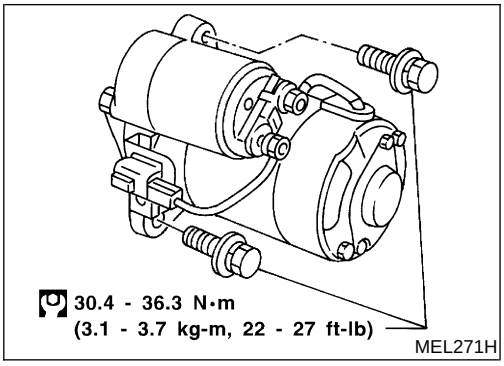

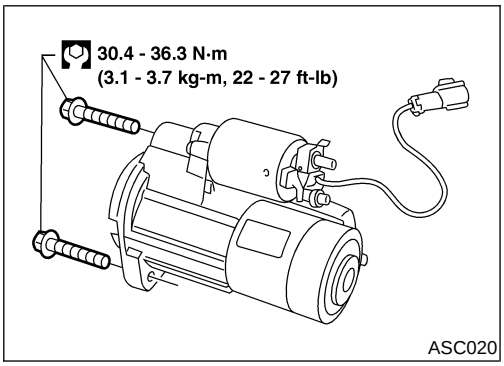

Removal and Installation

NESC0007

KA24DE MODELS

NESC0007S03

Removal

NESC0007S0301

1. Remove engine under cover.
2. Remove two bolts and starter.

Installation

NESC0007S0302

To install, reverse the removal procedure.

VG33E AND VG33ER MODELS

NESC0007S02

Removal

NESC0007S0201

1. Remove engine under cover.
2. Remove two bolts and starter.

Installation

NESC0007S0202

To install, reverse the removal procedure.

Pinion/Clutch Check

NESC0008

1. Inspect pinion teeth.

- Replace pinion if teeth are worn or damaged. (Also check condition of ring gear teeth.)

2. Inspect reduction gear teeth.

- Replace reduction gear if teeth are worn or damaged. (Also check condition of armature shaft gear teeth.)

3. Check to see if pinion locks in one direction and rotates smoothly in the opposite direction.

- If it locks or rotates in both directions, or unusual resistance is evident, replace.

System Description

NESC0009

The generator provides DC voltage to operate the vehicle's electrical system and to keep the battery charged. The voltage output is controlled by the IC regulator.
Power is supplied at all times to generator terminal S through:

- 80A fusible link [letter **a**, located in the fuse and fusible link box (with KA24DE engine)] or
- 100A fusible link [letter **a**, located in the fuse and fusible link box (with VG33E and VG33ER engine)] and
- 7.5A fuse (No. 36, located in the fuse and fusible link box).

Generator terminal B supplies power to charge the battery and operate the vehicle's electrical system. Output voltage is controlled by the IC regulator at generator terminal S detecting the input voltage. The charging circuit is protected by the 80A fusible link (with KA24DE engine) or the 100A fusible link (with VG33E and VG33ER engine).
Ground is supplied to generator terminal E through body ground E203 (with KA24DE engine) or body ground A1 (with VG33E and VG33ER engine).
With the ignition switch in the ON or START position, power is supplied

- through 10A fuse [No. 11, located in the fuse block (J/B)]
- to combination meter terminal 17 for the charge warning lamp.

Ground is supplied to combination meter terminal 43 through generator terminal L. With power and ground supplied, the charge warning lamp will illuminate. When the generator is providing sufficient voltage with the engine running, the ground is opened and the charge warning lamp will go off.
If the charge warning lamp illuminates with the engine running, a fault is indicated.

Wiring Diagram — CHARGE —

NESC0010

KA24DE MODELS

NESC0010S03

SC-CHARGE-01

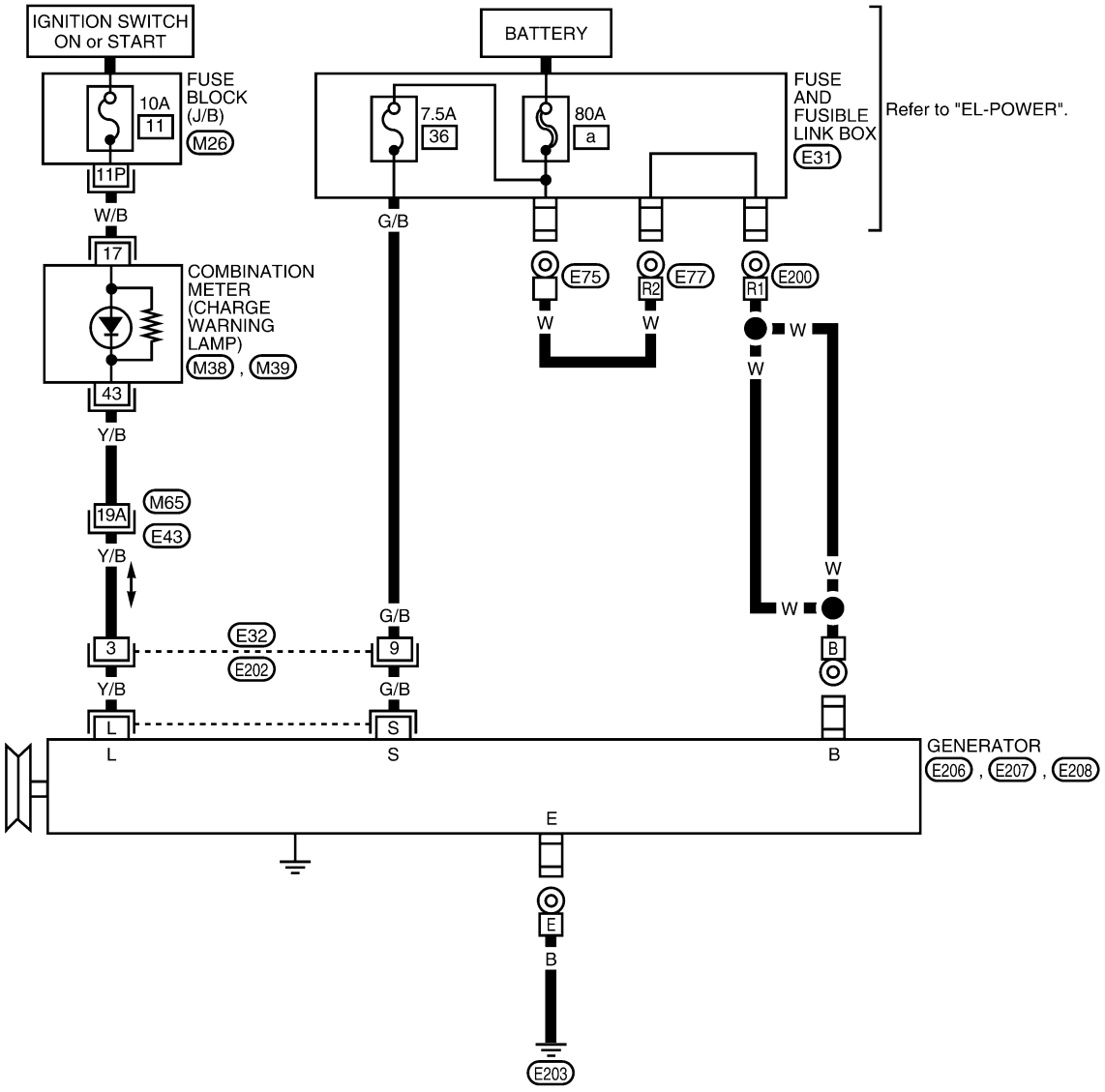

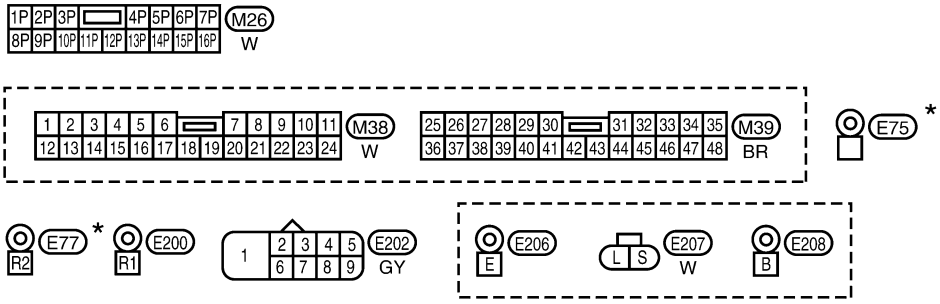

★: This connector is not shown in “HARNESS LAYOUT” of EL section.

Refer to the following.
M65 , E43 - SUPER MULTIPLE JUNCTION (SMJ)
E31 - FUSE AND FUSIBLE LINK BOX

WSC075

VG33E AND VG33ER MODELS

NESC0010S02

SC-CHARGE-02

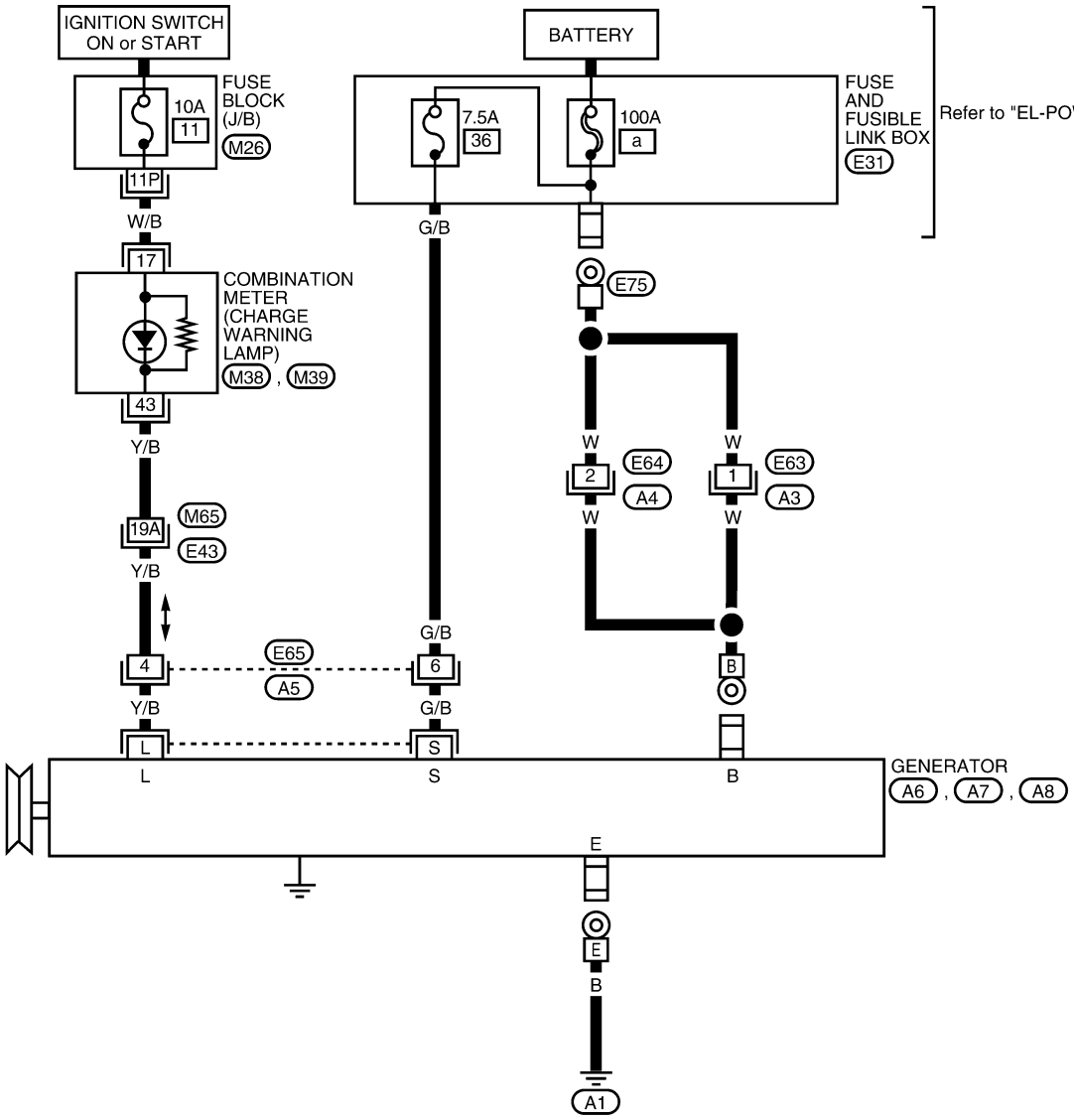

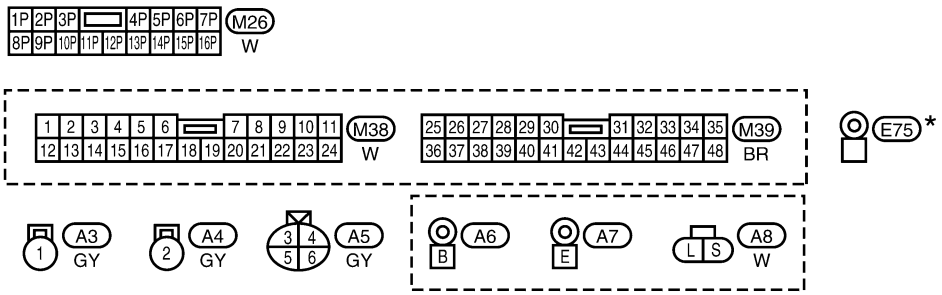

*: This connector is not shown in "HARNESS LAYOUT" of EL section.

Refer to the following.
M65, E43 - SUPER MULTIPLE JUNCTION (SMJ)
E31 - FUSE AND FUSIBLE LINK BOX

WSC076

Trouble Diagnoses with Battery/Starting/Charging System Tester

NESC0021

NOTE:
To ensure a complete and thorough diagnosis, the battery, starter and generator test segments must be done as a set from start to finish.

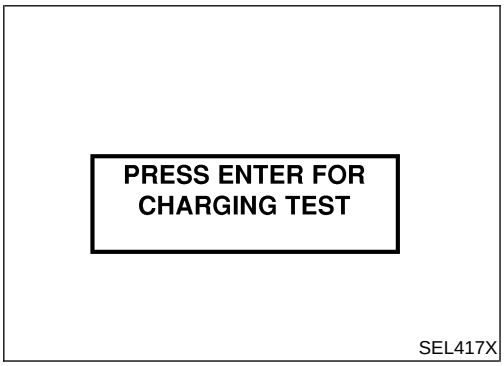

1. Turn off all loads on the vehicle electrical system.
2. Perform battery and starting system test with Battery/Starting/ Charging system tester.
3. Press “ENTER” to begin the charging system test.
4. Start engine.

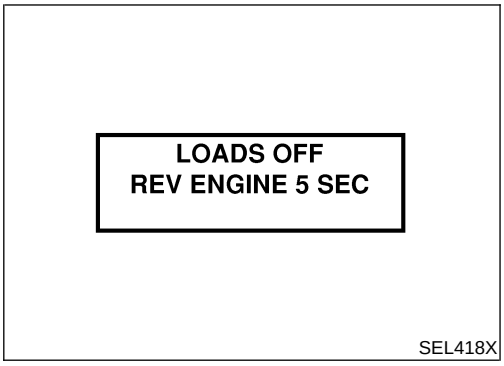

5. Press “ENTER” until “LOADS OFF REV ENGINE 5 SEC” is displayed.
6. Raise and hold the engine speed at 1,500 to 2,000 rpm for about 5 seconds, then return the engine to idle.
   Once the increase in engine rpm is detected, press “ENTER” to continue.

NOTE:
- If after 30 seconds an increase in engine idle speed is not detected, “RPM NOT DETECTED” will display.
- Some engines may have a higher idle initially after starting, particularly when the engine is cold. The tester may detect this without any other action being taken. If this occurs, continue on with the testing process. The final results will not be affected.

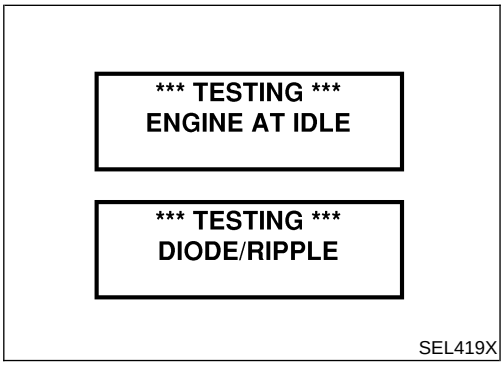

7. The tester now checks the engine at idle and performs the DIODE/RIPPLE check.
8. When complete, the tester will prompt you to turn on the following electrical loads.

- Heater fan set to highest speed. Do not run the A/C or windshield defroster.
- Headlamp high beam
- Rear window defogger

NOTE:
Do not run the windshield wipers or any other cyclical loads.

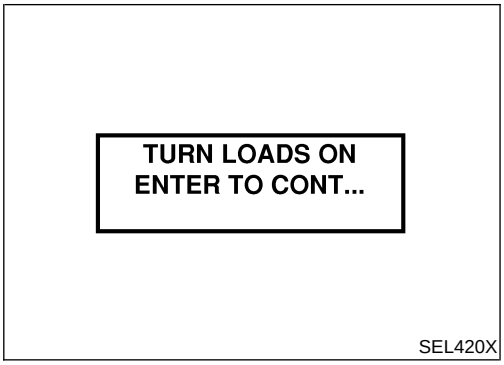

9. Press "ENTER" to continue.

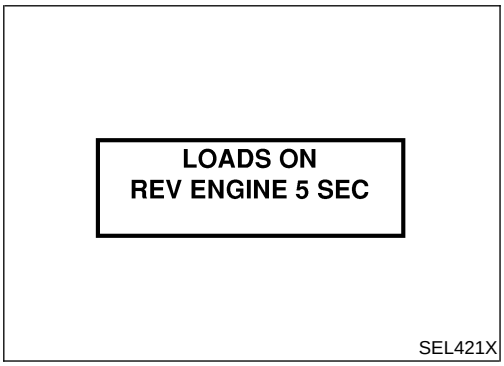

10. Raise and hold the engine speed at 1,500 to 2,000 rpm for about 5 seconds, then return the engine to idle. Once the increase in engine rpm is detected, press "ENTER" to continue.

NOTE:
If after 30 seconds an increase in engine idle speed is not detected, "RPM NOT DETECTED" will be displayed. Press "ENTER" to restart the test.

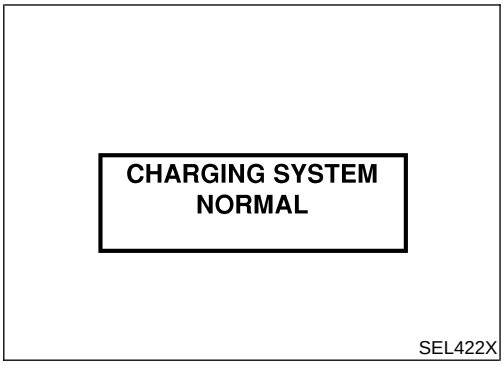

11. Diagnostic result is displayed on the tester. Refer to "DIAGNOSTIC RESULT ITEM CHART", SC-34.

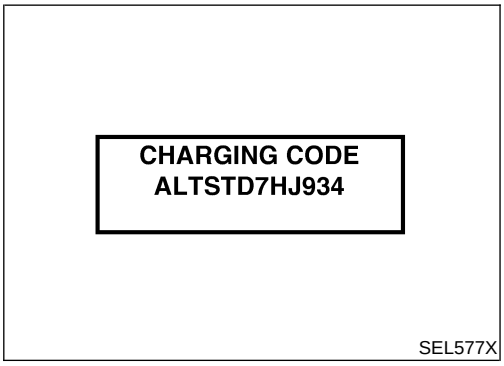

12. Press "ENTER" then test output code is displayed. Record the test output code on the repair order.
13. Toggle back to the "DIAGNOSTIC SCREEN" for test results.

Trouble Diagnoses with Battery/Starting/Charging System Tester (Cont'd)

DIAGNOSTIC RESULT ITEM CHART

NESC0021S01

Diagnostic item	Service procedure
CHARGING SYSTEM NORMAL	Charging system is normal and will also show DIODE RIPPLE test result.
NO CHARGING VOLTAGE	Go to "WORK FLOW", SC-35.
LOW CHARGING VOLTAGE	Go to "WORK FLOW", SC-35.
HIGH CHARGING VOLTAGE	Go to "WORK FLOW", SC-35.
DIODE RIPPLE NORMAL	Diode ripple is OK and will also show CHARGING VOLTAGE test result.
EXCESS RIPPLE DETECTED	Replace the generator. Perform "DIODE RIPPLE" test again using Battery/Starting/ Charging system tester to confirm repair.
DIODE RIPPLE NOT DETECTED	Go to "WORK FLOW", SC-35.

WORK FLOW

NESC0021S02

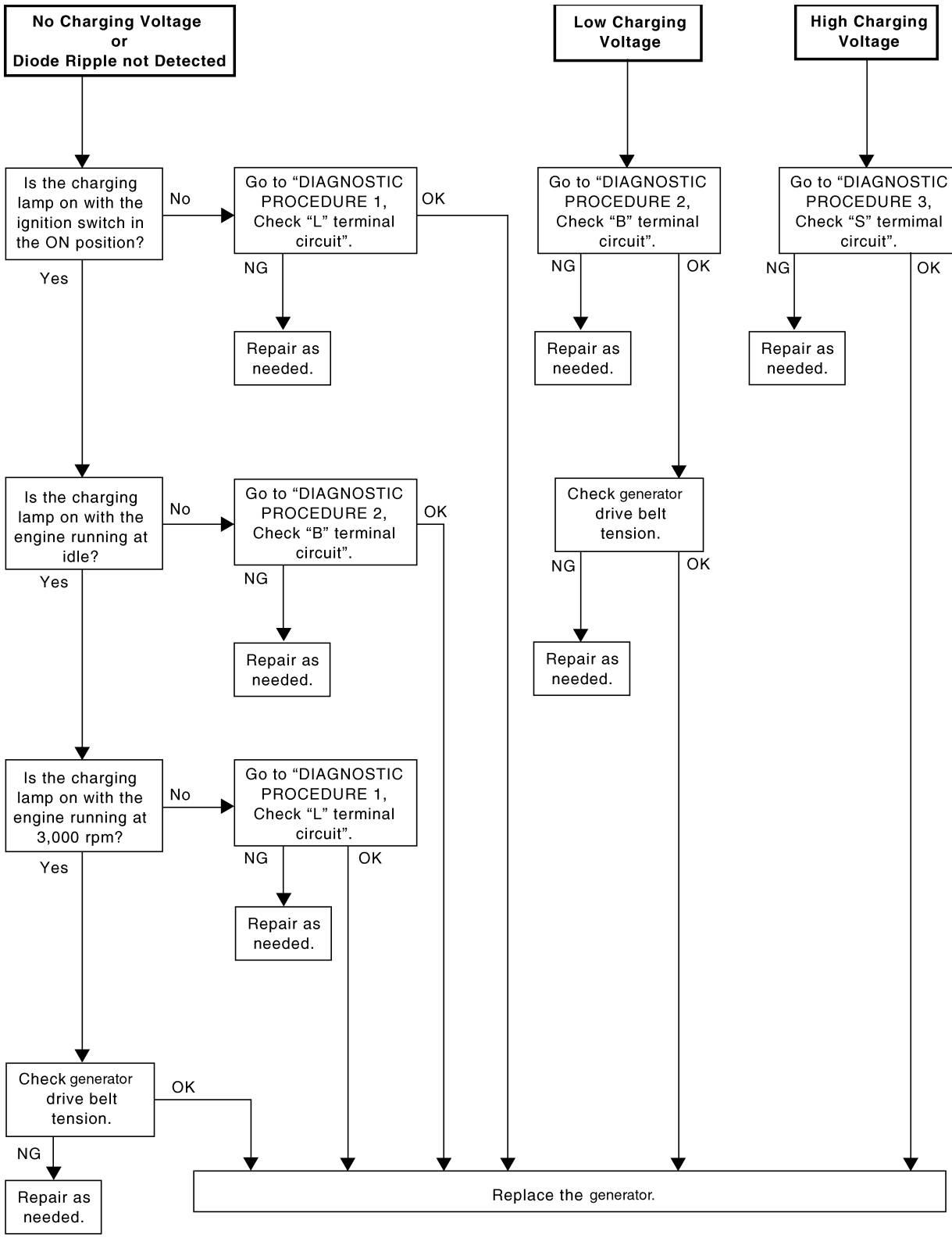

LSC047

DIAGNOSTIC PROCEDURE 1
Check "L" Terminal Circuit

NESC0021S03

NESC0021S0301

1	CHECK "L" TERMINAL CONNECTION	
Check to see if "L" terminal is clean and tight. **OK or NG**		
OK	▶	GO TO 2.
NG	▶	Repair "L" terminal connection. Confirm repair by performing complete Battery/Starting/Charging system test.

2	CHECK "L" TERMINAL CIRCUIT	
1. Disconnect E207 for KA24DE models or A8 for VG33E and VG33ER models connector from generator. 2. Apply ground to terminal "L" [E207, (Y/B) for KA24DE models or A8, (Y/B) for VG33E and VG33ER models] with the ignition switch in the ON position. 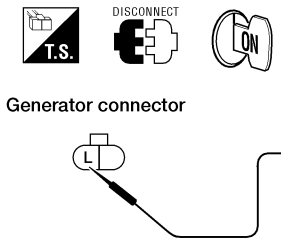 Generator connector **CHARGE lamp should light up.** LSC042 **OK or NG**		
OK	▶	Replace the generator. Confirm repair by performing complete Battery/Starting/Charging system test.
NG	▶	**Check the following.** ● 10A fuse [No. 11, located in fuse block (J/B)] ● CHARGE lamp ● Harness for open or short between combination meter and fuse ● Harness for open or short between combination meter and generator

DIAGNOSTIC PROCEDURE 2
Check "B" Terminal Circuit

=NESC0021S04

NESC0021S0401

1	CHECK "B" TERMINAL CONNECTION	
Check to see if "B" terminal is clean and tight. **OK or NG**		
OK	▶	GO TO 2. Confirm repair by performing complete Battery/Starting/Charging system test.
NG	▶	Repair "B" terminal connection.

2	CHECK GENERATOR "B" TERMINAL CIRCUIT	
Check voltage between generator terminal "B" [E208, (W) for the KA24DE models or A6, (W) for VG33E and VG33ER models] and ground using a digital circuit tester. 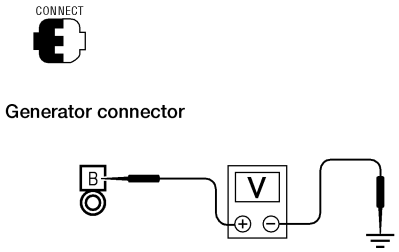 **Battery voltage should exist.** LSC043 **OK or NG**		
OK	▶	GO TO 3.
NG	▶	**Check the following.** ● 80A fusible link (letter **a**, located in fuse and fusible link box) for KA24DE models ● 100A fusible link (letter **a**, located in fuse and fusible link box) for VG33E and VG33ER models ● Harness for open or short between generator and fusible link

3	CHECK "B" TERMINAL CONNECTION QUALITY (VOLTAGE DROP TEST)	
Check voltage between generator terminal "B" [E208, (W) for the KA24DE models or A6, (W) for VG33E and VG33ER models] and battery positive terminal using a digital tester. 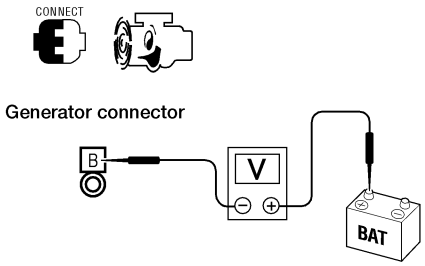 With the engine running at idle and warm, **Voltage: Less than 0.2V** LSC044 **OK or NG**		
OK	▶	Replace the generator. Confirm repair by performing complete Battery/Starting/Charging system test.
NG	▶	Check harness between the battery and the generator for poor continuity.

DIAGNOSTIC PROCEDURE 3
Check "S" Terminal Circuit

=NESC0021S05

NESC0021S0501

1	CHECK "S" TERMINAL CONNECTION	
Check to see if "S" terminal is clean and tight.		
OK or NG		
OK	▶	GO TO 2.
NG	▶	Repair "S" terminal connection. Confirm repair by performing complete Battery/Starting/Charging system test.

2	CHECK GENERATOR "S" TERMINAL CIRCUIT	
Check voltage between generator terminal "S" [E207, (G/B) for KA24DE models or A8, (G/B) for VG33E and VG33ER models] and ground using a digital circuit tester.		
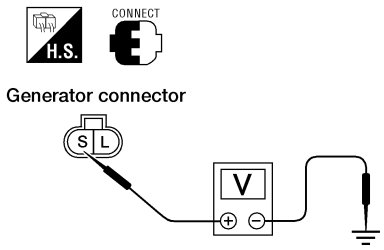		**Battery voltage should exist.** LSC045
OK or NG		
OK	▶	GO TO 3.
NG	▶	**Check the following.** ● 7.5A fuse (No. 36, located in fuse and fusible link box) ● Harness for open or short between generator and fuse

3	CHECK "S" TERMINAL CONNECTION QUALITY (VOLTAGE DROP TEST)	
Check voltage between generator terminal "S" [E207, (G/B) for KA24DE models or A8, (G/B) for VG33E and VG33ER models] and battery positive terminal using a digital tester.		
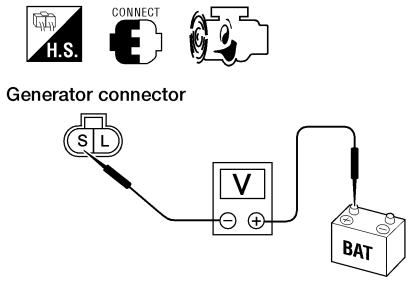		With the engine running at idle and warm, **Voltage: Less than 0.2V** LSC046
OK or NG		
OK	▶	Replace the generator. Confirm repair by performing complete Battery/Starting/Charging system test.
NG	▶	Check harness between the battery and the generator for poor continuity.

MALFUNCTION INDICATOR

=NESC0021S06

The IC regulator warning function activates to illuminate "CHARGE" warning lamp, if any of the following symptoms occur while generator is operating:

- Excessive voltage is produced.
- No voltage is produced.

Construction

NESC0012

KA24DE MODELS

NESC0012S03

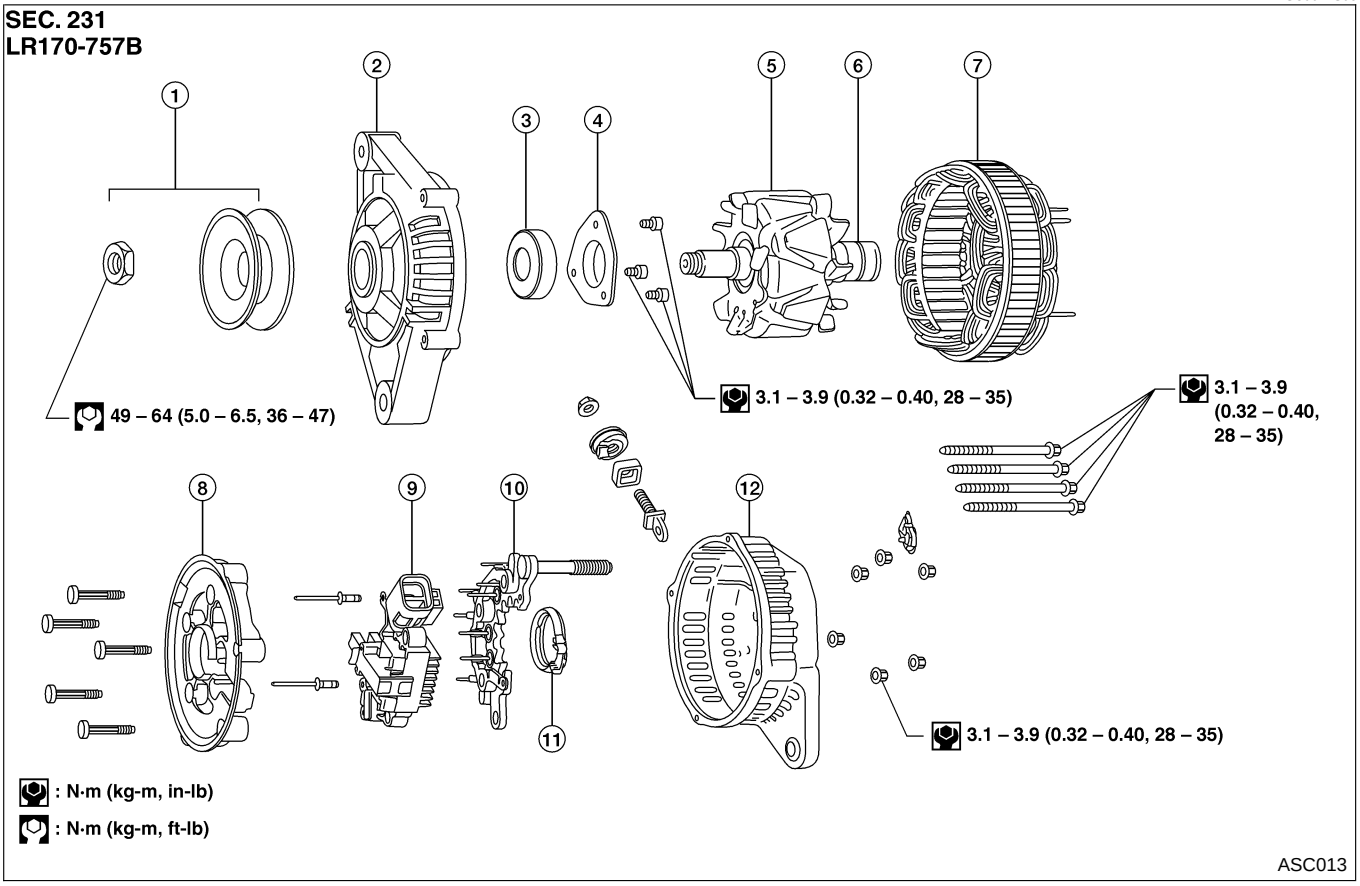

1. Pulley assembly
2. Front cover
3. Front bearing
4. Retainer
5. Rotor
6. Slip ring
7. Stator
8. Fan guide
9. IC regulator assembly
10. Diode assembly
11. Packing
12. Rear cover

Construction (Cont'd)

VG33E AND VG33ER MODELS

NESC0012S02

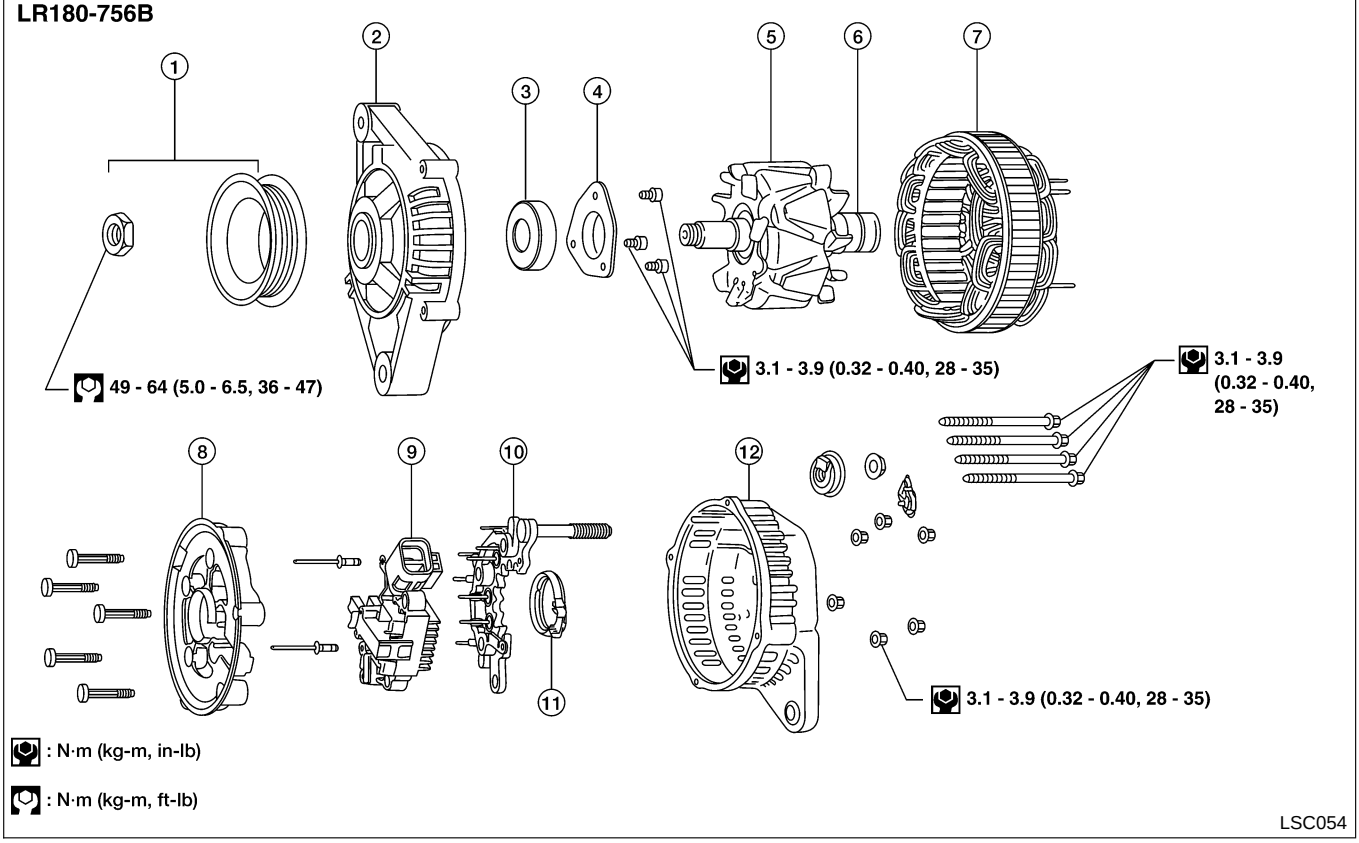

1. Pulley assembly
2. Front cover
3. Front bearing
4. Retainer
5. Rotor
6. Slip ring
7. Stator
8. Fan guide
9. IC regulator assembly
10. Diode assembly
11. Packing
12. Rear cover

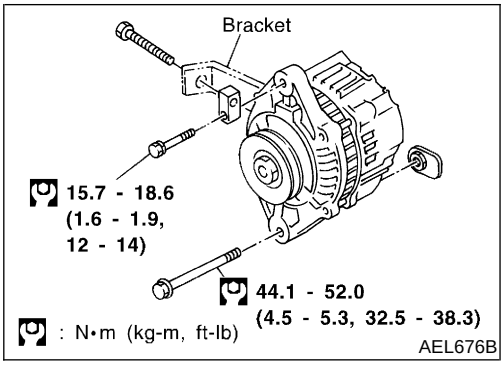

Removal and Installation

=NESC0013

KA24DE MODELS

NESC0013S03

Removal

NESC0013S0301

1. Remove engine undercover.
2. Remove RH side splash shield.
3. Disconnect harness connectors.
4. Loosen adjustment bolt, remove belt.
5. Remove two generator bolts and generator.

Installation

NESC0013S0302

To install, reverse the removal procedure.

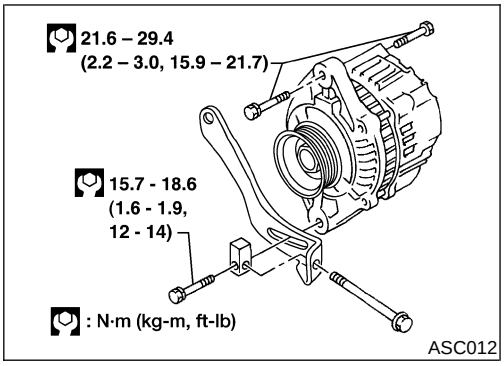

VG33E AND VG33ER MODELS

NESC0013S02

Removal

NESC0013S0201

1. Disconnect harness connectors.
2. Remove engine undercover.
3. Loosen adjustment bolt, remove belt.
4. Remove 3 generator bolts and generator.

Installation

NESC0013S0202

To install, reverse the removal procedure.

Battery

NESC0014

Applied area	USA	Canada
Type	55D23R	65D26R
Capacity V-AH	12-60	12-65
Cold cranking current A (For reference value)	356	413

Starter

NESC0015

Engine		KA24DE	VG33E and VG33ER
Type		M000T60082ZC	M000T60187ZC
		MITSUBISHI make	
		Reduction gear type	
System voltage		12 V	
No-load	Terminal voltage	11.0 V	
	Current	Less than 90 A	
	Revolution	More than 2,500 rpm	
Minimum diameter of commutator		29.3 mm (1.154 in)	
Minimum length of brush		7.0 mm (0.276 in)	
Brush spring tension		5.8 - 21.6 N (0.59 - 2.20 kg, 1.30 - 4.86 lb)	
Clearance of bearing metal and armature shaft		0.1 mm (0.004 in)	
Clearance between pinion front edge and pinion stopper		0.2 - 2.0 mm (0.008 - 0.079 in)	

Generator

NESC0016

Engine	KA24DE	VG33E and VG33ER
Type	LR170-757B	LR180-756B
	HITACHI make	
Nominal rating	12 V-70 A	12 V-80 A
Ground polarity	Negative	
Minimum revolution under no-load (When 13.5 volts are applied)	Less than 1,000 rpm	
Hot output current (When 13.5 volts are applied)	More than 17 A/1,300 rpm More than 54 A/2,500 rpm More than 72 A/5,000 rpm	More than 23 A/1,300 rpm More than 65 A/2,500 rpm More than 77 A/5,000 rpm
Regulated output voltage	14.1 - 14.7 V	
Minimum length of brush	6.0 mm (0.236 in)	
Brush spring pressure	1.000 - 2.452 N (102 - 250 g, 3.60 - 8.82 oz)	
Slip ring minimum outer diameter	26.0 mm (1.024 in)	
Rotor (Field coil) resistance	2.6 Ω	2.7 Ω

ELECTRICAL SYSTEM

SECTION EL

CONTENTS

PRECAUTIONS 4
Supplemental Restraint System (SRS) ″AIR BAG″ and ″SEAT BELT PRE-TENSIONER″ 4
Wiring Diagrams and Trouble Diagnosis 4
HARNESS CONNECTOR 5
Description 5
STANDARDIZED RELAY 7
Description 7
POWER SUPPLY ROUTING 9
Circuit Diagram 9
Wiring Diagram - POWER - 11
Inspection 16
GROUND 17
Ground Distribution 17
COMBINATION SWITCH 31
Check 31
Replacement 32
STEERING SWITCH 33
Check 33
HEADLAMP (FOR USA) 34
System Description 34
Wiring Diagram - H/LAMP - 35
Trouble Diagnoses 36
Bulb Replacement 37
Aiming Adjustment 37
HEADLAMP (FOR CANADA) - DAYTIME LIGHT SYSTEM - 39
System Description (For Canada) 39
Circuit Diagram 41
Wiring Diagram - DTRL - 42
Trouble Diagnoses 45
Bulb Replacement 46
Aiming Adjustment 46
PARKING, LICENSE AND TAIL LAMPS 47
Wiring Diagram - TAIL/L - 47
STOP LAMP 48
Wiring Diagram - STOP/L - 48
BACK-UP LAMP 49
Wiring Diagram - BACK/L - 49
FRONT FOG LAMP 50
System Description 50
Wiring Diagram - F/FOG - 51
Aiming Adjustment 52
Removal and Installation 53
Bulb and Lens Replacement 53
TURN SIGNAL AND HAZARD WARNING LAMPS 54
System Description 54
Wiring Diagram - TURN - 56
Trouble Diagnoses 58
Electrical Components Inspection 58
ILLUMINATION 59
System Description 59
Wiring Diagram - ILL - 60
INTERIOR ROOM LAMP 62
Component Parts and Harness Connector Location 62
System Description 63
Wiring Diagram - ROOM/L - 65
Trouble Diagnosis 67
METERS AND GAUGES 69
Component Parts and Harness Connector Location 69
System Description 70
Combination Meter 72
Wiring Diagram - METER - 74
Meter/Gauge Operation and Odo/Trip Meter Segment Check in Diagnosis Mode 75
Trouble Diagnoses 76
Electrical Components Inspection 82
WARNING LAMPS 84
Circuit Diagram 84
Wiring Diagram - WARN - 85
Electrical Components Inspection 93
A/T INDICATOR 94
Wiring Diagram - AT/IND - 94
WARNING CHIME 95
Component Parts and Harness Connector Location 95

CONTENTS (Cont'd)

System Description....96
Wiring Diagram - CHIME -....98
Trouble Diagnoses....100
FRONT WIPER AND WASHER....109
System Description....109
Wiring Diagram - WIPER -....112
Trouble Diagnoses (With intermittent wipers)....114
Removal and Installation....117
Washer Nozzle Adjustment....118
Washer Tube Layout....119
HORN....120
Wiring Diagram - HORN -....120
CIGARETTE LIGHTER....121
Wiring Diagram - CIGAR -....121
REAR WINDOW DEFOGGER....122
Component Parts and Harness Connector Location....122
System Description....123
Wiring Diagram - DEF -....125
Trouble Diagnoses....127
Electrical Components Inspection....131
Filament Check....132
Filament Repair....133
AUDIO....134
System Description....134
Wiring Diagram - AUDIO -....135
Trouble Diagnoses....141
Inspection....141
AUDIO ANTENNA....144
Location of Antenna....144
Fixed Antenna Rod Replacement....144
DOOR MIRROR....145
Wiring Diagram - MIRROR -....145
AUTOMATIC SPEED CONTROL DEVICE (ASCD)....146
Component Parts and Harness Connector Location....146
System Description....148
Circuit Diagram....150
Wiring Diagram - ASCD -....151
Fail-safe System....154
Trouble Diagnoses....155
Electrical Component Inspection....163
ASCD Wire Adjustment....165
POWER WINDOW....167
System Description....167
Circuit Diagram....170
Wiring Diagram - WINDOW -....171
Trouble Diagnoses....175
POWER DOOR LOCK....176
Component Parts and Harness Connector Location....176
System Description....177
Circuit Diagram....179
Wiring Diagram - D/LOCK -....180
Trouble Diagnoses....183
MULTI-REMOTE CONTROL SYSTEM....190
Component Parts and Harness Connector Location....190
System Description....191
Circuit Diagram....194
Wiring Diagram - MULTI -....195
Trouble Diagnoses....197
ID Code Entry Procedure....206
Remote Controller Battery Replacement....207
VEHICLE SECURITY (THEFT WARNING) SYSTEM....208
Component Parts and Harness Connector Location....208
System Description....210
Circuit Diagram....213
Wiring Diagram - VEHSEC -....214
Trouble Diagnoses....217
SMART ENTRANCE CONTROL UNIT....230
Description....230
Circuit Diagram....231
Smart Entrance Control Unit Inspection Table....233
ELECTRICAL UNITS LOCATION....235
Engine Compartment....235
Passenger Compartment....236
HARNESS LAYOUT....238
How to Read Harness Layout....238
Outline....239
Main Harness (KA24DE Models)....240
Main Harness (VG33E and VG33ER Models)....242
Engine Room Harness (KA24DE Models)....244
Engine Room Harness (VG33E and VG33ER Models)....247
Engine Control Harness (KA24DE Models)....250
Engine No. 2 Harness (KA24DE Models)....252
Engine Control Harness (VG33E Models)....253
Engine Control Harness (VG33ER Models)....255
Engine No. 2 Harness (VG33E and VG33ER Models)....257
Chassis and Tail Harness (KA24DE Models)....258
Chassis and Tail Harness (VG33E and VG33ER Models)....259
Room Lamp Harness....260
Front Door Harness....261
Rear Door Harness....263
BULB SPECIFICATIONS....265
Headlamp....265
Exterior Lamp....265
Interior Lamp....265

CONTENTS (Cont'd)

WIRING DIAGRAM CODES (CELL CODES).....266

Supplemental Restraint System (SRS) “AIR BAG” and “SEAT BELT PRE-TENSIONER”

NEEL0001

The Supplemental Restraint System such as “AIR BAG” and “SEAT BELT PRE-TENSIONER” used along with a seat belt, help to reduce the risk or severity of injury to the driver and front passenger in a frontal collision. The Supplemental Restraint System consists of air bag modules (located in the center of the steering wheel and in the instrument panel on the passenger side), seat belt pre-tensioners, a diagnosis sensor unit, warning lamp, wiring harness, and spiral cable.

The vehicle (except Crew Cab model) is equipped with a passenger air bag deactivation switch. Because no rear seat exists where a rear-facing child restraint can be placed, the switch is designed to turn off the passenger air bag so that a rear-facing child restraint can be used in the front passenger seat. The switch is located in the center of the instrument panel, near the ashtray. When the switch is turned to the ON position, the passenger air bag is enabled and could inflate in a frontal collision. When the switch is turned to the OFF position, the passenger air bag is disabled and will not inflate in a frontal collision. A passenger air bag OFF indicator on the instrument panel lights up when the passenger air bag is switched OFF. The driver air bag always remains enabled and is not affected by the passenger air bag deactivation switch.

Information necessary to service the system safely is included in the **RS section** of this Service Manual.

WARNING:

- **To avoid rendering the SRS inoperative, which could increase the risk of personal injury or death in the event of a collision which would result in air bag inflation, all maintenance should be performed by an authorized NISSAN dealer.**
- **Improper maintenance, including incorrect removal and installation of the SRS, can lead to personal injury caused by unintentional activation of the system. For removal of Spiral Cable and Air Bag Module, see the RS section.**
- **Do not use electrical test equipment on any circuit related to the SRS unless instructed to in this Service Manual. Spiral cable and wiring harnesses (except “SEAT BELT PRE-TENSIONER”) covered with yellow insulation either just before the harness connectors or for the complete harness are related to the SRS.**
- **The vehicle (except Crew Cab model) is equipped with a passenger air bag deactivation switch which can be operated by the customer. When the passenger air bag is switched OFF, the passenger air bag is disabled and will not inflate in a frontal collision. When the passenger air bag is switched ON, the passenger air bag is enabled and could inflate in a frontal collision. After SRS maintenance or repair, make sure the passenger air bag deactivation switch is in the same position (ON or OFF) as when the vehicle arrived for service.**

Wiring Diagrams and Trouble Diagnosis

NEEL0002

When you read wiring diagrams, refer to the following:

- ***GI-11***, “HOW TO READ WIRING DIAGRAMS”
- “POWER SUPPLY ROUTING” for power distribution circuit, EL-9

When you perform trouble diagnosis, refer to the following:

- ***GI-34***, “How to Follow Test Groups in Trouble Diagnoses”
- ***GI-23***, “HOW TO PERFORM EFFICIENT DIAGNOSIS FOR AN ELECTRICAL INCIDENT”

Check for any Service bulletins before servicing the vehicle.

Description

NEEL0003

HARNESS CONNECTOR (TAB-LOCKING TYPE)

NEEL0003S01

- The tab-locking type connectors help prevent accidental looseness or disconnection.
- The tab-locking type connectors are disconnected by pushing or lifting the locking tab(s). Refer to the illustration below.
  Refer to EL-6 for description of the slide-locking type connector.

CAUTION:

Do not pull the harness when disconnecting the connector.

[Example]

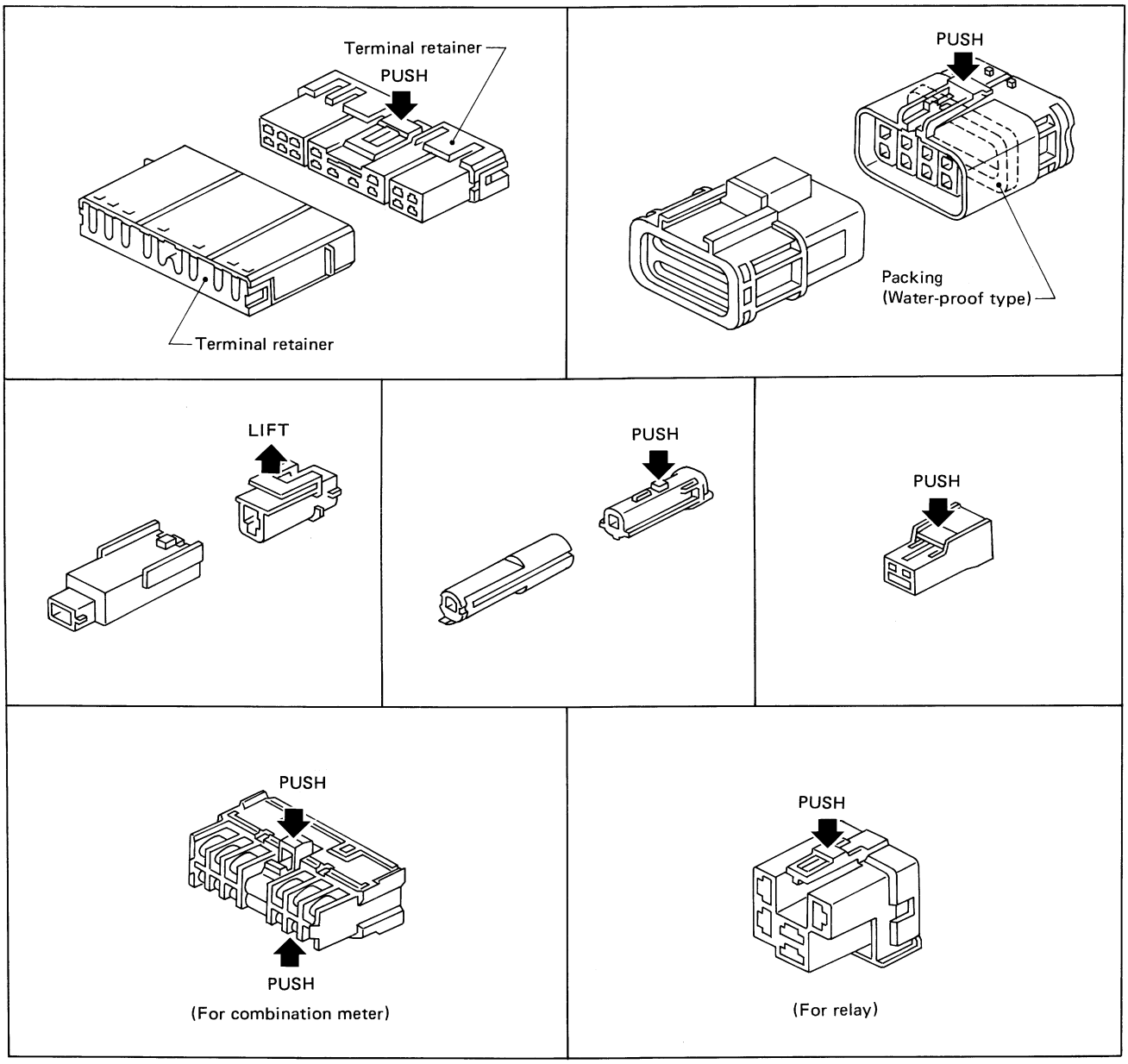

SEL769D

Description (Cont'd)

HARNESS CONNECTOR (SLIDE-LOCKING TYPE)

=NEEL0003S02

- A new style slide-locking connector is used on certain systems and components, especially those related to OBD.
- The slide-locking type connectors help prevent incomplete locking and accidental looseness or disconnection.
- The slide-locking type connectors are disconnected by pushing or pulling the slider. Refer to the illustration below.

CAUTION:

Do not pull the harness or wires when disconnecting the connector.
Be careful not to damage the connector support bracket when disconnecting the connector.

Waterproof type

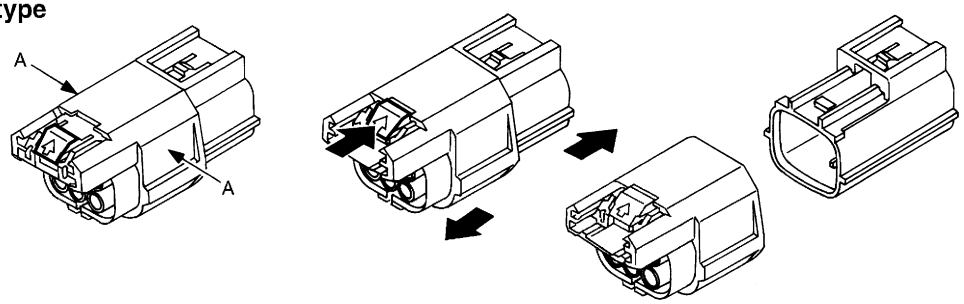

① Firmly grasp shell of connector housing at A.

② Push slider until connector pops or snaps apart.

③ Disconnect harness connector.

Non-waterproof type

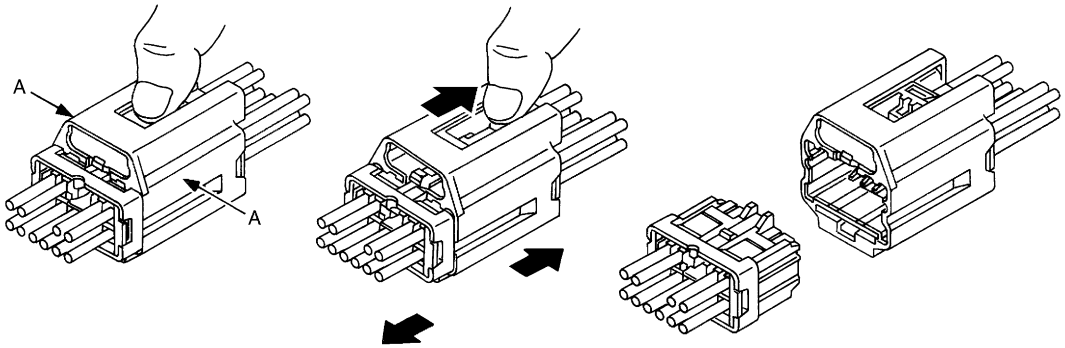

① Firmly grasp shell of connector housing at A.

② Pull back on the slider while pulling apart male and female halves of connector.

③ Disconnect harness connector.

AEL299C

Description

NEEL0004

NORMAL OPEN, NORMAL CLOSED AND MIXED TYPE RELAYS

NEEL0004S01

Relays can mainly be divided into three types: normal open, normal closed and mixed type relays.

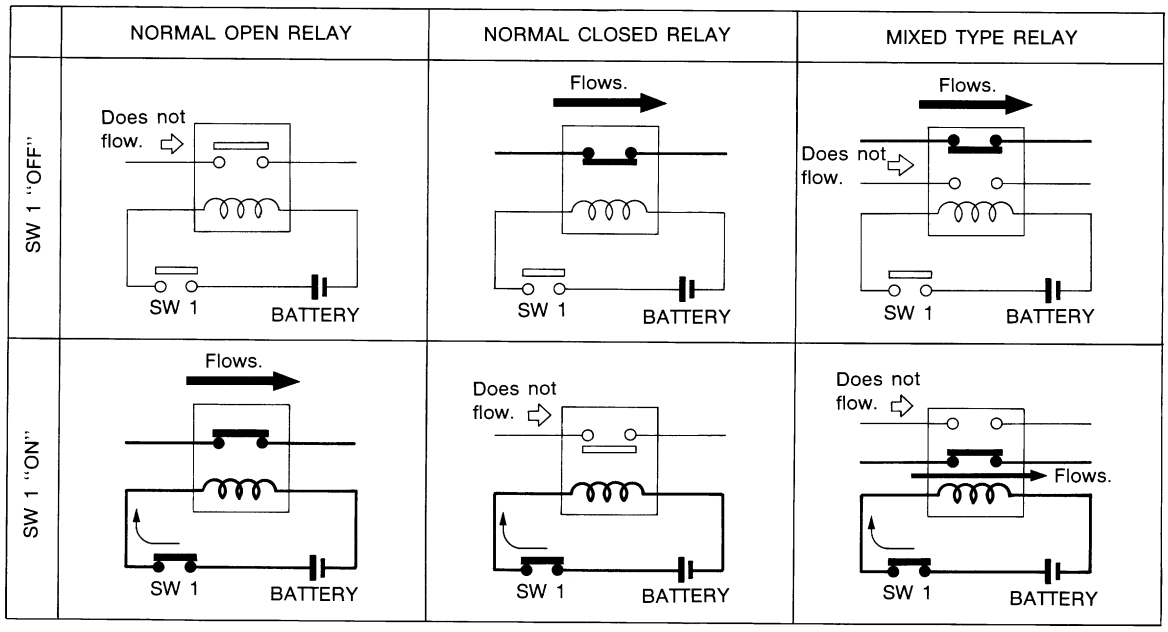

SEL881H

TYPE OF STANDARDIZED RELAYS

NEEL0004S02

1M	1 Make	2M	2 Make
1T	1 Transfer	1M·1B	1 Make 1 Break

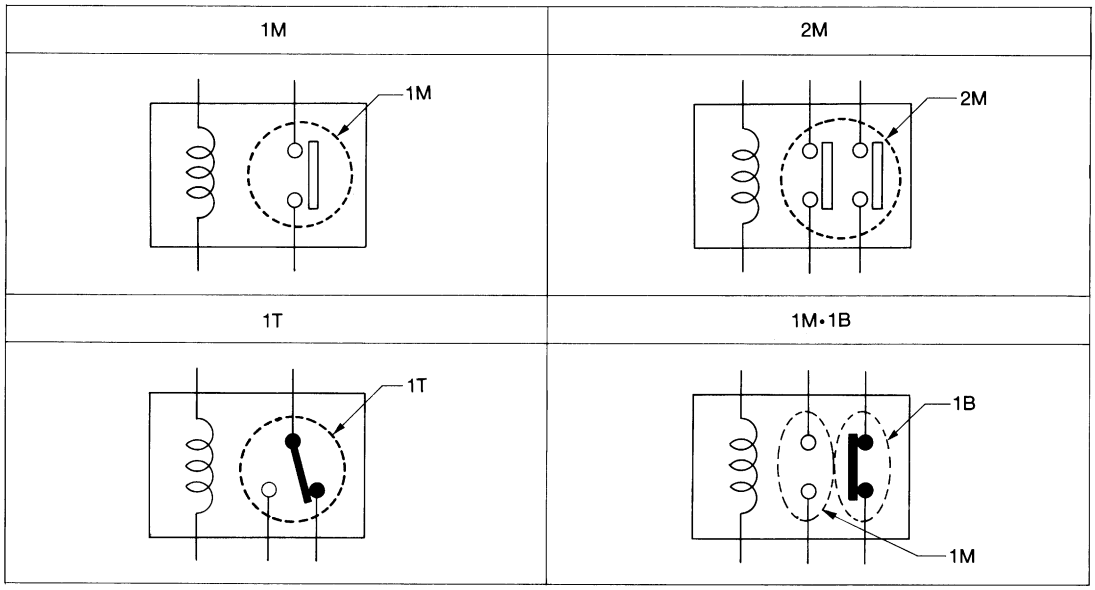

SEL882H

Description (Cont'd)

Type	Outer view	Circuit	Connector symbol and connector	Case color
1T	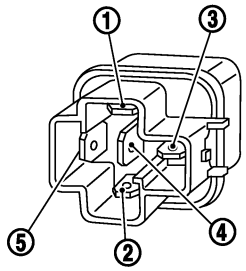	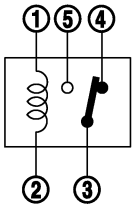	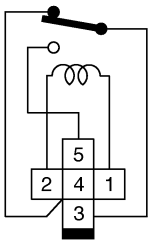	BLACK
	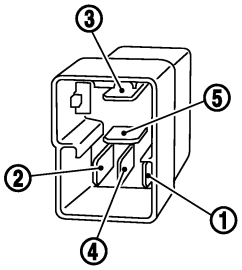		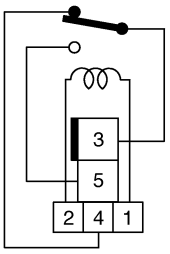	
2M	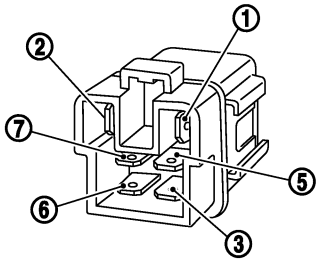	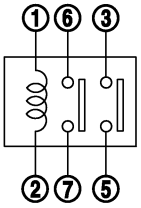	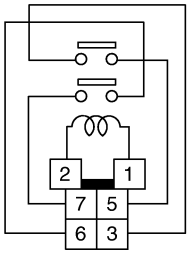	BROWN
1M•1B	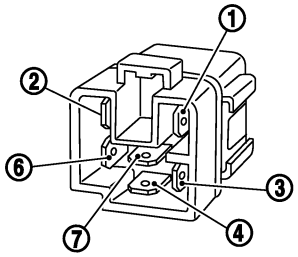	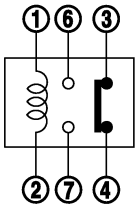	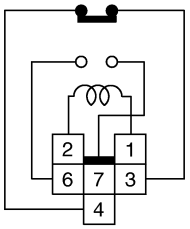	GRAY
1M	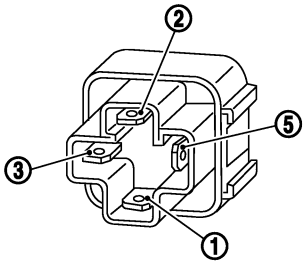	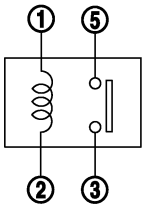	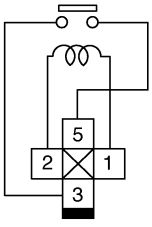	BLUE
	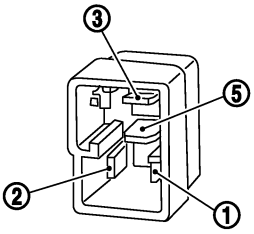		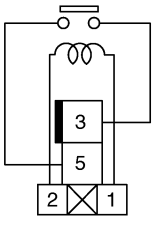	

The arrangement of terminal numbers on the actual relays may differ from those shown above.

GEL264

Circuit Diagram

NEEL0005

NOTE: For detailed ground distribution information, refer to “GROUND DISTRIBUTION”, EL-17.

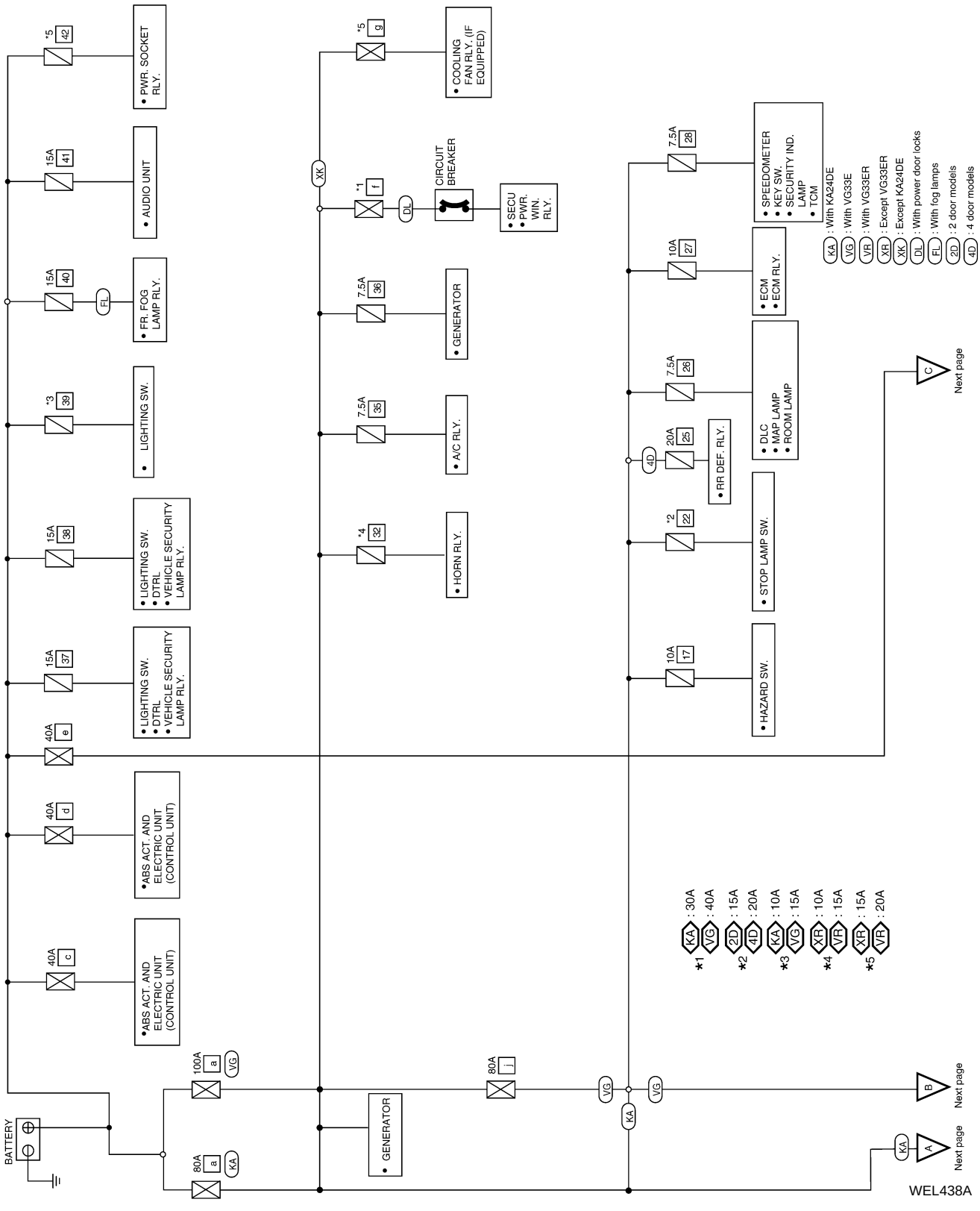

Circuit Diagram (Cont'd)

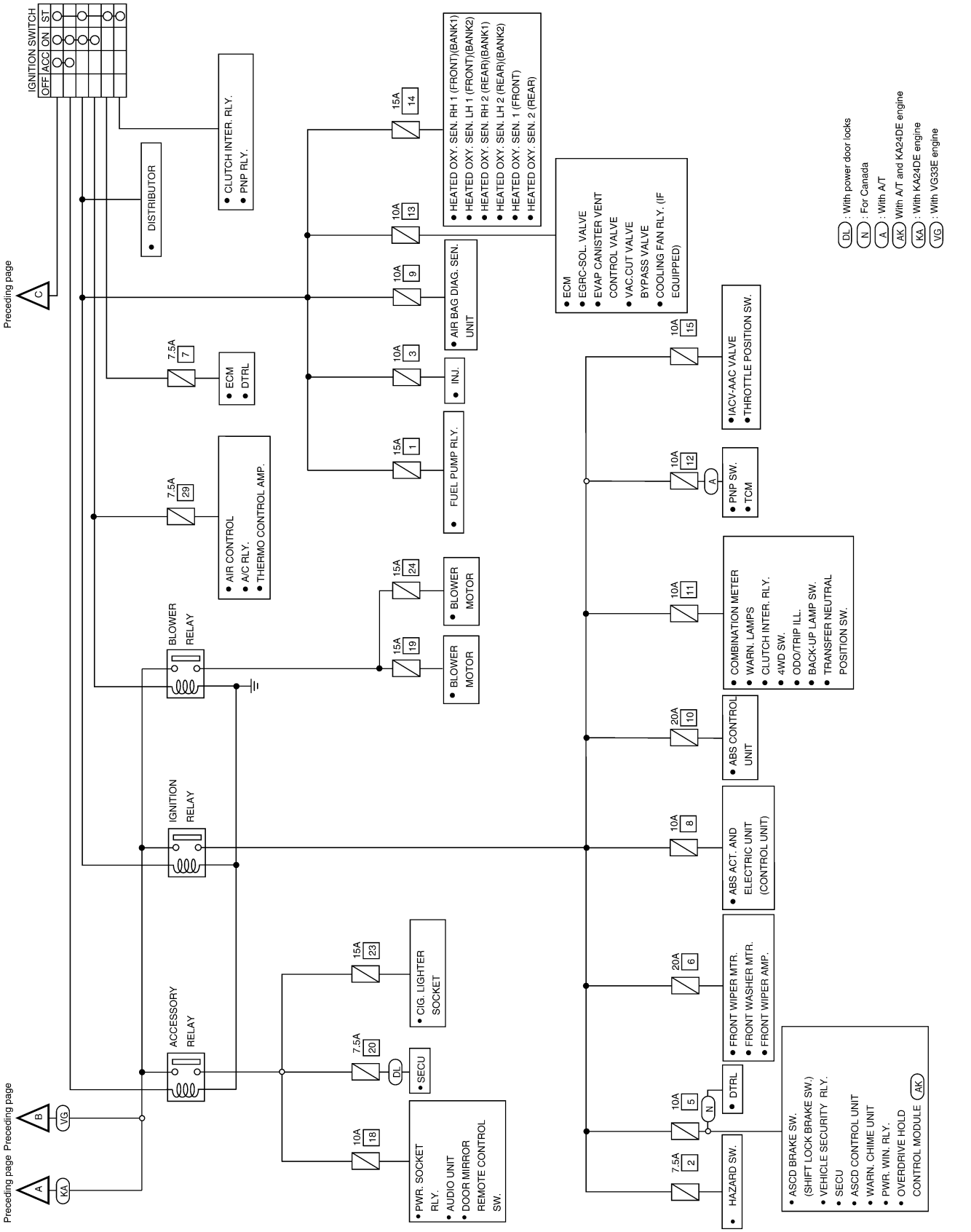

WEL503A

Wiring Diagram — POWER —

NEEL0006

BATTERY POWER SUPPLY — IGNITION SW. IN ANY POSITION

NEEL0006S01

NOTE:

For detailed ground distribution information, refer to “GROUND DISTRIBUTION”, EL-17.

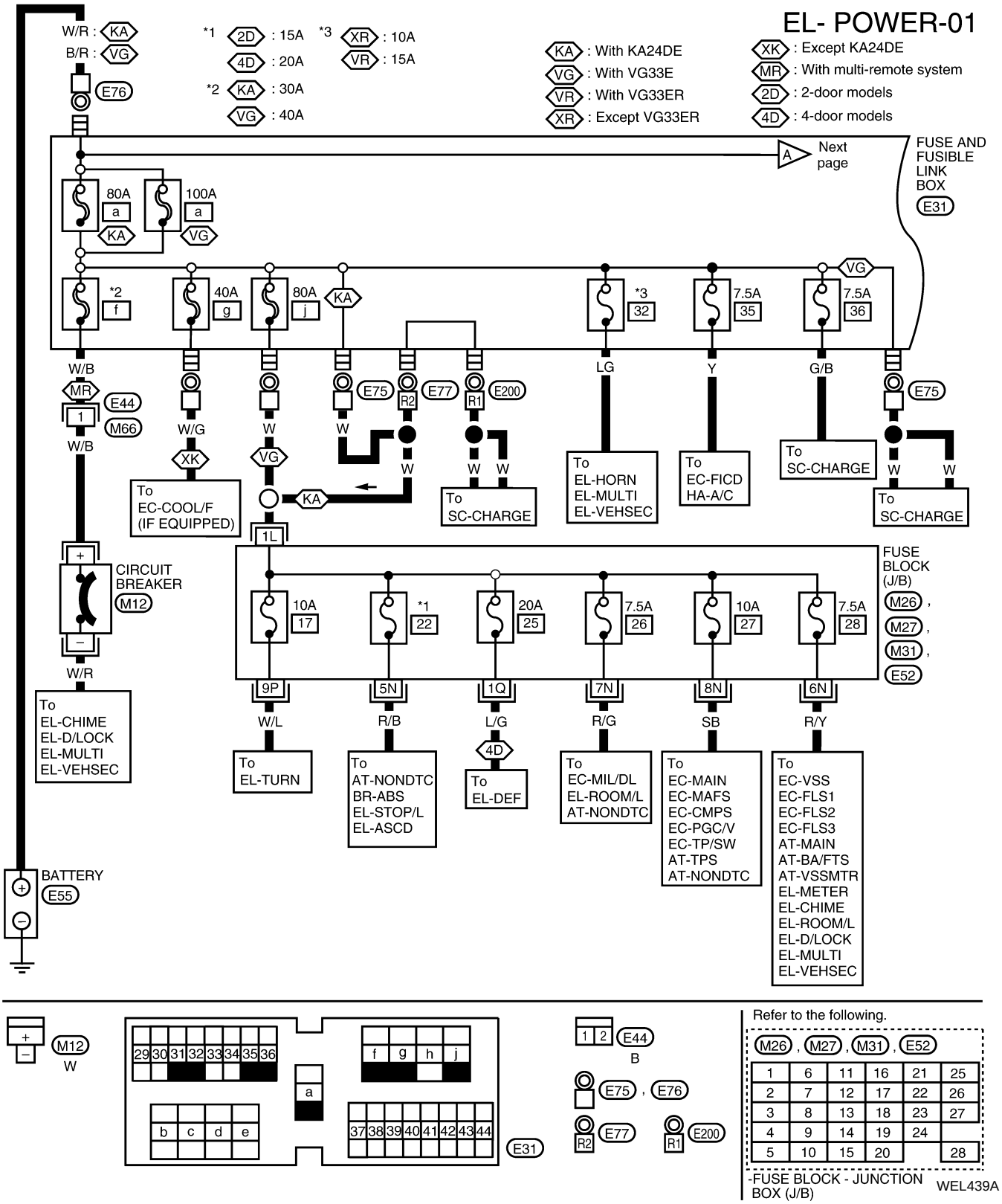

1	6	11	16	21	25
2	7	12	17	22	26
3	8	13	18	23	27
4	9	14	19	24	
5	10	15	20		28

EL-POWER-02

FL : With fog lamps
KA : With KA24DE
VG : With VG33E
VR : With VG33ER
XR : Except VG33ER

*4 KA : 10A
VG : 15A

*5 VR : 20A
XR : 15A

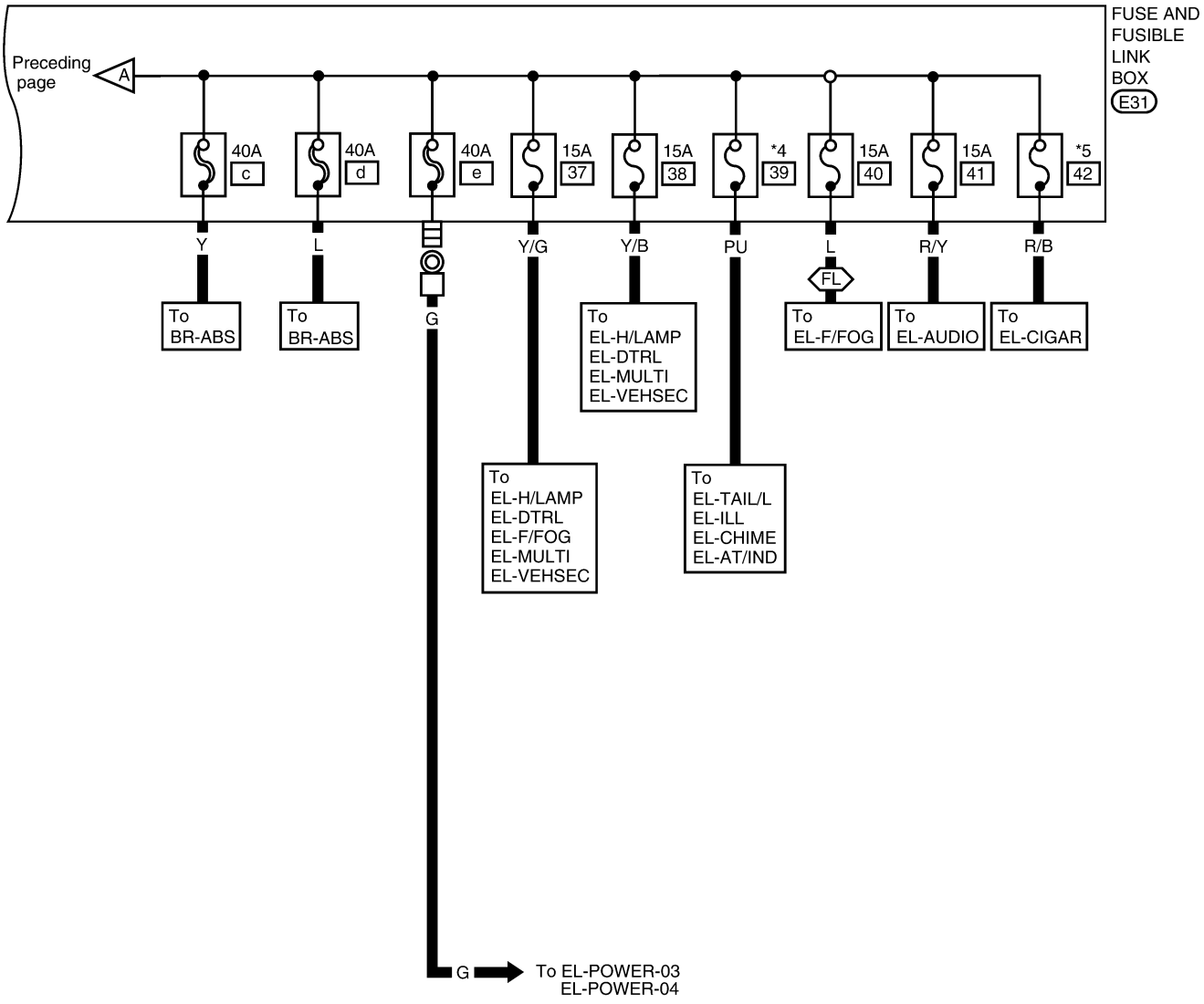

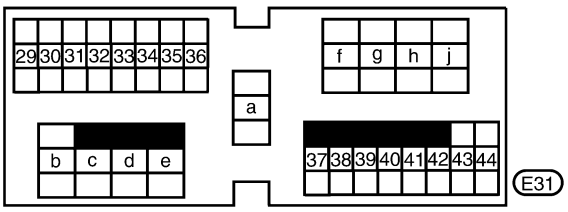

WEL440A

ACCESSORY POWER SUPPLY — IGNITION SW. IN ACC OR ON

=NEEL0006S02

NOTE:

For detailed ground distribution information, refer to "GROUND DISTRIBUTION", EL-17.

EL-POWER-03

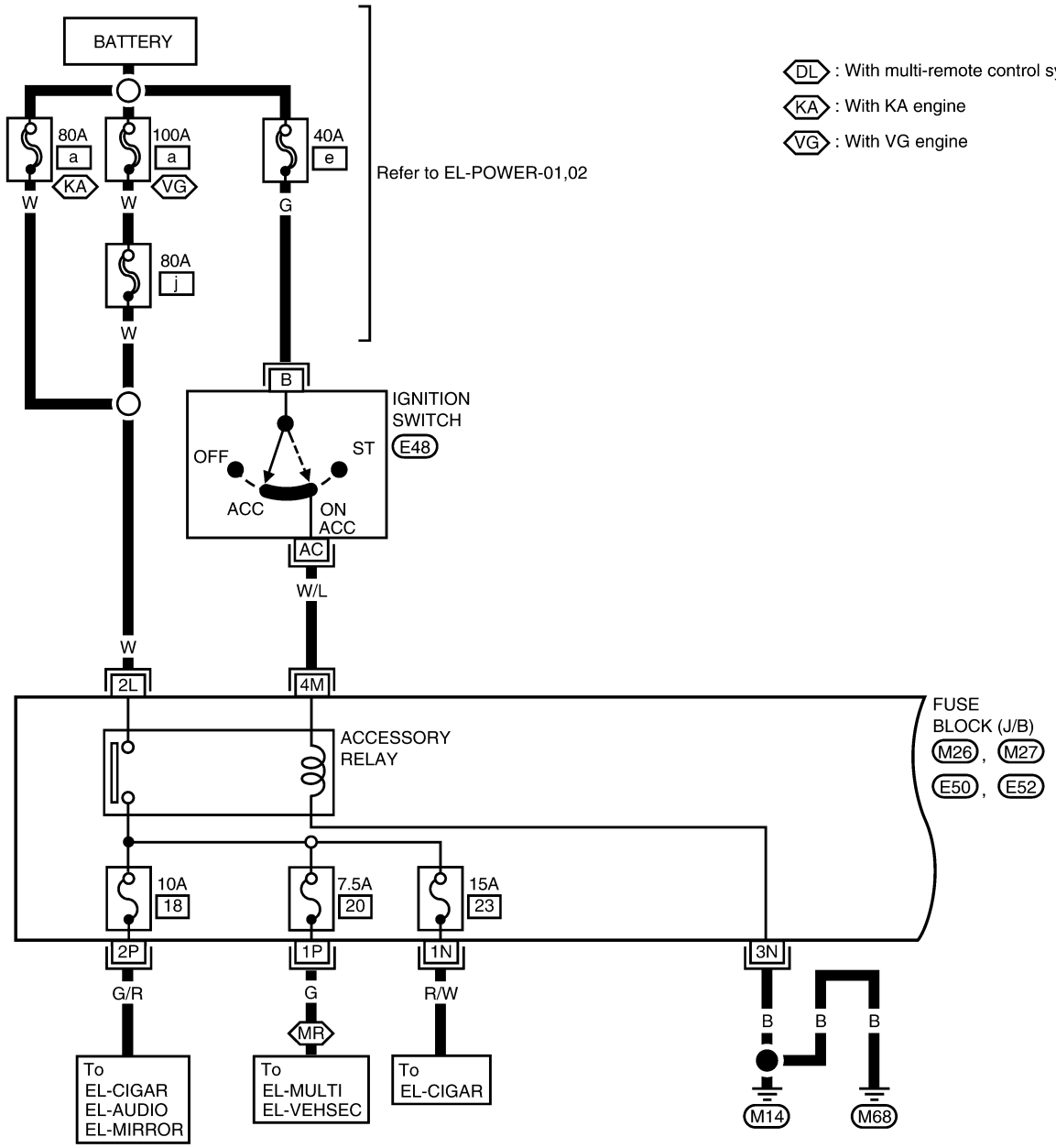



Refer to the following.

M26, M27, E50, E52

1	6	11	16	21	25
2	7	12	17	22	26
3	8	13	18	23	27
4	9	14	19	24	
5	10	15	20		28

-FUSE BLOCK - JUNCTION BOX (J/B)

LEL791

Wiring Diagram — POWER — (Cont'd)

IGNITION POWER SUPPLY — IGNITION SW. IN ON AND/OR START

=NEEL0006S03

NOTE:

For detailed ground distribution information, refer to "GROUND DISTRIBUTION", EL-17.

EL-POWER-04

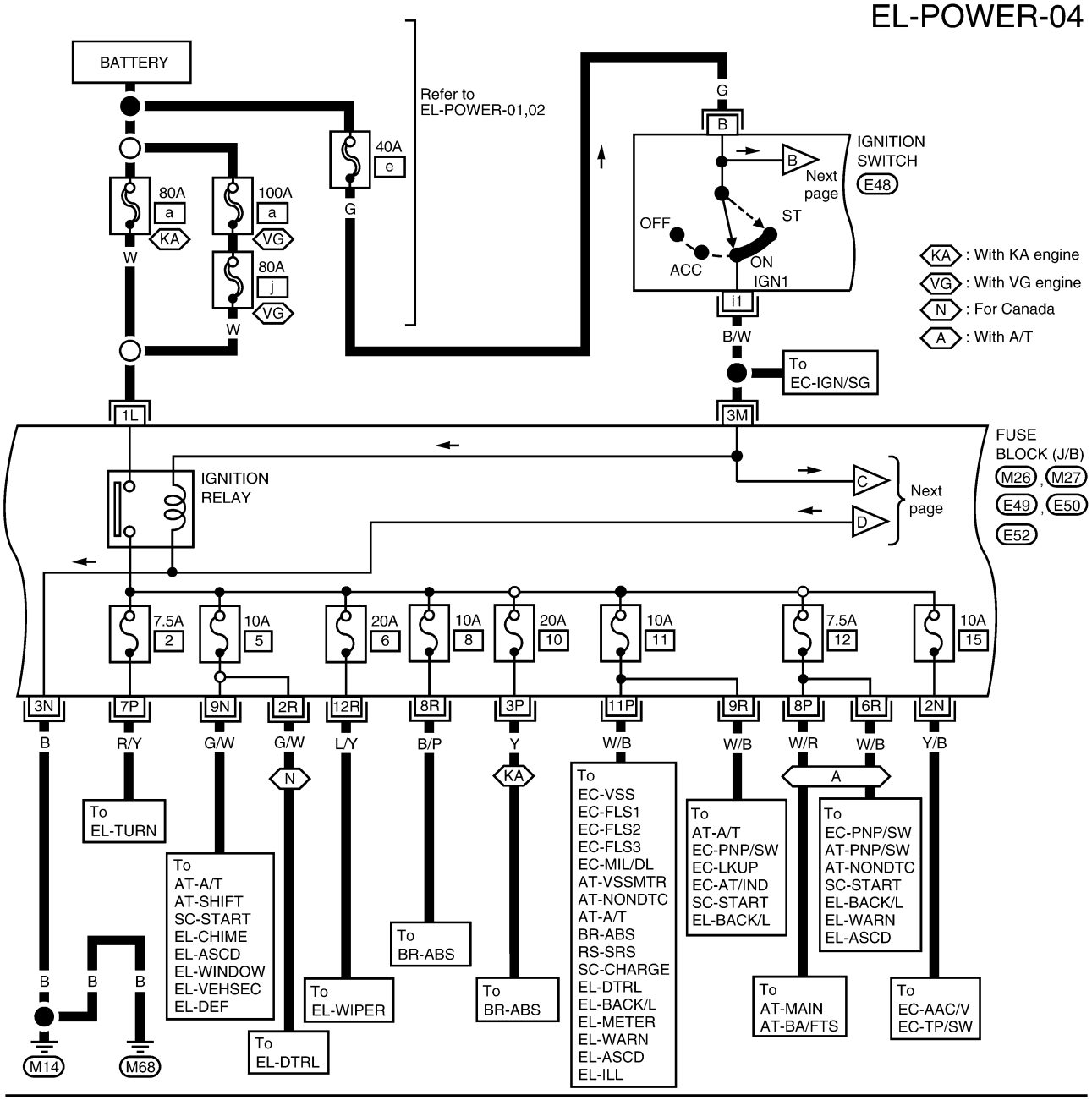



Refer to the following.

M26, M27, E49, E50, E52

1	6	11	16	21	25
2	7	12	17	22	26
3	8	13	18	23	27
4	9	14	19	24	
5	10	15	20		28

-FUSE BLOCK - JUNCTION BOX (J/B)

WEL042B

EL-POWER-05

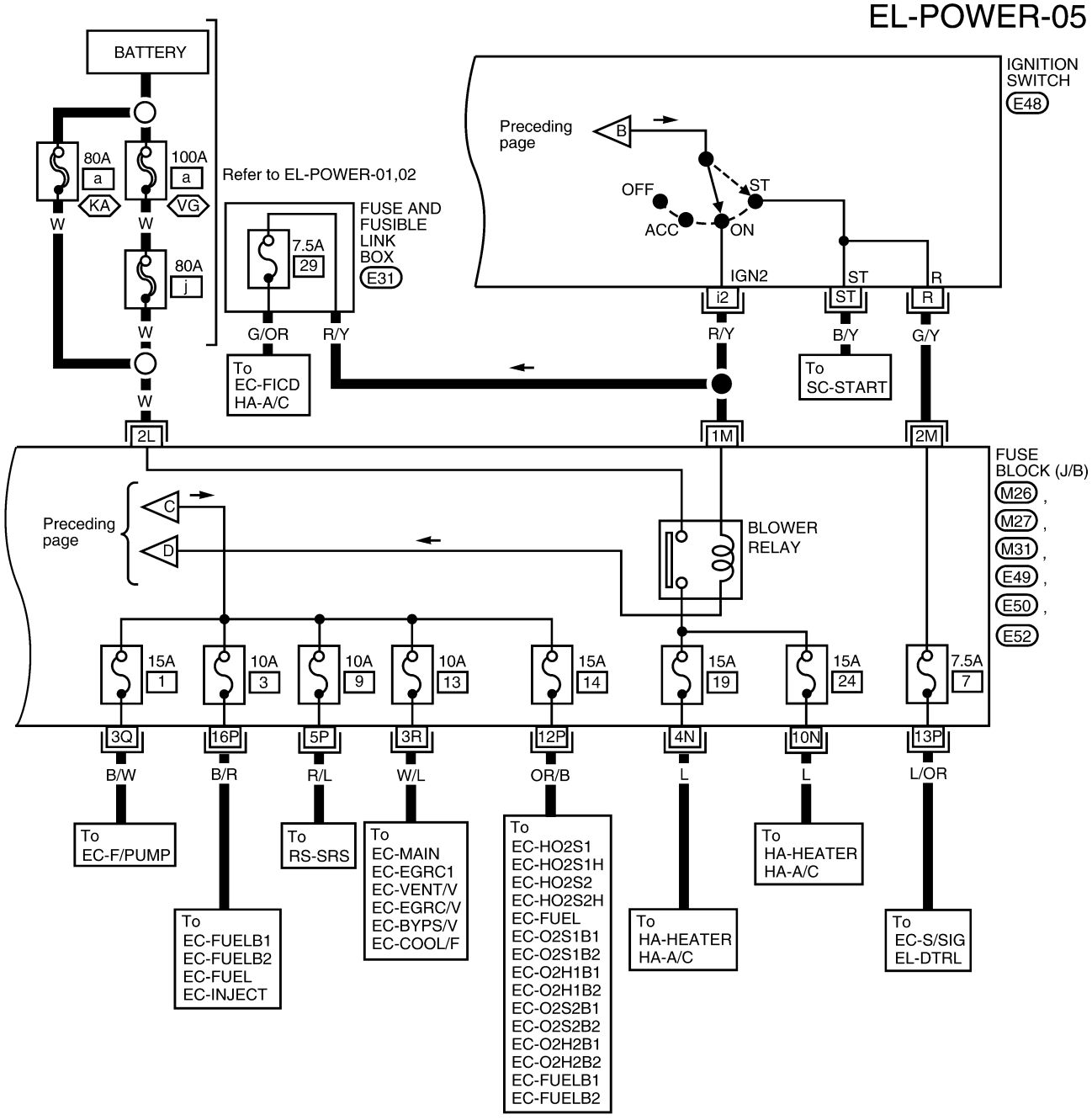

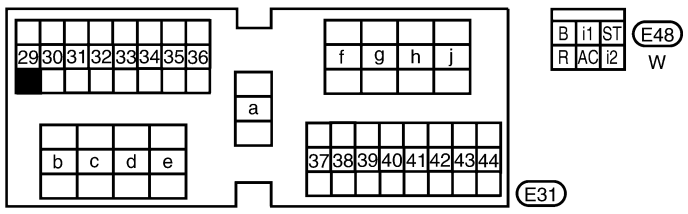

Refer to the following.

M26, M27, M31, E49, E50, E52

1	6	11	16	21	25
2	7	12	17	22	26
3	8	13	18	23	27
4	9	14	19	24	
5	10	15	20		28

-FUSE BLOCK - JUNCTION BOX (J/B)

LEL793

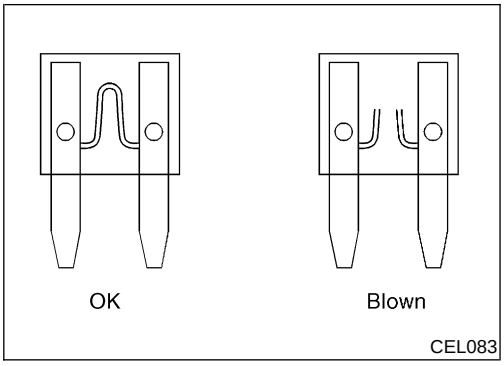

Inspection

NEEL0007

FUSE

NEEL0007S01

- **If fuse is blown, be sure to eliminate cause of problem before installing new fuse.**
- **Use fuse of specified rating. Never use fuse of more than specified rating.**
- **Do not partially install fuse; always insert it into fuse holder properly.**
- **Remove fuse for "ELECTRICAL PARTS (BAT)" if vehicle is not used for a long period of time.**

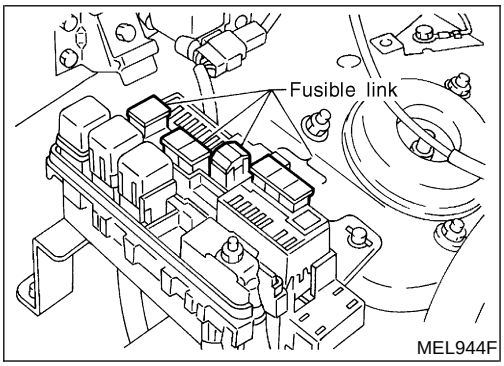

FUSIBLE LINK

NEEL0007S02

A melted fusible link can be detected either by visual inspection or by feeling with fingertip. If its condition is questionable, use circuit tester or test lamp.

CAUTION:

- **If fusible link should melt, it is possible that critical circuit (power supply or large current carrying circuit) is shorted. In such a case, carefully check and eliminate cause of problem.**
- **Never wrap outside of fusible link with vinyl tape. Important: Never let fusible link touch any other wiring harness, vinyl or rubber parts.**

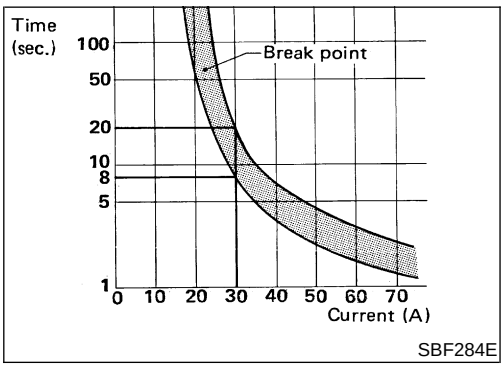

CIRCUIT BREAKER

NEEL0007S03

For example, when current is 30A, the circuit is broken within 8 to 20 seconds.

Circuit breakers are used in the following systems.

Ground Distribution

MAIN HARNESS

NEEL0171

NEEL0171S01

Body ground

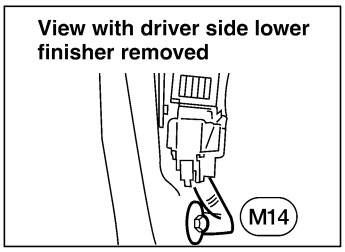

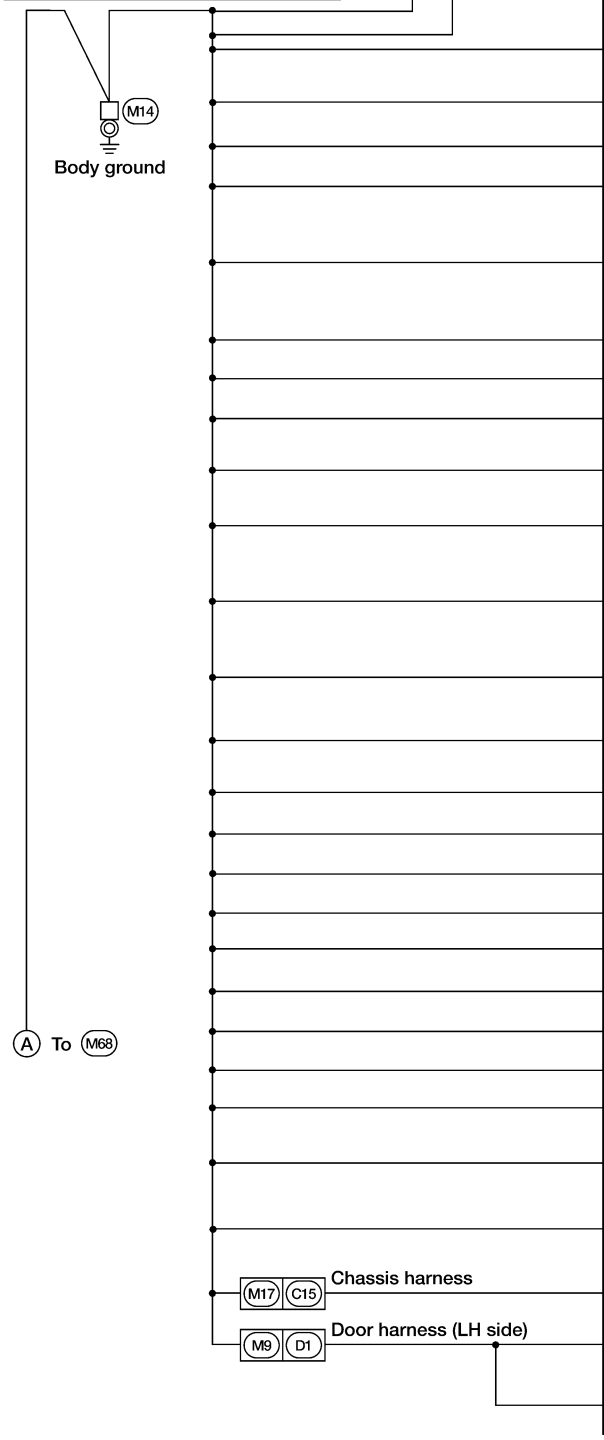

CONNECTOR NUMBER	CONNECT TO
M5	Clutch interlock switch (with M/T)
M6	Vehicle security relay (Terminal No. 3) (with vehicle security system) (with VG engine)
M11	Warning chime unit (Terminal No. 8) (without power door locks)
M19	Seat belt buckle switch
M20	Front door switch LH
M25	ABS check connector (with 2-wheel ABS)
M27	Fuse block (J/B) (Terminal No. 3N) • Accessory relay • Blower relay • Ignition relay
M28	Illumination control switch
M32	Data link connector (Terminal No. 4)
M35	A/T device (shift lock) (Terminal No. 1) (with A/T)
M35	A/T device (overdrive control switch) (Terminal No. 5) (with VG engine and A/T)
M36	Overdrive control switch (with KA engine and A/T)
M39	Combination meter (Terminal No. 36) • ABS warning lamp • Four wheel drive indicator • Turn signal indicators
M72	Door mirror remote control switch (Terminal No. 3)
M75	Subwoofer amplifier (with premium audio system) (except crew cab)
M76	ATP relay (Terminal No. 2) (with A/T) (2-door models)
M76	ATP relay (Terminal No. 4) (with A/T)
M112	Smart entrance control unit (Terminal No. 64)
M114	Air bag diagnosis sensor unit
M119	ASCD control unit (Terminal No. 17) (with ASCD)
M122	Rear window defogger timer (without power door locks)
M124	Passenger air bag deactivation switch (except Crew Cab)
M125	Rear window defogger switch (indicator) (Terminal No. 4)
M125	Rear window defogger switch (Terminal No. 2)
M126	Passenger air bag deactivation switch indicator (except Crew Cab)
M130	Overdrive hold control module (Terminal No. 4) (with KA engine and A/T) (if equipped)
C4	ABS actuator (with 2-wheel ABS)
D7	Main power window and door lock/unlock switch (with power door locks)
D9	Front door key cylinder switch LH (with power door locks)

WEL488A

Body ground

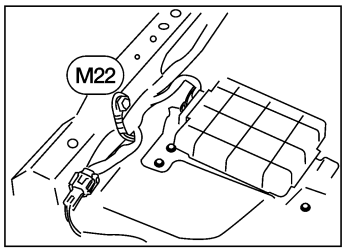

CONNECTOR NUMBER	CONNECT TO
M23	ABS control unit (Terminal No. 11) (With 2-wheel ABS)

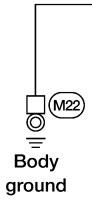

LEL795

Body ground

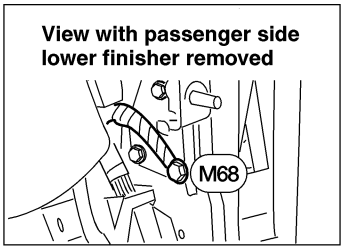

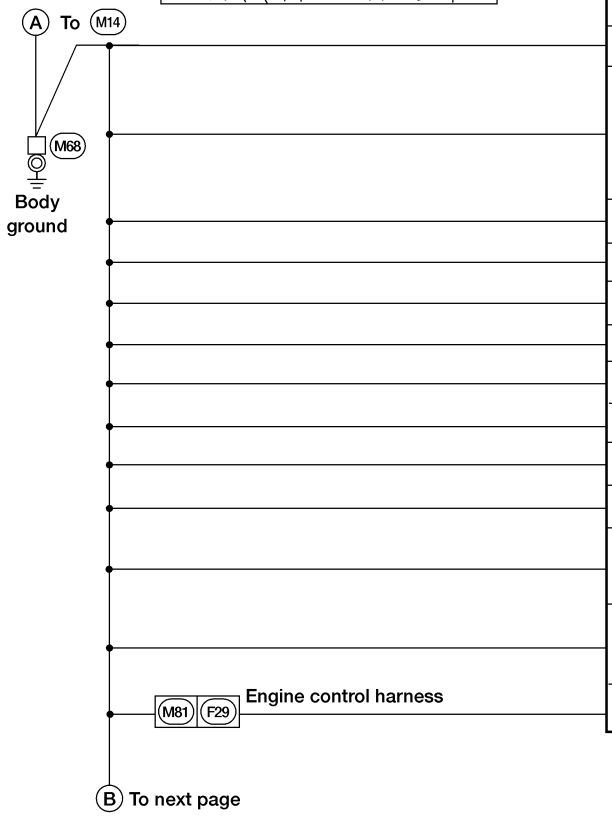

CONNECTOR NUMBER	CONNECT TO
M13	Power window relay (Terminal No.1) (with power windows)
M38	Combination meter (Terminal No. 24) • Air bag warning lamp • Fuel gauge • Speedometer • Water temperature gauge
M39	Combination meter (high beam indicator) (Terminal No. 27)
M45	Combination flasher unit
M52	Cigarette lighter socket
M54	Power socket
M57	Fan switch
M76	ATP relay (Terminal No. 2) (with A/T) (2-door models)
M95	Air control (Terminal No. 8) (with A/C)
M111	Smart entrance control unit (Terminal No. 43)
M129	Overdrive cancel relay (Terminal No. 2) (with KA engine and A/T) (if equipped)
M129	Overdrive cancel relay (Terminal No. 3) (with KA engine and A/T) (if equipped)
F29	ECM (Terminal No. 66)

WEL489A

Body ground

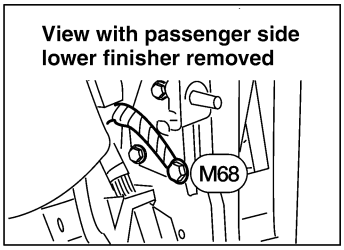

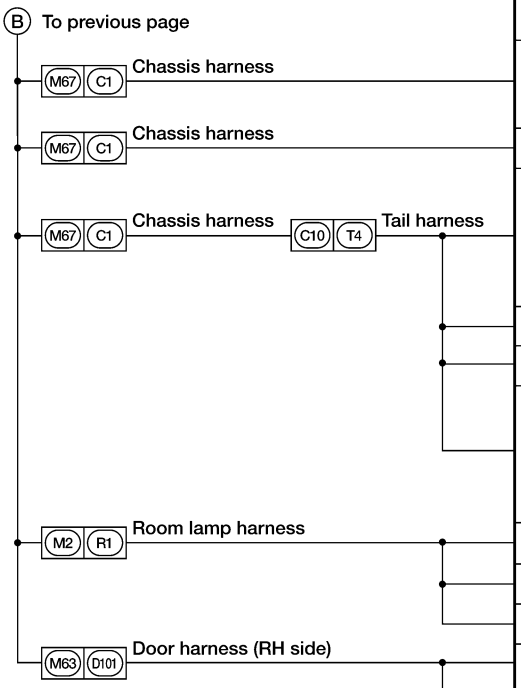

CONNECTOR NUMBER	CONNECT TO
C13	Fuel tank gauge unit (Terminal No. E) • Fuel level sensor unit • Tank fuel temperature sensor
C14	Fuel pump
T1	Rear combination lamp LH (Terminal No. 2) • Back-up lamp • Stop lamp • Tail lamp • Turn signal lamp
T2	License plate lamp LH
T3	License plate lamp RH
T5	Rear combination lamp RH (Terminal No. 2) • Back-up lamp • Stop lamp • Tail lamp • Turn signal lamp
R2	Map lamp
R3	High-mounted stop lamp
R4	Room lamp
D107	Front door lock and unlock switch RH (with power door locks)
D108	Front door lock actuator RH (door unlock sensor) (with power door locks)

LEL443A

ENGINE ROOM HARNESS
KA24DE

NEEL0171S02

NEEL0171S0203

Body ground

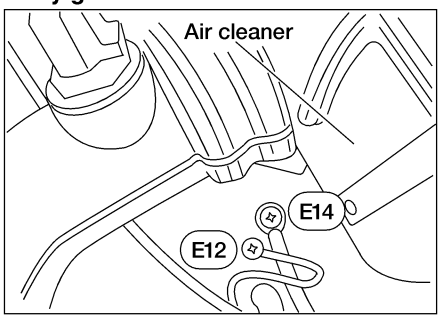

Body ground

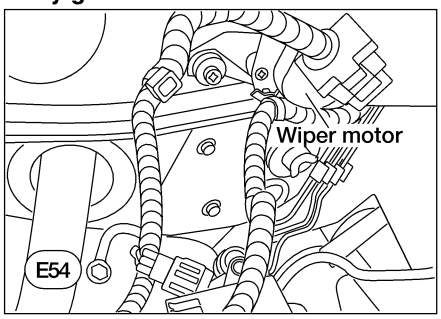

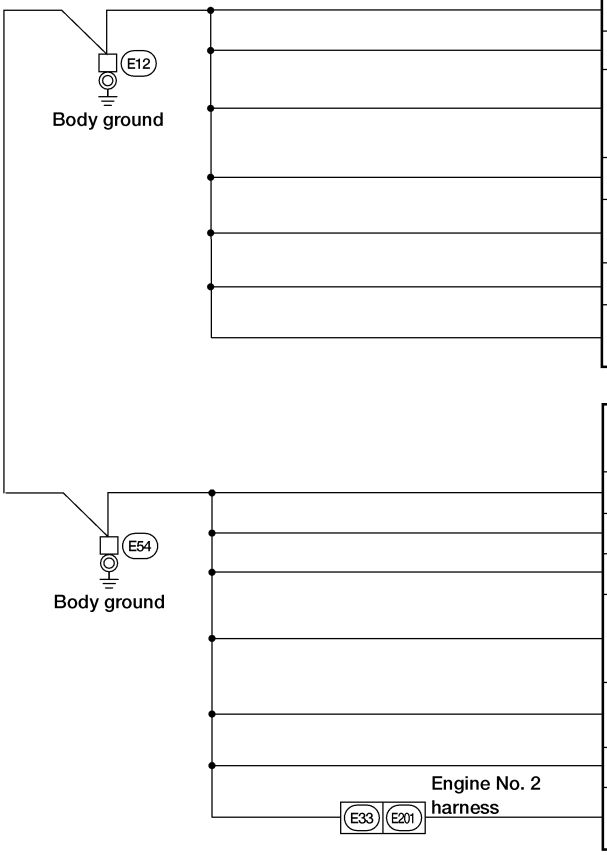

CONNECTOR NUMBER	CONNECT TO
E5	Washer fluid level switch (for Canada)
E7	Headlamp LH
E13	Front combination lamp LH (Terminal No.2) • Parking lamp • Turn signal lamp
E37	Brake fluid level switch
E39	ABS actuator and electric unit (control unit) (Terminal No.8)
E46	Front wiper switch (Terminal No. 17)
E46	Front wiper switch (Terminal No. 20) (with intermittent wipers)

CONNECTOR NUMBER	CONNECT TO
E1	Headlamp RH
E3	Dual-pressure switch
E17	Daytime light control unit (Terminal No. 9) (for Canada)
E19	Front combination lamp RH (Terminal No.2) • Parking lamp • Turn signal lamp
E40	Front wiper amplifier (Terminal No. 7) (with intermittent wipers)
E42	Front wiper motor (Terminal No. E)
E218	Park neutral position (PNP) switch (Terminal No. 2)

LEL730

VG33E and VG33ER

NEEL0171S0204

Body ground

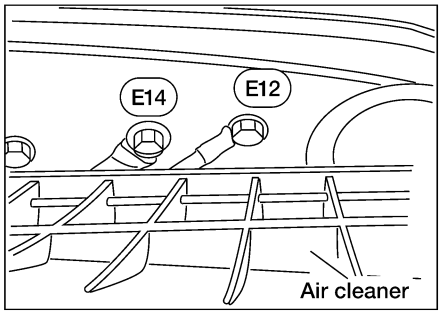

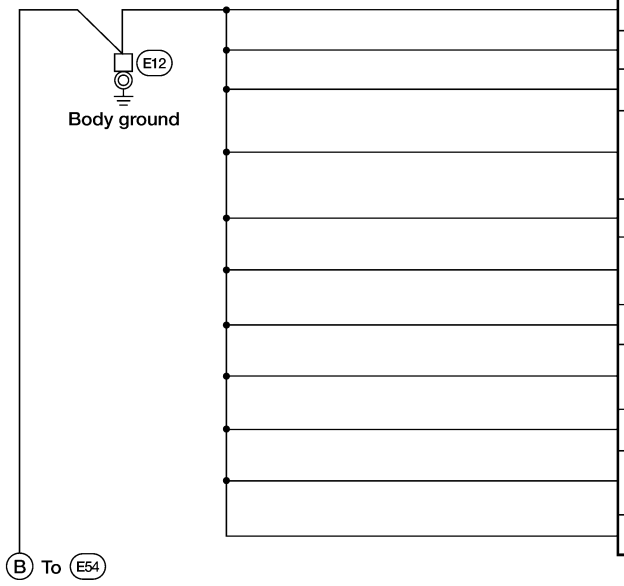

CONNECTOR NUMBER	CONNECT TO
E5	Washer fluid level switch (for Canada)
E7	Headlamp LH
E9	Hood switch (with vehicle security system)
E13	Front combination lamp LH (Terminal No.2) • Parking lamp • Turn signal lamp
E37	Brake fluid level switch
E39	ABS actuator and electric unit (control unit) [Terminal No.8 (4WD models)] [Terminal No. 16 (2WD models)]
E46	Front wiper switch (Terminal No. 17)
E46	Front wiper switch (Terminal No. 20) (with intermittent wipers)
E56	Front fog lamp relay (Terminal No. 1) (with fog lamps)
E58	Front fog lamp LH (Terminal No. 2) (with fog lamps)
E68	Ambient air temperature switch

LEL487A

Body ground

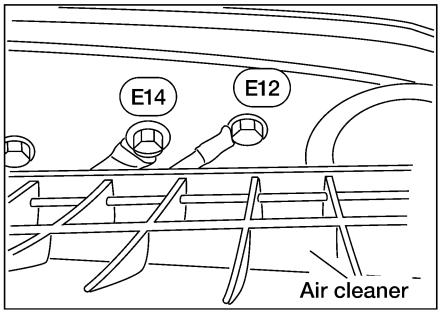

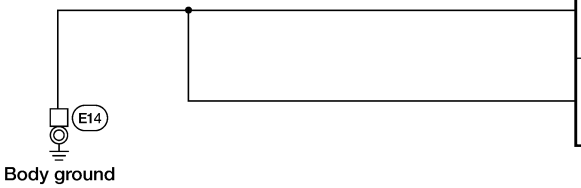

CONNECTOR NUMBER	CONNECT TO
E39	ABS actuator and electric unit (control unit) (Terminal No. 19)(2-wheel drive with VG engine)
E39	ABS actuator and electric unit (control unit) (Terminal No. 24)(4-wheel drive with VG engine)

LEL799

Body ground

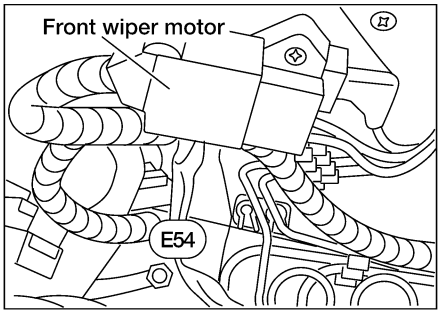

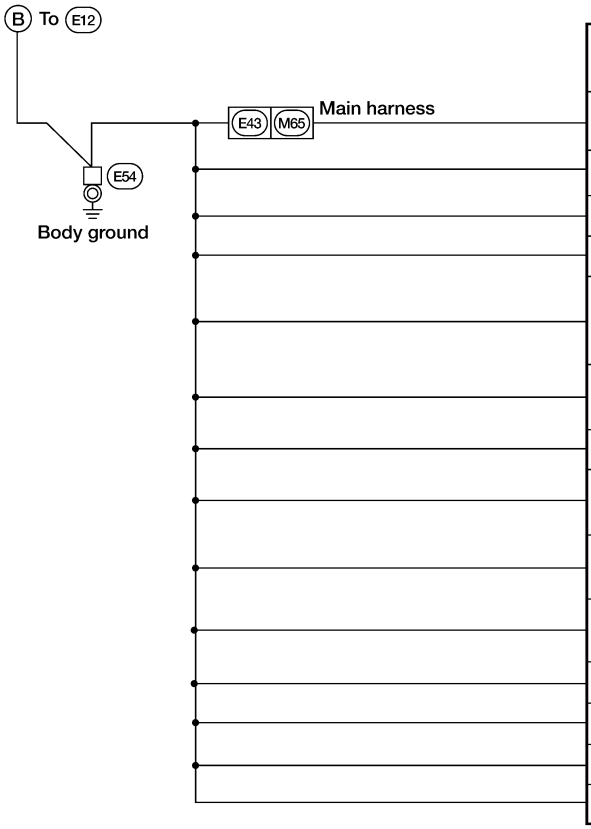

CONNECTOR NUMBER	CONNECT TO
M6	Vehicle security relay (Terminal No. 4) (with power door locks)
E1	Headlamp RH
E3	Triple-pressure switch
E17	Daytime light control unit (Terminal No. 9) (for Canada)
E19	Front combination lamp RH (Terminal No. 2) • Parking lamp • Turn signal lamp
E20	Vehicle security horn relay (Terminal No. 3) (with power door locks)
E21	ASCD relay (Terminal No. 2) (with A/T and ASCD)
E27	Park/neutral position (PNP) relay (Terminal No. 1) (with A/T)
E27	Park/neutral position (PNP) relay (Terminal No. 6) (with A/T)
E40	Front wiper amplifier (Terminal No. 7) (with intermittent wipers)
E42	Front wiper motor (Terminal No. E)
E57	Front fog lamp RH (Terminal No. 2) (with fog lamps)
E69	Cooling fan motor (Terminal No. 3) (if equipped)
E69	Cooling fan motor (Terminal No. 4) (if equipped)

WEL510A

ENGINE CONTROL HARNESS
KA24DE

NEEL0171S09

NEEL0171S0901

Engine ground

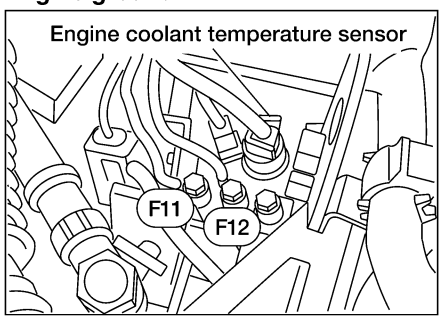

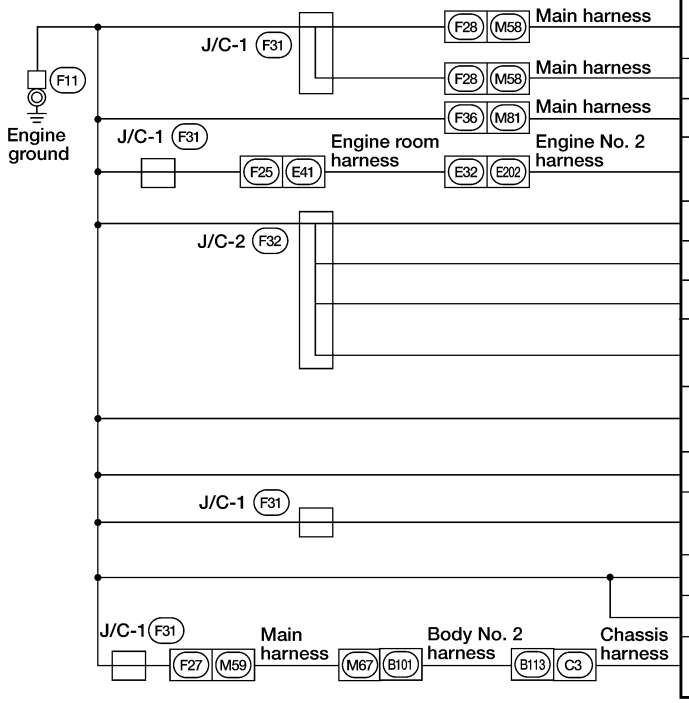

CONNECTOR NUMBER	CONNECT TO
M21	Heated oxygen sensor 2 (rear) (Terminal No. 4)
M21	Heated oxygen sensor 2 (rear)(shield wire)
M32	Data link connector (Terminal No. 5)
E211	Crankshaft position sensor (OBD) (shield wire)
F1	Mass air flow sensor (shield wire)
F2	Knock sensor (shield wire)
F3	Throttle position sensor (shield wire)
F13	Distributor (camshaft position sensor) (shield wire)
F13	Distributor (camshaft position sensor) (Terminal No. 6)
F14	Resistor (ignition coil) (shield wire)
F16	Heated oxygen sensor 1 (front) (shield wire)
F29	ECM (Terminal No. 25)
F29	ECM (Terminal No. 32)
C4	Evap control system pressure sensor (shield wire)



CONNECTOR NUMBER	CONNECT TO
F7	IACV-FICD solenoid valve
F13	Distributor (power transistor) (Terminal No. 2)
F29	ECM (Terminal No. 10)
F29	ECM (Terminal No. 19)
F29	ECM (Terminal No. 116)
F29	ECM (Terminal No. 124)

WEL490A

VG33E and VG33ER

NEEL0171S0902

Engine ground (VG33E)

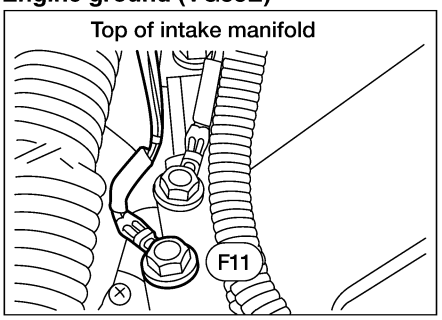

Engine ground (VG33ER)

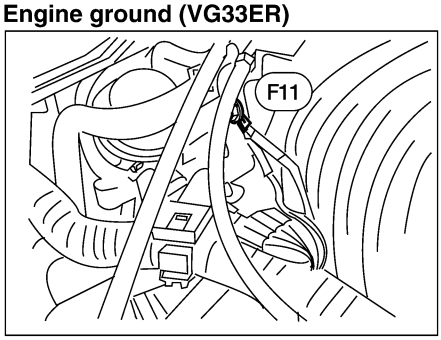

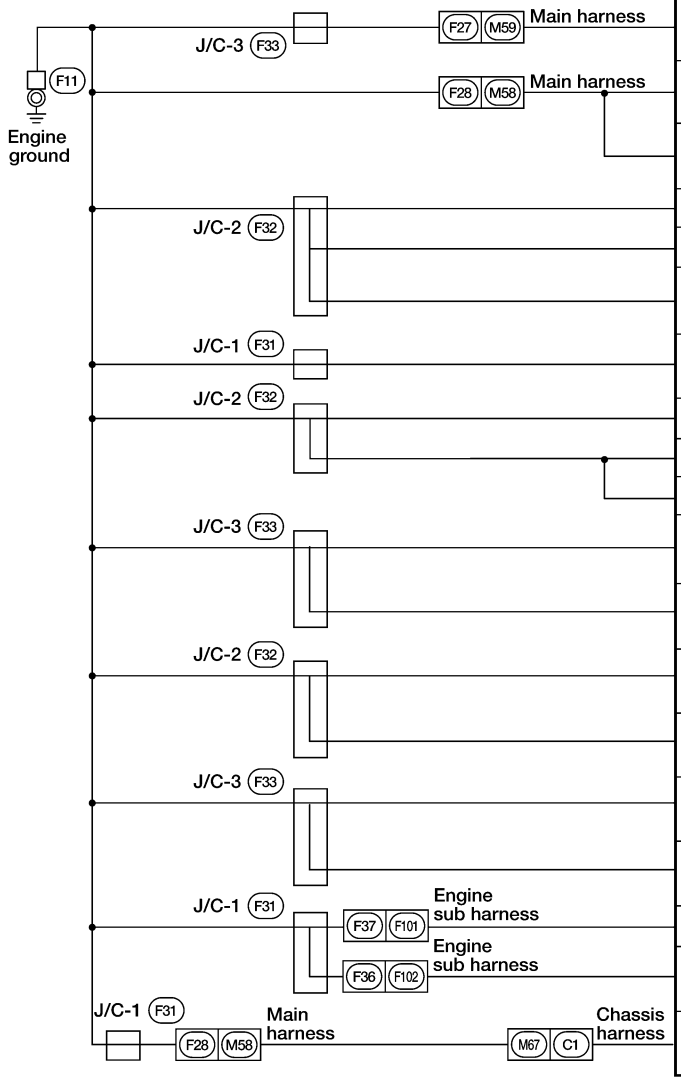

CONNECTOR NUMBER	CONNECT TO
M32	Data link connector (Terminal No. 5)
M78	TCM (transmission control module) (Terminal No. 25) (with A/T)
M78	TCM (transmission control module) (Terminal No. 48) (with A/T)
F1	Mass air flow sensor (shield wire)
F3	Throttle position sensor (shield wire)
F13	Distributor (camshaft position sensor) (Terminal No. 6)
F13	Distributor (camshaft position sensor) (shield wire)
F14	Resistor (ignition coil) (shield wire)
F29	ECM (Terminal No. 25)
F29	ECM (Terminal No. 32)
F39	Heated oxygen sensor 2 (rear) (bank2) (shield wire)
F39	Heated oxygen sensor 2 (rear) (bank2) (Terminal No. 4)
F40	Heated oxygen sensor 1 (front) (bank2) (shield wire)
F41	Heated oxygen sensor 1 (front) (bank1) (shield wire)
F42	Heated oxygen sensor 2 (rear) (bank1) (shield wire)
F42	Heated oxygen sensor 2 (rear) (bank1) (Terminal No. 4)
F109	Knock sensor (shield wire)
F110	Crankshaft position sensor (OBD) (shield wire)
C4	Evap control system pressure sensor (shield wire)

WEL442A

Engine ground (VG33E)

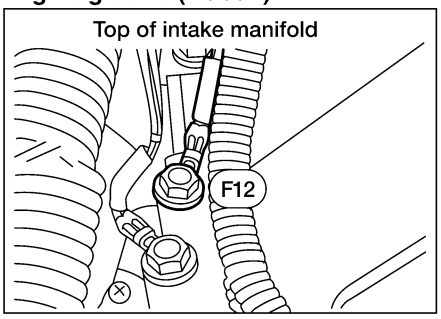

Engine ground (VG33ER)

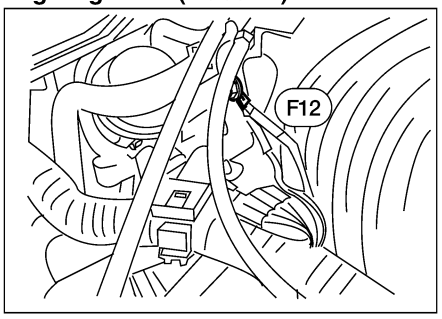

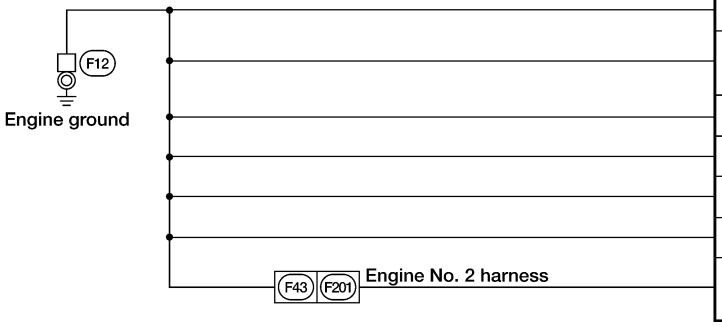

CONNECTOR NUMBER	CONNECT TO
F8	Power steering oil pressure switch
F13	Distributor (power transistor) (Terminal No. 2)
F29	ECM (Terminal No. 10)
F29	ECM (Terminal No. 19)
F29	ECM (Terminal No. 116)
F29	ECM (Terminal No. 124)
F218	Park/neutral position (PNP) switch (with M/T)

LEL441A

ENGINE NO. 2 HARNESS
KA24DE

NEEL0171S10

NEEL0171S1001

Body ground

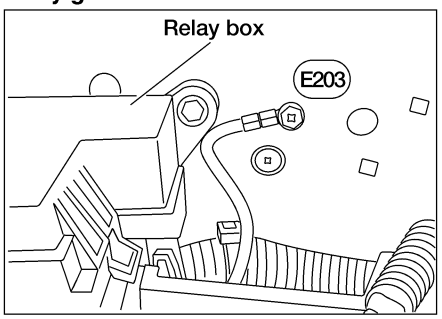

CONNECTOR NUMBER	CONNECT TO
E206	Generator

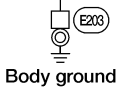

AEL710C

GENERATOR HARNESS
VG33E and VG33ER

NEEL0171S03

NEEL0171S0302

Body ground

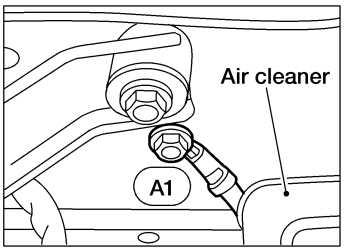

CONNECTOR NUMBER	CONNECT TO
A7	Generator

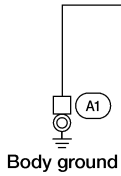

AEL697C

ROOM LAMP HARNESS
Crew Cab models

NEEL0171S08

NEEL0171S0801

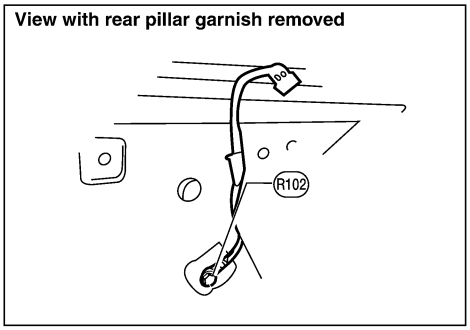

CONNECTOR NUMBER	CONNECT TO
R101	Rear window defogger (Crew Cab models)

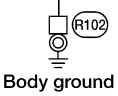

WEL453A

Check

NEEL0009

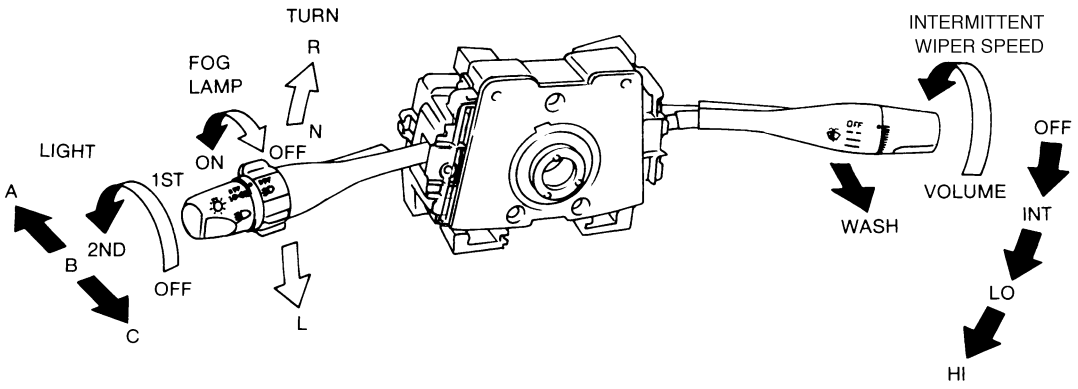

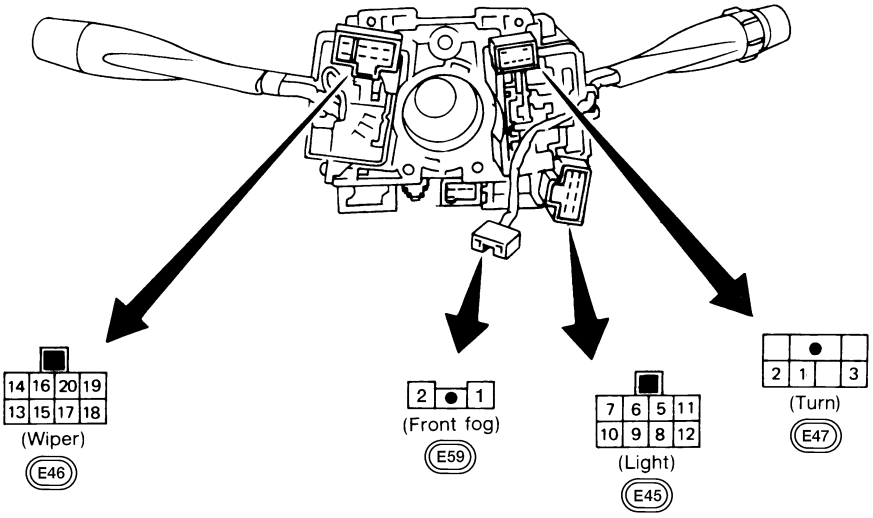

LIGHTING SWITCH

	OFF			1ST			2ND		
	A	B	C	A	B	C	A	B	C
5			○			○	○	○	○
6			○			○	○		○
7								○	
8			○			○	○	○	○
9			○			○	○		○
10								○	
11				○	○	○	○	○	○
12				○	○	○	○	○	○

WIPER SWITCH

	OFF	INT	LO	HI	WASH
13	○	○			
14	○	○	○		
15		○			
16				○	
17		○	○	○	○
18					○

INTERMITTENT WIPER VOLUME

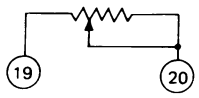

TURN SIGNAL SWITCH

	R	N	L
1	○		○
2	○		
3			○

FRONT FOG LAMP SWITCH

	OFF	ON
1		○
2		○

AEL122C

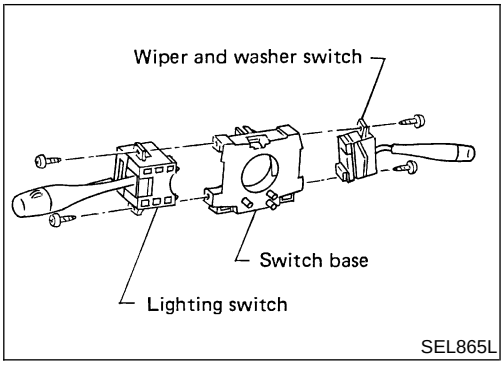

Replacement

NEEL0010

For removal and installation of spiral cable, refer to *RS-20*, "Driver Air Bag Module and Spiral Cable".

- Each switch can be replaced without removing combination switch base.

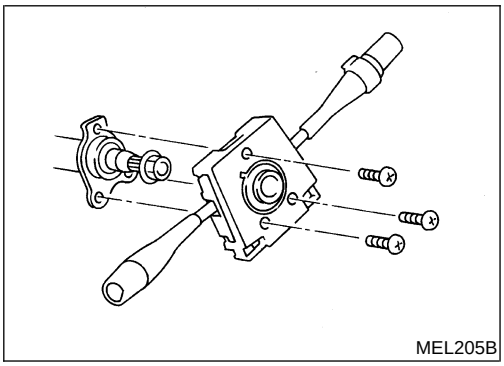

- To remove combination switch base, remove base attaching screws.

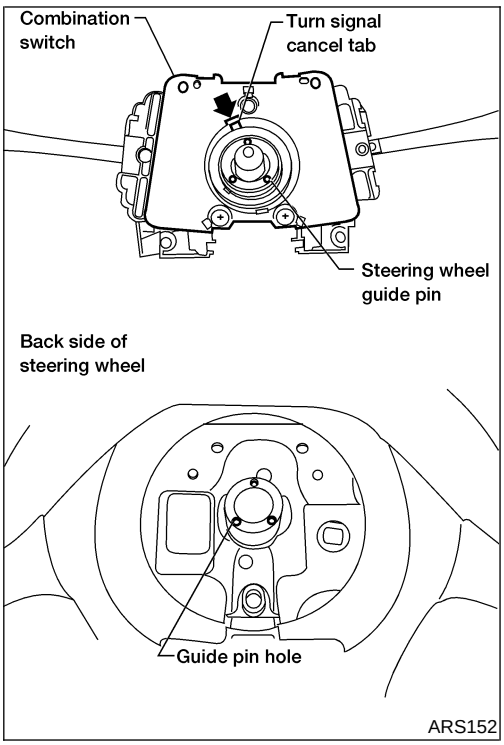

- Before installing the steering wheel, align the turn signal cancel tab with the notch of the combination switch. Refer to ***RS-20***, "Driver Air Bag Module and Spiral Cable".

Check

NEEL0011

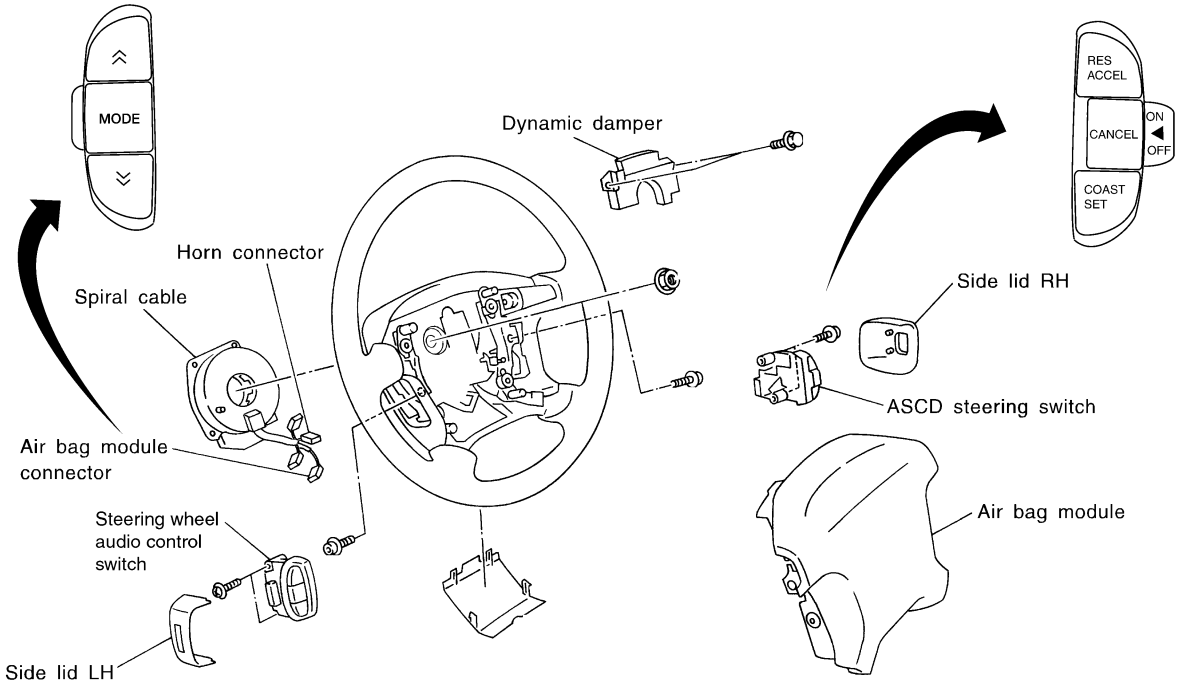

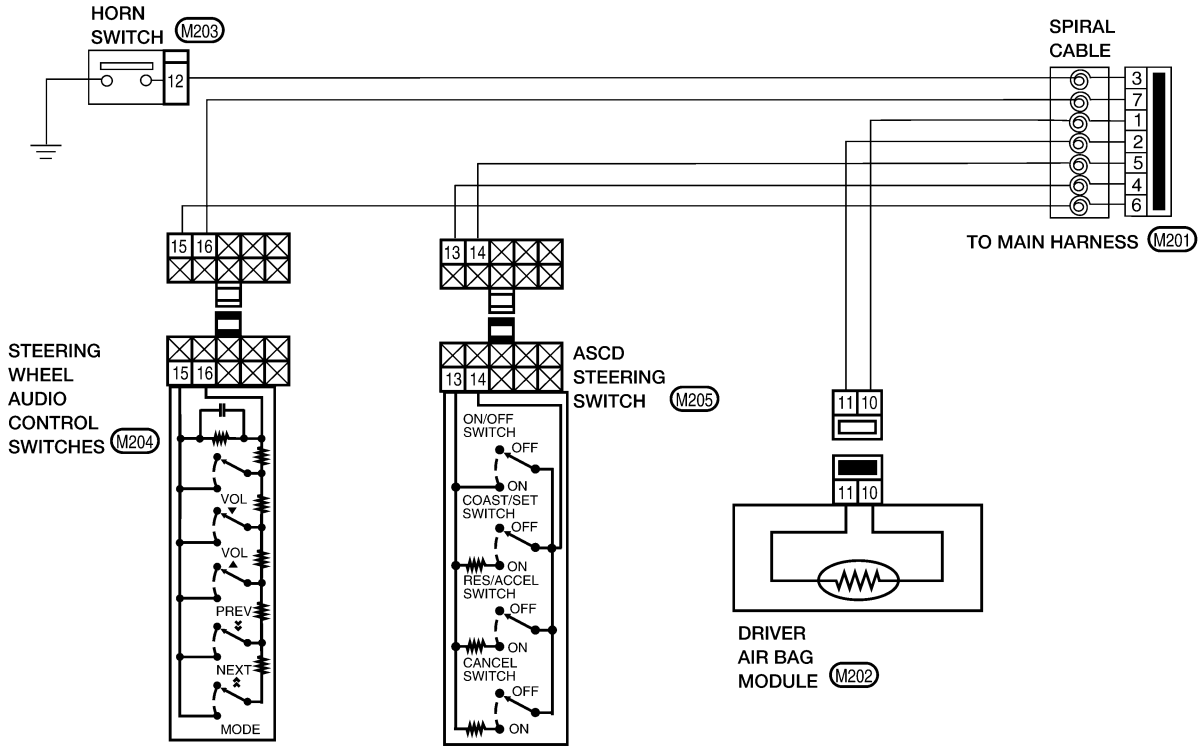

LEL179A

System Description

NEEL0012

The headlamps are controlled by the lighting switch which is built into the combination switch.
Power is supplied at all times

- through 15A fuse (No. 37, located in the fuse and fusible link box)
- to lighting switch terminal 5 and
- through 15A fuse (No. 38, located in the fuse and fusible link box)
- to lighting switch terminal 8.

LOW BEAM OPERATION

NEEL0012S01

With the lighting switch in the headlamp ON (2ND) position and LOW BEAM (B) position, power is supplied

- from lighting switch terminal 10
- to headlamp LH terminal D and
- from lighting switch terminal 7
- to headlamp RH terminal D.

Ground is supplied to headlamp LH/RH terminal E through body grounds E12 and E54.
With power and ground supplied, the low beams illuminate.

HIGH BEAM OPERATION/FLASH-TO-PASS OPERATION

NEEL0012S02

With the lighting switch in the FLASH TO PASS (C) position or the headlamp ON (2ND) position and HIGH BEAM (A) position, power is supplied

- from lighting switch terminal 6
- to headlamp RH terminal M and
- from lighting switch terminal 9
- to headlamp LH terminal M and
- to combination meter terminal 26 for the high beam indicator.

Ground is supplied to terminal 27 of the combination meter through body grounds M14 and M68.
Ground is supplied to headlamp LH/RH terminal E through body grounds E12 and E54.
With power and ground supplied, the high beams and the high beam indicator illuminate.

VEHICLE SECURITY SYSTEM

NEEL0012S03

The vehicle security system will flash the high beams if the system is triggered. Refer to “VEHICLE SECURITY (THEFT WARNING) SYSTEM”, EL-210.

Wiring Diagram — H/LAMP —

NEEL0013

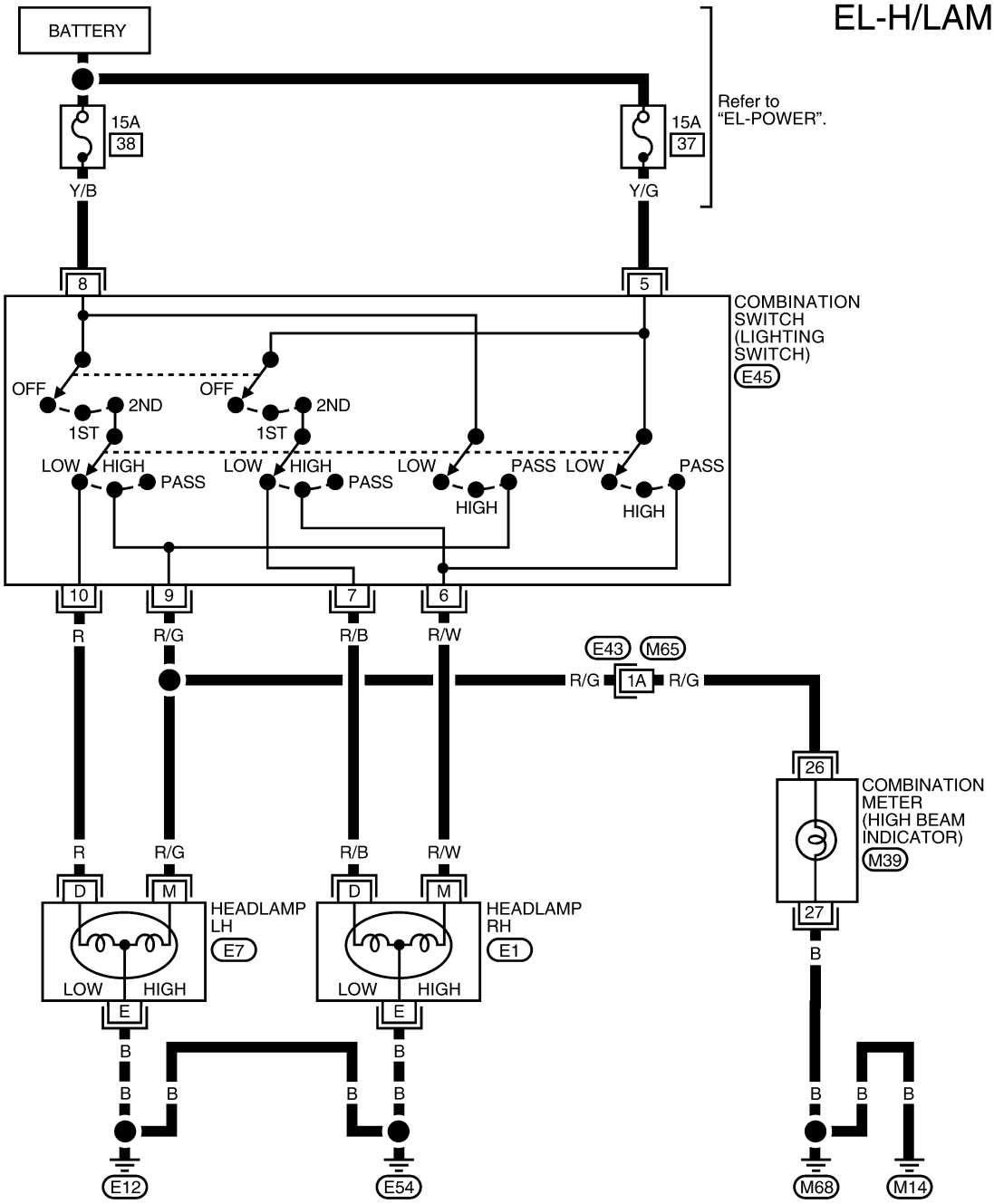

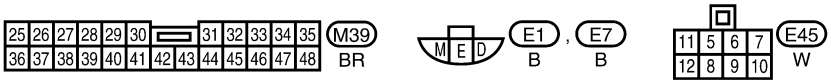

Refer to the following.
M65 , E43 - SUPER MULTIPLE JUNCTION (SMJ)

LEL738

Trouble Diagnoses

NEEL0014

Symptom	Possible cause	Repair order
Neither headlamp LH nor headlamp RH operate.	1. Lighting switch	1. Check lighting switch.
Headlamp LH does not operate, but headlamp RH operates properly.	1. Bulb 2. Headlamp LH ground circuit 3. 15A fuse 4. Lighting switch	1. Check bulb. 2. Check grounds E12 and E54 and continuity between headlamp LH terminal E and grounds E12 and E54. 3. Check 15A fuse (No. 38, located in fuse and fusible link box). Verify battery positive voltage is present at terminal 8 of lighting switch. 4. Check lighting switch.
Headlamp RH does not operate, but headlamp LH operates properly.	1. Bulb 2. Headlamp RH ground circuit 3. 15A fuse 4. Lighting switch	1. Check bulb. 2. Check grounds E12 and E54 and continuity between headlamp RH terminal E and grounds E12 and E54. 3. Check 15A fuse (No. 37, located in fuse and fusible link box). Verify battery positive voltage is present at terminal 5 of lighting switch. 4. Check lighting switch.
High beam LH does not operate, but low beam LH operates.	1. Bulb 2. Open in high beam LH circuit 3. Lighting switch	1. Check bulb. 2. Check R/G wire between lighting switch and headlamp LH for an open circuit. 3. Check lighting switch.
Low beam LH does not operate, but high beam LH operates.	1. Bulb 2. Open in low beam LH circuit 3. Lighting switch	1. Check bulb. 2. Check R wire between lighting switch and headlamp LH for an open circuit. 3. Check lighting switch.
High beam RH does not operate, but low beam RH operates.	1. Bulb 2. Open in high beam RH circuit 3. Lighting switch	1. Check bulb. 2. Check R/W wire between lighting switch and headlamp RH for an open circuit. 3. Check lighting switch.
Low beam RH does not operate, but high beam RH operates.	1. Bulb 2. Open in low beam RH circuit 3. Lighting switch	1. Check bulb. 2. Check R/B wire between lighting switch and headlamp RH for an open circuit. 3. Check lighting switch.
High beam indicator does not work.	1. Bulb 2. High beam indicator ground circuit 3. Open in high beam circuit	1. Check bulb in combination meter. 2. Check grounds M14 and M68 and continuity between combination meter terminal 27 and grounds M14 and M68. 3. Check R/G wire between lighting switch and combination meter for an open circuit.

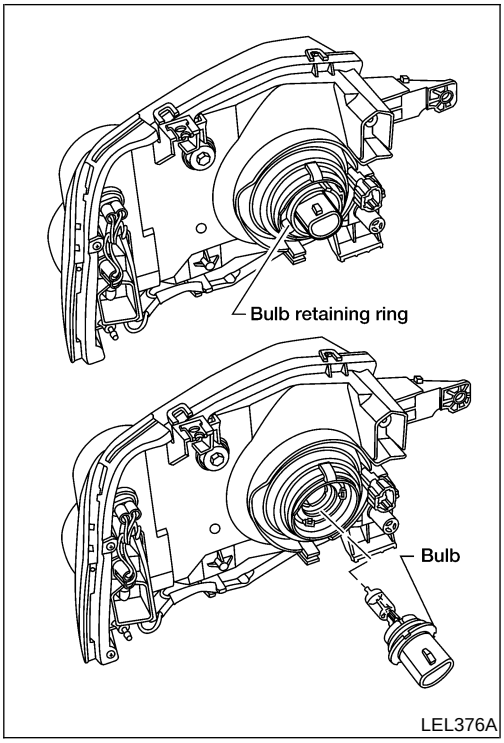

Bulb Replacement

NEEL0015

The headlamp is a semi-sealed beam type which uses a replaceable halogen bulb. The bulb can be replaced from the engine compartment side without removing the headlamp body.

- **Grasp only the plastic base when handling the bulb. Never touch the glass envelope.**

1. Disconnect the battery cable.
2. Disconnect the harness connector from the back side of the bulb.
3. Remove bulb retaining ring.
4. Remove the headlamp bulb carefully. Do not shake or rotate the bulb when removing it.
5. Install in the reverse order of removal.

CAUTION:

Do not leave headlamp reflector without bulb for a long period of time. Dust, moisture, smoke, etc. entering headlamp body may affect the performance of the headlamp. Remove headlamp bulb from the headlamp reflector just before a replacement bulb is installed.

Aiming Adjustment

NEEL0016

When performing headlamp aiming adjustment, use an aiming wall screen.

For details, refer to the regulations in your own country.

Before performing aiming adjustment, check the following.

1) **Keep all tires inflated to correct pressures.**
2) **Place vehicle on flat surface.**
3) **See that the vehicle is unloaded (except for full levels of coolant, engine oil and fuel, and spare tire, jack, and tools). Have the driver or equivalent weight placed in the driver's seat.**

LOW BEAM

NEEL0016S02

NOTE:

The horizontal headlamp aim cannot be adjusted. Only vertical aim is adjustable.

1. Turn headlamp low beam on.

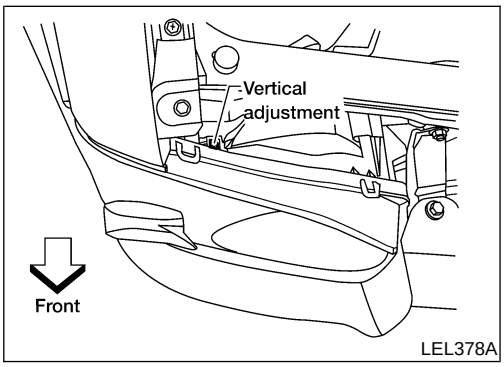

2. Use adjusting screw to adjust the vertical aim of the lamp.

- **Cover the opposite lamp and ensure fog lamps, if equipped, are turned off.**
- **Adjust beam pattern until cut-off line (top edge of illumination area) is positioned at same height off ground as bulb center (on H-line). Measure cut-off line within distance A on H-line. See aiming chart following.**

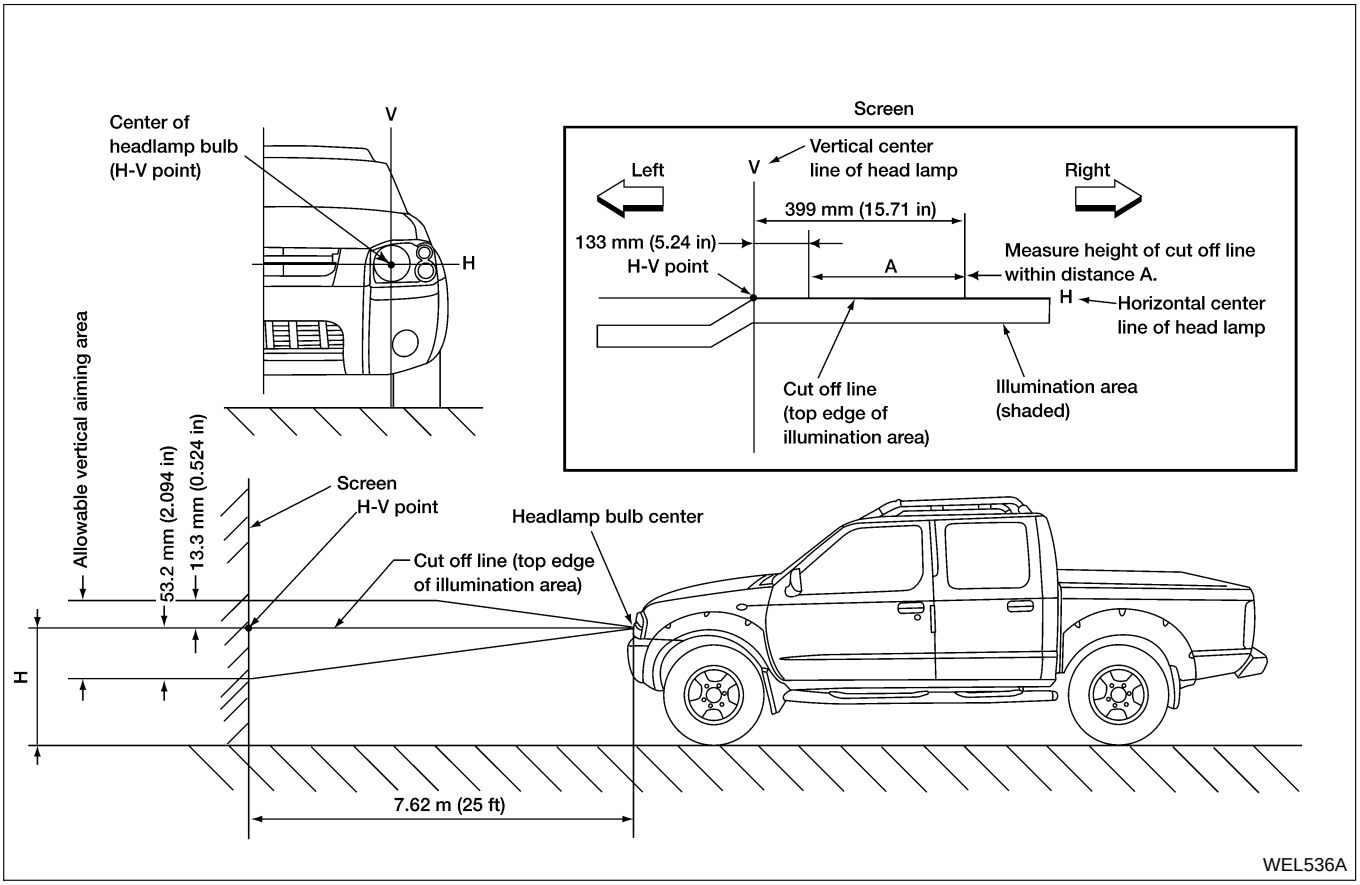

If the vehicle front body has been repaired and/or the headlamp assembly has been replaced, check aiming. Use the aiming chart shown in the figure.

- **Basic illuminating area (shaded) for adjustment should be within the range shown on the aiming chart. Adjust headlamps accordingly.**

System Description (For Canada)

NEEL0017

The headlamp system for Canada vehicles contains a daytime light control unit that activates the high beam headlamps at approximately half illumination whenever the engine is running. If the parking brake is applied before the engine is started, the daytime lights will not be illuminated. The daytime lights will illuminate once the parking brake is released. Thereafter, the daytime lights will continue to operate when the parking brake is applied. If the daytime light control unit receives a ground signal from the generator, the daytime lights will not be illuminated. The daytime lights will illuminate once a battery positive voltage signal is sent to the daytime light control unit from the generator.

Power is supplied at all times

- through 15A fuse (No. 38, located in the fuse and fusible link box)
- to daytime light control unit terminal 3 and
- to lighting switch terminal 8.

Power is also supplied at all times

- through 15A fuse (No. 37, located in the fuse and fusible link box)
- to daytime light control unit terminal 2 and
- to lighting switch terminal 5.

With the ignition switch in the ON or START position, power is supplied

- through 10A fuse [No. 5, located in the fuse block (J/B)]
- to daytime light control unit terminal 12.

With the ignition switch in the START position, power is supplied

- through 7.5A fuse [No. 7, located in the fuse block (J/B)]
- to daytime light control unit terminal 1.

Ground is supplied to daytime light control unit terminal 9 through body grounds E12 and E54.

HEADLAMP OPERATION

NEEL0017S01

Low Beam Operation

NEEL0017S0101

When the lighting switch is turned to the headlamp ON (2ND) position, LOW BEAM (B), power is supplied

- from lighting switch terminal 7
- to headlamp RH terminal D and
- to daytime light control unit terminal 4.

Ground is supplied to headlamp RH terminal E through body grounds E12 and E54.

Also, when the lighting switch is turned to the headlamp ON (2ND) position, LOW BEAM (B), power is supplied

- from lighting switch terminal 10
- to headlamp LH terminal D.

Ground is supplied

- to headlamp LH terminal E
- from daytime light control unit terminal 7
- through daytime light control unit terminal 9
- through body grounds E12 and E54.

With power and ground supplied, the low beam headlamps illuminate.

High Beam Operation/Flash-to-pass Operation

NEEL0017S0102

When the lighting switch is turned to the headlamp ON (2ND) position, HIGH BEAM (A) or FLASH TO PASS (C) position, power is supplied

- from lighting switch terminal 6
- to headlamp RH terminal M and
- to daytime light control unit terminal 8.

Also, when the lighting switch is turned to the headlamp ON (2ND) position, HIGH BEAM (A) or FLASH TO PASS (C) position, power is supplied

- from lighting switch terminal 9
- to combination meter terminal 26 for the high beam indicator and
- to daytime light control unit terminal 5
- through daytime light control unit terminal 6

- to headlamp LH terminal M.

Ground is supplied in the same manner as low beam operation.
Ground is supplied to combination meter terminal 27 through body grounds M14 and M68.
With power and ground supplied, the high beam headlamps and HI BEAM indicator illuminate.

DAYTIME LIGHT OPERATION

NEEL0017S02

With the engine running, the lighting switch in the OFF or 1ST position and parking brake released, power is supplied

- to daytime light control unit terminal 3
- through daytime light control unit terminal 6
- to headlamp LH terminal M
- through headlamp LH terminal E
- to daytime light control unit terminal 7
- through daytime light control unit terminal 8
- to headlamp RH terminal M.

Ground is supplied to headlamp RH terminal E through body grounds E12 and E54.
Because the high beam headlamps are now wired in series, they operate at half illumination.

OPERATION (FOR CANADA)

NEEL0017S03

After starting the engine with the lighting switch in the OFF or parking lamp (1ST) position, the headlamp high beams automatically turn on. Lighting switch operations other than the above are the same as conventional light systems.

Engine		With engine stopped									With engine running								
Lighting switch		OFF			1ST			2ND			OFF			1ST			2ND		
		A	B	C	A	B	C	A	B	C	A	B	C	A	B	C	A	B	C
Headlamp	High beam	X	X	O	X	X	O	O	X	O	△*	△*	O	△*	△*	O	O	X	O
	Low beam	X	X	X	X	X	X	X	O	X	X	X	X	X	X	X	X	O	X
Clearance and tail lamp		X	X	X	O	O	O	O	O	O	X	X	X	O	O	O	O	O	O
License and instrument illumination lamp		X	X	X	O	O	O	O	O	O	X	X	X	O	O	O	O	O	O

A: HIGH BEAM position
B: LOW BEAM position
C: FLASH TO PASS position
O : Lamp ON
X : Lamp OFF
△ : Lamp dims. (Added functions)
*: When starting the engine with the parking brake released, the daytime lights will come ON.
When starting the engine with the parking brake pulled, the daytime lights won't come ON.

Circuit Diagram

NEEL0019

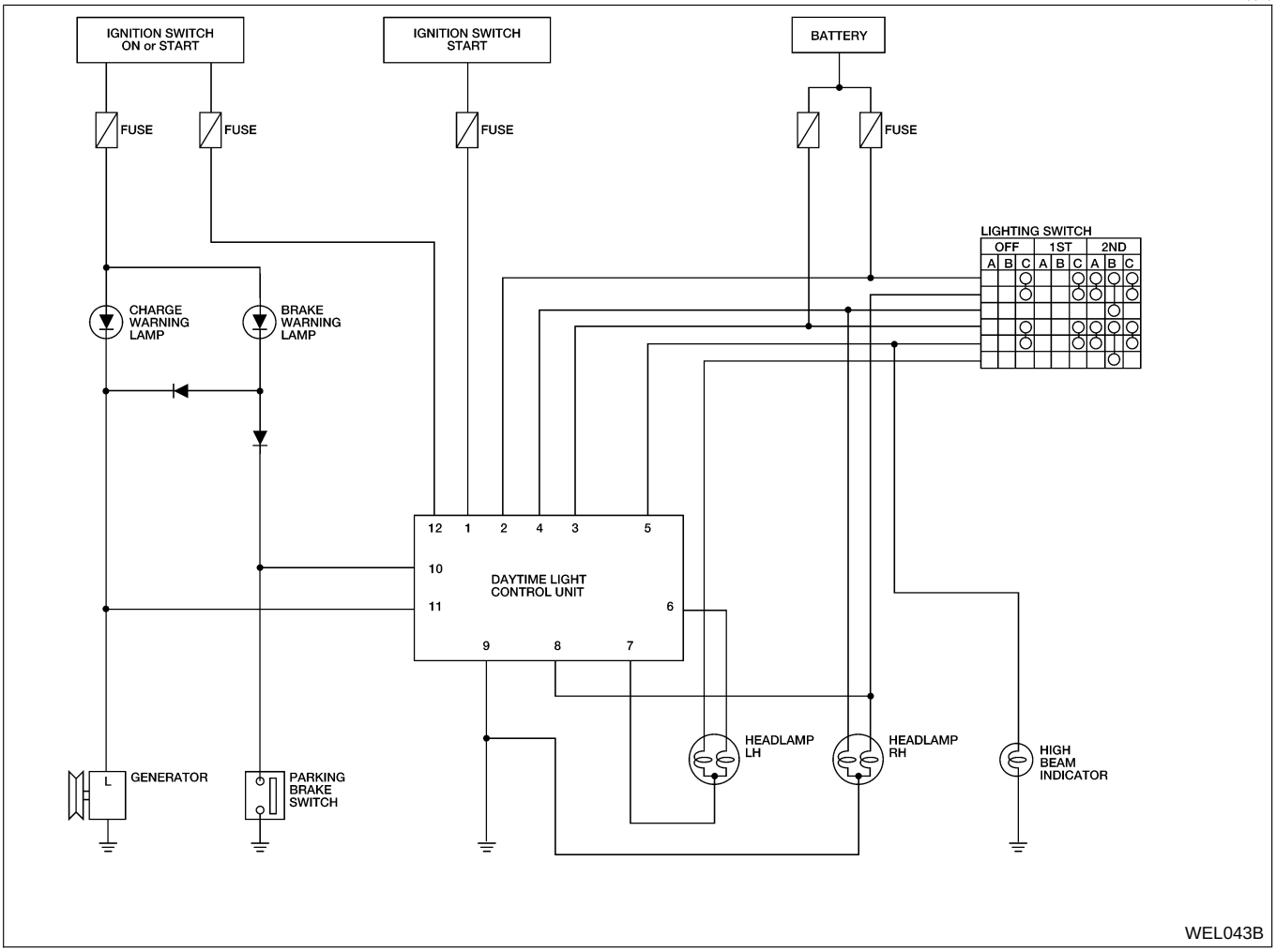

Wiring Diagram — DTRL —

NEEL0020

EL-DTRL-01

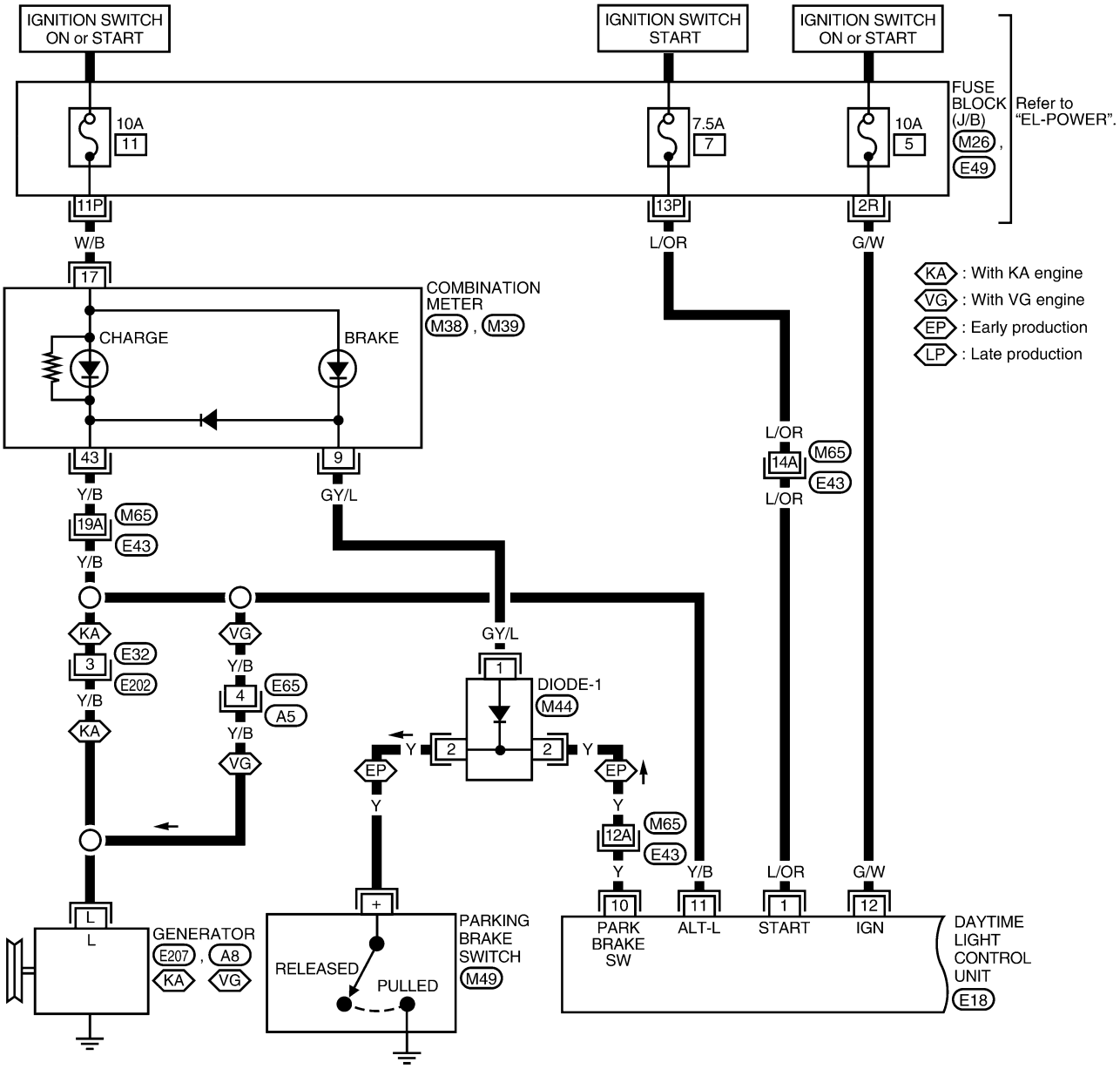

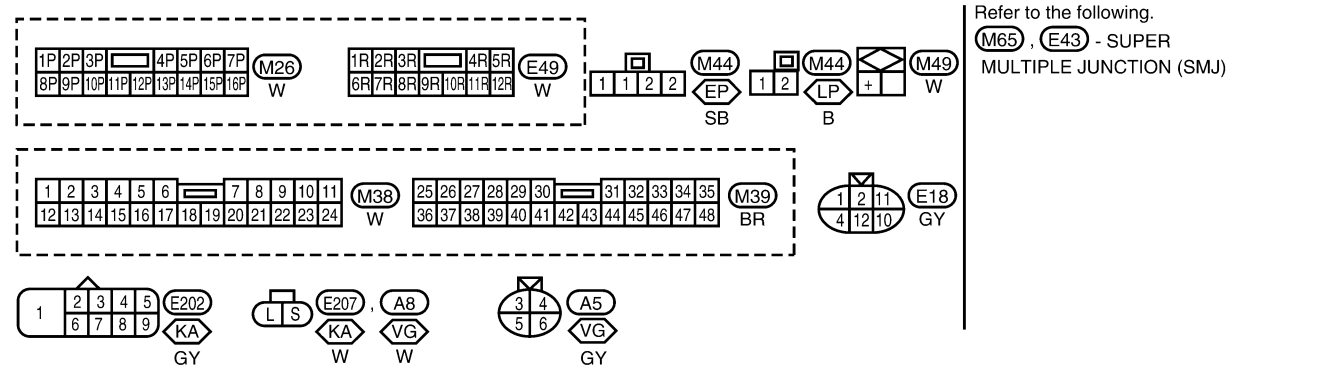

WEL044B

EL-DTRL-02

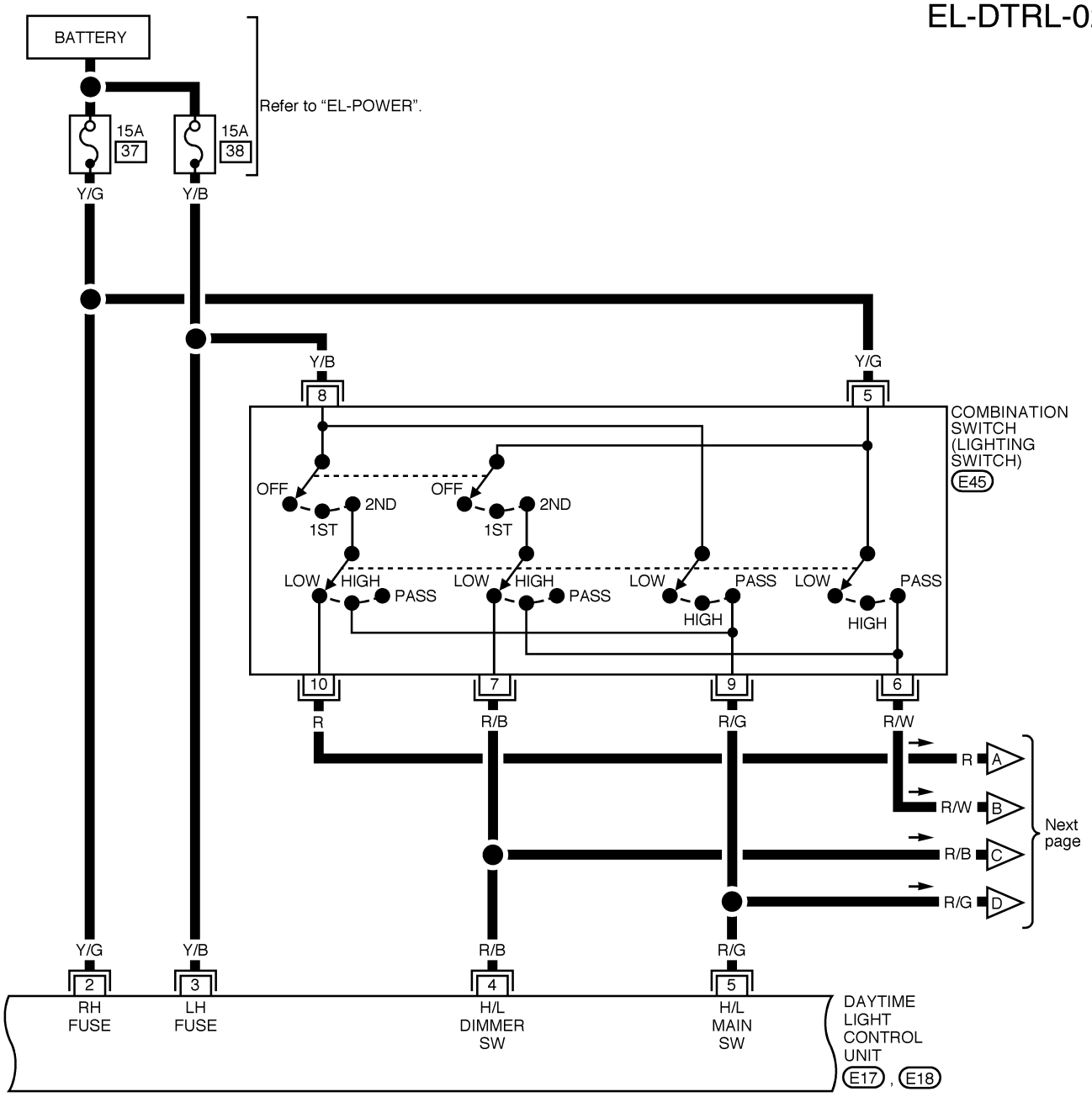

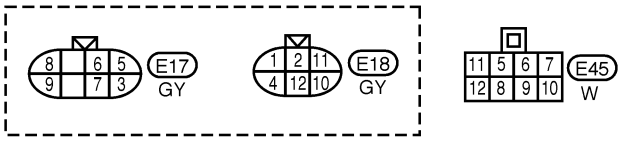

AEL350C

EL-DTRL-03

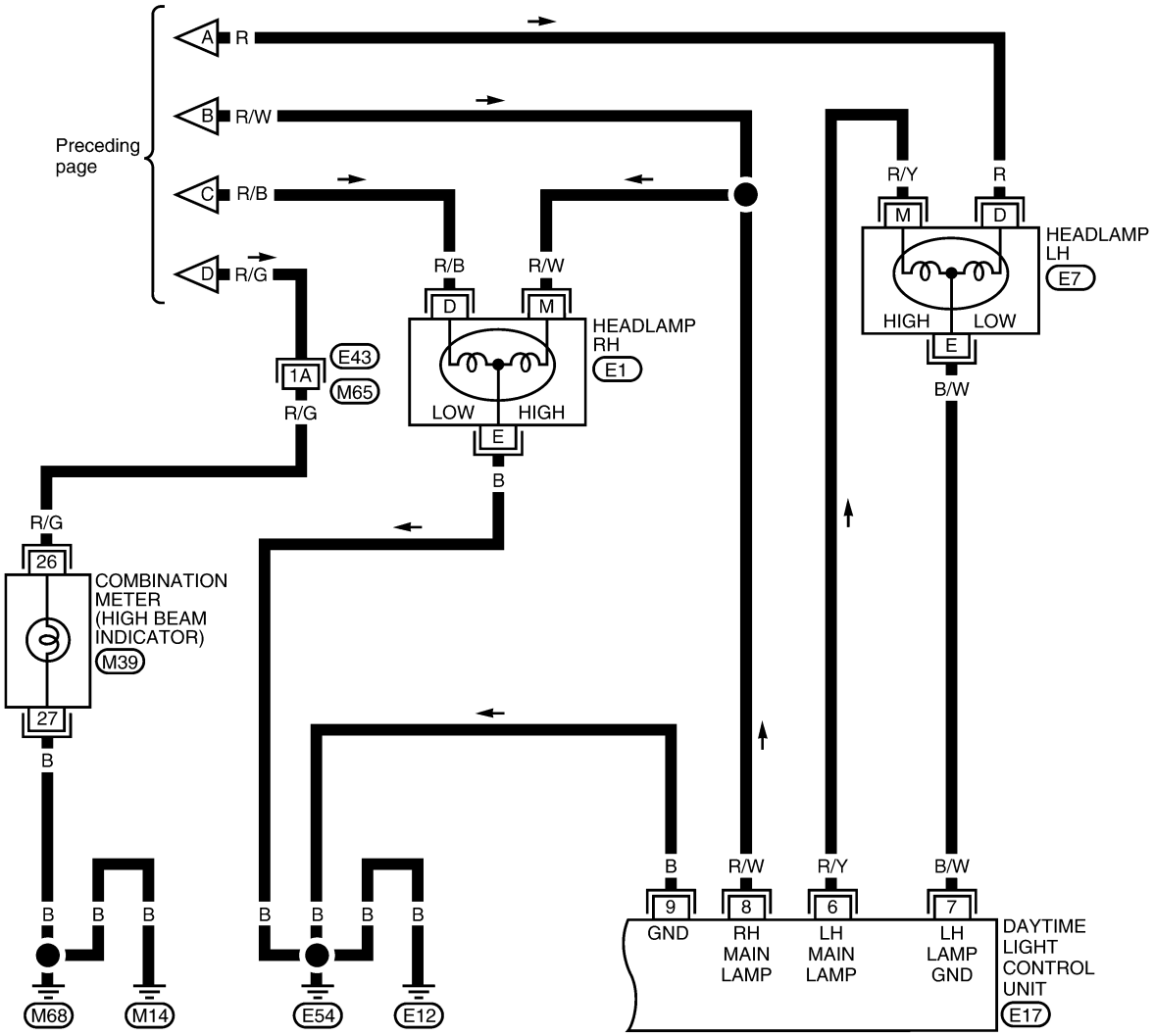



Refer to the following.
M65 , E43 - SUPER MULTIPLE JUNCTION (SMJ)

LEL740

Trouble Diagnoses

NEEL0021

DAYTIME LIGHT CONTROL UNIT INSPECTION TABLE

NEEL0021S01

Terminal No.	Wire color	Item	Condition	Voltage (Approx.)
1	L/OR	Ignition switch start signal	Ignition switch in START position	12
			All other conditions	0
2	Y/G	Power source for headlamp RH	—	12
3	Y/B	Power source for headlamp LH	—	12
4	R/B	Lighting switch headlamp RH low beam output	Lighting switch in the headlamp ON (2ND) position and LOW BEAM (B) position	12
			All other conditions	0
5	R/G	Lighting switch headlamp LH high beam output	Lighting switch in the FLASH TO PASS (C) position or headlamp ON (2ND) position and HIGH BEAM (A) position	12
			All other conditions	0
6	R/Y	Headlamp LH high beam	Lighting switch in the FLASH TO PASS (C) position or headlamp ON (2ND) position and HIGH BEAM (A) position	12
			With parking brake released, engine running and lighting switch in OFF or parking and tail lamp ON (1ST) positions **CAUTION:** **Block wheels and ensure selector lever is in P or N position.**	12
			All other conditions	0
7	B/W	Headlamp LH control (ground)	Lighting switch in the FLASH TO PASS (C) position or headlamp ON (2ND) position	0
			All other conditions	6
8	R/W	Lighting switch headlamp RH high beam output	Lighting switch in the FLASH TO PASS (C) position or headlamp ON (2ND) position and HIGH BEAM (A) position	12
			With parking brake released, engine running and lighting switch in OFF or parking and tail lamp ON (1ST) positions **CAUTION:** **Block wheels and ensure selector lever is in P or N position.**	6
			All other conditions	0
9	B	Ground	—	—
10	Y	Parking brake switch	Parking brake released	12
			Parking brake set	0
11	Y/B	Generator (L terminal)	When engine is running	12
			All other conditions	0

Trouble Diagnoses (Cont'd)

Terminal No.	Wire color	Item	Condition	Voltage (Approx.)
12	G/W	Ignition switch on signal	Ignition switch OFF, ACC positions	0
			Ignition switch ON, START positions	12

Bulb Replacement

NEEL0022

Refer to "Bulb Replacement", EL-37.

Aiming Adjustment

NEEL0023

Refer to "Aiming Adjustment", EL-37.

Wiring Diagram — TAIL/L —

NEEL0024

EL-TAIL/L-01

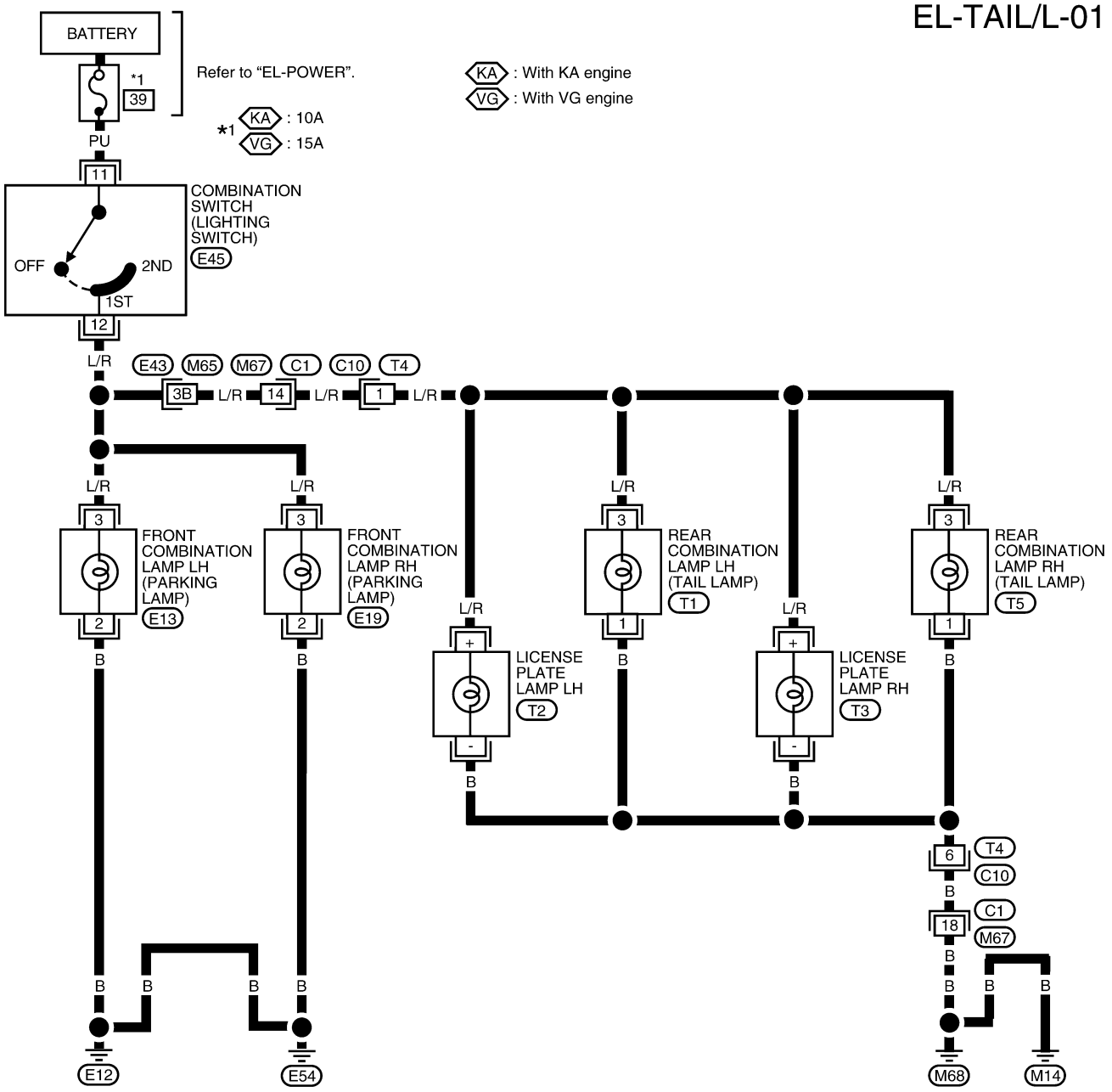

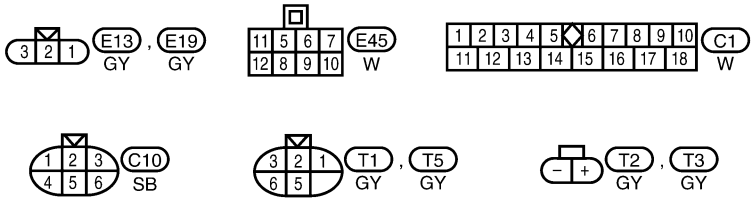

Refer to the following.
M65 , E43 - SUPER MULTIPLE JUNCTION (SMJ)

WEL532A

Wiring Diagram — STOP/L —

NEEL0025

EL-STOP/L-01

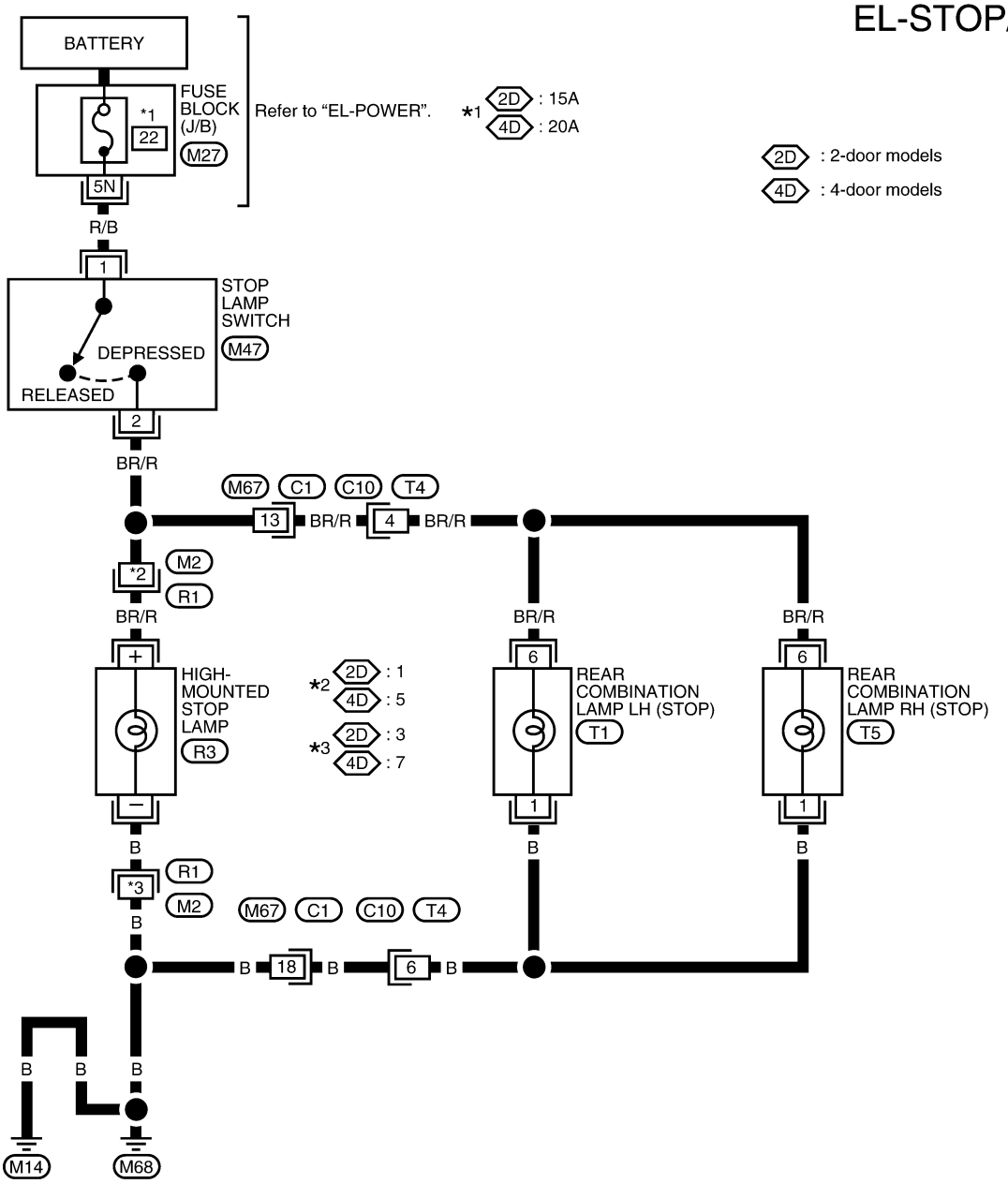

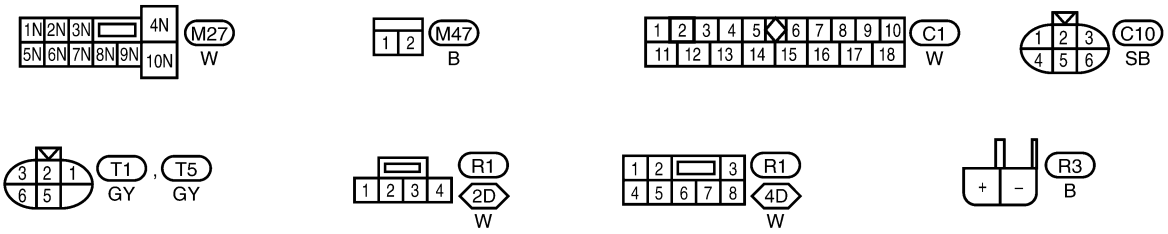

WEL194A

Wiring Diagram — BACK/L —

NEEL0026

EL-BACK/L-01

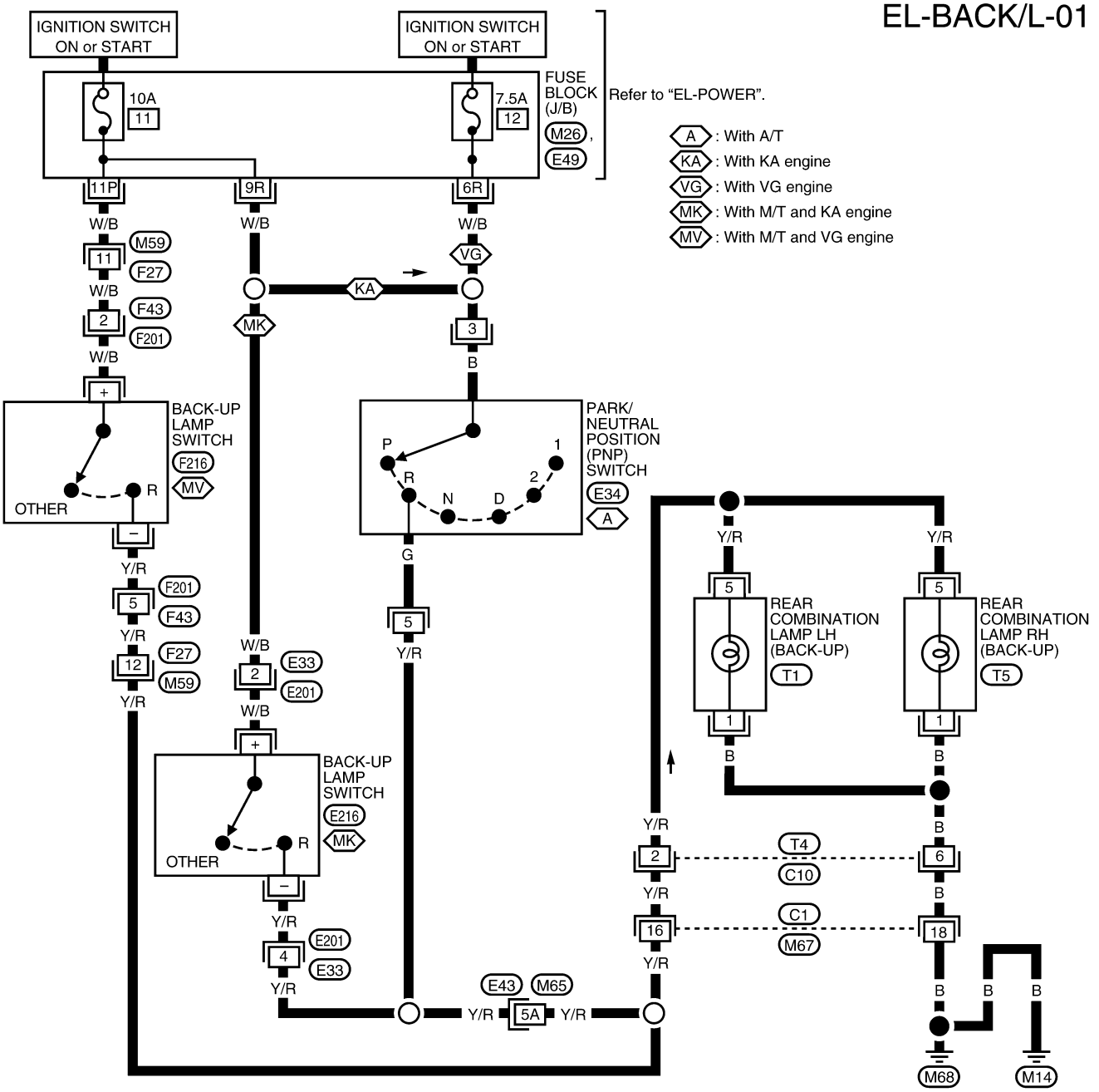

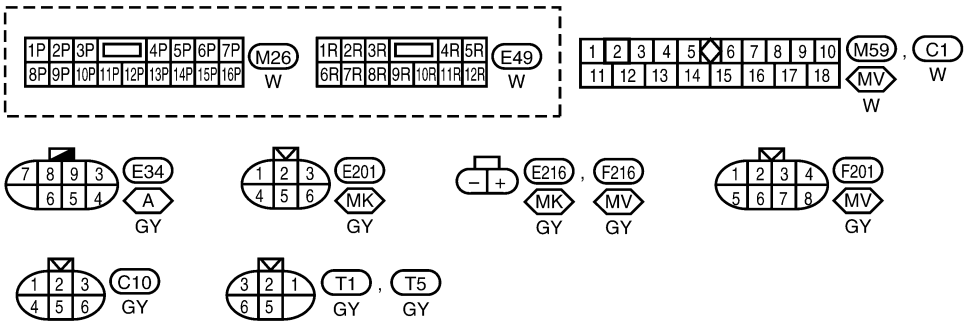

Refer to the following.
M65, E43 - SUPER MULTIPLE JUNCTION (SMJ)

LEL743

System Description

NEEL0027

Power is supplied at all times
- through 15A fuse (No. 40, located in the fuse and fusible link box)
- to front fog lamp relay terminal 5 and
- through 15A fuse (No. 37, located in the fuse and fusible link box)
- to lighting switch terminal 5.

With the lighting switch in the headlamp ON (2ND) position and LOW BEAM (B) position, power is supplied
- through lighting switch terminal 7
- to front fog lamp switch terminal 1.

FRONT FOG LAMP OPERATION

NEEL0027S01

The front fog lamp switch is built into the combination switch. The lighting switch must be in the headlamp ON (2ND) position and LOW BEAM (B) position for front fog lamp operation.
With the front fog lamp switch in the ON position, power is supplied
- to front fog lamp relay terminal 2
- from front fog lamp switch terminal 2.

Ground is supplied
- to front fog lamp relay terminal 1
- through body grounds E12 and E54.

The front fog lamp relay is energized and power is supplied
- from front fog lamp relay terminal 3
- to front fog lamp LH/RH terminal 1.

Ground is supplied to front fog lamp LH/RH terminal 2 through body grounds E12 and E54.
With power and ground supplied, the front fog lamps illuminate.

Wiring Diagram — F/FOG —

NEEL0028

EL-F/FOG-01

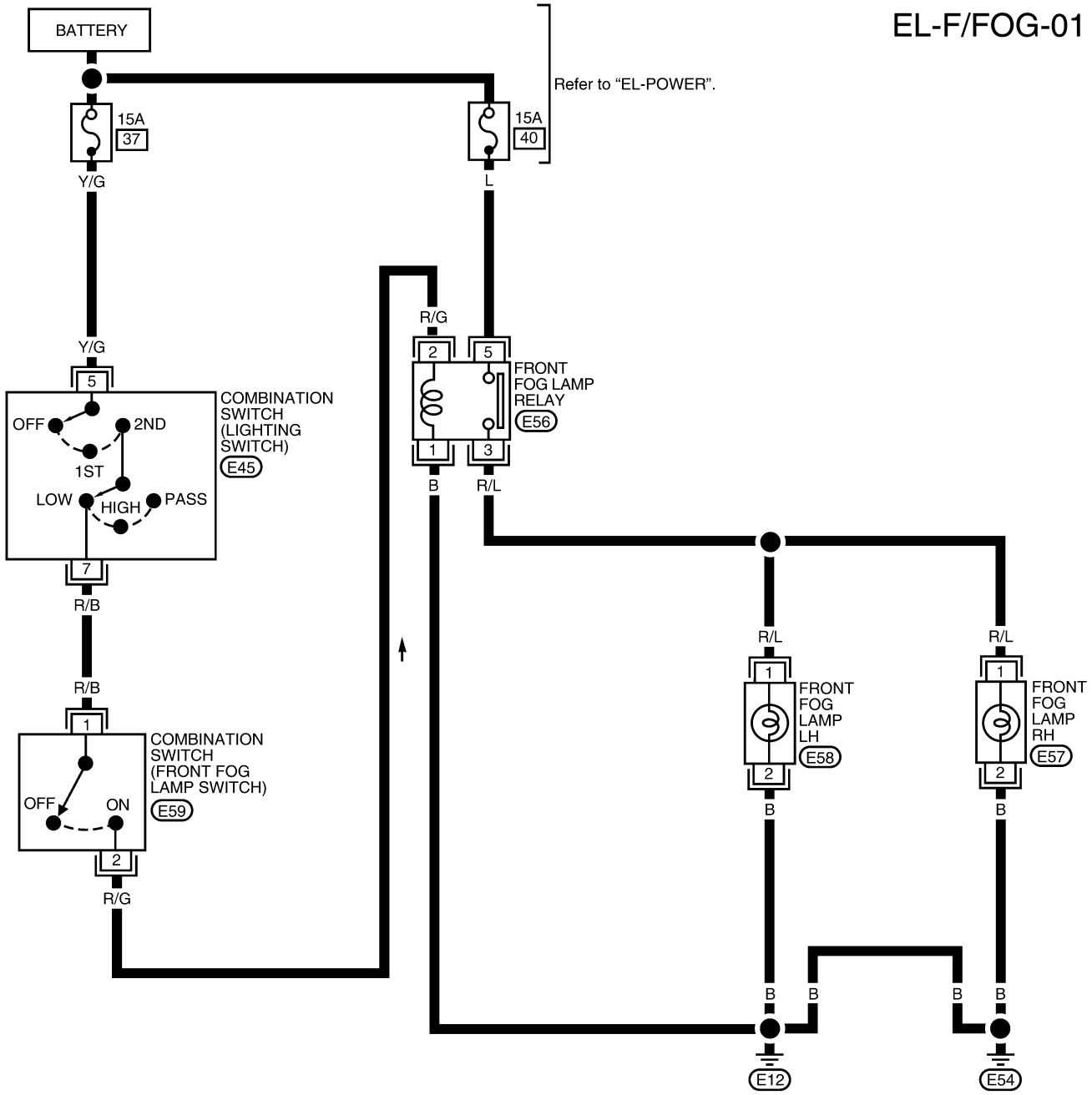

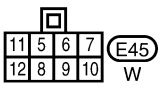

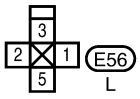

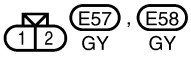

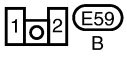

WEL486A

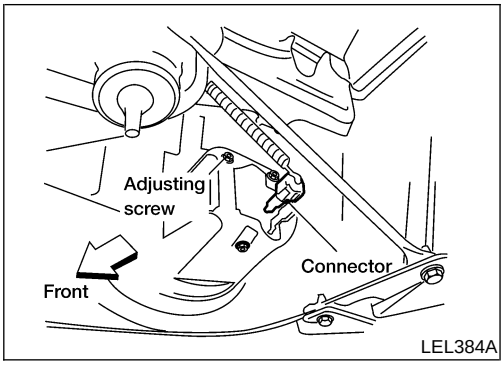

Aiming Adjustment

NEEL0029

Before performing aiming adjustment, make sure of the following.

1) Keep all tires inflated to correct pressure.
2) Place vehicle on level ground.
3) See that vehicle is unloaded (except for full levels of coolant, engine oil and fuel, and spare tire, jack, and tools). Have the driver or equivalent weight placed in driver seat.

Loosen front fog lamp adjusting nuts and adjust aiming by moving front fog lamps.

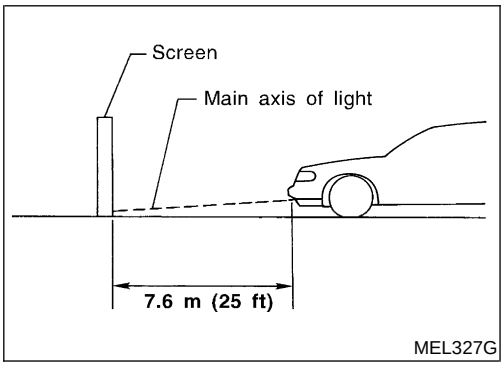

1. Set the distance between the screen and the center of the front fog lamp lens as shown at left.
2. Turn front fog lamps ON.

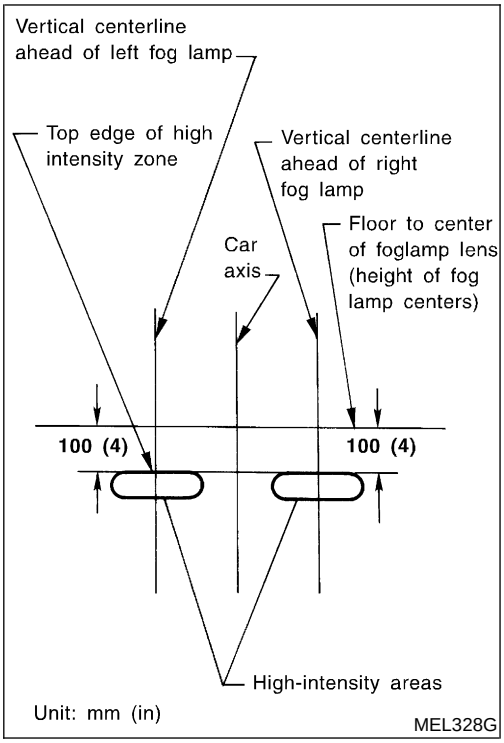

3. Adjust front fog lamps so that the top edge of the high intensity zone is 100 mm (4 in) below the height of the fog lamp centers as shown at left.

- **When performing adjustment, if necessary, cover the headlamps and opposite fog lamp.**

4. Tighten the front fog lamp adjusting nuts.

Removal and Installation

=NEEL0184

1. Disconnect front fog lamp harness connector.
2. Remove mounting bolt and remove lens and housing assembly from front bumper cover..
3. Install in reverse order of removal. Ensure top of lens faces up.
4. Tighten mounting bolt.

: 5 – 6 N·m (0.51 – 0.61 kg-m, 44.3 – 53.1 in-lb)

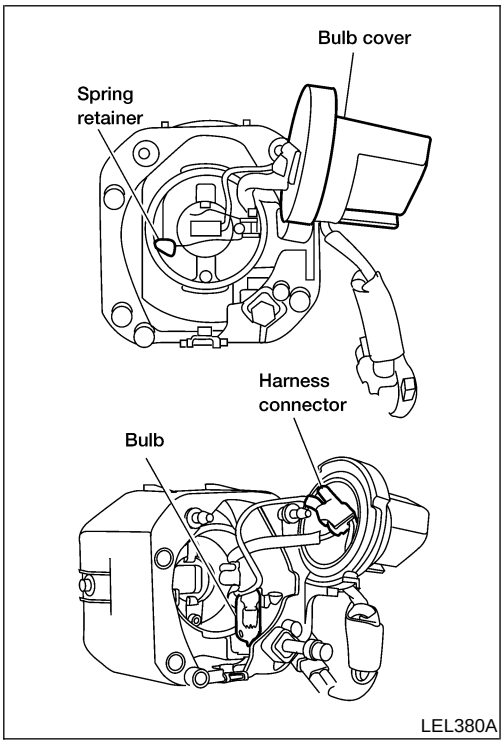

Bulb and Lens Replacement

NEEL0185

1. Remove front fog lamp. Refer to “Removal and Installation”, EL-53.
2. Remove bulb cover.
3. Release the spring retainer.
4. Disconnect fog lamp bulb connector.
5. Remove fog lamp bulb.
6. Install in reverse order of removal. Ensure top of lens faces up. **DO NOT TOUCH BULB.**

System Description

NEEL0030

TURN SIGNAL OPERATION

NEEL0030S01

With the hazard switch in the OFF position and the ignition switch in the ON or START position, power is supplied

- through 7.5A fuse [No. 2, located in the fuse block (J/B)]
- to hazard switch terminal 2
- through hazard switch terminal 1
- to combination flasher unit terminal B
- through combination flasher unit terminal L
- to turn signal switch terminal 1.

Ground is supplied to combination flasher unit terminal E through body grounds M14 and M68.

LH Turn

NEEL0030S0101

With the turn signal switch in the LH position, power is supplied from turn signal switch terminal 3 to

- front combination lamp LH terminal 1
- combination meter terminal 11 and
- rear combination lamp LH terminal 2.

Ground is supplied to front combination lamp LH terminal 2 through body grounds E12 and E54.
Ground is supplied

- to rear combination lamp LH terminal 1 and
- to combination meter terminal 36
- through body grounds M14 and M68.

With power and ground supplied, the combination flasher unit controls the flashing of the LH turn signal lamps.

RH Turn

NEEL0030S0102

With the turn signal switch in the RH position, power is supplied from turn signal switch terminal 2 to

- front combination lamp RH terminal 1
- combination meter terminal 28 and
- rear combination lamp RH terminal 2.

Ground is supplied to the front combination lamp RH terminal 2 through body grounds E12 and E54.
Ground is supplied

- to the rear combination lamp RH terminal 1 and
- to combination meter terminal 36
- through body grounds M14 and M68.

With power and ground supplied, the combination flasher unit controls the flashing of the RH turn signal lamps.

HAZARD LAMP OPERATION

NEEL0030S02

Power is supplied at all times to hazard switch terminal 3 through:

- 10A fuse [No. 17, located in the fuse block (J/B)].

With the hazard switch in the ON position, power is supplied

- through hazard switch terminal 1
- to combination flasher unit terminal B
- through combination flasher unit terminal L
- to hazard switch terminal 4.

Ground is supplied to combination flasher unit terminal E through body grounds M14 and M68.
Power is supplied through hazard switch terminal 5 to

- front combination lamp LH terminal 1
- combination meter terminal 11 and
- rear combination lamp LH terminal 2.

Power is supplied through hazard switch terminal 6 to

- front combination lamp RH terminal 1
- combination meter terminal 28 and
- rear combination lamp RH terminal 2.

Ground is supplied to front combination lamp LH/RH terminal 2 through body grounds E12 and E54.
Ground is supplied to combination meter terminal 36 and rear combination lamp LH/RH terminal 1 through body grounds M14 and M68.
With power and ground supplied, the combination flasher unit controls the flashing of the hazard warning lamps.

Wiring Diagram — TURN —

NEEL0032

EL-TURN-01

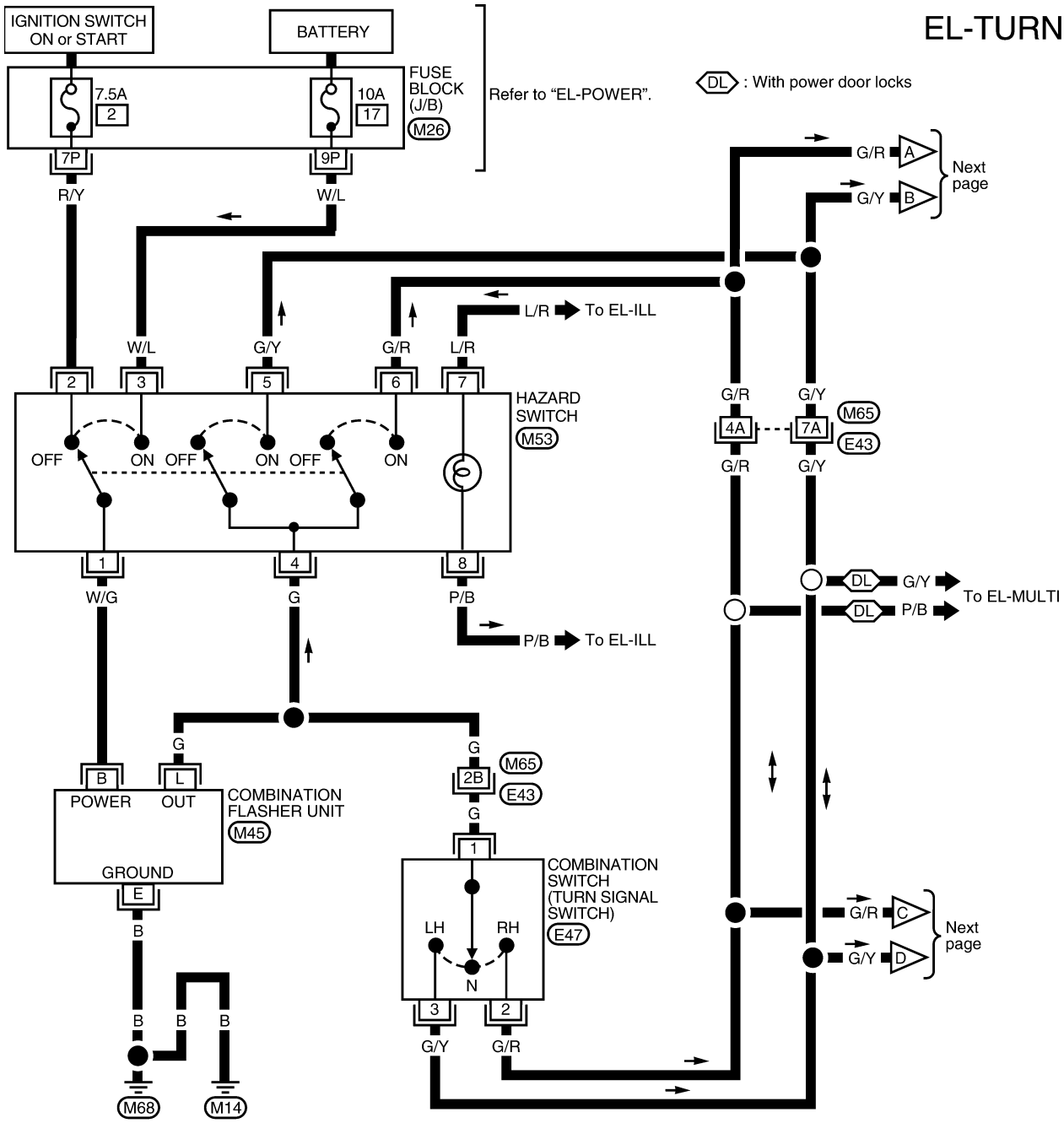

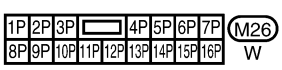



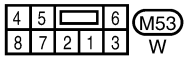

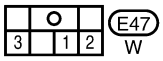

Refer to the following.
M65 , E43 - SUPER MULTIPLE JUNCTION (SMJ)

LEL745

EL-TURN-02

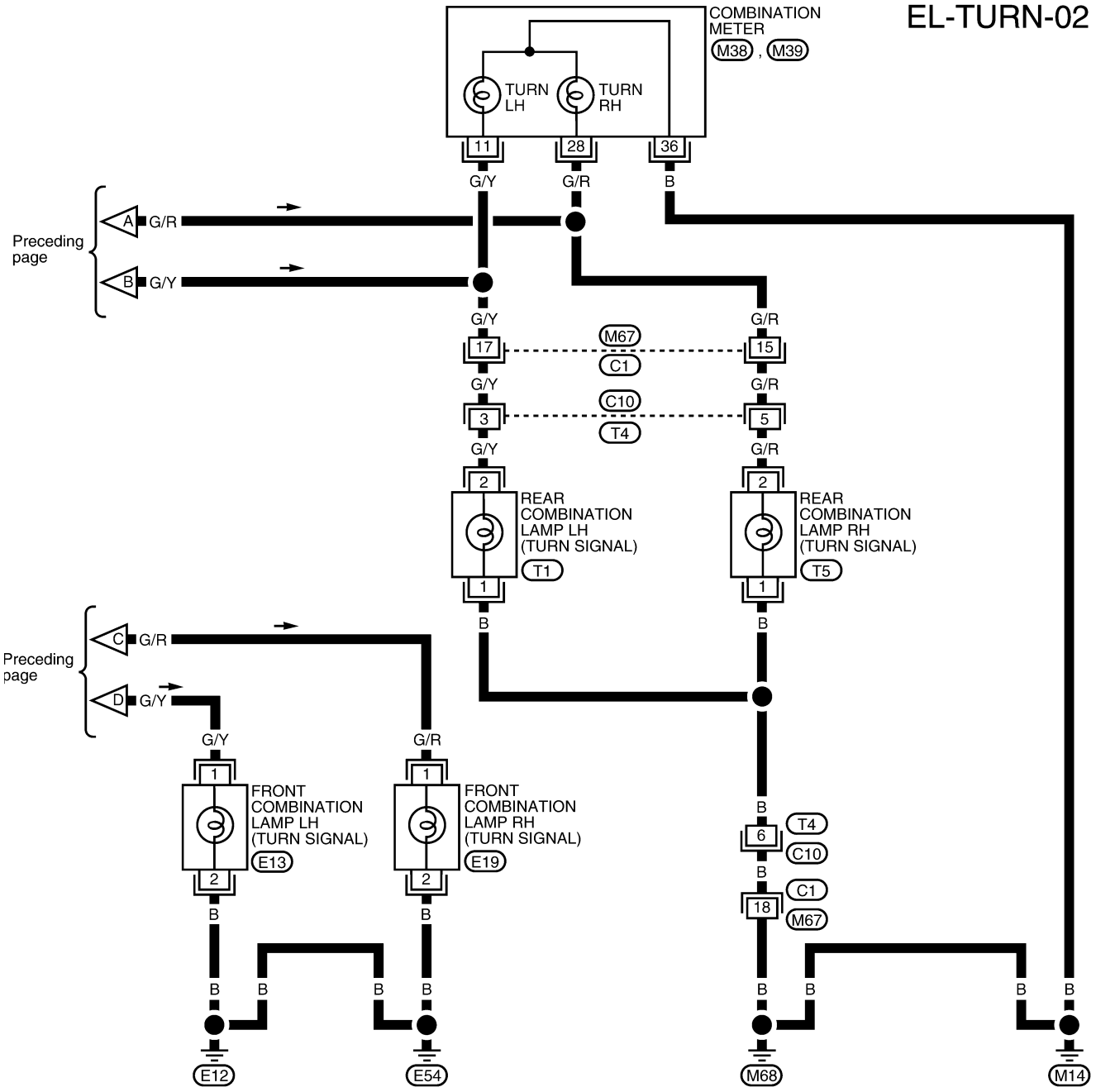

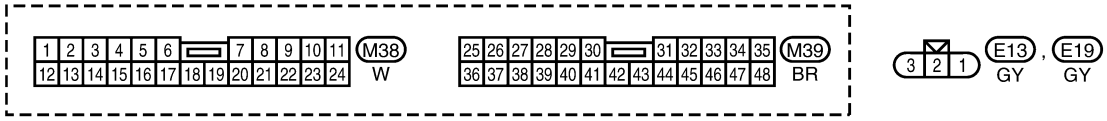

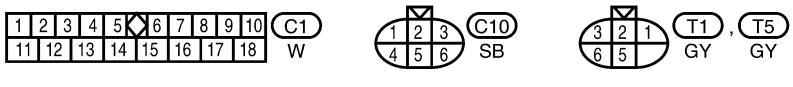

LEL197A

Trouble Diagnoses

NEEL0033

Symptom	Possible cause	Repair order
Turn signal and hazard warning lamps do not operate.	1. 7.5A fuse 2. 10A fuse 3. Hazard switch 4. Combination flasher unit 5. Open in combination flasher unit circuit	1. Check 7.5A fuse [No. 2, located in fuse block (J/B)]. Turn ignition switch ON and verify battery positive voltage is present at terminal 2 of hazard switch. 2. Check 10A fuse [No. 17, located in fuse block (J/B)]. Verify battery positive voltage is present at terminal 3 of hazard switch. 3. Check hazard switch. 4. Refer to combination flasher unit check. 5. Check wiring to combination flasher unit for open circuit.
Turn signal lamps do not operate but hazard warning lamps operate.	1. 7.5A fuse 2. Hazard switch 3. Turn signal switch 4. Open in turn signal switch circuit	1. Check 7.5A fuse [No. 2, located in fuse block (J/B)]. Turn ignition switch ON and verify battery positive voltage is present at terminal 2 of hazard switch. 2. Check hazard switch. 3. Check turn signal switch. 4. Check G wire between combination flasher unit and turn signal switch for open circuit. Check the harness between turn signal switch and front combination lamp for open circuit.
Hazard warning lamps do not operate but turn signal lamps operate.	1. 10A fuse 2. Hazard switch 3. Open in hazard switch circuit	1. Check 10A fuse [No. 17, located in fuse block (J/B)]. Verify battery positive voltage is present at terminal 3 of hazard switch. 2. Check hazard switch. 3. Check G wire between combination flasher unit and hazard switch for open circuit.
Front turn signal lamp LH or RH does not operate.	1. Bulb 2. Front turn signal lamp ground circuit	1. Check bulb. 2. Check grounds E12 and E54 and continuity between front turn signal lamp and grounds E12 and E54.
Rear turn signal lamp LH does not operate.	1. Bulb 2. Rear turn signal lamp LH ground circuit	1. Check bulb. 2. Check grounds M14 and M68 and continuity between rear turn signal lamp LH and grounds M14 and M68.
Rear turn signal lamp RH does not operate.	1. Bulb 2. Rear turn signal lamp RH ground circuit	1. Check bulb. 2. Check grounds M14 and M68 and continuity between rear turn signal lamp RH and grounds M14 and M68.
LH and RH turn indicators do not operate.	1. Ground circuit	1. Check grounds M14 and M68 and continuity between combination meter terminal 36 and grounds M14 and M68.
LH or RH turn indicator does not operate.	1. Bulb 2. Turn indicator circuit	1. Check bulb in combination meter. 2. Check the wire between hazard switch and combination meter.

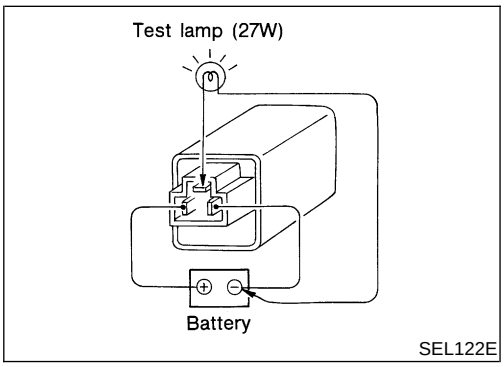

SEL122E

Electrical Components Inspection

NEEL0034

COMBINATION FLASHER UNIT CHECK

NEEL0034S01

- Before checking, ensure that bulbs meet specifications.
- Connect a battery and test lamp to the combination flasher unit, as shown. Combination flasher unit is properly functioning if it blinks when power is supplied to the circuit.

System Description

NEEL0035

Power is supplied at all times

- through 10A fuse (with KA24DE) (No. 39, located in the fuse and fusible link box) or
- through 15A fuse (with VG33E and VG33ER) (No. 39, located in the fuse and fusible link box)
- to lighting switch terminal 11.

The lighting switch must be in the parking and tail lamps ON (1ST) or headlamps ON (2ND) position for illumination.
The illumination control switch controls the amount of current to the illumination system. As the amount of current increases, the illumination becomes brighter.
The following chart shows the power and ground connector terminals for the components included in the illumination system.

Component	Connector No.	Power terminal	Ground terminal
A/T device (With A/T and VG engine)	M35	4	3
Hazard switch	M53	7	8
Air control	M95	1	3
Audio unit	M51	8	7
Combination meter	M38, M39	17, 40	41
Main power window and door lock/unlock switch	D7	3	8
A/T (With A/T and KA engine)	M127	1	2
Illumination control switch	M28	1	5

The ground for all of the components are controlled through terminals 4 and 5 of the illumination control switch and body grounds M14 and M68.

Wiring Diagram — ILL —

NEEL0037

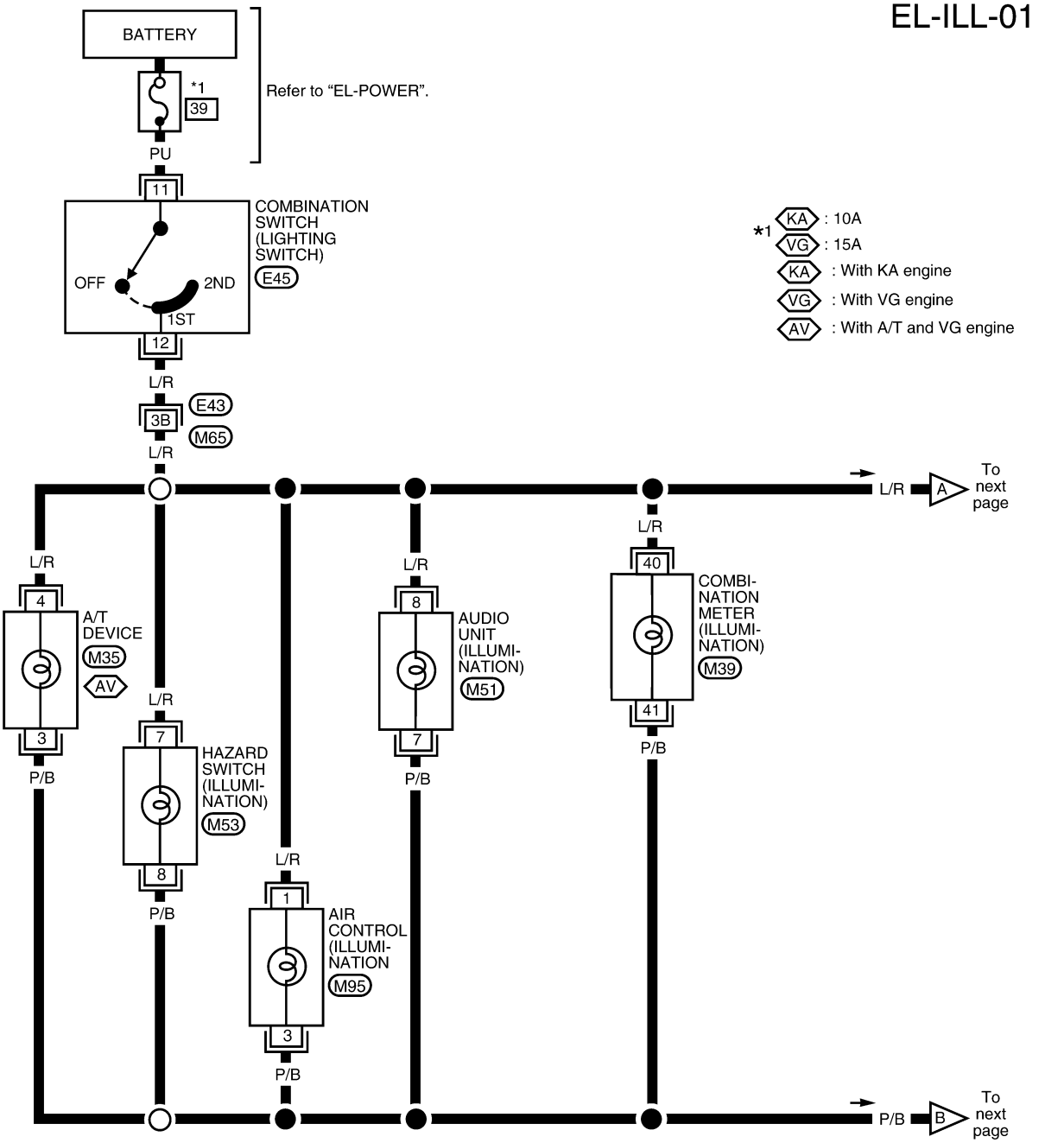

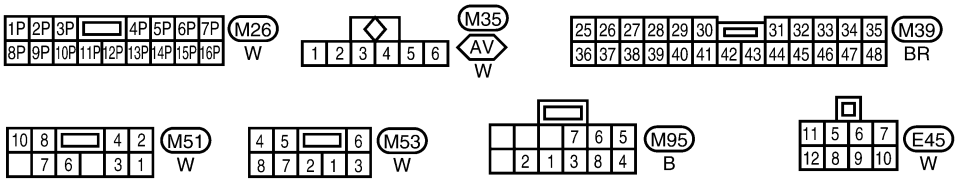

Refer to the following.
M65 , E43 - SUPER MULTIPLE JUNCTION (SMJ)

WEL061B

EL-ILL-02

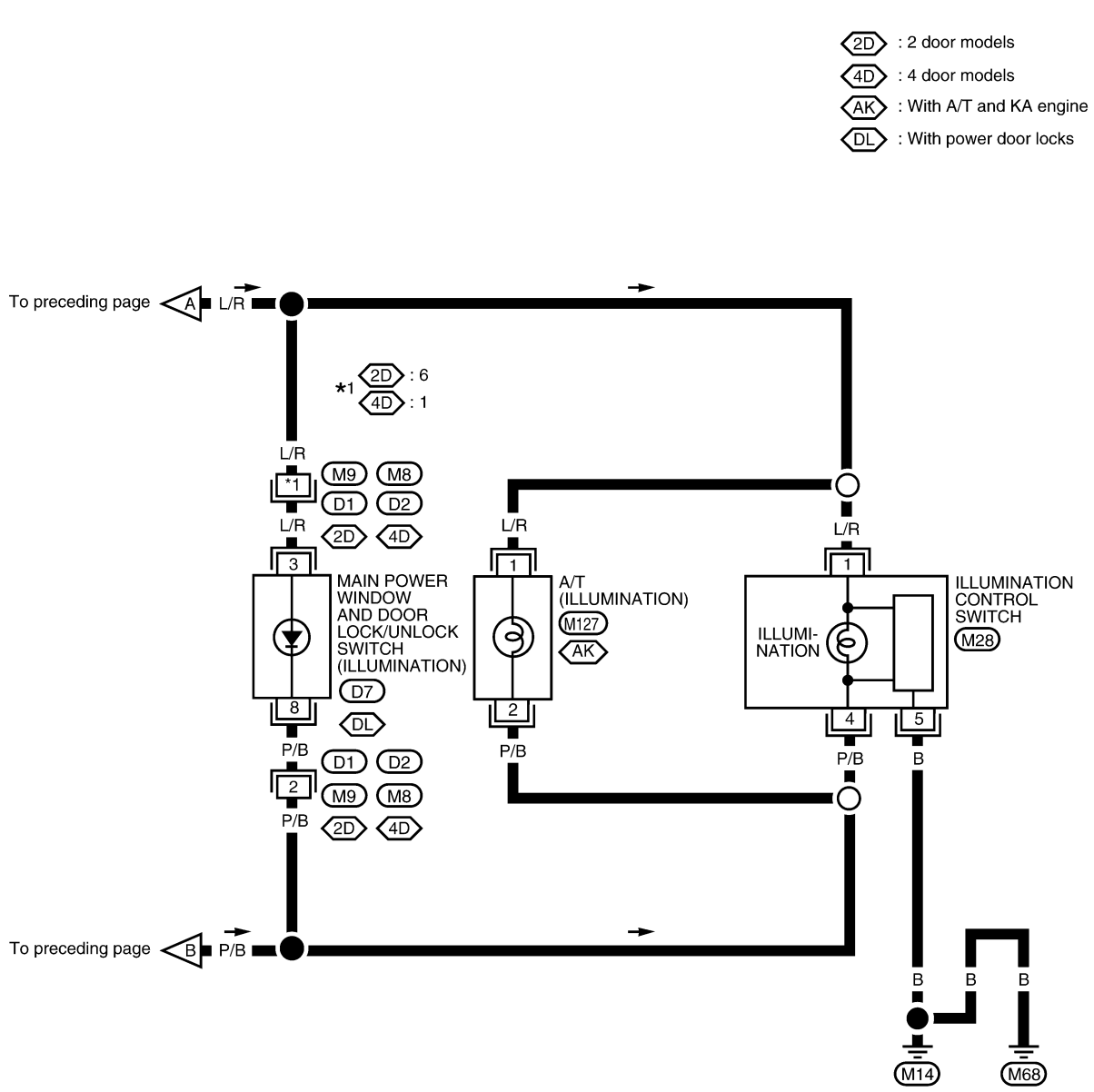

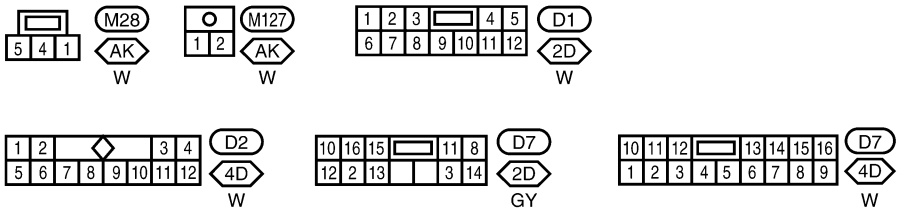

LEL747

Component Parts and Harness Connector Location

NEEL0194

Fuse block (J/B)

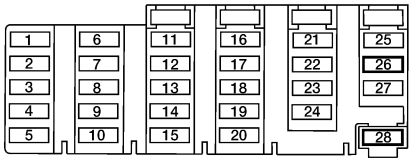

Fuse and fusible link box
For KA24DE

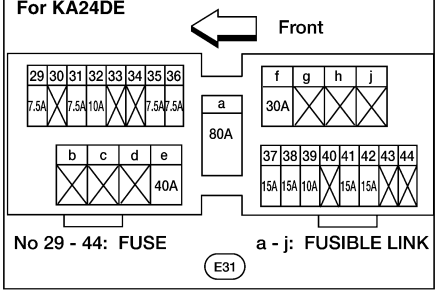

No 29 - 44: FUSE
a - j: FUSIBLE LINK
E31

Fuse and fusible link box
For VG33E

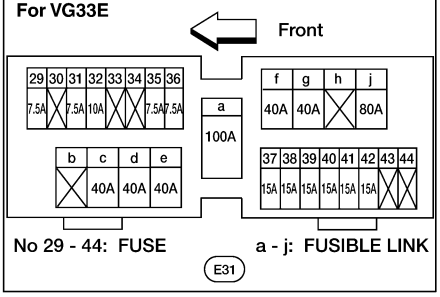

No 29 - 44: FUSE
a - j: FUSIBLE LINK
E31

Fuse and fusible link box
For VG33ER

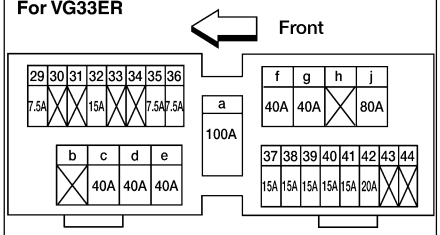

No 29 - 44: FUSE
a - j: FUSIBLE LINK
E31

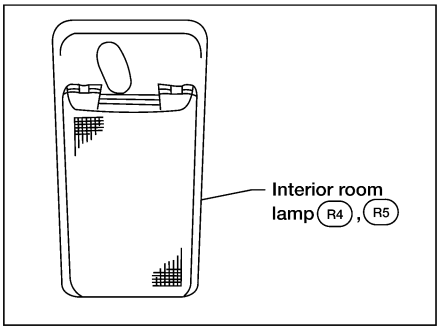

Crew Cab

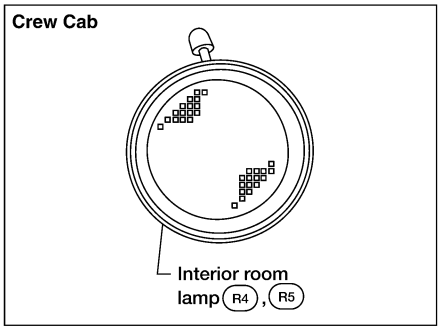

View with steering column covers removed

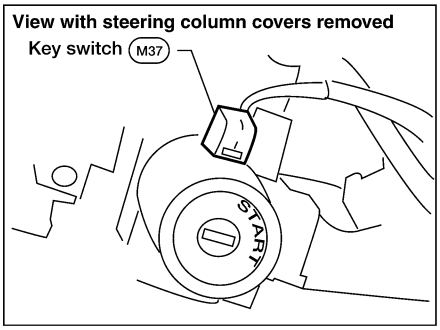

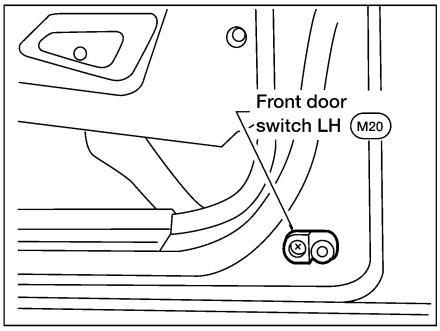

Crew Cab

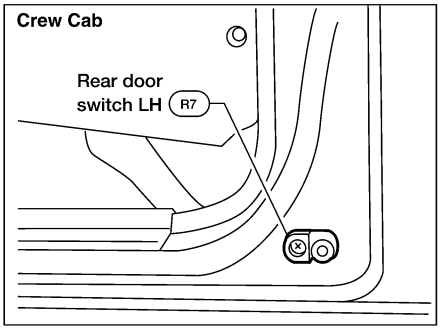

View with instrument lower panel driver's side removed

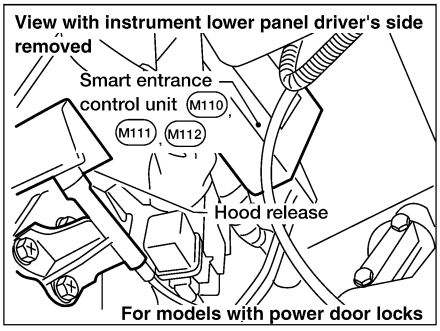

For models with power door locks

WEL447A

System Description

NEEL0038

MODELS WITHOUT POWER DOOR LOCKS

NEEL0038S09

Room Lamp

NEEL0038S0901

Power is supplied at all times

- through 7.5A fuse [No. 26, located in the fuse block (J/B)]
- to room lamp terminal +.

On 2 door models, with the room lamp switch in the ON position, ground is supplied

- to room lamp terminal –
- through body grounds M14 and M68.

On 4 door models, with the room lamp switch in the ON position, ground is supplied through the case of the room lamp.

With one or more doors open, with the room lamp switch in the DOOR position, ground is supplied

- to room lamp terminal SW
- through front door switch LH terminal 1 and/or
- through front door switch RH and/or rear door switch LH/RH terminal +.

MODELS WITH POWER DOOR LOCKS

NEEL0038S07

Room Lamp

NEEL0038S0701

Power is supplied at all times

- through 7.5A fuse [No. 28, located in the fuse block (J/B)]
- to smart entrance control unit terminal 49.

Ground is supplied at all times to smart entrance control unit terminals 43 and 64 through body grounds M14 and M68.

On 2 door models, with the room lamp switch in the ON position, ground is supplied

- to room lamp terminal –
- through body grounds M14 and M68.

On 4 door models, with the room lamp switch in the ON position, ground is supplied through the case of the room lamp.

With the front door LH open and the room lamp switch in the DOOR position, ground is supplied

- to smart entrance control unit terminal 1
- through front door switch LH terminal 2
- through front door switch LH terminal 3
- through body grounds M14 and M68 and
- to room lamp terminal SW
- through smart entrance control unit terminal 31.

With the front door RH open and the room lamp switch in the DOOR position, ground is supplied

- to smart entrance control unit terminal 2
- through front door switch RH terminal + and
- to room lamp terminal SW
- through smart entrance control unit terminal 31.

On 4 door models, with rear door LH/RH open and the room lamp switch in the DOOR position, ground is supplied

- to smart entrance control unit terminal 3 (with vehicle security system) or terminal 2 (without vehicle security system)
- through rear door switch LH/RH terminal + and
- to room lamp terminal SW
- through smart entrance control unit terminal 31.

Room Lamp Timer Operation

NEEL0038S0702

When the room lamp switch is in the DOOR position, the smart entrance control unit keeps the room lamp illuminated for about 30 seconds when

- unlock signal is supplied from door lock/unlock switch while all doors are closed and key is out of ignition key cylinder
- unlock signal is supplied from multi-remote controller or door key cylinder while all doors are closed

- key is removed from ignition key cylinder while driver door is closed
- driver door is opened and then closed while key is out of the ignition key cylinder. (However, if the driver door is closed with the key inserted in the ignition key cylinder after the front door LH is opened with the key removed, the timer operates.)

The timer is canceled and room lamp turns off when

- front door LH is locked with multi-remote controller, or
- front door LH is opened, or
- ignition switch is turned ON.

The smart entrance control unit turns off the room lamp if it is left on for 30 minutes.

MAP LAMP

NEEL0038S08

On models without power door locks, power is supplied at all times

- through 7.5A fuse [No. 26, located in the fuse block (J/B)]
- To map lamp terminal +.

On models with power door locks, power is supplied at all times

- through 7.5A fuse [No. 28, located in the fuse block (J/B)]
- to smart entrance control unit terminal 49
- through smart entrance control unit terminal 50
- to map lamp terminal +.

With the map lamp switch in the ON position, ground is supplied to map lamp terminal – through body grounds M14 and M68.

ON-OFF CONTROL

NEEL0038S10

When the front door LH, front door RH, rear LH or rear RH door is opened, the interior room lamp turns on while the room lamp switch is in the "DOOR" position.

BATTERY SAVER

NEEL0038S11

The lamp turns off automatically when room lamp, map lamp and/or spot lamp is illuminated with the ignition key in OFF position, if the lamp remains lit by the door switch open signal or if the lamp switch in ON position for more than 30 minutes.

Wiring Diagram — ROOM/L —

NEEL0040

MODELS WITHOUT POWER DOOR LOCKS

NEEL0040S01

EL-ROOM/L-01

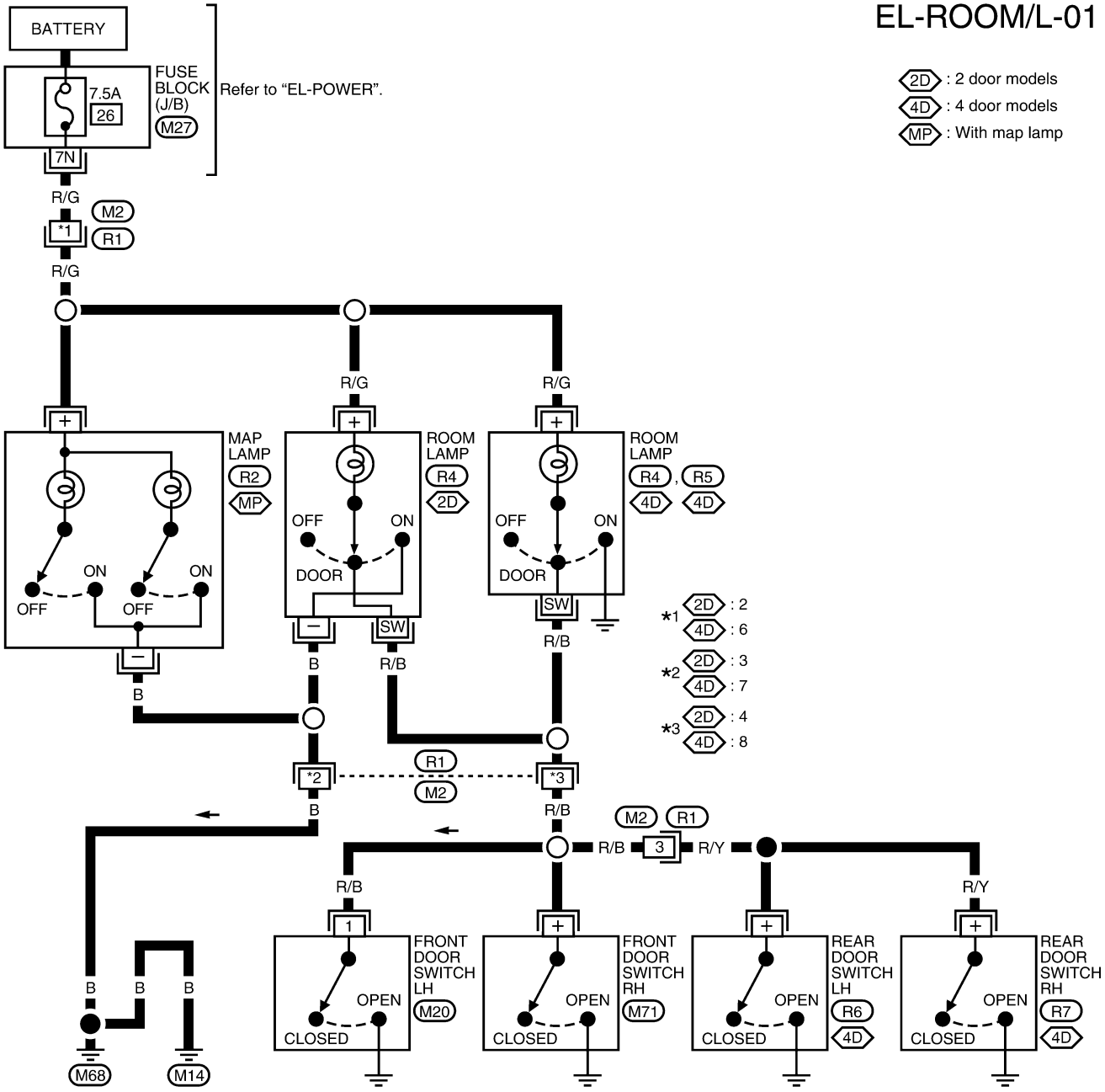

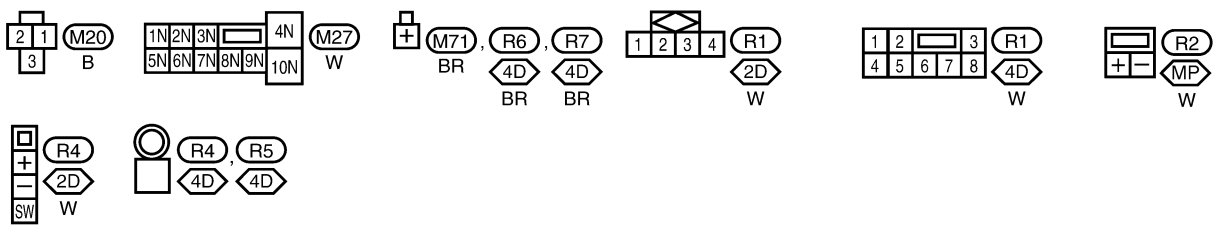

2D : 2 door models
4D : 4 door models
MP : With map lamp

LEL748

Wiring Diagram — ROOM/L — (Cont'd)

MODELS WITH POWER DOOR LOCKS

NEEL0040S02

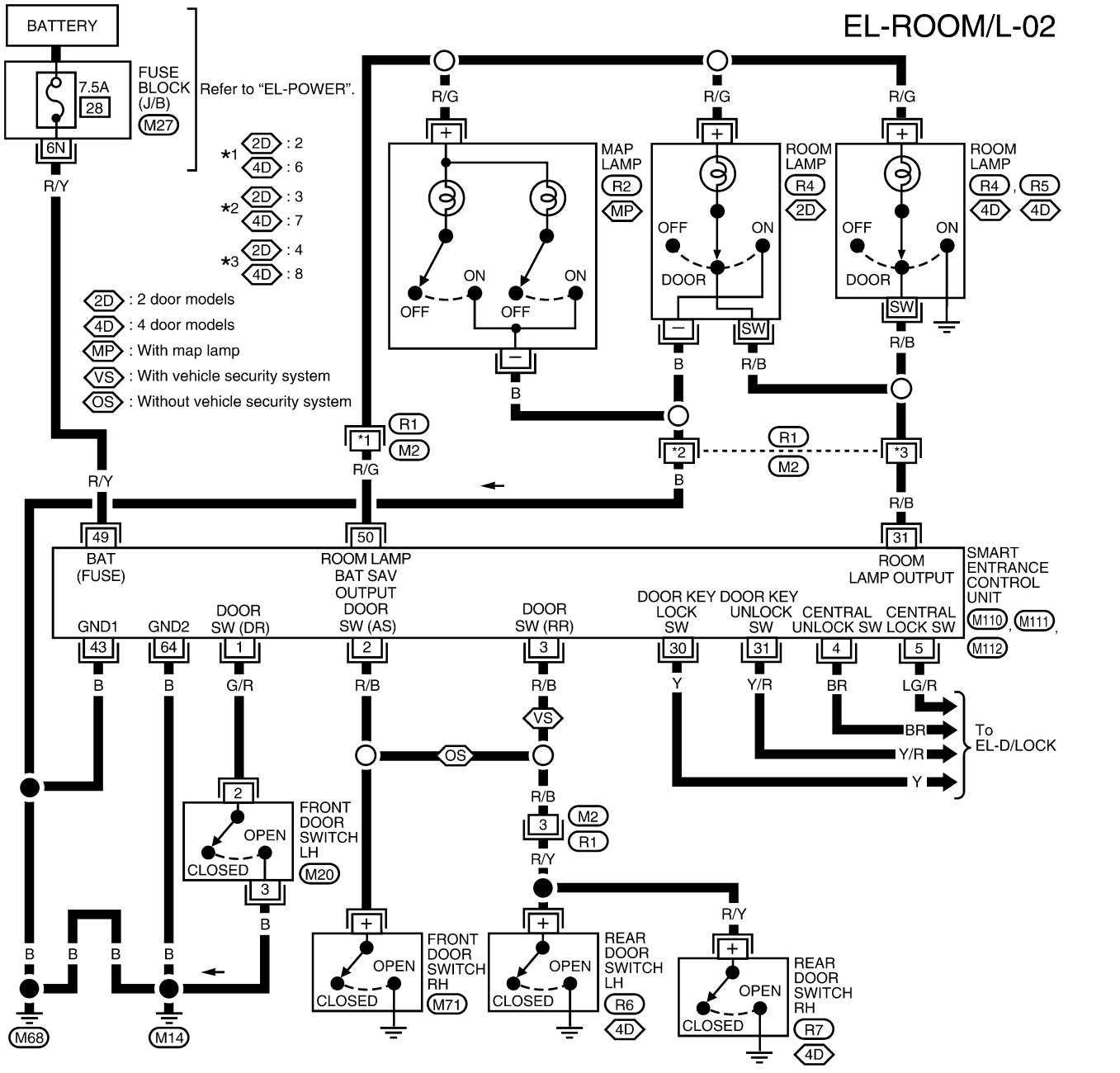

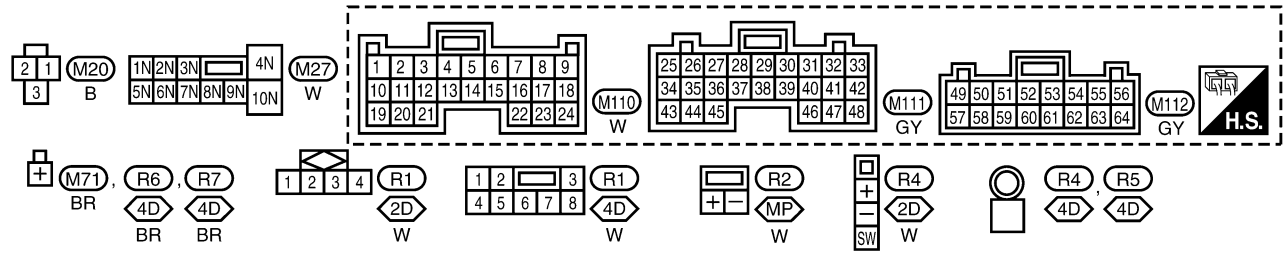

WEL081B

Trouble Diagnosis

NEEL0225

SYMPTOM: Room lamp does not turn on or off properly.

1	CHECK ROOM LAMP FUSE	
Check 7.5 A fuses [No. 26 (without power door locks), 28 (with power door locks), located in fuse block].		
OK or NG		
OK	▶	GO TO 2.
NG	▶	Replace fuse and check harness for short between fuse and room lamp.

2	CHECK ROOM LAMP SWITCH SIGNALS	
1. Close all doors, turn ON room lamp switch. **Do room lamps turn on?** 2. Turn off room lamp switch. **Do room lamps turn off?**		
OK or NG		
OK	▶	GO TO 3.
NG	▶	**Check the following.** ● Room lamp switch ● Room lamp switch ground circuit ● Harness for open or short between room lamp switch and smart entrance control unit (models with power door locks)

3	CHECK ROOM LAMP POWER SUPPLY	
Check voltage between room lamp connector R4 or R5 terminal + (R/G) and ground.		
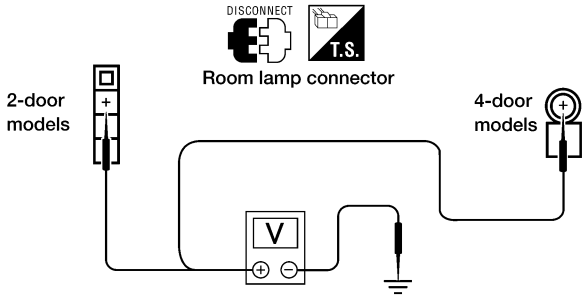 **Battery voltage should exist.**		
OK or NG		
OK	▶	GO TO 4.
NG	▶	Check harness for open between fuse and room lamp.

4	CHECK INTERIOR ROOM LAMP BULB	
Check interior room lamp bulb.		
OK or NG		
OK	▶	● For models without power door locks, inspection end. ● For models with power door locks, GO TO 5.
NG	▶	Replace bulb.

5	CHECK KEY SWITCH (INSERTED) AND IGNITION ON SIGNAL	
1. Insert key into ignition key cylinder. 2. Open front door LH. **Does warning chime sound?** 3. Turn ignition key to ON position. **Does warning chime stop sounding?**		
OK or NG		
OK	▶	GO TO 6.
NG	▶	Check warning chime system. Refer to "WARNING CHIME", EL-95.

6	CHECK DOOR SWITCH INPUT SIGNAL	
Unlock doors using LH door key cylinder. **Do the doors unlock?**		
OK or NG		
OK	▶	Replace smart entrance control unit.
NG	▶	Refer to "DOOR KEY CYLINDER SWITCH CHECK", EL-188.

Component Parts and Harness Connector Location

NEEL0041

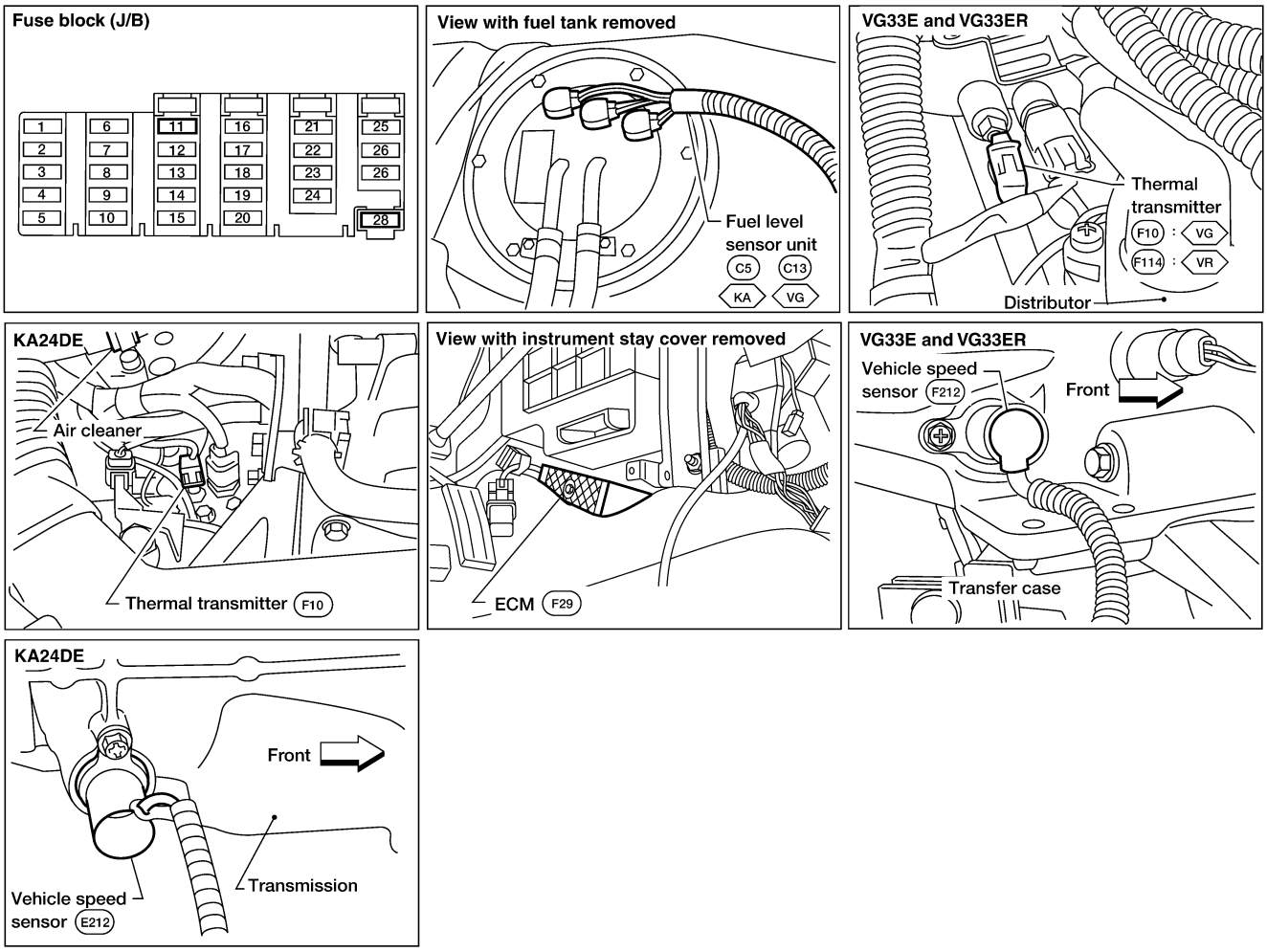

KA : With KA24DE
VG : With VG33E
VR : With VG33ER

WEL458A

System Description

NEEL0042

UNIFIED CONTROL METER

NEEL0042S06

- Speedometer, odo/trip meter, tachometer, fuel gauge and water temperature gauge are controlled totally by unified meter control unit.
- Digital meter is adopted for odo/trip meter.*
  *The record of the odometer is kept even if the battery cable is disconnected. The record of the trip meter is erased when the battery cable is disconnected.
- Odo/trip meter segment can be checked in diagnosis mode.
- Meter/gauge can be checked in diagnosis mode.

HOW TO CHANGE THE DISPLAY FOR ODO/TRIP METER

NEEL0042S07

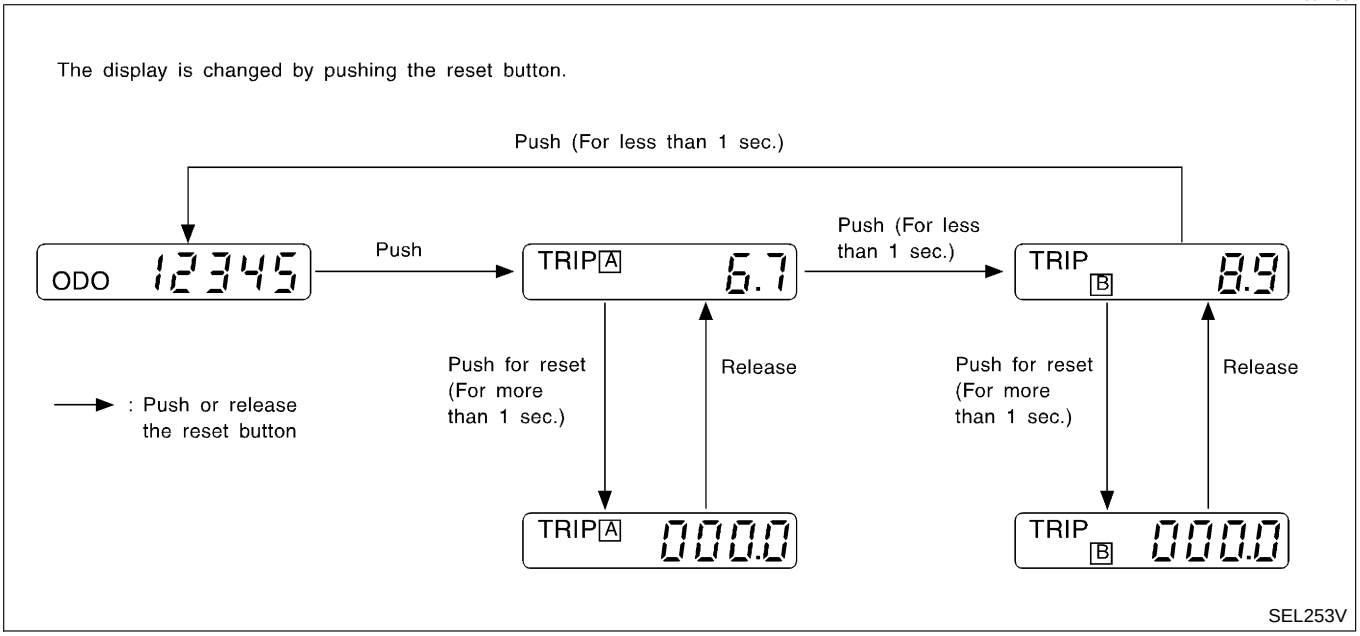

NOTE:
Turn ignition switch ON to operate odo/trip meter.

POWER SUPPLY AND GROUND CIRCUIT

NEEL0042S08

Power is supplied at all times

- through 7.5A fuse [No. 28, located in the fuse block (J/B)]
- to combination meter terminal 18.

With the ignition switch in the ON or START position, power is supplied

- through 10A fuse [No. 11, located in the fuse block (J/B)]
- to combination meter terminal 17.

Ground is supplied

- to combination meter terminal 24
- through body grounds M14 and M68.

FUEL GAUGE

NEEL0042S03

The fuel gauge indicates the approximate fuel level in the fuel tank. The reading on the gauge is based on the resistance of the fuel level sensor unit.
The fuel gauge is regulated by a variable ground signal supplied

- to combination meter terminal 20 for the fuel gauge
- through fuel level sensor unit terminal G (with VG33E and VG33ER) or 1 (with KA24DE)
- through fuel level sensor unit terminal E (with VG33E and VG33ER) or 4 (with KA24DE)
- through body grounds M14 and M68.

WATER TEMPERATURE GAUGE

NEEL0042S01

The water temperature gauge indicates the engine coolant temperature. The reading on the gauge is based on the resistance of the thermal transmitter.
The water temperature gauge is regulated by a variable ground signal supplied

- to combination meter terminal 19
- through thermal transmitter terminal 1.

As the temperature of the coolant increases, the resistance of the thermal transmitter decreases and the needle on the gauge moves from C to H.

TACHOMETER

NEEL0042S02

The tachometer indicates engine speed in revolutions per minute (rpm).
The tachometer is regulated by a signal

- to combination meter terminal 21 for the tachometer
- from ECM terminal 3.

SPEEDOMETER

NEEL0042S04

The vehicle speed sensor provides a voltage signal to the combination meter for the speedometer.
The voltage is supplied

- to combination meter terminals 22 and 23 for the speedometer
- from vehicle speed sensor terminals 1 and 2.

The unified meter control unit converts the voltage to the vehicle speed and displays it on the speedometer.

Combination Meter

NEEL0043

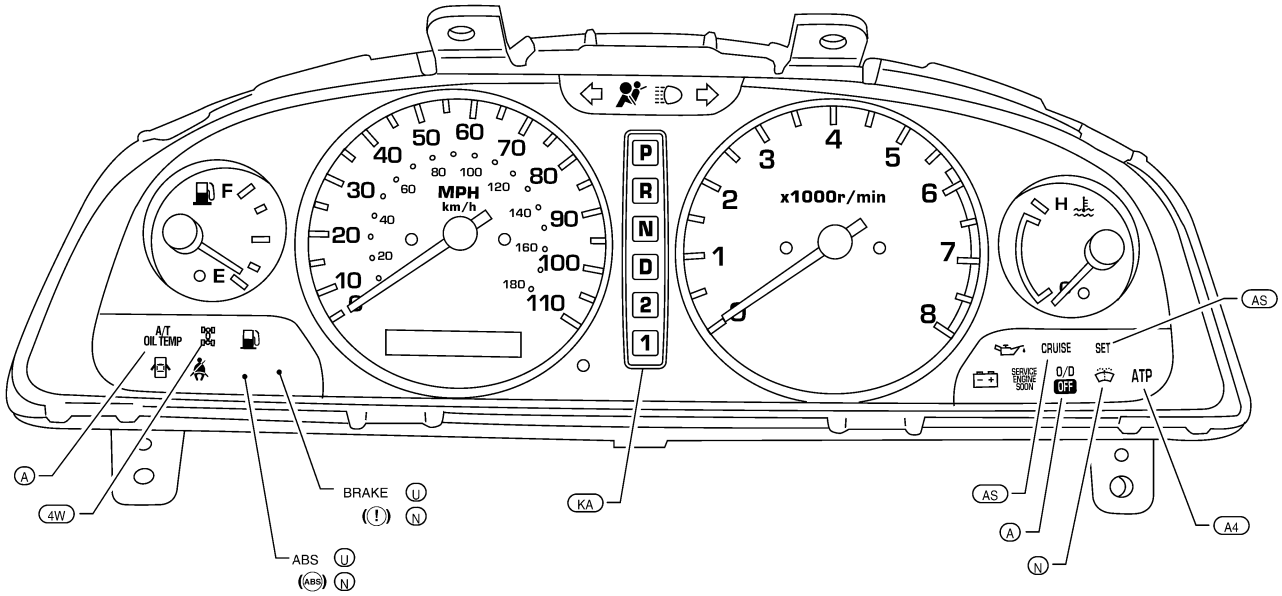

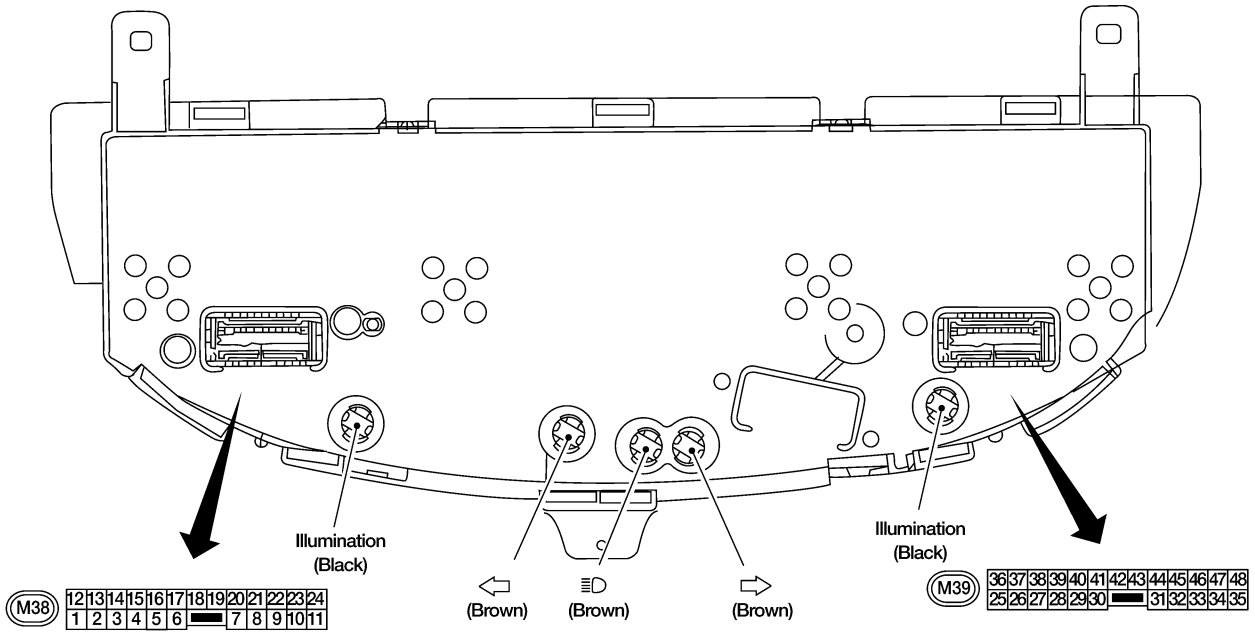

Bulb socket color	Bulb wattage
Brown	1.4 W
Black	3.0 W

( ) : Bulb socket color

(A4) : With A/T and 4-wheel drive
(A) : With A/T
(N) : For Canada
(U) : For USA
(AS) : With ASCD
(4W) : With 4-wheel drive
(KA) : With KA24DE

WEL045B

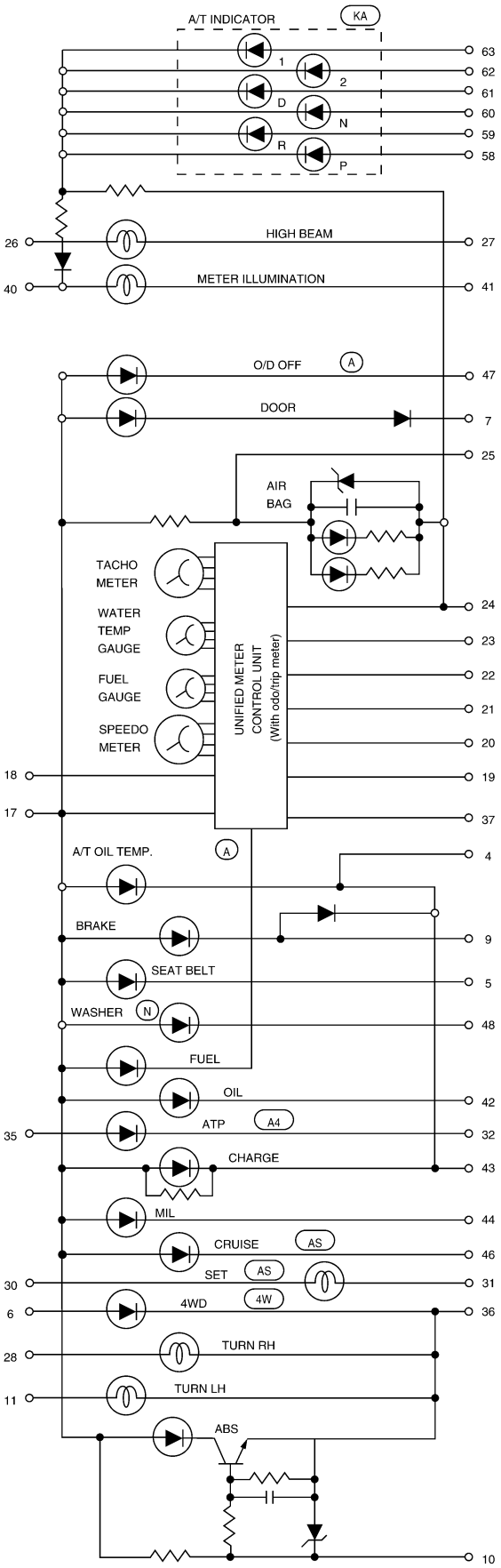

KA : With KA24DE engine and A/T
A4 : With A/T and 4-wheel drive
A : With A/T
N : For Canada
AS : With ASCD
4W : With 4-wheel drive

WEL046B

Wiring Diagram — METER —

NEEL0045

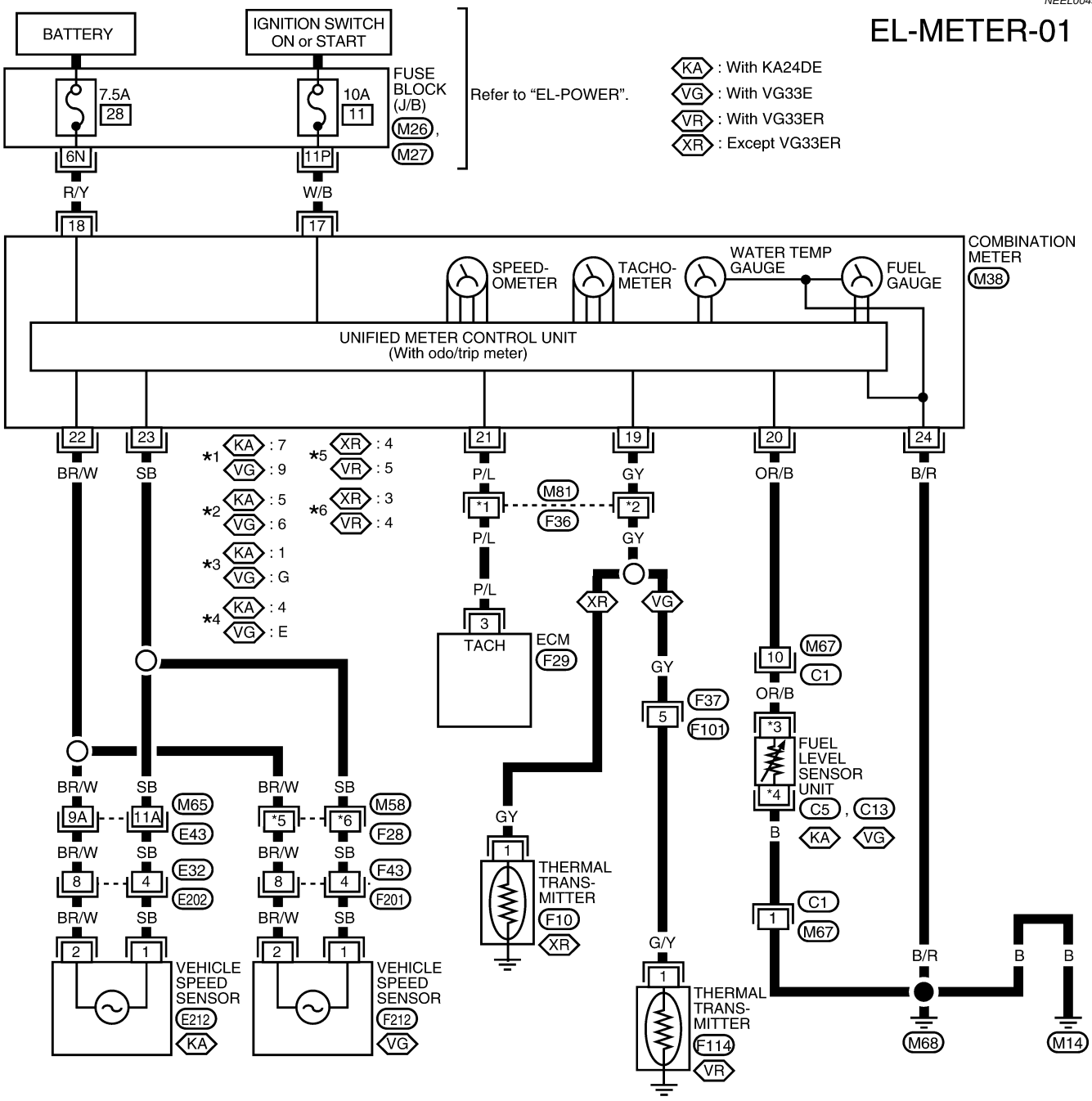

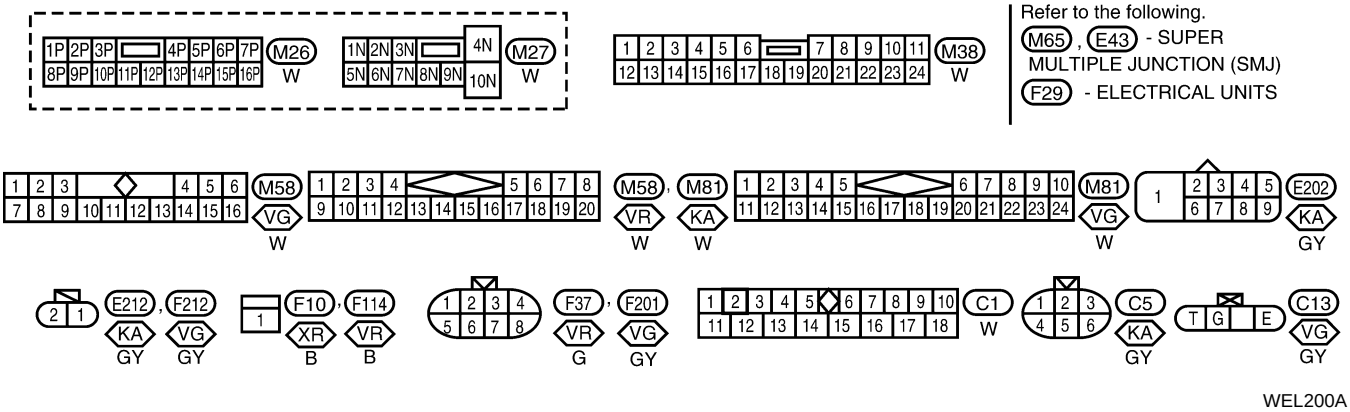

WEL200A

Meter/Gauge Operation and Odo/Trip Meter Segment Check in Diagnosis Mode

NEEL0151

DIAGNOSIS FUNCTION

NEEL0151S01

- Odo/trip meter segment can be checked in diagnosis mode.
- Meters/gauges can be checked in diagnosis mode.

HOW TO ALTERNATE DIAGNOSIS MODE

NEEL0151S02

1. Turn ignition switch ON and change odo/trip meter to TRIP A or TRIP B.
2. Turn ignition switch OFF.
3. Turn ignition switch ON while pressing and holding odo/trip meter switch.
4. Confirm that trip meter indicates “000.0”.
5. Push odo/trip meter switch more than 3 times within 7 seconds.

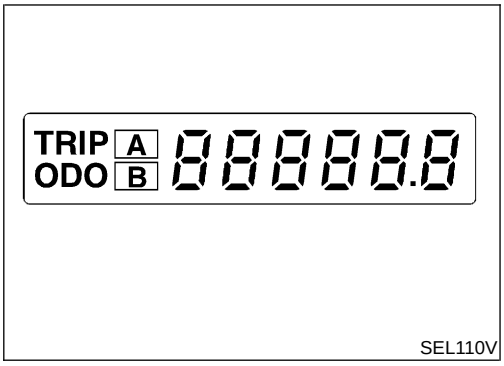

SEL110V

6. All odo/trip meter segments should be turned on.

NOTE:
If some segments are not turned on, unified meter control unit should be replaced.

At this point, the unified meter control unit is in diagnosis mode.

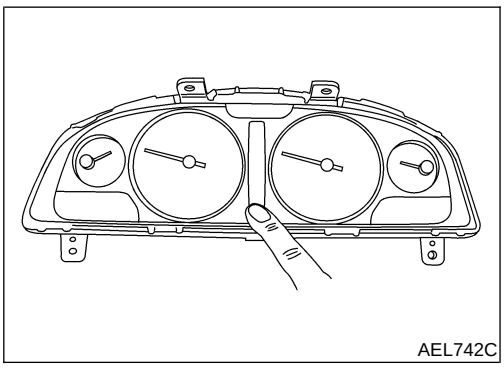
AEL742C

7. Push odo/trip meter switch. Indication of each meter/gauge should be as shown in figure at left while pushing odo/trip meter switch if it is not malfunctioning.

NOTE:
It takes about 1 minute for indication of fuel gauge to become stable.

Trouble Diagnoses

NEEL0046

PRELIMINARY CHECK

NEEL0046S04

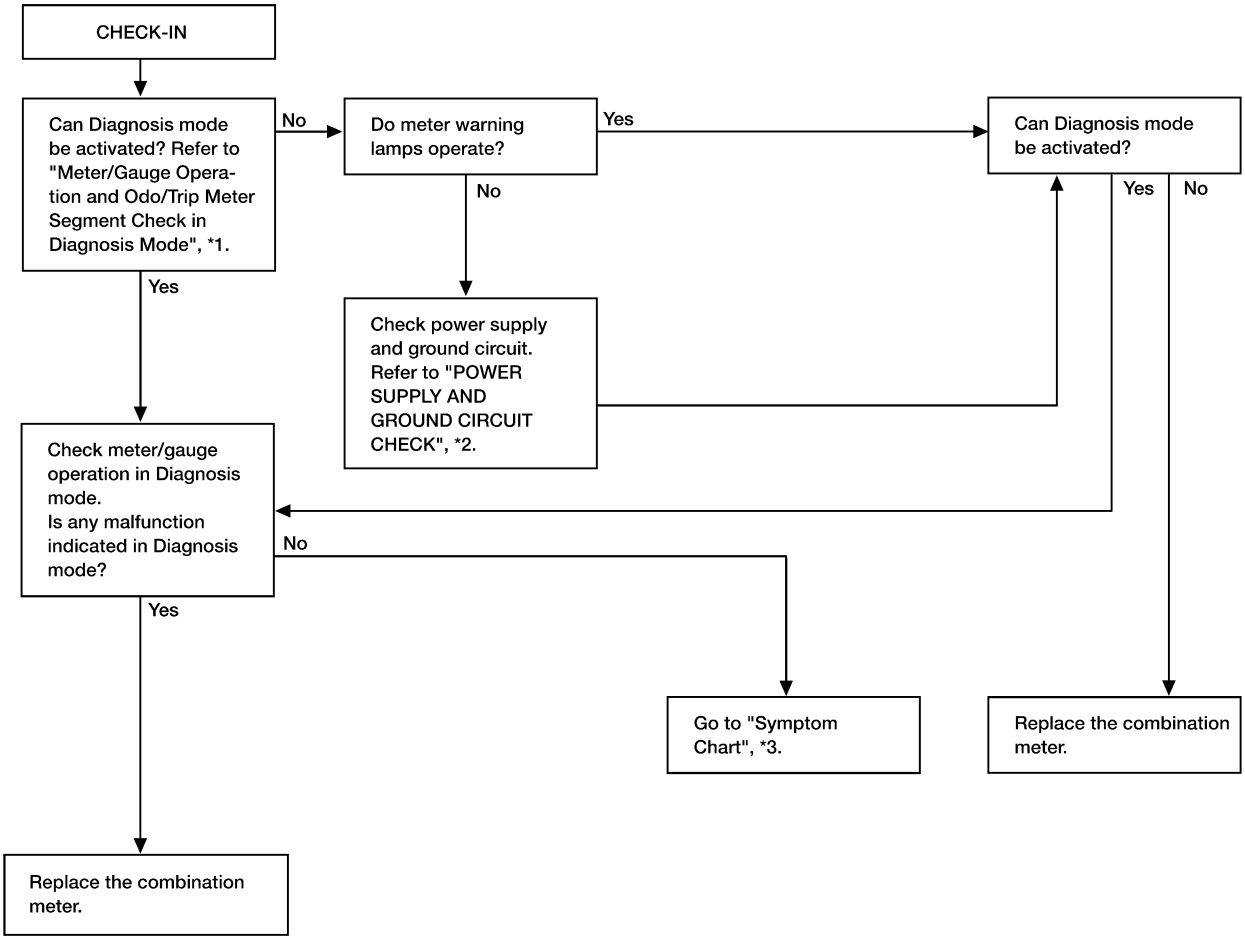

WEL835A

*1: EL-75 *2: EL-78 *3: EL-77

SYMPTOM CHART

NEEL0046S05

Symptom Chart 1 (Malfunction is Indicated in Diagnosis Mode)

NEEL0046S0501

Symptom	Possible causes	Repair order
Odo/trip meter indicates malfunction in Diagnosis mode.	• Unified meter control unit	• Replace combination meter.
Multiple meters/gauges indicate malfunction in Diagnosis mode.		
Speedometer, tachometer, fuel gauge or water temp. gauge indicates malfunction in Diagnosis mode.	1. Meter/Gauge 2. Unified meter control unit	

Symptom Chart 2 (No Malfunction is Indicated in Diagnosis Mode)

NEEL0046S0502

Symptom	Possible causes	Repair order
One or more gauges (speedometer, tachometer, fuel gauge, water temp. gauge) are malfunctioning.	1. Sensor – Vehicle speed signal – Engine revolution signal – Fuel gauge – Water temp. gauge 2. Unified meter control unit	1. Check the sensor for malfunctioning meter/gauge. Refer to "INSPECTION/VEHICLE SPEED SENSOR", EL-79. Refer to "INSPECTION/ENGINE REVOLUTION SIGNAL", EL-80. Refer to "INSPECTION/FUEL LEVEL SENSOR UNIT", EL-81. Refer to "INSPECTION/THERMAL TRANSMITTER", EL-82. 2. Replace combination meter.

Before starting trouble diagnoses above, perform "PRELIMINARY CHECK", EL-76.

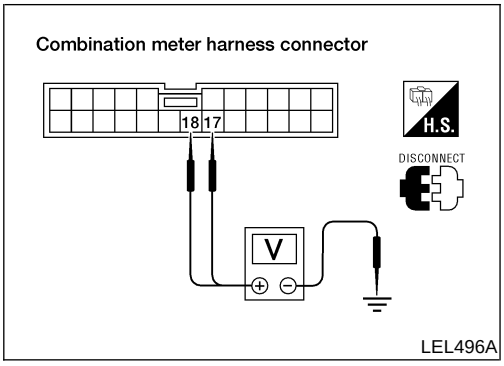

POWER SUPPLY AND GROUND CIRCUIT CHECK

=NEEL0046S07

Power Supply Circuit Check

NEEL0046S0701

Terminals			Ignition switch position		
(+)		(−)			
Connector	Terminal (Wire color)		OFF	ACC	ON
M38	18 (R/Y)	Ground	Battery voltage	Battery voltage	Battery voltage
M38	17 (W/B)		0V	0V	Battery voltage

If NG, check the following.

- 7.5A fuse [No. 28, located in fuse block (J/B)]
- 10A fuse [No. 11, located in fuse block (J/B)]
- Harness for open or short between fuse and combination meter

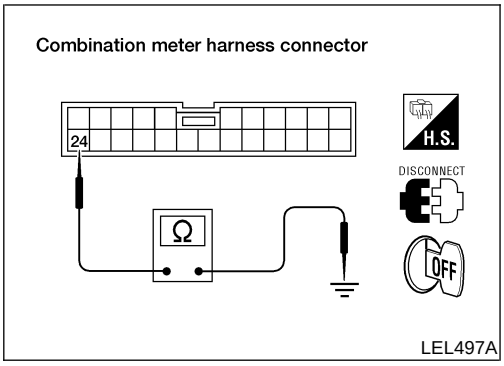

Ground Circuit Check

NEEL0046S0702

Terminals			Continuity
(+)		(−)	
Connector	Terminal (Wire color)		
M38	24 (B/R)	Ground	Yes

INSPECTION/VEHICLE SPEED SENSOR

=NEEL0046S03

1	CHECK VEHICLE SPEED SENSOR OUTPUT

1. Remove vehicle speed sensor from transmission.
2. Check voltage between combination meter harness connector M38 terminals 22 (BR/W) and 23 (SB) while quickly turning vehicle speed sensor pinion.

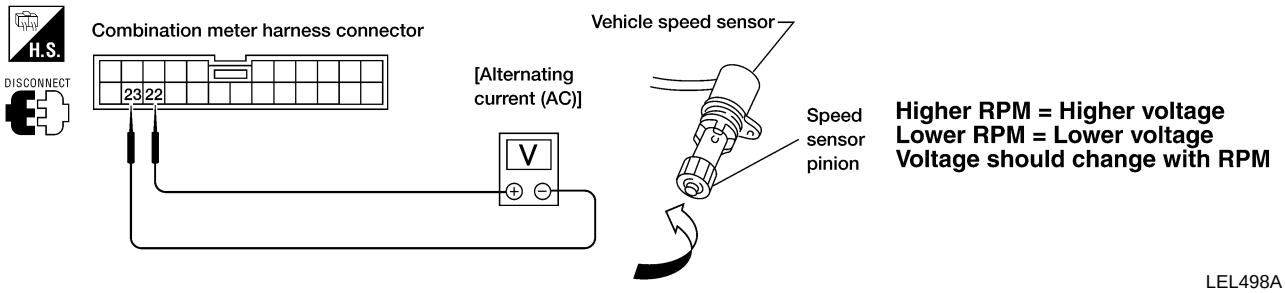

LEL498A

OK or NG

OK	▶	Vehicle speed sensor is OK.
NG	▶	GO TO 2.

2	CHECK VEHICLE SPEED SENSOR

Check resistance between vehicle speed sensor terminals 1 and 2.

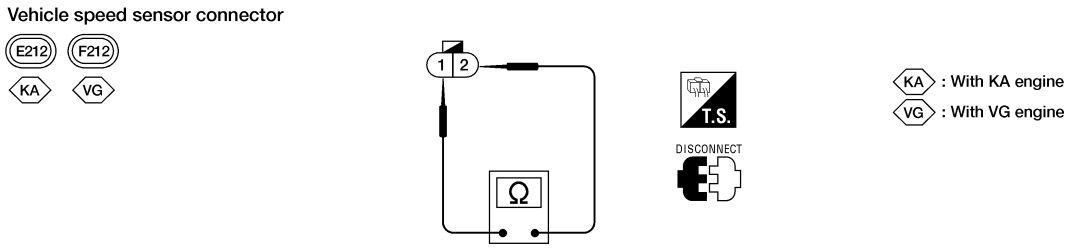

AEL538C

Resistance: Approx. 285Ω

OK or NG

OK	▶	Check harness and connector between speedometer and vehicle speed sensor.
NG	▶	Replace vehicle speed sensor.

INSPECTION/ENGINE REVOLUTION SIGNAL

NEEL0046S02

1	CHECK ECM OUTPUT

1. Start engine.
2. Check voltage between combination meter harness connector M38 terminals 21 (P/L) and 24 (B/R) at idle and 2,000 rpm.

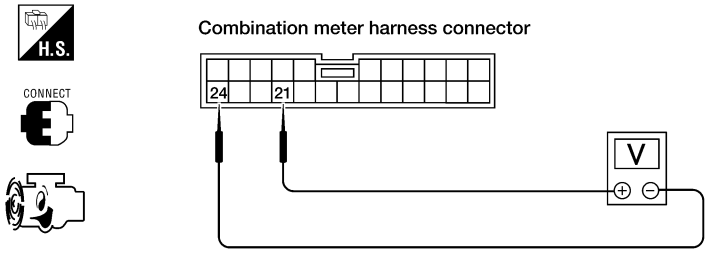

Voltage: Approx. 0.5V

LEL499A

OK or NG

OK	▶	Engine revolution signal is OK.
NG	▶	Harness for open or short between ECM and combination meter

INSPECTION/FUEL LEVEL SENSOR UNIT

=NEEL0046S08

1	CHECK GROUND CIRCUIT FOR FUEL LEVEL SENSOR UNIT

With VG33E and VG33ER: Check harness continuity between fuel level sensor unit harness connector C13 terminal E (B) and ground.
With KA24DE: Check harness continuity between fuel level sensor unit harness connector C5 terminal 4 (B) and ground.

Fuel level sensor unit harness connector

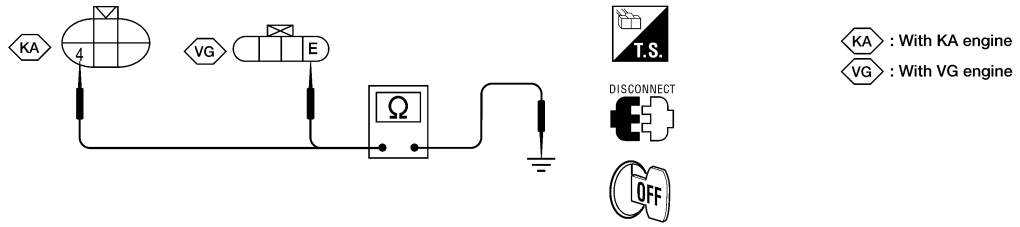

LEL364A

Does continuity exist?

Yes	▶	GO TO 2.
No	▶	Repair harness or connector.

2	CHECK GAUGE UNITS

Refer to "FUEL LEVEL SENSOR UNIT CHECK", EL-82.

OK or NG

OK	▶	GO TO 3.
NG	▶	Replace fuel level sensor unit.

3	CHECK HARNESS FOR OPEN OR SHORT

1. Disconnect combination meter harness connector M38, fuel level sensor unit harness connector and ECM harness connector F29.
2. With VG33E and VG33ER: Check continuity between combination meter harness connector M38, terminal 20 (OR/B) and fuel level sensor unit harness connector C13 terminal G (OR/B).
   With KA24DE: Check continuity between combination meter harness connector M38, terminal 20 (OR/B) and fuel level sensor unit harness connector C5 terminal 1 (OR/B).
   Continuity should exist.
3. Check continuity between combination meter harness connector M38 terminal 20 (OR/B) and ground.
   Continuity should not exist.

Combination meter harness connector

Fuel level sensor unit harness connector

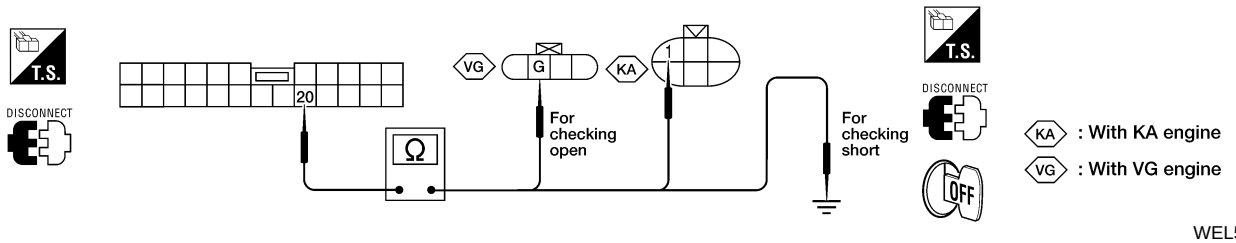

WEL534A

OK or NG

OK	▶	Fuel level sensor unit is OK.
NG	▶	Repair harness or connector.

INSPECTION/THERMAL TRANSMITTER

NEEL0046S09

1	CHECK THERMAL TRANSMITTER	
Refer to "THERMAL TRANSMITTER CHECK", EL-83.		
OK or NG		
OK	▶	GO TO 2.
NG	▶	Replace thermal transmitter.

2	CHECK HARNESS FOR OPEN OR SHORT	
1. Disconnect combination meter harness connector and thermal transmitter harness connector. 2. Check continuity between combination meter harness connector M38 terminal 19 (GY) and thermal transmitter harness connector F10 (except VG33ER) terminal 1 (GY) or F114 (with VG33ER) terminal 1 (G/Y). **Continuity should exist.** 3. Check continuity between combination meter harness connector terminal 19 and ground. **Continuity should not exist.**		
OK or NG		
OK	▶	Thermal transmitter is OK.
NG	▶	Repair harness or connector.

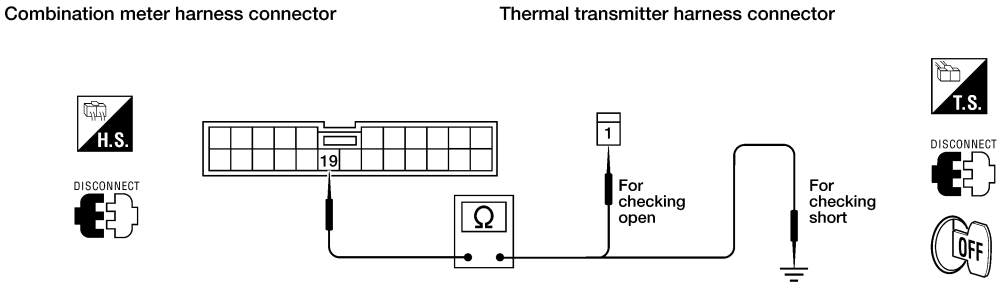

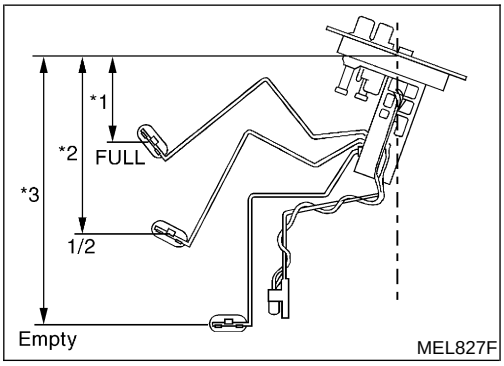

Electrical Components Inspection

NEEL0047

FUEL LEVEL SENSOR UNIT CHECK

NEEL0047S01

- Refer to ***FE-7***, "Removal".

With KA24DE

NEEL0047S0101

Check the resistance between fuel level sensor unit terminals 1 and 4.

Ohmmeter (+)	Ohmmeter (−)		Float position mm (in)		Resistance value (Ω) (Approx.)
1	4	*1	Full	96 (3.78)	4 - 6
		*2	1/2	188 (7.40)	30 - 34
		*3	Empty	257 (10.12)	80 - 83

*1 and *3: When float rod is in contact with stopper.

With VG33E and VG33ER

NEEL0047S0102

Check the resistance between fuel level sensor unit terminals G and E.

Ohmmeter (+)	Ohmmeter (−)	Float position mm (in)			Resistance value (Ω) (Approx.)
G	E	*1	Full	96 (3.78)	4 - 6
		*2	1/2	188 (7.40)	30 - 34
		*3	Empty	257 (10.12)	80 - 83

*1 and *3: When float rod is in contact with stopper.

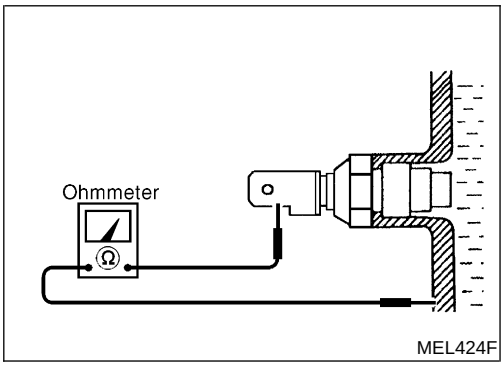

MEL424F

THERMAL TRANSMITTER CHECK

NEEL0047S02

Check the resistance between thermal transmitter terminal 1 and body ground.

Water temperature	Resistance (Approx.)
60°C (140°F)	170 - 210Ω
100°C (212°F)	47 - 53Ω

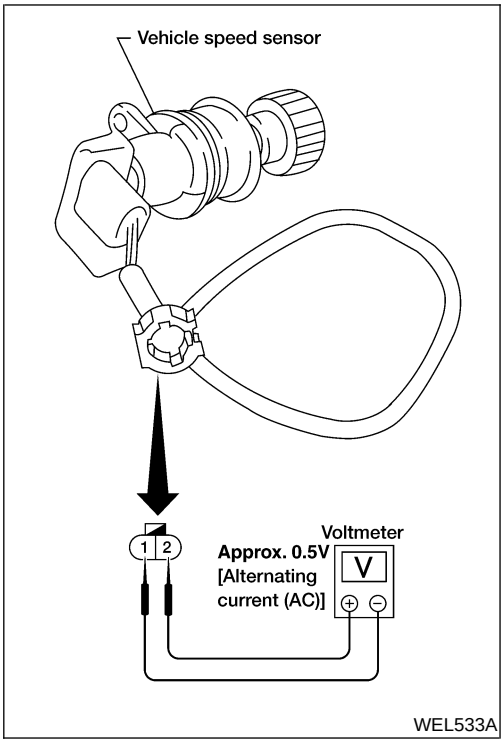

WEL533A

VEHICLE SPEED SENSOR SIGNAL CHECK

NEEL0047S03

1. Remove vehicle speed sensor from transmission.
2. Turn vehicle speed sensor pinion quickly and measure voltage across 1 and 2.

Circuit Diagram

NEEL0049

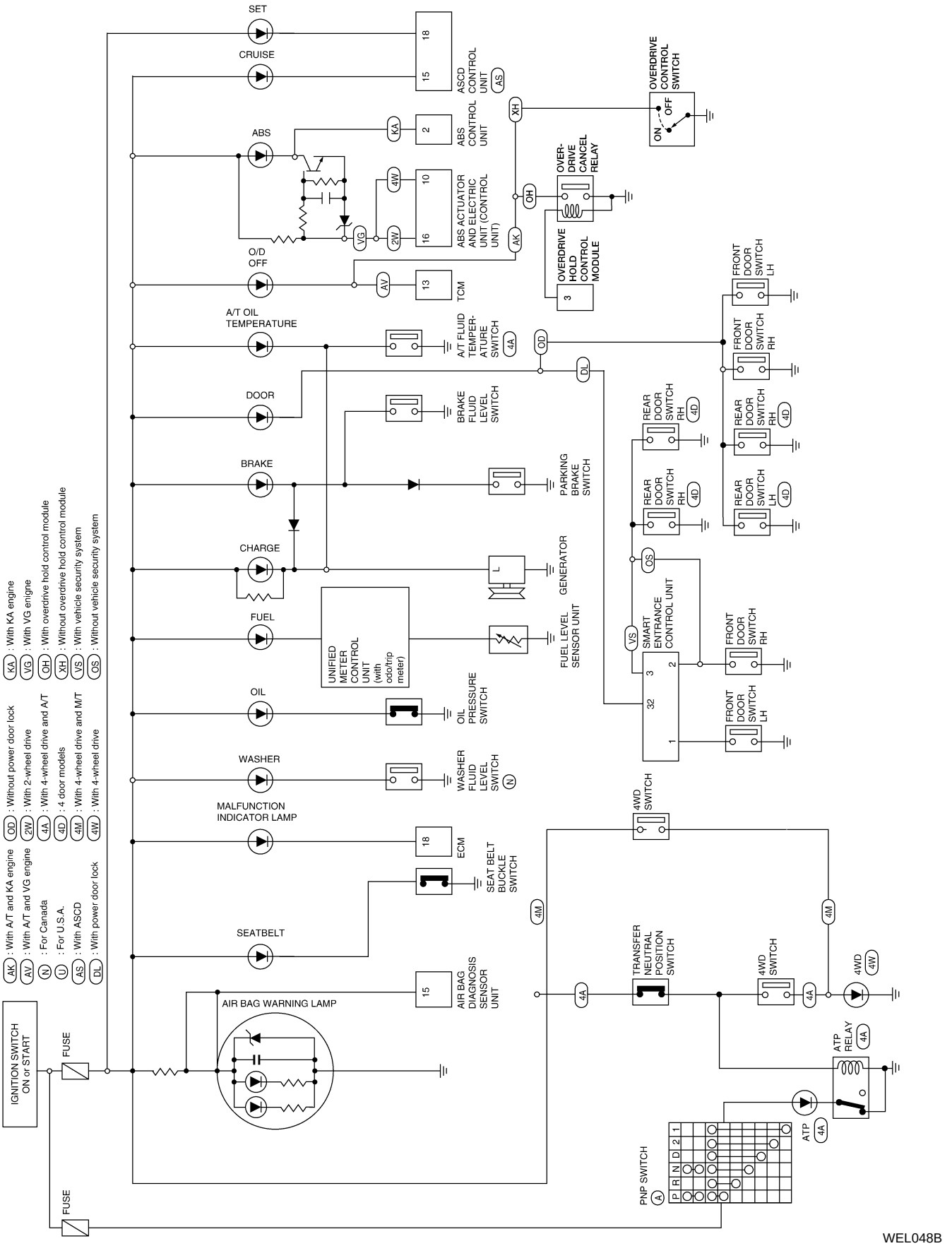

WEL048B

Wiring Diagram — WARN —

NEEL0050

EL-WARN-01

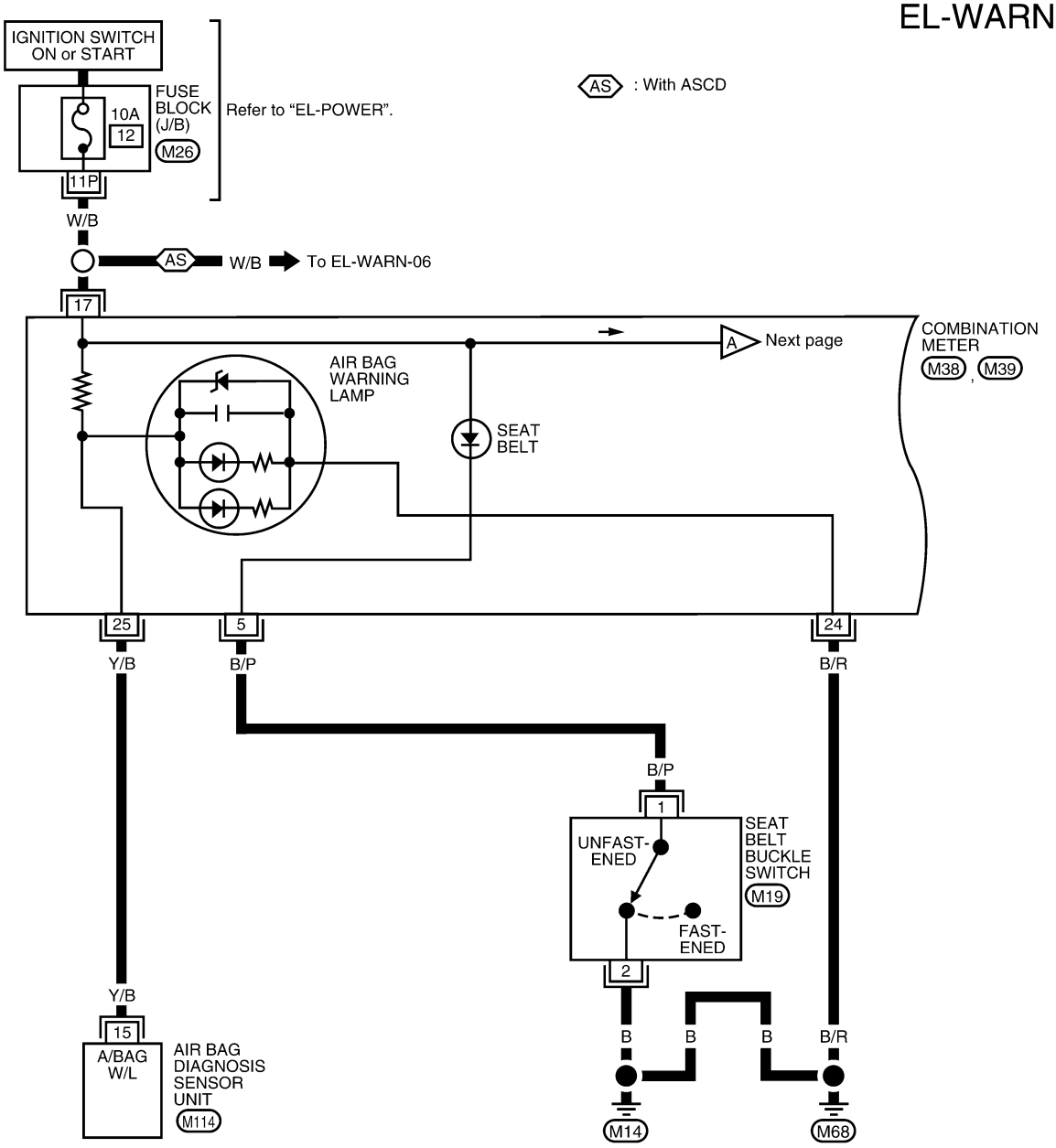

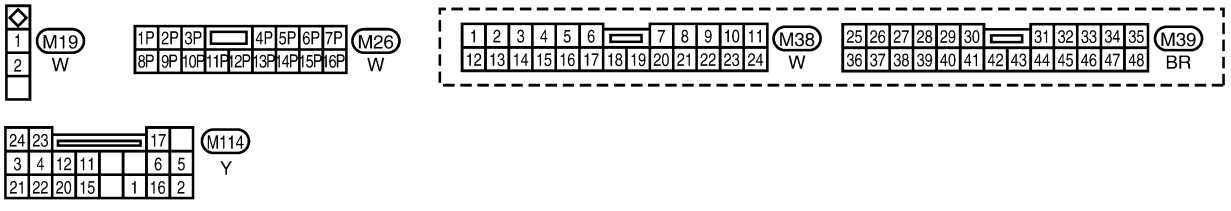

WEL049B

EL-WARN-02

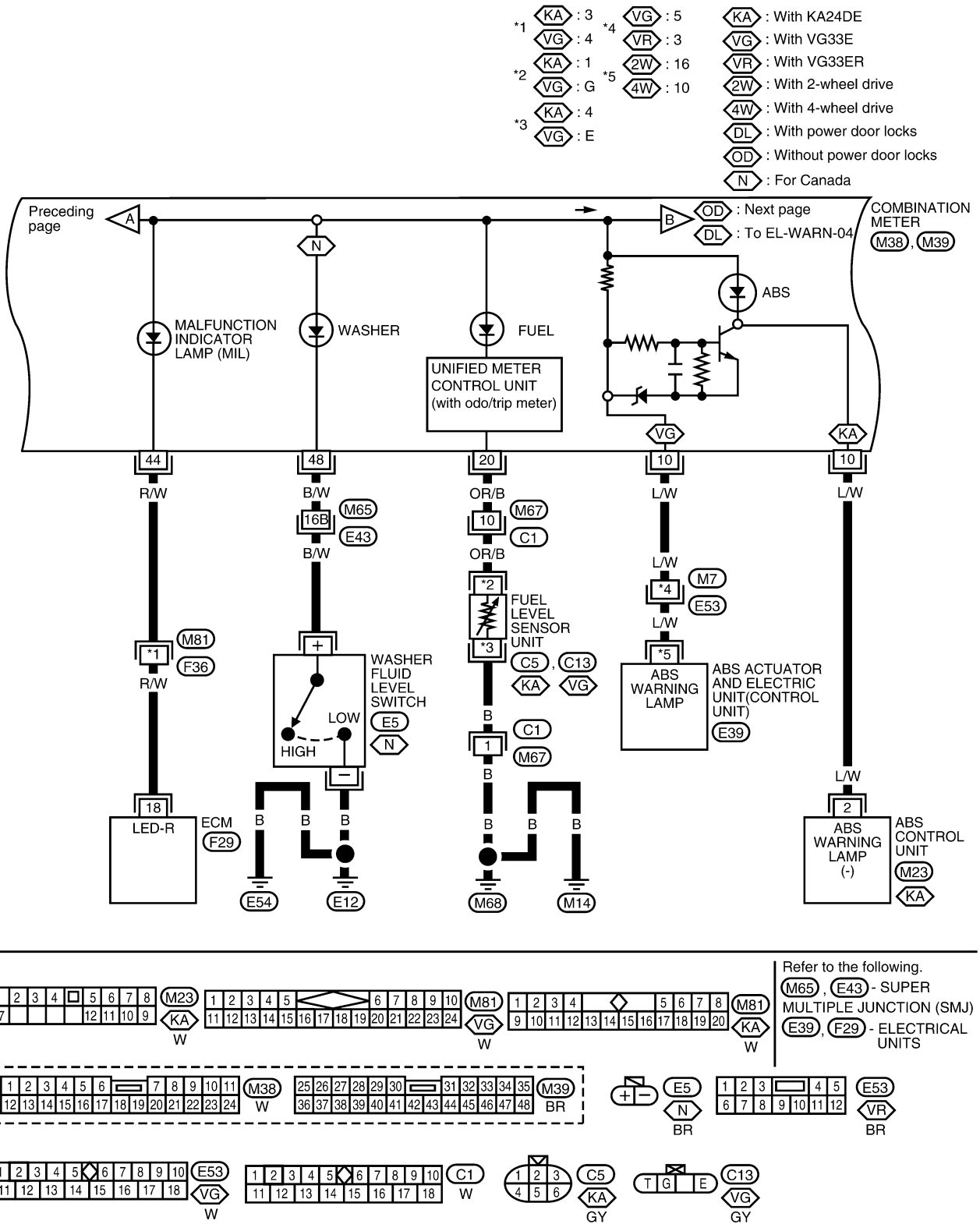

WEL050B

MODELS WITHOUT POWER DOOR LOCKS

NEEL0050S01

EL-WARN-03

2D : 2 door models
4D : 4 door models

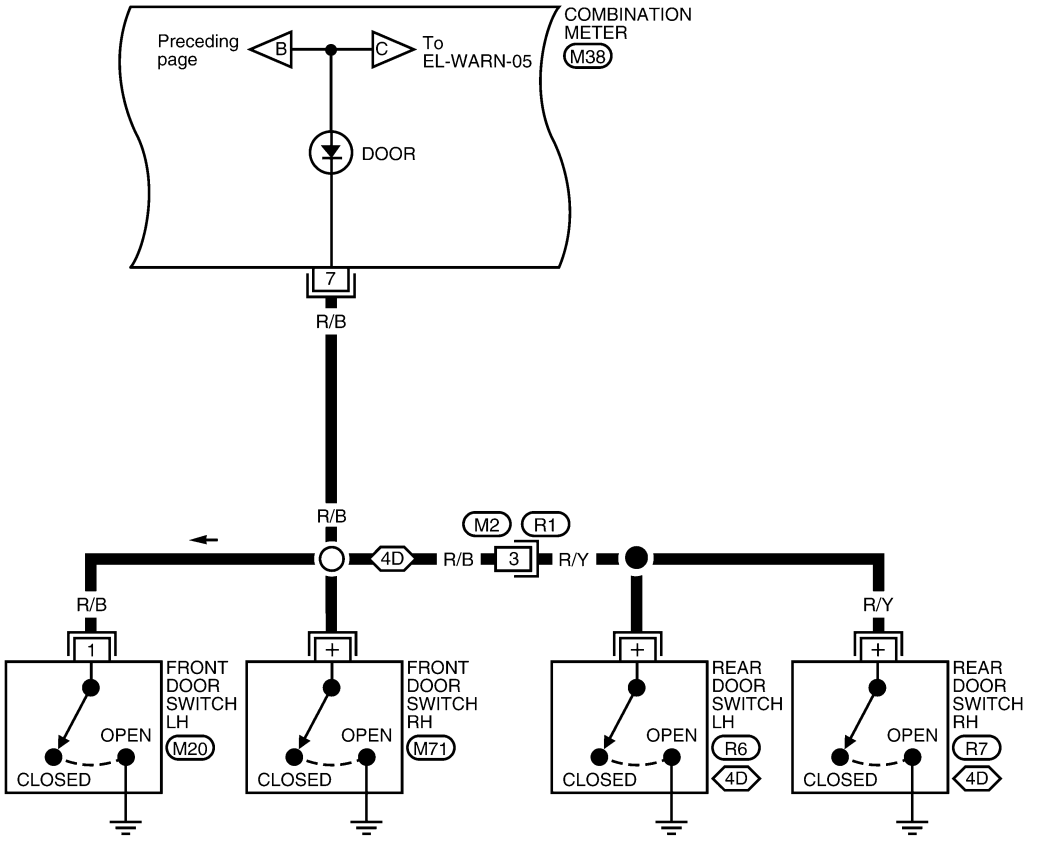

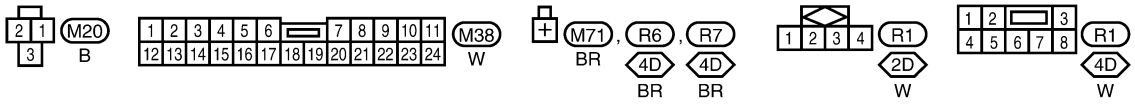

WEL051B

MODELS WITH POWER DOOR LOCKS

NEEL0050S02

EL-WARN-04

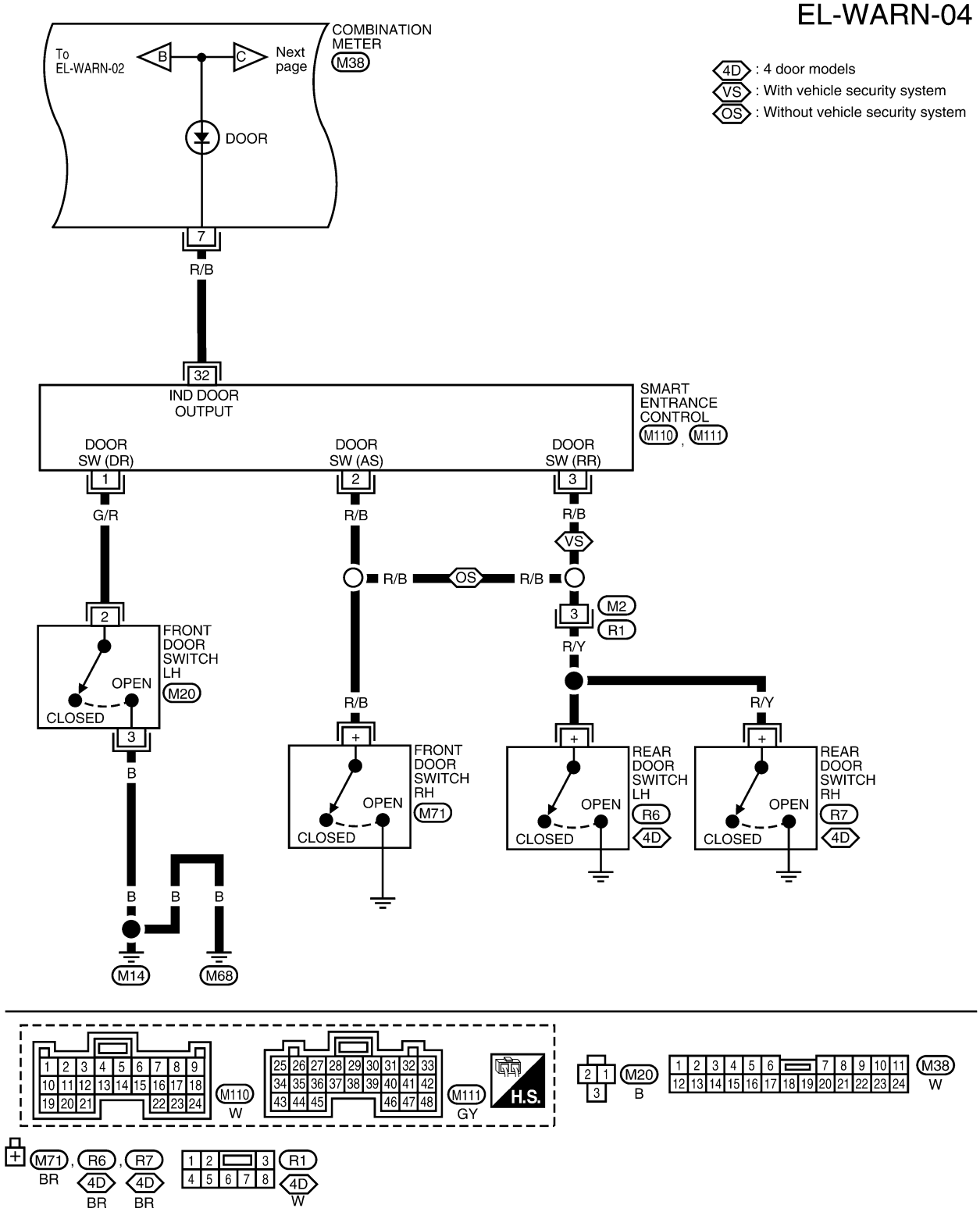

WEL052B

EL-WARN-05

4A : With 4-wheel drive and A/T
KA : With KA engine
VG : With VG engine
2X : With 2-wheel drive except 4 door models
4W : With 4-wheel drive and 4 door models and models with VG33ER engine

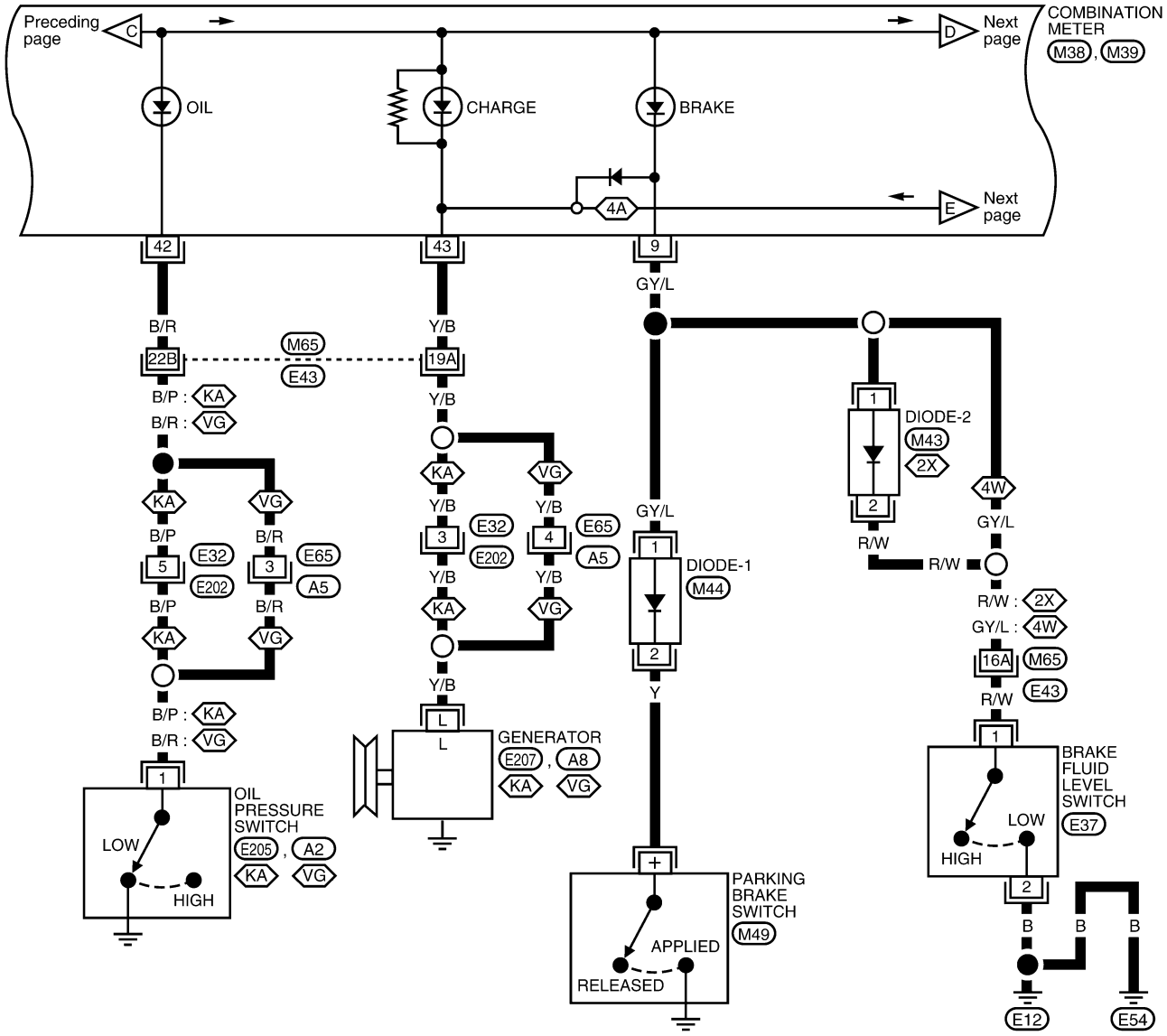

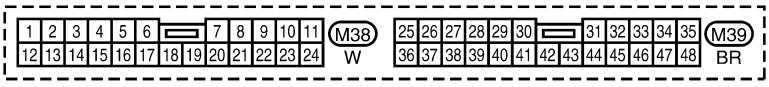

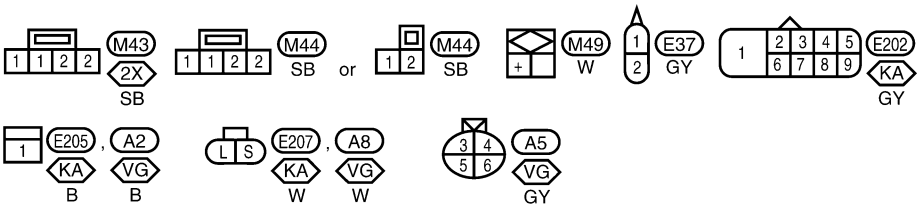

Refer to the following.
M65, E43 - SUPER MULTIPLE JUNCTION (SMJ)

WEL053B

EL-WARN-06

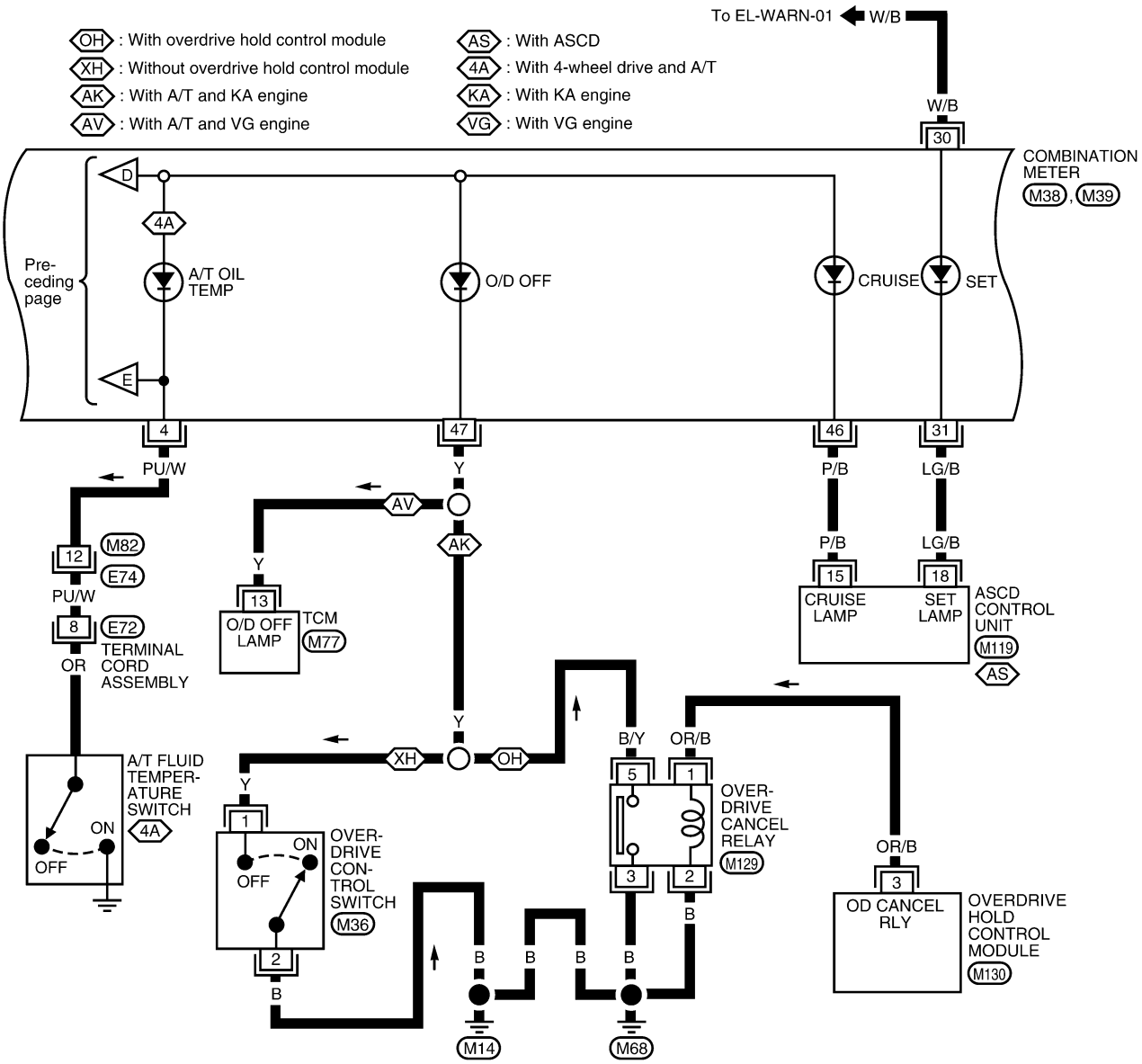

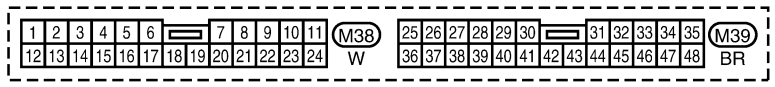

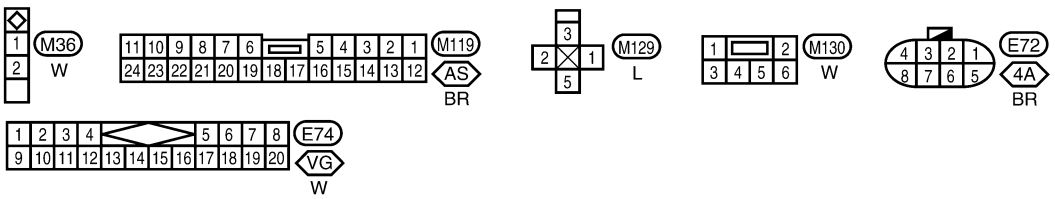

Refer to the following.
M77 - ELECTRICAL UNITS

WEL054B

EL-WARN-07

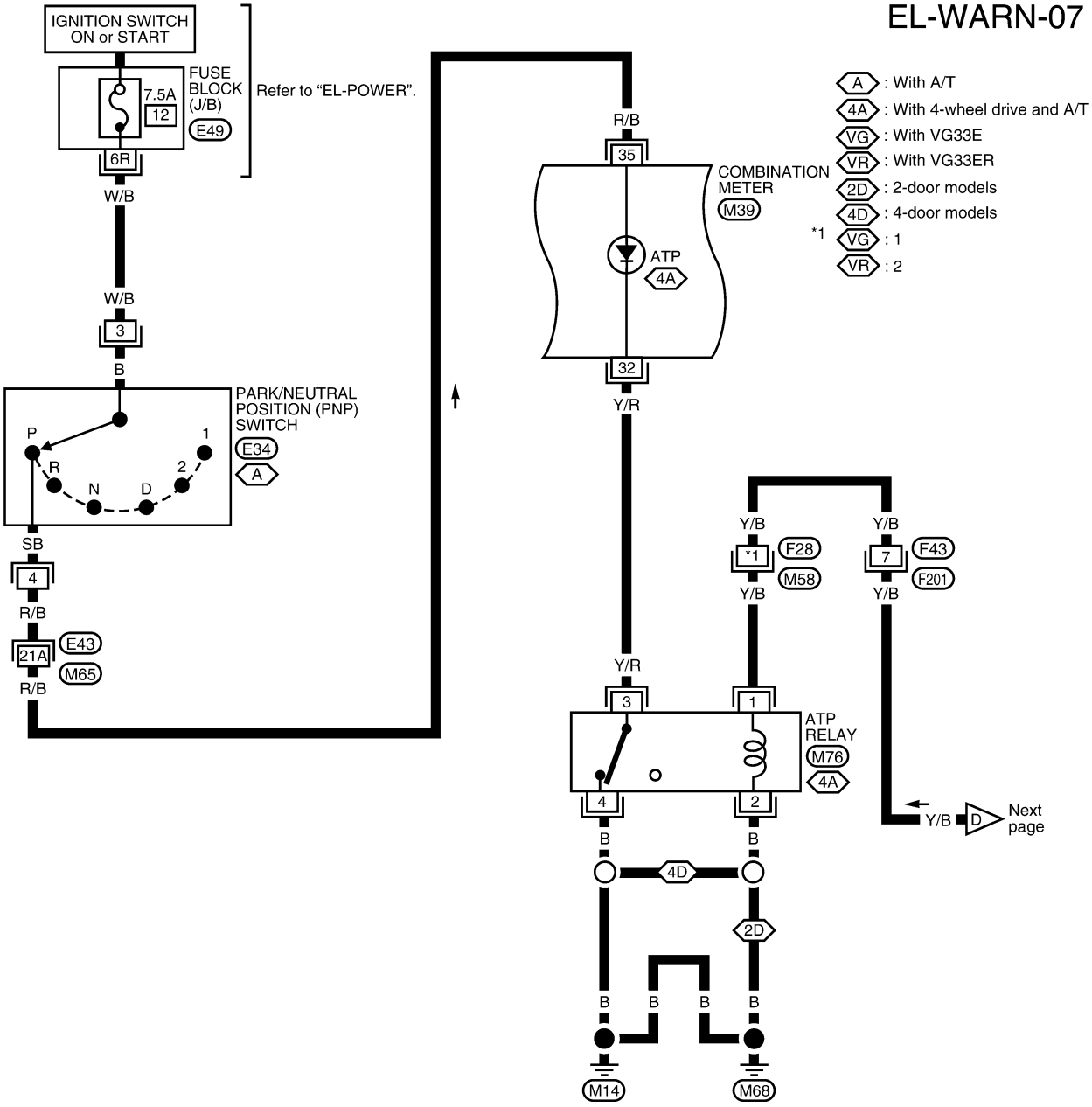

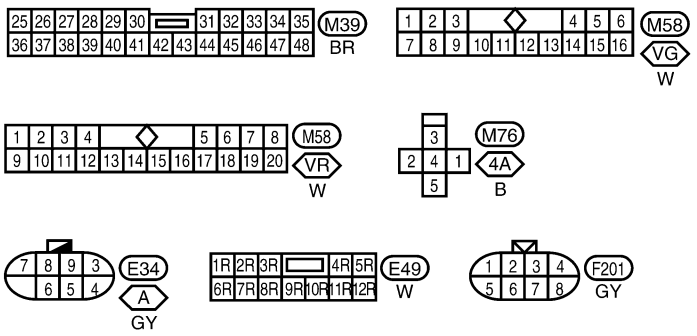

Refer to the following.
M65, E43 - SUPER MULTIPLE JUNCTION (SMJ)

WEL055B

EL-WARN-08

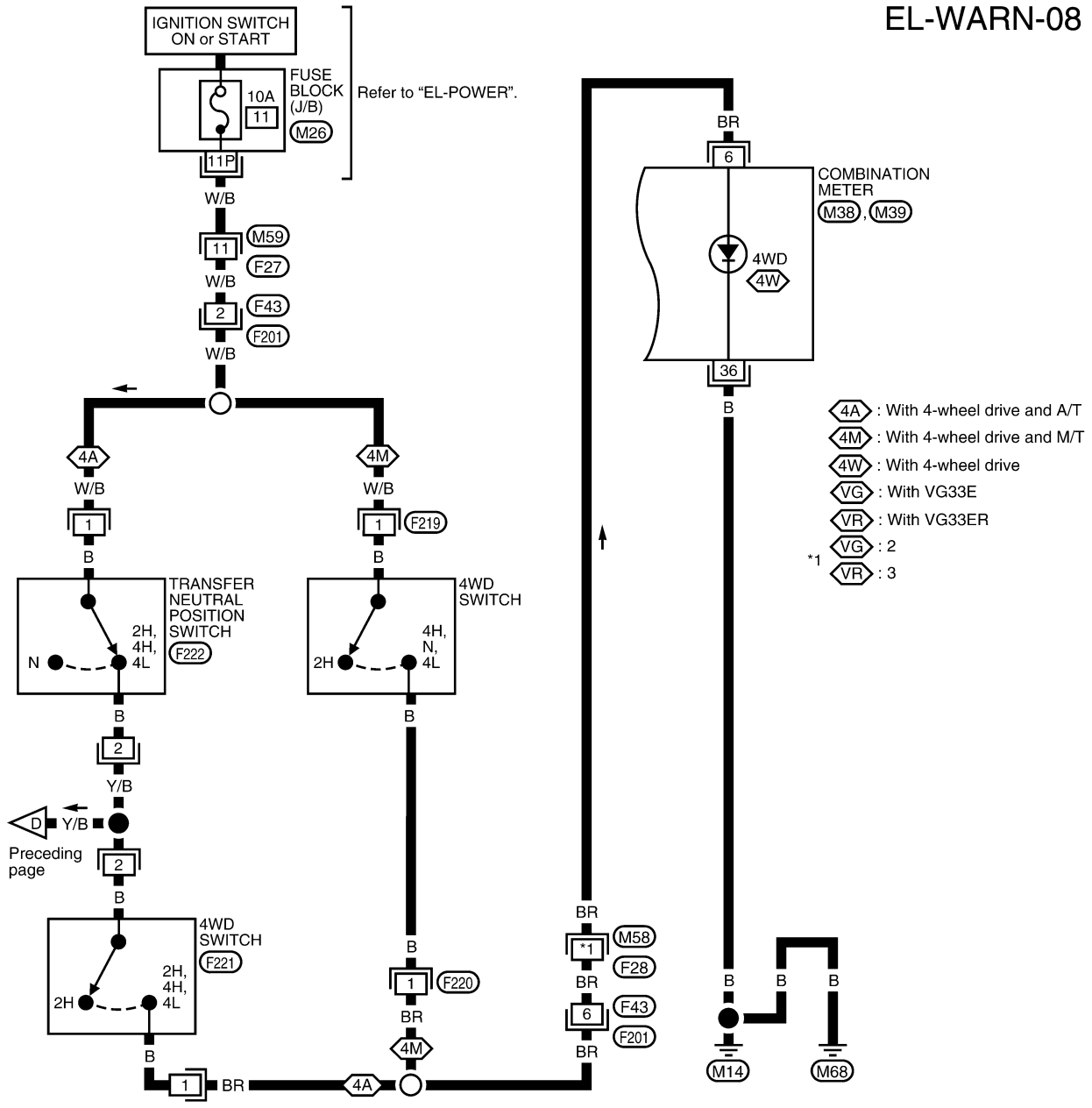

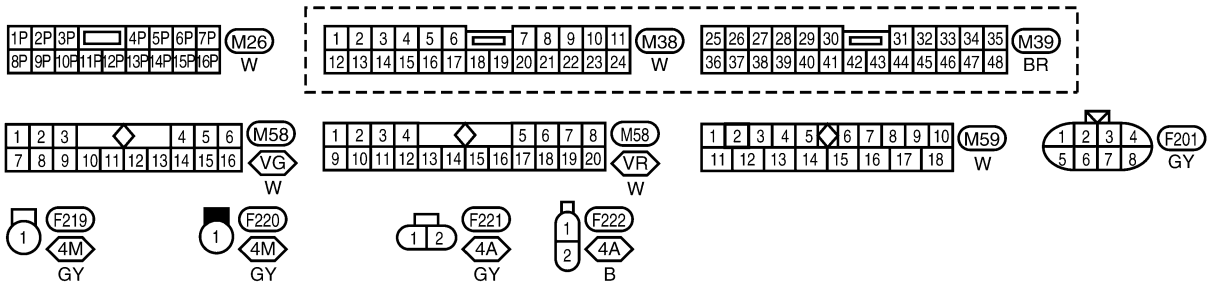

WEL056B

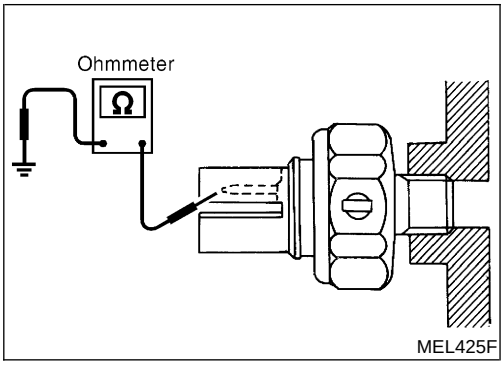

Electrical Components Inspection

NEEL0051

OIL PRESSURE SWITCH CHECK

NEEL0051S02

	Oil pressure kPa (kg/cm^2, psi)	Continuity
Engine start	More than 10 - 20 (0.1 - 0.2, 1 - 3)	No
Engine stop	Less than 10 - 20 (0.1 - 0.2, 1 - 3)	Yes

Check the continuity between oil pressure switch terminal 1 and body ground.

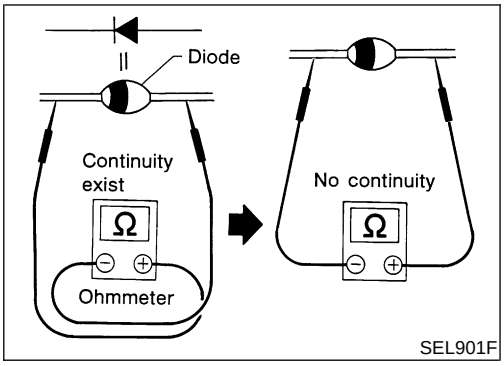

DIODE CHECK

NEEL0051S03

- Check continuity using an ohmmeter.
- Diode is functioning properly if test results are as shown in the figure at left.

NOTE:
Specification may vary depending on the type of tester. Before performing this inspection, be sure to refer to the instruction manual of the tester to be used.

- Diodes for warning lamps are built into the combination meter printed circuit.
- For diode location, refer to “Combination Meter”, EL-72.

Wiring Diagram — AT/IND —

NEEL0214

EL-AT/IND-01

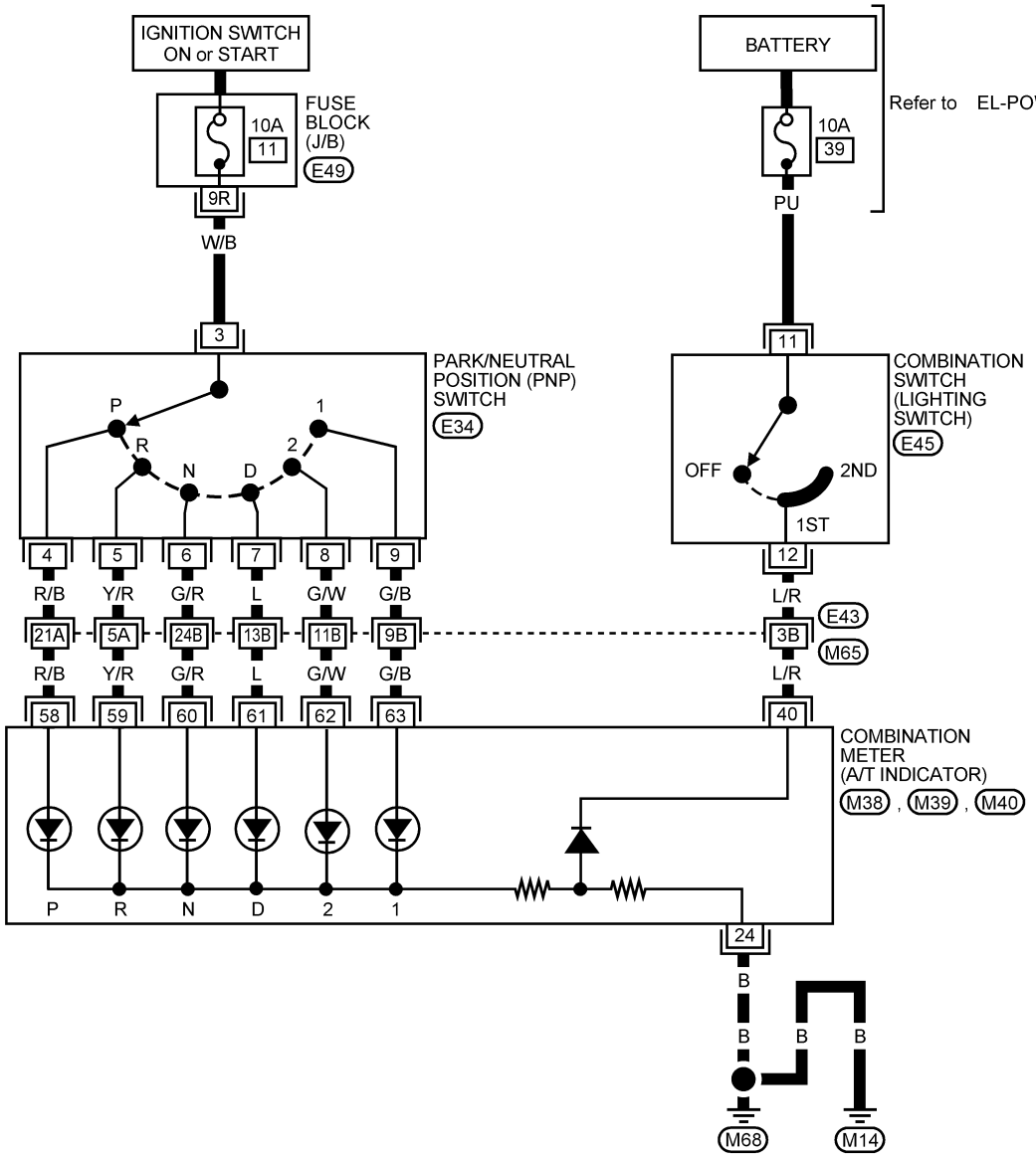

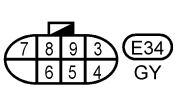

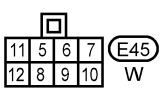



Refer to the following.
M65 , E43 - SUPER MULTIPLE JUNCTION (SMJ)

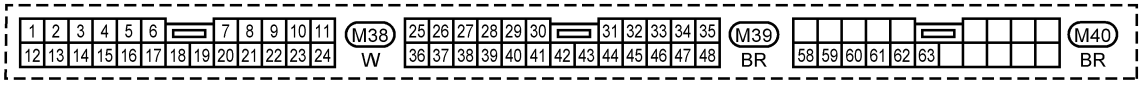

AEL769C

Component Parts and Harness Connector Location

NEEL0052

Fuse block (J/B)

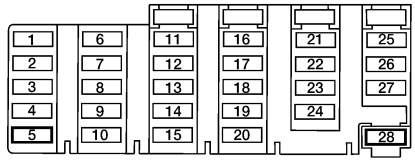

Fuse and fusible link box for KA24DE

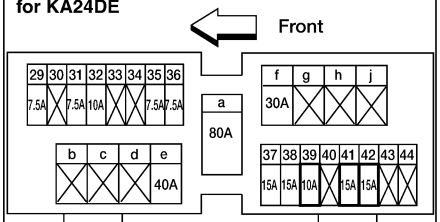

No 29 - 44: FUSE a - j: FUSIBLE LINK

E31

Fuse and fusible link box for VG33E

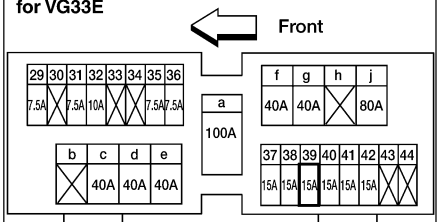

No 29 - 44: FUSE a - j: FUSIBLE LINK

E31

Fuse and fusible link box for VG33ER

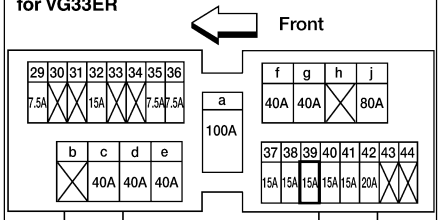

No 29 - 44: FUSE a - j: FUSIBLE LINK

E31

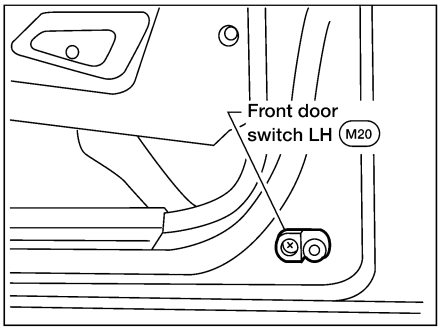

View with steering column covers removed

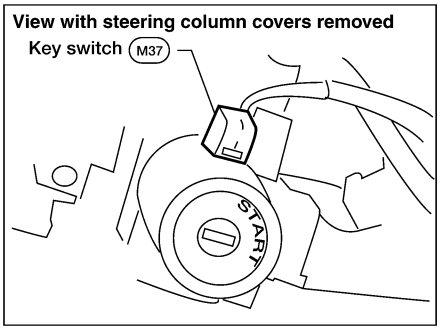

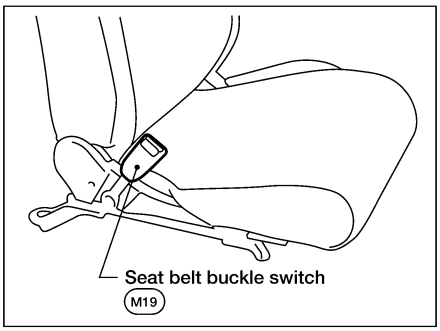

Crew Cab

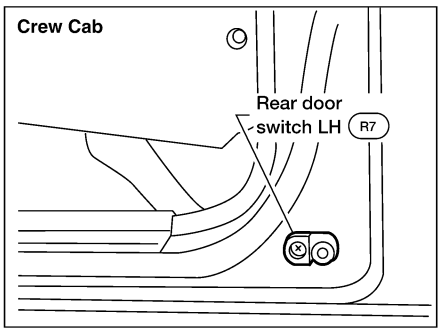

View with instrument lower panel driver side removed

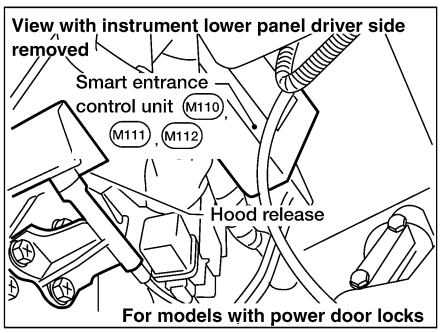

View with instrument lower panel driver side removed

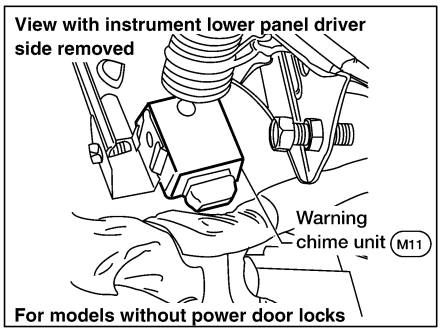

WEL464A

System Description

NEEL0053

MODELS WITHOUT POWER DOOR LOCKS

NEEL0053S04

The warning chime is integral with the warning chime unit, which controls its operation.
Power is supplied at all times

- through 7.5A fuse [No. 28, located in the fuse block (J/B)]
- to key switch terminal 1.

Power is supplied at all times

- through 10A fuse (with KA24DE) (No. 39, located in the fuse and fusible link box) or
- through 15A fuse (with VG33E and VG33ER) (No. 39, located in the fuse and fusible link box)
- to lighting switch terminal 11.

With the ignition switch in the ON or START position, power is supplied

- through 10A fuse [No. 5, located in the fuse block (J/B)]
- to warning chime unit terminal 1.

Ground is supplied to warning chime unit terminal 8 through body grounds M14 and M68.
When a signal, or combination of signals, is received by the warning chime unit, the warning chime will sound.

Ignition Key Warning Chime

NEEL0053S0401

With the key switch in the INSERTED (key is in the ignition key cylinder) position, the ignition switch in the OFF or ACC position and the front door LH open, the warning chime will sound. A battery positive voltage is supplied

- from key switch terminal 2
- to warning chime unit terminal 5.

Ground is supplied

- to warning chime unit terminal 7
- through front door switch LH terminal 2.

Front door switch LH terminal 3 is grounded through body grounds M14 and M68.

Light Warning Chime

NEEL0053S0402

With the ignition switch in the OFF or ACC position, front door LH open and lighting switch in the parking and tail lamps ON (1ST) or headlamps ON (2ND) position, the warning chime will sound. A battery positive voltage is supplied

- from lighting switch terminal 12
- to warning chime unit terminal 4.

Ground is supplied

- to warning chime unit terminal 7
- through front door switch LH terminal 2.

Front door switch LH terminal 3 is grounded through body grounds M14 and M68.

Seat Belt Warning Chime

NEEL0053S0403

The warning chime will sound for approximately 6 seconds when the ignition switch is turned from OFF to ON with the driver seat belt unfastened (seat belt buckle switch ON).
Ground is supplied

- to warning chime unit terminal 2
- through seat belt buckle switch terminal 1.

Seat belt buckle switch terminal 2 is grounded through body grounds M14 and M68.

MODELS WITH POWER DOOR LOCKS

NEEL0053S05

The warning chime is controlled by the smart entrance control unit.
Power is supplied at all times

- through 7.5A fuse [No. 28, located in the fuse block (J/B)]
- to key switch terminal 1 and
- to smart entrance control unit terminal 49.

Power is supplied at all times

- through 10A fuse (with KA24DE) (No. 39, located in the fuse and fusible link box) or
- through 15A fuse (with VG33E and VG33ER) (No. 39, located in the fuse and fusible link box)

- to lighting switch terminal 11.

With the ignition switch in the ON or START position, power is supplied

- through 10A fuse [No. 5, located in the fuse block (J/B)]
- to smart entrance control unit terminal 27.

Ground is supplied to smart entrance control unit terminals 43 and 64 through body grounds M14 and M68. When a signal, or combination of signals, is received by the smart entrance control unit, the warning chime will sound.

Ignition Key Warning Chime

NEEL0053S0501

With the key switch in the INSERTED (key is in the ignition key cylinder) position, the ignition switch in the OFF or ACC position and the front door LH open, the warning chime will sound. Power is supplied

- from key switch terminal 2
- to smart entrance control unit terminal 25.

Ground is supplied

- to smart entrance control unit terminal 1
- through front door switch LH terminal 2.

Front door switch LH terminal 3 is grounded through body grounds M14 and M68.

Light Warning Chime

NEEL0053S0502

With the ignition switch the OFF or ACC position, front door LH open and lighting switch in parking and tail lamps ON (1ST) or headlamps ON (2ND) position, the warning chime will sound. A battery positive voltage is supplied

- from lighting switch terminal 12
- to smart entrance control unit terminal 58.

Ground is supplied

- to smart entrance control unit terminal 1
- through front door switch LH terminal 2.

Front door switch LH terminal 3 is grounded through body grounds M14 and M68.

Seat Belt Warning Chime

NEEL0053S0503

The warning chime will sound for approximately 6 seconds when the ignition switch is turned from OFF to ON with the driver seat belt unfastened (seat belt buckle switch ON).
Ground is supplied

- to smart entrance control unit terminal 28
- through seat belt buckle switch terminal 1.

Seat belt buckle switch terminal 2 is grounded through body grounds M14 and M68.

Wiring Diagram — CHIME —

NEEL0054

MODELS WITHOUT POWER DOOR LOCKS

NEEL0054S01

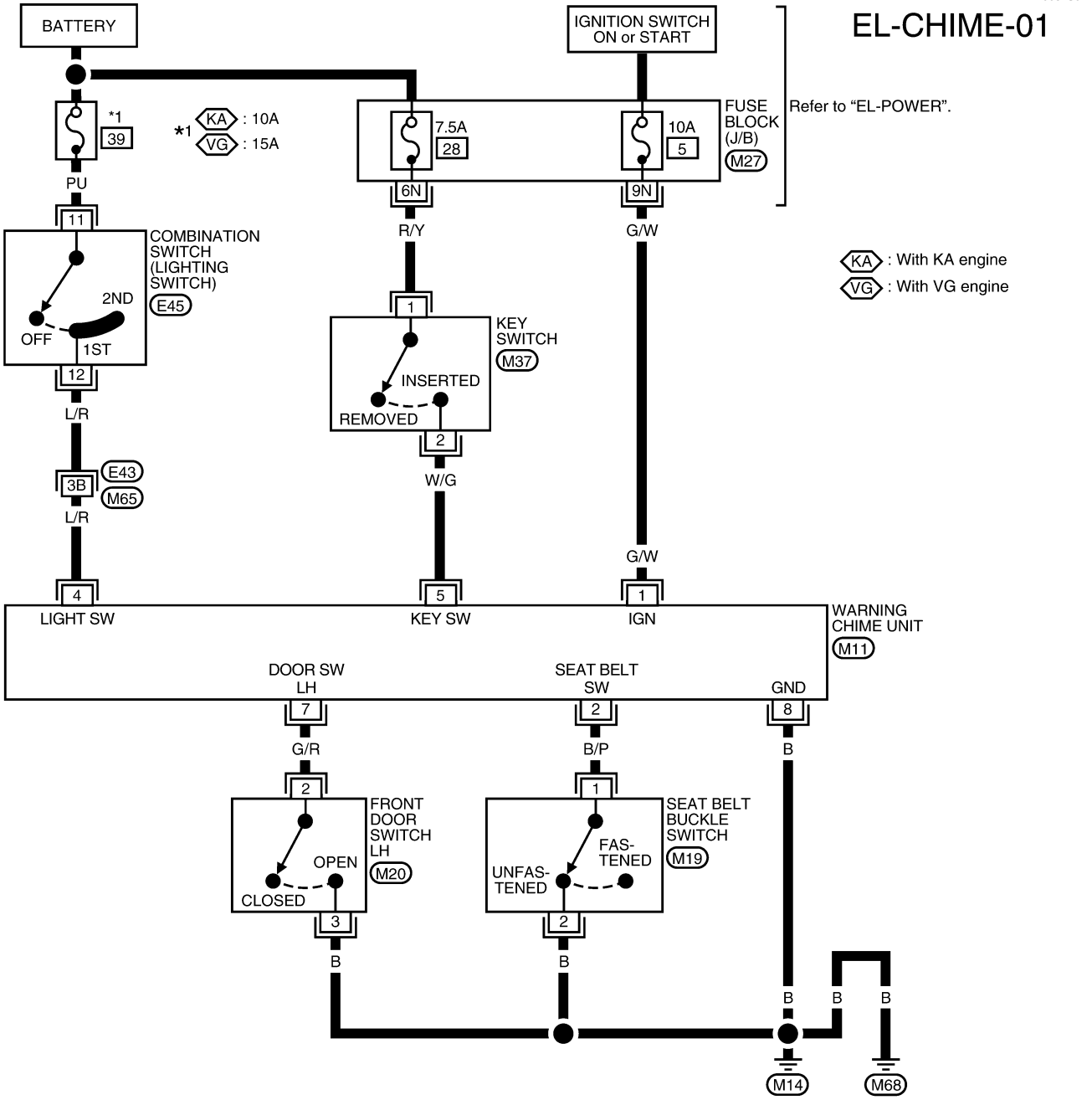

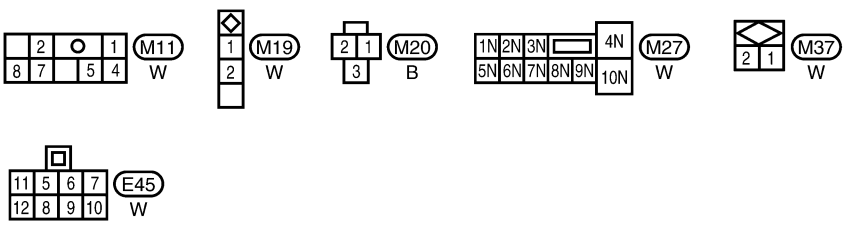

Refer to the following.
M65 , E43 - SUPER MULTIPLE JUNCTION (SMJ)

WEL538A

MODELS WITH POWER DOOR LOCKS

NEEL0054S02

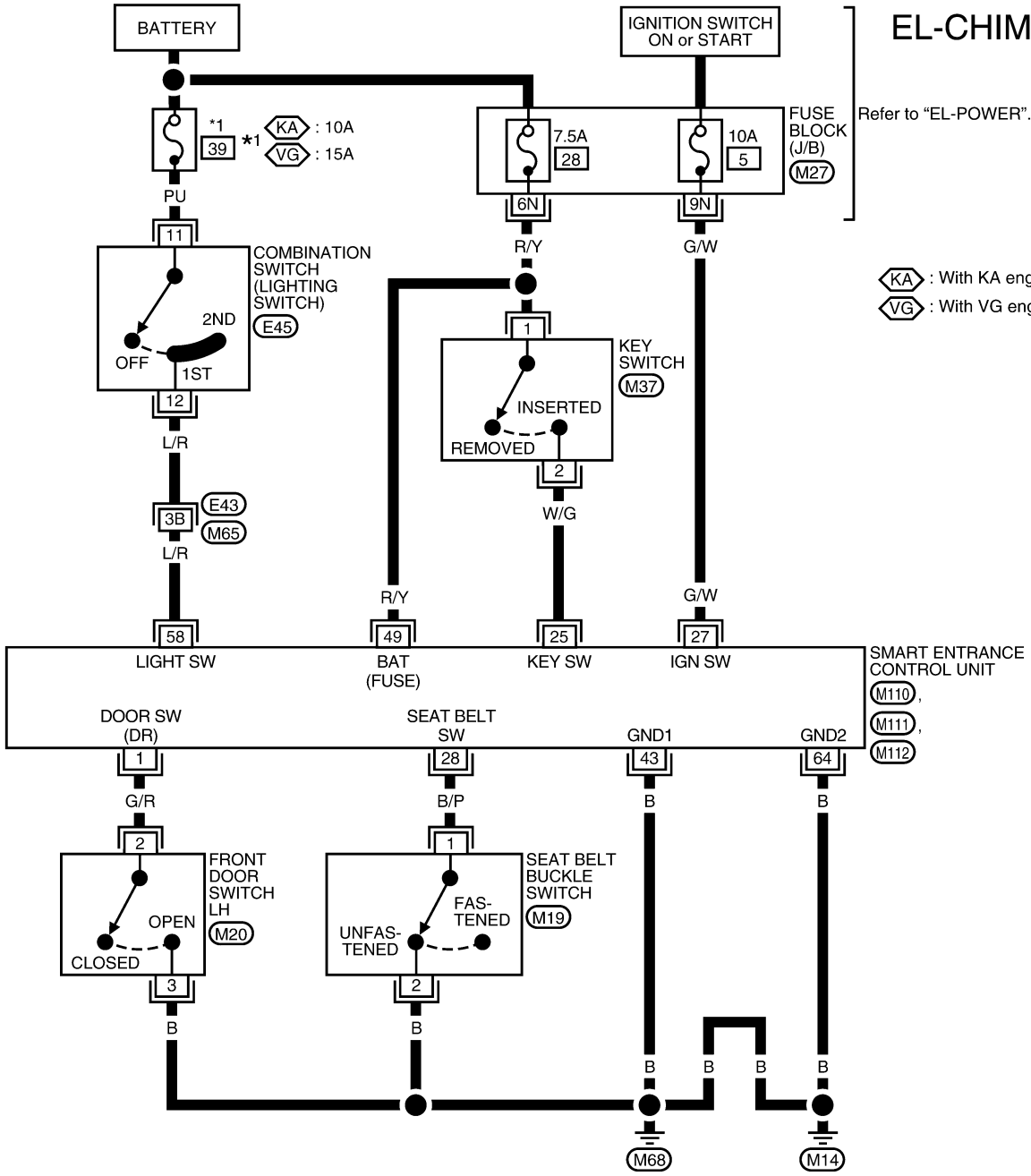

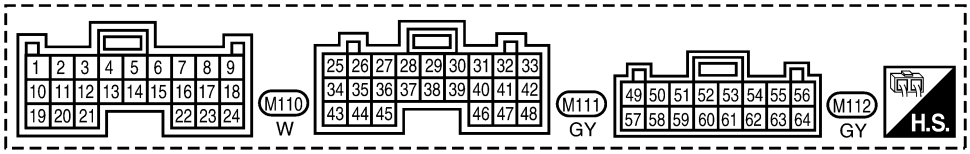

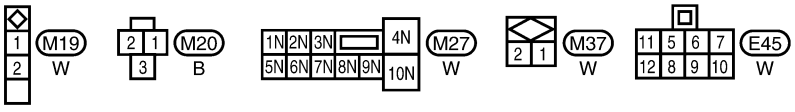

Refer to the following.
M65, E43 - SUPER MULTIPLE JUNCTION (SMJ)

WEL539A

Trouble Diagnoses

NEEL0055

SYMPTOM CHART

NEEL0055S01

REFERENCE PAGE (EL-)						
	Without power door locks	100	102	103	105	107
	With power door locks	100	102	104	106	108
SYMPTOM		POWER SUPPLY AND GROUND CIRCUIT CHECK	LIGHTING SWITCH INPUT SIGNAL CHECK	KEY SWITCH (INSERTED) CHECK	SEAT BELT BUCKLE SWITCH CHECK	FRONT DOOR SWITCH LH CHECK
Light warning chime does not activate.		X	X			X
Ignition key warning chime does not activate.		X		X		X
Seat belt warning chime does not activate.		X			X	
All warning chimes do not activate.		X				

X: Applicable

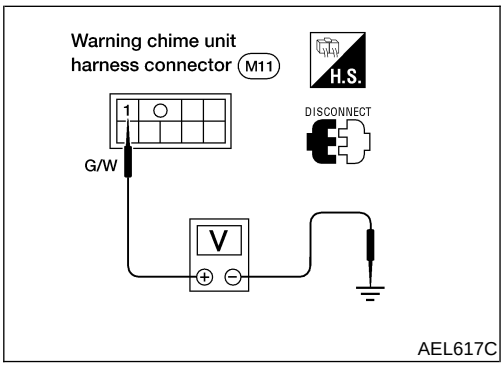

POWER SUPPLY AND GROUND CIRCUIT CHECK

NEEL0055S02

Main Power Supply Circuit Check

NEEL0055S0201

- **Models without power door locks**

Terminals		Ignition switch position		
(+)	(–)	OFF	ACC	ON
1	Ground	0V	0V	Battery voltage

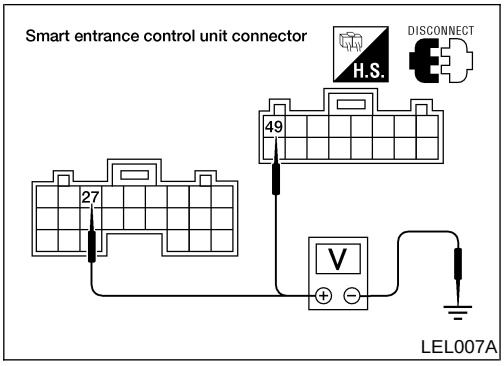

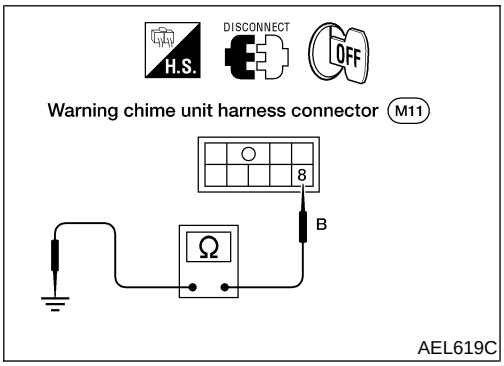

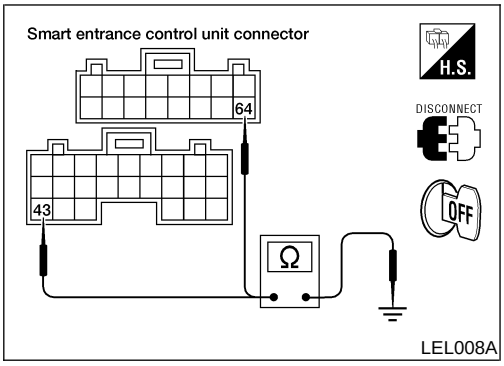

- **Models with power door locks**

Terminals		Ignition switch position		
(+)	(−)	OFF	ACC	ON
M112 - 49 (R/Y)	Ground	Battery voltage	Battery voltage	Battery voltage
M111 - 27 (G/W)	Ground	0V	0V	Battery voltage

Ground Circuit Check

NEEL0055S0202

- **Models without power door locks**

Terminals	Continuity
8 - Ground	Yes

- **Models with power door locks**

Terminals	Continuity
M111 - 43 (B) - Ground	Yes
M112 - 64 (B) - Ground	Yes

LIGHTING SWITCH INPUT SIGNAL CHECK

=NEEL0055S03

Models without Power Door Locks

NEEL0055S0301

1	CHECK LIGHTING SWITCH INPUT SIGNAL

Check voltage between warning chime unit terminal 4 and ground.

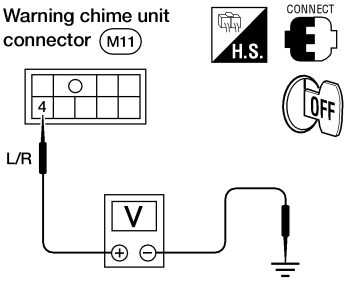

AEL372B

Voltage [V]:
Condition of lighting switch: 1ST or 2ND
Approx. 12
Condition of lighting switch: OFF
0

OK or NG

OK	▶	Lighting switch is OK.
NG	▶	**Check the following.** ● 10A fuse (with KA24DE), 15A fuse (with VG33E and VG33ER) (No. 39, located in the fuse and fusible link box) ● Harness for open or short between warning chime unit and lighting switch

Models with Power Door Locks

NEEL0055S0302

1	CHECK LIGHTING SWITCH INPUT SIGNAL

Check voltage between smart entrance control unit connector M112 terminal 58 (L/R) and ground.



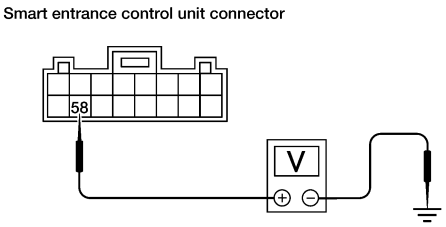

Voltage [V]:
Condition of lighting switch: 1ST or 2ND
Approx. 12
Condition of lighting switch: OFF
Approx. 0

WEL492A

OK or NG

OK	▶	Lighting switch is OK.
NG	▶	**Check the following.** ● 10A fuse (with KA24DE), 15A fuse (with VG33E and VG33ER) (No. 39, located in the fuse and fusible link box) ● Harness for open or short between smart entrance control unit and lighting switch

KEY SWITCH (INSERTED) CHECK
Models without Power Door Locks

NEEL0055S04

NEEL0055S0401

1	CHECK KEY SWITCH INPUT SIGNAL

Check voltage between warning chime unit terminal 5 and ground.

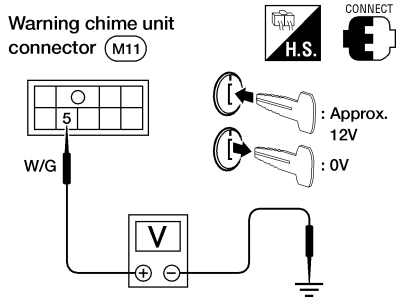

AEL374B

Voltage [V]:
Condition of key switch: Key is INSERTED.
Approx. 12
Condition of key switch: Key is REMOVED.
0

OK or NG

OK	▶	Key switch is OK.
NG	▶	GO TO 2.

2	CHECK KEY SWITCH (INSERTED)

Check continuity between terminals 1 and 2.

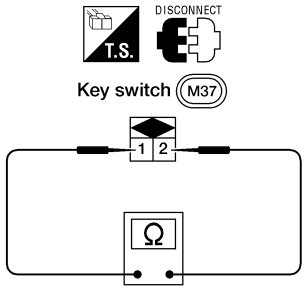

AEL416B

Continuity:
Condition of key switch: Key is INSERTED.
Yes
Condition of key switch: Key is REMOVED.
No

OK or NG

OK	▶	**Check the following.** ● 7.5A fuse [No. 28, located in fuse block (J/B)] ● Harness for open or short between key switch and fuse ● Harness for open or short between warning chime unit and key switch
NG	▶	Replace key switch.

Models with Power Door Locks

NEEL0055S0402

1	CHECK KEY SWITCH INPUT SIGNAL

Check voltage between smart entrance control unit connector M111 terminal 25 (W/G) and ground.

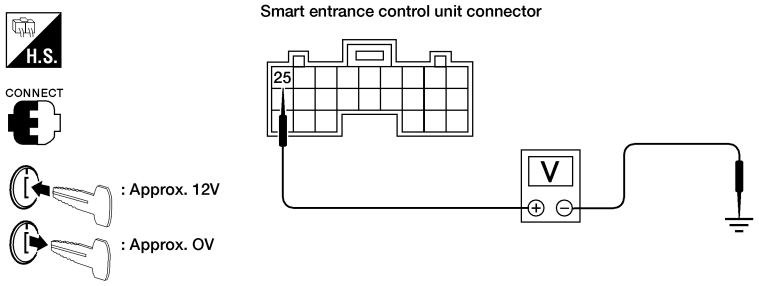

Voltage [V]:
Condition of key switch: Key is INSERTED.
Approx. 12
Condition of key switch: Key is REMOVED.
Approx. 0

LEL010A

OK or NG

OK	▶	Key switch is OK.
NG	▶	GO TO 2.

2	CHECK KEY SWITCH (INSERTED)

Check continuity between terminals 1 and 2.

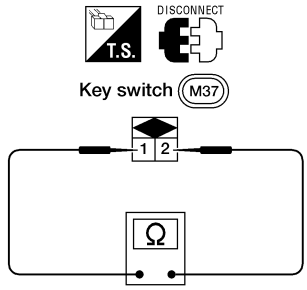

AEL416B

Continuity:
Condition of key switch: Key is INSERTED.
Yes
Condition of key switch: Key is REMOVED.
No

OK or NG

OK	▶	**Check the following.** • 7.5A fuse [No. 28, located in fuse block (J/B)] • Harness for open or short between key switch and fuse • Harness for open or short between smart entrance control unit and key switch
NG	▶	Replace key switch.

SEAT BELT BUCKLE SWITCH CHECK
Models without Power Door Locks

=NEEL0055S05

NEEL0055S0501

1	CHECK SEAT BELT BUCKLE SWITCH INPUT SIGNAL

1. Turn ignition switch ON.
2. Check voltage between warning chime unit terminal 2 and ground.

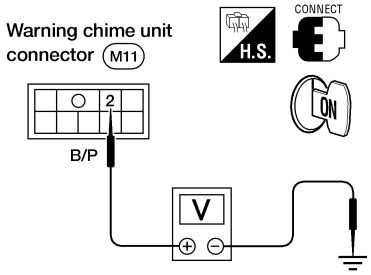

AEL376B

Voltage [V]:
Condition of seat belt buckle switch: FASTENED
Approx. 12
Condition of seat belt buckle switch: UNFASTENED
0

OK or NG

OK	▶	Seat belt buckle switch is OK.
NG	▶	GO TO 2.

2	CHECK SEAT BELT BUCKLE SWITCH

Check continuity between terminals 1 and 2 when seat belt is fastened and unfastened.

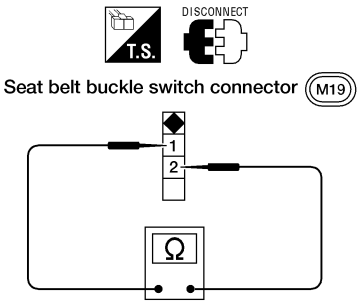

AEL381B

Continuity:
Seat belt is fastened.
No
Seat belt is unfastened.
Yes

OK or NG

OK	▶	**Check the following.** • Seat belt buckle switch ground circuit • Harness for open or short between warning chime unit and seat belt buckle switch
NG	▶	Replace seat belt buckle switch.

Models with Power Door Locks

NEEL0055S0502

1	CHECK SEAT BELT BUCKLE SWITCH INPUT SIGNAL

1. Turn ignition switch ON.
2. Check voltage between smart entrance control unit connector M111 terminal 28 (B/P) and ground.

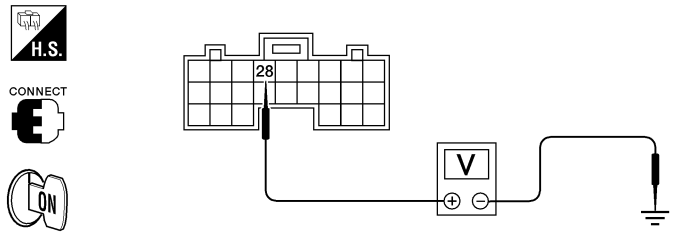

Voltage [V]:
Condition of seat belt buckle switch: FASTENED
Approx.12
Condition of seat belt buckle switch: UNFASTENED
Approx. 0

LEL011A

OK or NG

OK	▶	Seat belt buckle switch is OK.
NG	▶	GO TO 2.

2	CHECK SEAT BELT BUCKLE SWITCH

Check continuity between terminals 1 and 2 when seat belt is fastened and unfastened.

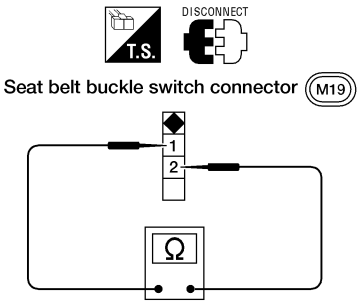

AEL381B

Continuity:
Seat belt is fastened.
No
Seat belt is unfastened.
Yes

OK or NG

OK	▶	**Check the following.** ● Seat belt buckle switch ground circuit ● Harness for open or short between smart entrance control unit and seat belt buckle switch
NG	▶	Replace seat belt buckle switch.

FRONT DOOR SWITCH LH CHECK
Models without Power Door Locks

NEEL0055S06

NEEL0055S0601

1	CHECK FRONT DOOR SWITCH LH INPUT SIGNAL

Check voltage between warning chime unit terminal 7 and ground.

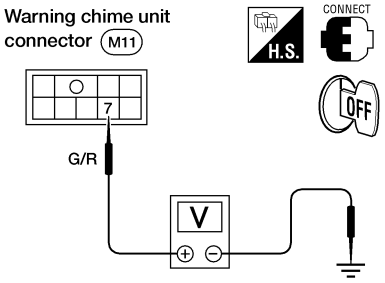

AEL378B

Voltage [V]:
Condition of front door LH: CLOSED
Approx. 12
Condition of front door LH: OPEN
0

OK or NG

OK	▶	Front door switch LH is OK.
NG	▶	GO TO 2.

2	CHECK FRONT DOOR SWITCH LH

Check continuity between front door switch LH terminals 2 and 3.

Front door switch LH connector

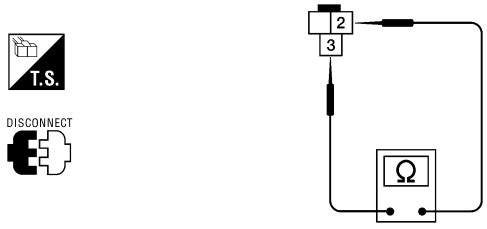

Contiuity:
Front door switch LH is pressed.
No
Front door switch LH is released.
Yes

LEL366A

Continuity:
Front door switch LH is pressed.
No
Front door switch LH is released.
Yes

OK or NG

OK	▶	**Check the following.** ● Front door switch LH ground circuit ● Harness for open or short between warning chime unit and front door switch LH
NG	▶	Replace front door switch LH.

Models with Power Door Locks

NEEL0055S0602

1	CHECK FRONT DOOR SWITCH LH INPUT SIGNAL

Check voltage between smart entrance control unit connector M110 terminal 1 (G/R) and ground.

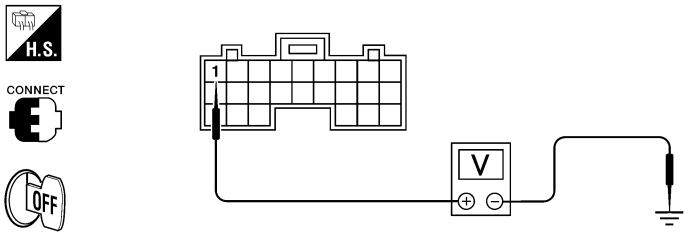

Voltage [V]:
Condition of front door LH: CLOSED
Approx. 5
Condition of front door LH: OPEN
Approx. 0

WEL515A

OK or NG

OK	▶	Front door switch LH is OK.
NG	▶	GO TO 2.

2	CHECK FRONT DOOR SWITCH LH

Check continuity between front door switch LH connector M20 terminals 2 and 3.

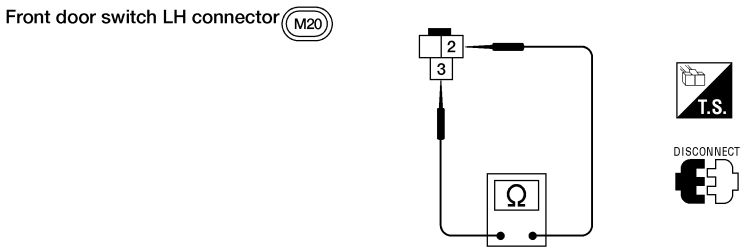

AEL543C

OK or NG

OK	▶	**Check the following.** ● Front door switch LH ground circuit ● Harness for open or short between smart entrance control unit and front door switch LH
NG	▶	Replace front door switch LH.

System Description

NEEL0057

WIPER OPERATION

NEEL0057S01

Models without Intermittent Wipers

NEEL0057S0104

The front wiper switch is controlled by a lever built into the combination switch.
There are two front wiper switch positions:

- LO speed
- HI speed

With the ignition switch in the ON or START position, power is supplied

- through 20A fuse [No. 6, located in the fuse block (J/B)]
- to front wiper motor terminal B.

Low and High Speed Wiper Operation

Ground is supplied to front wiper switch terminal 17 through body grounds E12 and E54.
With the front wiper switch in the LO position, ground is supplied

- to front wiper motor terminal L
- through front wiper switch terminal 14.

With power and ground supplied, the front wiper motor operates at low speed.
With the front wiper switch in the HI position, ground is supplied

- to front wiper motor terminal H
- through front wiper switch terminal 16.

With power and ground supplied, the front wiper motor operates at high speed.

Auto Stop Operation

When the front wiper switch is turned OFF, the front wiper motor will continue to operate at low speed until wiper blades reach windshield base.
When wiper blades are not located at base of windshield with front wiper switch OFF, ground is supplied

- to front wiper motor terminal L
- through front wiper switch terminal 14
- through front wiper switch terminal 13
- through front wiper motor terminal P.

Ground is supplied to front wiper motor terminal E through body grounds E12 and E54.

Models with Intermittent Wipers

NEEL0057S0105

The front wiper switch is controlled by a lever built into the combination switch.
There are three front wiper switch positions:

- LO speed
- HI speed
- INT (Intermittent).

With the ignition switch in the ON or START position, power is supplied

- through 20A fuse [No. 6, located in the fuse block (J/B)]
- to front wiper motor terminal B and
- to front wiper amplifier terminal 6.

Low and High Speed Wiper Operation

Ground is supplied to front wiper switch terminal 17 through body grounds E12 and E54
With the front wiper switch in the LO position, ground is supplied

- to front wiper motor terminal L
- through front wiper switch terminal 14.

With power and ground supplied, the front wiper motor operates at low speed.
With the front wiper switch in the HI position, ground is supplied

- to front wiper motor terminal H
- through front wiper switch terminal 16.

With power and ground supplied, the front wiper motor operates at high speed.

Auto Stop Operation

When the front wiper switch is turned OFF, the front wiper motor will continue to operate at low speed until wiper blades reach windshield base.
When wiper blades are not located at base of windshield with front wiper switch OFF, ground is supplied

- to front wiper motor terminal L
- through front wiper switch terminal 14
- through front wiper switch terminal 13
- through front wiper amplifier terminal 4
- through front wiper amplifier terminal 7
- through body grounds E12 and E54.

Ground is also supplied

- to front wiper amplifier terminal 8
- through front wiper motor terminal P
- through front wiper motor terminal E
- through body grounds E12 and E54.

When wiper blades reach base of windshield, front wiper motor terminals B and P are connected instead of terminals P and E.
Battery power is then supplied

- through front wiper motor terminal P
- to front wiper amplifier terminal 8.

With battery voltage supplied to front wiper amplifier terminal 8, the front wiper amplifier will stop the front wiper motor with the wiper blades at the PARK position.

Intermittent Operation

The wiper blades perform a single wiping operation, followed by a delay interval which is adjustable from approximately 3 to 13 seconds, after which the cycle repeats. This feature is controlled by the front wiper amplifier.
When the front wiper switch is placed in the INT position, ground is supplied

- to front wiper amplifier terminal 1
- through front wiper switch terminal 15
- through front wiper switch terminal 17
- through body grounds E12 and E54.

Ground is supplied intermittently

- to front wiper motor terminal L
- through front wiper switch terminal 14
- through front wiper switch terminal 13
- through front wiper amplifier terminal 4
- through front wiper amplifier terminal 7
- through body grounds E12 and E54.

The delay interval time is input

- to front wiper amplifier terminal 2
- from front wiper switch terminal 19.

Ground is supplied to front wiper switch terminal 20 through body grounds E12 and E54.
The wiper motor operates at low speed at the desired delay interval.

WASHER OPERATION

NEEL0057S02

With the ignition switch in the ON or START position, power is supplied

- through 20A fuse [No. 6, located in the fuse block (J/B)]
- to front washer motor terminal +.

When the lever is pulled to the WASH position, ground is supplied

- to front washer motor terminal – and
- to front wiper amplifier terminal 5 (models with intermittent wipers)
- through front wiper switch terminal 18
- through front wiper switch terminal 17
- through body grounds E12 and E54.

With power and ground supplied, the front washer motor operates.

Models with Intermittent Wipers

NEEL0057S0201

When the lever is pulled to the WASH position for one second or more, the wiper motor operates at low speed for approximately 3 seconds to clean windshield. This feature is controlled by the wiper amplifier in the same manner as the intermittent operation.

Wiring Diagram — WIPER —

NEEL0058

MODELS WITHOUT INTERMITTENT WIPERS

NEEL0058S01

EL-WIPER-01

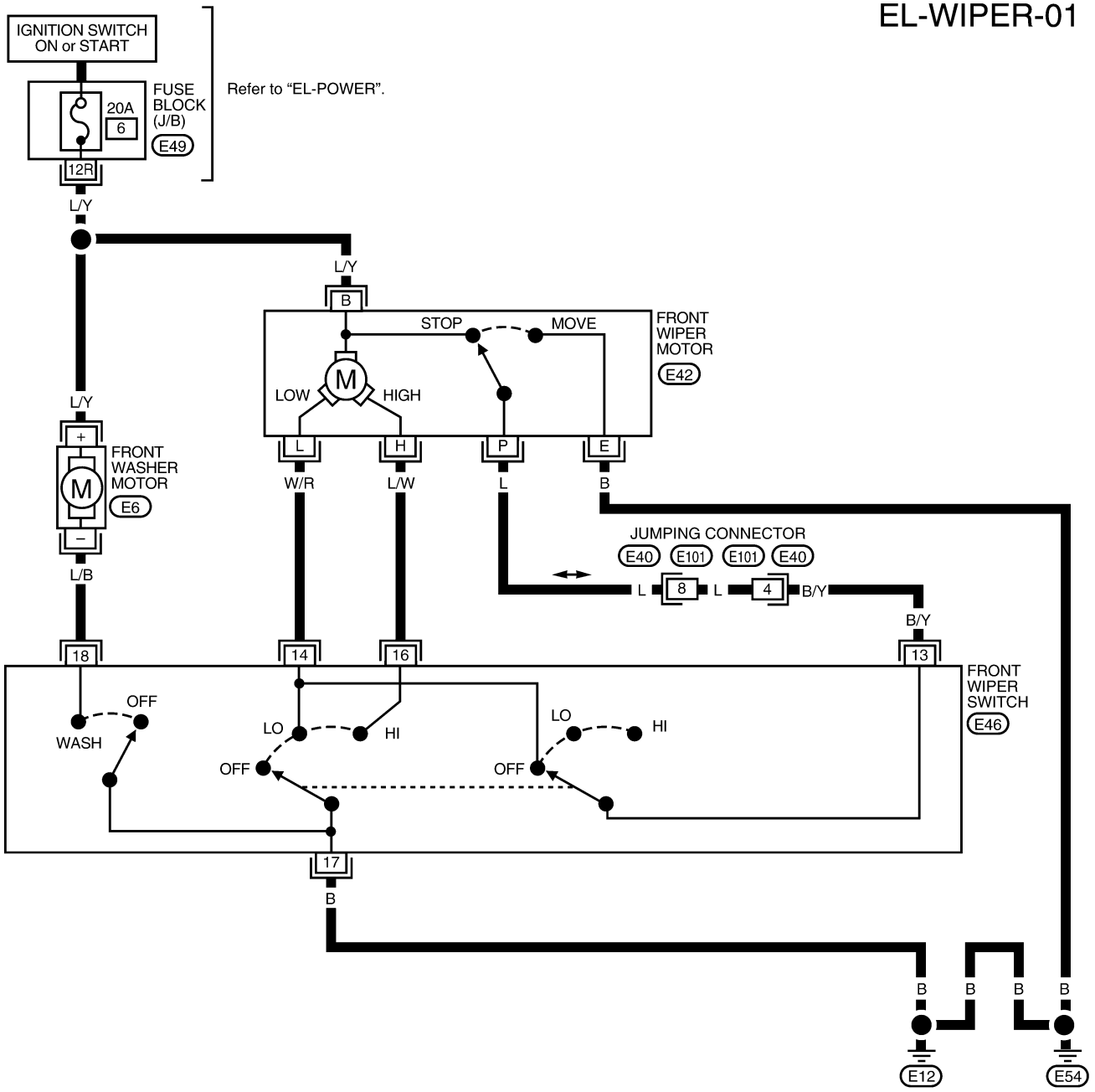

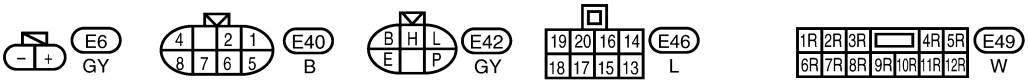

LEL759

MODELS WITH INTERMITTENT WIPERS

NEEL0058S02

EL-WIPER-02

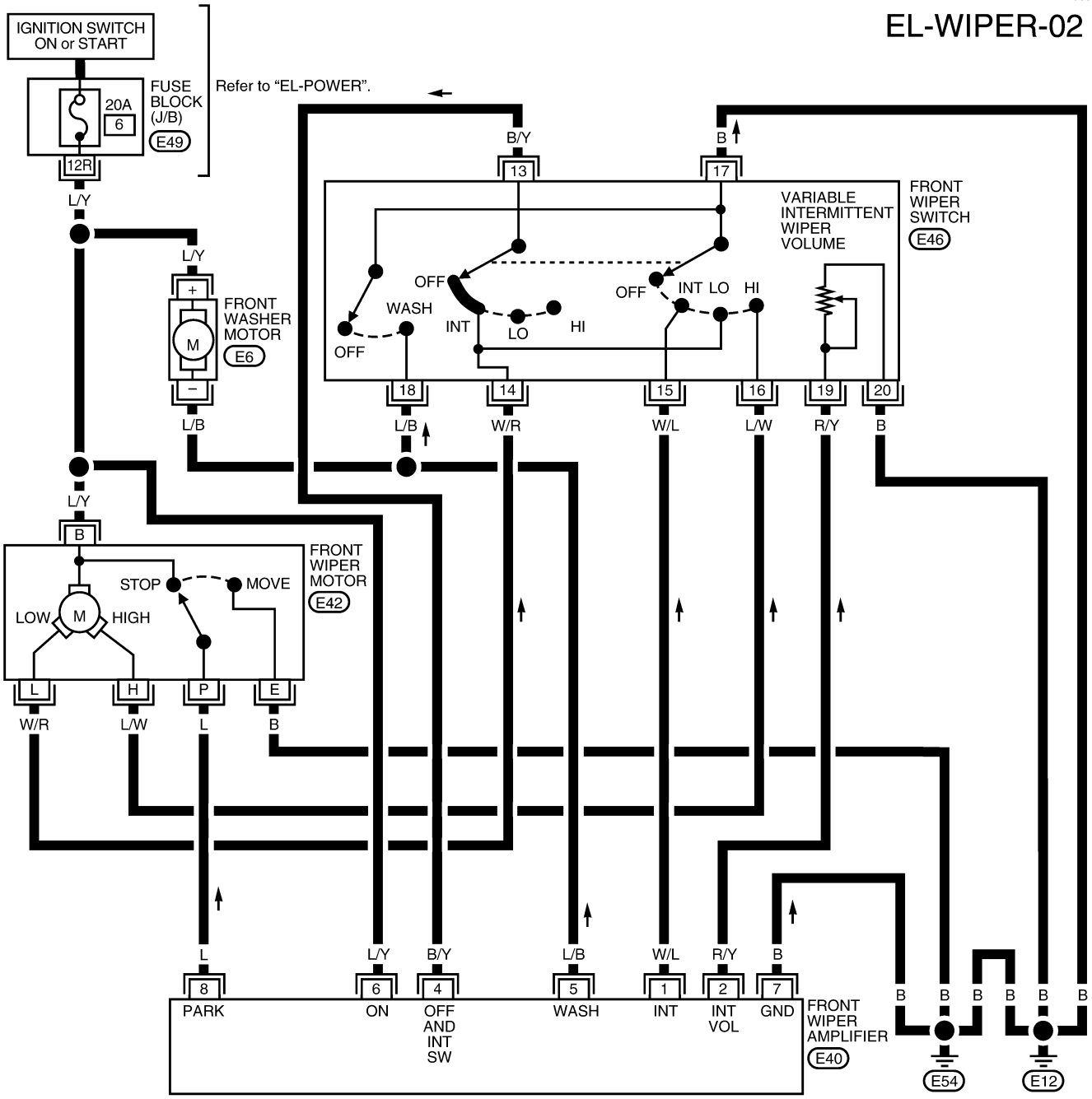



LEL760

Trouble Diagnoses (With intermittent wipers)

NEEL0059

DIAGNOSTIC PROCEDURE 1

NEEL0059S01

SYMPTOM: Intermittent wipers do not operate.

1	CHECK WIPER OPERATION	
Check whether wipers operate with the front wiper switch at LO position. **Do wipers operate at LO speed?**		
Yes	▶	GO TO 2.
No	▶	**Check the following.** ● 20A fuse [No. 6, located in fuse block (J/B)] ● Front wiper motor ● Front wiper switch ● Harness for open or short

2	CHECK FRONT WIPER AMPLIFIER OUTPUT	
1. Turn front wiper switch OFF. 2. Disconnect front wiper amplifier connector. 3. Check voltage between front wiper amplifier terminal 4 and ground. 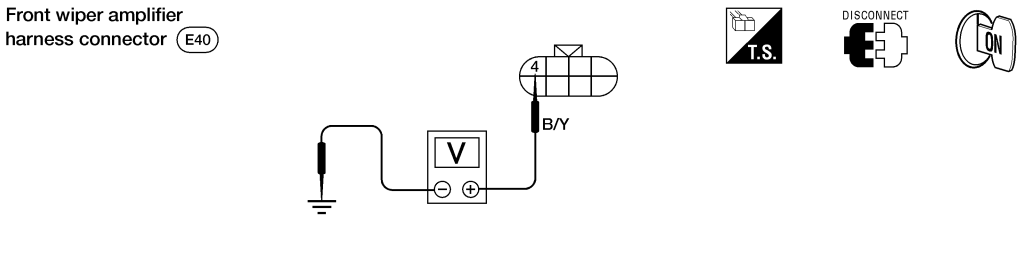 AEL544C **Does battery voltage exist?**		
Yes	▶	GO TO 3.
No	▶	**Check the following.** ● Wiper switch ● Harness for open or short between front wiper amplifier terminal 4 and front wiper switch terminal 13

3	CHECK INTERMITTENT SWITCH INPUT SIGNAL

Check harness continuity between front wiper amplifier terminal 1 and ground.

Continuity:

Condition of front wiper switch: OFF

No

Condition of front wiper switch: INT

Yes

Front wiper amplifier harness connector (E40)

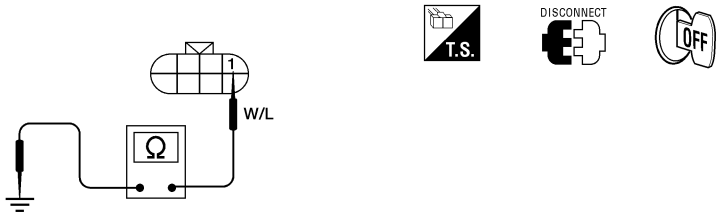

AEL545C

OK or NG

OK	▶	GO TO 4.
NG	▶	**Check the following.** ● Front wiper switch ● Harness for open or short between front wiper amplifier terminal 1 and front wiper switch terminal 15 ● Ground circuit for front wiper switch terminal 17

4	CHECK FRONT WIPER AMPLIFIER POWER SUPPLY CIRCUIT

Check voltage between front wiper amplifier terminal 6 and ground with ignition switch in the ON position.

Front wiper amplifier harness connector (E40)

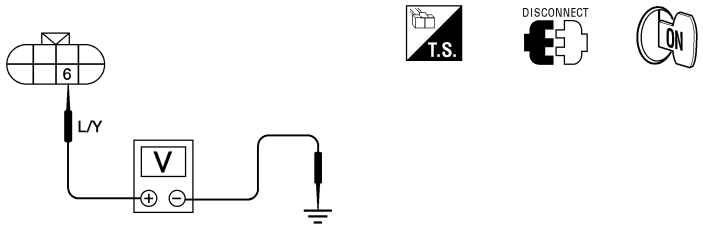

AEL546C

Does battery voltage exist?

Yes	▶	GO TO 5.
No	▶	**Check the following.** ● 20A fuse [No. 6, located in fuse block (J/B)] ● Harness for open or short between front wiper amplifier and fuse

5	CHECK FRONT WIPER AMPLIFIER GROUND CIRCUIT

Check harness continuity between front wiper amplifier terminal 7 and body ground.

Front wiper amplifier harness connector (E40)

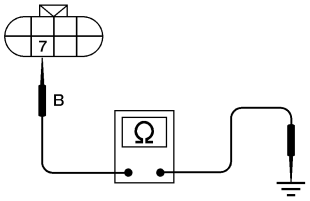



AEL547C

Does continuity exist?

Yes	▶	Replace front wiper amplifier.
No	▶	Repair harness or connector.

DIAGNOSTIC PROCEDURE 2

NEEL0059S02

SYMPTOM: Intermittent time of wiper cannot be adjusted.

1	CHECK INTERMITTENT WIPER VOLUME INPUT SIGNAL

1. Disconnect front wiper amplifier connector.
2. Measure resistance between front wiper amplifier terminals 2 and 7 while turning intermittent wiper volume knob.

Resistance [Ω]:

Position of intermittent wiper volume knob: S

0

Position of intermittent wiper volume knob: L

Approx. 1 k

Front wiper amplifier harness connector (E40)

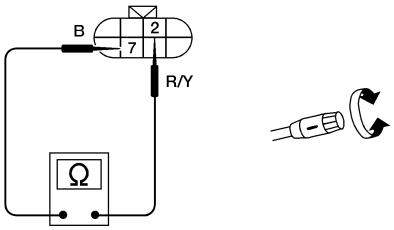



AEL548C

OK or NG

OK	▶	Replace front wiper amplifier.
NG	▶	**Check the following.** ● Intermittent wiper volume ● Harness for open or short between front wiper amplifier terminal 2 and front wiper switch terminal 19 ● Ground circuit for front wiper switch terminal 20

DIAGNOSTIC PROCEDURE 3

=NEEL0059S03

SYMPTOM: Wiper and washer activate individually but not in combination.

1	CHECK FRONT WASHER SWITCH INPUT SIGNAL

1. Turn ignition switch OFF.
2. Disconnect front wiper amplifier connector.
3. Check harness continuity between front wiper amplifier terminal 5 and ground.

Continuity:
Condition of front washer switch: OFF
No
Condition of front washer switch: ON
Yes

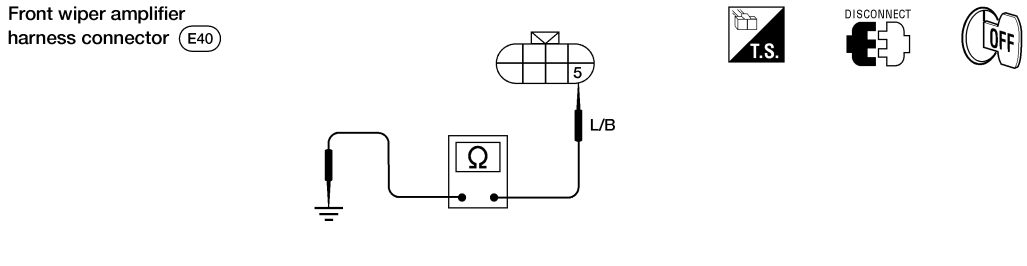

OK or NG

OK	▶	Go to DIAGNOSTIC PROCEDURE 1.
NG	▶	Check harness for open or short between front wiper amplifier terminal 5 and front wiper switch terminal 18.

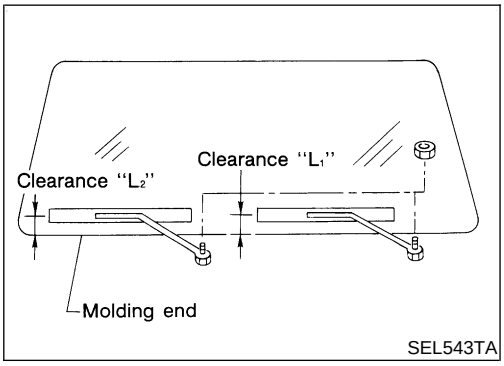

Removal and Installation

NEEL0060

WIPER ARMS

NEEL0060S01

1. Prior to wiper arm installation, turn on wiper switch to operate wiper motor and then turn it "OFF" (Auto Stop).
2. Lift the blade up and then set it down onto glass surface to set the blade center to clearance "L_1" & "L_2" immediately before tightening nut.
3. Eject washer fluid. Turn on wiper switch to operate wiper motor and then turn it "OFF".
4. Ensure that wiper blades stop within clearance "L_1" & "L_2".

Clearance "L_1": 25 mm (.98 in)
Clearance "L_2": 25 mm (.98 in)

- Tighten wiper arm nuts to specified torque.

Front wiper: 13 - 18 N·m (1.3 - 1.8 kg-m, 9 - 13 ft-lb)

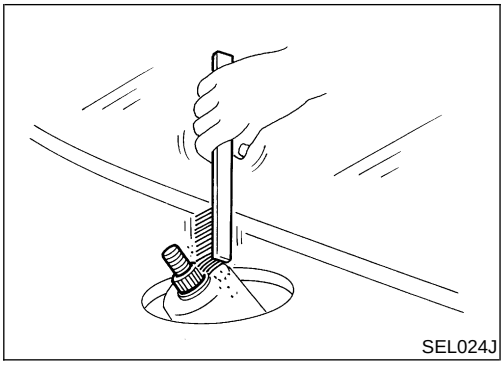
SEL024J

- **Before reinstalling wiper arm, clean the pivot area as illustrated. This will reduce possibility of wiper arm looseness.**

WIPER LINKAGE

NEEL0060S02

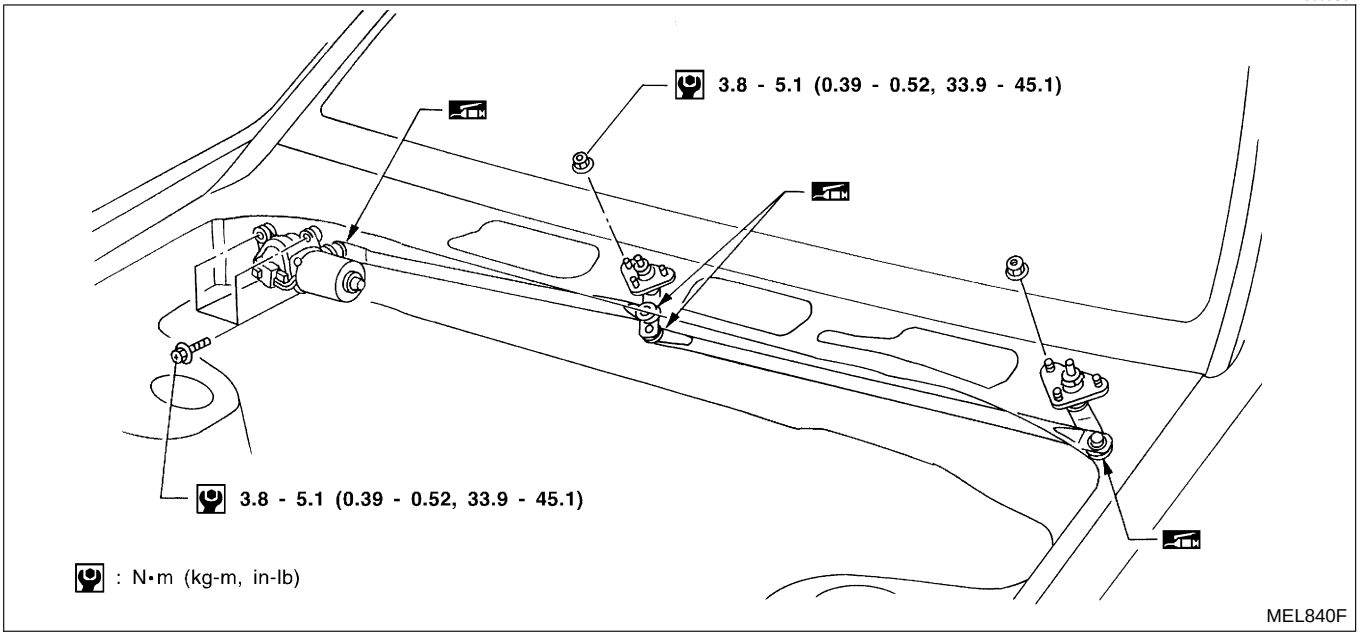

MEL840F

Removal

NEEL0060S0201

1. Remove 4 bolts that secure wiper motor.
2. Detach wiper motor from wiper linkage at ball joint.
3. Remove wiper linkage.

Be careful not to break ball joint rubber boot.

Installation

NEEL0060S0202

- Grease ball joint portion before installation.

1. Installation is the reverse order of removal.

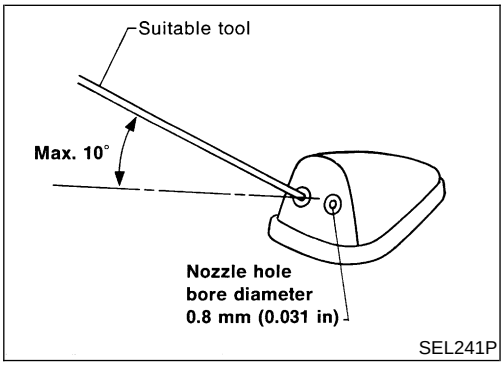

SEL241P

Washer Nozzle Adjustment

NEEL0061

- Adjust washer nozzle with suitable tool as shown in the figure at left.

Adjustable range: ±10°

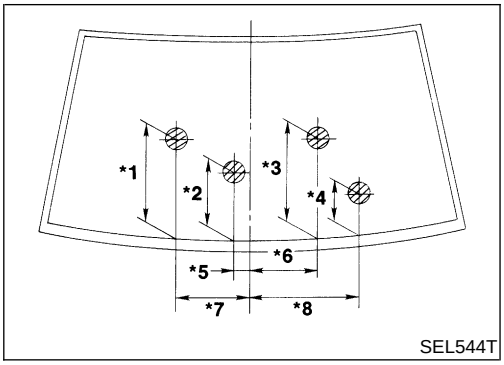

SEL544T

Unit: mm (in)

*1	390 (15.35)	*5	145 (5.71)
*2	160 (6.30)	*6	143 (5.63)
*3	379 (14.92)	*7	225 (8.86)
*4	140 (5.51)	*8	535 (21.06)

*: The diameters of these circles are less than 80 mm (3.15 in).

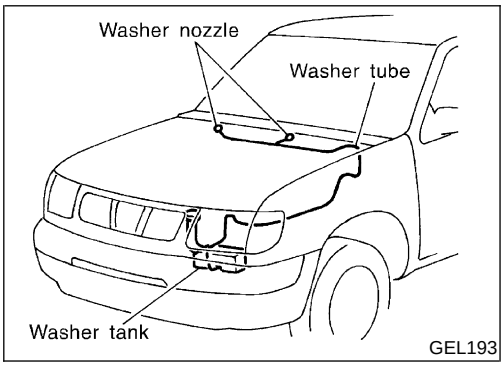

GEL193

Washer Tube Layout

NEEL0062

Wiring Diagram — HORN —

NEEL0071

EL-HORN-01

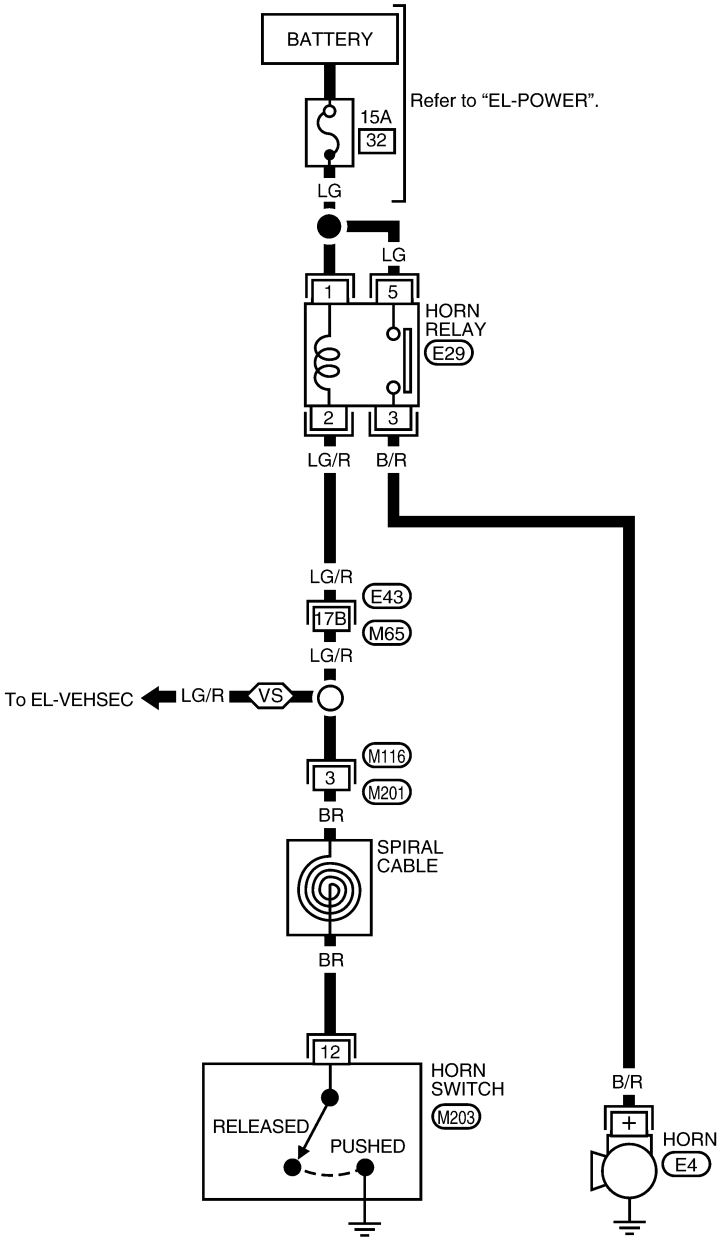

VS : With vehicle security system

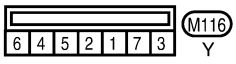



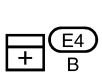

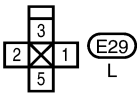

* : This connector is not shown in “HARNESS LAYOUT” of EL section.

Refer to the following.
M65 , E43 - SUPER MULTIPLE JUNCTION (SMJ)

WEL079B

Wiring Diagram — CIGAR —

NEEL0156

EL-CIGAR-01

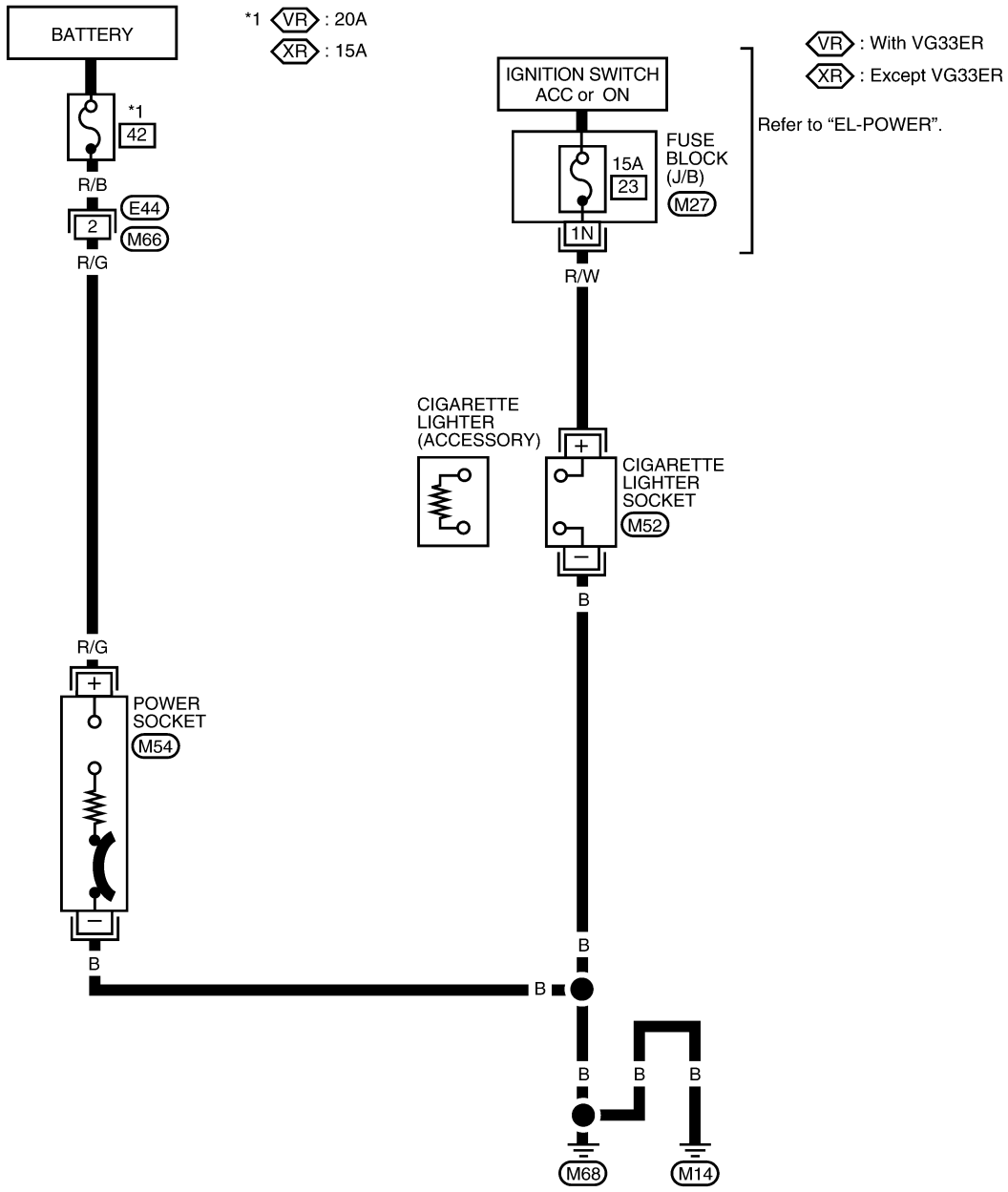

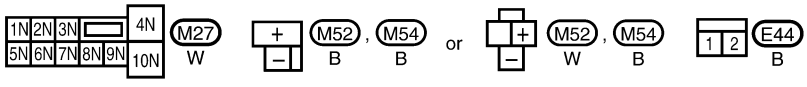

WEL520A

Component Parts and Harness Connector Location

NEEL0215

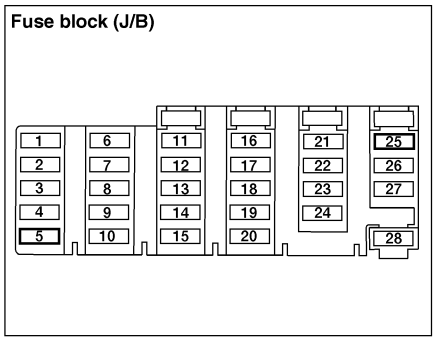

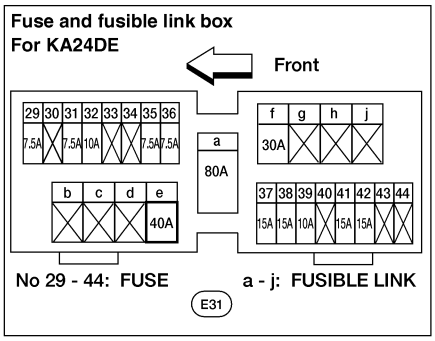

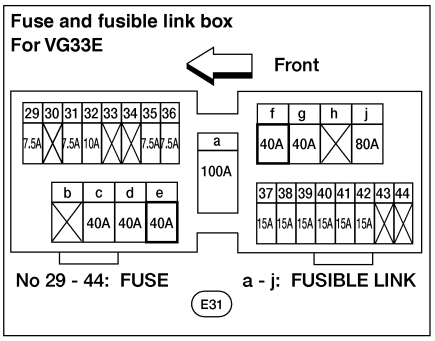

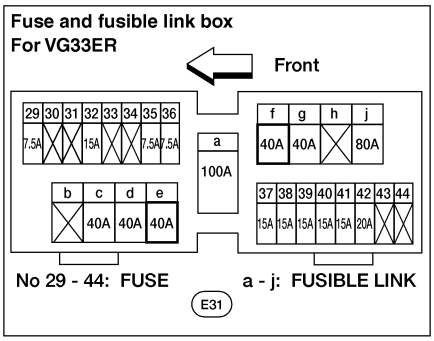

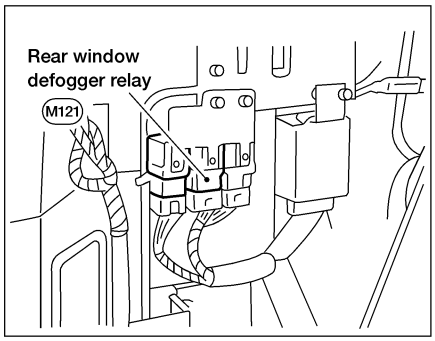

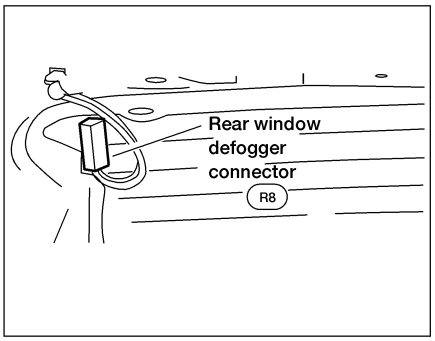

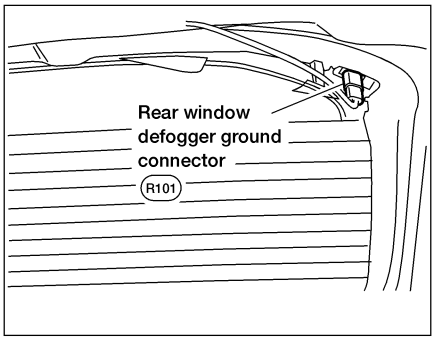

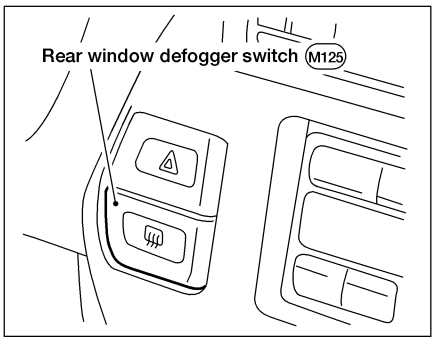

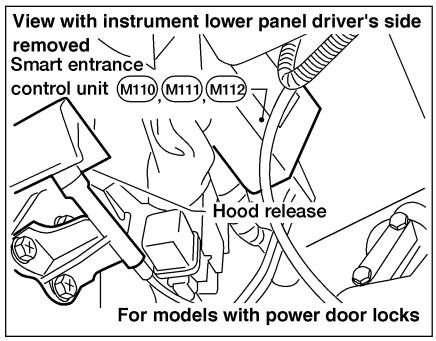

WEL465A

System Description

NEEL0216

MODELS WITHOUT POWER DOOR LOCKS

NEEL0216S01

The rear window defogger system is controlled by the rear window defogger timer. The rear window defogger operates only for approximately 15 minutes.
Power is supplied at all times

- to rear window defogger relay terminal 5
- through 20A fuse [No. 25, located in the fuse block (J/B)].

With the ignition switch in the ON or START position, power is supplied

- through 10A fuse [No. 5, located in the fuse block (J/B)]
- to rear window defogger relay terminal 2 and
- to rear window defogger timer terminal 1.

Ground is supplied to rear window defogger switch terminal 2 and warning chime unit terminal 4 through body grounds M14 and M68.
With the rear window defogger switch ON, ground is supplied

- to rear window defogger timer terminal 3
- through rear window defogger switch terminal 1.

Rear window defogger timer terminal 2 then supplies ground to the rear window defogger relay terminal 1.
With power and ground supplied, the rear window defogger relay is energized.
Power is supplied

- through terminal 3 of the rear window defogger relay
- to rear window defogger terminal +.

Rear window defogger terminal – is grounded through body ground R102.
With power and ground supplied, the rear window defogger filaments heat and defog the rear window.
When the system is activated, the rear window defogger indicator illuminates in the rear window defogger switch.
Power is supplied

- from rear window defogger relay terminal 3
- to rear window defogger switch terminal 3.

Rear window defogger switch terminal 4 is grounded through body grounds M14 and M68.

MODELS WITH POWER DOOR LOCKS

NEEL0216S02

The rear window defogger system is controlled by the smart entrance control unit. The rear window defogger operates only for approximately 15 minutes.
Power is supplied at all times

- to rear window defogger relay terminal 5
- through 20A fuse [No. 25, located in the fuse block (J/B)] and
- to smart entrance control unit terminal 49
- through 7.5A fuse [No. 28, located in the fuse block (J/B)].

With the ignition switch in the ON or START position, power is supplied

- through 10A fuse [No. 5, located in the fuse block (J/B)]
- to rear window defogger relay terminal 2 and
- to smart entrance control unit terminal 27.

Ground is supplied to rear window defogger switch terminal 2 and smart entrance control unit terminals 43 and 64 through body grounds M14 and M68.
With the rear window defogger switch ON, ground is supplied

- to smart entrance control unit terminal 14
- through rear window defogger switch terminal 1.

Smart entrance control unit terminal 37 then supplies ground to the rear window defogger relay terminal 1.
With power and ground supplied, the rear window defogger relay is energized.
Power is supplied

- through terminal 3 of the rear window defogger relay
- to rear window defogger terminal +.

System Description (Cont'd)

Rear window defogger terminal – is grounded through body ground R102.
With power and ground supplied, the rear window defogger filaments heat and defog the rear window.
When the system is activated, the rear window defogger indicator illuminates in the rear window defogger switch.
Power is supplied

- from rear window defogger relay terminal 3
- to rear window defogger switch terminal 3.

Rear window defogger switch terminal 4 is grounded through body grounds M14 and M68.

Wiring Diagram — DEF —

WITHOUT POWER DOOR LOCKS

NEEL0217

NEEL0217S01

EL-DEF-01

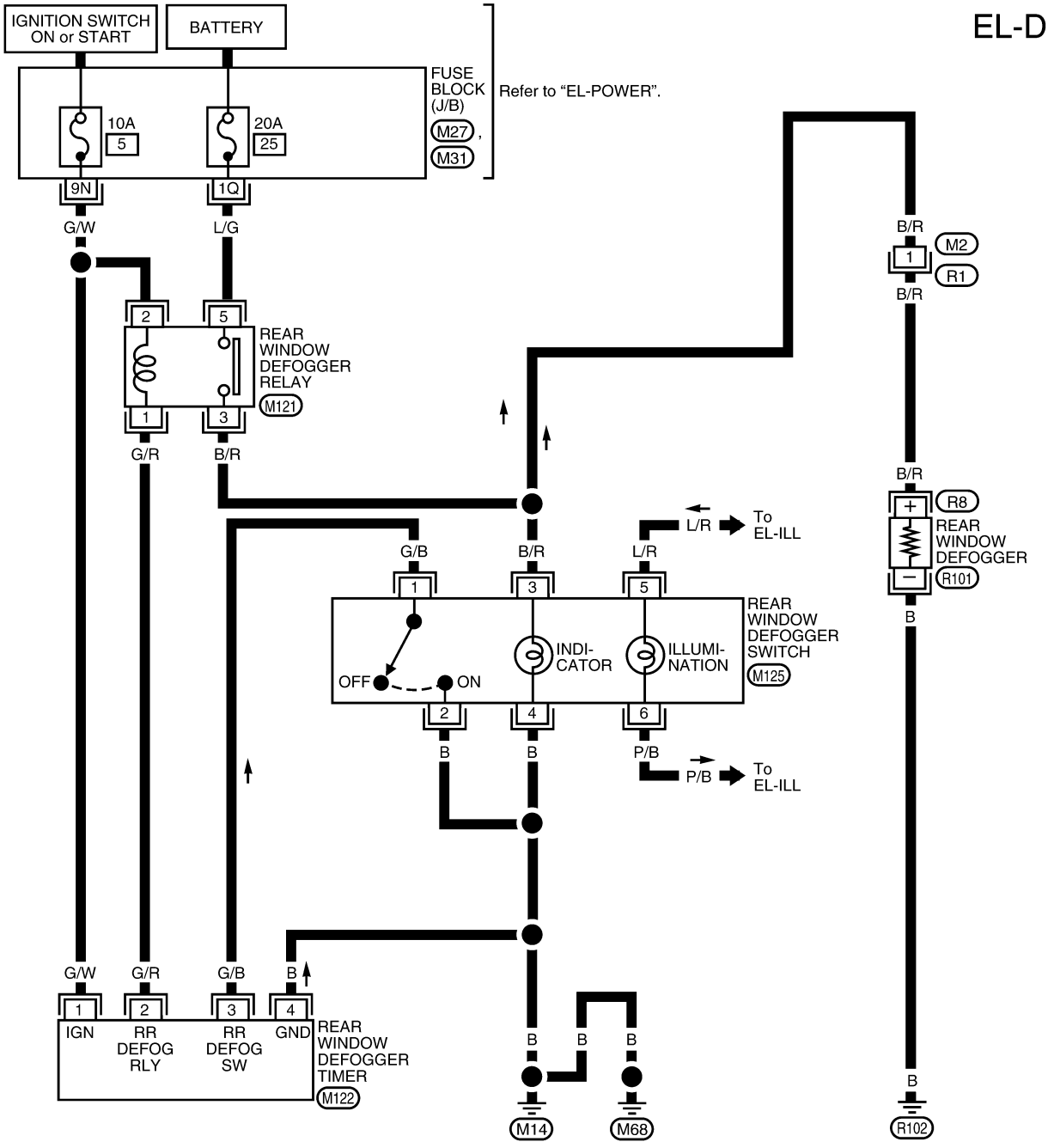

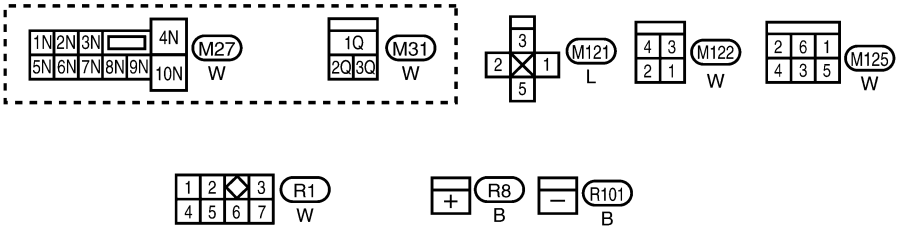

WEL540A

Wiring Diagram — DEF — (Cont'd)

WITH POWER DOOR LOCKS

NEEL0217S02

EL-DEF-02

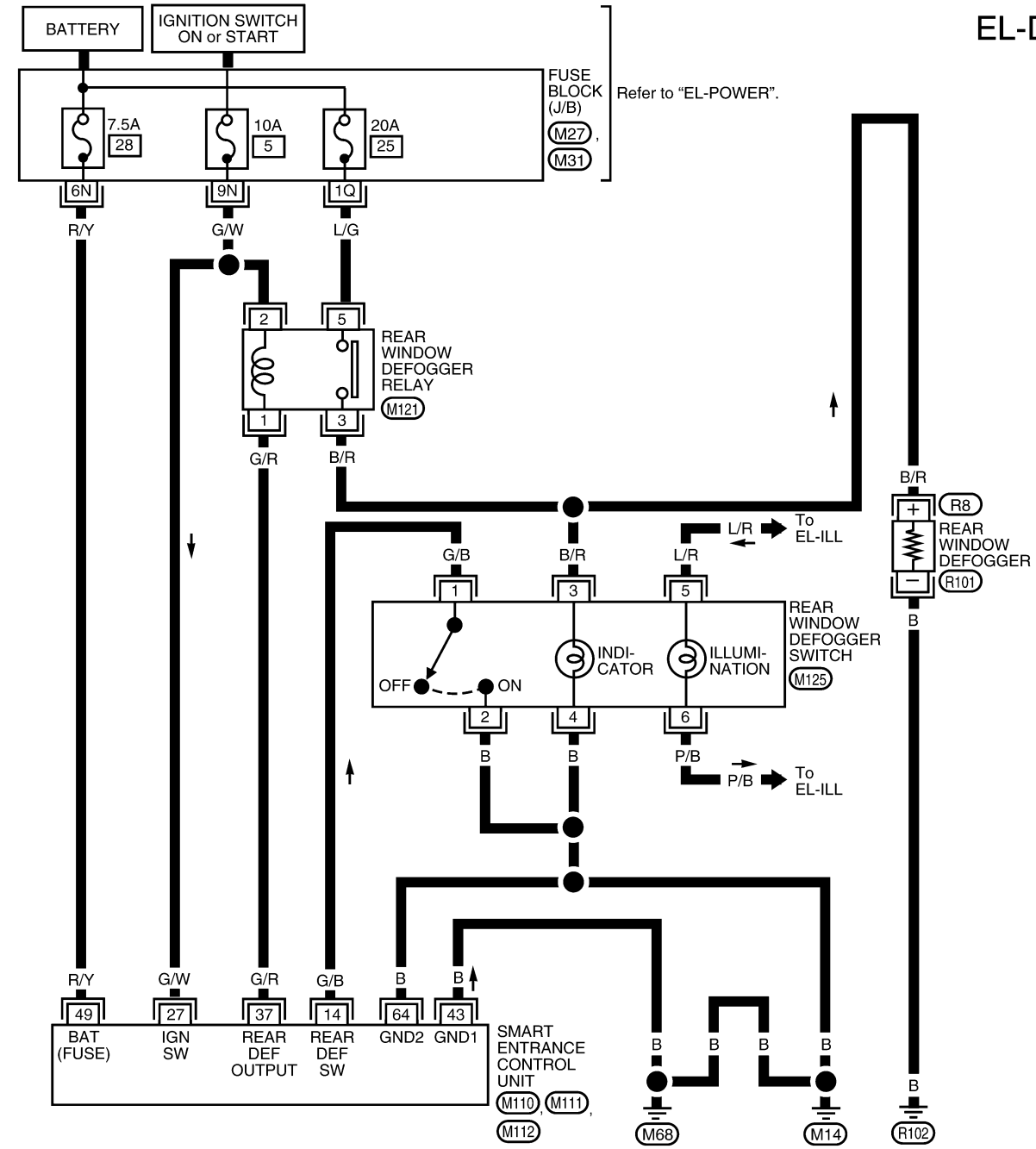

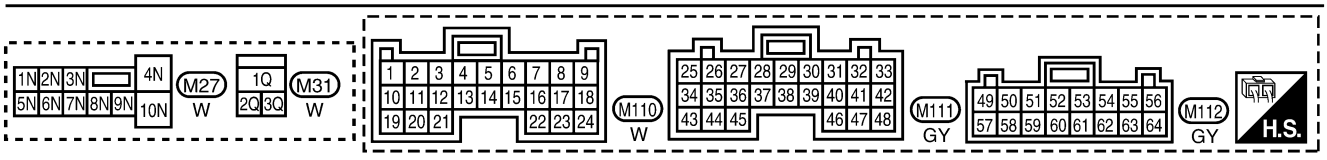

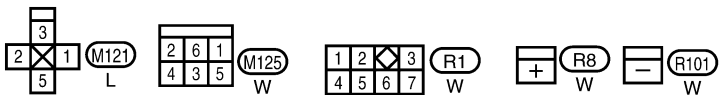

LEL221A

Trouble Diagnoses

NEEL0218

DIAGNOSTIC PROCEDURE

NEEL0218S01

SYMPTOM: Rear window defogger does not activate, or does not turn off after activating.

Models without Power Door Locks

NEEL0218S0101

1	CHECK REAR WINDOW DEFOGGER OUTPUT SIGNAL

1. Turn ignition switch ON.
2. Check voltage between rear window defogger timer harness connector M122 terminal 2 (G/R) and ground.

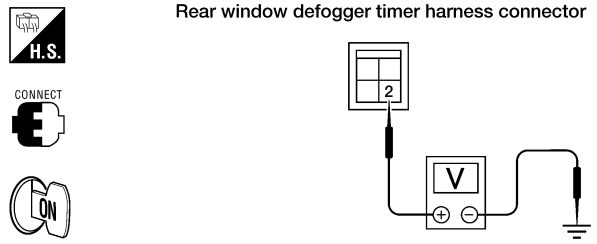

Voltage [V]:
Rear window defogger switch is OFF.
Approx. 12
Rear window defogger switch is ON
0

LEL257A

OK or NG

OK	▶	**Check the following.** ● Rear window defogger relay (Refer to “REAR WINDOW DEFOGGER RELAY”, EL-131) ● Rear window defogger circuit ● Rear window defogger filament (Refer to “Filament Check”, EL-132)
NG	▶	GO TO 2.

2	CHECK DEFOGGER RELAY COIL SIDE CIRCUIT

1. Disconnect rear window defogger timer harness connector.
2. Turn ignition switch ON.
3. Check voltage between rear window defogger timer harness connector M122 terminal 2 (G/R) and ground.

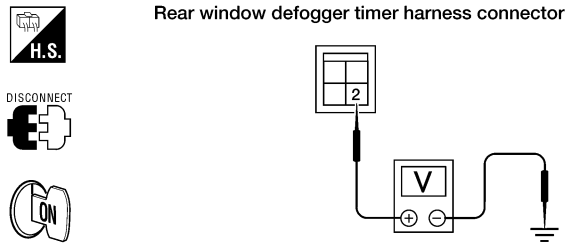

Battery voltage should exist.

LEL256A

OK or NG

OK	▶	GO TO 3.
NG	▶	**Check the following.** ● 10A fuse [No. 5, located in the fuse block (J/B)] ● Rear window defogger relay ● Harness for open or short between rear window defogger relay and rear window defogger timer ● Harness for open or short between rear window defogger relay and fuse

3	CHECK REAR WINDOW DEFOGGER SWITCH INPUT SIGNAL

Check continuity between rear window defogger timer harness connector M122 terminal 3 (G/B) and ground.



Rear window defogger timer harness connector

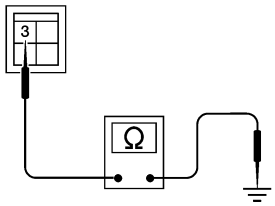

Continuity:
Rear window defogger switch is pressed.
Yes
Rear window defogger switch is released.
No

LEL260A

OK or NG

OK	▶	GO TO 4.
NG	▶	**Check the following.** ● Rear window defogger switch (Refer to "REAR WINDOW DEFOGGER SWITCH", EL-132) ● Harness for open or short between rear window defogger timer and rear window defogger switch ● Rear window defogger switch ground circuit

4	CHECK IGNITION INPUT SIGNAL

Check voltage between rear window defogger timer harness connector M122 terminal 1 (G/W) and ground.



Rear window defogger timer harness connector

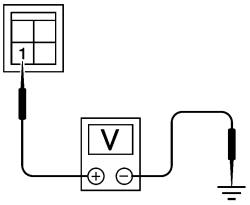

Voltage [V]:
Ignition switch is ON.
Approx. 12
Ignition switch is OFF.
0

LEL259A

OK or NG

OK	▶	GO TO 5.
NG	▶	**Check the following.** ● 10A fuse [No. 5, located in the fuse block (J/B)] ● Harness for open or short between rear window defogger timer and fuse

5	CHECK CONTROL UNIT GROUND CIRCUIT

Check continuity between rear window defogger timer harness connector M122 terminal 4 (B) and ground.

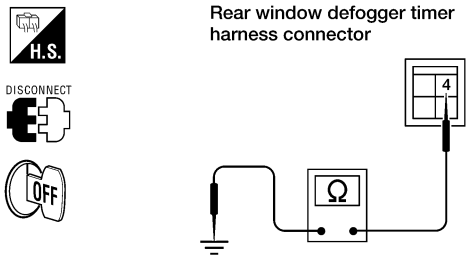

Continuity should exist.

LEL258A

OK or NG

OK	▶	Replace rear window defogger timer.
NG	▶	Repair harness or connectors.

Models with Power Door Locks

NEEL0218S0102

1	CHECK REAR WINDOW DEFOGGER OUTPUT SIGNAL

1. Turn ignition switch ON.
2. Check voltage between smart entrance control unit harness connector M111 terminal 37 (G/R) and ground.

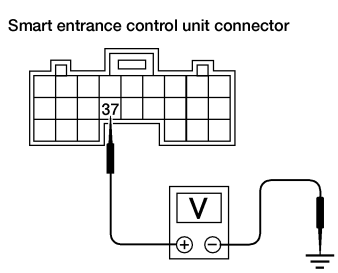

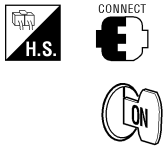

Voltage [V]:
Rear window defogger switch is OFF.
Approx. 12
Rear window defogger switch is ON.
0

LEL013A

OK or NG

OK	▶	**Check the following.** ● Rear window defogger relay (Refer to "REAR WINDOW DEFOGGER RELAY", EL-131) ● Rear window defogger circuit ● Rear window defogger filament (Refer to "Filament Check", EL-132)
NG	▶	GO TO 2.

2	CHECK DEFOGGER RELAY COIL SIDE CIRCUIT

1. Disconnect smart entrance control unit harness connector.
2. Turn ignition switch ON.
3. Check voltage between smart entrance control unit harness connector M111 terminal 37 (G/R) and ground.

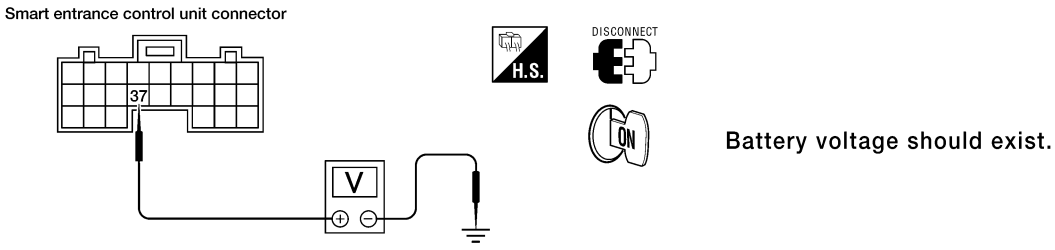

WEL516A

OK or NG

OK	▶	GO TO 3.
NG	▶	**Check the following.** ● 10A fuse [No. 5, located in the fuse block (J/B)] ● Rear window defogger relay ● Harness for open or short between rear window defogger relay and smart entrance control unit ● Harness for open or short between rear window defogger relay and fuse

3	CHECK REAR WINDOW DEFOGGER SWITCH INPUT SIGNAL

Check continuity between smart entrance control unit harness connector M110 terminal 14 (G/B) and ground.

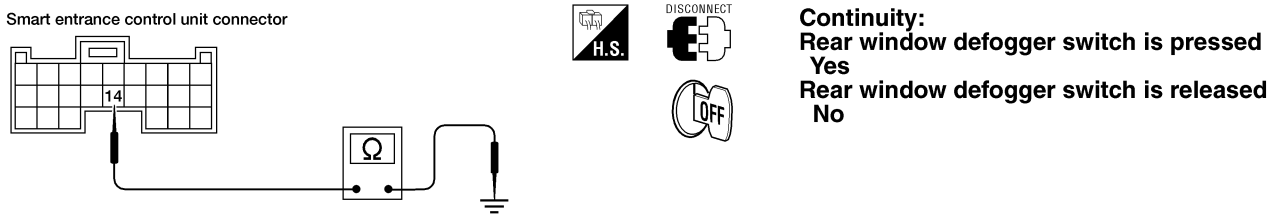

LEL015A

OK or NG

OK	▶	GO TO 4.
NG	▶	**Check the following.** ● Rear window defogger switch (Refer to "REAR WINDOW DEFOGGER SWITCH", EL-132) ● Harness for open or short between smart entrance control unit and rear window defogger switch ● Rear window defogger switch ground circuit

4	CHECK IGNITION INPUT SIGNAL

Check voltage between smart entrance control unit harness connector M111 terminal 27 (G/W) and ground.

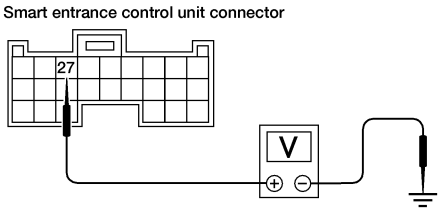



Voltage [V]:
Ignition switch is ON.
Approx. 12
Ignition switch is OFF.
0

LEL016A

OK or NG

OK	▶	GO TO 5.
NG	▶	**Check the following.** ● 10A fuse [No. 5, located in the fuse block (J/B)] ● Harness for open or short between smart entrance control unit and fuse

5	CHECK CONTROL UNIT GROUND CIRCUIT

Check continuity between smart entrance control unit harness connector M111 terminals 43 (B), 64 (B) and ground.



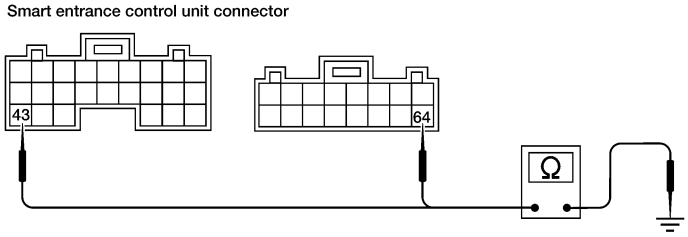

Continuity should exist.

WEL484A

OK or NG

OK	▶	Replace smart entrance control unit.
NG	▶	Repair harness or connectors.

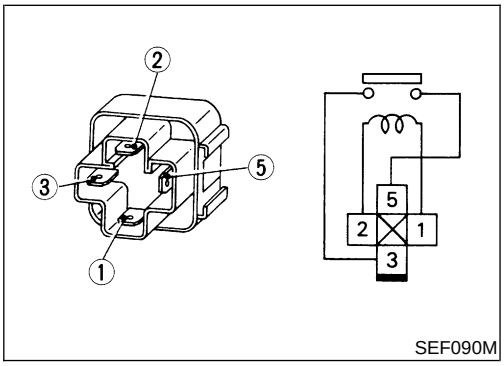

SEF090M

Electrical Components Inspection

NEEL0219

REAR WINDOW DEFOGGER RELAY

NEEL0219S01

Check continuity between terminals 3 and 5.

Condition	Continuity
12V direct current supply between terminals 1 and 2	Yes
No current supply	No

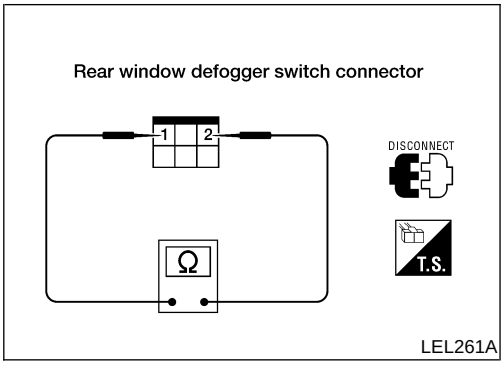

REAR WINDOW DEFOGGER SWITCH

NEEL0219S02

Check continuity between terminals when rear window defogger switch is pushed and released.

Terminals	Condition	Continuity
M121 1 - 2	Rear window defogger switch is pushed	Yes
	Rear window defogger switch is released	No

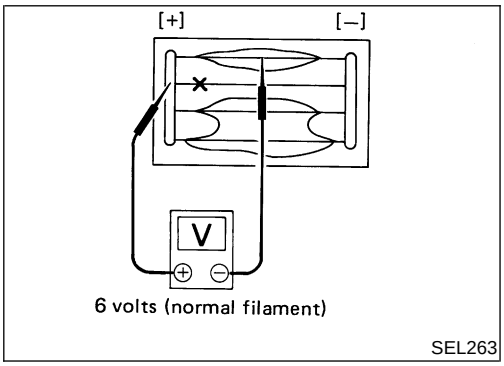

Filament Check

NEEL0220

1. Attach probe circuit tester (in volt range) to middle portion of each filament.

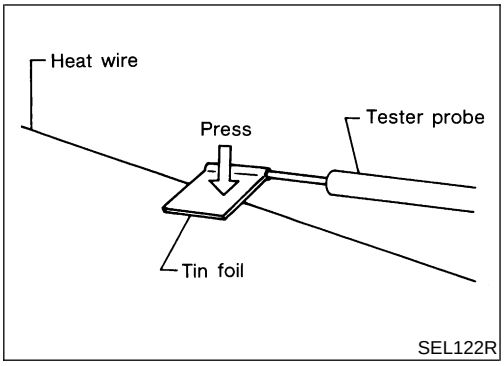

- **When measuring voltage, wrap tin foil around the top of the negative probe. Then press the foil against the wire with your finger.**

2. If a filament is burned out, circuit tester registers 0 or 12 volts.

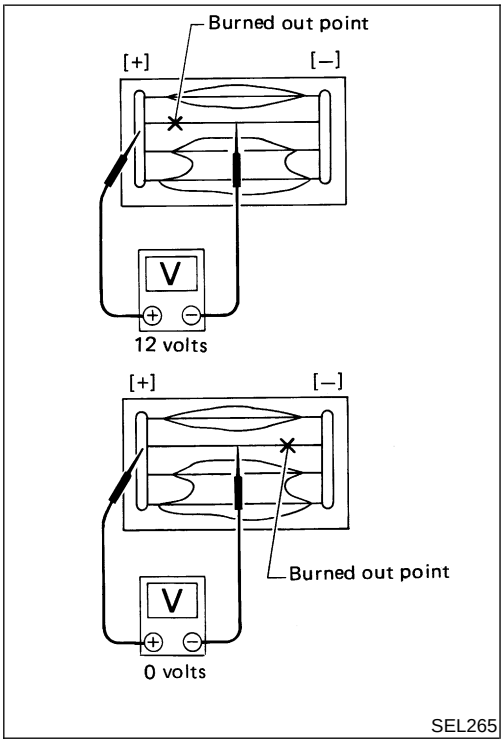

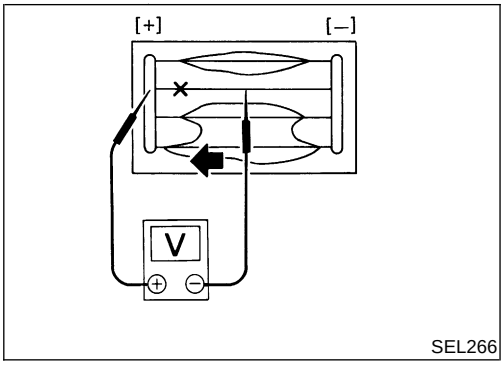

3. To locate burned out point, move probe to left and right along filament. Test needle will swing abruptly when probe passes the point.

Filament Repair

NEEL0221

REPAIR EQUIPMENT

NEEL0221S01

1) Conductive silver composition (Dupont No. 4817 or equivalent)
2) Ruler 30 cm (11.8 in) long
3) Drawing pen
4) Heat gun
5) Alcohol
6) Cloth

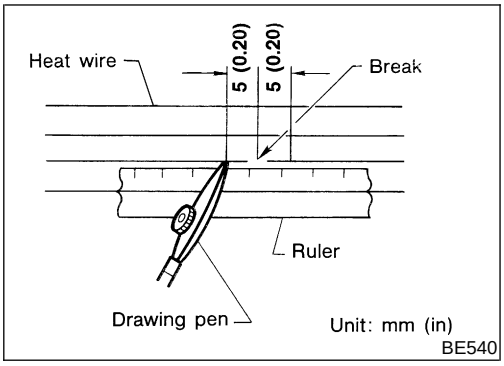

REPAIRING PROCEDURE

NEEL0221S02

1. Wipe broken heat wire and its surrounding area clean with a cloth dampened in alcohol.
2. Apply a small amount of conductive silver composition to tip of drawing pen.

Shake silver composition container before use.

3. Place ruler on glass along broken line. Deposit conductive silver composition on break with drawing pen. Slightly overlap existing heat wire on both sides [preferably 5 mm (0.20 in)] of the break.

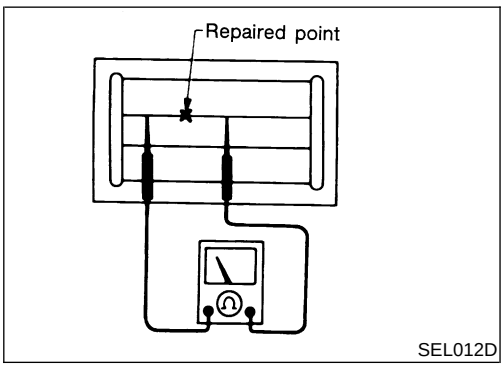

4. After repair has been completed, check repaired wire for continuity. This check should be conducted 10 minutes after silver composition is deposited.

Do not touch repaired area while test is being conducted.

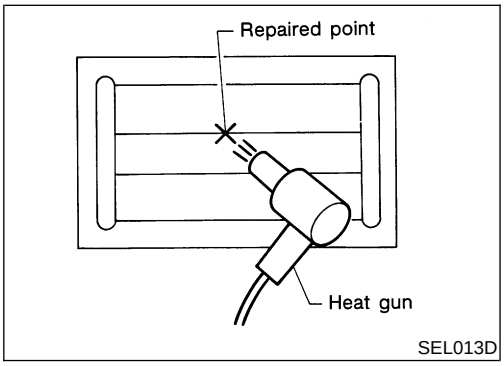

5. Apply a constant stream of hot air directly to the repaired area for approximately 20 minutes with a heat gun. A minimum distance of 3 cm (1.2 in) should be kept between repaired area and hot air outlet. If a heat gun is not available, let the repaired area dry for 24 hours.

System Description

NEEL0079

Refer to Owner's Manual for audio system operating instructions.

REGULAR AND KING CAB WITH BASE AUDIO SYSTEM

NEEL0079S03

Power is supplied at all times

- through 15A fuse (No. 41, located in the fuse and fusible link box)
- to audio unit terminal 6.

With the ignition switch in the ACC or ON position, power is supplied

- through 10A fuse [No. 18, located in the fuse block (J/B)]
- to audio unit terminal 10.

Ground is supplied through the case of the audio unit.
With the audio unit ON, audio signals are supplied

- through audio unit terminals 2, 4, 14 and 16
- to front door speakers and front door tweeters.

REGULAR AND KING CAB WITH PREMIUM AUDIO SYSTEM

NEEL0079S04

Power is supplied at all times

- through 15A fuse (No. 41, located in the fuse and fusible link box)
- to audio unit terminal 6 and
- to subwoofer amplifier terminal 8.

With the ignition switch in the ACC or ON position, power is supplied

- through 10A fuse [No. 18, located in the fuse block (J/B)]
- to audio unit terminal 10.

Ground is supplied through the case of the audio unit.
Ground is supplied to subwoofer amplifier terminal 7 through body grounds M14 and M68.
With the audio unit ON, audio signals are supplied

- through audio unit terminals 2, 4, 14 and 16
- to front door speakers and front door tweeters and
- to subwoofer amplifier terminals 2 and 4.

With the audio unit ON, an "amplifier ON" signal is supplied

- from audio unit terminal 12
- to subwoofer amplifier terminal 6.

When the steering wheel audio control switches are pushed, audio signals are supplied

- through audio unit terminal 5
- to steering wheel audio control switch terminal 15 and
- through steering audio control switch terminal 16
- to audio unit terminal 9.

CREW CAB

NEEL0079S05

Power is supplied at all times

- through 15A fuse (No. 41, located in the fuse and fusible link box)
- to audio unit terminal 6.

With the ignition switch in the ACC or ON position, power is supplied

- through 10A fuse [No. 18, located in the fuse block (J/B)]
- to audio unit terminal 10.

Ground is supplied through the case of the audio unit.
With the audio unit ON, audio signals are supplied

- through audio unit terminals 2, 4, 14 and 16
- to front door speakers, front door tweeters and rear door speakers.

When the steering wheel audio control switches are pushed, audio signals are supplied

- through audio unit terminal 5
- to steering wheel audio control switch terminal 15 and
- through steering audio control switch terminal 16
- to audio unit terminal 9.

Wiring Diagram — AUDIO —

NEEL0157

REGULAR AND KING CAB WITH BASE AUDIO SYSTEM

NEEL0157S01

EL-AUDIO-01

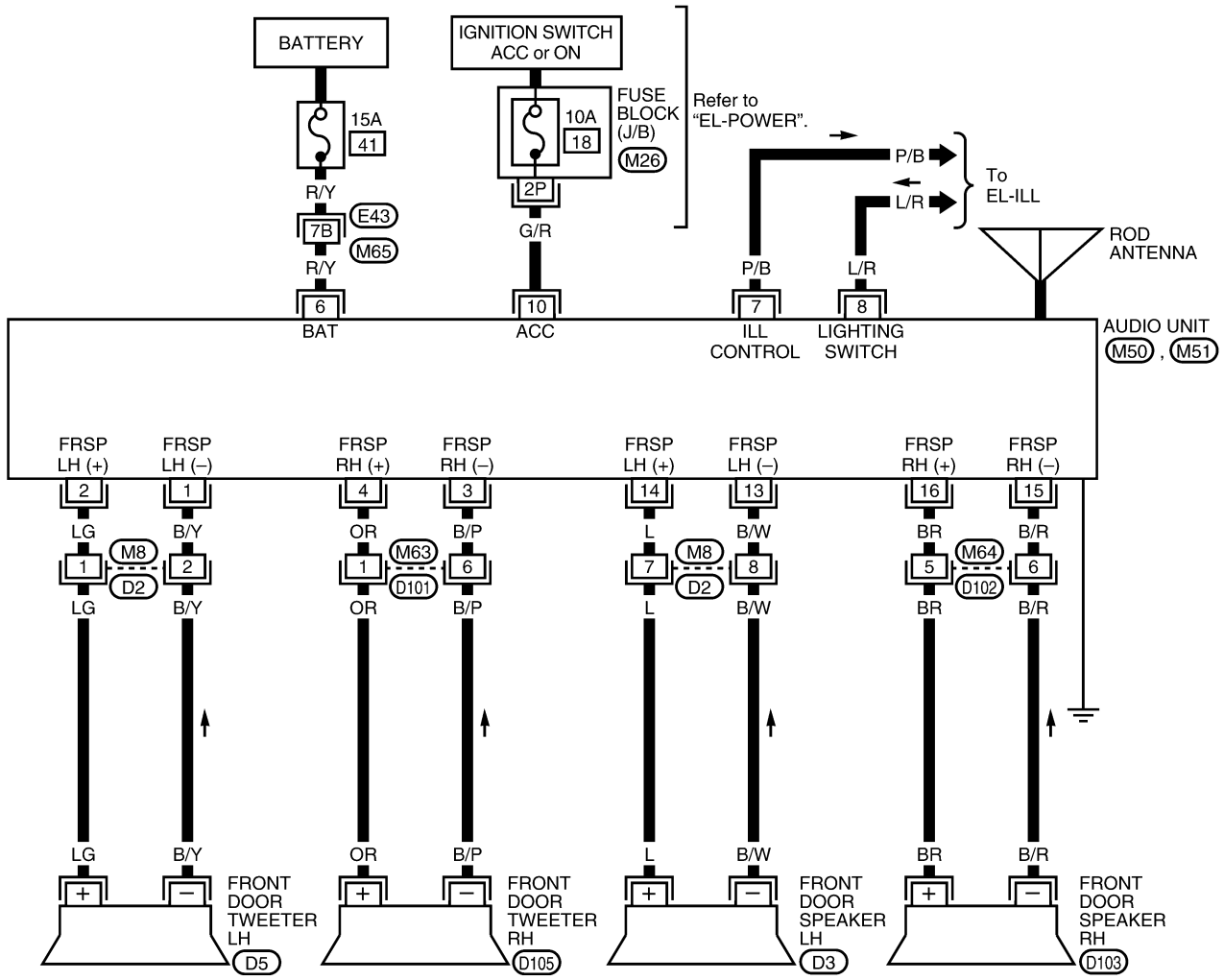

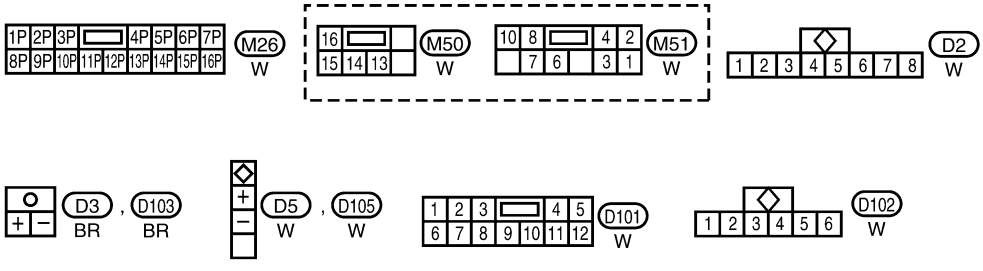

Refer to the following.
M65, E43 - SUPER MULTIPLE JUNCTION (SMJ)

LEL214A

Wiring Diagram — AUDIO — (Cont'd)

REGULAR AND KING CAB WITH PREMIUM AUDIO SYSTEM

NEEL0157S02

EL-AUDIO-02

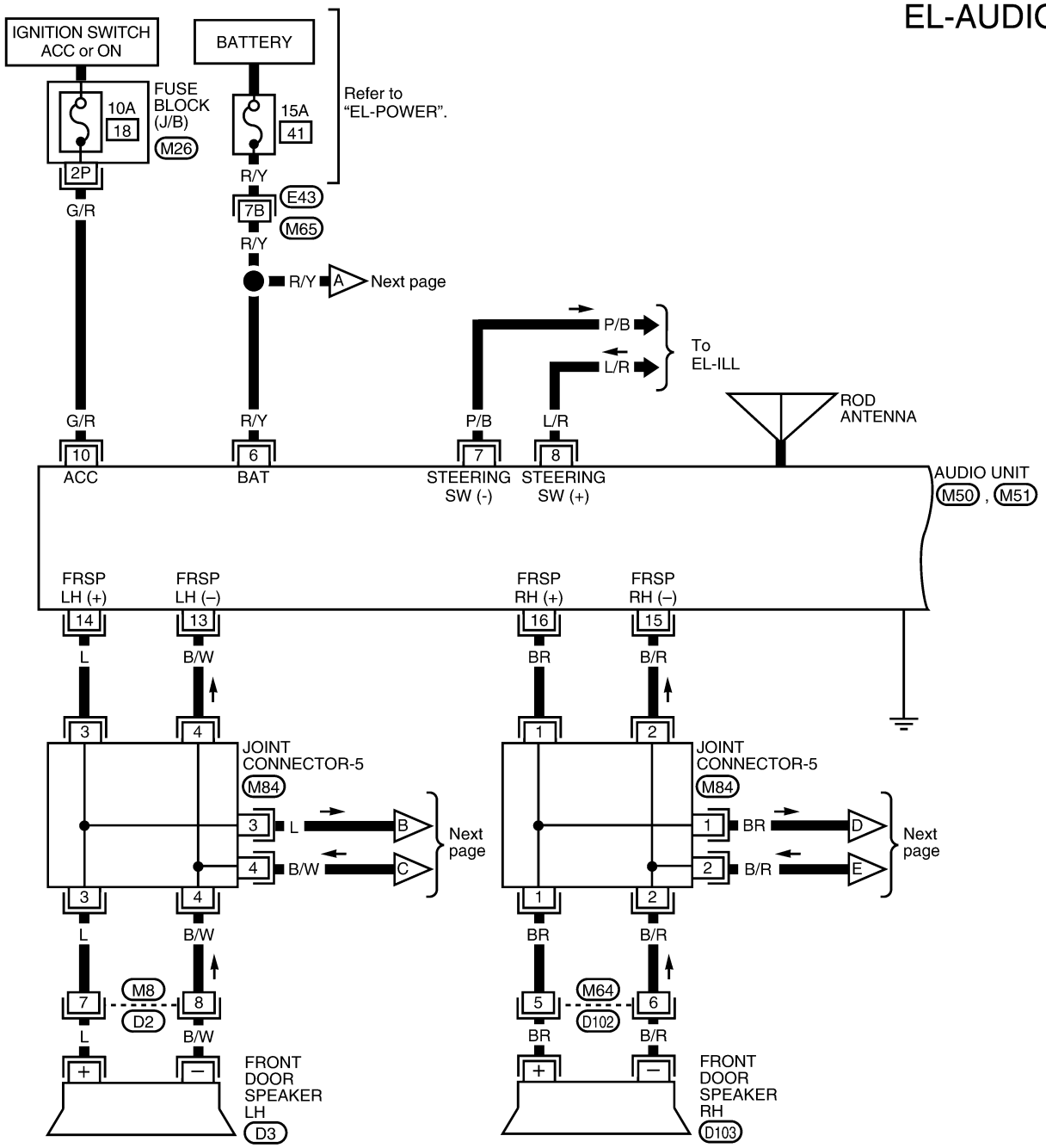

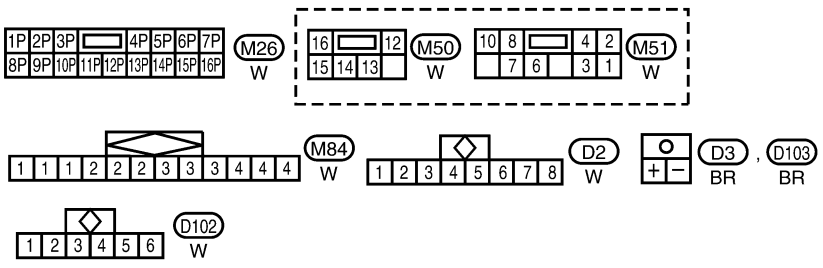

Refer to the following.
M65 , E43 - SUPER MULTIPLE JUNCTION (SMJ)

LEL763

EL-AUDIO-03

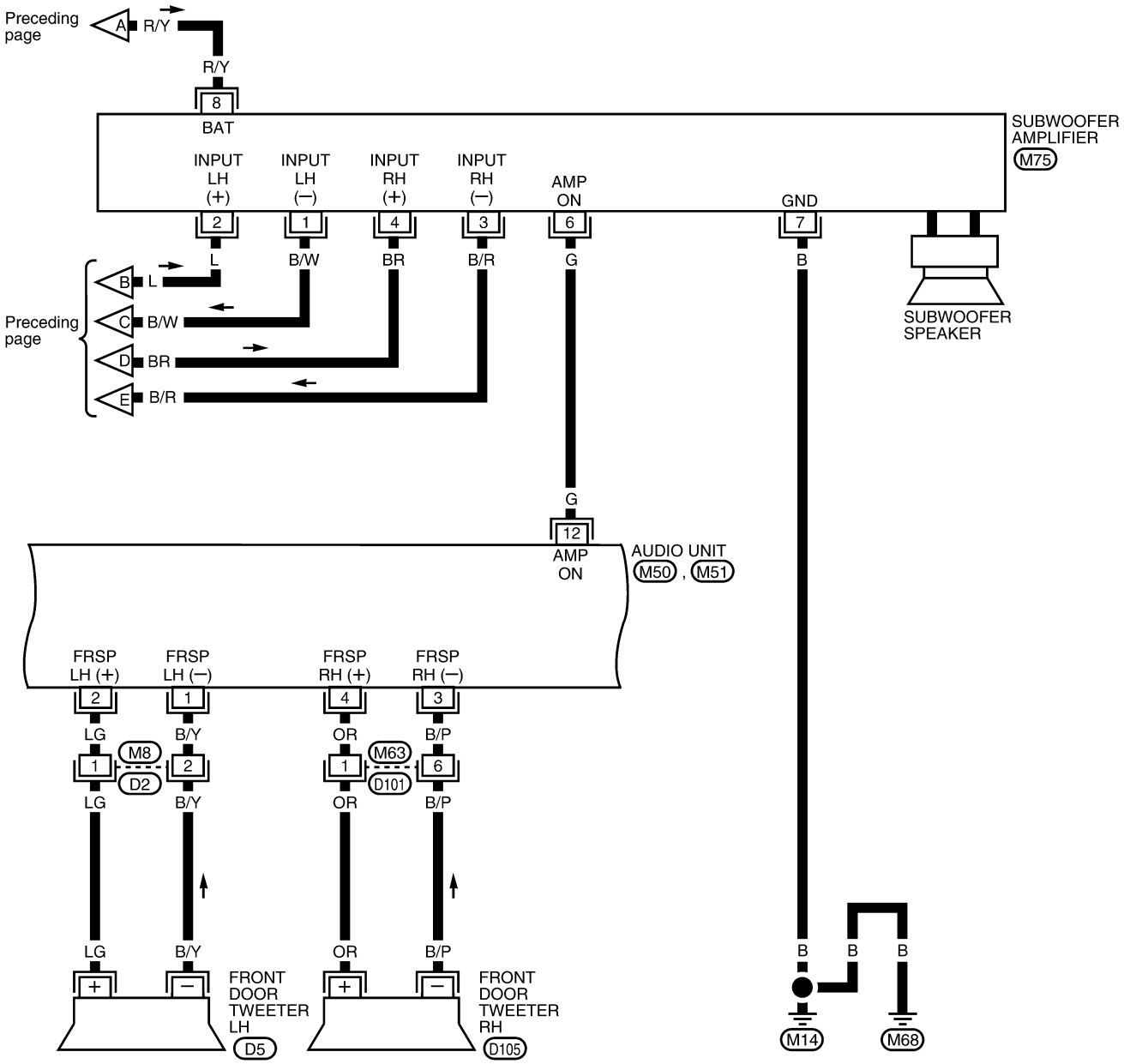

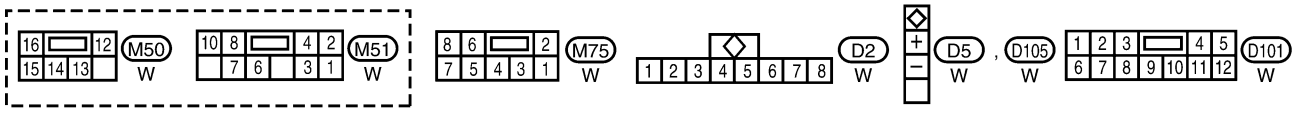

LEL462A

EL-AUDIO-04

PR: With premium audio system

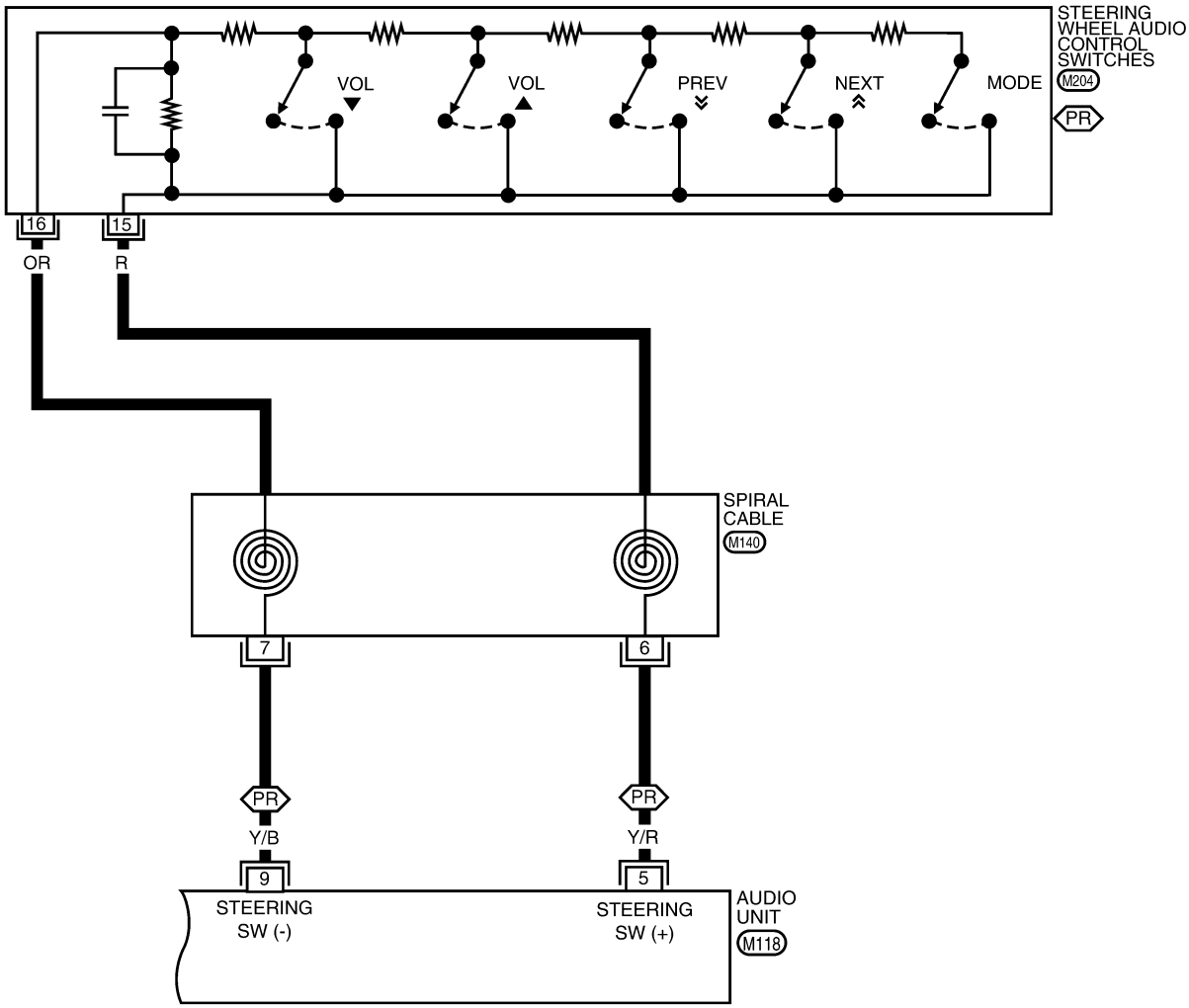

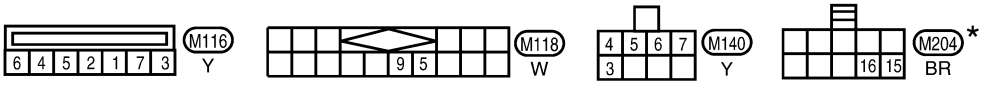

*: This connector is not shown in "HARNESS LAYOUT" of EL section.

WEL062B

CREW CAB

NEEL0157S03

EL-AUDIO-05

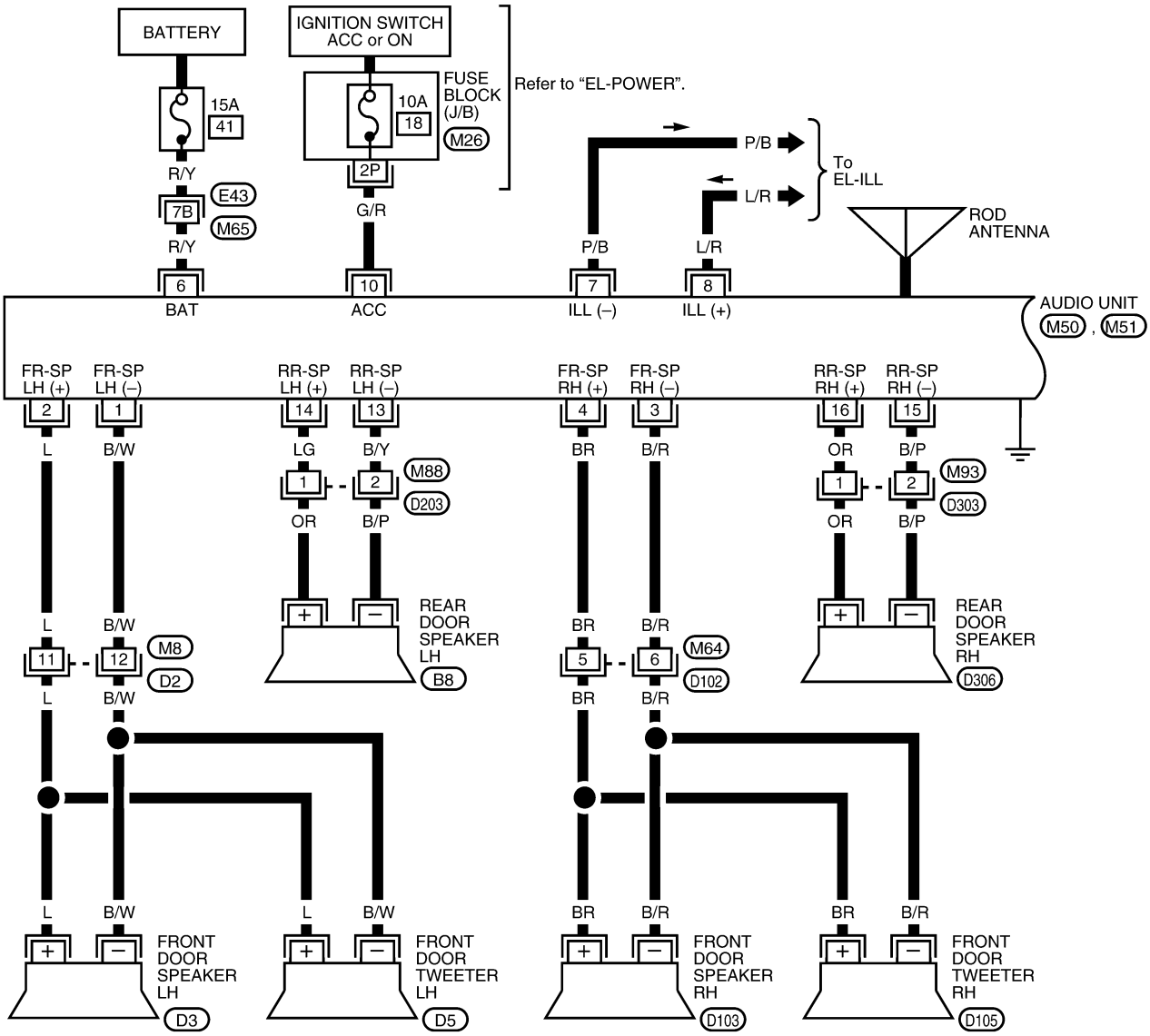

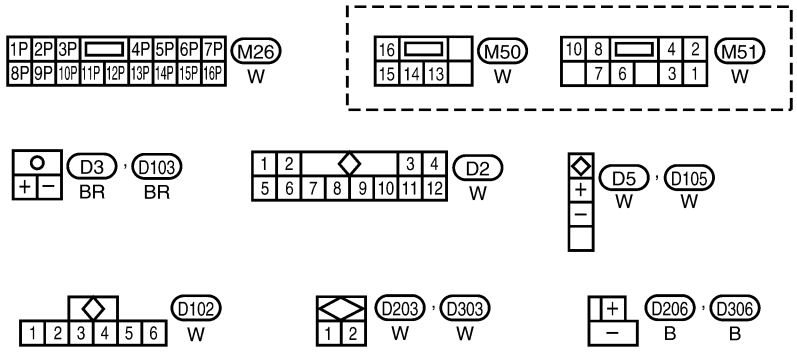

Refer to the following.
M65 , E43 - SUPER MULTIPLE JUNCTION (SMJ)

WEL463A

EL-AUDIO-06

SS: With steering wheel audio control switches

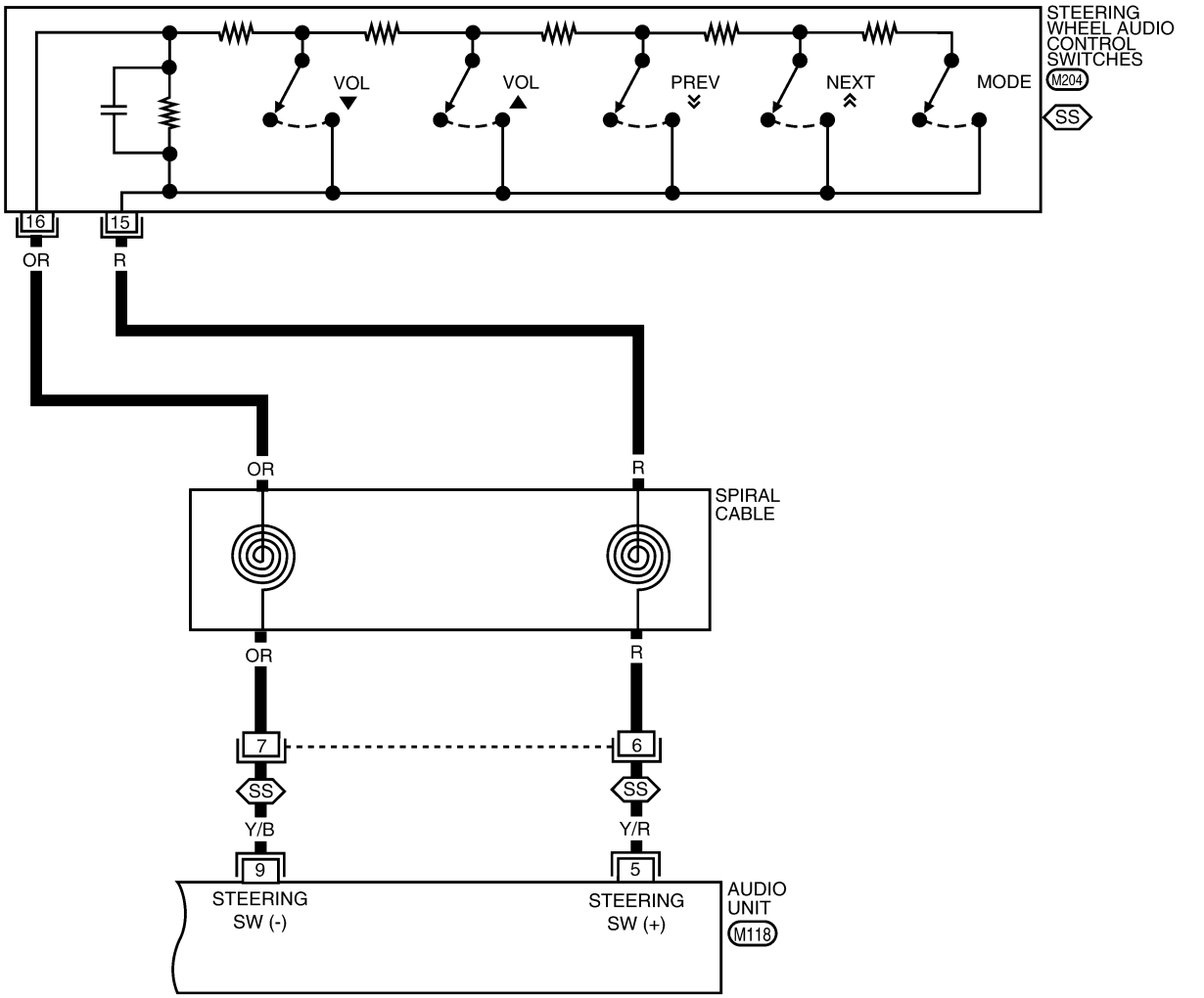

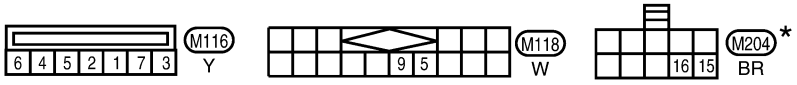

*: This connector is not shown in "HARNESS LAYOUT" of EL section.

LEL237A

Trouble Diagnoses

NEEL0082

AUDIO UNIT

NEEL0082S01

Symptom	Possible causes	Repair order
Audio unit inoperative (no digital display and no sound from speakers).	1. 10A fuse 2. Poor audio unit case ground 3. Audio unit	1. Check 10A fuse [No. 18, located in fuse block (J/B)]. Turn ignition switch ON and verify that battery positive voltage is present at terminal 10 of audio unit. 2. Check audio unit case ground. 3. Remove audio unit for repair.
Audio unit controls are operational, but no sound is heard from any speaker.	1. Audio unit output 2. Audio unit	1. Check audio unit output voltages. 2. Remove audio unit for repair.
Audio unit presets are lost when ignition switch is turned OFF.	1. 15A fuse 2. Audio unit	1. Check 15A fuse (No. 41, located in fuse and fusible link box) and verify that battery positive voltage is present at terminal 6 of audio unit. 2. Remove audio unit for repair.
Individual speaker is noisy or inoperative.	1. Speaker 2. Audio unit output 3. Speaker circuit 4. Audio unit	1. Check speaker. 2. Check audio unit output voltages. 3. Check wires for open or short between audio unit and speaker. 4. Remove audio unit for repair.
Subwoofer speaker is noisy or inoperative (2 door models with premium audio system).	1. Speaker 2. Subwoofer amplifier output 3. Poor subwoofer amplifier ground 4. Audio unit “amplifier ON” signal 5. Audio unit “amplifier ON” circuit	1. Check speaker. 2. Verify that battery positive voltage is present at terminal 8 of subwoofer amplifier 3. Check subwoofer amplifier ground. 4. Turn audio unit ON and verify that approximately 10.5 volts are present at terminal 12 of audio unit. 5. Check wire for open or short between audio unit and subwoofer amplifier.
Audio unit stations are weak or noisy.	1. Antenna 2. Poor audio unit ground 3. Audio unit	1. Check antenna. 2. Check audio unit ground. 3. Remove audio unit for repair.
Audio unit generates noise in AM and FM modes with engine running.	1. Poor audio unit ground 2. Loose or missing ground bonding straps 3. Ignition condenser or rear window defogger noise suppressor condenser (Crew Cab models) 4. Generator 5. Ignition coil or secondary wiring 6. Audio unit	1. Check audio unit ground. 2. Check ground bonding straps. 3. Replace ignition condenser or rear window defogger noise suppressor condenser (Crew Cab models). 4. Check generator. 5. Check ignition coil and secondary wiring. 6. Remove audio unit for repair.
Audio unit generates noise in AM and FM modes with accessories on (switch pops and motor noise).	1. Poor audio unit ground 2. Antenna 3. Accessory ground 4. Faulty accessory	1. Check audio unit ground. 2. Check antenna. 3. Check accessory ground. 4. Replace accessory.
Steering wheel audio control switch does not operate (except base audio system).	1. Steering wheel audio control switch 2. Audio unit output 3. Steering wheel audio control switch circuit 4. Audio unit	1. Check steering wheel audio control switch, refer to “STEERING WHEEL AUDIO CONTROL SWTICH RESISTANCE CHECK”, EL-143. 2. Check audio unit output voltage. 3. Check harness betwen audio unit and steering switch. 4. Remove audio unit for repair.

Inspection

NEEL0083

SPEAKER

NEEL0083S03

1. Disconnect speaker harness connector.
2. Measure the resistance between speaker terminals + and –.
- The resistance should be 2 - 4Ω.
3. Using jumper wires, momentarily connect a 9V battery between speaker terminals + and –.

Inspection (Cont'd)

- A momentary hum or pop should be heard.

ANTENNA

NEEL0083S02

1. Using a jumper wire, clip an auxiliary ground between antenna and body.
- If reception improves, check antenna ground (at body surface).
- If reception does not improve, check main feeder cable for short circuit or open circuit.

AUDIO UNIT

NEEL0083S01

All voltage inspections are made with:

- Ignition switch ON or ACC
- Audio unit ON
- Audio unit connected (If removed for inspection, supply a ground to the case using a jumper wire.)

AUDIO UNIT VOLTAGES

NEEL0083S04

Terminal	Wire color		Voltage (V) (Approx.)		
	2-Door Models	4-Door Models	2-Door Models with Base Audio System	2-Door Models with Premium Audio System	4-Door Models
1	B/W	B/W	5 - 7.5	5 - 7.5	5 - 7.5
2	LG	L	5 - 7.5	5 - 7.5	5 - 7.5
3	B/P	B/R	5 - 7.5	5 - 7.5	5 - 7.5
4	OR	BR	5 - 7.5	5 - 7.5	5 - 7.5
5	—	—	—	—	—
6	R/Y	R/Y	10.8 - 15.6	10.8 - 15.6	10.8 - 15.6
7	P/B	P/B	0 (Illumination)	0 (Illumination)	0 (Illumination)
8	L/R	L/R	0 - 12 (Illumination)	0 - 12 (Illumination)	0 - 12 (Illumination)
9	—	—	—	—	—
10	G/R	G/R	10.8 - 15.6	10.8 - 15.6	10.8 - 15.6
11	—	—	—	—	—
12	G*	—	—	10.5	—
13	B/W	B/Y	5 - 7.5	5 - 7.5	5 - 7.5
14	L	LG	5 - 7.5	5 - 7.5	5 - 7.5
15	B/R	B/P	5 - 7.5	5 - 7.5	5 - 7.5
16	BR	OR	5 - 7.5	5 - 7.5	5 - 7.5

* 2-door models with premium audio system only.

SUBWOOFER AMPLIFIER VOLTAGES

NEEL0083S05

Terminal	Wire color	Voltage (V) (Approx.)
1	B/W	5 - 7.5
2	L	5 - 7.5
3	B/R	5 - 7.5
4	BR	5 - 7.5
5	—	—
6	G	10.5
7	B	Body ground
8	R/Y	10.8 - 15.6

STEERING WHEEL AUDIO CONTROL SWITCH RESISTANCE CHECK

NEEL0083S06

	Terminal No.	Resistance (Ω) (Approx.)
VOLUM (DOWN) SW	15 - 16	21.7 - 22.2
VOLUM (UP) SW		69.3 - 70.7
PREVIOUS SW		108.9 - 111.1
NEXT SW		158.4 - 161.6
MODE SW		326.7 - 333.3

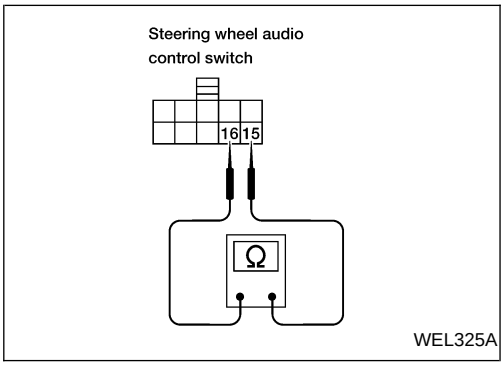

Location of Antenna

NEEL0204

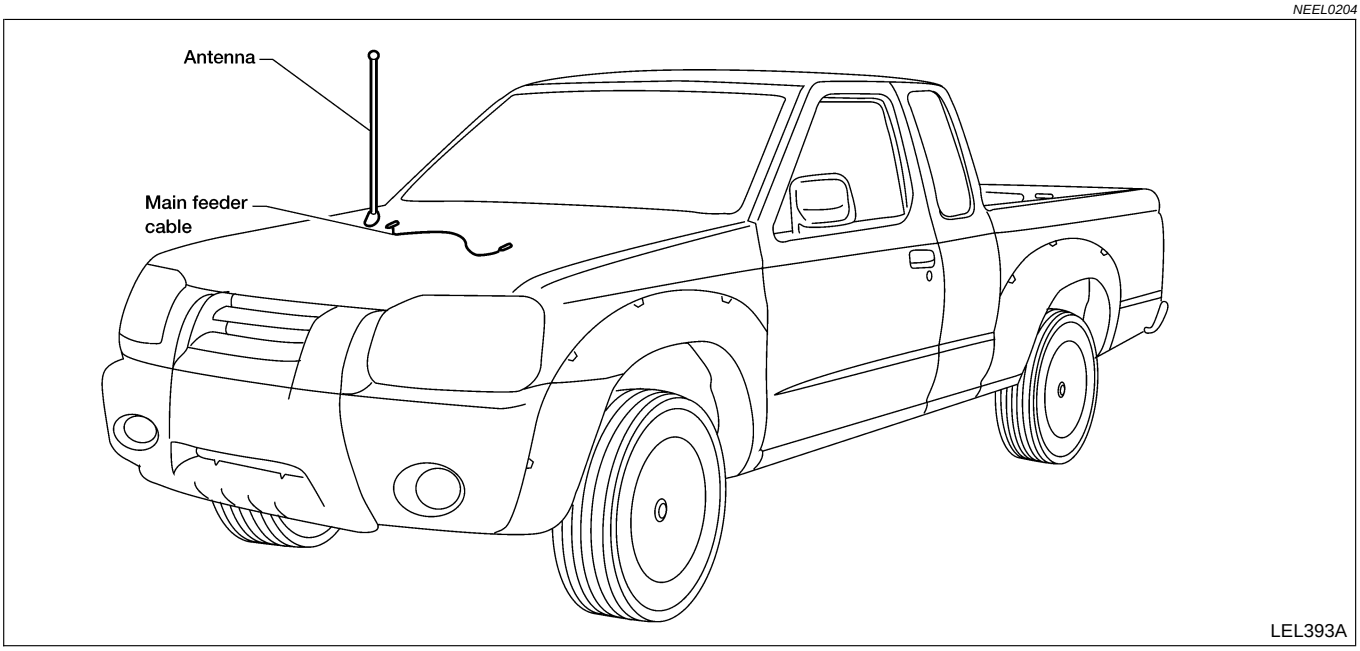

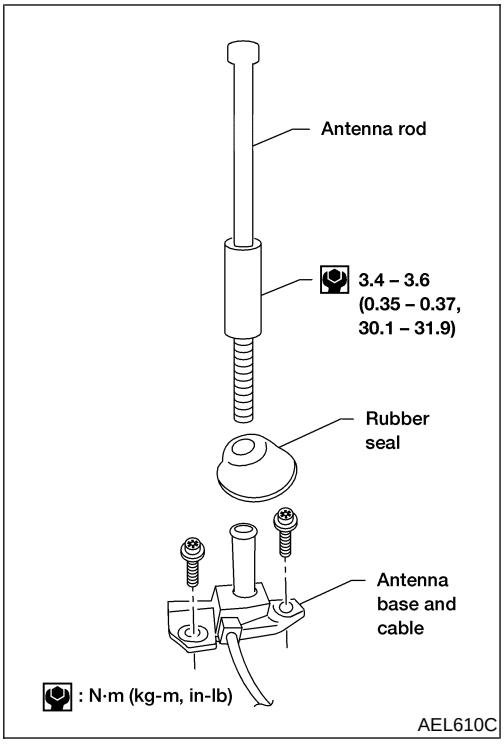

Fixed Antenna Rod Replacement

NEEL0192

REMOVAL

NEEL0192S01

1. Remove antenna rod.
2. Remove rubber seal.
3. Remove cowl screen top seal.
4. Remove right wiper arm.
5. Remove right cowl to grille.
6. Remove antenna base bolts.
7. Remove right fender splash shield.
8. Remove audio unit.
9. Disconnect antenna cable from audio unit.
10. Remove attachment clip from fender apron.
11. Remove antenna base and cable.

INSTALLATION

NEEL0192S02

Install in reverse order of removal.

CAUTION:

Always properly tighten the antenna rod during installation or the antenna rod may bend or break during vehicle operation.

Wiring Diagram — MIRROR —

NEEL0090

EL-MIRROR-01

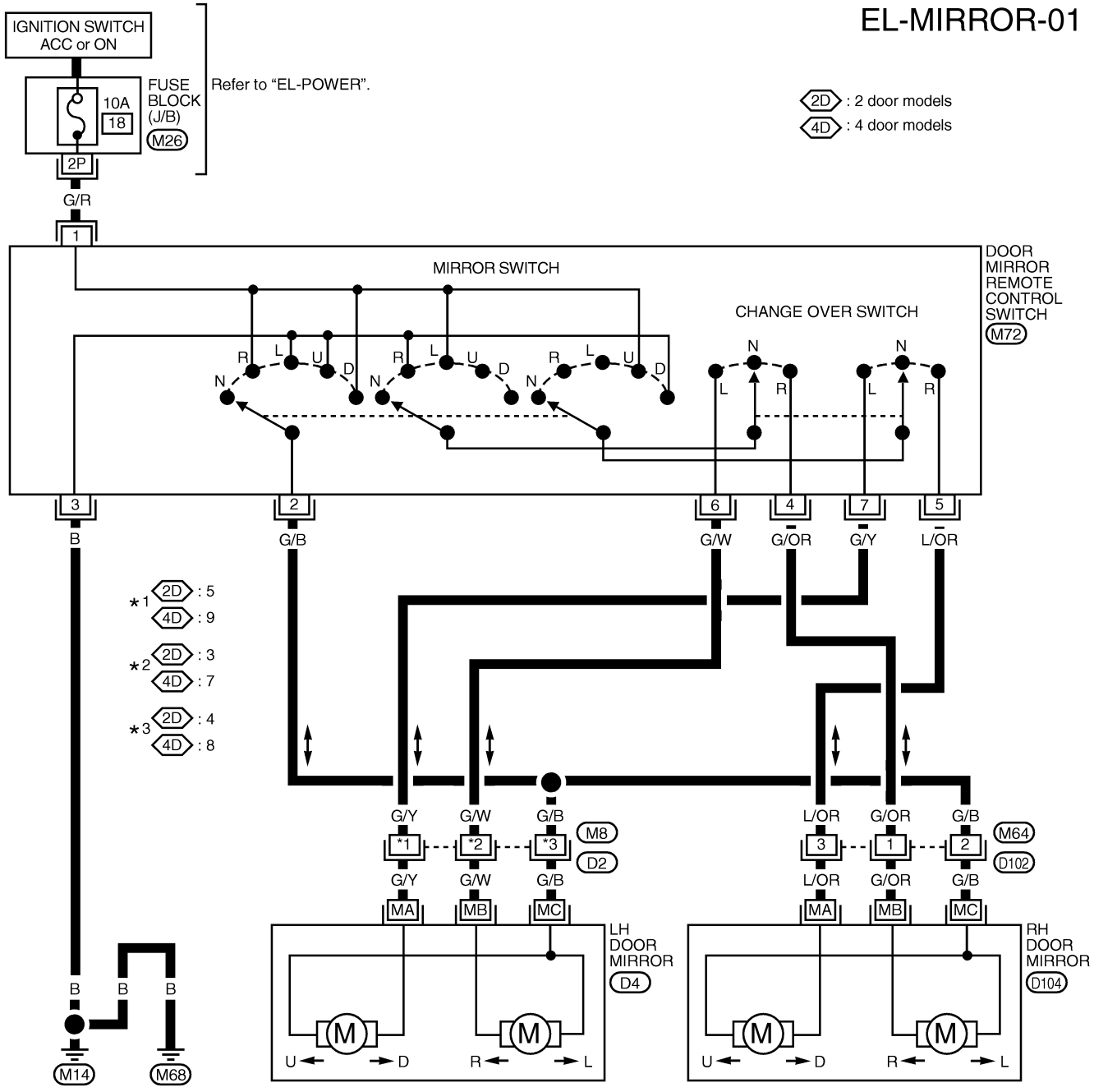

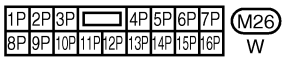

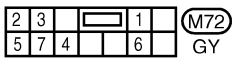

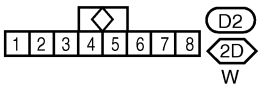

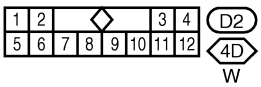



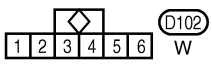

AEL475C

Component Parts and Harness Connector Location

NEEL0094

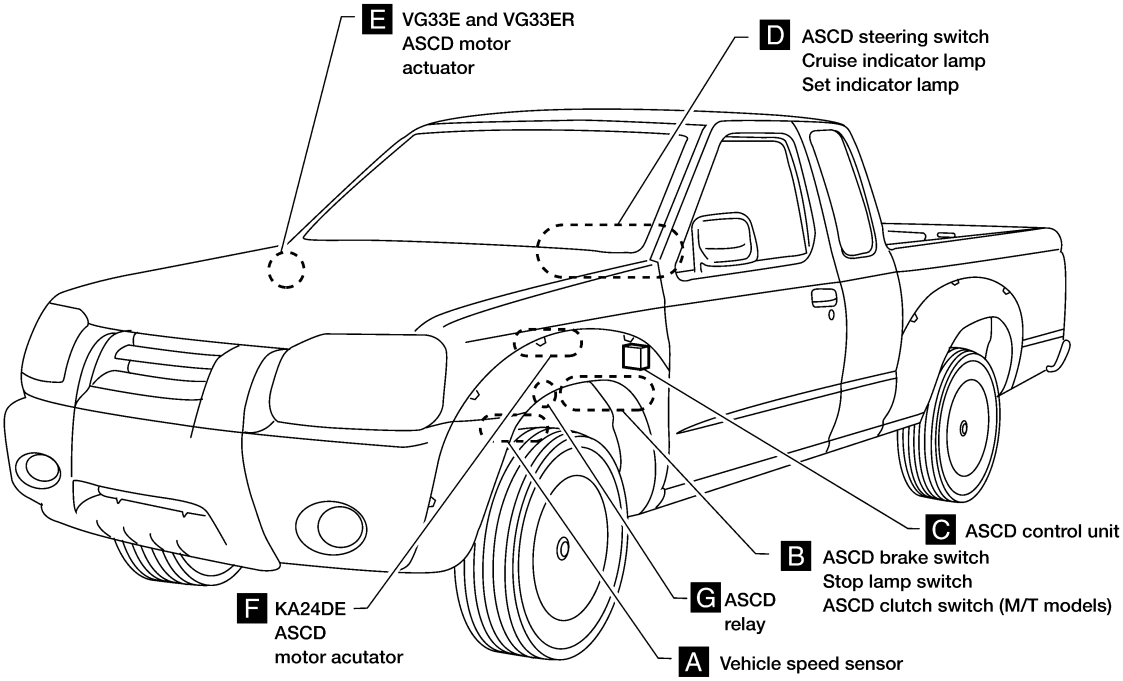

WEL446A

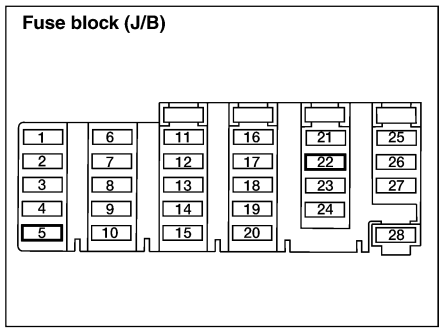
Fuse block (J/B)
1
2
3
4
5
6
7
8
9
10
11
12
13
14
15
16
17
18
19
20
21
22
23
24
25
26
27
28

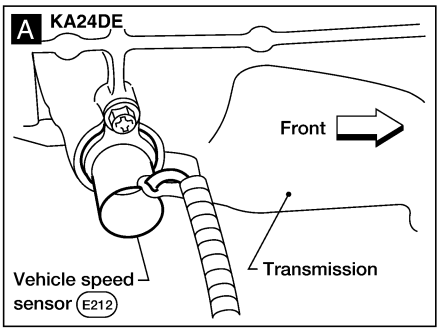
A
KA24DE
Front
Vehicle speed sensor E212
Transmission

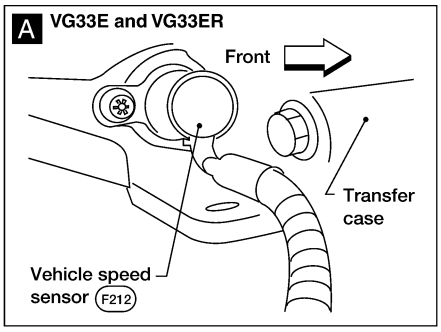
A
VG33E and VG33ER
Front
Transfer case
Vehicle speed sensor F212

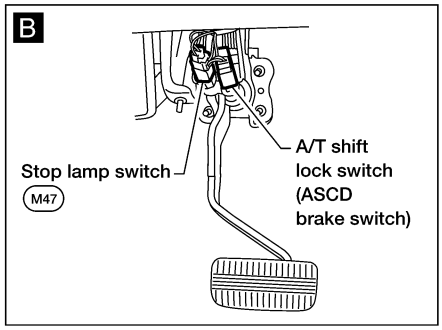
B
Stop lamp switch M47
A/T shift lock switch (ASCD brake switch)

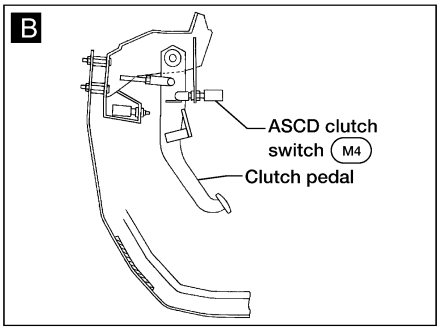
B
ASCD clutch switch M4
Clutch pedal

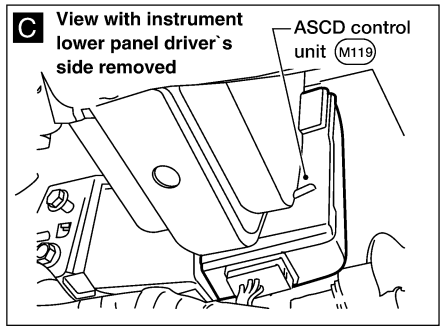
C
View with instrument lower panel driver`s side removed
ASCD control unit M119

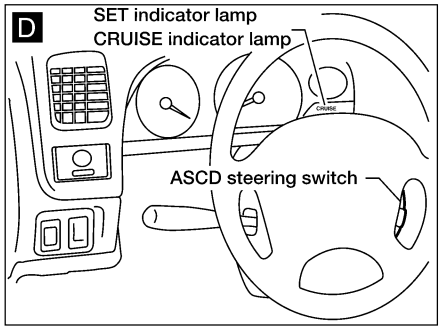
D
SET indicator lamp
CRUISE indicator lamp
ASCD steering switch

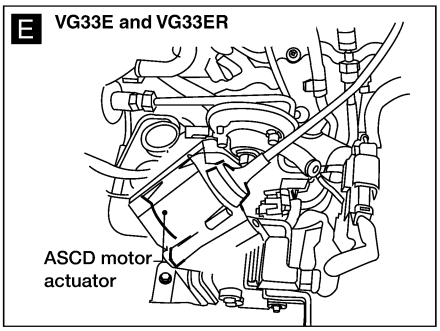
E
VG33E and VG33ER
ASCD motor actuator

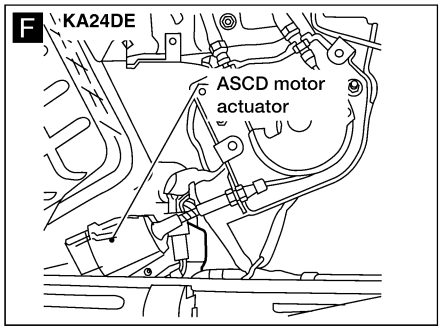
F
KA24DE
ASCD motor actuator

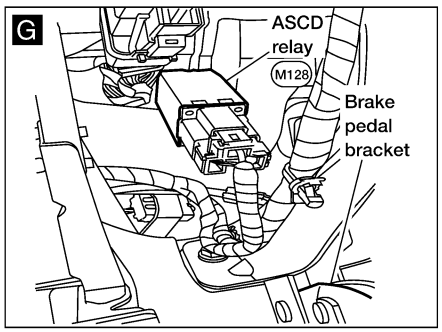
G
ASCD relay M128
Brake pedal bracket

WEL448A

System Description

NEEL0206

Refer to Owner's Manual for ASCD operating instructions.

POWER SUPPLY AND GROUND

NEEL0206S01

Power is supplied at all times

- through 15A fuse [No. 22, located in the fuse block (J/B)] (2–door models) or
- through 20A fuse [No. 22, located in the fuse block (J/B)] (4–door models)
- to the stop lamp switch terminal 1

When ignition switch is in the ON or START position, power is supplied

- through 10A fuse [No. 5, located in the fuse block (J/B)]
- to ASCD control unit terminal 5.
- through 7.5A fuse [No. 12, located in the fuse block (J/B)]
- to park/neutral position switch terminal 1,
- through 10A fuse [No. 11, located in the fuse block (J/B)]
- to combination meter terminals 17 and 30.

When park/neutral position switch (A/T) is in the P or N position, ground is supplied

- to park/neutral position switch terminal 2
- through ASCD relay terminal 1
- to ASCD relay terminal 2
- through body grounds E12 and E54.

When ON●OFF switch is depressed (ON), ground is supplied

- to ASCD control unit terminal 11
- from ASCD steering switch terminal 14
- to ASCD steering switch terminal 13
- from ASCD control unit terminal 24

Then ASCD control unit illuminates CRUISE indicator.
Ground is supplied

- to combination meter terminal 46
- from ASCD control unit terminal 15.

Ground is supplied

- to ASCD control unit terminal 17
- through body grounds M14 and M68.

OPERATION

NEEL0206S02

Set Operation

NEEL0206S0201

To activate the ASCD, all of following conditions must exist

- ASCD control unit receives ON●OFF switch ON signal
- Power supply to ASCD control unit terminal 8 [Brake and clutch pedal is released (M/T), and brake pedal is released and A/T selector lever is in other than P and N position (A/T)].
- Vehicle speed is between 40 km/h (25 MPH) and 144 km/h (89 MPH). (Signal from combination meter.)

When the COAST/SET switch is depressed, ground is supplied

- to ASCD control unit terminal 11,
- from ASCD steering switch terminal 14.

Then ASCD motor actuator is activated to control throttle wire and ASCD control unit supplies ground

- to combination meter terminal 31 to illuminate SET indicator
- from ASCD control unit terminal 18.

A/T Overdrive Control during Cruise Control Driving (A/T)

NEEL0206S0202

KA24DE MODELS

When the vehicle speed is approximately 5 km/h (3 MPH) below set speed, ground is supplied

- from ASCD control unit terminal 10
- to solenoid valve unit terminal 2.

When this occurs, overdrive is canceled.
When vehicle speed returns to approximately 0.6 km/h (0.4 MPH) below set speed, overdrive is reactivated.

VG33E AND VG33ER MODELS

When the vehicle speed is approximately 5 km/h (3 MPH) below set speed, a signal is sent

- from ASCD control unit terminal 10
- to TCM terminal 24.

When this occurs, the TCM cancels overdrive.
When vehicle speed returns to approximately 0.6 km/h (0.4 MPH) below set speed, overdrive is reactivated.

Coast Operation

NEEL0206S0203

When the COAST/SET switch is depressed during cruise control driving, ASCD motor actuator returns the throttle cable to decrease vehicle set speed until the switch is released. Then ASCD will keep the new set speed.
If COAST/SET switch is pressed and released quickly during cruise control driving, vehicle set speed will be reduced by 1.6 km/h (1.0 MPH).

Accel Operation

NEEL0206S0204

When the RES/ACCEL switch is depressed, ground is supplied

- from ASCD steering switch terminal 14
- to ASCD control unit terminal 11.

If the RES/ACCEL switch is depressed during cruise control driving, ASCD motor actuator pulls the throttle cable to increase the vehicle speed until the switch is released or vehicle speed is reached to maximum controlled speed by the system. Then ASCD will keep the new set speed.
If RES/ACCEL switch is pressed and released quickly during cruise control driving, vehicle set speed will be increased by 1.6 km/h (1.0 MPH).

Cancel Operation

NEEL0206S0205

When any of following conditions exist, cruise operation will be canceled

- CANCEL switch is depressed. (Ground is supplied to ASCD control unit terminal 11)
- Brake pedal is depressed. (Power is supplied to ASCD control unit terminal 23 from stop lamp switch)
- Brake or clutch pedal is depressed (M/T), brake pedal is depressed or A/T selector lever is shifted to P or N position (A/T). (Power supply to ASCD control unit terminal 8 is interrupted.)

If ON●OFF switch is turned to OFF when ASCD is activated, all of ASCD operation will be canceled and vehicle speed memory will be erased.

Resume Operation

NEEL0206S0206

When the RES/ACCEL switch is depressed, after cancel operation other than depressing ON●OFF switch is performed, vehicle speed will return to last set speed. To resume vehicle set speed, vehicle condition must meet following conditions

- Brake pedal is released.
- Clutch pedal is released (M/T).
- A/T selector lever is in other than P and N position (A/T).
- Vehicle speed is between 40 km/h (25 MPH) and 144 km/h (89 MPH).

ASCD MOTOR ACTUATOR OPERATION

NEEL0206S03

When the ASCD activates, power is supplied

- from terminal 7 of ASCD control unit
- to ASCD motor actuator terminal 1, and
- from terminal 12 of ASCD control unit
- to ASCD motor actuator terminal 6.

Ground is supplied

- from ASCD control unit terminals 1, 13, and 14
- to terminals 3, 5, and 2 of ASCD motor actuator.

Power to the actuator motor is supplied constantly from the ASCD control unit. The ASCD control unit then switches the actuator motor ground signals ON and OFF to control actuator motor operation and vehicle speed.

Circuit Diagram

NEEL0096

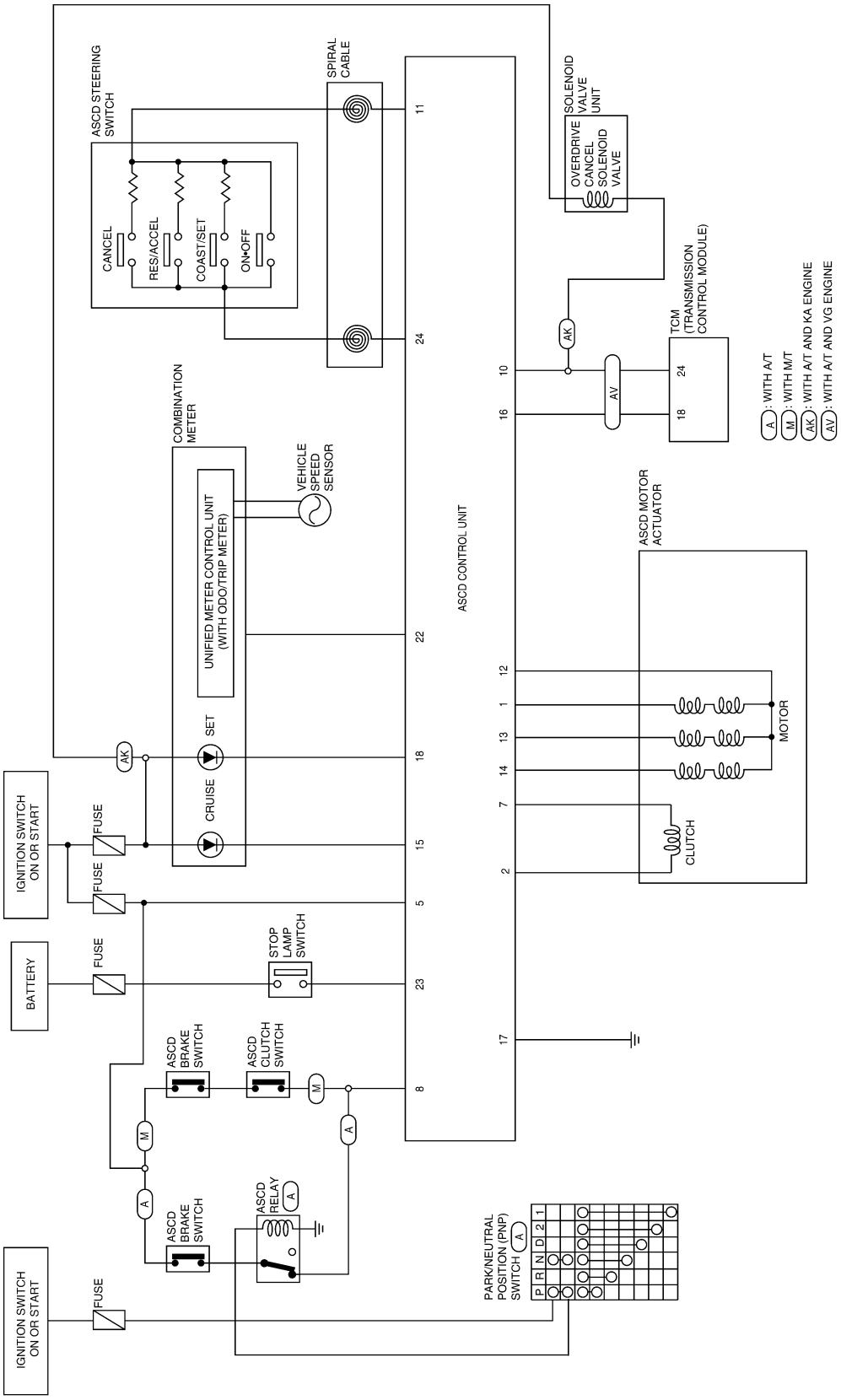

WEL057B

Wiring Diagram — ASCD —

NEEL0097

FIG. 1

NEEL0097S01

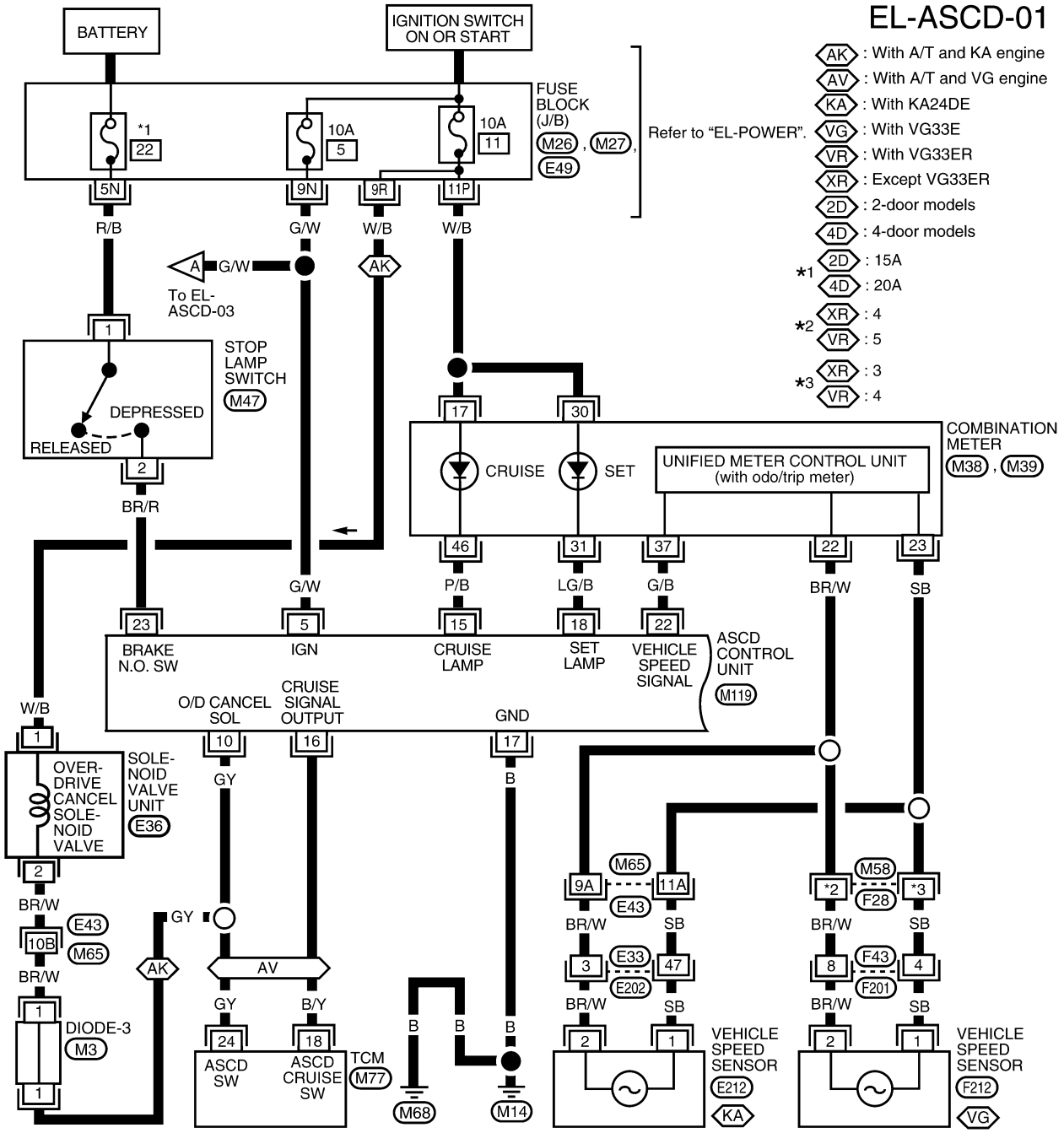

Refer to the following.
M65, E43 - SUPER MULTIPLE JUNCTION (SMJ)
M77 - ELECTRICAL UNITS
M26, M27, E49 - FUSE BLOCK-JUNCTION BOX (J/B)

WEL058B

FIG. 2

NEEL0097S02

EL-ASCD-02

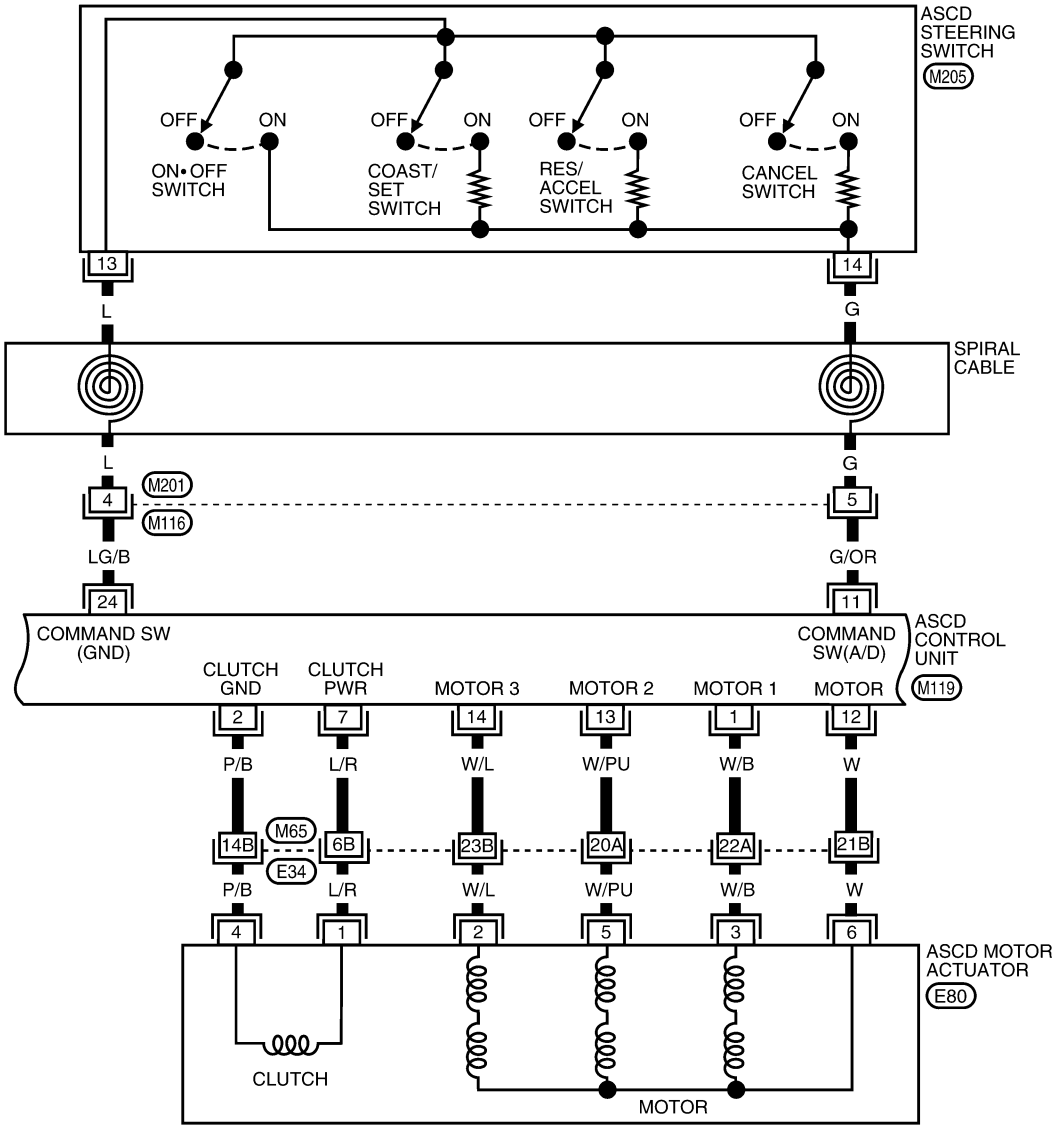

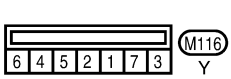

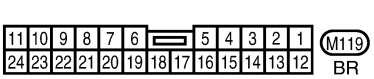

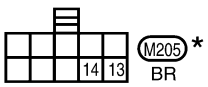

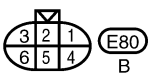

Refer to the following.
M65 , E43 - SUPER MULTIPLE JUNCTION (SMJ)

* : This connector is not shown in "HARNESS LAYOUT" of EL section.

WEL090B

FIG. 3

NEEL0097S03

EL-ASCD-03

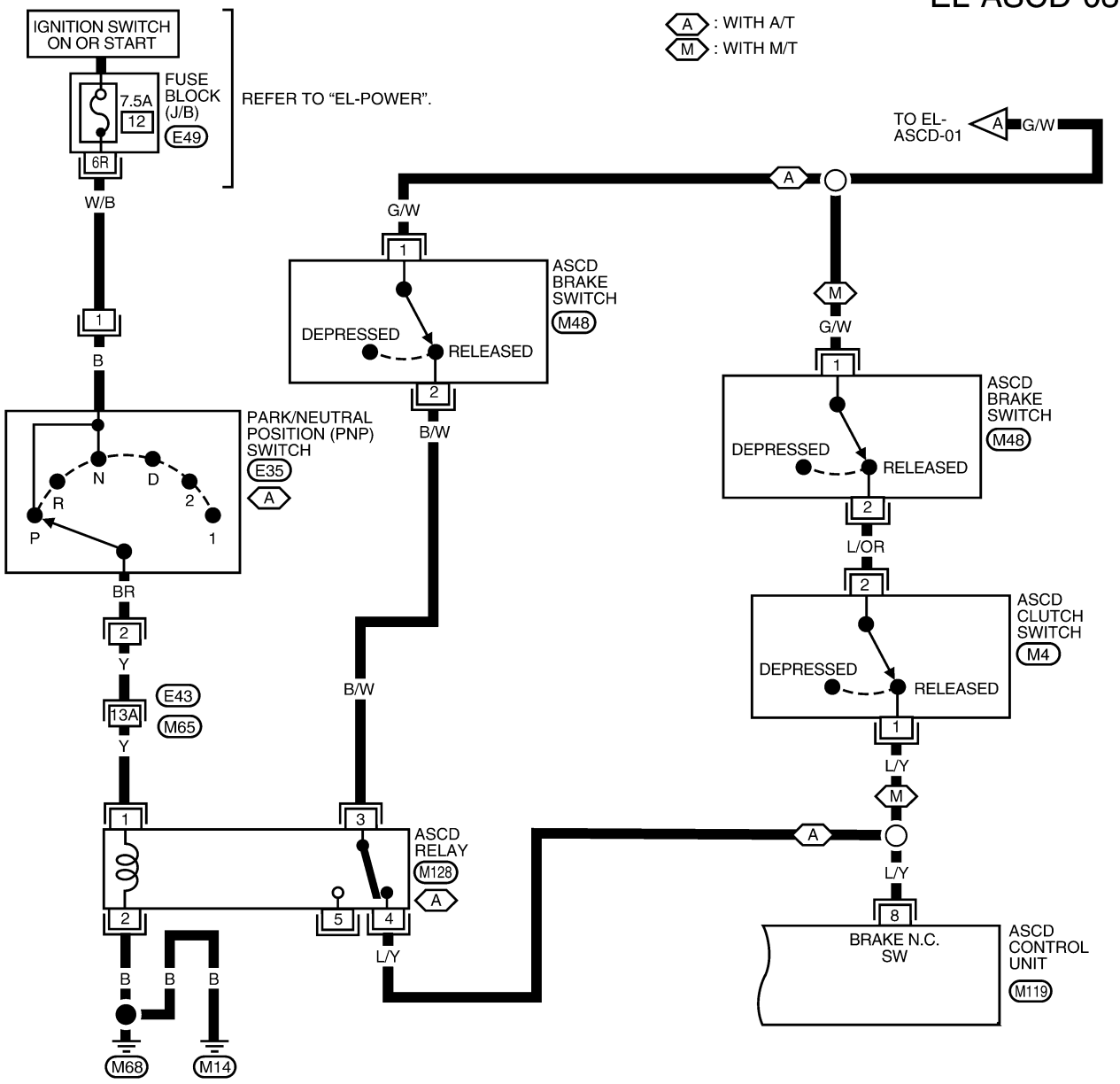

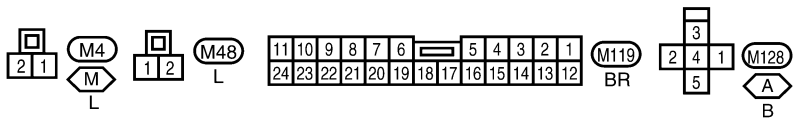

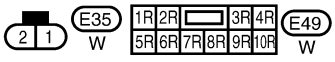

Refer to the following.
M65, E43 - SUPER MULTIPLE JUNCTION (SMJ)

WEL218A

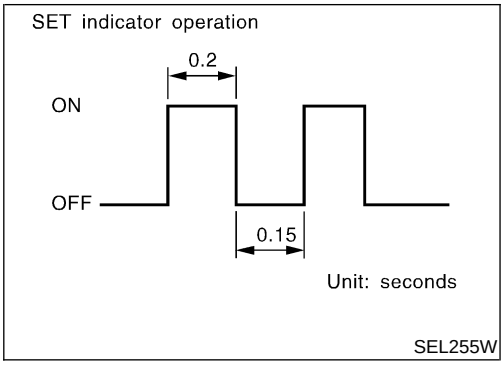

Fail-safe System

NEEL0098

DESCRIPTION

NEEL0098S01

When the fail-safe system senses a malfunction, it deactivates ASCD operation. The SET indicator in the combination meter will then flash.

MALFUNCTION DETECTION CONDITIONS

NEEL0098S02

Detection conditions	ASCD operation during malfunction detection
• ASCD steering (RES/ACCEL, CANCEL, COAST/SET) switch is stuck. • ASCD motor actuator ground circuit or power circuit is open or shorted. • ASCD motor actuator has internal malfunction. • Vehicle speed sensor is faulty. • ASCD control unit internal circuit is malfunctioning.	• ASCD is deactivated. • Vehicle speed memory is canceled.
• ASCD brake switch or stop lamp switch is faulty.	• ASCD is deactivated. • Vehicle speed memory is not canceled.

Trouble Diagnoses

SYMPTOM CHART

=NEEL0222

NEEL0222S01

PROCEDURE	Diagnostic procedure						
REFERENCE PAGE (EL-)	156	157	158	159	160	160	162
SYMPTOM	FAIL-SAFE SYSTEM CHECK	POWER SUPPLY AND GROUND CIRCUIT CHECK	ASCD BRAKE/STOP LAMP SWITCH CHECK	ASCD STEERING SWITCH CHECK	VEHICLE SPEED SENSOR CHECK	ASCD MOTOR ACTUATOR CIRCUIT CHECK	ASCD MOTOR ACTUATOR CHECK
ASCD cannot be set. (“CRUISE” indicator lamp does not turn ON.)		X		X★3			
ASCD cannot be set. (“SET” indicator lamp does not turn ON.)			X	X	X		
ASCD cannot be set. (“SET” indicator lamp blinks.★1)	X		X	X	X	X	
Vehicle speed does not decrease after COAST/SET switch has been pressed.				X			X
Vehicle speed does not return to the set speed after RES/ACCEL switch has been pressed.★2				X			X
Vehicle speed does not increase after RES/ACCEL switch has been pressed.				X			X
System is not released after CANCEL switch (steering) has been pressed.				X			X
Large difference between set speed and actual vehicle speed.					X	X	X
Deceleration is greatest immediately after ASCD has been set.					X	X	X

X: Applicable

★1: It indicates that system is in fail-safe. After completing diagnostic procedures, perform “FAIL-SAFE SYSTEM CHECK”, (EL-156) to verify repairs.

★2: If vehicle speed is greater than 40 km/h (25 MPH) after system has been released, pressing RES/ACCEL switch returns vehicle speed to the set speed previously achieved. However, doing so when the ON●OFF main switch is turned to “OFF”, vehicle speed will not return to the set speed since the memory is canceled.

★3: Check only ON●OFF switch built-in steering switch.

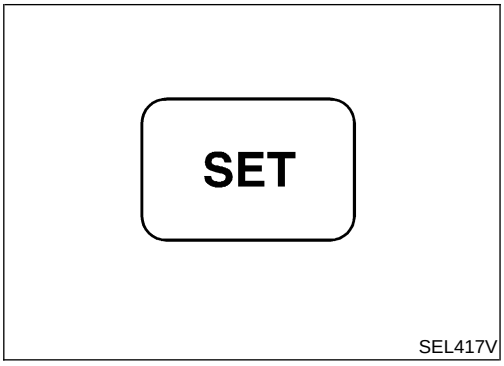

SEL417V

FAIL-SAFE SYSTEM CHECK

=NEEL0222S02

1. Turn ignition switch to ON position.
2. Turn CRUISE ON●OFF switch to ON and check if the "SET" indicator blinks.
   If the indicator lamp blinks, check the following.
- ASCD steering switch. Refer to "ASCD STEERING SWITCH CHECK", EL-159.

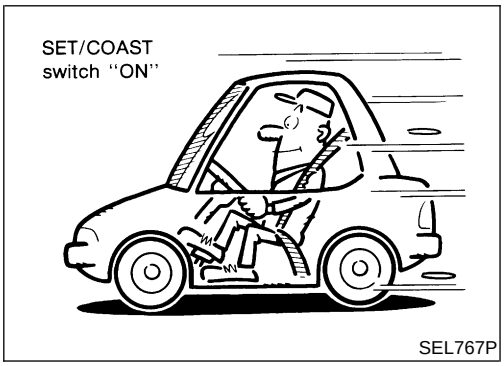

SEL767P

3. Drive the vehicle at more than 40 km/h (25 MPH) and push SET/COAST switch.
   If the indicator lamp blinks, check the following.
- Vehicle speed sensor. Refer to "VEHICLE SPEED SENSOR CHECK", EL-160.
- ASCD motor actuator circuit. Refer to "ASCD MOTOR ACTUATOR CIRCUIT CHECK", EL-160.
- Replace control unit.

4. Drive the vehicle at more than 20 km/h (12 MPH).
   If the indicator lamp blinks, check the following.
- Replace ASCD motor actuator.

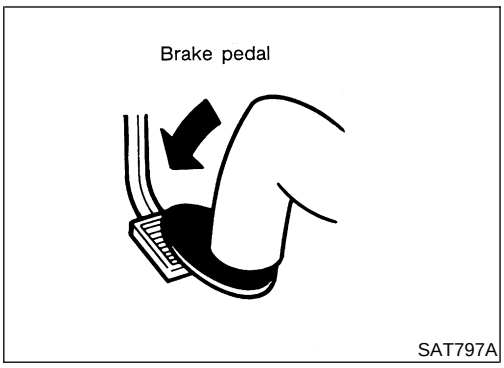

SAT797A

5. Depress brake pedal slowly (brake pedal should be depressed more than 5 seconds).
   If the indicator lamp blinks, check the following.
- ASCD brake/stop lamp switch. Refer to "ASCD BRAKE/STOP LAMP SWITCH CHECK", EL-158.

6. END. (System is OK.)

POWER SUPPLY AND GROUND CIRCUIT CHECK

=NEEL0222S03

1	CHECK POWER SUPPLY CIRCUIT FOR ASCD CONTROL UNIT

1. Disconnect ASCD control unit harness connector.
2. Turn ignition switch ON.
3. Check voltage between ASCD control unit harness connector M119 terminal 5 (G/W) and ground.

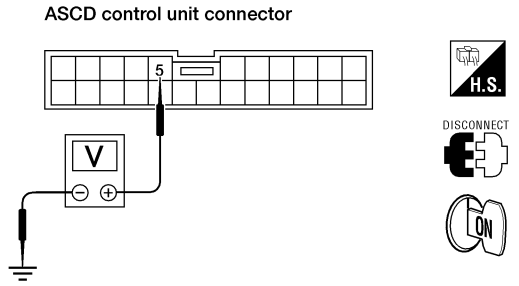

Does battery voltage exist?

WEL018A

Refer to "Wiring Diagram —ASCD—", EL-151.

Yes	▶	GO TO 2.
No	▶	**Check the following.** ● 10A fuse (No. 5 located in the fuse block) ● Harness for open or short

2	CHECK GROUND CIRCUIT FOR ASCD CONTROL UNIT

Check continuity between ASCD control unit harness connector M119 terminal 17 (B) and ground.

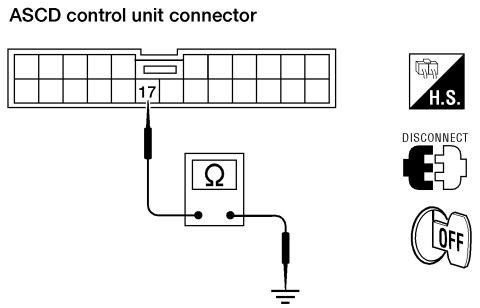

Does continuity exist?

WEL019A

Refer to "Wiring Diagram —ASCD—", EL-151.

Yes	▶	Power supply and ground circuit is OK.
No	▶	Repair harness.

ASCD BRAKE/STOP LAMP SWITCH CHECK

=NEEL0222S04

1 **CHECK ASCD BRAKE SWITCH CIRCUIT**

1. Turn ignition switch OFF.
2. Disconnect ASCD control unit harness connector.
3. Check continuity between ASCD control unit harness connector M119 terminal 8 (L/Y) and terminal 5 (G/W).

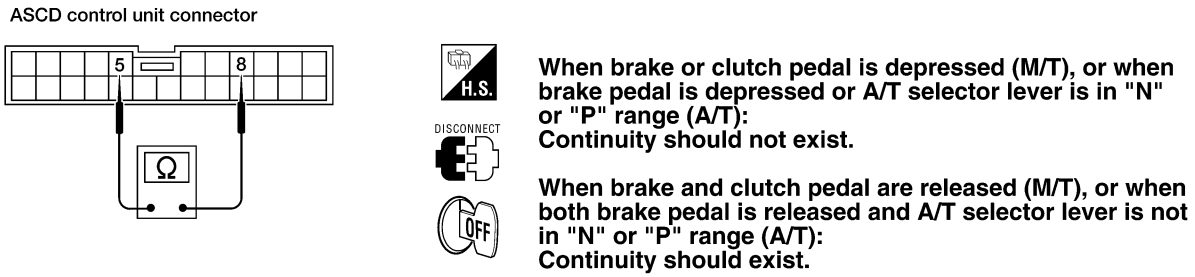

When brake or clutch pedal is depressed (M/T), or when brake pedal is depressed or A/T selector lever is in "N" or "P" range (A/T):
Continuity should not exist.

When brake and clutch pedal are released (M/T), or when both brake pedal is released and A/T selector lever is not in "N" or "P" range (A/T):
Continuity should exist.

WEL020A

OK or NG

OK	▶	GO TO 2.
NG	▶	**Check the following.** ● ASCD brake switch Refer to "ASCD BRAKE SWITCH AND STOP LAMP SWITCH", EL-163. ● Park/neutral position switch (A/T) Refer to "PARK/NEUTRAL POSITION SWITCH (A/T)", EL-163. ● Park/neutral position relay (A/T) Refer to "ASCD RELAY (A/T)", EL-164. ● ASCD clutch switch (M/T) Refer to "ASCD CLUTCH SWITCH (M/T)", EL-163. ● Harness for open or short ● ASCD control unit

2 **CHECK STOP LAMP SWITCH CIRCUIT**

1. Disconnect ASCD control unit harness connector.
2. Check voltage between ASCD control unit harness connector M119 terminal 23 (BR/R) and ground.

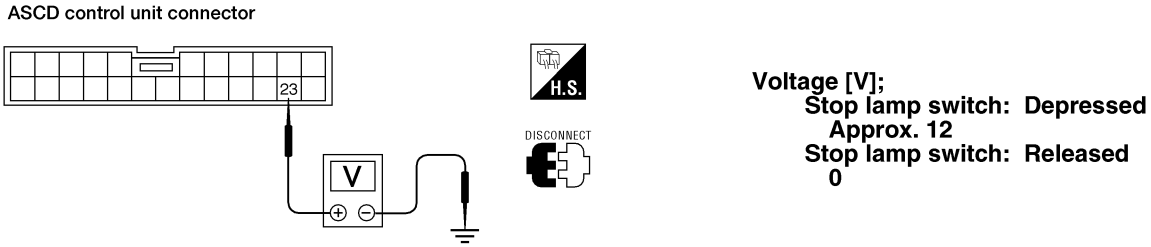

Voltage [V];
Stop lamp switch: Depressed
Approx. 12
Stop lamp switch: Released
0

WEL035A

Refer to "Wiring Diagram —ASCD—", EL-151.

OK or NG

OK	▶	ASCD brake/stop lamp switch is OK.
NG	▶	**Check the following.** ● 15A fuse (2-door models) or 20A fuse (4-door models) [No. 22, located in the fuse block (J/B)] ● Harness for open or short between ASCD control unit and stop lamp switch ● Harness for open or short between fuse and stop lamp switch ● Stop lamp switch Refer to "ASCD BRAKE SWITCH AND STOP LAMP SWITCH", EL-163.

ASCD STEERING SWITCH CHECK

=NEEL0222S05

1 **CHECK ASCD STEERING SWITCH CIRCUIT FOR ASCD CONTROL UNIT**

Check resistance between ASCD control unit harness connector M119 terminals 11 (G/OR) and 24 (LG/B).

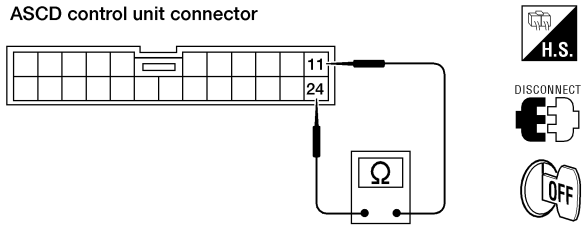

	Terminal No.	Resistance (kΩ)
CRUISE/ON-OFF SW	11 - 24	Approx. 0
SET/COAST SW		1.47 - 1.53
ACCEL/RES SW		3.24 - 3.36
CANCEL SW		5.00 - 5.20

WEL022A

Refer to "Wiring Diagram —ASCD—", EL-152.

OK or NG

OK	▶	ASCD steering switch is OK.
NG	▶	GO TO 2.

2 **CHECK CIRCUIT CONTINUITY**

1. Disconnect ASCD steering switch and ASCD control unit connector.
2. Check continuity between ASCD steering switch connector M205 terminal 14 (G) and ASCD control unit connector M119, terminal 11 (G/OR).
3. Check continuity between ASCD steering switch connector M205 terminal 13 (L) and ASCD control unit connector M119, terminal 24 (LG/B).

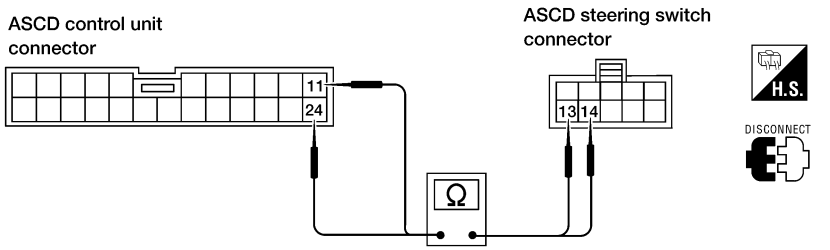

Continuity should exist.

WEL345A

Refer to "Wiring Diagram —ASCD—", EL-152.

OK or NG

OK	▶	Replace ASCD steering switch.
NG	▶	Repair or replace harness or connectors.

VEHICLE SPEED SENSOR CHECK

=NEEL0222S06

1	CHECK SPEEDOMETER OPERATION	
Refer to "Wiring Diagram —ASCD—", EL-151. **Does speedometer operate normally?**		
Yes	▶	GO TO 2.
No	▶	Check speedometer and vehicle speed sensor circuit. Refer to "Trouble Diagnoses", EL-76.

2	CHECK VEHICLE SPEED INPUT	
1. Apply wheel chocks and jack up drive wheel. 2. Disconnect ASCD control unit harness connector. 3. Check voltage between control unit connector M119 terminal 22 (G/B) and ground while turning drive wheel slowly by hand.		
ASCD control unit connector 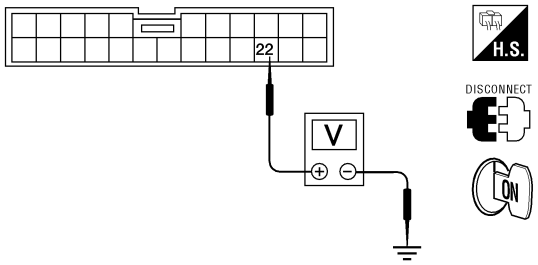 **Does voltage pointer deflect?** WEL023A		
Yes or No?		
Yes	▶	Vehicle speed sensor is OK.
No	▶	Check harness for open or short between ASCD control unit connector M119 terminal 22 (G/B) and combination meter connector M39 terminal 37 (G/B).

ASCD MOTOR ACTUATOR CIRCUIT CHECK

NEEL0222S07

1	CHECK ASCD MOTOR ACTUATOR (CLUTCH)	
1. Disconnect ASCD motor actuator connector. 2. Measure resistance between ASCD motor actuator connector E80 terminals 1 and 4.		
 ASCD motor actuator connector 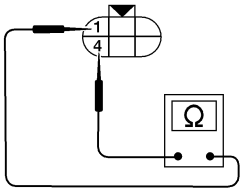 WEL024A		

Terminals		Resistance (Ω)
1	4	Approx. 38.5

Refer to "Wiring Diagram —ASCD—", EL-152.

OK or NG

OK	▶	GO TO 2.
NG	▶	Replace ASCD motor actuator.

2	CHECK ASCD MOTOR ACTUATOR (MOTOR)

1. Disconnect ASCD motor actuator connector.
2. Measure resistance between ASCD motor actuator connector E80 terminal 6 and terminals 2, 3, and 5.

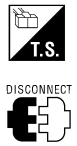

ASCD motor actuator connector

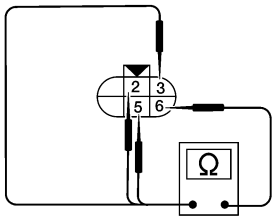

Terminals		Resistance (Ω)
6	2	Approx. 5.2
	3	
	5	

WEL089B

OK or NG

OK	▶	**Check the following.** ● Harness for open or short between ASCD motor actuator and ASCD control unit ● ASCD motor actuator (clutch) ground circuit
NG	▶	Replace ASCD motor actuator.

ASCD MOTOR ACTUATOR CHECK

=NEEL0222S08

1	CHECK ASCD WIRE

Check wire for improper installation, rust formation or breaks.

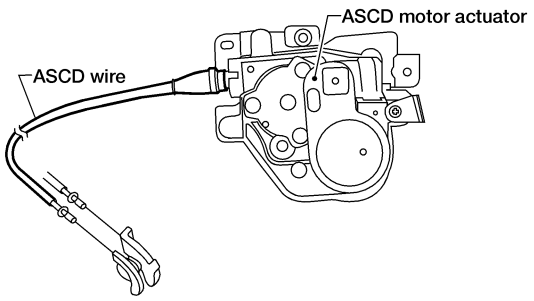

LEL620

OK or NG

OK	▶	Replace ASCD motor actuator.
NG	▶	Repair or replace wire. Refer to "ASCD Wire Adjustment", EL-165.

Electrical Component Inspection

=NEEL0223

ASCD STEERING SWITCH

NEEL0223S01

Check continuity between ASCD steering switch connector M205, terminals 14 and 13 by pushing each button.

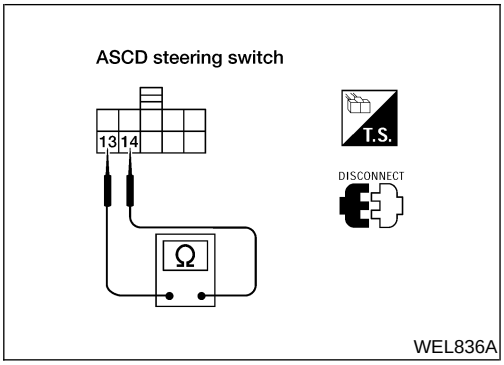

Button	Terminals	Resistance (kΩ) (Approx.)
ON●OFF	13 - 14	0
COAST/SET		1.47 - 1.53
RES/ACCEL		3.24 - 3.36
CANCEL		5.00 - 5.20

ASCD BRAKE SWITCH AND STOP LAMP SWITCH

NEEL0223S02

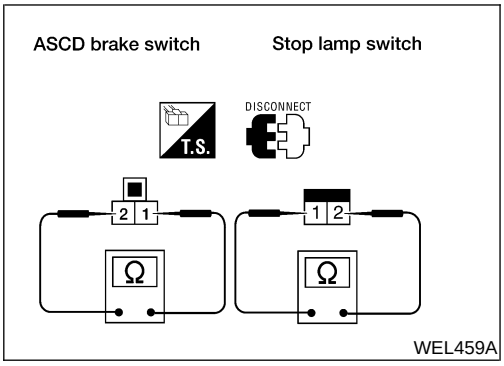

Condition	Continuity	
	ASCD brake switch (M48)	Stop lamp switch (M47)
When brake pedal is depressed	No	Yes
When brake pedal is released	Yes	No

Check brake pedal adjustment after checking each switch. Refer to *BR-18*, "Adjustment".

ASCD CLUTCH SWITCH (M/T)

NEEL0223S03

Check continuity between ASCD clutch switch M4 terminals 1 and 2.

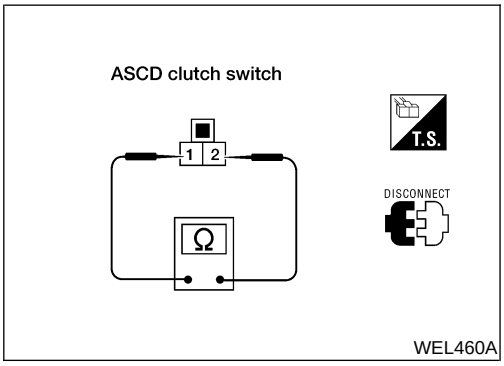

Condition	Continuity
When clutch pedal is depressed	No
When clutch pedal is released	Yes

PARK/NEUTRAL POSITION SWITCH (A/T)

NEEL0223S04

Check continuity between PNP switch E35 terminals 1 and 2.

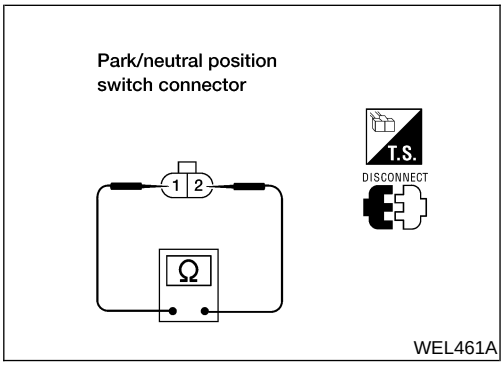

A/T selector lever position	Continuity
	Between terminals 1 and 2
"P"	Yes
"N"	Yes
Except "P" and "N"	No

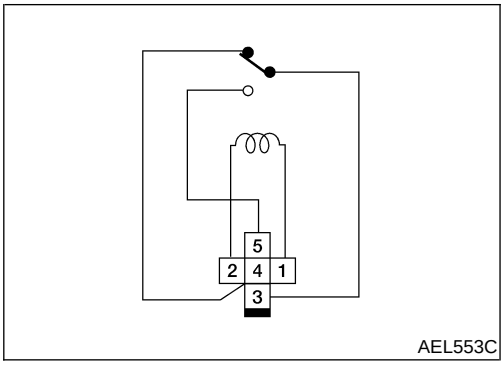

ASCD RELAY (A/T)

NEEL0223S05

Check continuity between ASCD relay harness connector M128 terminals 3 and 4, 3 and 5.

Condition	Continuity
12V direct current supply between terminals 1 and 2	Between terminals 3 and 5
No current supply	Between terminals 3 and 4

ASCD Wire Adjustment

=NEEL0224

WITH KA24DE

NEEL0224S01

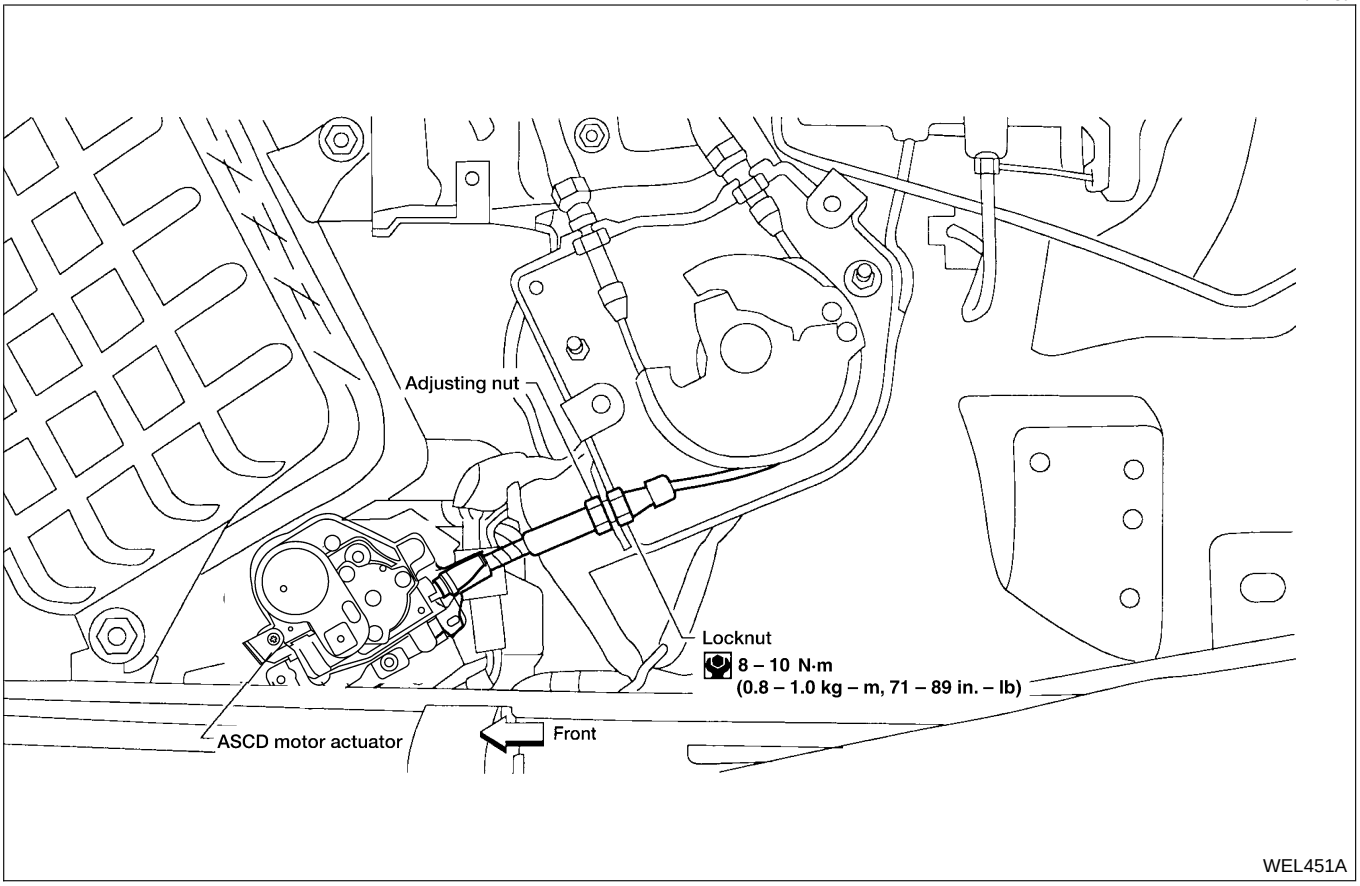

WEL451A

WITH VG33E

NEEL0224S02

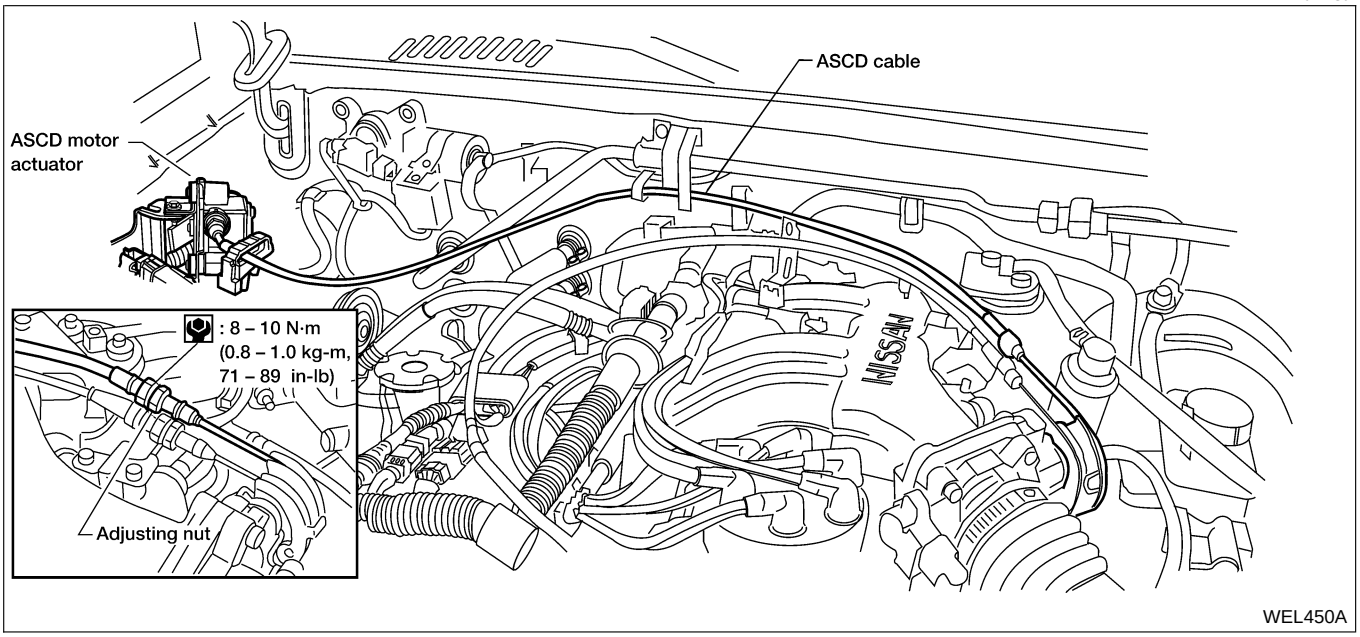

WEL450A

WITH VG33ER

NEEL0224S03

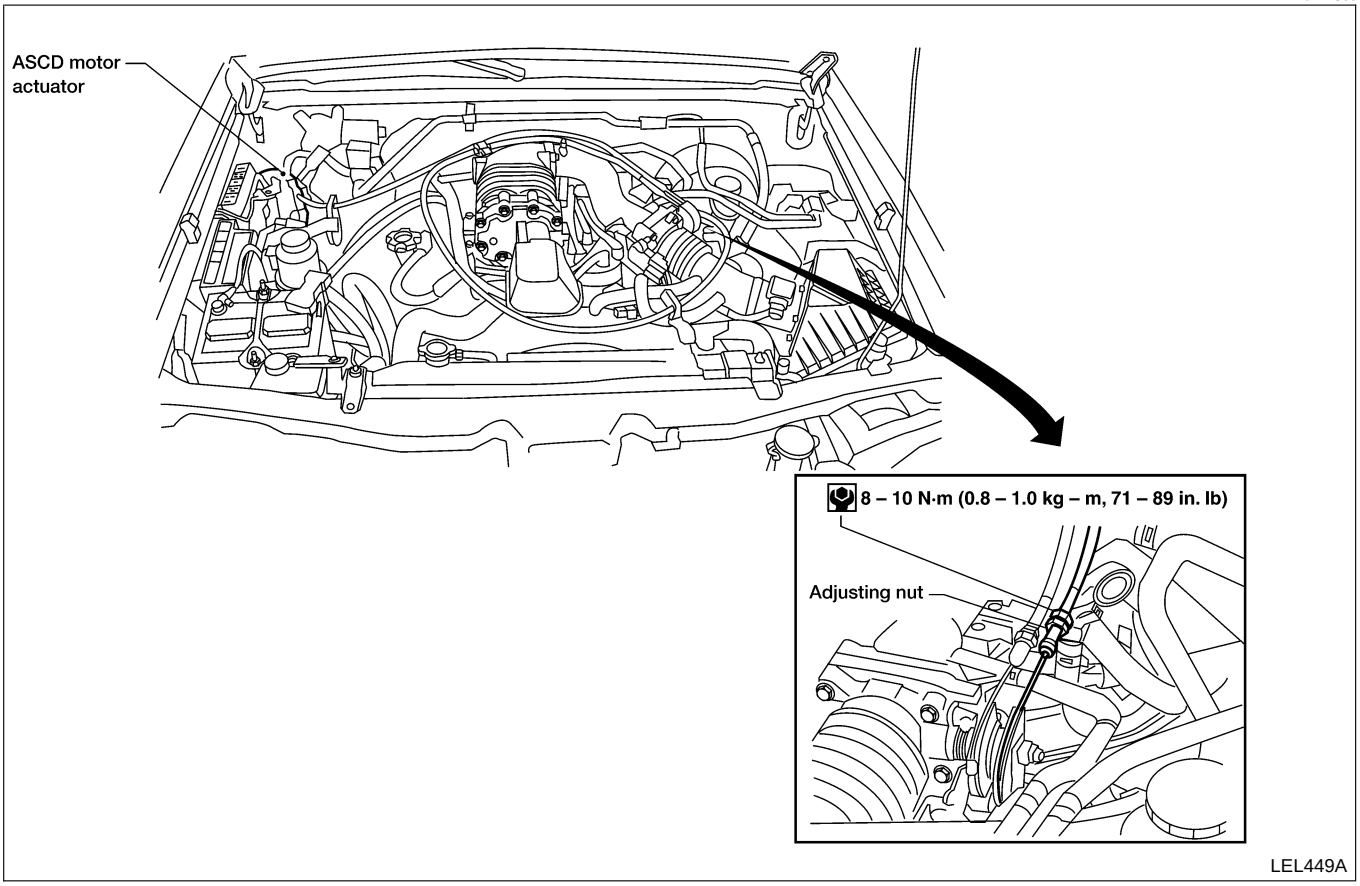

CAUTION:

- **Be careful not to twist ASCD wire when removing it.**
- **Do not tense ASCD wire excessively during adjustment.**

Adjust the tension of ASCD wire in the following manner.

1. Loosen lock nut and adjusting nut.
2. Make sure that accelerator wire is properly adjusted. Refer to ***FE-3***, "Adjusting Accelerator Wire".
3. Tighten adjusting nut just until throttle drum starts to move.
4. Loosen adjusting nut again 1/2 to 1 turn.
5. Tighten lock nut.

System Description

NEEL0102

Power is supplied at all times
- from 30A fusible link (with KA24DE) (letter **f**, located in the fuse and fusible link box) or
- from 40A fusible link (with VG33E and VG33ER) (letter **f**, located in the fuse and fusible link box)
- to circuit breaker terminal +
- through circuit breaker terminal –
- to power window relay terminal 5
- through 7.5A fuse [No. 28, located in the fuse block (J/B)]
- to smart entrance control unit terminal 49.

With the ignition switch in the ON or START position, power is supplied
- through 10A fuse [No. 5, located in the fuse block (J/B)]
- to smart entrance control unit terminal 27
- through smart entrance control unit terminal 46
- to power window relay terminal 2.

Ground is supplied to power window relay terminal 1
- through body grounds M14 and M68.

The power window relay is energized and power is supplied
- through power window relay terminal 3
- to main power window and door lock/unlock switch terminal 2
- to front power window switch RH terminal 4
- to rear power window switch LH terminal 5 (Crew Cab)
- to rear power window switch RH terminal 5 (Crew Cab).

Ground is supplied
- to main power window and door lock/unlock switch terminal 10
- through body grounds M14 and M68.

MANUAL OPERATION

NEEL0102S01

NOTE:
Numbers in parentheses are terminal numbers which apply with switch pressed in the UP and DOWN positions respectively.

Front Door LH

NEEL0102S0101

Power is supplied
- through main power window and door lock/unlock switch terminal (12, 16)
- to front power window motor LH terminal (UP, DN).

Ground is supplied
- to front power window motor LH terminal (DN, UP)
- through main power window and door lock/unlock switch terminal (16, 12).

Then, the motor raises or lowers the window until the switch is released or the window is fully closed or open.

Front Door RH

NEEL0102S0102

MAIN POWER WINDOW AND DOOR LOCK/UNLOCK SWITCH OPERATION
With front RH switch pressed, power is supplied
- through main power window and door lock/unlock switch (14, 13)
- to front power window switch RH (5, 2).

The following description is the same as the front power window switch RH description.
FRONT POWER WINDOW SWITCH RH OPERATION
Power is supplied
- through front power window switch RH (6, 3)
- to front power window motor RH (UP, DN).

Ground is supplied
- to front power window motor RH (DN, UP)
- through front power window switch RH (3, 6)
- to front power window switch RH (2, 5)

- through main power window and door lock/unlock switch (13, 14).

Then, the motor raises or lowers the window until the switch is released or the window is fully closed or open.

Rear Door LH (Crew Cab)

NEEL0102S0103

MAIN POWER WINDOW AND DOOR LOCK/UNLOCK SWITCH OPERATION
With rear LH switch pressed, power is supplied

- through main power window and door lock/unlock switch (1, 6)
- to rear power window switch LH (4, 3).

The following description is the same as the rear power window switch LH description.
REAR POWER WINDOW SWITCH LH OPERATION
Power is supplied

- through rear power window switch LH (1, 2)
- to rear power window motor LH (UP, DN).

Ground is supplied

- to rear power window motor LH (DN, UP)
- through rear power window switch LH (2, 1)
- to rear power window switch LH (3, 4)
- through main power window and door lock/unlock switch (6, 1).

Then, the motor raises or lowers the window until the switch is released or the window is fully closed or open.

Rear Door RH (Crew Cab)

NEEL0102S0104

MAIN POWER WINDOW AND DOOR LOCK/UNLOCK SWITCH OPERATION
With rear RH switch pressed, power is supplied

- through main power window and door lock/unlock switch (7, 9)
- to rear power window switch RH (4, 3).

The following description is the same as the rear power window switch RH description.
REAR POWER WINDOW SWITCH RH OPERATION
Power is supplied

- through rear power window switch RH (1, 2)
- to rear power window motor RH (UP, DN).

Ground is supplied

- to rear power window motor RH (DN, UP)
- through rear power window switch RH (2, 1)
- to rear power window switch RH (3, 4)
- through main power window and door lock/unlock switch (9, 7).

Then, the motor raises or lowers the window until the switch is released or the window is fully closed or open.

AUTO OPERATION

NEEL0102S02

The power window AUTO feature enables the driver to lower the driver window without holding the switch in the DOWN position.
The AUTO feature is activated by pressing the switch beyond the DOWN position to the AUTO position.
The AUTO feature only operates on the downward movement of the driver window.
The window can be stopped before it is fully open by pressing the window switch to the UP position.

POWER WINDOW LOCK

NEEL0102S03

The power window lock prevents operation of all windows except the driver window.
When the lock switch is pressed to lock position, ground of the front power window switch RH and the rear power window switch LH and RH (Crew Cab) is disconnected in the main power window and door lock/unlock switch. This prevents the front power window motor RH and the rear power window motor LH and RH (Crew Cab) from operating.

RETAINED POWER OPERATION (WITH POWER DOOR LOCKS)

NEEL0102S04

When the ignition switch is turned to OFF position from ON or START position, power is supplied for 45 seconds

- to power window relay terminal 2
- from smart entrance control unit terminal 46.

Ground is supplied

- to power window relay terminal 1
- through body grounds M14 and M68.

When power and ground are supplied, the power window relay continues to be energized, and the power window can be operated.
The retained power operation is cancelled when the driver or passenger side door is opened.

Circuit Diagram

NEEL0201

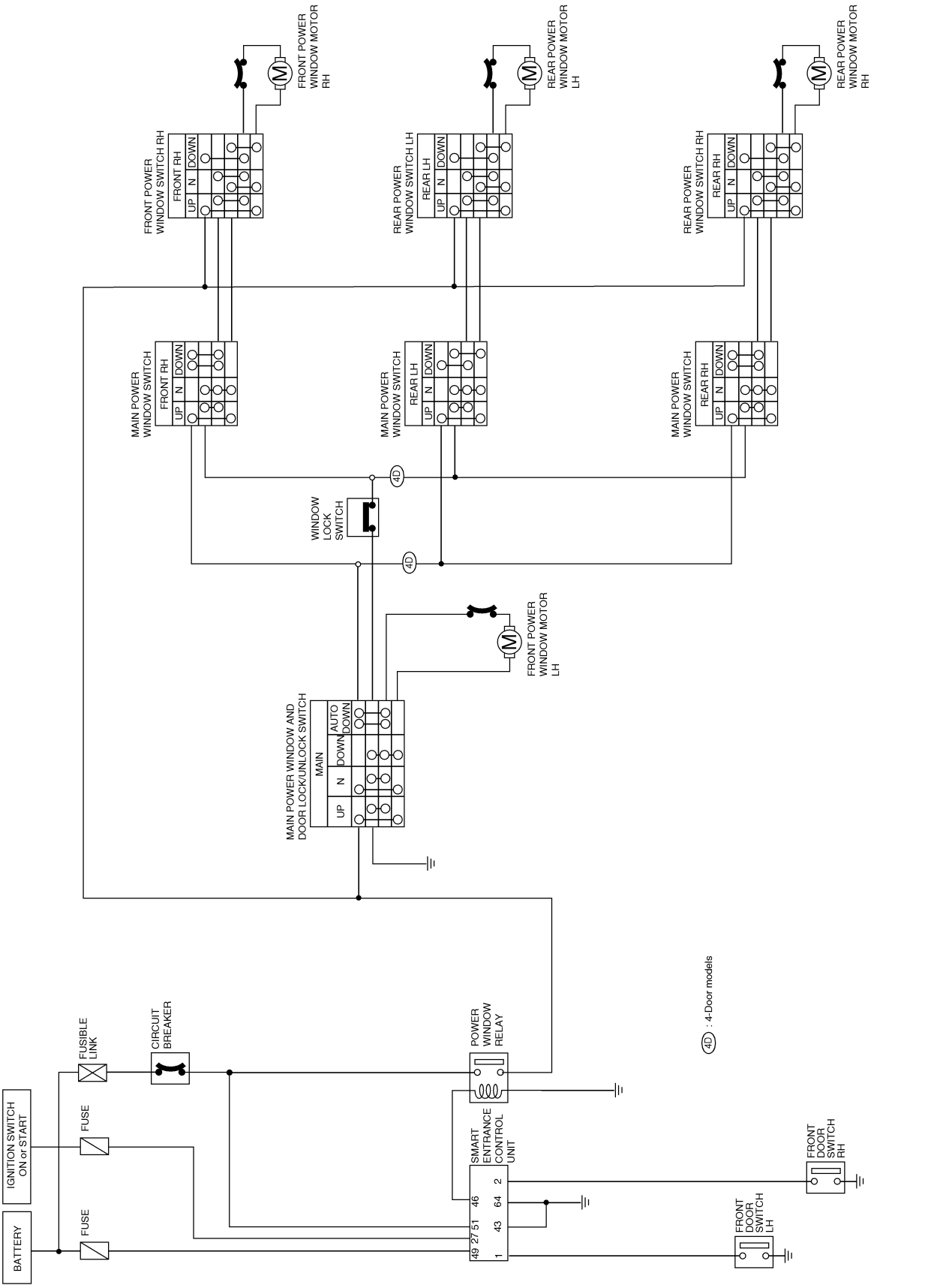

WEL501A

Wiring Diagram — WINDOW —

NEEL0104

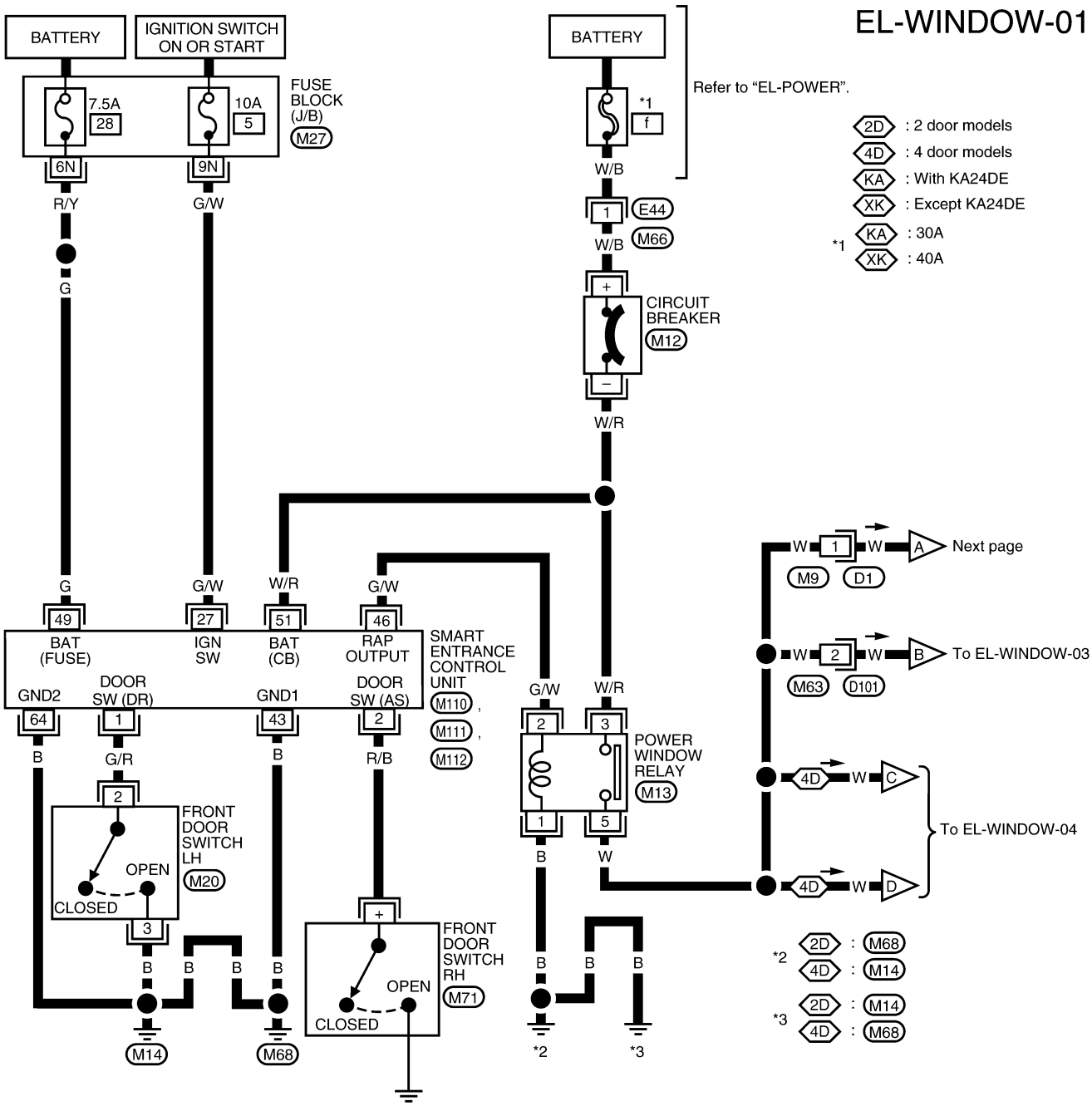

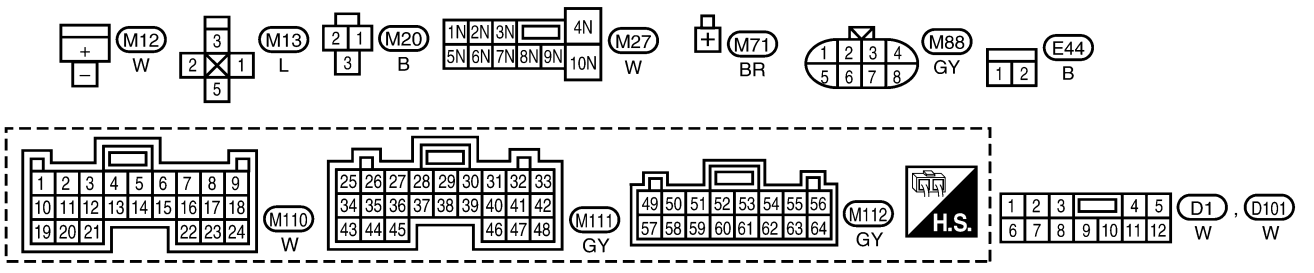

WEL485A

EL-WINDOW-02

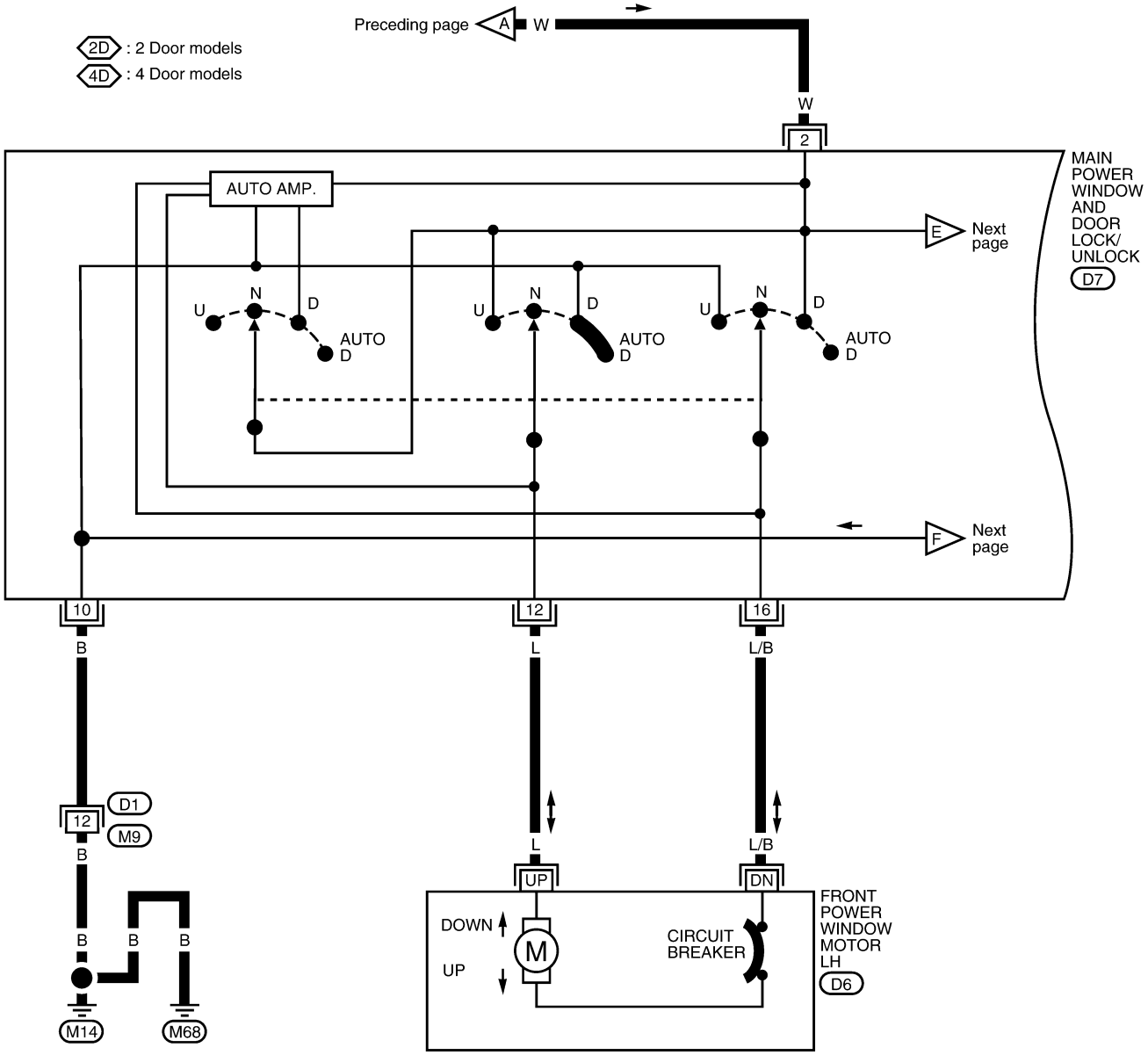

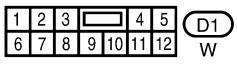



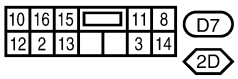

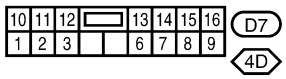

LEL770

EL-WINDOW-03

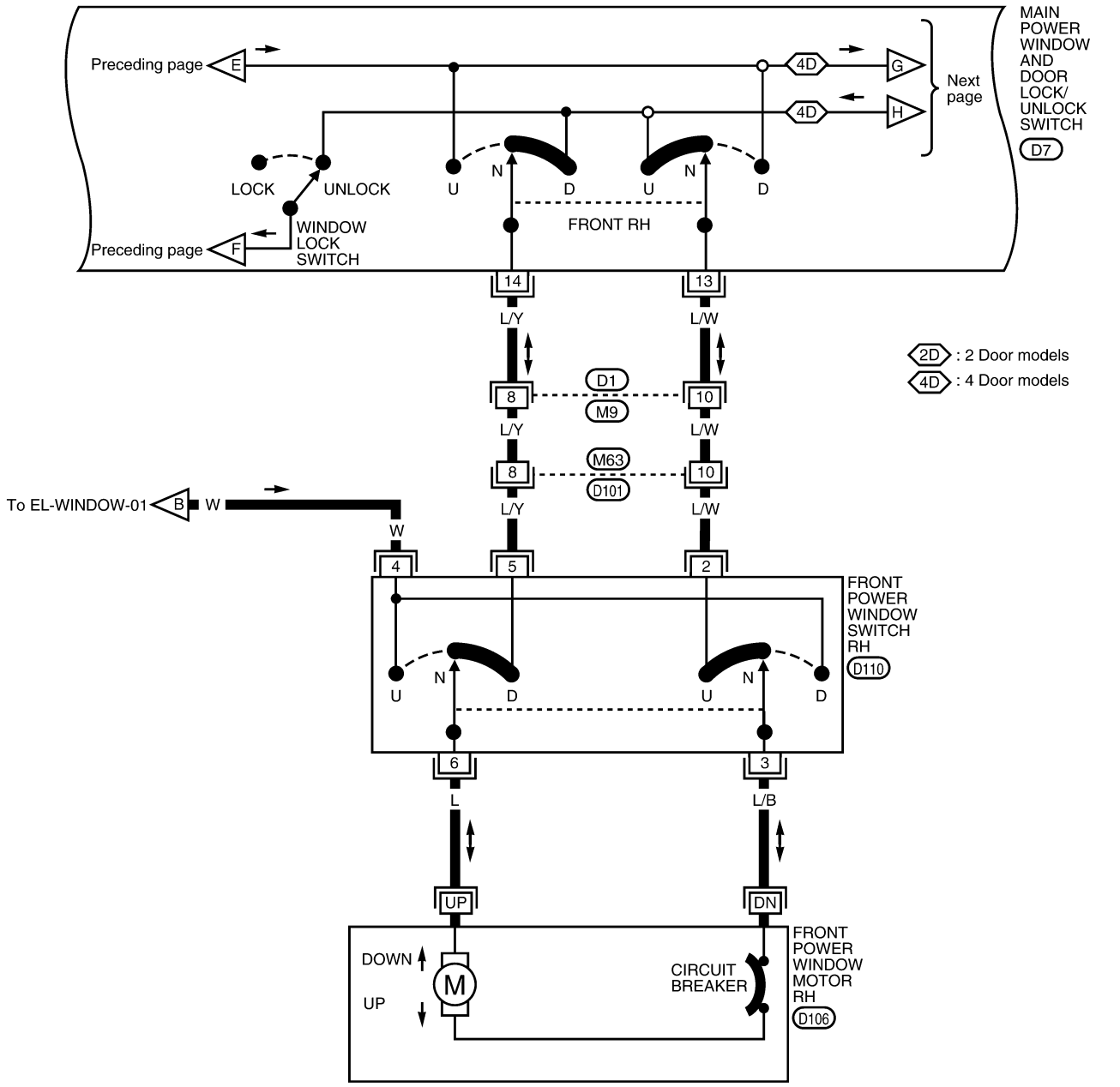

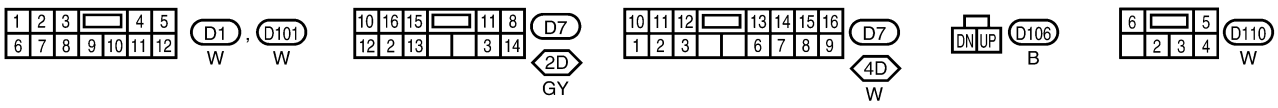

LEL771

Wiring Diagram — WINDOW — (Cont'd)

EL-WINDOW-04

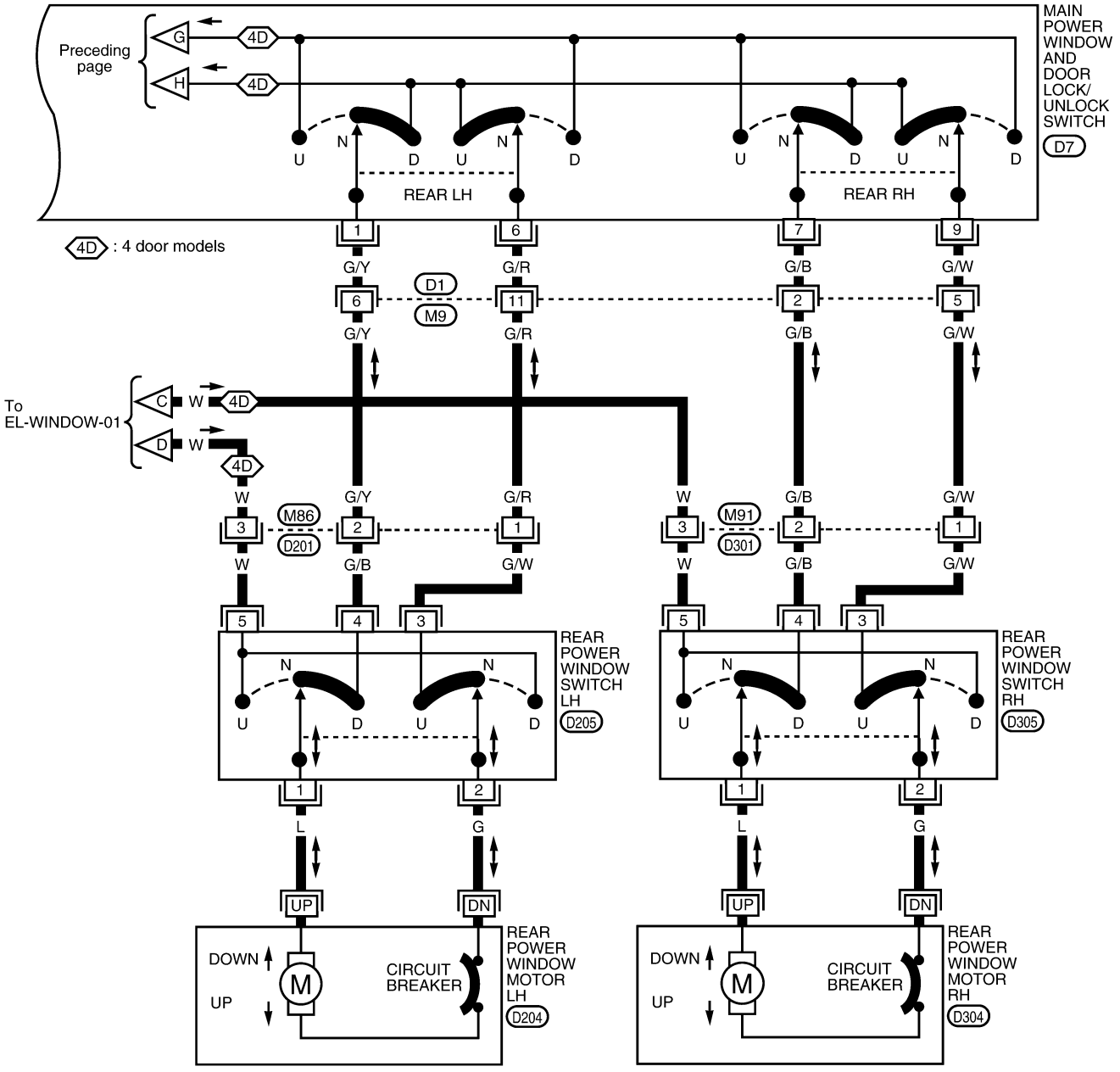

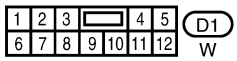

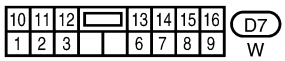



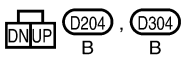

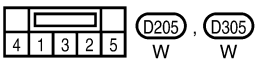

LEL772

Trouble Diagnoses

NEEL0105

Symptom	Possible cause	Repair order
None of the power windows can be operated using any switch.	1. 10A fuse, 30A fusible link (with KA24DE), or 40A fusible link (with VG33E and VG33ER) and M12 circuit breaker 2. Power window relay ground circuit 3. Power window relay 4. Open/short in main power window and door lock/unlock switch circuit 5. Open/short in power window relay control circuit 6. Smart entrance control unit	1. Check 10A fuse (No. 5, located in fuse block [J/B]), 30A fusible link (with KA24DE) (letter **f**, located in fuse and fusible link box), 40A fusible link (with VG33E and VG33ER) (letter **f**, located in fuse and fusible link box) and M12 circuit breaker. Turn ignition switch ON and verify battery positive voltage is present at smart entrance control unit terminal 27, main power window and door lock/unlock switch terminal 2, front power window switch RH terminal 4 and rear power window switch LH and RH terminal 5 (crew cab). 2. Check power window relay ground circuit. 3. Check power window relay. 4. Check circuit between power window relay and main power window and door lock/unlock switch for open/short circuit. 5. Check circuit between smart entrance control unit and power window relay for open/short circuit. 6. Check smart entrance control unit.
Front power window LH cannot be operated but other windows can be operated.	1. Front power window motor LH circuit 2. Front power window motor LH 3. Main power window and door lock/unlock switch	1. Check harness between main power window and door lock/unlock switch and front power window motor LH for open or short circuit. 2. Check front power window motor LH. 3. Check main power window and door lock/unlock switch.
Passenger power window cannot be operated.	1. Passenger power window switch 2. Passenger power window motor 3. Main power window and door lock/unlock switch 4. Power window circuit	1. Check passenger power window switch. 2. Check passenger power window motor. 3. Check main power window and door lock/unlock switch. 4. Check the following. a. Check harnesses between main power window and door lock/unlock switch and passenger power window switch for open/short circuit. b. Check harnesses between passenger power window switch and passenger power window motor for open/short circuit.
Passenger power window cannot be operated using main power window and door lock/unlock switch but can be operated by passenger power window switch.	1. Main power window and door lock/unlock switch	1. Check main power window and door lock/unlock switch.
Driver window AUTO function cannot be operated using main power window and door lock/unlock switch.	1. Main power window and door lock/unlock switch	1. Check main power window and door lock/unlock switch.
Retained power operation does not operate.	1. Retained power signal circuit 2. Driver or passenger side door switch circuit 3. Smart entrance control unit	1. Check harness between power window relay terminal 2 and smart entrance control unit terminal 46 for open circuit. 2. Check the following a. Harness between smart entrance control unit and driver or passenger side door switch for short circuit b. Driver or passenger side door switch ground circuit c. Driver or passenger side door switch 3. Check smart entrance control unit. Refer to “SMART ENTRANCE CONTROL UNIT”, EL-230.

Component Parts and Harness Connector Location

NEEL0106

Fuse block (J/B)

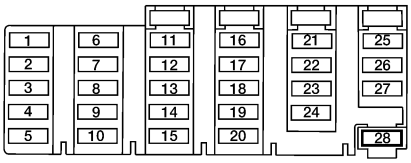

Fuse and fusible link box
For KA24DE

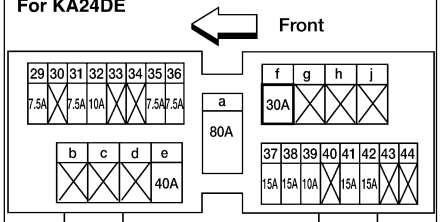

No 29 - 44: FUSE
a - j: FUSIBLE LINK
E31

Fuse and fusible link box
For VG33E

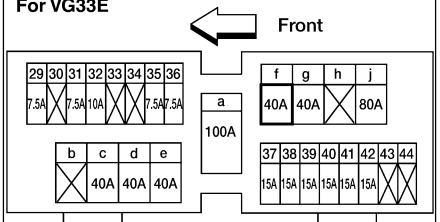

No 29 - 44: FUSE
a - j: FUSIBLE LINK
E31

Fuse and fusible link box
For VG33ER

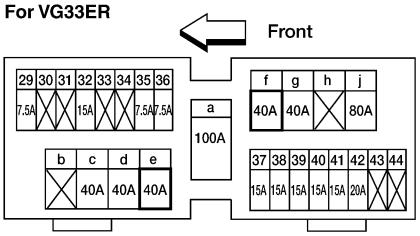

No 29 - 44: FUSE
a - j: FUSIBLE LINK
E31

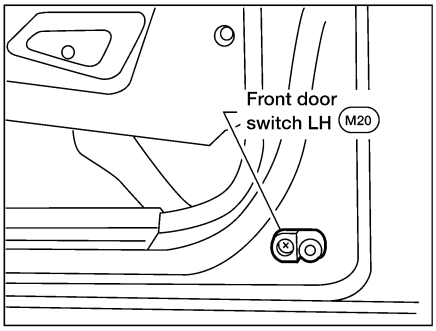

Crew Cab

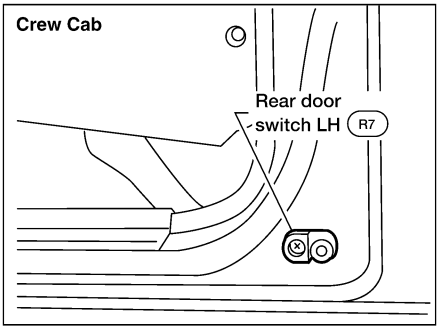

View with steering column covers removed

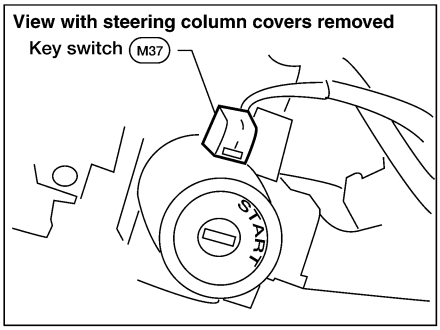

View with front door trim panel removed

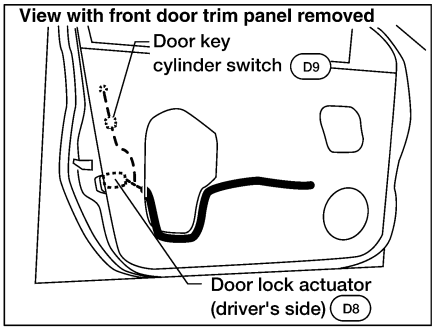

View with rear trim panel removed

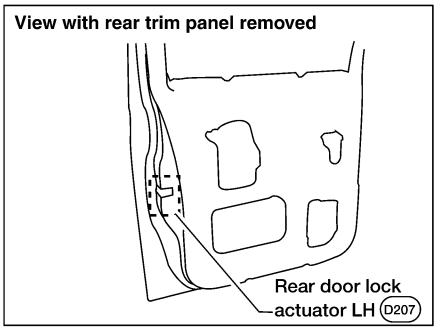

Main power widnow and
door lock/unlock
switch LH
D7

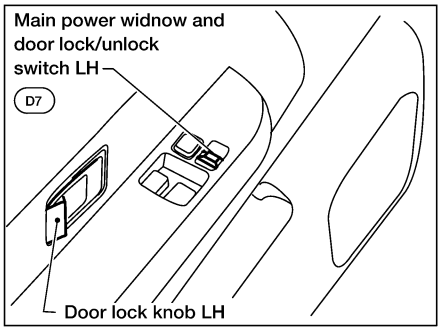

View with instrument lower panel driver side removed

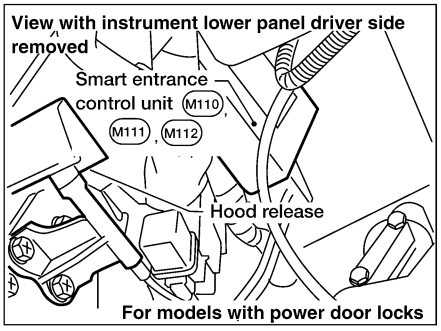

WEL466A

System Description

NEEL0107

Power is supplied at all times
- through 30A fusible link [letter **f**, located in the fuse and fusible link box (with KA24DE)] or
- through 40A fusible link [letter **f**, located in the fuse and fusible link box (with VG33E and VG33ER)]
- to circuit breaker terminal +
- through circuit breaker terminal –
- to smart entrance control unit terminal 51.

Power is supplied at all times
- through 7.5A fuse [No. 28, located in the fuse block (J/B)]
- to smart entrance control unit termnal 49 and
- to key switch terminal 1.

Ground is supplied
- to smart entrance control unit terminals 43 and 64
- through body grounds M14 and M68.

INPUT

NEEL0107S01

With the key in the ignition key cylinder, power is supplied
- through key switch terminal 2
- to smart entrance control unit terminal 25.

With front door LH open, ground is supplied
- to smart entrance control unit terminal 1
- through front door switch LH terminal 2
- through front door switch LH terminal 3
- through body grounds M14 and M68.

With front door RH open, ground is supplied
- to smart entrance control unit terminal 2
- through front door switch RH terminal +.

With rear door LH and RH (Crew Cab) open, ground is supplied
- to smart entrance control unit terminal 3
- through rear door switch LH and RH terminals +.

With the key inserted in the front door key cylinder switch LH and turned to LOCK, ground is supplied
- to smart entrance control unit terminal 11
- through front door key cylinder switch LH terminal 1
- through front door key cylinder switch LH terminal 2
- through body grounds M14 and M68.

With the key inserted in the front door key cylinder switch LH and turned to UNLOCK, ground is supplied
- to smart entrance control unit terminal 10
- through front door key cylinder switch LH terminal 3
- through front door key cylinder switch LH terminal 2
- through body grounds M14 and M68.

With the main power window and door lock/unlock switch pressed to LOCK, ground is supplied
- to smart entrance control unit terminal 5
- through main power window and door lock/unlock switch terminal 15
- through main power window and door lock/unlock switch terminal 10
- through body grounds M14 and M68.

With the door lock/unlock switch RH pressed to LOCK, ground is supplied
- to smart entrance control unit terminal 5
- through door lock/unlock switch RH terminal 6
- through door lock/unlock switch RH terminal 4
- through body grounds M14 and M68.

With the main power window and door lock/unlock switch pressed to UNLOCK, ground is supplied
- to smart entrance control unit terminal 4

- through main power window and door lock/unlock switch terminal 11
- through main power window and door lock/unlock switch terminal 10
- through body grounds M14 and M68.

With the door lock/unlock switch RH pressed to UNLOCK, ground is supplied

- to smart entrance control unit terminal 4
- through door lock/unlock switch RH terminal 3
- through door lock/unlock switch RH terminal 4
- through body grounds M14 and M68.

OUTPUT

NEEL0107S02

Unlock

NEEL0107S0201

Ground is supplied

- to front door lock actuator LH and RH and rear door lock actuator LH and RH (Crew Cab) terminal 3
- through smart entrance control unit terminal 54.

FRONT DOOR LH
Power is supplied

- to front door lock actuator LH terminal 1
- through smart entrance control unit terminal 55.

FRONT DOOR RH
Power is supplied

- to front door lock actuator RH terminal 1
- through smart entrance control unit terminal 56.

REAR DOOR LH AND RH (CREW CAB)
Power is supplied

- to rear door lock actuator LH and RH terminal 1
- through smart entrance control unit terminal 56.

Then, the doors are unlocked.

Lock

NEEL0107S0202

Ground is supplied

- to front door lock actuator LH terminal 1
- through smart entrance control unit terminal 55 and
- to front door lock actuator RH and rear door lock actuator LH and RH (Crew Cab) terminal 1
- through smart entrance control unit terminal 56.

Power is supplied

- to front door lock actuator LH and RH and rear door lock actuator LH and RH (Crew Cab) terminal 3
- through smart entrance control unit terminal 54.

Then, the doors are locked.

OPERATION

NEEL0107S03

- The main power window and door lock/unlock switch on front door LH trim and door lock/unlock switch RH on front door RH trim can lock and unlock all doors.
- With the key inserted in the front door key cylinder LH or RH, turning it to LOCK locks all doors; turning it to UNLOCK once unlocks the corresponding door; turning it to UNLOCK again within 5 seconds of the first unlock operation unlocks all other doors (signal from door key cylinder switch).

Key Reminder

NEEL0107S0301

When performing a door locking operation using either the main power window and door lock/unlock switch, the door lock/unlock switch RH, the front door LH lock knob or a multi-remote controller, all the doors will lock and then will immediately unlock if the

- key switch is in INSERTED position (key is in ignition key cylinder) and
- ignition switch is in the OFF position and
- either front door switch LH or RH is in OPEN position (door is open).

Circuit Diagram

NEEL0108

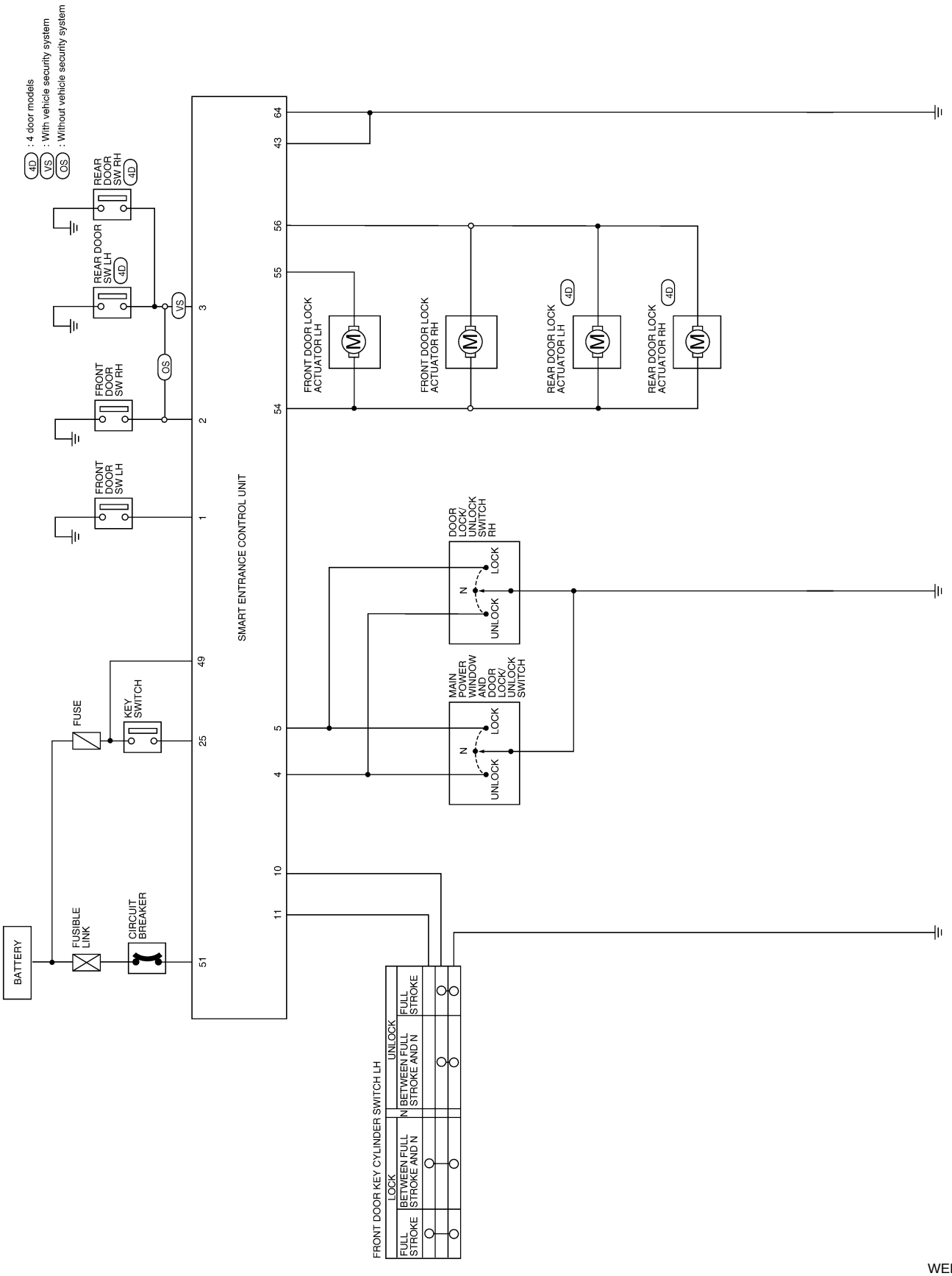

WEL083B

Wiring Diagram — D/LOCK —

NEEL0109

FIG. 1

NEEL0109S01

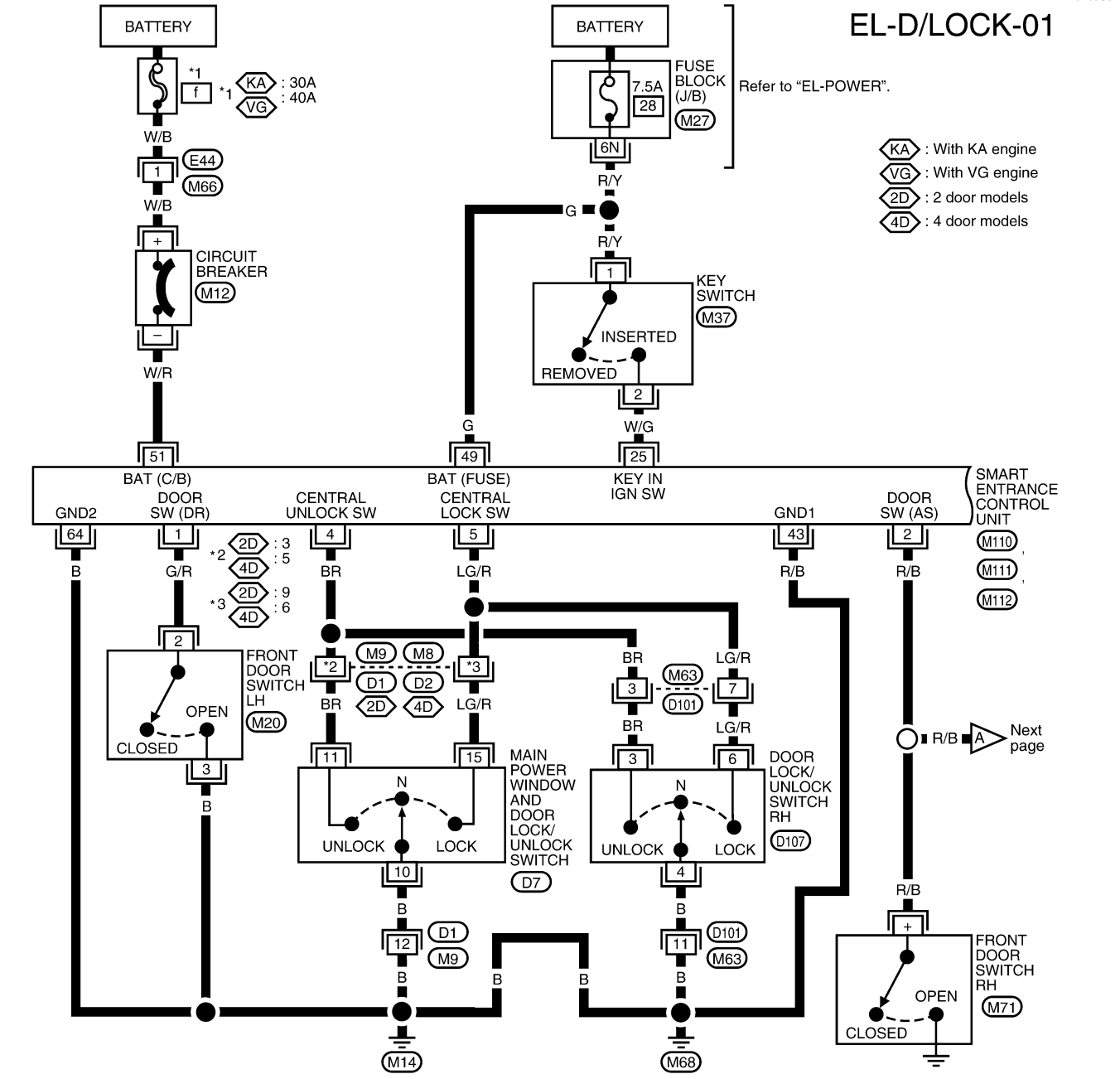

WEL084B

FIG. 2

NEEL0109S02

EL-D/LOCK-02

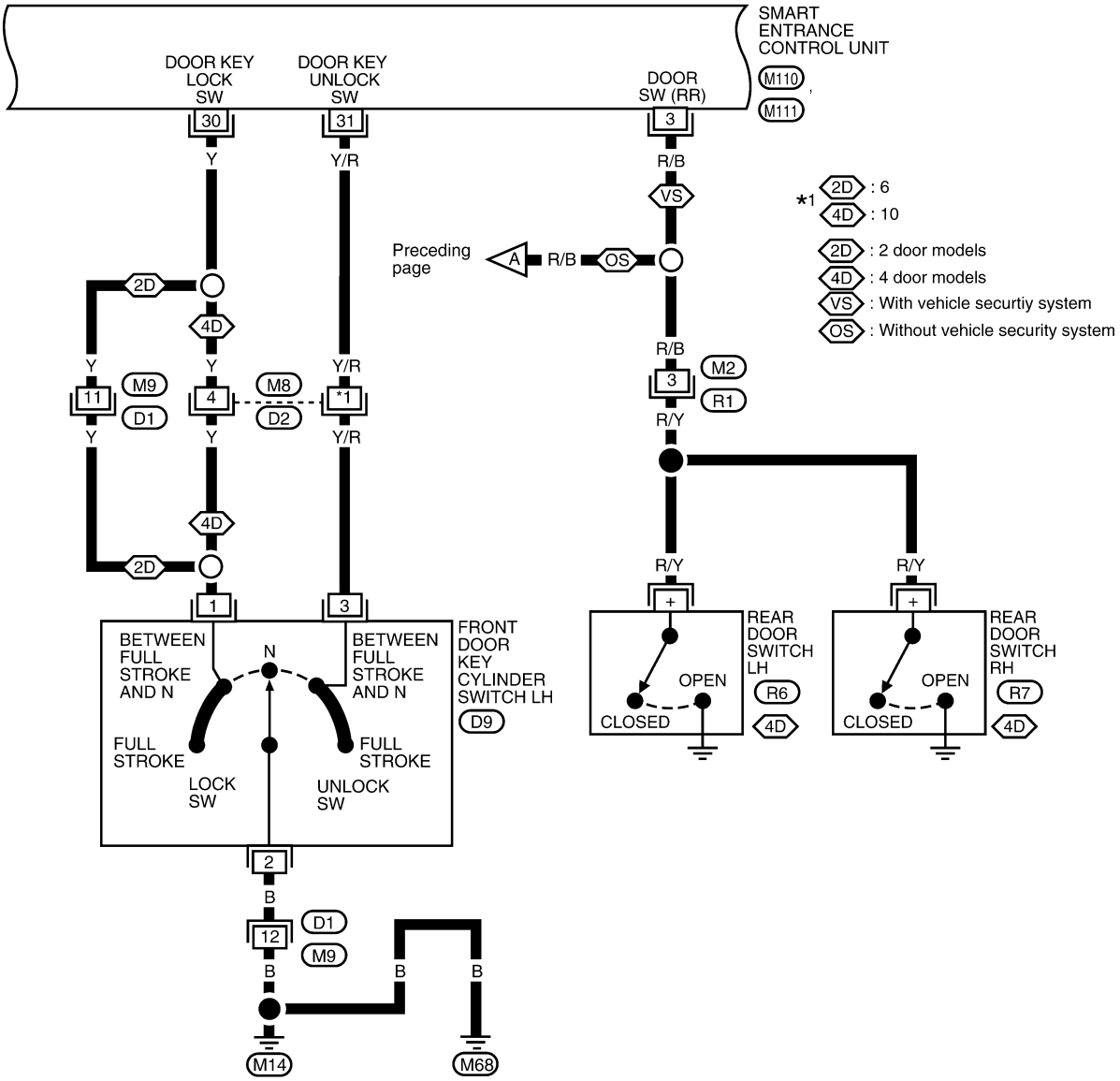

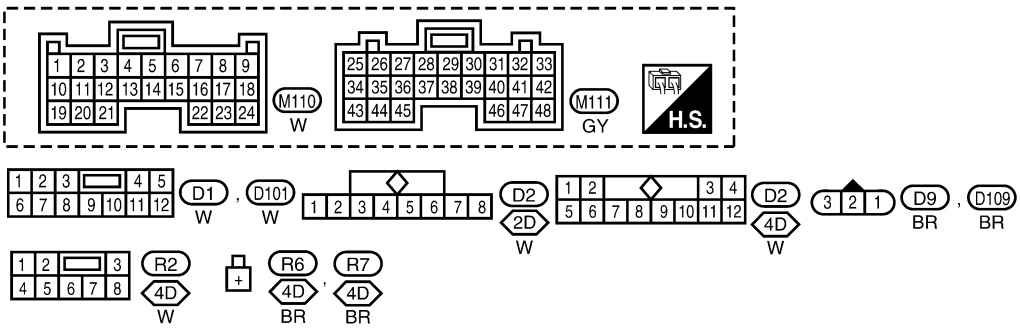

WEL085B

FIG. 3

NEEL0109S03

EL-D/LOCK-03

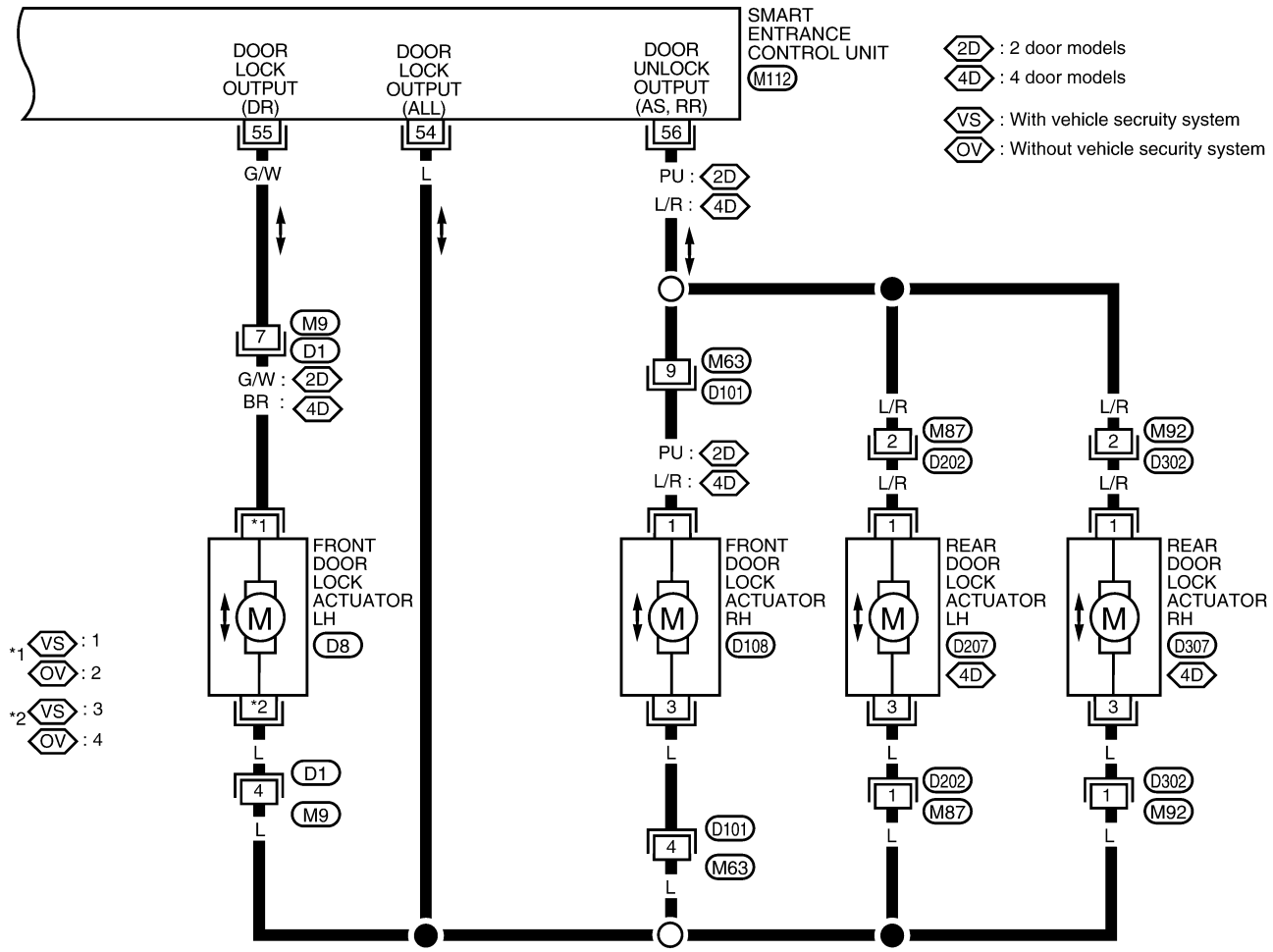

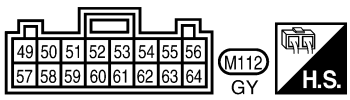

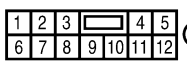



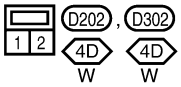

LEL224A

Trouble Diagnoses

NEEL0110

SYMPTOM CHART

NEEL0110S01

REFERENCE PAGE (EL-)	183	184	185	187	188	189
SYMPTOM	MAIN POWER SUPPLY AND GROUND CIRCUIT CHECK	DOOR SWITCH CHECK	KEY SWITCH (INSERT) CHECK	DOOR LOCK/UNLOCK SWITCH CHECK	FRONT DOOR KEY CYLINDER SWITCH CHECK	DOOR LOCK ACTUATOR CHECK
Key reminder door system does not operate properly.	X	X	X			X
Specific door lock actuator does not operate.	X					X
Power door lock does not operate with door lock and unlock switch (LH and RH) on door trim.	X			X		
Power door lock does not operate with front door key cylinder operation.	X				X	
Power door lock does not operate with back door key cylinder operation.	X					

X: Applicable

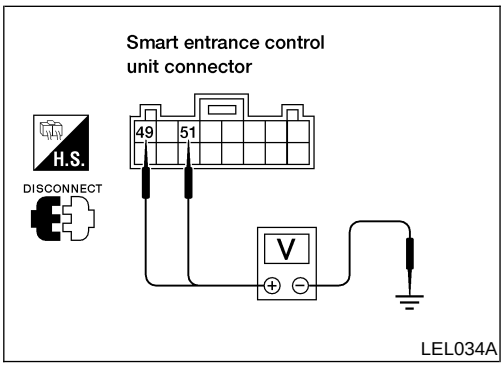

MAIN POWER SUPPLY AND GROUND CIRCUIT CHECK

NEEL0110S02

Main Power Supply Circuit Check

NEEL0110S0201

Terminal		Ignition switch		
(+)	(−)	OFF	ACC	ON
M112 - 49 (G)	Ground	Battery voltage	Battery voltage	Battery voltage
M112 - 51 (W/R)				

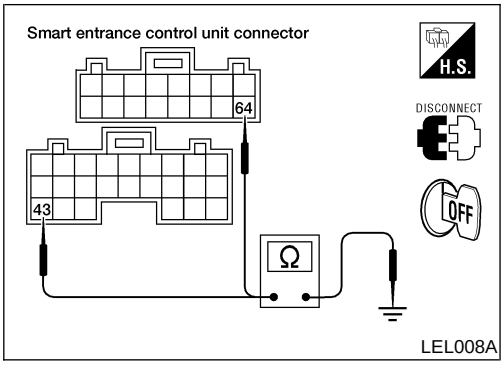

Ground Circuit Check

NEEL0110S0202

Terminals	Continuity
M111 - 43 (B) - Ground	Yes
M112 - 64 (B) - Ground	

DOOR SWITCH CHECK

NEEL0110S05

1 **CHECK FRONT DOOR SWITCH INPUT SIGNAL**

Check voltage between smart entrance control unit harness connector M111 terminals 1 (G/R), 2 (G/B) or 3 (R/B) and ground.

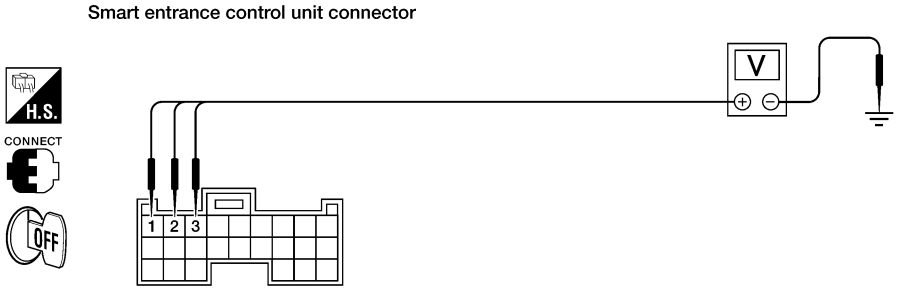

WEL517A

Refer to "Wiring Diagram", EL-180.

OK or NG

OK	▶	Door switch is OK.
NG	▶	GO TO 2.

2 **CHECK FRONT DOOR SWITCH**

1. Disconnect door switch harness connector.
2. Check continuity between door switch terminals.

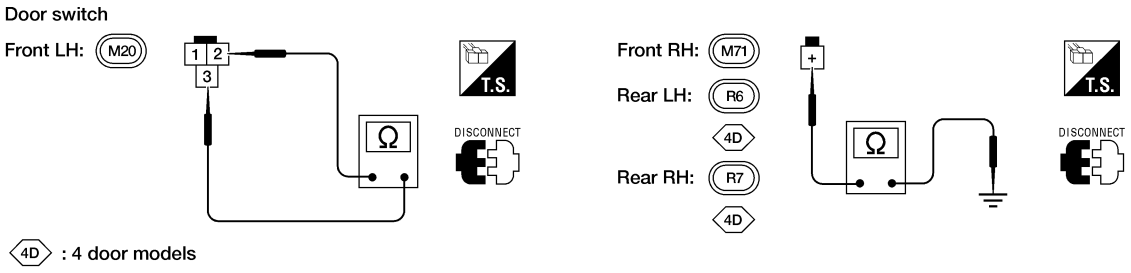

AEL577C

OK or NG

OK	▶	**Check the following** ● Front door switch LH ground circuit or front door switch RH ground condition ● Harness for open or short between smart entrance control unit and door switch
NG	▶	Replace door switch.

KEY SWITCH (INSERTED) CHECK

NEEL0110S06

1	CHECK KEY SWITCH INPUT SIGNAL

1. Disconnect smart entrance control unit harness connector.
2. Check voltage between smart entrance control unit harness connector M111 terminal 25 (W/G) and ground.

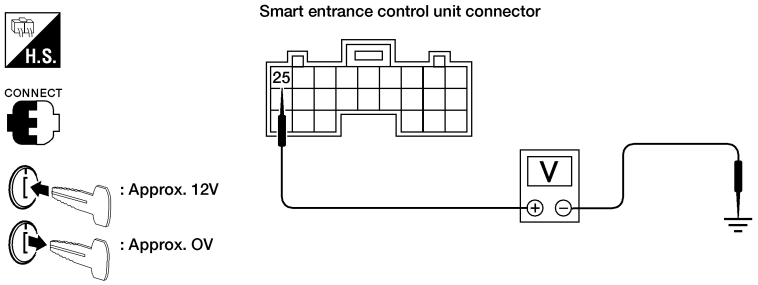

Voltage [V]:
Condition of key switch: Key is INSERTED.
Approx. 12
Condition of key switch: Key is REMOVED.
Approx. 0

LEL010A

Refer to "Wiring Diagram", EL-180.

OK or NG

OK	▶	Key switch is OK.
NG	▶	GO TO 2.

2	CHECK KEY SWITCH POWER SUPPLY

1. Disconnect key switch harness connector.
2. Check voltage between key switch harness connector terminal 1 and ground.

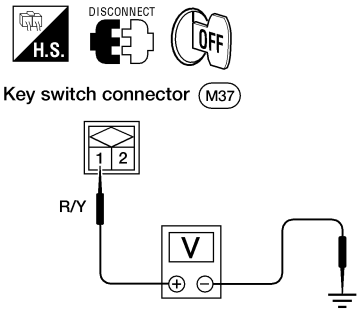

AEL415B

Battery voltage should exist.
Refer to "Wiring Diagram", EL-180.

OK or NG

OK	▶	GO TO 3.
NG	▶	**Check the following** ● 7.5A fuse [No. 28, located in the fuse block (J/B)] ● Harness for open or short between key switch and fuse

3	CHECK KEY SWITCH

Check continuity between key switch terminals 1 and 2.

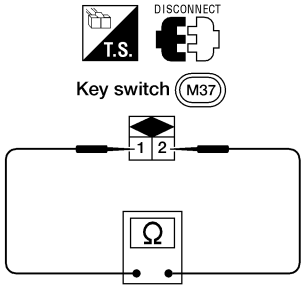

AEL416B

Continuity
Condition of key switch: Key is inserted.
Yes
Condition of key switch: Key is removed.
No

OK or NG

OK	▶	Check harness for open or short between smart entrance control unit and key switch.
NG	▶	Replace key switch.

DOOR LOCK/UNLOCK SWITCH CHECK

=NEEL0110S03

1 **CHECK DOOR LOCK/UNLOCK SWITCH INPUT SIGNAL**

1. Disconnect smart entrance control unit harness connector.
2. Check continuity between smart entrance control unit harness connector M110 terminal 4 (BR) or 5 (LG/R) and ground.

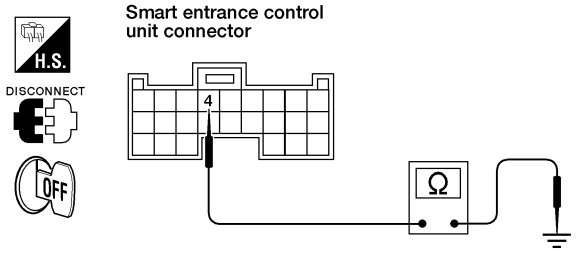

Terminals	Door lock/unlock switch (LH or RH) condition	Continuity
4 - ground	Lock	Yes
	N and Unlock	No
5 - ground	Unlock	Yes
	N and Lock	No

LEL047A

Refer to "Wiring Diagram", EL-180.

OK or NG

OK	▶	Door lock/unlock switch is OK.
NG	▶	GO TO 2.

2 **CHECK DOOR LOCK/UNLOCK SWITCH**

1. Disconnect door lock/unlock switch harness connector.
2. Check continuity between door lock/unlock switch terminals.

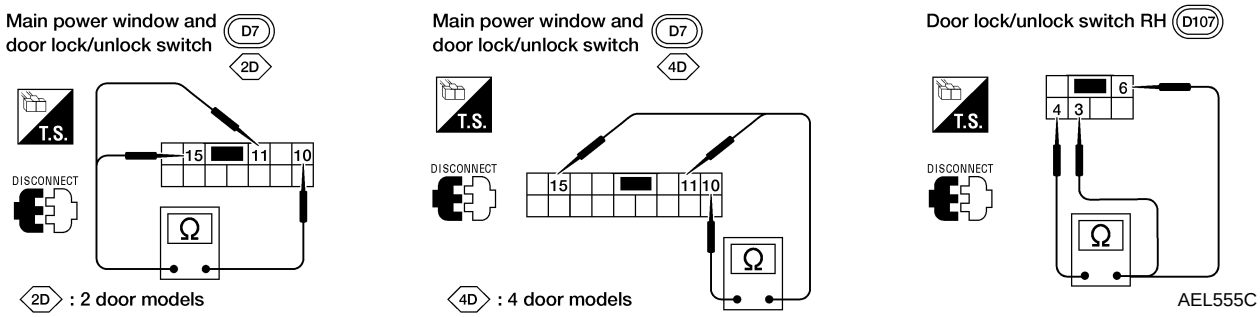

AEL555C

Main power window and door lock/unlock switch

Condition	Terminals		
	10	11	15
Lock	○		○
N	No continuity		
Unlock	○	○	

Door lock/unlock switch RH

Condition	Terminals		
	3	4	6
Lock		○	○
N	No continuity		
Unlock	○	○	

AEL556C

OK or NG

OK	▶	**Check the following.** ● Ground circuit for door lock/unlock switch ● Harness for open or short between door lock/unlock switch and smart entrance control unit
NG	▶	Replace door lock/unlock switch.

DOOR KEY CYLINDER SWITCH CHECK

NEEL0110S07

1 **CHECK DOOR KEY CYLINDER SWITCH INPUT SIGNAL (LOCK/UNLOCK SIGNAL)**

Check voltage between smart entrance control unit harness connector M110 terminal 10 (Y/R) or 11 (Y) and ground.

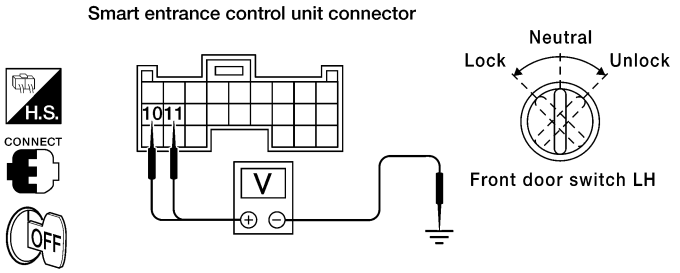

Terminals (+)	Terminals (–)	Key position	Voltage [V]
11	Ground	Neutral	Approx. 5
		Lock	0
10	Ground	Neutral	Approx. 5
		Unlock	0

WEL518A

Refer to "Wiring diagram", EL-181.

OK or NG

OK	▶	Door key cylinder switch is OK.
NG	▶	GO TO 2.

2 **CHECK DOOR KEY CYLINDER SWITCH**

1. Disconnect door key cylinder switch harness connector.
2. Check continuity between door key cylinder switch terminals.

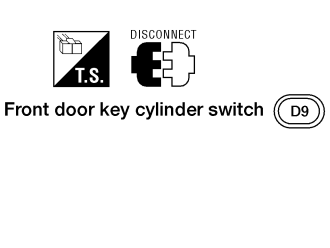

Terminals	Key position	Continuity
1 – 2	Neutral	No
	Lock	Yes
3 – 2	Neutral	No
	Unlock	Yes

LEL032A

OK or NG

OK	▶	**Check the following** ● Door key cylinder switch ground circuit ● Harness for open or short between smart entrance control unit and door key cylinder switch
NG	▶	Replace door key cylinder switch.

DOOR LOCK ACTUATOR CHECK

=NEEL0110S04

1 CHECK DOOR LOCK ACTUATOR CIRCUIT

Check voltage for door lock actuator circuits on smart entrance control unit connector M112 terminal 54 (L), 55 (G/W) or 56 (L/R) and ground.

Smart entrance control unit connector

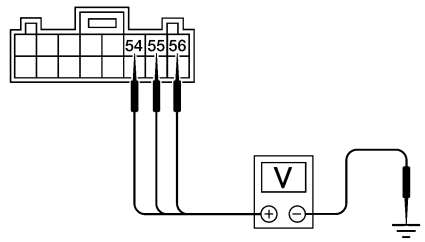

Door lock/unlock switch condition	Terminals		Voltage [V]
	+	−	
Lock	54	Ground	Approx. 12
Unlock (front door LH)	55	Ground	
Unlock (front door RH, rear door LH and RH)	56	Ground	

WEL368A

Refer to "Wiring Diagram", EL-182.

OK or NG

OK	▶	GO TO 2.
NG	▶	Replace smart entrance control unit. (Before replacing smart entrance control unit, perform other procedures indicated in "SYMPTOM CHART".)

2 CHECK DOOR LOCK ACTUATOR

1. Disconnect door lock actuator harness connector.
2. Apply 12V direct current to door lock actuator and check operation.

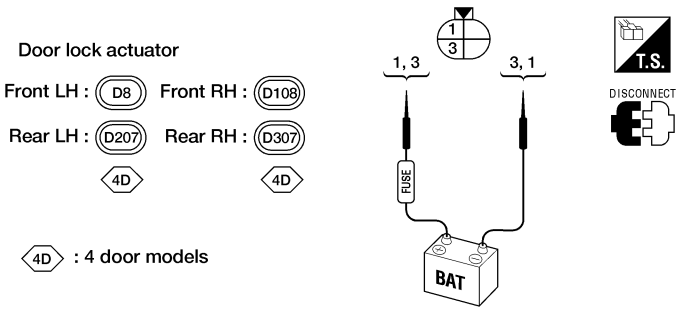

AEL574C

Door lock actuator operation	Terminals	
	+	−
Unlocked → Locked	3	1
Locked → Unlocked	1	3

AEL575C

OK or NG

OK	▶	Check harness for open or short between smart entrance control unit and door lock actuator.
NG	▶	Replace door lock actuator.

Component Parts and Harness Connector Location

NEEL0111

Fuse block (J/B)

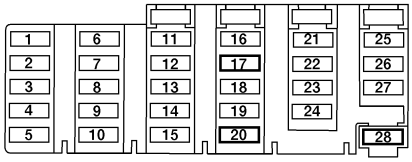

Fuse and fusible link box
For KA24DE

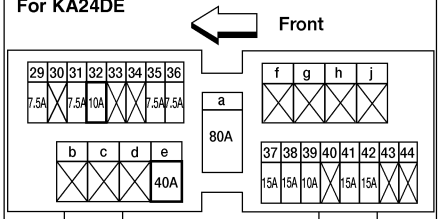

No 29 - 44: FUSE
a - j: FUSIBLE LINK
E31

Fuse and fusible link box
For VG33E

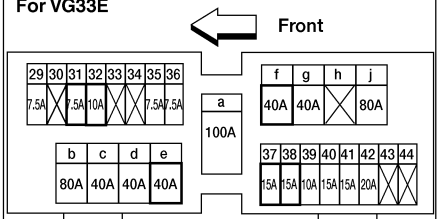

No 29 - 44: FUSE
a - j: FUSIBLE LINK
E31

Fuse and fusible link box
For VG33ER

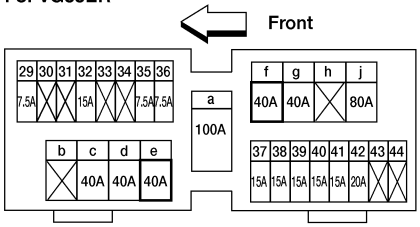

No 29 - 44: FUSE
a - j: FUSIBLE LINK
E31

For KA24DE and VG33E

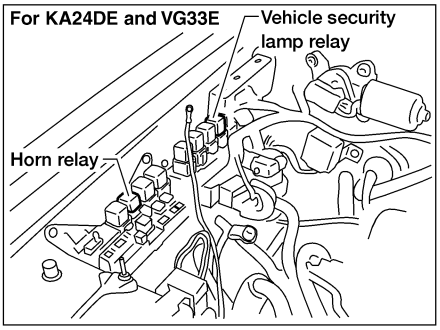

For VG33ER

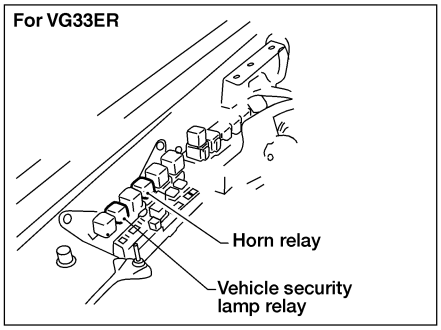

View with rear trim panel removed

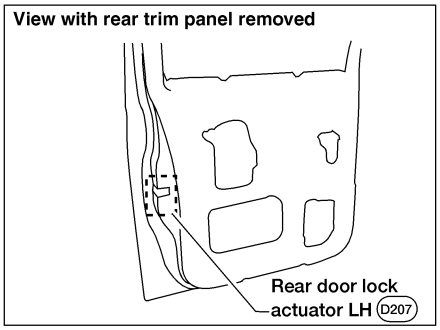

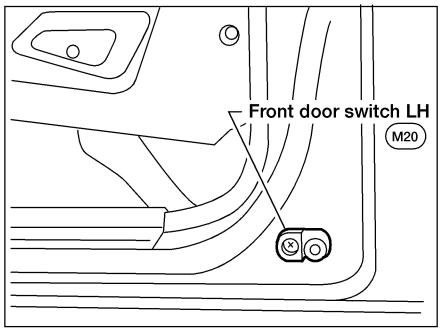

Crew Cab

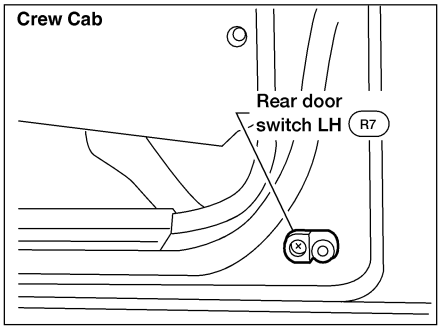

View with steering column covers removed

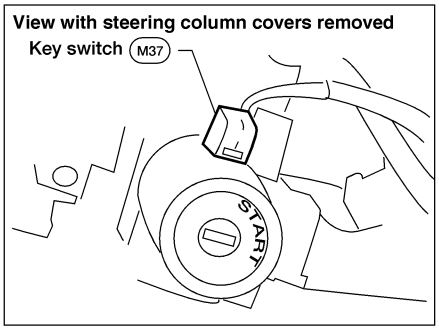

View with instrument lower panel driver's side removed

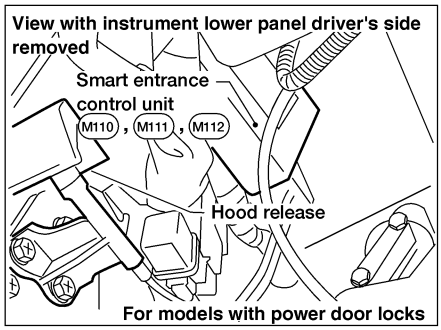

View with front door trim panel removed

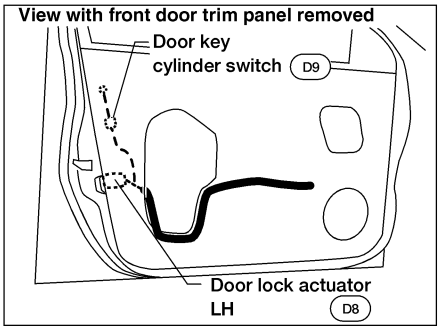

WEL467A

System Description

NEEL0112

POWER SUPPLY AND GROUND

NEEL0112S03

Power is supplied at all times
- through 30A fusible link [letter **f**, located in the fuse and fusible link box (with KA24DE)] or
- through 40A fusible link [letter **f**, located in the fuse and fusible link box (with VG33E and VG33ER)]
- to circuit breaker terminal +
- through circuit breaker terminal –
- to smart entrance control unit terminal 51.

With the ignition switch in the ACC or ON position, power is supplied
- through 7.5A fuse [No. 20, located in the fuse block (J/B)]
- to smart entrance control unit terminal 26.

Power is supplied at all times
- through 7.5A fuse [No. 28, located in the fuse block (J/B)]
- to key switch terminal 1 and
- to smart entrance control unit terminal 49.

Power is supplied at all times
- through 15A fuse (No. 37, located in the fuse and fusible link box)
- to vehicle security lamp relay terminal 7.

Power is supplied at all times
- through 15A fuse (No. 38, located in the fuse and fusible link box)
- to vehicle security lamp relay terminal 5.

Power is supplied at all times
- through 15A fuse (No. 32, located in the fuse and fusible link box)
- to horn relay terminal 1
- through horn relay terminal 2

Ground is supplied
- to smart entrance control unit terminals 43 and 64
- through body grounds M14 and M68.

INPUTS

NEEL0112S01

With the key switch in the INSERTED (key is in ignition key cylinder) position, power is supplied
- through key switch terminal 2
- to smart entrance control unit terminal 25.

With front door LH open, ground is supplied
- to smart entrance control unit terminal 1
- through front door switch LH terminal 2
- through front door switch LH terminal 3
- through body grounds M14 and M68.

With front door RH open, ground is supplied
- to smart entrance control unit terminal 2
- through front door switch RH terminal +.

With rear door LH or RH (Crew Cab) open, ground is supplied
- to smart entrance control unit terminal 3 (with vehicle security system) or terminal 2 (without vehicle security system)
- through rear door switch LH or RH terminal +.

Remote controller signal input
- through internal antenna.

The multi-remote control system controls operation of the
- power door locks
- interior lamp
- panic alarm
- hazard and horn reminder

OPERATION PROCEDURE

NEEL0112S02

Power Door Lock Operation

NEEL0112S0201

When the remote controller sends a LOCK signal with the key switch in the REMOVED position (key is not in ignition key cylinder), the smart entrance control unit locks all doors.
When the remote controller sends an UNLOCK signal once, the smart entrance control unit unlocks the front door LH.
Then, if the remote controller sends another UNLOCK signal within 5 seconds, the smart entrance control unit unlocks all other doors.

Key Reminder

NEEL0112S0207

When performing a door locking operation using either the main power window and door lock/unlock switch, the door lock/unlock switch RH, the front door LH lock knob or a multi-remote controller, all the doors will lock and then the front door LH will immediately unlock if the

- key switch is in INSERTED position (key is in ignition key cylinder) and
- ignition switch is in the OFF position
- and either front door switch LH or RH is in OPEN position (door is open).

Hazard and Horn Reminder

NEEL0112S0204

When smart entrance control unit receives LOCK or UNLOCK signal from remote controller with all doors closed, power is supplied

- through smart entrance control unit terminals 47 and 48
- to the hazard warning lamps.

Ground is supplied

- to horn relay terminal 2
- through smart entrance control unit terminal 19.

Horn relay is now energized, and hazard warning lamp flashes and horn sounds as a reminder.
The hazard and horn reminder has a horn chirp mode (C mode) and a non-horn chirp mode (S mode).

Operating function of hazard and horn reminder

	Horn chirp mode (C mode)		Non-horn chirp mode (S mode)	
	Hazard warning lamp flash	Horn sound	Hazard warning lamp flash	Horn sound
Lock	Twice	Once	Twice	—
Unlock	Once	—	—	—

How to change hazard and horn reminder mode

When LOCK and UNLOCK signals are sent from the remote controller for more than 2 seconds at the same time, the hazard and horn reminder mode is changed and hazard warning lamp flashes and horn sounds as follows:

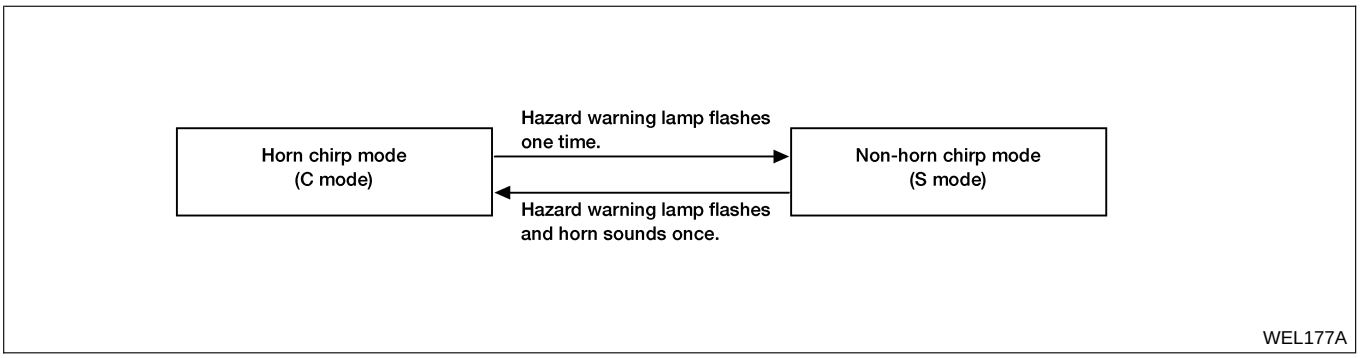

Interior Lamp Operation

NEEL0112S0205

When both of the following signals are supplied:

- all door switches in CLOSED position

Multi-remote control system turns on the front and rear room lamps for 30 seconds with input of UNLOCK signal from multi-remote controller.
For detailed description, refer to "INTERIOR ROOM LAMP", EL-62.

Panic Alarm Operation

NEEL0112S0203

When remote controller sends a PANIC ALARM signal with key switch in the REMOVED (key is not in ignition key cylinder) position, multi-remote control system operates the horn and headlamps intermittently.
For detailed description, refer to "VEHICLE SECURITY (THEFT WARNING) SYSTEM", EL-210.

Auto Relock Operation

NEEL0112S0208

All the doors will automatically lock again unless any one of the doors is opened or ignition switch is turned from OFF to ON within 5 minutes after the remote controller unlocks all the doors under the following conditions

- key switch is in INSERTED position (key is in ignition key cylinder) and
- ignition switch is in the OFF position and
- all door switches are in CLOSED position (doors are closed)
- all doors are locked.

Circuit Diagram

NEEL0113

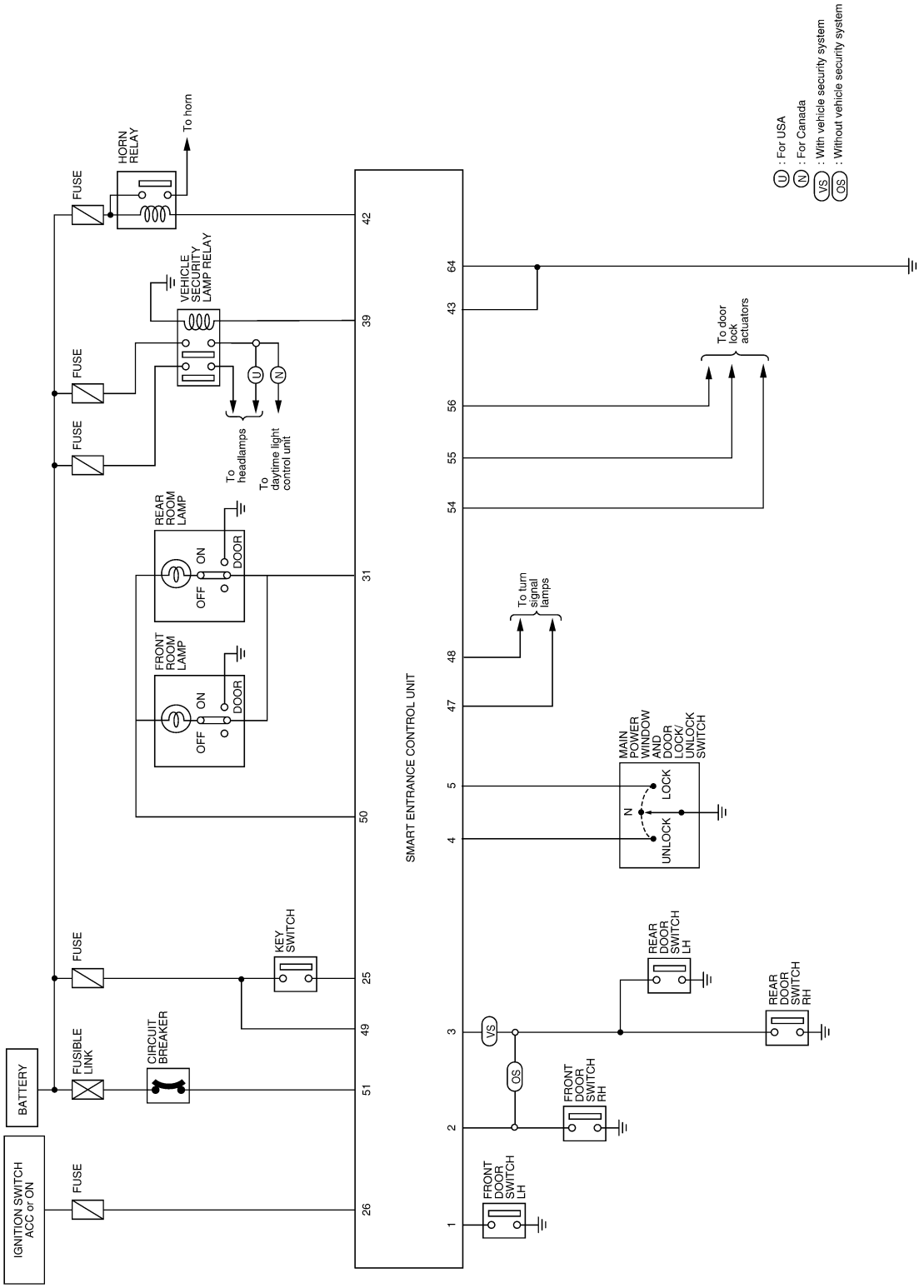

WEL087B

Wiring Diagram — MULTI —

NEEL0114

FIG. 1

NEEL0114S01

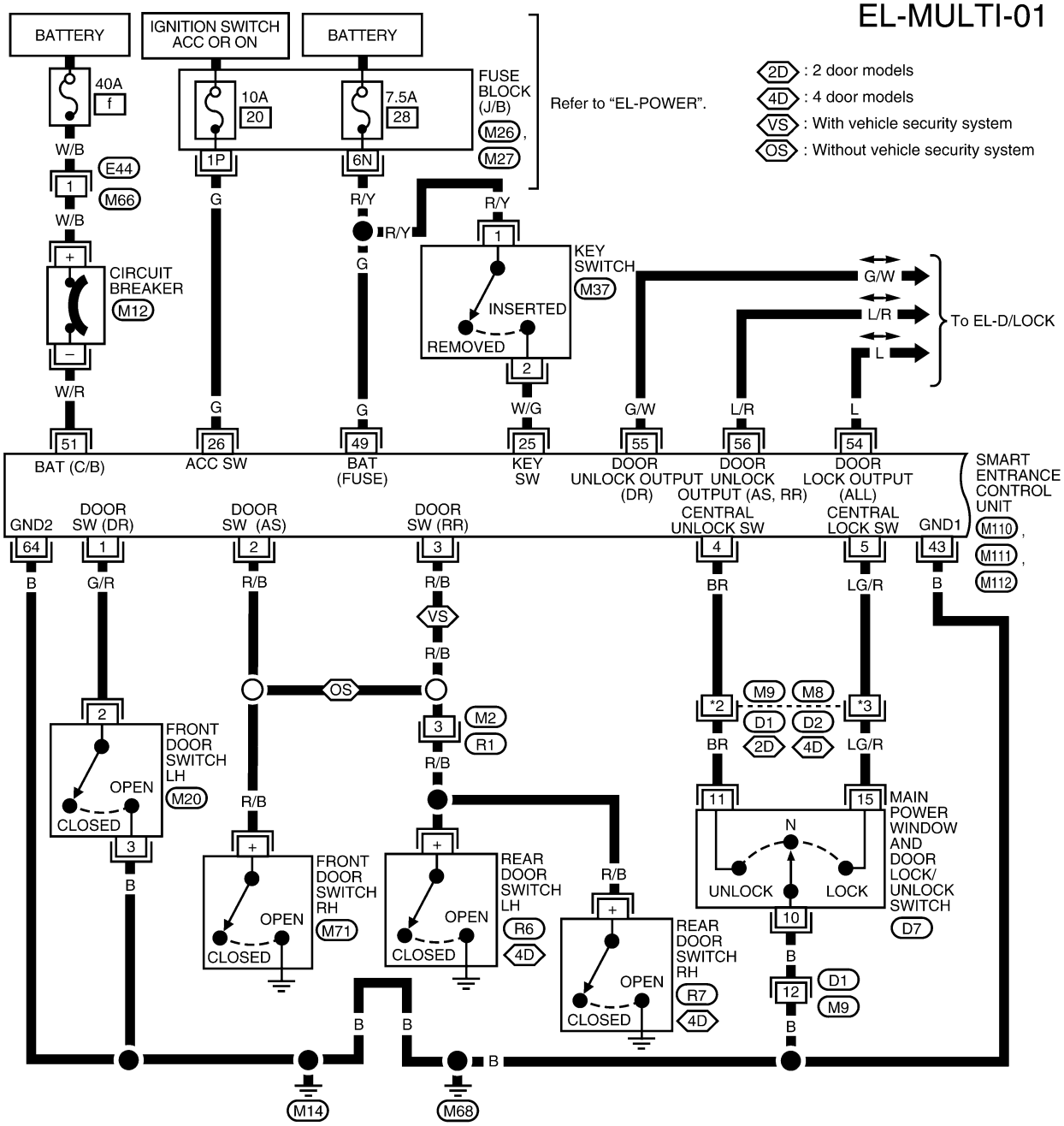

WEL086B

FIG. 2

NEEL0114S02

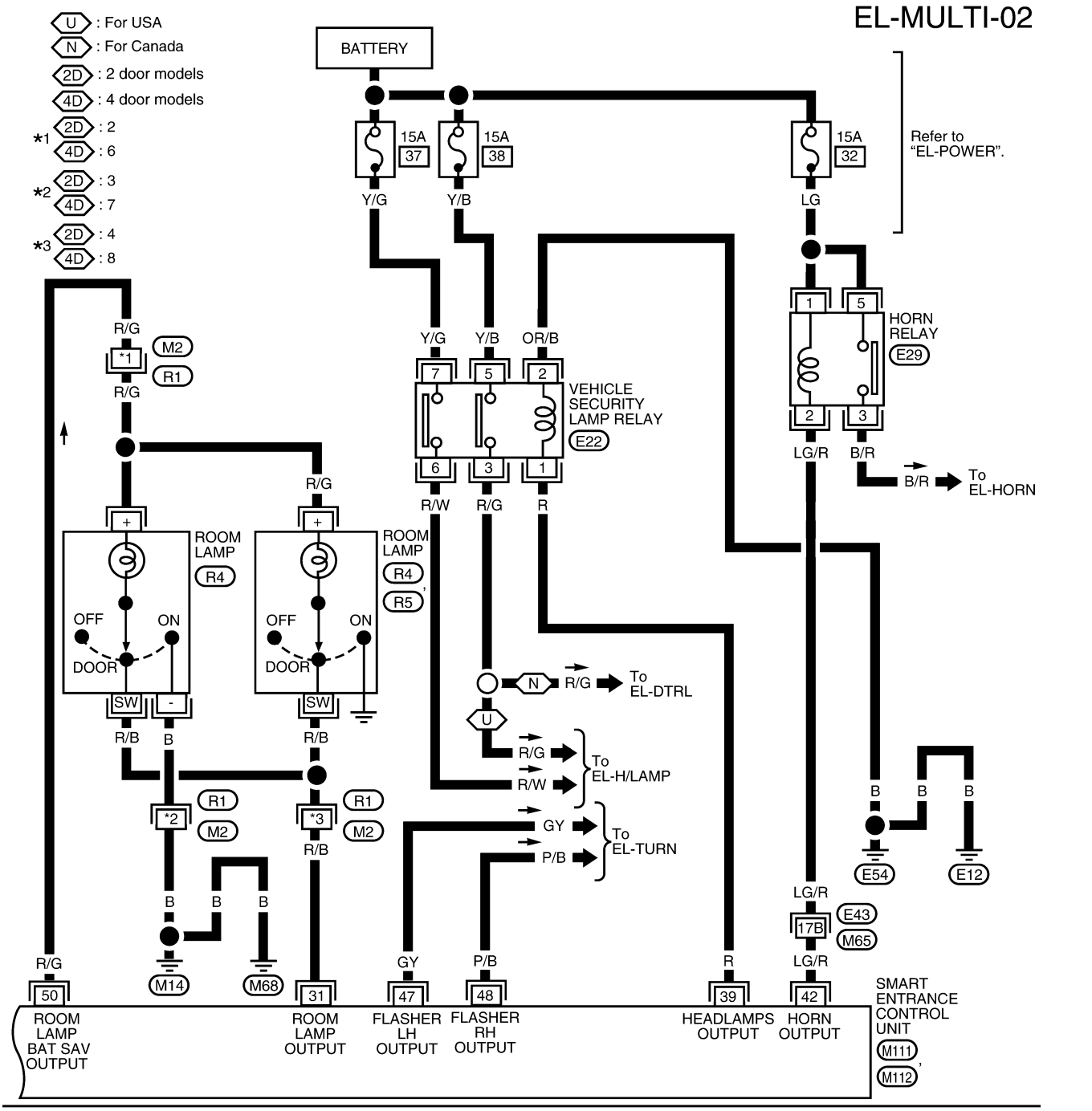

WEL063B

Trouble Diagnoses

=NEEL0115

SYMPTOM CHART

NEEL0115S01

NOTE:

- Always check remote controller battery before replacing remote controller

Symptom	Diagnoses/service procedure	Reference page (EL-)
All functions of multi-remote control system do not operate.	1. Remote controller battery check	198
	2. Power supply and ground circuit check	199
	3. Replace remote controller. Refer to ID Code Entry Procedure.	206
The new ID of remote controller cannot be entered.	1. Remote controller battery check	198
	2. Power supply and ground circuit check	199
	3. Key switch (inserted) check	202
	4. Door switch check	201
	5. Replace remote controller. Refer to ID Code Entry Procedure.	206
Door lock or unlock does not function (If the power door lock system does not operate manually, check power door lock system. Refer to “Trouble Diagnoses”, “POWER DOOR LOCK”, EL-183.).	1. Key switch (inserted) check	202
	2. Door switch check	201
	3. Replace remote controller. Refer to ID Code Entry Procedure.	206
Hazard indicator does not flash twice when pressing lock button of remote controller.	1. Hazard reminder check	204
	2. Replace remote controller. Refer to ID Code Entry Procedure.	206
Room lamp does not activate properly.	1. Room lamp operation check	204
	2. Door switch check	201
Panic alarm (horn and headlamps) does not activate when panic alarm button is pressed continuously for more than 1.5 seconds.	1. Vehicle security operation check. Refer to “PRELIMINARY CHECK”, “VEHICLE SECURITY SYSTEM”.	217
	2. Replace remote controller. Refer to ID Code Entry Procedure.	206

NOTE:

When performing a door locking operation using either the main power window and door lock/unlock switch, the door lock/unlock switch RH, the front door LH lock knob or a multi-remote controller, all the doors will lock and then the front door LH will immediately unlock if

- **the key switch is in INSERTED position (key is in ignition key cylinder) and**
- **ignition switch is in the OFF position and**
- **either front door switch LH or RH is in OPEN position (door is open).**

REMOTE CONTROLLER BATTERY CHECK

=NEEL0115S02

1	CHECK REMOTE CONTROLLER BATTERY

Remove battery (refer to "Remote Controller Battery Replacement", EL-207) and measure voltage across battery positive and negative terminals, (+) and (−).

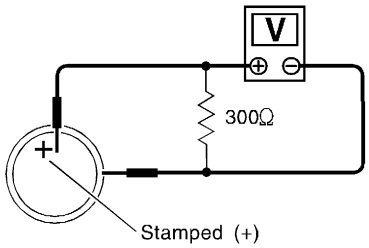

SEL277V

Voltage [V]:
2.5 - 3.0

NOTE:
Remote controller does not function if battery is not installed correctly.

OK or NG

OK	▶	Check remote controller battery terminals for corrosion and damage.
NG	▶	Replace battery.

POWER SUPPLY AND GROUND CIRCUIT CHECK

=NEEL0115S04

1	CHECK MAIN POWER SUPPLY CIRCUIT FOR CONTROL UNIT

1. Disconnect smart entrance control unit harness connector.
2. Check voltage between smart entrance control unit harness connector M112 terminals 49 (G), 51 (W/R) and ground.

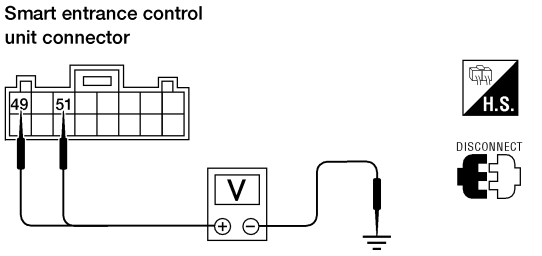

Battery voltage should exist.

LEL051A

Refer to "Wiring Diagram", EL-195.

OK or NG

OK	▶	GO TO 2.
NG	▶	**Check the following.** ● 30A fusible link (with KA24DE), 40A fusible link (with VG33E and VG33ER) (letter **f**, located in fuse and fusible link box) ● 7.5A fuse [No. 28, located in fuse block (J/B)] ● M12 circuit breaker ● Harness for open or short between smart entrance control unit and circuit breaker ● Harness for open or short between smart entrance control unit and fuse.

2	CHECK IGNITION SWITCH ACC CIRCUIT

1. Disconnect smart entrance control unit harness connector.
2. Check voltage between smart entrance control unit harness connector M111 terminal 26 (G) and ground while ignition switch is in ACC or ON position.

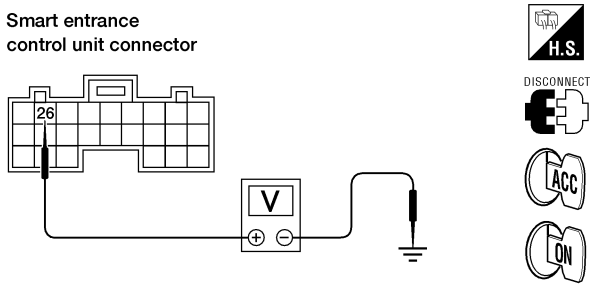

Battery voltage should exist.

LEL052A

Refer to "Wiring Diagram", EL-195.

OK or NG

OK	▶	GO TO 3.
NG	▶	**Check the following.** ● 7.5A fuse [No. 20, located in fuse block (J/B)] ● Harness for open or short between smart entrance control unit and fuse

3	CHECK GROUND CIRCUIT FOR CONTROL UNIT

Check continuity between smart entrance control unit harness connectors M111 and M112 terminals 43 (B) and 64 (B) and ground.

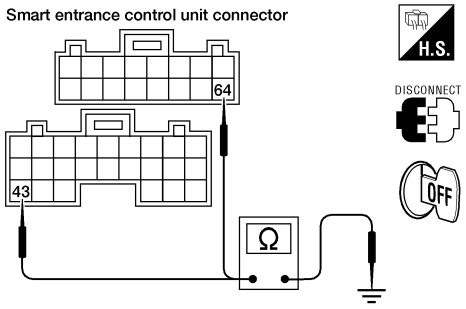

LEL008A

Refer to "Wiring Diagram", EL-195.

OK or NG

OK	▶	Power supply and ground circuits are OK.
NG	▶	Check ground harness.

DOOR SWITCH CHECK

=NEEL0115S05

1	CHECK DOOR SWITCH INPUT SIGNAL

Check voltage between smart entrance control unit connector M110 terminals 1 (G/R), 2 (G/B) or 3 (R/B) (Crew Cab with vehicle security system) and ground.

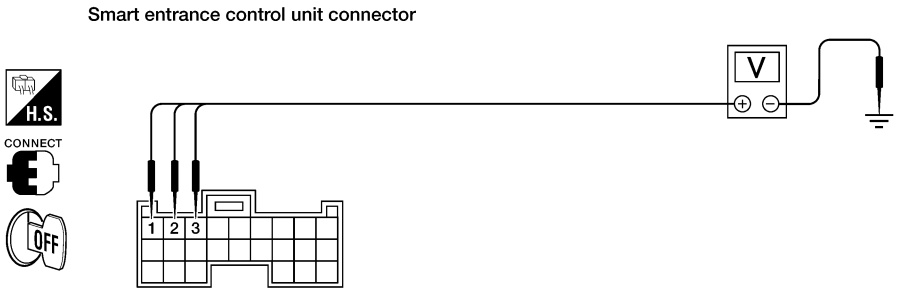

Voltage [V]:
Door is closed - Approx. 5
Door is open - Approx. 0

WEL517A

Refer to "Wiring Diagram", EL-195.

OK or NG

OK	▶	Door switch is OK.
NG	▶	GO TO 2.

2	CHECK DOOR SWITCH

1. Disconnect door switch harness connector.
2. Check continuity between door switch terminals.

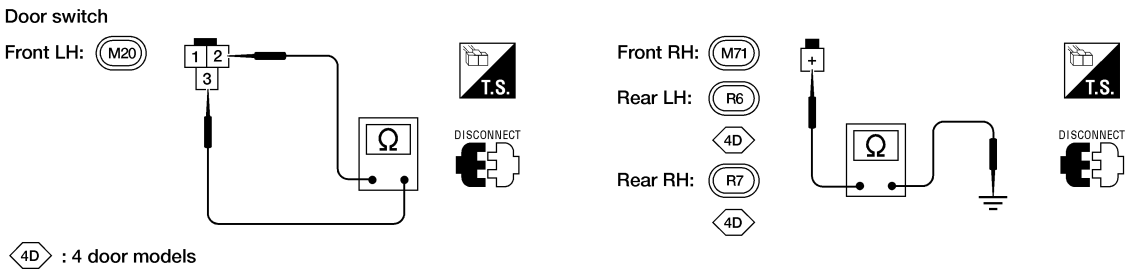

AEL577C

Continuity:
Front door switch LH terminals 2 - 3
Door switch is pressed - No
Door switch is released - Yes
Front door switch RH, rear door switch LH or RH terminal + - ground
Door switch is pressed - No
Door switch is released - Yes

OK or NG

OK	▶	**Check the following.** ● Front door switch LH ground circuit or door switch ground condition ● Harness for open or short between smart entrance control unit and door switch
NG	▶	Replace door switch.

KEY SWITCH (INSERTED) CHECK

=NEEL0115S07

1	CHECK KEY SWITCH INPUT SIGNAL

1. Disconnect smart entrance control unit harness connector.
2. Check voltage between smart entrance control unit harness connector M111 terminal 25 (W/G) and ground.

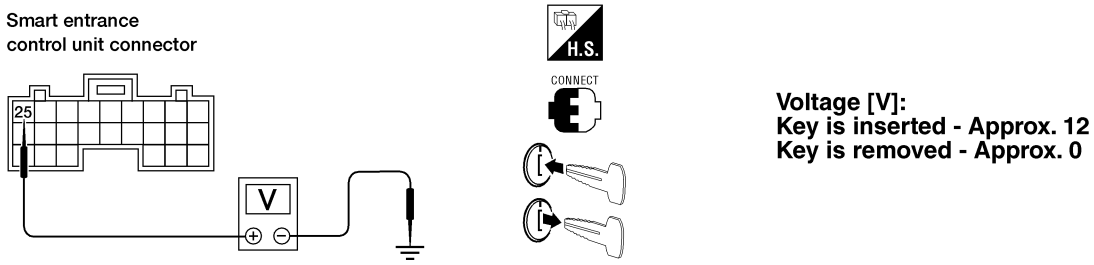

Voltage [V]:
Key is inserted - Approx. 12
Key is removed - Approx. 0

LEL053A

Refer to "Wiring Diagram", EL-195.

OK or NG

OK	▶	Key switch is OK.
NG	▶	GO TO 2.

2	CHECK KEY SWITCH POWER SUPPLY

1. Disconnect key switch harness connector.
2. Check voltage between key switch harness connector terminal 1 and ground.

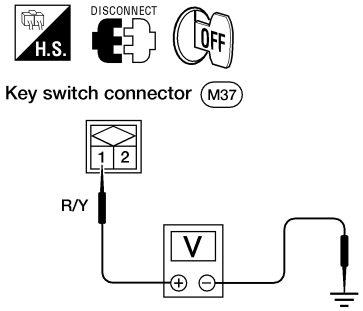

AEL415B

Battery voltage should exist.
Refer to "Wiring Diagram", EL-195.

OK or NG

OK	▶	GO TO 3.
NG	▶	**Check the following** ● 7.5A fuse [No. 28, located in the fuse block (J/B)] ● Harness for open or short between key switch and fuse

3	CHECK KEY SWITCH (INSERTED)	
Check continuity between terminals 1 and 2. 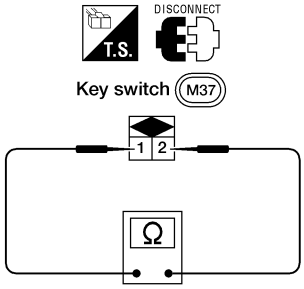 AEL416B **Continuity:** **Condition of key switch: Key is inserted.** **Yes** **Condition of key switch: Key is removed.** **No** **OK or NG**		
OK	▶	Check harness for open or short between smart entrance control unit and key switch.
NG	▶	Replace key switch.

HAZARD REMINDER CHECK

=NEEL0115S09

1	CHECK HAZARD INDICATOR	
Check if hazard indicator flashes with hazard switch. **Does hazard indicator operate?**		
Yes	▶	GO TO 2.
No	▶	Check "hazard indicator" circuit. Refer to "Trouble Diagnoses", "TURN SIGNAL AND HAZARD WARNING LAMPS", EL-58.

2	CHECK REMOTE CONTROLLER OPERATION	
Check door lock/unlock operation with remote controller. **Does door lock/unlock operate?**		
Yes	▶	GO TO 3.
No	▶	Check remote controller battery. Refer to "Remote Controller Battery Check, EL-198.

3	CHECK HAZARD REMINDER OUTPUT SIGNAL	
Measure voltage between smart entrance control unit connector M111 terminals 48, 49 and ground with CONSULT-II or oscilloscope when hazard reminder is operated. 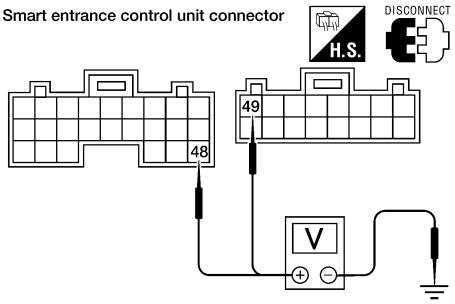 WEL369A **OK or NG**		
OK	▶	Check harness for open or short between smart entrance control unit and turn signal lamps.
NG	▶	Replace smart entrance control unit.

INTERIOR ROOM LAMP OPERATION CHECK

NEEL0115S08

1	CHECK INTERIOR ROOM LAMP	
Check if the interior room lamp switch is in the "ON" position and the lamp illuminates. **Does interior room lamp illuminate?**		
Yes	▶	GO TO 2.
No	▶	**Check the following.** ● Harness for open or short between smart entrance control unit and interior room lamp ● Interior room lamp

2	CHECK INTERIOR ROOM LAMP CIRCUIT

When interior room lamp switch is in "DOOR" position, check voltage across smart entrance control unit connector M111 terminal 31 (R/B) and ground.

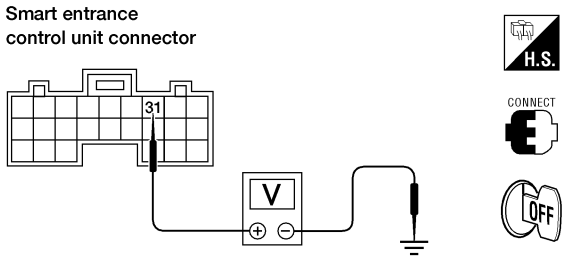

Battery voltage should exist.

LEL055A

Refer to "Wiring Diagram", EL-196.

OK or NG

OK	▶	GO TO 3.
NG	▶	Repair harness between smart entrance control unit and interior room lamp.

3	CHECK CONTROL UNIT OUTPUT

Push unlock button of remote controller with key removed and all doors closed, and check voltage across smart entrance control unit connector M111 terminal 31 (R/B) and ground.

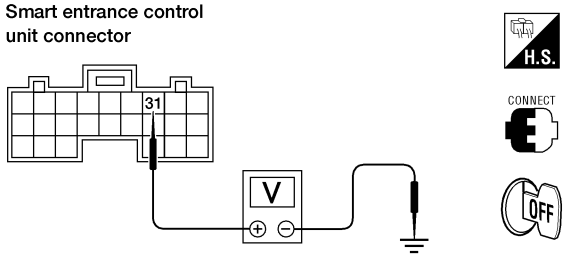

Voltage [v]:
Unlock button is pushed.
Approx. 0 (for approx. 30 seconds.)
Unlock button is not pushed.
Battery voltage

LEL056A

OK or NG

OK	▶	Check system again.
NG	▶	Replace smart entrance control unit.

ID Code Entry Procedure

NEEL0117

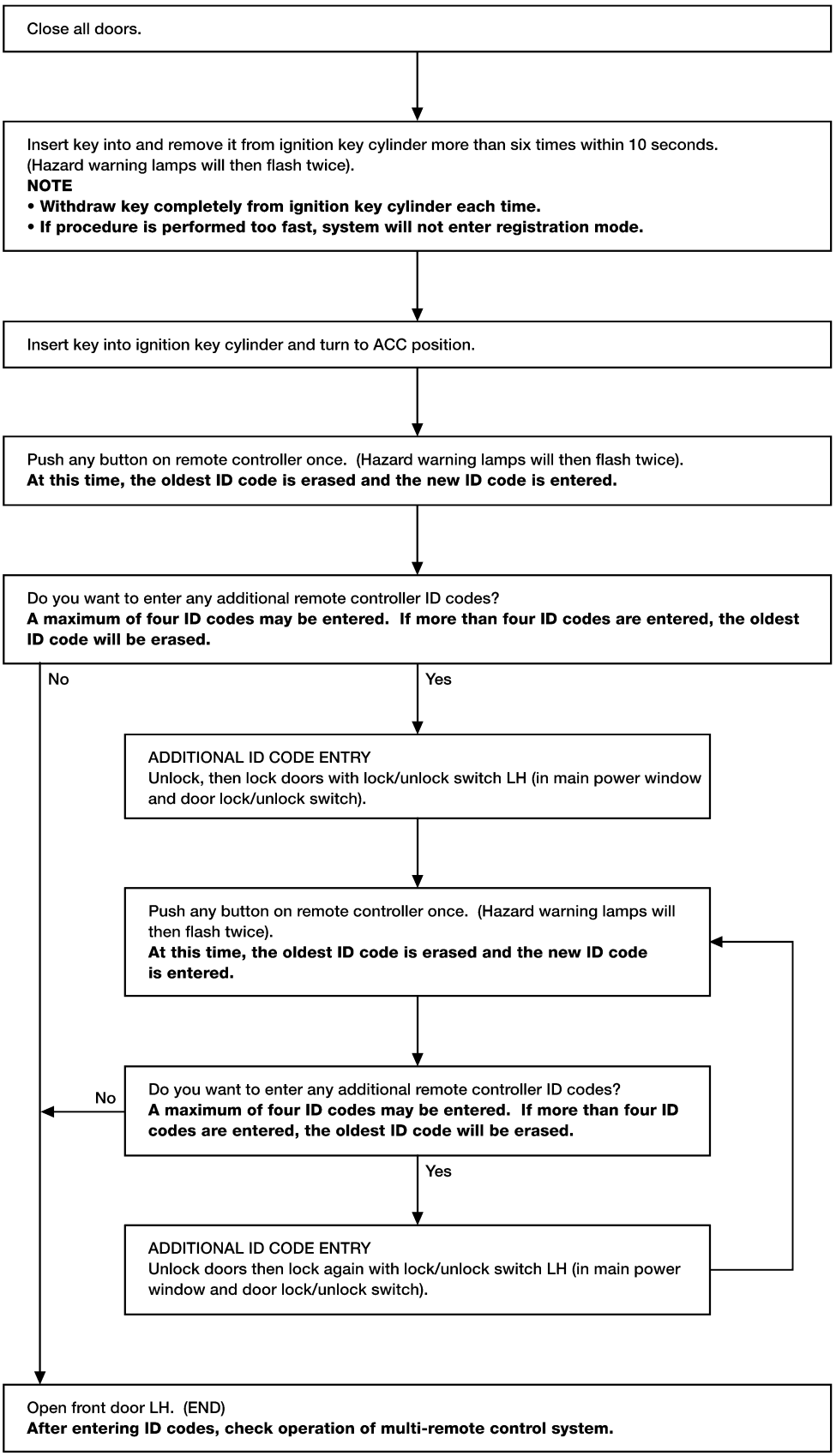

WEL519A

NOTE:

- If a remote controller is lost, the ID code of the lost remote controller must be erased to prevent unauthorized use.
  To erase all ID codes in memory, register one ID code (remote controller) four times. After all ID codes are erased, the ID codes of all remaining and/or new remote controllers must be re-registered.
- When registering an additional remote controller, the existing ID codes in memory may or may not be erased. If four ID codes are stored in memory when an additional code is registered, only the oldest code is erased. If less than four ID codes are stored in memory when an additional ID code is registered, the new ID code is added and no ID codes are erased.
- If you need to activate more than two additional new remote controllers, repeat the procedure "ADDITIONAL ID CODE ENTRY" for each new remote controller.
- Entry of a maximum of four ID codes is allowed. When more than four ID codes are entered, the oldest ID code will be erased.
- If an ID code has already been registered in the memory, the same ID code can be entered in the memory again. Each registration of an ID code counts as an additional code.

Remote Controller Battery Replacement

NEEL0118

NOTE:

- Be careful not to touch the circuit board or battery terminal.
- The remote controller is water-resistant. However, if it does get wet, wipe it dry immediately.
- After battery replacement, press the remote controller buttons two or three times to check their operation.

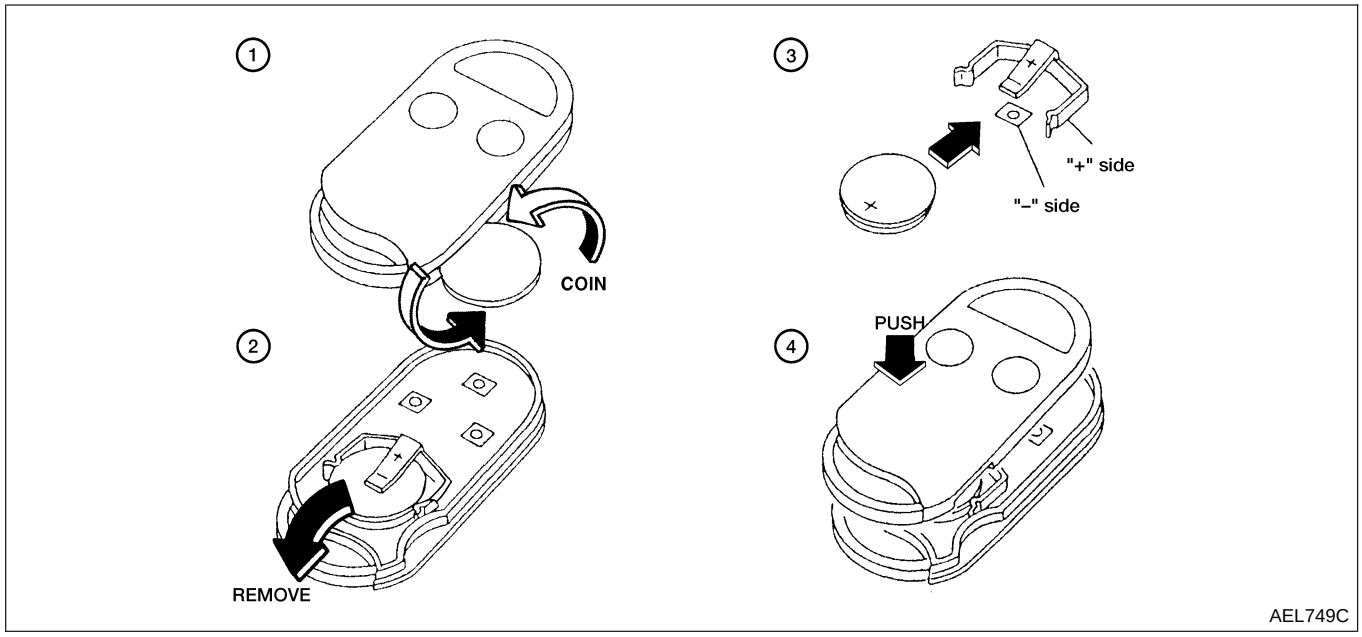

Component Parts and Harness Connector Location

NEEL0196

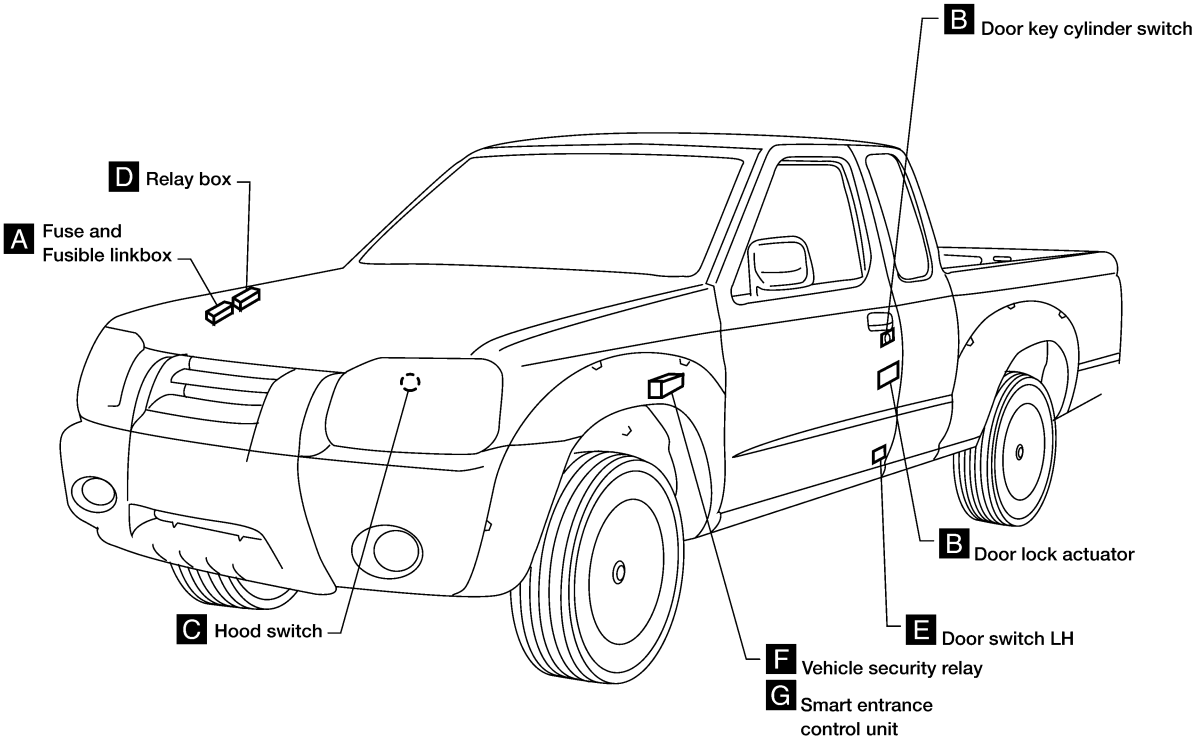

LEL399A

Fuse block (J/B)

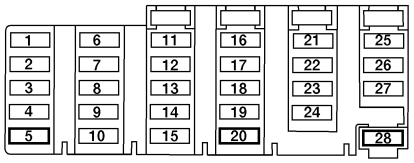

A Fuse and fusible link box
For VG33E

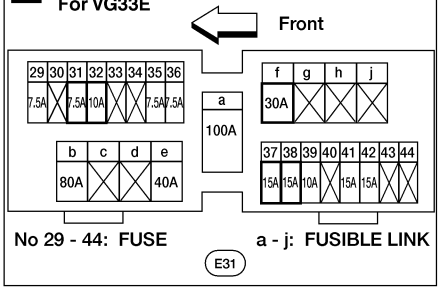

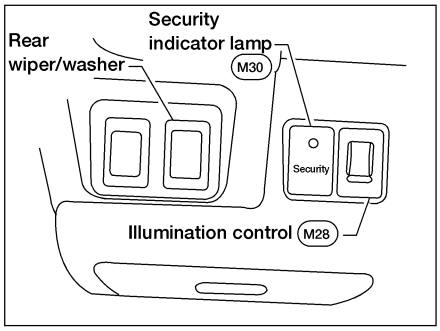

Fuse and fusible link box
For VG33ER

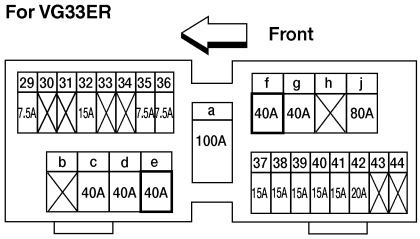

B View with front door trim panel removed

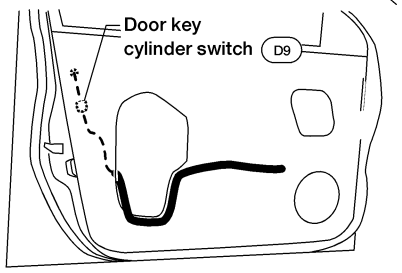

C

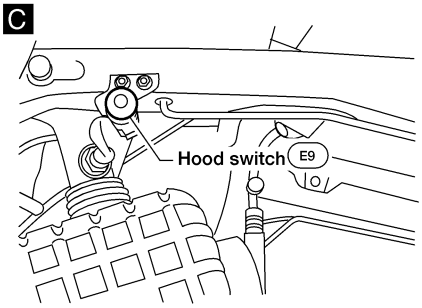

D For KA24DE
and VG33E

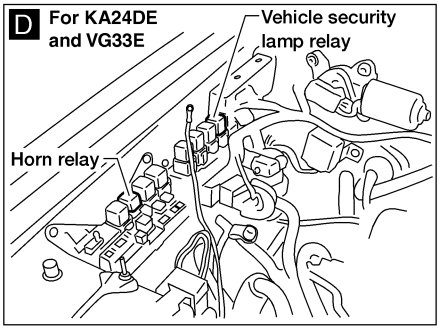

D For VG33ER

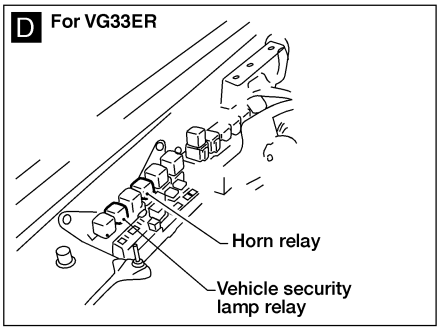

E

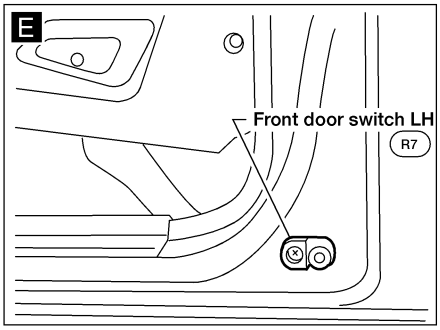

F View with instrument lower
panel driver's side removed

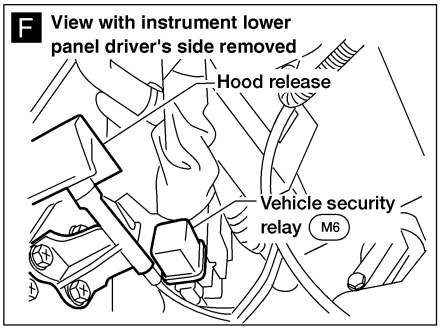

G View with instrument lower
panel driver's side removed

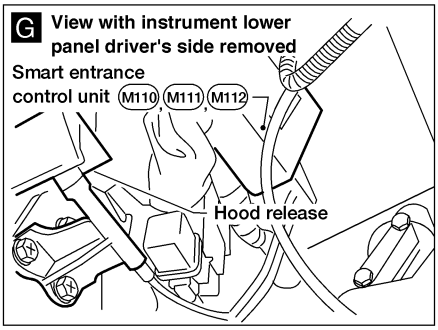

WEL468A

System Description

NEEL0197

DESCRIPTION

NEEL0197S01

1. Operation Flow

NEEL0197S0101

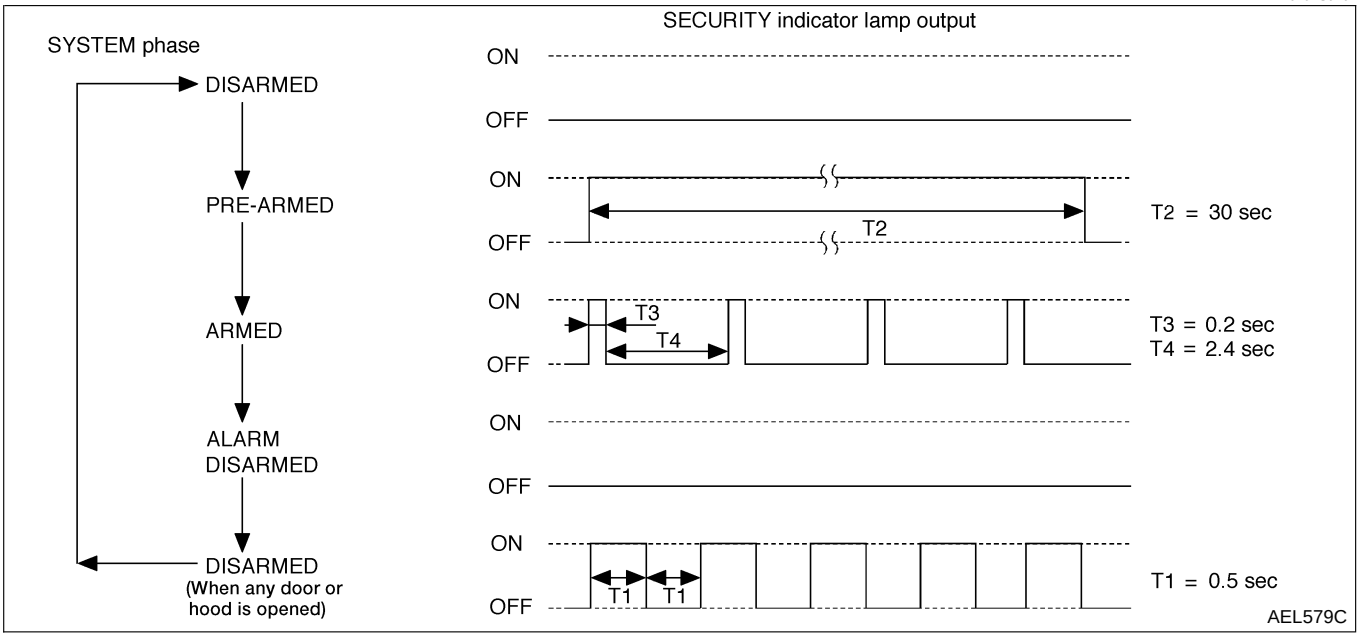

2. Setting the Vehicle Security System

NEEL0197S0102

Initial condition

1) Close all doors.
2) Close hood.

Disarmed phase

The vehicle security system is in the disarmed phase when any door(s) or hood is opened. The security indicator lamp blinks every second.

Pre-armed phase and armed phase

The vehicle security system turns into the “pre-armed” phase when hood and all doors are closed and the doors are locked by key or multi-remote controller. (The security indicator lamp illuminates.)
After about 30 seconds, the system automatically shifts into the “armed” phase (the system is set). (The security indicator lamp blinks every 2.6 seconds.)

3. Canceling the Set Vehicle Security System

NEEL0197S0103

When the doors are unlocked with the key or multi-remote controller, the armed phase is canceled.

4. Activating the Alarm Operation of the Vehicle Security System

NEEL0197S0104

Make sure the system is in the armed phase. (The security indicator lamp blinks every 2.6 seconds.)
When the following operation 1) or 2) is performed, the horn and headlamps operate intermittently for about 50 seconds. (At the same time, the system disconnects the starting system circuit.)

1) Engine hood or any door is opened before unlocking door with key or multi-remote controller.
2) Door is opened without first using key or multi-remote controller.

POWER SUPPLY AND GROUND

NEEL0197S02

Power is supplied at all times

- through 7.5A fuse [No. 28, located in the fuse block (J/B)]
- to smart entrance control unit terminal 49
- to key switch terminal 1 and
- to security indicator lamp terminal 1.

With the ignition switch in the ACC or ON position, power is supplied

- through 7.5A fuse [No. 20, located in the fuse block (J/B)]
- to smart entrance control unit terminal 26.

With the ignition switch in the ON or START position, power is supplied

- through 10A fuse [No. 5, located in the fuse block (J/B)]
- to smart entrance control unit terminal 27.

Ground is supplied

- to smart entrance control unit terminals 43 and 64
- through body grounds M14 and M68.

INITIAL CONDITION TO ACTIVATE THE SYSTEM

NEEL0197S03

To activate the vehicle security system, the smart entrance control unit must receive signals indicating the doors and hood are closed and the doors are locked.
When a door is open, smart entrance control unit terminal 1, 2, or 3 (Crew Cab) receives a ground signal from the corresponding door switch.
When the hood is open, ground is supplied

- to smart entrance control unit terminal 6
- through hood switch terminal +
- through hood switch terminal –
- through body grounds E12 and E54.

When the doors are locked with key or multi-remote controller and none of the described conditions exist, the vehicle security system will automatically shift to armed phase.

VEHICLE SECURITY SYSTEM ACTIVATION (WITH KEY OR REMOTE CONTROLLER USED TO LOCK DOORS)

NEEL0197S04

If the key is used to lock doors, ground is supplied to smart entrance control unit terminal 11

- through front door key cylinder switch LH terminal 1 or
- through front door key cylinder switch LH terminal 2
- through body grounds M14 and M68.

If this signal or lock signal from remote controller is received by the smart entrance control unit, the vehicle security system will activate automatically.
Once the vehicle security system has been activated, smart entrance control unit terminal 38 supplies ground to security indicator lamp terminal 2.
The security lamp will illuminate for approximately 30 seconds and then blink.
The vehicle security system is now in armed phase.

VEHICLE SECURITY SYSTEM ALARM OPERATION

NEEL0197S05

The vehicle security system is triggered by

- opening a door
- opening the hood

Once the vehicle security system is in armed phase, if the smart entrance control unit receives a ground signal at terminal 1, 2, or 3 (Crew Cab) or 6 (hood switch), the vehicle security system will be triggered. The horn and headlamps operate intermittently and the starting system is interrupted.
With the ignition switch in the ON or START position, power is supplied

- through 10A fuse [No. 5, located in the fuse block (J/B)].
- to vehicle security relay terminal 2.

If the vehicle security system is triggered, ground is supplied

- to vehicle security relay terminal 1
- through smart entrance control unit terminal 40.

With power and ground supplied, starter motor circuit is interrupted. The starter motor will not crank and the engine will not start.
Power is supplied at all times

- through 10A fuse (No. 32, located in fuse and fusible link box)
- to vehicle security lamp relay terminal 2.

When the vehicle security system is triggered, power is supplied intermittently

- to vehicle security lamp relay terminal 1
- through smart entrance control unit terminal 39

When the vehicle security system is triggered, ground is supplied intermittently

- to horn relay terminal 2
- through smart entrance control unit terminal 42.

The horn and headlamps operate intermittently.
The alarm automatically turns off after 50 seconds but will reactivate if the vehicle is tampered with again.

VEHICLE SECURITY SYSTEM DEACTIVATION

NEEL0197S06

To deactivate the vehicle security system, a door must be unlocked with the key or remote controller.
When the key is used to unlock the door, smart entrance control unit terminal 10 receives a ground signal

- through front door key cylinder switch LH terminal 3
- through body grounds M14 and M68.

When the smart entrance control unit receives this signal or an unlock signal from remote controller, the vehicle security system is deactivated (disarmed phase).

PANIC ALARM OPERATION

NEEL0197S07

Multi-remote control system may or may not operate vehicle security system (horn and headlamps) as required.
When the multi-remote control system is triggered, power is supplied intermittently

- to vehicle security lamp relay terminal 1
- to smart entrance control unit terminal 39

When the multi remote control system is triggered, ground is supplied intermittently

- to horn relay terminal 2
- through smart entrance control unit terminal 42.

The horn and headlamps operate intermittently.
The alarm automatically turns off after 30 seconds or when smart entrance control unit receives any signal from multi-remote controller.

Circuit Diagram

NEEL0198

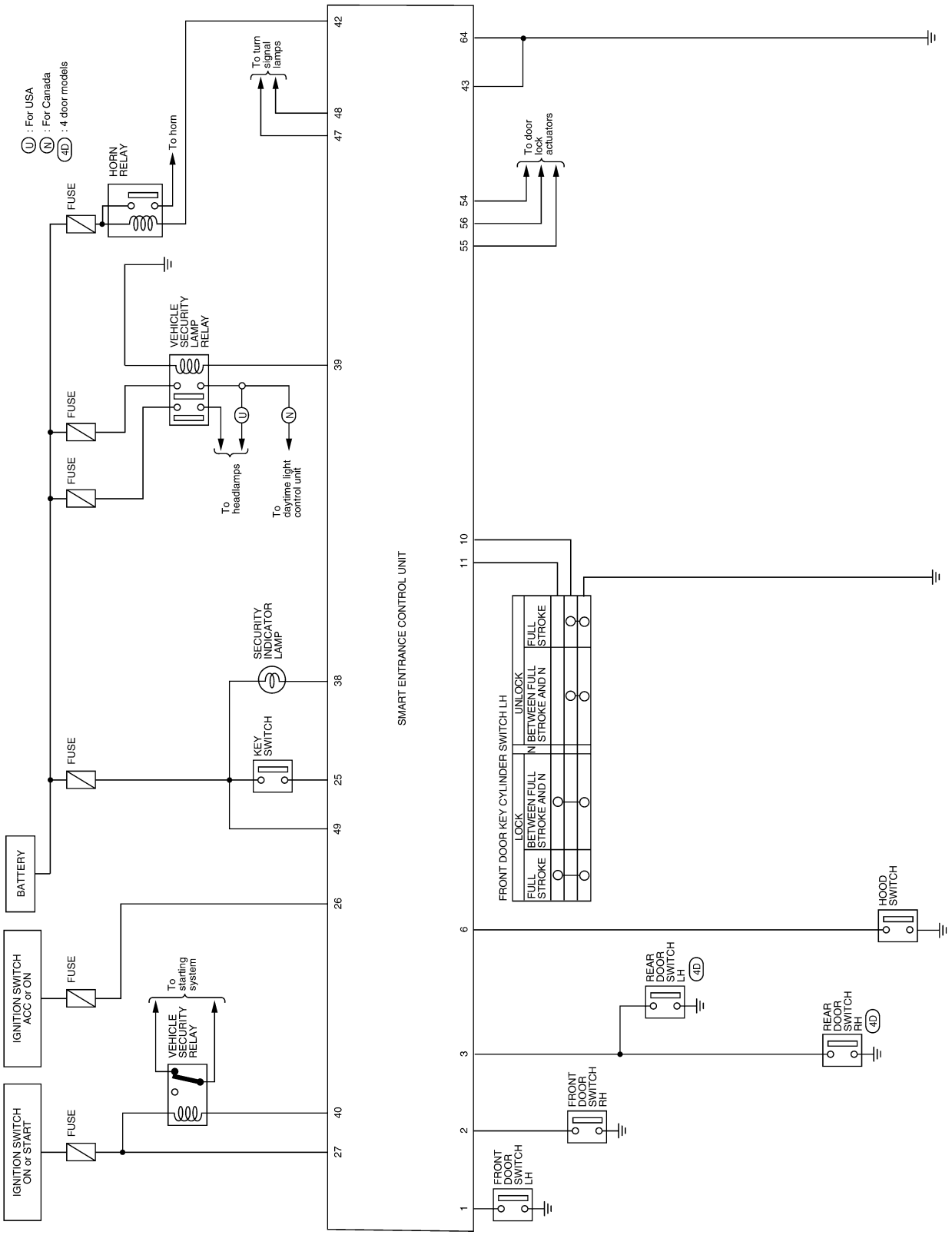

LEL229A

Wiring Diagram — VEHSEC —

NEEL0199

FIG. 1

NEEL0199S01

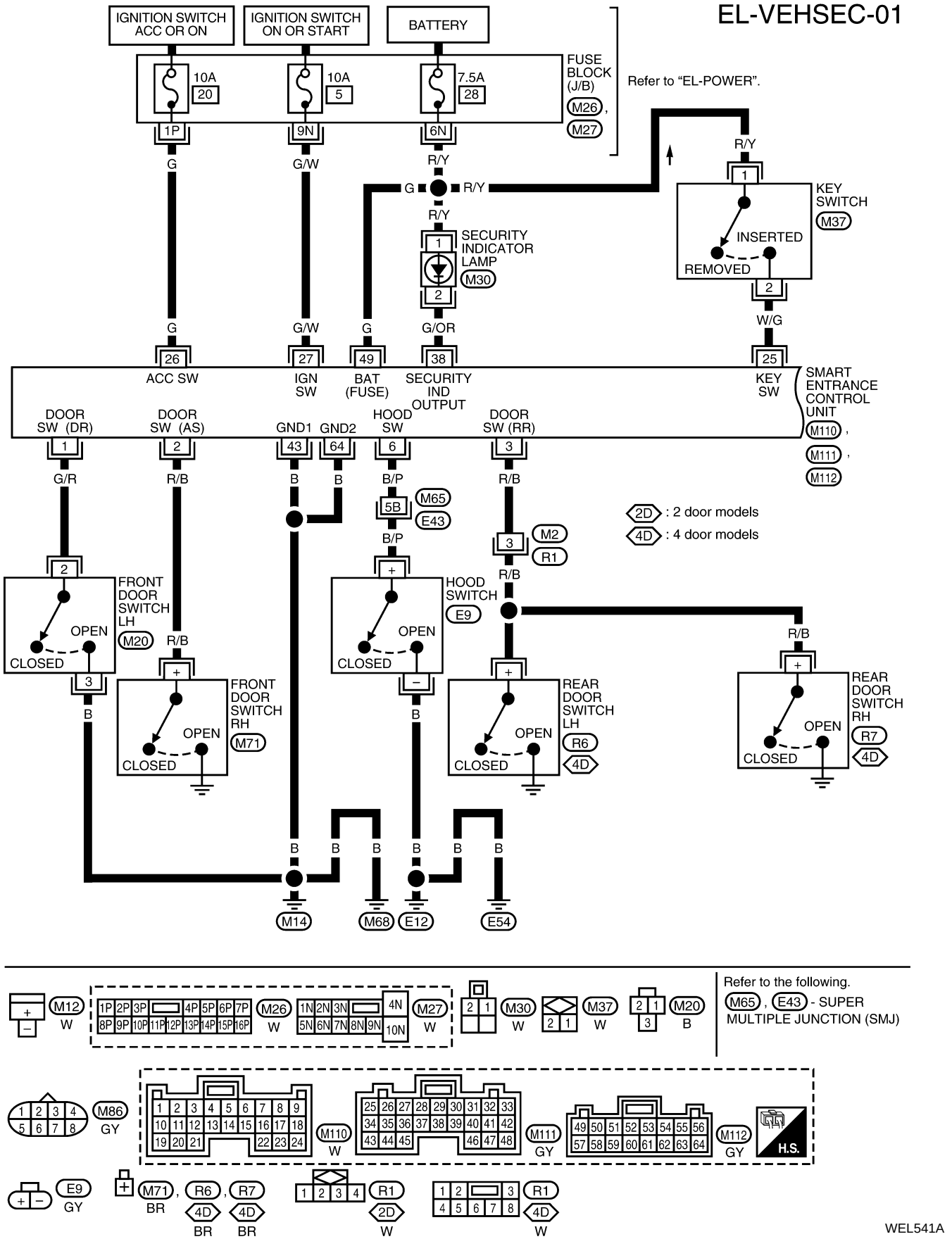

WEL541A

FIG. 2

NEEL0199S02

EL-VEHSEC-02

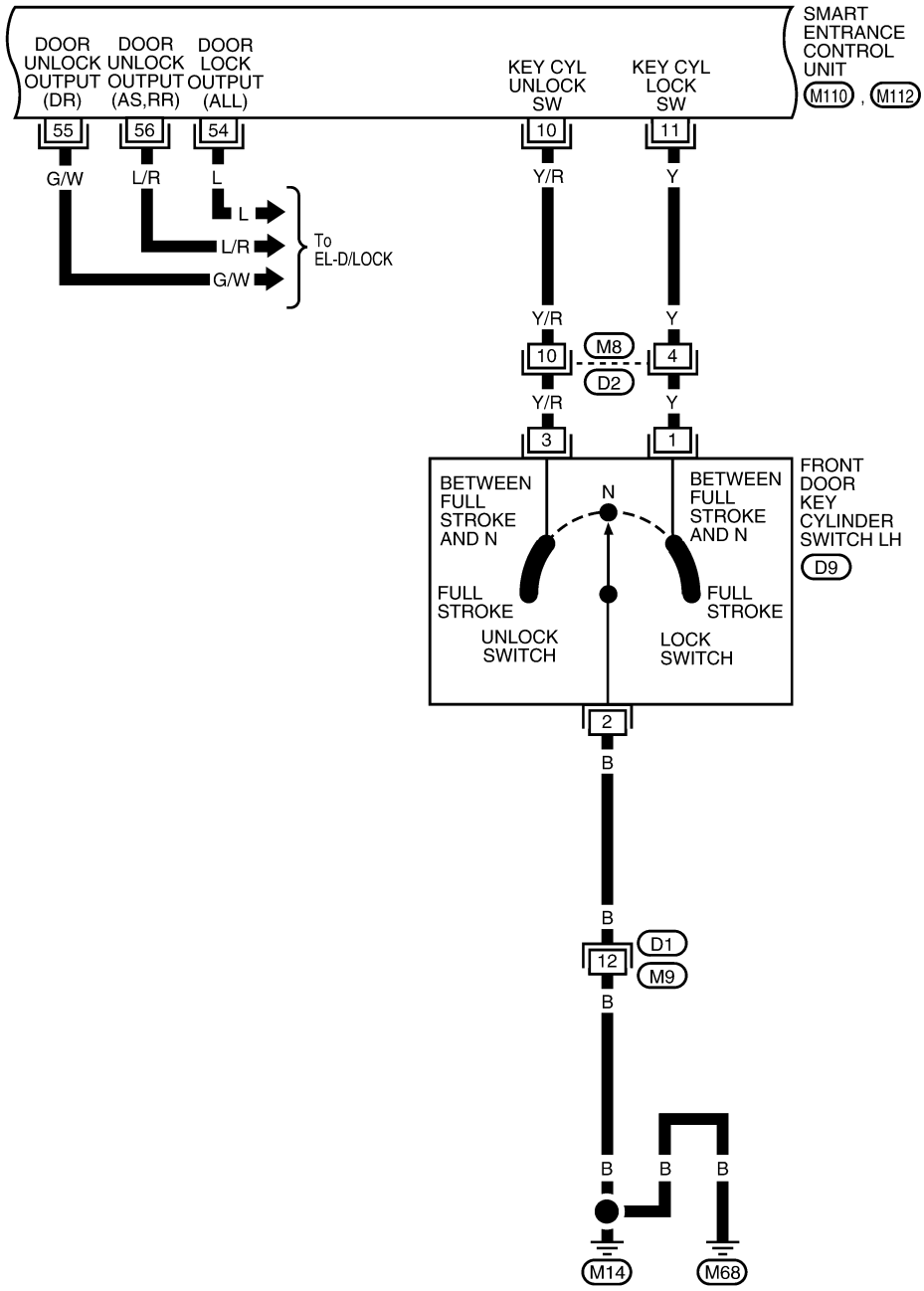

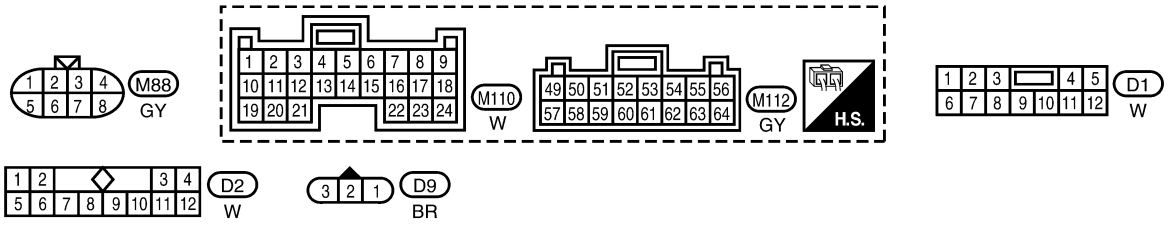

LEL783

FIG. 3

NEEL0199S03

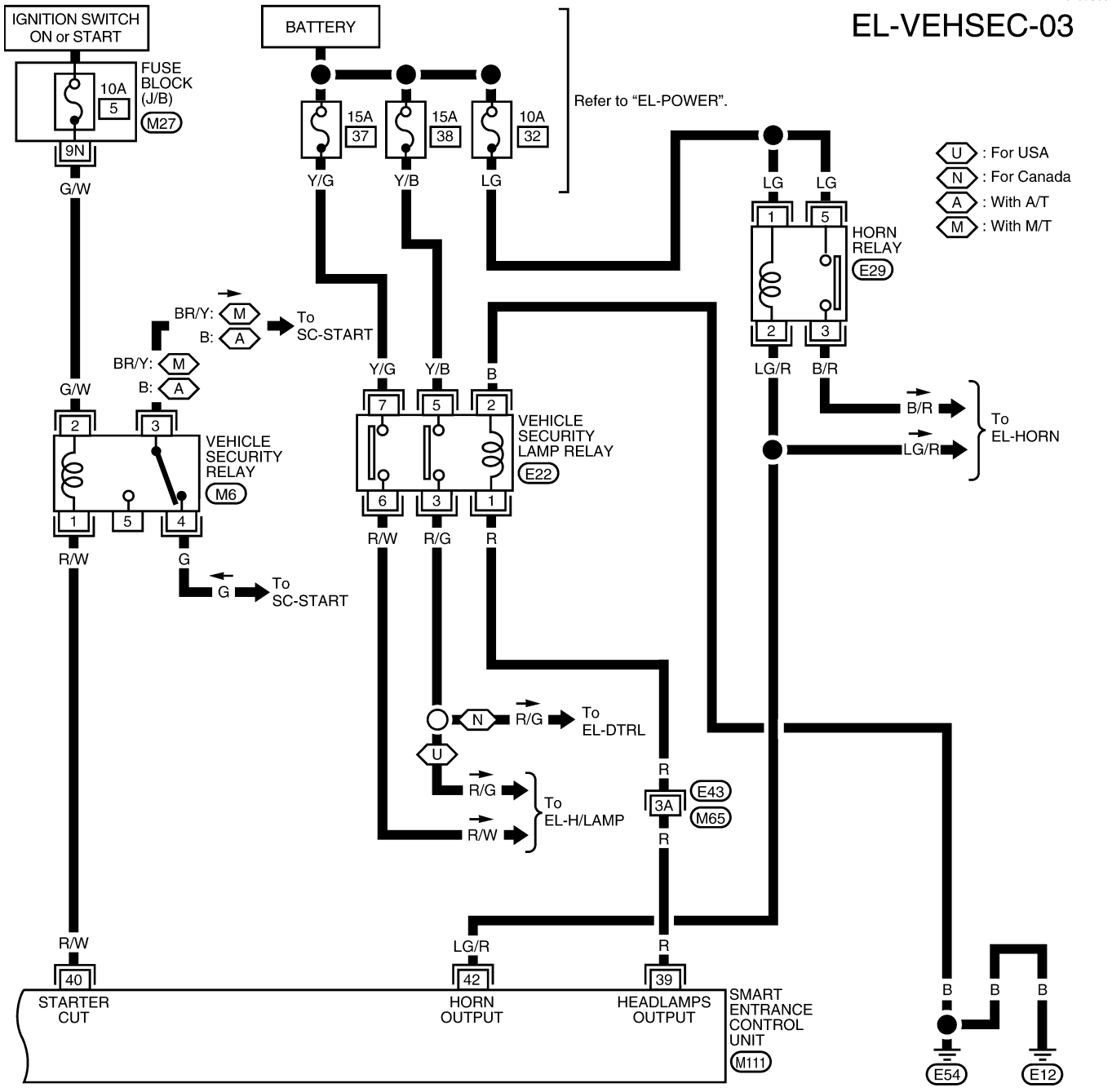

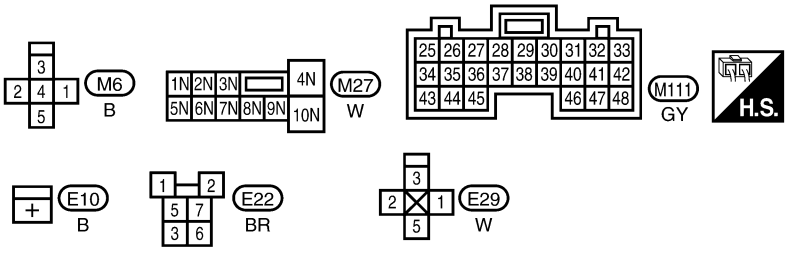

Refer to the following.
M65 , E43 - SUPER MULTIPLE JUNCTION (SMJ)

LEL232A

Trouble Diagnoses

NEEL0200

PRELIMINARY CHECK

NEEL0200S01

The system operation is canceled by turning ignition switch to ACC at any step between START and ARMED in the following flow chart.

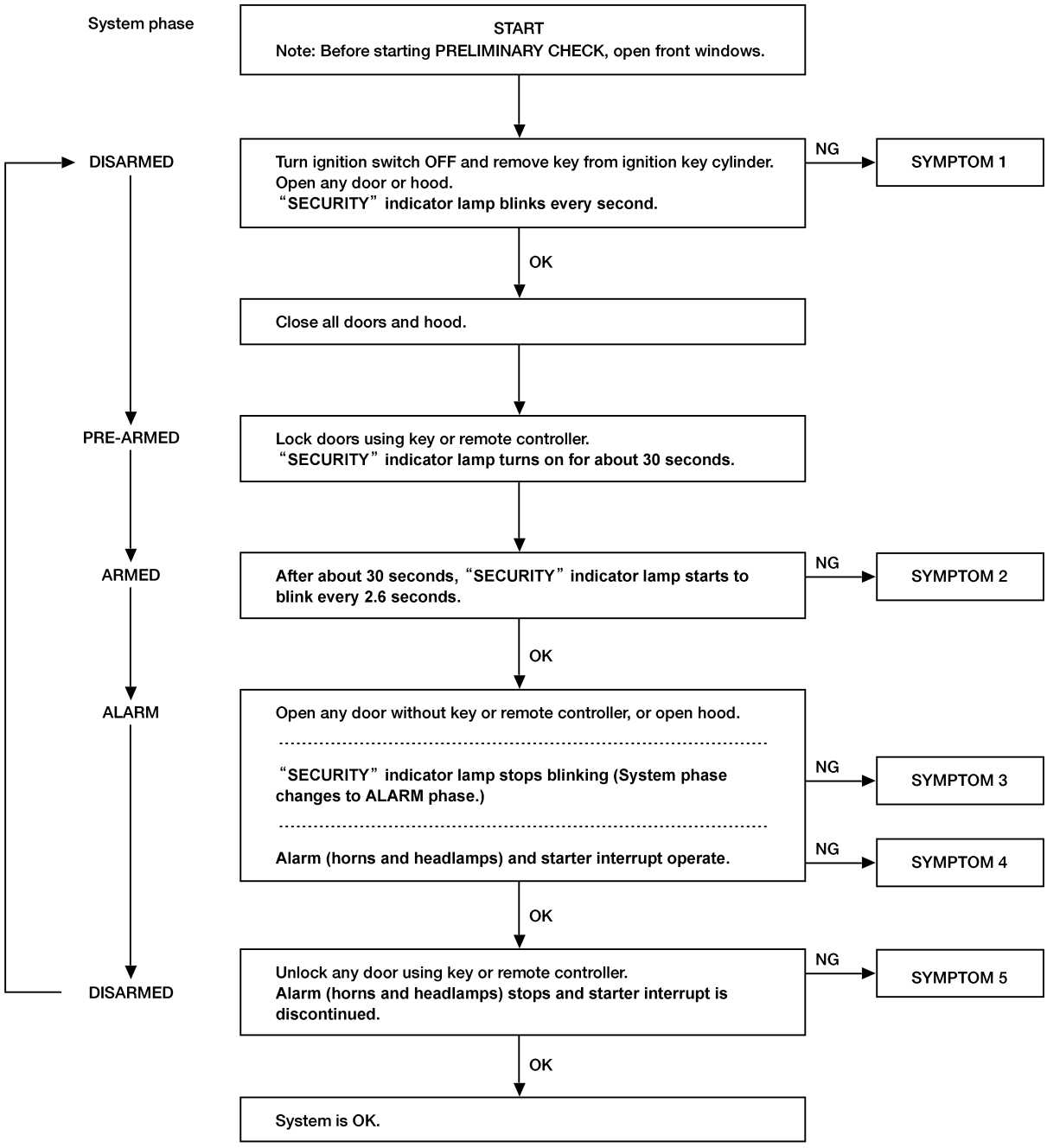

AEL763C

After performing "PRELIMINARY CHECK", go to "SYMPTOM CHART", EL-218.

Trouble Diagnoses (Cont'd)

SYMPTOM CHART

NEEL0200S02

REFERENCE PAGE (EL-)			217	219	220	224	225	226	228	229	197
SYMPTOM			PRELIMINARY CHECK	POWER SUPPLY AND GROUND CIRCUIT CHECK	DOOR AND HOOD SWITCH CHECK	SECURITY INDICATOR LAMP CHECK	DOOR KEY CYLINDER SWITCH CHECK	VEHICLE SECURITY HORN ALARM CHECK	VEHICLE SECURITY HEADLAMP ALARM CHECK	STARTER INTERRUPT SYSTEM CHECK	Check "MULTI-REMOTE CONTROL" system.
1	Vehicle security indicator does not turn ON or blink.		X	X		X					
2	Vehicle security system cannot be set by	All items	X	X	X						
		Door outside key	X				X				
		Multi-remote controller	X								X
3	*1 Vehicle security system does not alarm when ...	Any door is opened.	X		X						
		Front door LH or RH (regular and King Cab) is unlocked without using key or multi-remote controller.	X								
4	Vehicle security alarm does not activate.	All function	X	X	X						
		Horn alarm	X					X			
		Headlamp alarm	X						X		
		Starter interrupt	X							X	
5	Vehicle security system cannot be canceled by	Door outside key	X				X				
		Multi-remote controller	X								X

X : Applicable

*1: Make sure the system is in the armed phase.

Before starting trouble diagnoses above, perform "PRELIMINARY CHECK", EL-217.

Symptom numbers in the symptom chart correspond with those of "PRELIMINARY CHECK".

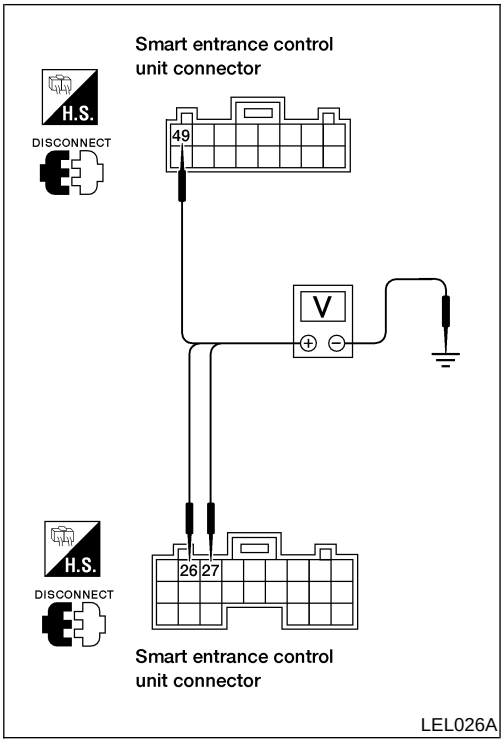

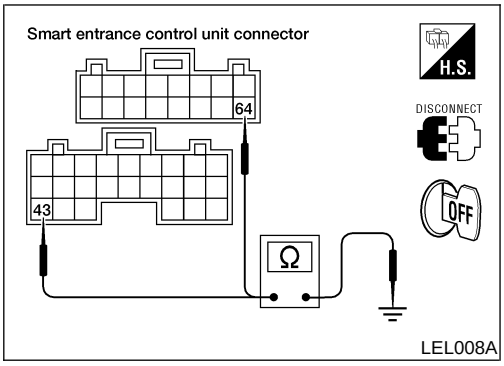

POWER SUPPLY AND GROUND CIRCUIT CHECK

NEEL0200S03

Power Supply Circuit Check

NEEL0200S0301

Terminals		Ignition switch position		
(+)	(−)	OFF	ACC	ON
M112 - 49 (G)	Ground	Battery voltage	Battery voltage	Battery voltage
M111 - 26 (G)	Ground	0V	Battery voltage	Battery voltage
M111 - 27 (G/W)	Ground	0V	0V	Battery voltage

Ground Circuit Check

NEEL0200S0302

Terminals	Continuity
M111 - 43 (B) - Ground	Yes
M112 - 64 (B) - Ground	

DOOR AND HOOD SWITCH CHECK

=NEEL0200S04

Door Switch Check

NEEL0200S0401

1	PRELIMINARY CHECK

1. Turn ignition switch OFF and remove key from ignition key cylinder.
2. Close all doors and hood.
   "SECURITY" indicator lamp should turn off.
3. Open any passenger door.
   "SECURITY" indicator lamp should blink every 2.6 seconds.

OK or NG

OK	▶	Door switch is OK. Check hood switch. Refer to "Hood Switch Check", EL-222.
NG	▶	GO TO 2.

2	CHECK DOOR SWITCH INPUT SIGNAL

Check voltage between smart entrance control unit connector M110 terminals 1 (G/R), 2 (R/B), and 3 (R/B) (Crew Cab) and ground.

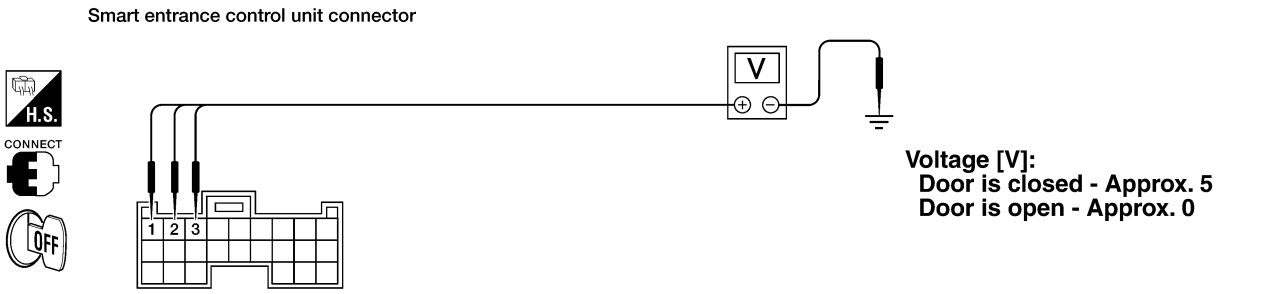

WEL517A

Refer to "Wiring Diagram", EL-214.

OK or NG

OK	▶	Door switch is OK. Check hood switch. Refer to "Hood Switch Check", EL-222.
NG	▶	GO TO 3.

3	CHECK DOOR SWITCH

1. Disconnect door switch harness connector.
2. Check continuity between door switch terminals.

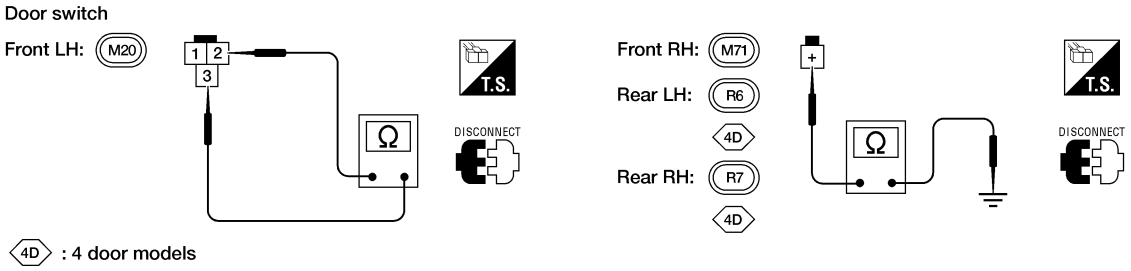

AEL577C

Continuity:

Front door switch LH terminals 2 - 3

Door switch is pressed - No

Door switch is released - Yes

Front door switch RH, rear door switch LH or RH terminal + - ground

Door switch is pressed - No

Door switch is released - Yes

OK or NG

OK	▶	**Check the following.** ● Front door switch LH ground circuit or door switch ground condition ● Harness for open or short between smart entrance control unit and door switch
NG	▶	Replace door switch.

Hood Switch Check

=NEEL0200S0402

1	PRELIMINARY CHECK

1. Turn ignition switch OFF and remove key from ignition key cylinder.
2. Close all doors and hood.
   "SECURITY" indicator lamp should turn off.
3. Open hood.
   "SECURITY" indicator lamp should blink every 2.6 seconds.

OK or NG

OK	▶	Hood switch is OK.
NG	▶	GO TO 2.

2	CHECK HOOD SWITCH FITTING CONDITION

OK or NG

OK	▶	GO TO 3.
NG	▶	Adjust installation of hood switch or hood.

3	CHECK HOOD SWITCH INPUT SIGNAL

Check voltage between smart entrance control unit connector M110 terminal 6 (B/P) and ground.

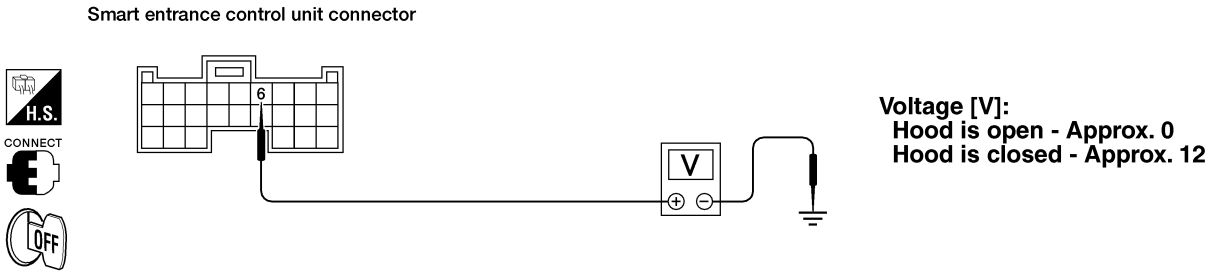

LEL029A

Refer to "Wiring Diagram", EL-214.

OK or NG

OK	▶	Hood switch is OK.
NG	▶	GO TO 4.

4	CHECK HOOD SWITCH

1. Disconnect hood switch harness connector.
2. Check continuity between hood switch terminals + and –.

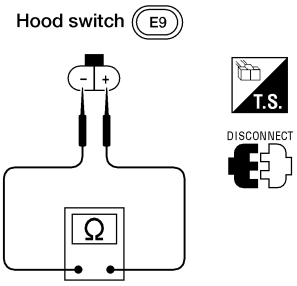

AEL430B

Continuity:
Condition: Pressed
No
Condition: Released
Yes

OK or NG

OK	▶	**Check the following.** ● Hood switch ground circuit ● Harness for open or short between smart entrance control unit and hood switch
NG	▶	Replace hood switch.

SECURITY INDICATOR LAMP CHECK

=NEEL0200S05

1	CHECK INDICATOR LAMP OUTPUT SIGNAL

1. Disconnect smart entrance control unit harness connector.
2. Check voltage between smart entrance control unit harness connector M111 terminal 38 (G/OR) and ground.

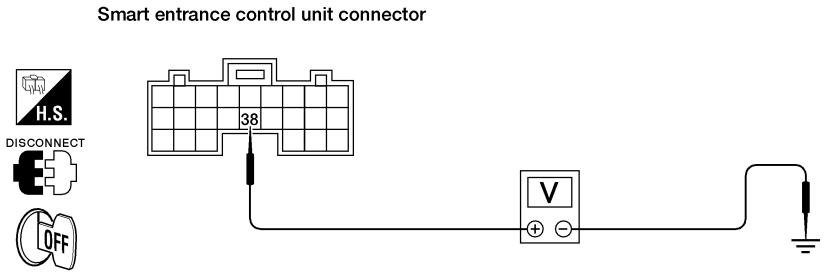

Battery voltage should exist.

LEL030A

Refer to "Wiring Diagram", EL-214.

OK or NG

OK	▶	Security indicator lamp is OK.
NG	▶	GO TO 2.

2	CHECK INDICATOR LAMP

OK or NG

OK	▶	GO TO 3.
NG	▶	Replace indicator lamp.

3	CHECK POWER SUPPLY CIRCUIT FOR INDICATOR LAMP

1. Disconnect security indicator lamp harness connector.
2. Check voltage between security indicator lamp harness connector terminal 1 and ground.

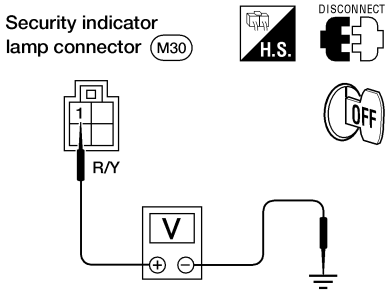

AEL145C

Does battery voltage exist?

Yes	▶	Check harness for open or short between security indicator lamp and smart entrance control unit.
No	▶	**Check the following.** ● 7.5A fuse [No. 28, located in fuse block (J/B)] ● Harness for open or short between security indicator lamp and fuse

DOOR KEY CYLINDER SWITCH CHECK

=NEEL0200S07

1 **CHECK DOOR KEY CYLINDER SWITCH INPUT SIGNAL (LOCK/UNLOCK SIGNAL)**

Check voltage between smart entrance control unit harness connector M111 terminal 11 (Y) or 10 (Y/R) and ground.

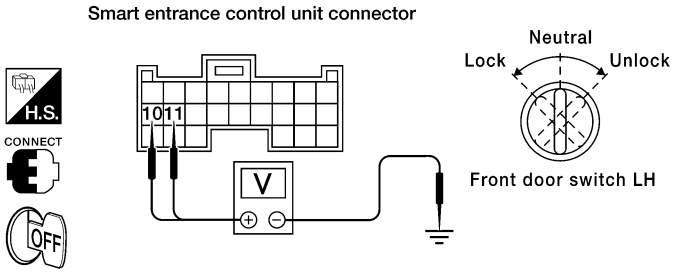

Terminals (+)	Terminals (–)	Key position	Voltage [V]
11	Ground	Neutral	Approx. 5
		Lock	0
10	Ground	Neutral	Approx. 5
		Unlock	0

WEL518A

Refer to "Wiring Diagram", EL-215.

OK or NG

OK	▶	Door key cylinder switch is OK.
NG	▶	GO TO 2.

2 **CHECK DOOR KEY CYLINDER SWITCH**

1. Disconnect door key cylinder switch harness connector.
2. Check continuity between door key cylinder switch terminals.

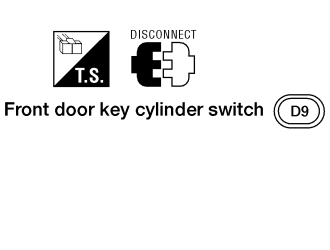

Terminals	Key position	Continuity
1 – 2	Neutral	No
	Lock	Yes
3 – 2	Neutral	No
	Unlock	Yes

LEL032A

OK or NG

OK	▶	**Check the following.** ● Door key cylinder switch ground circuit ● Harness for open or short between smart entrance control unit and door key cylinder switch
NG	▶	Replace door key cylinder switch.

HORN ALARM CHECK

=NEEL0200S09

1	CHECK HORN ALARM OPERATION

1. Disconnect smart entrance control unit harness connector.
2. Apply ground to smart entrance control unit harness connector M111 terminal 42 (LG/R).

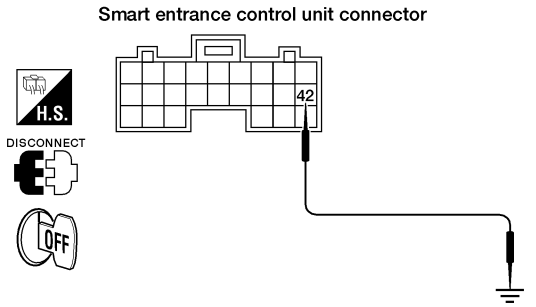

Horn alarm should operate.

LEL033A

Refer to "Wiring Diagram", EL-216.

OK or NG

OK	▶	Horn alarm is OK.
NG	▶	GO TO 2.

2	CHECK HORN RELAY

Check horn relay.

OK or NG

OK	▶	GO TO 3.
NG	▶	Replace.

3	CHECK POWER SUPPLY FOR HORN RELAY

1. Disconnect horn relay harness connector.
2. Check voltage between horn relay harness connector E29 terminal 2 (LG/R) and ground.

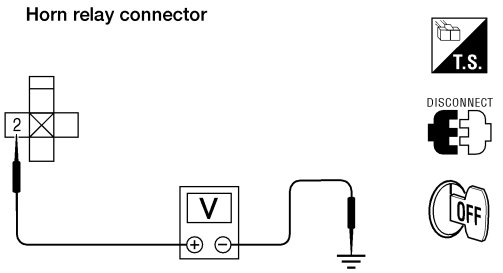

Does battery voltage exist?

WEL371A

Does battery voltage exist?

Yes	▶	GO TO 4.
No	▶	**Check the following.** ● 10A fuse (No. 32, located in the fuse and fusible link box) ● Harness for open or short between vehicle security horn relay and fuse

4	CHECK HORN RELAY CIRCUIT

1. Disconnect horn relay harness connector.
2. Check voltage between horn relay harness connector E29 terminals 3 (B) and 5 (LG/R).
   Battery voltage should exist.

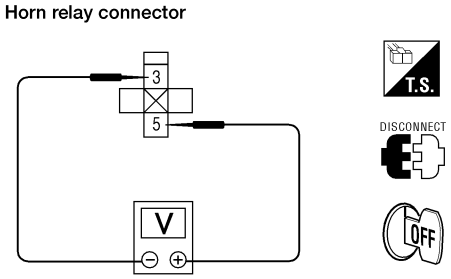

WEL372A

OK or NG

OK	▶	Check harness for open or short between vehicle security horn relay and smart entrance control unit.
NG	▶	Check harness for open or short.

VEHICLE SECURITY HEADLAMP ALARM CHECK

=NEEL0200S10

1	CHECK VEHICLE SECURITY LAMP CIRCUIT

1. Disconnect smart entrance control unit harness connector.
2. Check continuity between smart entance control unit M111 terminal 39 (R) and ground.

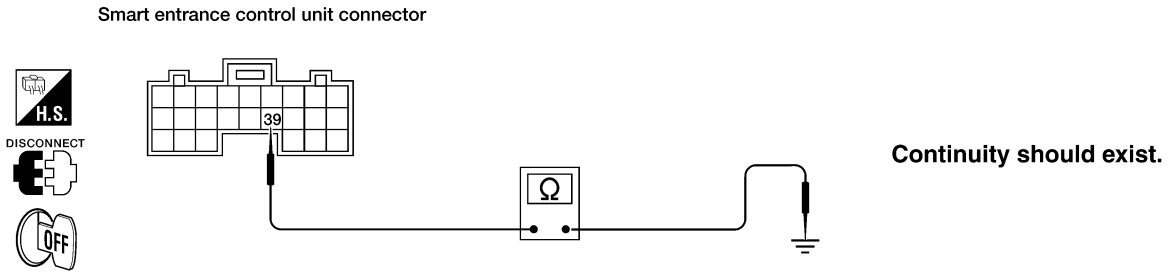

Refer to "Wiring Diagram", EL-216.

OK or NG

OK	▶	GO TO 2.
NG	▶	**Check the following** ● Harness for open or short between smart entrance control unit and vehicle security lamp relay ● Vehcile security lamp relay ground circuit ● Vehcile security lamp relay.

2	CHECK VEHICLE SECURITY LAMP RELAY CIRCUIT

1. Apply vehicle security lamp relay harness connector E22 terminal 3 (R/G) to 5 (R/W).
   Vehicle security headlamp should operate.
2. Apply vehicle security lamp relay harness connector E22 terminal 6 (R/W) to 7 (Y/G).
   Vehicle security headlamp should operate.

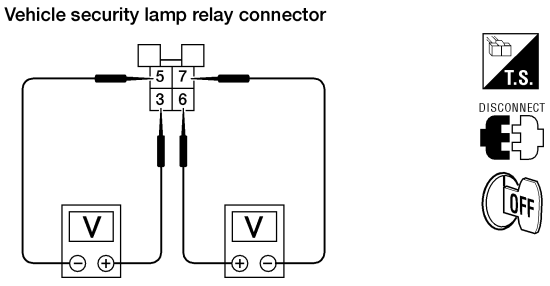

OK or NG

OK	▶	GO TO 3.
NG	▶	**Check the following** ● Harness for open or short between vehicle security lamp relay and headlamps ● Harness for open or short between vehicle security lamp relay and fuse

3	CHECK VEHICLE SECURITY LAMP RELAY

Check vehicle security lamp relay.

OK or NG

OK	▶	Replace smart entrance control unit.
NG	▶	Replace vehicle security lamp relay.

STARTER INTERRUPT SYSTEM CHECK

=NEEL0200S11

1	CHECK STARTER MOTOR INTERRUPT SIGNAL

1. Turn ignition switch ON.
2. Check voltage between smart entrance control unit connector M111 terminal 40 (R/W) and ground.

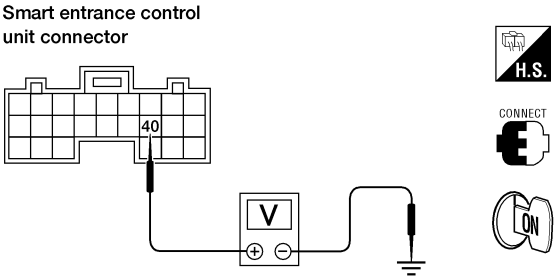

Voltage [V]:
Except starter interrupted phase - Approx. 12
Starter interrupted phase - Approx. 0

LEL057A

Refer to "Wiring Diagram", EL-216.

OK or NG

OK	▶	GO TO 2.
NG	▶	**Check the following.** ● 10A fuse [No. 5, located in fuse block (J/B)] ● Harness for open or short between vehicle security relay and fuse ● Harness for open or short between smart entrance control unit and vehicle security relay

2	CHECK VEHICLE SECURITY RELAY

Check vehicle security relay.

OK or NG

OK	▶	Check system again.
NG	▶	Replace relay.

Description

NEEL0124

The following systems are controlled by the smart entrance control unit.

- Warning chime
- Power window retained power
- Power door lock
- Multi-remote control system
- Vehicle security system
- Room lamp timer
- Rear window defogger timer
- Battery saver

For detailed description and wiring diagrams, refer to the relevant pages for the each system.
The smart entrance control unit receives data from the switches and sensors to control their corresponding system relays and actuators.

System	Input	Output
Warning chime	Key switch (insert) Ignition switch (ON) Lighting switch (1st) Seat belt buckle switch Front door switch LH	Warning chime
Power window retained power	Ignition switch Front door switch LH	Power window relay
Power door lock	Door lock/unlock switch Key switch (insert) Door switches Door key cylinder switch (lock/unlock)	Door lock actuator
Multi-remote control	Key switch (insert) Ignition switch (ACC) Door switch Door lock/unlock switches Antenna (remote controller signal)	Horn relay Vehicle security lamp relay Door lock actuator
Vehicle security	Ignition switch (ACC, ON) Door switch Hood switch Door lock/unlock switches Door key cylinder switch (lock/unlock)	Vehicle security lamp relay Vehicle security relay (Starter interrupt) Security indicator
Room lamp timer	Door switches Ignition switch Key switch (insert) Door lock/unlock switches	Room lamp
Rear window defogger timer	Ignition switch (ON) Rear window defogger switch	Rear window defogger relay
Battery saver	Ignition switch (ON) Door switches Key switch (insert)	Room lamp Map lamp

Circuit Diagram

NEEL0125

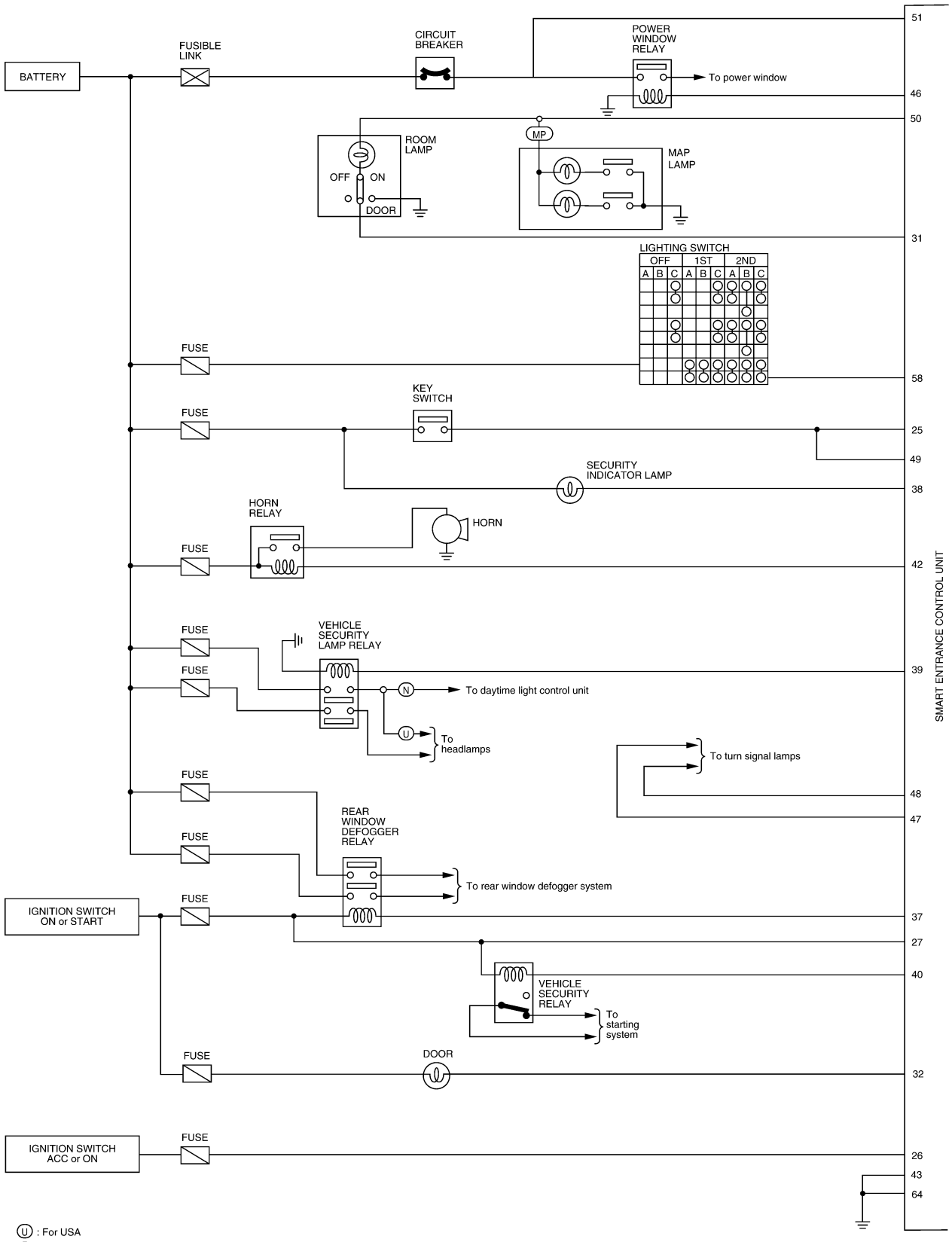

U : For USA
N : For Canada
MP : With map lamps

LEL785

Circuit Diagram (Cont'd)

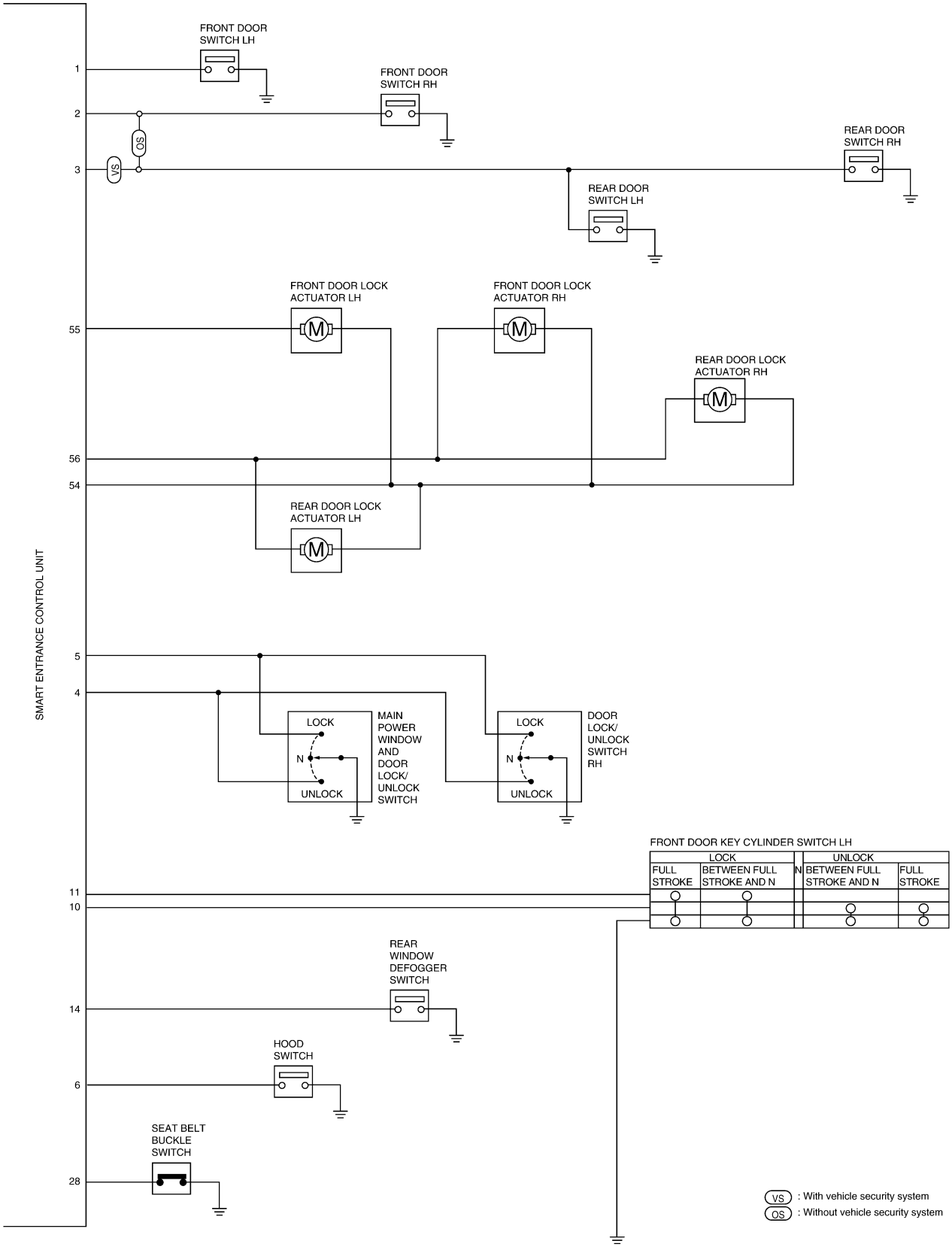

WEL088B

Smart Entrance Control Unit Inspection Table

NEEL0126

Terminal No.	Wire color	Connections	Operated condition	Voltage (Approx.)
1	G/R	Front door switch LH	OFF (Closed) → ON (Open)	5V → 0V
2	R/B	Front door switch RH and rear door switch LH and RH (Crew Cab without vehicle security system)	OFF (Closed) → ON (Open)	5V → 0V
3	R/B	Rear door switch LH and RH (Crew Cab with vehicle security system)	OFF (Closed) → ON (Open)	5V → 0V
4	BR	Main power window and door lock/unlock switch, door lock/unlock switch RH	Neutral → Unlock	5V → 0V
5	LG/R	Main power window and door lock/unlock switch, door lock/unlock switch RH	Neutral → Lock	5V → 0V
6	B/P	Hood switch	ON (Open) → OFF (Closed)	0V → 12V
10	Y/R	Front door key cylinder unlock switch LH	OFF (Neutral) → ON (Unlock)	5V → 0V
11	Y	Front door key cylinder lock switch LH	OFF (Neutral) → ON (Lock)	5V → 0V
14	G/B	Rear window defogger switch	OFF → ON	12V → 0V
25	W/G	Ignition key switch (Insert)	Key inserted → Key removed from ignition key cylinder	12V → 0V
26	G	Ignition switch (ACC)	ACC position	12V
27	G/W	Ignition switch (ON)	Ignition key is in ON position	12V
28	B/P	Seat belt buckle switch	Unfastened → Fastened (Ignition key is in ON position)	0V → 12V
31	R/B	Room lamp	When any door switch is in OPEN (door is open) position (Interior lamp switch in DOOR position)	12V → 0V
32	R/B	Door ajar indicator lamp	OFF → ON (Ignition key is in ON position)	12V → 0V
37	G/R	Rear window defogger relay	OFF → ON (Ignition key is in ON position)	12V → 0V
38	G/OR	Security indicator lamp	Turns OFF → Turns ON	12V → 0V
39	R	Vehicle security lamp relay	When panic alarm is operated using remote controller or when alarm is activated	12V → 0V
40	R/W	Vehicle security relay (Starter cut)	OFF → ON (Ignition key is in ON position)	12V → 0V
42	LG/R	Horn relay	When panic alarm is operated using remote controller or when alarm is activated	12V → 0V
43	B	Ground	—	—
46	G/W	Power window relay	Ignition key is in ON position → 45 seconds after ignition key is turned to OFF position	12V → 0V
47	GY	Turn signal lamp LH	When doors are locked using remote controller	12V → 0V
48	P/B	Turn signal lamp RH	When doors are locked using remote controller	12V → 0V
49	G	Power source (Fuse)	—	12V
50	R/G	Battery saver (Room lamp)	Turns OFF → Turns ON	12V → 0V
51	W/R	Power source (C/B)	—	12V

Smart Entrance Control Unit Inspection Table (Cont'd)

Terminal No.	Wire color	Connections	Operated condition		Voltage (Approx.)
54	L	Front door lock actuator LH and RH, rear door lock actuator LH and RH (Crew Cab)	Main power window and door lock/unlock switch, door lock/unlock switch RH	Lock	12V
				Neutral, unlock	0V
55	G/W	Front door lock actuator LH	Main power window and door lock/unlock switch, door lock/unlock switch RH	Unlock	12V
				Neutral, lock	0V
56	PU* L/R**	Front door lock actuator RH, rear door lock actuator LH and RH (Crew Cab)	Main power window and door lock/unlock switch, door lock/unlock switch RH	Unlock	12V
				Neutral, lock	0V
58	L/R	Lighting switch	1ST, 2ND positions: ON → OFF		12V → 0V
64	B	Ground	—		—

* Regular Cab and King Cab
** Crew Cab

Engine Compartment

NEEL0129

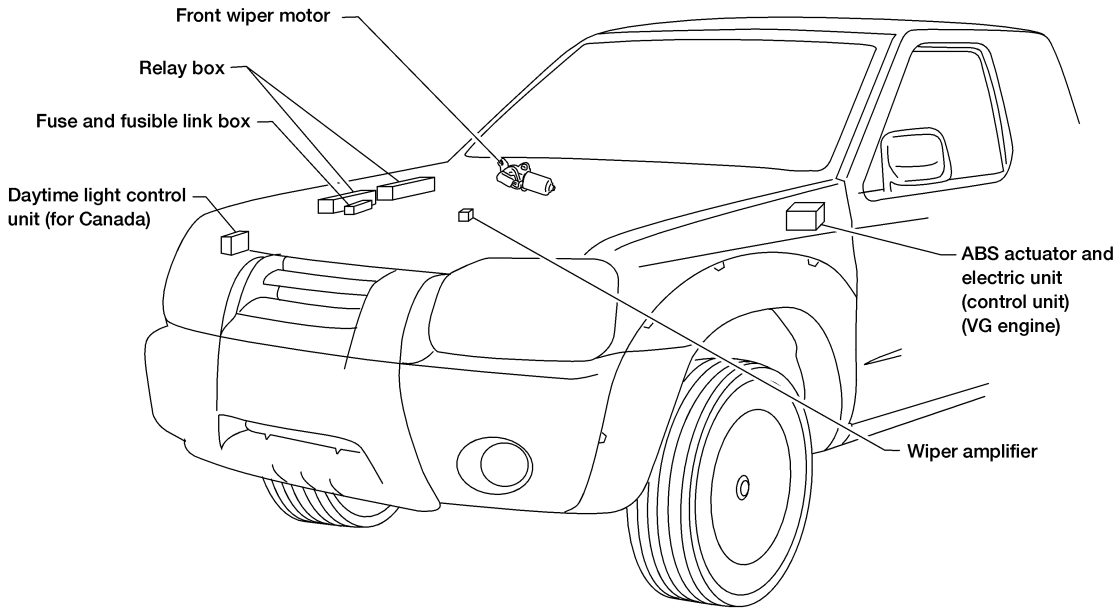

KA24DE and VG33E

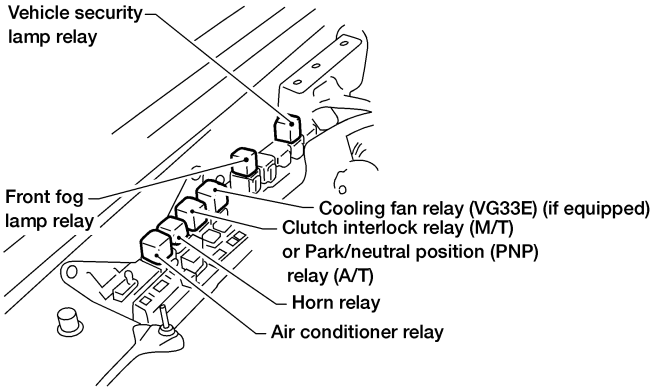

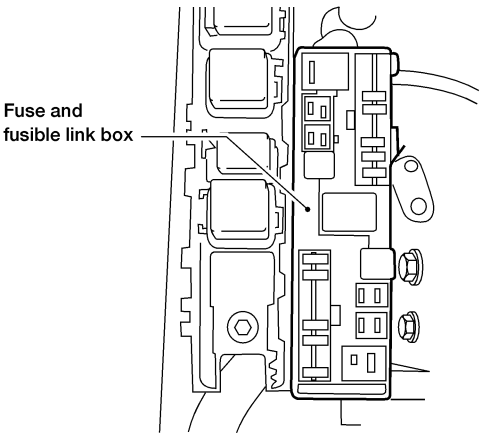

VG33ER

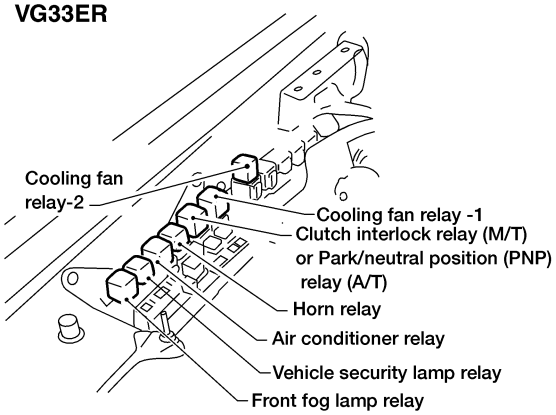

WEL452A

Passenger Compartment

NEEL0130

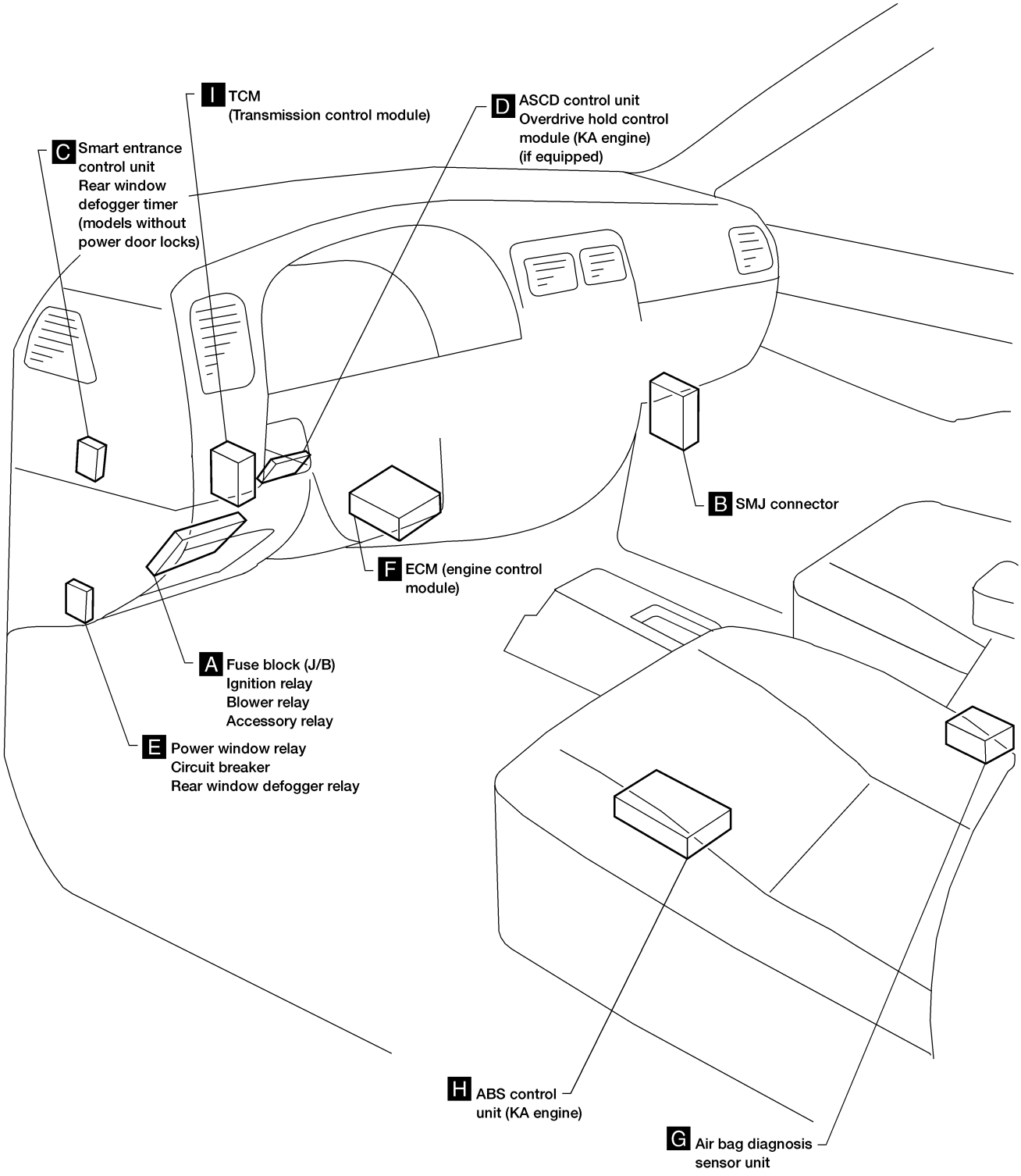

WEL508A

A

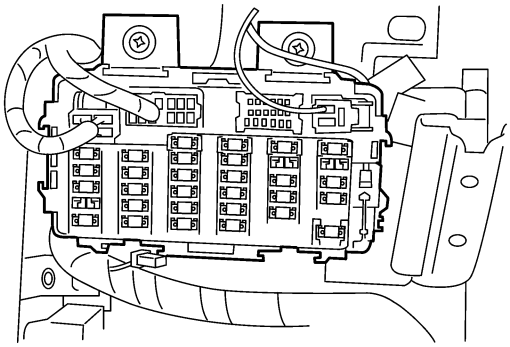

Rear view of fuse block (J/B)

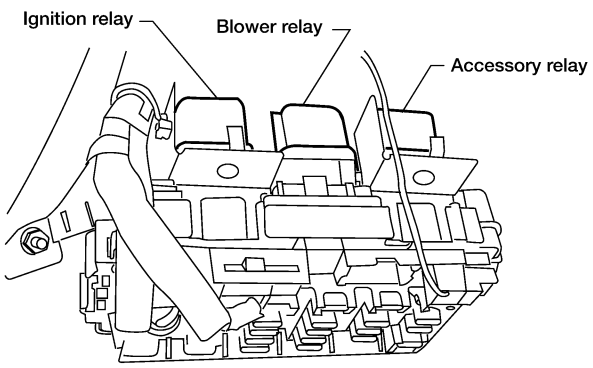

B

SMJ
View with dash side finisher RH removed

3 – 5 N·m
(0.3 – 0.5 kg-m
26 – 43 in-lb)

C

View with instrument lower panel driver's side removed

Smart entrance control unit (M110)
(M111) (M112)

Hood release

For models with power door locks

D

View with instrument lower panel driver's side removed

ASCD control unit (M33)

Overdrive hold control module (KA engine) (if equipped)

E

View with dash side pinisher LH removed

Power window relay
Circuit breaker
Rear window defogger relay

F

View with instrument stay cover removed

ECM (F29)

G

Air bag diagnosis sensor unit

Front

H

ABS control unit (KA engine) (M23)

I

View with instrument lower panel LH removed

TCM (Transmission control module)

Brake pedal

WEL509A

How to Read Harness Layout

NEEL0172

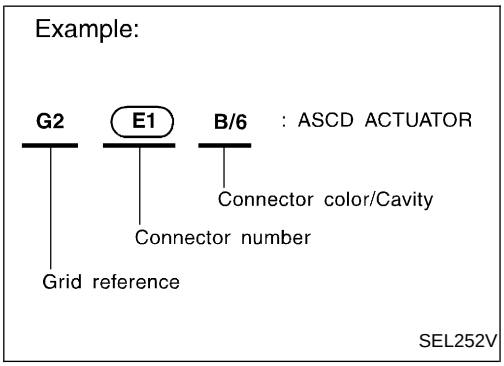

The following Harness Layouts use a map style grid to help locate connectors on the drawings:

- Main Harness and Body No. 2 Harness
- Engine Room Harness (Engine Compartment)

TO USE THE GRID REFERENCE

NEEL0172S01

1. Find the desired connector number on the connector list.
2. Find the grid reference.
3. On the drawing, find the crossing of the grid reference letter column and number row.
4. Find the connector number in the crossing zone.
5. Follow the line (if used) to the connector.

CONNECTOR SYMBOL

NEEL0172S02

Main symbols of connector (in Harness Layout) are indicated below.

Connector type	Water proof type		Standard type	
	Male	Female	Male	Female
• Cavity: Less than 4 • Relay connector				
• Cavity: From 5 to 8				
• Cavity: More than 9				
• Ground terminal etc.	—			

Outline

NEEL0173

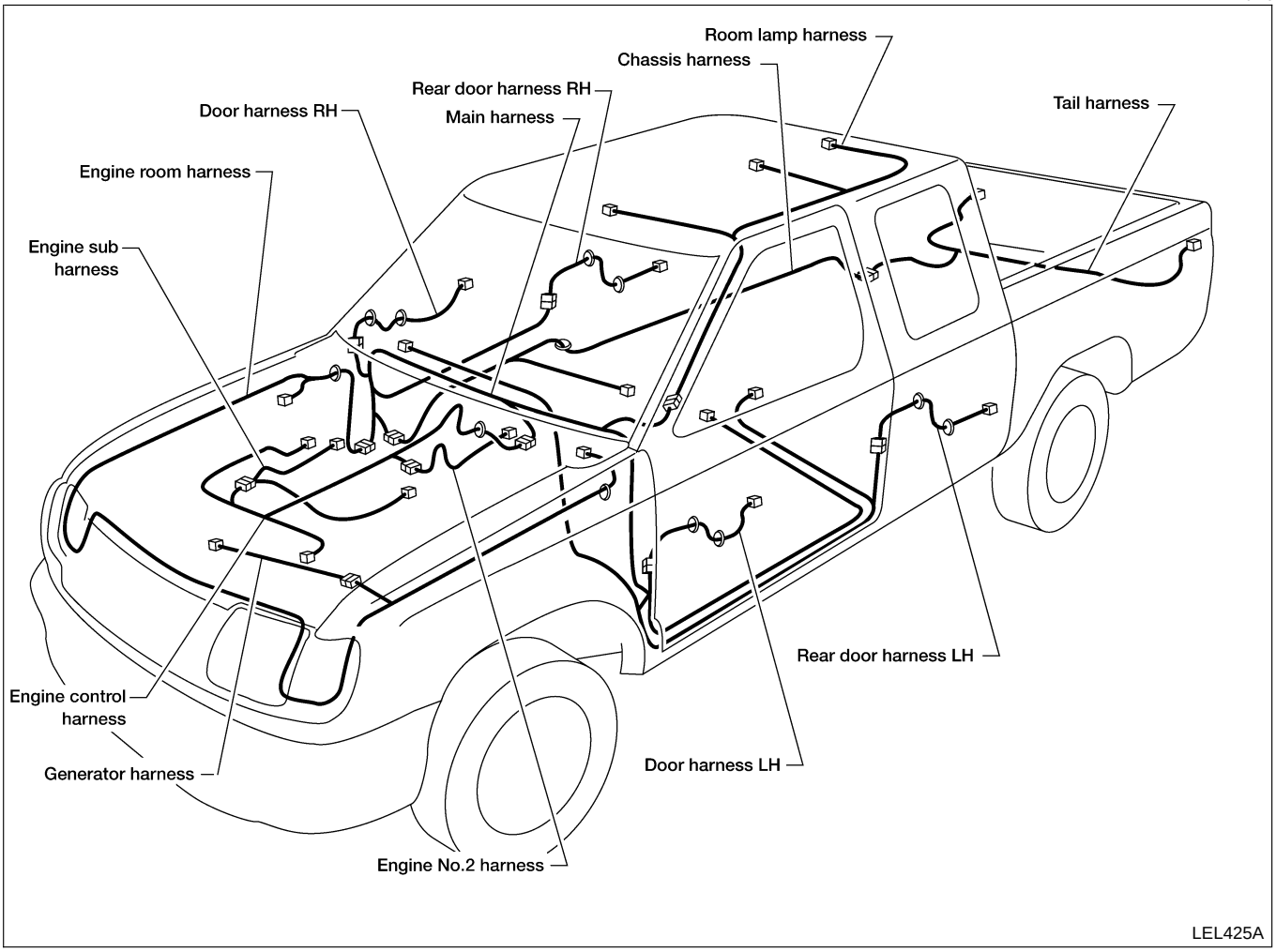

NOTE:
For detailed ground distribution information, refer to “GROUND DISTRIBUTION”, EL-17.

Main Harness (KA24DE Models)

NEEL0174

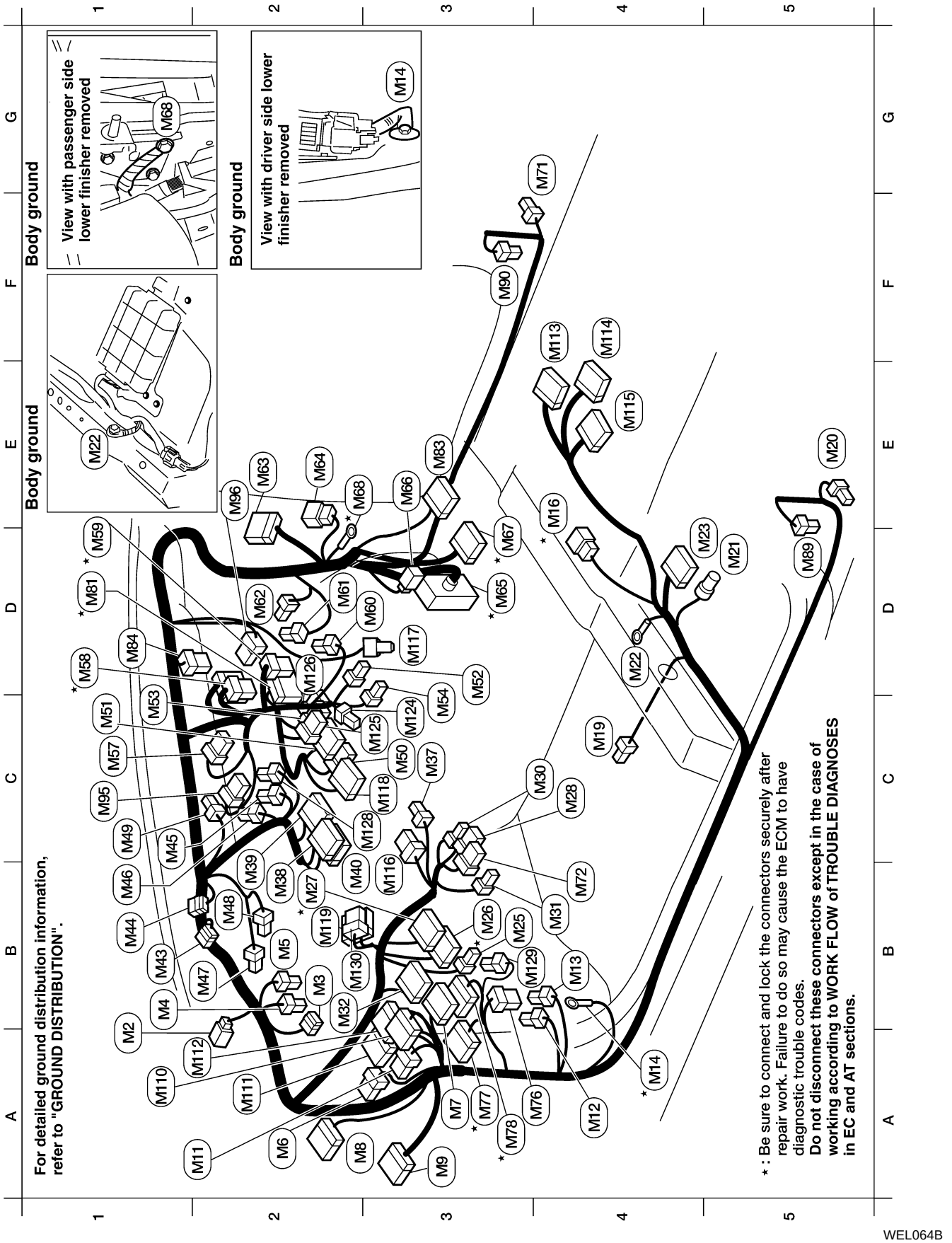

WEL064B

A1 (M2) W/4 : To (R1)
B1 (M3) GY/4 : Diode -3 (with A/T and ASCD)
B1 (M4) L/2 : ASCD clutch switch (with M/T)
B2 (M5) L/2 : Clutch interlock switch (with M/T)
A2 (M6) B/5 : Vehicle security relay (with vehicle security system)
A3 (M7) BR/12: To (E53)
A2 (M8) W/8 : To (D2)
A3 (M9) W/12 : To (D1)
A2 (M11) W/8 : Warning chime unit (without power door locks)
A4 (M12) W/2 : Circuit breaker (with power door locks)
B4 (M13) L/4 : Power window relay (with power windows)
A4 (M14) - : Body ground
D4 *(M16) W/6 : To (C15)
C4 (M19) W/3 : Seat belt buckle switch
E5 (M20) B/3 : Front door switch LH
D5 *(M21) GY/4 : Heated oxygen sensor 2 (rear)
D4 (M22) - : Body ground
D5 (M23) GY/17 : ABS control unit
B3 (M25) L/6 : ABS check connector
B3 *(M26) W/16 : Fuse block (J/B)
B2 *(M27) W/10 : Fuse block (J/B)
C4 (M28) W/3 : Illumination control switch
C4 (M30) W/4 : Security indicator lamp (with vehicle security system)
B4 (M31) W/3 : Fuse block (J/B)
B2 (M32) W/16 : Data link connector
C3 (M37) W/2 : Key switch
B2 (M38) W/24 : Combination meter
C2 (M39) BR/24: Combination meter
B2 (M40) BR/20: Combination meter
B1 (M43) SB/4 : Diode - 4
B1 (M44) SB/4 : Diode - 1 (for Canada)

C1 (M45) B/3 : Combination flasher unit
B1 (M46) L/4 : Fuel pump relay
B2 (M47) B/2 : Stop lamp switch
B2 (M48) L/2 : ASCD brake switch (A/T shift lock brake switch)
C1 (M49) W/2 : Parking brake switch
C3 (M50) W/6 : Audio unit
C1 (M51) W/10 : Audio unit
D3 (M52) B/2 : Cigarette lighter socket (early production)
D3 (M52) W/3 : Cigarette lighter socket (late production)
C1 (M53) W/8 : Hazard switch
D3 (M54) B/2 : Front power socket (with power socket)(early production)
D3 (M54) B/3 : Front power socket (with power socket)(late production)
C1 (M57) W/6 : Fan switch
D1 *(M58) W/6 : To (F28)
E1 *(M59) W/8 : To (F27)
D3 (M60) W/3 : Thermo control amplifier
D2 (M61) BR/4 : Fan resistor
D2 (M62) W/2 : Blower motor
E2 (M63) W/12 : To (D101)
E2 (M64) W/6 : To (D102)
D3 *(M65) SMJ : To (E43)

*: Be sure to connect and lock the connectors securely after repair work. Failure to do so may cause the ECM to have diagnostic trouble codes.
Do not disconnect these connectors except in the case of working according to WORK FLOW of TROUBLE DIAGNOSES in EC and AT sections.

E3 (M66) B/2 : To (E44)
E3 *(M67) W/18 : To (G1)
E3 *(M68) - : Body ground
G4 (M71) BR/1 : Front door switch RH
B4 (M72) GY/12 : Door mirror remote control switch
A4 *(M76) B/5 : ATP relay (with A/T)
A3 *(M77) W/24 : TCM (with A/T)
A3 *(M78) GY/24 : TCM (with A/T)
D2 *(M81) W/20 : To (F36)
E3 (M83) W/10 : To (C11)
D1 (M84) B/12 : Joint Connector - 5
D5 (M89) Y/2 : Drive seatbelt pre-tensioner
F3 (M90) Y/2 : Passenger seatbelt pre-tensioner
B1 (M94) SB/4 : Diode-2
C1 (M95) B/12 : Air control
E2 (M96) B/6 : Intake door motor
A1 (M10) W/24 : Smart entrance control unit
A2 (M11) GY/24 : Smart entrance control unit
A2 (M12) GY/16 : Smart entrance control unit
E4 (M13) Y/12 : Air bag unit
E4 (M14) Y/20 : Air bag unit
E4 (M15) Y/12 : Air bag unit
B3 (M16) Y/7 : To (M201)
D3 (M17) Y/2 : Passenger air bag module
C3 (M18) W/16 : Audio unit
B2 (M19) BR/24 : ASCD control unit
C3 (M24) W/6 : Passenger air bag deactivation switch
D2 (M25) W/2 : Passenger air bag deactivation indicator
C3 (M28) B/5 : ASCD relay
B4 (M29) L/4 : Overdrive cancel relay (with A/T) (if equipped)
B2 (M33) W/6 : Overdrive hold control module (with A/T) (if equipped)

Diode (M44)
Combination meter — DTRL control unit — Parking brake switch

Diode (M3)
Solenoid valve unit — Overdrive control switch (or overdrive hold control unit) — Combination meter
ASCD control unit

Diode (M43)
ABS control unit — ABS control unit — Brake fluid level switch
Combination meter

WEL065B

Main Harness (VG33E and VG33ER Models)

NEEL0226

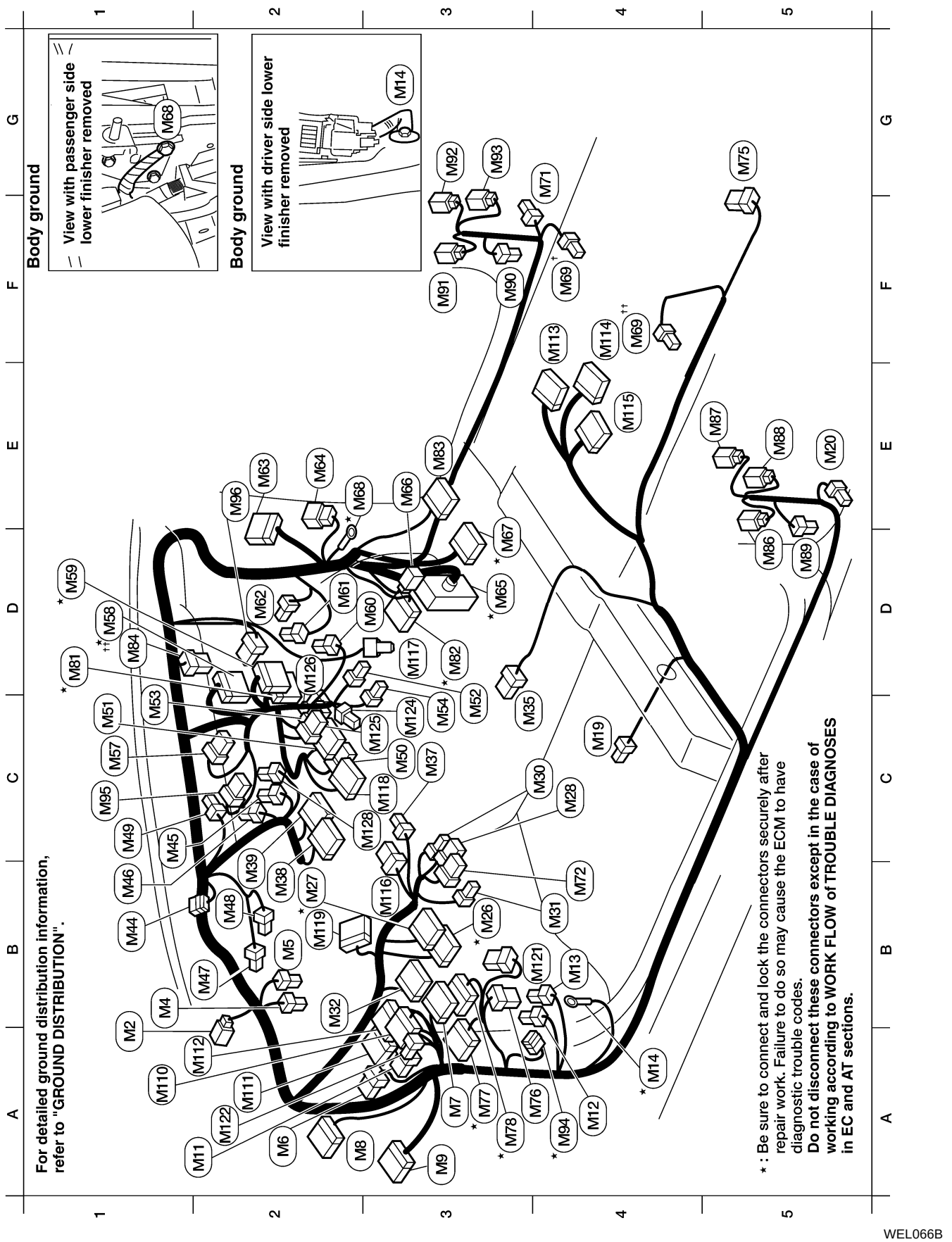

WEL066B

A1 (M2) W/4 : To (R1) (except Crew Cab)
A1 (M2) W/8 : To (R1) (Crew Cab)
B1 (M4) L/2 : ASCD clutch switch (with M/T)
B2 (M5) L/2 : Clutch interlock switch (with M/T)
A2 (M6) B/5 : Vehicle security relay (with power door locks)
A3 (M7) BR/12: To (E53)
A2 (M8) W/8 : To (D2) (except Crew Cab)
A2 (M8) W/12 : To (D2) (Crew Cab)
A3 (M9) W/12 : To (D1)
A2 (M11) W/8 : Warning chime unit (without power door locks)
A4 (M12) W/2 : Circuit breaker (with power door locks)
B4 (M13) L/4 : Power window relay (with power windows)
A4 * (M14) - : Body ground
C4 * (M19) W/3 : Seat belt buckle switch
E5 (M20) B/3 : Front door switch LH
B3 * (M26) W/16 : Fuse block (J/B)
B2 * (M27) W/10 : Fuse block (J/B)
C4 (M28) W/3 : Illumination control switch
C4 (M30) W/4 : Security indicator lamp (with theft warning)
B4 (M31) W/3 : Fuse block (J/B)
B2 (M32) W/16 : Data link connector
C4 (M35) W/6 : A/T device (with A/T)
C3 (M37) W/2 : Key switch
B2 (M38) W/24 : Combination meter
B2 (M39) BR/24: Combination meter
B1 (M44) SB/4 : Diode - 1 (for Canada)
C1 (M45) B/3 : Combination flasher unit
B1 (M46) L/4 : Fuel pump relay
B2 (M47) B/2 : Stop lamp switch
B2 (M48) L/2 : ASCD brake switch (A/T shift lock brake switch)

C1 (M49) W/2 : Parking brake switch
C3 (M50) W/6 : Audio unit
C1 (M51) W/10 : Audio unit
D3 (M52) B/2 : Cigarette lighter socket (early production)
D3 (M52) W/3 : Cigarette lighter socket (late production)
C1 (M53) W/8 : Hazard switch
D3 (M54) B/2 : Front power socket (with power socket) (early production)
D3 (M54) B/3 : Front power socket (with power socket) (early production)
C1 (M57) W/6 : Fan switch
D1 * (M58) W/16 : To (F28) (with VG33E)
D1 * (M58) W/20 : To (F28) (with VG33ER)
D1 * (M59) W/18 : To (F27)
D3 (M60) W/3 : Thermo control amplifier
D2 (M61) BR/4 : Fan resistor
D2 (M62) W/2 : Blower motor
E2 (M63) W/12 : To (D101)
E2 * (M64) W/6 : To (D102)
D3 * (M65) SMJ : To (E43)
E3 (M66) B/2 : To (E44)
D3 * (M67) W/18 : To (C1)
E3 * (M68) - : Body ground
F4 (M69) † B/3 : G-sensor (4-wheel drive except Crew Cab)
F4 (M69) †† B/3 : G-sensor (4-wheel drive Crew Cab)
G4 (M71) BR/1 : Front door switch RH

B4 (M72) GY/12 : Door mirror remote control switch
G5 (M75) W/8 : Subwoofer amplifier (except Crew Cab)
A4 * (M76) B/5 : ATP relay (with A/T)
A3 * (M77) W/24 : TCM (with A/T)
A3 * (M78) GY/24 : TCM (with A/T)
D2 * (M81) W/24 : To (F36)
D3 * (M82) W/20 : To (E74)
E3 (M83) W/10 : To (C11)
D1 (M84) B/12 : Joint Connector-5
D5 (M86) W/3 : To (D201) (Crew Cab)
E5 (M87) W/2 : To (D202) (Crew Cab)
E5 (M88) W/2 : To (D203) (Crew Cab)
D5 (M89) Y/2 : Drive seatbelt pre-tensioner
F3 (M90) Y/2 : Passenger seatbelt pre-tensioner
F3 (M91) W/3 : To (D301) (Crew Cab)
G3 (M92) W/2 : To (D302) (Crew Cab)
G3 (M93) W/2 : To (D303) (Crew Cab)
A4 (M94) W/2 : Diode-2 (with A/T)
C1 (M95) B/12 : Air control
E2 (M96) B/6 : Intake door motor
A1 (M10) W/24 : Smart entrance control unit
A2 (M11) GY/24 : Smart entrance control unit
A2 (M12) GY/16 : Smart entrance control unit
E4 (M13) Y/12 : Air bag unit
E4 (M14) Y/20 : Air bag unit
E4 (M15) Y/12 : Air bag unit
B3 (M16) Y/7 : To (M20)
D3 (M17) Y/2 : Passenger air bag module
C3 (M18) W/16 : Audio unit
B2 (M19) BR/24 : ASCD control unit
B4 (M21) L/4 : Rear window defogger relay (Crew Cab)
A2 (M22) W/4 : Rear window defogger timer (Crew Cab)
C3 (M24) W/6 : Passenger air bag deactivation switch (except Crew Cab)
C2 (M25) W/6 : Rear window defogger switch (Crew Cab)
D2 (M26) W/2 : Passenger air bag deactivation indicator (except Crew Cab)
C3 (M28) B/5 : ASCD relay

* : Be sure to connect and lock the connectors securely after repair work. Failure to do so may cause the ECM to have diagnostic trouble codes. **Do not disconnect these connectors except in the case of working according to WORK FLOW of TROUBLE DIAGNOSES in EC and AT sections.**

† : Diode (M94)

Combination meter — DTRL control unit — Parking brake switch

Park/neutral position (PNP) switch — TCM (transmission control module)

WEL067B

Engine Room Harness (KA24DE Models)

NEEL0175

ENGINE COMPARTMENT

NEEL0175S06

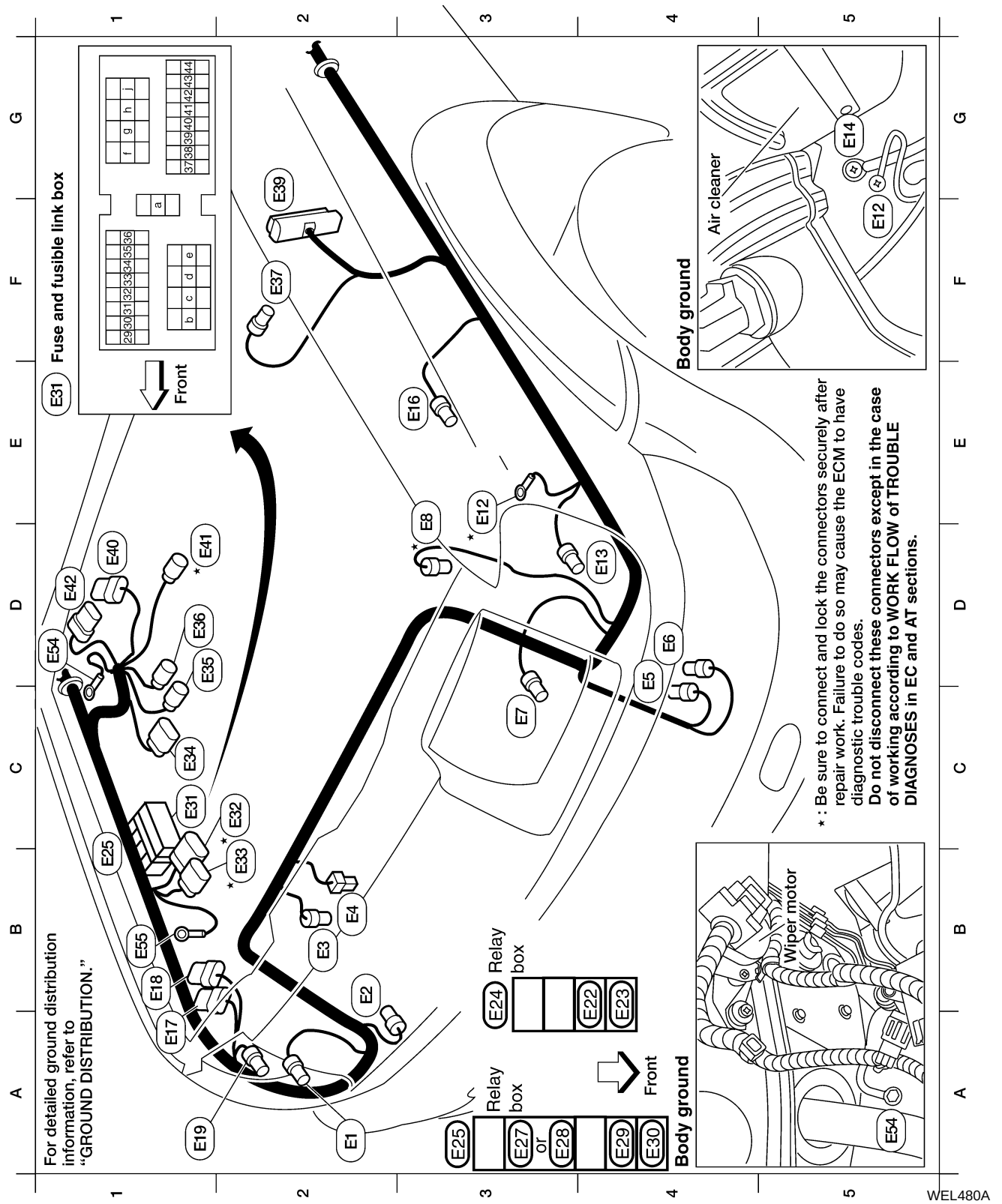

WEL480A

A2 (E1) B/3 : Head lamp RH
B2 (E2) GY/2 : Front wheel sensor RH
B2 (E3) B/2 : Dual-pressure switch (with A/C)
B2 (E4) B/1 : Horn
C4 (E5) BR/2 : Washer fluid level switch (for Canada)
D4 (E6) GY/2 : Front washer motor
C3 (E7) B/3 : Headlamp LH
D3 *(E8) B/2 : Intake air temperature sensor
D3 (E9) GY/2 : Hood switch (with multi-remote)
D3 (E10) B/1 : Theft warning horn (with multi-remote)
D3 *(E12) — : Body ground
D4 (E13) GY/3 : Front combination lamp LH
E3 (E16) BR/2 : Front wheel sensor LH
A1 (E17) GY/8 : Daytime light control unit (with DTRL)
B1 (E18) GY/6 : Daytime light control unit (with DTRL)
A1 (E19) GY/3 : Front combination lamp RH
B4 (E22) BR/6 : Vehicle security lamp relay (with multi-remote)
B4 (E23) BR/6 : Multi-remote control relay (with multi-remote)
C1 (E24) — : Relay box
B1 (E25) — : Relay box
A3 (E27) BR/6 : Park/neutral position (PNP) relay (with A/T)
A3 (E28) L/4 : Clutch interlock relay (with M/T)
A4 (E29) L/4 : Horn relay
A4 (E30) L/4 : Air conditioner relay (with A/C)
C1 (E31) — : Fuse and fusible link box
C2 *(E32) GY/9 : To (E202)
B2 *(E33) GY/6 : To (E201)
C1 (E34) GY/8 : Park/neutral position (PNP) switch (A/T)
C1 (E35) W/2 : Park/neutral position (PNP) switch (A/T)
D1 (E36) GY/3 : Solenoid valve unit
F2 (E37) GY/2 : Brake fluid level switch
F2 (E39) B/31 : ABS actuator and electric unit (control unit)
D1 *(E41) GY/3 : To (F25)
D1 (E42) W/6 : Front wiper motor
C1 (E54) — : Body ground
B1 (E55) — : Battery
A2 (E57) B/1 : Front fog lamp RH
C4 (E58) B/1 : Front fog lamp LH

*: Be sure to connect and lock the connectors securely after repair work. Failure to do so may cause the ECM to have diagnostic trouble codes.
Do not disconnect these connectors except in the case of working according to WORK FLOW of TROUBLE DIAGNOSES in EC and AT sections.

WEL542A

PASSENGER COMPARTMENT

NEEL0175S05

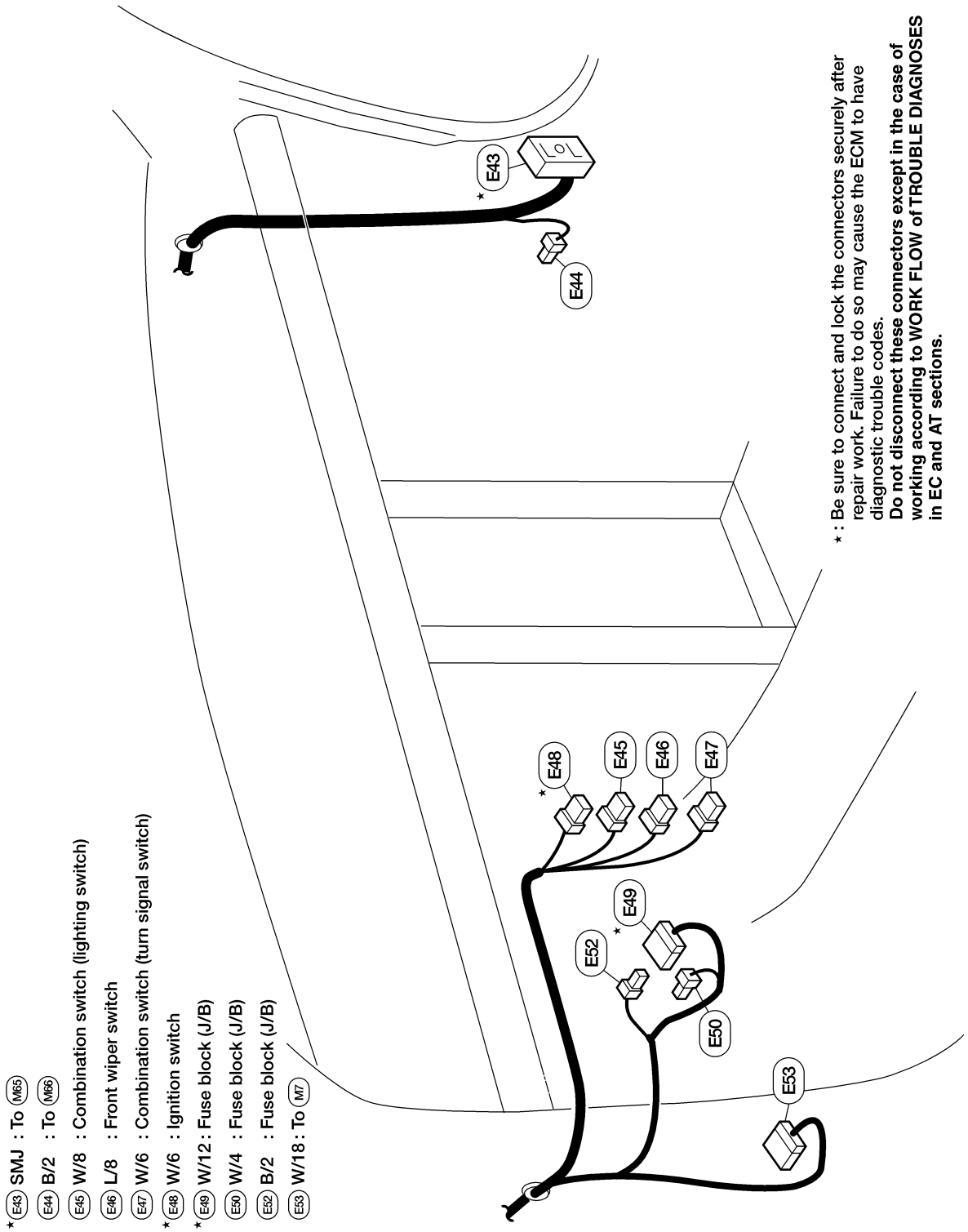

LEL155A

Engine Room Harness (VG33E and VG33ER Models)

NEEL0213

ENGINE COMPARTMENT

NEEL0213S01

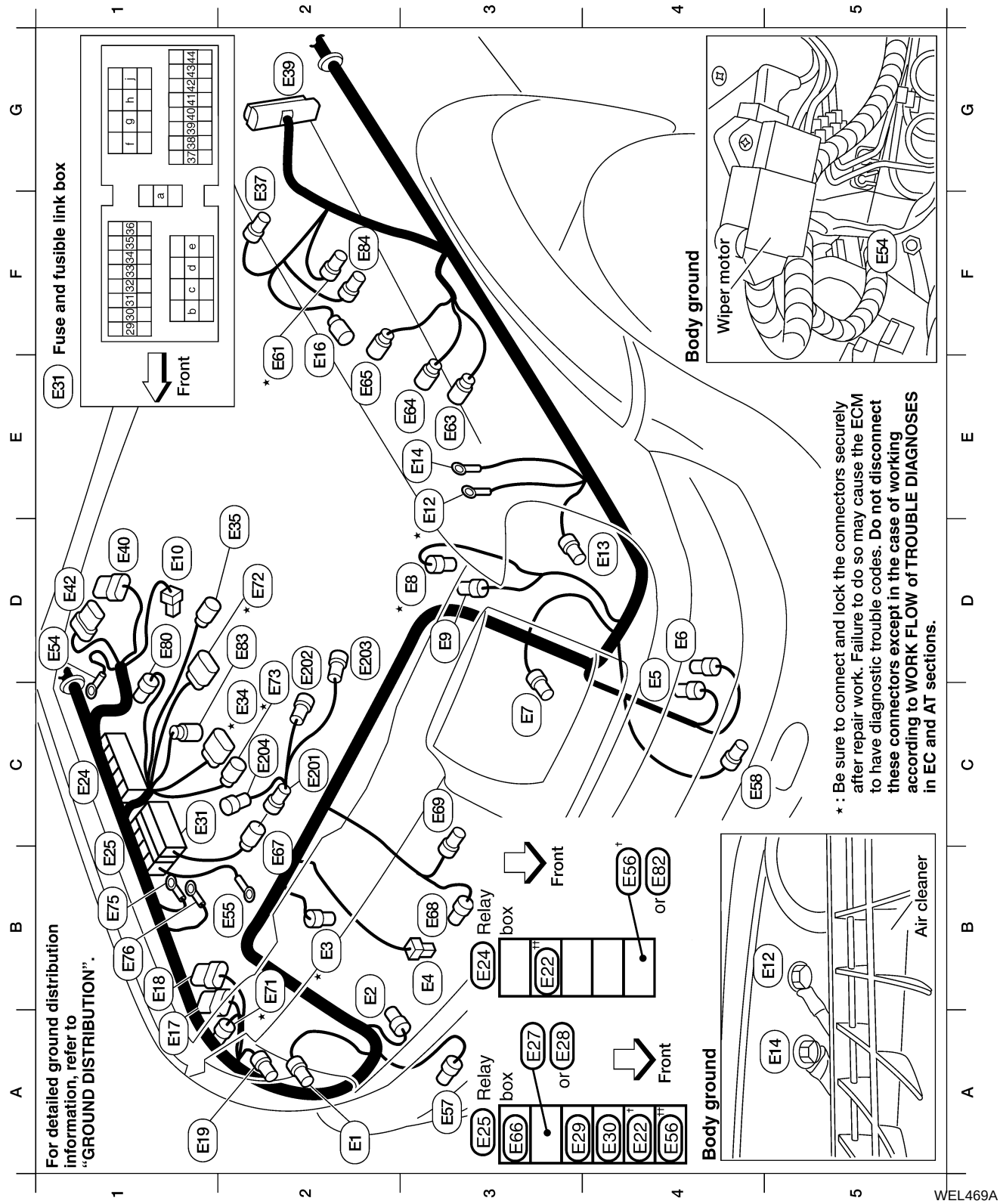

A2 (E1) B/3 : Head lamp RH
B2 (E2) GY/2 : Front wheel sensor RH
B2 * (E3) B/4 : Triple-pressure switch
B3 (E4) B/1 : Horn
C4 (E5) BR/2 : Washer fluid level switch (for Canada)
D4 (E6) GY/2 : Front washer motor
C3 (E7) B/3 : Headlamp LH
D3 * (E8) B/2 : Intake air temperature sensor
D3 (E9) GY/2 : Hood switch (with power door locks)
D1 (E10) B/1 : Vehicle security horn (with power door locks)
D3 * (E12) - : Body ground
D4 (E13) GY/3 : Front combination lamp LH
E3 (E14) - : Body ground
E2 (E16) BR/2 : Front wheel sensor LH
A1 (E17) GY/8 : Daytime light control unit (with DTRL)
B1 (E18) GY/6 : Daytime light control unit (with DTRL)
A1 (E19) GY/3 : Front combination lamp RH
B4 (E20) BR/6 : Vehicle security horn relay (w/ power door locks)
B3 (E22) † BR/6 : Vehicle security lamp relay (w/ power door locks) (VG33ER models)
A3 (E22) †† BR/6 : Vehicle security lamp relay (w/ power door locks) (VG33E models)
B3 (E23) BR/6 : Multi-remote control relay (w/ power door locks)
C1 (E24) - : Relay box

C1 (E25) - : Relay box
A3 * (E27) BR/6 : Park/neutral position (PNP) relay (with A/T)
A4 (E28) L/4 : Clutch interlock relay (with M/T)
A4 (E29) L/4 : Horn relay
A4 (E30) L/4 : A/C relay
C1 (E31) - : Fuse and fusible link box
C2 * (E34) GY/8 : Park/neutral position (PNP) switch (with A/T)
E2 (E35) GY/2 : Park/neutral position (PNP) switch (with A/T)
G2 (E37) GY/2 : Brake fluid level switch
G2 (E39) B/31 : ABS actuator and electric unit (control unit) (2WD models)
G2 (E39) B/25 : ABS actuator and electric unit (control unit) (4WD models)
D1 (E40) B/8 : Front wiper amplifier
D1 (E42) W/6 : Front wiper motor
D1 * (E54) - : Body ground
B2 (E55) - : Battery
B4 (E56) † L4 : Front fog lamp relay (relay box) (VG33E models)
A3 (E56) †† L4 : Front fog lamp relay (relay box) (VG33ER models)

Relay box

A3 (E57) GY/2 : Front fog lamp RH
C4 (E58) GY/2 : Front fog lamp LH
E2 * (E61) L/2 : EVAP canister purge volume control solenoid valve
E3 (E63) GY/1 : To (A3)
E3 (E64) GY/1 : To (A4)
E2 (E65) GY/4 : To (A5)
A3 * (E66) L/4 : Cooling fan relay (VG33E models) (if equipped) (relay box)
A3 (E66) L/4 : Cooling fan relay-1 (VG33ER models) (relay box)
C2 (E67) GY/2 : To (E201)
B3 (E68) GY/2 : Ambient air temperature switch
C3 * (E69) B/4 : Cooling fan motor (if equipped)
B2 * (E71) GY/2 : Dropping resistor
D2 * (E72) BR/8 : Terminal cord assembly
C2 * (E73) GY/3 : Revolution sensor
B1 (E75) - : To (E31)
B1 (E76) - : To (E31)
D1 (E80) GY/6 : ASCD motor actuator
B4 * (E82) L/4 : Cooling fan relay-2 (VG33ER models)
D2 (E83) L/4 : Turbine revolution sensor (with VG33ER and A/T)
F3 (E84) B/2 : Supercharger bypass valve control solenoid valve (VG33ER models)
C2 (E201) GY/1 : To (E67)
D2 (E202) GY/1 : Starter motor
D2 (E203) - : Starter motor
C2 (E204) - : Battery

* : Be sure to connect and lock the connectors securely after repair work. Failure to do so may cause the ECM to have diagnostic trouble codes.
Do not disconnect these connectors except in the case of working according to WORK FLOW of TROUBLE DIAGNOSES in EC and AT sections.

WEL470A

PASSENGER COMPARTMENT

NEEL0213S02

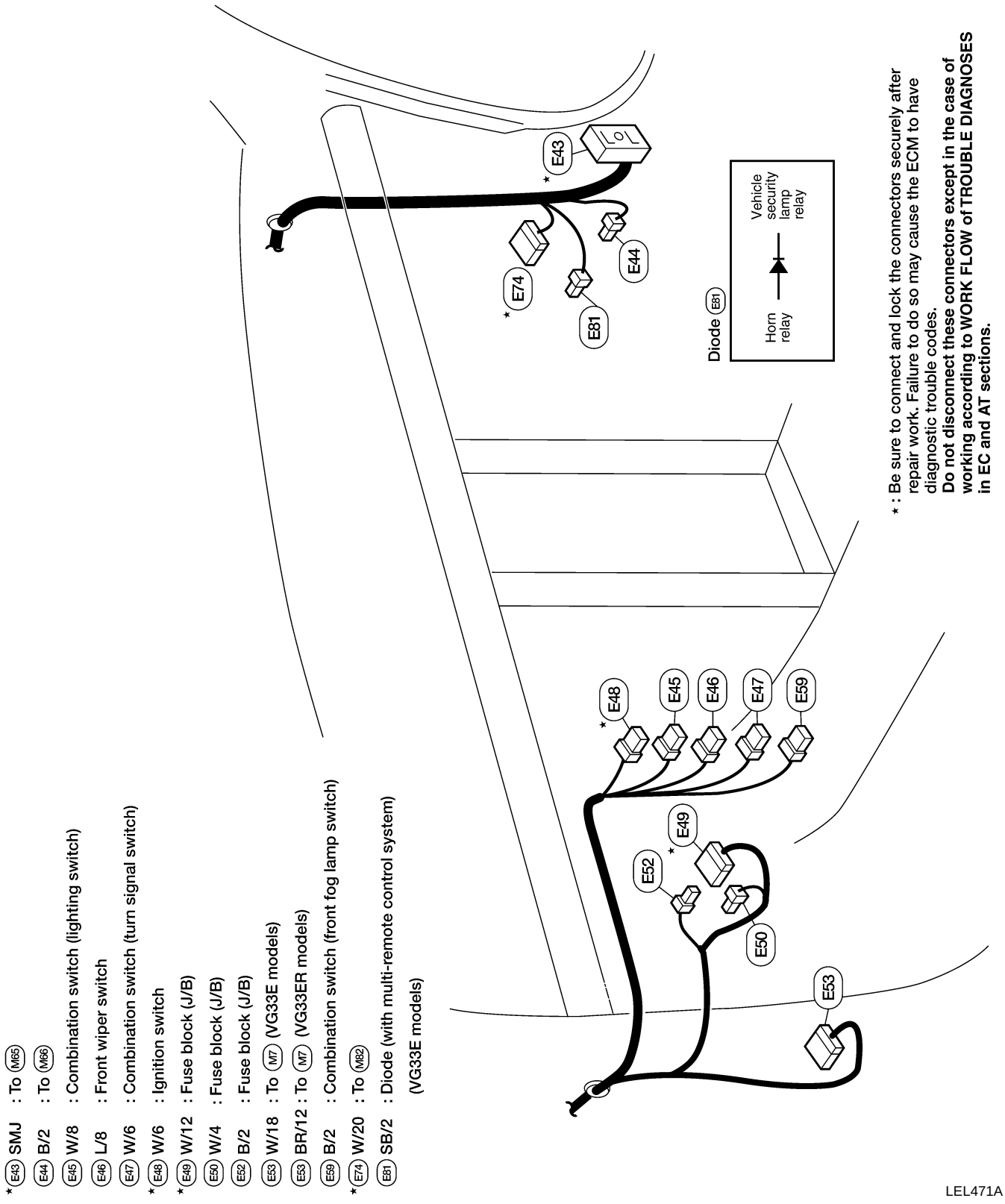

LEL471A

Engine Control Harness (KA24DE Models)

NEEL0209

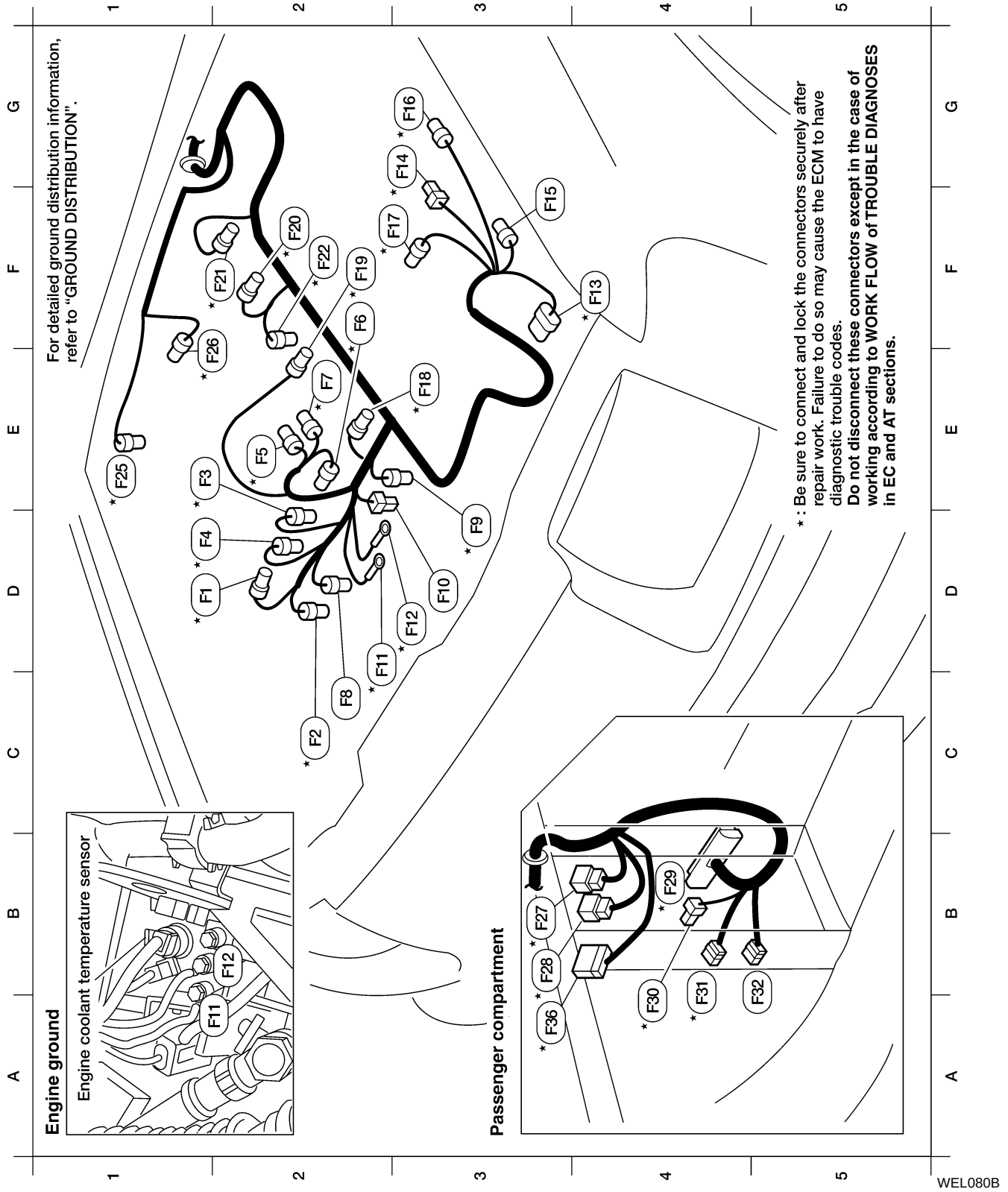

WEL080B

D2 ★(F1) BR/4 : Mass air flow sensor
C2 ★(F2) GY/2 : Knock sensor
D2 ★(F3) BR/3 : Throttle position sensor
D2 ★(F4) GY/3 : Throttle position switch (closed throttle position switch and wide open throttle position switch)
E2 ★(F5) GY/2 : EGR temperature sensor
F2 ★(F6) BR/2 : IACV-AAC valve
E2 ★(F7) PU/2 : IACV-FICD solenoid valve
C2 (F8) B/1 : Power steering oil pressure switch
D3 ★(F9) GY/2 : Engine coolant temperature sensor
D3 (F10) B/1 : Thermal transmitter
D2 ★(F11) Ñ : Engine ground
D3 ★(F12) Ñ : Engine ground
F4 ★(F13) GY/6 : Distributor (camshaft position sensor)
G3 ★(F14) GY/2 : Resistor
F3 (F15)-1 B/1 : A/C compressor
G3 ★(F16) GY/3 : Heated oxygen sensor 1 (front)
or
SB
F3 ★(F17) GY/2 : Distributor (ignition coil)
E3 ★(F18) B/2 : Injector No. 1
F2 ★(F19) B/2 : Injector No. 2
F2 ★(F20) B/2 : Injector No. 3
F2 ★(F21) B/2 : Injector No. 4
F2 ★(F22) G/2 : EGRC-solenoid valve
E1 ★(F25) GY/3 : To (E41)
E2 ★(F26) L/2 : EVAP canister purge volume control solenoid valve
B3 ★(F27) W/8 : To (M59)
B3 ★(F28) W/6 : To (M58)
B4 ★(F29) GY/104 : ECM
A4 ★(F30) L/4 : ECM relay
A4 ★(F31) GY/6 : Joint connector-1
A5 (F32) GY/6 : Joint connector-2
A3 ★(F36) W/20 : To (M81)

★: Be sure to connect and lock the connectors securely after repair work. Failure to do so may cause the ECM to have diagnostic trouble codes.
Do not disconnect these connectors except in the case of working according to WORK FLOW of TROUBLE DIAGNOSES in EC and AT sections.

WEL059B

Engine No. 2 Harness (KA24DE Models)

NEEL0211

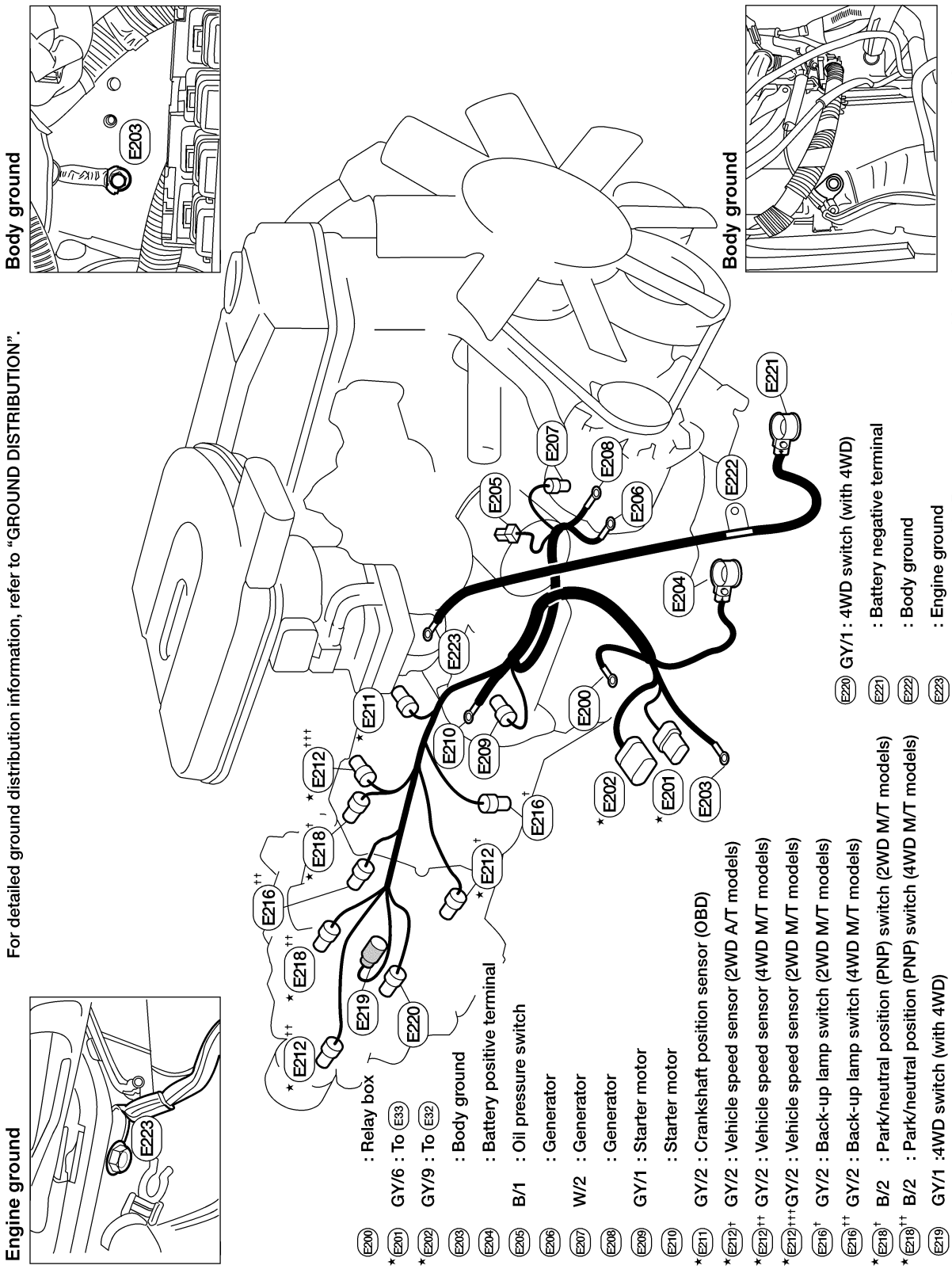

AEL727C

Engine Control Harness (VG33E Models)

NEEL0176

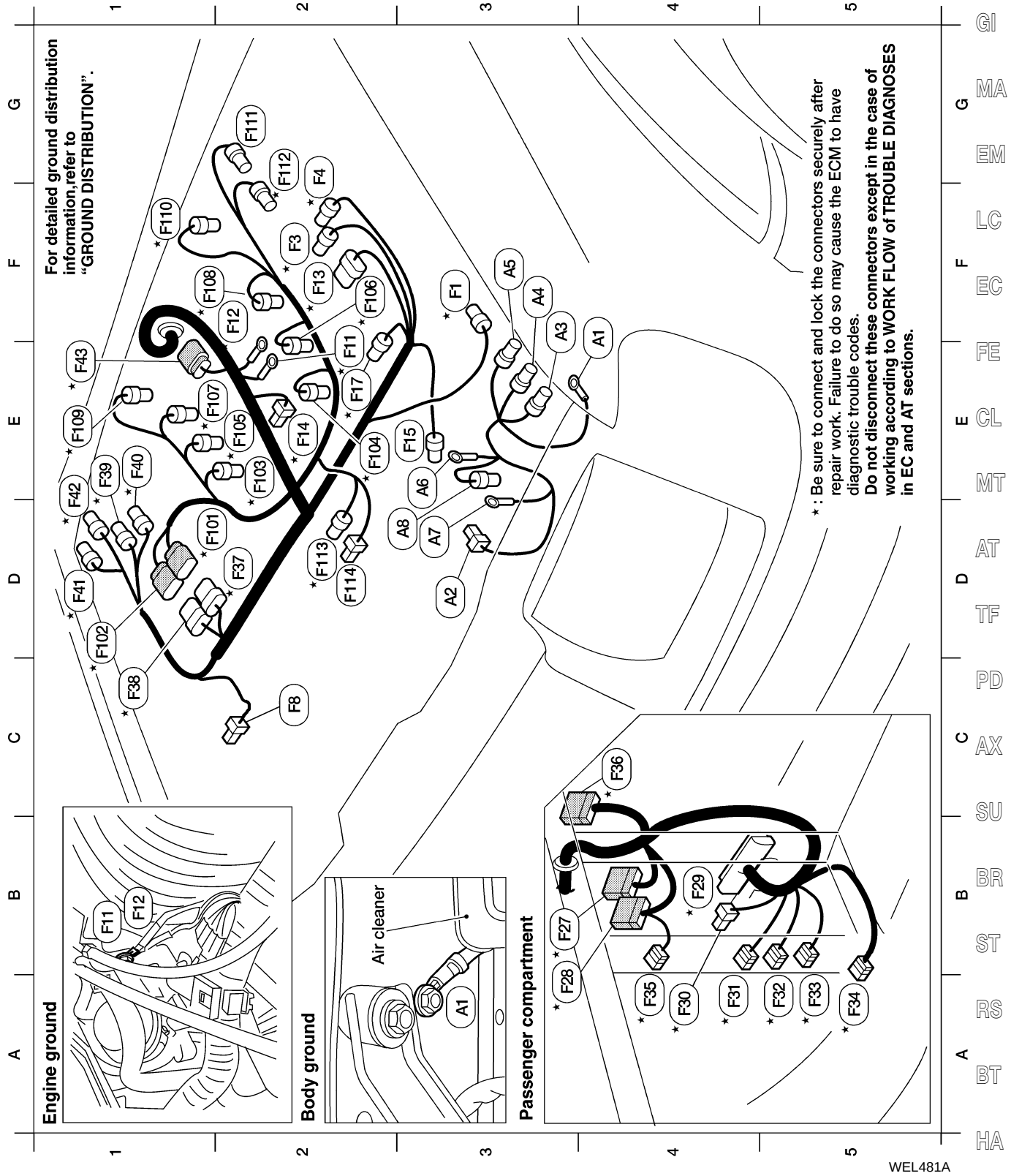

WEL481A

Engine control harness

F3 (F1) BR/4 : Mass air flow sensor
F2 (F3) BR/3 : Throttle position sensor
F2 (F4) GY/3 : Throttle position switch (closed throttle position switch and wide open throttle position switch)
C2 (F8) B/2 : Power steering oil pressure switch
D2 * (F9) GY/2 : Engine coolant temperature sensor
D2 (F10) B/1 : Thermal transmitter
E2 * (F11) – : Engine ground
F2 * (F12) – : Engine ground
F2 * (F13) GY/6 : Distributor (camshaft position sensor)
E2 * (F14) GY/2 : Resistor
E3 (F15) B/1 : A/C compressor
E2 * (F17) GY/2 : Distributor (ignition coil)
B3 * (F27) W/18 : To (M59)
A3 * (F28) W/16 : To (M58)
B4 * (F29) GY/104 : ECM
A4 * (F30) L/4 : ECM relay
A4 * (F31) GY/6 : Joint connector-1
A5 * (F32) GY/6 : Joint connector-2
A5 * (F33) GY/6 : Joint connector-3
A5 * (F34) GY/6 : Joint connector-4
A4 * (F35) SB/2 : Diode
C4 * (F36) W/24 : To (M81)
D2 * (F37) B/8 : To (F101)
C1 * (F38) GY/8 : To (F102)
E1 * (F39) GY/4 : Heated oxygen sensor 2 (rear) (bank 2)
E1 * (F40) GY/3 : Heated oxygen sensor 1 (front) (bank 2)

Engine control harness (continued)

D1 * (F41) GY/3 : Heated oxygen sensor 1(front) (bank 1)
D1 * (F42) GY/4 : Heated oxygen sensor 2 (rear) (bank 1)
E1 * (F43) GY/8 : To (F201)

Engine sub harness

D2 * (F101) B/8 : To (F37)
D1 * (F102) GY/8 : To (F38)
E2 * (F103) B/2 : Injector No. 1
E2 * (F104) B/2 : Injector No. 2
E2 * (F105) B/2 : Injector No. 3
F2 * (F106) B/2 : Injector No. 4
E2 * (F107) B/2 : Injector No. 5
F1 * (F108) B/2 : Injector No. 6
E1 * (F109) GY/2 : Knock sensor
F1 * (F110) GY/2 : Crankshaft position sensor (OBD)
G2 (F111) GY/2 : IACV-FICD solenoid valve
G2 * (F112) BR/2 : IACV-AAC valve

Generator harness

F4 (A1) – : Body ground
D3 (A2) B/1 : Oil pressure switch
F3 (A3) GY/1 : To (E63)
F3 (A4) GY/1 : To (E64)
F3 (A5) GY/4 : To (E65)
E3 (A6) – : Generator
D3 (A7) – : Generator
D3 (A8) GY/2 : Generator

Diode (F35)

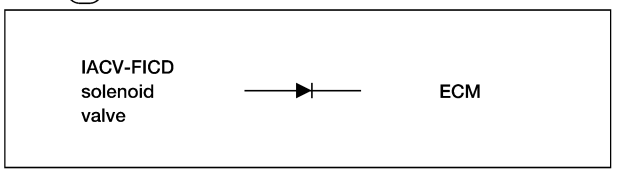

* : Be sure to connect and lock the connectors securely after repair work. Failure to do so may cause the ECM to have diagnostic trouble codes.
Do not disconnect these connectors except in the case of working according to WORK FLOW of TROUBLE DIAGNOSES in EC and AT sections.

WEL482A

Engine Control Harness (VG33ER Models)

NEEL0227

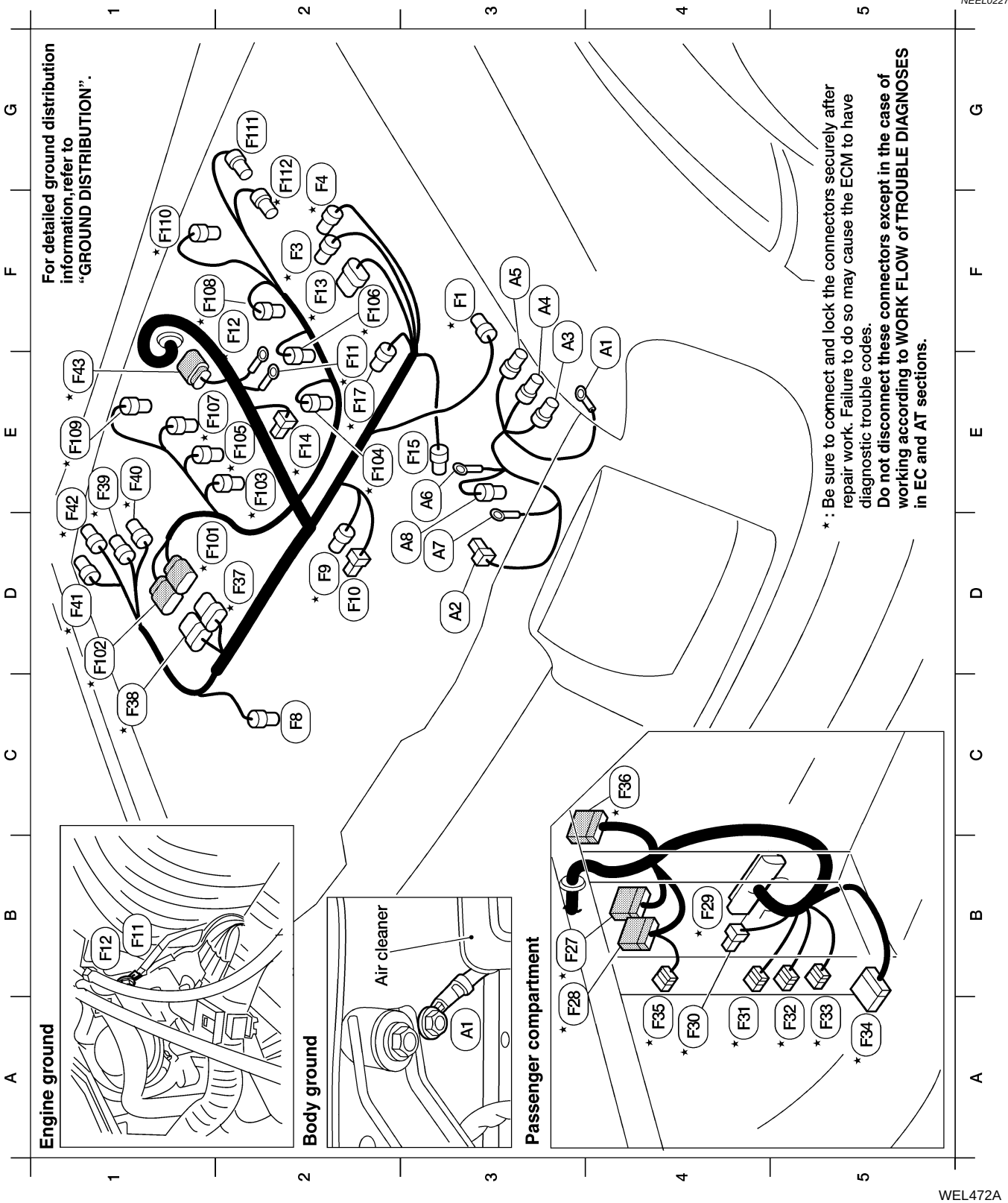

WEL472A

Engine control harness

F3 * (F1) BR/4 : Mass air flow sensor
F2 * (F3) BR/3 : Throttle position sensor
F2 (F4) GY/3 : Throttle position switch (closed throttle position switch and wide open throttle position switch)
C2 (F8) B/2 : Power steering oil pressure switch
E2 * (F11) – : Engine ground
F2 * (F12) – : Engine ground
F2 * (F13) GY/6 : Distributor (camshaft position sensor)
E2 * (F14) GY/2 : Resistor
E3 (F15) B/1 : A/C compressor
E2 * (F17) GY/2 : Distributor (ignition coil)
B3 * (F27) W/18 : To (M59)
A3 * (F28) W/20 : To (M58)
B4 * (F29) GY/104 : ECM
A4 * (F30) L/4 : ECM relay
A4 * (F31) GY/6 : Joint connector-1
A5 * (F32) GY/6 : Joint connector-2
A5 * (F33) GY/6 : Joint connector-3
A5 * (F34) GY/6 : Joint connector-4
A4 * (F35) SB/2 : Diode
C4 * (F36) W/24 : To (M81)
D2 * (F37) G/10 : To (F101)
C1 * (F38) GY/10 : To (F102)
E1 * (F39) GY/4 : Heated oxygen sensor 2 (rear) (bank 2)
E1 * (F40) GY/3 : Heated oxygen sensor 1 (front) (bank 2)

Engine control harness (continued)

D1 * (F41) GY/3 : Heated oxygen sensor 1 (front) (bank 1)
D1 * (F42) GY/4 : Heated oxygen sensor 2 (rear) (bank 1)
E1 * (F43) GY/8 : To (F201)

Engine sub harness

D2 * (F101) B/8 : To (F37)
D1 * (F102) GY/10 : To (F38)
E2 * (F103) B/2 : Injector No. 1
E2 * (F104) B/2 : Injector No. 2
E2 * (F105) B/2 : Injector No. 3
F2 * (F106) B/2 : Injector No. 4
E2 * (F107) B/2 : Injector No. 5
F1 * (F108) B/2 : Injector No. 6
E1 * (F109) GY/2 : Knock sensor
F1 * (F110) GY/2 : Crankshaft position sensor (OBD)
G2 (F111) GY/2 : IACV-FICD solenoid valve
G2 * (F112) BR/2 : IACV-AAC valve
D2 * (F113) GY/2 :Engine coolant temperature sensor
D2 * (F114) B/1 :Thermal transmitter

Generator harness

F4 (A1) – : Body ground
D3 (A2) B/1 : Oil pressure switch
F3 (A3) GY/1 : To (E63)
F3 (A4) GY/1 : To (E64)
F3 (A5) GY/4 : To (E65)
E3 (A6) – : Generator
D3 (A7) – : Generator
D3 (A8) GY/2 : Generator

Diode (F35)

IACV-FICD solenoid valve ⟶ ECM

* : Be sure to connect and lock the connectors securely after repair work. Failure to do so may cause the ECM to have diagnostic trouble codes.
Do not disconnect these connectors except in the case of working according to WORK FLOW of TROUBLE DIAGNOSES in EC and AT sections.

WEL473A

Engine No. 2 Harness (VG33E and VG33ER Models)

NEEL0207

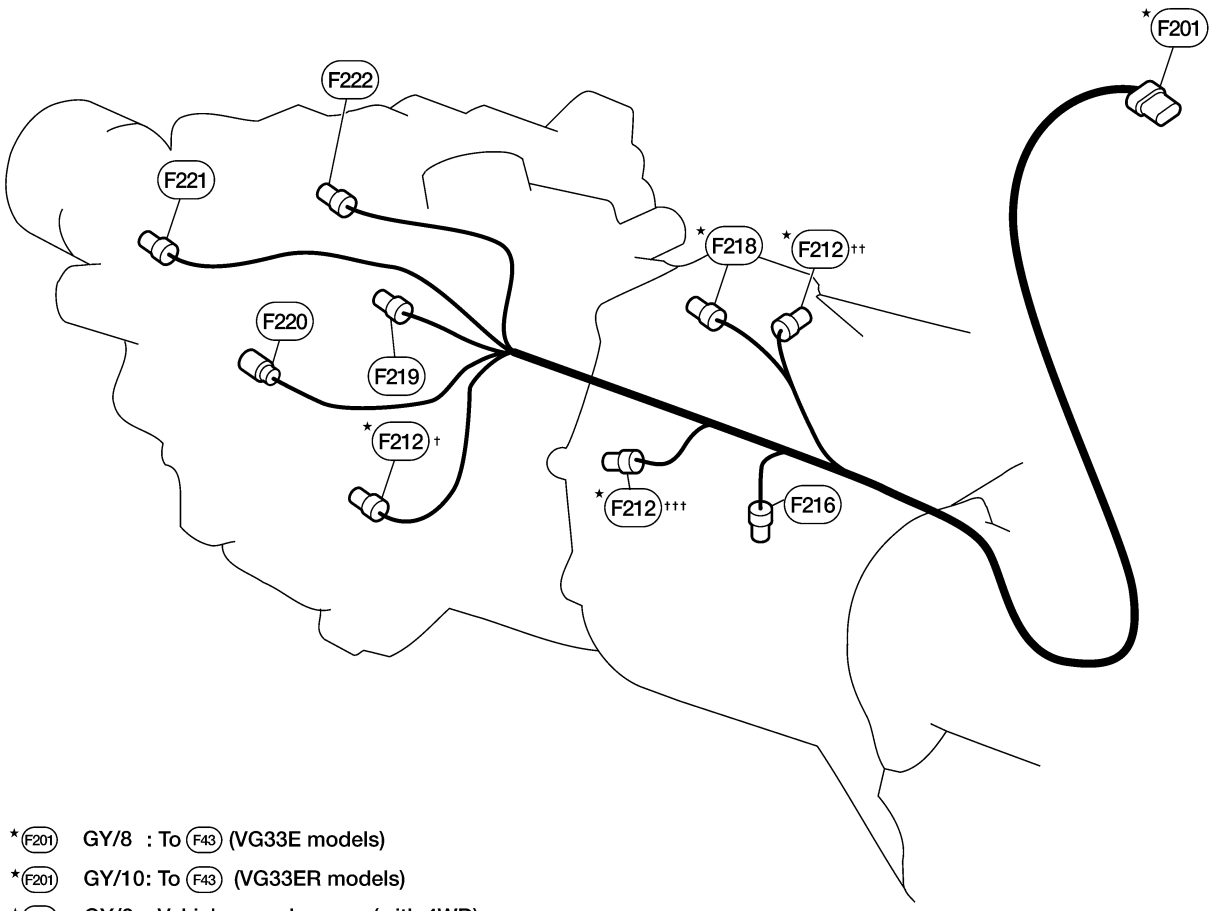

*(F201) GY/8 : To (F43) (VG33E models)
*(F201) GY/10: To (F43) (VG33ER models)
*(F212†) GY/2 : Vehicle speed sensor (with 4WD)
*(F212††) GY/2 : Vehicle speed sensor (with 2WD M/T)
*(F212†††) GY/2 : Vehicle speed sensor (with 2WD A/T)
(F216) GY/2 : Back-up lamp switch (with M/T)
*(F218) B/2 : Park/neutral position (PNP) switch (with M/T)
(F219) GY/1 : 4WD switch (with M/T)
(F220) GY/1 : 4WD switch (with M/T)
(F221) GY/2 : 4WD switch (with A/T)
(F222) B/2 : Transfer neutral position switch (with A/T)

* : Be sure to connect and lock the connectors securely after repair work. Failure to do so may cause the ECM to have diagnostic trouble codes.
Do not disconnect these connectors except in the case of working according to WORK FLOW of TROUBLE DIAGNOSES in EC and AT sections.

WEL474A

Chassis and Tail Harness (KA24DE Models)

NEEL0212

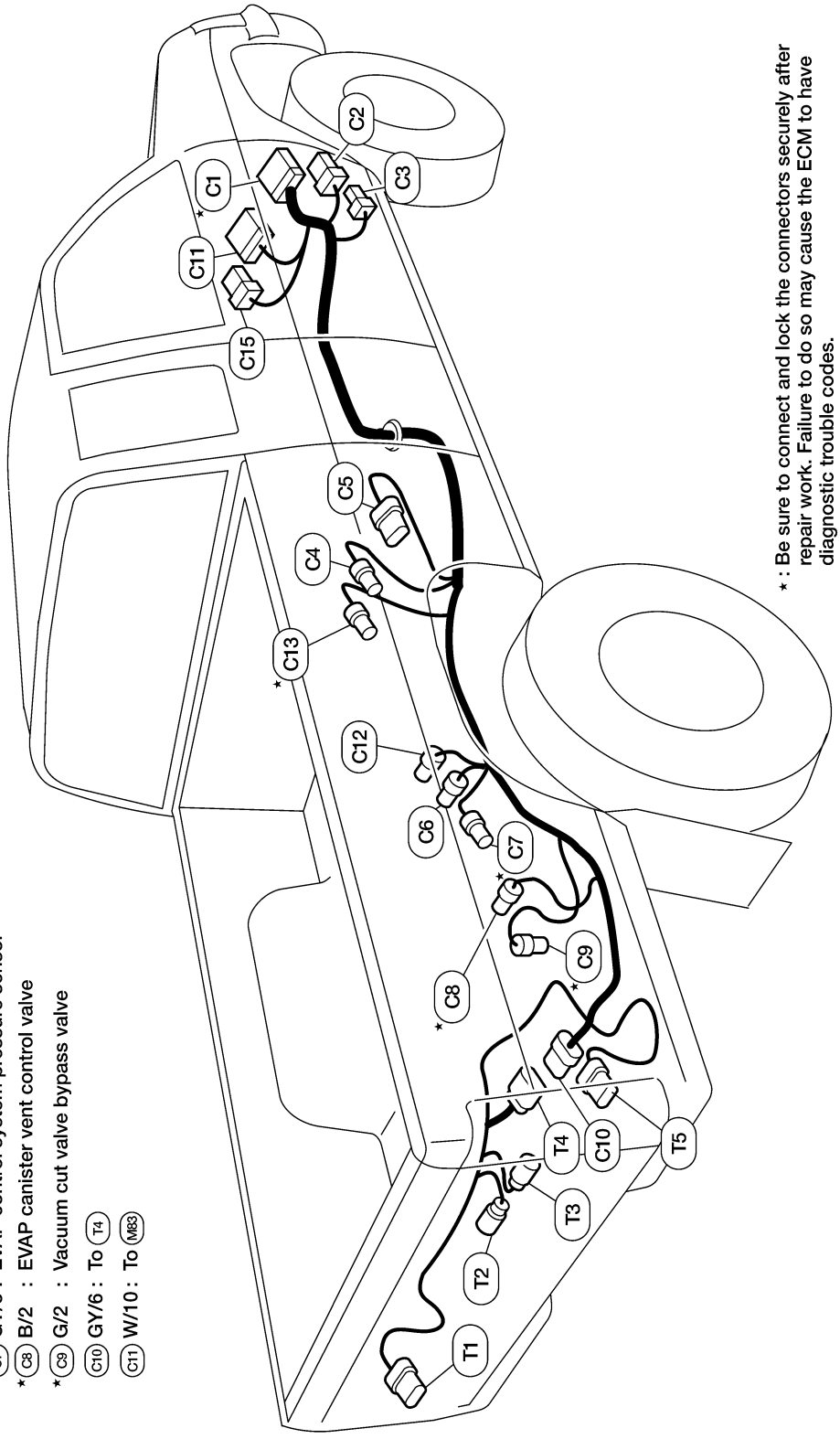

Chassis harness

- ★C1 W/18 : To M67
- C2 W/8 : To M17
- C3 W/3 : To M15 (with 2WD and KA24 engine)
- C4 GY/4 : ABS actuator (with 2WD and KA24 engine)
- C5 GY/6 : Fuel level sensor unit and fuel pump
- C6 GY/2 : Rear wheel sensor
- ★C7 GY/3 : EVAP control system pressure sensor
- ★C8 B/2 : EVAP canister vent control valve
- ★C9 G/2 : Vacuum cut valve bypass valve
- C10 GY/6 : To T4
- C11 W/10 : To M83

Chassis harness

- C12 GY/4 : Rear wheel sensor
- ★C13 GY/4 : Fuel tank gauge unit
- C15 W/6 : To M128

Tail harness

- T1 GY/6 : Rear combination lamp LH
- T2 GY/2 : License plate lamp LH
- T3 GY/2 : License plate lamp RH
- T4 GY/6 : To C10
- T5 GY/6 : Rear combination lamp RH

★ : Be sure to connect and lock the connectors securely after repair work. Failure to do so may cause the ECM to have diagnostic trouble codes.
Do not disconnect these connectors except in the case of working according to WORK FLOW of TROUBLE DIAGNOSES in EC and AT sections.

LEL416A

Chassis and Tail Harness (VG33E and VG33ER Models)

NEEL0177

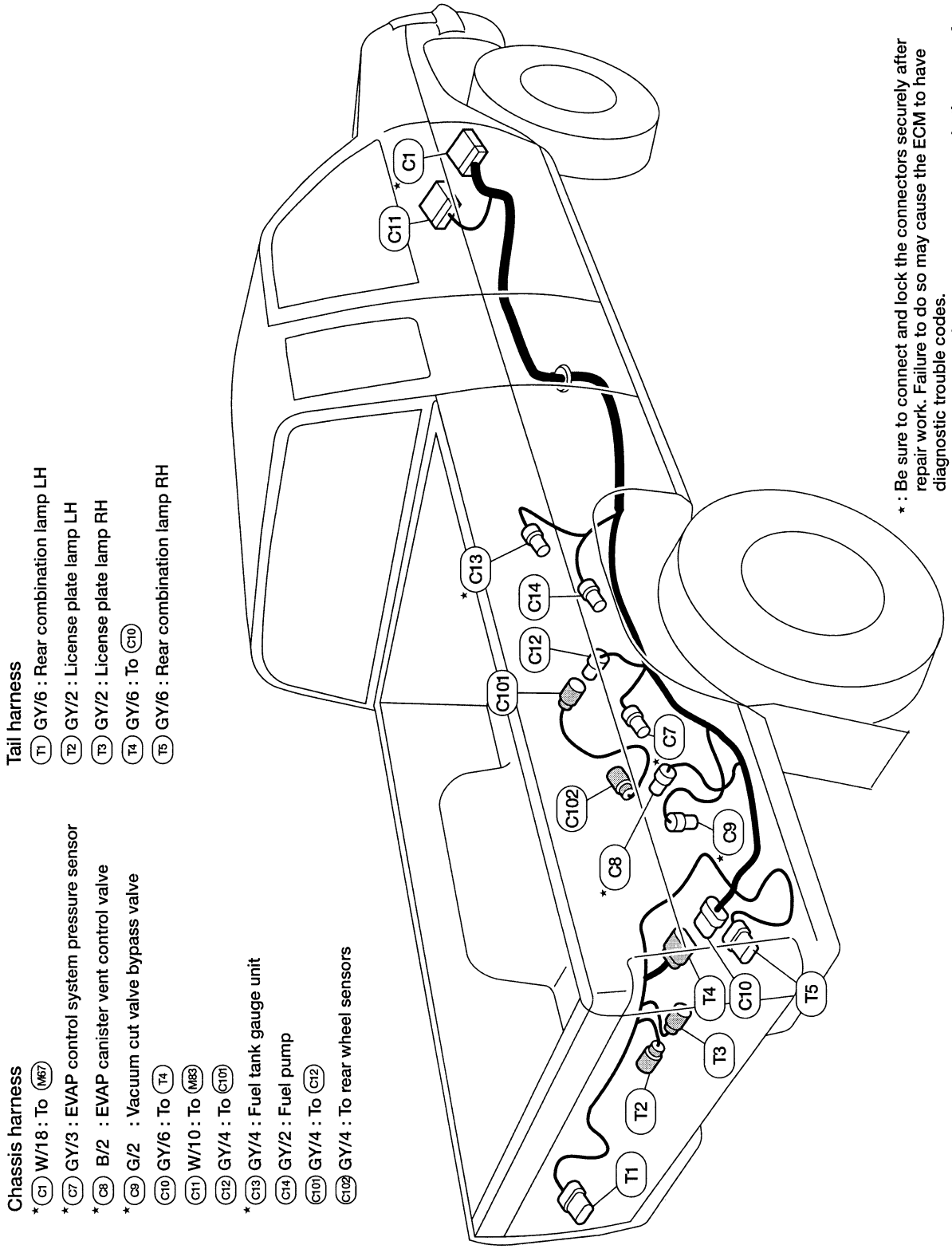

Chassis harness
- *C1 W/18 : To M67
- *C7 GY/3 : EVAP control system pressure sensor
- *C8 B/2 : EVAP canister vent control valve
- *C9 G/2 : Vacuum cut valve bypass valve
- C10 GY/6 : To T4
- C11 W/10 : To M83
- C12 GY/4 : To C101
- *C13 GY/4 : Fuel tank gauge unit
- C14 GY/2 : Fuel pump
- C101 GY/4 : To C12
- C102 GY/4 : To rear wheel sensors

Tail harness
- T1 GY/6 : Rear combination lamp LH
- T2 GY/2 : License plate lamp LH
- T3 GY/2 : License plate lamp RH
- T4 GY/6 : To C10
- T5 GY/6 : Rear combination lamp RH

⋆: Be sure to connect and lock the connectors securely after repair work. Failure to do so may cause the ECM to have diagnostic trouble codes.
Do not disconnect these connectors except in the case of working according to WORK FLOW of TROUBLE DIAGNOSES in EC and AT sections.

AEL751C

Room Lamp Harness

NEEL0180

(R1) W/8 : To (M2) (Crew Cab)
(R1) W/4 : To (M2) (except Crew Cab)
(R2) W/2 : Map lamp (with map lamp)
(R3) B/2 : High mounted stop lamp
(R4) W/1 : Room lamp (Crew Cab)
(R4) W/3 : Room lamp (except Crew Cab)
(R5) BR/1 : Room lamp (Crew Cab)
(R6) BR/1 : Rear door switch LH (Crew Cab)
(R7) BR/1 : Rear door switch RH (Crew Cab)
(R8) B/1 : Rear window defogger (+) (Crew Cab)

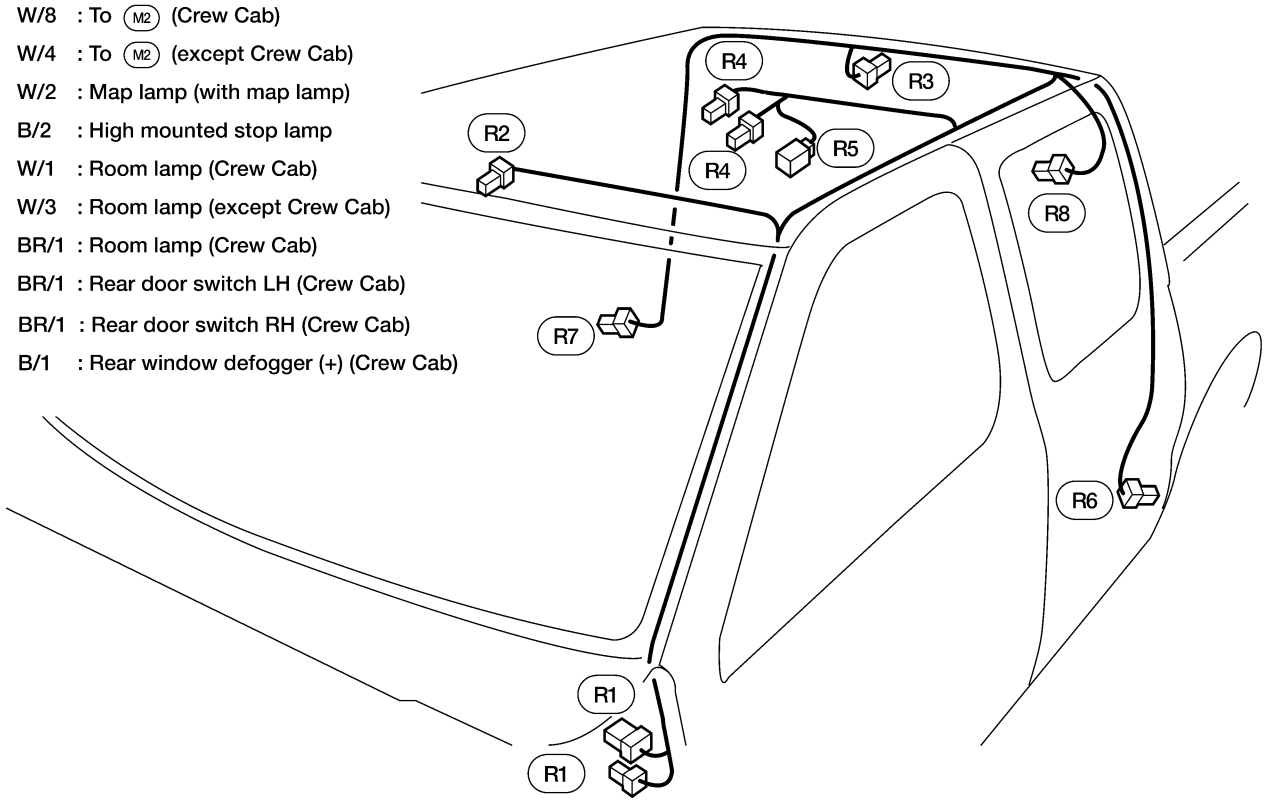

LEL483A

Front Door Harness

NEEL0182

LH SIDE

NEEL0182S01

(D1) W/12 : To (M9)
(D2)† W/12 : To (M8) (crewcab)
(D2)†† W/8 : To (M8) (except crewcab)
(D3) BR/2 : Door speaker LH
(D4) BR/3 : Door mirror LH
(D5) W/3 : Door tweeter LH (with premium audio)
(D6) B/2 : Front power window motor LH (with power windows)
(D7) W/16 : Main power window and door lock/unlock switch (with power windows)
(D8) GY/4 : Front door lock actuator LH (with power door locks)
(D9) BR/3 : Front door key cylinder switch LH (with power door locks)

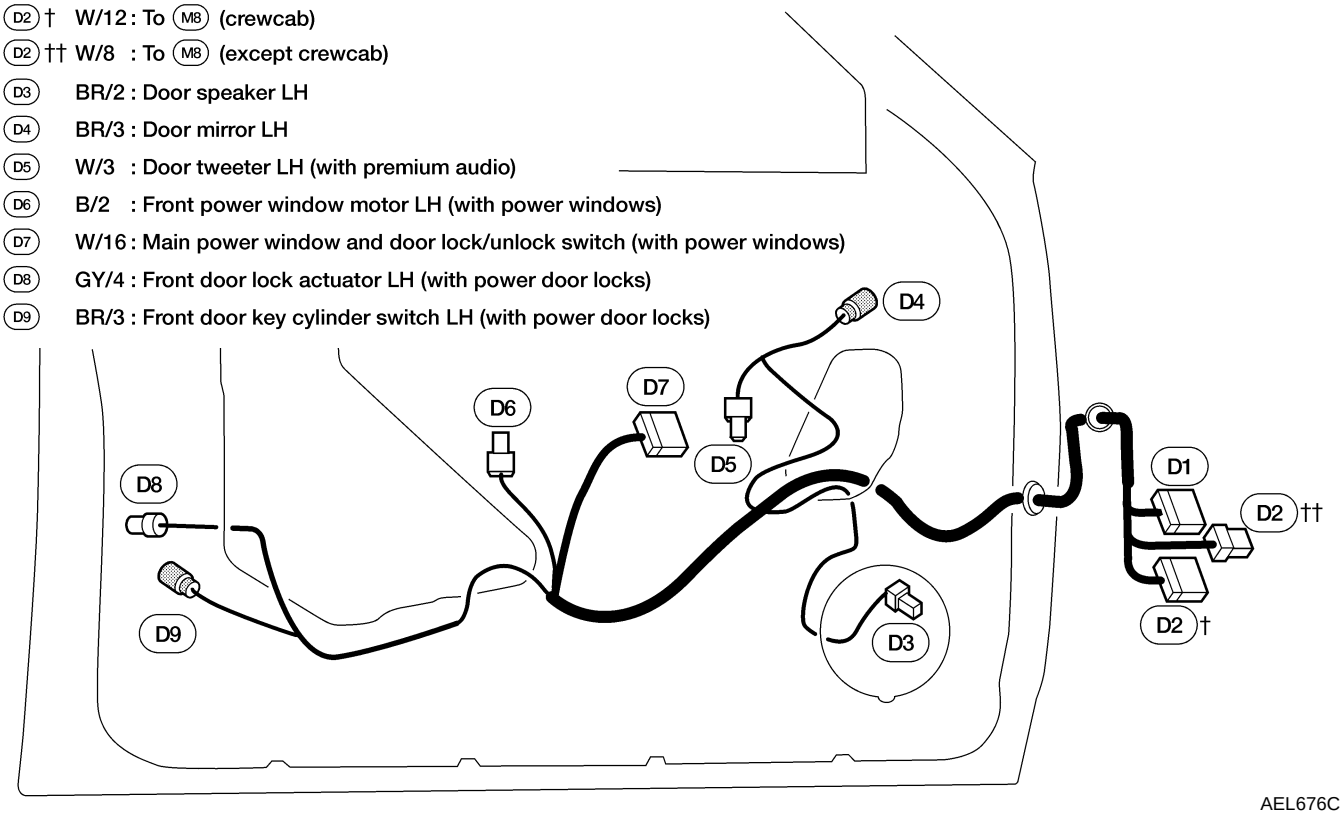

AEL676C

RH SIDE

NEEL0182S02

D101 W/12 : To M63
D102 W/6 : To M64
D103 BR/2 : Door speaker RH
D104 BR/3 : Door mirror RH
D105 W/3 : Door tweeter RH (with premium audio)
D106 B/2 : Power window motor RH (with power windows)
D107 BR/6 : Door lock/unlock switch RH (with power door locks)
D108 GY/4 : Front door lock actuator RH (with power door locks)
D110 W/6 : Front power window switch (with power windows)

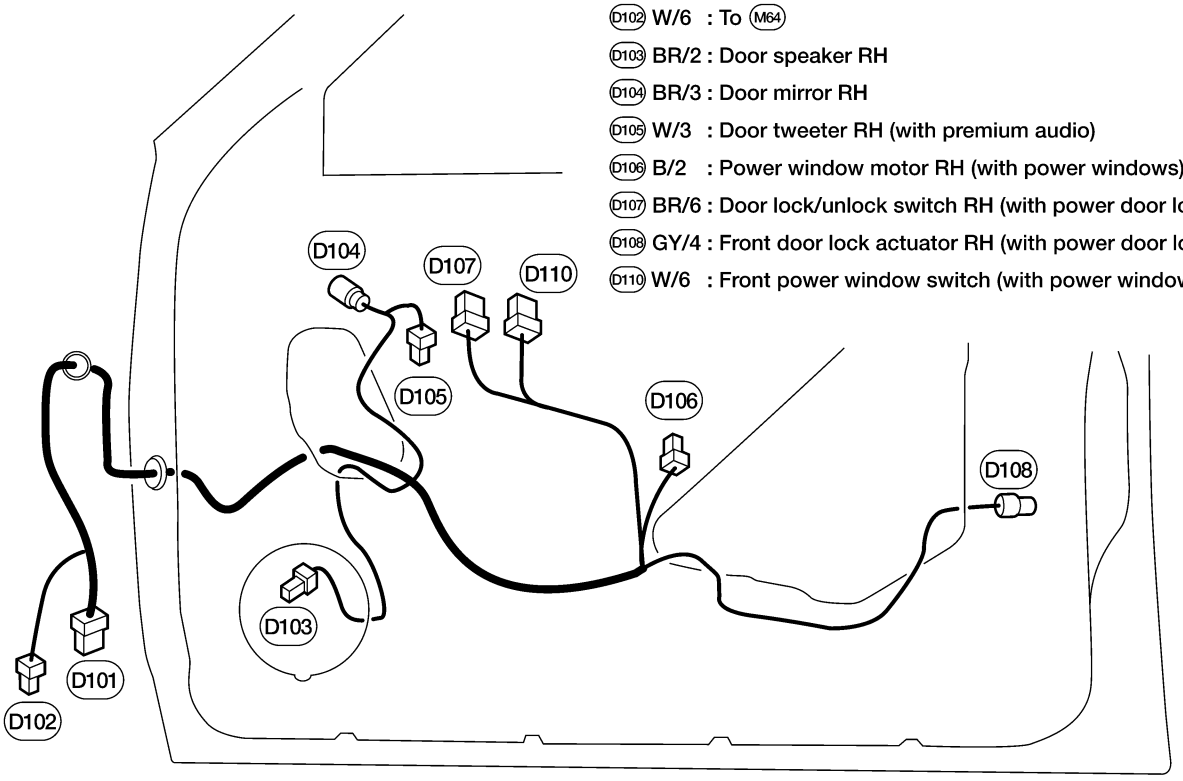

LEL444A

Rear Door Harness

NEEL0183

LH SIDE

NEEL0183S01

(D201) W/3 : To (M86)
(D202) W/2 : To (M87)
(D203) W/2 : To (M88)
(D204) B/2 : Rear power window motor LH (with power windows)
(D205) W/7 : Rear power window switch LH (with power windows)
(D206) B/2 : Rear door speaker LH
(D207) GY/4 : Rear door lock actuator LH (with power door locks)

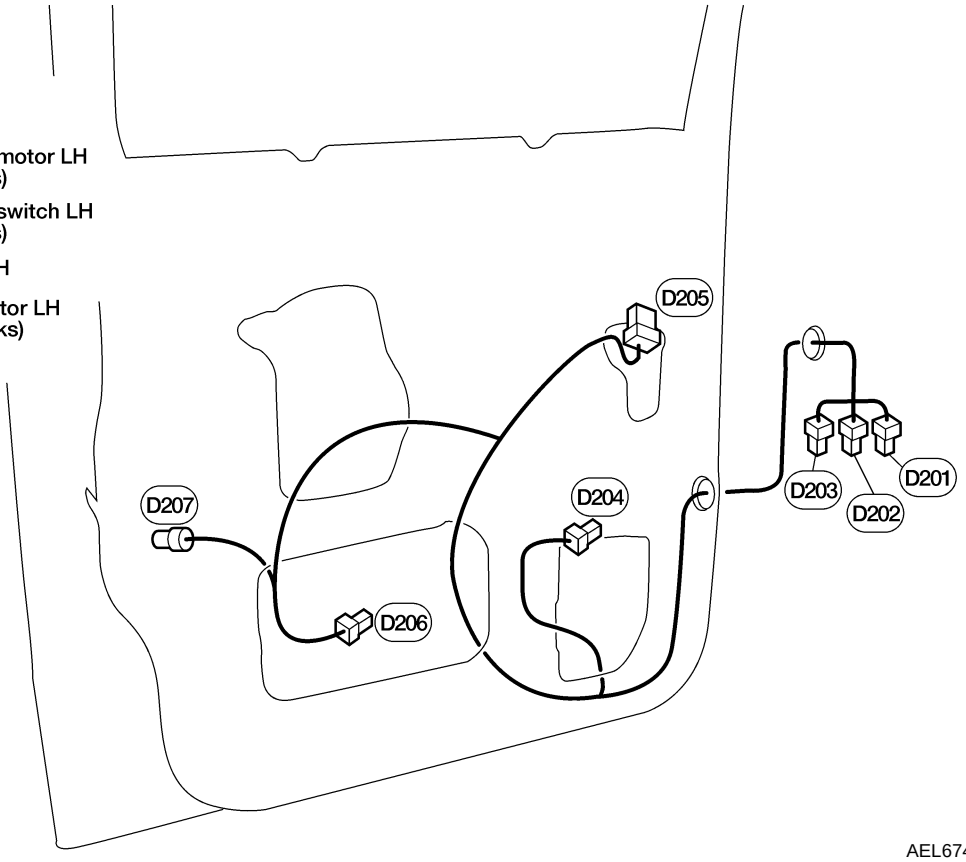

AEL674C

RH SIDE

NEEL0183S02

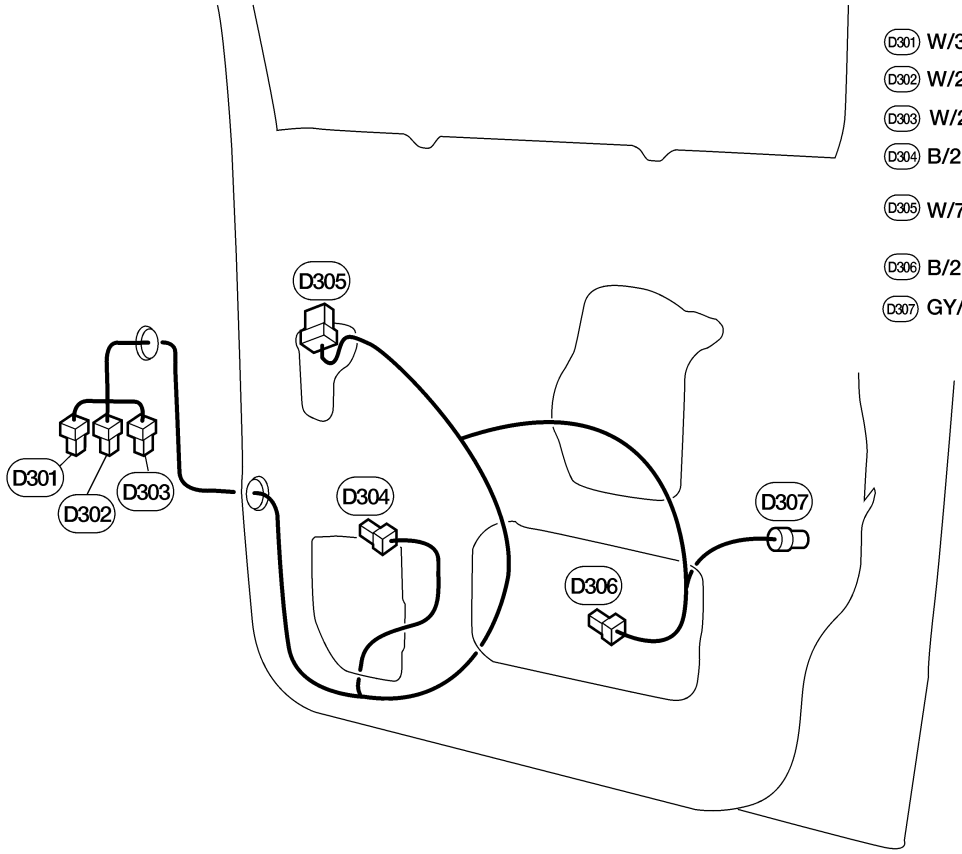

D301 W/3 : To M91
D302 W/2 : To M92
D303 W/2 : To M93
D304 B/2 : Rear power window motor RH (with power windows)
D305 W/7 : Rear power window switch RH (with power windows)
D306 B/2 : Rear door speaker RH
D307 GY/4 : Rear door lock actuator RH (with power door locks)

AEL675C

BULB SPECIFICATIONS

Headlamp

NEEL0144S03

	Wattage (W)	Bulb No.*
High/Low	65/55	9007

*: Always check with the Parts Department for the latest parts information.

Exterior Lamp

NEEL0144S01

		Wattage (W)	Bulb No.*
Front combination lamp	Turn signal	28.5	3456K
	Parking	5	168
	Side marker	5	168
Fog lamp		55	H3
Rear combination lamp	Turn signal	27	3157NA
	Stop/Tail	27/7	3157K
	Back-up	27	3156K
High-mounted stop lamp		*	*
License plate lamp		3.8	194

*: Always check with the Parts Department for the latest parts information.

Interior Lamp

NEEL0144S02

	Wattage (W)	Bulb No.*
Room lamp (Dome lamp)	10	*
Map lamp	8	578

*: Always check with the Parts Department for the latest parts information.

WIRING DIAGRAM CODES (CELL CODES)

Use the chart below to find out what each wiring diagram code stands for.
Refer to the wiring diagram code in the alphabetical index to find the location (page number) of each wiring diagram.

Code	Section	Wiring Diagram Name
1STSIG	AT	A/T 1ST Signal
2NDSIG	AT	A/T 2ND Signal
3RDSIG	AT	A/T 3RD Signal
4THSIG	AT	A/T 4TH Signal
A/C	HA	Air Conditioner
AAC/V	EC	IACV-AAC Valve
ABS	BR	Anti-lock Brake System
ASCD	EL	Automatic Speed Control Device
A/T	AT	A/T
AT/C	EC	A/T Control
ATDIAG	EC	A/T Diagnosis Communication Line
AT/IND	EL	A/T Indicator
AUDIO	EL	Audio
BA/FTS	AT	A/T Fluid Temperature Sensor and Transmission Control Module (TCM) Power Supply
BACK/L	EL	Back-up Lamp
BYPS/V	EC	Vacuum Cut Valve Bypass Valve
CHARGE	SC	Charging System
CHIME	EL	Warning Chime
CIGAR	EL	Cigarette Lighter
CKPS	EC	Crankshaft Position Sensor (OBD)
CMPS	EC	Camshaft Position Sensor
COOL/F	EC	Cooling Fan Control [VG33E (if equipped) and VG33ER]
D/LOCK	EL	Power Door Lock
DEF	EL	Rear Window Defogger
DTRL	EL	Headlamp - With Daytime Light System
ECTS	EC	Engine Coolant Temperature Sensor
EGR/TS	EC	EGR Temperature Sensor (KA24DE)
EGRC/V	EC	EGRC-solenoid Valve (KA24DE)
EGRC1	EC	EGR Function (KA24DE)
ENGSS	AT	Engine Speed Signal
F/FOG	EL	Front Fog Lamp
F/PUMP	EC	Fuel Pump
FLS1	EC	Fuel Level Sensor Unit
FLS2	EC	Fuel Level Sensor Unit
FLS3	EC	Fuel Level Sensor Unit
FICD	EC	IACV-FICD Solenoid Valve
FTTS	EC	Fuel Tank Temperature Sensor
FTS	AT	A/T Fluid Temperature Sensor
FUEL	EC	Fuel Injection System Function (KA24DE)
FUELB1	EC	Fuel Injection System Function (Bank 1) (VG33E and VG33ER)
FUELB2	EC	Fuel Injection System Function (Bank 2) (VG33E and VG33ER)
H/LAMP	EL	Headlamp
HEATER	HA	Heater System
HO2S1	EC	Heated Oxygen Sensor 1 (Front) (KA24DE)
HO2S2	EC	Heated Oxygen Sensor 2 (Rear) (KA24DE)
HO2S2H	EC	Heated Oxygen Sensor 2 (Rear) Heater (KA24DE)
HO2S1H	EC	Heated Oxygen Sensor 1 (Front) Heater (KA24DE)
HORN	EL	Horn
IATS	EC	Intake Air Temperature Sensor
IGN/SG	EC	Ignition Signal (KA24DE and VG33E)
IGNSYS	EC	Ignition Signal (VG33ER)
ILL	EL	Illumination
INJECT	EC	Injector
KS	EC	Knock Sensor
LKUP	EC	Torque Converter Clutch Solenoid Valve (KA24DE)
LPSV	AT	Line Pressure Solenoid Valve
MAFS	EC	Mass Air Flow Sensor
MAIN	AT	Main Power Supply and Ground Circuit
MAIN	EC	Main Power Supply and Ground Circuit
METER	EL	Speedometer, Tachometer, Temp., Oil and Fuel Gauges
MIL/DL	EC	MIL and Data Link Connector

Code	Section	Wiring Diagram Name
MIRROR	EL	Door Mirror
MULTI	EL	Multi-remote Control System
NONDTC	AT	Non-detectable Items
O2H1B1	EC	Heated Oxygen Sensor 1 (Front) Heater (Bank 1) (VG33E and VG33ER)
O2H1B2	EC	Heated Oxygen Sensor 1 (Front) Heater (Bank 2) (VG33E and VG33ER)
O2H2B1	EC	Heated Oxygen Sensor 2 (Rear) Heater (Bank 1) (VG33E and VG33ER)
O2H2B2	EC	Heated Oxygen Sensor 2 (Rear) Heater (Bank 2) (VG33E and VG33ER)
O2S1B1	EC	Heated Oxygen Sensor 1 (Front) (Bank 1) (VG33E and VG33ER)
O2S1B2	EC	Heated Oxygen Sensor 1 (Front) (Bank 2) (VG33E and VG33ER)
O2S2B1	EC	Heated Oxygen Sensor 2 (Rear) (Bank 1) (VG33E and VG33ER)
O2S2B2	EC	Heated Oxygen Sensor 2 (Rear) (Bank 2) (VG33E and VG33ER)
OVRCSV	AT	Overrun Clutch Solenoid Valve
PGC/V	EC	EVAP Canister Purge Volume Control Solenoid Valve
PNP/SW	AT	Park/Neutral Position Switch
PNP/SW	EC	Park/Neutral Position Switch
POWER	EL	Power Supply Routing
PRE/SE	EC	EVAP Control System Pressure Sensor
PST/SW	EC	Power Steering Oil Pressure Switch
ROOM/L	EL	Interior Room Lamp
S/CHGR	EC	Supercharger bypass valve control solenoid valve (VG33ER)
S/SIG	EC	Start Signal
SHIFT	AT	A/T Shift Lock System
SRS	RS	Supplemental Restraint System
SSV/A	AT	Shift Solenoid Valve A
SSV/B	AT	Shift Solenoid Valve B
START	SC	Starting System
STOP/L	EL	Stop lamp
TAIL/L	EL	Parking, License and Tail Lamps

Code	Section	Wiring Diagram Name
TCCSIG	AT	A/T TCC Signal (Lock Up)
TCV	AT	Torque Converter Clutch Solenoid Valve
TP/SW	EC	Throttle Position Switch
TPS	AT	Throttle Position Sensor
TPS	EC	Throttle Position Sensor
TRSA/T	AT	Turbine Revolution Sensor
TURN	EL	Turn Signal and Hazard Warning Lamps
VEHSEC	EL	Vehicle Security System
VENT/V	EC	EVAP Canister Vent Control Valve
VSS	EC	Vehicle Speed Sensor
VSSAT	AT	Vehicle Speed Sensor A/T (Revolution Sensor)
VSSMTR	AT	Vehicle Speed Sensor MTR
WARN	EL	Warning Lamps
WINDOW	EL	Power Window
WIPER	EL	Front Wiper and Washer

NOTES

ALPHABETICAL INDEX

SECTION IDX

A

AAC/V - Wiring diagram.....EC-437, 1051, 1649
ABS - Wiring diagram BR-47, 80, 120
ABS sensor rotor AX-13
Absolute pressure sensor EC-166, 769, 1369
A/C air flow HA-19
A/C component layout HA-20
A/C compressor clutch removal and installation HA-72
A/C compressor description HA-17
A/C compressor precaution HA-8
A/C compressor special service tool.....HA-12, 16
A/C control linkage adjustment (manual A/C) HA-42
A/C control operation (manual A/C) HA-18
A/C diagnostic work flow (manual A/C) HA-28
A/C HFC134a (R134a) system precaution.....HA-3
A/C HFC134a (R134a) system service tools.....HA-13
A/C HFC134a system service equipment precaution.....HA-8
A/C lubricant (R134a).....HA-68
A/C lubrication oil.....HA-68
A/C operational check HA-29
A/C pressure switch.....HA-52
A/C relay.....HA-52
A/C service data specification HA-88
A/C switch.....HA-18
A/C symptom chart (manual A/C).....HA-28
A/C trouble diagnoses (manual A/C).....HA-21
A/C, M - Wiring diagram.....HA-26
Accelerator control system.....FE-3
Accelerator wire adjustment.....FE-3
Air bag RS-13, 20
Air bag disposal RS-27
Air bag precautions.....GI-3
Air bleeding (hydraulic clutch).....CL-7
Air bleeding for brake system BR-11
Air cleaner filter replacement MA-20, 30
Air conditioner cut control EC-39, 639, 1240
Air flow meter - See Mass air flow sensor EC-156, 760, 1360
Air spoiler, rear BT-35
Alternator SC-39
Antenna - See Power antenna.....EL-144
Anti-lock brake system - Wiring diagram.....BR-47, 80, 120
ASCD (automatic speed control device) EL-146
ASCD - Wiring diagram.....EL-151
A/T - Wiring diagram AT-10
A/T - Wiring diagram - AT - FTS AT-258
A/T - Wiring diagram - AT - MAIN AT-247
A/T - Wiring diagram - AT - PNP/SW.....AT-252
A/T - Wiring diagram - AT - VSS A/T AT-264
A/T control EC-1061, 1659
A/T diagnosis communication line.....EC-1171, 1774
A/T fluid temperature sensor AT-261
A/T shift lock system AT-56, 409
A/T shift lock system - Wiring diagram AT-58, 410
A/T trouble diagnoses AT-27
A/T Wiring diagram - AT - ENG SS.....AT-269
A/T Wiring diagram AT - 1ST AT-275
A/T Wiring diagram AT - 2ND.....AT-281
A/T Wiring diagram AT - 3RD.....AT-287
A/T Wiring diagram AT - 4TH AT-294
A/T Wiring diagram AT - BA/FTS AT-344
A/T Wiring diagram AT - LPSV.....AT-315
A/T Wiring diagram AT - NONDTC AT-361
A/T Wiring diagram AT - OVRCSV.....AT-339
A/T Wiring diagram AT - SSV/A AT-320
A/T Wiring diagram AT - SSV/B AT-325
A/T Wiring diagram AT - TCCSIG AT-307
A/T Wiring diagram AT - TCV.....AT-301
A/T Wiring diagram AT - TPS.....AT-331
A/T Wiring diagram AT - VSSMTR.....AT-350
AT/C - Wiring diagram.....EC-1063, 1661
ATDIAG - Wiring diagram.....EC-1172, 1775
Audio EL-134
AUDIO - Wiring diagram EL-135
Audio and A/C control removal and installation - See Instrument panel.....BT-20
Auto lock free running hub AX-10
Automatic speed control system - See ASCD.....EL-146
Automatic transmission fluid replacement MA-38
Automatic transmission number GI-44
Auxiliary air control (AAC) valve.....EC-434, 1048, 1646

B

Back door BT-15
Back door opener - See Back door BT-15
Back window BT-35, 49
Back-up lamp EL-49
Back-up lamp switch (M/T).....MT-8, 40
BACK/L - Wiring diagram.....EL-49
Ball joint (front) SU-20
Basic inspection.....EC-110, 715, 1314
Battery.....SC-4
Battery/Starting/Charging System Tester SC-7, 19, 32
Baulk ring (M/T).....MT-12, 45
Blower motor.....HA-37
Blower resistor HA-37

Body alignment.....BT-53
Body mounting BT-52
Boring/honing cylinder block EM-47, 118
Brake booster BR-22
Brake control valve (Proportioning valve).....BR-14
Brake fluid change.....BR-9
Brake fluid level.....MA-41
Brake fluid level and line check.....BR-9
Brake hydraulic line BR-12
Brake inspection.....MA-42
Brake lines and cables inspection MA-41
Brake master cylinder.....BR-19
Brake pedal.....BR-17
Bulb specifications.....EL-265
Bumper, front.....BT-12
Bumper, rear.....BT-15
BYPS/V - Wiring diagram.....EC-539, 547, 1158, 1165, 1761, 1768

C

Camshaft inspection.....EM-32, 96
Camshaft position sensor (CMPS) EC-325, 967, 1565
Canister-See EVAP canister EC-40, 640, 1241
Center bearing assembly (propeller shaft) PD-11
Center bearing disassembly (propeller shaft).....PD-9
Center case (Transfer) TF-12
CHARGE - Wiring diagram.....SC-30
Charging system.....SC-29
Chassis and body maintenance.....MA-37
CHIME - Wiring diagram EL-98
CIGAR - Wiring diagram EL-121
Cigarette lighter EL-121
Circuit breaker EL-16
CKPS - Wiring diagram.....EC-321, 455, 963, 1091, 1561, 1694
Closed loop control.....EC-451
Closed loop control (Left bank).....EC-1070, 1668
Closed loop control (Right bank) EC-1070, 1668
Closed throttle position switch.....EC-440, 1054, 1652
Clutch cover.....CL-12, 13
Clutch disc.....CL-12
Clutch fluid level.....MA-37
Clutch master cylinder CL-8
Clutch operating cylinder CL-9
Clutch pedal.....CL-5, 6
Clutch release bearing.....CL-10
Clutch release mechanism.....CL-10
Clutch withdrawal lever.....CL-10
CMPS - Wiring diagram EC-328, 970, 1568
Collision diagnosis.....RS-63
Combination lamp, front, removal and installation.....BT-12
Combination lamp, rear, removal and installation.....BT-35
Combination meter.....EL-69
Combination meter removal and installation - See Instrument panel.....BT-20
Combination switch EL-31
Component Location (manual A/C) HA-21
Compression pressure.....EM-15, 78
Compressor clutch removal and installation HA-72
Compressor description.....HA-17
Compressor precaution HA-8
Compressor special service tool HA-12, 16
Connecting rod.....EM-46, 117
Connecting rod bearing clearance EM-50, 122
Connecting rod bushing clearance EM-51, 122
Connector inspection GI-20
Console box - See Instrument panel BT-20
CONSULT for ABS BR-85, 126
CONSULT for engine EC-93, 696, 1295
CONSULT-II general information GI-38
Control lever (M/T) MT-13, 47
Control valve (A/T) AT-90, 442
Converter housing installation.....AT-69, 422
COOL/F - Wiring diagram.....EC-932, 1075, 1533, 1673
Coolant mixture ratio MA-15
Coolant replacement.....MA-17, 27
Cooling circuit (engine) LC-10, 27
Cooling fan.....LC-16, 33
Cooling fan control.....EC-574, 1072, 1084, 1670
Cooling unit (A/C evaporator).....HA-87
Counter gear (M/T).....MT-12, 45
Counter gear (Transfer) TF-13, 23
Coupling sleeve (M/T) MT-12, 45
Crank angle sensor built into distributor - See Camshaft position sensor EC-325, 967, 1565
Crankcase emission control system - See positive crankcase ventilation.....EC-55, 656, 1257
Crankcase ventilation system - See Positive crankcase ventilation EC-55
Crankshaft EM-48, 119
Crankshaft position sensor (OBD).....EC-319, 453, 961, 1559
Crankshaft position sensor (OBD) cog chipping EC-453, 1089, 1692
Cruise control - See ASCD EL-146
Cylinder block.....EM-44, 114
Cylinder block boring.....EM-47, 119

Cylinder head EM-29, 92
Cylinder head bolt tightening EM-104

D

Data link connector for Consult EC-57, 696, 1295
Daytime light system EL-39
Daytime running light - See Daytime light system EL-39
DEF - Wiring diagram EL-125
Detonation sensor - See Knock sensor EC-315, 957, 1555
Diagnosis sensor unit RS-19
Diagnostic trouble code (DTC) for OBD system EC-19, 618, 675, 1219, 1275
Diagnostic trouble code (DTC) inspection priority chart EC-124, 729, 1329
Differential carrier assembly PD-32, 57, 84
Differential carrier disassembly PD-46, 70
Differential gear oil replacement MA-40
Dimensions GI-44
Distributor EC-37, 638, 1239
Distributor ignition (DI) system EC-37, 638, 1239
D/LOCK - Wiring diagram EL-180
Dome light - See Interior lamp EL-62
Door glass BT-18
Door glass Fitting Adjustment BT-18
Door lock BT-18
Door mirror BT-51
Door trim BT-30
Door, front BT-18
Drive belt inspection MA-16, 25
Drive chain (Transfer) TF-13
Drive pinion diff. inspection PD-24, 49, 73
Drive pinion height PD-27, 51, 80
Drive plate runout EM-52, 123
Drive shaft (front) AX-16
Dropping resistor (A/T) AT-317
DTC work support EC-102, 707, 1306
DTRL - Wiring diagram EL-42

E

ECM input/output signal EC-135, 740, 1340
ECTS - Wiring diagram EC-176, 195, 778, 796, 1378, 1396
EGR control (EGRC) - BPT valve EC-345
EGR control (EGRC) - solenoid valve EC-459
EGR temperature sensor EC-466
EGR/TS - Wiring diagram EC-469
EGRC/V - Wiring diagram EC-461
EGRC1 - Wiring diagram EC-337, 475
Electrical diagnoses GI-23
Electrical ignition system EC-37, 638, 1239
Electrical unit EL-273
Electrical units location EL-235
Electronic ignition (EI) system EC-37
Engine compartment BT-54
Engine control circuit diagram EC-31, 632, 1233
Engine control component parts location EC-29, 630, 1231
Engine control module (ECM) EC-447, 1066, 1664
Engine control system diagram and chart EC-32, 633, 1234
Engine coolant temperature sensor (ECTS) EC-174, 193, 776, 794, 1376, 1394
Engine fail-safe system EC-125, 730, 1330
Engine oil filter replacement MA-21, 31
Engine oil precautions GI-7
Engine oil replacement MA-20, 30
Engine outer component parts EM-12, 75
Engine removal EM-41, 111
Engine room - See Engine compartment BT-54
Engine serial number GI-43
EVAP canister EC-40, 641, 1242
EVAP canister purge volume control solenoid valve EC-498, 640, 994, 1113, 1241, 1592, 1716
EVAP canister purge volume control valve EC-375, 498
EVAP canister vent control valve EC-383, 510, 526, 1001, 1125, 1144, 1599, 1728, 1747
EVAP control system (small leak) diagnosis EC-42, 358, 481, 483, 979, 1096, 1098, 1577, 1699, 1701
EVAP control system pressure sensor EC-391, 1007, 1605
EVAP control system purge flow monitoring diagnosis EC-516, 1132, 1735
EVAP system close mode EC-42
EVAP vapor lines inspection MA-23, 35
Evaporative emission (EVAP) system EC-40, 640, 1241
Exhaust gas recirculation (EGR) valve EC-333, 472
Exhaust system FE-8
Exhaust system inspection MA-37
Exterior BT-35

F

Fan switch HA-36
Fast idle cam (FIC) inspection and adjustment EC-660, 1261
F/FOG - Wiring diagram EL-51
FICD - Wiring diagram EC-610, 1211, 1814

Final drive disassembly PD-45, 69
Final drive pre-inspection PD-45, 69
Final drive removal and installation PD-45, 69
Finisher, interior - See Trim.....BT-24
Floor trim BT-24
Flow charts.....GI-23
Fluid temperature sensor (A/T) AT-261
Fluids MA-13
Flywheel (clutch) CL-12, 13
Flywheel runout.....EM-52, 123
FO2H-L - Wiring diagram EC-853, 1454
FO2H-R - Wiring diagram EC-852, 1453
Fog lamp, front.....EL-50
Fog lamp, front, removal and installation.....BT-12
Fork rod (M/T) MT-13, 47
Forward clutch.....AT-107, 461
F/PUMP - Wiring diagram.....EC-599, 1200, 1803
Freeze frame data.....EC-74, 675, 1275
FRO2 - Wiring diagram.....EC-202, 223, 233
FRO2/H - Wiring diagram.....EC-240
FRO2LH - Wiring diagram EC-804, 832, 845, 1405, 1433, 1446
FRO2RH - Wiring diagram.....EC-803, 831, 844, 1404, 1432, 1445
Front axle AX-2
Front bumper.....BT-12
Front case (Transfer) TF-12, 25
Front combination lamp removal and installation.....BT-12
Front disc brake.....BR-26
Front door.....BT-18
Front drive shaft (Transfer) TF-13, 22
Front final drive disassembly (4WD) PD-20
Front final drive pre-inspection (4WD) PD-20
Front final drive removal and installation (4WD).....PD-19
Front fog lamp.....EL-50
Front fog lamp removal and installation.....BT-12
Front heated oxygen sensor (HO2S) EC-198, 206, 213, 220, 231
Front heated oxygen sensor (HO2S) (Left bank).....EC-799, 810, 819, 828, 842, 1400, 1411, 1420, 1429, 1443
Front heated oxygen sensor (HO2S) (Right bank).....EC-799, 810, 819, 828, 842, 1400, 1411, 1420, 1429, 1443
Front heated oxygen sensor (HO2S) heater.....EC-238
Front heated oxygen sensor heater (Left bank) EC-850, 1451
Front heated oxygen sensor heater (Right bank).....EC-850, 1451
Front oxygen sensor (O2S) monitor EC-690, 1289
Front passenger air bag RS-13, 23
Front seat BT-41
Front seat belt.....RS-5
Front suspension SU-2
Front washer EL-109
Front wiper EL-109
FUEL - Wiring diagram.....EC-288, 295
Fuel cut control (at no load & high engine speed).....EC-39, 640, 1241
Fuel filler lid BT-15
Fuel filter.....EC-57
Fuel filter replacement MA-19, 29
Fuel gauge EL-69
Fuel injection system.....EC-286, 293
Fuel injection system (Left bank) EC-905, 914, 1506, 1515
Fuel injection system (Right bank).....EC-905, 914, 1506, 1515
Fuel injector EC-588
Fuel line inspection MA-19, 29
Fuel precautions GI-7
Fuel pressure check.....EC-57, 658, 1259
Fuel pressure regulator.....EC-58, 659, 1260
Fuel pressure release EC-57, 658, 1259
Fuel pump.....EC-597, 1198, 1801
Fuel pump and gauge.....FE-7
Fuel pump relay.....EC-597
Fuel system.....FE-4
Fuel tank temperature sensor EC-300, 922, 1523
Fuel tank vacuum relief valve.....EC-41, 641, 1242
FUELLH - Wiring diagram.....EC-908, 917, 1509, 1518
FUELRH - Wiring diagram.....EC-907, 916, 1508, 1517
Fuse.....EL-16
Fuse block.....EL-270
Fusible link EL-16

G

Garage jack and safety stand.....GI-46
Gauges.....EL-69
Gear components (M/T) MT-12, 45
Generator.....SC-39
Generator - See Alternator SC-39
Generic scan tool (GST) EC-104, 709, 1308
Glass BT-18
Governer valve assembly.....AT-100
Grease.....MA-13

H

Harness connector EL-5
Harness connector inspection GI-20
Harness layout EL-238

Hazard warning lamp EL-54
Headlamp EL-34
Headlining - See Roof trim.....BT-32
Heated oxygen sensor
(HO2S) (front).....EC-198, 206, 213, 220, 231
Heated oxygen sensor (HO2S)
heater (front) EC-238
Heated oxygen sensor (HO2S)
heater (rear) EC-281
Heated oxygen sensor
(rear) EC-243, 253, 263, 273
HEATER - Wiring diagram.....HA-25
Heater system - Wiring diagram.....HA-25
Heater unit (heater core) HA-86
Height (Dimensions) GI-44
HFC134a (R134a) system
precaution.....HA-3
HFC134a (R134a) system
service tools HA-13
HFC134a system service equipment
precaution.....HA-8
High clutch.....AT-105, 459
H/LAMP - Wiring diagram EL-35
Hood BT-12
Horn.....EL-120
HORN - Wiring diagram EL-120
How to erase DTC for OBD
system.....EC-85, 687, 1287
Hydraulic lash adjuster
inspection.....EM-102

I

IACV-AAC valve EC-434, 1048, 1646
IACV-FICD solenoid
valve.....EC-609, 1210, 1813
IATS - Wiring diagram.....EC-170, 773, 1373
Identification.....HA-4
Identification plate GI-42
Idle air control (IAC) system.....EC-434
Idle air control valve
(IACV) EC-434, 1048, 1646
Idle mixture ratio.....EC-59, 662, 1262
Idle speed.....EC-59, 662, 1262
IGN/SG - Wiring diagram EC-581, 1184, 1787
Ignition control system.....EC-579, 1183, 1786
Ignition timing EC-59, 662, 1262
ILL - Wiring diagram.....EL-60
Illumination EL-59
INJECT - Wiring diagram EC-589, 1190, 1793
Injector EC-1189, 1792
Injector removal and
installation.....EC-58, 659, 1260
Instrument panel.....BT-20
Intake air temparature
sensor EC-168, 771, 1371
Intake door control linkage adjustment HA-42
Intake manifold.....EM-12, 75
Interior BT-24
Interior lamp EL-62

J

Jacking points GI-46
Joint connector (J/C) EL-272
Journal bearing assembly
(propeller shaft) PD-11
Journal bearing disassembly
(propeller shaft) PD-10
Jump seat.....BT-44
Junction box (J/B) EL-270

K

Keyless entry system - See
Multi-remote control system EL-190
Knock sensor (KS) EC-315, 316, 957, 1555
Knuckle spindle.....AX-14
KS - Wiring diagram EC-958, 1556

L

Leaf spring (rear) SU-29
Length (Dimensions).....GI-44
License lamp EL-47
Lifting points.....GI-47
Limited slip diff. adjustment PD-76
Limited slip diff. assembly PD-78
Limited slip diff. disassembly.....PD-74
Limited slip diff. inspection PD-75
Line pressure solenoid
valve AT-298, 312, 317
Line pressure test (A/T) AT-30, 209
Liquid gasket application.....EM-19
Location of electrical units.....EL-235
Lock, door.....BT-18
Low and reverse brake AT-111, 465
LSV (Load sensing valve) BR-15
Lubricant (R134a) A/C HA-68
Lubricants MA-13
Lubrication circuit (engine).....LC-5, 20
Lubrication oil A/C.....HA-68
Lubrication-locks, hinges
and hood latches MA-44
Luggage room lamp EL-62

M

MAFS - Wiring diagram.....EC-160, 764, 1364
Magnet clutch HA-72

MAIN - Wiring diagram.....EC-149, 754, 1354
Main drive gear (M/T).....MT-12, 45
Main gear (Transfer).....TF-13, 23
Mainshaft (M/T).....MT-12, 45
Mainshaft (Transfer).....TF-13, 20
Maintenance (engine).....MA-16, 25
MAJOR OVERHALL.....AT-71, 423
Major overhaul (Transfer).....TF-11
Malfunction indicator lamp (MIL).....EC-87, 689, 1289
Manual air conditioner - Wiring diagram.....HA-26
Manual transmission number.....GI-43
Manual transmission oil replacement.....MA-37
Mass air flow sensor (MAFS).....EC-156, 760, 1360
Master cylinder (brake).....BR-19
Master cylinder (clutch).....CL-8
Meter.....EL-69
METER - Wiring diagram.....EL-74
MIL & Data link connectors circuit.....EC-615, 1216, 1819
MIL/DL - Wiring diagram.....EC-615, 1216, 1819
MIRROR - Wiring diagram.....EL-145
Mirror defogger.....EL-122
Mirror, door.....BT-51
Mirror, out side.....BT-51
Misfire.....EC-306, 948, 1546
Mode door control linkage adjustment.....HA-39
Model variation.....GI-40
Molding - See Exterior.....BT-35
M/T major overhaul.....MT-11, 44
M/T removal and installation.....MT-9, 41
MULTI - Wiring diagram.....EL-195
Multi-remote control system.....EL-190
Multiport fuel injection (MFI) system.....EC-35, 636, 1237
Multiport fuel injection precautions.....GI-5

N

Neutral position switch.....EC-555
NVH troubleshooting (AX).....AX-4, 27
NVH troubleshooting (BR).....BR-8
NVH troubleshooting (CL).....CL-4
NVH troubleshooting (EM).....EM-10, 72
NVH troubleshooting (M/T).....MT-6, 36
NVH troubleshooting (PD).....PD-4
NVH troubleshooting (ST).....ST-5
NVH troubleshooting (SU).....SU-3

O

Oil change (capacity).....MA-13
Oil pan (engine).....EM-16, 80
Oil pressure (engine).....LC-6, 21
Oil pump (A/T).....AT-86, 438
Oil pump (engine).....LC-6, 21
Oil pump regulator valve (engine).....LC-7, 23
Oil seal replacement (engine).....EM-26, 90
Oil seal replacement (front final drive 4WD).....PD-16
Oil seal replacement (front of final drive).....PD-43, 67
On board diagnostic system.....EC-73, 674, 1274
Operating cylinder (clutch).....CL-9
ORVR (On-board Refueling Vapor Recovery).....EC-45, 646, 1247
Out side mirror.....BT-51
Overdrive control switch.....AT-46, 48, 406
Overrun clutch.....AT-107, 461
Overrun clutch solenoid valve.....AT-341
Oversize piston.....EM-48, 119

P

Pantograph jack.....GI-46
Park/Neutral position switch.....EC-555, 1174, 1777
Park/neutral position switch (A/T).....AT-51, 254, 407
Park/neutral position switch (M/T).....MT-8, 40
Parking brake control.....BR-35
Parking lamp.....EL-47
PCV (positive crankcase ventilation).....EC-55, 656, 1257
PCV filter replacement.....MA-23
PGC/V - Wiring diagram.....EC-378, 501, 997, 1116, 1595, 1719
Pilot bushing replacement.....EM-54, 125
Pinion bearing preload diff.....PD-27
Pinion gear height diff.....PD-27, 51, 80
Piston assembly.....EM-52, 123
Piston pin inspection.....EM-45, 116
Piston ring inspection.....EM-46, 116
Piston to bore clearance.....EM-47, 118
PNP/SW - Wiring diagram.....EC-558, 1177, 1780
POWER - Wiring diagram.....EL-11
Power antenna.....EL-144
Power door lock.....EL-176
Power door mirror.....EL-145
Power steering fluid level.....MA-43, ST-7
Power steering gear.....ST-15
Power steering hydraulic pressure.....ST-9
Power steering oil pressure switch.....EC-605, 1205, 1808
Power steering oil pump.....ST-18
Power steering system bleeding.....ST-8
Power supply routing.....EL-9

Power transistor & ignition coil.....EC-579, 1183, 1786
Power window.....EL-167
PRE/SE - Wiring diagram.....EC-394, 1009, 1607
Precations for Leak detection dye.....HA-4
Precautions (General).....GI-4
Pressure plate - See Clutch cover.....CL-12
Pressure test (A/T).....AT-30, 209
Propeller shaft.....PD-3, 5, 6
Propeller shaft greasing.....MA-40
Propeller shaft inspection.....MA-39
Propeller shaft on vehicle service.....PD-8
Propeller shaft vibration.....PD-8
PST/SW - Wiring diagram.....EC-606, 1206, 1809

R

Radiator.....LC-14, 32
Radiator fan - See Cooling fan.....LC-16, 33
Radio - See Audio.....EL-134
Rear air spoiler.....BT-35
Rear axle.....AX-25
Rear body.....BT-52
Rear bumper.....BT-15
Rear case (Transfer).....TF-12, 26
Rear combination lamp removal and installation.....BT-35
Rear cover packing replacement diff.....PD-17, 43
Rear drum brake.....BR-30
Rear heated oxygen sensor (HO2S).....EC-243, 253, 263, 273, 857, 867, 877, 887, 1458, 1468, 1478, 1488
Rear heated oxygen sensor (HO2S) heater.....EC-281, 897, 1498
Rear seat.....BT-44
Rear seat belt.....RS-7
Rear side window.....BT-48
Rear suspension.....SU-24
Rear window.....BT-49
Rear window defogger.....EL-122
Refrigerant connection precaution.....HA-4
Refrigerant discharging evacuating charging.....HA-66
Refrigerant general precaution.....HA-3
Refrigerant lines.....HA-79
Refrigeration cycle.....HA-17
Release bearing (clutch).....CL-10
Removal and installation (A/T).....AT-67, 420
Removal and installation (Transfer).....TF-10
Reverse clutch.....AT-101, 455
Reverse idler shaft (M/T).....MT-12, 45
Reverse lamp switch (M/T) - See Back-up lamp switch (M/T).....MT-8, 40
Reverse main gear (M/T).....MT-12, 45
Revolution sensor (A/T).....AT-266
Ring gear diff. inspection.....PD-24, 49, 73
RO2H-L - Wiring diagram.....EC-900, 1501
RO2H-R - Wiring diagram.....EC-899, 1500
Road wheel size.....GI-45
Roof trim.....BT-32
Room lamp - See Interior lamp.....EL-62
ROOM/L - Wiring diagram.....EL-65
RRO2 - Wiring diagram.....EC-246, 256, 266, 275
RRO2/H - Wiring diagram.....EC-283
RRO2LH - Wiring diagram.....EC-861, 871, 881, 891, 1462, 1472, 1482, 1492
RRO2RH - Wiring diagram.....EC-860, 870, 880, 890, 1461, 1471, 1481, 1491

S

SAE J1930 terminology list.....GI-51
S/CHGR - Wiring diagram.....EC-1689
Seal - See Exterior.....BT-35
Seat belt inspection.....MA-45, RS-9
Seat belt pre-tensioner.....RS-13, 19
Seat belt pre-tensioner disposal.....RS-27
Seat belt, front.....RS-5
Seat belt, rear.....RS-7
Seat, front.....BT-41
Seat, rear.....BT-44
Self-diagnostic results.....EC-87, 690, 1289
SHIFT - Wiring diagram.....AT-58, 410
Shift control (Transfer).....TF-14, 27
Shift control components (M/T).....MT-13, 47
Shift fork (M/T).....MT-13, 47
Shift lever.....MT-13, 47
Shift lock system.....AT-56, 409
Shift schedule.....AT-141, 497
Shift solenoid valve A (A/T).....AT-277, 289, 298, 322
Shift solenoid valve B (A/T).....AT-277, 282, 298, 327
Shock absorber (front).....SU-14
Shock absorber (rear).....SU-28
Side bearing preload (front final drive 4WD).....PD-25
Side bearing preload diff.....PD-50
Side shaft diff.....PD-23
Side trim.....BT-24
Smart entrance control unit.....EL-230
SMJ (super multiple junction).....EL-268
Spare tire size.....GI-45
Spark plug replacement.....MA-22, 32
Speedometer.....EL-69
Spiral cable.....RS-20
Spot lamp.....EL-62

SRS - See Supplemental Restraint System RS-13
SRS - Wiring diagram.....RS-39
S/SIG - Wiring diagram EC-594, 1195, 1798
Stabilizer bar (front).....SU-17
Stabilizer bar (rear).....SU-30
Stall test (A/T) AT-27, 206
Standardized relay EL-7
START - Wiring diagram.....SC-14
Start signal.....EC-593, 1194, 1797
Starter SC-26
Starting system.....SC-10
Steering gear, linkage and transfer gear inspection.....MA-43
Steering linkage.....ST-21
Steering switch.....EL-33
Steering wheel and column.....ST-11
Steering wheel play.....ST-6
Steering wheel turning force ST-9
Stop lamp EL-48
STOP/L - Wiring diagram EL-48
Striking rod (M/T).....MT-13, 47
Sub-gear (M/T) MT-12, 45
Sunroof.....BT-46
Supercharger EC-1686
Supercharger bypass (SCB) valve control solenoid valve EC-1686
Supplemental Restraint System RS-13
Supplemental restraint system - Wiring diagram.....RS-39
Symbols and abbreviations.....GI-10
Symptom matrix chart EC-126, 731, 1331
Synchronizer (M/T).....MT-12, 45
System readiness test (SRT) code EC-75, 676, 1276

T

Tachometer.....EL-69
Tail lamp EL-47
TAIL/L - Wiring diagram EL-47
TCM circuit diagram AT-156
TCM inspection table.....AT-243
Temperature control cable and linkage adjustment HA-64
TFTS - Wiring diagram.....EC-302, 924, 1525
THEFT - Wiring diagram EL-214
Theft warning system.....EL-208
Thermal protector HA-53
Thermo control amp HA-54
Thermostat.....LC-13, 30
Three way catalyst.....EC-353
Three way catalyst function (Left bank).....EC-974, 1572
Three way catalyst function (Right bank) EC-974, 1572
Three way catalyst precautions.....GI-6
Throttle bodies EM-12, 75
Throttle chambers EM-12, 75
Throttle drum adjustment.....FE-3
Throttle position sensor (TPS).....EC-179, 781, 1381
Throttle position sensor adjustment.....EC-110, 715, 1314
Throttle position switch AT-336, 407, EC-440, 1054, 1652
Throwout bearing - See Clutch release bearing.....CL-10
Tie-rod ST-21
Tie-rod ball joints.....ST-21
Tightening torque of standard bolts.....GI-50
Timing belt.....EM-83
Timing chain EM-18
Tire rotation MA-41
Tire size GI-45
Tooth contact (front final drive 4WD).....PD-31
Tooth contact diff. PD-56, 83
Torque converter installation AT-69, 422
Torque convertor clutch solenoid valve.....AT-43, 303, 312
Torsion bar spring.....SU-14
Tow truck towing GI-47
Towing point.....GI-49
TP/SW - Wiring diagram EC-442, 1056, 1654
TPS - Wiring diagram.....EC-184, 786, 1386
Transfer case TF-12
Transfer oil replacement MA-39
Transfer serial number.....GI-43
Transmission case (M/T) MT-11, 44
Transmission serial number GI-43, 44
Tread-FR&RR (Dimensions).....GI-44
Trim BT-24
Trouble diagnoses GI-33
Turbine revolution sensor.....AT-352
TURN - Wiring diagram.....EL-56
Turn signal lamp.....EL-54
Two trip detection logic EC-73, 674, 1274
Two-pole lift.....GI-47

U

Under body.....BT-56

V

Vacuum cut valve EC-640, 1241
Vacuum cut valve bypass valve.....EC-537, 544, 640, 1156, 1162, 1241, 1759, 1765
Vacuum hose (brake system) BR-24
Vacuum hose drawing (Engine control) EC-33, 634, 1235

Valve clearance.....EM-38, 127
Valve guide.....EM-33, 98
Valve lifter.....EM-37
Valve seat.....EM-35, 99
Valve spring.....EM-37, 101
Vehicle identification number.....GI-42
Vehicle recovery (freeing a stuck vehicle).....GI-49
Vehicle speed sensor (VSS).....EC-429, 1044, 1642
VENT/V - Wiring diagram.....EC-385, 1003, 1127, 1147, 1601, 1730, 1750
Viscosity number (SAE).....MA-14
VSS - Wiring diagram.....EC-432, 1046, 1644

W

WARN - Wiring diagram.....EL-85
Warning chime.....EL-95
Warning lamps.....EL-84
Washer, front.....EL-109
Water pump.....LC-12, 29
Water temperature gauge.....EL-69
Weatherstrip - See Exterior.....BT-35
Wheel alignment (front).....SU-7
Wheel balance.....MA-41
Wheel bearing (front).....AX-5
Wheel bearing (rear).....AX-28
Wheel hub (front).....AX-12
Wheel sensors (ABS).....BR-93, 132, 152
Wheel size.....GI-45
Wheelbase (Dimensions).....GI-44
Wide open & closed throttle position switch.....EC-179, 781, 1381
Width (Dimensions).....GI-44
WINDOW - Wiring diagram.....EL-171
Window, back.....BT-35, 49
Window, door.....BT-18
Window, opera.....BT-52
Window, rear.....BT-49
Windshield.....BT-47
WIPER - Wiring diagram.....EL-112
Wiper, front.....EL-109
Wiring Diagram (Cell code) list.....EL-266
Wiring diagrams.....GI-11
Withdrawal lever (clutch).....CL-10
Wrist pin - See Piston pin inspection.....EM-45, 116