# 2005 KIA SPORTAGE 4WD V6-2.7L
## TABLE OF CONTENTS

**ENGINE**
ENGINE CONTROLS....2
**STARTING CHARGING**
STARTING CHARGING - CHARGING CIRCUIT....5
STARTING CHARGING - STARTING CIRCUIT....6
**ELECTRICAL & POWER CONTROL**
BODY COMPUTER....7
COMPUTER DATA LINES....8
**DEFOGGER**
DEFOGGER - FRONT DEFOGGER CIRCUIT....10
DEFOGGER - REAR DEFOGGER & HEATED MIRRORS CIRCUIT....11
**DRIVER CONTROLS**
EXTERIOR LIGHTS - BACK-UP LAMPS CIRCUIT....12
EXTERIOR LIGHTS - EXTERIOR LAMPS CIRCUIT....13
EXTERIOR LIGHTS - EXTERIOR LAMPS CIRCUIT....14
HEADLIGHTS - AUTOLAMPS CIRCUIT....15
HEADLIGHTS - HEADLAMPS CIRCUIT (W/DRL)....16
HEADLIGHTS - HEADLAMPS CIRCUIT (W/DRL)....17
HEADLIGHTS - HEADLAMPS CIRCUIT (W/O DRL)....18
WARNING SYSTEMS - KEY REMINDER & SEAT BELT WARNING CIRCUIT....19
WARNING SYSTEMS - TIRE PRESSURE MONITORING CIRCUIT....20
INSTRUMENT CLUSTER - CLOCK CIRCUIT....21
INSTRUMENT CLUSTER - INSTRUMENT CLUSTER CIRCUIT....22
INSTRUMENT CLUSTER - INSTRUMENT CLUSTER CIRCUIT....23
INTERIOR LIGHTS - COURTESY LAMPS CIRCUIT....24
INTERIOR LIGHTS - INSTRUMENT ILLUMINATION CIRCUIT....25
**MIRRORS**
MIRRORS - ELECTROCHROMIC MIRROR CIRCUIT....26
MIRRORS - POWER MIRROR CIRCUIT....27
**POWER WINDOWS**
POWER WINDOWS....28
**RESTRAINTS**
SUPPLEMENTAL RESTRAINTS....29
**VENTILATION, HEATER & AIR CONDITIONER**
AIR CONDITIONING - AUTOMATIC A/C CIRCUIT....31
AIR CONDITIONING - AUTOMATIC A/C CIRCUIT....32
AIR CONDITIONING - MANUAL A/C CIRCUIT....33
AIR CONDITIONING - MANUAL A/C CIRCUIT....34
**TRACTION CONTROL SYSTEMS**
ANTI-LOCK BRAKES - W/ESP....35
ANTI-LOCK BRAKES - W/O ESP....36
**POWER AND GROUND DISTRIBUTION**
GROUND DISTRIBUTION....37
GROUND DISTRIBUTION....38
GROUND DISTRIBUTION....39
POWER DISTRIBUTION....40
POWER DISTRIBUTION....41
POWER DISTRIBUTION....42
POWER DISTRIBUTION....43
POWER DISTRIBUTION....44
POWER DISTRIBUTION....45
POWER DISTRIBUTION....46
RELAY BOX ENGINE COMPARTMENT....47
RELAY BOX PASSENGER COMPARTMENT....48
RELAY BOX PASSENGER COMPARTMENT....49
**RADIO, STEREO, AND COMPACT DISC**
SOUND SYSTEMS - W/AMPLIFIER....50
SOUND SYSTEMS - W/O AMPLIFIER....51
**TRANSMISSION AND DRIVERTRAIN**
TRANSAXLE RANGE SWITCH....52
TRANSMISSIONS - 4WD CIRCUIT....53
TRANSMISSIONS - A/T CIRCUIT....54
TRANSMISSIONS - A/T CIRCUIT....55
**SENSOR AND SWITCHES, CONNECTOR**
CAMSHAFT POSITION SENSOR....56
CRANKSHAFT POSITION SENSOR....57
CYLINDER....58
DATA LINK CONNECTOR....59
DATA LINK CONNECTOR....60
DATA LINK CONNECTOR....61
DATA LINK CONNECTOR....62
ENGINE COOLANT TEMPERATURE SENSOR....63
HEATED OXYGEN SENSOR....64
INTAKE AIR TEMPERATURE SENSOR....65
KNOCK SENSOR....66
KNOCK SENSOR....67
PIN-OUT ENGINE CONTROL MODULE....68
THROTTLE POSITION SENSOR....76
WHEEL SPEED SENSOR....77
**GLOSSARY**
GLOSSARY OF TERMS....78
GLOSSARY OF TERMS....79

# 2005 KIA SPORTAGE 4WD V6-2.7L
## ENGINE CONTROLS

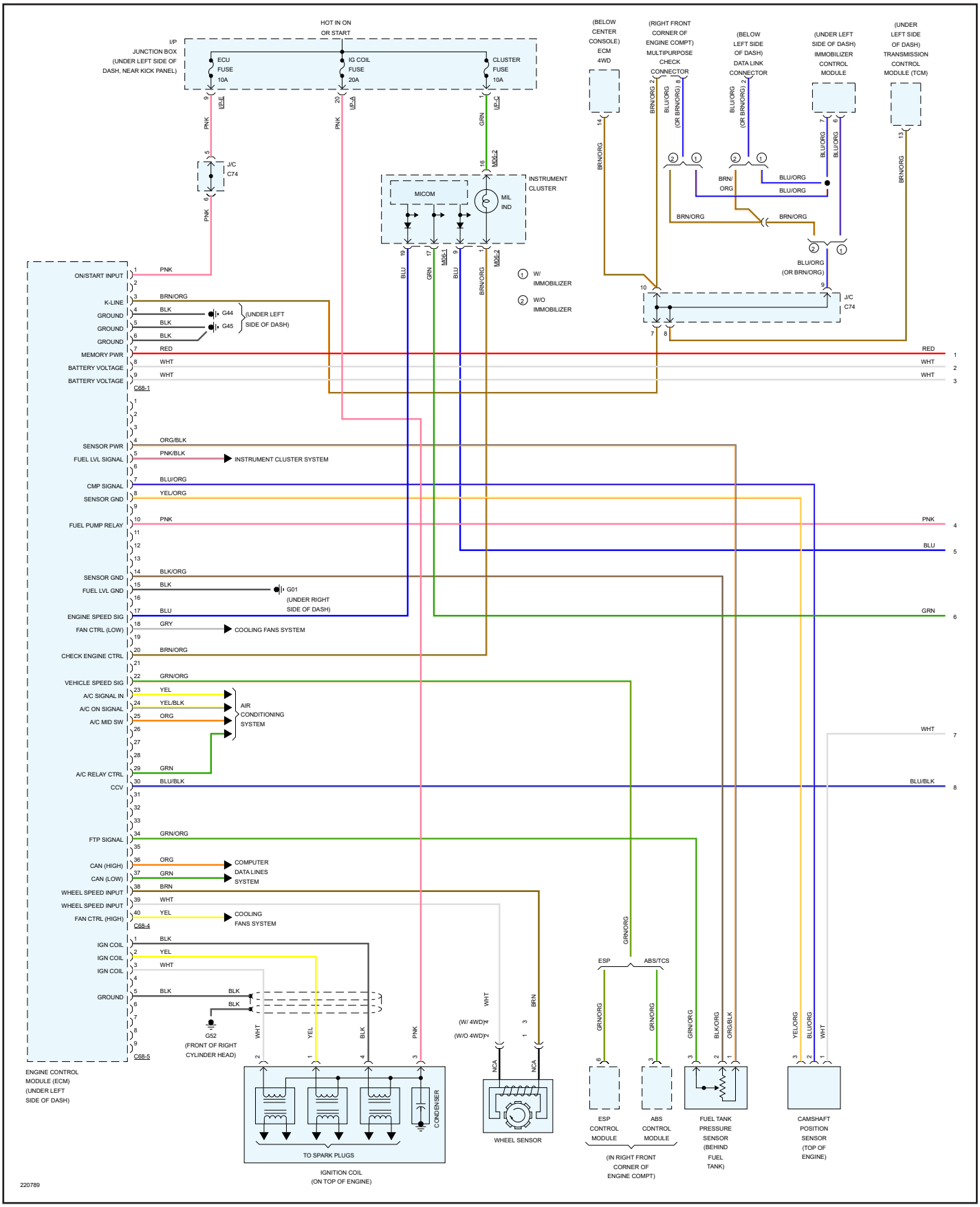

# 2005 KIA SPORTAGE 4WD V6-2.7L
## ENGINE CONTROLS

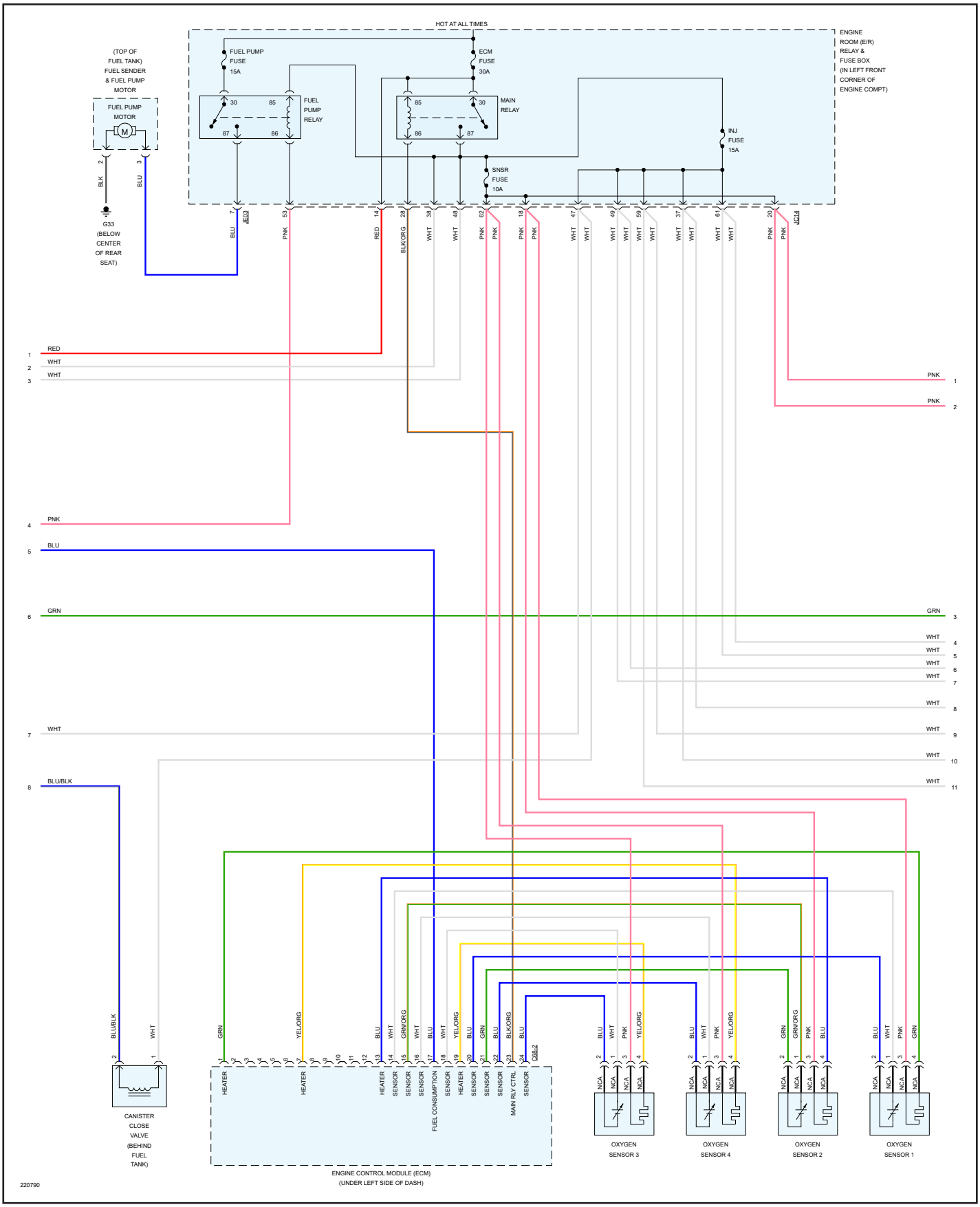

# 2005 KIA SPORTAGE 4WD V6-2.7L
## ENGINE CONTROLS

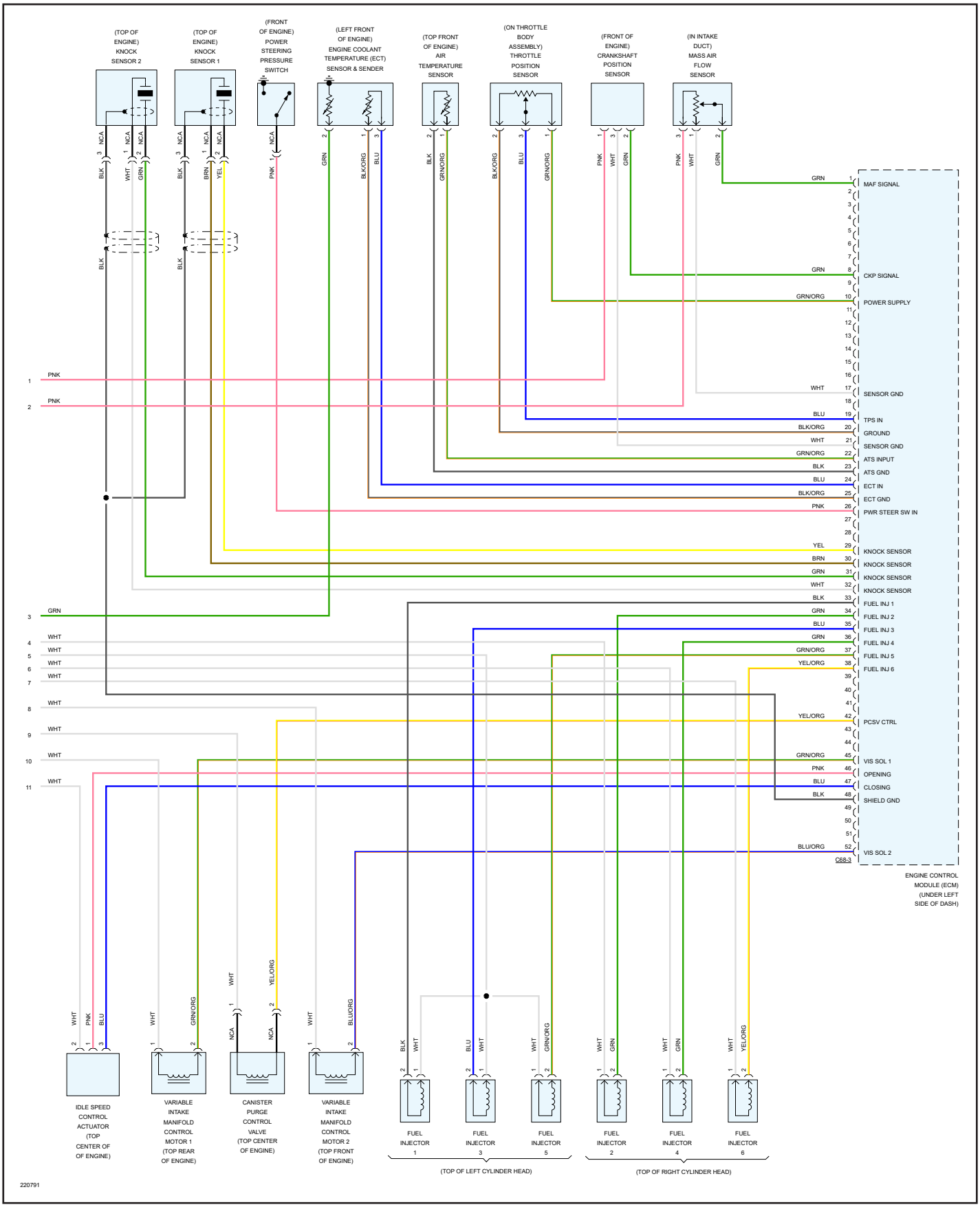

# 2005 KIA SPORTAGE 4WD V6-2.7L

## STARTING CHARGING - CHARGING CIRCUIT

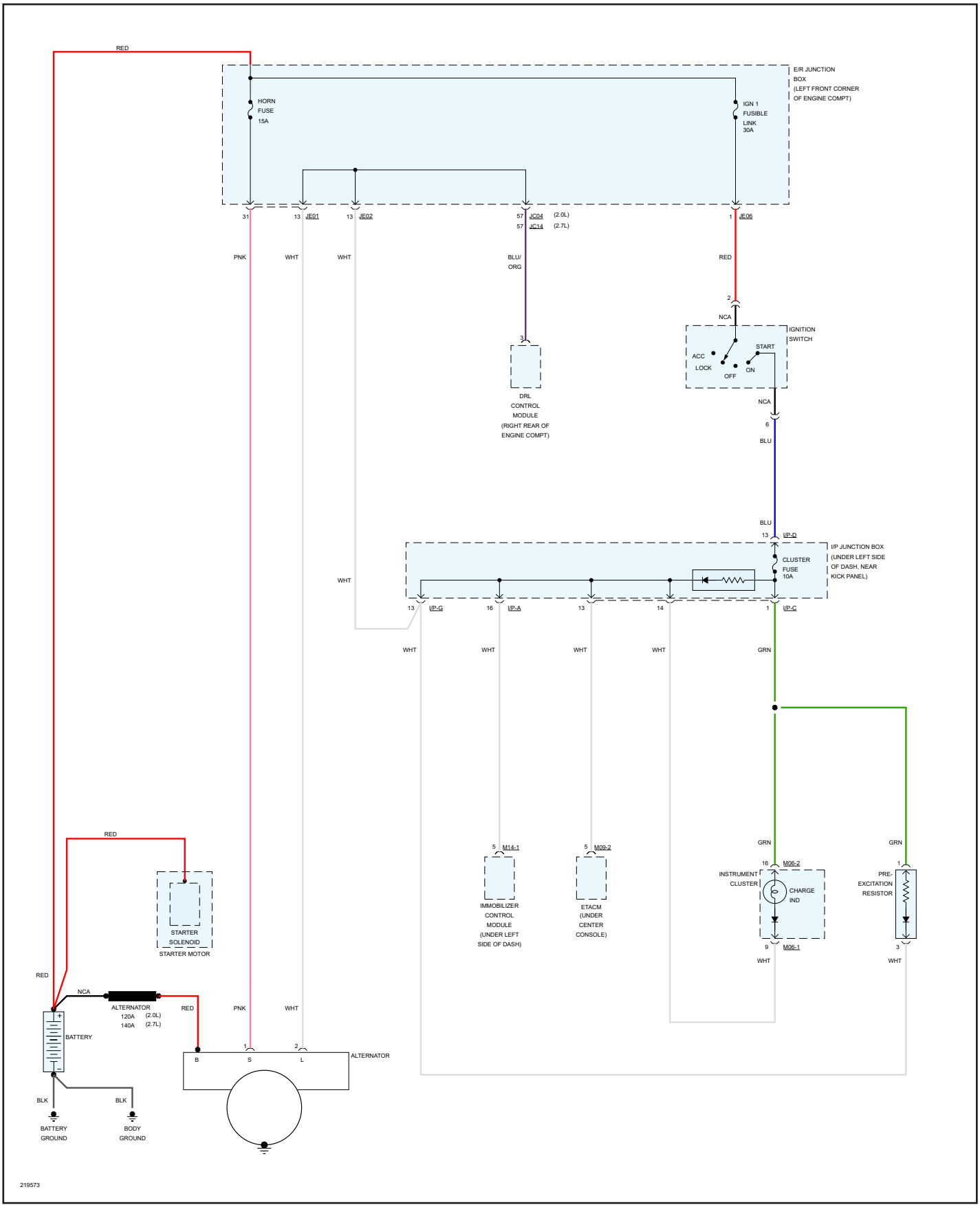

# 2005 KIA SPORTAGE 4WD V6-2.7L

## STARTING CHARGING - STARTING CIRCUIT

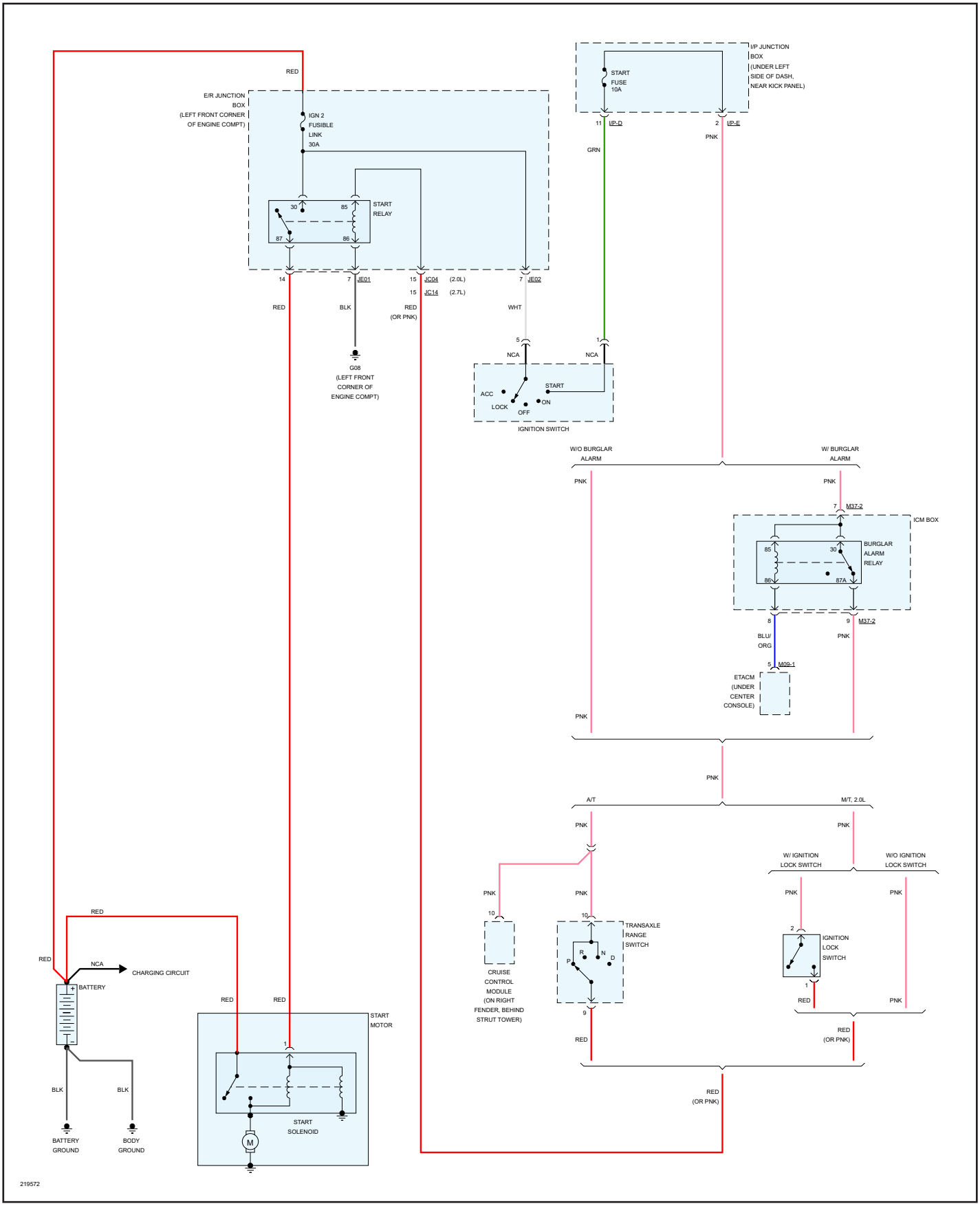

# 2005 KIA SPORTAGE 4WD V6-2.7L

## BODY COMPUTER

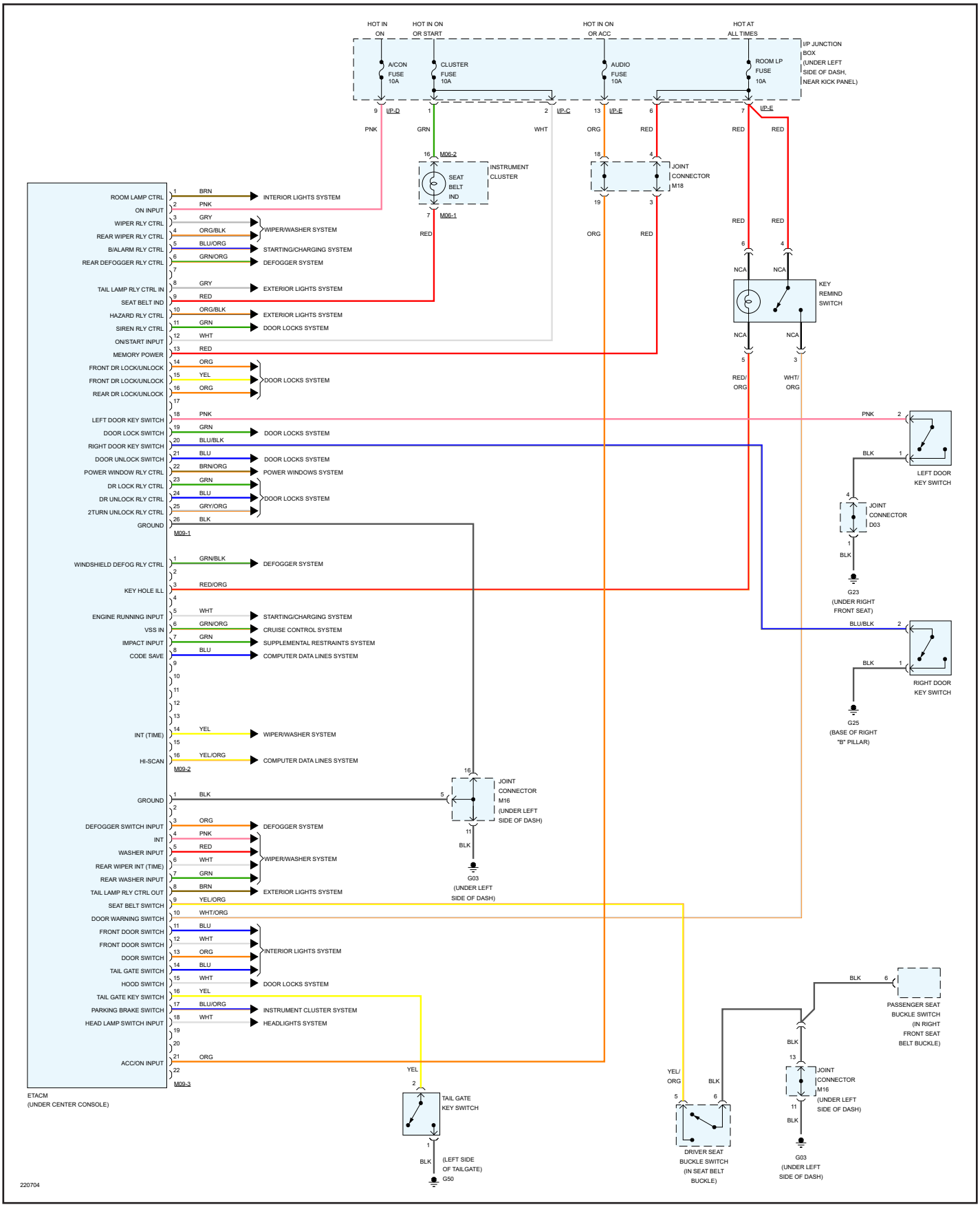

# 2005 KIA SPORTAGE 4WD V6-2.7L
## COMPUTER DATA LINES

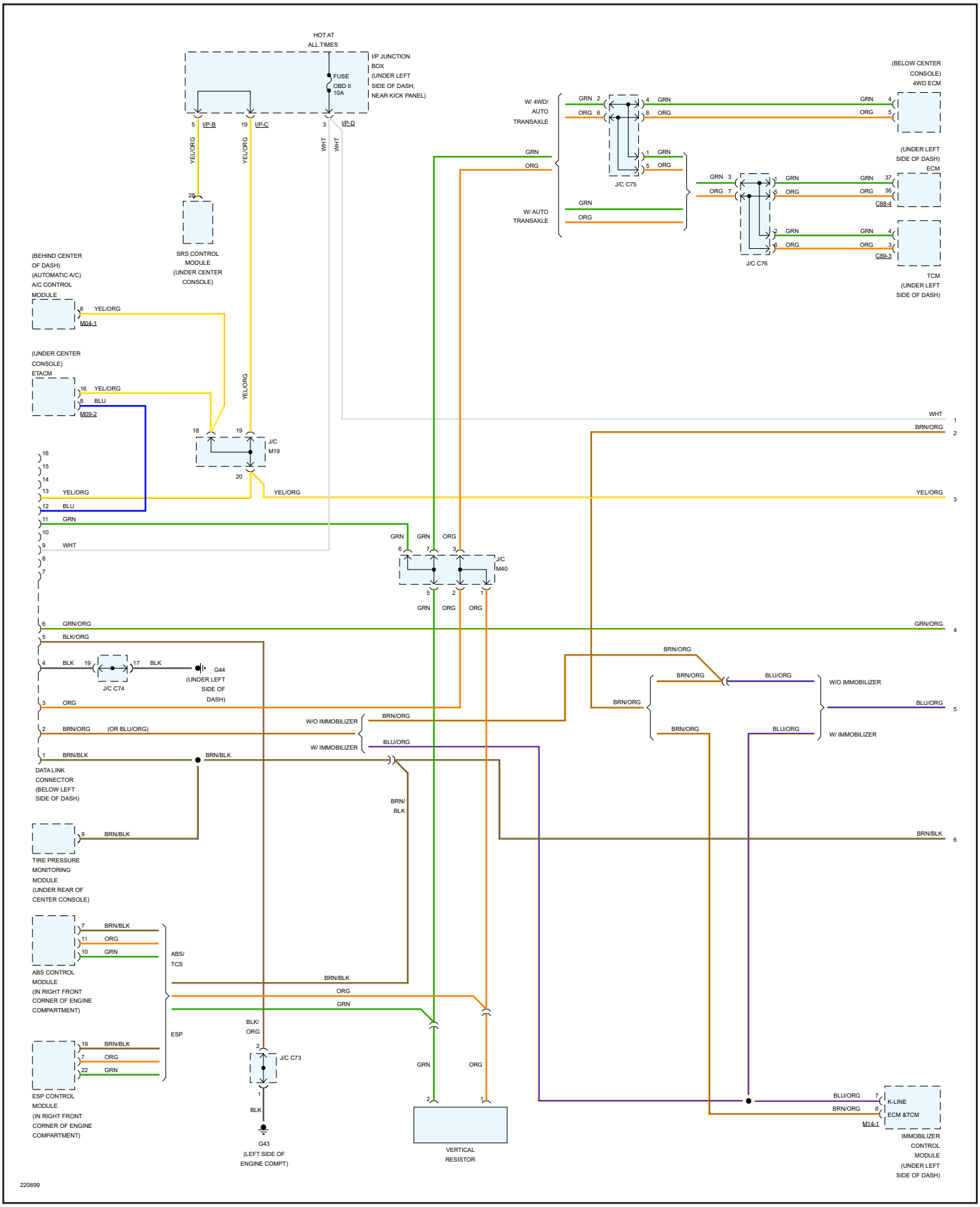

# 2005 KIA SPORTAGE 4WD V6-2.7L
## COMPUTER DATA LINES

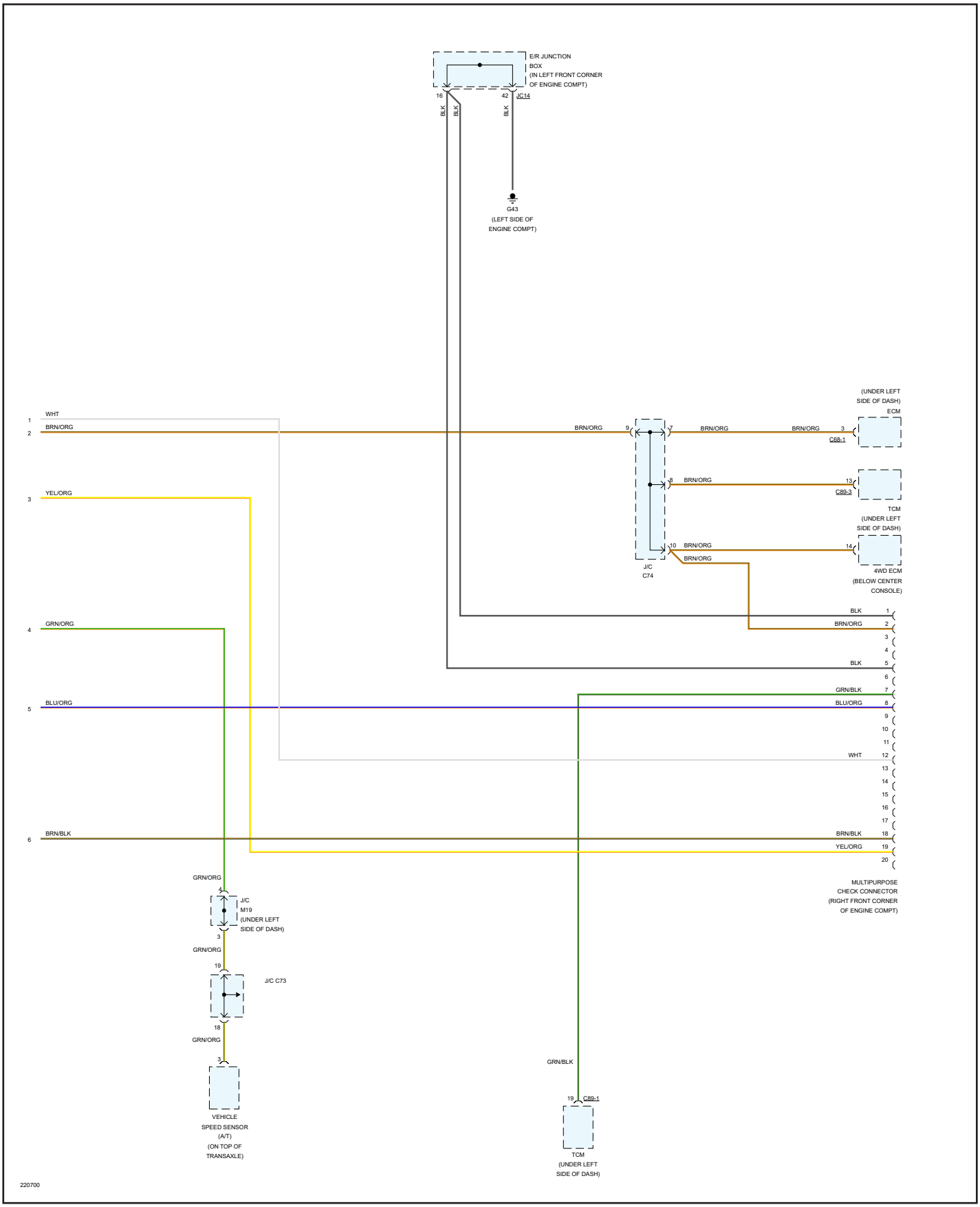

# 2005 KIA SPORTAGE 4WD V6-2.7L
## DEFOGGER - FRONT DEFOGGER CIRCUIT

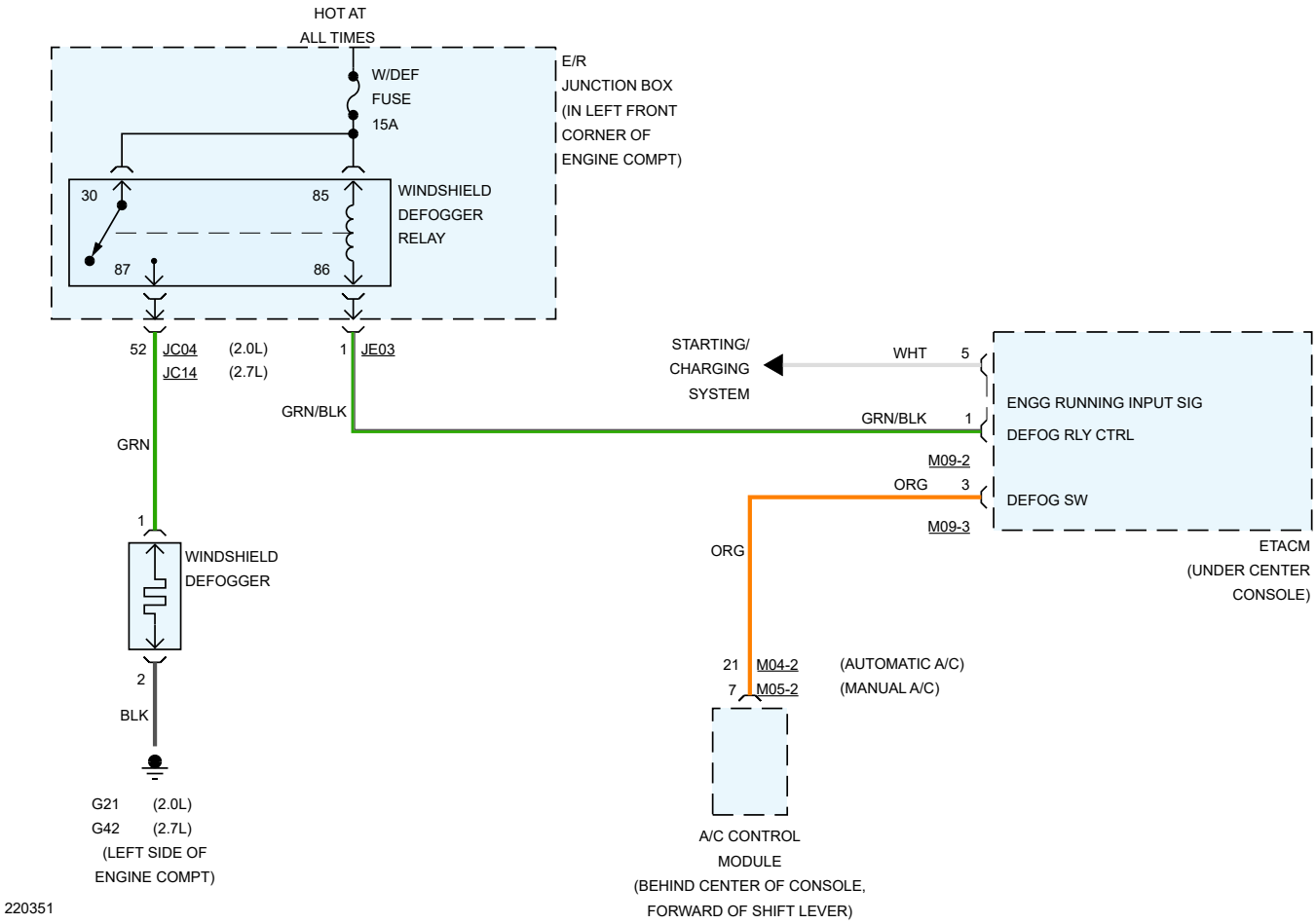

# 2005 KIA SPORTAGE 4WD V6-2.7L

## DEFOGGER - REAR DEFOGGER & HEATED MIRRORS CIRCUIT

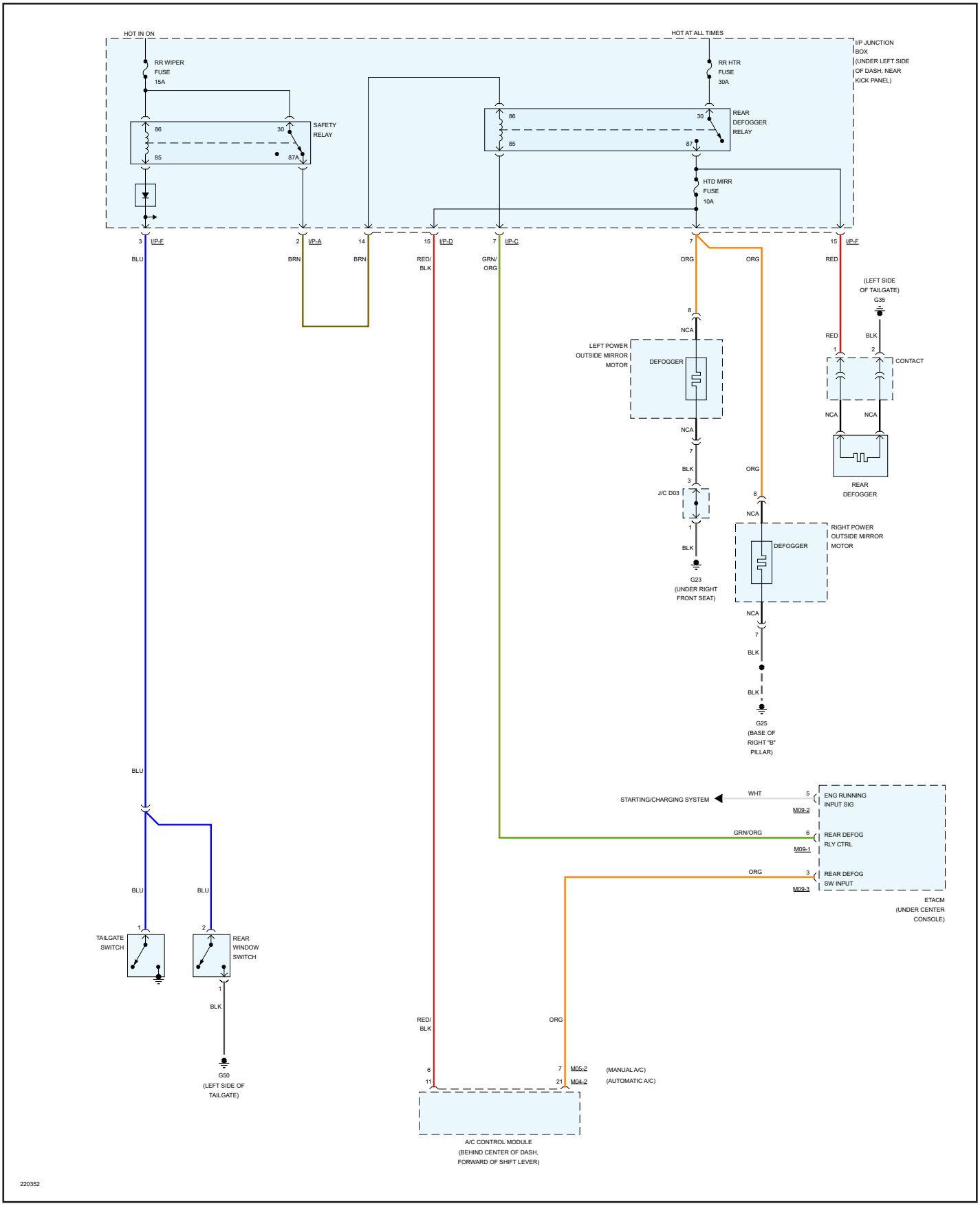

# 2005 KIA SPORTAGE 4WD V6-2.7L

## EXTERIOR LIGHTS - BACK-UP LAMPS CIRCUIT

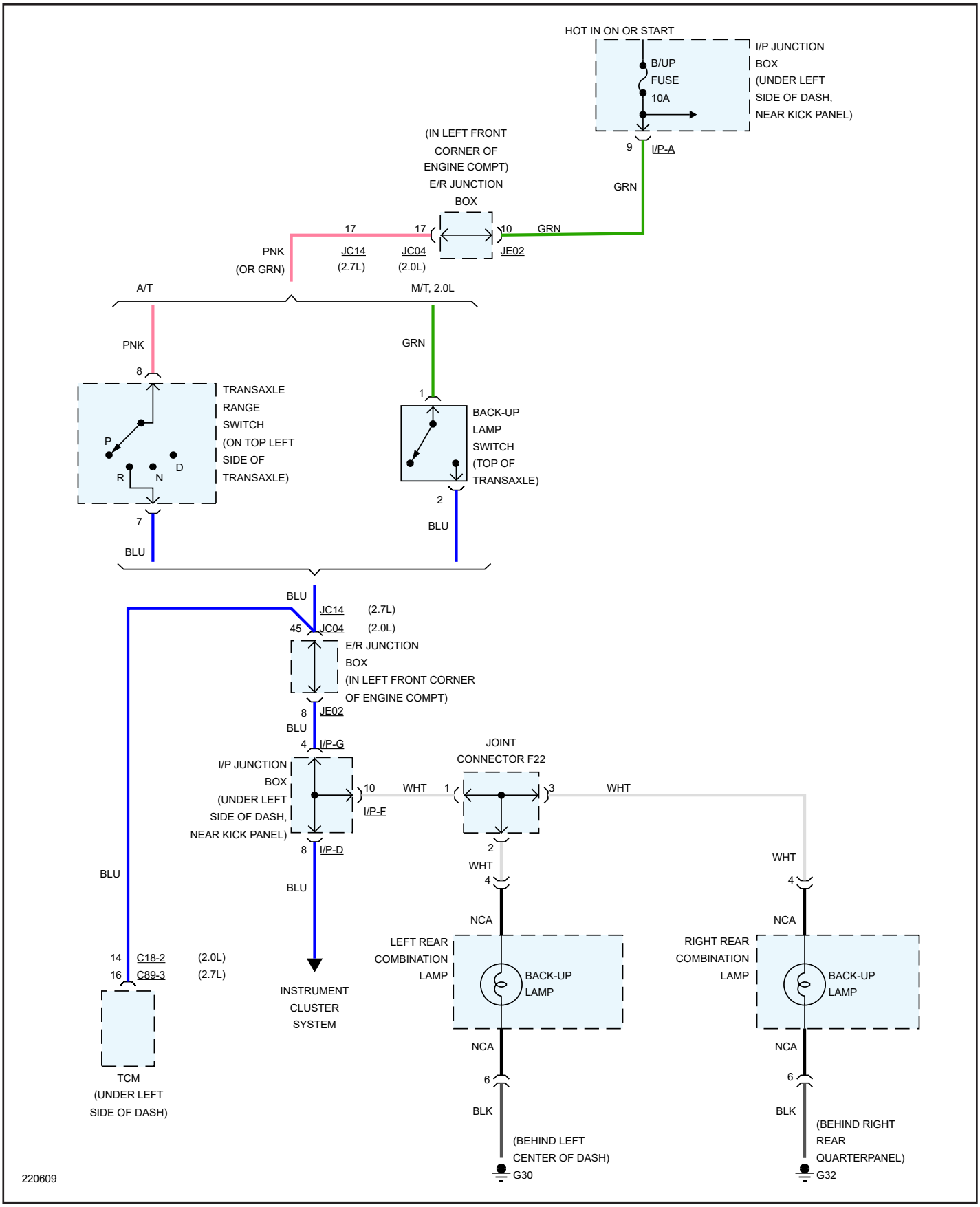

# 2005 KIA SPORTAGE 4WD V6-2.7L

## EXTERIOR LIGHTS - EXTERIOR LAMPS CIRCUIT

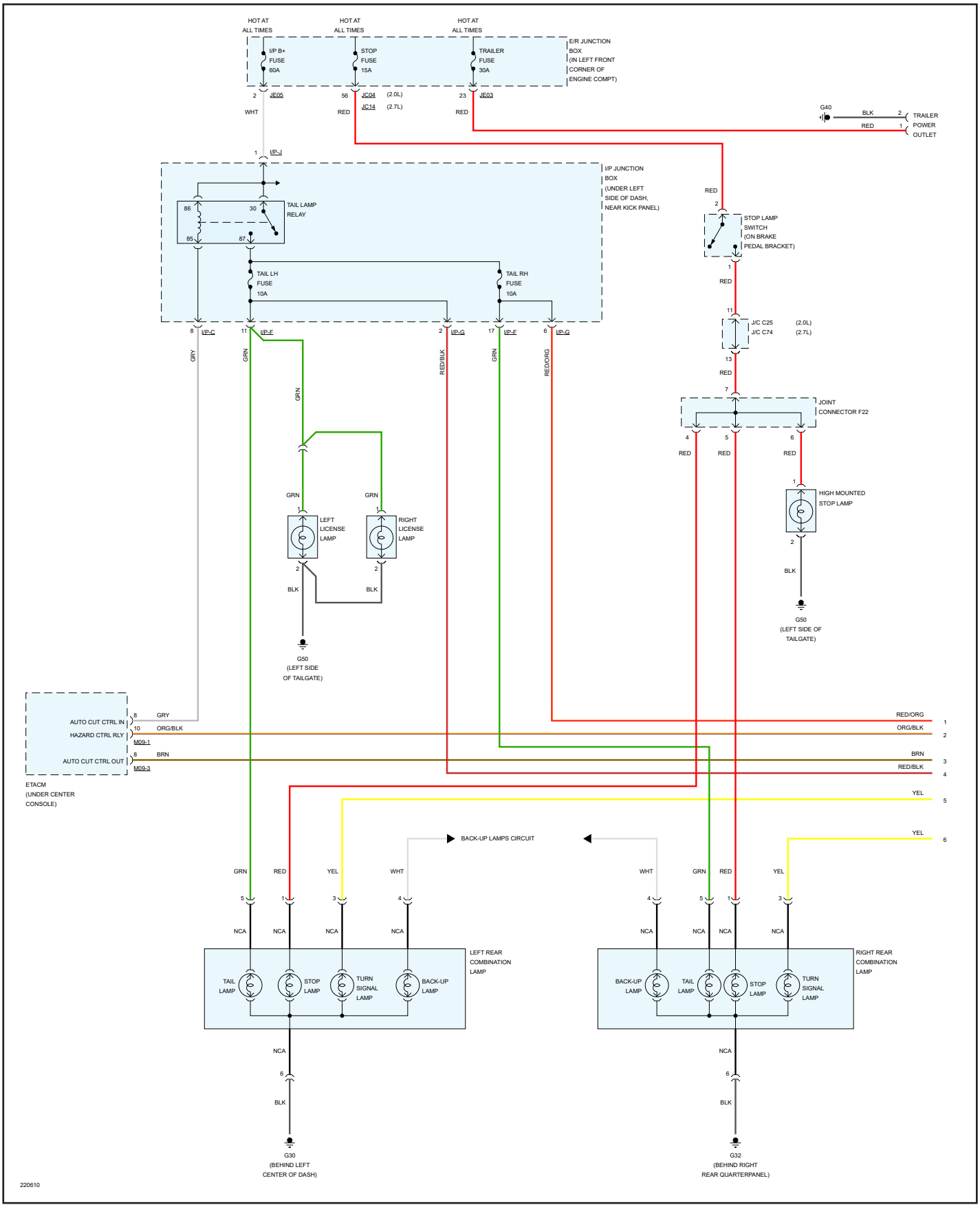

# 2005 KIA SPORTAGE 4WD V6-2.7L

## EXTERIOR LIGHTS - EXTERIOR LAMPS CIRCUIT

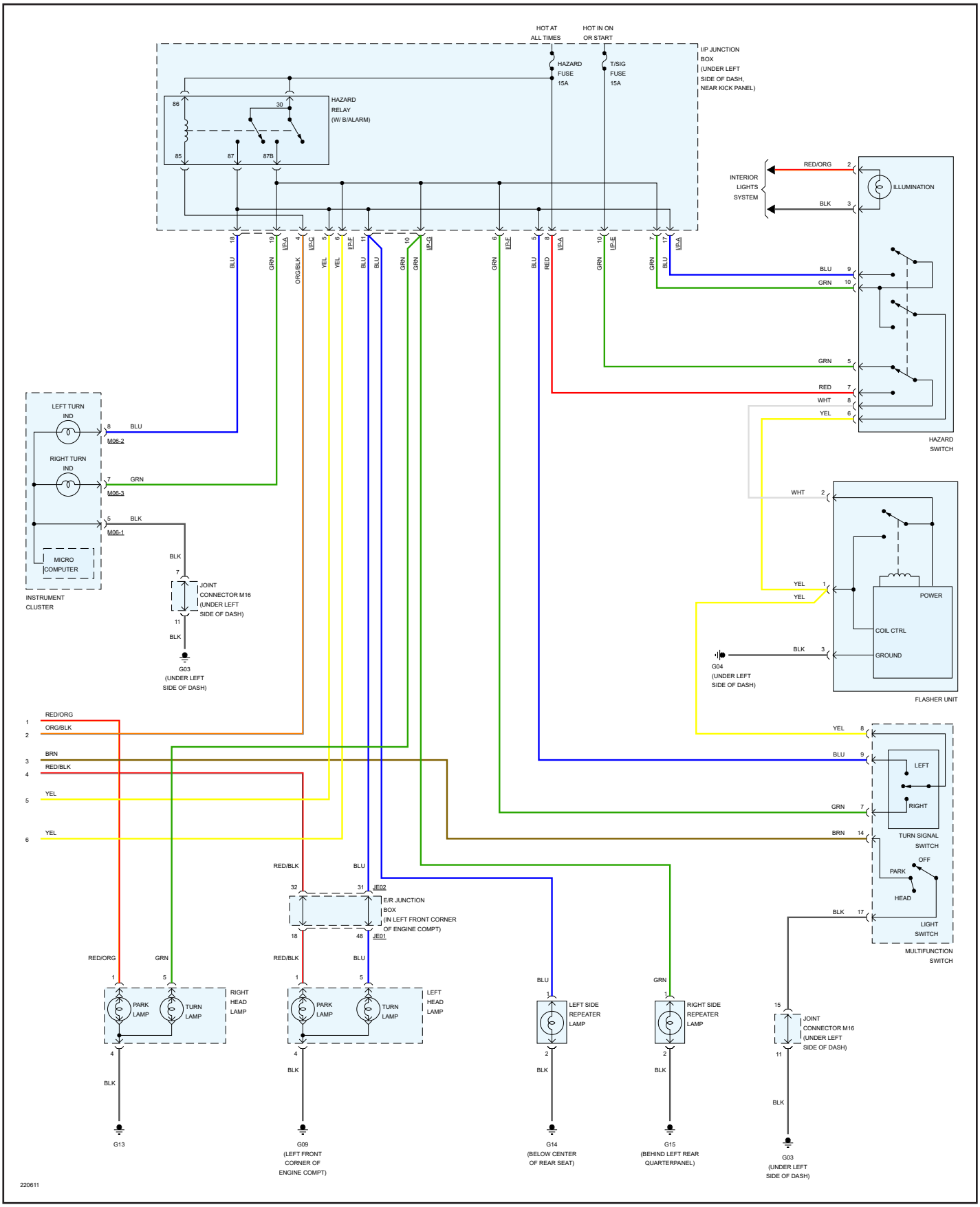

# 2005 KIA SPORTAGE 4WD V6-2.7L

## HEADLIGHTS - AUTOLAMPS CIRCUIT

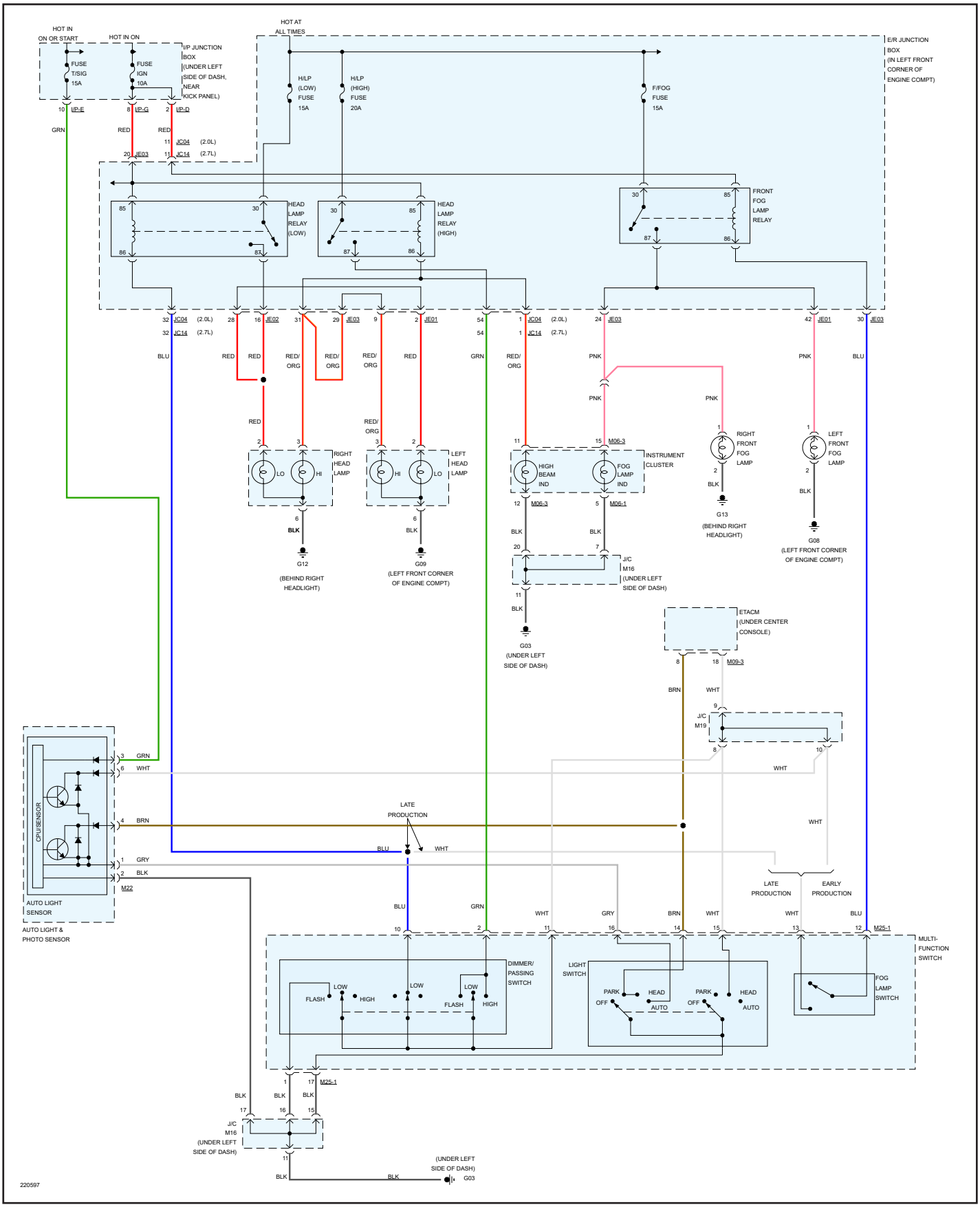

# 2005 KIA SPORTAGE 4WD V6-2.7L

## HEADLIGHTS - HEADLAMPS CIRCUIT (W/DRL)

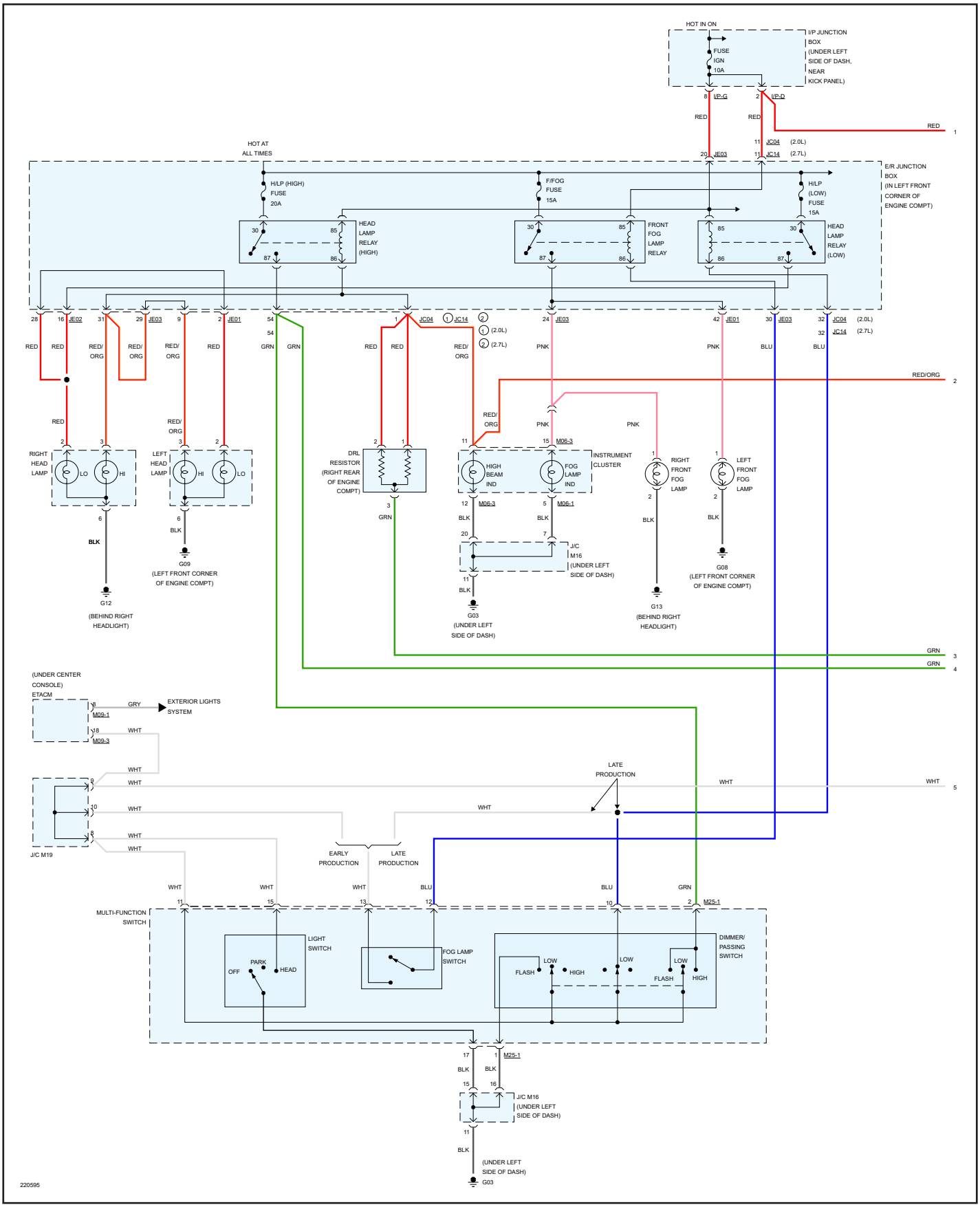

# 2005 KIA SPORTAGE 4WD V6-2.7L
## HEADLIGHTS - HEADLAMPS CIRCUIT (W/DRL)

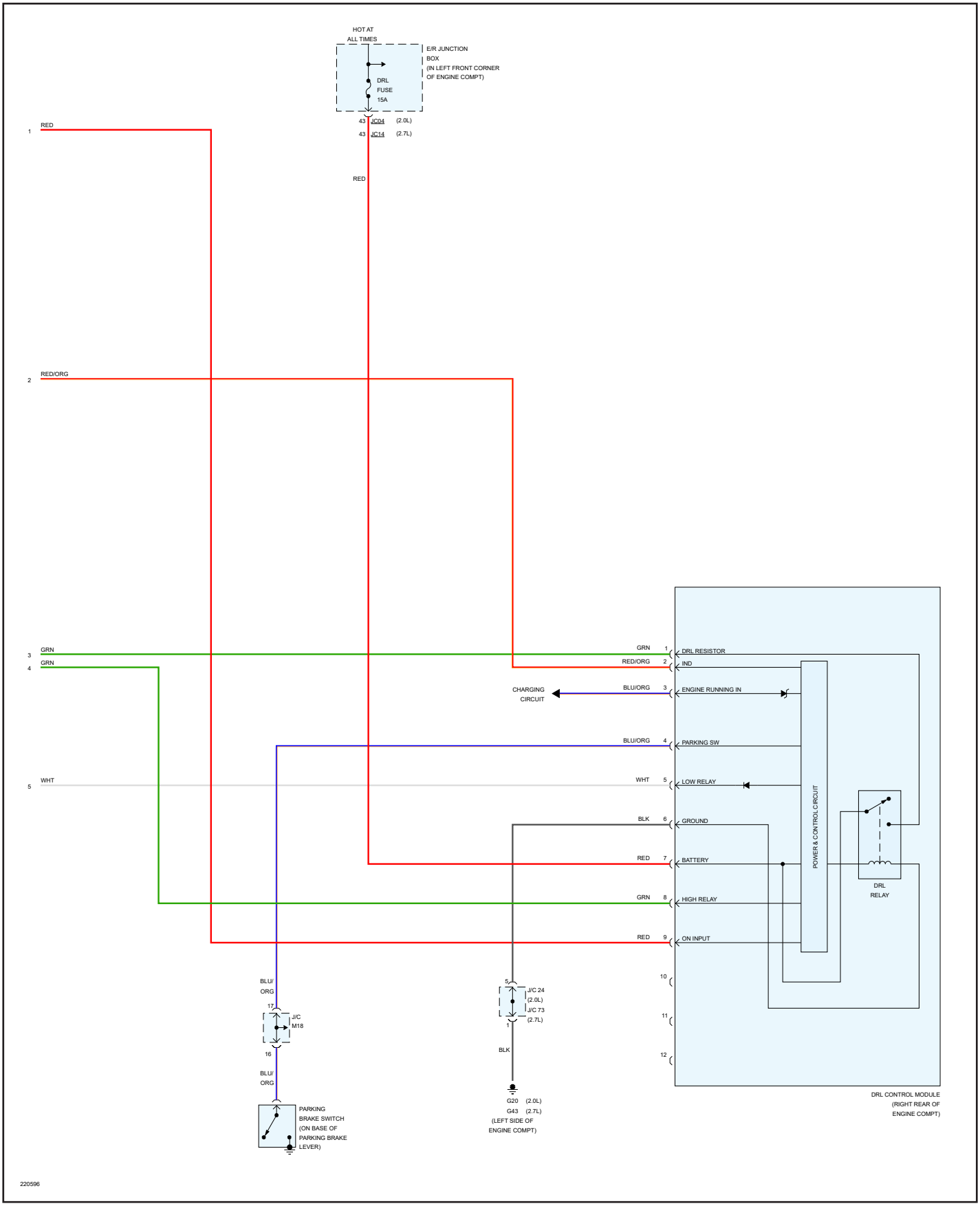

# 2005 KIA SPORTAGE 4WD V6-2.7L

## HEADLIGHTS - HEADLAMPS CIRCUIT (W/O DRL)

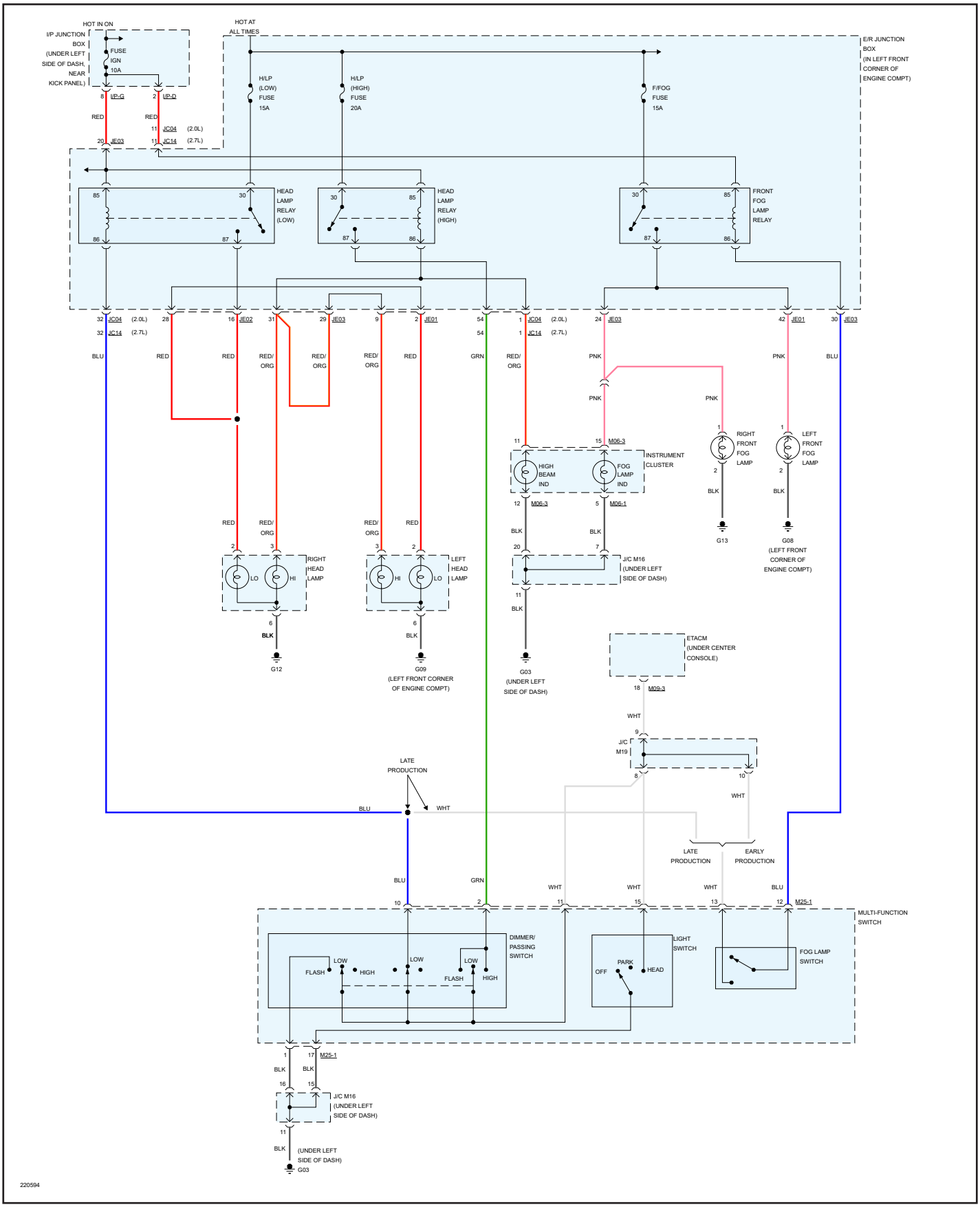

# 2005 KIA SPORTAGE 4WD V6-2.7L

## WARNING SYSTEMS - KEY REMINDER & SEAT BELT WARNING CIRCUIT

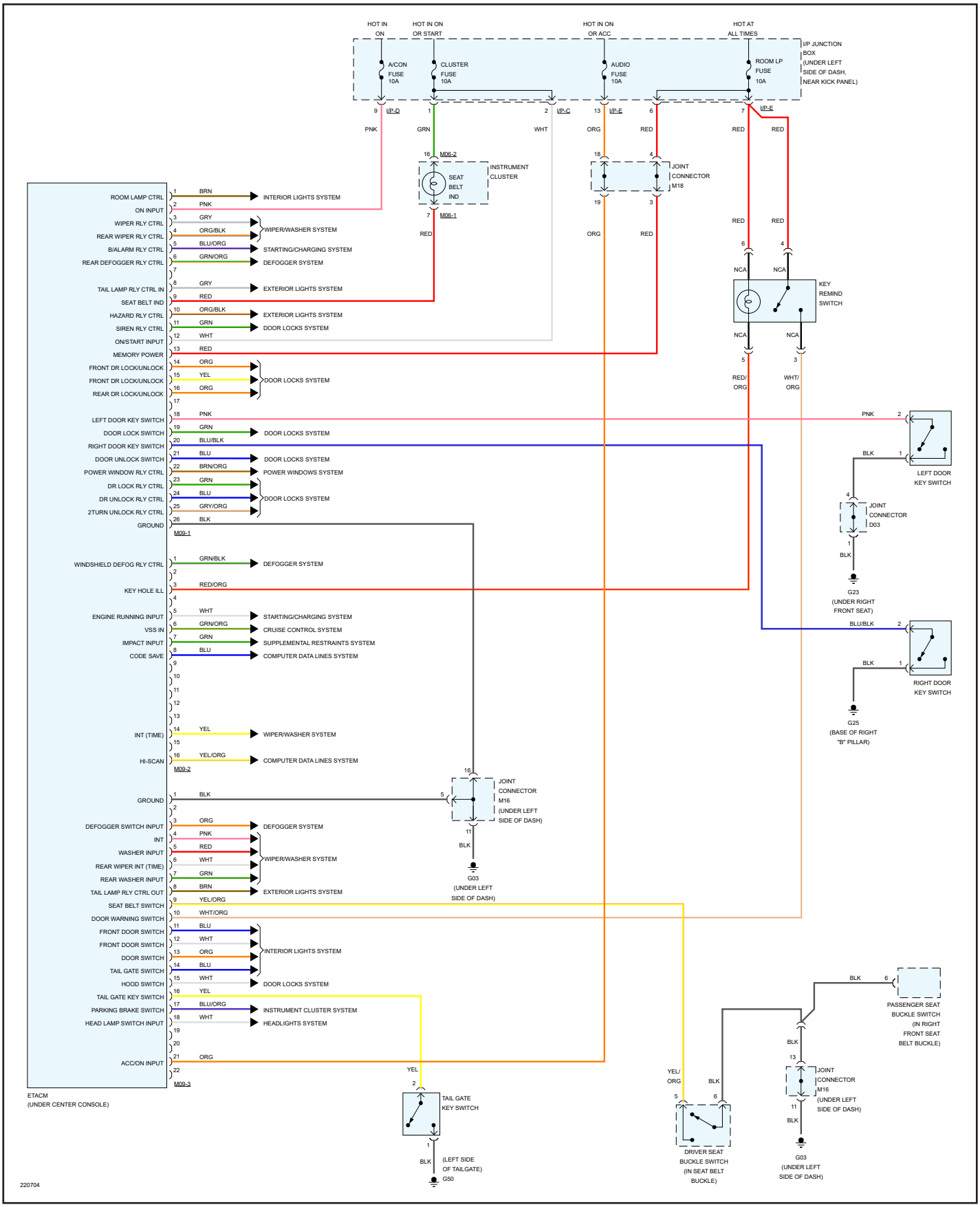

# 2005 KIA SPORTAGE 4WD V6-2.7L

## WARNING SYSTEMS - TIRE PRESSURE MONITORING CIRCUIT

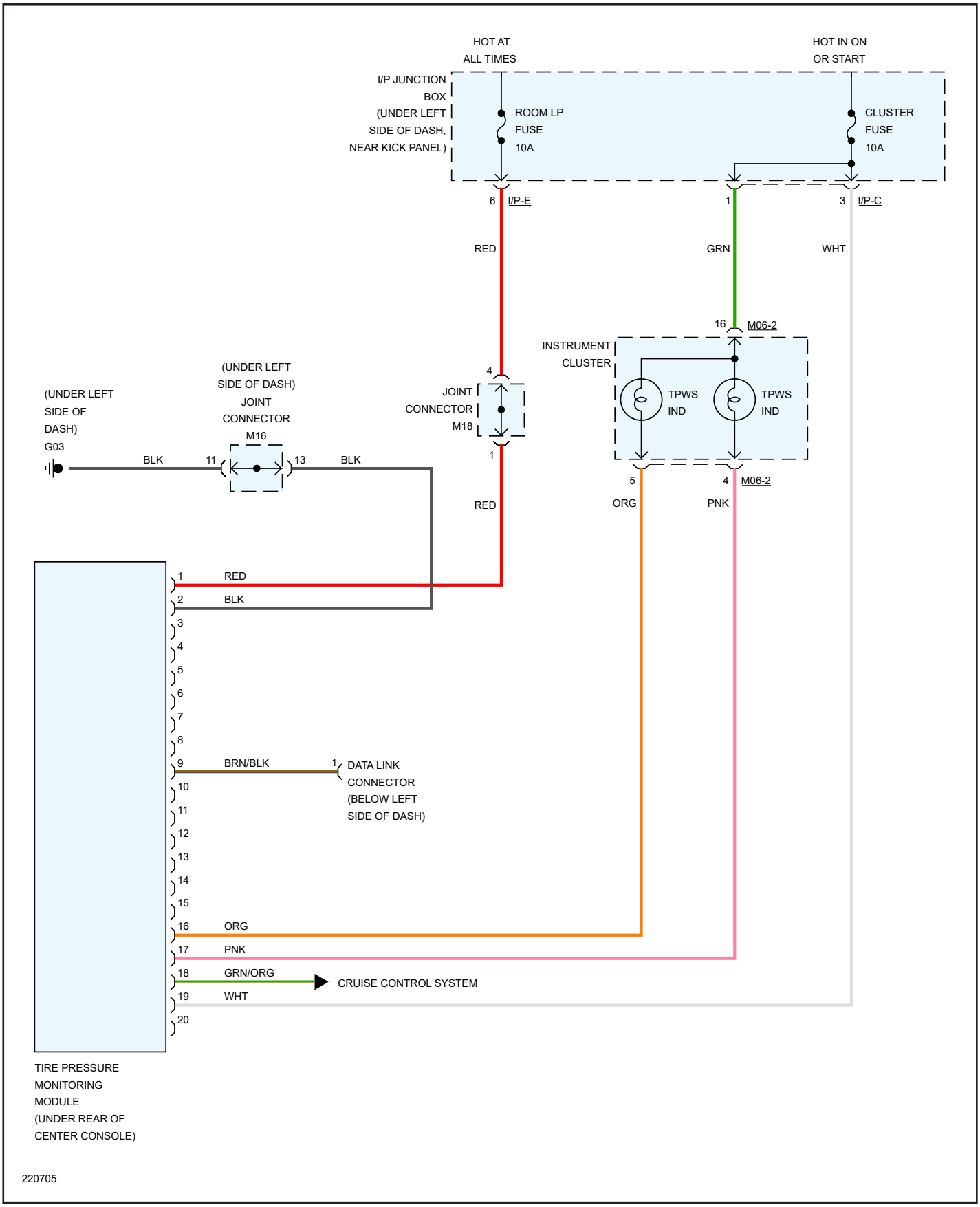

# 2005 KIA SPORTAGE 4WD V6-2.7L
## INSTRUMENT CLUSTER - CLOCK CIRCUIT

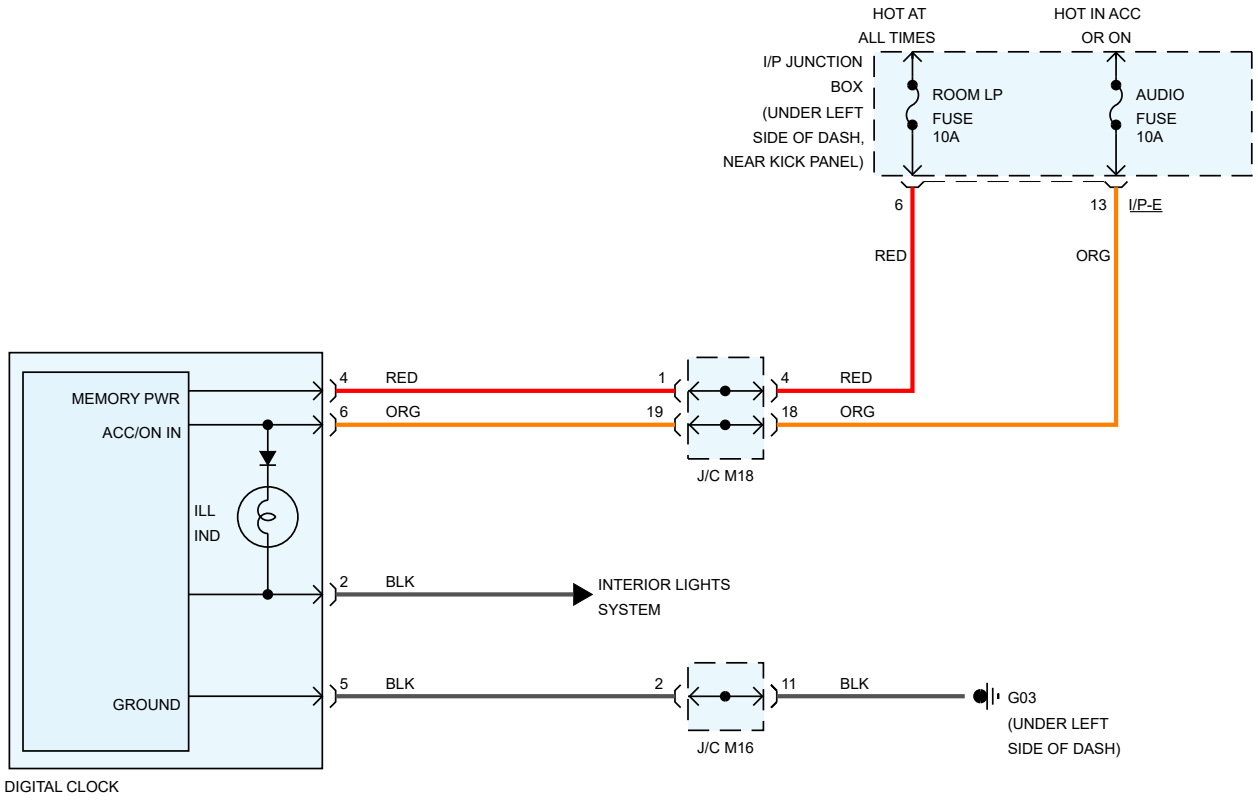


220694

# 2005 KIA SPORTAGE 4WD V6-2.7L

## INSTRUMENT CLUSTER - INSTRUMENT CLUSTER CIRCUIT

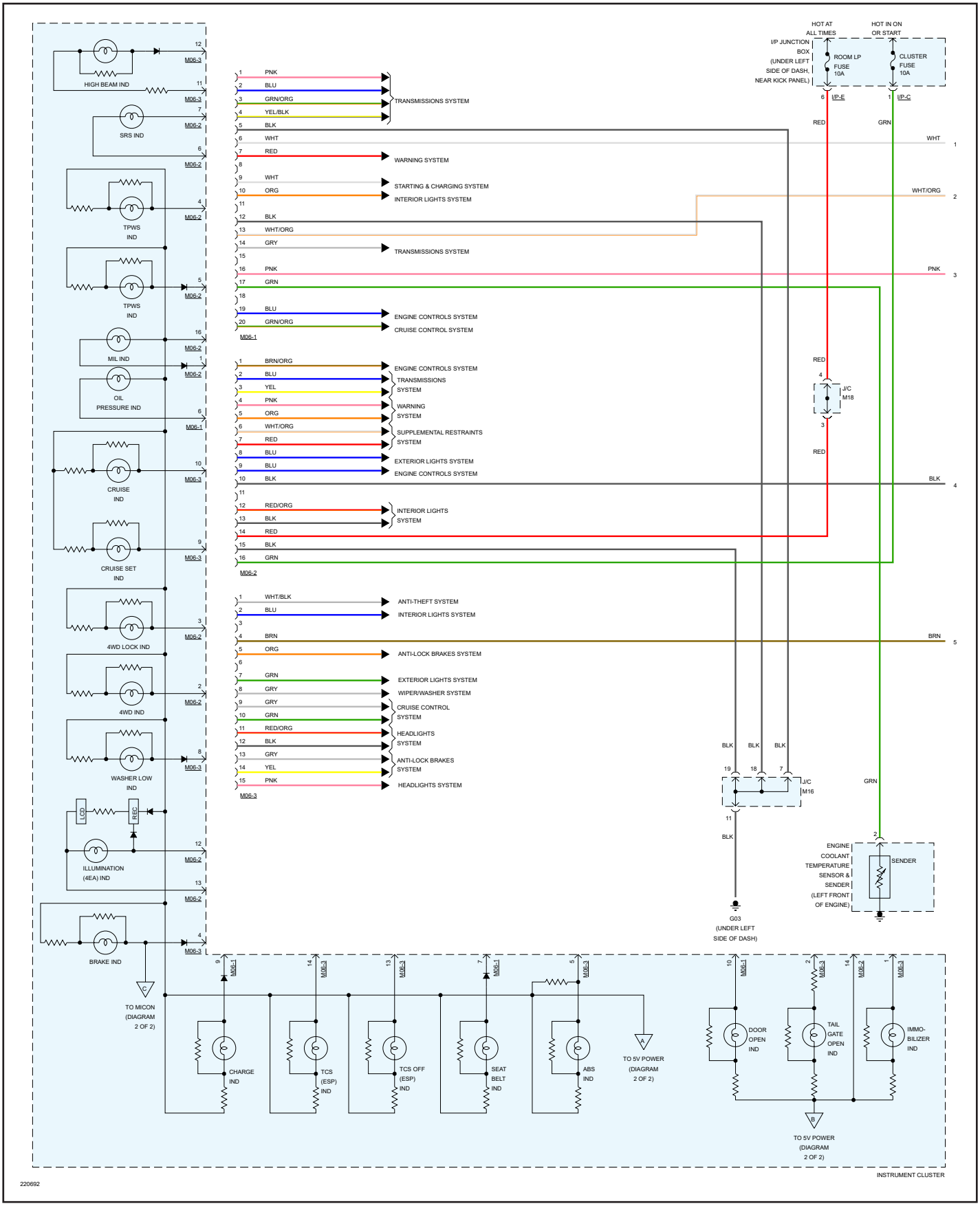

# 2005 KIA SPORTAGE 4WD V6-2.7L

## INSTRUMENT CLUSTER - INSTRUMENT CLUSTER CIRCUIT

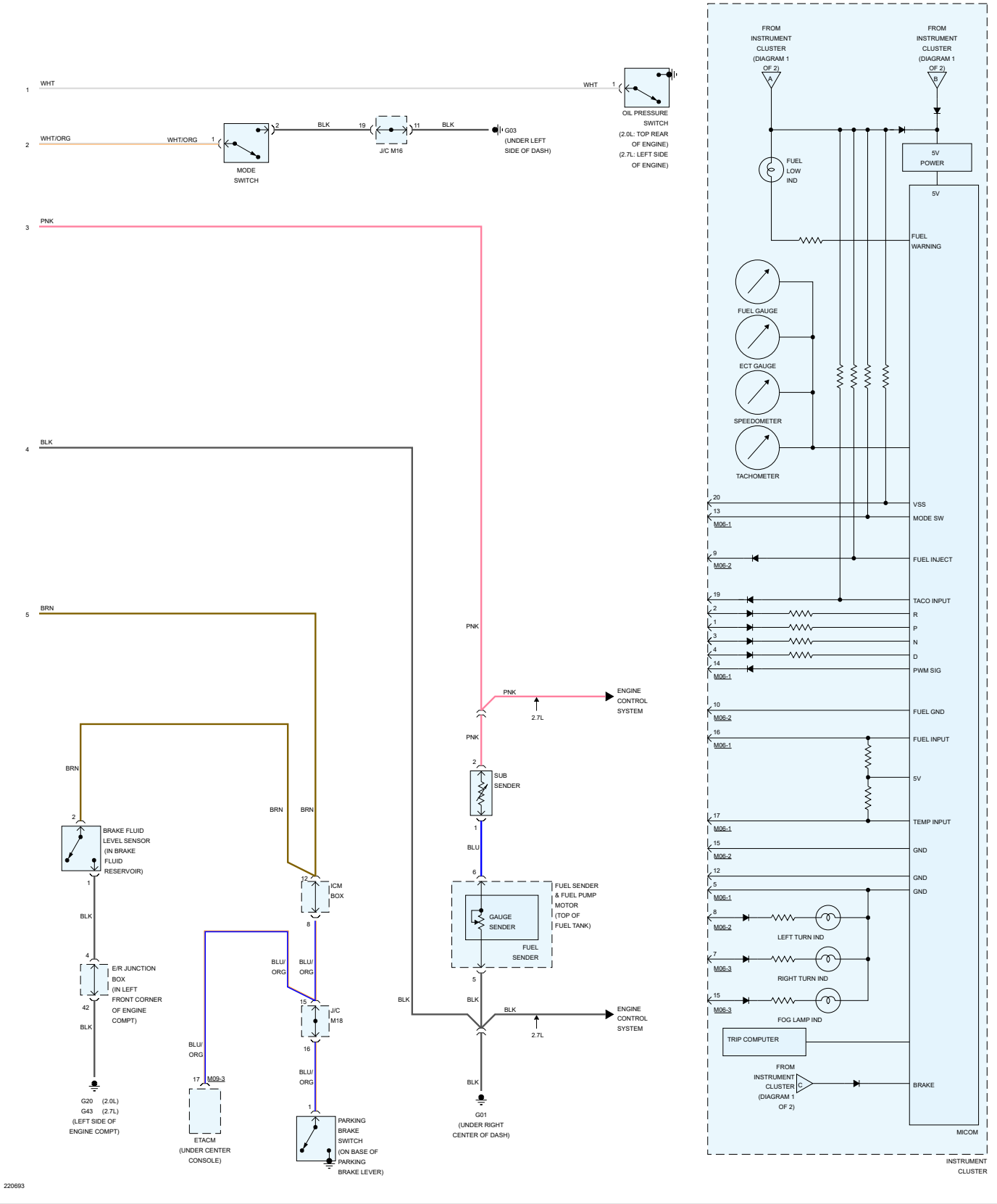

# 2005 KIA SPORTAGE 4WD V6-2.7L

## INTERIOR LIGHTS - COURTESY LAMPS CIRCUIT

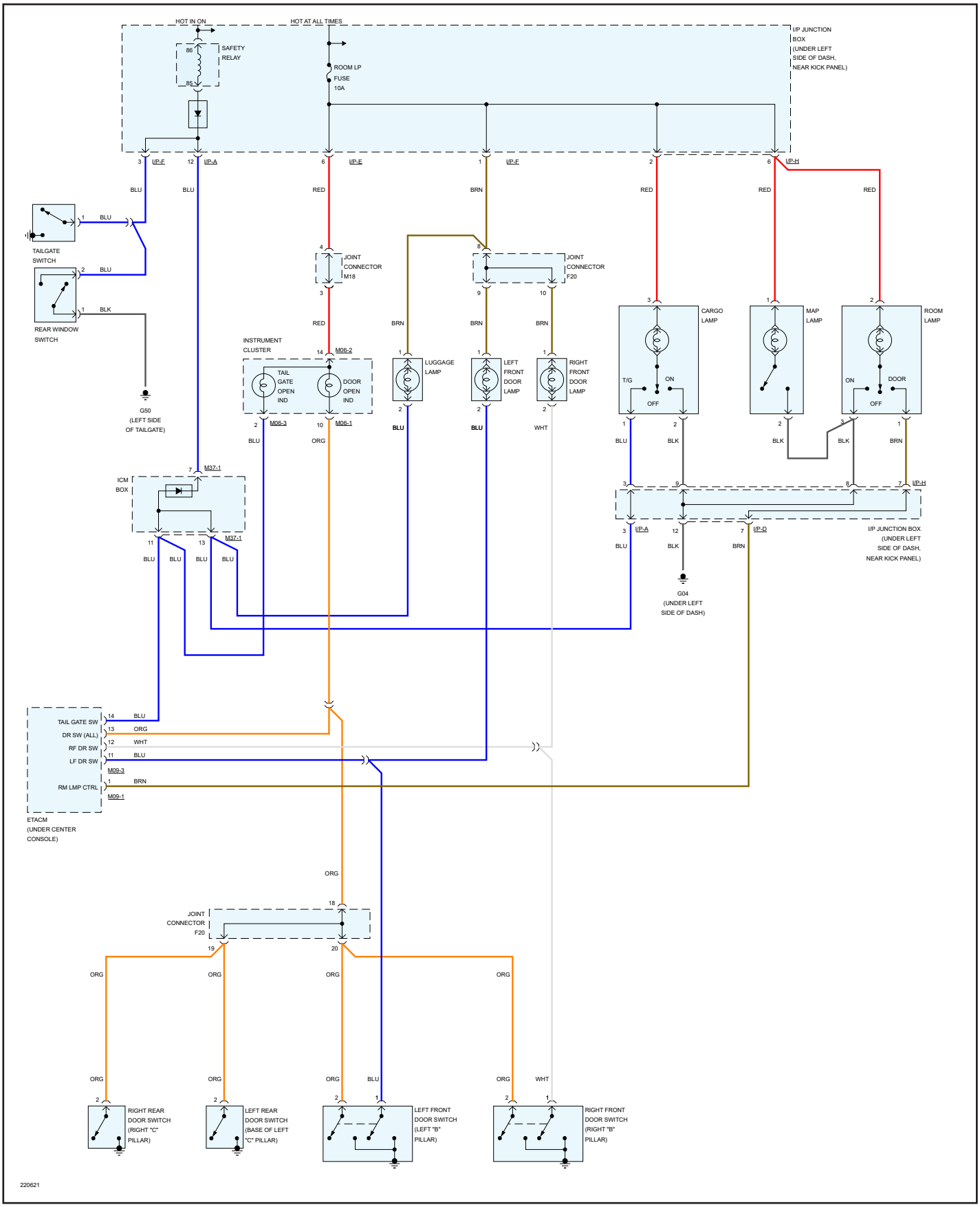

# 2005 KIA SPORTAGE 4WD V6-2.7L

## INTERIOR LIGHTS - INSTRUMENT ILLUMINATION CIRCUIT

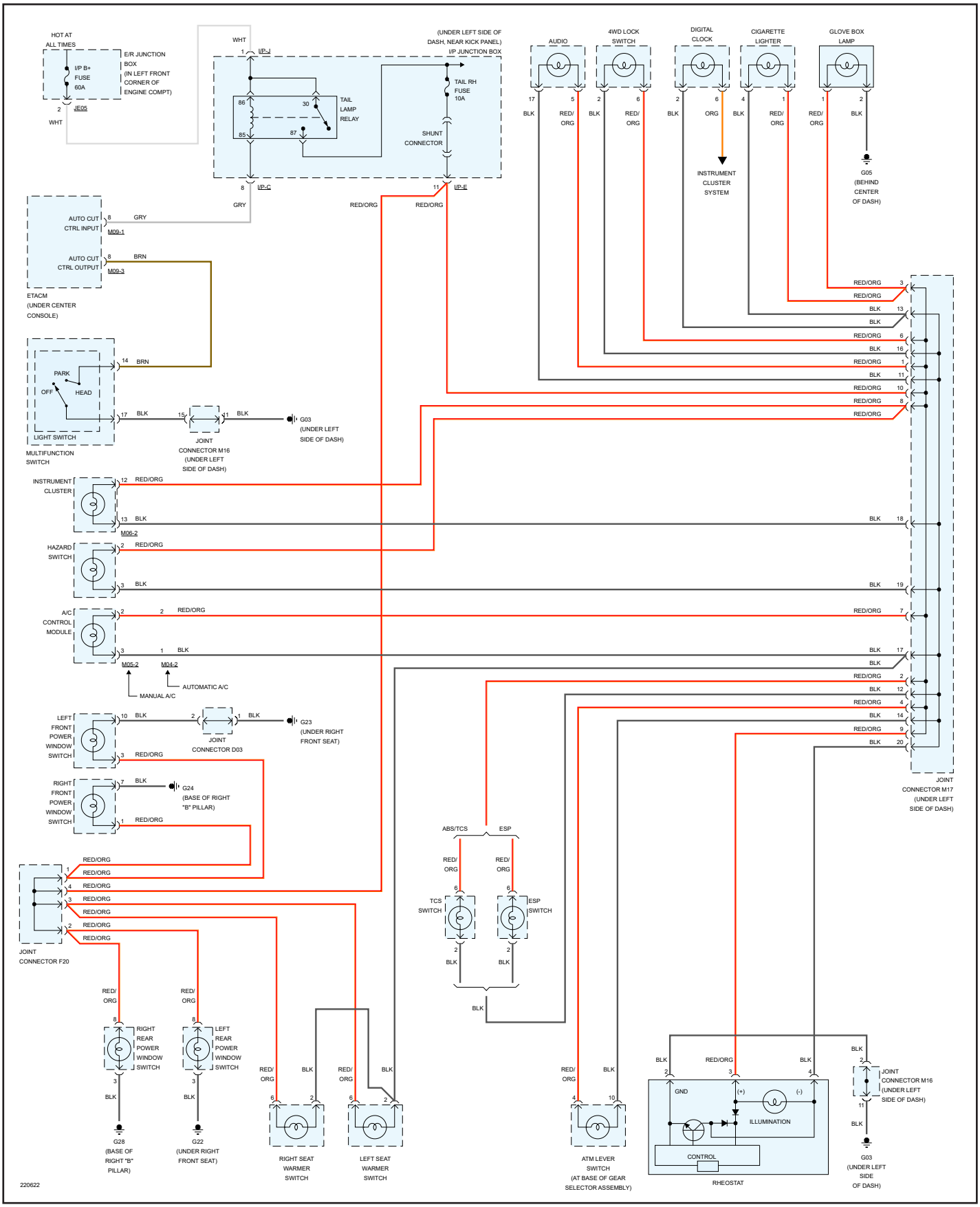

# 2005 KIA SPORTAGE 4WD V6-2.7L

## MIRRORS - ELECTROCHROMIC MIRROR CIRCUIT

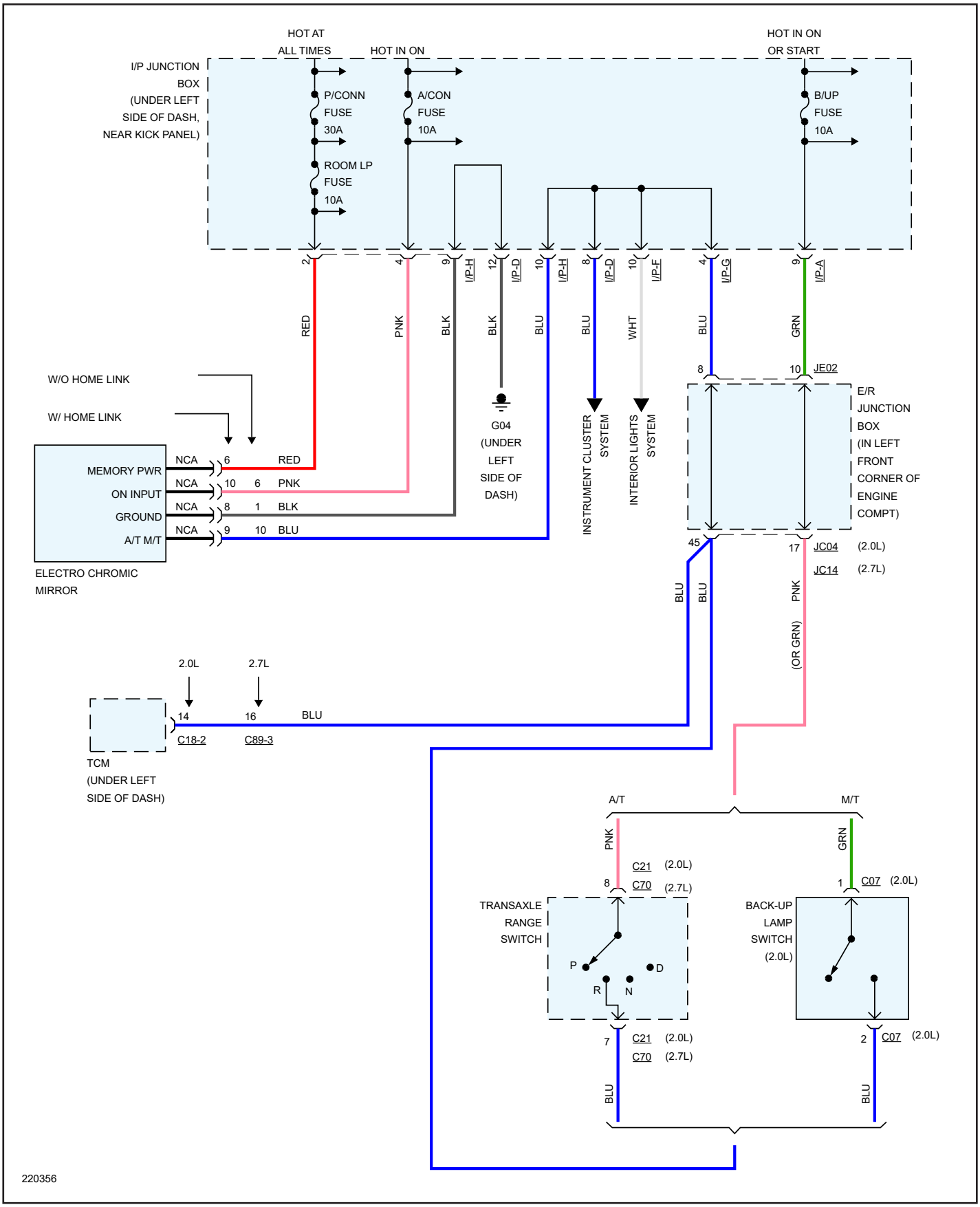

# 2005 KIA SPORTAGE 4WD V6-2.7L

## MIRRORS - POWER MIRROR CIRCUIT

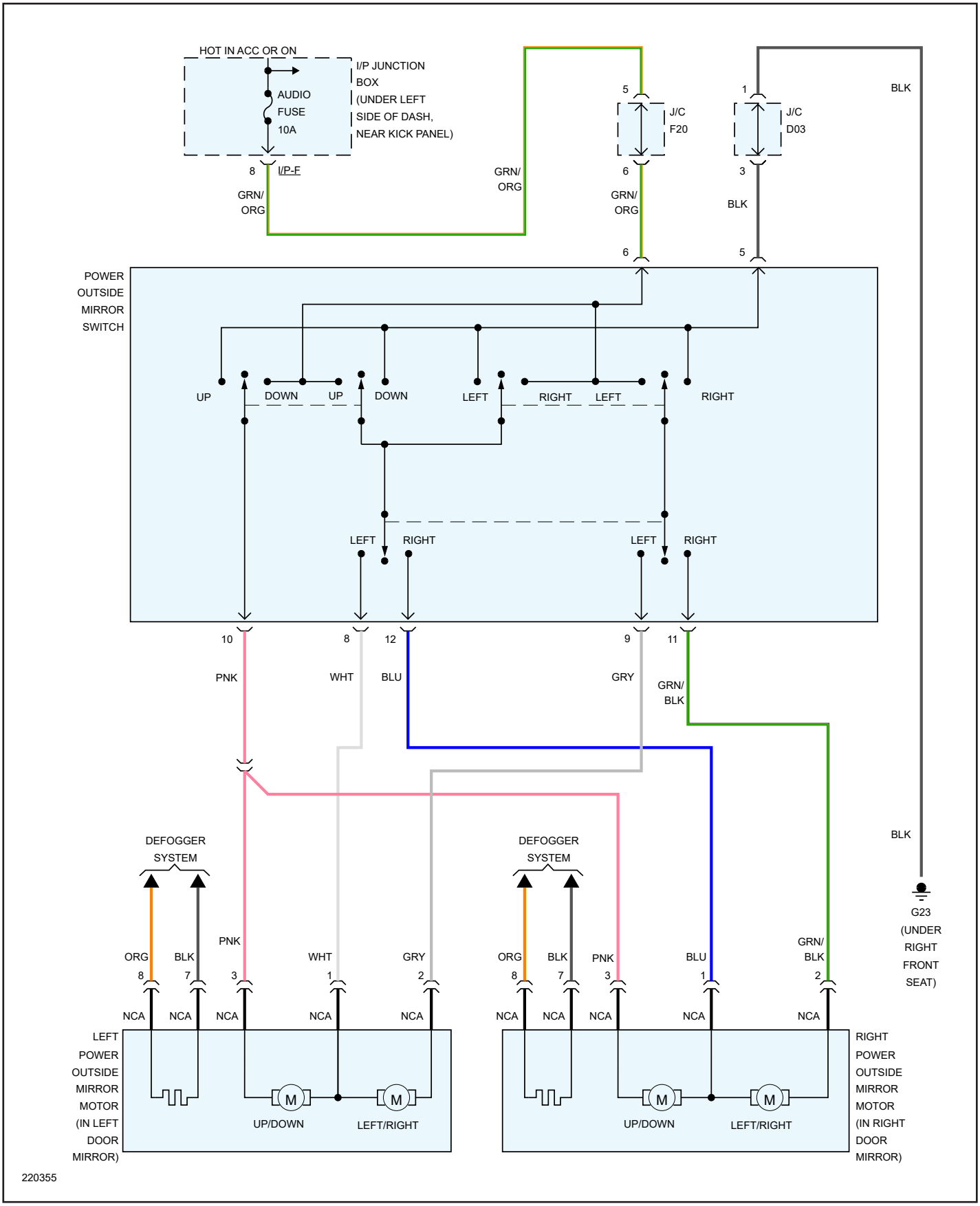

# 2005 KIA SPORTAGE 4WD V6-2.7L
## POWER WINDOWS

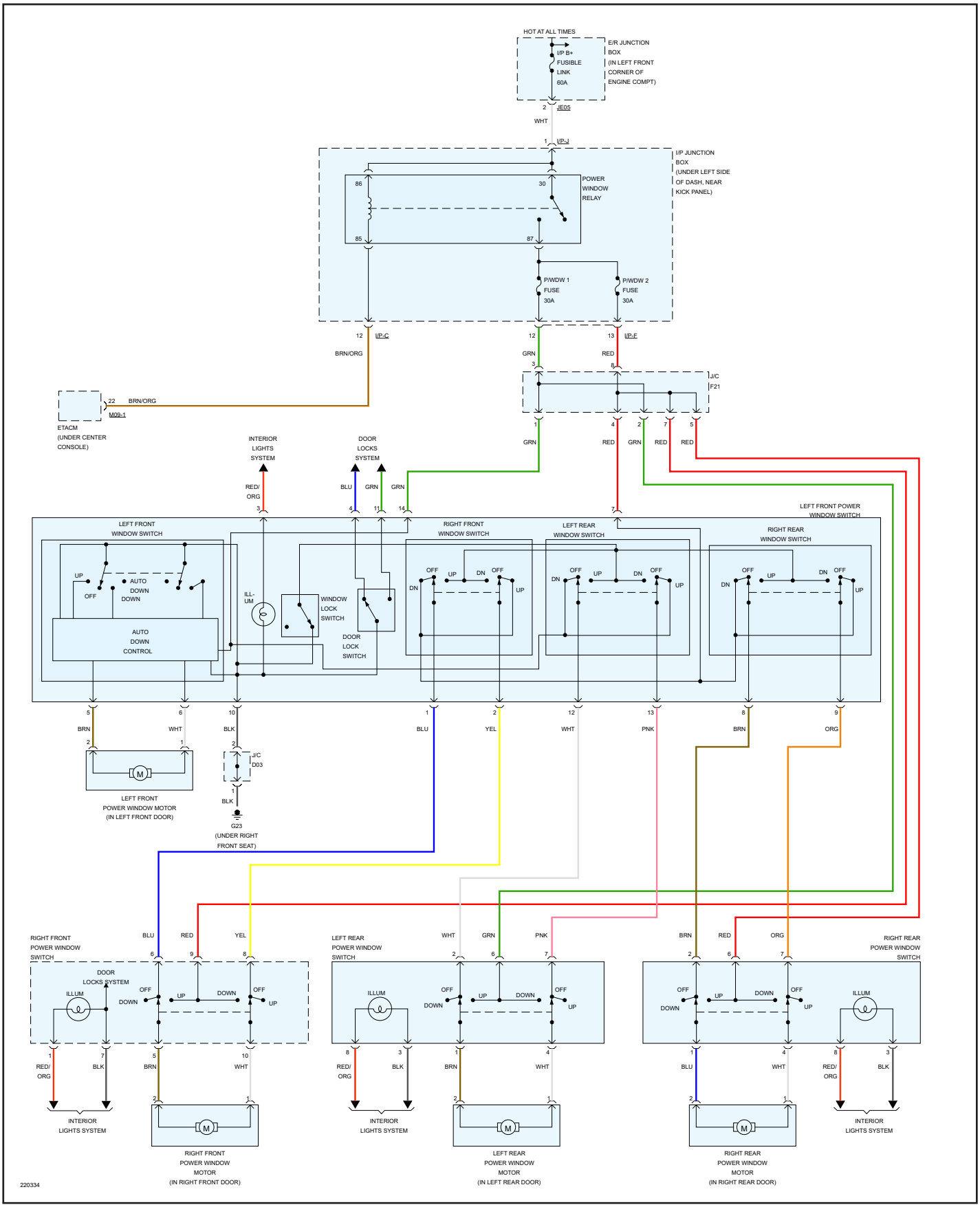

# 2005 KIA SPORTAGE 4WD V6-2.7L

## SUPPLEMENTAL RESTRAINTS

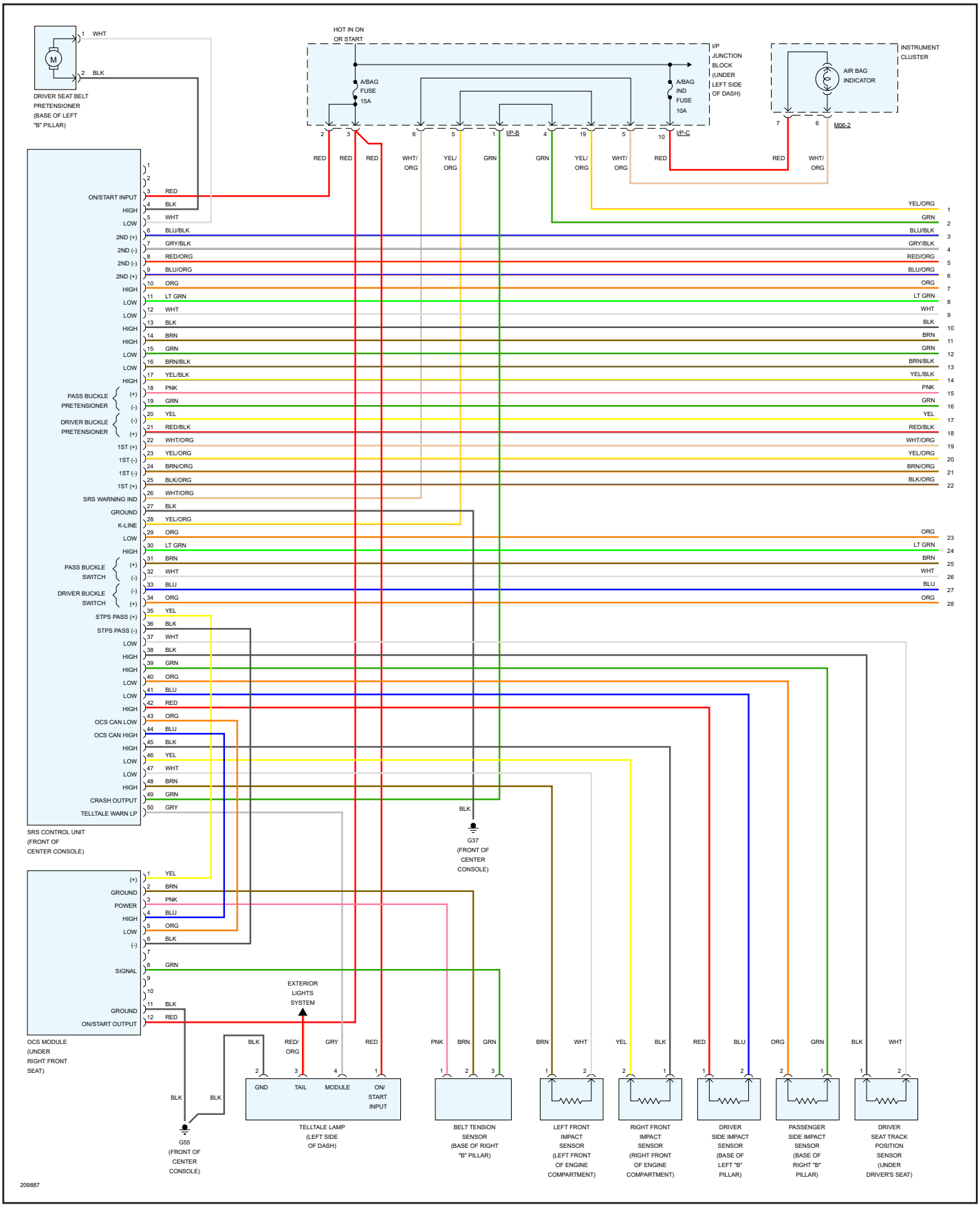

# 2005 KIA SPORTAGE 4WD V6-2.7L

## SUPPLEMENTAL RESTRAINTS

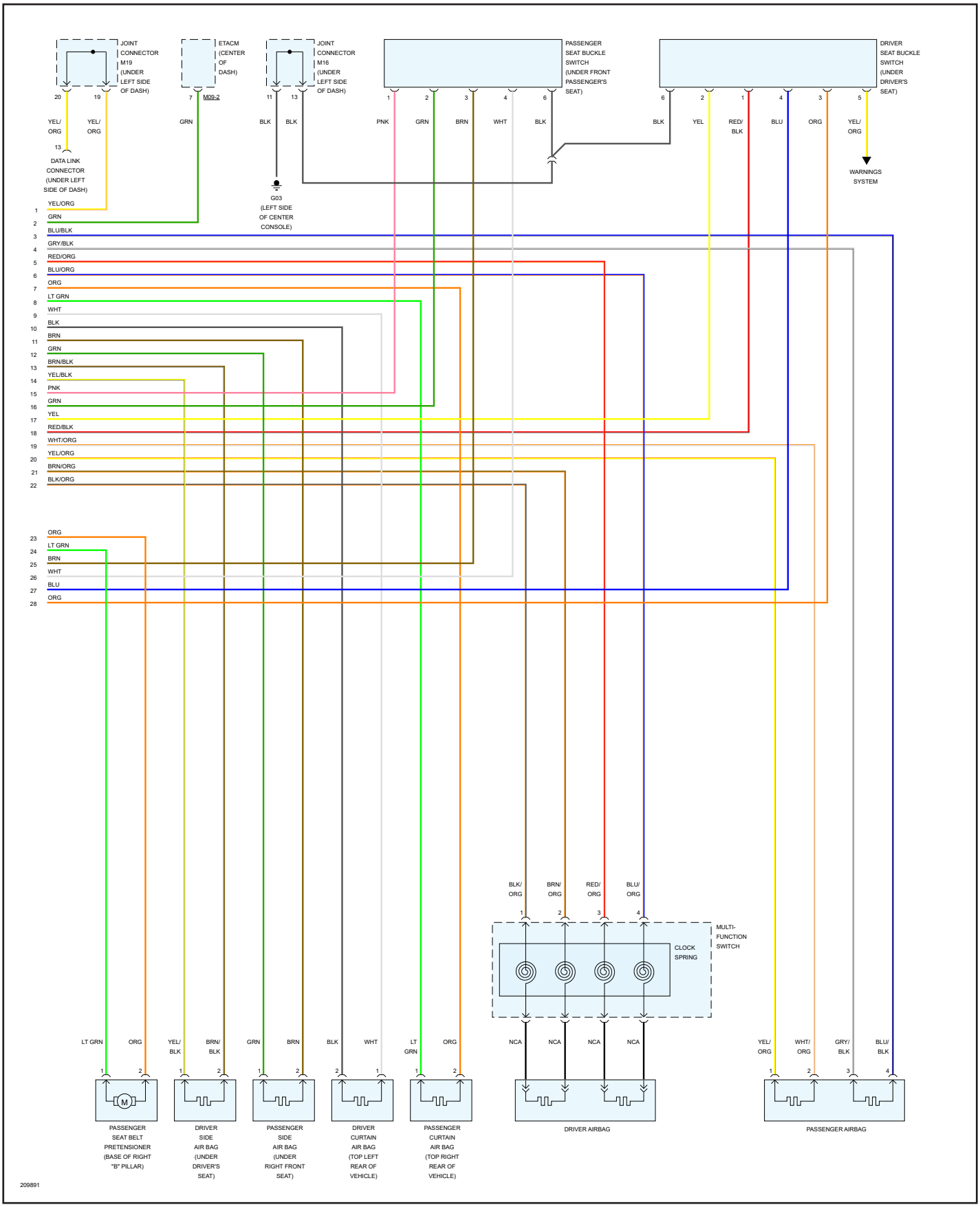

# 2005 KIA SPORTAGE 4WD V6-2.7L

## AIR CONDITIONING - AUTOMATIC A/C CIRCUIT

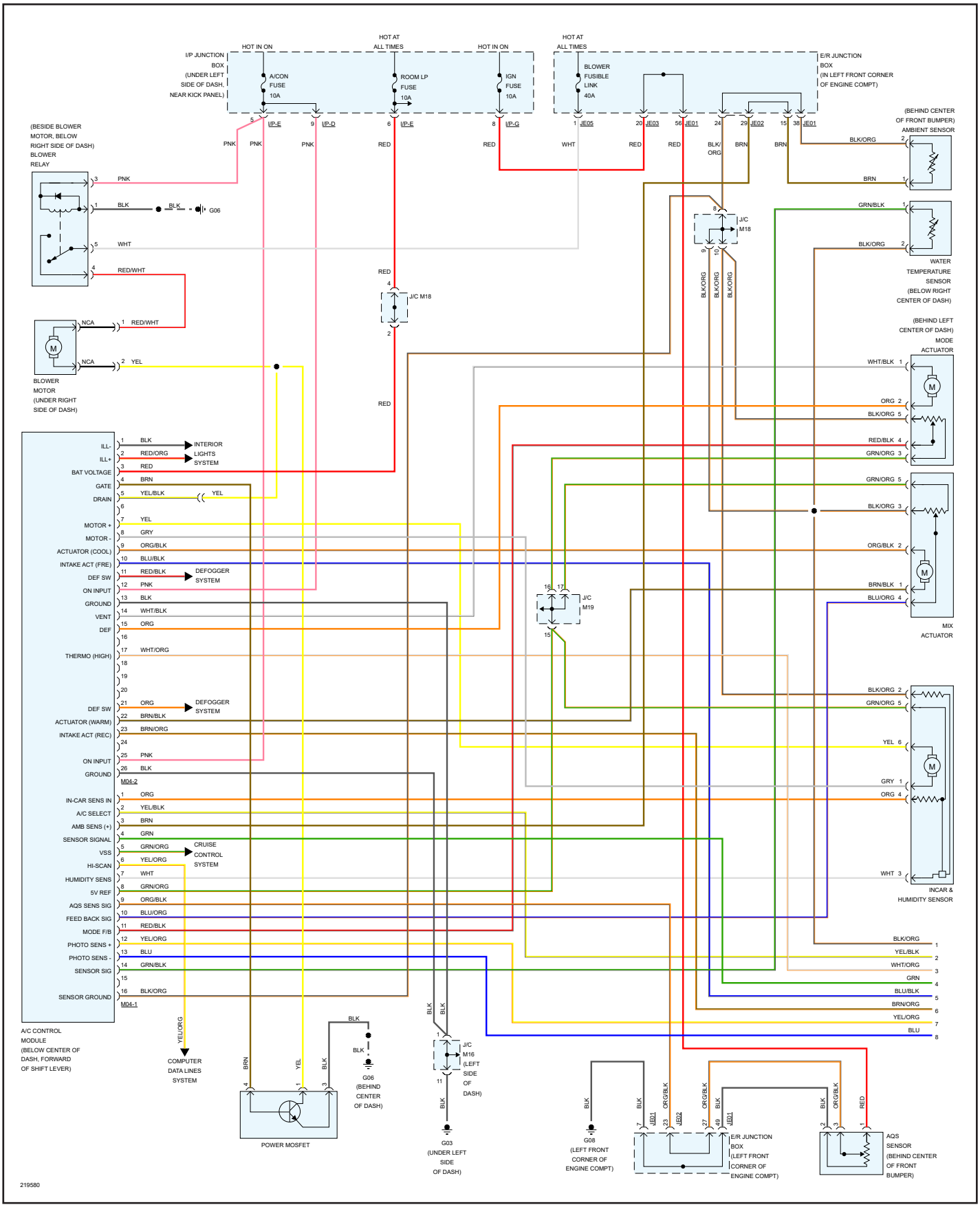

# 2005 KIA SPORTAGE 4WD V6-2.7L

## AIR CONDITIONING - AUTOMATIC A/C CIRCUIT

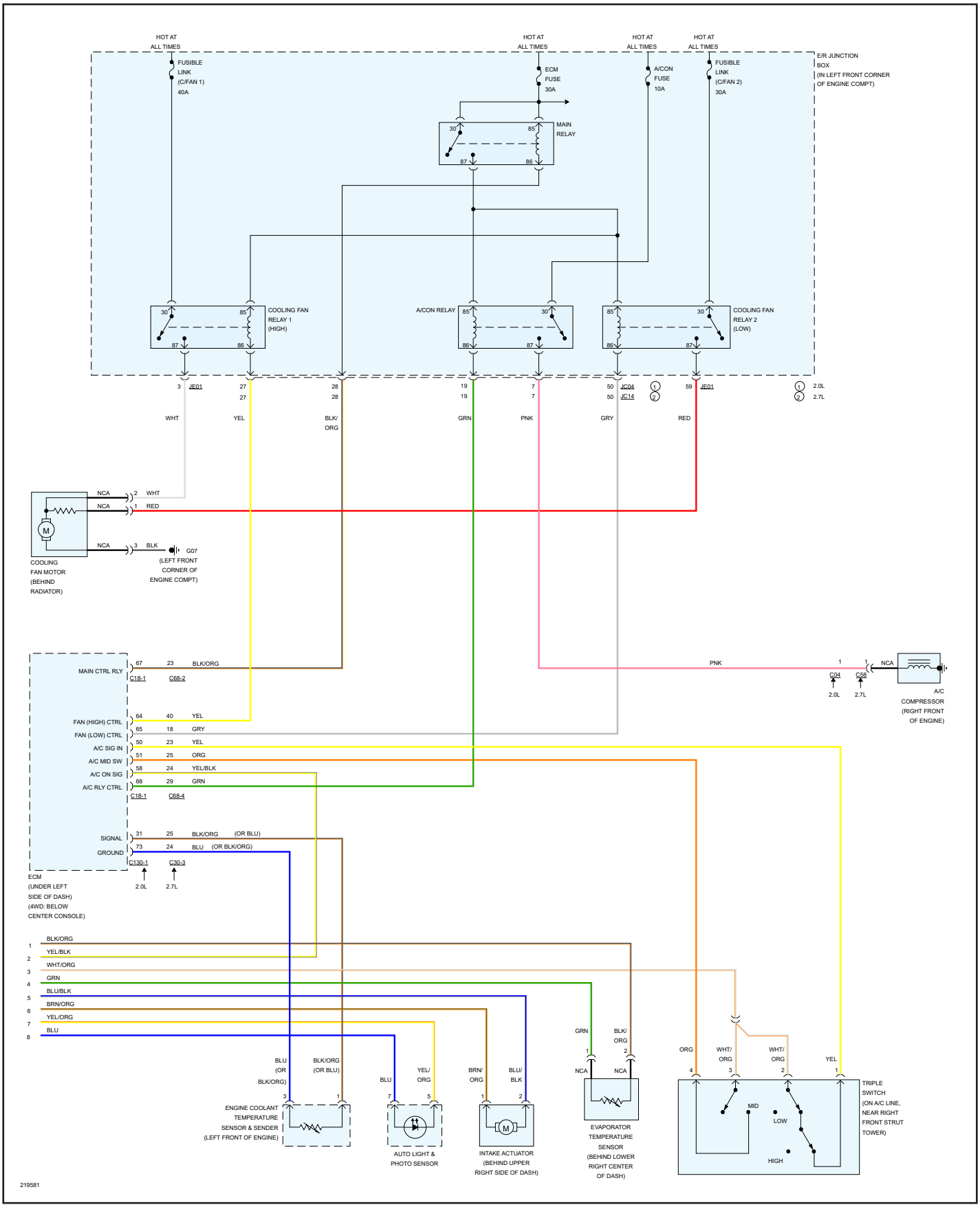

# 2005 KIA SPORTAGE 4WD V6-2.7L

## AIR CONDITIONING - MANUAL A/C CIRCUIT

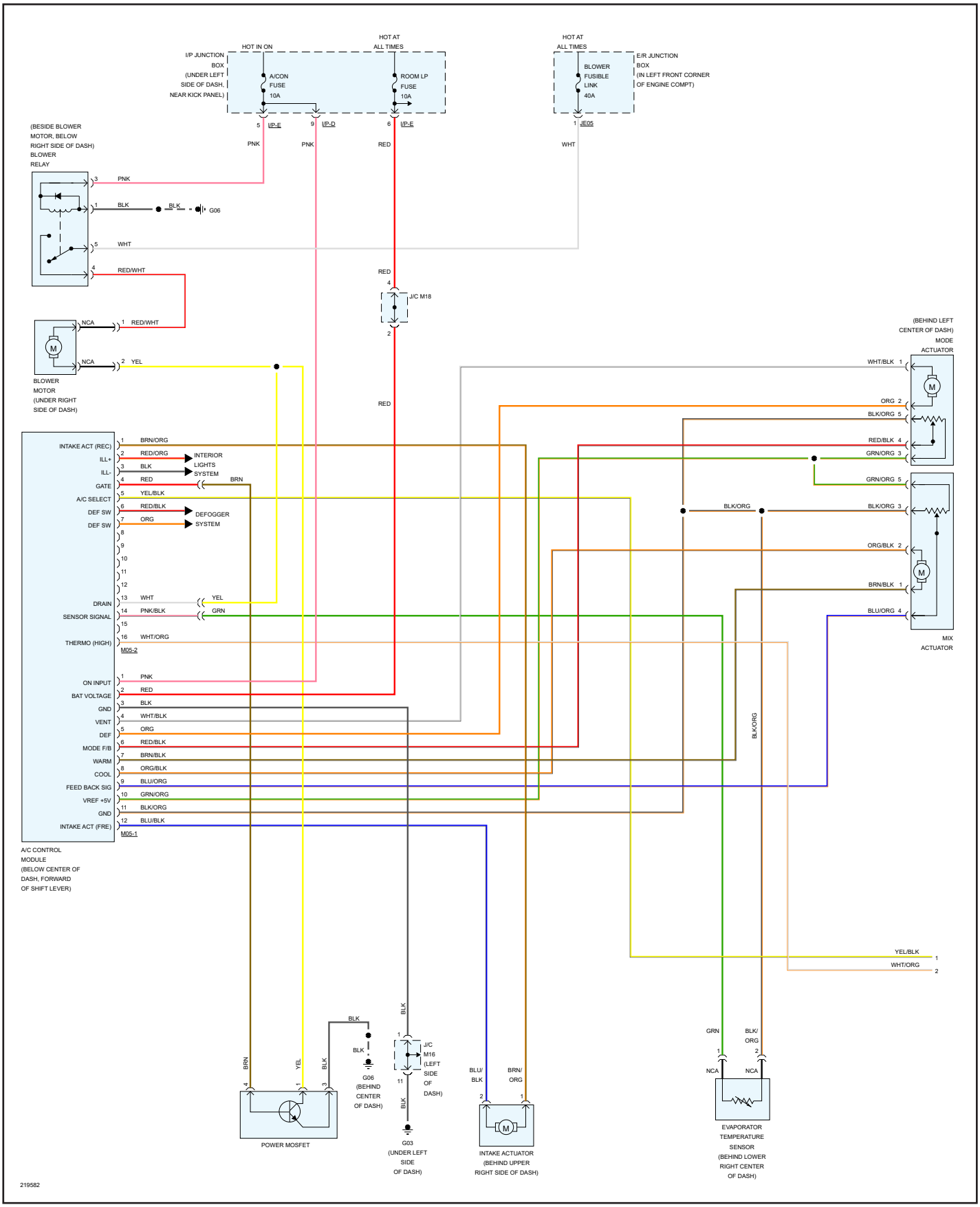

# 2005 KIA SPORTAGE 4WD V6-2.7L

## AIR CONDITIONING - MANUAL A/C CIRCUIT

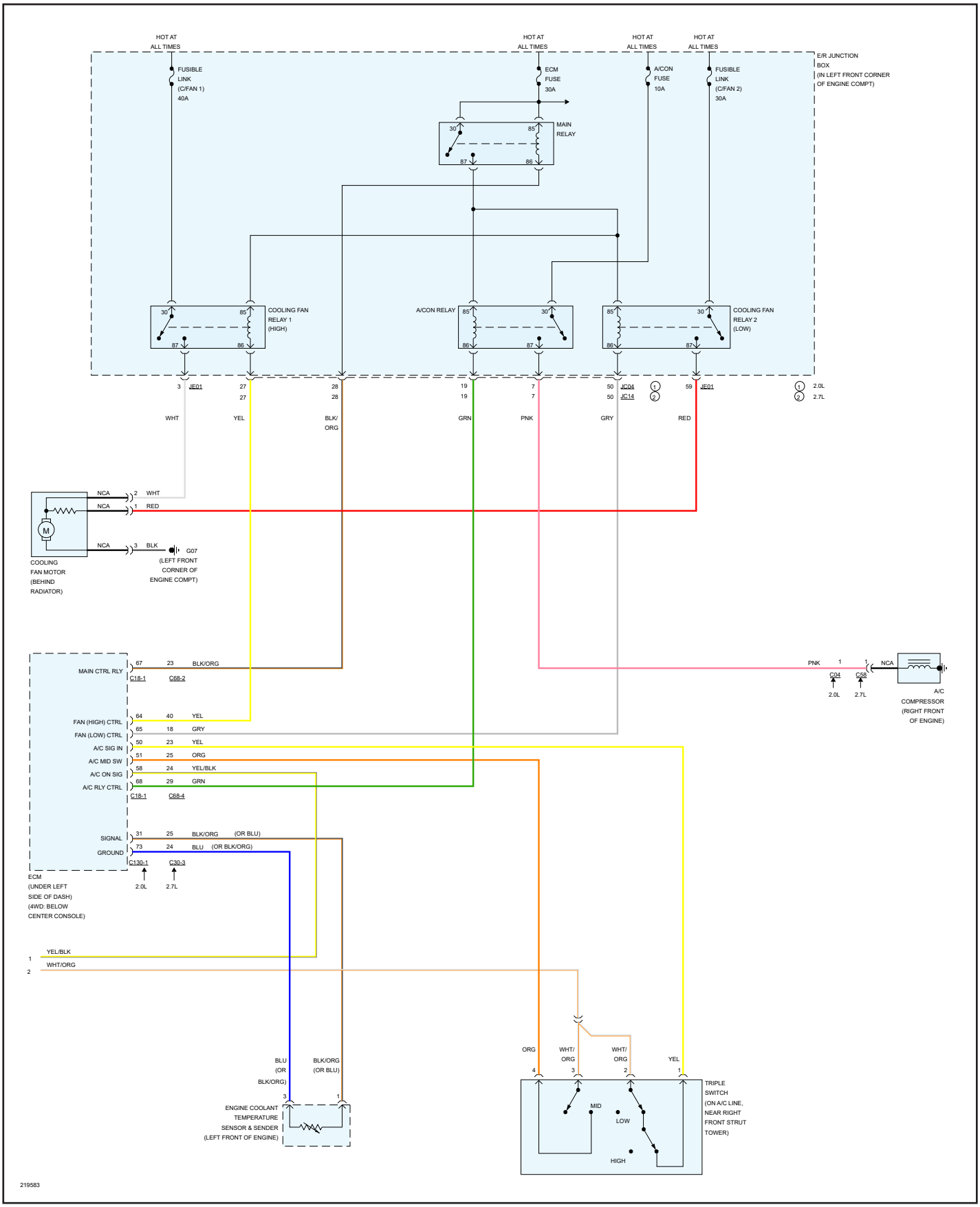

# 2005 KIA SPORTAGE 4WD V6-2.7L

## ANTI-LOCK BRAKES - W/ESP

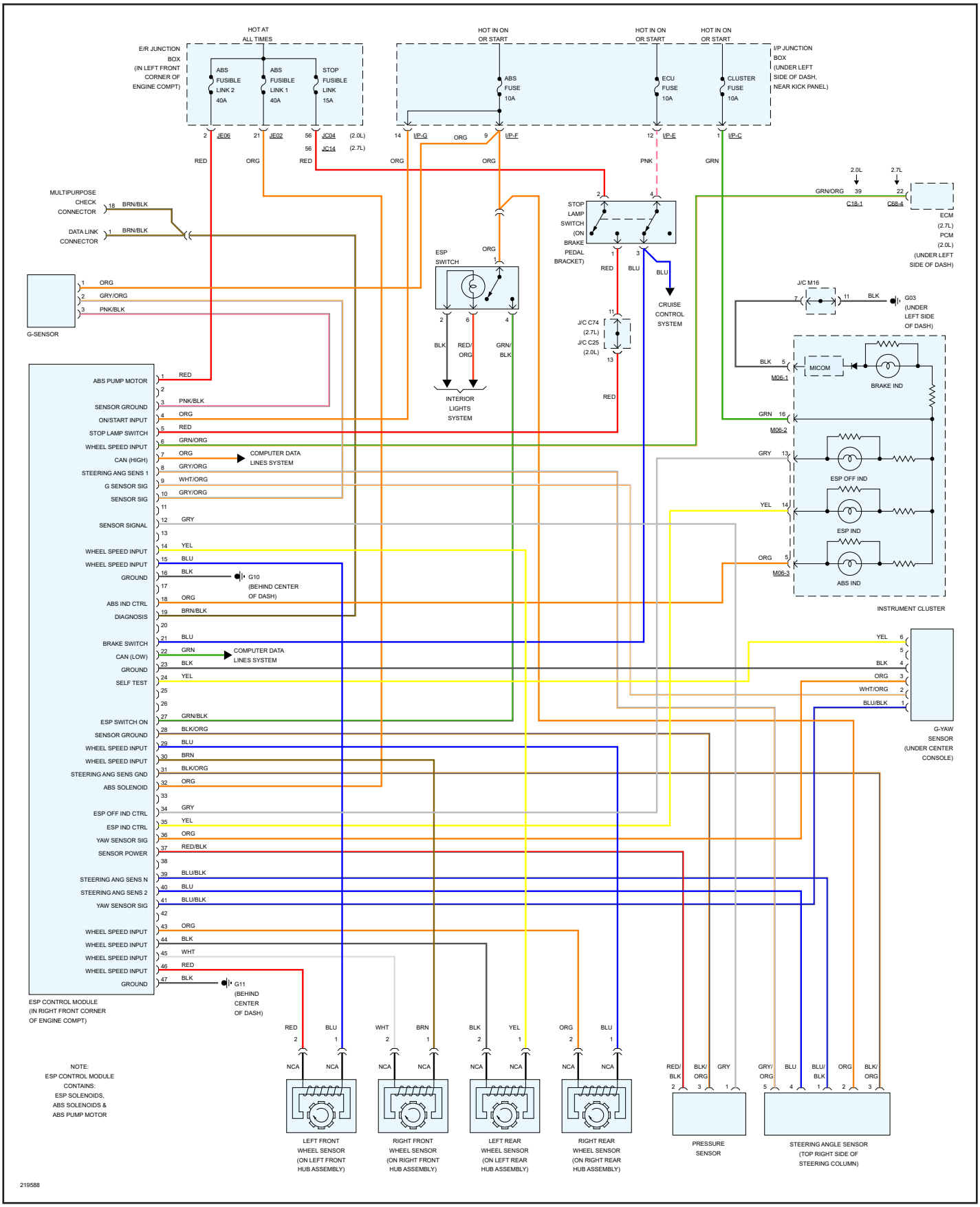

# 2005 KIA SPORTAGE 4WD V6-2.7L

## ANTI-LOCK BRAKES - W/O ESP

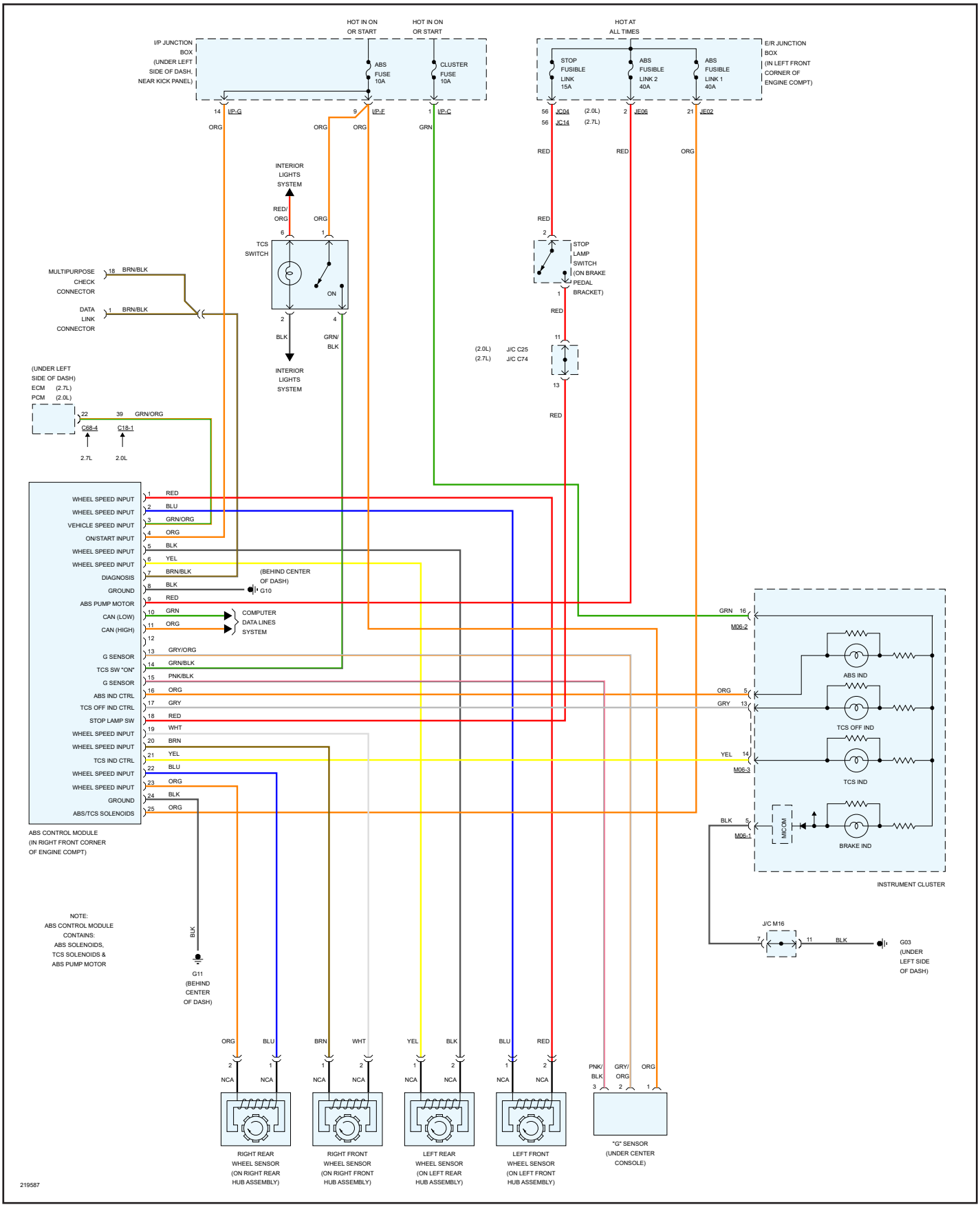

# 2005 KIA SPORTAGE 4WD V6-2.7L
## GROUND DISTRIBUTION

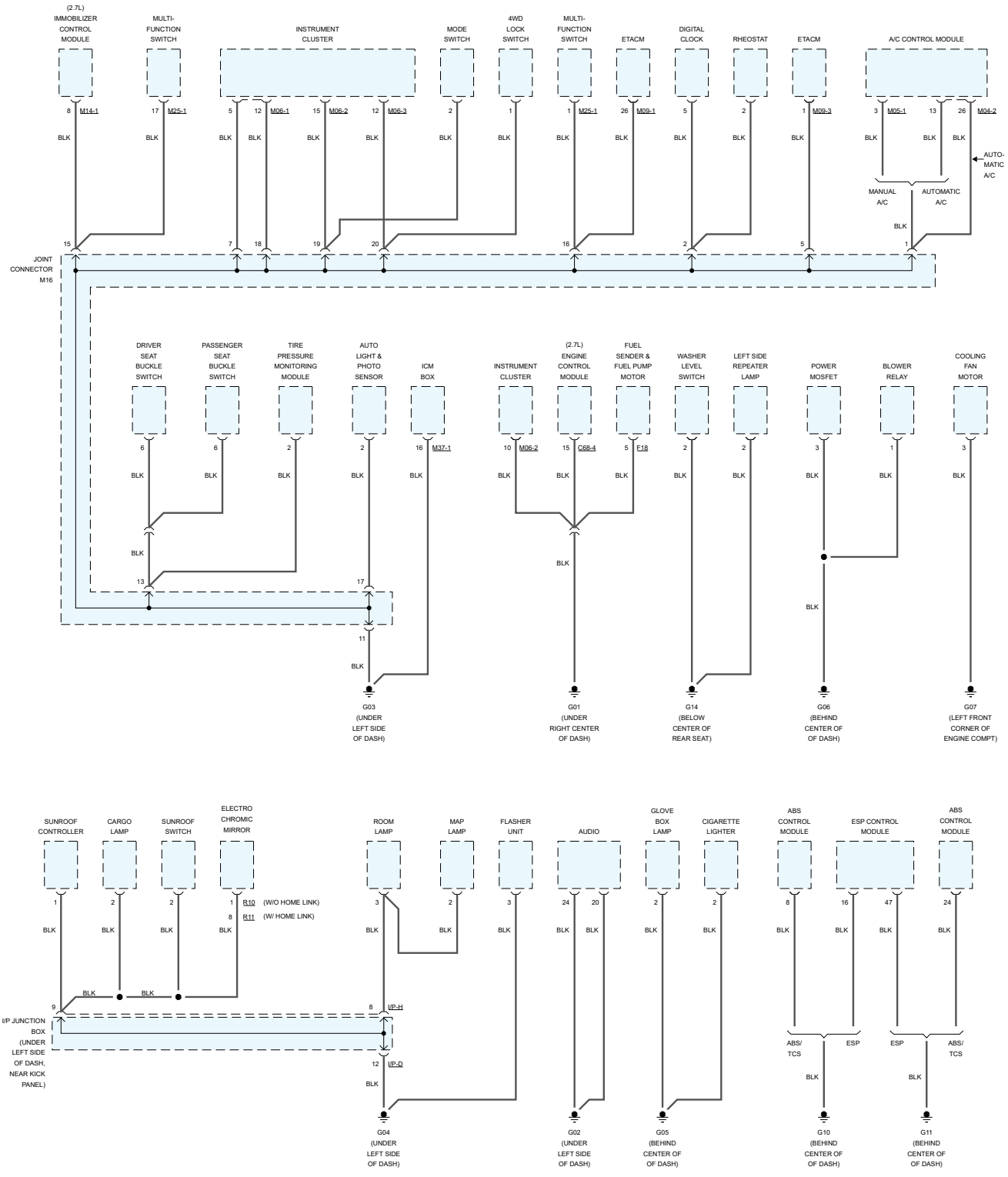

# 2005 KIA SPORTAGE 4WD V6-2.7L

## GROUND DISTRIBUTION

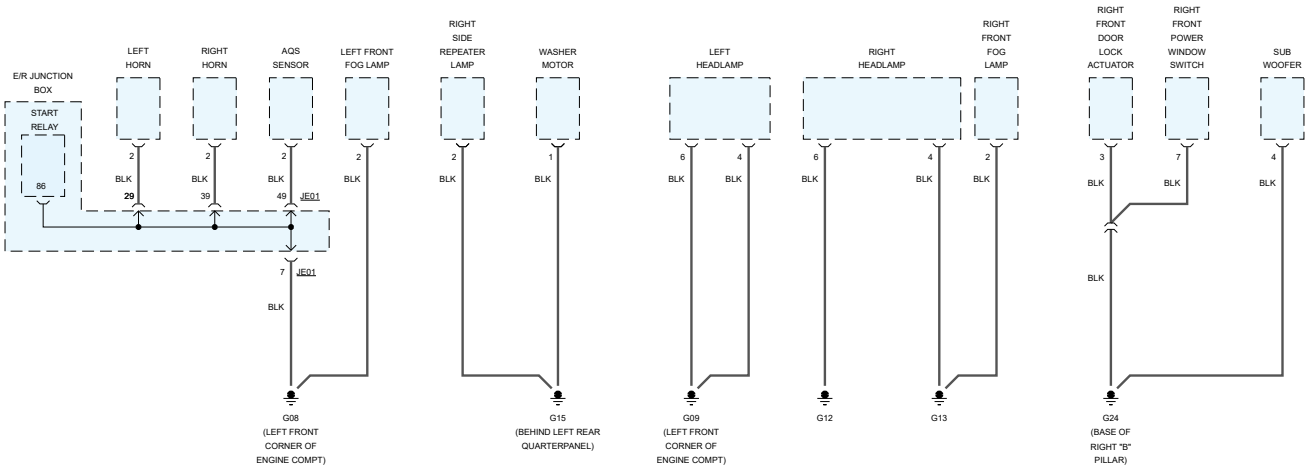


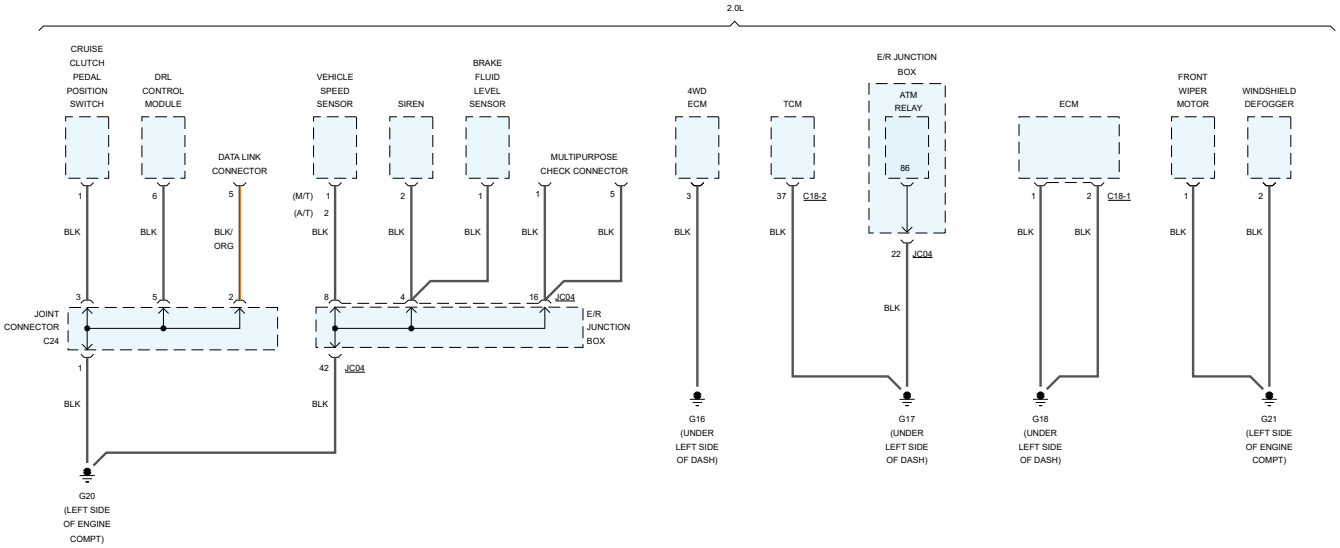


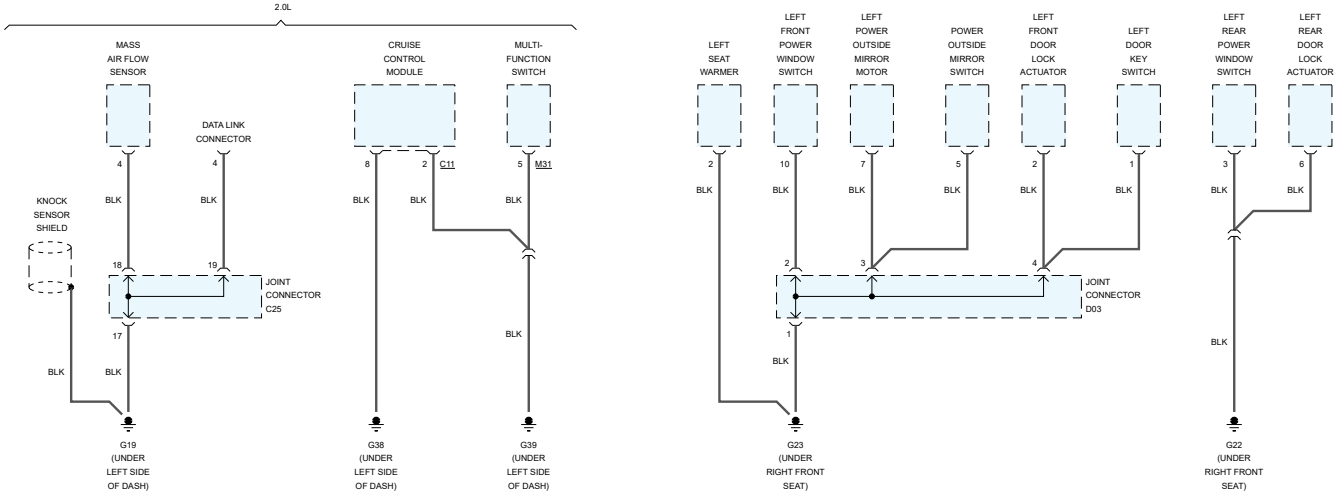


219491

# 2005 KIA SPORTAGE 4WD V6-2.7L

## GROUND DISTRIBUTION

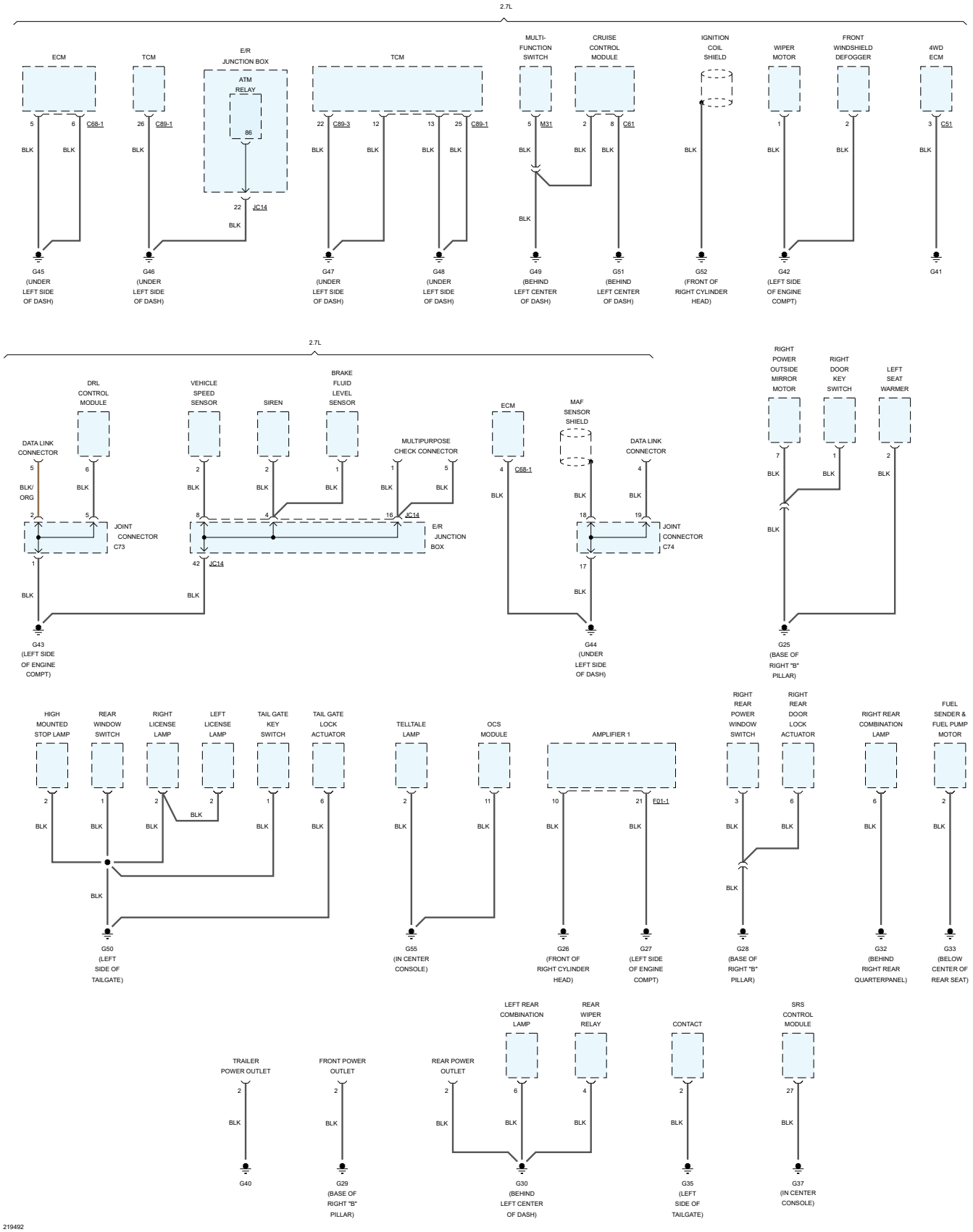

# 2005 KIA SPORTAGE 4WD V6-2.7L

## POWER DISTRIBUTION

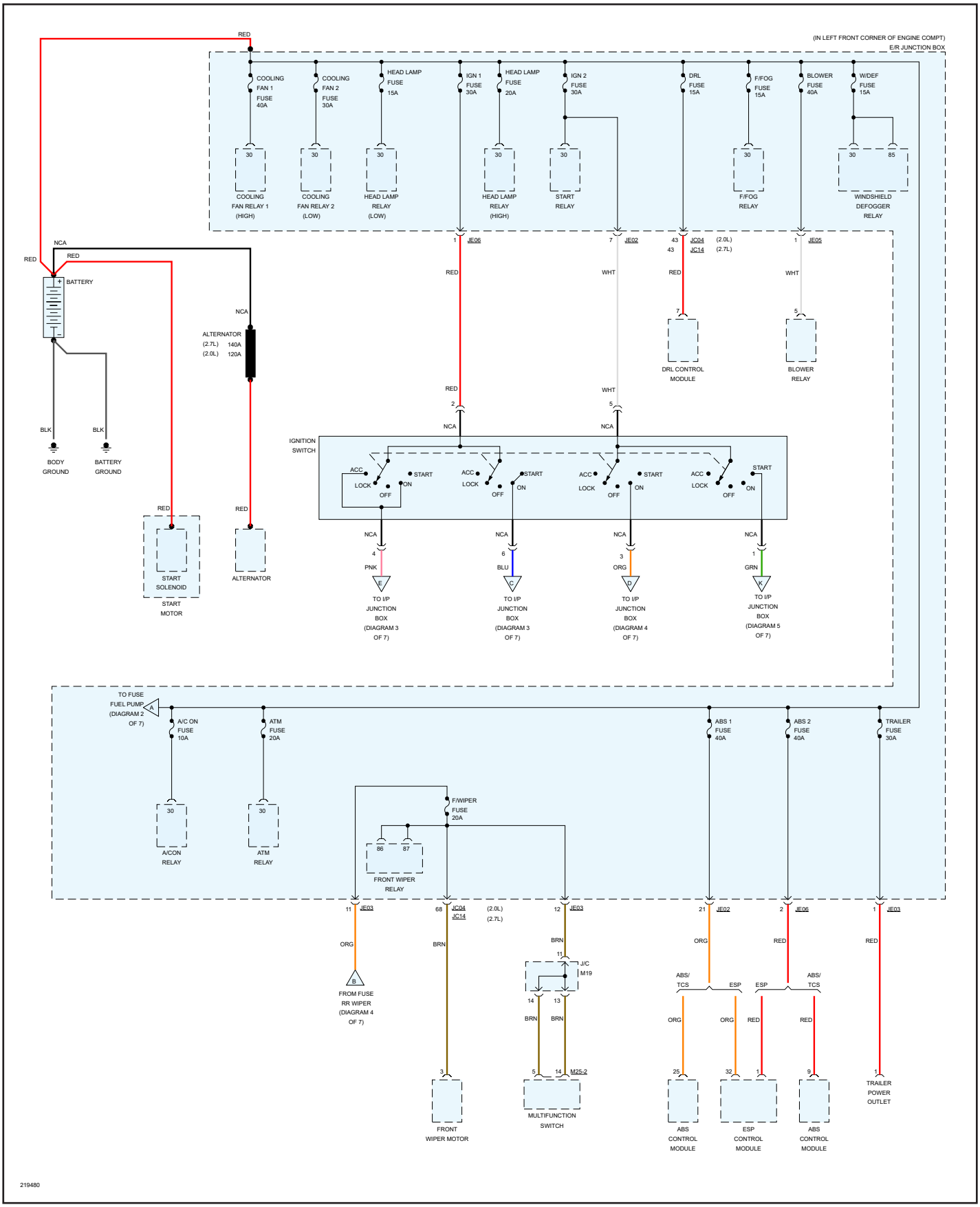

# 2005 KIA SPORTAGE 4WD V6-2.7L
## POWER DISTRIBUTION

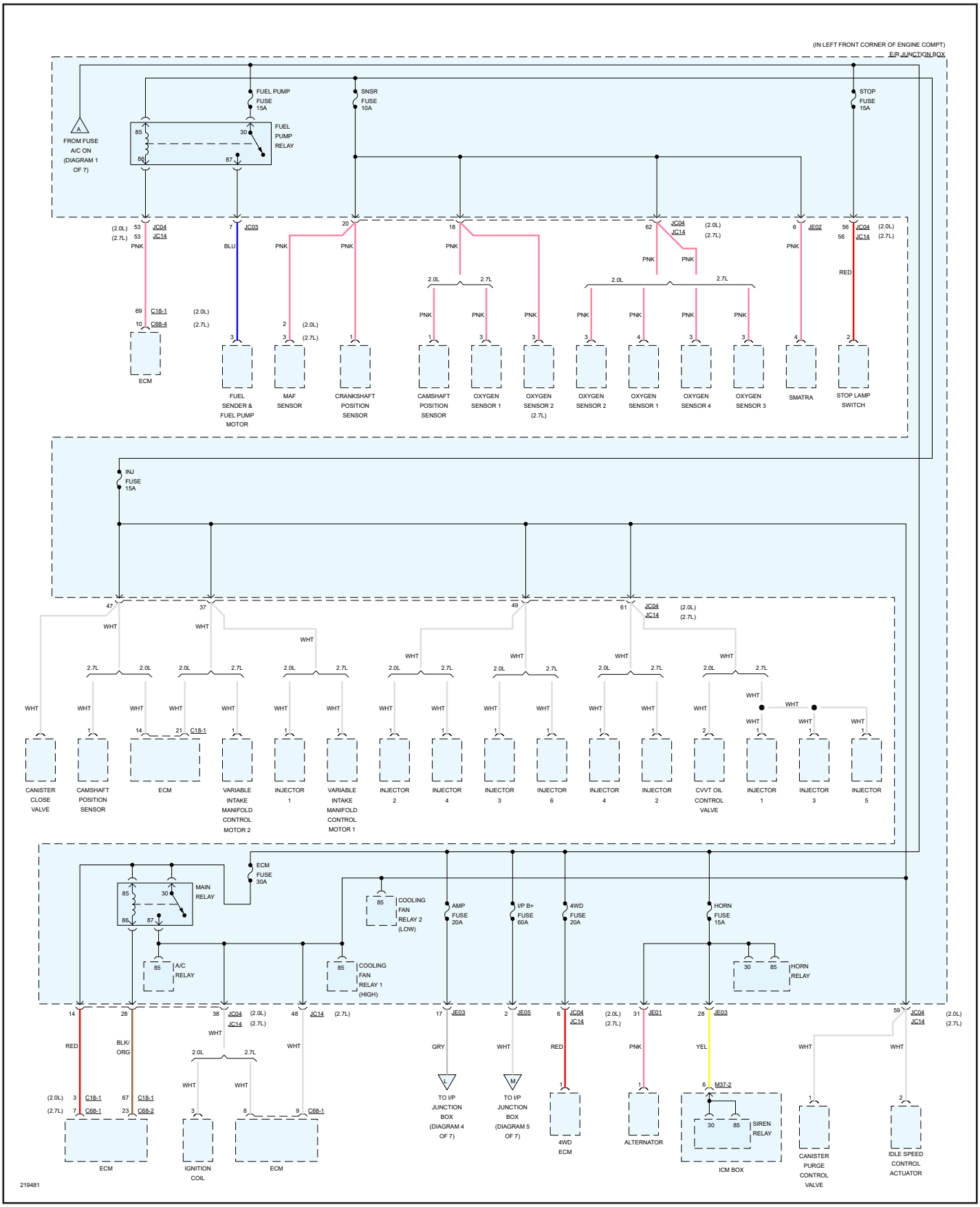

# 2005 KIA SPORTAGE 4WD V6-2.7L
## POWER DISTRIBUTION

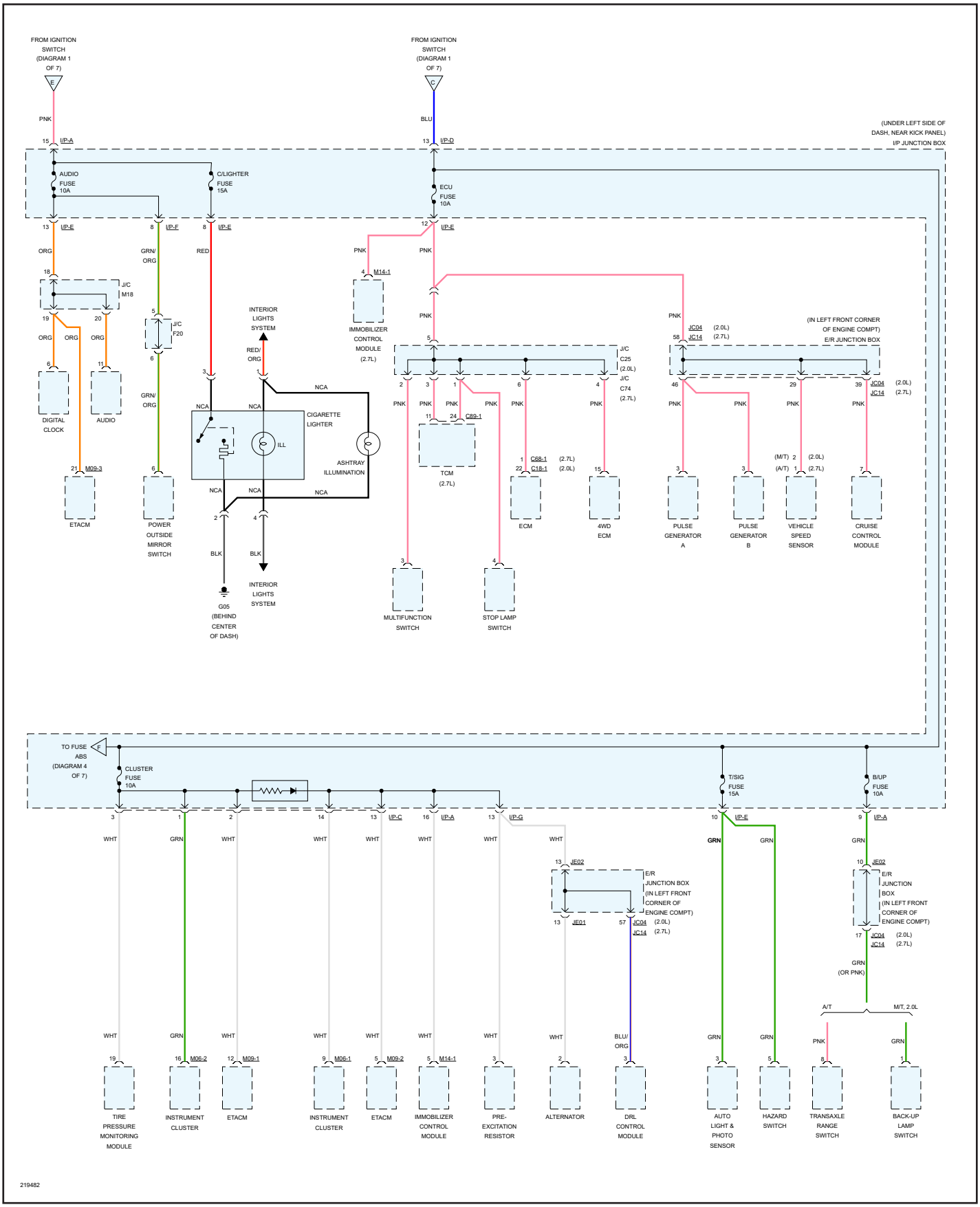

# 2005 KIA SPORTAGE 4WD V6-2.7L

## POWER DISTRIBUTION

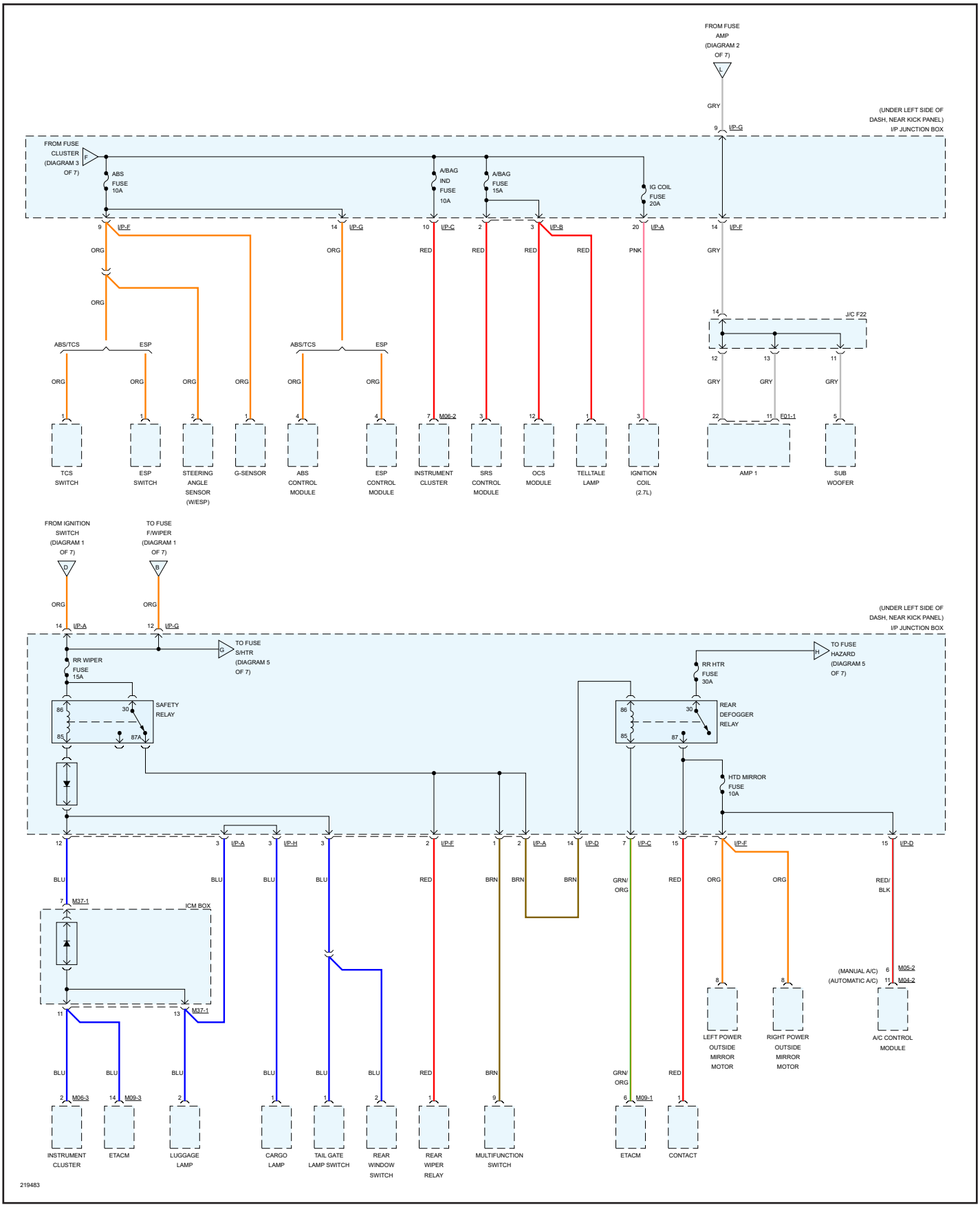

# 2005 KIA SPORTAGE 4WD V6-2.7L

## POWER DISTRIBUTION

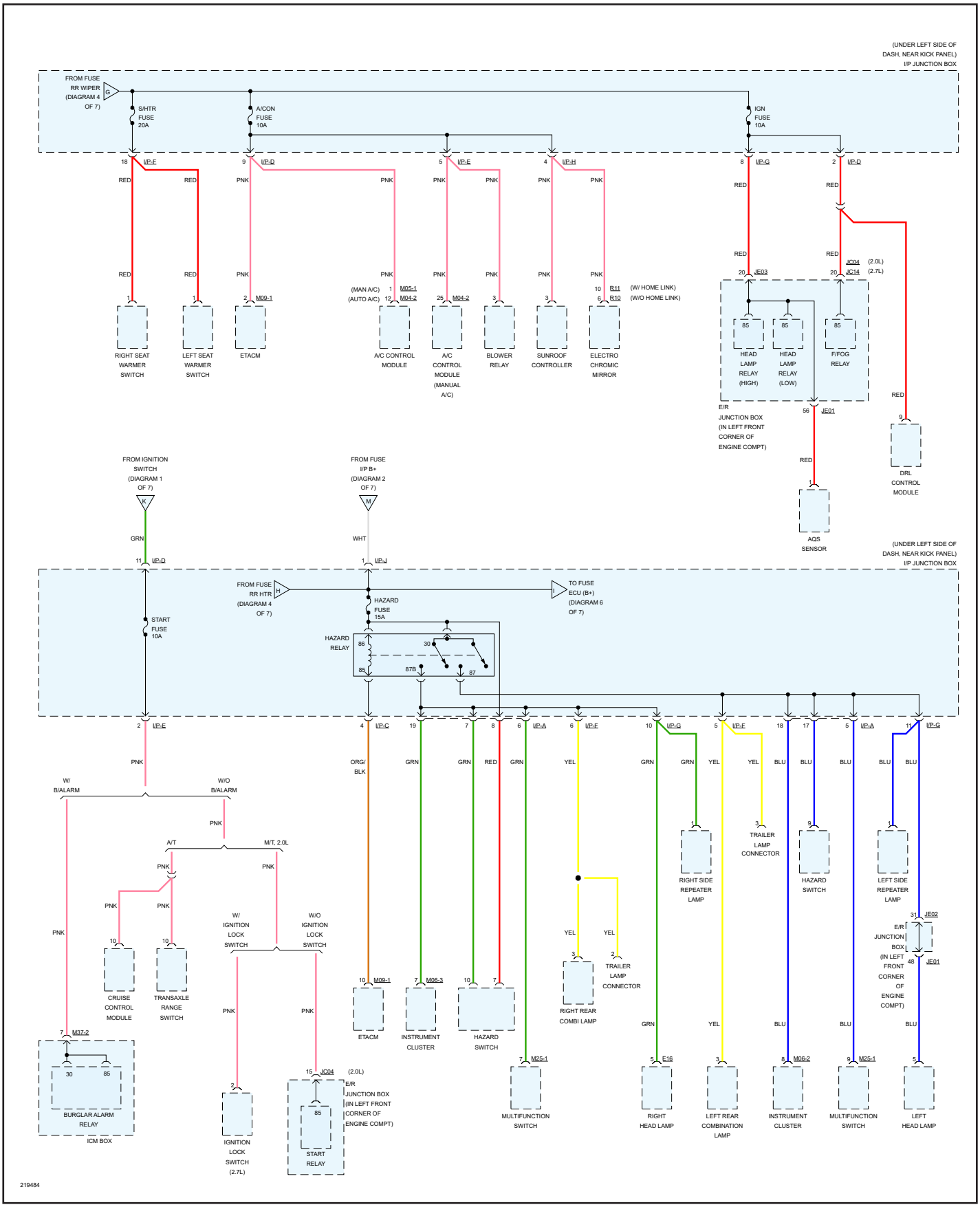

# 2005 KIA SPORTAGE 4WD V6-2.7L
## POWER DISTRIBUTION

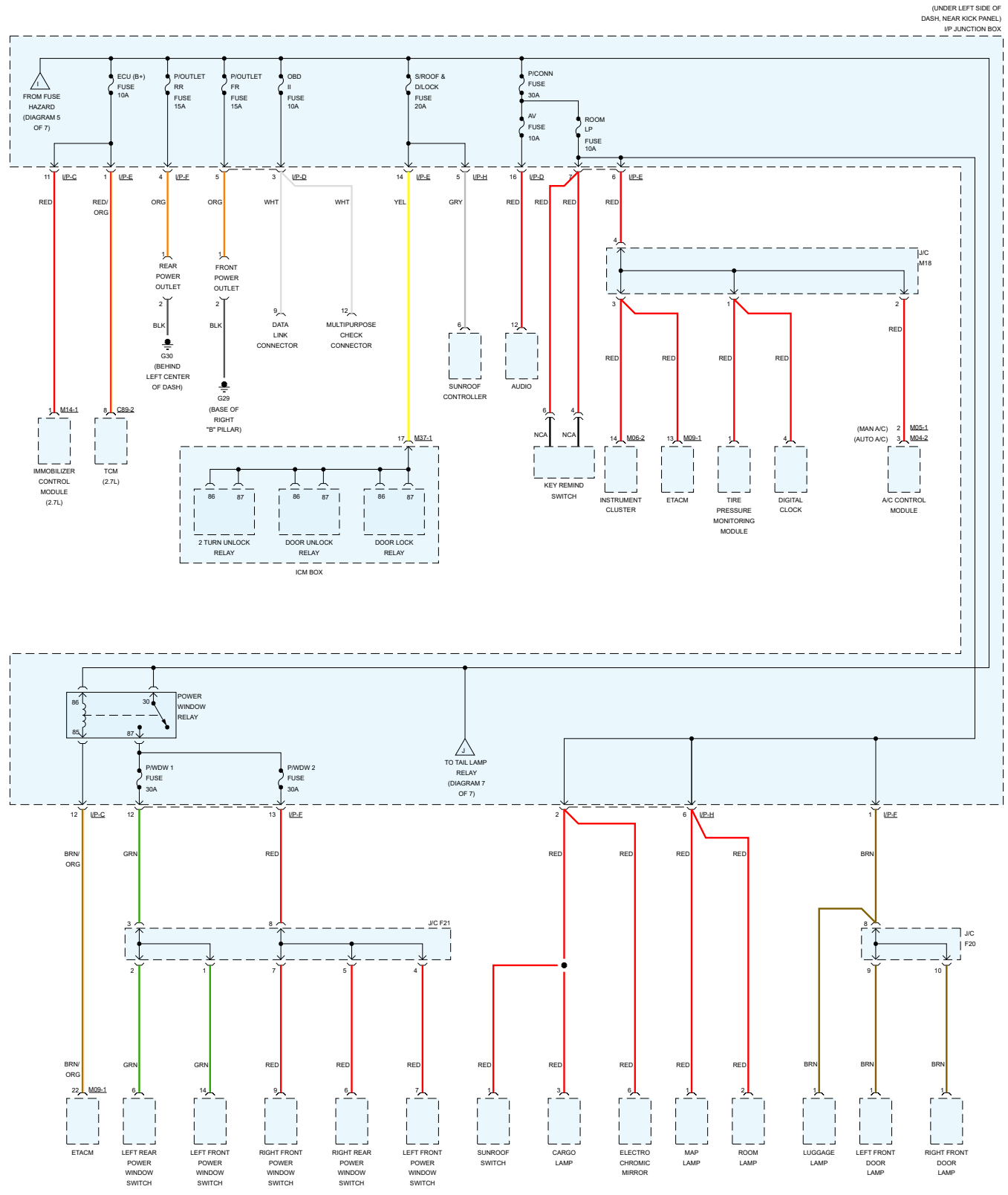

# 2005 KIA SPORTAGE 4WD V6-2.7L

## POWER DISTRIBUTION

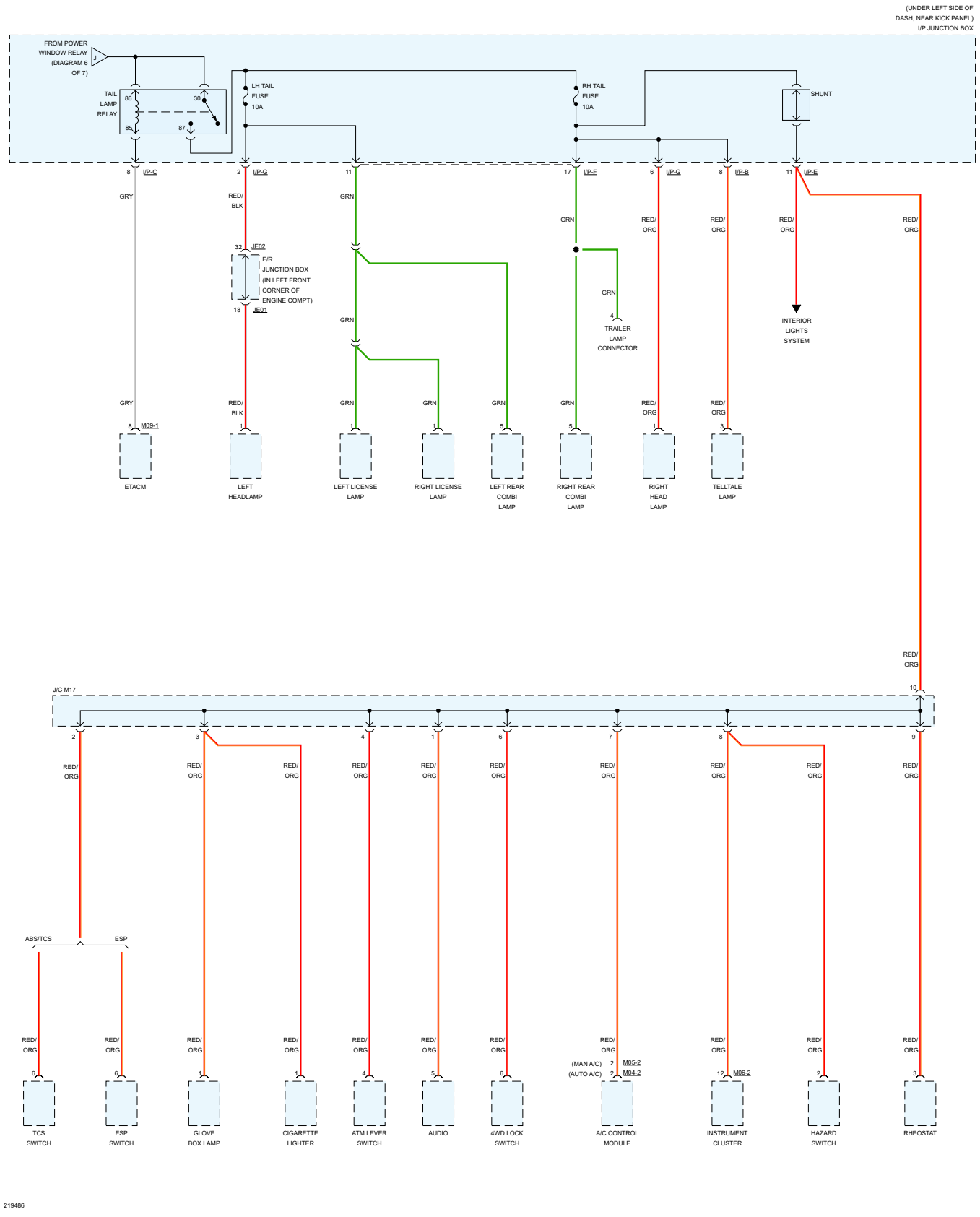

# 2005 KIA SPORTAGE 4WD V6-2.7L
## RELAY BOX ENGINE COMPARTMENT

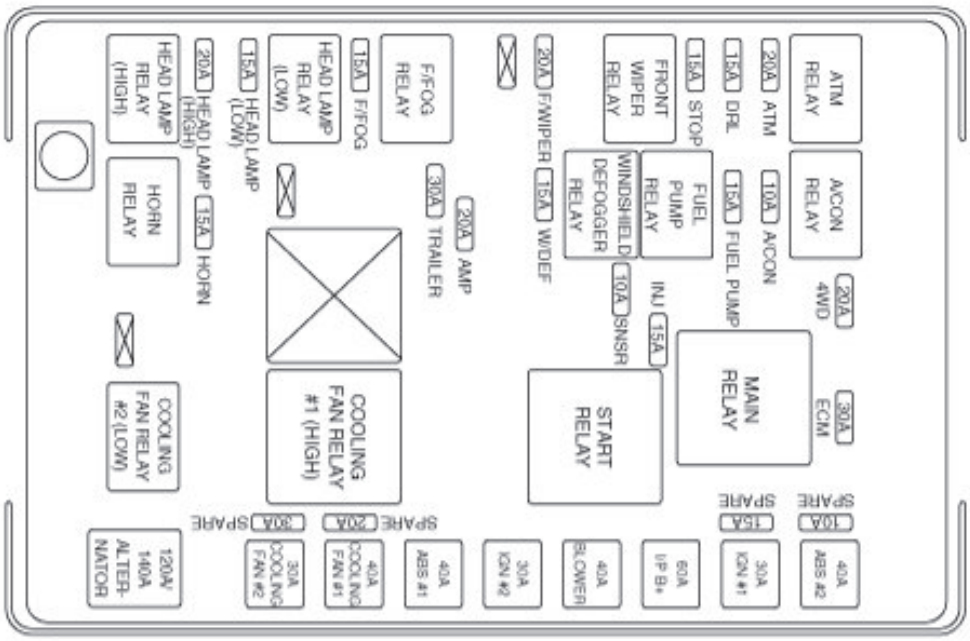


### CIRCUIT

| FUSE | (A) | Circuit Protected |
|---|---|---|
| ALTERNATOR | 120A/140A | Battery, Alternator |
| I/P B+ | 60A | I/P Junction Box |
| BLOWER | 40A | Blower Relay |
| ABS #1 | 40A | ABS Control Module, ESP Control Module |
| ABS #2 | 40A | ABS Control Module, ESP Control Module |
| COOLING FAN #1 | 40A | Cooling Fan Relay #1 (HIGH) |
| COOLING FAN #2 | 30A | Cooling Fan Relay #2 (LOW) |
| IGN #1 | 30A | Ignition Switch (IG1, ACC) |
| IGN #2 | 30A | Ignition Switch (IG2, START), Start Relay |
| ECM | 30A | Main Relay, Fuel Pump Relay, SNSR 10A, INJ 10A, ECM |
| TRAILER | 30A | Trailer Power Outlet |
| 4WD | 20A | 4WD ECM |
| F/WIPER | 20A | Front Wiper Relay, Front Wiper motor, Multifunction Switch |
| AMP | 20A | Sub Woofer, AMP #1 |
| HEAD LAMP (HIGH) | 20A | Head Lamp Relay (HIGH) |
| ATM | 20A | ATM Relay |
| FUEL PUMP | 15A | Fuel Pump Relay |
| INJ | 15A | ECM, Injector, ISA, CVVT Oil Control Valve, Canister Close Valve, Variable Intake Manifold Control Motor #1, #2 |
| STOP | 15A | Stop Lamp Switch |
| W/DEF | 15A | Windshield Defogger Relay |
| F/FOG | 15A | F/FOG Relay |
| HEAD LAMP (LOW) | 15A | Head Lamp Relay (LOW) |
| HORN | 15A | Horn Relay, Alternator, Siren Relay |
| A/CON | 10A | A/CON Relay |
| SNSR | 10A | MAF Sensor, $O_2$ Sensor, ECM, SMATRA, Crank Shaft Position Sensor |
| DRL | 15A | DRL Control Module |

**※ USE THE DESIGNATED FUSE ONLY**

# 2005 KIA SPORTAGE 4WD V6-2.7L
## RELAY BOX PASSENGER COMPARTMENT

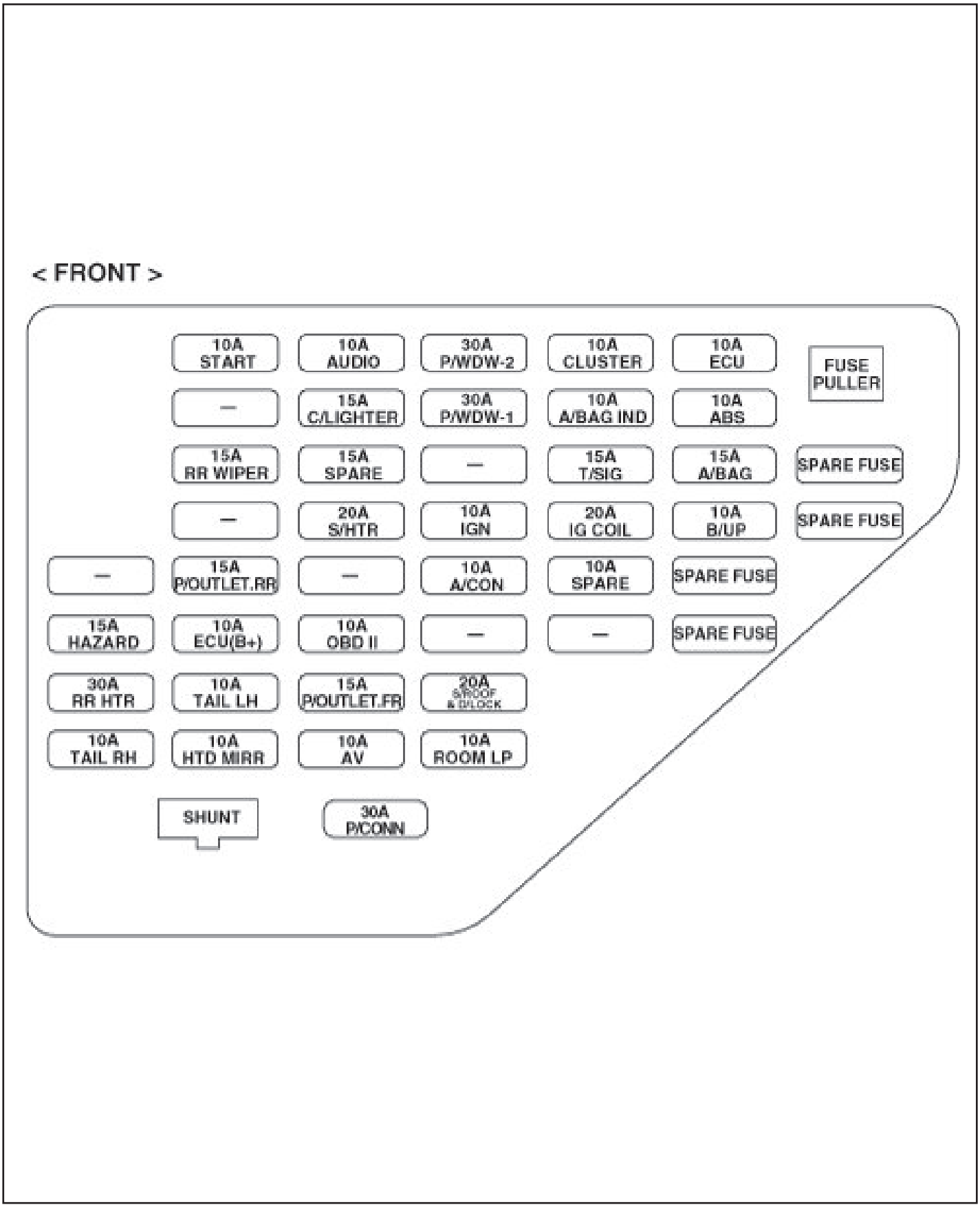

# 2005 KIA SPORTAGE 4WD V6-2.7L
## RELAY BOX PASSENGER COMPARTMENT

| FUSE | (A) | Circuit Protected |
|---|---|---|
| TAIL RH | 10A | Rear Combi Lamp RH, Head Lamp RH, F/FOG Relay, Telltale Lamp, Trailer Lamp Connector |
| RR HTR | 30A | Rear Defogger Relay, Contact, ETACM |
| HAZARD | 15A | Hazard Relay, Hazard Switch, ETACM, Instrument Cluster Multifunction Switch, Rear Combi Lamp, Head Lamp, Side Repeater Lamp,Trailer Lamp Connector |
| HTD MIRR | 15A | Power Outside Mirror Motor LH/RH, A/C Control Module |
| TAIL LH | 10A | Head Lamp LH, Rear Combi Lamp LH, License Lamp LH/RH |
| ECU(B+) | 10A | TCM, Immobilizer Control Module |
| P/OUTLET. RR | 15A | Rear Power Outlet |
| RR WIPER | 15A | Instrument Cluster, ETACM, Luggage Lamp, Cargo Lamp, Tailgate Switch, Rear Window Switch, Rear Wiper Relay, Multifunction Switch, Rear Defogger Relay |
| START | 10A | Burglar Alarm Relay, Cruise Control Module, Start Relay Transaxle Range Switch, Ignition Lock Switch |
| AV | 10A | Audio |
| P/OUTLET. FR | 15A | Front Power Outlet |
| OBD II | 10A | Data Link Connector, Multipurpose Check Connector |
| S/HTR | 20A | Seat Warmer Switch LH/RH |
| C/LIGHTER | 15A | Cigarette Lighter |
| AUDIO | 10A | Power Outside Mirror Switch, Digital Clock, ETACM Audio |
| ROOM LP | 10A | Key Remind Switch, Instrument Cluster, ETACM, Room Lamp A/C Control Module, Digital Clock, Luggage Lamp, Front Door Lamp LH/RH, Map Lamp, Cargo Lamp, Sunroof Switch |
| S/ROOF & D/LOCK | 20A | Door Lock / Unlock Relay, Sunroof Controller, 2Turn Unlock Relay |
| A/CON | 10A | A/C Control Module, ETACM, Blower Relay, Sunroof Controller Electro Chromic Mirror |
| IGN | 10A | Head Lamp Relay, AQS Sensor, DRL Control Module, F/FOG Relay |
| P/WDW -1 | 30A | Front Power Window Switch LH Rear Power Window Switch LH |
| P/WDW -2 | 30A | Front Power Window Switch LH/RH Rear Power Window Switch RH |
| IG COIL | 20A | Ignition Coil |
| T/SIG | 15A | Hazard Switch, Auto Light & Photo Sensor |
| A/BAG IND | 10A | Instrument Cluster |
| CLUSTER | 10A | Instrument Cluster, ETACM, Immobilizer Control Module Pre-excitation Resistor, Alternator, DRL Control Module |
| B/UP | 10A | Back-up Lamp Switch, Transaxle Range Switch |
| A/BAG | 15A | SRS Control Module, PODS Module, Telltale Lamp |
| ABS | 10A | ABS Control Module, ESP Control Module, G-sensor, TCS Switch, ESP Switch, Steering Angle Sensor |
| ECU | 10A | Immobilizer Control Module, Vehicle Speed Sensor, ECM, TCM Pulse Generator 'A'/'B', Cruise Control Module, 4WD ECM, Stop Lamp Switch, Multifunction Switch |

**※ USE THE DESIGNATED FUSE ONLY**

# 2005 KIA SPORTAGE 4WD V6-2.7L

## SOUND SYSTEMS - W/AMPLIFIER

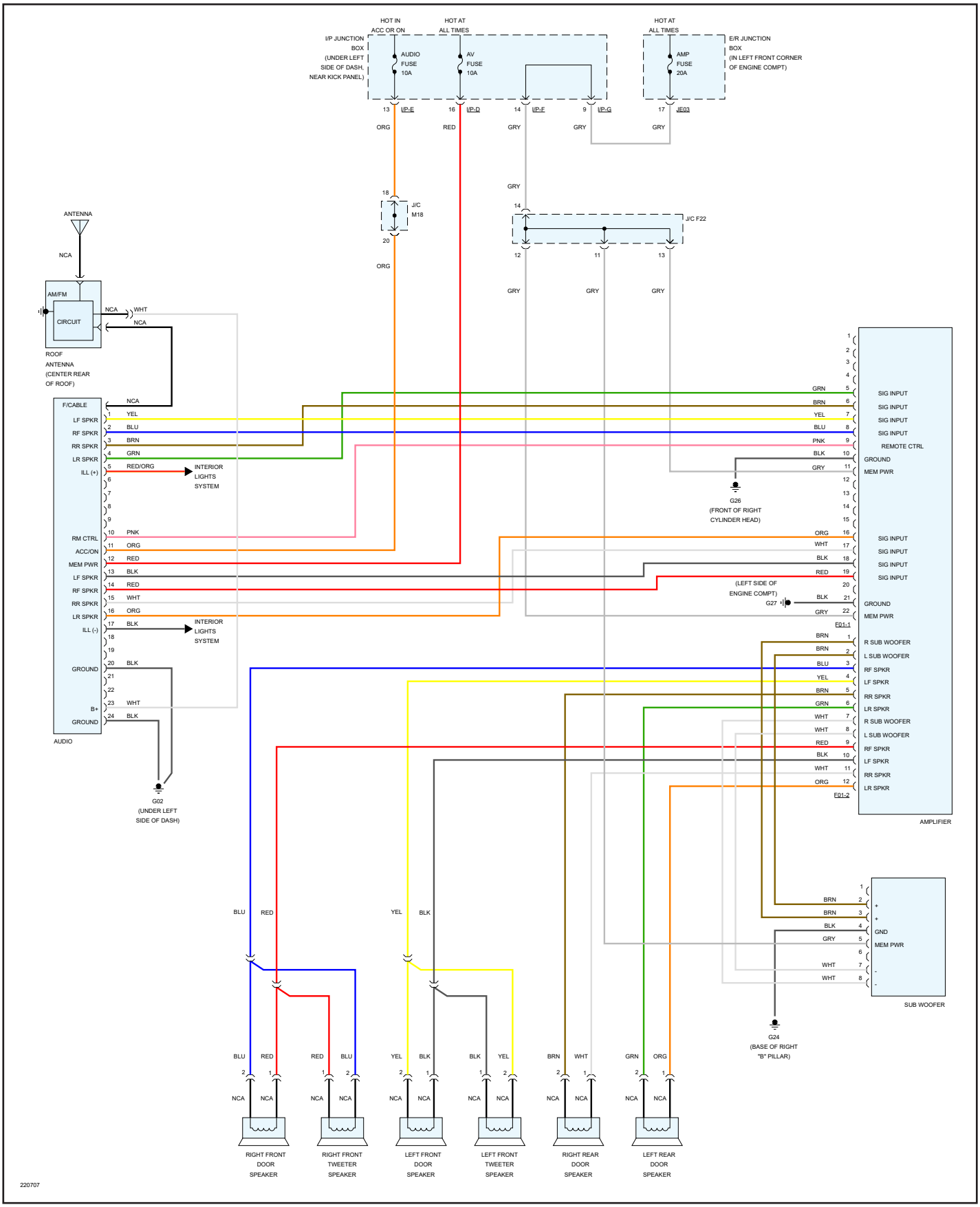

# 2005 KIA SPORTAGE 4WD V6-2.7L

## SOUND SYSTEMS - W/O AMPLIFIER

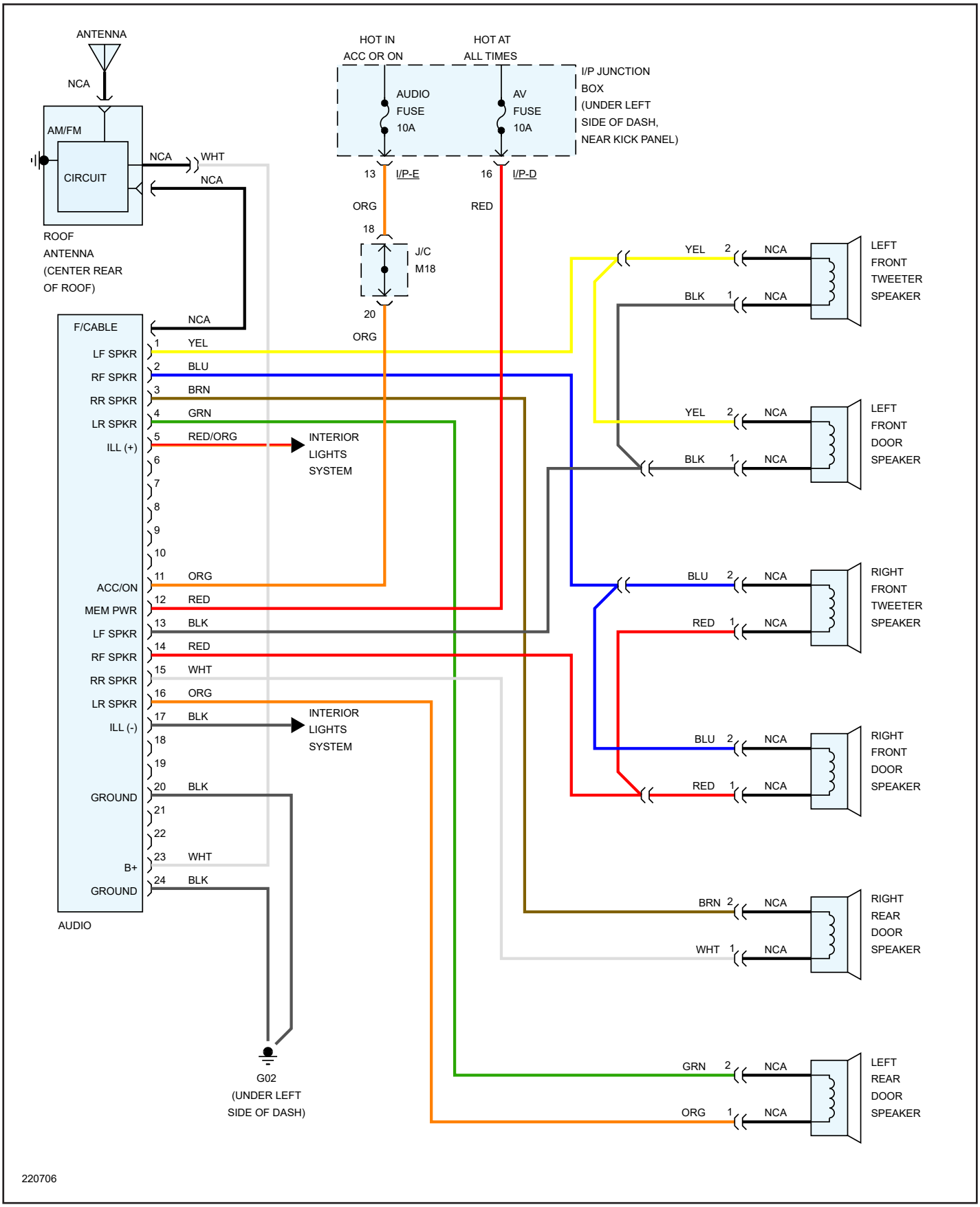

# 2005 KIA SPORTAGE 4WD V6-2.7L
## TRANSAXLE RANGE SWITCH

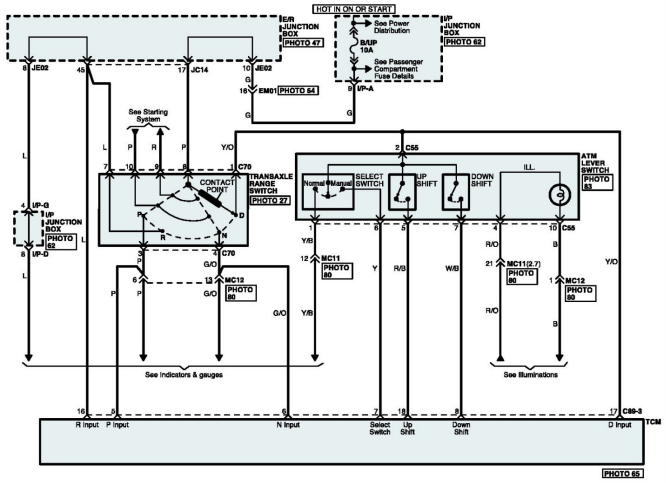


TCM

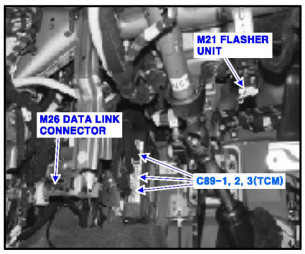


ATM LEVER SWITCH

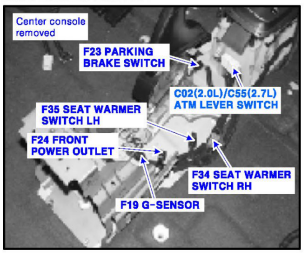


TRANSAXLE RANGE SWITCH

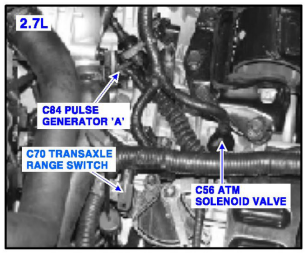


I/P JUNCTION BOX

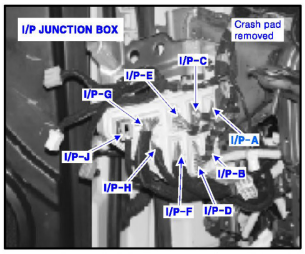


C89-3

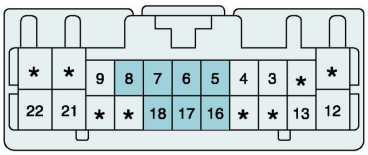


C55

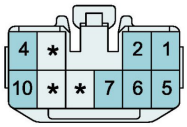


C70



# 2005 KIA SPORTAGE 4WD V6-2.7L
## TRANSMISSIONS - 4WD CIRCUIT

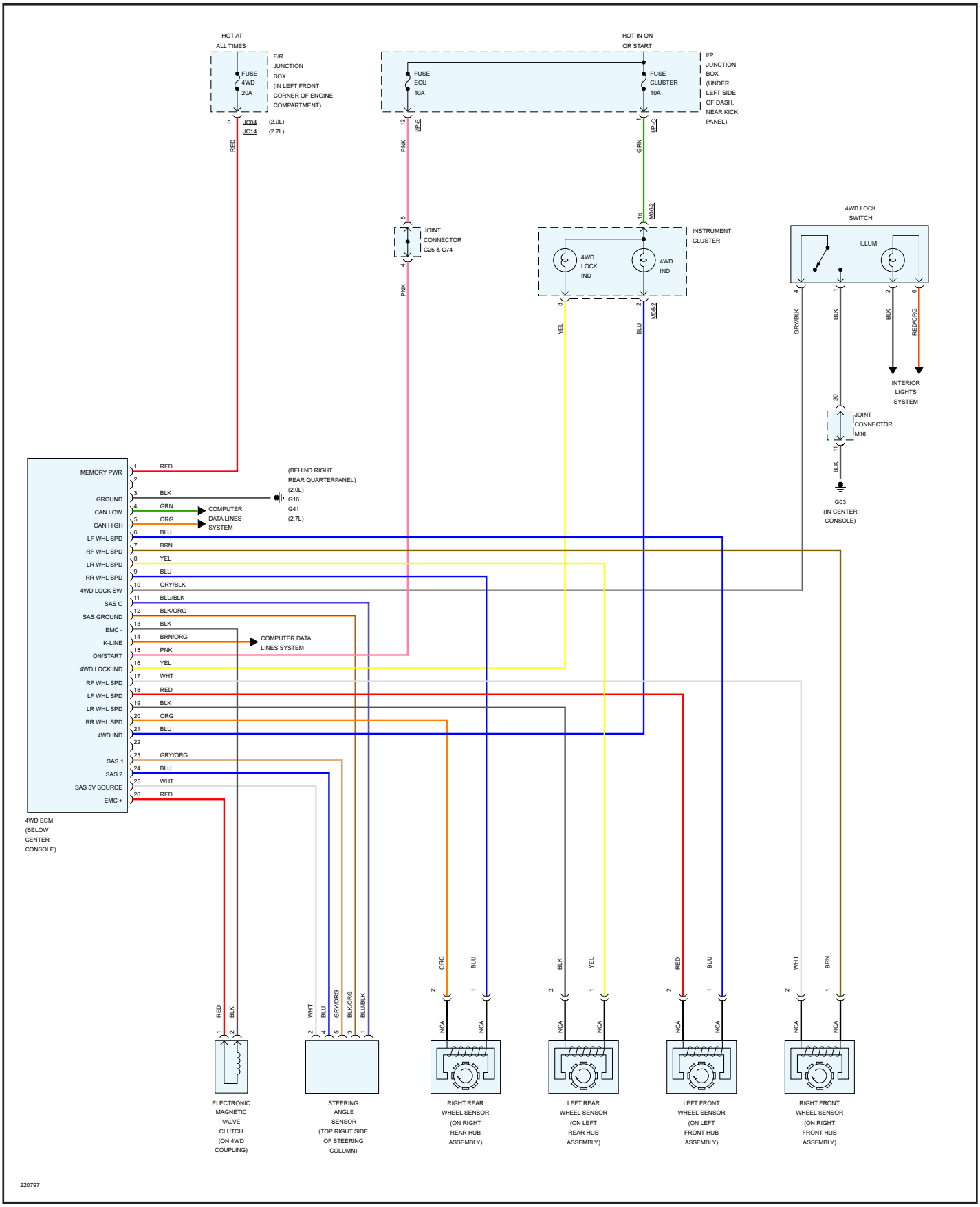

# 2005 KIA SPORTAGE 4WD V6-2.7L
## TRANSMISSIONS - A/T CIRCUIT

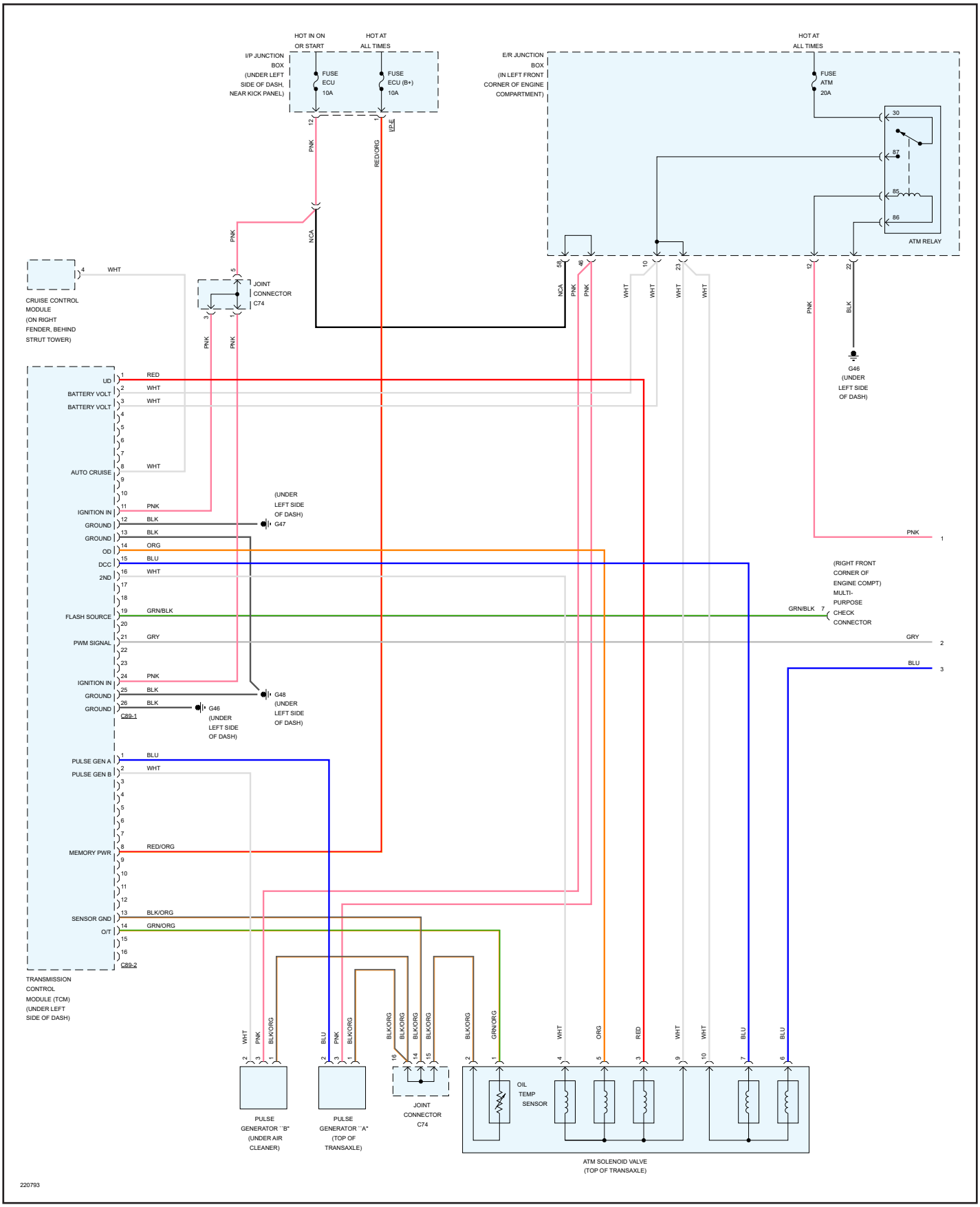

# 2005 KIA SPORTAGE 4WD V6-2.7L

## TRANSMISSIONS - A/T CIRCUIT

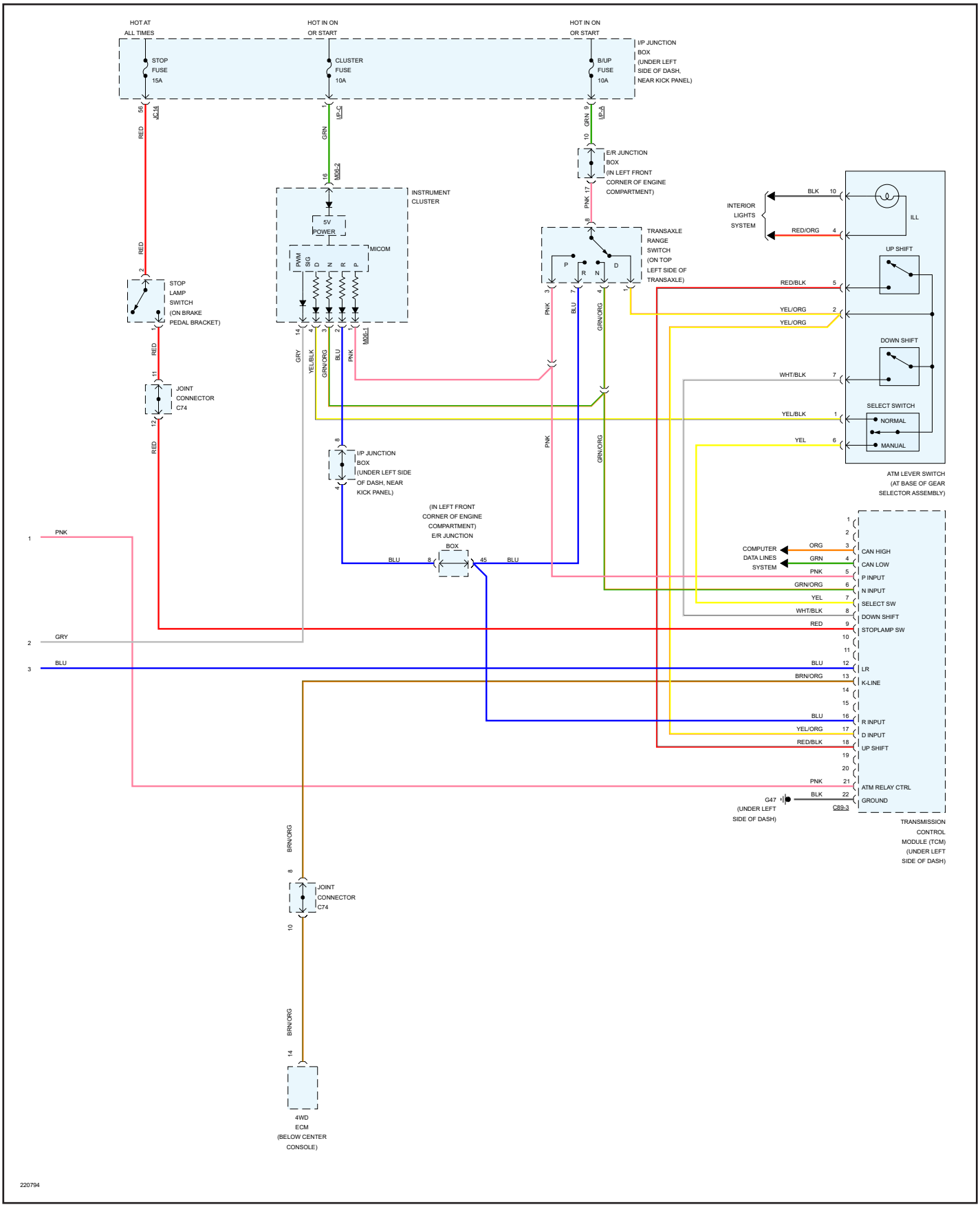

# 2005 KIA SPORTAGE 4WD V6-2.7L
## CAMSHAFT POSITION SENSOR

[CIRCUIT DIAGRAM]

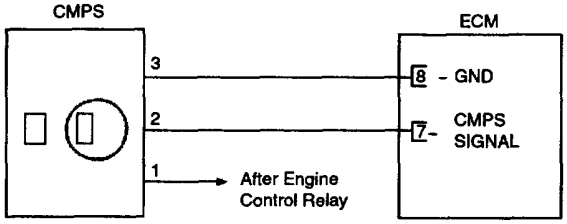


[CONNECTION INFORMATION]

| Terminal | Connected to | Function |
|---|---|---|
| 1 | Engine Control Relay | Battery Voltage |
| 2 | ECM Terminal C68-4(7) | CMPS signal |
| 3 | ECM Terminal C68-4(8) | Sensor ground |

[HARNESS CONNECTORS]

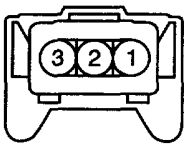


**C90**
CMPS Harness side connector

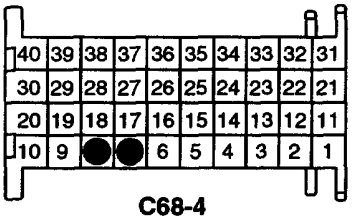


**C68-4**
ECM side terminal

# 2005 KIA SPORTAGE 4WD V6-2.7L
## CRANKSHAFT POSITION SENSOR

[CIRCUIT DIAGRAM]

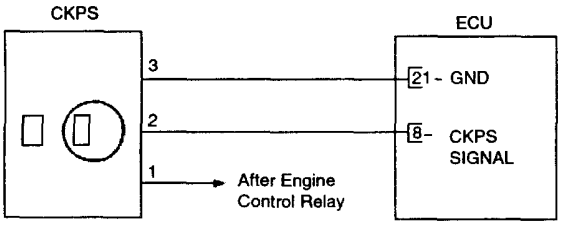


[CONNECTION INFORMATION]

| Terminal | Connected to | Function |
|---|---|---|
| 1 | Engine Control Relay | Battery Voltage |
| 2 | ECM Terminal C68-3(8) | CKPS signal |
| 3 | ECM Terminal C68-3(21) | Sensor ground |

[HARNESS CONNECTORS]

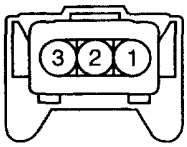


**C62**
CKPS Harness side connector

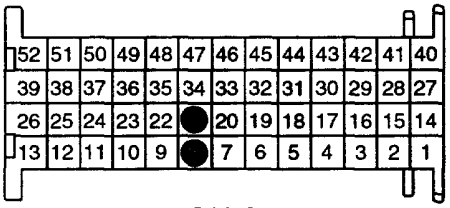


**C68-3**
ECM side terminal

# 2005 KIA SPORTAGE 4WD V6-2.7L
## CYLINDER

[CIRCUIT DIAGRAM]

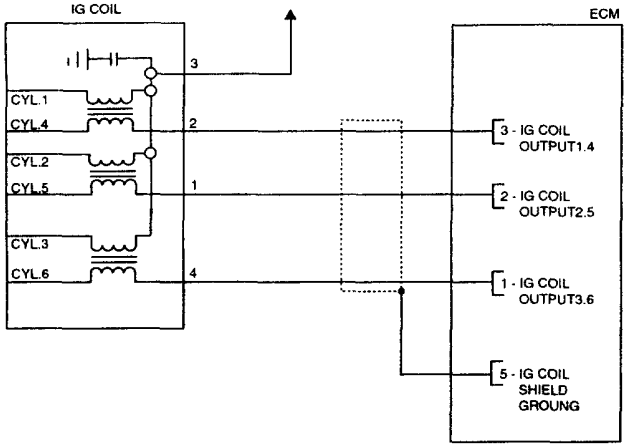


[CONNECTION INFORMATION]

| Terminal | Connected to | Function |
|---|---|---|
| 1 | ECM Terminal C68-5(2) | IG Coil Control (2,5) |
| 2 | ECM Terminal C68-5(3) | IG Coil Control (1,4) |
| 3 | Engine Control Relay | Battery Voltage |
| 4 | ECM Terminal C68-5(1) | IG Coil Control (3,6) |

[HARNESS CONNECTORS]




**C69**
IG Coil Harness side connector

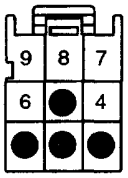


**C68-5**
ECM side terminal

# 2005 KIA SPORTAGE 4WD V6-2.7L
## DATA LINK CONNECTOR

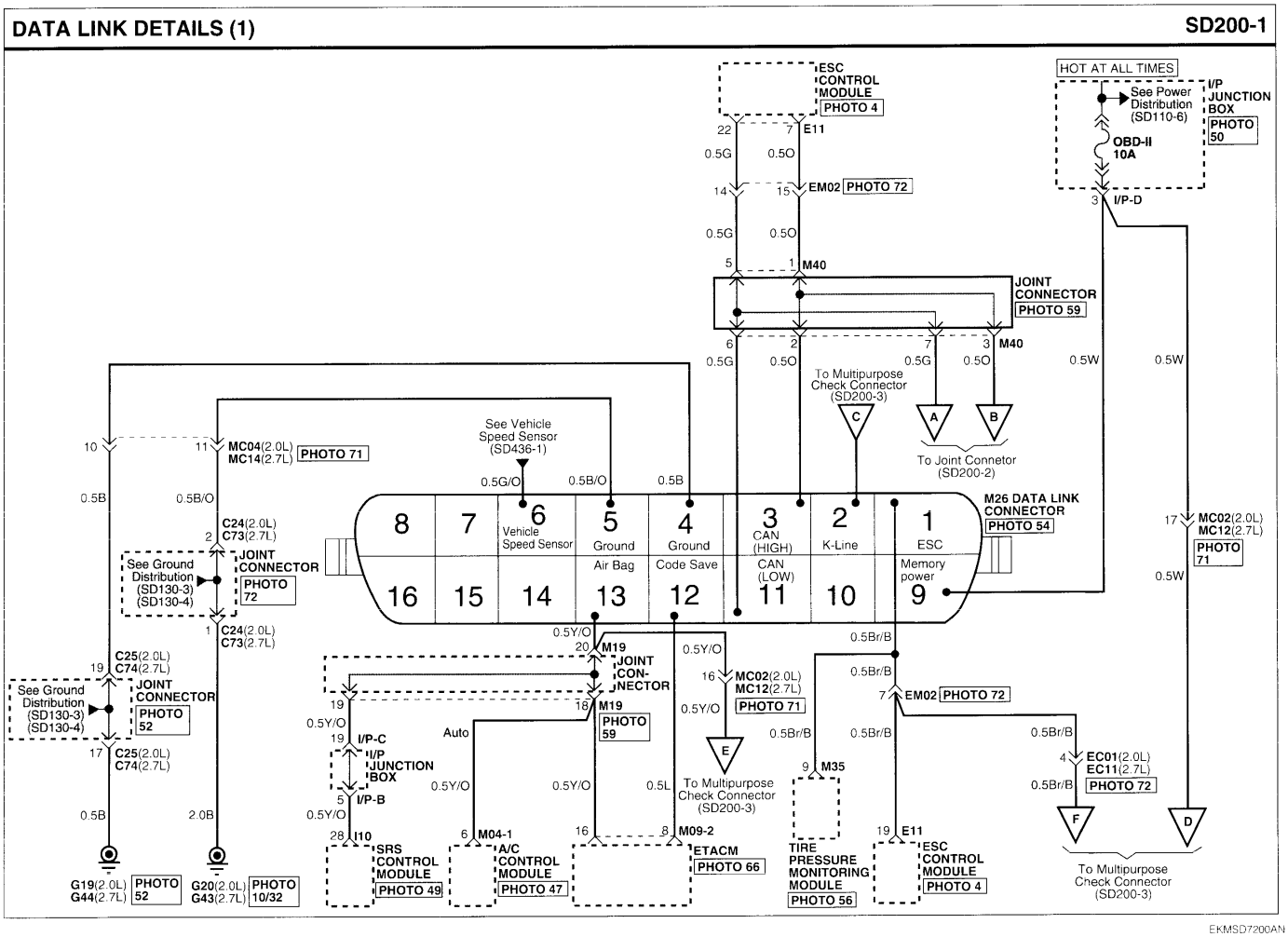

# 2005 KIA SPORTAGE 4WD V6-2.7L
## DATA LINK CONNECTOR

**DATA LINK DETAILS (2)** SD200-2

### 2.0L

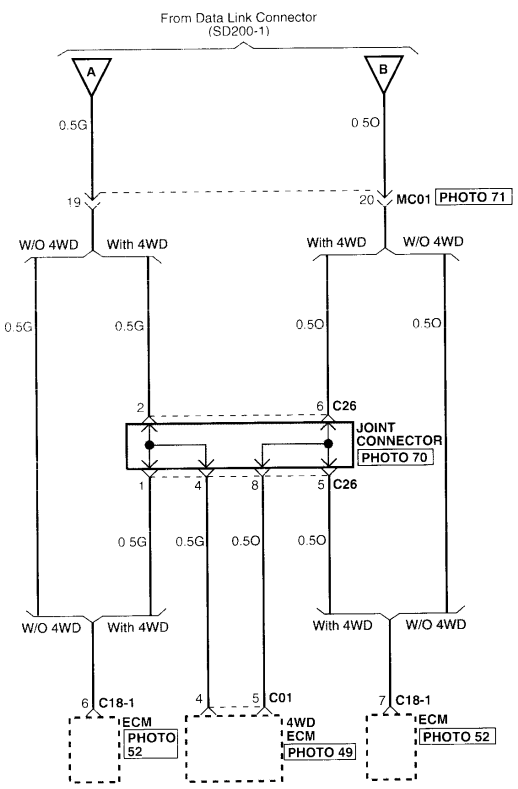


### 2.7L

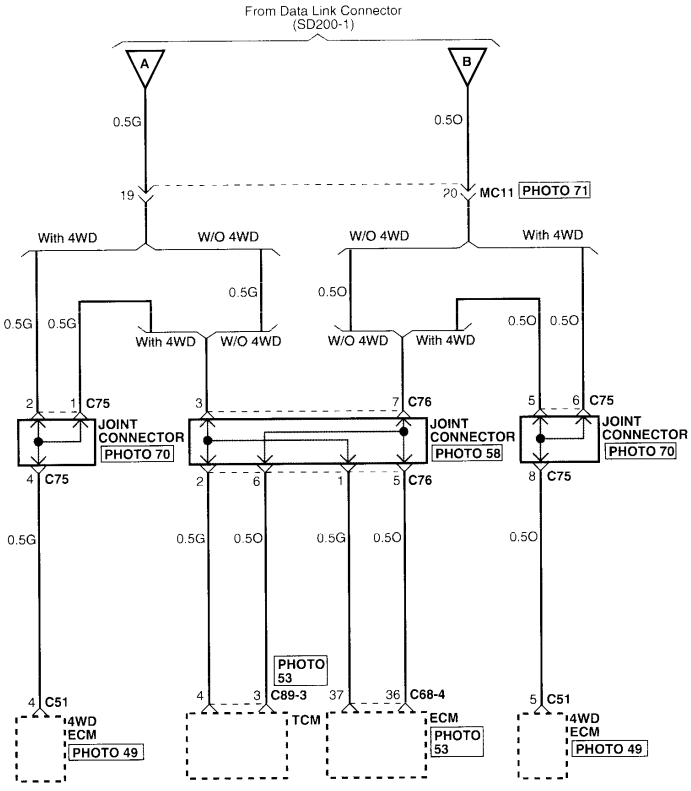


EKMSD7200BN

# 2005 KIA SPORTAGE 4WD V6-2.7L
## DATA LINK CONNECTOR

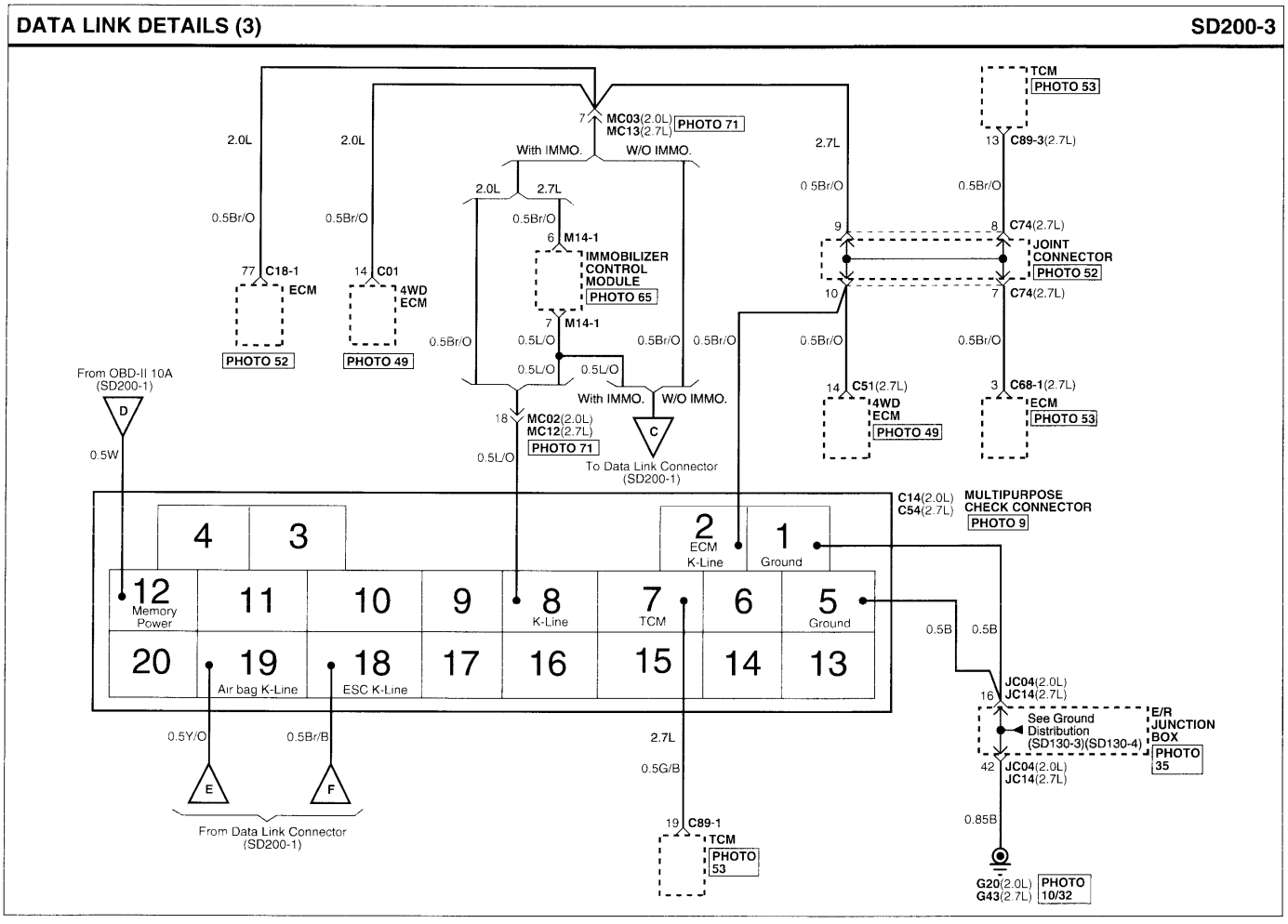

# 2005 KIA SPORTAGE 4WD V6-2.7L
## DATA LINK CONNECTOR

**DATA LINK DETAILS (4)** — **SD200-4**

**C01/C51**

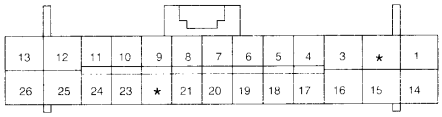

AMP_0407_26F_W_HD

**C14**

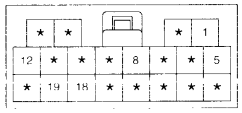

KET_DIAG_20F_B_CLIP

**C54**

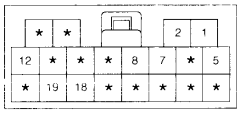

KET_DIAG_20F_B_CLIP

**C18-1**

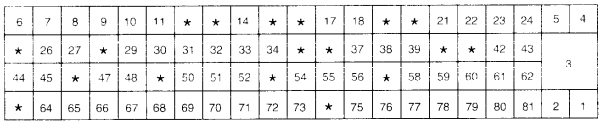

KET_ECU_81F

**C68-3**

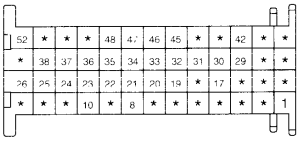

AMP_ECU_52F_B_134P

**C89-1**

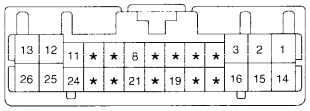

KET_0407_26F_W

**C89-3**

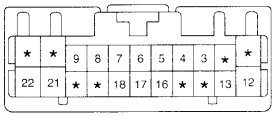

KET_0407_22F_W

**I10**

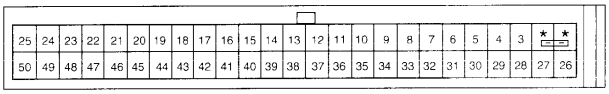

AMP_ABG_50F

**M04-1**

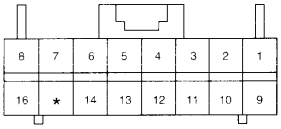

AMP_0407_16F_W_040

**E11**

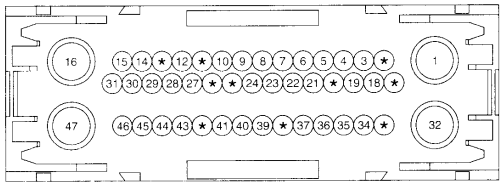

AMP_ABS_47F_B

**M09-2**

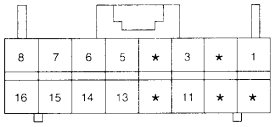

AMP_0407_16F_W_040

**M14-1**

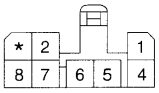

AMP_070_08F_W

**M26**

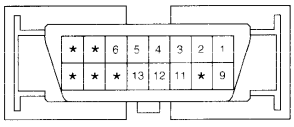

MLX_OBDII_16F_B_SIN

**M35**

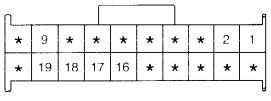

AMP_MQS_20F_B_BA

FKMSD7200DN

# 2005 KIA SPORTAGE 4WD V6-2.7L
## ENGINE COOLANT TEMPERATURE SENSOR

[CIRCUIT DIAGRAM]

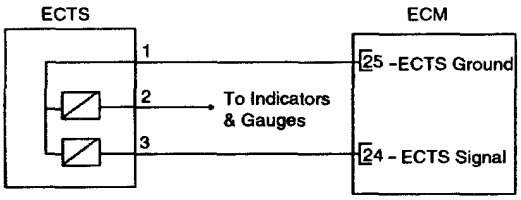


[CONNECTION INFORMATION]

| Terminal | Connected to | Function |
|---|---|---|
| 1 | ECM terminal C68-3(25) | ECTS Ground |
| 2 | Indicators & Gauges | - |
| 3 | ECM terminal C68-3(24) | ECTS Signal |

[HARNESS CONNECTORS]

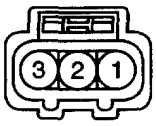


**C94**
ECTS Harness side connector

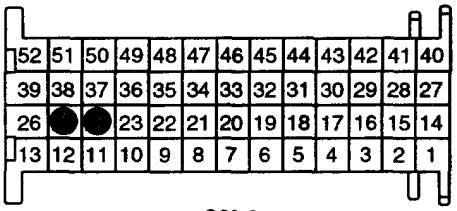


**C68-3**
ECM side terminal

# 2005 KIA SPORTAGE 4WD V6-2.7L
## HEATED OXYGEN SENSOR

### [CIRCUIT DIAGRAM]

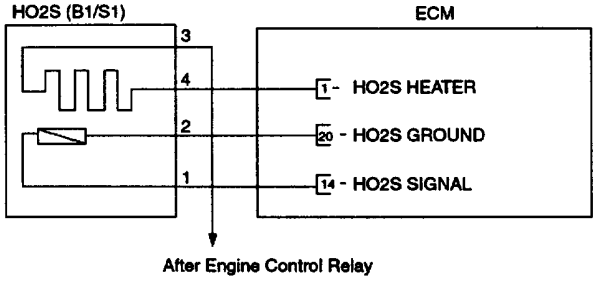


### [CONNECTION INFORMATION]

| Terminal | Connected to | Function |
|---|---|---|
| 1 | ECM Terminal C68-2(14) | Signal |
| 2 | ECM Terminal C68-2(20) | Ground |
| 3 | Engine Control Relay | Battery Voltage |
| 4 | ECM Terminal C68-2 (1) | Heater Control |

### [HARNESS CONNECTORS]




**C52,C79,C80,C81**

HO2S Harness side connector

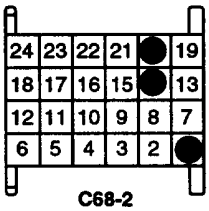


**C68-2**

ECM side terminal

# 2005 KIA SPORTAGE 4WD V6-2.7L
## INTAKE AIR TEMPERATURE SENSOR

[CIRCUIT DIAGRAM]

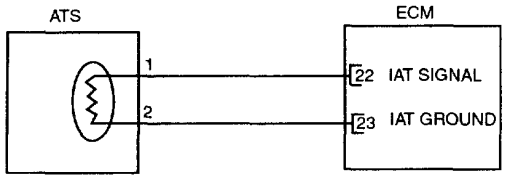


[CONNECTION INFORMATION]

| Terminal | Connected to | Function |
|---|---|---|
| 1 | ECM Terminal C68-3(22) | IAT Signal |
| 2 | ECM Terminal C68-3(23) | IAT Ground |

[HARNESS CONNECTORS]

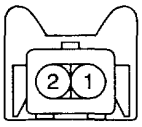


**C57**
IAT Harness side connector

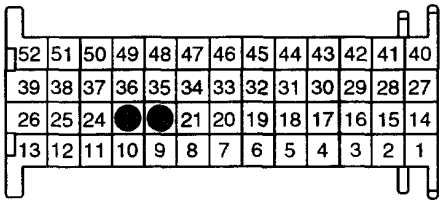


**C68-3**
ECM side terminal

# 2005 KIA SPORTAGE 4WD V6-2.7L
## KNOCK SENSOR

[CIRCUIT DIAGRAM]

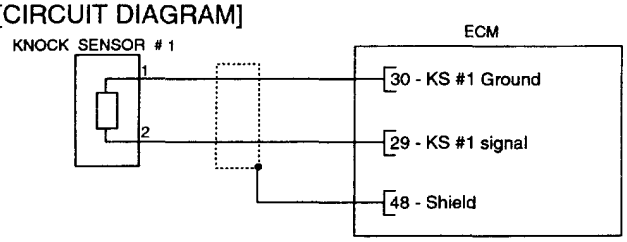


[CONNECTION INFORMATION]

| Terminal | Connected to | Function |
|---|---|---|
| 1 | ECM Terminal C68-3(30) | Sensor Ground |
| 2 | ECM Terminal C68-3(29) | Sensor Signal |

[HARNESS CONNECTORS]

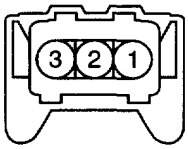


**C78**
Sensor Harness side connector

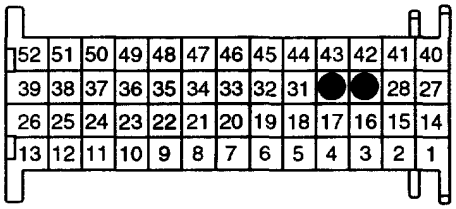


**C68-3**
ECM side terminal

# 2005 KIA SPORTAGE 4WD V6-2.7L
## KNOCK SENSOR

[CIRCUIT DIAGRAM]

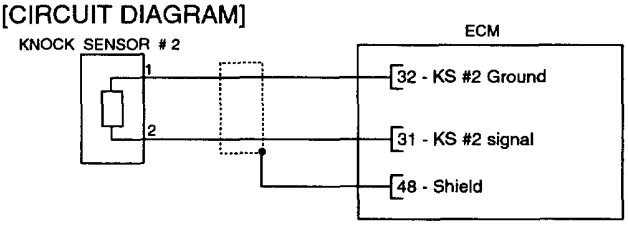


[CONNECTION INFORMATION]

| Terminal | Connected to | Function |
|---|---|---|
| 1 | ECM Terminal C68-3(32) | Sensor Ground |
| 2 | ECM Terminal C68-3(31) | Sensor Signal |

[HARNESS CONNECTORS]

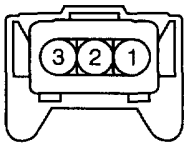


**C77**

IG Coil Harness side connector

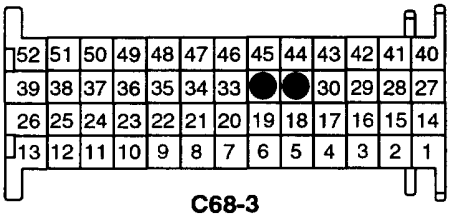


**C68-3**

ECM side terminal

# 2005 KIA SPORTAGE 4WD V6-2.7L
## PIN-OUT ENGINE CONTROL MODULE

**ECM HARNESS CONNECTOR**

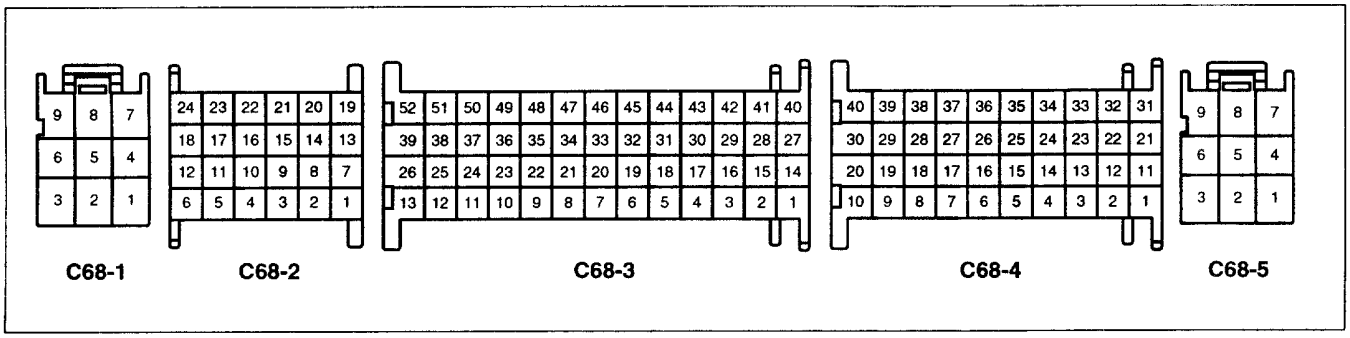

# 2005 KIA SPORTAGE 4WD V6-2.7L
## PIN-OUT ENGINE CONTROL MODULE

**CONNECTOR [C68-1]**

| Pin | Description | Type | Vehicle State | Level | Test Result |
|---|---|---|---|---|---|
| 1 | Ignition switch signal input | DC | IG OFF | Max. 0.5 V | 14.69V |
| | | | IG ON | Vbatt | 0V |
| 2 | Not connected | | | | |
| 3 | Diagnostic Data Line (k-Line) | Pulse | When transmitting | Hi: Min. Vbatt×80%<br>Lo: Max. Vbatt×20% | High: 10.687V<br>Low: 0.125V<br>Vbatt: 14V |
| | | | When receiving | Hi: Min. Vbatt×70%<br>Lo: Max. Vbatt×30% | |
| 4 | ECM ground | DC | Idle | Max. 50 mV | - |
| 5 | Power stage ground | DC | Idle | Max. 50 mV | - |
| 6 | Power stage ground | DC | Idle | Max. 50 mV | - |
| 7 | Battery voltage supply | DC | Always | Vbatt | 14.625V |
| 8 | Battery Voltage Supply after Main Relay | DC | IG OFF | Max. 1.0 V | 14.3V |
| | | | IG ON | Vbatt | 0.0625V |
| 9 | Battery Voltage Supply after Main Relay | DC | IG OFF | Max. 1.0 V | 14.3V |
| | | | IG ON | Vbatt | 0.0625V |

# 2005 KIA SPORTAGE 4WD V6-2.7L
## PIN-OUT ENGINE CONTROL MODULE

**CONNECTOR [C68-2]**

| Pin | Description | Type | Vehicle State | Level | Test Result |
|---|---|---|---|---|---|
| 1 | Heated Oxygen Sensor Heater (B1/S1) control | Pulse | Engine Run | High: Vbatt | 14.687V |
| | | | | Low: Max. 1.0V | 0.25V |
| | | | | Freguency: 10Hz | |
| 2 | Not connected | | | | |
| 3 | Not connected | | | | |
| 4 | Not connected | | | | |
| 5 | Not connected | | | | |
| 6 | Not connected | | | | |
| 7 | Heated Oxygen Sensor (B1/S2) Heater control | Pulse | Engine Run | High: Vbatt | 14.5V |
| | | | | Low: Max. 1.0V | 0.313V |
| | | | | Freguency: 10Hz | |
| 8 | Not connected | | | | |
| 9 | Not connected | | | | |
| 10 | Not connected | | | | |
| 11 | Not connected | | | | |
| 12 | Not connected | | | | |
| 13 | Heated Oxygen Sensor (B2/S1) Heater control | Pulse | Engine Run | High: Vbatt | 14.562V |
| | | | | Low: Max. 1.0V | 0.25V |
| | | | | Freguency: 10Hz | |
| 14 | Heated Oxygen Sensor (B1/S1) signal input | DC | When racing | Rich: 0.6 ~ 1.0V | 0.83V |
| | | | | Lean: 0 ~ 0.4V | 0.37V |
| 15 | Heated Oxygen Sensor (B2/S1) signal input | DC | When racing | Rich: 0.6 ~ 1.0V | 0.86V |
| | | | | Lean: 0 ~ 0.4V | 0.46V |
| 16 | Heated Oxygen Sensor (B1/S2) signal input | DC | When racing | Rich: 0.6 ~ 1.0V | 0.95V |
| | | | | Lean: 0 ~ 0.4V | 0.16V |
| 17 | Fuel Consumption signal output | Pulse | Idle | High: Vbatt or Vcc | 13.812V |
| | | | | Low: Max. 0.5V | 0V |
| | | | | Freguency: 4Hz | |
| 18 | Heated Oxygen Sensor (B2/S2) signal input | DC | When racing | Rich: 0.6 ~ 1.0V | 0.952V |
| | | | | Lean: 0 ~ 0.4V | 0.166V |
| 19 | Heated Oxygen Sensor (B2/S2) Heater control | Pulse | Engine Run | High: Vbatt | 14.562V |
| | | | | Low: Max. 1.0V | 0.375V |
| | | | | Freguency: 10Hz | |
| 20 | Heated Oxygen Sensor (B1/S1) ground | DC | Idle | Max. 50mV | 15.573mV |
| 21 | Heated Oxygen Sensor (B2/S1) ground | DC | Idle | Max. 50mV | 15.662mV |
| 22 | Heated Oxygen Sensor (B1/S2) ground | DC | Idle | Max. 50mV | 15.525mV |
| 23 | Main Relay control output | DC | Relay ON | Max. 1.0V | 0.75V |
| | | | Relay OFF | Vbatt | 12.5V |
| 24 | Heated Oxygen Sensor (B2/S2) ground | DC | Idle | Max. 50mV | 15.245mV |

# 2005 KIA SPORTAGE 4WD V6-2.7L
## PIN-OUT ENGINE CONTROL MODULE

**CONNECTOR [C68-3]**

| Pin | Description | Type | Vehicle State | Level | Test Result |
|---|---|---|---|---|---|
| 1 | Mass Air Flow Sensor signal input | Analog | Idle | 0 ~ 2.0V | 0.788V |
| | | | 3000 rpm | 1.0 ~ 4.5V | 1.942V |
| 2 | Not connected | | | | |
| 3 | Not connected | | | | |
| 4 | Not connected | | | | |
| 5 | Not connected | | | | |
| 6 | Not connected | | | | |
| 7 | Not connected | | | | |
| 8 | Crankshaft Position Sensor signal input | Pulse | Idle | High: Vcc or Vbatt | 4.988V |
| | | | | Low: Max. 1.0V | 0.188V |
| | | | | Frequency: 524Hz | |
| 9 | Not connected | | | | |
| 10 | Throttle Position Sensor supply | DC | IG OFF | Max. 0.5V | 0V |
| | | | IG ON | 4.9 ~ 5.1V | 5.0375V |
| 11 | Not connected | | | | |
| 12 | Not connected | | | | |
| 13 | Not connected | | | | |
| 14 | Not connected | | | | |
| 15 | Not connected | | | | |
| 16 | Not connected | | | | |
| 17 | Mass Air Flow Sensor ground | DC | Idle | Max. 50 mV | 31.43mV |
| 18 | Not connected | | | | |
| 19 | Throttle Position Sensor signal input | Analog | C.T | 0.25 ~ 0.9V | 0.35V |
| | | | W.O.T | Min. 4.0V | 4.18V |
| 20 | Throttle Position Sensor ground | DC | Idle | Max. 50 mV | 21.14mV |
| 21 | Crankshaft Position Sensor ground | DC | Idle | Max. 50 mV | 11.85mV |
| 22 | Intake Air Temperature Sensor signal input | Analog | Idle | 0 ~ 5V | 1.525V at 78℃ |
| 23 | Intake Air Temperature Sensor ground | DC | Idle | Max. 50 mV | 11.93mV |
| 24 | Engine Coolant Temperature Sensor signal input | Analog | Idle | 0.5 ~ 4.5V | 1.09V at 93℃ |
| 25 | Engine Coolant Temperature Sensor ground | DC | Idle | Max. 50 mV | 12.27mV |
| 26 | Power Steering Load input | DC | S/W ON | Max. 0.5V | 0V |
| | | | S/W OFF | Vbatt | 11.5V |
| 27 | Not connected | | | | |
| 28 | Not connected | | | | |

# 2005 KIA SPORTAGE 4WD V6-2.7L
## PIN-OUT ENGINE CONTROL MODULE

| Pin | Description | Type | Vehicle State | Level | Test Result |
|---|---|---|---|---|---|
| 29 | Knock Sensor #1 (Cyl. #1, 3, 5) signal input | Frequency | Knocking | -0.3 ~ 0.3 V | |
| | | | Normal | 0 V | |
| 30 | Knock Sensor #1 (Cyl. #1, 3, 5) ground | | | | |
| 31 | Knock Sensor #2 (Cyl. #2, 4, 6) signal input | Frequency | Knocking | -0.3 ~ 0.3 V | |
| | | | Normal | 0 V | |
| 32 | Knock Sensor #2 (Cyl. #2, 4, 6) ground | | | | |
| 33 | Injector (Cyl. 1) control output | Pulse | Idle | High: Vbatt | 14V |
| 34 | Injector (Cyl. 2) control output | | | Low: Max . 1.0V | 0.25V |
| 35 | Injector (Cyl. 3) control output | | | Vpeak : Max. 70V | 48.625V |
| 36 | Injector (Cyl. 4) control output | | | Frequency: 5.5Hz | |
| 37 | Injector (Cyl. 5) control output | | | | |
| 38 | Injector (Cyl. 6) control output | | | | |
| 39 | Not connected | | | | |
| 40 | Not connected | | | | |
| 41 | Not connected | | | | |
| 42 | Purge Control Solenoid Valve PWM output | Pulse | Inactive Active | High: Vbatt | 14.312V |
| | | | | Low: Max. 1.0V | 0.125V |
| | | | | Vpeak: Max. 70V | 48.375V |
| | | | | Frequency: 20Hz | |
| 43 | Not connected | | | | |
| 44 | Not connected | | | | |
| 45 | Intake Manifold Tuning Valve #1 (Surge Tank Side) control output | DC (20Hz) | Inactive | Max. 1.0 V | 0.0625V |
| | | | Active | Vbatt | 15.125V |
| 46 | Idle Speed Control Actuator PWM output 2 (OPEN) | Pulse | Idle | High: Vbatt | 15.125V |
| | | | | Low: Max . 1.0V | 0.125V |
| | | | | Frequency: 100Hz | |
| 47 | Idle Speed Control Actuator PWM output 1 (CLOSE) | Pulse | Idle | High: Vbatt | 15.187V |
| | | | | Low: Max . 1.0V | 0.0625V |
| | | | | Frequency: 100Hz | |
| 48 | Knock Sensor Shield | DC | Idle | Max. 50 mV | 11.63mV |
| 49 | Not connected | | | | |
| 50 | Not connected | | | | |
| 51 | Not connected | | | | |
| 52 | Intake Manifold Tuning Valve #2 (In-mani Side) control output | DC (20Hz) | Inactive | Max. 1.0 V | 0V |
| | | | Active | Vbatt | 15.125V |

# 2005 KIA SPORTAGE 4WD V6-2.7L
## PIN-OUT ENGINE CONTROL MODULE

**CONNECTOR [C68-4]**

| Pin | Description | Type | Vehicle State | Level | Test Result |
|---|---|---|---|---|---|
| 1 | Not connected | | | | |
| 2 | Not connected | | | | |
| 3 | Not connected | | | | |
| 4 | Fuel Tank Pressure Sensor supply | DC | IG OFF | Max. 0.5V | 0V |
| | | | IG ON | 4.9 ~ 5.1V | 5.05V |
| 5 | Fuel Level Sensor signal input | DC | IG ON | 0V ~ Vbatt | 2.93V |
| 6 | Not connected | | | | |
| 7 | Camshaft Position Sensor signal input | Pulse | Idle | High: Vcc or Vbatt | 5V |
| | | | | Low: Max . 1.0V | 0.625V |
| | | | | Frequency: 10.99Hz | |
| 8 | Camshaft Position Sensor ground | DC | Idle | Max. 50 mV | - |
| 9 | Not connected | | | | |
| 10 | Fuel Pump Relay control output | DC | Relay OFF | Vbatt | 12.38V |
| | | | Relay ON | Max. 1.0V | 0.125V |
| 11 | Not connected | | | | |
| 12 | Not connected | | | | |
| 13 | Throttle Position PWM output | Pulse | Idle | High: Vbatt | 11.75V |
| | | | | Low: Max. 0.5V | 0V |
| | | | | Frequency: 100Hz | |
| 14 | Fuel Tank Pressure Sensor ground | DC | Idle | Max. 50 mV | 23.78V |
| 15 | Fuel Level Sensor ground | DC | Idle | Max. 50 mV | 14.92V |
| 16 | Not connected | | | | |
| 17 | Engine Speed signal output | Pulse | Idle | High: Vbatt | 14.25V |
| | | | | Low: Max. 0.5V | 0V |
| | | | | Frequency: 38.76Hz | |
| 18 | Cooling Fan Relay [Low] control output | DC | Relay OFF | Vbatt | 14.312V |
| | | | Relay ON | Max. 1.0V | 0.25V |
| 19 | Not connected | | | | |
| 20 | Malfunction Indicating Lamp (MIL) output | DC | Lamp OFF | Vbatt | 13.812V |
| | | | Lamp ON | Max. 1.0VVbatt | 0.0625V |
| 21 | Not connected | | | | |
| 22 | Vehicle speed signal input | Pulse | Vehicle Run | High: Min. 5.0V<br>Low: Max. 0.5V<br>Frequency: 250Hz | 252Hz |
| 23 | Air conditioner switch [Low/High] signal input | DC | A/C OFF | Max. 0.5V | 0V |
| | | | A/C ON | Vbatt | 13.812V |
| 24 | Air conditioner switch signal input | DC | A/C OFF | Max. 1.0V | 0V |
| | | | A/C ON | Vbatt | 12.937V |

# 2005 KIA SPORTAGE 4WD V6-2.7L
## PIN-OUT ENGINE CONTROL MODULE

| Pin | Description | Type | Vehicle State | Level | Test Result |
|---|---|---|---|---|---|
| 25 | Air conditioner switch [Middle] signal input | DC | MID OFF | Max. 0.5V | 12.625V |
| | | | MID ON | Vbatt | 0.0625V |
| 26 | Not connected | | | | |
| 27 | Not connected | | | | |
| 28 | Not connected | | | | |
| 29 | Air Conditioner Compressor Relay control output | DC | A/C OFF | Vbatt | 14.125V |
| | | | A/C ON | Max. 1.0V | 0.125V |
| 30 | Canister Close Valve control output | DC | Active | High: Vbatt | 14.125V |
| | | | Inactive | Low: Max. 1.0V | 0.125V |
| | | | | Frequency: 10Hz | |
| 31 | Not connected | | | | |
| 32 | Not connected | | | | |
| 33 | Not connected | | | | |
| 34 | Fuel Tank Pressure Sensor signal input | DC | Idle | 0.4 ~ 4.6V | 2.501V |
| 35 | Not connected | | | | |
| 36 | CAN [HIGH] | Pulse | Recessive | 2.0 ~ 3.0 V | 2.275V |
| | | | Dominant | 2.75~4.5 V | 2.953V |
| 37 | CAN [LOW] | Pulse | Recessive | 2.0 ~ 3.0 V | 2.254V |
| | | | Dominant | 0.5~2.25 V | 1.552V |
| 38 | Wheel Speed Sensor (WSS) ground | DC | Idle | Max. 50 mV | 40.83mV |
| 39 | Wheel Speed Sensor (WSS) signal input | Sine Wave | Vehicle Run | Vp-p: Min.0.2V Frequency: 100Hz | 2.625V (10 mile) |
| 40 | Cooling Fan Relay - High control output | DC | Relay OFF | Vbatt | 14.625V |
| | | | Relay ON | Max. 1.0V | 0.188V |

# 2005 KIA SPORTAGE 4WD V6-2.7L
## PIN-OUT ENGINE CONTROL MODULE

**CONNECTOR [C68-5]**

| Pin | Description | Type | Vehicle State | Level | Test Result |
|---|---|---|---|---|---|
| 1 | Ignition coil #3 (Cyl. #3,6) control output | Pulse | Idle | 1st Voltage: 300~400V | 362V |
| | | | | ON Voltage: Max. 2.0V | 1.5V |
| 2 | Ignition coil #2 (Cyl. #2,5) control output | Pulse | Idle | 1st Voltage: 300~400V | 363.25V |
| | | | | ON Voltage: Max. 2.0V | 1.5V |
| 3 | Ignition coil #1 (Cyl. #1,4) control output | Pulse | Idle | 1st Voltage: 300~400V | 361.75V |
| | | | | ON Voltage: Max. 2.0V | 1.5V |
| 4 | Not connected | | | | |
| 5 | Ignition Coil shield | DC | Idle | Max. 50 mV | -12.575mV |
| 6 | Not connected | | | | |
| 7 | Not connected | | | | |
| 8 | Not connected | | | | |
| 9 | Not connected | | | | |

# 2005 KIA SPORTAGE 4WD V6-2.7L
## THROTTLE POSITION SENSOR

[CIRCUIT DIAGRAM]

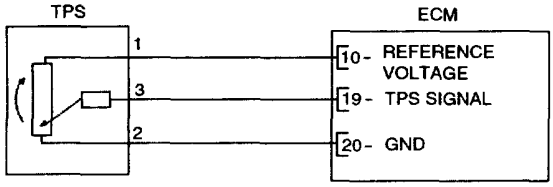


[CONNECTION INFORMATION]

| Terminal | Connected to | Function |
|---|---|---|
| 1 | ECM terminal C68-3(10) | Reference Voltage |
| 2 | ECM terminal C68-3(20) | TPS Ground |
| 3 | ECM terminal C68-3(19) | TPS Signal |

[HARNESS CONNECTORS]

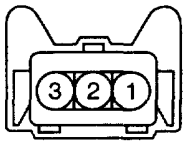


**C91**

TPS Harness side connector

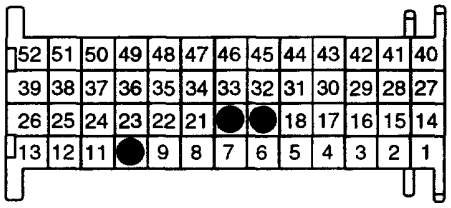


**C68-3**

ECM side terminal

# 2005 KIA SPORTAGE 4WD V6-2.7L
## WHEEL SPEED SENSOR

[CIRCUIT DIAGRAM]

[With ABS / TCS, EPS]

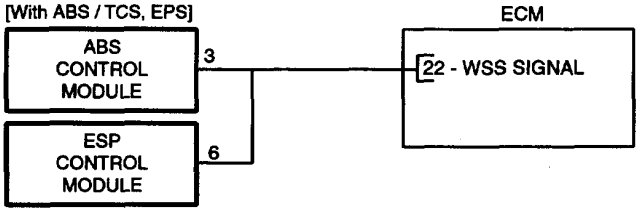


[CONNECTION INFORMATION]

| Terminal | Connected to | Function |
|---|---|---|
| 3 | ECM Terminal C68-4(22) | WSS Signal |
| 6 | ECM Terminal C68-4(22) | WSS Signal |

[HARNESS CONNECTORS]

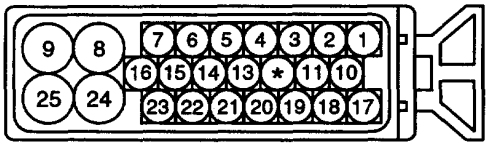


**E10**
ABS

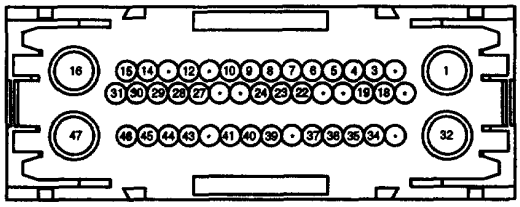


**E11**
ESP

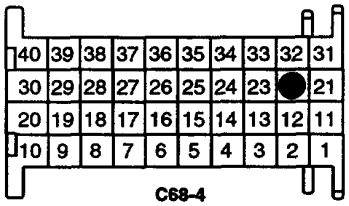


**C68-4**
ECM side terminal

[CIRCUIT DIAGRAM]

[Without ABS / TCS, ESP]

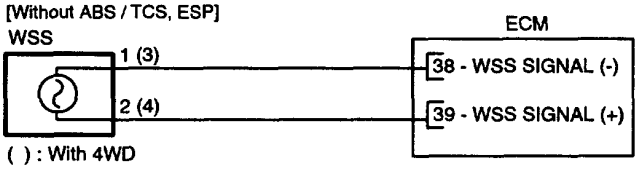


( ) : With 4WD

[CONNECTION INFORMATION]

| Terminal | Connected to | Function |
|---|---|---|
| 1(3) | ECM Terminal C68-4(38) | WSS Signal (-) |
| 2(4) | ECM Terminal C68-4(39) | WSS Signal (+) |

( ) : With 4WD

[HARNESS CONNECTORS]




**E26**
WSS

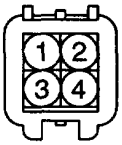


**E25**
WSS (With 4WD)

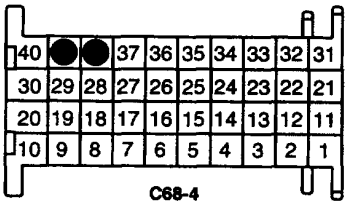


**C68-4**
ECM side terminal

# 2005 KIA SPORTAGE 4WD V6-2.7L
## GLOSSARY OF TERMS

### MODELOS DE AUTOS

**CC:** DESCAPOTABLE O CONVERTIBLE COUPE

**GL:** GRAN LUJO

**GLS:** GRAN LUJO SÚPER

**GLX:** GRAN LUJO EXTRA

**GT:** GRAND TOURING O GRAN TURISMO

**GTI:** GRAN TURISMO DE INYECCION

**GTS:** GRAN TURISMO DEPORTIVO

**GTX:** GRAN TURISMO EXCLUSIVO

**ST:** TECNÓLOGIAS DEPORTIVA

**SS:** MODELO SÚPER DEPORTIVO

### MÓDULO DE CONTROL

**ABS:** SISTEMA ANTIBLOQUEO DE FRENOS

**BCM:** MÓDULO DE CONTROL DEL CUERPO

**ECM:** MÓDULO DE CONTROL DEL MOTOR

**ECU:** UNIDAD DE CONTROL DEL MOTOR

**ESP:** CONTROL ELECTRÓNICO DE ESTABILIDAD

**PCM:** MÓDULO DE CONTROL DEL TREN DE POTENCIA

**PIM:** MÓDULO DE INTERFAZ DEL TREN MOTRIZ

**SRS:** SISTEMA DE SEGURIDAD SUPLEMENTARIO

**TCM:** MÓDULO DE CONTROL DE LA TRANSMISIÓN

**VCM**: MÓDULO DE CONTROL DEL VEHICULO

**FICM:** MÓDULO DE CONTROL DEL INYECTOR DE COMBUSTIBLE

### MOTOR

**OHC:** ÁRBOL DE LEVAS EN CULATA

**SOCH:** UN SOLO ÁRBOL DE LEVAS

**DOCH:** DOBLE ÁRBOL DE LEVAS

**OHV:** MOTOR DE 4 TIEMPOS DE VÁLVULAS EN LA CABEZA

**SV:** MOTOR DE 4 TIEMPOS DE VÁLVULAS LATERALES

### SENSORES

**CKP:** SENSOR DE POSICIÓN DEL CIGUEÑAL

**CMP:** SENSOR DE POSICIÓN DE ÁRBOL DE LEVAS

**ECT:** SENSOR DE TEMPERATURA DEL REFRIGERANTE

**EGT:** SENSOR DE TEMPERATURA DEL GAS DE ESCAPE

**IAT:** SENSOR DE TEMPERATURA DE AIRE DE ENTRADA

**KS:** SENSOR DE DETONACIÓN

**MAF:** SENSOR DE FLUJO DE MASA DE AIRE

**MAP:** SENSOR DE PRESIÓN ABSOLUTA DEL MULTIPLE DE ADMISIÓN

**O2:** SENSOR DE OXYGENO

**OPS:** SENSOR DE PRESIÓN DE ACEITE

**TPS:** SENSOR DE POSICIÓN DEL ACELERAODR

**TRS:** SENSOR DE RANGO DE LA TRANSMISION

**TSS**: SENSOR DE VELOCIDAD DE LA TRANSMISIÓN

**VSS:** SENSOR DE VELOCIDAD DEL VEHÍCULO

# 2005 KIA SPORTAGE 4WD V6-2.7L
## GLOSSARY OF TERMS

### SISTEMA DE TRACCIÓN

**2WD:** SISTEMA DE TRACCIÓN EN 2 RUEDAS

**4WD:** TRACCIÓN 4X4 CONECTABLE

**AWD:** TRACCIÓN EN LAS 4 RUEDAS PERMANENTE

**FWD:** TRACCIÓN DELANTERA

**RWD:** TRACCIÓN TRASERA

**4X4:** TRACCIÓN EN LAS 4 RUEDAS

**ASR:** SISTEMA DE CONTROL DE TRACCIÓN

**QUATTRO:** TRACCIÓN PERMANENTE A LAS CUATRO RUEDAS (TERMINO COMUNMENTE USADO EN AUTOS AUDI)

### SISTEMAS

**A/C:** AIRE ACONDICIONADO

**AC:** CORRIENTE ALTERNA

**EGR:** RECIRCULACIÓN DE GASES DE ESCAPE

**EVAP:** SISTEMA DE CONTROL DE EMISIONES EVAPORATIVAS

**VVT:** SISTEMA DE DISTRIBUCIÓN VARIABLE

### SISTEMA DE INYECCIÓN

**COMMON-RAIL:** SISTEMA ELECTRÓNICO DE INYECCIÓN DE COMBUSTIBLE PARA MOTORES DIESEL

**HPI:** MOTORES DE GASOLINA DE INYECCIÓN DIRECTA

**JTD:** MOTORES DIÉSEL DE INYECCIÓN DIRECTA CON “COMMO RAIL”

**EFI:** INYECCIÓN ELECTRÓNICA DE GASOLINA

**TSI:** INYECCIÓN ESTRATIFICADA CON TURBOCARGADOR (MOTORES A GASOLINA)

**TD:** MOTORES TURBO DIÉSEL

**TDI:** MOTOR TURBO DIÉSEL CON INYECCIÓN DIRECTA (TIPO DE INYECCIÓN COMUNMENTE USADA POR VOLKSWAGEN)

**FSI:** INYECCIÓN ESTRATIFICADA DE GASOLINA

**TFSI:** INYECCIÓN ESTRATIFICADA DE GASOLINA CON TURBO

**HDI:** INYECCIÓN DIÉSEL DE ALTA PRESIÓN

### SISTEMA DE TRANSMISIÓN

**A/T:** TRANSMISIÓN AUTOMÁTICA

**M/T:** TRANSMISIÓN MANUAL

**CVT:** TRANSMISIÓN CONTINUAMENTE VARIABLE

### SISTEMA DE CILINDROS Y VÁLVULAS

**L4:** MOTOR DE 4 CILINDROS EN LINEA

**L6:** MOTOR DE 6 CILINDROS EN LINEA

**V2:** MOTOR DE 2 CILINDROS EN POSICIÓN V

**V6:** MOTOR 6 CILINDROS EN POSICIÓN V

**V8:** MOTOR DE 8 CILINDROS EN POSICIÓN V

**V10:** MOTOR DE 10 CILINDROS EN POSICIÓN V

**V12:** MOTOR DE 12 CILINDROS EN POSICIÓN V

**20VT:** 20 VÁLVULAS TURBO

**CVVT:** SINCRONIZACIÓN DE VALVULAS CONTINUAMENTE VARIABLE