Clio II wiring diagrams

Key to circuits

Diagram 1 **Information for wiring diagrams**

Diagram 2 **Starting, charging, engine cooling fan, diagnostic socket**

Diagram 3 **Safety restraint system, electric power steering, horn, cigar lighter, Diesel fuel filter heater, heater blower**

Diagram 4 **Typical air conditioning**

Diagram 5 **Instrument cluster**

Diagram 6 **Anti-lock brakes, front foglight, clock and external temperature gauge Side, tail, number plate and headlights**

Diagram 7 **Direction indicators, hazard warning, rear fog light, stop and reversing lights, headlight levelling**

Diagram 8 **Interior light, luggage compartment light, heated rear window, front and rear wash/wipe, headlight washers**

Diagram 9 **Electric mirrors, central locking, audio system, electric sunroof**

Diagram 10 **Electric windows, Diesel engine management**

Diagram 11 **Fuel injection (D7F 720 models)**

Diagram 12 **Fuel injection (D7F 726 models)**

Diagram 13 **Fuel injection (E7J 780/K7M 744 models)**

Key to symbols

Bulb

Flashing bulb

Switch

Multiple contact switch (ganged)

Fuse/fusible link and current rating



Resistor

Variable resistor

Variable resistor

Wire splice or soldered joint

Connecting wires

Item no. 2

Single speed pump/motor

Twin speed pump/motor

Gauge/meter

Earth point

Diode

Light emitting diode (LED)

Solenoid actuator

Heating element

Wire colour (brown with black tracer) Ma/No

Screened cable

Dashed outline denotes part of a larger item, containing in this case an electronic or solid state device.

p3 - connector pin identification
No - connector housing colour (black)

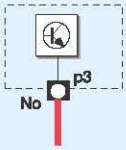

Passenger fusebox

Fuse	Rating	Circuit protected
F1	15A	Airbag, multi-timer unit
F2	15A	Stop lights, instrument panel, automatic transmission economy/performance switch and light, multi-timer unit, diagnostic socket
F3	15A	Heated rear screen, air conditioning ECU, automatic transmission ECU, rear screen wiper, reversing lights
F4	20A	Windscreen wiper
F5	10A	Anti-lock braking system
F6	10A	Multi-timer unit, air conditioning fan and control unit
F7	15A	Radio, cigar lighter, clock, heated rear screen
F8	15A	Horn
F9	10A	LH dipped beam
F10	10A	RH dipped beam
F11	10A	RH main beam
F12	10A	LH main beam
F13	20A	Dipped headlights (twin headlights)
F14	5A	Daytime running lights
F15	-	Spare
F16	-	Spare
F17	10A	Heated mirrors
F18	20A	Front fog lights
F19	-	Spare
F20	-	Spare
F21	5A	Multi-timer unit, diagnostic socket
F22	15A	Direction indicators and hazard warning lights
F23	15A	Rear fog lights
F24	-	Spare
F25	-	Spare
F26	10A	LH sidelights, switch lighting
F27	10A	RH sidelights, switch lighting
F28	2A	Immobiliser transponder, decoder unit
F29	20A	Accessories cut-off, interior lights, electric mirrors, radio, clock
F30	30A	Heated rear screen
F31	20A	Central locking
F32	30A	Electric windows
F33	20A	Headlight washer
F34	30A	Heater blower
F35	20A	Heated seats
F36	30A	Electric windows
F37	20A	Sunroof
F38	-	Spare
F39	-	Spare

Key to circuits

Diagram 1	Information for wiring diagrams.
Diagram 2	Starting, charging, engine cooling fan, diagnostic socket.
Diagram 3	Safety restraint system, electric power steering, horn, cigar lighter, Diesel fuel filter heater, heater blower.
Diagram 4	Typical air conditioning.
Diagram 5	Instrument cluster.
Diagram 6	Anti-lock brakes, front foglight, clock and external temperature gauge. Side, tail, number plate and headlights.
Diagram 7	Direction indicators, hazard warning, rear fog light, stop and reversing lights, headlight levelling.
Diagram 8	Interior light, luggage compartment light, heated rear window, front and rear wash/wipe, headlight washers.
Diagram 9	Electric mirrors, central locking, audio system, electric sunroof.
Diagram 10	Electric windows, Diesel engine management.
Diagram 11	Fuel injection (D7F 720 models).
Diagram 12	Fuel injection (D7F 726 models).
Diagram 13	Fuel injection (E7J 780/K7M 744 models).

Diagram 2

Wire colours

Ba	White	**No**	Black
Be	Blue	**Or**	Orange
Bj	Beige	**Rg**	Red
Cy	Clear	**Sa**	Pink
Gr	Grey	**Ve**	Green
Ja	Yellow	**Vi**	Mauve
Ma	Brown		

Key to items

1 Battery
2 Ignition switch
3 Starter motor
4 Alternator
5 Engine fusebox
6 Passenger fuse/relay/ multi-timer unit
7 Automatic transmission unit
a = starter inhibitor switch
8 Cooling fan switch
9 Cooling fan motor
10 Cooling fan resistor
11 Diagnostic socket
12 Engine relay unit
a = starter inhibitor relay
b = injection locking relay
c = cooling fan relay
d = percolation fan low speed relay

H32309

Starting and charging system (manual transmission)

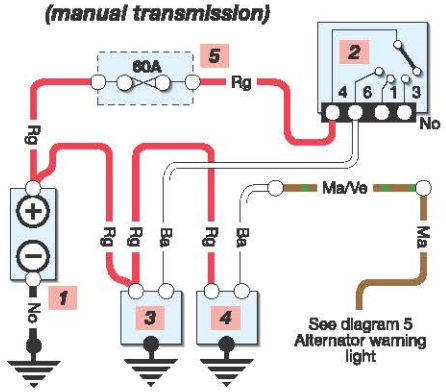

Starting and charging system (automatic transmission)

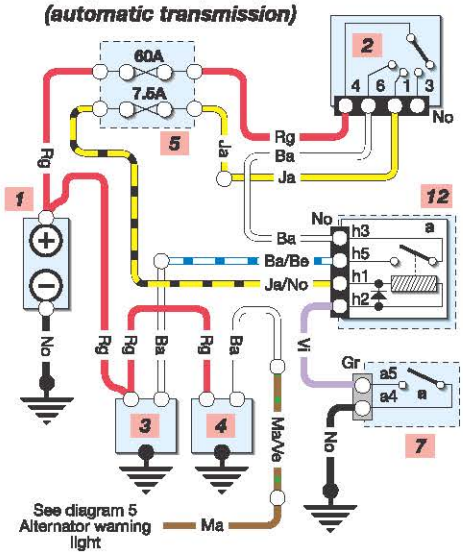

Engine cooling fan (Diesel engine)

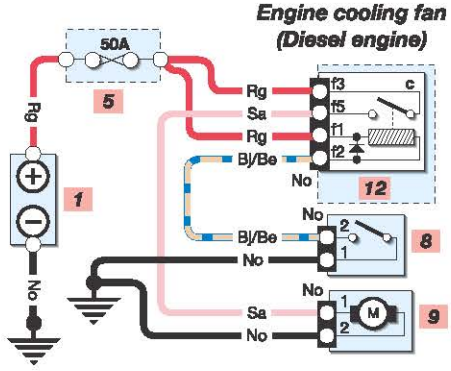

Engine cooling fan - petrol model (typical model without A/C)

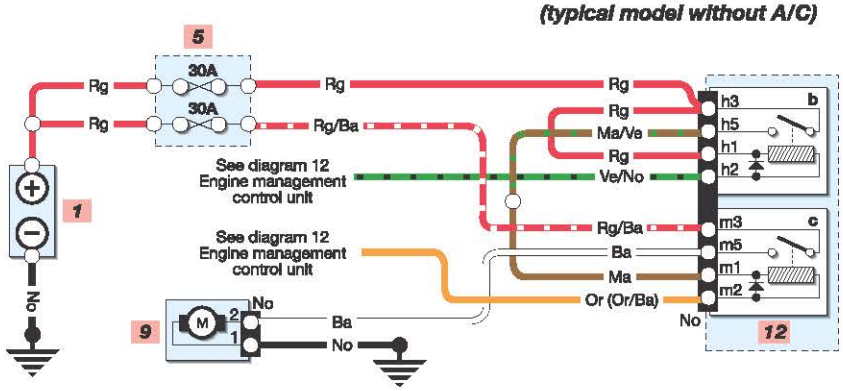

Engine cooling fan - petrol model (typical model with A/C)

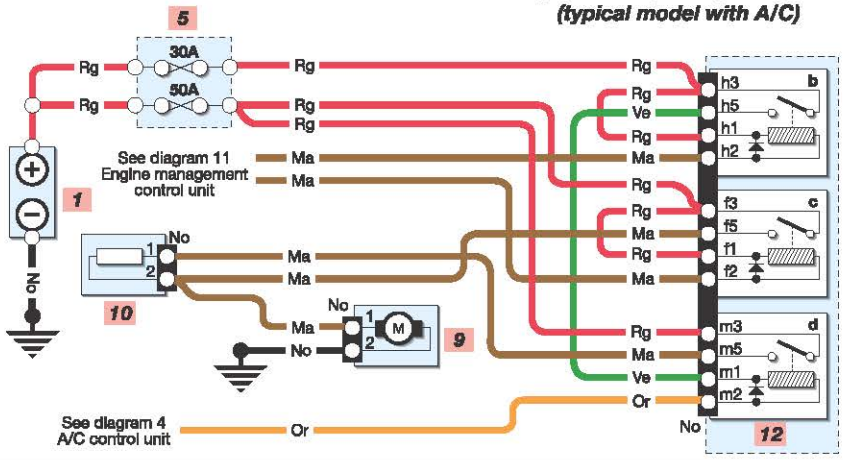

Diagnostic socket

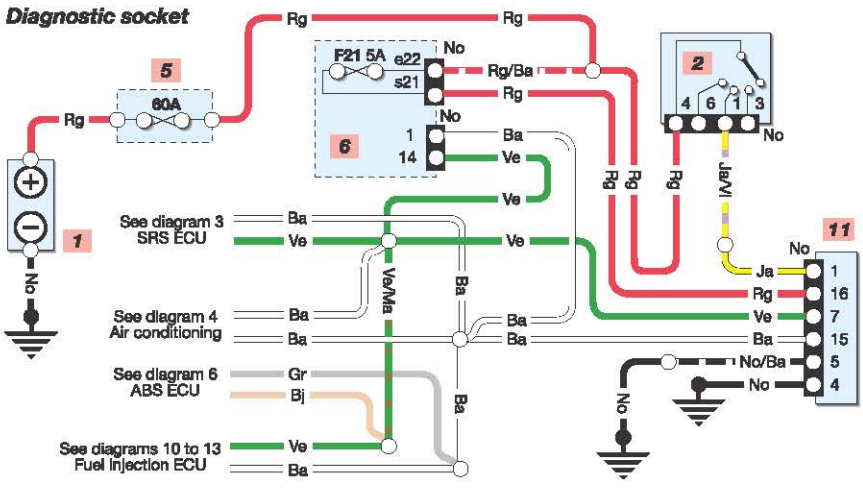

Diagram 3

Wire colours

Ba	White	**No**	Black
Be	Blue	**Or**	Orange
Bj	Beige	**Rg**	Red
Cy	Clear	**Sa**	Pink
Gr	Grey	**Ve**	Green
Ja	Yellow	**Vi**	Mauve
Ma	Brown		

Key to items

1 Battery
2 Ignition switch
5 Engine fusebox
6 Passenger fuse/relay/ multi-timer unit
12 Engine relay unit
e = power steering relay
f = fuel filter heater relay
15 Power steering electric pump
16 SRS control unit
17 Driver's seatbelt pretensioner
18 Passenger's seatbelt pretensioner
19 Driver's airbag
20 Passenger's airbag
21 Horn/light switch
a = horn
b = side/headlight
22 Horn
23 Cigar lighter
24 Fuel filter heater element
25 Heater blower assembly
26 Heater blower switch
a = blower switch
27 Interior lighting rheostat

H32310

Safety restraint system

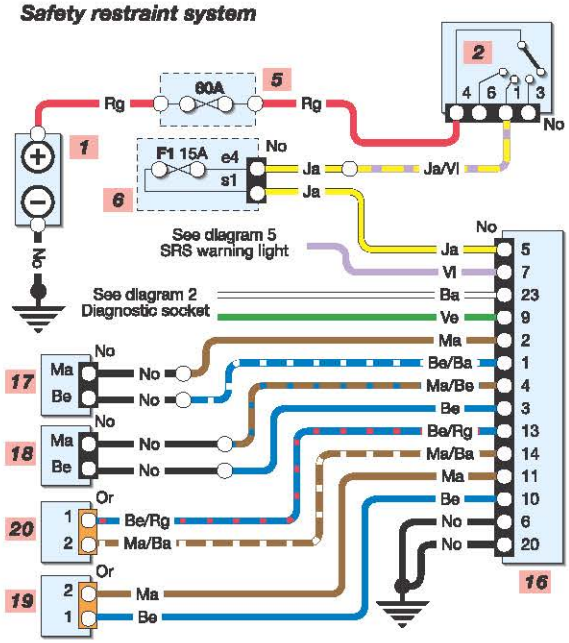

Cigar lighter

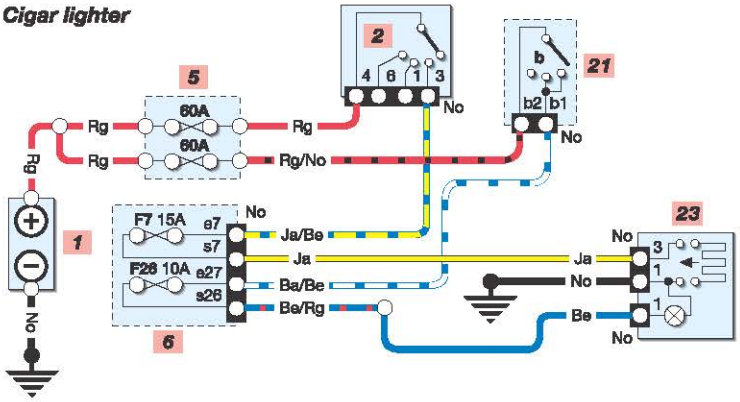

Diesel fuel filter heater

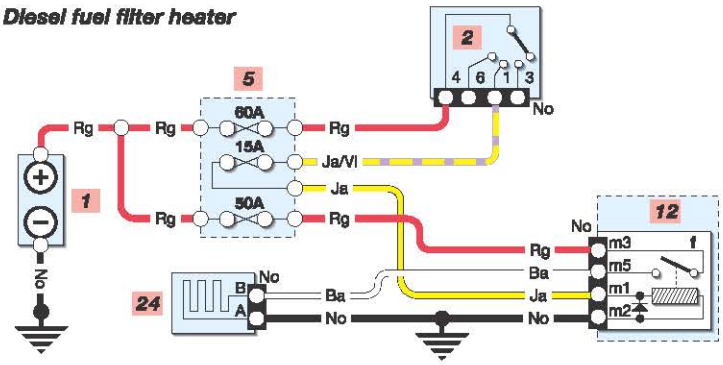

Electric power steering

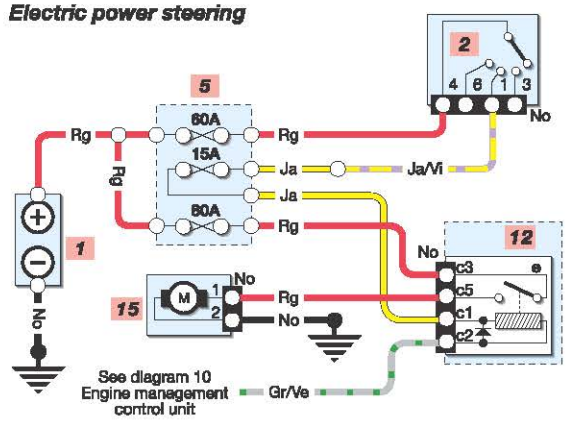

Heater blower (models without A/C)

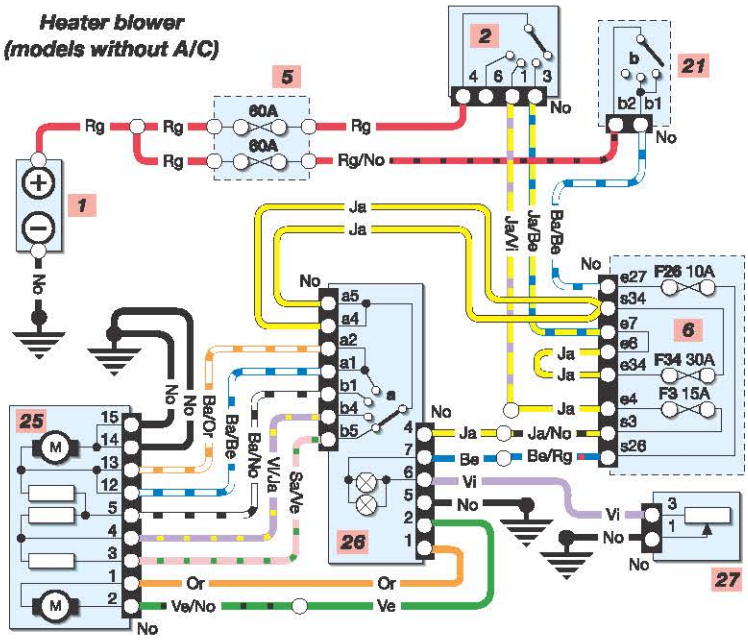

Horn

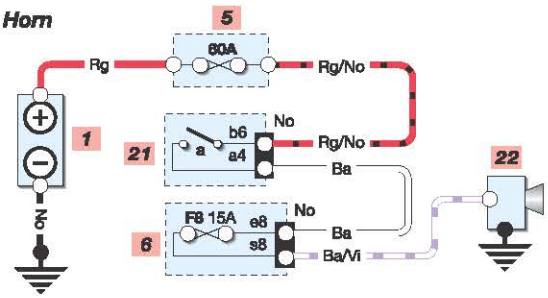

Diagram 4

Wire colours

Ba	White	**No**	Black
Be	Blue	**Or**	Orange
Bj	Beige	**Rg**	Red
Cy	Clear	**Sa**	Pink
Gr	Grey	**Ve**	Green
Ja	Yellow	**Vi**	Mauve
Ma	Brown		

Key to items

1 Battery
2 Ignition switch
5 Engine fusebox
6 Passenger fuse/relay/ multi-timer unit
21 Horn/light switch
b = side/headlight
25 Heater blower assembly
26 Heater blower switch
a = blower switch
b = a/c switch
c = recirculation switch
d = heated rear window switch
e = heated rear window indicator
f = recirculation indicator
g = a/c indicator
27 Interior lighting rheostat
30 Air conditioning monitoring unit
31 Air conditioning three function pressure switch
32 Air conditioning clutch

H32311

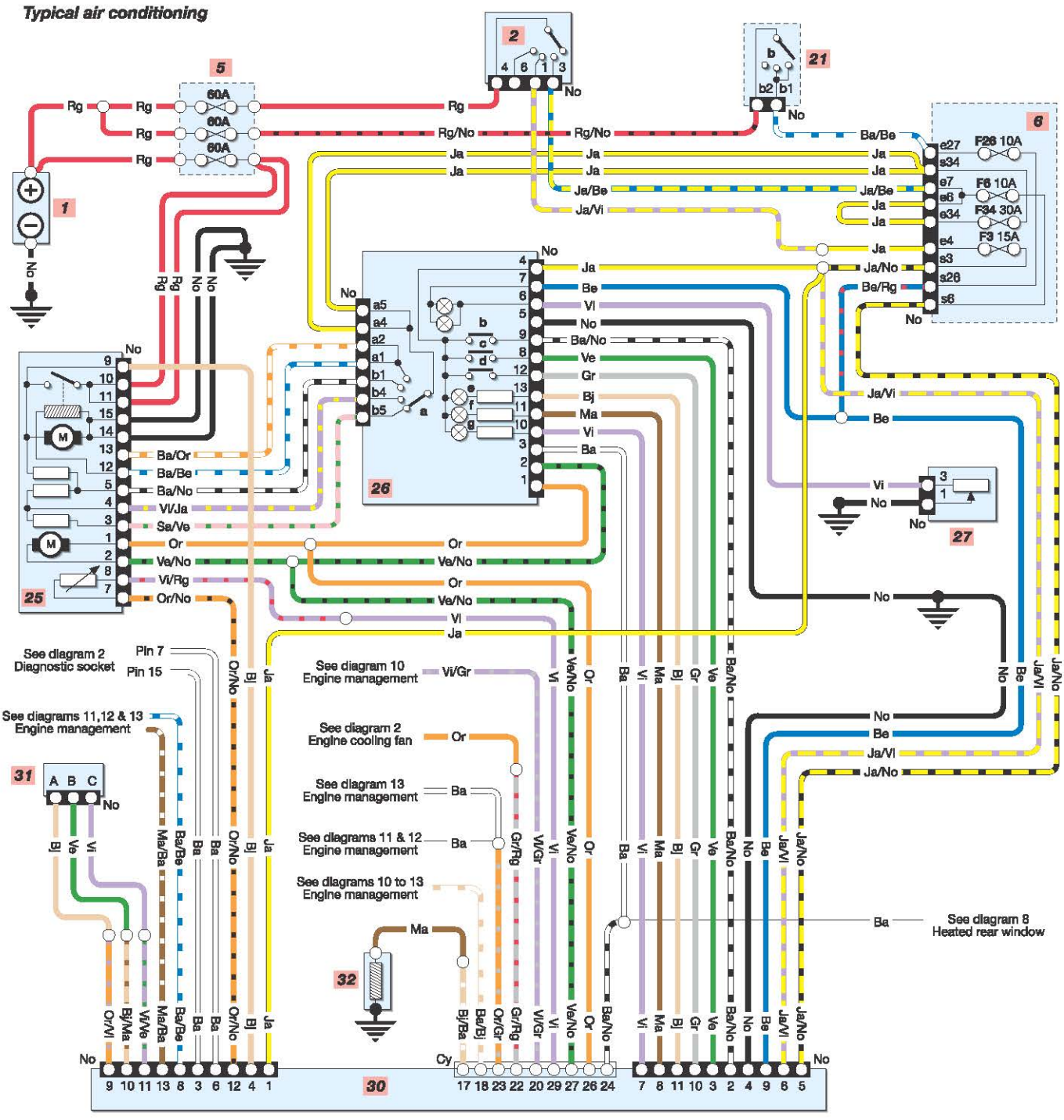

Diagram 5

Wire colours

Ba	White	**No**	Black
Be	Blue	**Or**	Orange
Bj	Beige	**Rg**	Red
Cy	Clear	**Sa**	Pink
Gr	Grey	**Ve**	Green
Ja	Yellow	**Vi**	Mauve
Ma	Brown		

① Diesel models

Key to items

1 Battery
2 Ignition switch
5 Engine fusebox
6 Passenger fuse/relay/multi-timer unit
21 Horn/light switch
b = side/headlight
27 Interior lighting rheostat
35 Instrument cluster
a = fuel gauge
b = immobiliser warning light
c = injection warning light
d = alternator warning light
e = low fuel warning light
f = high temp. warning light
g = oil pressure warning light

35 Instrument cluster continued
h = rear foglight warning light
i = front foglight warning light
j = RH indicator warning light
k = LH indicator warning light
l = dipped beamwarning light
m = main beam warning light
n = seat belt warning light
o = glow plug warning light
p = SRS warning light
r = door ajar warning light
s = instrument illumination
t = temp. gauge
u = pad wear warning light
v = ABS warning light
w = brake system warning light

35 Instrument cluster continued
x = tachometer
y = speedometer
z = oil level gauge
a1 = trip computer
36 Fuel gauge sender unit/fuel pump
37 Oil pressure switch
38 Seat belt switch
39 Coolant temp. sensor/temp. switch
40 Pad wear sensor
41 Brake fluid level switch
42 Handbrake switch
43 Oil level sensor
44 Windscreen wash/wipe switch
a = trip computer reset button

H32312

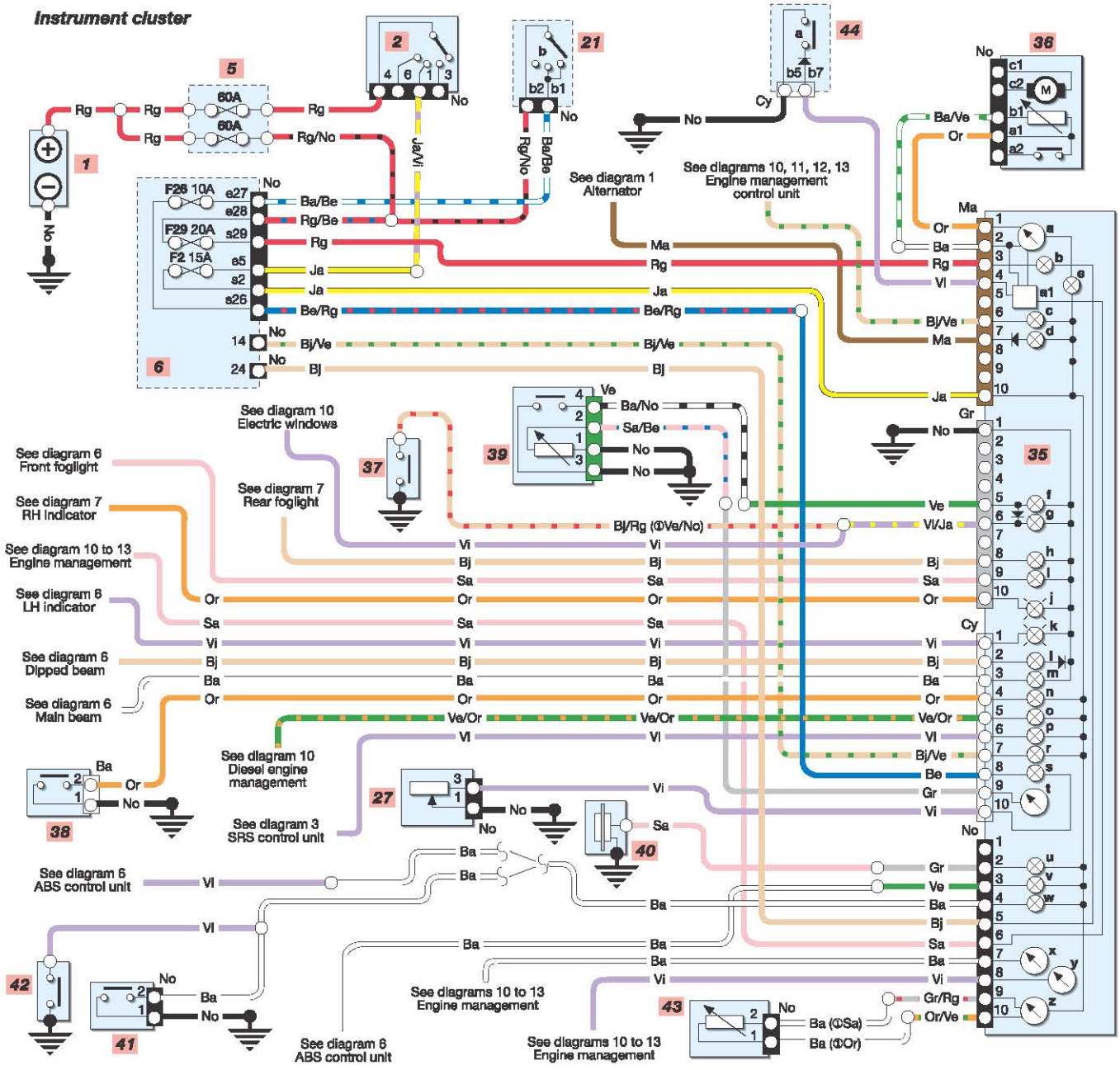

Wire colours

Ba	White	**No**	Black
Be	Blue	**Or**	Orange
Bj	Beige	**Rg**	Red
Cy	Clear	**Sa**	Pink
Gr	Grey	**Ve**	Green
Ja	Yellow	**Vi**	Mauve
Ma	Brown		

Key to items

1 Battery
2 Ignition switch
5 Engine fusebox
6 Passenger fuse/relay unit
a = front foglight relay
21 Horn/light switch
b = side/headlight
c = front foglight
d = headlight flasher
27 Interior lighting rheostat
46 ABS control unit
47 LH front wheel sensor
48 RH front wheel sensor
49 LH rear wheel sensor
50 RH rear wheel sensor
51 Clock/external temp. display (depending upon equipment)
52 Clock/external temp./radio display (depending upon equipment)
53 Passenger mirror assembly (outside air temp. sensor)
54 LH sidelight
55 RH sidelight
56 LH headlight
57 RH headlight
58 LH rear light unit
a = tail light
59 RH rear light unit
a = tail light
60 Number plate light
61 LH front foglight
62 RH front foglight

Diagram 6

H32313

Anti-lock brakes

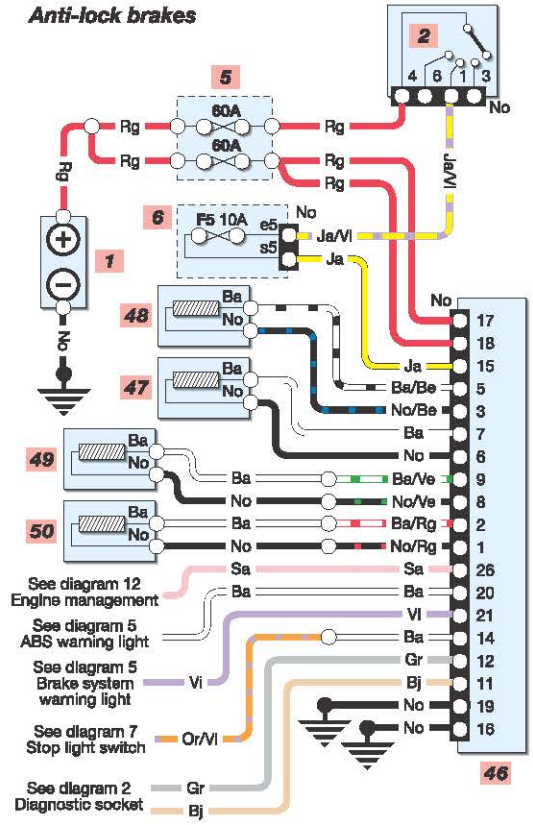

Clock and external temperature gauge

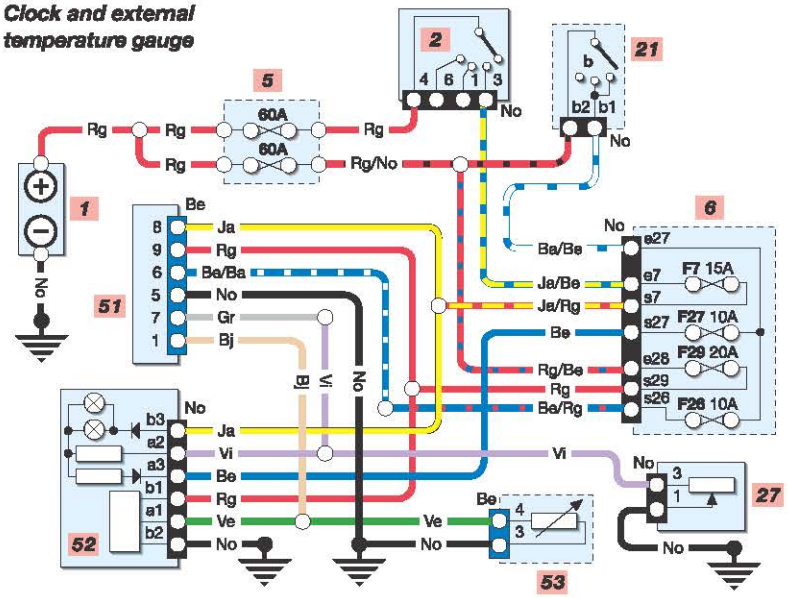

Front foglight

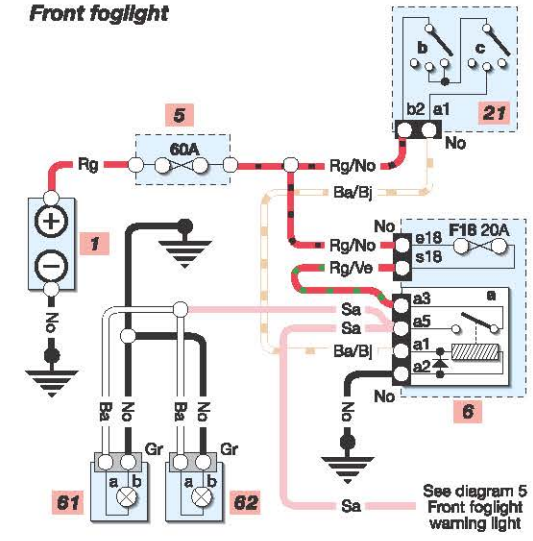

Side, tail, number plate and headlights

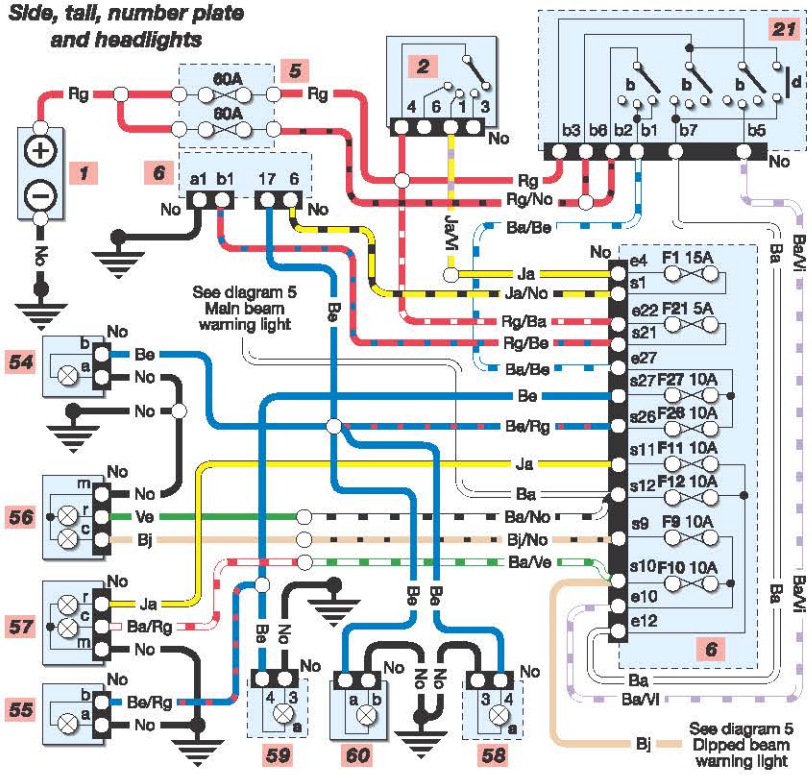

Wire colours

Ba	White	**No**	Black
Be	Blue	**Or**	Orange
Bj	Beige	**Rg**	Red
Cy	Clear	**Sa**	Pink
Gr	Grey	**Ve**	Green
Ja	Yellow	**Vi**	Mauve
Ma	Brown		

Key to items

Diagram 7

1 Battery
2 Ignition switch
5 Engine fusebox
6 Passenger fuse/relay/ /multi-timer unit
21 Horn/light switch
b = side/headlight
d = rear foglight
e = direction indicator
56 LH headlight
57 RH headlight
58 LH rear light unit
b = reversing light
c = stop light
d = direction indicator
e = foglight
59 RH rear light unit
b = reversing light
c = stop light
d = direction indicator
65 High level stop light
66 Reversing light switch (manual transmission)
67 Automatic transmission module
68 Automatic transmission control unit
69 Stop light switch
70 LH front indicator
71 RH front indicator
72 LH front indicator side repeater
73 RH front indicator side repeater
74 Hazard warning light switch
75 Headlight levelling control
76 LH headlight levelling motor
77 RH headlight levelling motor

H22314

Direction indicators and hazard warning light

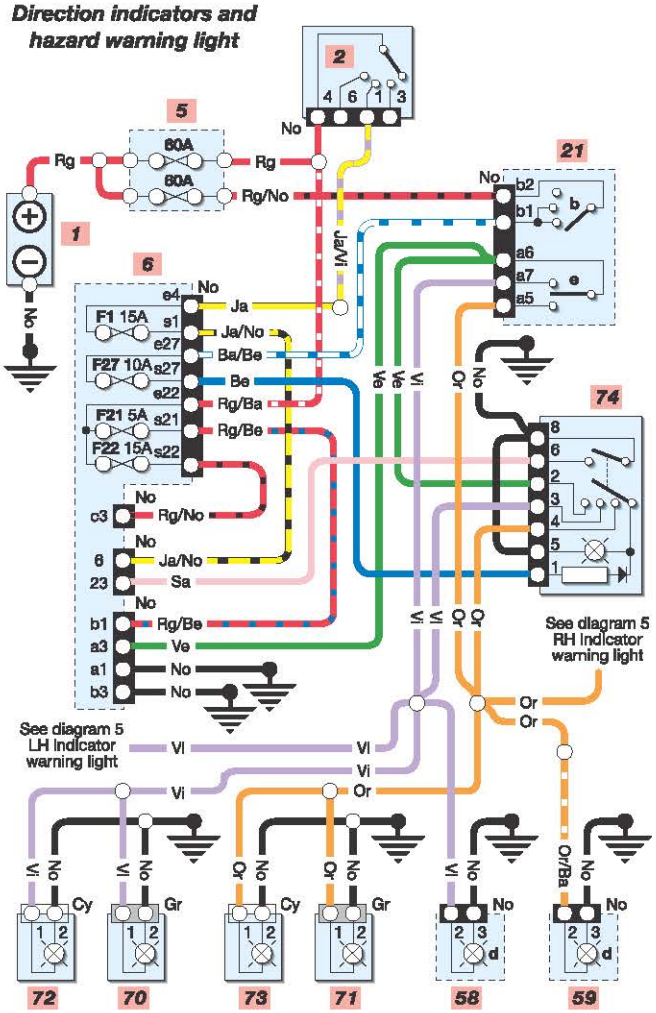

Stop and reversing lights

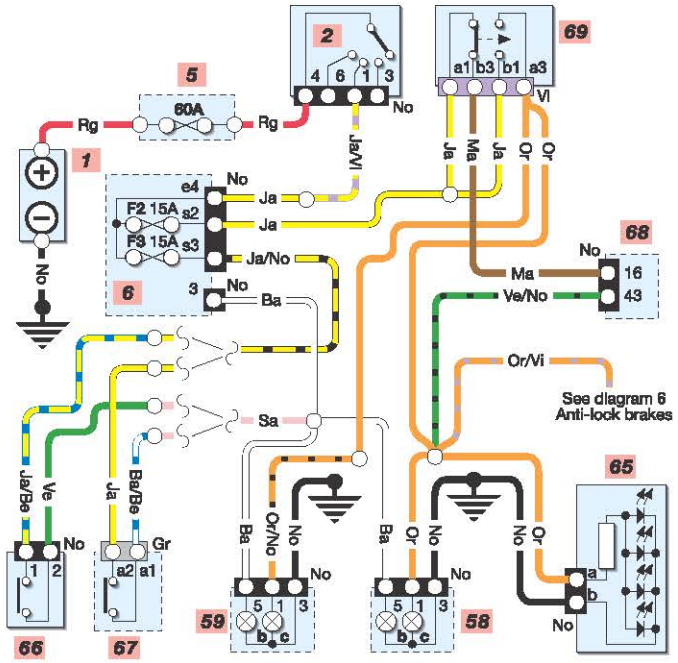

Headlight levelling

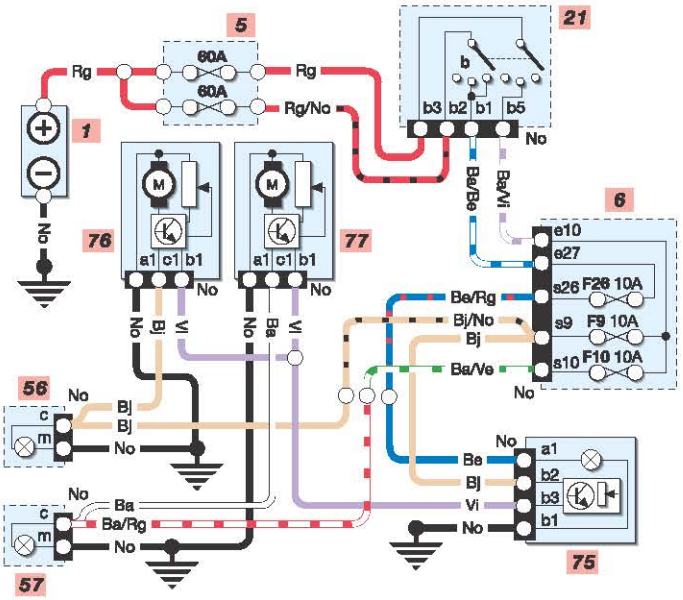

Rear foglight

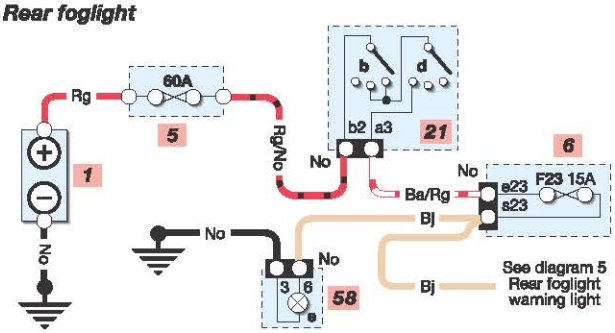

Wire colours

Ba	White	**No**	Black
Be	Blue	**Or**	Orange
Bj	Beige	**Rg**	Red
Cy	Clear	**Sa**	Pink
Gr	Grey	**Ve**	Green
Ja	Yellow	**Vi**	Mauve
Ma	Brown		

Key to items

1	Battery
2	Ignition switch
5	Engine fusebox
6	Passenger fuse/relay/ /multi-timer unit b = heated rear window relay
44	Windscreen wash/wipe switch b = front wiper c = rear wash/wipe d = front washer
80	Infra-red receiver (if fitted)
81	Luggage compartment light
82	Luggage compartment light switch
83	Front courtesy light
84	Driver's door switch
85	Passenger's door switch
86	LH rear door switch
87	RH door switch
88	Front wiper motor
89	Rear wiper motor
90	Washer pump
91	Headlight washer pump
92	Headlight washer pump relay
93	Heated rear window

Diagram 8

H32315

Interior light and luggage compartment light

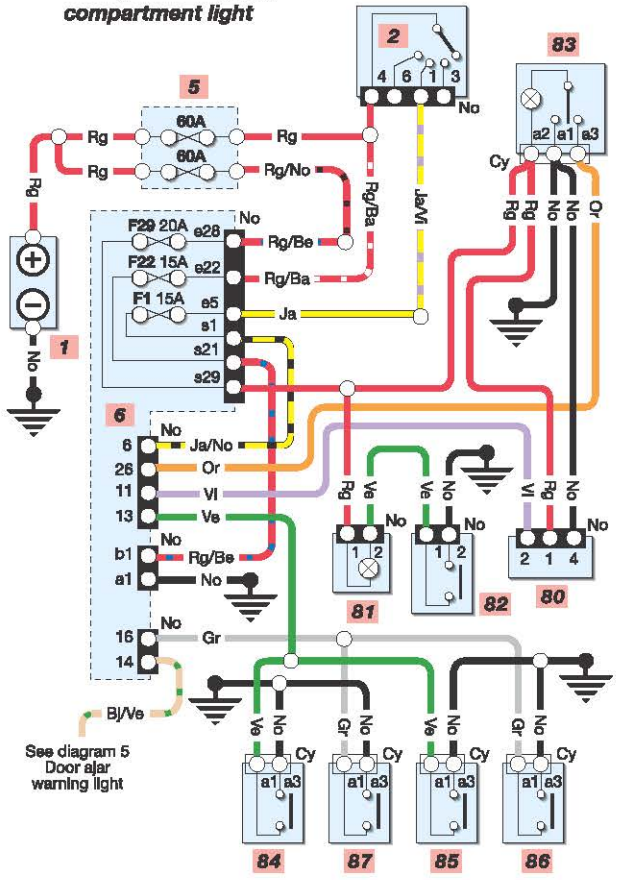

Front and rear wash/wipe

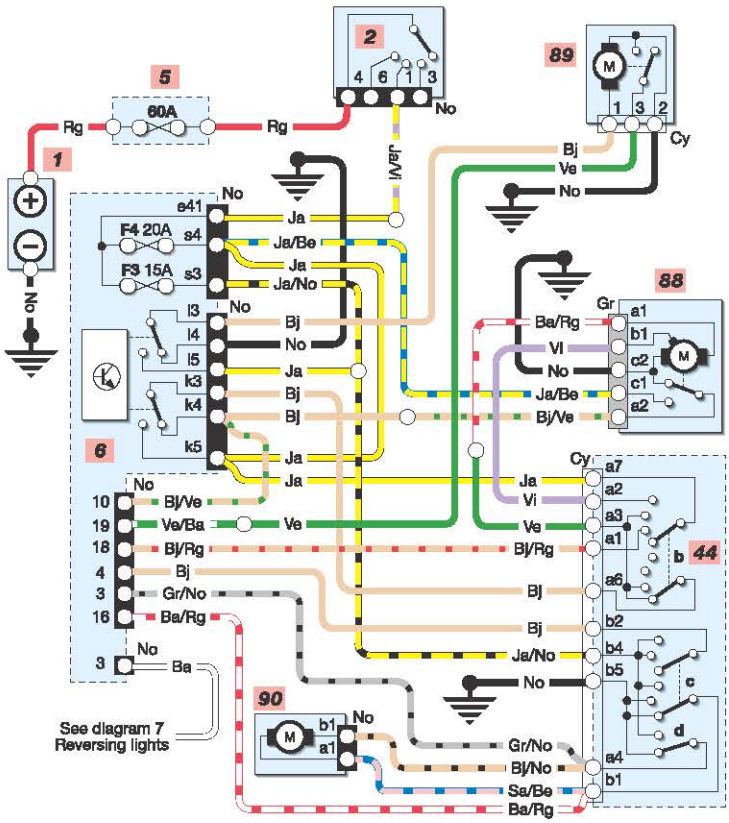

Heated rear window

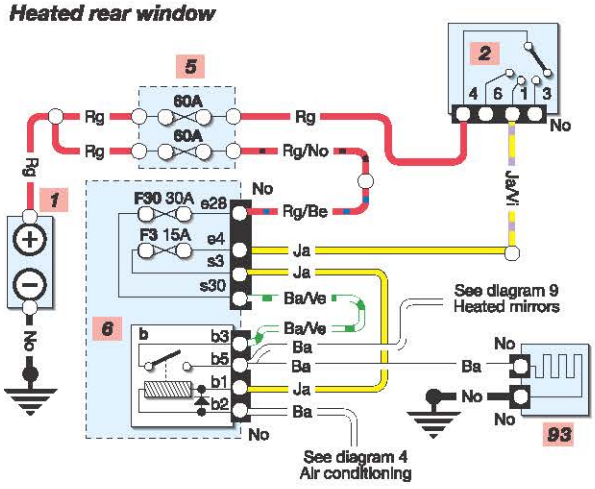

Headlight washers

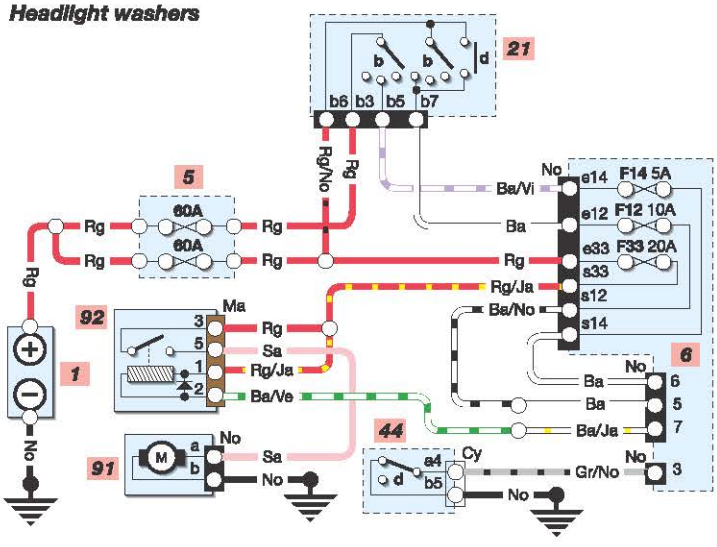

Wire colours

Ba	White	**No**	Black
Be	Blue	**Or**	Orange
Bj	Beige	**Rg**	Red
Cy	Clear	**Sa**	Pink
Gr	Grey	**Ve**	Green
Ja	Yellow	**Vi**	Mauve
Ma	Brown		

Key to items

1	Battery
2	Ignition switch
5	Engine fusebox
6	Passenger fuse/relay /multi-timer unit
21	Horn/light switch b = side/headlight
53	Passenger mirror assembly
80	Infra-red receiver
95	Mirror switch
96	Driver mirror assembly
97	Audio unit
98	LH front speaker
99	RH front speaker
100	LH front tweeter
101	RH front tweeter
102	Door lock switch
103	Tailgate lock motor
104	LH rear door lock motor
105	RH rear door lock motor
106	Driver's door lock motor
107	Passenger's door lock motor
108	Sunroof motor

Diagram 9

H32316

Electric mirrors

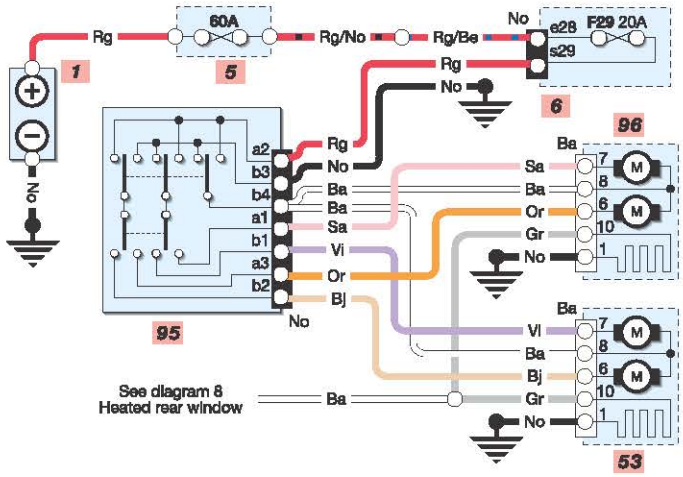

Audio system

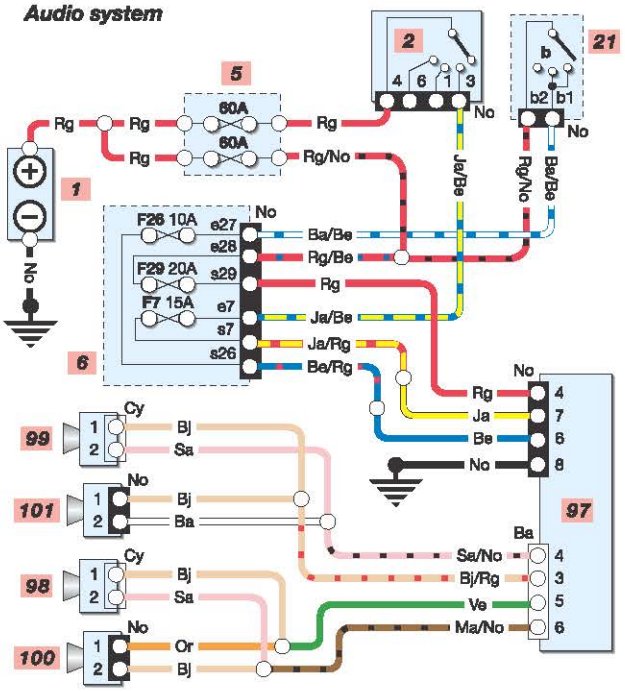

Central locking

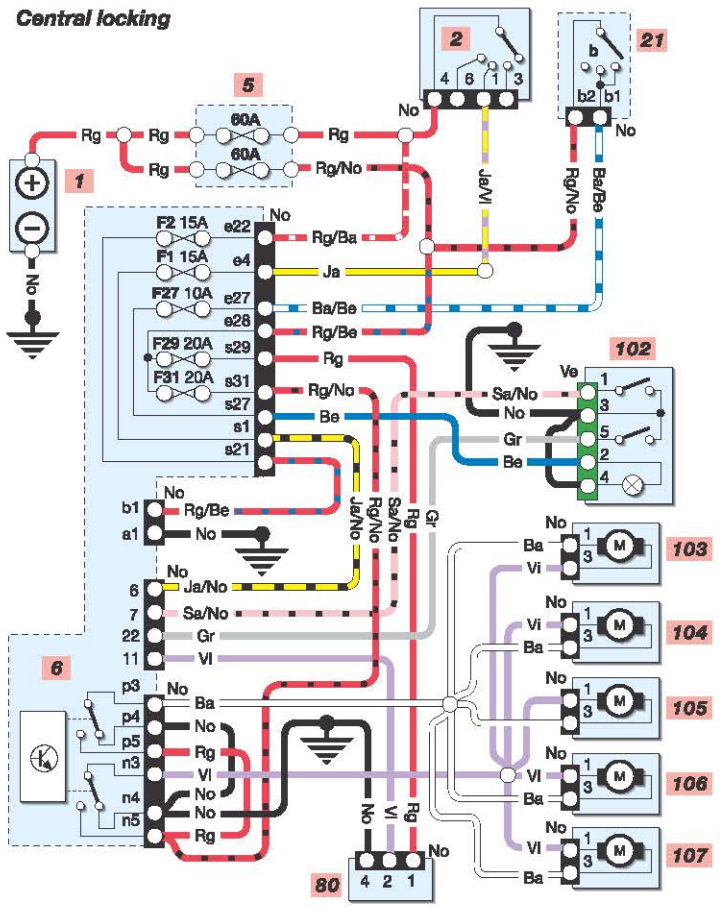

Electric sunroof

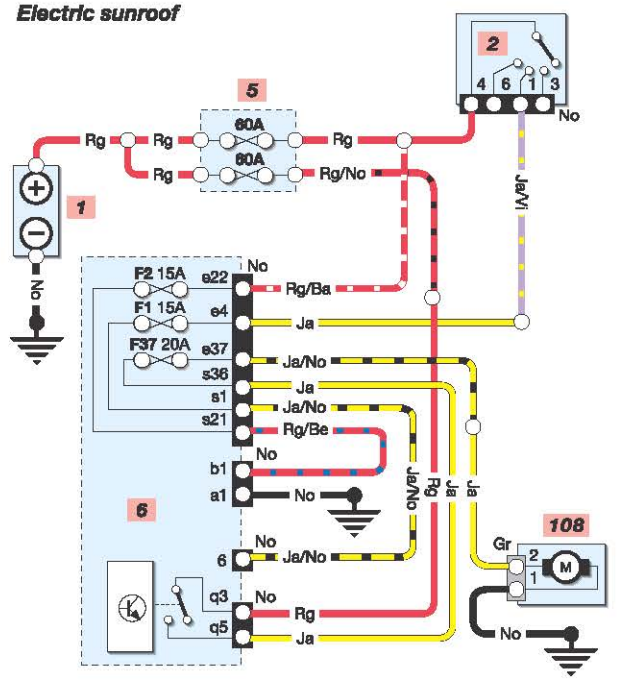

Wire colours

Ba	White	**No**	Black
Be	Blue	**Or**	Orange
Bj	Beige	**Rg**	Red
Cy	Clear	**Sa**	Pink
Gr	Grey	**Ve**	Green
Ja	Yellow	**Vi**	Mauve
Ma	Brown		

Key to items

Diagram 10

1 Battery
2 Ignition switch
5 Engine fusebox
6 Passenger fuse/relay/ /multi-timer unit
12 Engine compartment relay unit
b = injection locking relay
g = altitude relay
21 Horn/light switch
b = side/headlight
84 Driver's door switch
85 Passenger's door switch
110 Driver's window motor
111 Passenger's window motor
112 Driver's window switch
113 Driver's switch for passenger window
114 Passenger's window switch
115 Engine management control unit
116 Pre-heater unit
117 Glow plugs
118 Speed sensor
119 Inertia switch
120 Pump unit
a = boost compensator
b = immobiliser
c = throttle potentiometer
d = advance solenoid
121 EGR solenoid valve
122 Fast idle solenoid valve
123 Needle lift sensor
124 Speed threshold sensor
125 Air temp. sensor
126 Coolant temp. sensor

H32317

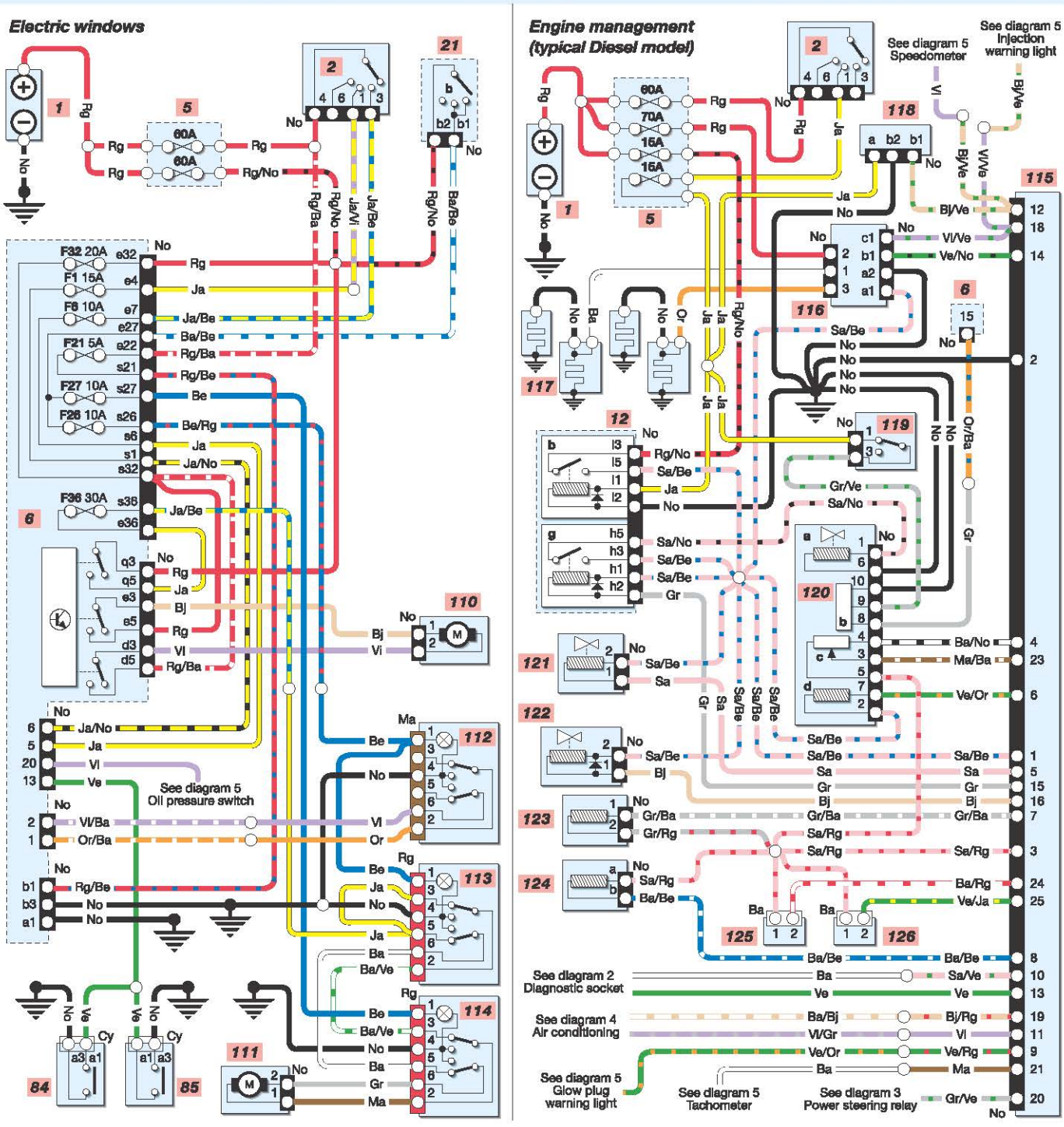

Diagram 11

Wire colours

Ba	White	**No**	Black
Be	Blue	**Or**	Orange
Bj	Beige	**Rg**	Red
Cy	Clear	**Sa**	Pink
Gr	Grey	**Ve**	Green
Ja	Yellow	**Vi**	Mauve
Ma	Brown		

Key to items

1 Battery
2 Ignition switch
5 Engine fusebox
6 Passenger fuse/relay/ /multi-timer unit
12 Engine compartment relay unit
b = injection locking relay
h = fuel pump relay
36 Fuel gauge sender unit/fuel pump
115 Engine management control unit
118 Speed sensor
119 Inertia switch
124 Speed threshold sensor
125 Air temp. sensor
126 Coolant temp. sensor
130 Ignition coil module
131 Suppressor
132 Fuel injector
133 Throttle unit
134 Power steering pressure switch
135 Knock sensor
136 MAP sensor
137 Oxygen sensor
138 EVAP valve
139 Throttle potentiometer

H32318

Fuel injection (typical D7F 720 model)

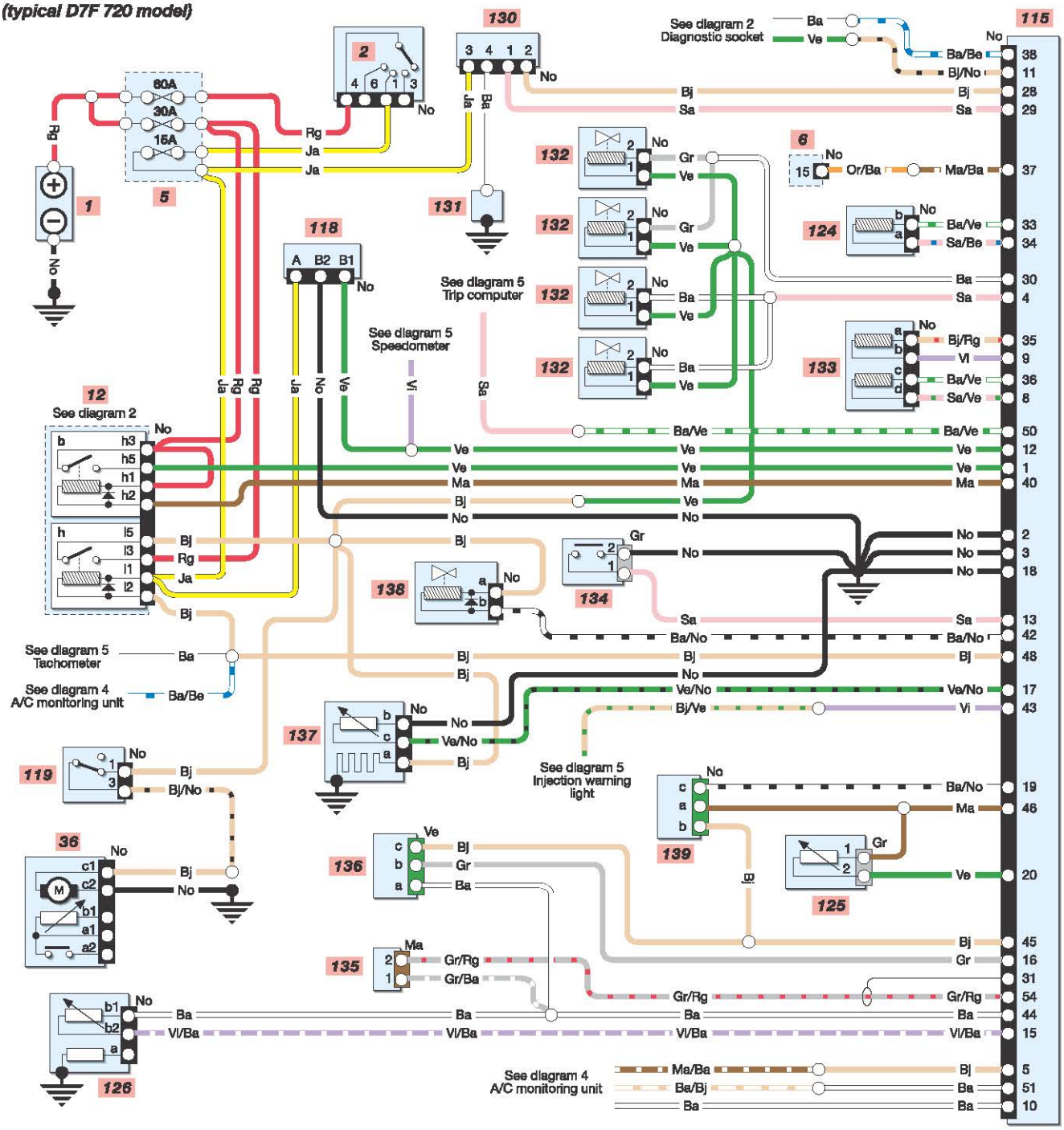

Wire colours

Ba	White	**No**	Black
Be	Blue	**Or**	Orange
Bj	Beige	**Rg**	Red
Cy	Clear	**Sa**	Pink
Gr	Grey	**Ve**	Green
Ja	Yellow	**Vi**	Mauve
Ma	Brown		

Key to items

1 Battery
2 Ignition switch
5 Engine fusebox
6 Passenger fuse/relay/ /multi-timer unit
12 Engine compartment relay unit
b = injection locking relay
h = fuel pump relay
36 Fuel gauge sender unit/fuel pump
115 Engine management control unit
118 Speed sensor
119 Inertia switch
124 Speed threshold sensor
125 Air temp. sensor
126 Coolant temp. sensor
130 Ignition coil module
131 Suppressor
132 Fuel injector
133 Throttle unit
134 Power steering pressure switch
135 Knock sensor
136 MAP sensor
137 Oxygen sensor
138 EVAP valve
139 Throttle potentiometer

Diagram 12

H32319

Fuel injection (typical D7F 726 model)

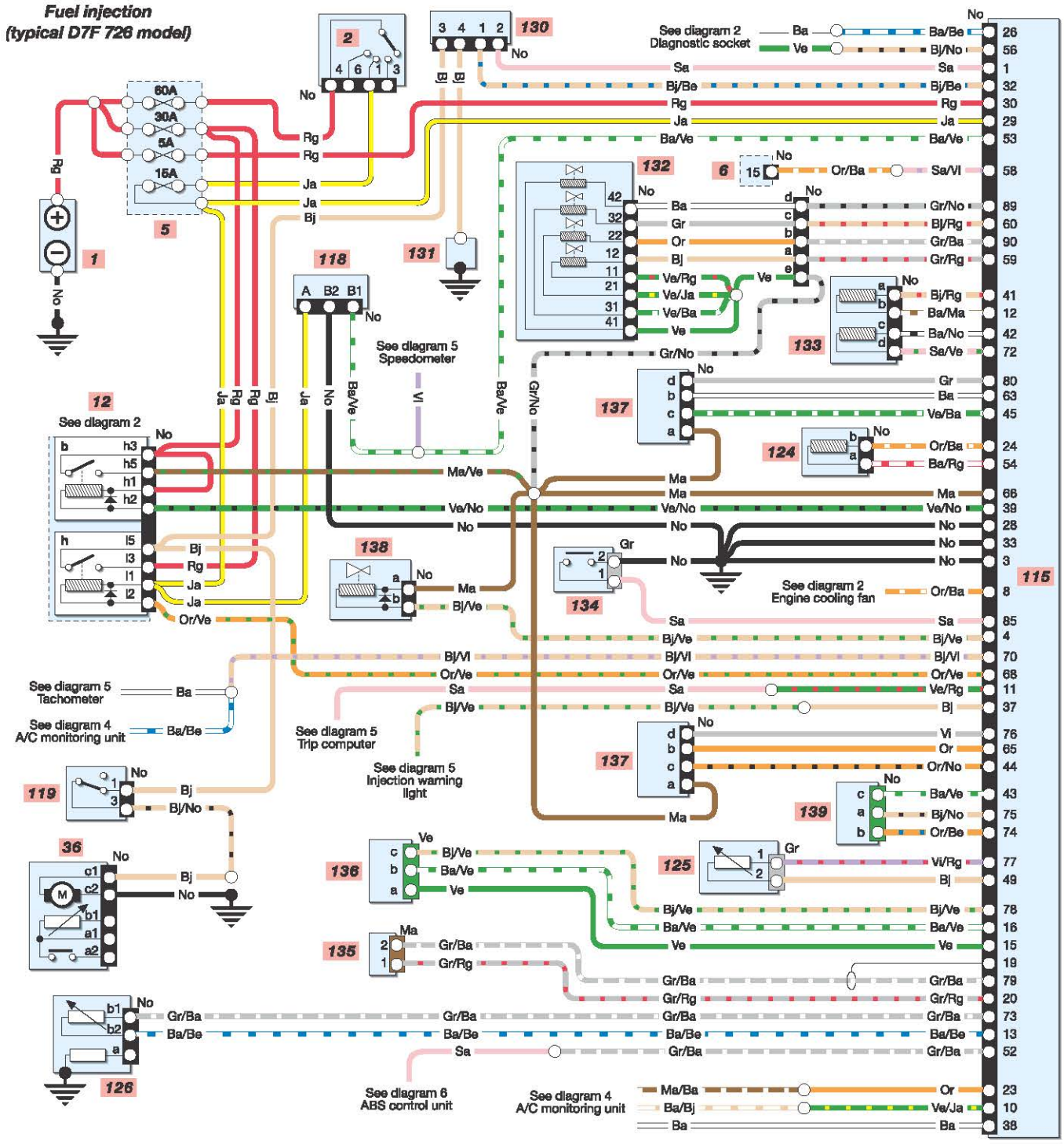

Wire colours

Ba	White	**No**	Black
Be	Blue	**Or**	Orange
Bj	Beige	**Rg**	Red
Cy	Clear	**Sa**	Pink
Gr	Grey	**Ve**	Green
Ja	Yellow	**Vi**	Mauve
Ma	Brown		

Key to items

1 Battery
2 Ignition switch
5 Engine fusebox
6 Passenger fuse/relay/ /multi-timer unit
12 Engine compartment relay unit
b = injection locking relay
h = fuel pump relay
36 Fuel gauge sender unit/fuel pump
115 Engine management control unit
118 Speed sensor
119 Inertia switch
124 Speed threshold sensor
125 Air temp. sensor
126 Coolant temp. sensor
131 Suppressor
132 Fuel Injector
133 Throttle unit
134 Power steering pressure switch
135 Knock sensor
136 MAP sensor
137 Oxygen sensor
138 EVAP valve
139 Throttle potentiometer
140 Ignition coil

Diagram 13

H32320

Fuel injection (typical E7J 780/K7M 744 models)

