Workshop Manual

Alhambra 2011 ➤ , Altea 2004 ➤ ,
Altea 2009 ➤ , Altea XL 2007 ➤ ,
Altea XL 2009 ➤ ,
Altea XL Freetrack 2008 ➤ ,
Altea XL Freetrack 2009 ➤ ,
Córdoba 2003 ➤ , Exeo 2009 ➤ ,
Exeo ST 2009 ➤ , Ibiza 2002 ➤ ,
Ibiza 2008 ➤ , Ibiza ST 2010 ➤ ,
León 2006 ➤ , León 2009 ➤ ,
Toledo 2005 ➤ , Toledo 2009 ➤

Rims and tyres:

Edition 06.2011

Protected by copyright. Copying for private or commercial purposes, in part or in whole, is not permitted unless authorised by SEAT S.A. SEAT S.A does not guarantee or accept any liability with respect to the correctness of information in this document. Copyright by SEAT S.A.

List of Workshop Manual Repair Groups

Repair Group

44 - Wheels, tyres, vehicle geometry

Protected by copyright. Copying for private or commercial purposes, in part or in whole, is not permitted unless authorised by SEAT S.A. SEAT S.A does not guarantee or accept any liability with respect to the correctness of information in this document. Copyright by SEAT S.A.

Technical information should always be available to the foremen and mechanics, because their careful and constant adherence to the instructions is essential to ensure vehicle road-worthiness and safety. In addition, the normal basic safety precautions for working on motor vehicles must, as a matter of course, be observed.

All rights reserved.
No reproduction without prior agreement from publisher.

Copyright © 2015 Seat S.A

Contents

44 - Wheels, tyres, vehicle geometry 1
1 General information about wheel rims and tyres 1
2 Legal and technical conditions for modifying wheel rim and tyre combinations 2
2.1 Legal conditions for modifying wheel rim and tyre combinations 2
2.2 Technical conditions for modifying wheel rim and tyre combinations 3
2.3 Legal regulations for disposal of old tyres 3
3 Vehicle documents 4
3.1 TÜV certificate and vehicle registration 4
3.2 COC-Document (EC certificate of conformity 4
3.3 Determining the version code of the vehicle 4
3.4 Official designation of model types 5
4 Facts about tyres 6
4.1 Markings on tyre sidewall 6
4.2 Explanation of tyre markings 7
4.3 Percent of speed-dependent loading capacity 8
4.4 Speed symbol on tyres 9
4.5 Tyres with speed index code letter V 9
4.6 V-tyres with extra load (XL) specification/reinforced 10
4.7 Ripples in sidewall 10
4.8 Tyre storage 11
4.9 Ageing of tyres 11
4.10 Tyres with different tread 12
4.11 Tyres with special bead for starting 13
4.12 Winter tyres 13
4.13 All-season tyres 15
4.14 Snow chains 15
5 Wear/performance characteristics of tyres (passenger cars) 18
5.1 General information 18
5.2 Tyre properties 18
5.3 Wear on high-speed tyres 18
5.4 Factors influencing the useful life of tyres 19
5.5 Driving style 19
5.6 Tyre maintenance 20
5.7 Uniformly worn tyres 21
5.8 Measuring tread depth 22
5.9 Lateral wear 22
5.10 Wear of the outer shoulder 25
5.11 Centre wear 25
5.12 Diagonal wear 26
6 Tyre rolling noises 27
6.1 General information 27
6.2 Saw-tooth tread wear 28
6.3 Locking points 28
7 Imbalance when driving due to the wheels / tyres 30
7.1 Causes of rough running 30
7.2 Balancing wheels 30
7.3 Test drive prior to balancing 30
7.4 Balancing on a static wheel balancer 31
7.5 Vibration control system VAS 6230 32
7.6 Balancing with a Finish Balancer 33
7.7 Wheel (rim and tyre) radial and axial run-out 34
7.8 Radial and axial rim eccentricity: 34

SEAT
Protected by copyright. Copying for private or commercial purposes, in part or in whole, is not permitted unless authorised by SEAT S.A. SEAT S.A does not guarantee or accept any liability with respect to the correctness of information in this document. Copyright by SEAT S.A.
erWin

7.9 Match balancing . . . 35
7.10 Flat spots caused by storage or handling . . . 36
8 Vehicle pulls to one side . . . 38
8.1 General information . . . 38
8.2 Conicity . . . 38
8.3 Remedy for pulling to one side . . . 39
8.4 Selective interchange of wheels fitted with tyres without specified direction of travel. . . . 40
8.5 Specific replacement of wheels for tyres with prescribed direction of rotation and/or asymmetric tyres . . . 41
9 Tyre damage . . . 43
9.1 General notes . . . 43
9.2 Structure of a radial tyre . . . 43
9.3 Damage from impacts . . . 44
9.4 Cuts . . . 46
9.5 Damage from foreign bodies . . . 46
9.6 Damage due to age . . . 47
9.7 Scraping: . . . 48
9.8 Loss in tyre pressure . . . 48
9.9 Tyre pressure . . . 48
9.10 Damage to tyres as a result of under inflation . . . 49
9.11 Increase in temperature of an underinflated tyre . . . 50
9.12 Tyre damage resulting from mounting errors . . . 51
10 Run flat tyres (tyres with emergency running characteristics) . . . 53
10.1 General information . . . 53
10.2 Tyres with emergency running characteristics SST/runflat (self-supporting tyre) . . . 54
10.3 Retrofitting/prerequisites for use of tyres with emergency running characteristics . . . 56
10.4 Tyre pressure monitor (TPM+) . . . 56
10.5 Repair . . . 57
11 Self-sealing tyre „ContiSeal“ . . . 58
11.1 Explanation of the ContiSeal tyre . . . 58
11.2 Handling the ContiSeal tyres . . . 59
12 Important information on rims . . . 60
12.1 General notes . . . 60
12.2 Layout of a wheel rim . . . 60
12.3 Specifications on disk wheels . . . 61
12.4 Care and maintenance of light alloy wheel rims . . . 62
12.5 Repair of light alloy rims . . . 62
12.6 The valve . . . 63
13 Alternative systems for spare tyre . . . 64
13.1 Instructions for the use of emergency wheels . . . 64
13.2 Instructions for the use of breakdown repair kit . . . 64
14 Mounting wheels . . . 66
14.1 Interchanging wheels . . . 66
14.2 Instructions for changing/fitting wheels . . . 66
15 Technical data on wheels for SEAT vehicle models . . . 68
16 Technical data on wheels for Altea 2004 . . . 69
17 Technical data on wheels for Altea 2009 . . . 71
18 Technical data on wheels for Altea XL 2007 . . . 73
19 Technical data on wheels for Altea XL 2009 . . . 75
20 Technical data on wheels for Altea XL Freetrack 2008 . . . 77
21 Technical data on wheels for Altea XL Freetrack 2009 . . . 78
22 Technical data on wheels for Leon 2006 . . . 80
23 Technical data on wheels for Leon 2009 . . . 82

Protected by copyright. Copying for private or commercial purposes, in part or in whole, is not permitted unless authorised by SEAT S.A. SEAT S.A. does not guarantee or accept any liability with respect to the correctness of information in this document. Copyright by SEAT S.A.

24 Technical data on wheels for Toledo 2005 85
25 Technical data on wheels for Toledo 2009 87
26 Technical data on wheels for Ibiza 2002 89
27 Technical data on wheels for Cordoba 2003 92
28 Technical data on wheels for Ibiza 2008, Ibiza ST 2010 94
29 Technical data on wheels for Exeo 2009, Exeo ST 2009 97
30 Technical wheel data for Alhambra 2011 99
31 Emergency tyres and rim for SEAT vehicles 101
32 Recommended conventional tyres or summer tyres for SEAT vehicle 102
32.1 Conventional tyres or summer tyres for Altea 2004 102
32.2 Conventional tyres or summer tyres for Altea 2009 103
32.3 Conventional tyres or summer tyres for Altea XL 2007 103
32.4 Conventional tyres or summer tyres for Altea XL 2009 104
32.5 Conventional tyres or summer tyres for Altea XL Freetrack 2008 104
32.6 Conventional tyres or summer tyres for Altea XL Freetrack 2009 105
32.7 Conventional tyres or summer tyres for Leon 2006 105
32.8 Conventional tyres or summer tyres for Leon 2009 106
32.9 Conventional tyres or summer tyres for Toledo 2005 107
32.10 Conventional tyres or summer tyres for Toledo 2009 107
32.11 Conventional tyres or summer tyres for Ibiza 2002 108
32.12 Conventional tyres or summer tyres for Cordoba 2003 109
32.13 Conventional tyres or summer tyres for Ibiza 2008, Ibiza 2010 109
32.14 Conventional tyres or summer tyres for Exeo 2009, Exeo ST 2009 110
32.15 Conventional tyres or summer tyres for Alhambra 2011 110
33 Recommended all-season tyre) for SEAT vehicles 111

Protected by copyright. Copying for private or commercial purposes, in part or in whole, is not permitted unless authorised by SEAT S.A. SEAT S.A does not guarantee or accept any liability with respect to the correctness of information in this document. Copyright by SEAT S.A.

Protected by copyright. Copying for private or commercial purposes, in part or in whole, is not permitted unless authorised by SEAT S.A. SEAT S.A does not guarantee or accept any liability with respect to the correctness of information in this document. Copyright by SEAT S.A.

44 – Wheels, tyres, vehicle geometry

1 General information about wheel rims and tyres

This instruction includes updated information above tyres and wheel rims for passenger cars. Subjects such as troubleshooting for tyres, alternative spare tyre systems and special tyres with emergency running features are also listed.

This information is intended to supplement knowledge and experience to make you capable of precise and reliable diagnosis in the event of complaints and on questions regarding tyres and rims. This will allow you to give your customers a clear and precise explanation.

Tyres are high-tech products which have been adapted perfectly to the conditions of use on modern vehicles based on new production processes and continuous quality control.

All tyres used on SEAT vehicles are checked by our technical development department and matched to the specific vehicle model. When changing tyres we recommend using only brands approved by SEAT.

Protected by copyright. Copying for private or commercial purposes, in part or in whole, is not permitted unless authorised by SEAT S.A. SEAT S.A does not guarantee or accept any liability with respect to the correctness of information in this document. Copyright by SEAT S.A.

For maximum traffic safety it is necessary to ensure tyres have balanced characteristics. For this purpose various conditions of use such as speed ranges and maximum speed are matched to the usual ambient conditions and road conditions.

Tyre care is of great importance for guaranteeing traffic safety, driving comfort and performance as well as minimising numerous types of stress to which the tyres are objected during their service life.

Note

The causes for complaints and irregularities on tyres can vary highly. For this purpose it is necessary to determine primarily whether the causes for the specific complaint are the tyres themselves or other vehicle components in the specific vehicle.

It is necessary to take into consideration that the driving characteristics of the tyres change as a result of normal tyre wear. This wear can result in wheel noise or imbalance when driving which cannot be eliminated in certain cases.

Wheel alignment

Adjustment of the wheel alignment is a very important factor for achieving maximum tyre performance. See information concerning alignment in ⇒ Running gear, axles, steering; Rep. gr. 44 .

Mounting and removing tyres

Further information on mounting and removing tyres is given in the guidelines ⇒ Running gear, axles, steering; Rep. gr. 44 .

Mounting and removing tyres with emergency running properties

Further information on mounting and removing tyres with emergency running properties is given in the guidelines ⇒ Running gear, axles, steering; Rep. gr. 44 .

2 Legal and technical conditions for modifying wheel rim and tyre combinations

2.1 Legal conditions for modifying wheel rim and tyre combinations

The rim/tyre combinations used on SEAT vehicles have been matched for the specific models.

> **Caution**
>
> - ***We recommend using only these rim/tyre combinations. Otherwise this poses a hazard for the vehicle safety and traffic safety with corresponding danger of an accident.***
> - ***Any unauthorised modifications of the rim/tyre combinations or to the vehicle invalidate the guarantee. This also applies for all damage caused by such action including damage to other vehicles resulting from such modifications.***

The manufacturer receives a general model approval (TÜV certificate) for the complete vehicle as well as for certain equipment conversion possibilities.

The wheels and tyres may only be changed under certain circumstances. The following points must be taken into consideration:

- When the specific rim/tyre combination is listed in the TÜV certificate together with the load index ⇒ page 7 and speed symbol ⇒ page 7 this rim/tyre combination can be mounted on the vehicle without exception.

It is possible that all approved combinations are not listed in the TÜV certificate according to the „homologation“.

- When the specific rim/tyre combination is not listed in the TÜV certificate, request a certification of „significant retrofit“ from the manufacturer. If the specific combination is already included in the „homologation“ for the vehicle, the manufacturer issues a certificate.
- When the specific rim/tyre combination is not listed in either the TÜV certificate or the „homologation“ it is necessary to request an approval study from the manufacturer. If the manufacturer this combination, it is necessary for this new rim/tyre combination to be included in the TÜV certificate for the vehicle.

Protected by copyright. Copying for private or commercial purposes, in part or in whole, is not permitted unless authorised by SEAT S.A. SEAT S.A. does not guarantee or accept any liability with respect to the correctness of information in this document. Copyright by SEAT S.A.

These points relate to legal regulations applicable in the European Union and are not necessarily complete. Outside the European Union other legal regulations may apply.

The rim/tyre combination recommended by SEAT and approved by the Ministry for Industry Tourism and Commerce for the SEAT vehicles (TÜV certificate) take into consideration the prerequisites which must be observed in this context. The use of Genuine wheel rims on a vehicle to which they have not been assigned is not permitted.

In the event of possible changes to the equipment given in the corresponding lists, the combinations satisfy the requirements of SEAT S.A. in regard to the driving characteristics and driving

safety. They are the result of practical tests performed on the basis of SEAT S.A. recommendations.

2.2 Technical conditions for modifying wheel rim and tyre combinations

- It is not possible to authorise rim and tyre combinations or even the exchange of rim equipment resulting from the trade of accessories.
- The wheel rim/tyre combinations or alternative equipment specified in the charts with the technical data for the wheels on each vehicle ⇒ page 68 refer exclusively to Genuine SEAT wheel rims.
- Tyres with the emergency running properties (for example run-flat system) may be used only on rims with „extended hump“ ⇒ page 55 and in combination with a tyre inflation pressure indicator.
- When using the specified wheel/tyre combinations, the tyre pressures shown should be maintained. The tyre inflation pressure for conventional tyres or summer tyres is indicated on the data sticker on the inside of the fuel tank flap on the vehicle ⇒ Body Repairs; Rep. gr. 00 .
- When the information and conditions on the TÜV certificate are observed, sufficient freedom of motion is guaranteed for the tyres and rims relation to the wheel wells and other parts of the vehicles and brakes under all operating conditions.
- If not otherwise specified, snow chains may only be fitted to the drive wheels. However, in four-wheel drive vehicles only the front wheels should be fitted with snow chains.

2.3 Legal regulations for disposal of old tyres

Regulations for disposal of old tyres

Protected by copyright. Copying for private or commercial purposes, in part or in whole, is not permitted unless authorised by SEAT S.A. SEAT S.A does not guarantee or accept any liability with respect to the correctness of information in this document. Copyright by SEAT S.A.

The purpose of this regulation is to prevent improper disposal of old tyres, provide legal guidelines for production and handling and promote reduction, recycling and other types of utilisation in order to protect the environment.

Producers and owners of old tyres are obligated to return old tyres to the tyre manufacturer for recycling or to an approved disposal point unless they are in a position to properly dispose of them themselves In this case, the legal regulations for old tyre disposal facilities apply.

Storage of old tyres in the facilities of the tyre manufacturer or tyre owner may not exceed a period of one year or a quantity of over 30 tons.

3 Vehicle documents

3.1 TÜV certificate and vehicle registration

TÜV certificate

- This contains all technical data required for registration of a vehicle within Europe. It also contains certain tyre data including the „homologation“.
- It contains the European alpha-numeric code assigned by the technical data so that the TÜV certificate can be recognised easily on the basis of registration documents prescribed in all European countries.

Vehicle registration

- This indicates only the present vehicle owner
- It contains a small portion of the technical vehicle data

The vehicle registration and TÜV certificate should be kept in the vehicle and must be shown to the responsible authorities on request.

The rim/tyre combination specified in the TÜV certificate must not necessarily mounted. All combinations can be mounted which are approved according to the „vehicle homologation“ and European homologation ⇒ page 4 **.**

Approval of a rim/tyre combination not specified in the „homologation“, the TÜV certificate for the European homologation must be confirmed as previously by a modification confirmation issued by the manufacturer ⇒ page 2 .

3.2 COC-Document (EC certificate of conformity

It is necessary for the vehicle manufacturer to apply for a general EU homologation for vehicles in category M1 /passenger cars in general.

The so-called COC (= Certificate of Conformity) is then issued on the basis of this approval.

This document confirms that the vehicle has an EU homologation (model approval according to EU) and can be registered in any EU country without individual registration.

This is issued for all vehicles produced according to the EU homologation.

These vehicles have an EU module plate in the engine compartment.

Protected by copyright. Copying for private or commercial purposes, in part or in whole, is not permitted. Compiled by Seat Technical Training Services, Ltd. Copyright © 2011 Seat Technical Training Services, Ltd. All rights reserved. Copyright © 2011 Seat Technical Training Services, Ltd. All rights reserved.

The COC document contains the EU homologation number and technical data for the vehicle such as emission category and all rim/tyre combinations approved for the vehicle.

A copy of the COC can be requested from the manufacturer.

The COC has the same significance as the homologation documents and should always be kept in the vehicle.

3.3 Determining the version code of the vehicle

The version code can be obtained in the documentation ⇒ page 4 and the European type approval of ⇒ page 4 the vehicle.

Sometimes this code is necessary for requesting certain data, such as the lowest speed code letter.

In the section „Version “ or „Variant“ of the documentation, a code comprising letters and figures is specified. The version code is defined by the letters „E“, „A“, „B“ or „N“.

Example for an Ibiza 2008

- 6J AGFD7AM01230GG SCNBTSX0

3.4 Official designation of model types

All passenger cars registered for highway operation in Spain and European Union (EU) member of countries require a homologation for issue of the vehicle registration documents.

In the European union (EU) member countries this procedure was not used for issue of registration documents for the vehicle previously. Until 31.12.1997, each member state was entitled to issue its own national type approvals according to its own procedures.

Protected by copyright. Copying for private or commercial purposes, in part or in whole, is not permitted unless authorised by SEAT S.A. SEAT S.A does not guarantee or accept any liability with [illegible] this document. Copyright by SEAT S.A.

⇒ page 5 Since 01.01.1998 all passenger vehicles licensed for road use within the European Union must possess type approval according to EU guidelines. Examples of exceptions of vehicles approved for operation in Germany with individual approval certificate.

In this way the same directives are applicable to all automobile manufacturers. This makes trading across borders of the countries within the EU easier.

Official model designation, sales or commercial designation

All SEAT vehicles which already have an EU homologation are listed in the table below.

Official designation of EU models	Sales or commercial designation
6H	Arosa 1997:
6HS	Arosa 3L 2001
9KS	Inca 2000:
7MS	Alhambra 1996 >, Alhambra 2001 >
7NS	Alhambra 2011 >
6KS	Ibiza 1999 >, Cordoba 1999 >, Cordoba Vario 1999 >
6L	Ibiza 2002>, Cordoba 2003 >
1M	Leon 1999 >, Toledo 1999 >
1P	Leon 2006 >, Leon 2009 >
5P	Altea 2004 >, Altea 2009 >, Altea XL 2007 >, Altea XL 2009 >, Toledo 2005 >, Toledo 2009 >, Altea XL Freetrack 2008 >, Altea XL Freetrack 2009 >
6J	Ibiza 2008 >, Ibiza ST 2010 >
3R	Exeo 2009 >, Exeo ST 2009 >

4 Facts about tyres

Mounting and removing tyres

Further information on mounting and removing tyres is given in the guidelines ⇒ Running gear, axles, steering; Rep. gr. 44 .

4.1 Markings on tyre sidewall

Example: Dunlop SP Sport 9000

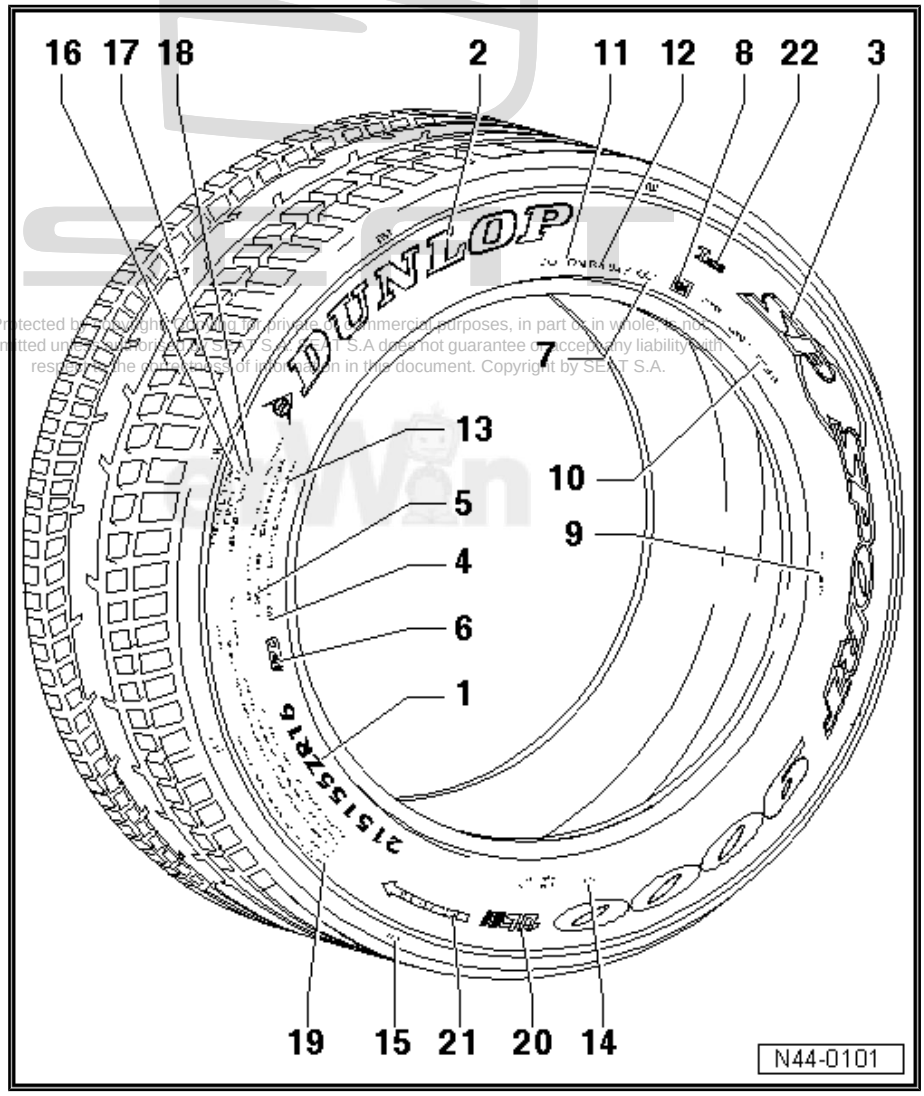

1 - Tyre size

- For example: 195/65 R 15 91T ⇒ page 7

2 - Manufacturer (registered trademark)

3 - Tyre model

4 - Tubeless tyre mark

5 - Radial structure

- Radial run of threads on carcass

6 - Information on execution „With rim guard“

7 - Date of manufacture

- Ageing of tyres ⇒ page 11

8 - No. E = Approval index

- The tyre complies with European standards ECE-R-30 and EEC92/93

9 - Country of manufacture

- For example, produced in Germany

10 - DUNLOP internal model code

11 - DOT - Department of Transportation

- Tyre fulfils specifications of US department of traffic

12 - DOT Identification number

- Identification number of manufacturer centre, tyre size and type

13 - Maximum permitted load and pressure

- Figures only valid for North America

14 - Number of layers in the centre of the tread and on the sidewall and type of material

15 - Position of TWIs (Tread Wear Indicator)

16 - Relative useful life - resistance to friction

- based on standard US test

17 - Assessment of braking capacity on wet surfaces A, B and C

- based on standard US test

Protected by copyright. Copying for private or commercial purposes, in part or in whole, is not permitted unless authorised by SEAT S.A. SEAT S.A does not guarantee or accept any liability with respect to the correctness of information in this document. Copyright by SEAT S.A.

18 - Assessment of resistance to temperatures A, B and C

- ❑ based on standard US test

19 - Safety recommendations for tyre use or assembly.

20 - Marking of „Ultra-Leichtbau-Weise“ (ultra light)

- ❑ The tyre is up to 30% lighter

21 - Defined direction of travel

22 - Inmetro code

- ❑ Only required in the Brazilian market

Markings on tyres with emergency running characteristics
⇒ page 54

4.2 Explanation of tyre markings

Tyre codes

Tyre	Vehicle speed	1	2	3	4	5	6	7
Summer tyres	up to 240 km/h	195	65	R	15	91	V	-
Winter tyres	up to 160 km/h	195	65	R	15	91	Q	M + S
Winter tyres	up to 190 km/h	195	65	R	15	91	T	M + S
High speed tyres	over 240 km/h.	225	50	ZR	16	91	-	-

Protected by copyright. Copying for private or commercial purposes, in part or in whole, is not permitted unless authorised by SEAT S.A. SEAT S.A does not guarantee or accept any liability with respect to the correctness of information in this document. Copyright by SEAT S.A.

1 - Tyre width

2 - Cross-section relation in %

3 - Tyre type code letter „R“ (is for radial)

4 - Wheel rim diameter code

5 - Load figure/maximum load (IC)

6 - Speed rating

7 - Winter tyre / also code for „all weather “

Speed category code letter/maximum speed

Speed rating	Maximum speed in km/h
L	120
M	130
N	140
P	150
Q	160
R	170
S	180
T	190
U	200
H	210
V	240
ZR	over 240
W	270
Y	300

Load figure/maximum load (IC)

The tyre quality grading is on the tyre sidewall and indicates the maximum load capacity of the tyre.

The tyre quality grading is found in the tyre size coding, for example, 195/65 R 15 91T. It is indicated on the tyre as a code according to ETRTO. The load indexes used at SEAT are listed in the table below with the corresponding loading capacity for the tyres.

Load index	Maximum load in kg
75	387
78	425
79	437
80	450
81	462
82	475
83	487
84	500
85	515
86	530
87	545
88	560
89	580
90	600
91	615
92	630
93	650
94	670
95	690
96	710
97	730
98	750
99	775
100	800
101	825
102	850
103	875
104	900
110	1060
112	1120

Protected by copyright. Copying for private or commercial purposes, in part or in whole, is not permitted unless authorised by SEAT S.A. SEAT S.A does not guarantee or accept any liability with respect to the correctness of information in this document. Copyright by SEAT S.A.

4.3 Percent of speed-dependent loading capacity

Percent of speed-dependent loading capacity [1]				
Vehicle speed (km/h)	Speed rating			
	H	V	W	Y
	%	%	%	%
210	100	100	100	100

Percent of speed-dependent loading capacity [1]				
Vehicle speed (km/h)	Speed rating			
	H	V	W	Y
220	—	97	100	100
230	—	94	100	100
240	—	91	100	100
250	—	—	95	100
260	—	—	90	100
270	—	—	85	100
280	—	—	—	95
290	—	—	—	90
300 [2]	—	—	—	85

[1] At medium maximum speeds linear interpolation of the load capacity of the tyre is possible.

[2] At speeds greater than 300 km/h the loading capacity and inflation pressure for the tyre is defined by the tyre and vehicle manufacturer together (or their national representatives) in consideration of the vehicle characteristics and practical use of the vehicle. The loading capacity above 300 km/h should never exceed 85 % of the load specified by the load index.

This table reflects the ratio between the loading capacity and speed. The loading capacity of the tyre is limited in relation to the speed for speed index letters beyond the letter H (above 210 km/h). This means that when the maximum load permitted by the load index is used, the maximum speed of the vehicle must be limited as specified in the table.

4.4 Speed symbol on tyres

The speed symbol (e.g. „T“) following the tyre size specification (e.g. 185/65 R 14 86T) indicates the permissible maximum speed (v_{max}) for the tyre.

Vehicle tyres should be selected so that the maximum permitted speed is higher than that which can be reached by the vehicle („given its design“).

Vehicles with EC type approval

If your vehicle has an EC type approval, the maximum speed for all vehicles is calculated as follows:

$v_{max} = 1{,}05 \times v$

Example: Specified maximum speed v = 172 km/h

$v_{max} = 1.05 \times 172$ km/h = 180.60 km/h

In this example a „T“ tyre, or a tyre with a higher value speed symbol must be used.

It is permitted to use tyres with a higher value speed symbol. The same applies to tyres with a higher value load index.

4.5 Tyres with speed index code letter V

Tyre manufacturers supply tyres with the speed index code letter V ⇒ page 7 .

Protected by copyright. Copying for private or commercial purposes, in part or in whole, is not permitted unless authorised by SEAT S.A. SEAT S.A does not guarantee or accept any liability with respect to the correctness of information in this document. Copyright by SEAT S.A.

These tyres may be used only under certain conditions V_{max} = 240 km/h.

All tyres with speed index code letter V (without particular specifications ⇒ page 10) indicate a maximum loading capacity up to a speed of 210 km/h, i.e. 100 % of their load index „(IC)“ ⇒ page 10 .

It is only permissible to exceed a speed of 210 km/h with tyres with the speed code letter V when the maximum loading capacity of the tyres is not exceeded. The load capacity of a tyre decreases gradually as the speed increases. See table with percent of speed-dependent loading capacity ⇒ page 8 .

The maximum permitted loads on the shafts and the maximum obtainable speed in certain SEAT vehicles are so high that the load capacity of V-rated tyres is not adequate for speeds up to 240 km/h.

Example: Tyre 205/55 R 16 91V

The load index „IC“ 91 indicates that this tyre has a loading capacity of 615 kg per tyre up to 210 km/h.

At 240 km/h this tyre can only be loaded to 560 kg; therefore the maximum axle load is only 1120 kg.

In this example the vehicle has a maximum permissible axle load of 1150 kg and achievable maximum speed of 232 km/h. This vehicle can be operated at speeds of up to 230 km/h when tyres are mounted with speed index code letter V.

4.6 V-tyres with extra load (XL) specification/reinforced

The tyres indicating „Reinforced“ or „Extra Load “ have a higher loading capacity than V-tyres without this specifications.

The term „Reinforced“ has recently been replaced by certain manufacturers with the term „Extra Load“. This designation has long been standard in non-European countries. However from a technical point of view there is no difference.

On the other hand, some manufacturers also use the term „XL“ instead of „Extra Load“ tyres.

Tyres marked with the term „Reinforced“ or „Extra Load (XL)“ are identical.

Higher speeds can be obtained with V XL tyres, however the speed limit of the V-rated tyre of up to 240 km/h is not permitted for all SEAT models.

Protected by Copyright. Copying for private or commercial purposes, in part or in whole, is not permitted unless authorised by SEAT S.A. SEAT S.A does not guarantee or accept any liability with respect to the correctness of information in this document. Copyright by SEAT S.A.

Tyre pressure of Extra Load V-rated tyres

The V tyre V Extra Load generally obtain an additional tyre pressure of approx. 0.2 bar.

The same conditions as for V-tyres without special specification also apply for these tyres.

4.7 Ripples in sidewall

Theses ripples are small grooves on the tyre sidewall.

They reach from the tyre bead to the shoulder. The figure ⇒ page 38 shows these components.

There is an accumulation of material at the contact points of the tyre components.

Ripples on the side of the tyre have no effect on

- the safety,

- Service life,
- the vehicle characteristics or
- other tyre properties.

These ripples are noticeable to a greater or lesser degree. It is not necessary to remove the tyre or carry out an inspection.

What causes the ripples on the sidewall?

To reduce weight, the sidewalls of modern radial tyres with metal frame usually only have one layer.

Before assembly, when the tyre is being shaped, the pieces of the sidewall are made up of longitudinal bands. These then overlap on the contact points of the materials. This produces small irregularities and ripples at the overlap zones. Due to the construction type using only one layer, these overlaps can be more easily observed from the outside.

4.8 Tyre storage

Storage location

The place where tyres are stored should be:

- dark,
- dry,
- cool and
- ventilated

.

WARNING

The tyres should never come into contact with fuel, oil, grease or chemical products while they are stored. The tyre material would be damaged by these products as a result of chemical processes which can not always be detected.

This may result in dangerous driving conditions.

Protected by copyright. Copying for private or commercial purposes, in part or in whole, is not permitted unless authorised by SEAT S.A. SEAT S.A. does not guarantee or accept any liability with respect to the correctness of information in this document. Copyright by SEAT S.A.

However, for a tyre to be damaged in this way it requires long exposure to the effects of these chemical products. If a few drops of fuel fall on the tyre while refuelling this does not pose a threat.

Tyre storage

Complete wheels

Complete wheels (rim and tyre) may be stacked one on top of the other. Take special care to ensure that the wheels are clean and dry. The tyre pressure should be increased to a maximum of 3 bars.

Tyres without wheels

Tyres without rims should be stored in vertical position. When tyres are stacked on top of one another for a longer period of time, they are pressed together. This makes them more difficult to mount because the tyres separate from the shoulder on the rim. Tyres stored vertically should be turned every 14 days to prevent flattening.

4.9 Ageing of tyres

Tyres age due to physical and chemical processes, this may affect their functioning. Tyres stored for long periods of time without being used harden and become brittle more rapidly than tyres permanently fitted on the vehicle. Fine cracks may appear in older

tyres as a result of ageing. In tyres fitted permanently on the vehicle, the rubber softens as a result of driving, thus preventing the rubber from hardening and cracking.

It is therefore important to not only take into account the tread depth, but also the age of spare tyres, stored tyres and tyres which are not permanently in use. The date of production is shown on the DOT code.

Example of a DOT number before 31.12.1999

DOT	5 0	9	< Code for 199_
		Last figure of the production year	
	Week of the year		

In this example, the date of production is week number 50.

Example of a DOT number after 01.01.2000

DO ..... T .	0 1	0 0 Last two figures of the production year
	Week of the year	

In this example, the date of production is the first week in the year 2000.

Recommendation

- Winter tyres and conventional tyres or summer tyres older than 6 years should not be used. Their original properties deteriorate with age. Particularly winter tyres loose their traction.
- If a new tyre is required, the spare tyre can be used, provided it is in perfect condition and under 6 years old. The age of the spare tyre has a considerable effect on the resistance of the tyre at high speeds. Use of a spare tyre several years old in conjunction with other new tyres may affect driving behaviour.
- Tyre design is constantly evolving and therefore, there may be minor differences in the compounds used even where the tyres have the same manufacturer, size and tread.
- All SEAT vehicles are equipped at the factory with four identical tyres and rims as a matter of principle.

Vehicles with front-wheel drive

- For safety reasons when driving, tyres of the same make and tread pattern should always be used on the same axle.

Four wheel drive vehicles

- All 4 wheels of a four-wheel drive vehicle should be of the same size, manufacturer, tread pattern and make.

Replacing tyres

Tyres should be replaced whenever:

- minimum tread depth is reached, legally fixed at 1.6 mm
- damage due to mechanical faults is observed

4.10 Tyres with different tread

Some tyres have different treads depending on the arrangement of their tread blocks:

SEAT
Copyright. Copying for private or commercial purposes, in part or in whole, is not permitted unless authorised by SEAT S.A. SEAT S.A does not guarantee or accept any liability with respect to the correctness of information in this document. Copyright by SEAT S.A.
erWin

Standard or non-directional tyres

- The tread blocks have no particular arrangement.

Directional tyres

- The tyre has a certain direction of rotation and must be mounted in a specific position on the rim.
- The direction of rotation is normally indicated by the small arrow or the word „rotation“.

Asymmetrical

- The tread blocks differ on each tyre side whereby the side has special traction conditions.
- The outside of the tyre (normally indicated by the word „Outside“ on the side), should never be mounted on the inside of the rim.

Mix (directional + asymmetric)

- This is a combination of both characteristics.

4.11 Tyres with special bead for starting

Tyres manufacturers produce tyres with a special bead to prevent damaging light alloy rims when the wheel scrapes against the curb.

If tyres with starter protection, steel rims, and hubcaps are used together, there is a risk that the hubcaps may fall off while driving. Hubcaps fall off from their housing due to the buckling of the tyre.

WARNING

Tyres with starter protection cannot be fitted on steel rims.

Protected by copyright. Copying for private or commercial purposes, in part or in whole, is not permitted unless authorised by SEAT S.A. SEAT S.A does not guarantee or accept any liability with respect to the correctness of information in this document. Copyright by SEAT S.A.

The figure shows the unauthorised combination of steel rim, hub cover and tyre with special bead for starting.

A - Special bead for rim

B - Steel rim contour

C - Hub cap

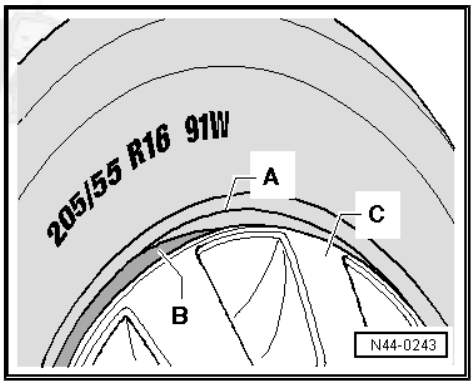

WARNING

Never fit this combination!

4.12 Winter tyres

General notes

Winter tyres have greater tread depth and are produced with a material mixture which prevents snow from adhering to the casing.



In addition to the already mentioned mixture in the tread the key for traction consists of a series of tread blocks in to which sipes are cut which provide for greater traction in the longitudinal and lateral direction depending on the shape and flexibility.

The traction characteristics which these give winter tyres can be reduced as soon as a certain tyre operating temperature is reached. For this reason such tyres normally have lower speed index.

As soon as it is no longer necessary to use winter tyres they should be replaced by conventional tyres or summer tyres to reduce the wear, tyre noise and fuel consumption and to maintain the tyre characteristics.

These sipes also produce a pressure on the road surface to break up the water layer which can be present below the tyre and thereby prevent aqua planning [1)].

Four identical winter tyres should be mounted to ensure best possible dynamic vehicle driving characteristics.

[1)] When the vehicle is moved on a wet surface the grooves (treads) convey water away from the contact surface between the grooves and the surface. In some cases it may not be possible to convey all of the water present away depending on the type and condition of the tyre and the road surface. In this case the tyre uses contact to the road and the car skids on a film of water. If this happens the steering characteristics and braking force of the vehicle are impaired. This dangerous phenomenon is know as „aqua planning“ and depends on the vehicle speed. With a certain type of tyre with a certain inflation pressure and at a concrete thickness of the water film the „aqua planning“ phenomenon occurs at a certain speed known as the „aqua planning speed“.

Regulations for EU approval

Directive 2005/11 specifies that the minimum speed index for winter tyres is the letter Q (160 km/h).

This directive allows use of winter tyres whose speed index is lower than the maximum speed of the vehicle.

In such cases a sticker with a maximum permissible speed must be applied at a point which is easily visible for the driver.

Note

This sticker should be placed in the driver's field of vision.

Tyre pressures for winter tyres

The winter tyre pressure should be adjusted to 0.2 bar above the valid tyre pressure for standard tyres, although to a limit of 3.5 bar.

Newer generations of winter tyres no longer require an increase in the inflation pressure.

Use of winter tyres

The German traffic laws changed as of 1st May 2006. A passage was added which requires such vehicle equipment be adapted to the climatic conditions. This adaptation includes particular installation of critical tyres or installation of slip-resistant elements on the tyres.

As a basic rule:

All tyre sizes specified in the vehicle documents (with corresponding rim combinations) can also be used for winter tyres.

SEAT
Copying for private or commercial purposes, in part or in whole, is not permitted unless authorized by SEAT S.A. SEAT S.A does not guarantee or accept any liability with respect to the correctness of information in this document. Copyright by SEAT S.A.
erWin

The technical data for conventional tyres with speed index letter V or higher also apply for winter tyres ⇒ page 9 .

The use of winter tyres and the eventual change to the wheel rim and tyre dimensions as a result affects the dynamic qualities. When driving with winter tyres the vehicle speed should be adapted to the new dynamic qualities and the corresponding road conditions.

If, in order to fit winter tyres, the vehicle is subsequently fitted with wheel rims different to those mounted at the factory, the following should be taken into account:

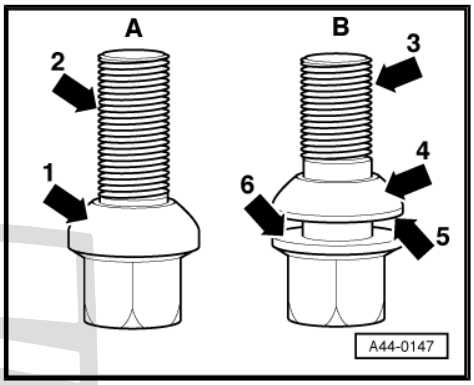

- Wheel rims and nuts are assigned in a specific manner.
- For this reason wheel lug bolts of the correct length and with the proper crown geometry must be used when changing to another type of rim [2] -1 and 4-. The secure fitting of the wheel and the correct working of the braking system depend upon this.
- Winter tyres with a tread depth less than 4 - 5 may be used in winter only with limitations.
- Certain countries require a minimum tread depth of 4 mm for winter tyres.
- We recommend that winter tyres are not used for more than 6 years. The „specific qualities for winter use“ of these tyres deteriorate with age, independently of the distance travelled.

[2] The ball socket for crown is the bent surface of spherical section. The semi-spherical cap is visible on the wheel nut and the hole for the bolt on the wheel rim disc.

Vehicles with tire inflation indicator system

On vehicles with tyre inflation indicator system it is necessary to reregister the tyre inflation values after changing from conventional tyres or summer tyres to winter tyres and vice versa, see ⇒ Running gear guidelines for vehicle in question .

4.13 All-season tyres

General notes

This type of tyre combines the properties of winter tyres and those of conventional tyres or summer tyres. All-season tyres can be used on wet or slightly snowy roads as well as in summer without wearing as with winter tyres when used on dry pavement or at high temperatures.

All tyre sizes specified in the vehicle documents (with corresponding rim combinations) can also be used for all-season tyres.

4.14 Snow chains

General notes

Chains may only be fitted on the drive-wheels.

However, in four-wheel drive vehicles only the front wheels should be fitted with snow chains.

Chains can not be mounted on all rim and tyre combinations. Information on this is given in the table with technical data in these guidelines ⇒ page 69 .

Protected by copyright. Copying for private or commercial purposes, in part or in whole, is not permitted unless authorised by SEAT S.A. SEAT S.A does not guarantee or accept any liability with respect to the correctness of information in this document. Copyright by SEAT S.A.

With certain rim/tyre combinations on certain vehicle models it is only permissible to install special snow chains with small chain links (9 mm or 7 mm) (this dimension also applies for the chain lock). Information on this is given in the table with technical data in these guidelines ⇒ page 69 .



Note

The maximum legally permitted speed for driving with snow chains is 50 km/h.

It is necessary to remove the chains on snow-free roads, because the driving characteristics are poorer and the wear to the chains and tyres is greater.

Instructions for installing snow chains

Caution

- ***Before installing snow chains check whether sufficient space is available in the wheel well.***
- ***After installing snow chains check the space in the wheel well again.***

It may necessary to remove caked snow and ice.

Install chains and tension, retention after driving a short distance.

„Practice installing“ chains in dry conditions before starting a trip to facilitate actual installation when nervous and cold

Protected by copyright. Copying for private or commercial purposes, in part or in whole, is not permitted unless authorised by SEAT S.A. SEAT S.A does not guarantee or accept any liability with respect to the correctness of information in this document. Copyright by SEAT S.A.

Note

Observe the care and maintenance instructions of the snow chain manufacturer.

Special snow chain versions

Special versions of snow chains are available which provide an additional slip-resistant surface across the read by using different elements.

Textile sleeve:

The contact surface to the pavement consists of highly resistant fibres woven together. Tyres equipped with this system have the same traction as tyres with snow chains.

These sleeves can be installed very quickly and simply.

Stiff attachment:

The tyre contact the surface over stiff synthetic bows installed over the tyre.

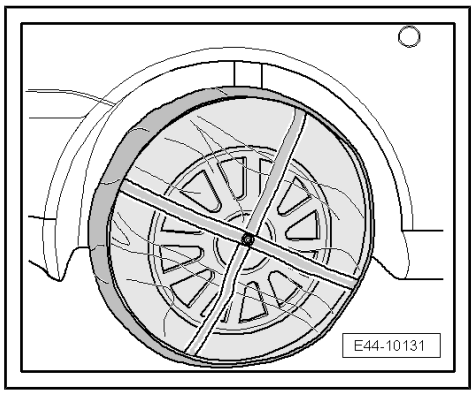

It is very simple to install these bows on the tyre using an adapter fastened to the rim. This adapter can remain installed over the entire winter without any negative affects to the functional characteristics of the tyre.

In both cases the advantage of these special versions of snow chains is that they can be installed easily and quickly are simple to use and have a minimum height above the tyre making them particularly suitable for vehicles with little free space between the tyre and body..

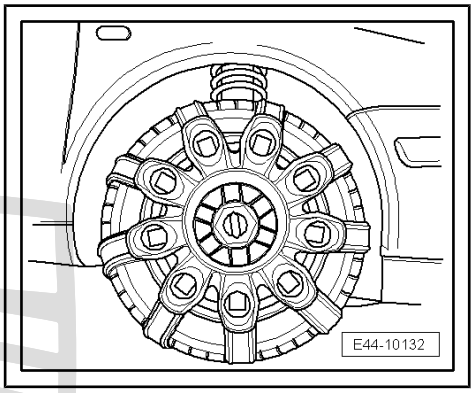

Note

The instructions for using this type of aid as well as the precautions are identical to those for conventional snow chains. Additional information regarding installation on the vehicle is given in the specific instructions published by the manufacturers of these types of devices.

Protected by copyright. Copying for private or commercial purposes, in part or in whole, is not permitted unless authorised by SEAT S.A. SEAT S.A does not guarantee or accept any liability with respect to the correctness of information in this document. Copyright by SEAT S.A.

5 Wear/performance characteristics of tyres (passenger cars)

5.1 General information

A tyre is required to have multiple properties ⇒ page 18 .

All these properties are incorporated into the tyre to a greater or lesser degree.

Depending upon the tyre usage and the vehicle type, certain properties are more important than others.

Particularly tyres for „vehicles with powerful engines“ (type H, V and Z) are inspected to provide high traction on wet, flooded roadways. This requirement is incompatible with, for example, high kilometre performance (types S or T).

5.2 Tyre properties

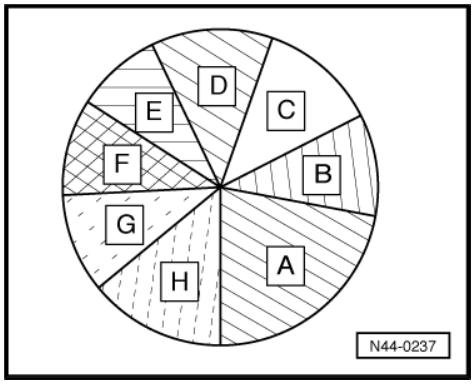

A - Braking behaviour on wet surfaces

B - Driving comfort

C - Guidance precision

D - Driving stability

E - Weight of tyre

F - Useful life

G - Rolling resistance

H - Aquaplaning

The pie chart illustrates to what extent the tyre meets the various requirements. The tyre in this example (with its specific structure and rubber composition) would meet the requirements listed above (A to H) to the extent indicated by the size of the segments of the pie.

An improvement in one quality implies a decrease in an another quality.

Example:

Protected by copyright. Copying for private or commercial purposes, in part or in whole, is not permitted unless authorised by SEAT S.A. SEAT S.A does not guarantee or accept any liability with respect to the correctness of information in this document. Copyright © SEAT S.A.

Improved braking performance on wet surfaces -A- leads to a decrease in the driving comfort -B-, the rolling resistance -G- and the useful life -F- of the tyre.

The useful life of passenger vehicle tyres does not only depend upon the mixture used and the construction of the tyre. Conditions of use, combined with vehicle characteristics and driving styles result in major differences concerning the length of tyre life.

Modern automobiles with appropriate specifications enable driving geared towards both savings and tyre conservation as well as towards a more sporty style. The useful life of a tyre ranges from 5,000 to 40,000 km or more.

Note

Driving style is the determining factor in the useful life of tyres.

5.3 Wear on high-speed tyres

These tyres are designed for driving at the highest speeds. Therefore, good grip on wet road surfaces is of particular importance in

the design. These combinations of materials are not as resistant to friction as the T and H tyres designed for lower speeds.

The useful life of high-speed tyres is therefore much lower, given similar conditions of use.

5.4 Factors influencing the useful life of tyres

The following factors have an influence on the useful life of tyres to a varying degree:

Driving style:

- Speed ⇒ page 19
- Braking ⇒ page 19
- Acceleration ⇒ page 20
- Cornering ⇒ page 20

For further information concerning Driving Style, see ⇒ page 19 .

Maintenance:

- Tyre pressure ⇒ page 20

For further information concerning Maintenance, see ⇒ page 20 .

Environment:

- Road surface
- Air temperature/weather

Vehicle:

- Weight
- Dynamic values of toe-in and camber

Usage range:

- Speed range
- wet or dry

Type of tyre:

Winter tyres/conventional tyres or summer tyres/all-season tyres

Protected by copyright. Copying for private or commercial purposes, in part or in whole, is not permitted unless authorised by SEAT S.A. SEAT S.A does not guarantee or accept any liability with respect to the correctness of information in this document. Copyright by SEAT S.A.

5.5 Driving style

I. Steady driving, without deceleration or acceleration

Example:

Speed (km/h)	Slip	Friction
100	1	1
180	3	9

II. Braking (driving style)

Greatest friction normally occurs on braking.

For example: braking from a speed of 50 km/h.

Distance (m)	Deceleration (m/s^2) 1)	Slip	Friction
Vehicle comes to a stop		0	0
100	0.1 x g	4	1

Distance (m)	Deceleration (m/s^2) 1)	Slip	Friction
50	0.2 x g	8	4
12,5	0.4 x g 2)	32	2000 - 3000

1) g = gravitational acceleration 9.81 m/s^2

2) A deceleration of 0.4 x g corresponds to hard braking.

III. Acceleration (driving style)

The slippage produced when starting slowly is approximately equal to that existing at a constant speed of some 100 km/h.

Example:

	Slip	Friction
Slow starting	1 - 2	1
Normal starting	7 - 8	5
Starting with wheel spin	20 and over	100 - 200

IV. Cornering (driving style)

Taking corners is also known to increase wear when driving at high speeds or in a sports-like manner.

In practice, this implies a friction 16 times greater on doubling the speed. This is the disadvantage that comes with wishing to save time.

Example: driving through a radius curve of 150 m.

Speed (km/h)	Transversal acceleration (m/s^2)1)	Friction
50	1 = 0.13 x g	1
80	2.5 = 0.33 x g	6,5
100	4 = 0.53 x g	16

1) g = gravitational acceleration 9.81 m/s^2

5.6 Tyre maintenance

Tyre pressure

The weight of the vehicle causes the tyre to flatten out slightly. As the tyre goes round, the rolling surface and the entire radial structure become misshapen. If the tyre pressure is too low, the forced deformation is greater, implying increased temperatures and greater resistance to rolling. This leads to greater wear and increased risk from the point of view of safety.

Example: standard tyre pressure given according to load with tyres cold.

Pressure (bars)	Pressure (%)	Useful life (%)
2,3	100	100
1,9	80	85
1,4	60	60
1,0	40	25

Protected by copyright. Copying for private or commercial purposes, in part or in whole, is not permitted unless authorised by SEAT S.A. SEAT S.A does not guarantee or accept any liability with respect to the correctness of information in this document. Copyright by SEAT S.A.

In turn, tyre pressures which are too high lead to above average wear and a reduction in driving comfort. We therefore recommend maintaining the tyre pressure specified by the manufacturer.

Note

- *The diagrams shown are not applicable in all cases. They are merely intended to give an idea of the wear rates of tyres on the front and rear axles and with front-wheel drive and four-wheel drive.*
- *The values obtained for useful life may differ considerably depending upon the conditions of service and the running gear.*

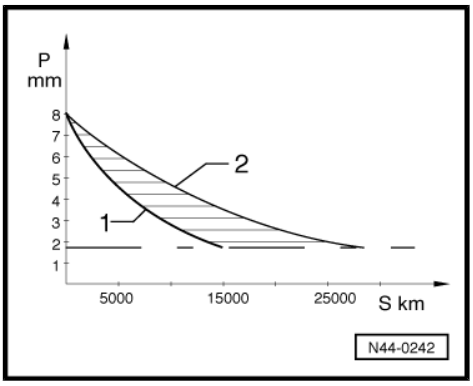

Diagram 1:

Tread depth versus tyre life for vehicles with front-wheel drive and V-rated tyres

P - Tread depth

S - Section

1 - Front axle

2 - Rear axle

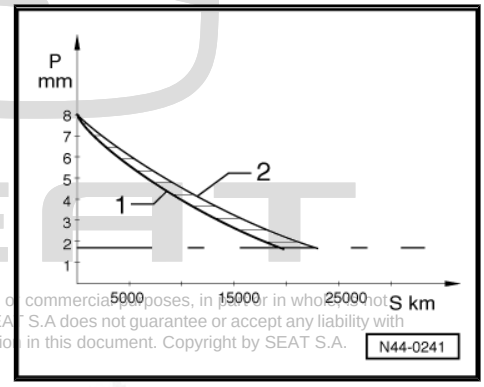

Diagram 2:

Tread depth versus tyre life for vehicles with four-wheel drive and V-rated tyres

P - Tread depth

S - Section

1 - Front axle

2 - Rear axle

As can be seen from diagrams 1 and 2, the tread of new tyres wears more in a set time period than that of very used tyres. After the first 5,000 km it is not possible to estimate the total useful life of tyres, as the line of wear is not lineal.

In front-wheel drive vehicles, the tyres must not only transmit guidance and driving forces, but also the majority of the transversal and braking forces. For this reason, the front wheels of front-wheel drive vehicles wear faster than the rear wheels. Uniform wear of all the tyres can be obtained by regularly interchanging the front and rear wheels. Interchanging wheels ⇒ page 66 .

5.7 Uniformly worn tyres

The loads which the tyres must withstand increase continuously.

This is due to the following factors:

- Increase in vehicle weight
- Higher maximum speed
- high level of vehicle safety.

Increased tyre loads imply increased wear.

The affect of driving style on tyre wear is significant. Therefore, in the event of a complaint of wear, if the tread rib is uniformly worn, the tyres will not be replaced under guarantee.

Protected by copyright. Copying for private or commercial purposes, in part or in whole, is not permitted unless authorised by SEAT S.A. SEAT S.A does not guarantee or accept any liability with respect to the correctness of information in this document. Copyright by SEAT S.A.

The useful life of a tyre lasts until the tread depth reaches 2 mm, diagrams ⇒ page 21

5.8 Measuring tread depth

Note

- *The tread depth is measured in the main tread channels.*
- *It is not necessary to measure at the TWI (Tread Wear Indicator).*

The depth of the tyre tread should be measured at the principal tread grooves, at the points of greatest wear. The positions of the TWI indicators are marked on the tyre sides ⇒ Item 15 (page 6) .

A „Δ“ or the „logo of the manufacturer“ may also be specified instead of the „TWI“.

The surfaces of the tread wear indicators have a height of 1.6 mm. This is the legally prescribed minimum tread depth in Spain.

Different values may apply in other countries.

Protected by copyright. Copying for private or commercial purposes, in part or in whole, is not permitted unless authorised by SEAT S.A. SEAT S.A does not guarantee or accept any liability with respect to the correctness of information in this document. Copyright by SEAT S.A.

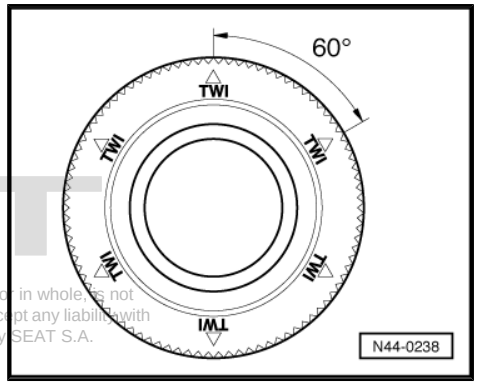

The wear indicators should not be included in the measurements. The measurement obtained at the deepest point of the tread grooves is the value to be taken for measurement.

A - TWIs on the principal grooves of the tread

B - Principal grooves of the tread with TWIs -arrows-

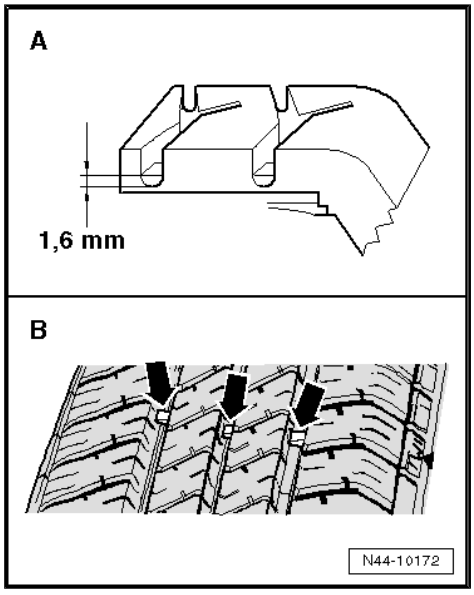

5.9 Lateral wear

The causes principally lie in driving style and, on occasions, axle alignment.

Upper side wear

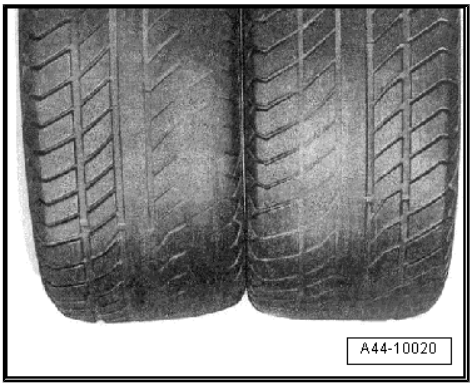

Lateral wear, generally in combination with erosion on the tread ribs and fine cuts, appears when the tyres pull to one side and therefore have an »eroding effect« on the road surface.

Fast driving on winding roads leads to increased wear of the tyre shoulders.

A rounded tyre shoulder in combination with excessive wear of the exterior tread blocks indicates frequent driving at high speeds on winding roads. This type of wear is influenced by driving style.

The running gear is adjusted to specified values of toe-in and camber in order to optimise driving behaviour. If the tyres do not meet the above conditions, high lateral wear should be considered.

In particular, incorrect toe-in and camber values may result in high lateral wear, increasing the risk of diagonal erosion.

Toe-out

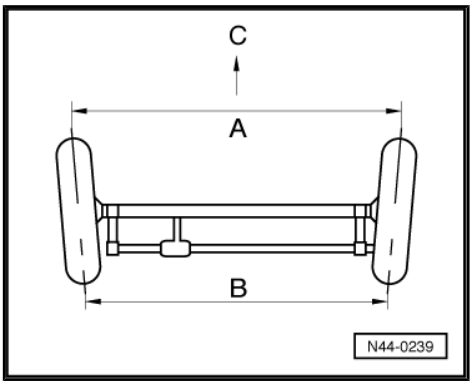

The distance between the wheels is greater at the front edge -A- than at the rear edge-B- (-C- in the direction of travel).

SEAT
Protected by copyright. Copying for private or commercial purposes, in part or in whole, is not permitted unless authorised by SEAT S.A. SEAT S.A does not guarantee or accept any liability with respect to the correctness of information in this document. Copyright by SEAT S.A.
erWin

Toe-in

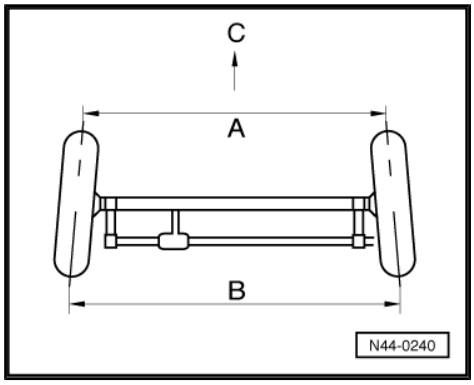

The distance between the wheels is smaller at the front edge -A- than at the rear edge-B- (-C- in the direction of travel).

To prevent lateral wear of tyres, the wheel adjustment should be checked to ensure that it is within the tolerance margin specified by the vehicle manufacturer. The most common causes of imbalance in wheels are external, e.g. hitting the kerb when parking.

By measuring wheel alignment it is possible to determine whether the wheel balance lies within the tolerance margin or whether the wheels require balancing.

Modifications to the running gear

Lowering the running gear or fitting light alloy wheel rims not recommended by Seat may result in wheel imbalance when driving.

As a result of the modified lever arm due to the reduced height and the position of the wheels when driving, uneven wear takes place, even if all the values lie within the tolerance margins when the wheel alignment is checked while the vehicle is at a standstill.

To avoid one-sided wear to the tyres it is necessary to ensure that the wheels are properly aligned on the one hand and, on the other, that the vehicle is used as intended.

Good vehicle and tyre maintenance will help to reduce wear. The following points should be remembered:

- The minimum specified tyre pressures should be maintained.
- It is not possible to prevent greater wear of the drive-wheel tyres as a function of driving style. To reduce this effect, interchange the tyres between the axles regularly. For example, by taking advantage of the change from summer tyres to winter tyres and vice-versa. This rotation ensures that all tyres were evenly and that a complete set of new tyres can be installed when required. This helps to prevent the fitting of tyres with different treads on the axles, which may have a negative effect on the handling of the vehicle.
- If the vehicle is not driven aggressively, the expected pattern of wear will be like the teeth of a saw ⇒ page 28 . The noise of the tyres increases, but will gradually decrease as tread wear becomes deeper. In the event of slight saw-tooth wear or where the saw-tooth is still forming, it is usually sufficient to interchange the tyres between axles. In the event of considerable saw-tooth wear, the wheels should be changed in such a way as to ensure the direction of travel is altered ⇒ page 28 .
- Some tyre treads give the optical impression of premature wear: if the winter tyre film is worn or there are cuts in the tread, only the compact blocks of the tread remain without the negative part, giving the impression that the tyre is worn. In this case, the remaining tread depth in each of the grooves should be measured. When the tread depth is greater than the minimum permissible tread depth, the tyre can continued to be used without limitations (in Germany the minimum tread depth is 1.6 mm), We recommend using winter tyres with a remaining tread depth of up to 4 mm in summer only, in Austria is even required).

Copyright by Copyright by Copyright by Copyright by Commercial purposes, in part or in whole, is not permitted. Copyright by SEAT S.A. SEAT S.A. does not guarantee or accept any liability with respect to the correctness of information in this document. Copyright by SEAT S.A.

5.10 Wear of the outer shoulder



To avoid one-sided wear to the tyres it is necessary to ensure that the wheels are properly aligned on the one hand and, on the other, that the vehicle is used as intended.

Good vehicle and tyre maintenance will help to reduce wear. The following points should be remembered:

- The minimum specified tyre pressures should be maintained.
- It is not possible to prevent greater wear of the drive-wheel tyres as a function of driving style. To reduce this effect, interchange the tyres between the axles regularly. For example, by taking advantage of the change from summer tyres to winter tyres and vice-versa. This rotation ensures that all tyres were evenly and that a complete set of new tyres can be installed when required. This helps to prevent the fitting of tyres with different treads on the axles, which may have a negative effect on the handling of the vehicle.
- If the vehicle is not driven aggressively, the expected pattern of wear will be like the teeth of a saw ⇒ page 28 . The noise of the tyres increases, but will gradually decrease as tread wear becomes deeper. In the event of slight saw-tooth wear or where the saw-tooth is still forming, it is usually sufficient to interchange the tyres between axles. In the event of considerable saw-tooth wear, the wheels should be changed in such a way as to ensure the direction of travel is altered ⇒ page 28 .
- Some tyre treads give the optical impression of premature wear: if the winter tyre film is worn or there are cuts in the tread, only the compact blocks of the tread remain without the negative part, giving the impression that the tyre is worn. In this case, the remaining tread depth in each of the grooves should be measured. When the tread depth is greater than the minimum permissible tread depth, the tyre can continued to be used without limitations (in Germany the minimum tread depth is 1.6 mm), We recommend using winter tyres with a remaining tread depth of up to 4 mm in summer only, in Austria is even required).

Protected by Copyright. Copying for private or commercial purposes, in part or in whole, is not permitted unless authorised by SEAT. SEAT does not guarantee or accept any liability with respect to the correctness of information in this document. Copyright by SEAT S.A.

5.11 Centre wear



This type of wear is typical on the drive-wheels of powerful vehicles, frequently used on long journeys at high speeds.

Due to centrifugal forces, when driving at high speeds the tyre diameter is more pronounced in the centre of the band than at the shoulder. The driving force is transmitted from the central part of the band to the road, and this is reflected in the pattern of wear on the tyre.

This effect is particularly noticeable on wide tyres.

This pattern of wear can not be reduced by deflating the tyres.

> **WARNING**
>
> ***For reasons of safety, tyres must never be deflated to below the specified pressure values.***

More uniform wear can be obtained by regularly interchanging the tyres on the drive-wheels to the other axle.

High wear on the tread band

Typical wear pattern on drive-wheels of a powerful vehicle.

The high level of wear on the central part of the tread band is due to the effort related to the centrifugal force of the tyre and the transmission of the drive wheel.

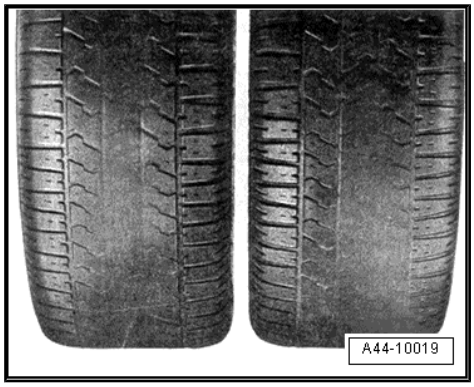

5.12 Diagonal wear

Diagonal wear

The diagonal wear is produced at an angle of 45 ° to the tyre circumference.

Usually it appears at one point, but sometimes may appear at various points along the perimeter.

Such erosion wear occurs almost exclusively on the tyres on the non-driven wheels, in particular at the rear left. Some vehicle models are subject to frequent wear while others rarely have a problem. The effect is worsened with high toe-in values. Values below the lower tolerance limit improve the wear.

The most serious diagonal wear is often found at the joint of the tyre components.

The wheel which turns under toe-in also does so when travelling in a straight line to one side. This leads to diagonal deformation in the contact zone between the tyre and the road surface.

Wear is increased by driving with low tyre pressures. To prevent wear of this type, the toe-in values of both rear wheels should be equal and the specified tyre pressures should be maintained.

Interchange the wheels on the driveshaft when wear begins, as long as they are in good condition. Deep wear cannot be repaired.

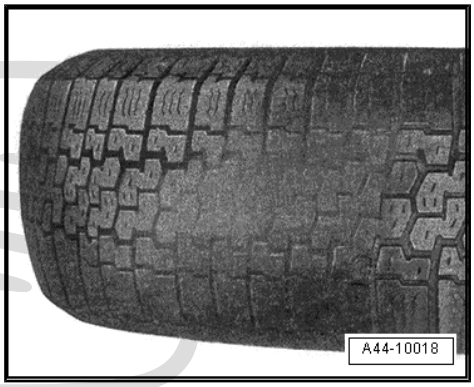

Error in alignment

In the event of complaint of „diagonal wear“ check the wheel alignment. If this is correct, the cause of diagonal wear most probably lies in the tyres.

Tyres with diagonal wear as a result of incorrect wheel alignment are not covered by the guarantee.

SEAT
Reproduction of this document for private or commercial purposes, in part or in whole, is not permitted unless authorised by SEAT S.A. SEAT S.A does not guarantee or accept any liability with respect to the correctness of information in this document. Copyright by SEAT S.A.
erWin

6 Tyre rolling noises

6.1 General information

Tyre noise that can be heard by the human ear is caused by vibrations which are transmitted by the air from the source of the sound to our ears.

The noises, which occur due to particular characteristics and effects during tyre rolling (noise source) are of particular interest in conjunction with this.

The noise level will chiefly depend upon the road surface/tyre combination.

The surface structure and the road material will have an effect on the tyre rolling noise. The sound level on a wet road, e.g., is considerably higher than on a dry road.

The tyre tread has a great influence on the noise. Tyres with transversal grooves at a 90° angle are noisier than tyres with grooves at oblique confluent angles.

Small tread blocks are unstable. Their highly pronounced deformation agitates the air as the tyres roll. This creates the air vibrations that cause tyre noise.

Wider tyres are also noisier. More grooves are required in the tread pattern to allow the water to drain off. As the tyres go round, the air is dislodged towards these grooves, resulting in air transmitted vibrations.

Printed in Spain. All rights reserved. Duplication, translation, storage in data processing systems or transmission by any means, electronic, mechanical, photocopying, recording or otherwise, permitted only with the prior written consent of SEAT S.A. SEAT S.A does not guarantee or accept any liability with respect to the correctness of information in this document. Copyright by SEAT S.A.

Other aspects with an effect on the emission of sound:

- Tyre vibrations are the main cause of tyre rolling noise. They are the result of the excitation of the column of air in the tread grooves.
- „Air pumping“ is the compression and dilation of the air as it passes over the support surface of the tyre, due to the deformation in the tread blocks.

Theories behind tyre rolling noise

The noise is essentially caused by contact between the tyre and the road surface.

The determining factors of the road surface are the roughness, structure and material.

The determining factors of the tyre include the width of the tyre and of the tyre rim. A wider tyre is noisier, due to the increased contact surface area, as more air is dislodged a greater „mass“ is made to vibrate than in a narrow tyre.

A wider wheel rim also implies a wider tyre contact surface area. The effects on the noise are, therefore, basically similar to those of a wider tyre. In addition, a wider wheel rim may result in negative influences on the shock absorbing properties of the tyre.

Tyre rolling noises are heard more clearly in the rear seats of the vehicles with engines at the front, as the sound of the wind and the engine muffle the tyre rolling noises.

6.2 Saw-tooth tread wear

Saw-toothed tread wear means incremental wear to the various tread blocks ⇒ page 28 , which result in higher tyre noise. The saw tooth pattern ("heel-and-toe" wear) is caused by uneven deformation of the tread blocks in the tyre contact area. Saw tooth wear is more pronounced in non-drive wheels than in drive-wheels.

New tyres have a greater tendency to saw-tooth wear as the high tread blocks are more elastic. As the tread depth decreases, the tread blocks become more rigid and the tendency to wear in a saw-tooth pattern decreases.



View of saw tooth wear

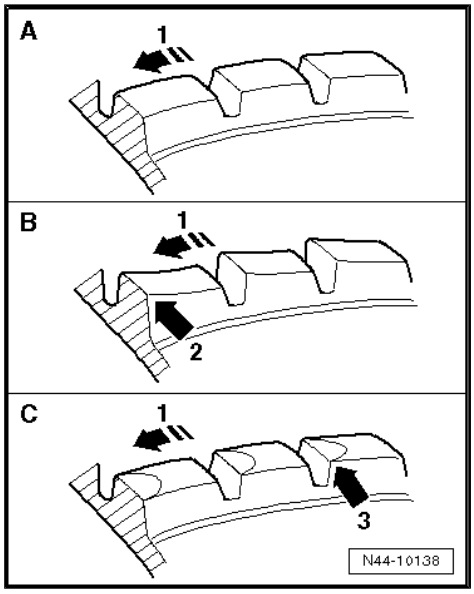

A - Tread blocks on a new tyre: blocks viewed in the direction of travel -arrow 1-, identical height front and back.

B - Formation of the saw tooth: blocks viewed in the direction of travel -arrow 1-, higher at the front than at the rear-arrow 2-.

C - Tread blocks in the direction of travel -arrow 1-, greater wear at the front part of the „saw tooth“ -arrow 3-.

If the saw tooth wear is very pronounced, there may be complaints about the resulting noise.

Increased saw tooth wear is due to:

- Excessive toe-in
- Incorrect tyre pressures
- when the tread is coarse, open
- Tyres not fitted on the drive shaft
- Sharp bends

Tyres without specified direction of travel

If saw tooth wear occurs the direction of travel of the tyres should be changed. If severe saw tooth wear occurs with a high degree of tyre rolling noise, the wheels should be interchanged in diagonal pairs. This will result in a rapid decrease in saw tooth wear.

This effect is even more noticeable in front-wheel drive vehicles due to the greater wear on the front axle.

The tyre rolling noise produced by the tyres increases immediately after changing the tyres, and returns to a normal tyre rolling noise level after driving between 500 and 1000 km.

Tyres with specified direction of travel

If the saw tooth wear on the rear axle is excessive, particularly on vehicles with front-wheel drive, the rear wheels should be exchanged with the front wheels. If saw-toothed shaped higher one axle, both tyres should be mounted reversed on their rims. The left-hand wheel must then be fitted on the right side of the vehicle and the right-hand wheel on the left side.

6.3 Locking points

Locking points are the result of sharp braking with the wheels locked, causing friction to the rubber on the tyre where it is in contact with the road.

As the tyre slides over the road surface, the friction generates heat which reduces the resistance to friction of the tyre tread.

Protected by copyright. Copying for private or commercial purposes, in part or in whole, is not permitted unless authorised by SEAT S.A. SEAT S.A. does not guarantee or accept any liability with respect to the correctness of information in this document. Copyright by SEAT S.A.

Even the use of a combination of friction resistant materials on the tyre rolling surface does not exclude the possibility of locking points, such as those produced during severe braking.

Even regulated ABS braking systems are unable to prevent a short period of locking and the resultant reduced planning.

The significance of this friction chiefly depends upon the vehicle speed, the road surface and the load on the wheels. The numerical examples given below serve to illustrate the above.

For a vehicle braking on a dry road, with the wheels locked, until coming to a total standstill, the friction of the rubber in the contact area, approximately the size of a postcard, is approximately:

- at 57 km/h = 23.8 m braking distance, to 2.0 mm
- at 75 km/h = 41.8 m braking distance, to 3.3 mm
- at 92 km/h = 71.6 m braking distance, to 4.8 mm

Locking points on the contact surface area

A tyre damaged in this way is unserviceable and must be replaced.

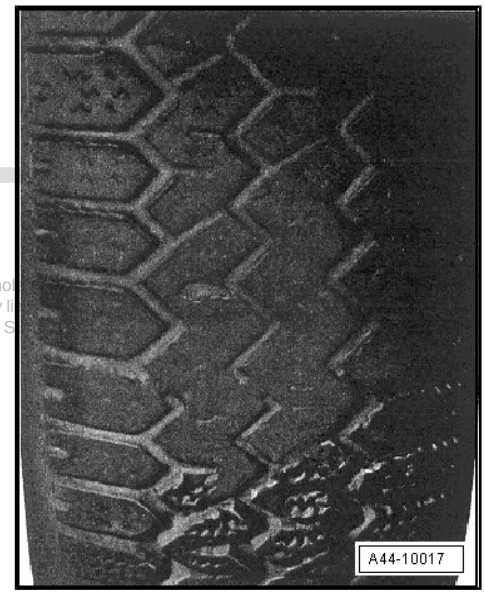

Protected by copyright. Copying for private or commercial purposes, in part or in whol
permitted unless authorised by SEAT S.A. SEAT S.A does not guarantee or accept any li
respect to the correctness of information in this document. Copyright by SEAT S

7 Imbalance when driving due to the wheels / tyres

7.1 Causes of rough running

Rough running can have a number of different causes. It can also be caused by tyre wear. Tyre wear caused by driving is not always evenly spread across the entire running surface of the tyre. This causes slight imbalances which affect the smooth running of a wheel which was previously exactly balanced.

These small imbalanced actions cannot be perceived on the steering wheel, but they are there. They increase tyre wear and reduce the operating life of the tyres.

Recommendation

To ensure

- optimal safety,
- smoothest possible running and
- even wear

the wheels / tyres should be balanced at least twice during their useful life.

7.2 Balancing wheels

Before balancing the wheels /tyres, the following conditions should be met:

- The tyre pressure must be correct.
- The tyre tread must not show one-sided wear and should be at least 4 mm deep.
- The tyre should not in any way be cut, punctured or contain foreign bodies, etc.
- The suspension, steering and suspension rods including the shock absorbers should be in perfect condition.
- A test drive should first be made.

SEAT
Electronic copyright. Copying for private or commercial purposes, in part or in whole, is not permitted unless authorised by SEAT S.A. SEAT S.A does not guarantee or accept any liability with respect to the correctness of information in this document. Copyright by SEAT S.A.

7.3 Test drive prior to balancing

If a complaint is received for „imbalance while driving“ the vehicle should be taken for a test drive before starting the balancing.

♦ This will give you information about the nature of the rough running.

♦ You will be able to determine the speed range in which rough running occurs.

– Raise the vehicle on a lifting platform immediately after the road test.

– Mark the assembly point on the tyre.

Location of the tyre	Marked with
left front tyre	FL
right front tyre	FR
Rear left tyre	RL
Rear right tyre	RR

– Remove the wheels from the vehicle.

– Balance the wheels.

7.4 Balancing on a static wheel balancer

Attaching the wheel onto the wheel balancer

Note

When balancing tyres, please remember that cleanliness is absolutely essential, as indeed it is in the case of any other repair work you carry out. Only then can you attain a flawless result!

Dirt and rust in the contact areas and the centre opening of the wheel may distort the results.

– Clean the contact surfaces, the centre of the wheel and the recess on the inside of the wheel before mounting the wheel on the wheel balancer.

– Fasten the whole wheel on the balancer.

Note

- *Use a centring system for stationary balancing machines to fasten the rim.*
- *This ensures that the wheel is 100% centred and that the wheel will be clamped without damage!*
- *The wheel cannot be centralised 100% with conical clamping elements on the wheel balancing machine.*
- *A centring arrow of 0.1 mm corresponds to an imbalance of 10 g.*

Procedure for balancing the wheel rim / tyre

– Turn the wheel or tyre on the balancer.

– Check that the indicator lines on the sidewalls of the tyre near the wheel rim flange run evenly.

Protected by copyright. Copying for private or commercial purposes, in part or in whole, is not permitted unless authorised by SEAT S.A. SEAT S.A does not guarantee or accept any liability with respect to the correctness of information in this document. Copyright by SEAT S.A.

– Check the tyre tread while turning the wheel.

Note

If one-sided wear, flat spots from braking or severe erosion is apparent, balancing will not be able to achieve smooth running. In this case, the tyre must be renewed.

– Check the concentricity of the wheel / tyre. If not all the wheel turns in a concentric manner, and if no flattening has been detected, there may be radial or axial run-out.

– Check the radial and axial run-out of the wheel ⇒ page 34 .

– If the radial and axial run-out do not exceed the permitted tolerance levels, balance the wheel and the tyre.

Note

- *Do not attach counterweights of over 60 g to the wheels.*
- *If a larger weight is required, you can possibly achieve smoother running by "matching" the tyre and rim. Matching tyres* ⇒ page 35 .
- *The display on the balancing equipment should read 0 grams.*
- *As an alternative to match mounting, you could use the vibration control system -VAS 6230-* ⇒ page 32 .

– Screw rim onto vehicle.

– Tighten all lower wheel lug bolts by hand to approx. 30 Nm.

– Then tighten the remaining wheel bolts to about 30 Nm (in diagonal sequence). This process centres the wheel on the hub.

– Lower vehicle onto its wheels.

– Then tighten the lug bolts in a cris-cross pattern to specified torque using torque wrench.

Perform road test.

– After balancing the wheels and tyres, carry out a road test.

If any imbalance is detected during the test drive, this may be due to tolerances in the centre of the wheel.

In unfavourable circumstances, the tolerances of the wheel components and the wheel hubs may be added together, this can also cause imbalance while driving. These can be removed with a finish balancer ⇒ page 33 .

Protected by copyright. Copying for private or commercial purposes, in part or in whole, is not permitted unless authorised by SEAT S.A. SEAT S.A does not guarantee or accept any liability with respect to the correctness of information in this document. Copyright by SEAT S.A.

7.5 Vibration control system -VAS 6230-

The vibration control system -VAS 6230- has a range of additional features over and above regular static wheel balancing.

One peculiarity of this system is it is able to check the radial force of the wheel while rolling.

For this purpose, a roller presses against the wheel with a force of approx. 635 kg. This simulates the force exerted by the tyre's contact patch on the road surface while the vehicle is in motion.

The contact forces on the tyre vary due to variations in the stiffness of the tyre and the degree of radial and lateral run-out on the wheel/tyre.

The -VAS 6230- detects and memorises the position of maximum measured radial force in the tyre. It then locates the smallest measurement between the wheel flange and the centre of the rim.

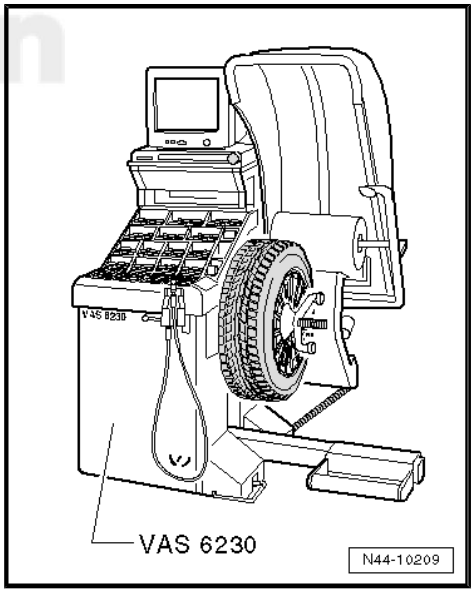

7.6 Balancing with a Finish Balancer

Note

- *Before using a finish balancer the operator should receive instruction from the manufacturer of the equipment.*
- *Position vehicle on the sensor platforms (front wheels only on front-wheel drive vehicle, all four wheels on four-wheel drive vehicle) in order to balance the wheels.*

If a residual imbalance of over 20 grams is detected during the balancing procedure, the wheel should be turned on the wheel hub.

– Mark the points which the imbalance is indicated.

– Unbolt the wheel and turn it on the wheel hub so that the mark faces downwards.

Note

The wheel hub should not rotate during this process.

– Tighten all lower wheel lug bolts by hand to approx. 30 Nm.

– Then tighten the remaining wheel bolts to about 30 Nm (in diagonal sequence). This process makes sure the wheel is centred properly on the hub.

– Use the finish balancer to check whether the imbalance is now below 20 grams.

Note

The counterweight should only be modified if the imbalance is under 20 grams.

– If necessary, undo the wheel bolts again.

– Rotate the wheel relative to the hub once more, turning it one or two wheel bolt holes further.

– Tighten the wheels as shown above.

Note

Protected by copyright. Copying for private or commercial purposes, in part or in whole, is not permitted unless authorised by SEAT S.A. SEAT S.A does not guarantee or accept any liability with respect to the correctness of information in this document. Copyright by SEAT S.A.

Only if the imbalance is below 20 g can it be modified by using a counterweight.

– Balance the wheel until the imbalance is below 5 g.

– Tighten wheel bolts to specified tightening torque if you have not already done so.

WARNING

Always tighten wheel bolts to specified torque using a torque wrench!

7.7 Wheel (rim and tyre) radial and axial run-out

Radial and axial run-out are due to a fault in the tyre concentricity.

For technical reasons, 100% true running is not possible.

For this reason, the manufacturers of these components allow a precisely determined tolerance.

If the wheel and the tyre are fitted in unfavourable positions, the maximum permitted tolerance level for the whole wheel may be exceeded.

The table gives the maximum permitted tolerance levels for complete wheels.

Tolerance values for radial and lateral run-out of wheel discs with tyres

Wheel with tyre	Radial run-out (mm)	Axial run-out (mm)
Passenger vehicles	0,9	1,1 (1.3 in the inscriptions area)

Note

These are presently checked with the vibration control system - VAS 6230-

7.8 Radial and axial rim eccentricity:

The radial run-out -H- and axial run-out -S- results from the rim not being perfectly round.

For technical reasons, 100% true running is not possible.

For this reason, the manufacturers of these components allow a precisely determined tolerance.

The table gives the maximum permitted tolerance levels for complete wheels.

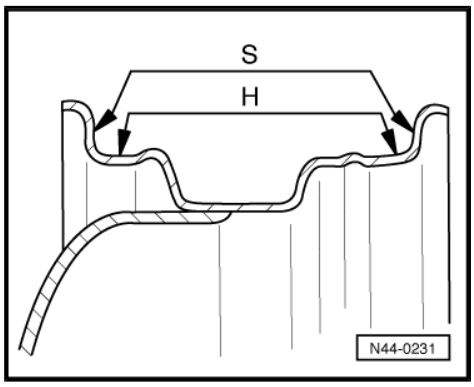

Specified values for radial and lateral wheel rim run-out

Wheel rim		Radial run-out (mm)	Axial run-out (mm)
Passenger vehicles	Steel wheel rims	0,5	0,5
	Light alloy wheel rims	0,5	0,8
Alhambra	Steel wheel rims	0,5	0,8
	Light alloy wheel rims	0,5	0,5

Protected by copyright. Copying for private or commercial purposes, in part or in whole, is not permitted unless authorised by SEAT S.A. SEAT S.A. does not guarantee or accept any liability with respect to the correctness of information in this document. Copyright by SEAT S.A.

Note

When the value measured is greater than the nominal value, it is not possible to achieve acceptable running smoothness.

Note

These are presently checked with the vibration control system - VAS 6230-

7.9 Match balancing

General information

If the radial or axial run-out of the wheel rim and the tyre are the same, this will accentuate the concentricity fault in the whole wheel.

For technical reasons, 100% true running is not possible ⇒ page 34 .

Before matching wheels already mounted and run on a vehicle, warm up the tyres. This will eliminate any flat spots caused by storage or handling ⇒ page 36 .

Match balancing process

Protected by copyright. Copying for private or commercial purposes, in part or in whole, is not permitted unless authorised by SEAT S.A. SEAT S.A does not guarantee or accept any liability with respect to the correctness of information in this document. Copyright by SEAT S.A.

- Deflate the tyre.
- Press the tyre beads off the rim flanges.
- Coat the tyre bead all round with tyre fitting paste .
- Turn the tyre 180° with respect to the rim.
- Pump tyre up to approx. 4 bars.
- Fasten the whole wheel on the balancer.
- Check the concentricity or radial and axial run-out.

Note

- *If the theoretical values for radial and axial run-out are not exceeded, the wheel can be balanced to 0 grams. The nominal values are specified in ⇒ page 34 .*
- *Turn wheel again if the radial or axial run-out exceeds the nominal values.*

- Deflate the tyre and separate the tyre bead from the rim contour tabs
- Rotate the tyre 90° relative to the wheel (1/4 of a turn).
- Inflate the tyre to 4 bars again and check the concentricity.

Note

- *If the theoretical values for radial and axial run-out are not exceeded, the wheel can be balanced to 0 grams.*
- *Turn wheel again of the axial or radial run-out still exceeds the nominal values .*

- Press the tyre off the rim flanges again as described above.
- Rotate the tyre 180° with respect to the wheel (1/2 a turn).

If the radial and/ or lateral run-out are still not within the specified values, check the wheel for radial and / or lateral run-out: ⇒ page 34 .

If the measured values for radial and lateral run-out of the wheel are within the specified values, the tyre has an impermissibly high radial or lateral run-out. In this case, the tyre must be renewed.

Note

- *After fitting the tyres there will be fitting lubricant between the tyres and the rim flanges.*
- *For this reason, severe braking and acceleration manoeuvres must be avoided for the first 100 or 200 km driven. The tyres may otherwise rotate on the rims and your work will have been in vain.*

7.10 Flat spots caused by storage or handling

What is a flat spot?

The terms flat area and flats are also used for the term flat spot.

Flat spots resulting from storage or handling also cause irregular running in the same way as incorrectly balanced wheels do. It is important that flat spots on the tread are identified as such.

Flattening cannot be balanced. It may reappear for different reasons at any moment. Complex tools are not necessary to remove flattening, except in the case of flattening due to sudden breaking ⇒ page 28 .

Note

Flat spots caused by hard braking cannot be repaired. Such tyres must be renewed.

Causes for standing flat spots

- The vehicle has been left standing in one place without being moved for several weeks.
- The tyre inflation pressure is too low.
- The vehicle was placed in a paint shop drying booth after painting.
- The vehicle was parked with warm tyres in a cool garage or similar for a long period of time. In this case, a flat spot may even occur overnight.

Eliminating standing flat spots

- Flat spots caused by storage or handling cannot be eliminated from the tyre using workshop equipment.
- The flat spots can only be removed by running the tyres warm.
- The method described below is not recommended in cold and wintry weather.

Prerequisites/conditions

– Check and, if necessary, correct inflation pressures.

– If possible, drive the vehicle along the motorway.

– Traffic and road conditions permitting, drive a distance of 20 to 30 km at a speed of 120 to 150 km/h.

Protected by copyright. Copying for private or commercial purposes, in part or in whole, is not permitted unless authorised by SEAT S.A. SEAT S.A does not guarantee or accept any liability with respect to the correctness of information in this document. Copyright by SEAT S.A.

WARNING

- *Do not put your life or that of other drivers at risk.*
- *Observe the highway code and the speed limits during the test drive.*

– Raise the vehicle immediately following the road test.

– Remove wheels.

– Balance the wheels on the stationary balancing machine ⇒ page 31 .

Protected by copyright. Copying for private or commercial purposes, in part or in whole, is not permitted unless authorised by SEAT S.A. SEAT S.A does not guarantee or accept any liability with respect to the correctness of information in this document. Copyright by SEAT S.A.

8 Vehicle pulls to one side

8.1 General information

During test drive check whether vehicle pulls to one side and if so, to which side If the vehicle pulls to one side, see ⇒ page 39 .

If an axle measurement has been made, attach the measurement sheet to the tyre with the complaint notification.

The tire structure may be tapered due to manufacturing tolerances. This results in a lateral force when the tire rolls which is transferred directly to the wheel suspension leading to a self-steering tendency on the vehicle. This self-steering behaviour can be compensated by selective rotation of the wheels.

8.2 Conicity

Protected by copyright. Copying for private or commercial purposes, in part or in whole, is not permitted unless authorised by SEAT S.A. SEAT S.A. does not guarantee or accept any liability with respect to the correctness of information in this document. Copyright by SEAT S.A.

Conicity is caused by asymmetry of the tyre band and/or belt with respect to the geometrical centre of the tyre, within a margin of tenths of a millimetre. Conicity is not noticeable at first glance and can not be measured using workshop equipment.

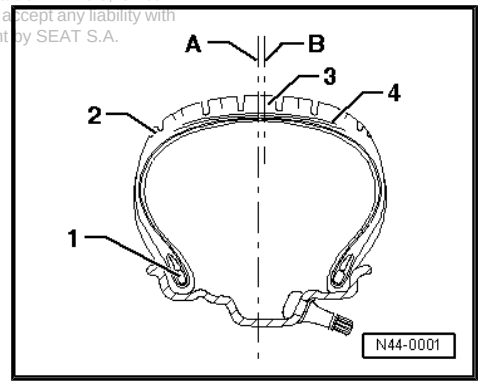

Tyre components

1 - Bead

2 - Shoulder

3 - Tread

4 - Steel cable belt

A - Geometric centre of tyre

B - True belt position. This may be off-centre towards the exterior or the interior

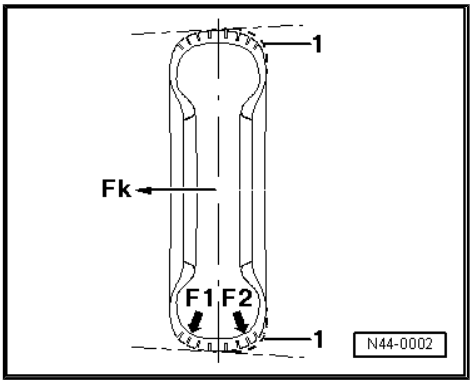

In explanation:

1 - Belt/tread off-centre

F1 - Unequal vertical forces

F2 - Unequal vertical forces

Fk - Conicity force

Due to this asymmetry, different degrees of rigidness occur on the interior and exterior shoulders of the tyre, leading to different contact forces of the same. As a result, the belt and the tread are not pressed with the same force (F1, F2) onto the road surface. A cone is formed. The resulting force (conicity force Fk) may become so great, depending upon the speed of the vehicle, that the vehicle pulls to one side.

If the force (Fk) is, for example, 50 Newton on one wheel of the axle and 50 Newton's on the other wheel, if both forces act in the same direction, the forces are added together. The side pull of the vehicle can be compensated for by rotating the tyre on the wheel rim, as then the forces would be opposing.

Given that the direction in which the conicity force acts is not visible on the tyre, it can only be determined by making test drives and interchanging the wheels/tyres which are the cause of the lateral pull.

The tyre is made up of various components and different materials, partially vulcanised at the end of a complex manufacturing process. This is why different constructive tolerances arise which are noticeable due to the presence of lateral forces of greater or lesser intensity (lateral conicity forces). These forces may also appear in new tyres.

Pulling to one side on front axle

Pulling to one side can be caused by the running gear. However, experience shows that in 90% of all complaints, the tyres cause pulling to one side.

Pulling to one side when driving normally

The vehicle tends to pull to one side when driving on a straight flat road surface, at constant speed or moderate acceleration. No force is felt on the steering wheel.

Pulling to one side when accelerating sharply

Pulling to one side when accelerating sharply is partly an intrinsic phenomenon of front-wheel drive vehicles. The driving properties are considerably affected by the different wear relations between the right and left wheels, or even by irregularities in the road surface (bumps), with the resulting fluctuation in grip on the road surface. This complaint is not covered under the guarantee.

Protected by copyright. Copying for private or commercial purposes, in part or in whole, is not permitted unless authorised by SEAT S.A. SEAT S.A does not guarantee or accept any liability with respect to the correctness of information in this document. Copyright by SEAT S.A.

8.3 Remedy for pulling to one side

Points to check before and during the test drive:

– Check for possible damage to suspension components of the front and rear axles.

– Tyre inflation has been checked.

– Tyre has been inspected visually for outer damage. Punctures, cuts, bumps on the side surfaces, flat spots or damage to the tread.

– Ask customer if he has had a flat tyre/blowout and has repaired in a certified workshop; replace tyres if necessary.

– Tyres checked for uniform wear and tread depth.

– Check all the tyres are the same type, make and have the same tread pattern.

– For tyres with no specified direction of travel, check that all the DOT marks on the tyre face outwards. If this is not the case, the wheel rims/tyres have been previously interchanged.

– Is the tyre brand recommended as original equipment by the factory?

– Level, straight roadway without rust which does not incline to one side.

– Test drive vehicle together with customer under conditions described above. Have customer demonstrate complaint phenomenon.

Note

No strong side wind.

If the complaint is justified, we recommend rotating the wheels and tyres as described below.

Before commencing, the following instructions should be observed. Otherwise, the work may be carried out in vain

Note

- *Mark the wheels / tyres before interchanging for the first time, for example with LF, RF, LR and RR.*
- *After interchanging the wheels or turning the tyre on the wheel rim, the performance of the vehicle should be checked on a test drive. Make a note of how and what has changed.*
- *Assess the intensity of or possible modification to the lateral pull.*
- *It is also important that the test drives are made by the same person and along the same roads. It is best to drive along the road in both directions.*
- *Replacing a tyre with a new tyre does not necessarily guarantee that the pulling to one side will be eliminated. Therefore it is recommended to strategically change round the wheels as described below as a first step.*
- *If there are large differences in the tread depth of the tyres on the front and rear axles, the tyres with the deeper tread should always be mounted on the front axle.*

Protected by copyright. Copying for private or commercial purposes, in part or in whole, is not permitted unless authorised by SEAT S.A. SEAT S.A does not guarantee or accept any liability with respect to the correctness of information in this document. Copyright by SEAT S.A.

8.4 Selective interchange of wheels fitted with tyres without specified direction of travel.

Note

Observe technical data for tyres with different treads ⇒ page 12

↓
Check for pulling to one side, and to which side, during the test drive
↓
If there is a pull, interchange the front wheels

<table>
<tr><td colspan="3">↓</td></tr>
<tr><td colspan="3">Perform road test.</td></tr>
<tr><td colspan="3">The vehicle does not pull any more - END</td></tr>
<tr><td colspan="2">The vehicle pulls to the opposite side</td><td>The vehicle pulls to the same side</td></tr>
<tr><td colspan="2">↓</td><td>↓</td></tr>
<tr><td colspan="2">Turn a front tyre on the wheel rim (in the opposite direction to the direction of rotation)</td><td>Interchange front wheels with rear wheels</td></tr>
<tr><td colspan="2">↓</td><td>↓</td></tr>
<tr><td colspan="2">Perform road test.</td><td>Perform road test.</td></tr>
<tr><td colspan="2">The vehicle does not pull any more - END</td><td>The vehicle does not pull any more - END</td></tr>
<tr><td colspan="2">The vehicle pulls to one side</td><td>The vehicle pulls to one side</td></tr>
<tr><td colspan="2">↓</td><td>↓</td></tr>
<tr><td colspan="2">Interchange front wheels with rear wheels</td><td>The vehicle pulls to the opposite side</td><td>No change</td></tr>
<tr><td colspan="2">↓</td><td>↓</td><td>↓</td></tr>
<tr><td colspan="2">Perform road test.</td><td rowspan="6">Turn a front tyre on the wheel rim (in the opposite direction to the direction of rotation)</td><td rowspan="6">Check the alignment of the front and rear axles, adjusting where necessary.

If the alignment is correct, consult Product Behaviour</td></tr>
<tr><td colspan="2">The vehicle does not pull any more - END</td></tr>
<tr><td colspan="2">The vehicle pulls to one side</td></tr>
<tr><td colspan="2">↓</td></tr>
<tr><td colspan="2">Interchange the front tyres</td></tr>
<tr><td colspan="2">↓</td><td>↓</td></tr>
<tr><td colspan="2">Perform road test.</td><td>Perform road test.</td></tr>
<tr><td>The vehicle does not pull any more - END</td><td>The vehicle pulls to one side</td><td>The vehicle does not pull any more - END</td></tr>
<tr><td rowspan="7"></td><td>↓</td><td>The vehicle pulls to one side</td></tr>
<tr><td>Fit new tyres on front axle</td><td>Fit new tyres on front axle</td></tr>
<tr><td>↓</td><td>↓</td></tr>
<tr><td>Perform road test.</td><td>Perform road test.</td></tr>
<tr><td>The vehicle does not pull any more - END</td><td>The vehicle does not pull any more - END</td></tr>
<tr><td>↓</td><td>↓</td></tr>
<tr><td colspan="3">Vehicle pulls to one side, see product behaviour</td></tr>
</table>

Protected by copyright. Copying for private or commercial purposes, in part or in whole, is not permitted unless authorised by SEAT S.A. SEAT S.A. does not guarantee or accept any liability with respect to the correctness of information in this document. Copyright by SEAT S.A.

8.5 Specific replacement of wheels for tyres with prescribed direction of rotation and/or asymmetric tyres

Note

Observe technical data for tyres with different treads ⇒ page 12

<table>
<tr><td>↓</td></tr>
<tr><td>Check for pulling to one side, and to which side, during the test drive</td></tr>
</table>

↓
If the vehicle pulls to one side, interchange the front tyres (wheels) with the rear ones
↓
Perform road test.
The vehicle does not pull any more - END
The vehicle pulls to one side
↓
First replace a tyre on the front axle
↓
Perform road test.
The vehicle does not pull any more - END
The vehicle pulls to one side
↓
Then replace the other tyre on the front axle
↓
Perform road test.
The vehicle does not pull any more - END
The vehicle pulls to one side
↓
Measure the alignment of the vehicle at the front and back
↓
Perform road test.
The vehicle does not pull any more - END
Vehicle pulls to one side, see product behaviour

Protected by copyright. Copying for private or commercial purposes, in part or in whole, is not permitted unless authorised by SEAT S.A. SEAT S.A does not guarantee or accept any liability with respect to the correctness of information in this document. Copyright by SEAT S.A.

9 Tyre damage

9.1 General notes

The use of damaged tyres may have serious consequences, therefore it is necessary for tyres to be regularly checked by both the driver and the workshop, so that any possible faults can be detected early..

A damaged tyre can not withstand extreme driving situations such as:

The failure of a tyre may be due to a variety of reasons:

- Driving with underinflated tyres
- Error in fitting tyre
- Hitting obstacles
- Age
- Incorrect storage

WARNING

Whenever a safety risk cannot be ruled out, the tyre must be renewed.

9.2 Structure of a radial tyre

Cross-section of a radial tyre

Protected by copyright. Copying for private or commercial purposes, in part or in whole, is not permitted unless authorised by SEAT S.A. SEAT S.A does not guarantee or accept any liability with respect to the correctness of information in this document. Copyright by SEAT S.A.

1 - Tread block

2 - Tread groove

3 - Tread

4 - Nylon wheel ring

5 - Layers of belt

- ❑ generally steel

6 - Bead

- ❑ Formed of steel cables vulcanised on the compound
- ❑ They ensure secure seating of the tyre on the rim.

7 - Bead reinforcement

8 - Rim contour guard

- ❑ This provides protection against wear to the rim and tyre from chafing against the curb, etc.
- ❑ Tyres with rim guards bear the letters MFS

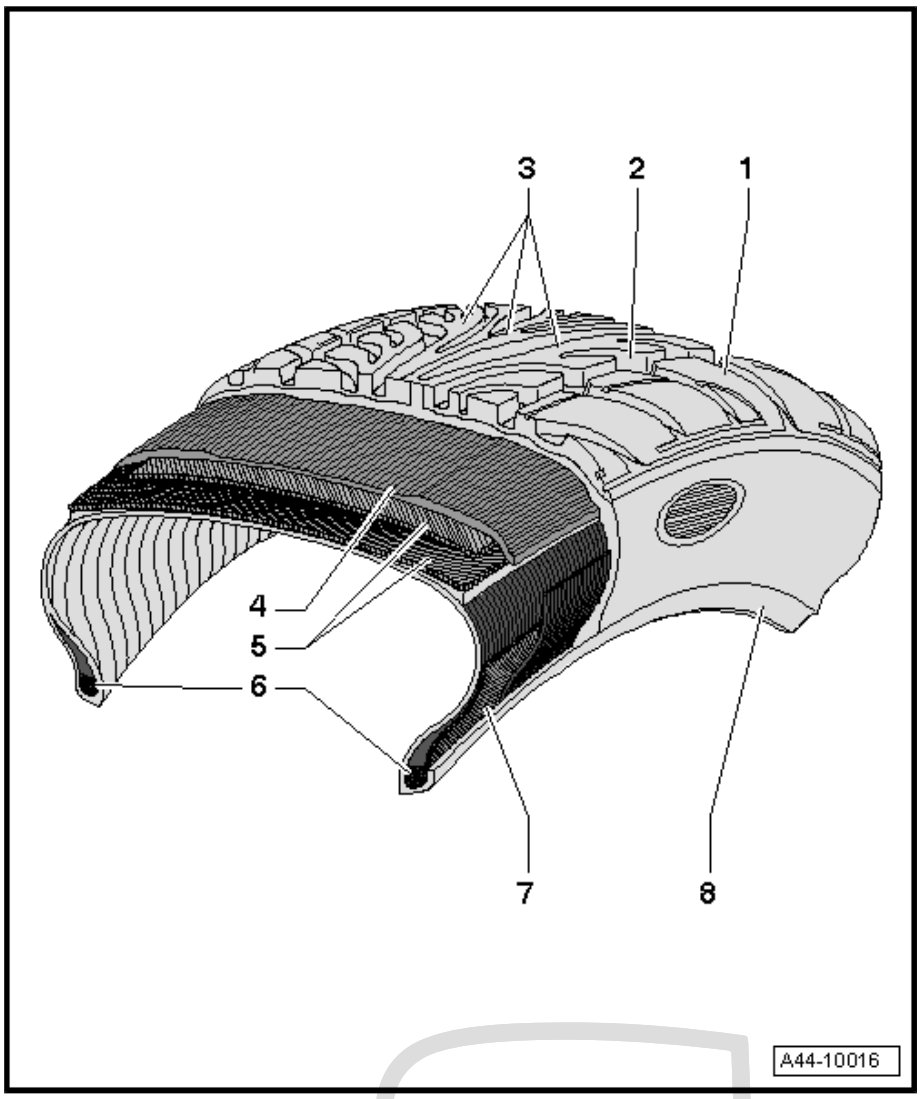

The nylon ring -4-, the layers of belt -5-, the bead -6- and the bead reinforcement -7- form the carcass. The carcass is the „frame“ which supports the tyre.

9.3 Damage from impacts

Bulging on the tyre sidewalls is generally a sign of a break in the steel cables on the interior of the tyre.

The usual cause of this type of damage is a knock at a sharp angle against a curb, for example.

Tyre carcasses flattened in this way may be damaged.

In these cases, the interior part of the tyre is strained until some of the carcass threads break.

The severity of the damage depends upon the speed of collision, the angle of collision, the tyre pressure, the axle load and the type of obstacle.

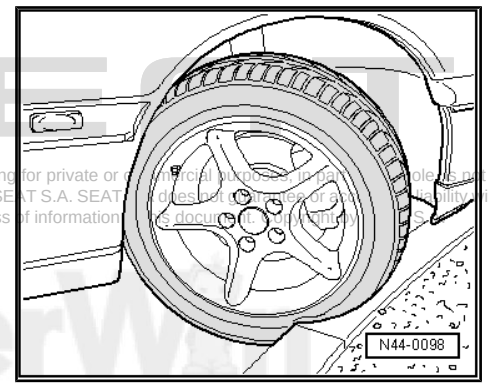

Protected by copyright. Copying for private or commercial purposes, in part or in whole, is not permitted unless authorised by SEAT S.A. SEAT does not guarantee or accept any liability with respect to the correctness of information in this document. © SEAT S.A.

Signs of the collision on the tyre sidewall -arrows-

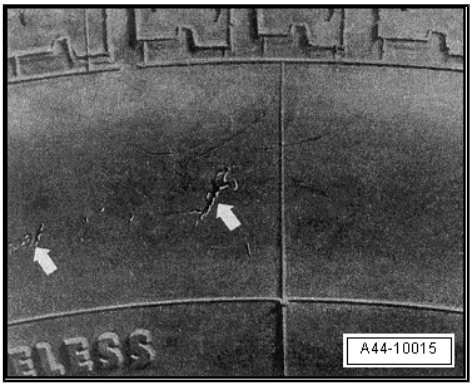

Note

- *Care should be taken not to drive onto kerbs!*
- *When driving on a curb always approach very slowly at an obtuse angle.*

Interior view of a tyre with a broken carcass

As a result of the hard impact the carcass has been flattened against the contour rim, and has broken at the contact area.

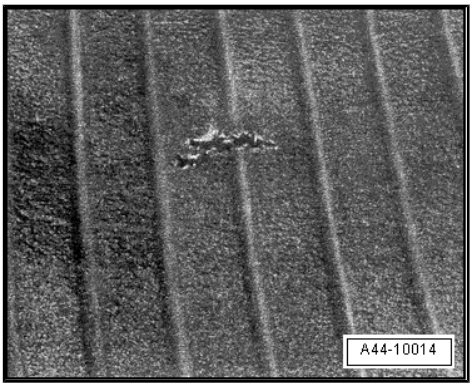

Damage to the interior of the tyres caused by collision (double fracture)

Double fault -arrows- resulting from pinching together when driving over a curb. This is frequently not visible from the exterior.

Outer view of tyre with broken carcass

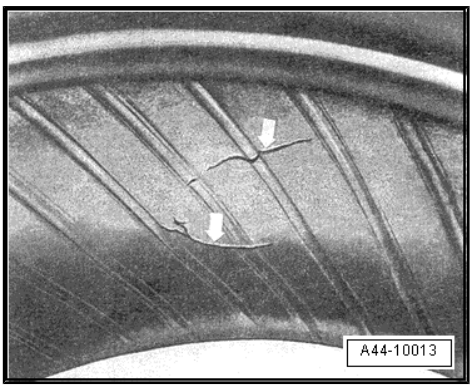

A broken carcass can be recognised from the outsides by the signs shown in these illustrations.



Protected by copyright. Copying for private or commercial purposes, in p
permitted unless authorised by SEAT S.A. SEAT S.A does not guarantee or
respect to the correctness of information in this document. Copyrigh

This second effect is known as an „air pouch “



9.4 Cuts

Cuts caused by sharp obstacles -arrow-.

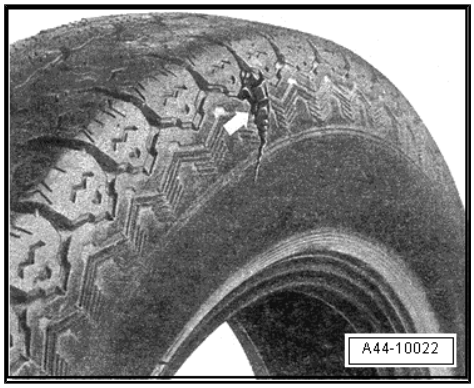

Cut in tread -arrow-.

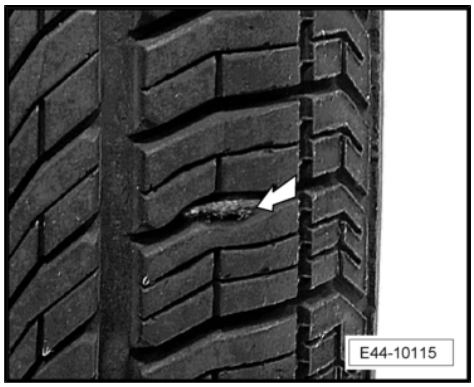

Protected by copyright. Copying for private or commercial purposes, in part or in whole, is not permitted unless authorised by SEAT S.A. SEAT S.A does not guarantee or accept any liability with respect t... ...ght by SEAT S.A.

9.5 Damage from foreign bodies

Driving over hard, pointed objects like nails, screws and the like can pierce the tyre.

This inevitably leads to future tyre damage.

> ⚠ **Caution**
>
> ***Radial tyres with a metal frame whose structure has been perforated by a foreign body should not be repaired.***

Damage from foreign bodies incrusted in tyres

The object in question -mark- is often incrusted in the tyre in such a way that it does not come out even at high speeds. It may even act as a plug, sealing the tyre relatively well. The consequence is a slow loss of air, not immediately perceived by the driver, but which may lead to a sudden fault in the tyre.

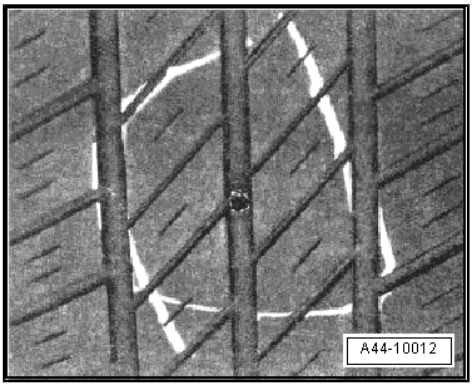

Damage in form of rubber tear-out



9.6 Damage due to age

Various signs of wear can occur as a result of tyre material aging. Check production date.

SEAT

Protected by copyright. Copying for private or commercial purposes, in part or in whole, is not permitted unless authorised by SEAT S.A. SEAT S.A does not guarantee or accept any liability with respect to the correctness of information in this document. Copyright by SEAT S.A.

erWin



Note

If the production date is more than six years old, replace tyres.



9.7 Scraping:

Continuous scraping can wear the side of the tyre without cutting.

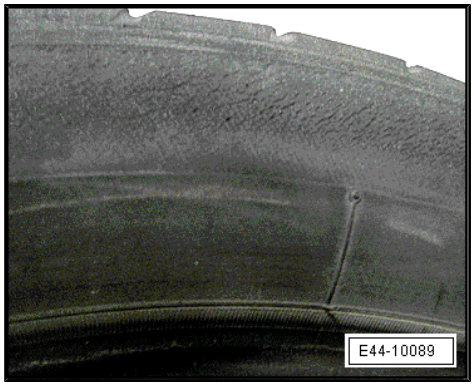

9.8 Loss in tyre pressure

In the event of a complaint of loss in pressure, the tyre should be checked to see whether it has been perforated by a foreign body.

Note

Radial tyres with a metal frame whose structure has been perforated by a foreign body should not be repaired.

The steel cables may become corroded This causes the polymers to become detached from the metal frame.

In general it is not possible to determine when a foreign body became attached. For this reason it is highly probable that the tyre structure has already been damaged resulting from operation with insufficient inflation pressure.

Protected by copyright. Copying for private or commercial purposes, in part or in whole, is not permitted unless authorised by SEAT. SEAT does not guarantee or accept any liability with regard to the correctness of information in this document. Copyright by SEAT S.A.

If the belt cables are damaged, the polymers will eventually become detached from the metal frame. This may result in total failure of the tyre after a time, possibly long after the damage took place.

Damage as a result of foreign bodies in the tyres is not covered by the guarantee.

9.9 Tyre pressure

The tyre pressure must be checked regularly. It should be checked every 14 days. Correct type pressure is very important, particularly on long journeys and when the vehicle is loaded. Sports-like driving also requires the correct tyre pressure or even slightly higher than normal pressures.

Slow loss of pressure

Slow loss of pressure on the interior of the tyre is a particularly deceptive process, often impossible to detect even for experienced drivers.

Due to the loss in pressure and the resulting increase in temperature, the different tyre materials heat up in such a way that they may detach from each other and there may be separation of the tyre polymer mixture.

The result is almost always a useless tyre ⇒ page 49 .

The cause for the slow pressure loss cannot always be determined because the tyre is severely damaged and structural components of the tyre are missing.

Tyres filled with nitrogen

Nitrogen is an inert gas which does not contain moisture which reduces oxidation on the inside of the tyre and rim. Its chemical composition contributes to maintaining the tyre components. It keeps them in good condition thereby increasing the service life.

The operating temperature of the tyre is kept low minimising the risk of a blowout.

The tyre pressure loss is lower than on tyres filled with air; the tyre maintains the correct inflation pressure over a longer period. It is not necessary to check the tyre pressure as frequently, although here as well regular checks and use of nitrogen are recommended. If nitrogen is not available, normal air can also be used, even though the advantages of filling with nitrogen are then lost.

Note

Pumping up the tyre with air and regularly checking the inflation pressure has the same effect as inflating with nitrogen.

9.10 Damage to tyres as a result of under inflation

The most frequent cause of these problems is from minor exterior damage, a faulty valve or a leaky wheel rim as a result of damage or corrosion.

Detachment of the polymer casing

A sudden increase in temperature as a result of driving with underinflated tyres ⇒ page 50 causes separation between the tyre structure and the polymer fusion -arrows-.

Protected by copyright. Copying for private or commercial purposes, in part or in whole, is not permitted unless authorised by SEAT S.A. SEAT S.A. does not guarantee or accept any liability with respect to the correctness of information in this document. Copyright by SEAT S.A.

The tyre shown was driven for a short time while underinflated with respect to the load being carried. Typical indications of this are worn points resulting from scraping in the area of the bead caused by the rim flange and discolorations. This can be recognised by small notches in the area of the inner side wall.

As the tyre rolls, strong shearing forces are produced between the layers of the steel tyre cables, especially at the ends of the radial structure.



Tyres with dents along the edge of the bead zone

Wide dents along the perimeter of the bead zone -arrows- are also the result of under inflation.

If tyres are driven on while underinflated or if tyre damage is undetected or not repaired, the consequences may be serious.

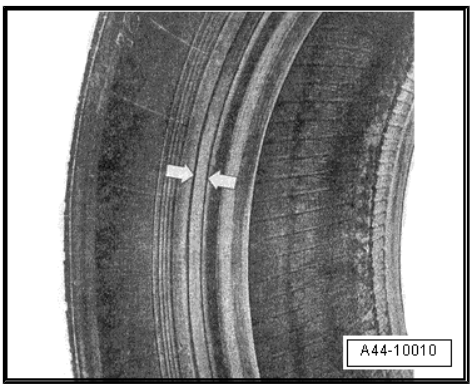

The tyre will not withstand the forces generated while driving.

Therefore, the tyre properties will be severely lessened. The polymers will become detached, and other components will be partially detached. This will result in the total destruction of the tyre.



Tyres with separated tread

This type of damage generally emerges over long periods of time. If a damaged tyre, as shown here, is subjected to high levels of stress, this may cause a break in the structure of the tyre due to the centrifugal forces generated when travelling at high speeds.

The diagram shows a tyre with the tread torn off as a result of driving with the tyre underinflated.



9.11 Increase in temperature of an underinflated tyre

The diagram shows the evolution of the temperature of a tyre at a speed of 180 km/h.

A - Normal range: the temperature remains stable while the specified tyre pressure is maintained.

B - Limit range: A decrease in the nominal inflation pressure of 0.3 bars results in an increase in the temperature when driving at high speeds to over 120 °C.

C - Critical temperature limit: tyre failure is now programmable.

T - Temperature in °C.

t - Travelling time in minutes.

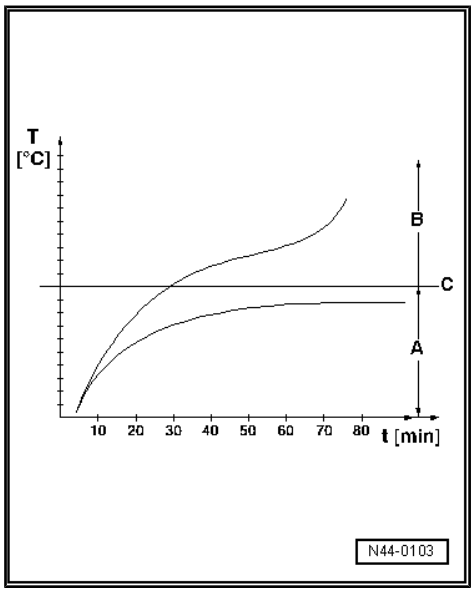

Protected by copyright. Copying for private or commercial purposes, in part or in whole, is not permitted unless authorised by SEAT S.A. SEAT S.A does not guarantee or accept any liability with respect to the correctness of information in this document. Copyright by SEAT S.A.

9.12 Tyre damage resulting from mounting errors

Bead broken as tyre is inflated

Modern radial vehicle tyres are exclusively fitted on safety rims, these have a perimeter ridge on the shoulders -1-.

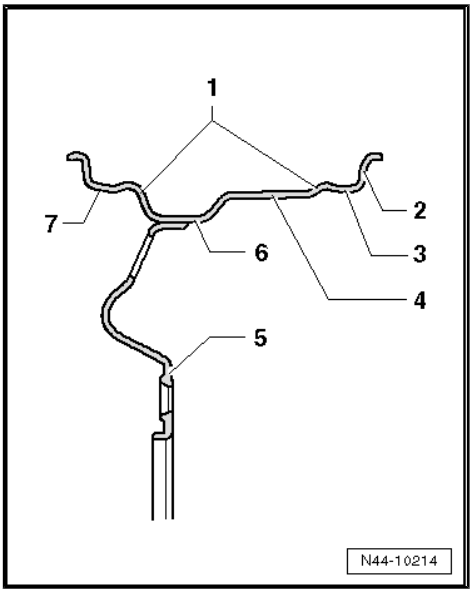

1 - Hump (double hump H 2, high double hump EH2)

2 - Wheel rim contour:

3 - Interior shoulder of wheel rim (for example, oblique shoulder rims)

4 - Wheel rim

5 - Wheel rim plate:

6 - Lower throat

7 - Exterior shoulder of wheel rim (for example, oblique shoulder rims)

This ridge prevents the tyre bead from being flattened by the wheel rim shoulders when driving with underinflated tyres.

When the tyre is inflated, the bead may be caught on the narrow shoulder rim, on the ridge, on part of the perimeter.

In this case, there is a risk of forcing the tyre bead in the event of over inflation, and breaking the steel cables either partially or totally. Generally, breaks in the bead can not be perceived from the exterior.

Special features on tyres with emergency running characteristics

Protected by copyright. Copying for private or commercial purposes, in part or in whole, is not permitted unless authorised by SEAT S.A. SEAT S.A. does not guarantee or accept any liability with respect to the correctness of information in this document. Copyright by SEAT S.A.

Tyres with emergency running characteristics (reinforced side walls) require rims with extended double hump (extended double hump EH2) ⇒ page 60 . The extended double hump prevents the deflated tyre from separating from the rim when flat.

Note

To prevent damage during mounting it is absolutely necessary to observe the instructions for mounting tyre with emergency running characteristics in the guidelines ⇒ Running rear, axles, steering; Rep. gr. 44 ; Removal and mounting of tyres with emergency running characteristics .

WARNING

- ***Tyres with damaged bead do not fit safely onto the wheel rim. These tyres are dangerous.***
- ***There is also a risk that the broken bead will be detached if the vehicle continues to be driven, and the tyre may break suddenly. If there is a break in the bead when the tyre is inflated during assembly, this will also destroy the tyre carcass.***

Tyres with split bead and carcass

The figure shows a split bead and broken carcass as a result of excess tension when mounting the tyre.

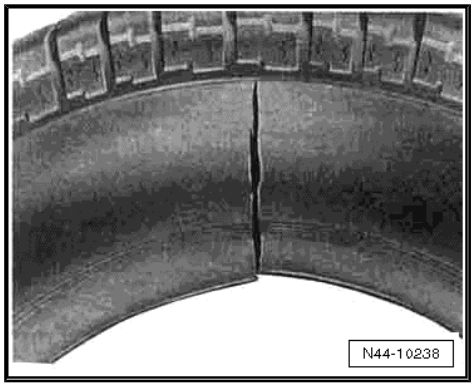

Damage to the bead as a result of faulty or incorrect assembly of the tyre on the assembly machine

The following faults in the tyre assembly may result in serious damage to the tyre:

- When the lower bead is not in contact or only partially in contact with the bottom channel when inserting the upper bead into the machine ⇒ page 51
- When the mounting head is adjusted incorrectly
- when the tap of the edge of the mounting roller is incorrect
- when the guide rollers are worn or have edges

Tyres with damage to the bead

As a result of the above-mentioned circumstances, the floor of the bead may divide up under excess strain along the perimeter and/or be flattened to the bead strands.

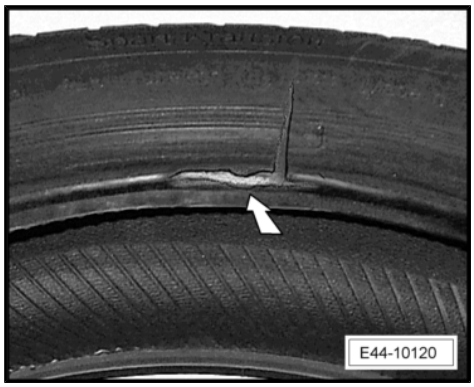

Protected by Copyright. Copying for private or commercial purposes, in part or in whole, is not permitted unless authorised by SEAT S.A. SEAT S.A does not guarantee or accept any liability with respect to the correctness of information in this document. Copyright by SEAT S.A.

Often there are signs of incrustation and the exit of the guide roller in the region of the damage.



Note

As a general rule, both tyre beads and the wheel rim shoulders should be lubricated with a product to ease movement .

If damage produced during assembly is not taken into account, there is a risk of faulty tyres at a later stage.

NOTE:

- Never without assembly paste
- Step pressure never over 3 bars
- Seat pressure never over 4 bars
- Finally reduce to specified tyre pressure

10 Run flat tyres (tyres with emergency running characteristics)

Mounting and removing tyres with emergency running properties

Removal and mounting of tyres with emergency running properties is described in the guidelines ⇒ Running gear, axles, steering; Rep. gr. 44 .

10.1 General information

On tyres with emergency running characteristics the side wall is reinforced in comparison to normal tyres. This reduces chafing on the side wall when the tyre looses pressure and prevents the side walls from being pinched. The vehicle remains manoeuvrable and its handling characteristics are almost normal. This makes it unnecessary to change the spare tyre under hazardous circumstances such as on freeways or in inclement weather.

In event of a tyre fault, the trip can be continued to the next workshop (approx. 50 km) with appropriate speed (max. 80 km/h) and with a driving style that is suitable for the conditions, see ⇒ Instruction manual .

In the event of a flat the driver is always responsible for deciding if it is possible to continue a trip after checking the condition of the affected tyre(s).

Protected by copyright. Copying for private or commercial purposes, in part or in whole, is not permitted unless authorised by SEAT S.A. SEAT S.A does not guarantee or accept any liability with respect to the correctness of information in this document. Copyright by SEAT S.A.

-I- Tyres with normal inflation pressure

1 - Tyres with emergency running characteristics (reinforced side wall -red-)

2 - Normal tyres

-I- Tyres without inflation pressure

When a normal tyre -2- looses air, the side wall is pressed together extremely by the rim. The tyre side wall heats up highly when operated without inflation pressure or is pinched and thereby damaged.

On tyres with emergency running characteristic -1- the tyre is supported by the reinforced side wall (-red-). Due to a special rubber mixture and the low friction to which the side is subject, the tyre does not heat up as highly during operation and the vehicle remains steerable.

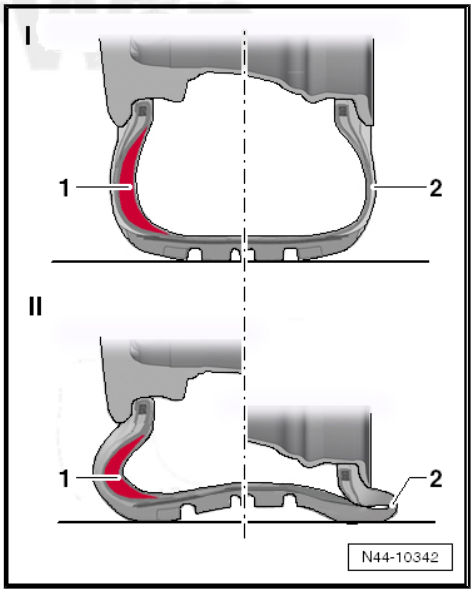

Note

Note the special conditions for use of tyres with emergency running characteristics *⇒ page 56* .

Identification

Tyres with emergency running characteristics can be recognised by the following abbreviations: DSST, Euforia, RFT, ROF, RSC, SSR or ZP. These abbreviations are listed on the side of the tyre behind the tyre description of the respective tyre manufacturer.



Body

1 - Bead with core

2 - Side wall

3 - Side wall reinforcement

4 - Rim with "extended hump" (EH2) on both sides - required when tyres with emergency running characteristics are to be used.

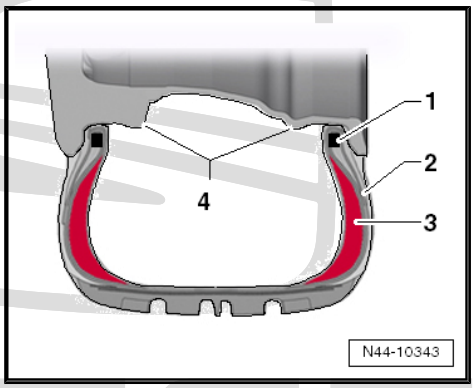

10.2 Tyres with emergency running characteristics SST/runflat (self-supporting tyre)

Protected by copyright. Copying for private or commercial purposes, in part or in whole, is not permitted unless authorised by SEAT S.A. SEAT S.A does not guarantee or accept any liability with respect to the correctness of information in this document. Copyright by SEAT S.A.

General notes

SST tyres are labelled on the sidewall with a special RSC symbol (= Runflat System Component).

This system is characterised by tyres with reinforced side walls. When the tyre looses pressure the side walls support the entire weight of the vehicle in curves as well as when driving straight ahead and prevent the rim from coming into contact with the pavement.

As with the PAX system these tyres must be installed in combination with special rims for them to function correctly.

SST tyres may be used on vehicles with a tyre inflation pressure control system.

Note the special installation instructions for SST tyres.

It is not permissible to mount SST tyres together with standard tyres on one car, even in pairs on one axle. It is only permissible to mount a standard tyre in exceptions for a short period of time or short distance. However, this can negate the specific advantages of SST tyres in the event of a flat while driving and it is necessary to notify the customer of this expressly.

Note

- *When all pressure is lost, it is possible to continue the trip at a maximum speed of 80 km/h for a distance of not more than 50 km.*
- *After use in an emergency running situation it is necessary to replace the tyres.*
- *It is necessary to check the rims immediately for possible damage and replace them if necessary.*

Tyres with SST system

-I- Inflated SST tyres

-II- Uninflated SST tyres.

The particularly strong side walls keep the uninflated tyre on the rim and help keep the vehicle steerable.

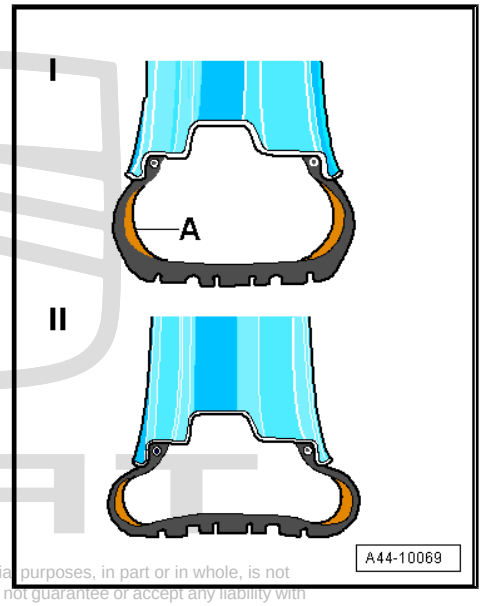

Tyre structure

SST technology is based on self-supporting reinforced sidewalls.

Protected by copyright. Copying for private or commercial purposes, in part or in whole, is not permitted unless authorised by SEAT S.A. SEAT S.A does not guarantee or accept any liability with respect to the correctness of information in this document.

A special rubber mixture reinforces the tyres and supports the weight of the vehicle when driving with uninflated tyres.

- -A- SST tyres.
- -B- Conventional tyres.

In comparison to conventional tyres the reinforced side walls prevent the side wall from being pinched between the road and rim in the event of a flat.

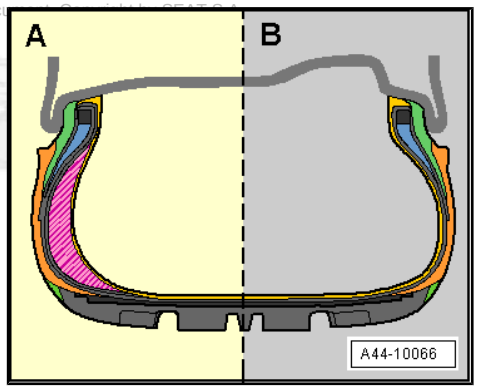

Difference between H2 and EH2 rims (extended hump)

– The greater height of the EH2 rim -1- prevents the SST tyre from separating from the rim in the event of pressure loss.

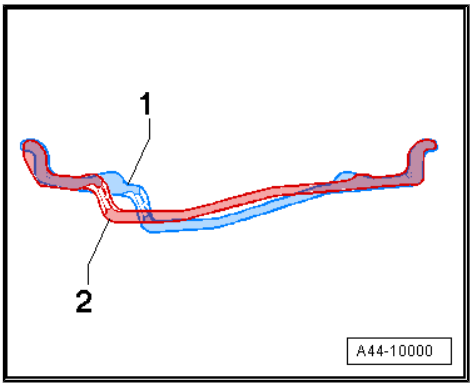

10.3 Retrofitting/prerequisites for use of tyres with emergency running characteristics

Since loss of pressure is not always recognisable at first glance on tyres with emergency running characteristics, it is necessary for vehicles on which such tyres are used to have a tyre inflation pressure control system. With such a system the drive is notified when the inflation pressure drops to below a certain value.

Tyres with emergency running characteristics require rims with extended double hump (extended double hump EH2) ⇒ page 60 .

Observe the special instructions for mounting ⇒ Running gear, axles, steering; Rep. gr. 44 ; Mounting and removing tyres with emergency running characteristics .

Mixed mounting together with standard tyres is not permissible even in pairs on one axle.

A standard tyre may be mounted only in exceptions for a short time or for a limited distance. However, this eliminates the special emergency running characteristics and it is necessary to advise the driver of this specifically.

Protected by copyright. Copying for private or commercial purposes, in part or in whole, is not permitted unless authorised by SEAT S.A. SEAT S.A does not guarantee or accept any liability with respect to the correctness of information in this document. Copyright by SEAT S.A.

10.4 Tyre pressure monitor (TPM+)

General notes:

Please observe the instructions in the ⇒ Owner's Manual .

The TPM and TPM+ measuring systems are indirect measuring systems. The wheels are equipped with an electronic circuit. The tyre pressure monitor uses information from the ABS sensors to compare the rolling circumference and the vibration of the individual wheels. Any changes on one or more wheels are indicated on the dash panel display. If only one tyre is affected, the tyre position is indicated.

The tyre pressure monitor is fitted with an independent controller for detecting the slow and creeping loss of tyre pressure at a wheel position. Using the signals from the ABS sensors, the RKA + compares the revolutions and thus the rolling circumference of the individual wheels. The tyre pressure warning lamp in the instrument cluster lights up if the rolling circumference of one of the wheels changes. The rolling circumference of the tyre may change if:

- If the tyre pressure is too low.
- If the tyre is damaged.
- the wheels have been changed and the new tyre pressures not saved.
- If the vehicle is loaded unevenly.
- If the wheels of one axle are subjected to a greater load (e.g. when pulling a trailer or when driving uphill and downhill).
- When driving with snow-tyres.
- When driving with the temporary spare wheel.
- one wheel on each axle has been changed (including when wheels have been swapped from front to rear or vice versa).
- the left and right wheels are run on different surfaces for a sustained period of time.

Tyre pressure warning appears

The tyre pressure warning on the instrument cluster -arrow- indicates when the tyre pressure is too low or when there is a system malfunction.

Information of the function of the tyre pressure monitor is given in the guidelines ⇒ Running gear, axles, steering; Rep. gr. 44 ; Tyre pressure monitor (TPM+)

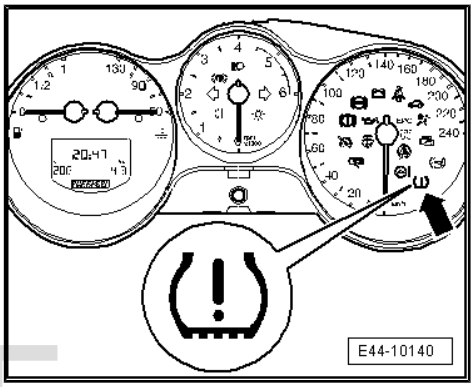

10.5 Repair

Protected by copyright. Copying for private or commercial purposes, in part or in whole, is not permitted unless authorised by SEAT S.A. SEAT S.A does not guarantee or accept any liability with respect to the correctness of information in this document. Copyright by SEAT S.A.

WARNING

- *Tyres with emergency running characteristic must be replaced after being run flat.*
- *Observe the special instructions for mounting ⇒ Running gear, axles, steering; Rep. gr. 44 ; Mounting and removing tyres with emergency running characteristics .*

General notes

– As with conventional rim/tyre systems it is necessary to check the rim before mounting.

– After use in emergency operation it is necessary to check the rim for damage (concentricity, parallel rotation, other damage ⇒ page 34), because the rim may have been damaged during emergency operation by a pothole or similar.

– If the rim is damaged, replace it with a new rim.

11 Self-sealing tyre „ContiSeal“

- Certain Seat models are delivered with self-sealing tyres from Continental ex-factory.
- This technology, referred to as ContiSeal, is a system that has been developed to allow the car to continue to be driven even if a nail or screw has penetrated the tyre: if screws or nails penetrate the tyre, a protective layer on the inside of the tyre running surface immediately seals the resulting holes.
- This means no air can escape. This sealing procedure is effective by almost all holes that have been caused by an object with a diameter from up to five millimetres.

11.1 Explanation of the ContiSeal tyre

- ContiSeal is a preventative sealing compound installed by the manufacturer Continental as an integral component of the production process.
- ContiSeal is a self-adhesive, viscous sealing compound that is applied in an even coat from shoulder to shoulder on the inside of the running surface.
- This sealing compound is a component of the ContiSeal tyre.
- ContiSeal tyres are designated by a special symbol on the wall of the tyre.

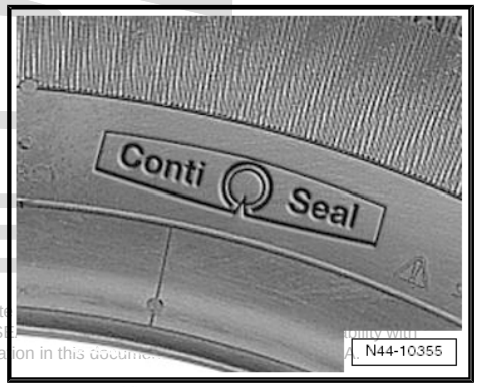

Protected by copyright. Copying for private
permitted unless authorised by SEAT S.A. SE
respect to the correctness of information in this document

Caution

The sealing compound is not intended as a permanent tyre repair following a puncture.

ContiSeal tyres whose structure has been perforated by a foreign body should not be repaired.

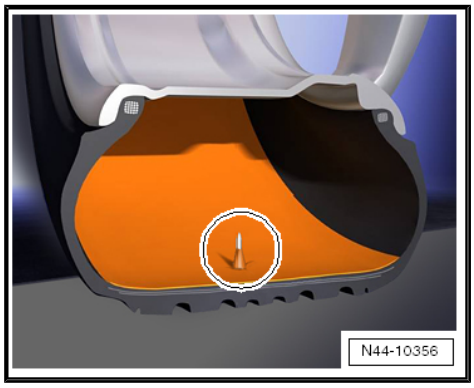

- When the tread of a ContiSeal tyre is penetrated by an object with a diameter of up to 5 mm, the sealing compound encloses this and due to the immediate sealing, prevents the loss of pressure.
- The sealing compound is designed to seal the majority of puncture types caused by foreign bodies up to 5 mm in diameter.
- ContiSeal significantly reduces the frequency of flat tyres, but it is not intended to allow the tyre to be operated with reduced pressure or when flat (without air).
- With all other aspects, the ContiSeal tyres have the same features as tyres without this system.

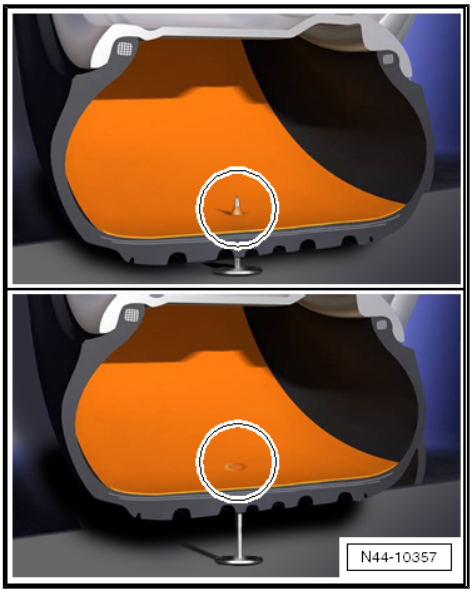

Protected by copyright. Copying for private or commercial purposes, in part or in whole, is not permitted unless authorised by SEAT S.A. SEAT S.A does not guarantee or accept any liability with respect to the correctness of information in this document. Copyright by SEAT S.A.

11.2 Handling the ContiSeal tyres

- When dealing with the ContiSeal tyres, special focus must be made on cleanliness when handling and storing.
- The sealing compound on the inside of the running surface of the tyre is not protected and is therefore very susceptible to any type of contamination.
- We recommend storing each tyre individually in a sufficiently large plastic bag or similar.
- As with other tyres, the ContiSeal tyre must also be checked for cuts, punctures and loss in pressure on a regular basis.
- This inspection should be conducted at least once or twice a month, and always prior to each long trip.
- Penetrations or damage that is not attended to in good time can lead to a loss of inflation pressure and/or failure of the tyre.
- ContiSeal tyres with cuts and punctures must be checked immediately.
- It is necessary to decide whether the tyre must be taken out of use and scrapped.
- ContiSeal are mounted and removed in the same way as conventional tyres.

12 Important information on rims

12.1 General notes

Production materials

Rims are produced primarily of three materials: steel, aluminium alloys and magnesium alloys.

Different production and mouldings processes are used for each material. This results in rims with different physical and dynamic characteristics.

Steel

This is the traditionally and most used material due to its good mechanical properties and particularly due to the low costs. The major disadvantage is its weight.

Aluminium alloys

This is a popular material due to its specific properties such as light weight and mechanical stability. These properties make the material resistant to the stresses encountered when used on sport cars. However, the costs are higher than for steel. The production and mouldings process consist of cold-chamber die-casting followed by machining.

Protected by copyright. Copying or distribution of this document, or any part or in whole, is not permitted without the written permission of SEAT. All rights reserved. We do not accept any liability with respect to the correctness of information in this document. Copyright by SEAT S.A.

Magnesium alloy

Use of this material is virtually obligatory for racing cars. It is becoming increasingly popular due to its high stability combined with extremely low weight. The costs are higher than for aluminium alloy rims. The production and mouldings process consist of hot-chamber die-casting followed by machining.

12.2 Layout of a wheel rim

1 - Wheel rim contour:

- ❑ Contact surface for lateral tyre bead

2 - Hump (H2) on both sides of rim

- ❑ This prevents the tyre from coming off the shoulder of the rim during extreme cornering.
- ❑ Extended hump (EH2): required for use with tyres with emergency running characteristics ⇒ page 61

3 - Lower throat

- ❑ Facilitates tyre mounting

A - Flange-to-flange width

- ❑ Distance between contact surfaces on both rim flanges
- ❑ Dimensions specified in inches

B - Wheel rim diameter code

- ❑ Distance between contact surfaces of tyre on opposing shoulders
- ❑ Dimensions specified in inches

C - Rim depth

- ❑ Distance between vertical centre of wheel and inner wheel contact surface
- ❑ Dimensions specified in mm

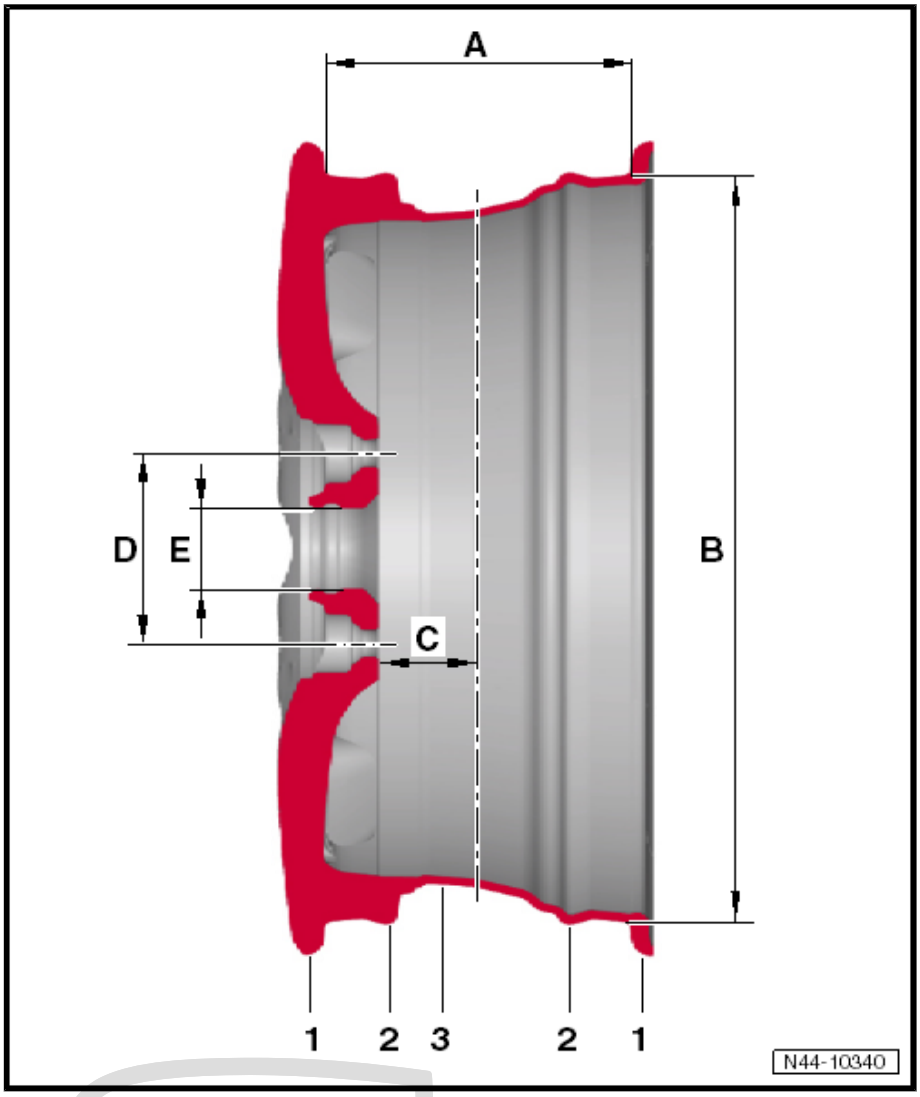

D - Pitch circle diameter

- ❑ Pitch circle diameter of holes for wheel lug bolts
- ❑ Dimensions specified in mm

E - Middle hole

- ❑ Used for centring
- ❑ Dimensions specified in mm

12.3 Specifications on disk wheels

A variety of data appears on the wheel rims. The following example shows the data required to correctly identify the wheel rim.

Protected by copyright. Copying for private or commercial purposes, in part or in whole, is not permitted unless authorised by SEAT S.A. SEAT S.A. does not guarantee or accept any liability with respect to the correctness of information in this document. Copyright by SEAT S.A.

Wheel rim size:	6 J x 15 6 - rim width, in inches J - shape of rim flange 15 - diameter of rim, in inches
Positive offset (ET) in mm:	43
Rim contour and flange data:	EH2 Extended hump [1]

[1] Extended hump on both rim flanges. When using an uninflated tyre with emergency running characteristics these prevent the

tyre from coming off its seat on the rim flange. EH2 wheels are only required if emergency driving tyres are fitted. ⇒ page 53

12.4 Care and maintenance of light alloy wheel rims

Regular maintenance is required to keep light alloy rims looking good over long periods of time.

They should be carefully washed at least every two weeks in order to remove de-icing salt and the remains of braking friction, otherwise these will attack the wheel rim covering.

Cleaning products

Suitable cleaning products include:

- Water or soapy water
- Water and vinegar essence
- Special cleaning products designed for this purpose which do not contain acids or aggressive solvents.

Protected by copyright. Copying for private or commercial purposes, in part or in whole, is not permitted unless authorised by SEAT S.A. SEAT S.A does not guarantee or accept any liability with respect to the correctness of information in this document. Copyright by SEAT S.A.

The cleaning product should not be left on the wheel rim for longer than the specified application time.

The shorter the recommended soaking time, the stronger and more aggressive the cleaning agent.

Damage to the protective coat

If the protective coat of lacquer is damaged, for example by flying stones, it should be repaired immediately ⇒ page 62 .

Removing the remains of glue from light alloy wheel rims

- Strong solvents and acids attack the upper layer of enamel on light alloy rims, dulling the treated area and giving it an opaline appearance. Therefore, products of this type should not be used.
- To remove adhesive residue on alloy wheels, use alloy cleansers or a petrol-based cleanser. The specified application period should not be exceeded.
- Wash rims thoroughly with water after cleaning or removing remains of glue.

12.5 Repair of light alloy rims

WARNING

- *it is not permissible to repair damaged rims using heat, welding or material deposition or removal*
- *It is not permissible to repair damaged or deformed rims and rims whose bolt holes are cracked or deformed.*
- *Repair only with proven and approved paint.*
- *Following repair to a rim the manufacturer is no longer liable.*

Rims with cracks at the edges should never be repaired; they must be replaced immediately.

Any type of machining, heat treatment or welding work with material deposition is prohibited.

Reshaping the material is prohibited

The radial and axial run-out before repair must not exceed the production tolerance of 0.8 mm.

Only cast light-alloy rims may be treated with filler. The material specification AISI xx is stamped on the inside of such rims.

Forged rims may only be painted.

Repair is limited to the painted surfaces.

Machined rims with one a transparent paint finish cannot be re-paired in any manner.

It is only permissible to repair surface damage on the visible side of the rim (design side).

For repair the damage must not be deeper than 1 mm.

Apply filler only at a distance of 50 mm from the outer rim flange.

12.6 The valve

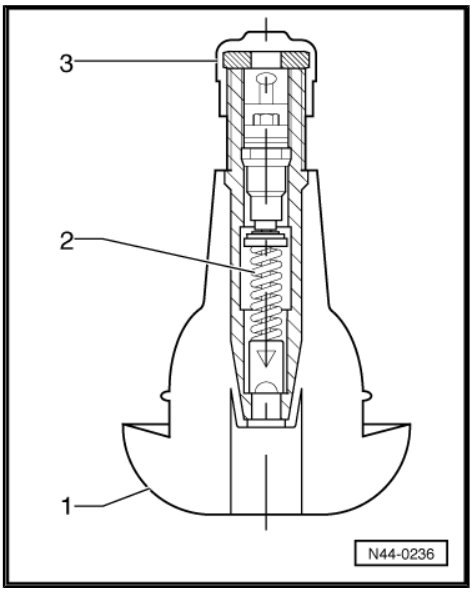

1 - Valve stem

2 - Valve core

3 - Valve cap

1. Valve stem

The rubber valve for tubeless tyres is designed so that the wheel rim opening seals hermetically. The elastic material of the valve body is compressed hard against the wheel rim opening.

For threaded valves with a metal foot, a rubber gasket serves to make the seal. The valve hole boundary areas are sealing areas. Therefore they must be free of rust, contamination and damage.

2. Valve core

The valve cone has the most important purpose: it seals and allows the checking and control of the tyre pressure. The small plate seal can only operate correctly if it clean and dry. The equipment used to inflate the tyres must be dry and free of oil.

3. Valve cap

A cap should always be screwed on the valves. It prevents dirt from getting into the valve. If the valve is soiled, the dirt could reach the valve plate when inflating the tyre resulting in leakage.

The valve should be changed every time the tyre is assembled.

If the vehicle is driven without valve cap, dirt can get into the valve. This can result in a slow leak:

- Detachment of the polymer casing ⇒ page 49
- Dents along the edge of the bead zone ⇒ page 49
- Detached tread and guard ⇒ page 50

WARNING

The valve is only safely sealed if the hood is screwed on tightly.

Protected by copyright. Copying for private or commercial purposes, in part or in whole, is not permitted unless authorised by SEAT S.A. SEAT S.A does not guarantee or accept any liability with respect to the correctness of information in this document. Copyright by SEAT S.A.

13 Alternative systems for spare tyre

Note

The vehicle equipment may not include a conventional spare tyre, i.e. a wheel with the same characteristics as the wheels mounted on the vehicle.

SEAT offers two alternatives for replacing the spare tyres:

- Emergency spare wheel
- Breakdown repair kit

13.1 Instructions for the use of emergency wheels

Notify your customers of the following information whenever necessary, and refer them to the Owner's Manual.

Note

- *Inflatable spare tyres of this type were developed for provisional and temporary use. Therefore they should be changed as soon as possible for normal wheels.*
- *Tyre pressures of emergency or spare wheels should be checked immediately after assembly. The inflation pressure table in the maintenance guidelines contain the precise values and the vehicle owner's manual also contains the correct values.*
- *The speed limits given for emergency wheels must be adhered to („MAX 80 km/h“ or „MAX 50 mph“).*
- *Avoid accelerating or sharp braking and rapid cornering.*
- *Never drive with more than one emergency or spare wheel fitted.*
- *For technical reasons the use of snow chains is not permitted on emergency wheels.*
- *In the event of fault on a front wheel, fit the emergency wheel on the rear axle if chains are required. The free rear wheel should be fitted in place of the faulty front wheel.*

Protected by copyright. Copying for private or commercial purposes, in part or in whole, is not permitted. Unauthorized use may violate copyright laws. SEAT S.A. SEAT S.A does not guarantee or accept any liability with respect to the correctness of information in this document. Copyright by SEAT S.A.

13.2 Instructions for the use of breakdown repair kit

The breakdown repair kit is located in the boot, where the spare tyre was normally be located and replaces it. In addition to a compressor this set includes a bottle with tyre sealant.

This product allows minor damage to the surface of the tyre tread produced by sharp objects to be sealed.

Cuts or punctures in the tyre with a size greater than 6 mm cannot be repaired with the breakdown repair kit.

13.2.1 Tyre sealant

The sealant consists of natural latex and does not have a corrosive effect either for the tyre or the rim.

The tyre sealant is contained in a plastic bottle and has an expiry date -arrow-.



The sealant can be used over a period of four years. After expiration of this expiry date it is necessary to replace the plastic bottle. After opening, e.g. to repair a tyre, it is necessary to replace the bottle with sealant.

The temperature range for use is from -30 °C to 70 °C.

A bottle containing 450 ml is sufficient for a tyre size of 245/45 R17 or 245/40 R18 and similar tyre sizes. For larger tyres a bottle with a capacity of 600 ml is required.

Repair of tyres in which the sealant has been used:

When the tyre is removed from the rim it is necessary to remove the remaining liquid from the inside of the tyre (e.g. with a syringe).

Note

The remains of the sealant liquid cannot be reused; they should be collected and given to centres specialised in the disposal of workshop waste material.

Wipe out remaining tyre sealant which may still be present on the rim and inside of the tyre, carefully with a clean rag.

Always replace the tyre inflation valve.

The repair of a punctured tyre that has been repaired with liquid sealant is carried out the same way as for a conventional tyre.

Protected by copyright. Copying for private or commercial purposes, in part or in whole, is not permitted unless authorised by SEAT S.A. SEAT S.A does not guarantee or accept any liability with respect to the correctness of information in this document. Copyright by SEAT S.A.

14 Mounting wheels

14.1 Interchanging wheels .

Greater tread wear occurs on tyres on the front axle of front-wheel drive vehicles. This is because they are subjected to greater strains.

In order that the 4 tyres on the vehicle all have the same useful life, the wheels on the front axle should be fitted on the rear axle and vice versa.

The longer a tyre is driven in any position, the more it adapts to this position, therefore tyres should be interchanged at short intervals, for example every 5000 km.

For tyres with a specified direction of travel, make sure that the direction has not been changed.

Tyres can only be interchanged in diagonal pairs if there is no specified direction of travel. This interchange is particularly beneficial where saw-tooth wear is detected ⇒ page 28 .

If advanced saw-tooth wear is detected and tread wear is over 50%, only minor improvements can be obtained and it is therefore unnecessary to interchange the tyres. The elasticity of tread blocks is reduced and wear is not excessive.

14.2 Instructions for changing/fitting wheels

WARNING

Firm fit of wheel bolts and wheels can only be guaranteed when observing the tests and instructions listed below.

– Check to ensure that contact surfaces -arrows- on brake disc are free of corrosion and dirt.

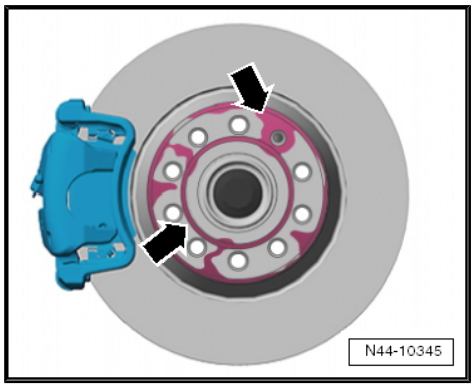

Protected by copyright. Copying for private or commercial purposes, in part or in whole, is not permitted unless authorised by SEAT S.A. SEAT S.A does not guarantee or accept any liability with respect to the correctness of information in this document. Copyright by SEAT S.A.

– Check to ensure that contact surface -arrow- on centring seat of brake disc are free of corrosion and dirt.

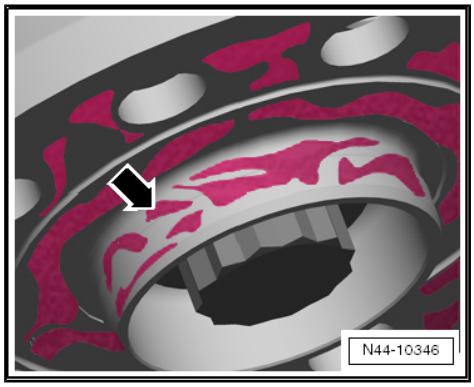

– Check to ensure that contact surface -arrow- on inner side of wheel (rim) and also centring seat of rim are free of corrosion and dirt.

– The calottes [1] of the holes for the wheel bolts and the threads of the wheel bolts must also be free from corrosion, contamination, oil and grease.

[1] The calotte is a bent surface of a round segment.

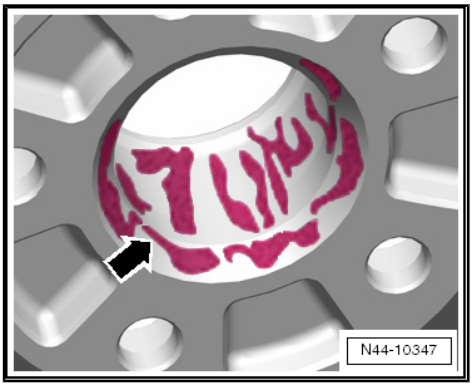

– Check whether the wheel bolts can be easily screwed in by hand. The thread of the wheel nuts should not come into contact with the brake disc opening -arrow-.

If the thread of the wheel bolt touches the opening -arrow-, turn the brake disc as necessary.

If necessary, remove dirt and corrosion, oil or grease from the contact surfaces, threads in the wheel hub and/or wheel bolts as necessary.

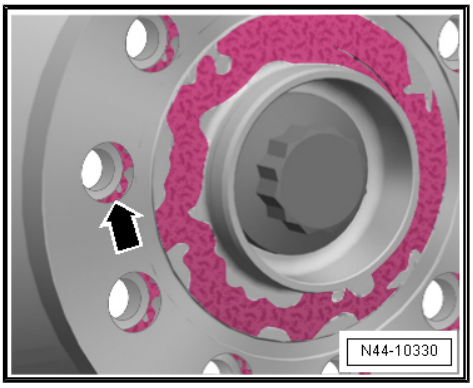

WARNING

Wheel bolts that are damaged, severely corroded or are difficult to remove must be replaced.

Wheel assembly

– Preserving wheel centring seat ⇒ Running gear, axles, steering; Rep. gr. 44 ; Wheel centring seat: Protect from corrosion .

1 - Hand tighten the wheel nuts evenly.

2 - Tighten wheel lug bolts in crisscross pattern to approx. 50 Nm.

3 - Lower vehicle and tighten all wheel lug bolts in crisscross pattern to specified torque ⇒ Running gear, axle,s steering; Rep. gr. 44 ; Tightening torque for mounting wheels .

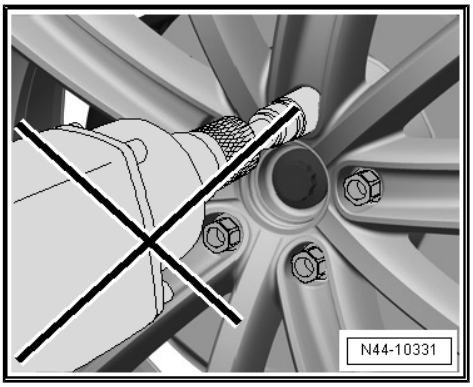

WARNING

Never use an impact spanner to tighten to wheel lug bolts.

Protected by copyright. Copying for private or commercial purposes, in part or in whole, is not permitted unless authorised by SEAT S.A. SEAT S.A does not guarantee or accept any liability with respect to the correctness of information in this document. Copyright by SEAT S.A.

15 Technical data on wheels for SEAT vehicle models

⇒ „16 Technical data on wheels for Altea 2004“, page 69

⇒ „17 Technical data on wheels for Altea 2009“, page 71

⇒ „18 Technical data on wheels for Altea XL 2007“, page 73

⇒ „19 Technical data on wheels for Altea XL 2009“, page 75

⇒ „20 Technical data on wheels for Altea XL Freetrack 2008“, page 77

⇒ „21 Technical data on wheels for Altea XL Freetrack 2009“, page 78

⇒ „22 Technical data on wheels for Leon 2006“, page 80

⇒ „23 Technical data on wheels for Leon 2009“, page 82

⇒ „24 Technical data on wheels for Toledo 2005“, page 85

⇒ „25 Technical data on wheels for Toledo 2009“, page 87

⇒ „26 Technical data on wheels for Ibiza 2002“, page 89

⇒ „27 Technical data on wheels for Cordoba 2003“, page 92

⇒ „28 Technical data on wheels for Ibiza 2008, Ibiza ST 2010“, page 94

⇒ „29 Technical data on wheels for Exeo 2009, Exeo ST 2009“, page 97

⇒ „30 Technical wheel data for Alhambra 2011“, page 99

Protected by copyright. Copying for private or commercial purposes, in part or in whole, is not permitted unless authorised by SEAT S.A. SEAT S.A does not guarantee or accept any liability with respect to the correctness of information in this document. Copyright by SEAT S.A.

16 Technical data on wheels for Altea 2004

General information

SEAT vehicles are designed in accordance with the latest safety techniques. In order for this to continue, we recommend that only original SEAT spare parts are used. This is indicated by the SEAT trademark and the part number. These parts have been checked for reliability, safety and suitability.

Despite continual market observations, these aspects cannot by determined by other products. In view of the above, it is therefore understandable that we cannot assume responsibility where these products are mounted.

The wheel rim/tyre combinations or alternative equipment specified in the charts for each vehicle refer exclusively to Genuine SEAT wheel rims. It is not possible to authorise rim and tyre combinations or even the exchange of rim equipment resulting from the trade of accessories.

WARNING

The tightening torques of the wheel nuts and the corresponding conditions for handling and assembly should be observed.

permitted unless authorised by SEAT S.A. SEAT S.A does not guarantee or accept any liability with respect to the correctness of information in this document. Copyright by SEAT S.A.

Data table

Engine	Wheels (rims)	Tyre	Load index	Minimum Speed index code letter 1)	Chains (max. thickness)
Petrol engines					
1.4 63 kW	6.5Jx16 ET50	205/55 R16	91	T	9 mm
1.4 92 kW	6.5Jx16 ET50	205/55 R16	91	H	9 mm
	7Jx17 ET54	225/45 R17	91	H	9 mm
1.6 75 kW	6.5Jx16 ET50	205/55 R16	91	U	9 mm
	7Jx17 ET54	225/45 R17	91	U	9 mm
1.8 118 kW	7Jx17 ET54	225/45 R17	91	V	9 mm
	7,5Jx18 ET51	225/40 R18	91	V	9 mm
2.0 110 kW	6.5Jx16 ET50	205/55 R16	91	V	9 mm
	7Jx17 ET54	225/45 R17	91	V	9 mm
2.0 147 kW	7Jx17 ET54	225/45 R17	91	V	9 mm
	7,5Jx18 ET51	225/40 R18	91	V	9 mm
Diesel engines					
1.9 77 kW with/without DPF	6.5Jx16 ET50	205/55 R16	91	U	9 mm
	7Jx17 ET54	225/45 R17	91	U	9 mm
2.0 100 kW	6.5Jx16 ET50	205/55 R16	91	H	9 mm
	7Jx17 ET54	225/45 R17	91	H	9 mm
2.0 103 kW with/without DPF	6.5Jx16 ET50	205/55 R16	91	V	9 mm
	7Jx17 ET54	225/45 R17	91	V	9 mm
2.0 125 kW DPF	7Jx17 ET54	225/45 R17	91	V	9 mm
	7,5Jx18 ET51	225/40 R18	91	V	9 mm

[1] This is the minimum permissible technical speed index code letter. See documents ⇒ page 4 or EU homologation ⇒ page 4 for vehicle to determine letter applicable for vehicle.

Note

Tyre pressures are given on the inside of the fuel cap.

Note

- *Further information on snow chains is given in ⇒ page 15 .*
- *Further information on all-season tyres is given in ⇒ page 15 .*
- *Further information on winter tyres is given in ⇒ page 13 .*

Protected by copyright. Copying for private or commercial purposes, in part or in whole, is not permitted unless authorised by SEAT S.A. SEAT S.A does not guarantee or accept any liability with respect to the correctness of information in this document. Copyright by SEAT S.A.

17 Technical data on wheels for Altea 2009

General information

SEAT vehicles are designed in accordance with the latest safety techniques. In order for this to continue, we recommend that only original SEAT spare parts are used. This is indicated by the SEAT trademark and the part number. These parts have been checked for reliability, safety and suitability.

Despite continual market observations, these aspects cannot by determined by other products. In view of the above, it is therefore understandable that we cannot assume responsibility where these products are mounted.

The wheel rim/tyre combinations or alternative equipment specified in the charts for each vehicle refer exclusively to Genuine SEAT wheel rims. It is not possible to authorise rim and tyre combinations or even the exchange of rim equipment resulting from the trade of accessories.

This document is protected by copyright. Reproduction or distribution of this document is not permitted unless authorised by SEAT S.A. SEAT S.A. does not guarantee or accept any liability with respect to the correctness of information in this document. Copyright by SEAT S.A.

WARNING

The tightening torques of the wheel nuts and the corresponding conditions for handling and assembly should be observed.

Data table

Engine	Wheels (rims)	Tyre	Load index	Minimum Speed index code letter 1)	Chains (max. thickness)
Petrol engines					
1.2 77 kW	6.5Jx16 ET50	205/55 R16	91	U	9 mm
	7Jx17 ET54	225/45 R17	91	U	9 mm
	7,5Jx18 ET51	225/40 R18	91	U	9 mm
1.4 63 kW	6Jx15 ET47	195/65 R15	91	S	15 mm
	6.5Jx16 ET50	205/55 R16	91	S	9 mm
	7Jx17 ET54	225/45 R17	91	S	9 mm
	7,5Jx18 ET51	225/40 R18	91	S	9 mm
1.4 92 kW	6.5Jx16 ET50	205/55 R16	91	H	9 mm
	7Jx17 ET54	225/45 R17	91	H	9 mm
	7,5Jx18 ET51	225/40 R18	91	H	9 mm
1.6 75 kW and LPG	6Jx15 ET47	195/65 R15	91	U	15 mm
	6.5Jx16 ET50	205/55 R16	91	U	9 mm
	7Jx17 ET54	225/45 R17	91	U	9 mm
	7,5Jx18 ET51	225/40 R18	91	U	9 mm
1.8 118 kW	6.5Jx16 ET50	205/55 R16	91	V	9 mm
	7Jx17 ET54	225/45 R17	91	V	9 mm
	7,5Jx18 ET51	225/40 R18	91	V	9 mm
Diesel engines					
1.6 66 kW CR	6Jx15 ET47	195/65 R15	91	T	15 mm
	6.5Jx16 ET50	205/55 R16	91	T	9 mm
	7Jx17 ET54	225/45 R17	91	T	9 mm
	7,5Jx18 ET51	225/40 R18	91	T	9 mm

Engine	Wheels (rims)	Tyre	Load index	Minimum Speed index code letter 1)	Chains (max. thickness)
1.6 77 kW CR	6Jx15 ET47	195/65 R15	91	U	15 mm
	6.5Jx16 ET50	205/55 R16	91	U	9 mm
	7Jx17 ET54	225/45 R17	91	U	9 mm
	7,5Jx18 ET51	225/40 R18	91	U	9 mm
1.9 66 kW	6Jx15 ET47	195/65 R15	91	T	15 mm
	6.5Jx16 ET50	205/55 R16	91	T	9 mm
	7Jx17 ET54	225/45 R17	91	T	9 mm
	7,5Jx18 ET51	225/40 R18	91	T	9 mm
1.9 77 kW with/ without DPF	6Jx15 ET47	195/65 R15	91	U	15 mm
	6.5Jx16 ET50	205/55 R16	91	U	9 mm
	7Jx17 ET54	225/45 R17	91	U	9 mm
	7,5Jx18 ET51	225/40 R18	91	U	9 mm
2.0 103 kW with/ without DPF	6.5Jx16 ET50	205/55 R16	91	V	9 mm
	7Jx17 ET54	225/45 R17	91	V	9 mm
	7,5Jx18 ET51	225/40 R18	91	V	9 mm
2.0 103 kW CR	6.5Jx16 ET50	205/55 R16	91	V	9 mm
	7Jx17 ET54	225/45 R17	91	V	9 mm
	7,5Jx18 ET51	225/40 R18	91	V	9 mm
2.0 125 kW CR	7Jx17 ET54	225/45 R17	91	V	9 mm
	7,5Jx18 ET51	225/40 R18	91	V	9 mm

1) This is the minimum permissible technical speed index code letter. See documents ⇒ page 4 or EU homologation ⇒ page 4 for vehicle to determine letter applicable for vehicle.

Protected by copyright. Copying for private or commercial purposes, in part or in whole, is not permitted unless authorised by SEAT S.A. SEAT S.A does not guarantee or accept any liability with respect to the correctness of information in this document. Copyright by SEAT S.A.

Note

Tyre pressures are given on the inside of the fuel cap.

Note

- *Further information on snow chains is given in ⇒ page 15 .*
- *Further information on all-season tyres is given in ⇒ page 15 .*
- *Further information on winter tyres is given in ⇒ page 13 .*

18 Technical data on wheels for Altea XL 2007

General information

SEAT vehicles are designed in accordance with the latest safety techniques. In order for this to continue, we recommend that only original SEAT spare parts are used. This is indicated by the SEAT trademark and the part number. These parts have been checked for reliability, safety and suitability.

Despite continual market observations, these aspects cannot by determined by other products. In view of the above, it is therefore understandable that we cannot assume responsibility where these products are mounted.

The wheel rim/tyre combinations or alternative equipment specified in the charts for each vehicle refer exclusively to Genuine SEAT wheel rims. It is not possible to authorise rim and tyre combinations or even the exchange of rim equipment resulting from the trade of accessories.

WARNING

The tightening torques of the wheel nuts and the corresponding conditions for handling and assembly should be observed.

Data table

Engine	Wheels (rims)	Tyre	Load index	Minimum Speed index code letter [1)]	Chains (max. thickness)
Petrol engines					
1.4 63 kW	6.5Jx16 ET50	205/55 R16	91	T	9 mm
1.4 92 kW	6.5Jx16 ET50	205/55 R16	91	H	9 mm
	7Jx17 ET54	225/45 R17	91	H	9 mm
1.6 75 kW	6.5Jx16 ET50	205/55 R16	91	U	9 mm
	7Jx17 ET54	225/45 R17	91	U	9 mm
1.8 118 kW	7Jx17 ET54	225/45 R17	91	V	9 mm
	7,5Jx18 ET51	225/40 R18	91	V	9 mm
2.0 110 kW	6.5Jx16 ET50	205/55 R16	91	V	9 mm
	7Jx17 ET54	225/45 R17	91	V	9 mm
2.0 147 kW	7Jx17 ET54	225/45 R17	91	V	9 mm
	7,5Jx18 ET51	225/40 R18	91	V	9 mm
Diesel engines					
1.9 77 kW with/without DPF	6.5Jx16 ET50	205/55 R16	91	U	9 mm
	7Jx17 ET54	225/45 R17	91	U	9 mm
2.0 100 kW	6.5Jx16 ET50	205/55 R16	91	H	9 mm
	7Jx17 ET54	225/45 R17	91	H	9 mm
2.0 103 kW with/without DPF	6.5Jx16 ET50	205/55 R16	91	V	9 mm
	7Jx17 ET54	225/45 R17	91	V	9 mm
2.0 125 kW DPF	7Jx17 ET54	225/45 R17	91	V	9 mm
	7,5Jx18 ET51	225/40 R18	91	V	9 mm

Protected by copyright. Copying for private or commercial purposes, in part or in whole, is not permitted unless authorised by SEAT S.A. SEAT S.A. does not guarantee the accuracy with respect to the correctness of information in this document. Copyright by SEAT S.A.

[1] This is the minimum permissible technical speed index code letter. See documents ⇒ page 4 or EU homologation ⇒ page 4 for vehicle to determine letter applicable for vehicle.

Note

Tyre pressures are given on the inside of the fuel cap.

Note

- *Further information on snow chains is given in ⇒ page 15 .*
- *Further information on all-season tyres is given in ⇒ page 15 .*
- *Further information on winter tyres is given in ⇒ page 13 .*

Protected by copyright. Copying for private or commercial purposes, in part or in whole, is not permitted unless authorised by SEAT S.A. SEAT S.A does not guarantee or accept any liability with respect to the correctness of information in this document. Copyright by SEAT S.A.

19 Technical data on wheels for Altea XL 2009

General information

SEAT vehicles are designed in accordance with the latest safety techniques. In order for this to continue, we recommend that only original SEAT spare parts are used. This is indicated by the SEAT trademark and the part number. These parts have been checked for reliability, safety and suitability.

Despite continual market observations, these aspects cannot by determined by other products. In view of the above, it is therefore understandable that we cannot assume responsibility where these products are mounted.

The wheel rim/tyre combinations or alternative equipment specified in the charts for each vehicle refer exclusively to Genuine SEAT wheel rims. It is not possible to authorise rim and tyre combinations or even the exchange of rim equipment resulting from the trade of accessories.

SEAT. Copying for private or commercial purposes, in part or in whole, is not permitted unless authorised by SEAT S.A. SEAT S.A does not guarantee or accept any liability with respect to the correctness of information in this document. Copyright by SEAT S.A.

WARNING

The tightening torques of the wheel nuts and the corresponding conditions for handling and assembly should be observed.

Data table

Engine	Wheels (rims)	Tyre	Load index	Minimum Speed index code letter 1)	Chains (max. thickness)
Petrol engines					
1.2 77 kW	6.5Jx16 ET50	205/55 R16	91	U	9 mm
	7Jx17 ET54	225/45 R17	91	U	9 mm
	7,5Jx18 ET51	225/40 R18	91	U	9 mm
1.4 63 kW	6Jx15 ET47	195/65 R15	91	S	15 mm
	6.5Jx16 ET50	205/55 R16	91	S	9 mm
	7Jx17 ET54	225/45 R17	91	S	9 mm
	7,5Jx18 ET51	225/40 R18	91	S	9 mm
1.4 92 kW	6.5Jx16 ET50	205/55 R16	91	H	9 mm
	7Jx17 ET54	225/45 R17	91	H	9 mm
	7,5Jx18 ET51	225/40 R18	91	H	9 mm
1.6 75 kW and LPG	6Jx15 ET47	195/65 R15	91	U	15 mm
	6.5Jx16 ET50	205/55 R16	91	U	9 mm
	7Jx17 ET54	225/45 R17	91	U	9 mm
	7,5Jx18 ET51	225/40 R18	91	U	9 mm
1.8 118 kW	6.5Jx16 ET50	205/55 R16	91	V	9 mm
	7Jx17 ET54	225/45 R17	91	V	9 mm
	7,5Jx18 ET51	225/40 R18	91	V	9 mm
Diesel engines					
1.6 66 kW CR	6Jx15 ET47	195/65 R15	91	T	15 mm
	6.5Jx16 ET50	205/55 R16	91	T	9 mm
	7Jx17 ET54	225/45 R17	91	T	9 mm
	7,5Jx18 ET51	225/40 R18	91	T	9 mm

Engine	Wheels (rims)	Tyre	Load index	Minimum Speed index code letter 1)	Chains (max. thickness)
1.6 77 kW CR	6Jx15 ET47	195/65 R15	91	U	15 mm
	6.5Jx16 ET50	205/55 R16	91	U	9 mm
	7Jx17 ET54	225/45 R17	91	U	9 mm
	7,5Jx18 ET51	225/40 R18	91	U	9 mm
1.9 66 kW	6Jx15 ET47	195/65 R15	91	T	15 mm
	6.5Jx16 ET50	205/55 R16	91	T	9 mm
	7Jx17 ET54	225/45 R17	91	T	9 mm
	7,5Jx18 ET51	225/40 R18	91	T	9 mm
1.9 77 kW with/ without DPF	6Jx15 ET47	195/65 R15	91	U	15 mm
	6.5Jx16 ET50	205/55 R16	91	U	9 mm
	7Jx17 ET54	225/45 R17	91	U	9 mm
	7,5Jx18 ET51	225/40 R18	91	U	9 mm
2.0 103 kW with/ without DPF	6.5Jx16 ET50	205/55 R16	91	V	9 mm
	7Jx17 ET54	225/45 R17	91	V	9 mm
	7,5Jx18 ET51	225/40 R18	91	V	9 mm
2.0 103 kW CR	6.5Jx16 ET50	205/55 R16	91	V	9 mm
	7Jx17 ET54	225/45 R17	91	V	9 mm
	7,5Jx18 ET51	225/40 R18	91	V	9 mm
2.0 125 kW CR	7Jx17 ET54	225/45 R17	91	V	9 mm
	7,5Jx18 ET51	225/40 R18	91	V	9 mm

1) This is the minimum permissible technical speed index code letter. See documents ⇒ page 4 or EU homologation ⇒ page 4 for vehicle to determine letter applicable for vehicle.

Protected by copyright. Copying for private or commercial purposes, in part or in whole, is not permitted unless authorised by SEAT S.A. SEAT S.A does not guarantee or accept any liability with respect to the correctness of information in this document. Copyright by SEAT S.A.

Note

Tyre pressures are given on the inside of the fuel cap.

Note

- *Further information on snow chains is given in ⇒ page 15 .*
- *Further information on all-season tyres is given in ⇒ page 15 .*
- *Further information on winter tyres is given in ⇒ page 13 .*

20 Technical data on wheels for Altea XL Freetrack 2008

General information

SEAT vehicles are designed in accordance with the latest safety techniques. In order for this to continue, we recommend that only original SEAT spare parts are used. This is indicated by the SEAT trademark and the part number. These parts have been checked for reliability, safety and suitability.

Despite continual market observations, these aspects cannot by determined by other products. In view of the above, it is therefore understandable that we cannot assume responsibility where these products are mounted.

The wheel rim/tyre combinations or alternative equipment specified in the charts for each vehicle refer exclusively to Genuine SEAT wheel rims. It is not possible to authorise rim and tyre combinations or even the exchange of rim equipment resulting from the trade of accessories.

WARNING

The tightening torques of the wheel nuts and the corresponding conditions for handling and assembly should be observed.

Data table

Engine	Wheels (rims)	Tyre	Load index	Minimum Speed index code letter [1)]	Chains (max. thickness)
Petrol engines					
2.0 147 kW	7Jx17 ET46	225/50 R17	94	V	no
Diesel engines					
2.0 103 kW DPF and 2.0 125 kW DPF	7Jx17 ET46	225/50 R17	94	V	no

[1)] This is the minimum permissible technical speed index code letter. See documents ⇒ page 4 or EU homologation ⇒ page 4 for vehicle to determine letter applicable for vehicle.

SEAT
Copyright for private or commercial purposes, in part or in whole, is not allowed unless authorised by SEAT S.A. SEAT S.A does not guarantee or accept any liability with respect to the correctness of information in this document. Copyright by SEAT S.A.
erWin

Note

Tyre pressures are given on the inside of the fuel cap.

Note

- *Further information on snow chains is given in ⇒ page 15 .*
- *Further information on all-season tyres is given in ⇒ page 15 .*
- *Further information on winter tyres is given in ⇒ page 13 .*

21 Technical data on wheels for Altea XL Freetrack 2009

General information

SEAT vehicles are designed in accordance with the latest safety techniques. In order for this to continue, we recommend that only original SEAT spare parts are used. This is indicated by the SEAT trademark and the part number. These parts have been checked for reliability, safety and suitability.

Despite continual market observations, these aspects cannot by determined by other products. In view of the above, it is therefore understandable that we cannot assume responsibility where these products are mounted.

The wheel rim/tyre combinations or alternative equipment specified in the charts for each vehicle refer exclusively to Genuine SEAT wheel rims. It is not possible to authorise rim and tyre combinations or even the exchange of rim equipment resulting from the trade of accessories.

WARNING

The tightening torques of the wheel nuts and the corresponding conditions for handling and assembly should be observed.

Data table

Protected by copyright. Copying for private or commercial purposes, in part or in whole, is not permitted unless authorised by SEAT S.A. SEAT S.A. does not guarantee or accept any liability with respect to the correctness of information in this document. Copyright © SEAT S.A.

Engine	Wheels (rims)	Tyre	Load index	Minimum Speed index code letter [1]	Chains (max. thickness)
Petrol engines					
1.4 92 kW	6.5Jx16 ET50	205/55 R16	91	U	15 mm
	7Jx17 ET54	225/45 R17	91	U	9 mm
2.0 155 kW	7Jx17 ET46	225/50 R17	94	V	no
Diesel engines					
1.6 77 kW CR	6.5Jx16 ET50	205/55 R16	91	U	15 mm
	7Jx17 ET54	225/45 R17	91	U	9 mm
2.0 103 kW CR	7Jx17 ET46	225/50 R17	94	H	no
2.0 103 kW DPF / 2.0 125 kW DPF and 2.0 125 kW CR	7Jx17 ET46	225/50 R17	94	V	no

[1] This is the minimum permissible technical speed index code letter. See documents ⇒ page 4 or EU homologation ⇒ page 4 for vehicle to determine letter applicable for vehicle.

Note

Tyre pressures are given on the inside of the fuel cap.

Note

- *Further information on snow chains is given in ⇒ page 15 .*
- *Further information on all-season tyres is given in ⇒ page 15 .*
- *Further information on winter tyres is given in ⇒ page 13 .*

Protected by copyright. Copying for private or commercial purposes, in part or in whole, is not permitted unless authorised by SEAT S.A. SEAT S.A does not guarantee or accept any liability with respect to the correctness of information in this document. Copyright by SEAT S.A.

22 Technical data on wheels for Leon 2006

General information

SEAT vehicles are designed in accordance with the latest safety techniques. In order for this to continue, we recommend that only original SEAT spare parts are used. This is indicated by the SEAT trademark and the part number. These parts have been checked for reliability, safety and suitability.

Despite continual market observations, these aspects cannot by determined by other products. In view of the above, it is therefore understandable that we cannot assume responsibility where these products are mounted.

The wheel rim/tyre combinations or alternative equipment specified in the charts for each vehicle refer exclusively to Genuine SEAT wheel rims. It is not possible to authorise rim and tyre combinations or even the exchange of rim equipment resulting from the trade of accessories.

WARNING

The tightening torques of the wheel nuts and the corresponding conditions for handling and assembly should be observed.

Data table

Engine	Wheels (rims)	Tyre	Load index	Minimum Speed index code letter [1)]	Chains (max. thickness)
Petrol engines					
1.4 63 kW	6.5Jx16 ET50	205/55 R16	91	T	9 mm
1.4 92 kW	6.5Jx16 ET50	205/55 R16	91	H	9 mm
	7Jx17 ET54	225/45 R17	91	H	9 mm
1.6 75 kW	6.5Jx16 ET50	205/55 R16	91	U	9 mm
	7Jx17 ET54	225/45 R17	91	U	9 mm
1.8 118 kW	7Jx17 ET54	225/45 R17	91	V	9 mm
	7,5Jx18 ET51	225/40 R18	91	V	9 mm
2.0 110 kW	6.5Jx16 ET50	205/55 R16	91	V	9 mm
	7Jx17 ET54	225/45 R17	91	V	9 mm
2.0 136 kW	7Jx17 ET54	225/45 R17	91	W	9 mm
2.0 147 kW	7Jx17 ET54	225/45 R17	91	W	9 mm
	7,5Jx18 ET51	225/40 R18	91	W	9 mm
2.0 177 kW	7,5Jx18 ET51	225/40 R18	91	W	9 mm
Diesel engines					
1.9 66 kW	6.5Jx16 ET50	205/55 R16	91	T	9 mm
	7Jx17 ET54	225/45 R17	91	T	9 mm
1.9 77 kW with/without DPF	6.5Jx16 ET50	205/55 R16	91	U	9 mm
	7Jx17 ET54	225/45 R17	91	U	9 mm
1.9 77 kW Ecomotive	6Jx15 ET47	195/65 R15	91	U	15 mm
	6.5Jx16 ET50	205/55 R16	91	U	9 mm
2.0 100 kW	6.5Jx16 ET50	205/55 R16	91	H	9 mm
	7Jx17 ET54	225/45 R17	91	H	9 mm

Protected by copyright. Copying for private or commercial purposes, in part or in whole, is not permitted unless authorised by SEAT S.A. SEAT S.A does not guarantee and accepts no liability with respect to the correctness of information in this document. Copyright by SEAT S.A.

Engine	Wheels (rims)	Tyre	Load index	Minimum Speed index code letter 1)	Chains (max. thickness)
2.0 103 kW with/ without DPF	6.5Jx16 ET50	205/55 R16	91	V	9 mm
	7Jx17 ET54	225/45 R17	91	V	9 mm
2.0 125 kW DPF	7Jx17 ET54	225/45 R17	91	V	9 mm
	7,5Jx18 ET51	225/40 R18	91	V	9 mm

1) This is the minimum permissible technical speed index code letter. See documents ⇒ page 4 or EU homologation ⇒ page 4 for vehicle to determine letter applicable for vehicle.

Note

Tyre pressures are given on the inside of the fuel cap.

Protected by copyright. Copying for private or commercial purposes, in part or in whole, is not permitted unless authorised by SEAT S.A. SEAT S.A does not guarantee or accept any liability with respect to the correctness of information in this document. Copyright by SEAT S.A.

Note

- *Further information on snow chains is given in ⇒ page 15 .*
- *Further information on all-season tyres is given in ⇒ page 15 .*
- *Further information on winter tyres is given in ⇒ page 13 .*

23 Technical data on wheels for Leon 2009

General information

SEAT vehicles are designed in accordance with the latest safety techniques. In order for this to continue, we recommend that only original SEAT spare parts are used. This is indicated by the SEAT trademark and the part number. These parts have been checked for reliability, safety and suitability.

Despite continual market observations, these aspects cannot by determined by other products. In view of the above, it is therefore understandable that we cannot assume responsibility where these products are mounted.

The wheel rim/tyre combinations or alternative equipment specified in the charts for each vehicle refer exclusively to Genuine SEAT wheel rims. It is not possible to authorise rim and tyre combinations or even the exchange of rim equipment resulting from the trade of accessories.

WARNING

The tightening torques of the wheel nuts and the corresponding conditions for handling and assembly should be observed.

Data table

Engine	Wheels (rims)	Tyre	Load index	Minimum Speed index code letter [1)]	Chains (max. thickness)
Petrol engines					
1.2 77 kW	6.5Jx16 ET50	205/55 R16	91	U	9 mm
	7Jx17 ET54	225/45 R17	91	U	9 mm
	7,5Jx18 ET51	225/40 R18	91	U	9 mm
1.4 63 kW	6Jx15 ET47	195/65 R15	91	T	15 mm
	6.5Jx16 ET50	205/55 R16	91	T	9 mm
	7Jx17 ET54	225/45 R17	91	T	9 mm
	7,5Jx18 ET51	225/40 R18	91	T	9 mm
1.4 92 kW	6.5Jx16 ET50	205/55 R16	91	H	9 mm
	7Jx17 ET54	225/45 R17	91	H	9 mm
	7,5Jx18 ET51	225/40 R18	91	H	9 mm
1.6 75 kW EU2 / EU4 / EU5 and LPG	6Jx15 ET47	195/65 R15	91	U	15 mm
	6.5Jx16 ET50	205/55 R16	91	U	9 mm
	7Jx17 ET54	225/45 R17	91	U	9 mm
	7,5Jx18 ET51	225/40 R18	91	U	9 mm
1.8 118 kW	6.5Jx16 ET50	205/55 R16	91	V	9 mm
	7Jx17 ET54	225/45 R17	91	V	9 mm
	7,5Jx18 ET51	225/40 R18	91	V	9 mm
2.0 155 kW	7Jx17 ET54	225/45 R17	91	W	9 mm
	7,5Jx18 ET51	225/40 R18	91	W	9 mm
2.0 177 kW	7,5Jx18 ET51	225/40 R18	91	Y	-
2.0 195 kW	8Jx19 ET53	235/35 R19	91	Y	-
Diesel engines					

Protected by copyright. Copying for private or commercial purposes, in part or in whole, is not permitted unless authorised by SEAT S.A. SEAT S.A does not guarantee or accept any liability with respect to the correctness of information in this document. Copyright by SEAT S.A.

Engine	Wheels (rims)	Tyre	Load index	Minimum Speed index code letter [1]	Chains (max. thickness)
1.6 66 kW CR	6Jx15 ET47	195/65 R15	91	T	15 mm
	6.5Jx16 ET50	205/55 R16	91	T	9 mm
	7Jx17 ET54	225/45 R17	91	T	9 mm
	7,5Jx18 ET51	225/40 R18	91	T	9 mm
1.6 77 kW CR	6Jx15 ET47	195/65 R15	91	U	15 mm
	6.5Jx16 ET50	205/55 R16	91	U	9 mm
	7Jx17 ET54	225/45 R17	91	U	9 mm
	7,5Jx18 ET51	225/40 R18	91	U	9 mm
1.6 77 kW CR Ecomotive	6Jx15 ET47	195/65 R15	91	U	15 mm
	6.5Jx16 ET50	205/55 R16	91	U	9 mm
1.9 66 kW	6Jx15 ET47	195/65 R15	91	T	15 mm
	6.5Jx16 ET50	205/55 R16	91	T	9 mm
	7Jx17 ET54	225/45 R17	91	T	9 mm
	7,5Jx18 ET51	225/40 R18	91	T	9 mm
1.9 77 kW with/without DPF	6Jx15 ET47	195/65 R15	91	U	15 mm
	6.5Jx16 ET50	205/55 R16	91	U	9 mm
	7Jx17 ET54	225/45 R17	91	U	9 mm
	7,5Jx18 ET51	225/40 R18	91	U	9 mm
1.9 77 kW Ecomotive	6Jx15 ET47	195/65 R15	91	U	15 mm
	6.5Jx16 ET50	205/55 R16	91	U	9 mm
2.0 100 kW	6.5Jx16 ET50	205/55 R16	91	H	9 mm
	7Jx17 ET54	225/45 R17	91	H	9 mm
	7,5Jx18 ET51	225/40 R18	91	H	9 mm
2.0 103 kW with/without DPF	6.5Jx16 ET50	205/55 R16	91	V	9 mm
	7Jx17 ET54	225/45 R17	91	V	9 mm
	7,5Jx18 ET51	225/40 R18	91	V	9 mm
2.0 103 kW CR	6.5Jx16 ET50	205/55 R16	91	V	9 mm
	7Jx17 ET54	225/45 R17	91	V	9 mm
	7,5Jx18 ET51	225/40 R18	91	V	9 mm
2.0 125 kW CR	7Jx17 ET54	225/45 R17	91	V	9 mm
	7,5Jx18 ET51	225/40 R18	91	V	9 mm

[1] This is the minimum permissible technical speed index code letter. See documents ⇒ page 4 or EU homologation ⇒ page 4 for vehicle to determine letter applicable for vehicle.

Note

Tyre pressures are given on the inside of the fuel cap.

Protected by copyright. Copying for private or commercial purposes, in any form or medium, is not permitted unless authorised by SEAT S.A. SEAT S.A does not guarantee or accept any liability with respect to the correctness of information in this document. Copyright © SEAT S.A.

Note

- *Further information on snow chains is given in ⇒ page 15 .*
- *Further information on all-season tyres is given in ⇒ page 15 .*
- *Further information on winter tyres is given in ⇒ page 13 .*

Protected by copyright. Copying for private or commercial purposes, in part or in whole, is not permitted unless authorised by SEAT S.A. SEAT S.A does not guarantee or accept any liability with respect to the correctness of information in this document. Copyright by SEAT S.A.

24 Technical data on wheels for Toledo 2005

General information

SEAT vehicles are designed in accordance with the latest safety techniques. In order for this to continue, we recommend that only original SEAT spare parts are used. This is indicated by the SEAT trademark and the part number. These parts have been checked for reliability, safety and suitability.

Despite continual market observations, these aspects cannot by determined by other products. In view of the above, it is therefore understandable that we cannot assume responsibility where these products are mounted.

The wheel rim/tyre combinations or alternative equipment specified in the charts for each vehicle refer exclusively to Genuine SEAT wheel rims. It is not possible to authorise rim and tyre combinations or even the exchange of rim equipment resulting from the trade of accessories.

WARNING

The tightening torques of the wheel nuts and the corresponding conditions for handling and assembly should be observed.

Data table

Engine	Wheels (rims)	Tyre	Load index	Minimum Speed index code letter [1)]	Chains (max. thickness)
Petrol engines					
1.4 63 kW	6.5Jx16 ET50	205/55 R16	91	T	9 mm
1.6 75 kW	6.5Jx16 ET50	205/55 R16	91	U	9 mm
	7Jx17 ET54	225/45 R17	91	U	9 mm
1.8 118 kW	7Jx17 ET54	225/45 R17	91	V	9 mm
	7,5Jx18 ET51	225/40 R18	91	V	9 mm
2.0 110 kW	6.5Jx16 ET50	205/55 R16	91	V	9 mm
	7Jx17 ET54	225/45 R17	91	V	9 mm
2.0 147 kW	7Jx17 ET54	225/45 R17	91	V	9 mm
	7,5Jx18 ET51	225/40 R18	91	V	9 mm
Diesel engines					
1.9 77 kW with/without DPF	6.5Jx16 ET50	205/55 R16	91	U	9 mm
	7Jx17 ET54	225/45 R17	91	U	9 mm
2.0 100 kW	6.5Jx16 ET50	205/55 R16	91	H	9 mm
	7Jx17 ET54	225/45 R17	91	H	9 mm
2.0 103 kW with/without DPF	6.5Jx16 ET50	205/55 R16	91	V	9 mm
	7Jx17 ET54	225/45 R17	91	V	9 mm
2.0 125 kW DPF	7Jx17 ET54	225/45 R17	91	V	9 mm
	7,5Jx18 ET51	225/40 R18	91	V	9 mm

[1)] This is the minimum permissible technical speed index code letter. See documents ⇒ page 4 or EU homologation ⇒ page 4 for vehicle to determine letter applicable for vehicle.

Protected by copyright. Copying for private or commercial purposes, in part or in whole, is not allowed unless authorised by SEAT S.A. SEAT S.A. does not guarantee or accept any liability with respect to the correctness of information in this document. Copyright by SEAT S.A.

Note

Tyre pressures are given on the inside of the fuel cap.

Note

- *Further information on snow chains is given in ⇒ page 15 .*
- *Further information on all-season tyres is given in ⇒ page 15 .*
- *Further information on winter tyres is given in ⇒ page 13 .*

Protected by copyright. Copying for private or commercial purposes, in part or in whole, is not permitted unless authorised by SEAT S.A. SEAT S.A does not guarantee or accept any liability with respect to the correctness of information in this document. Copyright by SEAT S.A.

25 Technical data on wheels for Toledo 2009

General information

SEAT vehicles are designed in accordance with the latest safety techniques. In order for this to continue, we recommend that only original SEAT spare parts are used. This is indicated by the SEAT trademark and the part number. These parts have been checked for reliability, safety and suitability.

Despite continual market observations, these aspects cannot by determined by other products. In view of the above, it is therefore understandable that we cannot assume responsibility where these products are mounted.

The wheel rim/tyre combinations or alternative equipment specified in the charts for each vehicle refer exclusively to Genuine SEAT wheel rims. It is not possible to authorise rim and tyre combinations or even the exchange of rim equipment resulting from the trade of accessories.

WARNING

The tightening torques of the wheel nuts and the corresponding conditions for handling and assembly should be observed.

Data table

Engine	Wheels (rims)	Tyre	Load index	Minimum Speed index code letter [1)]	Chains (max. thickness)
Petrol engines					
1.6 75 kW	6Jx15 ET47	195/65 R15	91	U	15 mm
	6.5Jx16 ET50	205/55 R16	91	U	9 mm
	7Jx17 ET54	225/45 R17	91	U	9 mm
	7,5Jx18 ET51	225/40 R18	91	U	9 mm
Diesel engines					
1.9 77 kW without DPF	6Jx15 ET47	195/65 R15	91	U	15 mm
	6.5Jx16 ET50	205/55 R16	91	U	9 mm
	7Jx17 ET54	225/45 R17	91	U	9 mm
	7,5Jx18 ET51	225/40 R18	91	U	9 mm
2.0 103 kW without DPF	6.5Jx16 ET50	205/55 R16	91	V	9 mm
	7Jx17 ET54	225/45 R17	91	V	9 mm
	7,5Jx18 ET51	225/40 R18	91	V	9 mm

Protected by copyright. Copying for private or commercial purposes, in part or in whole, is not permitted unless authorised by SEAT S.A. SEAT S.A. does not guarantee or accept any liability with respect to the correctness of information in this document. Copyright by SEAT S.A.

[1)] This is the minimum permissible technical speed index code letter. See documents ⇒ page 4 or EU homologation ⇒ page 4 for vehicle to determine letter applicable for vehicle.

Note

Tyre pressures are given on the inside of the fuel cap.

Note

- *Further information on snow chains is given in ⇒ page 15 .*
- *Further information on all-season tyres is given in ⇒ page 15 .*
- *Further information on winter tyres is given in ⇒ page 13 .*

Protected by copyright. Copying for private or commercial purposes, in part or in whole, is not permitted unless authorised by SEAT S.A. SEAT S.A does not guarantee or accept any liability with respect to the correctness of information in this document. Copyright by SEAT S.A.

26 Technical data on wheels for Ibiza 2002

General information

SEAT vehicles are designed in accordance with the latest safety techniques. In order for this to continue, we recommend that only original SEAT spare parts are used. This is indicated by the SEAT trademark and the part number. These parts have been checked for reliability, safety and suitability.

Despite continual market observations, these aspects cannot by determined by other products. In view of the above, it is therefore understandable that we cannot assume responsibility where these products are mounted.

The wheel rim/tyre combinations or alternative equipment specified in the charts for each vehicle refer exclusively to Genuine SEAT wheel rims. It is not possible to authorise rim and tyre combinations or even the exchange of rim equipment resulting from the trade of accessories.

Protected by copyright. Copying for private or commercial purposes, in part or in whole, is not permitted unless authorised by SEAT S.A. SEAT S.A does not guarantee or accept any liability with respect to the correctness of information in this document. Copyright by SEAT S.A.

WARNING

The tightening torques of the wheel nuts and the corresponding conditions for handling and assembly should be observed.

Data table

Engines	Wheels (rims)	Tyre	Load index	Speed rating	Chains (max. thickness)	Remarks
Petrol engines						
1.2 44 kW	6Jx15 ET43	195/55 R15	85	V	9 mm	
	6,5Jx16 ET43	205/45 R16	83	W	9 mm	
1.2 47 kW	6Jx14 ET43	185/60 R14	82	T	15 mm	
	6Jx15 ET43	195/55 R15	85	V	9 mm	
	6,5Jx16 ET43	205/45 R16	83	W	9 mm	as of MY 2005
1.2 51 kW	6Jx15 ET43	195/55 R15	85	V	9 mm	
	6,5Jx16 ET43	205/45 R16	83	W	9 mm	
1.4 55 kW	6Jx14 ET43	185/60 R14	82	T	15 mm	up to MY 2006
	6Jx15 ET43	195/55 R15	85	V	9 mm	
	6,5Jx16 ET43	205/45 R16	83	W	9 mm	
1.4 63 kW	6Jx15 ET43	195/55 R15	85	V	9 mm	
	6,5Jx16 ET43	205/45 R16	83	W	9 mm	
1.4 74 kW	6Jx14 ET43	185/60 R14	82	H	15 mm	up to MY 2006
	6Jx15 ET43	195/55 R15	85	V	9 mm	
	6,5Jx16 ET43	205/45 R16	83	W	9 mm	
1.6 77 kW	6Jx15 ET43	195/55 R15	85	V	9 mm	
	6,5Jx16 ET43	205/45 R16	83	W	9 mm	
1.8 110 kW	6,5Jx16 ET43	205/45 R16	83	W	9 mm	up to MY 2006

Engines	Wheels (rims)	Tyre	Load index	Speed rating	Chains (max. thickness)	Remarks
	7Jx17 ET41	205/40 R17	82	V	9 mm	as of MY 2007
1.8 132 kW	7Jx17 ET41	205/40 R17	83	V	9 mm	
2.0 85 kW	6Jx15 ET43	195/55 R15	85	V	9 mm	
	6,5Jx16 ET43	205/45 R16	83	W	9 mm	
Diesel engines						
1.4 51 kW	6Jx14 ET43	185/60 R14	82	H	15 mm	for MY 2006
	6Jx15 ET43	195/55 R15	85	V	9 mm	
	6,5Jx16 ET43	205/45 R16	83	W	9 mm	
1.4 55 kW	6Jx14 ET43	185/60 R14	82	H	15 mm	
	6Jx15 ET43	195/55 R15	85	V	9 mm	
	6,5Jx16 ET43	205/45 R16	83	W	9 mm	
1.4 59 kW without DPF	6Jx14 ET43	185/60 R14	82	H	15 mm	for MY 2006
	6Jx15 ET43	195/55 R15	85	V	9 mm	
	6,5Jx16 ET43	205/45 R16	83	W	9 mm	
1.4 59 kW DPF	6Jx15 ET43	195/55 R15	85	V	9 mm	
	6,5Jx16 ET43	205/45 R16	83	W	9 mm	
1.4 59 kW DPF Eco	5Jx14 ET35	165/70 R14	81	T	15 mm	
1.9 47 kW	6Jx14 ET43	185/60 R14	82	T	15 mm	
	6Jx15 ET43	195/55 R15	85	V	9 mm	
	6,5Jx16 ET43	205/45 R16	83	W	9 mm	as of MY 2005
1.9 74 kW without DPF	6Jx14 ET43	185/60 R14	82	H	15 mm	up to MY 2006
	6Jx15 ET43	195/55 R15	85	V	9 mm	
	6,5Jx16 ET43	205/45 R16	83	W	9 mm	
1.9 74 kW DPF	6Jx15 ET43	195/55 R15	85	V	9 mm	
	6,5Jx16 ET43	205/45 R16	83	W	9 mm	
1.9 96 kW	6,5Jx16 ET43	205/45 R16	83	W	9 mm	up to MY 2006
	7Jx17 ET41	205/40 R17	83	V	9 mm	as of MY 2007
1.9 118 kW	7Jx17 ET41	205/40 R17	83	V	9 mm	

Note

Protected by copyright. Copying for private or commercial purposes, in part or in whole, is not permitted unless authorised by SEAT S.A. SEAT S.A does not guarantee or accept any liability with respect to the correctness of information in this document. Copyright by SEAT S.A.

Tyre pressures are given on the inside of the fuel cap.

Note

- *Further information on snow chains is given in ⇒ page 15 .*
- *Further information on all-season tyres is given in ⇒ page 15 .*
- *Further information on winter tyres is given in ⇒ page 13 .*

Protected by copyright. Copying for private or commercial purposes, in part or in whole, is not permitted unless authorised by SEAT S.A. SEAT S.A does not guarantee or accept any liability with respect to the correctness of information in this document. Copyright by SEAT S.A.

27 Technical data on wheels for Cordoba 2003

General information

SEAT vehicles are designed in accordance with the latest safety techniques. In order for this to continue, we recommend that only original SEAT spare parts are used. This is indicated by the SEAT trademark and the part number. These parts have been checked for reliability, safety and suitability.

Despite continual market observations, these aspects cannot by determined by other products. In view of the above, it is therefore understandable that we cannot assume responsibility where these products are mounted.

The wheel rim/tyre combinations or alternative equipment specified in the charts for each vehicle refer exclusively to Genuine SEAT wheel rims. It is not possible to authorise rim and tyre combinations or even the exchange of rim equipment resulting from the trade of accessories.

WARNING

The tightening torques of the wheel nuts and the corresponding conditions for handling and assembly should be observed.

Data table

Engines	Wheels (rims)	Tyre	Load index	Speed rating	Chains (max. thickness)	Remarks
Petrol engines						
1.2 47 kW	6Jx14 ET43	185/60 R14	82	T	15 mm	
	6Jx15 ET43	195/55 R15	85	V	9 mm	
	6,5Jx16 ET43	205/45 R16	83	W	9 mm	as of MY 2005
1.2 51 kW	6Jx15 ET43	195/55 R15	85	V	9 mm	
	6,5Jx16 ET43	205/45 R16	83	W	9 mm	
1.4 55 kW	6Jx14 ET43	185/60 R14	82	T	15 mm	up to MY 2006
	6Jx15 ET43	195/55 R15	85	V	9 mm	
	6,5Jx16 ET43	205/45 R16	83	W	9 mm	
1.4 63 kW	6Jx15 ET43	195/55 R15	85	V	9 mm	
	6,5Jx16 ET43	205/45 R16	83	W	9 mm	
1.4 74 kW	6Jx14 ET43	185/60 R14	82	H	15 mm	up to MY 2006
	6Jx15 ET43	195/55 R15	85	V	9 mm	
	6,5Jx16 ET43	205/45 R16	83	W	9 mm	
1.6 77 kW	6Jx15 ET43	195/55 R15	85	V	9 mm	
	6,5Jx16 ET43	205/45 R16	83	W	9 mm	
2.0 85 kW	6Jx15 ET43	195/55 R15	85	V	9 mm	
	6,5Jx16 ET43	205/45 R16	83	W	9 mm	
Diesel engines						

Protected by copyright. Copying for private or commercial purposes, in part or in whole, is not permitted unless authorised by SEAT. SEAT does not guarantee or accept any liability with respect to the correctness of information in this document. Copyright by SEAT S.A.

Engines	Wheels (rims)	Tyre	Load index	Speed rating	Chains (max. thickness)	Remarks
1.4 51 kW	6Jx14 ET43	185/60 R14	82	H	15 mm	for MY 2006
	6Jx15 ET43	195/55 R15	85	V	9 mm	
	6,5Jx16 ET43	205/45 R16	83	W	9 mm	
1.4 55 kW	6Jx14 ET43	185/60 R14	82	H	15 mm	
	6Jx15 ET43	195/55 R15	85	V	9 mm	
	6,5Jx16 ET43	205/45 R16	83	W	9 mm	
1.4 59 kW without DPF	6Jx14 ET43	185/60 R14	82	H	15 mm	for MY 2006
	6Jx15 ET43	195/55 R15	85	V	9 mm	
	6,5Jx16 ET43	205/45 R16	83	W	9 mm	
1.4 59 kW DPF	6Jx15 ET43	195/55 R15	85	V	9 mm	
	6,5Jx16 ET43	205/45 R16	83	W	9 mm	
1.9 47 kW	6Jx14 ET43	185/60 R14	82	T	15 mm	
	6Jx15 ET43	195/55 R15	85	V	9 mm	
	6,5Jx16 ET43	205/45 R16	83	W	9 mm	as of MY 2005
1.9 74 kW without DPF	6Jx14 ET43	185/60 R14	82	H	15 mm	up to MY 2006
	6Jx15 ET43	195/55 R15	85	V	9 mm	
	6,5Jx16 ET43	205/45 R16	83	W	9 mm	
1.9 74 kW DPF	6Jx15 ET43	195/55 R15	85	V	9 mm	
	6,5Jx16 ET43	205/45 R16	83	W	9 mm	
1.9 96 kW	6,5Jx16 ET43	205/45 R16	85	V	9 mm	
	7Jx17 ET41	205/40 R17	83	W	9 mm	

Protected by copyright. Copying for private or commercial purposes, in part or in whole, is not permitted unless authorised by SEAT S.A. SEAT S.A does not guarantee or accept any liability with respect to the correctness of information in this document. Copyright by SEAT S.A.

Note

Tyre pressures are given on the inside of the fuel cap.

Note

- *Further information on snow chains is given in ⇒ page 15 .*
- *Further information on all-season tyres is given in ⇒ page 15 .*
- *Further information on winter tyres is given in ⇒ page 13 .*

28 Technical data on wheels for Ibiza 2008, Ibiza ST 2010

General information

SEAT vehicles are designed in accordance with the latest safety techniques. In order for this to continue, we recommend that only original SEAT spare parts are used. This is indicated by the SEAT trademark and the part number. These parts have been checked for reliability, safety and suitability.

Despite continual market observations, these aspects cannot by determined by other products. In view of the above, it is therefore understandable that we cannot assume responsibility where these products are mounted.

The wheel rim/tyre combinations or alternative equipment specified in the charts for each vehicle refer exclusively to Genuine SEAT wheel rims. It is not possible to authorise rim and tyre combinations or even the exchange of rim equipment resulting from the trade of accessories.

WARNING

The tightening torques of the wheel nuts and the corresponding conditions for handling and assembly should be observed.

Data table

Engines	Wheels (rims)	Tyre	Load index	Minimum Speed index code letter [1)]	Chains (max. thickness)
Petrol engines					
1.2 44 kW	5Jx14 ET35	175/70 R14	84	R	15 mm
	6Jx15 ET38	185/60 R15	84	R	15 mm
	7Jx16 ET43	215/45 R16	86	R	9 mm
	7Jx17 ET43	215/40 R17	87	R	7 mm
1.2 51 kW	5Jx14 ET35	175/70 R14	84	S	15 mm
	6Jx15 ET38	185/60 R15	84	S	15 mm
	7Jx16 ET43	215/45 R16	86	S	9 mm
	7Jx17 ET43	215/40 R17	87	S	7 mm
1.2 77 kW	6Jx15 ET38	185/60 R15	84	U	15 mm
	7Jx16 ET43	215/45 R16	86	U	9 mm
	7Jx17 ET43	215/40 R17	87	U	7 mm
1.4 63 kW	5Jx14 ET35	175/70 R14	84	T	15 mm
	6Jx15 ET38	185/60 R15	84	T	15 mm
	7Jx16 ET43	215/45 R16	86	T	9 mm
	7Jx17 ET43	215/40 R17	87	T	7 mm
1.6 77 kW	6Jx15 ET38	185/60 R15	84	U	15 mm
	7Jx16 ET43	215/45 R16	86	U	9 mm
	7Jx17 ET43	215/40 R17	87	U	7 mm
1.4 110 kW	7Jx17 ET43	215/40 R17	87	V	7 mm
1.4 132 kW	7Jx17 ET43	215/40 R17	87	V	7 mm
Diesel engines					
1.2 55 kW CR	5Jx14 ET35	175/70 R14	84	S	15 mm

Protected by copyright. Copying for private or commercial purposes, in part or in whole, is not permitted unless authorised by SEAT S.A. SEAT S.A. does not guarantee or accept any liability with respect to the correctness of information in this document. Copyright by SEAT S.A.

Engines	Wheels (rims)	Tyre	Load index	Minimum Speed index code letter [1)]	Chains (max. thickness)
Version Code „N“ ⇒ page 4	6Jx15 ET38	185/60 R15	84	S	15 mm
	7Jx16 ET43	215/45 R16	86	S	9 mm
	7Jx17 ET43	215/40 R17	87	S	7 mm
1.2 55 kW CR Version Code „A“ ⇒ page 4	5Jx14 ET35	175/70 R14	84	T	15 mm
	6Jx15 ET38	185/60 R15	84	T	15 mm
	7Jx16 ET43	215/45 R16	86	T	9 mm
	7Jx17 ET43	215/40 R17	87	T	7 mm
1.2 55 kW CR Version Code „E“ ⇒ page 4	6Jx15 ET38	185/60 R15	84	T	15 mm
1.2 55 kW CR Version Code „B“ ⇒ page 4	6Jx15 ET38	185/60 R15	84	T	15 mm
1.4 59 kW DPF	5Jx14 ET35	175/70 R14	84	T	15 mm
	6Jx15 ET38	185/60 R15	84	T	15 mm
	7Jx16 ET43	215/45 R16	86	T	9 mm
	7Jx17 ET43	215/40 R17	87	T	7 mm
1.4 59 kW DPF Eco	5Jx14 ET35	175/70 R14	84	T	15 mm
1.6 66 kW CR	6Jx15 ET38	185/60 R15	84	T	15 mm
	7Jx16 ET43	215/45 R16	86	T	9 mm
	7Jx17 ET43	215/40 R17	87	T	7 mm
1.6 77 kW CR	6Jx15 ET38	185/60 R15	84	U	15 mm
	7Jx16 ET43	215/45 R16	86	U	9 mm
	7Jx17 ET43	215/40 R17	87	U	7 mm
1.9 66 kW DPF	6Jx15 ET38	185/60 R15	84	T	15 mm
	7Jx16 ET43	215/45 R16	86	T	9 mm
	7Jx17 ET43	215/40 R17	87	T	7 mm
1.9 77 kW with/ without DPF	6Jx15 ET38	185/60 R15	84	U	15 mm
	7Jx16 ET43	215/45 R16	86	U	9 mm
	7Jx17 ET43	215/40 R17	87	U	7 mm
2.0 105 kW CR	7Jx17 ET43	215/40 R17	87	V	7 mm

[1)] This is the minimum permissible technical speed index code letter. See documents ⇒ page 4 or EU homologation ⇒ page 4 for vehicle to determine letter applicable for vehicle.

Note

Tyre pressures are given on the inside of the fuel cap.

Protected by copyright. Copying for private or commercial purposes, in part or in whole, is not permitted unless authorised by SEAT S.A. SEAT S.A does not guarantee or accept any liability with respect to the correctness of information in this document. Copyright by SEAT S.A.

Note

- *Further information on snow chains is given in ⇒ page 15 .*
- *Further information on all-season tyres is given in ⇒ page 15 .*
- *Further information on winter tyres is given in ⇒ page 13 .*

Protected by copyright. Copying for private or commercial purposes, in part or in whole, is not permitted unless authorised by SEAT S.A. SEAT S.A does not guarantee or accept any liability with respect to the correctness of information in this document. Copyright by SEAT S.A.

29 Technical data on wheels for Exeo 2009, Exeo ST 2009

General information

SEAT vehicles are designed in accordance with the latest safety techniques. In order for this to continue, we recommend that only original SEAT spare parts are used. This is indicated by the SEAT trademark and the part number. These parts have been checked for reliability, safety and suitability.

Despite continual market observations, these aspects cannot by determined by other products. In view of the above, it is therefore understandable that we cannot assume responsibility where these products are mounted.

The wheel rim/tyre combinations or alternative equipment specified in the charts for each vehicle refer exclusively to Genuine SEAT wheel rims. It is not possible to authorise rim and tyre combinations or even the exchange of rim equipment resulting from the trade of accessories.

> ⚠ **WARNING**
>
> ***The tightening torques of the wheel nuts and the corresponding conditions for handling and assembly should be observed.***

Data table

Engine	Wheels (rims)	Tyre	Load index	Minimum Speed index code letter [1]	Chains (max. thickness)
Petrol engines					
1.6 75 kW	7Jx16 ET45	205/55 R16	91	H	15 mm
	7.5Jx17 ET42	225/45 R17	91	H	9 mm
	8Jx18 ET42	225/40 R18	92	H	7 mm
1.8 88 kW 1.8 110 kW and 1.8 118 kW	7Jx16 ET45	205/55 R16	91	V	15 mm
	7.5Jx17 ET42	225/45 R17	91	V	9 mm
	8Jx18 ET42	225/40 R18	92	V	7 mm
2.0 147 kW	7Jx16 ET45	205/55 R16	91	W	15 mm
	7.5Jx17 ET42	225/45 R17	91	W	9 mm
	8Jx18 ET42	225/40 R18	92	W	7 mm
2.0 155 kW	7.5Jx17 ET42	225/45 R17	91	W	9 mm
	8Jx18 ET42	225/40 R18	92	W	7 mm
Diesel engines					
2.0 88 kW CR and 2.0 105 kW CR	7Jx16 ET45	205/55 R16	91	V	15 mm
	7.5Jx17 ET42	225/45 R17	91	V	9 mm
	8Jx18 ET42	225/40 R18	92	V	7 mm
2.0 125 kW CR	7Jx16 ET45	205/55 R16	91	W	15 mm
	7.5Jx17 ET42	225/45 R17	91	W	9 mm
	8Jx18 ET42	225/40 R18	92	W	7 mm

Copyrighted by copyright. Copying for private or commercial purposes, in part or in whole, is not permitted unless authorised by SEAT S.A. SEAT S.A does not guarantee or accept any liability with respect to the accuracy or information in the document. Copyright by SEAT S.A.

[1] This is the minimum permissible technical speed index code letter. See documents ⇒ page 4 or EU homologation ⇒ page 4 for vehicle to determine letter applicable for vehicle.

Note

Tyre pressures are given on the inside of the fuel cap.

Note

- *Further information on snow chains is given in ⇒ page 15 .*
- *Further information on all-season tyres is given in ⇒ page 15 .*
- *Further information on winter tyres is given in ⇒ page 13 .*

Protected by copyright. Copying for private or commercial purposes, in part or in whole, is not permitted unless authorised by SEAT S.A. SEAT S.A does not guarantee or accept any liability with respect to the correctness of information in this document. Copyright by SEAT S.A.

30 Technical wheel data for Alhambra 2011

General information

SEAT vehicles are designed in accordance with the latest safety techniques. In order for this to continue, we recommend that only original SEAT spare parts are used. This is indicated by the SEAT trademark and the part number. These parts have been checked for reliability, safety and suitability.

Despite continual market observations, these aspects cannot by determined by other products. In view of the above, it is therefore understandable that we cannot assume responsibility where these products are mounted.

The wheel rim/tyre combinations or alternative equipment specified in the charts for each vehicle refer exclusively to Genuine SEAT wheel rims. It is not possible to authorise rim and tyre combinations or even the exchange of rim equipment resulting from the trade of accessories.

WARNING

The tightening torques of the wheel nuts and the corresponding conditions for handling and assembly should be observed.

Data table

Engine	Wheels (rims)	Tyre	Load index	Minimum Speed index code letter [1)]	Chains (max. thickness)
Petrol engines					
1.4 110 kW	6.5Jx16 ET33	205/60 R16	96	H	Yes
		215/60 R16	95	H	-
	7Jx17 ET39	225/50 R17	98	H	-
Diesel engines					
2.0 100 kW CR and 2.0 103 kW CR	6.5Jx16 ET33	205/60 R16	96	H	Yes
		215/60 R16	95	H	-
	7Jx17 ET39	225/50 R17	98	H	-

Protected by copyright. Copying for private or commercial purposes, in part or in whole, is not permitted unless authorised by SEAT S.A. SEAT S.A. does not guarantee or accept any liability with respect to the correctness of information in this document. Copyright by SEAT S.A.

[1)] This is the minimum permissible technical speed index code letter. See documents ⇒ page 4 or EU homologation ⇒ page 4 for vehicle to determine letter applicable for vehicle.

Note

Tyre pressures are given on the inside of the fuel cap.

Note

- *Further information for „ContiSeal“ self-sealing tyres can be obtained in ⇒ page 58 .*
- *Further information on snow chains is given in ⇒ page 15 .*
- *Further information on all-season tyres is given in ⇒ page 15 .*
- *Further information on winter tyres is given in ⇒ page 13 .*

Protected by copyright. Copying for private or commercial purposes, in part or in whole, is not permitted unless authorised by SEAT S.A. SEAT S.A does not guarantee or accept any liability with respect to the correctness of information in this document. Copyright by SEAT S.A.

31 Emergency tyres and rim for SEAT vehicles

The vehicle equipment may not include a conventional spare tyre, i.e. a wheel with the same characteristics as the wheels mounted on the vehicle.

SEAT offers two alternatives for replacing the spare tyres:

- Emergency spare wheel

Ones instructions for the use of emergency wheels ⇒ page 64

- Breakdown repair kit

Ones instructions for the use breakdown repair kit ⇒ page 64

Type	Wheel rim	Tyre		
	Sizes	**Sizes**	**Manufacturer**	**Type**
Altea 2004, Altea 2009, Altea XL 2007, Altea XL 2009, Leon 2006, Leon 2009, Toledo 2005, Toledo 2009	3,5Jx16 ET25,5	125/70 R16 96M	Hankook	S 300
			Continental	CST 17
	3,5Jx18 ET25,5	125/70 R18 99M	-	-
Altea XL Freetrack 2008, Altea XL Freetrack 2009	3,5Jx16 ET25,5	135/90 R16 102M	Continental	CST 17
	3,5Jx18 ET25,5	125/70 R18 99M	-	-

Protected by copyright. Copying for private or commercial purposes, in part or in whole, is not permitted unless authorised by SEAT S.A. SEAT S.A does not guarantee or accept any liability with respect to the correctness of information in this document. Copyright by SEAT S.A.

32 Recommended conventional tyres or summer tyres for SEAT vehicle

Notes on recommended conventional tyres or summer tyres

- Tyres are one of the most important elements in motor vehicle construction and have a major influence on road safety. For this reason they must satisfy numerous conditions specified particularly in DIN standards and EU directives. In addition, we carry out comprehensive testing before tyres are approved for initial fitting on our vehicles.
- The following lists all tyre makes and tread patterns that have are or been fitted to VW vehicles at the factory at the time of publication of this information.
- These tyre makes/tread patterns satisfy the said conditions. We therefore recommend the tyres listed here for refitting to vehicles.
- Note the special conditions for use of tyres with emergency running characteristics ⇒ page 53 .

32.1 Conventional tyres or summer tyres for Altea 2004

Observe notes on recommended conventional tyres or summer tyres ⇒ page 102

Tyre size	Manufacturer	Tyre model
205/55 R16 91V	Dunlop	SP 01A
	Michelin	Energy 3A
	Continental	Sport Contact
	Goodyear	Eagle NCT 5
	Bridgestone	ER 300
	Pirelli	P 7
225/45 R17 91W	Dunlop	SP 9090
	Michelin	Pilot Primacy
	Continental	Sport Contact
	Goodyear	NCT 5
	Bridgestone	RE 050
	Pirelli	P 7
225/45 R/ZR17 91Y	Dunlop	SP Maxx
	Michelin	Pilot Exalto
	Continental	Sport Contact 2
	Goodyear	Excellence
	Bridgestone	RE 050 A
	Pirelli	PZero Rosso
225/40 R18 92Y	Dunlop	SP Maxx
	Michelin	Pilot Exalto
	Continental	Sport Contact 2
	Goodyear	Excellence
	Bridgestone	RE 050 A
	Pirelli	PZero Rosso

Protected by copyright. Copying for private or commercial purposes, in part or in whole, is not permitted unless authorised by SEAT S.A. SEAT S.A does not guarantee or accept any liability with respect to the correctness of information in this document. Copyright by SEAT S.A.

32.2 Conventional tyres or summer tyres for Altea 2009

Observe notes on recommended conventional tyres or summer tyres ⇒ page 102

Tyre size	Manufacturer	Tyre model
195/65 R15 91H	Hankook	K 405
	Michelin	EN 3
		Saver
	Continental	CEC 3
	Goodyear	NCT 5
	Bridgestone	B 390
		ER 300
	Pirelli	P 7
205/55 R16 91V	Dunlop	SP 01A
	Michelin	Energy 3A
	Continental	Sport Contact
	Goodyear	Eagle NCT 5
	Bridgestone	ER 300
	Pirelli	P 7
225/45 R17 91W	Dunlop	SP Sport Maxx TT
	Michelin	Pilot Primacy
	Goodyear	Eagle F1
	Bridgestone	Potenza RE 050 A
	Pirelli	PZero Rosso
225/40 R18 92Y	Michelin	Pilot Exalto
	Goodyear	Eagle F1
	Bridgestone	Potenza RE 050 A
	Pirelli	PZero Rosso

Protected by copyright. Copying for private or commercial purposes, in part or in whole, is not permitted unless authorised by SEAT S.A. SEAT S.A does not guarantee or accept any liability with respect to the correctness of information in this document. © by SEAT S.A.

32.3 Conventional tyres or summer tyres for Altea XL 2007

Observe notes on recommended conventional tyres or summer tyres ⇒ page 102

Tyre size	Manufacturer	Tyre model
205/55 R16 91V	Dunlop	SP 01A
	Michelin	Energy 3A
	Continental	Sport Contact
	Goodyear	Eagle NCT 5
	Bridgestone	ER 300
	Pirelli	P 7
225/45 R17 91W	Dunlop	SP 9090
	Michelin	Pilot Primacy
	Continental	Sport Contact
	Goodyear	NCT 5
	Bridgestone	RE 050
	Pirelli	P 7
225/45 R/ZR17 91Y	Dunlop	SP Maxx
	Michelin	Pilot Exalto

Tyre size	Manufacturer	Tyre model
	Continental	Sport Contact 2
	Goodyear	Excellence
	Bridgestone	RE 050 A
	Pirelli	PZero Rosso
225/40 R18 92Y	Dunlop	SP Maxx
	Michelin	Pilot Exalto
	Continental	Sport Contact 2
	Goodyear	Excellence
	Bridgestone	RE 050 A
	Pirelli	PZero Rosso

32.4 Conventional tyres or summer tyres for Altea XL 2009

Observe notes on recommended conventional tyres or summer tyres ⇒ page 102

Tyre size	Manufacturer	Tyre model
195/65 R15 91H	Hankook	K 405
	Michelin	EN 3
		Saver
	Continental	CEC 3
	Goodyear	NCT 5
	Bridgestone	B 390
		ER 300
	Pirelli	P 7
205/55 R16 91V	Dunlop	SP 01A
	Michelin	Energy 3A
	Continental	Sport Contact
	Goodyear	Eagle NCT 5
	Bridgestone	ER 300
	Pirelli	P 7
225/45 R17 91W	Dunlop	SP Sport Maxx TT
	Michelin	Pilot Primacy
	Goodyear	Eagle F1
	Bridgestone	Potenza RE 050 A
	Pirelli	PZero Rosso
225/40 R18 92Y	Michelin	Pilot Exalto
	Goodyear	Eagle F1
	Bridgestone	Potenza RE 050 A
	Pirelli	PZero Rosso

Protected by copyright. Copying for private or commercial purposes, in part or in whole, is not permitted unless authorised by SEAT S.A. SEAT S.A does not guarantee or accept any liability with respect to the correctness of information in this document. Copyright by SEAT S.A.

32.5 Conventional tyres or summer tyres for Altea XL Freetrack 2008

Observe notes on recommended conventional tyres or summer tyres ⇒ page 102

Tyre size	Manufacturer	Tyre model
225/50 R17 94W	Pirelli	PZero Rosso

Tyre size	Manufacturer	Tyre model
	Dunlop	SP 01 A

32.6 Conventional tyres or summer tyres for Altea XL Freetrack 2009

Observe notes on recommended conventional tyres or summer tyres ⇒ page 102

Tyre size	Manufacturer	Tyre model
225/50 R17 94W	Pirelli	PZero Rosso
	Dunlop	SP 01 A
	Michelin	Primacy HP
	Bridgestone	Dueler H/PSport

32.7 Conventional tyres or summer tyres for Leon 2006

Observe notes on recommended conventional tyres or summer tyres ⇒ page 102

Tyre size	Manufacturer	Tyre model
205/55 R16 91V	Dunlop	SP 01A
	Michelin	Energy 3A
	Continental	Sport Contact
	Goodyear	Eagle NCT 5
	Bridgestone	ER 300
	Pirelli	P 7
205/55 R16 91V (Ecomotive)	Dunlop	SP Fast Response
	Michelin	Energy Saver
	Bridgestone	Turanza ER 300
	Pirelli	P 7
225/45 R17 91W	Dunlop	SP 9090
	Michelin	Pilot Primacy
	Continental	Sport Contact
	Goodyear	NCT 5
	Bridgestone	Potenza RE 050
		Potenza RE 050 A
	Pirelli	P 7
		PZero Rosso
225/45 R/ZR17 91Y	Dunlop	SP Maxx
	Michelin	Pilot Exalto
	Continental	Sport Contact 2
	Goodyear	Excellence
	Bridgestone	RE 050 A
	Pirelli	PZero Rosso
225/40 R18 92Y	Dunlop	SP Maxx
	Michelin	Pilot Exalto
	Continental	Sport Contact 2
	Goodyear	Excellence
	Bridgestone	RE 050 A

Protected by copyright. Copying for private or commercial purposes, in part or in whole, is not permitted unless authorised by SEAT S.A. SEAT S.A does not guarantee or accept any liability with respect to the correctness of information in this document. ©Copyright by SEAT S.A.

Tyre size	Manufacturer	Tyre model
	Pirelli	PZero Rosso

32.8 Conventional tyres or summer tyres for Leon 2009

Observe notes on recommended conventional tyres or summer tyres ⇒ page 102

Tyre size	Manufacturer	Tyre model
205/55 R16 91V	Dunlop	SP 01A
	Michelin	Energy 3A
	Continental	Sport Contact
	Goodyear	Eagle NCT 5
	Bridgestone	ER 300
	Pirelli	P 7
205/55 R16 91V (Ecomotive)	Dunlop	SP Fast Response
	Michelin	Energy Saver
	Bridgestone	Turanza ER 300
	Pirelli	P 7
225/45 R17 91W	Dunlop	SP 9090
	Michelin	Pilot Primacy
	Continental	Sport Contact
	Goodyear	NCT 5
	Bridgestone	Potenza RE 050
		Potenza RE 050 A
	Pirelli	P 7
		PZero Rosso
225/45 R17 91W (Cupra/FR)	Dunlop	SP Sport Maxx TT
	Michelin	Pilot Primacy
	Goodyear	Eagle F1
	Bridgestone	Potenza RE 050 A
	Pirelli	PZero Rosso
225/40 R18 92Y	Dunlop	SP Maxx
	Michelin	Pilot Exalto
	Continental	Sport Contact 2
	Goodyear	Excellence
	Bridgestone	RE 050 A
	Pirelli	PZero Rosso
225/40 R18 92Y (Cupra/FR)	Michelin	Pilot Exalto
	Goodyear	Eagle F1
	Bridgestone	Potenza RE 050 A
	Pirelli	PZero Rosso

Protected by copyright. Copying for private or commercial purposes, in part or in whole, is not permitted unless authorised by SEAT S.A. SEAT S.A does not guarantee or accept any liability with respect to the correctness of information in this document. Copyright by SEAT S.A.

32.9 Conventional tyres or summer tyres for Toledo 2005

Observe notes on recommended conventional tyres or summer tyres ⇒ page 102

Tyre size	Manufacturer	Tyre model
205/55 R16 91V	Dunlop	SP 01A
	Michelin	Energy 3A
	Continental	Sport Contact
	Goodyear	Eagle NCT 5
	Bridgestone	ER 300
	Pirelli	P 7
225/45 R17 91W	Dunlop	SP 9090
	Michelin	Pilot Primacy
	Continental	Sport Contact
	Goodyear	NCT 5
	Bridgestone	RE 050
	Pirelli	P 7
225/45 R/ZR17 91Y	Dunlop	SP Maxx
	Michelin	Pilot Exalto
	Continental	Sport Contact 2
	Goodyear	Excellence
	Bridgestone	RE 050 A
	Pirelli	PZero Rosso
225/40 R18 92Y	Dunlop	SP Maxx
	Michelin	Pilot Exalto
	Continental	Sport Contact 2
	Goodyear	Excellence
	Bridgestone	RE 050 A
	Pirelli	PZero Rosso

Protected by copyright. Copying for private or commercial purposes, in part or in whole, is not permitted unless authorised by SEAT S.A. SEAT S.A does not guarantee or accept any liability with respect to the correctness of information in this document. Copyright by SEAT S.A.

32.10 Conventional tyres or summer tyres for Toledo 2009

Observe notes on recommended conventional tyres or summer tyres ⇒ page 102

Tyre size	Manufacturer	Tyre model
195/65 R15 91H	Hankook	K 405
	Michelin	EN 3
		Saver
	Continental	CEC 3
	Goodyear	NCT 5
	Bridgestone	B 390
		ER 300
	Pirelli	P 7
205/55 R16 91V	Dunlop	SP 01A
	Michelin	Energy 3A
	Continental	Sport Contact
	Goodyear	Eagle NCT 5
	Bridgestone	ER 300

Tyre size	Manufacturer	Tyre model
	Pirelli	P 7
225/45 R17 91W	Dunlop	SP Sport Maxx TT
	Michelin	Pilot Primacy
	Goodyear	Eagle F1
	Bridgestone	Potenza RE 050 A
	Pirelli	PZero Rosso
225/40 R18 92Y	Michelin	Pilot Exalto
	Goodyear	Eagle F1
	Bridgestone	Potenza RE 050 A
	Pirelli	PZero Rosso

32.11 Conventional tyres or summer tyres for Ibiza 2002

Observe notes on recommended conventional tyres or summer tyres ⇒ page 102

Tyre size	Manufacturer	Tyre model
165/70 R14 81T	Michelin	EN XT1
	Firestone	F 590 S
	Continental	CEC EP
	Goodyear	GT 2E
	Dunlop	SP 10 A
	Matador	MP 15
	Adhesive	Viaxer AS
	Barum	OR 57
185/60 R14 82H	Dunlop	SP 2000 E
	Firestone	FH 700 FS
	Goodyear	NCT 5
	Pirelli	P 6000 Powergy
	Matador	MP 35
	Barum	OR 58
	Continental	CEC CP
	Michelin	EN XH1
195/55 R15 85V	Michelin	Pilot Primacy
	Goodyear	NCT 5
	Firestone	FH 700 FS
	Dunlop	SP 2000 E
	Pirelli	P 6
205/45 R16 83W	Dunlop	SP 2000 E
		SP Maxx
	Michelin	Pilot Primacy
	Continental	CSC
	Bridgestone	ER 030
	Pirelli	PZero Rosso
205/40 R17 84W Extraload	Pirelli	PZero Rosso
	Dunlop	SP Maxx

Protected by copyright. Copying for private or commercial purposes, in part or in whole, is not permitted unless authorised by SEAT S.A. SEAT S.A. does not guarantee or accept any liability with respect to the correctness of information in this document. Copyright by SEAT S.A.

32.12 Conventional tyres or summer tyres for Cordoba 2003

Observe notes on recommended conventional tyres or summer tyres ⇒ page 102

Tyre size	Manufacturer	Tyre model
165/70 R14 81T	Michelin	EN XT1
	Firestone	F 590 S
	Continental	CEC EP
	Goodyear	GT 2E
	Dunlop	SP 10 A
	Matador	MP 15
	Adhesive	Viaxer AS
	Barum	OR 57
185/60 R14 82H	Dunlop	SP 2000 E
	Firestone	FH 700 FS
	Goodyear	NCT 5
	Pirelli	P 6000 Powergy
	Matador	MP 35
	Barum	OR 58
	Continental	CEC CP
	Michelin	EN XH1
195/55 R15 85V	Michelin	Pilot Primacy
	Goodyear	NCT 5
	Firestone	FH 700 FS
	Dunlop	SP 2000 E
	Pirelli	P 6
205/45 R16 83W	Dunlop	SP 2000 E
		SP Maxx
	Michelin	Pilot Primacy
	Continental	CSC
	Bridgestone	ER 030
	Pirelli	PZero Rosso
205/40 R17 84W Extraload	Pirelli	PZero Rosso
	Dunlop	SP Maxx

32.13 Conventional tyres or summer tyres for Ibiza 2008, Ibiza 2010

Observe notes on recommended conventional tyres or summer tyres ⇒ page 102

Protected by copyright. Copying for private or commercial purposes, in part or in whole, is not permitted unless authorised by SEAT S.A. SEAT S.A does not guarantee or accept any liability with respect to the correctness of information in this document. Copyright by SEAT S.A.

Tyre size	Manufacturer	Tyre model
175/70 R14 84T	Dunlop	SP 01
	Bridgestone	B 250
	Pirelli	P 4
185/60 R15 84T	Dunlop	SP 01
	Bridgestone	B 250
	Pirelli	P 6

Tyre size	Manufacturer	Tyre model
185/60 R15 84H	Dunlop	SP 01
	Bridgestone	B 250
	Pirelli	P 6
215/45 R16 86H	Dunlop	SP Sport Maxx
	Michelin	Pilot Exalto
	Continental	Sport Contact 2
	Bridgestone	Turanza ER 300
	Pirelli	P 7
	Goodyear	Excellence
215/40 R17 87V	Dunlop	SP Sport Maxx
	Bridgestone	Potenza RE 050A
	Pirelli	P 7
	Goodyear	Excellence

32.14 Conventional tyres or summer tyres for Exeo 2009, Exeo ST 2009

Observe notes on recommended conventional tyres or summer tyres ⇒ page 102

Tyre size	Manufacturer	Tyre model
205/55 R16 91V	Michelin	Energy Saver
	Bridgestone	Turanza ER 300
	Pirelli	P 7
225/45 R17 91W	Michelin	Pilot Primacy
	Bridgestone	Potenza RE 050 A
	Pirelli	PZero Rosso
	Goodyear	Eagle F1
225/40 R18 92Y	Dunlop	SP Sport Maxx GT
	Michelin	Pilot Exalto
	Bridgestone	Potenza RE 050 A
	Pirelli	PZero Rosso
	Goodyear	Eagle F1

32.15 Conventional tyres or summer tyres for Alhambra 2011

Observe notes on recommended conventional tyres or summer tyres ⇒ page 102

Tyre size	Manufacturer	Tyre model	Remarks
205/60 R16 96H XL	Continental	Conti Premium Contact 2	Self-sealing tyre „Conti-Seal“. See ⇒ page 58
215/60 R16 95H			
215/60 R16 95V			
225/50 R17 98H XL			
225/50 R17 98V XL			

Protected by copyright. Copying for private or commercial purposes, in part or in whole, is not permitted unless authorised by SEAT S.A. SEAT S.A does not guarantee or accept any liability with respect to the correctness of information in this document. Copyright by SEAT S.A.

33 Recommended all-season tyre) for SEAT vehicles

Notes on recommend all-season tyres

- Tyres are one of the most important elements in motor vehicle construction and have a major influence on road safety. For this reason they must satisfy numerous conditions specified particularly in DIN standards and EU directives. In addition, we carry out comprehensive testing before tyres are approved for initial fitting on our vehicles.
- The following lists all tyre makes and tread patterns that have are or been fitted to VW vehicles at the factory at the time of publication of this information.
- These tyre makes/tread patterns satisfy the said conditions. We therefore recommend the tyres listed here for refitting to vehicles.
- Observe properties of all-season tyres ⇒ page 15 .
- Note the special conditions for use of tyres with emergency running characteristics ⇒ page 53 .

Type	Tyre size	Manufacturer	Tyre model
Altea 2004, Altea XL 2007, Leon 2006, Leon 2009, Toledo 2005, Exeo 2009, Exeo ST 2009	205/55 R16 94V	Goodyear	Vector 2
Altea 2009, Altea XL 2009, Toledo 2009	195/65 R15 91H	Dunlop	AS M2
		Goodyear	Vector EV2
	205/55 R16 94V	Goodyear	Vector 2
Alhambra 2011	205/60 R16 96H XL	Continental	TS 815

Protected by copyright. Copying for private or commercial purposes, in part or in whole, is not permitted unless authorised by SEAT S.A. SEAT S.A does not guarantee or accept any liability with respect to the correctness of information in this document. Copyright by SEAT S.A.