2008 Chevrolet Optra Owner Manual

Seats and Restraint Systems 1-1
- Front Seats 1-2
- Rear Seats 1-8
- Safety Belts 1-10
- Child Restraints 1-27
- Airbag System 1-51
- Restraint System Check 1-66

Features and Controls 2-1
- Keys 2-2
- Doors and Locks 2-6
- Windows 2-11
- Theft-Deterrent Systems 2-14
- Starting and Operating Your Vehicle 2-17
- Mirrors 2-34
- Storage Areas 2-36
- Sunroof 2-39

Instrument Panel 3-1
- Instrument Panel Overview 3-4
- Climate Controls 3-19
- Warning Lights, Gages, and Indicators 3-24
- Audio System(s) 3-41

Driving Your Vehicle 4-1
- Your Driving, the Road, and Your Vehicle 4-2
- Towing 4-23

Service and Appearance Care 5-1
- Service 5-4
- Fuel 5-6
- Checking Things Under the Hood 5-10
- Headlamp Aiming 5-40
- Bulb Replacement 5-40
- Windshield Wiper Blade Replacement 5-48
- Tires 5-49
- Appearance Care 5-79
- Vehicle Identification 5-87
- Electrical System 5-88
- Capacities and Specifications 5-94
- Maintenance Replacement Parts 5-95

Maintenance Schedule 6-1
- Maintenance Schedule 6-2

Customer Assistance Information 7-1
- Customer Assistance and Information 7-2
- Reporting Safety Defects 7-13
- Vehicle Data Recording and Privacy 7-16

Index 1



GENERAL MOTORS, GM, the GM Emblem, CHEVROLET, the CHEVROLET Emblem, and the name OPTRA are registered trademarks of General Motors Corporation.

This manual includes the latest information at the time it was printed. We reserve the right to make changes after that time without further notice. For vehicles first sold in Canada, substitute the name “General Motors of Canada Limited” for Chevrolet Motor Division whenever it appears in this manual.

This manual describes features that may be available in this model, but your vehicle may not have all of them. For example, more than one entertainment system may be offered or your vehicle may have been ordered without a front passenger or rear seats.

Keep this manual in the vehicle for quick reference.

Canadian Owners

A French language copy of this manual can be obtained from your dealer/retailer or from:

Helm, Incorporated
P.O. Box 07130
Detroit, MI 48207

1-800-551-4123
www.helminc.com

Propriétaires Canadiens

On peut obtenir un exemplaire de ce guide en français auprès de concessionnaire ou à l’adresse suivante:

Helm Incorporated
P.O. Box 07130
Detroit, MI 48207

1-800-551-4123
www.helminc.com

Litho in U.S.A.
Part No. 25810495 A First Print

©2007 General Motors Corporation. All Rights Reserved.

Using this Manual

Many people read the owner manual from beginning to end when they first receive their new vehicle to learn about the vehicle's features and controls. Pictures and words work together to explain things.

Index

A good place to quickly locate information about the vehicle is the Index in the back of the manual. It is an alphabetical list of what is in the manual and the page number where it can be found.

Safety Warnings and Symbols

There are a number of safety cautions in this book. A box with the word CAUTION is used to tell about things that could hurt you or others if you were to ignore the warning.

⚠ CAUTION:

These mean there is something that could hurt you or other people.

We tell you what the hazard is and what to do to help avoid or reduce the hazard. Please read these cautions. If you do not, you or others could be hurt.

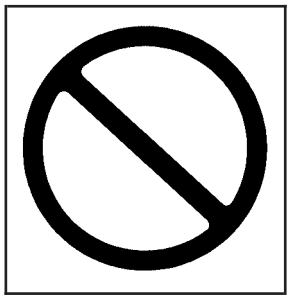

A circle with a slash through it is a safety symbol which means "Do Not," "Do Not do this" or "Do Not let this happen."

Vehicle Damage Warnings

You will also find notices in this manual.

Notice: **These mean there is something that could damage your vehicle.**

A notice tells about something that can damage the vehicle. Many times, this damage would not be covered by your vehicle's warranty, and it could be costly. The notice tells what to do to help avoid the damage.

When you read other manuals, you might see CAUTION and NOTICE warnings in different colors or in different words.

There are also warning labels on the vehicle which use the same words, CAUTION or NOTICE.

Vehicle Symbols

The vehicle has components and labels that use symbols instead of text. Symbols are shown along with the text describing the operation or information relating to a specific component, control, message, gage, or indicator.

Section 1 Seats and Restraint Systems

Front Seats 1-2
Manual Seats (With Sliding Storage Tray) 1-2
Manual Seats (Without Sliding Storage Tray) 1-3
Driver Seat Tilt Adjuster 1-4
Manual Lumbar 1-4
Reclining Seatbacks 1-5
Head Restraints 1-7

Rear Seats 1-8
Rear Seat Operation 1-8

Safety Belts 1-10
Safety Belts: They Are for Everyone 1-10
How to Wear Safety Belts Properly 1-15
Lap-Shoulder Belt 1-23
Safety Belt Use During Pregnancy 1-26
Safety Belt Extender 1-26

Child Restraints 1-27
Older Children 1-27
Infants and Young Children 1-30
Child Restraint Systems 1-33
Where to Put the Restraint 1-36
Lower Anchors and Tethers for Children (LATCH) 1-37
Securing a Child Restraint in a Rear Seat Position 1-45
Securing a Child Restraint in the Right Front Seat Position 1-48

Airbag System 1-51
Where Are the Airbags? 1-54
When Should an Airbag Inflate? 1-56
What Makes an Airbag Inflate? 1-57
How Does an Airbag Restrain? 1-57
What Will You See After an Airbag Inflates? 1-58
Passenger Sensing System 1-59
Servicing Your Airbag-Equipped Vehicle 1-64
Adding Equipment to Your Airbag-Equipped Vehicle 1-64

Restraint System Check 1-66
Checking the Restraint Systems 1-66
Replacing Restraint System Parts After a Crash 1-67

Front Seats

Manual Seats
(With Sliding Storage Tray)

⚠ CAUTION:

You can lose control of the vehicle if you try to adjust a manual driver's seat while the vehicle is moving. The sudden movement could startle and confuse you, or make you push a pedal when you do not want to. Adjust the driver's seat only when the vehicle is not moving.

If your vehicle has a sliding storage tray under the front seat, the manual seat lever looks like this.



Pull up and hold the lever located under the front of the seat to unlock it.

Slide the seat to where you want it and release the lever. Then try to move the seat with your body, to make sure the seat is locked into place.

Manual Seats
(Without Sliding Storage Tray)

⚠ CAUTION:

You can lose control of the vehicle if you try to adjust a manual driver's seat while the vehicle is moving. The sudden movement could startle and confuse you, or make you push a pedal when you do not want to. Adjust the driver's seat only when the vehicle is not moving.

If your vehicle does not have a sliding storage tray under the front seat, the manual seat bar looks like this.



Pull up and hold the bar located under the front of the seat to unlock it.

Slide the seat to where you want it and release the bar. Then try to move the seat with your body, to make sure the seat is locked into place.

Driver Seat Tilt Adjuster

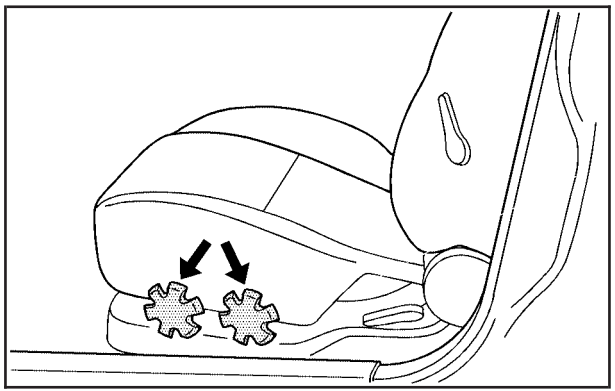

The manual drivers seat tilt adjuster knobs are located on the outboard side of the seat cushion.

Turn the front knob to adjust the tilt of the front portion of the seat cushion. Turn the rear knob to adjust the tilt of the rear portion of the seat cushion.

Manual Lumbar

Your vehicle may have manually operated lumbar support for the driver's seat.

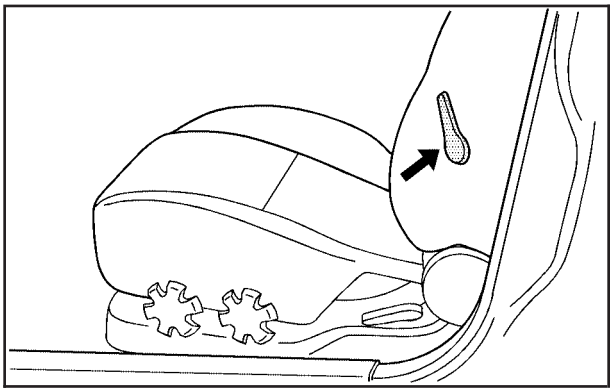

To adjust the front seat lumbar support, use the lever located on the outboard side of the seatback.

Push the lever down to adjust the support for the lower part of the seatback. Pull the lever up to return the support to its original position.

Reclining Seatbacks

⚠ CAUTION:

You can lose control of the vehicle if you try to adjust a manual driver's seat while the vehicle is moving. The sudden movement could startle and confuse you, or make you push a pedal when you do not want to. Adjust the driver's seat only when the vehicle is not moving.

⚠ CAUTION:

If the seatback is not locked, it could move forward in a sudden stop or crash. That could cause injury to the person sitting there. Always push and pull on the seatback to be sure it is locked.

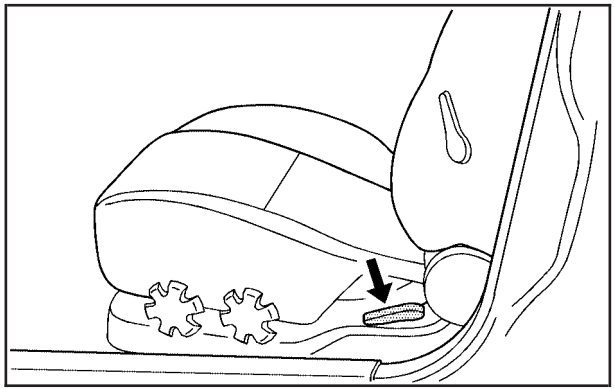

The seats have manual reclining seatbacks. The lever used to operate them is located on the outboard side of the seats.

To recline the seatback:

1. Lift the recline lever.
2. Move the seatback to the desired position, then release the lever to lock the seatback in place.
3. Push and pull on the seatback to make sure it is locked.

To return the seatback to an upright position:

1. Lift the lever fully without applying pressure to the seatback and the seatback will return to the upright position.
2. Push and pull on the seatback to make sure it is locked.

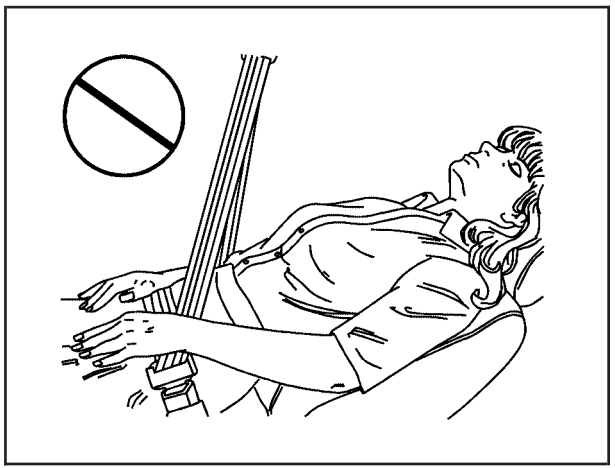

⚠ CAUTION:

Sitting in a reclined position when your vehicle is in motion can be dangerous. Even if you buckle up, your safety belts cannot do their job when you are reclined like this.

The shoulder belt cannot do its job because it will not be against your body. Instead, it will be in front of you. In a crash, you could go into it, receiving neck or other injuries.

The lap belt cannot do its job either. In a crash, the belt could go up over your abdomen. The belt forces would be there, not at your pelvic bones. This could cause serious internal injuries.

For proper protection when the vehicle is in motion, have the seatback upright. Then sit well back in the seat and wear your safety belt properly.

Do not have a seatback reclined if your vehicle is moving.

Head Restraints

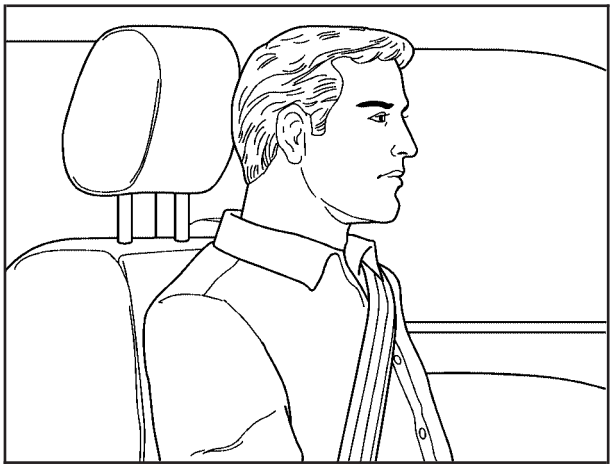

Adjust the head restraint so that the top of the restraint is at the same height as the top of the occupant's head. This position reduces the chances of a neck injury in a crash.

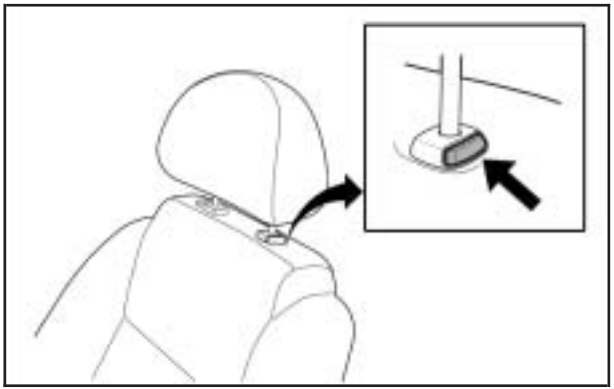

Pull the head restraint up to raise it. To lower the restraint, press the button, located on the top of the seatback, and push the restraint down.

The rear seat head restraints may be adjustable and work the same as the front head restraints.

The head restraints are removable. To remove a restraint, press the button, located on the top of the seatback, and lift the head restraint from the guide sleeve. Replace the head restraint before driving.

Rear Seats

Rear Seat Operation

Your vehicle has rear seatbacks that can be folded down to provide an extended cargo area.

To fold down the seatback, do the following:

Notice: **Folding a rear seat with the safety belts still fastened may cause damage to the seat or the safety belts. Always unbuckle the safety belts and return them to their normal stowed position before folding a rear seat.**

1. Push the rear head restraints down completely.
2. Detach the safety belt in the rear center seat position. Press the button in the buckle to release the latch plate from the buckle.

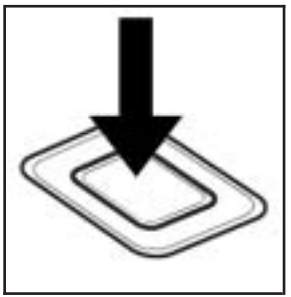

3. Press the release button located on top of the rear seatback.
4. Fold the rear seatback forward and down.

To return the seatback to the upright position, do the following:

⚠ CAUTION:

If the seatback is not locked, it could move forward in a sudden stop or crash. That could cause injury to the person sitting there. Always push and pull on the seatback to be sure it is locked.

1. Lift the seatback up and push firmly on the top of the seatback until it latches securely in the fully upright position.

⚠ CAUTION:

A safety belt that is improperly routed, not properly attached, or twisted will not provide the protection needed in a crash. The person wearing the belt could be seriously injured. After raising the rear seatback, always check to be sure that the safety belts are properly routed and attached, and are not twisted.

2. Make sure that the safety belts are not twisted or caught under the seatback.
3. Re-attach the rear center safety belt. Push the latch plate at the end of the safety belt strap into the buckle with the release button until the mechanism clicks. Make sure the strap is not twisted. The sliding latch plate should face the front of the vehicle.

Safety Belts

Safety Belts: They Are for Everyone

This part of the manual tells you how to use safety belts properly. It also tells you some things you should not do with safety belts.

⚠ CAUTION:

Do not let anyone ride where he or she cannot wear a safety belt properly. If you are in a crash and you are not wearing a safety belt, your injuries can be much worse. You can hit things inside the vehicle harder or be ejected from it and be seriously injured or killed. In the same crash, you might not be, if you are buckled up. Always fasten your safety belt, and check that your passenger(s) are restrained properly too.

⚠ CAUTION:

It is extremely dangerous to ride in a cargo area, inside or outside of a vehicle. In a collision, people riding in these areas are more likely to be seriously injured or killed. Do not allow people to ride in any area of your vehicle that is not equipped with seats and safety belts. Be sure everyone in your vehicle is in a seat and using a safety belt properly.

Your vehicle has indicators as a reminder to buckle your safety belts. See *Safety Belt Reminders on page 3-27*.

In most states and in all Canadian provinces, the law requires wearing safety belts. Here is why:

You never know if you will be in a crash. If you do have a crash, you do not know if it will be a serious one.

A few crashes are mild, and some crashes can be so serious that even buckled up, a person would not survive. But most crashes are in between. In many of them, people who buckle up can survive and sometimes walk away. Without belts they could have been badly hurt or killed.

After more than 40 years of safety belts in vehicles, the facts are clear. In most crashes buckling up does matter... a lot!

Why Safety Belts Work

When you ride in or on anything, you go as fast as it goes.

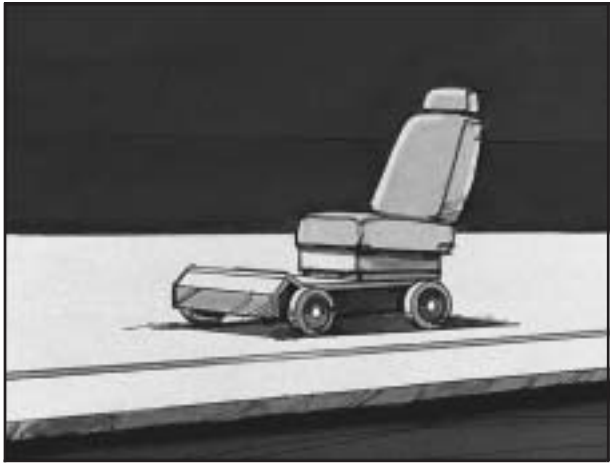

Take the simplest vehicle. Suppose it is just a seat on wheels.

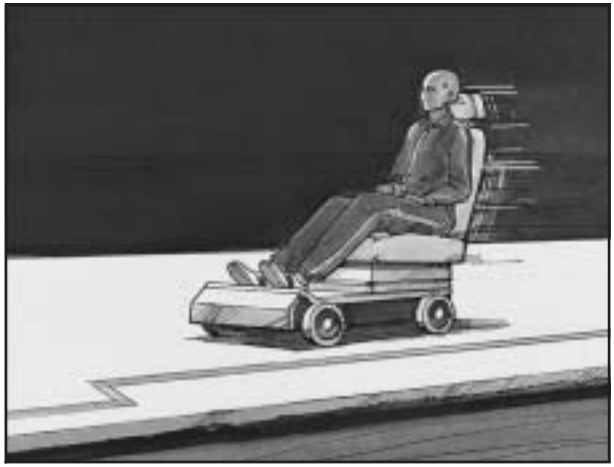

Put someone on it.

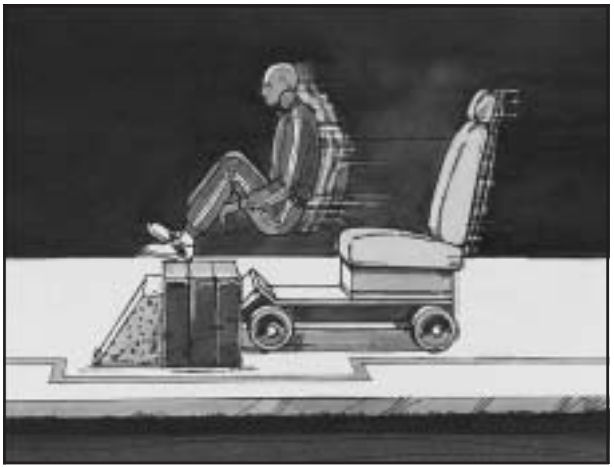

Get it up to speed. Then stop the vehicle. The rider does not stop.



The person keeps going until stopped by something. In a real vehicle, it could be the windshield...

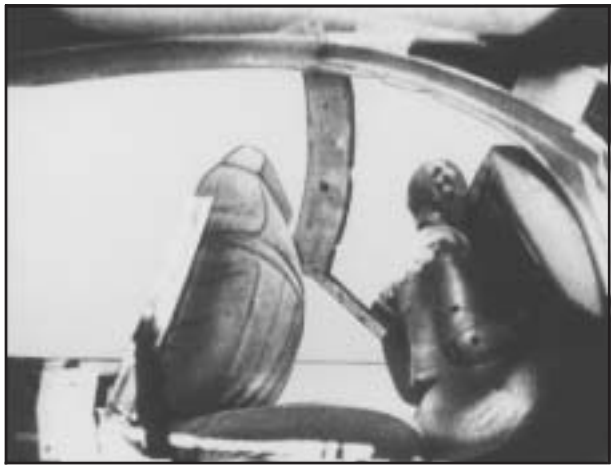

or the instrument panel...



or the safety belts!

With safety belts, you slow down as the vehicle does. You get more time to stop. You stop over more distance, and your strongest bones take the forces. That is why safety belts make such good sense.

Questions and Answers About Safety Belts

Q: Will I be trapped in the vehicle after a crash if I am wearing a safety belt?

A: You *could* be — whether you are wearing a safety belt or not. But your chance of being conscious during and after an accident, so you *can* unbuckle and get out, is *much* greater if you are belted. And you can unbuckle a safety belt, even if you are upside down.

Q: If my vehicle has airbags, why should I have to wear safety belts?

A: Airbags are supplemental systems only; so they work *with* safety belts — not instead of them. Whether or not an airbag is provided, all occupants still have to buckle up to get the most protection. That is true not only in frontal collisions, but especially in side and other collisions.

Q: If I am a good driver, and I never drive far from home, why should I wear safety belts?

A: You may be an excellent driver, but if you are in a crash — even one that is not your fault — you and your passenger(s) can be hurt. Being a good driver does not protect you from things beyond your control, such as bad drivers.

Most accidents occur within 25 miles (40 km) of home. And the greatest number of serious injuries and deaths occur at speeds of less than 40 mph (65 km/h).

Safety belts are for everyone.

How to Wear Safety Belts Properly

This section is only for people of adult size.

Be aware that there are special things to know about safety belts and children. And there are different rules for smaller children and babies. If a child will be riding in your vehicle, see *Older Children on page 1-27* or *Infants and Young Children on page 1-30*. Follow those rules for everyone's protection.

It is very important for all occupants to buckle up. Statistics show that unbelted people are hurt more often in crashes than those who are wearing safety belts.

Occupants who are not buckled up can be thrown out of the vehicle in a crash. And they can strike others in the vehicle who are wearing safety belts.

First, before you or your passenger(s) wear a safety belt, there is important information you should know.

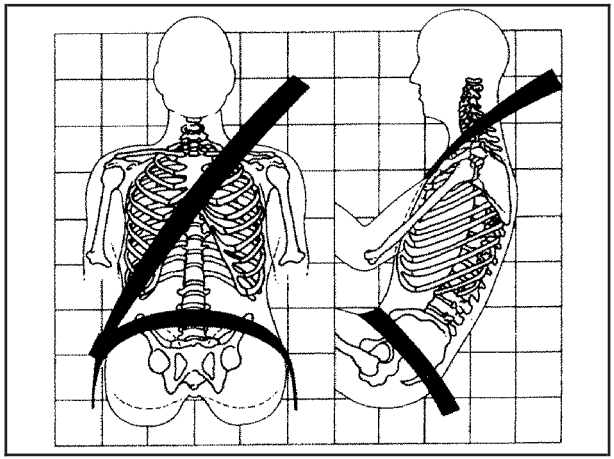

Sit up straight and always keep your feet on the floor in front of you. The lap part of the belt should be worn low and snug on the hips, just touching the thighs. In a crash, this applies force to the strong pelvic bones and you would be less likely to slide under the lap belt. If you slid under it, the belt would apply force on your abdomen. This could cause serious or even fatal injuries. The shoulder belt should go over the shoulder and across the chest. These parts of the body are best able to take belt restraining forces.

The shoulder belt locks if there is a sudden stop or crash.

Q: What is wrong with this?

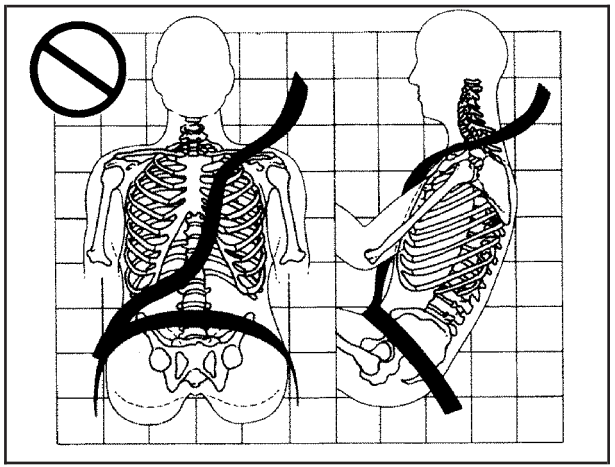

A: The shoulder belt is too loose. It will not give as much protection this way.

⚠ CAUTION:

You can be seriously hurt if your shoulder belt is too loose. In a crash, you would move forward too much, which could increase injury. The shoulder belt should fit snugly against your body.

Q: **What is wrong with this?**

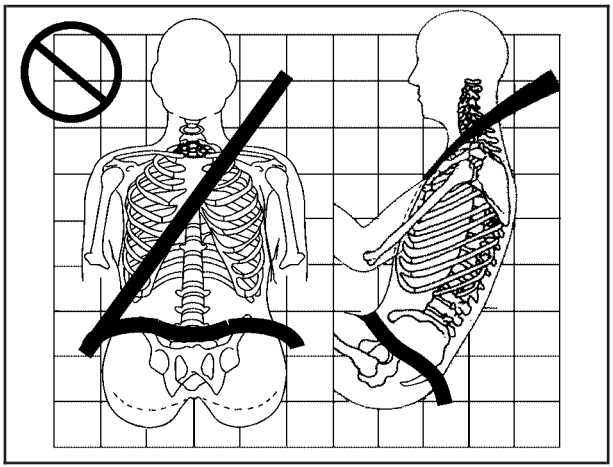

A: The lap belt is too loose. It will not give nearly as much protection this way.

⚠ CAUTION:

You can be seriously hurt if your lap belt is too loose. In a crash, you could slide under the lap belt and apply force on your abdomen. This could cause serious or even fatal injuries. The lap belt should be worn low and snug on the hips, just touching the thighs.

Q: What is wrong with this?

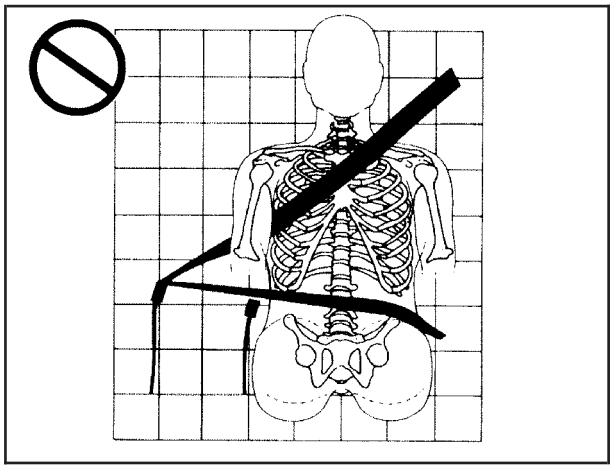

A: The belt is buckled in the wrong place.

⚠ CAUTION:

You can be seriously injured if your belt is buckled in the wrong place like this. In a crash, the belt would go up over your abdomen. The belt forces would be there, not on the pelvic bones. This could cause serious internal injuries. Always buckle your belt into the buckle nearest you.

Q: What is wrong with this?

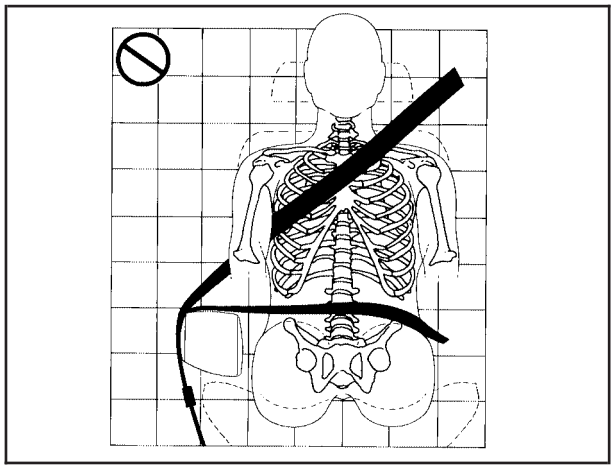

A: The belt is over an armrest.

⚠ CAUTION:

You can be seriously injured if your belt goes over an armrest like this. The belt would be much too high. In a crash, you can slide under the belt. The belt force would then be applied on the abdomen, not on the pelvic bones, and that could cause serious or fatal injuries.
Be sure the belt goes under the armrests.

Q: What is wrong with this?

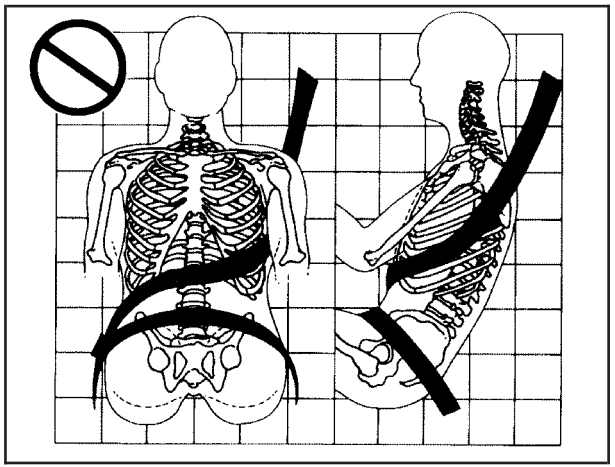

A: The shoulder belt is worn under the arm. It should be worn over the shoulder at all times.

⚠ CAUTION:

You can be seriously injured if you wear the shoulder belt under your arm. In a crash, your body would move too far forward, which would increase the chance of head and neck injury. Also, the belt would apply too much force to the ribs, which are not as strong as shoulder bones. You could also severely injure internal organs like your liver or spleen. The shoulder belt should go over the shoulder and across the chest.

Q: **What is wrong with this?**

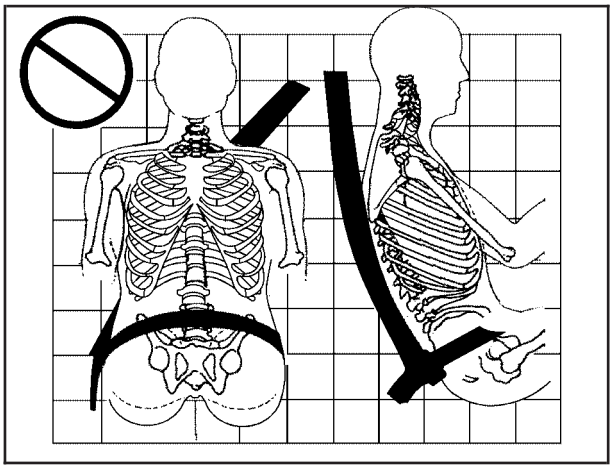

A: The belt is behind the body.

⚠ CAUTION:

You can be seriously injured by not wearing the lap-shoulder belt properly. In a crash, you would not be restrained by the shoulder belt. Your body could move too far forward increasing the chance of head and neck injury. You might also slide under the lap belt. The belt force would then be applied right on the abdomen. That could cause serious or fatal injuries. The shoulder belt should go over the shoulder and across the chest.

Q: **What is wrong with this?**

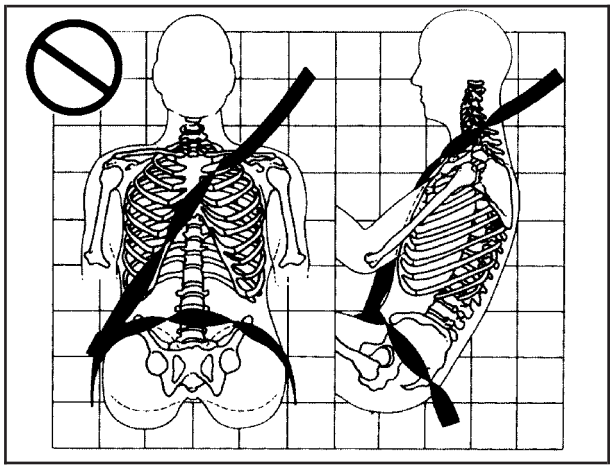

A: The belt is twisted across the body.

⚠ CAUTION:

You can be seriously injured by a twisted belt. In a crash, you would not have the full width of the belt to spread impact forces. If a belt is twisted, make it straight so it can work properly, or ask your dealer/retailer to fix it.

Lap-Shoulder Belt

All seating positions in your vehicle have a lap-shoulder belt.

If you are using a rear seating position with a detachable safety belt and the safety belt is not attached, see *Rear Seat Operation on page 1-8* for instruction on reconnecting the safety belt to the mini-buckle.

Here is how to wear a lap-shoulder belt properly.

1. Adjust the seat, if the seat is adjustable, so you can sit up straight. To see how, see “Seats” in the Index.
2. Pick up the latch plate and pull the belt across you. Do not let it get twisted.

   The lap-shoulder belt may lock if you pull the belt across you very quickly. If this happens, let the belt go back slightly to unlock it. Then pull the belt across you more slowly.

   If you ever pull the shoulder portion of a passenger belt out all the way, you may engage the child restraint locking feature. If this happens, just let the belt go back all the way and start again.

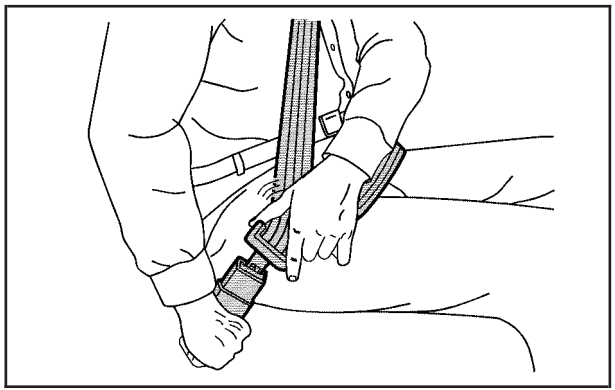

3. Push the latch plate into the buckle until it clicks.

   If you find that the latch plate will not go fully into the buckle, see if you are using the correct buckle.
4. Pull up on the latch plate to make sure it is secure. If the belt is not long enough, see *Safety Belt Extender on page 1-26*.

   Make sure the release button on the buckle is positioned so you would be able to unbuckle the safety belt quickly if necessary.

5. If equipped with a shoulder belt height adjuster, move it to the height that is right for you. Improper shoulder belt height adjustment could reduce the effectiveness of the safety belt in a crash. See “Shoulder Belt Height Adjustment” later in this section.

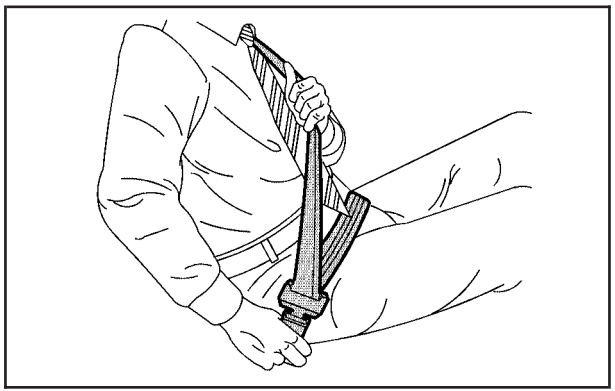

6. To make the lap part tight, pull up on the shoulder belt.

   It may be necessary to pull stitching on the safety belt through the latch plate to fully tighten the lap belt on smaller occupants.

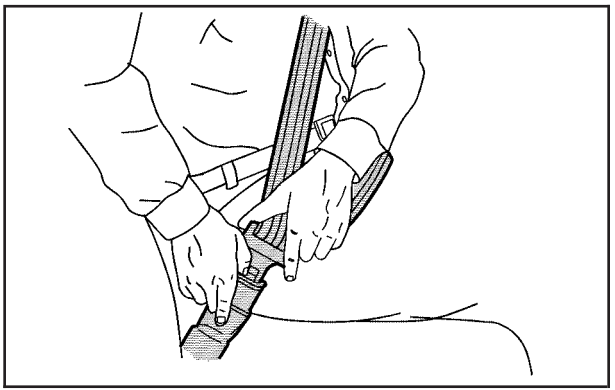

To unlatch the belt, push the button on the buckle. The belt should go back out of the way.

Before you close a door, be sure the belt is out of the way. If you slam the door on it, you can damage both the belt and your vehicle.

Shoulder Belt Height Adjuster

Your vehicle has a shoulder belt height adjuster for the driver and right front passenger.

Adjust the height so that the shoulder portion of the belt is centered on your shoulder. The belt should be away from your face and neck, but not falling off your shoulder. Improper shoulder belt height adjustment could reduce the effectiveness of the safety belt in a crash.

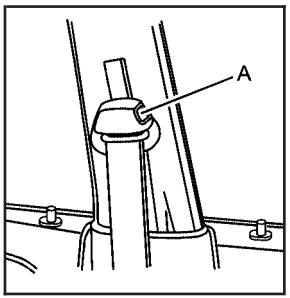

To move it down, press the release button (A) and move the height adjuster to the desired position.

After you move the height adjuster to where you want it, try to move it down without pressing the release button to make sure it has locked into position.

Safety Belt Pretensioners

Your vehicle has safety belt pretensioners for front outboard occupants. Although you cannot see them, they are part of the safety belt assembly. They can help tighten the safety belts during the early stages of a moderate to severe frontal or near frontal crash if the threshold conditions for pretensioner activation are met.

Pretensioners work only once. If they activate in a crash, you will need to get new ones, and probably other new parts for your safety belt system. See *Replacing Restraint System Parts After a Crash on page 1-67*.

Safety Belt Use During Pregnancy

Safety belts work for everyone, including pregnant women. Like all occupants, they are more likely to be seriously injured if they do not wear safety belts.

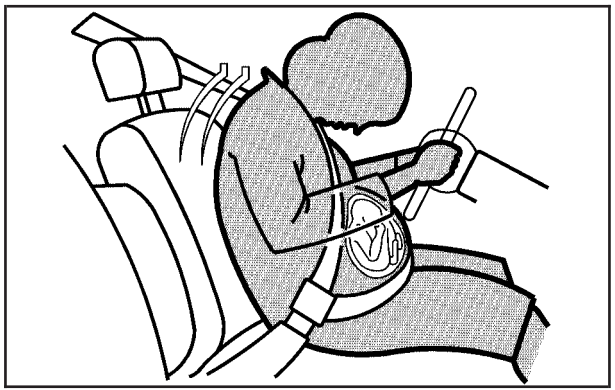

A pregnant woman should wear a lap-shoulder belt, and the lap portion should be worn as low as possible, below the rounding, throughout the pregnancy.

The best way to protect the fetus is to protect the mother. When a safety belt is worn properly, it is more likely that the fetus will not be hurt in a crash. For pregnant women, as for anyone, the key to making safety belts effective is wearing them properly.

Safety Belt Extender

If the vehicle's safety belt will fasten around you, you should use it.

But if a safety belt is not long enough, your dealer/retailer will order you an extender. When you go in to order it, take the heaviest coat you will wear, so the extender will be long enough for you. To help avoid personal injury, do not let someone else use it, and use it only for the seat it is made to fit. The extender has been designed for adults. Never use it for securing child seats. To wear it, attach it to the regular safety belt. For more information, see the instruction sheet that comes with the extender.

Child Restraints

Older Children

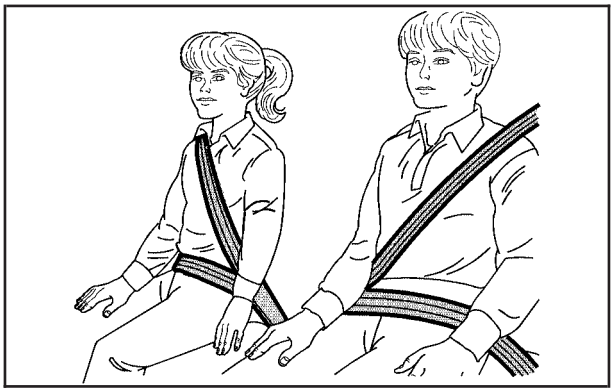

Older children who have outgrown booster seats should wear the vehicle's safety belts.

The manufacturer's instructions that come with the booster seat, state the weight and height limitations for that booster. Use a booster seat with a lap-shoulder belt until the child passes the below fit test:

- Sit all the way back on the seat. Do the knees bend at the seat edge? If yes, continue. If no, return to the booster seat.
- Buckle the lap-shoulder belt. Does the shoulder belt rest on the shoulder? If yes, continue. If no, then return to the booster seat.
- Does the lap belt fit low and snug on the hips, touching the thighs? If yes, continue. If no, return to the booster seat.
- Can proper safety belt fit be maintained for the length of the trip? If yes, continue. If no, return to the booster seat.

Q: What is the proper way to wear safety belts?

A: An older child should wear a lap-shoulder belt and get the additional restraint a shoulder belt can provide. The shoulder belt should not cross the face or neck. The lap belt should fit snugly below the hips, just touching the top of the thighs. This applies belt force to the child's pelvic bones in a crash. It should never be worn over the abdomen, which could cause severe or even fatal internal injuries in a crash.

According to accident statistics, children and infants are safer when properly restrained in the rear seating positions than in the front seating positions.

In a crash, children who are not buckled up can strike other people who are buckled up, or can be thrown out of the vehicle. Older children need to use safety belts properly.

⚠ CAUTION:

Never do this.

Here two children are wearing the same belt. The belt cannot properly spread the impact forces. In a crash, the two children can be crushed together and seriously injured. A belt must be used by only one person at a time.

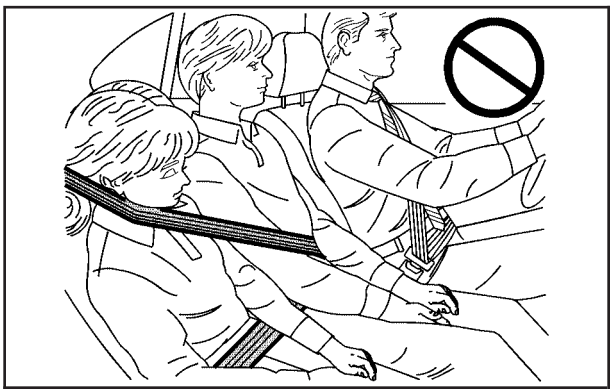

⚠ CAUTION:

Never do this.

Here a child is sitting in a seat that has a lap-shoulder belt, but the shoulder part is behind the child. In a crash, the child would not be restrained by the shoulder belt. The child might slide under the lap belt. The belt force would then be applied right on the abdomen. That could cause serious or fatal injuries. The child could also move too far forward increasing the chance of head and neck injury. The shoulder belt should go over the shoulder and across the chest.



Infants and Young Children

Everyone in a vehicle needs protection! This includes infants and all other children. Neither the distance traveled nor the age and size of the traveler changes the need, for everyone, to use safety restraints. In fact, the law in every state in the United States and in every Canadian province says children up to some age must be restrained while in a vehicle.

⚠ CAUTION:

Children can be seriously injured or strangled if a shoulder belt is wrapped around their neck and the safety belt continues to tighten. Never leave children unattended in a vehicle and never allow children to play with the safety belts.

Every time infants and young children ride in vehicles, they should have the protection provided by appropriate restraints. Children who are not restrained properly can strike other people, or can be thrown out of the vehicle. In addition, young children should not use the vehicle's adult safety belts alone; they need to use a child restraint.

⚠ CAUTION:

People should never hold an infant in their arms while riding in a vehicle. An infant does not weigh much — until a crash. During a crash an infant will become so heavy it is not possible to hold it. For example, in a crash at only 25 mph (40 km/h), a 12 lb (5.5 kg) infant will suddenly become a 240 lb (110 kg) force on a person's arms. An infant should be secured in an appropriate restraint.

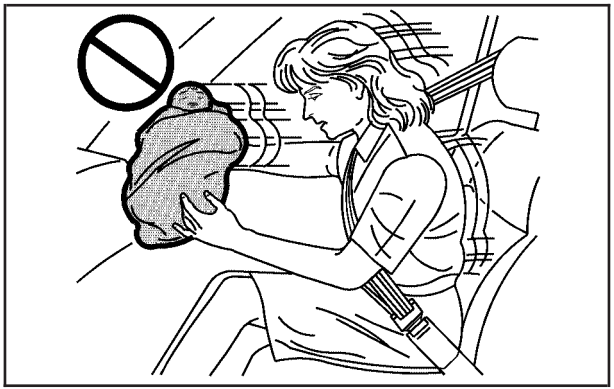

⚠ CAUTION:

Children who are up against, or very close to, any airbag when it inflates can be seriously injured or killed. Airbags plus lap-shoulder belts offer protection for adults and older

CAUTION: (Continued)

CAUTION: (Continued)

children, but not for young children and infants. Neither the vehicle's safety belt system nor its airbag system is designed for them. Young children and infants need the protection that a child restraint system can provide.



Q: What are the different types of add-on child restraints?

A: Add-on child restraints, which are purchased by the vehicle's owner, are available in four basic types. Selection of a particular restraint should take into consideration not only the child's weight, height, and age but also whether or not the restraint will be compatible with the motor vehicle in which it will be used.

For most basic types of child restraints, there are many different models available. When purchasing a child restraint, be sure it is designed to be used in a motor vehicle. If it is, the restraint will have a label saying that it meets federal motor vehicle safety standards.

The restraint manufacturer's instructions that come with the restraint state the weight and height limitations for a particular child restraint. In addition, there are many kinds of restraints available for children with special needs.

⚠ CAUTION:

Newborn infants need complete support, including support for the head and neck. This is necessary because a newborn infant's neck is weak and its head weighs so much compared with the rest of its body. In a crash, an infant in a rear-facing seat settles into the restraint, so the crash forces can be distributed across the strongest part of an infant's body, the back and shoulders. Infants should always be secured in appropriate infant restraints.

⚠ CAUTION:

The body structure of a young child is quite unlike that of an adult or older child, for whom the safety belts are designed. A young child's hip bones are still so small that the vehicle's regular safety belt may not remain low on the hip bones, as it should. Instead, it may settle up around the child's abdomen. In a crash, the belt would apply force on a body area that is unprotected by any bony structure. This alone could cause serious or fatal injuries. Young children should always be secured in appropriate child restraints.

Child Restraint Systems

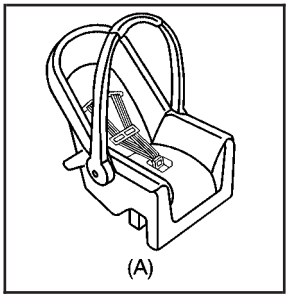
(A)

A rear-facing infant seat (A) provides restraint with the seating surface against the back of the infant.

The harness system holds the infant in place and, in a crash, acts to keep the infant positioned in the restraint.

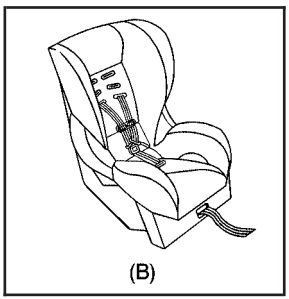
(B)

A forward-facing child seat (B) provides restraint for the child's body with the harness.

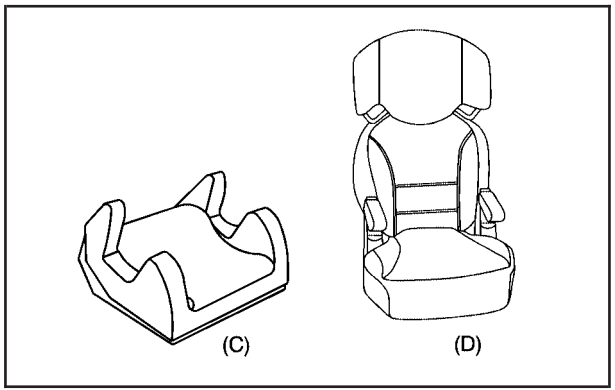

A booster seat (C-D) is a child restraint designed to improve the fit of the vehicle's safety belt system. A booster seat can also help a child to see out the window.

Securing an Add-On Child Restraint in the Vehicle

⚠ CAUTION:

A child can be seriously injured or killed in a crash if the child restraint is not properly secured in the vehicle. Make sure the child restraint is properly installed in the vehicle using the vehicle's safety belt or LATCH system, following the instructions that came with that restraint, and also the instructions in this manual.

To help reduce the chance of injury, the child restraint must be secured in the vehicle. Child restraint systems must be secured in vehicle seats by lap belts or the lap belt portion of a lap-shoulder belt, or by the LATCH system.

See *Lower Anchors and Tethers for Children (LATCH) on page 1-37* for more information. A child can be endangered in a crash if the child restraint is not properly secured in the vehicle.

When securing an add-on child restraint, refer to the instructions that come with the restraint which may be on the restraint itself or in a booklet, or both, and to this manual. The child restraint instructions are important, so if they are not available, obtain a replacement copy from the manufacturer.

Keep in mind that an unsecured child restraint can move around in a collision or sudden stop and injure people in the vehicle. Be sure to properly secure any child restraint in your vehicle — even when no child is in it.

Securing the Child Within the Child Restraint

⚠ CAUTION:

A child can be seriously injured or killed in a crash if the child is not properly secured in the child restraint. Because there are different systems, it is important to refer to the instructions that come with the restraint. Make sure the child is properly secured, following the instructions that came with that restraint.

Where to Put the Restraint

Accident statistics show that children are safer if they are restrained in the rear rather than the front seat.

We recommend that children and child restraints be secured in a rear seat, including: an infant or a child riding in a rear-facing child restraint; a child riding in a forward-facing child seat; an older child riding in a booster seat; and children, who are large enough, using safety belts.

A label on your sun visor says, “Never put a rear-facing child seat in the front.” This is because the risk to the rear-facing child is so great, if the airbag deploys.

⚠ CAUTION:

A child in a rear-facing child restraint can be seriously injured or killed if the right front passenger’s airbag inflates. This is because the back of the rear-facing child restraint would be very close to the inflating airbag.

Even though the passenger sensing system is designed to turn off the right front passenger’s frontal airbag if the system detects a rear-facing child restraint, no system is fail-safe, and no one can guarantee that an airbag will not deploy under some unusual circumstance, even though it is turned off. We recommend that rear-facing child restraints be secured in a rear seat, even if the airbag is off.

If you secure a forward-facing child restraint in the right front seat, always move the front passenger seat as far back as it will go. It is better to secure the child restraint in a rear seat.

See *Passenger Sensing System on page 1-59* for additional information.

When securing a child restraint in a rear seating position, study the instructions that came with your child restraint to make sure it is compatible with this vehicle.

Wherever you install a child restraint, be sure to secure the child restraint properly.

Keep in mind that an unsecured child restraint can move around in a collision or sudden stop and injure people in the vehicle. Be sure to properly secure any child restraint in your vehicle — even when no child is in it.

Lower Anchors and Tethers for Children (LATCH)

The LATCH system holds a child restraint during driving or in a crash. This system is designed to make installation of a child restraint easier. The LATCH system uses anchors in the vehicle and attachments on the child restraint that are made for use with the LATCH system.

Make sure that a LATCH-compatible child restraint is properly installed using the anchors, or use the vehicle's safety belts to secure the restraint, following the instructions that came with that restraint, and also the instructions in this manual. When installing a child restraint with a top tether, you must also use either the lower anchors or the safety belts to properly secure the child restraint. A child restraint must never be installed using only the top tether and anchor.

In order to use the LATCH system in your vehicle, you need a child restraint that has LATCH attachments. The child restraint manufacturer will provide you with instructions on how to use the child restraint and its attachments. The following explains how to attach a child restraint with these attachments in your vehicle.

Not all vehicle seating positions or child restraints have lower anchors and attachments or top tether anchors and attachments.

Lower Anchors

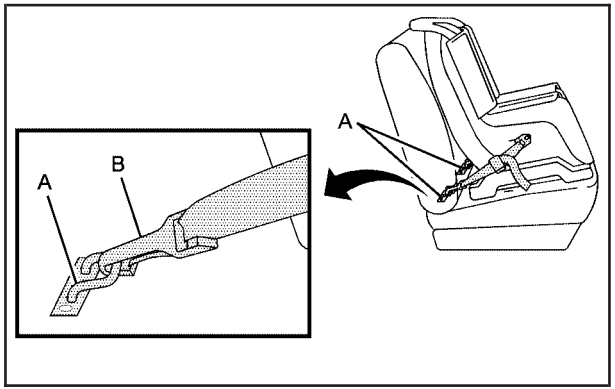

Lower anchors (A) are metal bars built into the vehicle. There are two lower anchors for each LATCH seating position that will accommodate a child restraint with lower attachments (B).

Top Tether Anchor

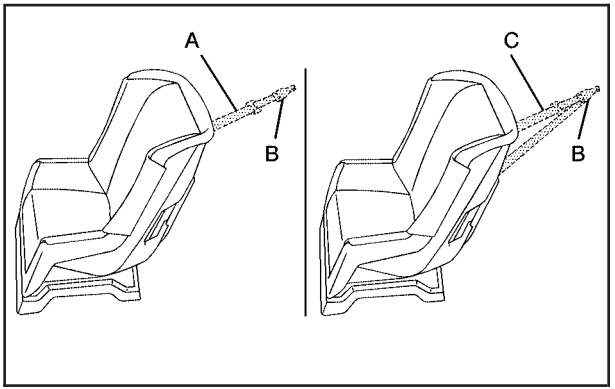

A top tether (A, C) anchors the top of the child restraint to the vehicle. A top tether anchor is built into the vehicle. The top tether attachment (B) on the child restraint connects to the top tether anchor in the vehicle in order to reduce the forward movement and rotation of the child restraint during driving or in a crash.

Your child restraint may have a single tether (A) or a dual tether (C). Either will have a single attachment (B) to secure the top tether to the anchor.

Some child restraints that have a top tether are designed for use with or without the top tether being attached. Others require the top tether always to be attached. In Canada, the law requires that forward-facing child restraints have a top tether, and that the tether be attached. Be sure to read and follow the instructions for your child restraint.

If the child restraint does not have a top tether, one can be obtained, in kit form, for many child restraints. Ask the child restraint manufacturer whether or not a kit is available.

Lower Anchor and Top Tether Anchor Locations

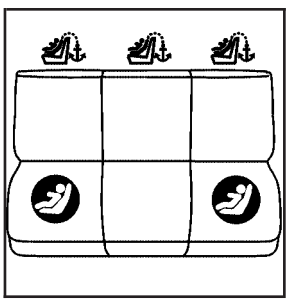

Rear Seat

(Top Tether Anchor): Seating positions with top tether anchors.

(Lower Anchor): Seating positions with two lower anchors.



To assist you in locating the lower anchors, each seating position with lower anchors has two labels, near the crease between the seatback and the seat cushion.

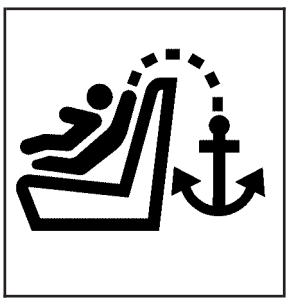

To assist you in locating the top tether anchors, the top tether anchor symbol is located on the cover, if there is a cover.

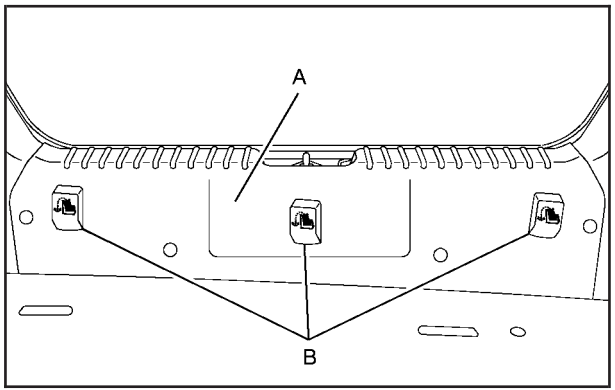

Hatchback

For hatchback models, the top tether anchors (B) are located under covers in the rear cargo area, attached to the back wall (A) of the vehicle. Squeeze and pull the front part of the cover to access the anchors. Remove the cargo shade before installing the top tether. The cargo shade should remain off while the top tether anchor is in use. Be sure to use an anchor located on the same side of the vehicle as the seating position where the child restraint will be placed.

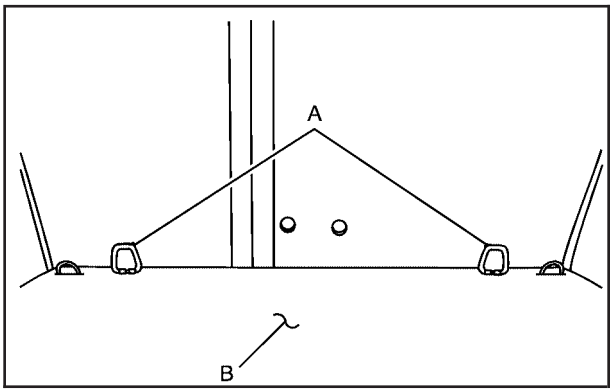

Wagon Outside Positions

For outside seating positions in a wagon model, the top tether anchors (A) are exposed anchors, located behind the rear seat, on the floor of the rear cargo area (B). Be sure to use an anchor located on the same side of the vehicle as the seating position where the child restraint will be placed.

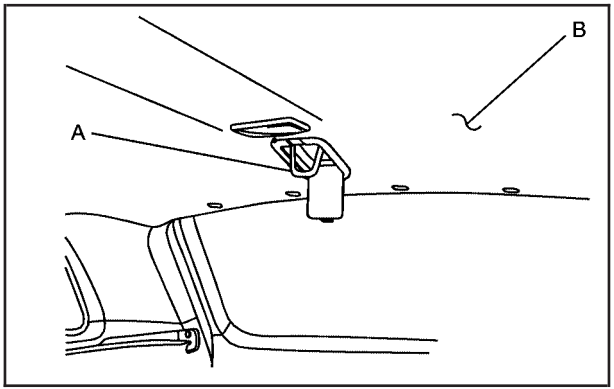

Wagon Center Position

For the center position in wagon model, the top tether anchor (A) is located under a cover on the ceiling (B). Open the cover to access the anchors. Be sure to use an anchor located on the same side of the vehicle as the seating position where the child restraint will be placed.

Do not secure a child restraint in a position without a top tether anchor if a national or local law requires that the top tether be attached, or if the instructions that come with the child restraint say that the top tether must be attached.

Accident statistics show that children are safer if they are restrained in the rear rather than the front seat. See *Where to Put the Restraint on page 1-36* for additional information.

Securing a Child Restraint Designed for the LATCH System

⚠ CAUTION:

If a LATCH-type child restraint is not attached to anchors, the restraint will not be able to protect the child correctly. In a crash, the child could be seriously injured or killed. Make sure that a LATCH-type child restraint is properly installed using the anchors, or use the vehicle's safety belts to secure the restraint, following the instructions that came with that restraint, and also the instructions in this manual.

⚠ CAUTION:

Each top tether anchor and lower anchor in the vehicle is designed to hold only one child restraint. Attaching more than one child restraint to a single anchor could cause the anchor or attachment to come loose or even break during a crash. A child or others could be injured if this happens. To help prevent injury to people and damage to your vehicle, attach only one child restraint per anchor.

⚠ CAUTION:

Children can be seriously injured or strangled if a shoulder belt is wrapped around their neck and the safety belt continues to tighten. Secure any unused safety belts behind the child restraint so children cannot reach them. Pull the shoulder belt all the way out of the retractor to set the lock, if your vehicle has one, after the child restraint has been installed. Be sure to follow the instructions of the child restraint manufacturer.

Notice: **Contact between the child restraint LATCH attachment parts and the vehicle's safety belt assembly may cause damage to these parts. Make sure when securing unused safety belts behind the child restraint that there is no contact between the child restraint LATCH attachment parts and the vehicle's safety belt assembly.**

Folding an empty rear seat with the safety belts secured may cause damage to the safety belt or the seat. When removing the child restraint, always remember to return the safety belts to their normal, stowed position before folding the rear seat.

1. Attach and tighten the lower attachments to the lower anchors. If the child restraint does not have lower attachments or the desired seating position does not have lower anchors, secure the child restraint with the top tether and the safety belts. Refer to your child restraint manufacturer instructions and the instructions in this manual.
   1.1. Find the lower anchors for the desired seating position.
   1.2. Put the child restraint on the seat.
   1.3. Attach and tighten the lower attachments on the child restraint to the lower anchors.

2. If the child restraint manufacturer recommends that the top tether be attached, attach and tighten the top tether to the top tether anchor, if equipped. Refer to the child restraint instructions and the following steps:
   2.1. Find the top tether anchor.
   2.2. For hatchback models, remove the cargo shade before installing the top tether. The cargo shade should remain off while the top tether anchor is in use.
   2.3. Squeeze and pull the front part of the cover, if there is one, to access the anchors. For the center position in a wagon model, flip the cover on the ceiling to access the anchor.
   2.4. Raise the headrest or head restraint if the desired seating position has an adjustable headrest or head restraint. See *Head Restraints on page 1-7*.
   2.5. Route and tighten the top tether according to your child restraint instructions and the following instructions:

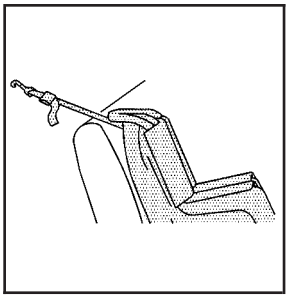

If the position you are using does not have a headrest or head restraint and you are using a single tether, route the tether over the seatback.

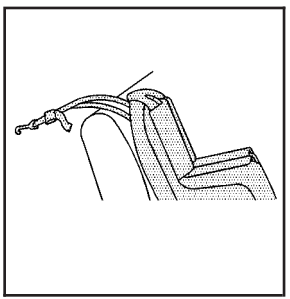

If the position you are using does not have a headrest or head restraint and you are using a dual tether, route the tether over the seatback.

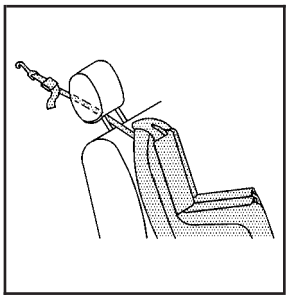

If the position you are using has a headrest or head restraint and you are using a single tether, route the tether under the headrest or head restraint and in between the headrest or head restraint.

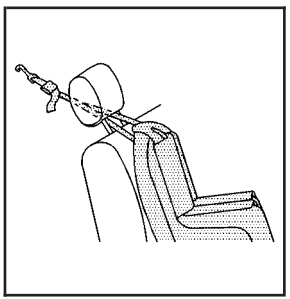

If the position you are using has a headrest or head restraint and you are using dual tether, route the tether under the headrest or head restraint and in between the headrest or head restraint posts.

3. Push and pull the child restraint in different directions to be sure it is secure.

Securing a Child Restraint in a Rear Seat Position

When securing a child restraint in a rear seating position, study the instructions that came with your child restraint to make sure it is compatible with this vehicle.

If your child restraint has the LATCH system, see *Lower Anchors and Tethers for Children (LATCH) on page 1-37* for how to install your child restraint using LATCH. If you secure a child restraint using a safety belt and it uses a top tether, see *Lower Anchors and Tethers for Children (LATCH) on page 1-37* for top tether anchor locations.

Do not secure a child restraint in a position without a top tether anchor if a national or local law requires that the top tether be anchored, or if the instructions that come with the child restraint say that the top strap must be anchored.

In Canada, the law requires that forward-facing child restraints have a top tether, and that the tether be attached.

If your child restraint does not have the LATCH system, you will be using the safety belt to secure the child restraint in this position. Be sure to follow the instructions that came with the child restraint. Secure the child in the child restraint when and as the instructions say.

If you need to install more than one child restraint in the rear seat, be sure to read *Where to Put the Restraint on page 1-36*.

1. Put the child restraint on the seat.
2. Pick up the latch plate, and run the lap and shoulder portions of the vehicle's safety belt through or around the restraint. The child restraint instructions will show you how.

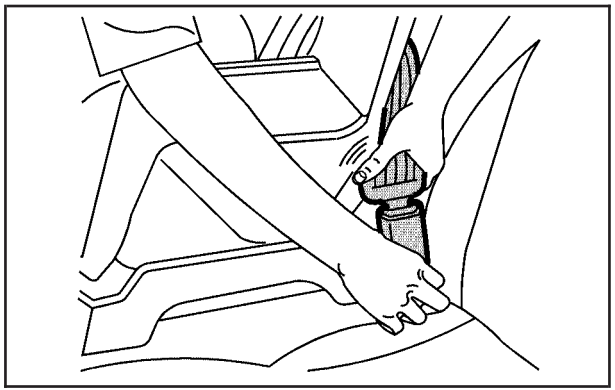

3. Push the latch plate into the buckle until it clicks.

   If you find that the latch plate will not go fully into the buckle, see if you are using the correct buckle. Make sure the release button is positioned so you would be able to unbuckle the safety belt quickly if necessary.

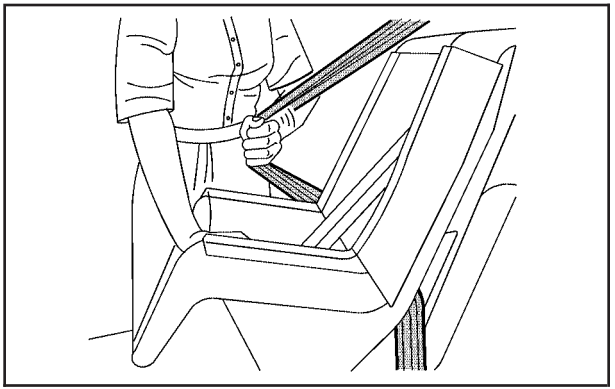

4. Pull the rest of the shoulder belt all the way out of the retractor to set the lock.

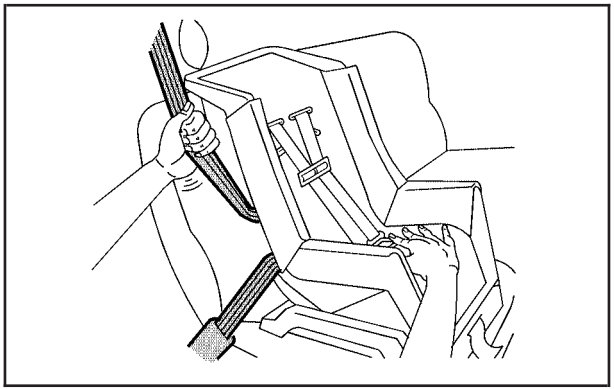

5. To tighten the belt, push down on the child restraint, pull the shoulder portion of the belt to tighten the lap portion of the belt and feed the shoulder belt back into the retractor. If you are using a forward-facing child restraint, you may find it helpful to use your knee to push down on the child restraint as you tighten the belt.
6. If your child restraint has a top tether, follow the child restraint manufacturer's instructions regarding the use of the top tether. See *Lower Anchors and Tethers for Children (LATCH) on page 1-37*.
7. Push and pull the child restraint in different directions to be sure it is secure.

To remove the child restraint, unbuckle the vehicle's safety belt and let it go back all the way. If the top tether is attached to a top tether anchor, disconnect it.

Securing a Child Restraint in the Right Front Seat Position

Your vehicle has airbags. A rear seat is a safer place to secure a forward-facing child restraint. See *Where to Put the Restraint on page 1-36*.

In addition, your vehicle has a passenger sensing system which is designed to turn off the right front passenger's frontal airbag and seat-mounted side impact airbag (if equipped) under certain conditions. See *Passenger Sensing System on page 1-59* and *Passenger Airbag Status Indicator on page 3-28* for more information on this, including important safety information.

A label on your sun visor says, "Never put a rear-facing child seat in the front." This is because the risk to the rear-facing child is so great, if the airbag deploys.

⚠ CAUTION:

A child in a rear-facing child restraint can be seriously injured or killed if the right front passenger's airbag inflates. This is because the back of the rear-facing child restraint would be very close to the inflating airbag.

Even though the passenger sensing system is designed to turn off the right front passenger's frontal airbag if the system detects a rear-facing child restraint, no system is fail-safe, and no one can guarantee that an airbag will not deploy under some unusual circumstance, even though it is turned off. We recommend that rear-facing child restraints be secured in a rear seat, even if the airbag is off.

If you secure a forward-facing child restraint in the right front seat, always move the front passenger seat as far back as it will go. It is better to secure the child restraint in a rear seat.

See *Passenger Sensing System on page 1-59* for additional information.

If your child restraint has the LATCH system, see *Lower Anchors and Tethers for Children (LATCH) on page 1-37* for how to install your child restraint using LATCH. If you secure a child restraint using a safety belt and it uses a top tether, see *Lower Anchors and Tethers for Children (LATCH) on page 1-37* for top tether anchor locations.

Do not secure a child seat in a position without a top tether anchor if a national or local law requires that the top tether be anchored, or if the instructions that come with the child restraint say that the top strap must be anchored.

In Canada, the law requires that forward-facing child restraints have a top tether, and that the tether be attached.

You will be using the lap-shoulder belt to secure the child restraint in this position. Follow the instructions that came with the child restraint.

1. Move the seat as far back as it will go before securing the forward-facing child restraint.

   When the passenger sensing system has turned off the right front passenger's frontal airbag and seat-mounted side impact airbag (if equipped), the off symbol on the passenger airbag status indicator should light and stay lit when you start the vehicle. See *Passenger Airbag Status Indicator on page 3-28*.

2. Put the child restraint on the seat.
3. Pick up the latch plate, and run the lap and shoulder portions of the vehicle's safety belt through or around the restraint. The child restraint instructions will show you how.

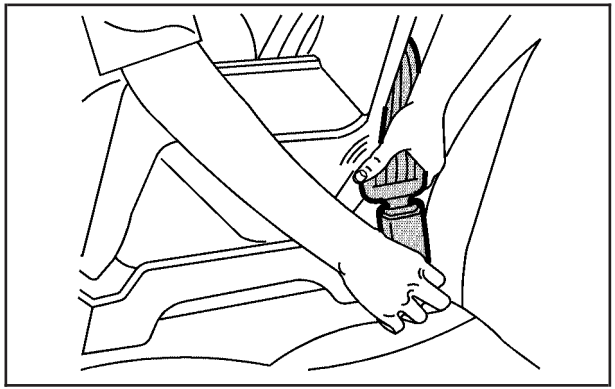

4. Push the latch plate into the buckle until it clicks.

   Make sure the release button is positioned so you would be able to unbuckle the safety belt quickly if necessary.

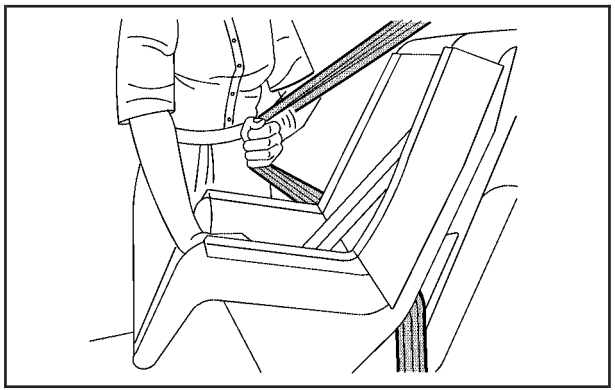

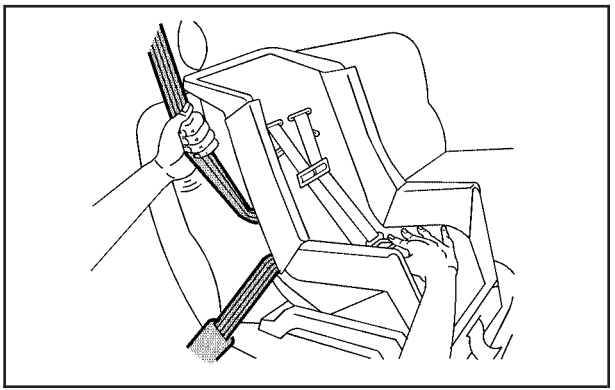

5. Pull the rest of the shoulder belt all the way out of the retractor to set the lock.
6. To tighten the belt, push down on the child restraint, pull the shoulder portion of the belt to tighten the lap portion of the belt and feed the shoulder belt back into the retractor. If you are using a forward-facing child restraint, you may find it helpful to use your knee to push down on the child restraint as you tighten the belt.
7. Push and pull the child restraint in different directions to be sure it is secure.

If the airbag or airbags are off, the off symbol will be lit when the vehicle is started.

If a child restraint has been installed and the off symbol is not lit, turn the vehicle off. Remove the child restraint from the vehicle and reinstall the child restraint.

If, after reinstalling the child restraint and restarting the vehicle, the off symbol is still not lit, check to make sure that the vehicle's seatback is not pressing the child restraint into the seat cushion. If this happens, slightly recline the vehicle's seatback and adjust the seat cushion if possible. Also make sure the child restraint is not trapped under the vehicle head restraint. If this happens, adjust the head restraint.

Remove any additional material from the seat such as blankets, cushions, seat covers, seat heaters or seat massagers before reinstalling or securing the child restraint.

If the off symbol is still not lit, secure the child in the child restraint in a rear seat position in the vehicle and check with your dealer/retailer.

To remove the child restraint, unbuckle the vehicle's safety belt and let it go back all the way.

Airbag System

Your vehicle has the following airbags:

- A frontal airbag for the driver.
- A frontal airbag for the right front passenger.

Your vehicle may have the following airbags:

- A seat-mounted side impact airbag for the driver.
- A seat-mounted side impact airbag for the right front passenger.

All of the airbags in your vehicle will have the word AIRBAG embossed in the trim or on an attached label near the deployment opening.

For frontal airbags, the word AIRBAG will appear on the middle part of the steering wheel for the driver and on the instrument panel for the right front passenger.

With seat-mounted side impact airbags, the word AIRBAG will appear on the side of the seatback closest to the door.

Airbags are designed to supplement the protection provided by safety belts. Even though today's airbags are also designed to help reduce the risk of injury from the force of an inflating bag, all airbags must inflate very quickly to do their job.

Here are the most important things to know about the airbag system:

⚠ CAUTION:

You can be severely injured or killed in a crash if you are not wearing your safety belt — even if you have airbags. Wearing your safety belt during a crash helps reduce your chance of hitting things inside the vehicle or being ejected from it. Airbags are "supplemental restraints" to the safety belts. All airbags are designed to work with safety belts, but do not replace them.

⚠ CAUTION:

Frontal airbags are designed to deploy in moderate to severe frontal and near frontal crashes. They are not designed to inflate in rollover, rear crashes, or in many side crashes.

Seat-mounted side impact airbags are designed to inflate in moderate to severe crashes where something hits the side of your vehicle. They are not designed to inflate in frontal, in rollover, or in rear crashes.

Everyone in your vehicle should wear a safety belt properly — whether or not there is an airbag for that person.

⚠ CAUTION:

Airbags inflate with great force, faster than the blink of an eye. Anyone who is up against, or very close to, any airbag when it inflates can be seriously injured or killed. Do not sit unnecessarily close to the airbag, as you would be if you were sitting on the edge of your seat or leaning forward. Safety belts help keep you in position before and during a crash. Always wear your safety belt, even with airbags. The driver should sit as far back as possible while still maintaining control of the vehicle.

Occupants should not lean on or sleep against the door or side windows in seating positions with seat-mounted airbags.

⚠ CAUTION:

Airbags plus lap-shoulder belts offer the best protection for adults, but not for young children and infants. Neither the vehicle's safety belt system nor its airbag system is designed for them. Young children and infants need the protection that a child restraint system can provide. Always secure children properly in your vehicle. To read how, see *Older Children on page 1-27* or *Infants and Young Children on page 1-30*.

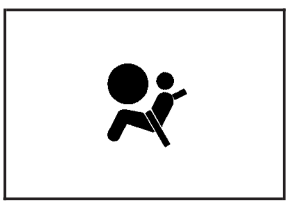

There is an airbag readiness light on the instrument panel, which shows the airbag symbol.

The system checks the airbag electrical system for malfunctions. The light tells you if there is an electrical problem. See *Airbag Readiness Light on page 3-27* for more information.

Where Are the Airbags?



The driver's airbag is in the middle of the steering wheel.



The right front passenger's airbag is in the instrument panel on the passenger's side.

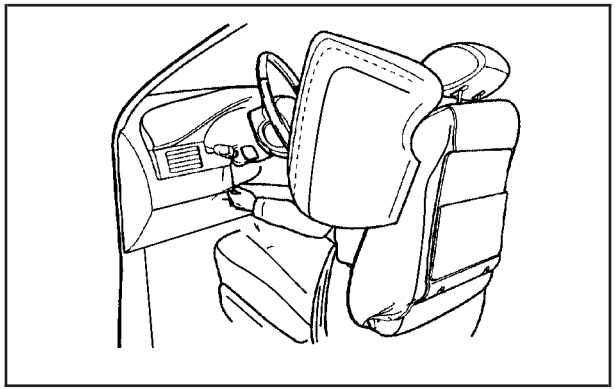

Driver Side shown, Passenger Side similar

If your vehicle has seat-mounted side impact airbags for the driver and right front passenger, they are in the side of the seatbacks closest to the door.

⚠ CAUTION:

If something is between an occupant and an airbag, the airbag might not inflate properly or it might force the object into that person causing severe injury or even death. The path of an inflating airbag must be kept clear. Do not put anything between an occupant and an airbag, and do not attach or put anything on the steering wheel hub or on or near any other airbag covering.

Do not use seat accessories that block the inflation path of a seat-mounted side impact airbag.

When Should an Airbag Inflate?

Frontal airbags are designed to inflate in moderate to severe frontal or near-frontal crashes to help reduce the potential for severe injuries mainly to the driver's or right front passenger's head and chest. However, they are only designed to inflate if the impact exceeds a predetermined deployment threshold. Deployment thresholds are used to predict how severe a crash is likely to be in time for the airbags to inflate and help restrain the occupants.

Whether your frontal airbags will or should deploy is not based on how fast your vehicle is traveling. It depends largely on what you hit, the direction of the impact, and how quickly your vehicle slows down.

Frontal airbags may inflate at different crash speeds. For example:

- If the vehicle hits a stationary object, the airbags could inflate at a different crash speed than if the vehicle hits a moving object.
- If the vehicle hits an object that deforms, the airbags could inflate at a different crash speed than if the vehicle hits an object that does not deform.
- If the vehicle hits a narrow object (like a pole), the airbags could inflate at a different crash speed than if the vehicle hits a wide object (like a wall).
- If the vehicle goes into an object at an angle, the airbags could inflate at a different crash speed than if the vehicle goes straight into the object.

Thresholds can also vary with specific vehicle design.

In addition, your vehicle has dual-stage frontal airbags. Dual-stage airbags adjust the restraint according to crash severity. Your vehicle has electronic frontal sensors, which help the sensing system distinguish between a moderate frontal impact and a more severe frontal impact. For moderate frontal impacts, dual-stage airbags inflate at a level less than full deployment. For more severe frontal impacts, full deployment occurs.

Frontal airbags are not intended to inflate during vehicle rollovers, rear impacts, or in many side impacts.

Your vehicle may or may not have seat-mounted side impact airbags. See *Airbag System on page 1-51*. Seat-mounted side impact airbags are intended to inflate in moderate to severe side crashes. Seat-mounted side impact airbags will inflate if the crash severity is above the system's designed threshold level. The threshold level can vary with specific vehicle design.

Seat-mounted side impact airbags are not intended to inflate in frontal impacts, near-frontal impacts, rollovers, or rear impacts. A seat-mounted side impact airbag is intended to deploy on the side of the vehicle that is struck.

In any particular crash, no one can say whether an airbag should have inflated simply because of the damage to a vehicle or because of what the repair costs were. For frontal airbags, inflation is determined by what the vehicle hits, the angle of the impact, and how quickly the vehicle slows down. For seat-mounted side impact airbags, deployment is determined by the location and severity of the side impact.

What Makes an Airbag Inflate?

In a deployment event, the sensing system sends an electrical signal triggering a release of gas from the inflator. Gas from the inflator fills the airbag causing the bag to break out of the cover and deploy. The inflator, the airbag, and related hardware are all part of the airbag module.

Frontal airbag modules are located inside the steering wheel and instrument panel. For vehicles with seat-mounted side impact airbags, there are airbag modules in the side of the front seatbacks closest to the door.

How Does an Airbag Restrain?

In moderate to severe frontal or near frontal collisions, even belted occupants can contact the steering wheel or the instrument panel. In moderate to severe side collisions, even belted occupants can contact the inside of the vehicle.

Airbags supplement the protection provided by safety belts. Frontal airbags distribute the force of the impact more evenly over the occupant's upper body, stopping the occupant more gradually. Seat-mounted side impact airbags distribute the force of the impact more evenly over the occupant's upper body.

But airbags would not help in many types of collisions, primarily because the occupant's motion is not toward those airbags. See *When Should an Airbag Inflate? on page 1-56* for more information.

Airbags should never be regarded as anything more than a supplement to safety belts.

What Will You See After an Airbag Inflates?

After the frontal and seat-mounted side impact airbags inflate, they quickly deflate, so quickly that some people may not even realize the airbags inflated. Some components of the airbag module may be hot for several minutes. For location of the airbag modules, see *What Makes an Airbag Inflate? on page 1-57*.

The parts of the airbag that come into contact with you may be warm, but not too hot to touch. There may be some smoke and dust coming from the vents in the deflated airbags. Airbag inflation does not prevent the driver from seeing out of the windshield or being able to steer the vehicle, nor does it prevent people from leaving the vehicle.

⚠ CAUTION:

When an airbag inflates, there may be dust in the air. This dust could cause breathing problems for people with a history of asthma or other breathing trouble. To avoid this, everyone in the vehicle should get out as soon as it is safe to do so. If you have breathing problems but cannot get out of the vehicle after an airbag inflates, then get fresh air by opening a window or a door. If you experience breathing problems following an airbag deployment, you should seek medical attention.

Your vehicle has a feature that may automatically unlock the doors, turn the interior lamps on, and turn on the hazard warning flashers when the airbags inflate. You can lock the doors, turn the interior lamps off, and turn the hazard warning flashers off by using the controls for those features.

In many crashes severe enough to inflate the airbag, windshields are broken by vehicle deformation. Additional windshield breakage may also occur from the right front passenger airbag.

- Airbags are designed to inflate only once. After an airbag inflates, you will need some new parts for the airbag system. If you do not get them, the airbag system will not be there to help protect you in another crash. A new system will include airbag modules and possibly other parts. The service manual for your vehicle covers the need to replace other parts.
- Your vehicle has a crash sensing and diagnostic module which records information after a crash. See *Vehicle Data Recording and Privacy on page 7-16* and *Event Data Recorders on page 7-16*.
- Let only qualified technicians work on the airbag system. Improper service can mean that the airbag system will not work properly. See your dealer/retailer for service.

Passenger Sensing System

Your vehicle has a passenger sensing system for the right front passenger's position. The passenger airbag status indicator will be visible when you start the vehicle.

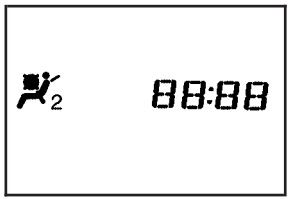

The airbag off symbol will be visible near the clock, located in the center of the instrument panel, during the system check.

When the system check is complete, the airbag off symbol will be visible under certain conditions. See *Passenger Airbag Status Indicator on page 3-28*. The passenger sensing system will turn off the right front passenger's frontal airbag and seat-mounted side impact airbag (if equipped) under certain conditions. The driver's airbags are not part of the passenger sensing system.

The passenger sensing system works with a sensor that is part of the right front passenger's seat. The sensor is designed to detect the presence of a properly-seated occupant and determine if the right front passenger's frontal airbag and seat-mounted side impact airbag (if equipped) should be enabled (may inflate) or not.

Accident statistics show that children are safer if they are restrained in the rear rather than the front seat.

We recommend that children be secured in a rear seat, including: an infant or a child riding in a rear-facing child restraint; a child riding in a forward-facing child seat; an older child riding in a booster seat; and children, who are large enough, using safety belts.

A label on your sun visor says, "Never put a rear-facing child seat in the front." This is because the risk to the rear-facing child is so great, if the airbag deploys.

⚠ CAUTION:

A child in a rear-facing child restraint can be seriously injured or killed if the right front passenger's airbag inflates. This is because the back of the rear-facing child restraint would be very close to the inflating airbag.

Even though the passenger sensing system is designed to turn off the passenger's frontal airbag and side impact airbag (if equipped) if the system detects a rear-facing child restraint, no system is fail-safe, and no one can guarantee that an airbag will not deploy under some unusual circumstance, even though it is turned off. We recommend that rear-facing child restraints be secured in a rear seat, even if the airbag or airbags are off.

If you secure a forward-facing child restraint in the right front seat, always move the front passenger seat as far back as it will go. It is better to secure the child restraint in a rear seat.

The passenger sensing system is designed to turn off the right front passenger's frontal airbag and seat-mounted side impact airbag (if equipped) if:

- The right front passenger seat is unoccupied.
- The system determines that an infant is present in a rear-facing infant seat.
- The system determines that a small child is present in a child restraint.
- The system determines that a small child is present in a booster seat.
- A right front passenger takes his/her weight off of the seat for a period of time.
- The right front passenger seat is occupied by a smaller person, such as a child who has outgrown child restraints.
- Or, if there is a critical problem with the airbag system or the passenger sensing system.

When the passenger sensing system has turned off the right front passenger's frontal airbag and seat-mounted side impact airbag (if equipped), the off symbol will light and stay lit to remind you that the airbag or airbags are off. See *Passenger Airbag Status Indicator on page 3-28*.

If a child restraint has been installed and the off symbol is not lit, turn the vehicle off. Remove the child restraint from the vehicle and reinstall the child restraint following the child restraint manufacturer's directions and refer to *Securing a Child Restraint in the Right Front Seat Position on page 1-48*.

If, after reinstalling the child restraint and restarting the vehicle, the off symbol is still not lit, check to make sure that the vehicle's seatback is not pressing the child restraint into the seat cushion. If this happens, slightly recline the vehicle's seatback and adjust the seat cushion if possible.

Remove any additional material from the seat such as blankets, cushions, seat covers, seat heaters, or seat massagers before reinstalling or securing the child restraint.

If the off symbol is still not lit, secure the child in the child restraint in a rear seat position in the vehicle and check with your dealer/retailer.

The passenger sensing system is designed to enable (may inflate) the right front passenger's frontal airbag and seat-mounted side impact airbag (if equipped) anytime the system senses that a person of adult size is sitting properly in the right front passenger's seat. When the passenger sensing system has allowed the airbag or airbags to be enabled, the off symbol will not light.

For some children who have outgrown child restraints and for very small adults, the passenger sensing system may or may not turn off the right front passenger's frontal airbag and seat-mounted side impact airbag (if equipped), depending upon the person's seating posture and body build. Everyone in your vehicle who has outgrown child restraints should wear a safety belt properly — whether or not there is an airbag for that person.

If a person of adult-size is sitting in the right front passenger's seat, but the off indicator is lit, it could be because that person is not sitting properly in the seat. If this happens, turn the vehicle off, remove any additional material from the seat, such as blankets, cushions, seat covers, seat heaters or seat massagers and ask the person to place the seatback in the fully upright position, then sit upright in the seat, centered on the seat cushion, with the person's legs comfortably extended. Restart the vehicle and have the person remain in this position for two to three minutes. This will allow the system to detect that person and then enable the right front passenger's frontal airbag and seat-mounted side impact airbag (if equipped).



Safety belts help keep the passenger in position on the seat during vehicle maneuvers and braking, which helps the passenger sensing system maintain the passenger airbag status. See "Safety Belts" and "Child Restraints" in the Index for additional information about the importance of proper restraint use.

⚠ CAUTION:

If the airbag readiness light in the instrument panel cluster ever comes on and stays on, it means that something may be wrong with the airbag system. If this ever happens, have the vehicle serviced promptly, because an adult-size person sitting in the right front passenger's seat may not have the protection of the airbag(s). See *Airbag Readiness Light on page 3-27* for more on this, including important safety information.

A thick layer of additional material, such as a blanket or cushion, or aftermarket equipment such as seat covers, seat heaters, and seat massagers can affect how well the passenger sensing system operates.

We recommend that you not use seat covers or other aftermarket equipment other than any that GM has approved for your specific vehicle. See *Adding Equipment to Your Airbag-Equipped Vehicle on page 1-64* for more information about modifications that can affect how the system operates.

⚠ CAUTION:

Stowing of articles under the passenger's seat or between the passenger's seat cushion and seatback may interfere with the proper operation of the passenger sensing system.

Servicing Your Airbag-Equipped Vehicle

Airbags affect how your vehicle should be serviced. There are parts of the airbag system in several places around your vehicle. Your dealer/retailer and the service manual have information about servicing your vehicle and the airbag system. To purchase a service manual, see *Service Publications Ordering Information on page 7-15*.

⚠ CAUTION:

For up to 10 seconds after the ignition is turned off and the battery is disconnected, an airbag can still inflate during improper service. You can be injured if you are close to an airbag when it inflates. Avoid yellow connectors. They are probably part of the airbag system. Be sure to follow proper service procedures, and make sure the person performing work for you is qualified to do so.

Adding Equipment to Your Airbag-Equipped Vehicle

Q: Is there anything I might add to or change about the vehicle that could keep the airbags from working properly?

A: Yes. If you add things that change your vehicle's frame, bumper system, height, front end or side sheet metal, they may keep the airbag system from working properly. Changing or moving any parts of the front seats, safety belts, the airbag sensing and diagnostic module, steering wheel, instrument panel, front sensors, or airbag wiring can affect the operation of the airbag system.

In addition, your vehicle has a passenger sensing system for the right front passenger's position, which includes sensors that are part of the passenger's seat. The passenger sensing system may not operate properly if the original seat trim is replaced with non-GM covers, upholstery or trim, or with GM

covers, upholstery or trim designed for a different vehicle. Any object, such as an aftermarket seat heater or a comfort enhancing pad or device, installed under or on top of the seat fabric, could also interfere with the operation of the passenger sensing system. This could either prevent proper deployment of the passenger airbag(s) or prevent the passenger sensing system from properly turning off the passenger airbag(s). See *Passenger Sensing System on page 1-59*.

If you have any questions about this, you should contact Customer Assistance before you modify your vehicle. The phone numbers and addresses for Customer Assistance are in Step Two of the Customer Satisfaction Procedure in this manual. See *Customer Satisfaction Procedure on page 7-2*.

Q: Because I have a disability, I have to get my vehicle modified. How can I find out whether this will affect my airbag system?

A: If you have questions, call Customer Assistance. The phone numbers and addresses for Customer Assistance are in Step Two of the Customer Satisfaction Procedure in this manual. See *Customer Satisfaction Procedure on page 7-2*.

In addition, your dealer/retailer and the service manual have information about the location of the airbag sensors, sensing and diagnostic module and airbag wiring.

Restraint System Check

Checking the Restraint Systems

Safety Belts

Now and then, make sure the safety belt reminder light and all your belts, buckles, latch plates, retractors and anchorages are working properly.

Look for any other loose or damaged safety belt system parts. If you see anything that might keep a safety belt system from doing its job, have it repaired. Torn or frayed safety belts may not protect you in a crash. They can rip apart under impact forces. If a belt is torn or frayed, get a new one right away.

Make sure the safety belt reminder light is working. See *Safety Belt Reminders on page 3-27* for more information.

Keep safety belts clean and dry. See *Care of Safety Belts on page 5-81*.

Airbags

The airbag system does not need regularly scheduled maintenance or replacement. Make sure the airbag readiness light is working. See *Airbag Readiness Light on page 3-27* for more information.

Notice: **If an airbag covering is damaged, opened, or broken, the airbag may not work properly. Do not open or break the airbag coverings. If there are any opened or broken airbag covers, have the airbag covering and/or airbag module replaced. For the location of the airbag modules, see *What Makes an Airbag Inflate? on page 1-57*. See your dealer/retailer for service.**

Replacing Restraint System Parts After a Crash

⚠ CAUTION:

A crash can damage the restraint systems in your vehicle. A damaged restraint system may not properly protect the person using it, resulting in serious injury or even death in a crash. To help make sure your restraint systems are working properly after a crash, have them inspected and any necessary replacements made as soon as possible.

If you have had a crash, do you need new belts or LATCH system (if equipped) parts?

After a very minor crash, nothing may be necessary. But the belt assemblies that were used during any crash may have been stressed or damaged. See your dealer/retailer to have your safety belt assemblies inspected or replaced.

If your vehicle has the LATCH system and it was being used during a crash, you may need new LATCH system parts.

New parts and repairs may be necessary even if the belt or LATCH system (if equipped), was not being used at the time of the crash.

If an airbag inflates, you will need to replace airbag system parts. See the part on the airbag system earlier in this section.

Have your safety belt pretensioners checked if your vehicle has been in a crash, if your airbag readiness light stays on after you start your vehicle, or while you are driving. See *Airbag Readiness Light on page 3-27*.

NOTES

Section 2 Features and Controls

Keys 2-2
Remote Keyless Entry (RKE) System 2-3
Remote Keyless Entry (RKE) System Operation 2-4

Doors and Locks 2-6
Door Locks 2-6
Central Door Unlocking System 2-7
Power Door Locks 2-7
Door Ajar Reminder 2-8
Rear Door Security Locks 2-8
Lockout Protection 2-9
Liftgate 2-10

Windows 2-11
Manual Windows 2-11
Power Windows 2-12
Sun Visors 2-13

Theft-Deterrent Systems 2-14
Theft-Deterrent System 2-14
Immobilizer 2-16
Immobilizer Operation 2-16

Starting and Operating Your Vehicle 2-17
New Vehicle Break-In 2-17
Ignition Positions 2-18
Starting the Engine 2-19
Engine Coolant Heater 2-21
Automatic Transmission Operation 2-22
Manual Transmission Operation 2-26
Parking Brake 2-28
Shifting Into PARK (P) (Automatic Transmission) 2-29
Shifting Out of PARK (P) 2-30
Parking Your Vehicle (Manual Transmission) 2-31
Parking Over Things That Burn 2-32
Engine Exhaust 2-32
Running the Vehicle While Parked 2-33

Mirrors 2-34
Manual Rearview Mirror 2-34
Outside Manual Mirrors 2-34
Outside Power Mirrors 2-35
Outside Convex Mirror 2-35
Outside Heated Mirrors 2-35

Storage Areas 2-36
Glove Box 2-36
Cupholder(s) 2-36
Sunglasses Storage Compartment 2-36
Front Armrest Storage Area 2-36
Luggage Carrier 2-37
Rear Seat Armrest 2-37
Convenience Net 2-37
Cargo Cover 2-38
Hideaway Rear Storage Bins (Wagon Only) 2-38

Sunroof 2-39

Keys

⚠ CAUTION:

Leaving children in a vehicle with the ignition key is dangerous for many reasons, children or others could be badly injured or even killed. They could operate the power windows or other controls or even make the vehicle move. The windows will function with the keys in the ignition and they could be seriously injured or killed if caught in the path of a closing window. Do not leave the keys in a vehicle with children.

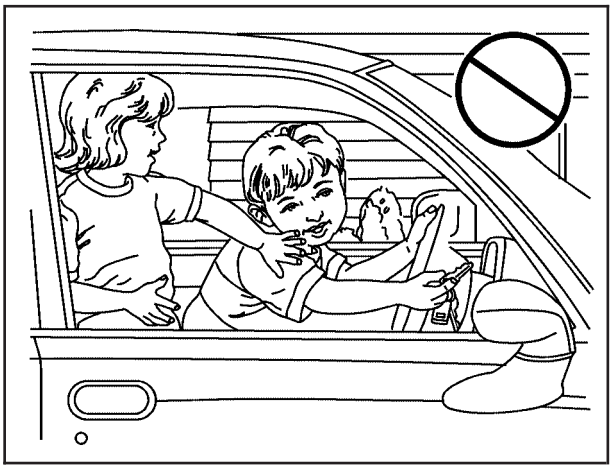

One key is used for the ignition and all locks.

When a new vehicle is delivered, the dealer/retailer removes the key tag and gives it to the first owner. The tag has a code on it that tells your dealer/retailer how to make extra keys. For vehicle security, keep the key tag in a safe place and also record the key number somewhere other than inside of the vehicle. If you lose your key, you will be able to have a new one made easily using the tag.

If you need a new key, contact your dealer/retailer who can obtain the correct key code. See *Roadside Assistance Program on page 7-6* for more information.

Notice: **If you ever lock your keys in your vehicle, you may have to damage the vehicle to get in. Be sure you have spare keys.**

Remote Keyless Entry (RKE) System

If the vehicle has the Remote Keyless Entry (RKE) system, it operates on a radio frequency subject to Federal Communications Commission (FCC) Rules and with Industry Canada.

This device complies with Part 15 of the FCC Rules. Operation is subject to the following two conditions:

1. This device may not cause interference.
2. This device must accept any interference received, including interference that may cause undesired operation of the device.

This device complies with RSS-210 of Industry Canada. Operation is subject to the following two conditions:

1. This device may not cause interference.
2. This device must accept any interference received, including interference that may cause undesired operation of the device.

Changes or modifications to this system by other than an authorized service facility could void authorization to use this equipment.

At times you may notice a decrease in range. This is normal for any RKE system. If the transmitter does not work or if you have to stand closer to your vehicle for the transmitter to work, try this:

- Check the distance. You may be too far from your vehicle. You may need to stand closer during rainy or snowy weather.
- Check the location. Other vehicles or objects may be blocking the signal. Take a few steps to the left or right, hold the transmitter higher, and try again.
- Check to determine if battery replacement is necessary. See “Battery Replacement” later in this section.
- If you are still having trouble, see your dealer/retailer or a qualified technician for service.

Remote Keyless Entry (RKE) System Operation

The LED light (A), on the transmitter, will flash when the buttons on the Remote Keyless Entry (RKE) transmitter are pressed. You can lock and unlock the vehicle's doors from about 20 feet (6 m) away.

There are other conditions which can affect the performance of the transmitter. See *Remote Keyless Entry (RKE) System on page 2-3*.

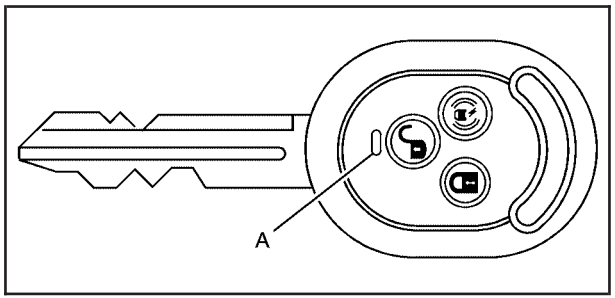

(Unlock): Press to unlock all of the doors and the liftgate, if equipped. If all of the doors and the liftgate are closed, the hazard lamps will flash twice to indicate that unlocking has occurred. The theft-deterrent system will deactivate and the security light will turn off. The security light is located on the base of the driver's door lock.

If a door is not opened, all of the doors will automatically lock and the theft-deterrent system will reactivate.

(Lock): Press to lock all of the doors and the liftgate, if equipped. If all of the doors and the liftgate are closed, the hazard lamps will flash once and the horn will sound to indicate that locking has occurred. The theft-deterrent system will activate and the security light will flash.

If the driver's door is open while pressing lock, all of the doors, except for the driver's door will lock. If any door other than the driver's door is open while pressing lock, all of the doors, including the driver's door, will lock.

(Panic): If your vehicle has this feature, press to turn on the hazard warning flashers. The hazard warning lamps will flash for about 28 seconds. Press again to turn off the hazard warning lamps.

The lock, unlock, and panic buttons, on the RKE transmitter, will not operate while the key is in the ignition. The theft-deterrent system will not activate while the key is in the ignition.

Matching Transmitter(s) to Your Vehicle

Each RKE transmitter is coded to prevent another transmitter from unlocking your vehicle. If a transmitter is lost or stolen, a replacement can be purchased through your dealer/retailer. All transmitters need to be re-coded to match the new transmitter. The lost transmitter will no longer work after the new transmitters are re-coded. Each vehicle can have a maximum of four transmitters matched to it.

Battery Replacement

The battery is weak if the LED light fails to illuminate or if the transmitter will not work at the normal operating range. If you have to get close to your vehicle before the transmitter works, change the battery.

Notice: **When replacing the battery, use care not to touch any of the circuitry. Static from your body transferred to these surfaces may damage the transmitter.**

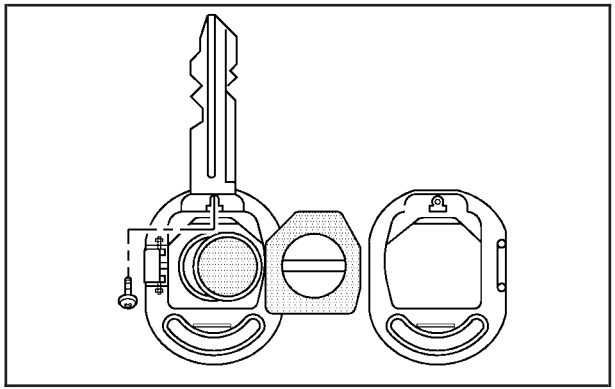

To replace the battery in the RKE transmitter, do the following:

1. Remove the screw from the back of the cover and open the cover of the transmitter.
2. Pull the transmitter unit out of the cover and open the cover of the transmitter unit.
3. Remove the battery and replace it with the new one. Make sure the positive side of the battery faces up. Use one three-volt, CR1616, or equivalent type battery.
4. Close the cover of the transmitter unit and put the unit in the cover of the transmitter.

5. Assemble the transmitter cover and replace the screw. Make sure the cover is on tightly, so water will not get in.
6. Test the transmitter operation.

Doors and Locks

Door Locks

⚠ CAUTION:

Unlocked doors can be dangerous.

- **Passengers, especially children, can easily open the doors and fall out of a moving vehicle. When a door is locked, the handle will not open it. You increase the chance of being thrown out of the vehicle in a crash if the doors are not locked. So, wear safety belts properly and lock the doors whenever you drive.**

CAUTION: (Continued)

CAUTION: (Continued)

- **Young children who get into unlocked vehicles may be unable to get out. A child can be overcome by extreme heat and can suffer permanent injuries or even death from heat stroke. Always lock your vehicle whenever you leave it.**
- **Outsiders can easily enter through an unlocked door when you slow down or stop your vehicle. Locking your doors can help prevent this from happening.**

There are several ways to lock and unlock your vehicle.

From the outside, use your key or the optional Remote Keyless Entry transmitter. See *Remote Keyless Entry (RKE) System Operation on page 2-4*.

To manually lock and unlock the doors from the outside, insert the key into the lock and turn it toward the front or rear of the vehicle.

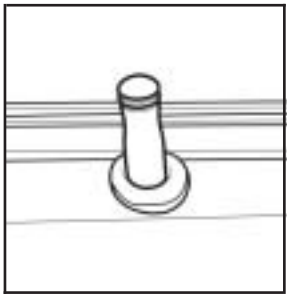

All doors, except for the driver's door, can be locked from the outside by pushing down the manual door lock and then closing the door.

The driver's door lock cannot be manually locked while the door is open. Upon leaving the vehicle, the driver's door can only be locked from the outside by using the key or the optional RKE transmitter.

If your vehicle has a driver's door security light, it is located on the base of the lock. The light turns off when you unlock the door using the key or the RKE transmitter. The light turns on when the door is locked using the key or the RKE transmitter.

From the inside, lock and unlock all of the doors by pushing or pulling the manual door lock. The doors can also be locked and unlocked with the optional power door lock switches located on the driver's door.

Central Door Unlocking System

Your vehicle may have a central door unlocking system that is activated from the driver's door.

From the outside, you can lock or unlock all of the doors on your vehicle from the driver's door by using either the key or the optional Remote Keyless Entry transmitter. From the inside, you can lock or unlock all of the doors using the driver's door lock.

Power Door Locks

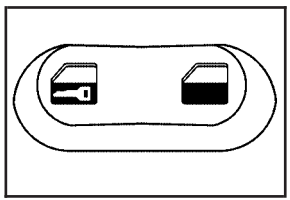

On vehicles with power door locks, the doors can be locked or unlocked using the driver's door lock switch.

Press the switch to lock and unlock the doors.

Door Ajar Reminder

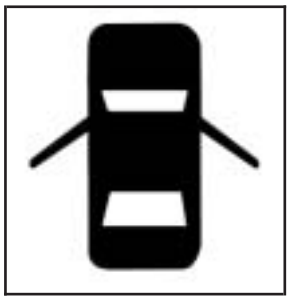

If one of the doors on is not closed properly while the ignition is on, the door ajar light on the instrument panel cluster comes on and stays on until the doors are closed.

See *Door Ajar Light on page 3-39* for additional information.

Rear Door Security Locks

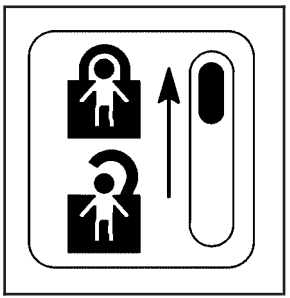

Your vehicle has rear door security locks on each rear door that prevent passengers from opening the rear doors from the inside.

Using the Rear Door Security Lock

1. Move the lever up to lock.
2. Close the door.
3. Do the same thing to the other rear door lock.

Notice: **Pulling the inside door handle while the rear door security locks are engaged could damage your vehicle. Do not pull the inside door handle while the rear door security locks are engaged.**

The rear doors on your vehicle cannot be opened from the inside while this feature is in use.

Opening a Rear Door When the Security Lock is On

1. Unlock the door from the inside.
2. Open the door from the outside.

If you do not cancel the security lock, adults or older children who ride in the rear will not be able to open the rear door from the inside. You should let adults and older children know how to cancel the locks.

Canceling the Rear Door Security Lock

1. Unlock the door from the inside and open the door from the outside.
2. Move the lever down to unlock.
3. Do the same for the other rear door.

The rear door locks can now be locked and unlocked normally.

Lockout Protection

This feature helps prevent locking the key in the car. The driver's door can only be locked with the door closed. From the outside of the vehicle, close the driver's door and lock it using the key or the Remote Keyless Entry transmitter.

This feature cannot guarantee that you will never be locked out of your vehicle. Always remember to take your key with you.

Liftgate

⚠ CAUTION:

It can be dangerous to drive with the liftgate open because carbon monoxide (CO) gas can come into your vehicle. You cannot see or smell CO. It can cause unconsciousness and even death. If you must drive with the liftgate open or if electrical wiring or other cable connections must pass through the seal between the body and the liftgate:

- **Make sure all other windows are shut.**
- **Turn the fan on your heating or cooling system to its highest speed and select the control setting that will force outside air into your vehicle. See *Climate Control System on page 3-19*.**
- **If you have air outlets on or under the instrument panel, open them all the way. See *Engine Exhaust on page 2-32*.**

The liftgate can be locked and unlocked from outside of the vehicle by inserting the key into the lock and turning it. The Remote Keyless Entry transmitter, if the vehicle has one, can also be used. Then pull up the handle above the license plate to open the liftgate.

When closing the liftgate, close it from the center to make sure it fully latches.

Windows

⚠ CAUTION:

Leaving children, helpless adults, or pets in a vehicle with the windows closed is dangerous. They can be overcome by the extreme heat and suffer permanent injuries or even death from heat stroke. Never leave a child, a helpless adult, or a pet alone in a vehicle, especially with the windows closed in warm or hot weather.

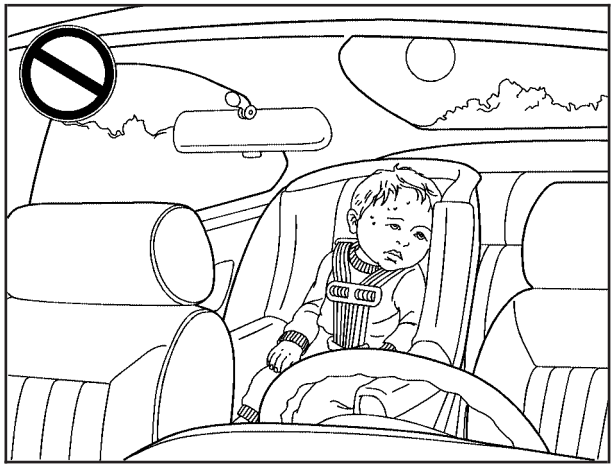

Manual Windows

Use the window crank to open and close each window. The rear windows do not open fully.

Power Windows

⚠ CAUTION:

Leaving children, helpless adults, or pets in a vehicle with the windows closed is dangerous. They can be overcome from extreme heat in warm or hot weather and suffer permanent injuries or even death from heat stroke.

Leaving children in a vehicle with the ignition key is dangerous for many reasons, children or others could be badly injured or even killed. They could operate the power windows or other controls or even make the vehicle move. The windows will function with the keys in the ignition and they could be seriously injured or killed if caught in the path of a closing window. Do not leave keys in a vehicle with children.

When there are children in the rear seat use the window lockout button to prevent unintentional operation of the windows.

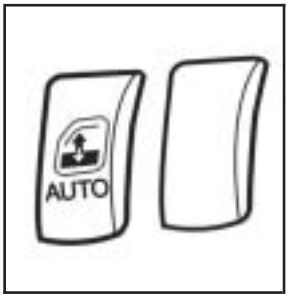

Uplevel shown, Base similar

If your vehicle has this feature, the power window switches are located on the driver's door armrest.

In addition, each passenger door has a switch for its own window. The ignition must be turned to ON/RUN to use the power windows. To lower a window, press the switch. To raise a window, lift up on the switch.

Express-Down Window

The driver's window may also have an express-down feature. This switch is labeled AUTO. Press the switch then release it and the driver's window goes all the way down.

To stop the window while it is lowering, press the switch again. To raise the window, pull up and hold the switch.

Window Lockout

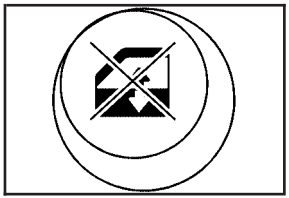

The driver's power window controls may also include a lockout button.

Press the lockout button to stop the front and rear passengers from using their window switches. The driver can still operate all the windows with the lock on. Press the lockout button again to return to normal window operation.

Sun Visors

To block out glare you can pull the visors down. They can also be removed from the center mount and moved to the side.

Visor Vanity Mirror

Your vehicle has vanity mirrors located on the back of the sun visors. Pull the sun visor down and lift the cover to expose the vanity mirror.

Theft-Deterrent Systems

Vehicle theft is big business, especially in some cities. Although your vehicle has a number of theft-deterrent features, we know that nothing we put on it can make it impossible to steal.

Theft-Deterrent System

Your vehicle may have a theft-deterrent system.

The theft-deterrent system will not arm when you lock the doors using the key or the manual door lock. It activates only when you use the optional remote keyless entry transmitter.

Arming the System

To arm the system:

1. Turn the ignition to LOCK/OFF and remove the key from the ignition.

   If the key is inserted in the ignition, the transmitter will not operate the theft-deterrent system.

2. Close the doors, the windows, the hood, and the liftgate.

   Make sure the windows are closed, as the system can be activated even if the windows are open.

3. Lock the door using the remote keyless entry transmitter. The transmitter must be used to activate the theft-deterrent system.

   - The LED light on the transmitter will flash once.
   - All of the doors will lock.
   - The hazard warning lamps will flash once and the horn will sound.
   - The theft-deterrent mode will activate.
   - The security light will flash once every second to indicate that the theft-deterrent system is armed. The security light is located on the base of the driver's door lock.

To avoid activating the alarm by accident, use one of the following methods:

- Unlock the driver's or passenger's door using the key.
- Press the unlock button on the remote keyless entry transmitter.

Unlocking a door any other way will activate the alarm when a door or the liftgate is opened.

If you do not want to arm the theft-deterrent system, lock the vehicle using the key or the manual door locks.

Disarming the System

To disarm the system, use one of the following methods:

- Unlock the driver's or passenger's door using the key.
- Press the unlock button on the transmitter.
  - The LED light on the transmitter will flash once.
  - All of the doors will unlock.
  - The hazard warning lamps will flash twice.
  - The theft-deterrent mode will deactivate.

If the door is not opened or if the engine is not started within 30 seconds after disarming the system with the transmitter, all of the doors will automatically lock and the theft-deterrent mode will reactivate.

How the System Alarm is Activated

If a door or the liftgate is opened without using the key or the remote keyless entry transmitter, the horn will sound and the lamps will flash for up to 30 seconds.

How to Turn Off the System Alarm

If the system alarm is active, it can be deactivated using one of the following methods:

- Press the lock or unlock button on the remote keyless entry transmitter.
- Unlock the driver's or passenger's front door using the key.

Otherwise, the alarm will automatically stop after 30 seconds. The system will then lock the doors and reactivate the theft-deterrent system.

How to Detect a Tamper Condition

If the hazard warning lamps flash once when you press the lock or unlock buttons on the remote keyless entry transmitter, that means the theft-deterrent system alarm was triggered while you were away, from the vehicle.

Do not leave the key or device that disarms or deactivates the theft deterrent system in the vehicle.

Immobilizer

This device complies with Part 15 of the FCC Rules. Operation is subject to the following two conditions:

1. This device may not cause interference.
2. This device must accept any interference received, including interference that may cause undesired operation.

This device complies with RSS-210 of Industry Canada. Operation is subject to the following two conditions:

1. This device may not cause interference.
2. This device must accept any interference received, including interference that may cause undesired operation of the device.

Changes or modifications to this system by other than an authorized service facility could void authorization to use this equipment.

Immobilizer Operation

Your vehicle may have a passive theft-deterrent system.

The immobilizer system prevents your vehicle from being started by unauthorized persons.

The system is automatically armed when the key is removed from the ignition.

You do not have to manually arm or disarm the system.

The security light will come on if there is a problem with arming or disarming the theft-deterrent system.

Your vehicle has a special key that works with the theft-deterrent system. There is a transponder in the key head that is electronically coded. The correct key will start the vehicle. An invalid key immobilizes the engine. The immobilizer system isolates the power supply to the ignition system, the fuel pump and the fuel injectors.

If the immobilizer system does not recognize the electronic code when the key is turned to START, the engine will not start and the security light will flash. If your key is ever damaged, you may not be able to start your vehicle.

When trying to start the vehicle, if the engine does not start and the security light continues flashing, there may be a problem with the theft-deterrent system. Turn the ignition off and try again.

If the engine still does not start, and the key appears to be undamaged, try another key. At this time, you may also want to check the fuse. See *Fuses and Circuit Breakers on page 5-89*. If the engine still does not start with the other key, your vehicle needs service. If your vehicle does start, the first key may be faulty. See your dealer/retailer who can have a new key made.

Up to five keys may be programmed for the vehicle. If you lose or damage your keys, only a dealer/retailer can have new keys made.

In an emergency, contact Roadside Assistance. See *Roadside Assistance Program on page 7-6*.

Do not leave the key or device that disarms or deactivates the theft deterrent system in the vehicle.

Starting and Operating Your Vehicle

New Vehicle Break-In

Notice: **Your vehicle does not need an elaborate break-in. But it will perform better in the long run if you follow these guidelines:**

- **Do not drive at any one constant speed, fast or slow, for the first 500 miles (805 km). Do not make full-throttle starts. Avoid downshifting to brake or slow the vehicle.**
- **Avoid making hard stops for the first 200 miles (322 km) or so. During this time the new brake linings are not yet broken in. Hard stops with new linings can mean premature wear and earlier replacement. Follow this breaking-in guideline every time you get new brake linings.**

Following break-in, engine speed and load can be gradually increased.

Ignition Positions

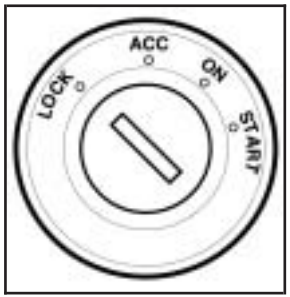

The ignition switch can be turned to four different positions with the key.

⚠ CAUTION:

On manual transmission vehicles, turning the key to LOCK/OFF and removing it will lock the steering column and result in a loss of ability to steer the vehicle. This could cause a collision. If you need to turn the engine off while the vehicle is moving, turn the key only to ACC/ACCESSORY. Do not push the key in while the vehicle is moving.

Notice: **Using a tool to force the key from the ignition switch could cause damage or break the key. Use the correct key and turn the key only with your hand. Make sure the key is all the way in. If it is, turn the steering wheel left and right while you turn the key hard. If none of this works, then your vehicle needs service.**

LOCK/OFF: This position locks the steering wheel, ignition, shift lever and transmission. This is the only position in which you can insert or remove the key. For easier key operation when unlocking the steering wheel, move the steering wheel from right to left and turn the key to ACC/ACCESSORY.

ACC (ACC/ACCESSORY): This position operates some of the electrical accessories, such as the radio, but not the climate control system.

ON/RUN: This is the position the switch returns after you start the engine and release the key. The switch stays in RUN when the engine is running. But even when the engine is not running, you can use ON/RUN to operate the electrical accessories, and to display some instrument panel warning lights.

START: This position starts the engine. When the engine starts, release the key. The switch returns to ON/RUN for normal driving. Do not turn the key to START if the engine is running.

Even if the engine is not running, ACC/ACCESSORY and ON/RUN allow you to operate electrical accessories, such as the radio.

Starting the Engine

Automatic Transmission

Move the shift lever to PARK (P) or NEUTRAL (N). The engine will not start in any other position — that is a safety feature. To restart when you are already moving, use NEUTRAL (N) only.

Notice: **Do not try to shift to PARK (P) if your vehicle is moving. If you do, you could damage the transmission. Shift to PARK (P) only when your vehicle is stopped.**

Manual Transmission

The shift lever should be in NEUTRAL and the parking brake engaged. Hold the clutch pedal to the floor and start the engine. Your vehicle will not start if the clutch pedal is not all the way down — that is a safety feature.

Starting Procedure

1. With your foot off the accelerator pedal, turn the ignition to START. When the engine starts, let go of the key. The idle speed will go down as your engine gets warm.

Notice: **Holding your key in START for longer than 15 seconds at a time will cause your battery to be drained much sooner. And the excessive heat can damage your starter motor. Wait about 15 seconds between each try to help avoid draining your battery or damaging your starter.**

2. If it does not start, wait about 15 seconds and try again to start the engine by turning the ignition to START. Wait about 15 seconds between each try.

   When the engine has run about 10 seconds to warm up, your vehicle is ready to be driven. Do not run your engine at high speed when it is cold.

   If the weather is below freezing (32°F or 0°C), let the engine run for a few minutes to warm up.

3. If the engine still will not start, or starts but then stops, it could be flooded with too much gasoline. Try pushing your accelerator pedal all the way to the floor and holding it there as you hold the key in START for about three seconds. If the vehicle starts briefly but then stops again, do the same thing, but this time keep the pedal down for five or six seconds. This clears the extra gasoline from the engine.

Notice: **The engine is designed to work with the electronics in your vehicle. If electrical parts or accessories are added, you could change the way the engine operates. Before adding electrical equipment, check with your dealer/retailer. If you do not, the engine might not perform properly. Any resulting damage would not be covered by your vehicle's warranty.**

Engine Coolant Heater

The engine coolant heater can help in cold weather conditions at or below 0°F (–18°C) for easier starting and better fuel economy during engine warm-up. Plug in the coolant heater at least four hours before starting your vehicle.

To Use the Engine Coolant Heater

1. Turn off the engine.
2. Open the hood and unwrap the electrical cord. The cord is located on the driver side of the engine compartment, behind the battery.
3. Plug it into a normal, grounded 110-Volt AC outlet.

⚠ CAUTION:

Plugging the cord into an ungrounded outlet could cause an electrical shock. Also, the wrong kind of extension cord could overheat and cause a fire. You could be seriously injured. Plug the cord into a properly grounded three-prong 110-volt AC outlet. If the cord will not reach, use a heavy-duty three-prong extension cord rated for at least 15 amps.

4. Before starting the engine, be sure to unplug and store the cord as it was before to keep it away from moving engine parts. If you do not, it could be damaged.

How long should you keep the coolant heater plugged in? The answer depends on the outside temperature, the kind of oil you have, and some other things. Instead of trying to list everything here, we ask that you contact your dealer/retailer in the area where you will be parking your vehicle. The dealer/retailer can give you the best advice for that particular area.

Automatic Transmission Operation

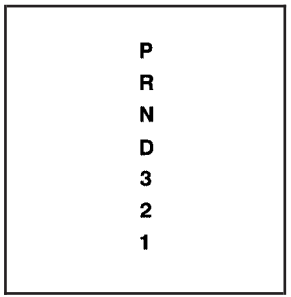

If your vehicle has an automatic transmission, the shift lever is located on the console between the seats.

Your vehicle may also have an electronic shift position indicator that displays the position of the shift lever. This indicator is located to the right of the trip odometer on the instrument panel cluster.

Movement between certain positions requires pushing the shift lever to the passenger side while shifting. This prevents you from changing positions unexpectedly by blocking the straight movement of the shift lever while the vehicle is moving.

PARK (P): This position locks the front wheels. It is the best position to use when the start your engine because your vehicle cannot move easily.

⚠ CAUTION:

It is dangerous to get out of your vehicle if the shift lever is not fully in PARK (P) with the parking brake firmly set. Your vehicle can roll.

Do not leave your vehicle when the engine is running unless you have to. If you have left the engine running, the vehicle can move suddenly. You or others could be injured. To be sure your vehicle will not move, even when you are on fairly level ground, always set your parking brake and move the shift lever to PARK (P). See *Shifting Into PARK (P) (Automatic Transmission) on page 2-29*.

Make sure the shift lever is fully in PARK (P) before starting the engine. Your vehicle has an automatic transmission shift lock control system. The regular brakes must be applied before you can shift from PARK (P) when the ignition key is in ON/RUN. If you cannot shift out of PARK (P) while holding the brake pedal down, see *Shifting Out of PARK (P) on page 2-30*.

REVERSE (R): Use this gear to back up.

When shifting from NEUTRAL (N) to REVERSE (R), you must press down on the shift lever while shifting.

Notice: **Shifting to REVERSE (R) while your vehicle is moving forward could damage the transmission. The repairs would not be covered by your warranty. Shift to REVERSE (R) only after your vehicle is stopped.**

To rock your vehicle back and forth to get out of snow, ice, or sand without damaging the transmission, see *If Your Vehicle is Stuck in Sand, Mud, Ice, or Snow on page 4-17*.

NEUTRAL (N): In this position, the engine does not connect with the wheels. To restart while you are already moving, use NEUTRAL (N) only. Also, use NEUTRAL (N) when your vehicle is being towed.

⚠ CAUTION:

Shifting into a drive gear while the engine is running at high speed is dangerous. Unless your foot is firmly on the brake pedal, your vehicle could move very rapidly. You could lose control and hit people or objects. Do not shift into a drive gear while your engine is running at high speed.

Notice: **Shifting out of PARK (P) or NEUTRAL (N) with the engine running at high speed may damage the transmission. The repairs would not be covered by your warranty. Be sure the engine is not running at high speed when shifting your vehicle.**

DRIVE (D): This position is for normal driving.

Notice: **If your vehicle seems to start up rather slowly or not shift gears when you go faster, and you continue to drive your vehicle that way, you could damage the transmission. Have your vehicle serviced right away.**

THIRD (3): This position is also used for normal driving, however, it offers more power and lower fuel economy than DRIVE (D). Here are some times you might choose THIRD (3) instead of DRIVE (D):

- When driving on hilly, winding roads.
- When going down a steep hill.

SECOND (2): This position gives you more power but lower fuel economy. Use SECOND (2) on hills. It can help control the vehicles speed as you go down steep mountain roads, but then you would also want to use your brakes off and on.

Notice: **Do not drive in SECOND (2) at speeds over 65 mph (105 km/h), or you can damage the transmission. Use THIRD (3) or AUTOMATIC OVERDRIVE (D) as much as possible. Do not shift into SECOND (2) unless you are going slower than 65 mph (105 km/h) or you can damage your engine.**

FIRST (1): This position gives you even more power but lower fuel economy than SECOND (2). Use it on very steep hills, or in deep snow or mud. If the shift lever is put in FIRST (1), the transmission does not shift into first gear until the vehicle is going slowly enough.

Notice: **Spinning the tires or holding the vehicle in one place on a hill using only the accelerator pedal may damage the transmission. The repair will not be covered by your warranty. If you are stuck, do not spin the tires. When stopping on a hill, use the brakes to hold the vehicle in place.**

If there is a malfunction with the automatic transmission, the Check Engine Light or the HOLD indicator light will turn on or flash. See *Malfunction Indicator Lamp on page 3-34* or *Hold Mode Light on page 3-33*.

Take your vehicle to your dealer/retailer as soon as possible.

Hold Mode

If your vehicle's transmission has a hold mode, select this mode to drive with some characteristics of a manual transmission. With hold mode turned on, the automatic transmission stays in a specific gear range.



Press the HOLD button on the shift lever console to turn on hold mode.

Press the button again to turn off hold mode, and return to normal automatic transmission operation.

While on, the HOLD indicator light on the instrument panel cluster will light up. See *Hold Mode Light on page 3-33*.

When hold mode is activated, the transmission operates in the following ways:

- When the transmission is in DRIVE (D), the transmission operates in a gear range of SECOND (2) to THIRD (3) to DRIVE (D) and tries to maintain DRIVE (D) for as long as possible.
- When the transmission is in THIRD (3), the transmission operates in a gear range of SECOND (2) to THIRD (3) and tries to maintain THIRD (3) for as long as possible.
- When the transmission is in SECOND (2), the transmission is fixed in that gear.
- When the transmission is in FIRST (1), the transmission is fixed in that gear.

Hold Mode Functions

Winter Function

Select hold mode while in DRIVE (D), THIRD (3) or SECOND (2) to help the vehicle maintain traction on slippery road surfaces, such as snow, mud, or ice.

Manually Controlling Shift

Select hold mode to use your automatic transmission like a four-speed manual transmission.

Manual Transmission Operation

Five-Speed

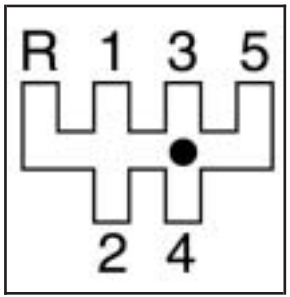

This is the shift pattern for a Five-Speed transmission.

Here is how to operate a manual transmission:

FIRST (1): Press the clutch pedal and shift into FIRST (1). Then, slowly let up on the clutch pedal as you press the accelerator pedal.

Shift into FIRST (1) while you are going less than 20 mph (32 km/h). If you have come to a complete stop and it is hard to shift into FIRST (1), put the shift lever in NEUTRAL and let up on the clutch. Press the clutch pedal back down. Then shift into FIRST (1).

SECOND (2): Press the clutch pedal as you let up on the accelerator pedal and shift into SECOND (2). Then, slowly let up on the clutch pedal as you press the accelerator pedal.

THIRD (3), FOURTH (4) and FIFTH (5): Shift into THIRD (3), FOURTH (4) and FIFTH (5), the same way you do for SECOND (2). Slowly let up on the clutch pedal as you press the accelerator pedal.

To stop, let up on the accelerator pedal and press the brake pedal. Just before the vehicle stops, press the clutch pedal and the brake pedal, and shift to NEUTRAL.

NEUTRAL: Use this position when you start or idle the engine.

REVERSE (R): To back up, press down the clutch pedal, lift up the ring on the shift lever and shift into REVERSE (R). Let up on the clutch pedal slowly while pressing the accelerator pedal.

Notice: **Shifting to REVERSE (R) while your vehicle is moving forward could damage the transmission. The repairs would not be covered by your warranty. Shift to REVERSE (R) only after your vehicle is stopped.**

Also, use REVERSE (R), along with the parking brake, for parking your vehicle.

Shift Speeds

⚠ CAUTION:

If you skip a gear when you downshift, you could lose control of your vehicle. You could injure yourself or others. Do not shift down more than one gear at a time when you downshift.

Parking Brake

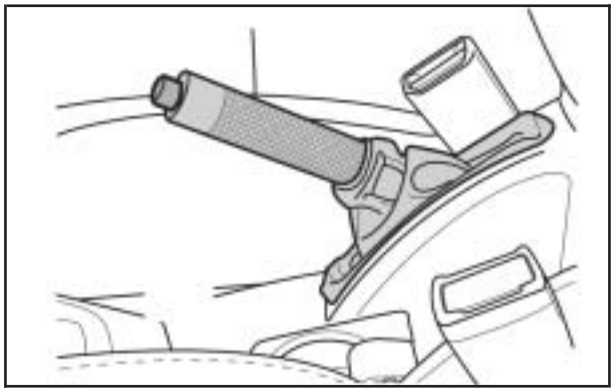

The parking brake lever is located between the bucket seats.

To set the parking brake, hold the brake pedal down and pull up on the parking brake lever. If the ignition is on, the brake system warning light will come on. See *Brake System Warning Light on page 3-31*.

To release the parking brake, hold the brake pedal down. Pull the parking brake lever up until you can press the release button. Hold the release button in as you move the brake lever all the way down.

Notice: **Driving with the parking brake on can overheat the brake system and cause premature wear or damage to brake system parts. Make sure that the parking brake is fully released and the brake warning light is off before driving.**

Shifting Into PARK (P) (Automatic Transmission)

⚠ CAUTION:

It can be dangerous to get out of your vehicle if the shift lever is not fully in PARK (P) with the parking brake firmly set. Your vehicle can roll. If you have left the engine running, the vehicle can move suddenly. You or others could be injured. To be sure your vehicle will not move, even when you are on fairly level ground, use the steps that follow.

1. Hold the brake pedal down and set the parking brake. See *Parking Brake on page 2-28* for more information.
2. Move the shift lever into PARK (P) by pushing the lever toward the passenger side of the vehicle and then up.
3. Turn the ignition to LOCK/OFF.
4. Remove the key and take it with you. If you can leave your vehicle with the ignition key in your hand, your vehicle is in PARK (P).

Leaving Your Vehicle With the Engine Running (Automatic Transmission)

⚠ CAUTION:

It can be dangerous to leave your vehicle with the engine running. Your vehicle could move suddenly if the shift lever is not fully in PARK (P) with the parking brake firmly set. And, if you leave the vehicle with the engine running, it could overheat and even catch fire. You or others could be injured. Do not leave your vehicle with the engine running.

If you have to leave your vehicle with the engine running, be sure your vehicle is in PARK (P) and your parking brake is firmly set before you leave it. After you have moved the shift lever into PARK (P), hold the regular brake pedal down. Then, see if you can move the shift lever away from PARK (P). If you can, it means that the shift lever was not fully locked into PARK (P).

Torque Lock (Automatic Transmission)

If you are parking on a hill and you do not shift your transmission into PARK (P) properly, the weight of the vehicle may put too much force on the parking pawl in the transmission. You may find it difficult to pull the shift lever out of PARK (P). This is called “torque lock.” To prevent torque lock, set the parking brake and then shift into PARK (P) properly before you leave the driver’s seat. To find out how, see *Shifting Into PARK (P) (Automatic Transmission) on page 2-29*.

When you are ready to drive, move the shift lever out of PARK (P) *before* you release the parking brake.

If torque lock does occur, you may need to have another vehicle push yours a little uphill to take some of the pressure from the parking pawl in the transmission, so you can pull the shift lever out of PARK (P).

Shifting Out of PARK (P)

An automatic transmission vehicle has an automatic transmission shift lock control system which locks the shift lever in PARK (P) when the ignition is in LOCK/OFF. You have to fully apply your regular brakes before you can shift from PARK (P) when the ignition is turned to ON. See *Automatic Transmission Operation on page 2-22*.

If you cannot shift out of PARK (P) while holding the brake pedal down, try this:

1. Set the parking brake.
2. Turn the ignition off and remove the key.
3. Pry off the cover over the shift-lock release slot using a small, flat object. The shift-lock release slot is located at the top of the shift lever.



4. Insert the key into the shift-lock release slot and press and hold the key.
5. Shift to NEUTRAL (N).
6. Remove the key from the shift-lock release slot, insert the key into the ignition and start the engine.
7. Replace the shift-lock release slot cover.
8. Apply and hold the regular brake fully and release the parking brake.
9. Shift to the gear you want.
10. Have the system fixed as soon as you can.

Parking Your Vehicle (Manual Transmission)

Before leaving your vehicle, do the following:

1. Hold the brake pedal down and firmly apply the parking brake.
2. Fully press in the clutch pedal and place the shift lever into the gear position as stated below:
   - When parking on level ground, place the shift lever into NEUTRAL.
   - When parking downhill, place the shift lever in REVERSE (R).
   - When parking uphill, place the shift lever in FIRST (1).
3. After shifting, turn the ignition to LOCK/OFF, remove the key and release the clutch.

Parking Over Things That Burn

⚠ CAUTION:

Things that can burn could touch hot exhaust parts under your vehicle and ignite. Do not park over papers, leaves, dry grass, or other things that can burn.

Engine Exhaust

⚠ CAUTION:

Engine exhaust can kill. It contains the gas carbon monoxide (CO), which you cannot see or smell. It can cause unconsciousness and death.

You might have exhaust coming in if:

- **The exhaust system sounds strange or different.**
- **Your vehicle gets rusty underneath.**
- **Your vehicle was damaged in a collision.**
- **Your vehicle was damaged when driving over high points on the road or over road debris.**
- **Repairs were not done correctly.**
- **Your vehicle or the exhaust system has been modified improperly.**

If you ever suspect exhaust is coming into your vehicle:

- **Drive it only with all the windows down to blow out any CO; and**
- **Have your vehicle fixed immediately.**

Running the Vehicle While Parked

It is better not to park with the engine running. But if you ever have to, here are some things to know.

⚠ CAUTION:

Idling the engine with the climate control system off could allow dangerous exhaust into your vehicle. See the earlier caution under *Engine Exhaust on page 2-32*.

Also, idling in a closed-in place can let deadly carbon monoxide (CO) into your vehicle even if the climate control fan is at the highest setting. One place this can happen is a garage. Exhaust — with CO — can come in easily. NEVER park in a garage with the engine running.

Another closed-in place can be a blizzard. See *Winter Driving on page 4-13*.

⚠ CAUTION:

It can be dangerous to get out of your vehicle if the automatic transmission shift lever is not fully in PARK (P) with the parking brake firmly set. Your vehicle can roll. Do not leave your vehicle when the engine is running unless you have to. If you have left the engine running, the vehicle can move suddenly. You or others could be injured. To be sure your vehicle will not move, even when it is on fairly level ground, always set the parking brake and move the automatic transmission shift lever to PARK (P), or the manual transmission shift lever to NEUTRAL.

Follow the proper steps to be sure your vehicle will not move. If you have an automatic transmission, see *Shifting Into PARK (P) (Automatic Transmission) on page 2-29*.

Mirrors

Manual Rearview Mirror

When you are sitting in a comfortable driving position, adjust the mirror so you can see clearly behind your vehicle. Hold the mirror in the center to move it up or down and side to side. The day/night adjustment allows you to adjust the mirror to avoid glare from the lamps behind you. Push the tab forward for daytime use and pull it for nighttime use.

Outside Manual Mirrors

The outside rearview mirrors should be adjusted so you can see the side of your vehicle when you are sitting in a comfortable driving position.

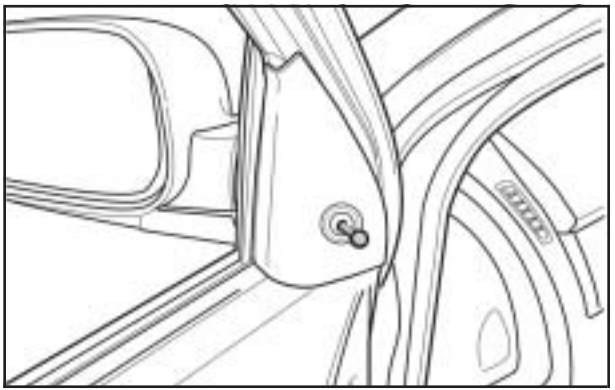

Adjust the outside mirrors with the control levers on the driver and passenger doors.

The outside rearview mirrors can be folded flat against the side of the vehicle by pushing them toward the vehicle.

Outside Power Mirrors

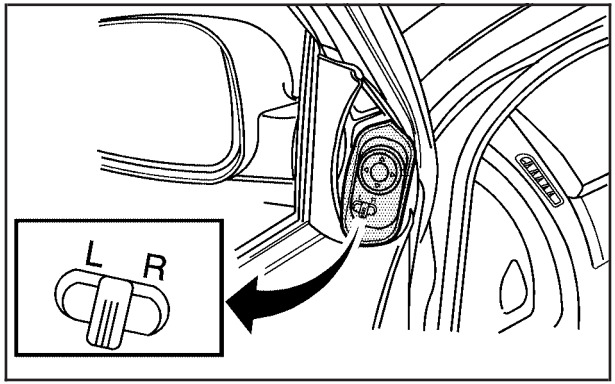

Your vehicle may have outside power mirrors. The control for the power mirrors is located on the driver's side door trim.

Move the outside power mirror control to L while adjusting the left mirror and to R while adjusting the right mirror. Place the control in the center position when not adjusting either mirror. To adjust a mirror, press the four-way control pad to move the mirror in the desired direction. The ignition must be turned to ON/RUN to adjust the mirrors.

The outside rearview mirrors can be folded flat against the side of the vehicle by pushing them toward the vehicle.

Outside Convex Mirror

⚠ CAUTION:

A convex mirror can make things (like other vehicles) look farther away than they really are. If you cut too sharply into the right lane, you could hit a vehicle on your right. Check your inside mirror or glance over your shoulder before changing lanes.

The passenger side mirror is convex. A convex mirror's surface is curved so more can be seen from the driver seat. It also makes things, like other vehicles, look farther away than they really are.

Outside Heated Mirrors

If your vehicle has this feature, when you operate the rear window defogger, the heated driver's and passenger's outside power mirrors are warmed to help clear them of ice, snow, and condensation. See "Rear Window and Outside Mirror Defogger" under *Climate Control System on page 3-19* for more information.

Storage Areas

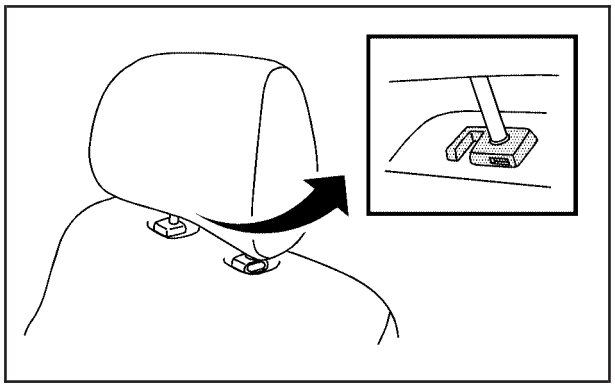

Your vehicle has shopping hooks on each front seatback for your convenience.

Glove Box

To open the glove box, lift up on the lever.

Cupholder(s)

The cupholders are located in the center console and in the rear seat center armrest. To use the front cupholders, move the inner support forward or backward. If your vehicle has rear cupholders, push down on the rear seat center armrest to use them.

Sunglasses Storage Compartment

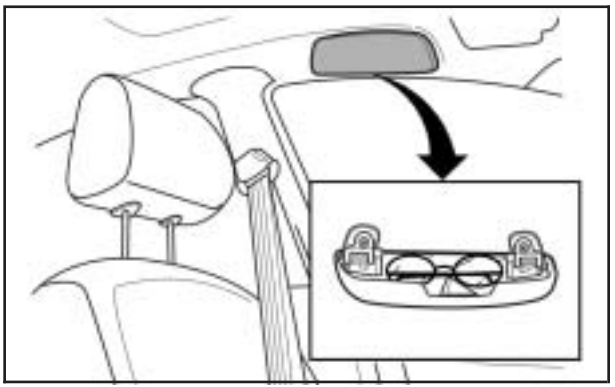

The sunglasses storage compartment is located above the driver's door. To open it, pull down and hold the upper part of the cover. To close the compartment, let go of the cover and the compartment will automatically close.

Front Armrest Storage Area

Your vehicle has a front armrest storage area. To open the storage area, pull up on the lift lever and raise the lid. To close the storage area, lower the lid and push it down until it latches securely.

Luggage Carrier

⚠ CAUTION:

If you try to carry something on top of your vehicle that is longer or wider than the roof rack— like paneling, plywood, a mattress and so forth — the wind can catch it as you drive along. This can cause you to lose control. What you are carrying could be violently torn off, and this could cause you or other drivers to have a collision, and of course damage your vehicle. You may be able to carry something like this inside. But, never carry something longer or wider than the roof rack on top of your vehicle.

The roof rack with side rails lets you to load things on top of your vehicle. Do not put things on top of your vehicle that are wider or longer than the roof rack.

Notice: **Loading cargo on the roof rack that weighs more than 220 lbs (100 kg) or hangs over the rear or sides of the vehicle may damage your vehicle. Load cargo so that it rests on the slats as far forward as possible and against the side rails, making sure to fasten it securely.**

Do not exceed the maximum vehicle capacity when loading your vehicle. For more information on vehicle capacity and loading, see *Loading Your Vehicle on page 4-18*.

To prevent damage or loss of cargo as you are driving, check now and then to make sure cargo is still securely fastened.

Rear Seat Armrest

Your vehicle may have a rear seat armrest that contains two cupholders. To access the cupholders, pull the armrest down from the rear seatback.

Convenience Net

The convenience net can help keep small loads from moving during sharp turns or quick starts and stops.

Hang the four net hooks in the metal rings on each corner of the floor.

Cargo Cover

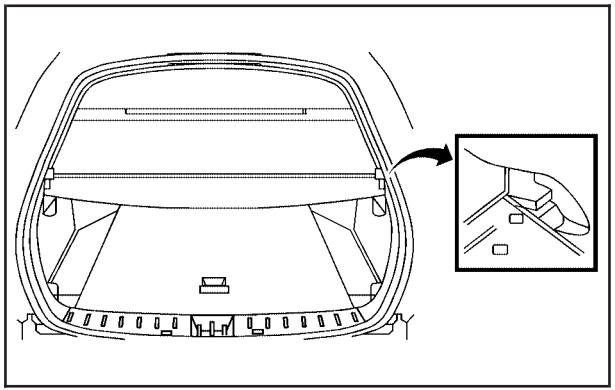

Your vehicle may have a cargo cover. Pull the handle of the cover toward the rear of the vehicle and insert the retainer into the slot located on both sides of the tailgate openings. To remove the cover, release the handle after pulling it toward you. The cover will retract automatically.

Do not place items on top of the cargo cover.

Hideaway Rear Storage Bins (Wagon Only)

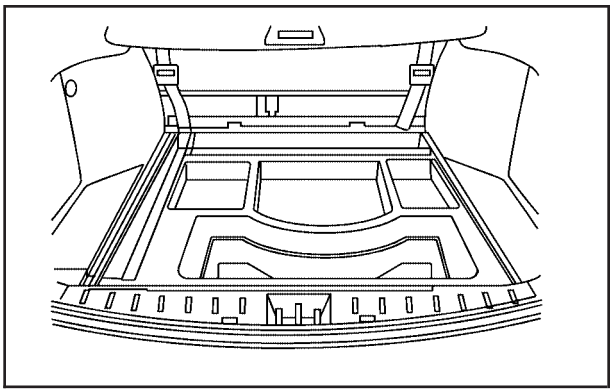

There are various bins under the luggage compartment floor. To access the bins, pull up on the floor mat handle.

Sunroof

If the vehicle has this feature, the switch is located between the map lamp buttons. The sunroof will only operate when the ignition is turned to ON/RUN. The sunroof can be opened to a vent position or it can be express-opened all of the way.

The sunroof must be manually opened or closed.

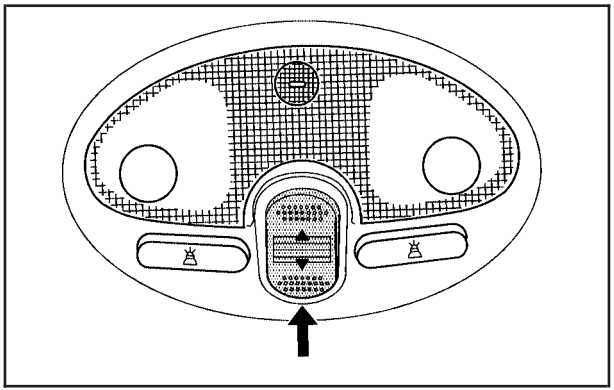

To open the sunroof to the vent position, push the front part of the switch. To return the sunroof to its original position, push the rear part of the switch and hold it until the sunroof reaches the desired position.

To fully open the sunroof, push the rear part of the switch. The sunroof will open automatically until the front or the rear part of the switch is pushed again. To close the sunroof, push the front part of the switch and hold it until the sunroof is closed. The sunroof will stop if the switch is released during operation.

In both the vent and fully open positions, the air flow can be adjusted for driving comfort by pushing and holding the switch until the sunroof moves to the desired position.

The sunroof glass panel cannot be opened or closed if the vehicle has an electrical failure.

NOTES

Section 3 Instrument Panel

Instrument Panel Overview 3-4
- Hazard Warning Flashers 3-6
- Other Warning Devices 3-6
- Horn 3-6
- Tilt Wheel 3-6
- Turn Signal/Multifunction Lever 3-7
- Turn and Lane-Change Signals 3-7
- Headlamp High/Low-Beam Changer 3-8
- Flash-to-Pass 3-8
- Windshield Wipers 3-8
- Windshield Washer 3-9
- Rear Window Wiper/Washer 3-10
- Cruise Control 3-10
- Exterior Lamps 3-13
- Headlamps on Reminder 3-13
- Daytime Running Lamps (DRL) 3-13
- Fog Lamps 3-14
- Instrument Panel Brightness 3-15
- Dome Lamp 3-15
- Map Lamps 3-16
- Inadvertent Power Battery Saver 3-16
- Accessory Power Outlet(s) 3-16
- Ashtray(s) and Cigarette Lighter 3-17
- Clock 3-18

Climate Controls 3-19
- Climate Control System 3-19
- Outlet Adjustment 3-22
- Passenger Compartment Air Filter 3-23

Warning Lights, Gages, and Indicators 3-24
- Instrument Panel Cluster 3-25
- Speedometer and Odometer 3-26
- Trip Odometer 3-26
- Tachometer 3-26
- Safety Belt Reminders 3-27
- Airbag Readiness Light 3-27
- Passenger Airbag Status Indicator 3-28
- Charging System Light 3-30
- Brake System Warning Light 3-31
- Anti-lock Brake System (ABS) Warning Light 3-32
- Speed Sensitive Power Steering (SSPS) Warning Light 3-32
- Hold Mode Light 3-33
- Engine Coolant Temperature Gage 3-33
- Tire Pressure Light 3-34
- Malfunction Indicator Lamp 3-34
- Oil Pressure Light 3-38
- Fog Lamp Light 3-38
- Cruise Control Light 3-38

Section 3 Instrument Panel

Highbeam On Light 3-39
Daytime Running Lamps (DRL)
Indicator Light 3-39
Door Ajar Light 3-39
Trunk Ajar Light (Hatchback Only) 3-39
Fuel Gage 3-40
Low Fuel Warning Light 3-40

Audio System(s) 3-41
Radio with CD (MP3/WMA) 3-42
Radio with Six-Disc CD (MP3/WMA) 3-48
Using an MP3 (Radio with CD Player) 3-54
Using an MP3 (Radio with Six-Disc Player) 3-58
Audio Steering Wheel Controls 3-61
Radio Reception 3-62
Care of Your CDs 3-63
Care of the CD Player 3-63
Integrated Windshield Antenna 3-63

NOTES

Instrument Panel Overview

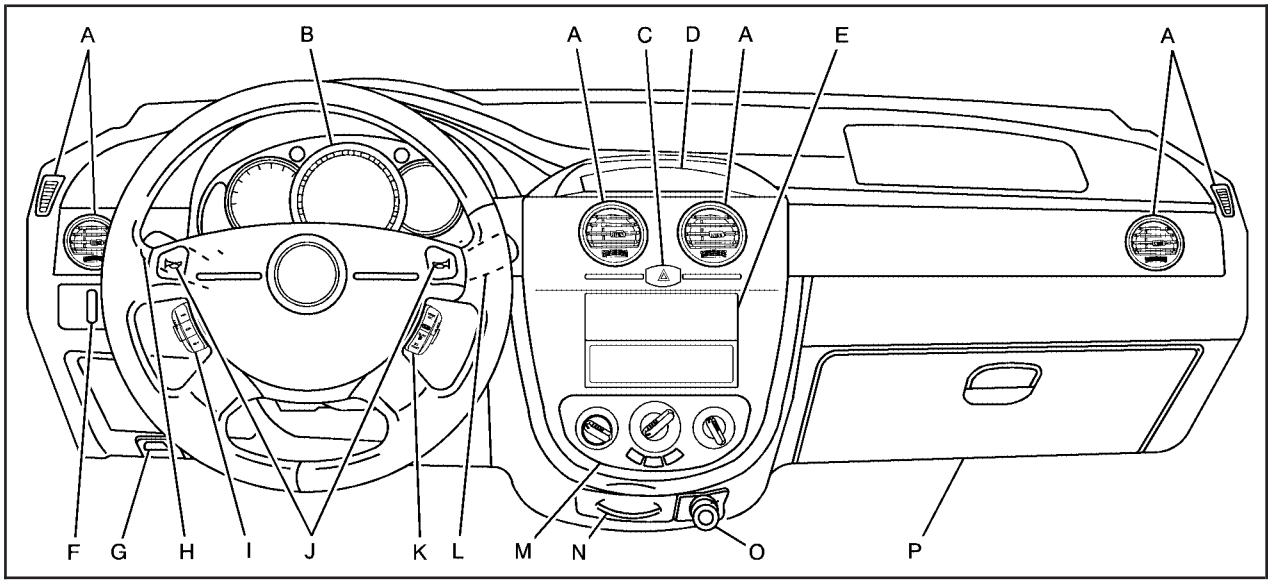

The main components of the instrument panel are the following:

A. Air Outlets. See *Outlet Adjustment on page 3-22*.

B. Instrument Panel Cluster. See *Instrument Panel Cluster on page 3-25*.

C. Hazard Warning Flashers Button. See *Hazard Warning Flashers on page 3-6*.

D. Digital Clock. See *Clock on page 3-18*.

E. Audio System. See *Audio System(s) on page 3-41*.

F. Instrument Panel Brightness Control. See *Instrument Panel Brightness on page 3-15*.

G. Hood Release. See *Hood Release on page 5-11*.

H. Exterior Lamps Control. See *Exterior Lamps on page 3-13*.

I. Audio Steering Wheel Controls (If Equipped). See *Audio Steering Wheel Controls on page 3-61*.

J. Horn. See *Horn on page 3-6*.

K. Cruise Control Buttons. See *Cruise Control on page 3-10*.

L. Windshield Wiper Control. See *Windshield Wipers on page 3-8*.

M. Climate Control System. See *Climate Control System on page 3-19*.

N. Ashtray. See *Ashtray(s) and Cigarette Lighter on page 3-17*.

O. Cigarette Lighter. See *Ashtray(s) and Cigarette Lighter on page 3-17*.

P. Glove Box. See *Glove Box on page 2-36*.

Hazard Warning Flashers

The hazard warning flashers let you warn the police and others that you have a problem. The front and rear turn signal lamps will flash on and off.

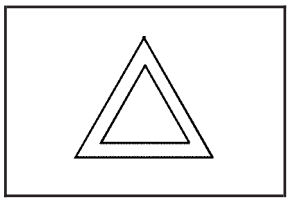

The hazard warning flasher button is on the instrument panel.

Press the button to make the front and rear turn signal lamps flash on and off. Press again to turn the flashers completely off.

The hazard warning flashers work even if the key is not in the ignition switch.

Other Warning Devices

If you carry reflective triangles, you can set them up at the side of the road about 300 feet (100 m) behind your vehicle.

Horn

Press near or on the horn symbols on the steering wheel pad to sound the horn.

Tilt Wheel

Your vehicle has a tilt wheel which lets you adjust the steering wheel before you drive.

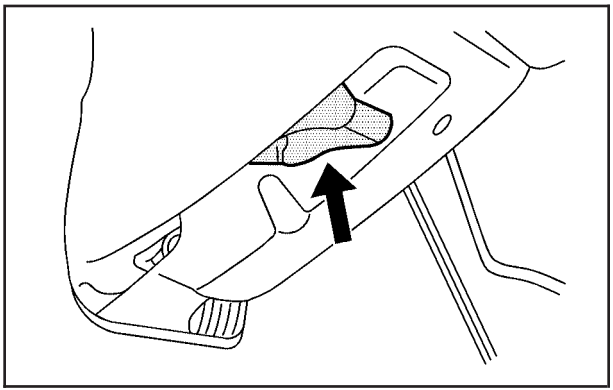

The lever that lets you tilt the steering wheel is located under the steering column.

To tilt the steering wheel, hold the wheel and push the lever away from you. Then, move the wheel to a comfortable position and pull the lever toward you to lock the wheel in place.

Raise it to the highest level to give your legs more room when you exit and enter the vehicle.

Turn Signal/Multifunction Lever

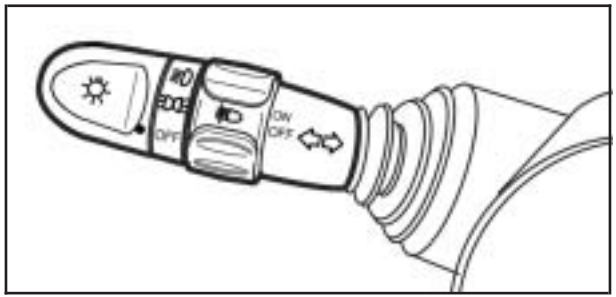

Uplevel shown, Base similar

The lever on the left side of the steering column includes the following:

- Turn and Lane-Change Signals. See *Turn and Lane-Change Signals on page 3-7*.
- Headlamp High/Low-Beam Changer. See *Headlamp High/Low-Beam Changer on page 3-8*.
- Flash-to-Pass. See *Flash-to-Pass on page 3-8*.
- Exterior Light Control. See *Exterior Lamps on page 3-13*.
- Fog Lamps, if equipped. See *Fog Lamps on page 3-14*.

Turn and Lane-Change Signals

The turn signal has two upward (for right) and two downward (for left) positions. These positions let you signal a turn or a lane change.

To signal a turn, move the lever all the way up or down.

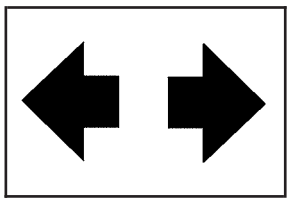

An arrow on the instrument panel cluster will flash in the direction of the turn or lane change.

When the turn is finished, the lever will return automatically.

To signal a lane change, raise or lower the lever until the arrow starts to flash. Hold it there until you complete your lane change. The lever returns by itself when it is released.

As you signal a turn or a lane change, if the arrows flash rapidly or do not go on at all, a signal bulb could be burned out and other drivers will not see your turn signal.

Replace the bulb to help avoid an accident. If the arrow still does not flash when signaling, check the fuse. See *Fuses and Circuit Breakers on page 5-89*.

Headlamp High/Low-Beam Changer

Push the turn signal/multifunction lever away from you to change the headlamps from low beam to high beam.

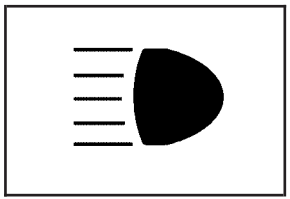

A light comes on in the instrument panel cluster if the high beams are on while the ignition is turned to ON/RUN.

To change the headlamps from high beam to low beam, pull the turn signal lever toward you.

Flash-to-Pass

This feature lets you use your high-beam headlamps to signal a driver in front of you that you want to pass.

To use it, pull the turn signal/multifunction lever toward you until the high-beam headlamps come on, then release the lever to turn them off.

Windshield Wipers

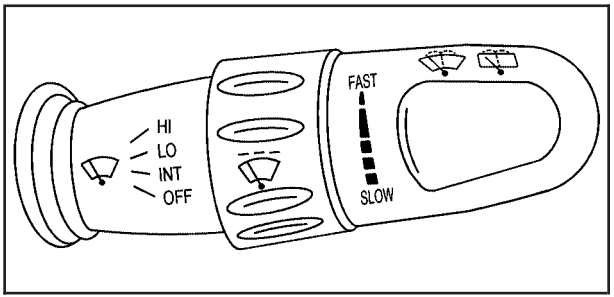

Use this lever located on the right side of the steering wheel to operate the windshield wipers. The ignition must be turned to ON/RUN to operate the windshield wipers.

HI (High Speed): This position is for wiping at a high speed.

LO (Low Speed): This position is for steady wiping at a low speed.

INT (Intermittent): This position lets you choose a delayed wiping cycle. Turn the band on the windshield wiper lever toward FAST or SLOW for a shorter or longer delay between wipes. The wiper speed can only be adjusted when the lever is in the INT position.

OFF: This position turns off the windshield wipers.

Mist Function

Move the lever toward, but not completely in, the INT position for a single wiping cycle. Hold it there until the windshield wipers start; then let go. The windshield wipers stop after one wipe. If additional wiping cycles are needed, hold the lever toward INT longer.

Remember that damaged wiper blades can prevent you from seeing well enough to drive safely. To avoid damage, be sure to clear ice and snow from the wiper blades before using them.

If they are frozen to the windshield, carefully loosen or thaw them. If the blades do become damaged, get new blades or blade inserts.

Heavy snow or ice can overload the wiper motor. A circuit breaker will stop the motor until it cools. Clear away snow or ice to prevent an overload.

Windshield Washer

To wash the windshield, pull the windshield wiper/washer lever toward you while the ignition is turned to ON/RUN.

⚠ CAUTION:

In freezing weather, do not use your washer until the windshield is warmed. Otherwise the washer fluid can form ice on the windshield, blocking your vision.

When the lever is released, the washers stop, but the wipers continue to wipe for about two or three cycles and either stop or resume at the previous speed.

Rear Window Wiper/Washer

⚠ CAUTION:

In freezing weather, do not use your washer until the windshield is warmed. Otherwise the washer fluid can form ice on the windshield, blocking your vision.

The vehicle has a rear window washer/wiper. Push the windshield wiper/washer lever toward the instrument panel to start the rear window washer/wiper system.

The wiper operates continuously when the lever is in the first position. In some vehicle models, the wiper operates intermittently.

Washer fluid sprays onto the rear window and the wiper operates continuously when the lever is pushed to the second position.

Cruise Control

If your vehicle has cruise control, a speed of about 24 mph (39 km/h) or more can be maintained without keeping your foot on the accelerator. This can really help on long trips. Cruise control does not work at speeds below 24 mph (39 km/h).

⚠ CAUTION:

Cruise control can be dangerous where you cannot drive safely at a steady speed. So, do not use your cruise control on winding roads or in heavy traffic.

Cruise control can be dangerous on slippery roads. On such roads, fast changes in tire traction can cause excessive wheel slip, and you could lose control. Do not use cruise control on slippery roads.

Setting Cruise Control

⚠ CAUTION:

If you leave your cruise control on when you are not using cruise, you might hit a button and go into cruise when you do not want to. You could be startled and even lose control. Keep the cruise control switch off until you want to use cruise control.

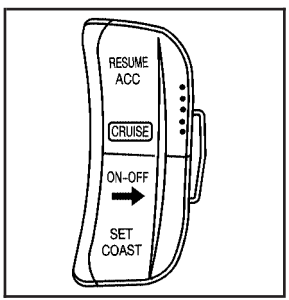

The cruise control pad is located on the inboard side of the steering wheel.

1. Press the ON/OFF button to turn on the cruise control.
2. Accelerate to the speed you want.
3. Press the SET button and release it. An indicator light on the instrument panel cluster comes on to show that the cruise control is on. See *Cruise Control Light on page 3-38*.
4. Take your foot off the accelerator pedal.

Resuming a Set Speed

If the cruise control is set to a desired speed and then turned off by applying the brake or clutch pedal, if you have a manual transmission, this shuts off the cruise control. However, it does not need to be reset. Once you are going about 24 mph (39 km/h) or more, briefly press the RESUME button.

The vehicle will go back to the previously set speed and stay there.

If the RESUME button is held, the vehicle keeps going faster until the button is released or you apply the brake pedal. Do not hold the RESUME button, if you do not want the vehicle speed to keep increasing.

Increasing Speed While Using Cruise Control

There are two ways to go to a higher speed.

- Use the accelerator pedal to get to a higher speed. Press the SET button, then release the button and the accelerator pedal. The vehicle now cruises at the higher speed.
- Press the RESUME button. Hold it there until the desired speed is reached, and then release the button. To increase the vehicle speed in very small amounts, briefly press the RESUME button and then release it. Each time this is done, the vehicle goes about 1 mph (1.6 km/h) faster.

The accelerate feature will only work after the cruise control is turned on by pressing the SET button.

Reducing Speed While Using Cruise Control

There are two ways to reduce the vehicle speed while using cruise control:

- Press the SET button until the desired lower speed is reached, then release it.
- To slow down in very small amounts, briefly press the SET button. Each time this is done, the vehicle goes about 1 mph (1.6 km/h) slower.

Passing Another Vehicle While Using Cruise Control

Use the accelerator pedal to increase the vehicle's speed. When you take your foot off the pedal, the vehicle slows down to the cruise control speed set earlier.

Using Cruise Control on Hills

How well the cruise control works on hills depends upon the vehicle speed, load, and the steepness of the hills. When going up steep hills, you might have to step on the accelerator pedal to maintain the vehicle's speed. When going downhill, you might have to brake or shift to a lower gear to keep the vehicle's speed down. Applying the brake pedal turns off the cruise control. Many drivers find this to be too much trouble and do not use cruise control on steep hills.

Ending Cruise Control

There are two ways to turn off the cruise control:

- Step lightly on the brake pedal, or press the clutch pedal, if the vehicle has a manual transmission.
- Press the ON/OFF button on the cruise control pad.

Erasing Speed Memory

The cruise control set speed memory can be erased by turning off the cruise control or the ignition.

Exterior Lamps

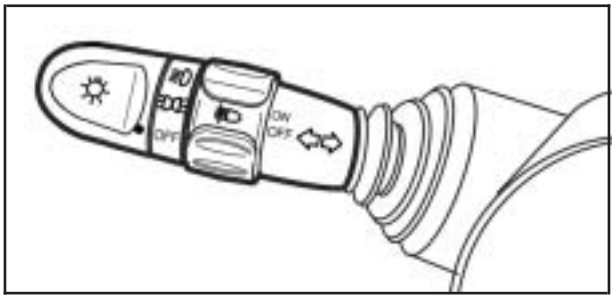

Uplevel shown, Base similar

The lever on the left side of the steering column operates the exterior lamps.

The exterior lamp band has three positions:

(Headlamps): Turn the band to this position to turn on the headlamps, together with the following:

- Taillamps
- License Plate Lamp
- Instrument Panel Lights
- Parking Lamps

The headlamps automatically turn off when the ignition key is turned to LOCK/OFF or ACC/ACCESSORY.

(Parking Lamps): Turn the band to this position to turn on the parking lamps, together with the taillamps, license plate lamp, and instrument panel lights.

OFF: Turn the band to this position to turn all lamps off, except the Daytime Running Lamps (DRL).

Headlamps on Reminder

If the driver's door is opened with the ignition turned to LOCK/OFF or ACC/ACCESSORY and the lamps are on, a warning chime will sound.

Daytime Running Lamps (DRL)

Daytime Running Lamps (DRL) can make it easier for others to see the front of your vehicle during the day. DRL can be helpful in many different driving conditions, but they can be especially helpful in the short periods after dawn and before sunset.

The DRL system will make your low-beam headlamps come on in daylight when the following conditions are met:

- The ignition is on.
- The exterior lamp band is in OFF or in the parking lamp position.
- The parking brake is released.

An indicator light will come on when the DRL are on. See *Daytime Running Lamps (DRL) Indicator Light on page 3-39*.

When the DRL system is on, the taillamps, sidemarker lamps, parking lamps and instrument panel lights will not be illuminated unless you have turned the exterior lamps control to the parking lamp or headlamp position.

The DRL system will turn off when one of the following conditions are met:

- The ignition is off.
- The parking brakes are on.
- The high-beam headlamps are on.
- The low-beam headlamps are on.
- The flash-to-pass feature is used.

As with any vehicle, you should turn on the regular headlamp system when you need it.

Fog Lamps

If your vehicle has fog lamps, use them for better visibility in foggy or misty conditions.

The band for the front fog lamps is located in the middle of the turn signal/multifunction lever. While using the fog lamps, the ignition must be on as well as the parking lamps or low-beam headlamps.

Turn the band to ON to turn the fog lamps on. An indicator light will come on while the fog lamps are on. See *Fog Lamp Light on page 3-38*.

Turn the band to OFF to turn the fog lamps off.

The fog lamps will also turn off while the high-beam headlamps are turned on. When the high-beam headlamps are turned off, the fog lamps will turn on again.

Instrument Panel Brightness



The thumbwheel for this feature is located on the instrument panel to the left of the steering wheel.

Turn the thumbwheel up to brighten the instrument panel lights or down to dim them.

Dome Lamp



The switch on this lamp has three positions.

ON: The light comes on and stays on regardless of whether a door is opened or closed.

● **(Door):** The light comes on while a door is opened. After all of the doors are closed, the light stays on for about seven seconds, and then fades out on the Notchback/Wagon models. On the Hatchback model the light will go off after the doors are closed. The light will also turn off when the ignition is turned to ON/RUN.

OFF: The light remains off even when a door is opened.

Map Lamps

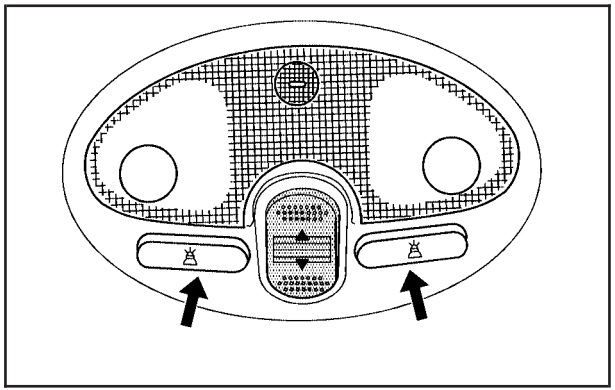

Uplevel shown, Base similar

Your vehicle may have map lamps. To turn a lamp on, press the button next to it. Press the button again to turn it off.

Inadvertent Power Battery Saver

This feature is designed to protect your vehicle's battery against drainage from the taillamps, license plate lamps, instrument panel lights, and parking lamps. When the ignition is turned off, the power to these features will automatically turn off after 5 seconds once the driver's door is closed.

Accessory Power Outlet(s)

Accessory power outlets can be used to connect auxiliary electrical equipment such as a cellular telephone or CB radio.

One accessory power outlet is located on the front of the center console below the front ashtray. For wagon models, there may be another outlet in the rear luggage compartment on the driver's side.

To use the outlet, remove the protective cap. When not in use, always cover the outlet with the protective cap. The accessory power outlet is operational when the ignition is turned to ACC/ACCESSORY or ON/RUN.

Notice: **Leaving electrical equipment on for extended periods will drain the battery. Always turn off electrical equipment when not in use and do not plug in equipment that exceeds the maximum amperage rating.**

Certain electrical accessories may not be compatible with the accessory power outlet and could result in blown vehicle or adapter fuses. If you experience a problem, see your dealer/retailer for additional information on the accessory power outlet.

Notice: **Adding any electrical equipment to your vehicle may damage it or keep other components from working as they should. The repairs would not be covered by your warranty. Do not use equipment exceeding maximum amperage rating of 20 amperes. Check with your dealer/retailer before adding electrical equipment.**

When adding electrical equipment, be sure to follow the proper installation instructions included with the equipment.

Notice: **Improper use of the power outlet can cause damage not covered by your warranty. Do not hang any type of accessory or accessory bracket from the plug because the power outlets are designed for accessory power plugs only.**

Ashtray(s) and Cigarette Lighter

The front ashtray is located at the lower part of the center of the instrument panel. To remove the bin from the front ashtray for cleaning, open the ashtray fully, lift up the inner bin and then pull the bin out.

The rear ashtray is located at the bottom of the rear center console. Pull the ashtray toward the rear of the vehicle to open it. To remove the rear ashtray, press in the retaining spring and pull the bin out.

Notice: **If you put papers, pins, or other flammable items in the ashtray, hot cigarettes or other smoking materials could ignite them and possibly damage your vehicle. Never put flammable items in the ashtray.**

The cigarette lighter is located to the right of the front ashtray. To use it, turn the ignition to ACC/ACCESSORY or ON/RUN, push the cigarette lighter in all the way and let go. When it is ready, it will pop back out by itself.

Notice: **Holding a cigarette lighter in while it is heating will not allow the lighter to back away from the heating element when it is hot. Damage from overheating may occur to the lighter or heating element. Do not hold a cigarette lighter in while it is heating.**

Clock

Your vehicle has a digital clock. If you have a wagon, the clock is located in the center of the instrument panel below the air outlets. If you have a hatchback, the clock is located in the center of the instrument panel above the air outlets. When the ignition is turned to ACC/ACCESSORY or ON/RUN, the time is displayed in the digital clock. There are three adjusting buttons for the digital clock:

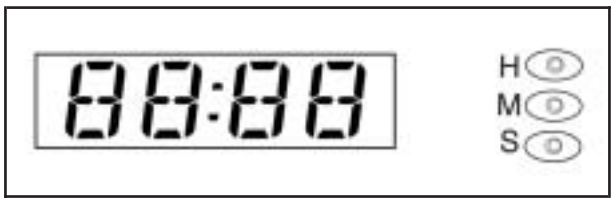

H (Hour): To go forward one hour, press the H button once. To go forward more than one hour, press and hold the button until the correct hour is reached.

M (Minute): To go forward one minute, press the M button once. To go forward more than one minute, press and hold the button until the correct minute is reached.

S (Set): To reset the time to the nearest hour, press the S button.

For example, if this button is pressed while the time is between 8:00 and 8:29, the display is set to 8:00. If this button is pressed while the time is between 8:30 and 8:59, the display is set to 9:00.

After disconnecting the battery or replacing the fuse, reset the clock.

Climate Controls

Climate Control System

The heating, cooling and ventilation for your vehicle can be controlled with this system.

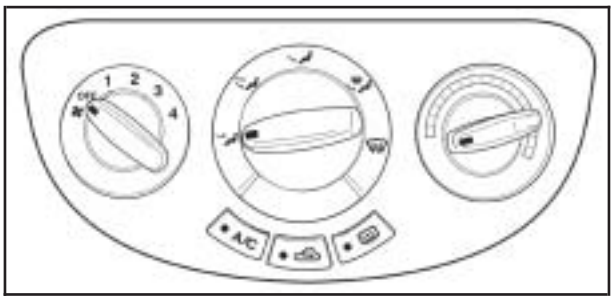

Uplevel shown, Base similar

(Fan): Turn the left knob clockwise or counterclockwise to increase or decrease the fan speed. In any setting other than off, the fan runs continuously with the ignition in ON/RUN. The fan must be on for the air conditioning compressor to run.

To change the current mode, select one of the following from the middle knob:

(Vent): This mode directs air to the instrument panel outlets.

(Bi-Level): This mode splits the air between the instrument panel outlets and the floor outlets.

(Floor): This mode directs most of the air to the floor outlets. Some of the air will also be directed to the windshield, instrument panel side outlets, and the rear outlets. Be sure to keep the area under the front seats clear to allow the flow of air to the rear compartment.

Temperature Control: Turn the right knob clockwise or counterclockwise to manually increase or decrease the temperature inside the vehicle. Turn the knob to the blue area to get cool air and to the red area to get warm air.

A/C (Air Conditioning): If your vehicle has air conditioning, follow these steps to use the system. Start the engine and set the fan control knob to the desired fan speed. The air conditioning compressor does not operate when the fan control knob is turned to OFF. Press the A/C button to turn the air conditioning system on and off. When A/C is pressed, an indicator light in the button comes on to show that the air conditioning is activated.

On hot days, open the windows to let hot inside air escape; then close them. This helps to reduce the time it takes for the vehicle to cool down. It also helps the system to operate more efficiently.

For quick cool down on hot days, do the following:

1. Select the vent mode.
2. Select the highest fan speed.
3. Press the A/C button.
4. Press the recirculation button.
5. Select the coolest temperature.

Using these settings together for long periods of time may cause the air inside of the vehicle to become too dry. To prevent this from happening, after the air in the vehicle has cooled, turn the recirculation mode off.

The air conditioning system removes moisture from the air, so a small amount of water might drip underneath the vehicle while idling or after turning off the engine. This is normal.

(Recirculation): This mode keeps outside air from coming into the vehicle. It can be used to prevent outside air and odors from entering the vehicle or to help heat or cool the air inside the vehicle more quickly.

Press this button to turn the recirculation mode on. When the button is pressed, an indicator light in the button comes on. Press this button again to return to outside air mode.

Using the recirculation mode for extended periods may cause your windows to fog. If this happens, select the defrost mode.

Defogging and Defrosting

Fog on the inside of windows is a result of high humidity or moisture condensing on the cool window glass. This can be minimized if the climate control system is used properly. There are two modes to clear fog or frost from the windshield. Use the defog mode to clear the windows of fog or moisture and warm the passengers. Use the defrost mode to remove fog or frost from the windshield more quickly.

(Defog): This mode directs most of the air to the windshield and the floor outlets. A small amount of air is also directed to the outboard outlets for the side windows and to the instrument panel side outlets.

When this mode is selected, the system runs the air-conditioning compressor. To defog the windows faster, turn the temperature control knob clockwise to the warmest setting.

(Defrost): This mode directs most of the air to the windshield and the outboard outlets for the side windows. A small amount of air is also directed to the instrument panel side outlets.

When this mode is selected, the system runs the air-conditioning compressor. To defrost the windows faster, turn the temperature control knob clockwise to the warmest setting.

Front Heated Windshield

Your vehicle may have a heated front windshield which can be used with defog and defrost. This feature will only work when the ignition is turned to ON/RUN.

The front heated windshield uses a heated element to remove fog or frost from the bottom of the windshield.

(Rear): Press this button located below the audio system. An indicator light in the button comes on to show that the feature is activated. The front windshield heater will turn off about ten minutes after the button is pressed. To manually turn off the heater, press the button again or turn off the engine. See “Rear Window and Outside Mirror Defogger” later in this section for more information on this button.

Rear Window and Outside Mirror Defogger

Your vehicle may have a rear window and outside mirror defogger. This feature will only work when the ignition is turned to ON/RUN.

The rear window defogger uses a warming grid to remove fog or frost from the rear window. Before using this feature, clear as much snow from the rear window as possible.

(Rear): Press this button. An indicator light in the button comes on to show that the rear window defogger is activated.

The rear window defogger will turn off about 10 minutes after the button is pressed. To manually turn off the defogger, press the button again or turn off the engine. See “Front Heated Windshield” earlier in this section for more information on this button.

Notice: **Do not use anything sharp on the inside of the rear window. If you do, you could cut or damage the warming grid, and the repairs would not be covered by your warranty. Do not attach a temporary vehicle license, tape, a decal or anything similar to the defogger grid.**

Outlet Adjustment

Use the lever located in the center of each outlet to change the direction of the airflow. Use the thumbwheel located near the outlets to turn the airflow on or off.

Operation Tips

- Clear away any ice, snow or leaves from the air inlets at the base of the windshield that may block the flow of air into the vehicle.
- Use of non-GM approved hood deflectors may adversely affect the performance of the system.
- Keep the path under the front seats clear of objects to help circulate the air inside of the vehicle more effectively.

Passenger Compartment Air Filter

Your vehicle may have a passenger compartment air filter. It is located on the passenger side under the glove box.

The filter traps most of the pollen from air entering the module. The filter may need to be changed periodically.

To change the passenger compartment air filter, use the following steps:

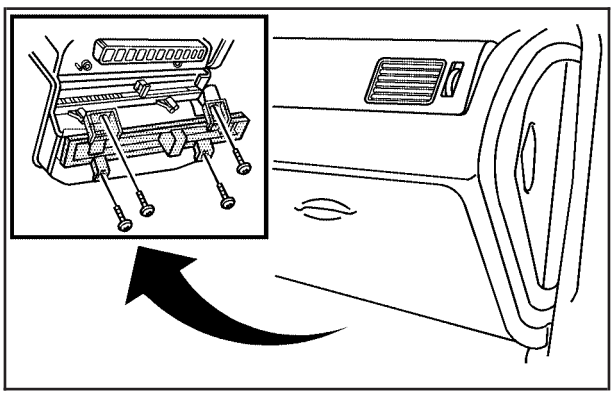

1. Remove the four screws from the filter cover located below the glove box.
2. Remove the filter cover.

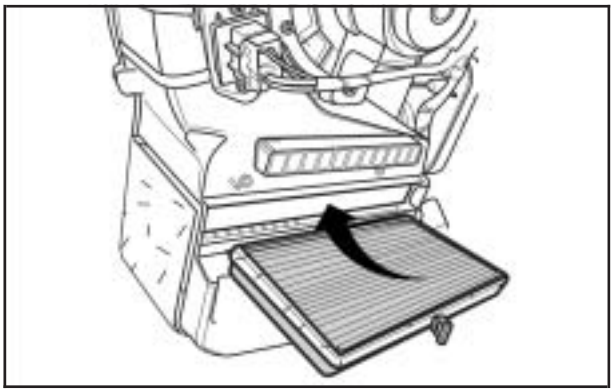

3. Remove the old passenger compartment air filter.
4. Reverse the steps to install the new air filter.

   Make sure that the new filter is inserted to the correct air flow.

Warning Lights, Gages, and Indicators

This section describes the warning lights and gages on your vehicle.

Warning lights and gages can signal that something is wrong before it becomes serious enough to cause an expensive repair or replacement. Paying attention to the warning lights and gages could also save you or others from injury.

Warning lights come on when there may be or is a problem with one of your vehicle's functions. Some warning lights come on briefly when you start the engine just to let you know they are working. If you are familiar with this section, you should not be alarmed when this happens.

Gages can indicate when there may be or is a problem with one of your vehicle's functions. Often gages and warning lights work together to let you know when there is a problem with your vehicle.

When one of the warning lights comes on and stays on as you are driving, or when one of the gages shows there may be a problem, check the section that tells you what to do about it. Follow this manual's advice. Waiting to do repairs can be costly and even dangerous.

Instrument Panel Cluster

Your instrument panel cluster is designed to let you know at a glance how your vehicle is running. You will know how fast you are going, how much fuel you are using, and many other things you will need to drive safely and economically.

Your vehicle's instrument panel cluster includes indicator warning lights and gages that are explained on the following pages.

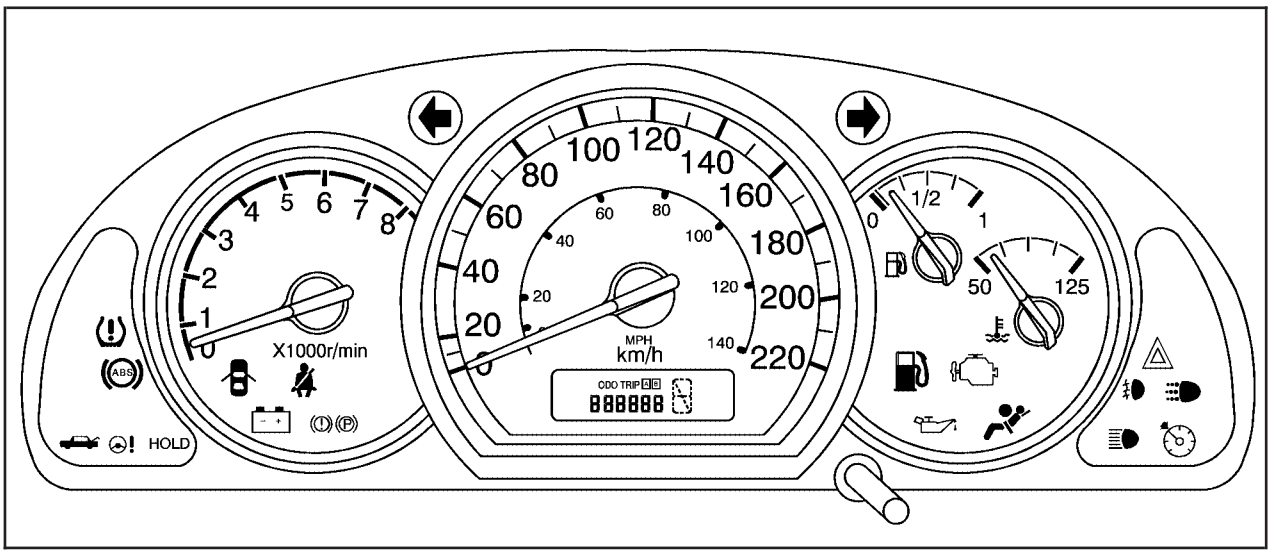

Uplevel shown, Base similar

Speedometer and Odometer

The speedometer lets you see your vehicle's speed in both miles per hour (mph) and kilometers per hour (km/h).

The odometer shows how far your vehicle has been driven in kilometers.

Trip Odometer

The trip odometer can record the number of kilometers traveled for up to two trips.

You can cycle between the odometer and trip odometers A and B by pressing the reset button located in the lower right area of the speedometer. By pressing the reset button, you can tell how many kilometers have been recorded on either Trip A or Trip B since you last set the trip odometer back to zero.

To reset each trip odometer to zero, press and hold the reset button. The reset button resets only the trip odometer that is displayed. Each trip odometer must be reset individually.

Tachometer

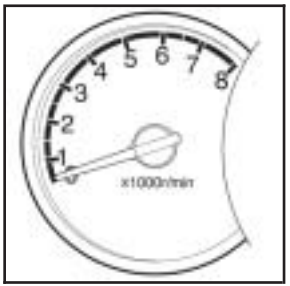

The tachometer displays your engine speed in revolutions per minute (rpm).

Notice: **If you operate the engine with the tachometer in the shaded warning area, your vehicle could be damaged, and the damages would not be covered by your warranty. Do not operate the engine with the tachometer in the shaded warning area.**

Safety Belt Reminders

Safety Belt Reminder Light



The safety belt light will come on when the engine is started and stay on until the driver's safety belt is buckled.

If the driver's belt is already buckled, the light will not come on.

Safety Belt Reminder Tone

If your vehicle has this feature, a tone will sound for several seconds when the engine is started to remind people to fasten their safety belts. The tone will not sound if the driver's safety belt is already buckled.

Airbag Readiness Light

There is an airbag readiness light on the instrument panel cluster, which shows the airbag symbol. The system checks the airbag's electrical system for malfunctions. The light tells you if there is an electrical problem. The system check includes the airbag sensor, the airbag modules, the wiring and the crash sensing and diagnostic module. For more information on the airbag system, see *Airbag System on page 1-51*.

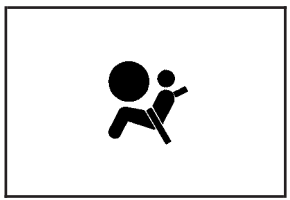

This light will come on when you start your vehicle, and it will flash for a few seconds. The light should go out and the system is ready.

If the airbag readiness light stays on after you start the vehicle or comes on when you are driving, your airbag system may not work properly. Have your vehicle serviced right away.

⚠ CAUTION:

If the airbag readiness light stays on after you start your vehicle, it means the airbag system may not be working properly. The airbags in your vehicle may not inflate in a crash, or they could even inflate without a crash. To help avoid injury to yourself or others, have your vehicle serviced right away if the airbag readiness light stays on after you start your vehicle.

The airbag readiness light should flash for a few seconds when the engine is started. If the light does not come on then, have it fixed so it will be ready to warn you if there is a problem.

Passenger Airbag Status Indicator

Your vehicle has the passenger sensing system. Your vehicle has a passenger airbag status indicator in the clock, located in the center of the instrument panel.

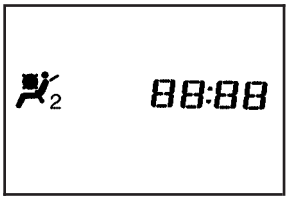

When you start the vehicle, the passenger airbag status indicator will light for several seconds as a system check.

Then, after several more seconds, if the off symbol is lit on the passenger airbag status indicator, it means that the passenger sensing system has turned off the right front passenger's frontal airbag and seat-mounted side impact airbag (if equipped). See *Passenger Sensing System on page 1-59* for more on this, including important safety information.

⚠ CAUTION:

If the on indicator comes on when you have a rear-facing child restraint installed in the right front passenger's seat, it means that the passenger sensing system has not turned off the passenger's frontal airbag and seat-mounted side impact airbag (if equipped). A child in a rear-facing child restraint can be seriously injured or killed if the right front passenger's airbag inflates. This is because the back of the rear-facing child restraint would be very close to the inflating airbag. Do not use a rear-facing child restraint in the right front passenger's seat if the airbag is turned on.

⚠ CAUTION:

Even though the passenger sensing system is designed to turn off the right front passenger's frontal airbag and seat-mounted side impact airbag (if equipped) if the system detects a rear-facing child restraint, no system is fail-safe, and no one can guarantee that an airbag will not deploy under some unusual circumstance, even though it is turned off. We recommend that rear-facing child restraints be secured in a rear seat, even if the airbag is or airbags are off.

If the off symbol is not lit on the passenger airbag status indicator, it means that the right front passenger's frontal airbag and seat-mounted side impact airbag (if equipped) are enabled (may inflate).

⚠ CAUTION:

If the airbag readiness light in the instrument panel cluster ever comes on and stays on, it means that something may be wrong with the airbag system. If this ever happens, have the vehicle serviced promptly, because an adult-size person sitting in the right front passenger's seat may not have the protection of the airbag(s). See *Airbag Readiness Light on page 3-27* for more on this, including important safety information.

Charging System Light

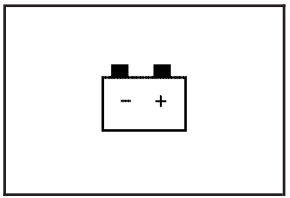

This light will come on briefly when the ignition is turned on, and the engine is not running, as a check to show you it is working.

It should go out when the engine is started. If it stays on, or comes on while you are driving, you may have a problem with the electrical charging system. Have it checked by your dealer/retailer. Driving while this light is on could drain your battery. If you must drive a short distance with the light on, be certain to turn off all your accessories, such as the radio and air conditioner to help reduce the drain on the battery.

Brake System Warning Light

Your vehicle's hydraulic brake system is divided into two parts. If one part is not working, the other part can still work and stop you. For good braking, though, you need both parts working well.

If the warning light comes on, there is a brake problem. Have your brake system inspected right away.

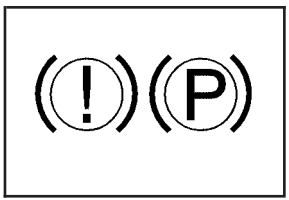

This light should come on briefly when you turn the ignition to ON/RUN. If it does not come on then, have it fixed so it will be ready to warn you if there is a problem.

When the ignition is on, the brake system warning light will also come on when you set your parking brake. The light will stay on if your parking brake does not fully release. If it stays on after your parking brake is fully released, it means you have a brake problem.

If the light comes on while you are driving, pull off the road and stop carefully. You may notice that the pedal is harder to push. Or, the pedal may go closer to the floor. It may take longer to stop. If the light is still on, have the vehicle towed for service. See *Towing Your Vehicle on page 4-23*.

⚠ CAUTION:

Your brake system may not be working properly if the brake system warning light is on. Driving with the brake system warning light on can lead to an accident. If the light is still on after you have pulled off the road and stopped carefully, have the vehicle towed for service.

Anti-lock Brake System (ABS) Warning Light

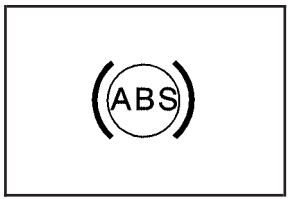

For vehicles with the Antilock Brake System (ABS), this light will come on briefly when the engine is started.

If it does not come on have your vehicle serviced.

If the light stays on, turn the ignition to LOCK/OFF. If the light comes on, stop as soon as possible and turn the ignition off. Then start the engine again to reset the system. If the light still stays on, or comes on again while you are driving, your vehicle needs service. See your dealer/retailer. If the regular brake system warning light is not on, you still have brakes, but you do not have antilock brakes. If the regular brake system warning light is also on, you do not have antilock brakes and there is a problem with your regular brakes. See *Brake System Warning Light on page 3-31*.

Speed Sensitive Power Steering (SSPS) Warning Light

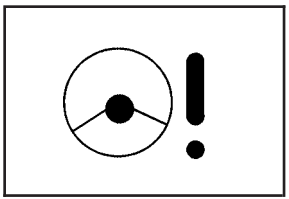

If your vehicle has Speed Sensitive Power Steering, this warning light will come on briefly when you turn the ignition to ON/RUN as a check to show you it is working.

Then it should go out after a few seconds.

If the warning light does not come on, have it fixed so it will be able to warn you if there is a problem.

If the warning light stays on, or comes on while you are driving, the system may not be working. If this happens, see your dealer/retailer for service.

Hold Mode Light

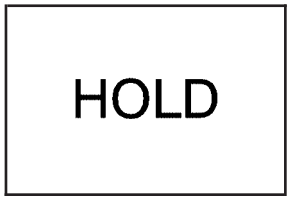

If your vehicle has this feature, this light comes on when the hold mode is active.

If the HOLD mode light flashes, have your vehicle checked. See “Hold Mode” under *Automatic Transmission Operation on page 2-22* for more information.

Engine Coolant Temperature Gage

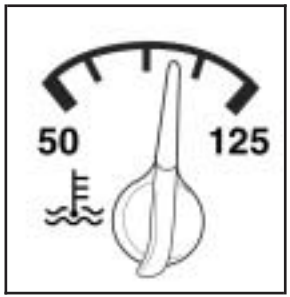

Your vehicle has an engine coolant temperature gage. With the ignition turned to ON/RUN, this gage shows the engine coolant temperature.

If the gage pointer moves into the red area, your engine is too hot. It means that your engine coolant has overheated.

If you have been operating your vehicle under normal driving conditions, you should pull off the road, stop your vehicle and turn off the engine as soon as possible.

See *Engine Overheating on page 5-22*.

Tire Pressure Light

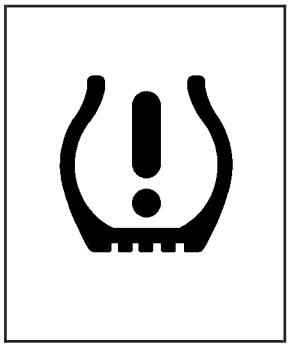

This light comes on briefly when you turn the ignition to ON/RUN.

This light will also come on when one or more of your tires are significantly underinflated.

Stop and check your tires as soon as it is safe to do so. If underinflated, inflate to the proper pressure. See *Tires on page 5-49* for more information.

This light will flash for about one minute and then stay on if a problem is detected with the Tire Pressure Monitor system.

See *Tire Pressure Monitor System on page 5-57* for more information.

Malfunction Indicator Lamp

Check Engine Light

A computer system called OBD II (On-Board Diagnostics-Second Generation) monitors operation of the fuel, ignition, and emission control systems. It makes sure that emissions are at acceptable levels for the life of the vehicle, helping to produce a cleaner environment.

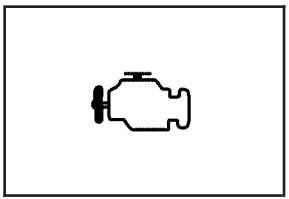

The check engine light comes on to indicate that there is an OBD II problem and service is required.

Malfunctions often are indicated by the system before any problem is apparent. This can prevent more serious damage to your vehicle. This system is also designed to assist your service technician in correctly diagnosing any malfunction.

Notice: **If you keep driving your vehicle with this light on, after a while, the emission controls might not work as well, your vehicle's fuel economy might not be as good, and the engine might not run as smoothly. This could lead to costly repairs that might not be covered by your warranty.**

Notice: **Modifications made to the engine, transmission, exhaust, intake, or fuel system of your vehicle or replacement tires that do not match your vehicle's original tires can affect your vehicle's emission controls and can cause this light to come on. Modifications to these systems could lead to costly repairs not covered by your warranty. This could also result in a failure to pass a required Emission Inspection/Maintenance test. See *Accessories and Modifications on page 5-4*.**

When the ignition is turned to ON/RUN, this light comes on and should go out after a few seconds as a check to show it is working. If the light does not come on, have it repaired. This light also comes on during a malfunction in one of two ways:

- **Light Flashing** — A misfire condition has been detected. A misfire increases vehicle emissions and could damage the emission control system on your vehicle. Diagnosis and service might be required.
- **Light On Steady** — An emission control system malfunction has been detected on your vehicle. Diagnosis and service might be required.

If the Light Is Flashing

The following can prevent more serious damage to your vehicle:

- Reduce vehicle speed.
- Avoid hard accelerations.
- Avoid steep uphill grades.

If the light stops flashing and remains on steady, see “If the Light Is On Steady” following.

If the light continues to flash, when it is safe to do so, stop the vehicle. Find a safe place to park your vehicle. Turn the key off, wait at least 10 seconds and restart the engine. If the light remains on steady, see “If the Light Is On Steady” following. If the light is still flashing, follow the previous steps, and see your dealer/retailer for service as soon as possible.

If the Light Is On Steady

You might be able to correct the emission system malfunction by considering the following:

Did you recently put fuel into your vehicle?

If so, reinstall the fuel cap, making sure to fully install the cap. See *Filling the Tank on page 5-8*. The diagnostic system can determine if the fuel cap has been left off or improperly installed. A loose or missing fuel cap allows fuel to evaporate into the atmosphere. A few driving trips with the cap properly installed should turn the light off.

Did you just drive through a deep puddle of water?

If so, your vehicle’s electrical system might be wet. The condition is usually corrected when the electrical system dries out. A few driving trips should turn the light off.

Have you recently changed brands of fuel?

If so, be sure to fuel your vehicle with quality fuel. See *Gasoline Octane on page 5-6*. Poor fuel quality causes the engine not to run as efficiently as designed. You might notice this as stalling after start-up, stalling when you put the vehicle into gear, misfiring, hesitation on acceleration, or stumbling on acceleration — these conditions might go away once the engine is warmed up. This will be detected by the system and cause the light to turn on.

If you experience one or more of these conditions, change the fuel brand you use. It will require at least one full tank of the proper fuel to turn the light off.

If none of the above steps have made the light turn off, your dealer/retailer can check the vehicle. Your dealer/retailer has the proper test equipment and diagnostic tools to fix any mechanical or electrical problems that might have developed.

Emissions Inspection and Maintenance Programs

Some state/provincial and local governments have or might begin programs to inspect the emission control equipment on your vehicle. Failure to pass this inspection could prevent you from getting a vehicle registration.

Here are some things you need to know to help your vehicle pass an inspection:

Your vehicle will not pass this inspection if the check engine light is on or not working properly.

Your vehicle will not pass this inspection if the OBD (on-board diagnostic) system determines that critical emission control systems have not been completely diagnosed by the system. The vehicle would be considered not ready for inspection. This can happen if you have recently replaced the battery or if the battery has run down. The diagnostic system is designed to evaluate critical emission control systems during normal driving. This can take several days of routine driving. If you have done this and your vehicle still does not pass the inspection for lack of OBD system readiness, your dealer/retailer can prepare the vehicle for inspection.

Oil Pressure Light

⚠ CAUTION:

Do not keep driving if the oil pressure is low. If you do, your engine can become so hot that it catches fire. You or others could be burned. Check your oil as soon as possible and have your vehicle serviced.

Notice: **Lack of proper engine oil maintenance may damage the engine. The repairs would not be covered by your warranty. Always follow the maintenance schedule in this manual for changing engine oil.**

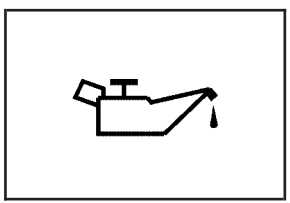

This light will come on briefly when you start your engine as a check to be sure it works. If it does not, have your vehicle serviced.

If the light comes on and stays on, it means that oil is not flowing through your engine properly. You could be low on oil and you might have some other system problem.

Fog Lamp Light

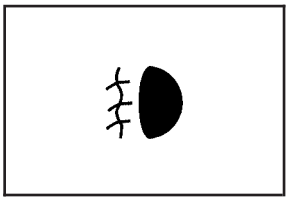

The fog lamp light will come on when the fog lamps are in use.

The light will go out when the fog lamps are turned off. See *Fog Lamps on page 3-14* for more information.

Cruise Control Light

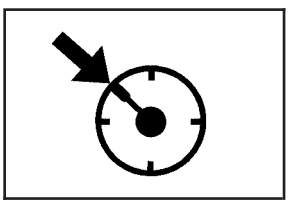

If your vehicle has cruise control, this light comes on whenever you set your cruise control.

The light will go out when the cruise control is turned off. See *Cruise Control on page 3-10* for more information.

Highbeam On Light

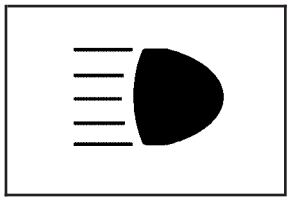

This light comes on when the high-beam headlamps are in use.

See *Headlamp High/Low-Beam Changer on page 3-8* for more information.

Daytime Running Lamps (DRL) Indicator Light

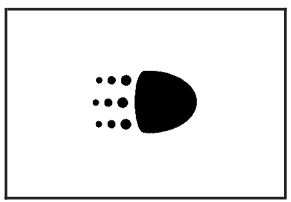

This light turns on whenever the Daytime Running Lamps are on.

See *Daytime Running Lamps (DRL) on page 3-13* for more information.

Door Ajar Light



This light will stay on until all doors are closed and completely latched.

If the key is in the ignition while the driver's door is open, you will also hear a warning chime.

Trunk Ajar Light (Hatchback Only)

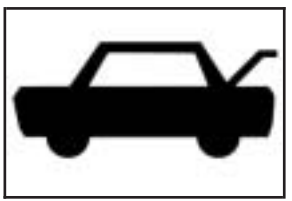

This light will come on when the trunk is not completely closed.

Fuel Gage



Your fuel gage tells you about how much fuel you have left when the ignition is turned to ON/RUN.

When the tank nears empty, the low fuel warning light will come on. You still have a little fuel left, but you should get more soon. See *Low Fuel Warning Light on page 3-40* for more information.

Here are four things that some owners ask about. None of these show a problem with your fuel gage:

- At the service station, the gas pump shuts off before the gage reads full.
- It takes a little more or less fuel to fill up than the gage indicated. For example, the gage may have indicated the tank was half full, but it actually took a little more or less than half the tank's capacity to fill the tank.
- The indicator moves a little when you turn a corner or speed up.
- The gage goes back to empty when you turn off the ignition.

Low Fuel Warning Light

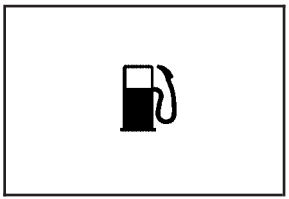

This light comes on when the fuel tank is low on fuel.

The low fuel warning light comes on when there is about 2.0 gallons (7.5 liters) of fuel remaining in the tank.

To turn the light off, add fuel to the fuel tank. See *Filling the Tank on page 5-8*.

Audio System(s)

Determine which radio your vehicle has and then read the pages following to familiarize yourself with its features.

⚠ CAUTION:

This system provides you with far greater access to audio stations and song listings. Giving extended attention to entertainment tasks while driving can cause a crash and you or others can be injured or killed. Always keep your eyes on the road and your mind on the drive — avoid engaging in extended searching while driving.

Keeping your mind on the drive is important for safe driving. See *Defensive Driving on page 4-2*. Here are some ways in which you can help avoid distraction while driving.

While your vehicle is parked:

- Familiarize yourself with all of its controls.
- Familiarize yourself with its operation.
- Set up your audio system by presetting your favorite radio stations, setting the tone, and adjusting the speakers. Then, when driving conditions permit, you can tune to your favorite radio stations using the presets and steering wheel controls if the vehicle has them.

Notice: **Before adding any sound equipment to your vehicle, such as an audio system, CD player, CB radio, mobile telephone, or two-way radio, make sure that it can be added by checking with your dealer/retailer. Also, check federal rules covering mobile radio and telephone units. If sound equipment can be added, it is very important to do it properly. Added sound equipment may interfere with the operation of your vehicle's engine, radio, or other systems, and even damage them. Your vehicle's systems may interfere with the operation of sound equipment that has been added.**

Radio with CD (MP3/WMA)

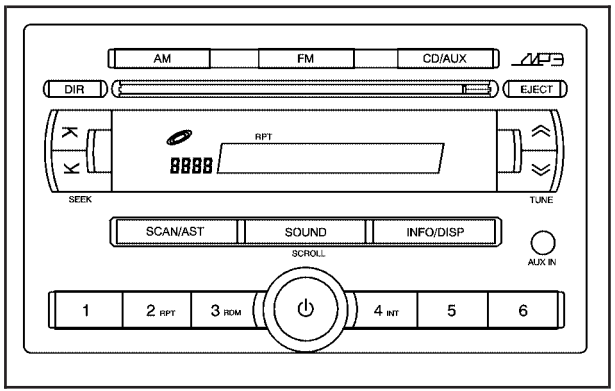

Playing the Radio

⏻ **(Power/Volume):** Press and release this knob to turn the system on. Press and hold this knob for more than two seconds to turn the system off.

Turn this knob clockwise or counterclockwise to increase or decrease the volume.

When the system is on, press and release this knob to mute the system. Press and release this knob again to turn the sound back on.

The previous volume setting is maintained whenever the radio is turned on. The volume can be adjusted by using the volume knob.

Finding a Station

AM: Press this button to switch to an AM station. The display shows the selection.

FM: Press this button to switch to an FM station. The display shows the selection.

TUNE: Press the TUNE arrows to select radio stations.

Press the up TUNE arrow to increase or the down TUNE arrow to decrease the radio frequencies.

SEEK: Press the SEEK arrows to seek radio stations.

Press the up SEEK arrow to seek the next radio station or the down SEEK arrow to seek the previous radio station.

SCAN/AST: Press this button to scan radio stations. The radio goes to a station, plays for a few seconds, then goes to the next station. Press this button again to stop scanning.

The radio scans stations only with a strong signal that are in the selected band.

AST (Automatic Store)

Six FM1 preset stations with the strongest reception in the region can be automatically stored. Press the AST button for more than two seconds. The display shows AUTO SCANNING and then SCANNING flashes on the display. Once the stations are stored, the radio switches to FM1 and the first preset station begins to play. FM-A displays while listening to the automatic stored stations. Press the AM or FM button to cancel automatic store.

Setting Preset Stations

Up to 24 stations (six FM1, six FM2, six AM1, and six AM2), can be programmed on the six numbered buttons, by performing the following steps:

1. Turn the radio on.
2. Press the AM or FM button to select FM1, FM2, AM1 or AM2.
3. Tune in the desired station.
4. Press and hold one of the six numbered buttons for more than two seconds. The preset button number one through six flashes on the display when the station has been set. When that numbered preset button is pressed, that preset station returns.
5. Repeat the Steps 1 through 4 for each preset button.

Order of Sound Function

The order for displayed sound function is BASS, TRE, BAL, FADE, EQ OFF, and VOL (Bass, Treble, Fade, Balance, Equalization Off, and Volume).

Setting the Tone (Bass/Treble)

SOUND (Bass/Treble): Press this button until BAS (bass) displays. Turn the ⏻ knob to increase or to decrease the bass. The display shows the bass level. After making the selection, press this button to set the bass level selection.

Press this button until TRE (treble) displays. Turn the ⏻ knob to increase or to decrease the treble. The display shows the treble level. After making the selection, press this button to set the treble level selection. If a station is weak or has static, decrease the treble.

Adjusting the Speakers (Balance/Fade)

SOUND (Balance/Fade): To adjust the balance between the right and the left speakers, press this button until BAL (balance) displays. Turn the ⏻ knob to increase or to decrease. The display shows the balance level. After making the selection, press this button to set the balance level.

To adjust the fade between the front and the rear speakers, press this button until FAD (fade) displays. Turn the ⏻ knob to increase or to decrease the fade between the front and the rear speakers. The display shows the fade level. After making the selection, press this button to set the fade level.

Setting the Equalization

The order for displayed customized equalization settings are EQ OFF, CLASSIC, DANCE, ROCK, JAZZ, POP, VOICE, TECHNO, EQ OFF.

SOUND (Equalization): Press this button until EQ OFF (equalization) displays to select customized equalization settings designed for classic, dance, rock, jazz, pop, voice and techno. Turn the ⏻ knob until the desired equalization setting displays. After making the selection, press the SOUND button to set the equalization setting.

To cancel an equalization setting, press the SOUND button until EQ OFF displays, turn the ⏻ knob until OFF displays, then press the SOUND button again to set the equalization setting.

Playing a CD

Insert a CD partway into the slot, label side up. The player pulls it in and the CD should begin playing.

When a CD is inserted, CDP displays. As the CD is loading, Filecheck displays. As each new track starts to play, Track and the track number displays.

If the ignition or radio is turned off with a CD in the player, it stays in the player. When a CD is in the player and the ignition is turned on, the radio must be turned on before the CD starts playback. When the ignition and radio are turned on, the CD starts playing where it stopped, if it was the last selected audio source.

The CD player can play the smaller 3 inch (8 cm) single CDs with an adapter ring. Full-size CDs and the smaller CDs are loaded in the same manner.

If playing a CD-R, the sound quality can be reduced due to CD-R quality, the method of recording, the quality of the music that has been recorded, and the way the CD-R has been handled. There can be an increase in skipping, difficulty in finding tracks, and/or difficulty

in loading and ejecting. If these problems occur, check the bottom surface of the CD. If the surface of the CD is damaged, such as cracked, broken, or scratched, the CD will not play properly. If the surface of the CD is soiled, see *Care of Your CDs on page 3-63* for more information.

If there is no apparent damage, try a known good CD.

Do not add any label to a CD, it could get caught in the CD player. If a CD is recorded on a personal computer and a description label is needed, try labeling the top of the recorded CD with a marking pen.

Notice: **If a label is added to a CD, or more than one CD is inserted into the slot at a time, or an attempt is made to play scratched or damaged CDs, the CD player could be damaged. While using the CD player, use only CDs in good condition without any label, load one CD at a time, and keep the CD player and the loading slot free of foreign materials, liquids, and debris.**

If an error displays, see “CD Messages” later in this section.

2 RPT (Repeat): Press this button to repeat the current track. RPT displays. Press this button again to turn off repeat play.

3 RDM (Random): Press this button to hear the tracks in random, rather than sequential, order. RDM displays. Press this button again to turn off random play.

4 INT (Scan): Press this button to listen to the first few seconds of each track on each loaded CD. INTRO displays. To stop scanning press this button again. The current track begins to play.

TUNE (Previous/Next Track): Press the up TUNE arrow to go to the next track. The track number displays. Press the down TUNE arrow to go to the start of the current track. The player continues moving forward or backward through the CD with each press of the up or down arrows.

AM: Press this button to listen to the radio while a CD is playing. The inactive CD remains inside the radio for future listening.

FM: Press this button to listen to the radio while a CD is playing. The inactive CD remains inside the radio for future listening.

CD/AUX: Press this button to play a CD while listening to the radio. CDP displays when the CD player has been selected. The CD symbol displays when a CD is loaded.

Press this button while a CD is playing to pause the CD. PAUSE flashes on the display. Press this button again to start playing the CD.

EJECT: Press this button to eject a CD. This is the only way a CD can be ejected from the player. The CD can eject when the ignition or the radio is turned off.

Playing an MP3/WMA CD-R Disc

If you have a radio with a single CD (MP3), it is capable of playing an MP3/WMA CD-R disc. For more information on how to play an MP3/WMA CD-R disc, see “Using an MP3” in the index.

CD Messages

CHECK CD: If this message displays and/or the CD comes out, it could be for one of the following reasons:

- It is very hot. When the temperature returns to normal, the CD should play.
- You are driving on a very rough road. When the road becomes smoother, the CD should play.
- The CD is dirty, scratched, wet, or upside down.
- The air is very humid. If so, wait about an hour and try again.
- The format of the CD might not be compatible. See *Using an MP3 (Radio with CD Player) on page 3-54* or *Using an MP3 (Radio with Six-Disc Player) on page 3-58* later in this section.
- There could have been a problem while burning the CD.
- The label could be caught in the CD player.

If the CD is not playing correctly, for any other reason, try a known good CD.

If any error occurs repeatedly or if an error cannot be corrected, contact your dealer/retailer. If the radio displays an error message, write it down and provide it to your dealer/retailer when reporting the problem.

Using the Auxiliary Input Jack

AUX IN (Auxiliary Input): The radio system has an auxiliary input jack located on the lower right side of the faceplate. This is not an audio output. Do not plug the headphone set into the front auxiliary input jack. An external audio device such as an iPod, laptop computer, MP3 player, CD changer, or cassette tape player, etc. can be connected to the auxiliary input jack for use as another source for audio listening.

The auxiliary input jack also accepts cell phone connectors. Plug the cell phone connector into the auxiliary input jack to hear a person speaking on a cell phone during conversation through the vehicle sound system.

Drivers are encouraged to set up any auxiliary device while the vehicle is in PARK (P). See *Defensive Driving on page 4-2* for more information on driver distraction.

To use a portable audio player, connect a 3.5 mm (1/8 inch) cable to the radio's front auxiliary input jack. While a device is connected, turn the portable audio player on and press the radio CD/AUX button to hear audio from the device over the vehicle speakers.

CD/AUX (CD/Auxiliary): Press this button once to play a CD while a portable audio device is playing. Press this button a second time for the system to begin playing audio from the connected portable audio player. Once in this mode, Auxinput appears on the display. If the auxiliary jack does not detect the presence of an output jack, the auxiliary mode does not display.

⏻ **(Power/Volume):** Turn the ⏻ knob clockwise or counterclockwise to increase or decrease the volume of the portable player. Additional adjustments on a portable device might be needed to get the desired volume.

Radio with Six-Disc CD (MP3/WMA)

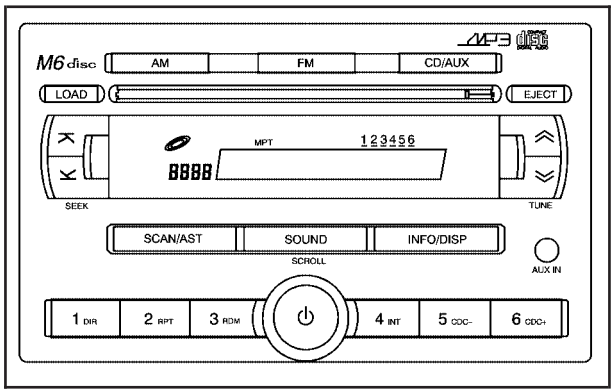

Playing the Radio

⏻ **(Power/Volume):** Press and release this knob to turn the system on. Press and hold this knob for more than two seconds to turn the system off.

Turn this knob clockwise or counterclockwise to increase or decrease the volume.

When the system is on, press and release this knob to mute the system. Press and release this knob again to turn the sound back on.

The previous volume setting is maintained whenever the radio is turned on. The volume can be adjusted by using the volume knob.

Finding a Station

AM: Press this button to switch to an AM station. The display shows the selection.

FM: Press this button to switch to an FM station. The display shows the selection.

TUNE: Press the TUNE arrows to select radio stations.

Press the up TUNE arrow to increase or the down TUNE arrow to decrease the radio frequencies.

SEEK: Press the SEEK arrows to seek radio stations.

Press the up SEEK arrow to seek the next radio station or the down SEEK arrow to seek the previous radio station.

SCAN/AST: Press this button to scan radio stations. The radio goes to a station, plays for a few seconds, then goes to the next station. Press this button again to stop scanning.

The radio only scans stations with a strong signal that are in the selected band.

AST (Automatic Store)

Six FM1 preset stations with the strongest reception in the region can be automatically stored. Press the AST button for more than one second. The display shows AUTO SCANNING and then SCANNING flashes on the display. Once the stations are stored, the radio switches to FM1 and the first preset station begins to play. FM-A displays while listening to the automatic stored stations. Press the AM or FM button to cancel automatic store.

Setting Preset Stations

Up to 36 stations (six FM1, six FM2, six FM-A, six AM1, six AM2, and six AM-A), can be programmed on the six numbered buttons, by performing the following steps:

1. Turn the radio on.
2. Press the AM or FM button to select FM1, FM2, FM-A, AM1, AM2, or AM-A.
3. Tune in the desired station.
4. Press and hold one of the six numbered pushbuttons for more than two seconds. The channel number (CH#1 through CH#6) flashes on the display when the station has been set. When that numbered preset button is pressed, that preset station returns.
5. Repeat the Steps 1 through 4 for each preset button.

Order of Sound Function

The order for displayed sound function is BASS, TRE, FAD, BAL, EQ OFF, and VOL (Bass, Treble, Fade, Balance, Equalization Off, and Volume).

Setting the Tone (Bass/Midrange/Treble)

SOUND (Bass/Midrange/Treble): Press this button until BAS (bass) displays. Turn the ⏻ knob to increase or to decrease the bass. The display shows the bass level. After making the selection, press this button to select the bass level.

Press this button until MID (midrange) displays. Turn the ⏻ knob to increase or to decrease the midrange. The display shows the midrange level. After making the selection, press this button to select the midrange level.

Press this button until TRE (treble) displays. Turn the ⏻ knob to increase or to decrease the treble. The display shows the treble level. After making the selection, press this button to select the treble level. If a station is weak or has static, decrease the treble.

Adjusting the Speakers (Balance/Fade)

SOUND (Balance/Fade): To adjust the balance between the right and the left speakers, press this button until BAL (balance) displays. Turn the ⏻ knob to increase or to decrease the balance. The display shows the balance level. After making the selection, press this button to select the balance level.

To adjust the fade between the front and the rear speakers, press this button until FAD (fade) displays. Turn the ⏻ knob to increase or to decrease the fade between the front and the rear speakers. The display shows the fade level. After making the selection, press this button to select the fade level.

Setting the EQ (Equalization)

SOUND (Equalization): Press this button until EQ OFF (equalization) displays to select customized equalization settings designed for classic, dance, rock, jazz, pop, voice, and techno. Turn the ⏻ knob until the desired equalization setting displays. After making the selection, press the SOUND button to select the equalization setting.

To cancel an equalization setting, press the SOUND button until EQ OFF displays. Turn the ⏻ knob until OFF displays, then press the SOUND button again to select the equalization setting.

Order of Sound Function

The order for displayed sound function is EQ OFF, CLASSIC, DANCE, ROCK, JAZZ, POP, VOICE, TECHNO, and EQ OFF.

Playing a CD(s)

LOAD: Press this button to load CDs into the CD player. This CD player holds up to six CDs.

1. Press and release the load button. A message to select a slot number from 1 through 6 displays.
2. Press the desired slot number. Wait for the message to insert the disc.
3. Load a CD. Insert the CD partway into the slot, label side up. The player pulls the CD in.

To insert multiple CDs, do the following:

1. Press and hold the load button for two seconds. A beep sounds and a message to load multiple discs displays.
2. Follow the displayed instruction on when to insert the discs. The CD player takes up to six CDs.
3. Press the LOAD button again to cancel loading more CDs.

As each CD is inserted, CDP displays. As each CD is loading, Filecheck displays.

Once playback begins, the track and track number displays.

If the ignition or radio is turned off with a CD in the player, it stays in the player. While a CD is in the player and the ignition is turned on, the radio must be turned on before the current CD starts playback. When the ignition and radio are turned on, the CD starts playing where it stopped, if it was the last selected audio source.

The CD player can play the smaller 3 inch (8 cm) single CDs with an adapter ring. Full-size CDs and the smaller CDs are loaded in the same manner.

If playing a CD-R, the sound quality can be reduced due to CD-R quality, the method of recording, the quality of the music that has been recorded, and the way the CD-R has been handled. There can be an increase in skipping, difficulty in finding tracks, and/or difficulty in loading and ejecting. If these problems occur, check the bottom surface of the CD. If the surface of the CD is damaged, such as cracked, broken, or scratched, the CD does not play properly. If the surface of the CD is soiled, see *Care of Your CDs on page 3-63* for more information.

If there is no apparent damage, try a known good CD.

Do not add any label to a CD, it could get caught in the CD player. If a CD is recorded on a personal computer and a description label is needed, try labeling the top of the recorded CD with a marking pen.

Notice: **If a label is added to a CD, or more than one CD is inserted into the slot at a time, or an attempt is made to play scratched or damaged CDs, the CD player could be damaged. While using the CD player, use only CDs in good condition without any label, load one CD at a time, and keep the CD player and the loading slot free of foreign materials, liquids, and debris.**

If an error displays, see “CD Messages” later in this section.

2 RPT (Repeat): Press this button to repeat the current track. RPT displays. Press this button again to turn off repeat play.

3 RDM (Random): Press this button to hear the tracks in random, rather than sequential, order. RDM displays.

Press this button again to turn off random play.

4 INT (Scan): Press this button to listen to the first few seconds of each track on each loaded CD. INTRO displays. To stop scanning press this button again. The current track begins to play.

5 CDC – (Previous CDC): Press this button to go back to the start of the previous CDC.

6 CDC + (Next CDC): Press this button to go forward to the start of the next CDC.

TUNE (Previous/Next Track): Press the up TUNE arrow to go to the next track. The track number displays. Press the down TUNE arrow to go to the start of the current track. The player continues moving forward or backward through the CD with each press of the up or down arrows.

AM: Press this button to listen to the radio while a CD is playing. The inactive CD remains inside the radio for future listening.

FM: Press this button to listen to the radio while a CD is playing. The inactive CD remains inside the radio for future listening.

CD/AUX: Press this button to play a CD while listening to the radio. CDP displays when the CD player has been selected. The CD symbol displays when a CD is loaded.

Press this button while a CD is playing to pause the CD. PAUSE flashes on the display. Press this button again to start playing the CD.

EJECT: Press this button to eject the CD. Press and hold this button to eject all CDs. This is the only way a CD can be ejected from the player. The CD can eject when the ignition or the radio is turned off.

Playing an MP3/WMA CD-R Disc

If your vehicle has a radio with a six-disc CD player, it is capable of playing an MP3/WMA CD-R disc. For more information on how to play an MP3/WMA disc, see “Using an MP3” in the index.

CD Messages

CHECK CD: If this message displays and/or the CD comes out, it could be for one of the following reasons:

- It is very hot. When the temperature returns to normal, the CD should play.
- You are driving on a very rough road. When the road becomes smoother, the CD should play.
- The CD is dirty, scratched, wet, or upside down.
- The air is very humid. If so, wait about an hour and try again.
- The format of the CD might not be compatible. See “Using an MP3” later in this section.
- There could have been a problem while burning the CD.
- The label could be caught in the CD player.

If the CD is not playing correctly, for any other reason, try a known good CD.

If any error occurs repeatedly or if an error cannot be corrected, contact your dealer/retailer. If the radio displays an error message, write it down and provide it to your dealer/retailer when reporting the problem.

Using the Auxiliary Input Jack

AUX IN (Auxiliary Input): The radio system has an auxiliary input jack located on the lower right side of the faceplate. This is not an audio output. Do not plug the headphone set into the front auxiliary input jack. An external audio device such as an iPod, laptop computer, MP3 player, CD changer, or XM™ receiver, etc. can be connected to the auxiliary input jack for use as another source for audio listening.

The auxiliary input jack also accepts cell phone connectors. Plug the cell phone connector into the auxiliary input jack to hear a person speck on a cell phone during a conversation through the vehicle sound system.

Drivers are encouraged to set up any auxiliary device while the vehicle is in PARK (P). See *Defensive Driving on page 4-2* for more information on driver distraction.

To use a portable audio player, connect a 3.5 mm (1/8 inch) cable to the radio's front auxiliary input jack. While a device is connected, turn the portable audio player on and press the radio CD/AUX button to hear audio from the device over the vehicle speakers.

⏻ **(Power/Volume):** Turn this knob clockwise or counterclockwise to increase or decrease the volume of the portable player. Additional adjustments on a portable device might be needed to get the desired volume.

CD/AUX (CD/Auxiliary): Press this button once to play a CD while a portable audio device is playing. Press this button a second time for the system to begin playing audio from the connected portable audio player. Once in this mode, Auxinput displays. If the auxiliary jack does not detect the presence of an output jack, the auxiliary mode does not display.

Using an MP3 (Radio with CD Player)

MP3/WMA CD-R Disc

MP3 Format

If you burn your own MP3/WMA disc on a personal computer:

- Make sure the MP3/WMA files are recorded on a CD-R disc.
- Do not mix standard audio and MP3/WMA files on one disc.
- Make sure each MP3/WMA file has a .m3u or.wma extension, other file extensions might not work.
- Files can be recorded with a variety of fixed or variable bit rates. Song title, artist name, and album are available for display by the radio when recorded using ID3 tags version 1 and 2.
- Create a folder structure that makes it easy to find songs while driving. Organize songs by albums using one folder for each album. Each folder or album should contain 18 songs or less.
- Make sure to finalize the disc when burning an MP3/WMA disc, using multiple sessions. It is usually better to burn the disc all at once.

The player is able to read and play a maximum of 50 folders, five sessions, and 999 files. Long file names and folder names can use more disc memory space than necessary. To conserve space on the disc, minimize the length of the file and folder names. An MP3/WMA CD that was recorded using no file folders can also be played. The system can support up to eight folders in depth, though, keep the depth of the folders to a minimum in order to keep down the complexity and confusion in trying to locate a particular folder during playback. If a CD contains more than the maximum of 50 folders, five sessions, and 999 files, the player lets you access and navigate up to the maximum, but all items over the maximum are ignored.

Root Directory

The root directory is treated as a folder. If the root directory has compressed audio files, the directory is displayed as ROOT. All files contained directly under the root directory are accessed prior to any other directory.

Empty Directory or Folder

If a root directory or a folder exists somewhere in the file structure that contains only folders/subfolders and no compressed files directly beneath them, the player advances to the next folder in the file structure that contains compressed audio files. The empty folder does not display.

No Folder

When a CD contains only compressed files, the files are located under the root folder. The next and previous folder function does not function on a CD that was recorded without folders or playlists. When displaying the name of the folder the radio displays ROOT.

When a CD contains only compressed audio files, but no folders, all files are located under the root folder. When the radio displays the name of the folder, the radio displays ROOT.

Order of Play

Tracks are played in the following order:

- Playback begins from the first track under the root directory.
- When all tracks from the root directory have played, playback continues from files, according to their numerical listing.
- After playing the last track from the last folder, the player begins playing again at the first track of the first folder or root directory.

File System and Naming

The song name in the ID3 tag is displayed. If the song name is not present in the ID3 tag, then the radio displays the file name without the extension (such as MP3/WMA) instead.

Track names longer than 32 characters or four pages are shortened. Parts of words on the last page of text and the extension of the filename does not display.

Playing an MP3/WMA

While the ignition is on, insert a CD partway into the slot, label side up. The player pulls it in, Loading, then Filecheck, and then MP3 or WMA displays. The CD should begin playing. A CD plays only while the ignition is in the ON/RUN or ACC/ACCESSORY.

As each new track starts to play, the track number, and the song name displays.

If the ignition or radio is turned off with a CD in the player, it stays in the player. When a CD is in the player and the ignition is turned on, the radio must be turned on before the CD starts playback. When the ignition and radio are turned on, the CD starts playing where it stopped, if it was the last selected audio source.

The CD player can play the smaller 3 inch (8 cm) single CDs with an adapter ring. Full-size CDs and the smaller CDs are loaded in the same manner.

If playing a CD-R, the sound quality can be reduced due to CD-R quality, the method of recording, the quality of the music that has been recorded, and the way the CD-R has been handled. There can be an increase in skipping, difficulty in finding tracks, and/or difficulty in loading and ejecting. If these problems occur, check the bottom surface of the CD. If the surface of the CD is damaged, such as cracked, broken, or scratched, the CD does not play properly. If the surface of the CD is soiled, see *Care of Your CDs on page 3-63* for more information.

If there is no apparent damage, try a known good CD.

Do not add any label to a CD, it could get caught in the CD player. If a CD is recorded on a personal computer and a description label is needed, try labeling the top of the recorded CD with a marking pen.

Notice: **If a label is added to a CD, or more than one CD is inserted into the slot at a time, or an attempt is made to play scratched or damaged CDs, the CD player could be damaged. While using the CD player, use only CDs in good condition without**

any label, load one CD at a time, and keep the CD player and the loading slot free of foreign materials, liquids, and debris.

If an error displays, see “CD Messages” later in this section.

All of the CD functions work the same while playing an MP3/WMA, except for those listed here. See “Playing a CD” earlier for more information.

SCROLL (MP3/WMA Mode Only): Press the SOUND button for longer than two seconds. The song title or other available information of a song scrolls on/off. The offset is scroll on. The scroll mode can be changed only when the SOUND button is pressed for longer than two seconds.

DIR (Directory): Press this button to repeat the tracks in the current directory. DIR displays.

Press this button again to repeat the tracks in all of the directories. ALL displays.

Press this button again to turn off repeat play.

SEEK (Previous/Next Folder) (in MP3/WMA Mode): Press the SEEK arrows to change the folder. If CD-R does not have any folder, “ROOT” flashes on the display for a short time.

TUNE (Previous/Next Track): Press the up TUNE arrow to go to the next track. The track number displays. Press the down TUNE arrow to go to the start of the current track. The player continues moving forward or backward through the CD with each press of the TUNE arrows.

INFO/DISP (Information/Display): Press this button to display additional text information related to the current MP3/WMA song. A choice of additional information such as: Song Title, Album Title, and Artist. Bit rate might also display.

When information is not available, No Info (information) displays.

Press this button for longer than two seconds to change display mode.

Using an MP3 (Radio with Six-Disc Player)

MP3/WMA CD-R Disc

MP3 Format

If you burn your own MP3/WMA disc on a personal computer:

- Make sure the MP3/WMA files are recorded on a CD-R disc.
- Do not mix standard audio and MP3/WMA files on one disc.
- Make sure each MP3/WMA file has a .m3u or.wma extension, other file extensions might not work.
- Files can be recorded with a variety of fixed or variable bit rates. Song title, artist name, and album are available for display by the radio when recorded using ID3 tags version 1 and 2.
- Create a folder structure that makes it easy to find songs while driving. Organize songs by albums using one folder for each album. Each folder or album should contain 18 songs or less.
- Make sure to finalize the disc when burning an MP3/WMA disc, using multiple sessions. It is usually better to burn the disc all at once.

The player is able to read and play a maximum of 50 folders, five sessions, and 999 files. Long file names and folder names might use more disc memory space than necessary. To conserve space on the disc, minimize the length of the file and folder names. An MP3/WMA CD that was recorded using no file folders can also be played. The system can support up to eight folders in depth, though, keep the depth of the folders to a minimum in order to keep down the difficulty and confusion in trying to locate a particular folder during playback. If a CD contains more than the maximum of 50 folders, five sessions, and 999 files, the player lets you access and navigate up to the maximum, but all items over the maximum is ignored.

Root Directory

The root directory is treated as a folder. If the root directory has compressed audio files, the directory is displayed as ROOT. All files contained directly under the root directory are accessed prior to any other directory.

Empty Directory or Folder

If a root directory or a folder exists somewhere in the file structure that contains only folders/subfolders and no compressed files directly beneath them, the player advances to the next folder in the file structure that contains compressed audio files. The empty folder does not display.

No Folder

When a CD contains only compressed files, the files are located under the root folder. The next and previous folder function does not function on a CD that was recorded without folders or playlists. When displaying the name of the folder the radio displays ROOT.

When a CD contains only compressed audio files, but no folders, all files are located under the root folder. When the radio displays the name of the folder, the radio displays ROOT.

Order of Play

Tracks is played in the following order:

- Playback begins from the first track under the root directory.
- When all tracks from the root directory have played, playback continues from files, according to their numerical listing.
- After playing the last track from the last folder, the player begins playing again at the first track of the first folder or root directory.

File System and Naming

The song name in the ID3 tag is displayed. If the song name is not present in the ID3 tag, then the radio displays the file name without the extension (such as MP3/WMA) instead.

Track names longer than 32 characters or four pages are shortened. Parts of words on the last page of text and the extension of the filename does not display.

Playing an MP3/WMA

While the ignition is on, insert a CD partway into the slot, label side up. The player pulls it in, Loading, then Filecheck, and then MP3 or WMA displays. The CD should begin playing. A CD plays only while the ignition is in the ON/RUN or ACC/ACCESSORY.

As each new track starts to play, the track number, and the song name displays.

If the ignition or radio is turned off with a CD in the player, it stays in the player. When a CD is in the player and the ignition is turned on, the radio must be turned on before the CD starts playback. When the ignition and radio are turned on, the CD starts playing where it stopped, if it was the last selected audio source.

The CD player can play the smaller 3 inch (8 cm) single CDs with an adapter ring. Full-size CDs and the smaller CDs are loaded in the same manner.

If playing a CD-R, the sound quality can be reduced due to CD-R quality, the method of recording, the quality of the music that has been recorded, and the way the CD-R has been handled. There can be an increase in skipping, difficulty in finding tracks, and/or difficulty in loading and ejecting. If these problems occur, check the bottom surface of the CD. If the surface of the CD is damaged, such as cracked, broken, or scratched, the CD will not play properly. If the surface of the CD is soiled, see *Care of Your CDs on page 3-63* for more information.

If there is no apparent damage, try a known good CD.

Do not add any label to a CD, it could get caught in the CD player. If a CD is recorded on a personal computer and a description label is needed, try labeling the top of the recorded CD with a marking pen.

Notice: **If a label is added to a CD, or more than one CD is inserted into the slot at a time, or an attempt is made to play scratched or damaged CDs, the CD player could be damaged. While using the CD player, use only CDs in good condition without any label, load one CD at a time, and keep the CD player and the loading slot free of foreign materials, liquids, and debris.**

If an error displays, see “CD Messages” later in this section.

All of the CD functions work the same while playing an MP3/WMA, except for those listed here. See “Playing a CD” earlier for more information.

SCROLL (MP3/WMA Mode Only): Press the SOUND button for longer than two seconds. The song title and other available information of the song scrolls on/off. The offset is scroll on. The scroll mode can be changed only when the SOUND button is pressed for longer than two seconds.

1 DIR (Directory): Press this button to repeat the tracks in the current directory. DIR displays.

Press this button again to repeat the tracks in all of the directories. ALL displays.

Press this button again to turn off repeat play.

SEEK (Previous/Next Folder) (in MP3/WMA Mode): Press the SEEK arrows to change the folder. If CD-R does not have any folder, “ROOT” flashes on the display for a short time.

TUNE (Previous/Next Track): Press the up TUNE arrow to go to the next track. The track number displays. Press the down TUNE arrow to go to the start of the current track. The player continues moving forward or backward through the CD with each press of the up or down arrows.

INFO/DISP (Information/Display): Press this button to display additional text information related to the current MP3/WMA song. A choice of additional information such as: Song Title, Album Title, and Artist. Bit rate might also display.

When information is not available, No Info (information) displays.

Press this button for longer than two seconds to change display mode.

Audio Steering Wheel Controls

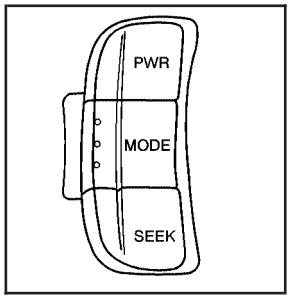

Front View of the Steering Wheel Controls

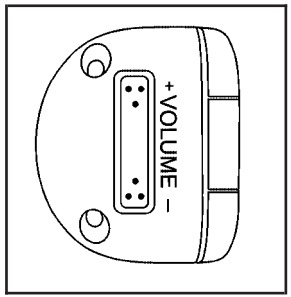

Side View of the Volume Control

If your vehicle has this feature, some audio controls can be adjusted at the steering wheel. They include the following:

PWR (Power): Press and release this knob to turn the system on. Press and hold this knob for more than two seconds to turn the system off.

When the system is on, press and release this knob to mute the system. Press and release this knob again to turn the sound back on.

SEEK: Press and release this button within 0.5 seconds to go to the next preset station.

Press and hold this button for longer than 0.5 seconds to go to the next radio station. The radio seeks stations only with a strong signal that are in the selected band.

When playing a CD, press and release this button within 0.5 seconds to go to the next track. Press and hold this button for longer than 0.5 seconds to fast forward through the tracks.

MODE: Press and release this button to select FM1, FM2, FM-A, AM1, AM2, AM-A, or CD (MP3). Press and release this button multiple times to cycle through the audio playback options that are available on your vehicle.

+ VOLUME –: Press the toggle bar located below the + VOLUME – to adjust the volume. Press the left side of the toggle bar, below the + (plus) sign to increase the volume. Press the right side of the toggle bar, below the – (minus) sign to decrease the volume.

Radio Reception

Frequency interference and static can occur during normal radio reception if items such as cell phone chargers, vehicle convenience accessories, and external electronic devices are plugged into the accessory power outlet. If there is interference or static, unplug the item from the accessory power outlet.

AM

The range for most AM stations is greater than for FM, especially at night. The longer range can cause station frequencies to interfere with each other. For better radio reception, most AM radio stations boost the power levels during the day, and then reduce these levels during the night. Static can also occur when things like storms and power lines interfere with radio reception. When this happens, try reducing the treble on your radio.

FM Stereo

FM stereo gives the best sound, but FM signals reach only about 10 to 40 miles (16 to 65 km). Tall buildings or hills can interfere with FM signals, causing the sound to fade in and out.

Care of Your CDs

Handle CDs carefully. Store them in their original cases or other protective cases and away from direct sunlight and dust. The CD player scans the bottom surface of the disc. If the surface of a CD is damaged, such as cracked, broken, or scratched, the CD does not play properly or not at all. If the surface of a CD is soiled, take a soft, lint free cloth or dampen a clean, soft cloth in a mild, neutral detergent solution mixed with water, and clean it. Make sure the wiping process starts from the center to the edge.

Do not touch the bottom side of a CD while handling it; this could damage the surface. Pick up CDs by grasping the outer edges or the edge of the hole and the outer edge.

Care of the CD Player

Do not use CD lens cleaners for CD players because the lens of the CD optics can become contaminated by lubricants.

Integrated Windshield Antenna

The antenna is located in the windshield. It is a very thin metal layer that outlines near the edges of the windshield. The connector is at the top of the windshield, where the headliner ends. For proper radio reception, the antenna connector at the top of the windshield needs to be properly attached to the post on the glass.

If difficulty with remote transmitters is experienced, such as a garage door opener, try pointing the device through the very top of the windshield.

Notice: **Using a razor blade or sharp object to clear the inside windshield may damage the antenna. Repairs would not be covered by your warranty. Do not clear the inside windshield with sharp objects.**

Make sure the inside surface of the windshield is not scratched and that the lines on the glass are not damaged. If the inside surface is damaged, it could interfere with radio reception.

NOTES

Section 4 Driving Your Vehicle

Your Driving, the Road, and Your Vehicle 4-2
- Defensive Driving 4-2
- Drunk Driving 4-2
- Control of a Vehicle 4-3
- Braking 4-3
- Antilock Brake System (ABS) 4-4
- Braking in Emergencies 4-5
- Steering 4-6
- Off-Road Recovery 4-8
- Passing 4-8
- Loss of Control 4-8
- Driving at Night 4-10
- Driving in Rain and on Wet Roads 4-10
- Before Leaving on a Long Trip 4-11
- Highway Hypnosis 4-12
- Hill and Mountain Roads 4-12
- Winter Driving 4-13
- If Your Vehicle is Stuck in Sand, Mud, Ice, or Snow 4-17
- Rocking Your Vehicle to Get It Out 4-18
- Loading Your Vehicle 4-18

Towing 4-23
- Towing Your Vehicle 4-23
- Recreational Vehicle Towing 4-23
- Towing a Trailer 4-25

Your Driving, the Road, and Your Vehicle

Defensive Driving

Defensive driving means “always expect the unexpected.” The first step in driving defensively is to wear your safety belt — See *Safety Belts: They Are for Everyone on page 1-10*.

⚠ CAUTION:

Assume that other road users (pedestrians, bicyclists, and other drivers) are going to be careless and make mistakes. Anticipate what they might do and be ready. In addition:

- **Allow enough following distance between you and the driver in front of you.**
- **Focus on the task of driving.**

Driver distraction can cause collisions resulting in injury or possible death. These simple defensive driving techniques could save your life.

Drunk Driving

⚠ CAUTION:

Drinking and then driving is very dangerous. Your reflexes, perceptions, attentiveness, and judgment can be affected by even a small amount of alcohol. You can have a serious — or even fatal — collision if you drive after drinking. Do not drink and drive or ride with a driver who has been drinking. Ride home in a cab; or if you are with a group, designate a driver who will not drink.

Death and injury associated with drinking and driving is a global tragedy.

Alcohol affects four things that anyone needs to drive a vehicle: judgment, muscular coordination, vision, and attentiveness.

Police records show that almost 40 percent of all motor vehicle-related deaths involve alcohol. In most cases, these deaths are the result of someone who was drinking and driving. In recent years, more than 17,000 annual motor vehicle-related deaths have been associated with the use of alcohol, with about 250,000 people injured.

For persons under 21, it is against the law in every U.S. state to drink alcohol. There are good medical, psychological, and developmental reasons for these laws.

The obvious way to eliminate the leading highway safety problem is for people never to drink alcohol and then drive.

Medical research shows that alcohol in a person's system can make crash injuries worse, especially injuries to the brain, spinal cord, or heart. This means that when anyone who has been drinking — driver or passenger — is in a crash, that person's chance of being killed or permanently disabled is higher than if the person had not been drinking.

Control of a Vehicle

The following three systems help to control your vehicle while driving — brakes, steering, and accelerator. At times, as when driving on snow or ice, it is easy to ask more of those control systems than the tires and road can provide. Meaning, you can lose control of your vehicle.

Adding non-dealer/non-retailer accessories can affect your vehicle's performance. See *Accessories and Modifications on page 5-4*.

Braking

See *Brake System Warning Light on page 3-31*.

Braking action involves perception time and reaction time. First, you have to decide to push on the brake pedal. That is perception time. Then you have to bring up your foot and do it. That is reaction time.

Average reaction time is about three-fourths of a second. But that is only an average. It might be less with one driver and as long as two or three seconds or more with another. Age, physical condition, alertness, coordination, and eyesight all play a part. So do alcohol, drugs, and frustration. But even in three-fourths of a second, a vehicle moving at 60 mph (100 km/h) travels 66 feet (20 m). That could be a lot of distance in an emergency, so keeping enough space between your vehicle and others is important.

And, of course, actual stopping distances vary greatly with the surface of the road, whether it is pavement or gravel; the condition of the road, whether it is wet, dry, or icy; tire tread; the condition of the brakes; the weight of the vehicle; and the amount of brake force applied.

Avoid needless heavy braking. Some people drive in spurts — heavy acceleration followed by heavy braking — rather than keeping pace with traffic. This is a mistake. The brakes might not have time to cool between hard stops. The brakes will wear out much faster if you do a lot of heavy braking. If you keep pace with the traffic and allow realistic following distances, you will eliminate a lot of unnecessary braking. That means better braking and longer brake life.

If your vehicle's engine ever stops while you are driving, brake normally but do not pump the brakes. If you do, the pedal could get harder to push down. If the engine stops, you will still have some power brake assist. But you will use it when you brake. Once the power assist is used up, it can take longer to stop and the brake pedal will be harder to push.

Adding non-dealer/non-retailer accessories can affect your vehicle's performance. See *Accessories and Modifications on page 5-4*.

Antilock Brake System (ABS)

Your vehicle might have the Antilock Brake System (ABS), an advanced electronic braking system that will help prevent a braking skid.

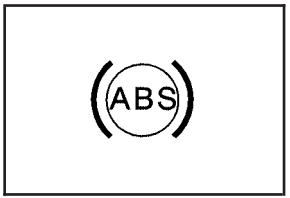

If your vehicle has ABS, this warning light on the instrument panel will come on briefly when you start your vehicle.

Let us say the road is wet and you are driving safely. Suddenly, an animal jumps out in front of you. You slam on the brakes and continue braking. Here is what happens with ABS:

A computer senses that wheels are slowing down. If one of the wheels is about to stop rolling, the computer will separately work the brakes at each wheel.

ABS can change the brake pressure faster than any driver could. The computer is programmed to make the most of available tire and road conditions. This can help you steer around the obstacle while braking hard.

As you brake, the computer keeps receiving updates on wheel speed and controls braking pressure accordingly.

Remember: ABS does not change the time you need to get your foot up to the brake pedal or always decrease stopping distance. If you get too close to the vehicle in front of you, you will not have time to apply the brakes if that vehicle suddenly slows or stops. Always leave enough room up ahead to stop, even though you have ABS.

Using ABS

Do not pump the brakes. Just hold the brake pedal down firmly and let antilock work for you. You might feel a slight brake pedal pulsation or notice some noise, but this is normal.

Braking in Emergencies

At some time, nearly every driver gets into a situation that requires hard braking.

If you have ABS, you can steer and brake at the same time. However, if you do not have ABS, your first reaction — to hit the brake pedal hard and hold it down — might be the wrong thing to do. Your wheels can stop rolling. Once they do, the vehicle cannot respond to your steering. Momentum will carry it in whatever direction it was headed when the wheels stopped rolling. That could be off the road, into the very thing you were trying to avoid, or into traffic.

If you do not have ABS, use a “squeeze” braking technique. This will give you maximum braking while maintaining steering control. You can do this by pushing on the brake pedal with steadily increasing pressure.

In an emergency, you will probably want to squeeze the brakes hard without locking the wheels. If you hear or feel the wheels sliding, ease off the brake pedal. This will help you retain steering control. If you do have ABS, it is different. See *Antilock Brake System (ABS) on page 4-4*.

In many emergencies, steering can help you more than even the very best braking.

Steering

Power Steering

If you lose power steering assist because the engine stops or the system is not functioning, you can steer but it will take much more effort.

Speed Sensitive Power Steering (SSPS)

If your vehicle has this optional steering system, the steering system continuously adjusts the effort you feel when steering at all vehicle speeds. It provides ease when parking, yet a firm, solid feel at highway speeds.

Steering Tips

It is important to take curves at a reasonable speed.

A lot of the “driver lost control” accidents mentioned on the news happen on curves.

Here is why:

Experienced driver or beginner, each of us is subject to the same laws of physics when driving on curves. The traction of the tires against the road surface makes it possible for the vehicle to change its path when you turn the front wheels. If there is no traction, inertia will keep the vehicle going in the same direction. If you have ever tried to steer a vehicle on wet ice, you will understand this.

The traction you can get in a curve depends on the condition of the tires and the road surface, the angle at which the curve is banked, and your speed. While you are in a curve, speed is the one factor you can control.

Suppose you are steering through a sharp curve. Then you suddenly apply the brakes. Both control systems — steering and braking — have to do their work where the tires meet the road. Unless you have antilock brakes, adding the hard braking can demand too much of those places. You can lose control.

The same thing can happen if you are steering through a sharp curve and you suddenly accelerate. Those two control systems — steering and acceleration — can overwhelm those places where the tires meet the road and make you lose control.

What should you do if this ever happens? Ease up on the brake or accelerator pedal, steer the vehicle the way you want it to go, and slow down.

Speed limit signs near curves warn that you should adjust your speed. Of course, the posted speeds are based on good weather and road conditions. Under less favorable conditions you will want to go slower.

If you need to reduce your speed as you approach a curve, do it before you enter the curve, while the front wheels are straight ahead.

Try to adjust your speed so you can drive through the curve. Maintain a reasonable, steady speed. Wait to accelerate until you are out of the curve, and then accelerate gently into the straightaway.

Adding non-dealer/non-retailer accessories can affect your vehicle's performance. See *Accessories and Modifications on page 5-4*.

Steering in Emergencies

There are times when steering can be more effective than braking. For example, you come over a hill and find a truck stopped in your lane, or a car suddenly pulls out from nowhere, or a child darts out from between parked cars and stops right in front of you. You can avoid these problems by braking — if you can stop in time. But sometimes you cannot; there is not room. That is the time for evasive action — steering around the problem.

Your vehicle can perform very well in emergencies like these. First apply the brakes — but, unless you have antilock brakes, not enough to lock the wheels. See *Braking on page 4-3*. It is better to remove as much speed as you can from a possible collision. Then steer around the problem, to the left or right depending on the space available.

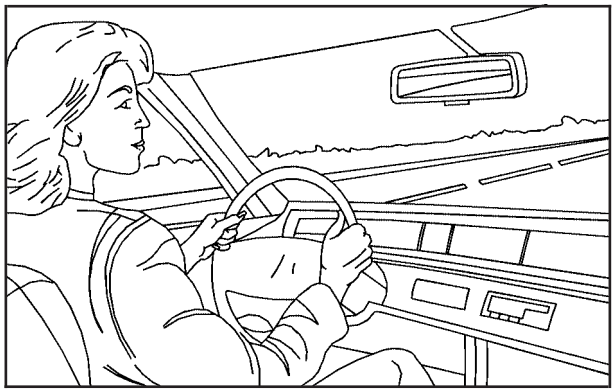

An emergency like this requires close attention and a quick decision. If you are holding the steering wheel at the recommended 9 and 3 o'clock positions, you can turn it a full 180 degrees very quickly without removing either hand. But you have to act fast, steer quickly, and just as quickly straighten the wheel once you have avoided the object.

The fact that such emergency situations are always possible is a good reason to practice defensive driving at all times and wear safety belts properly.

Off-Road Recovery

You may find that your vehicle's right wheels have dropped off the edge of a road onto the shoulder while you are driving.

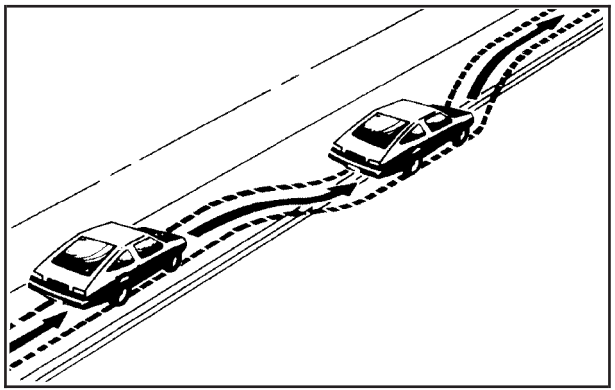

If the level of the shoulder is only slightly below the pavement, recovery should be fairly easy. Ease off the accelerator and then, if there is nothing in the way, steer so that your vehicle straddles the edge of the pavement. You can turn the steering wheel up to one-quarter turn until the right front tire contacts the pavement edge. Then turn the steering wheel to go straight down the roadway.

Passing

Passing another vehicle on a two-lane road can be dangerous. To reduce the risk of danger while passing, we suggest the following tips:

- Look down the road, to the sides, and to crossroads for situations that might affect a successful pass. If in doubt, wait.
- Watch for traffic signs, pavement markings, and lines that could indicate a turn or an intersection. Never cross a solid or double-solid line on your side of the lane.
- Do not get too close to the vehicle you want to pass. Doing so can reduce your visibility.
- Wait your turn to pass a slow vehicle.
- When you are being passed, ease to the right.

Loss of Control

Let us review what driving experts say about what happens when the three control systems — brakes, steering, and acceleration — do not have enough friction where the tires meet the road to do what the driver has asked.

In any emergency, do not give up. Keep trying to steer and constantly seek an escape route or area of less danger.

Skidding

In a skid, a driver can lose control of the vehicle. Defensive drivers avoid most skids by taking reasonable care suited to existing conditions, and by not overdriving those conditions. But skids are always possible.

The three types of skids correspond to your vehicle's three control systems. In the braking skid, the wheels are not rolling. In the steering or cornering skid, too much speed or steering in a curve causes tires to slip and lose cornering force. And in the acceleration skid, too much throttle causes the driving wheels to spin.

A cornering skid and an acceleration skid are best handled by easing your foot off the accelerator pedal.

If your vehicle starts to slide, ease your foot off the accelerator pedal and quickly steer the way you want the vehicle to go. If you start steering quickly enough, your vehicle may straighten out. Always be ready for a second skid if it occurs.

Of course, traction is reduced when water, snow, ice, gravel, or other material is on the road. For safety, you will want to slow down and adjust your driving to these conditions. It is important to slow down on slippery surfaces because stopping distance will be longer and vehicle control more limited.

While driving on a surface with reduced traction, try your best to avoid sudden steering, acceleration, or braking, including reducing vehicle speed by shifting to a lower gear. Any sudden changes could cause the tires to slide. You may not realize the surface is slippery until your vehicle is skidding. Learn to recognize warning clues — such as enough water, ice, or packed snow on the road to make a mirrored surface — and slow down when you have any doubt.

If you have the Antilock Brake System (ABS), remember: It helps avoid only the braking skid. If you do not have ABS, then in a braking skid, where the wheels are no longer rolling, release enough pressure on the brakes to get the wheels rolling again. This restores steering control. Push the brake pedal down steadily when you have to stop suddenly. As long as the wheels are rolling, you will have steering control.

Driving at Night

Night driving is more dangerous than day driving because some drivers are likely to be impaired — by alcohol or drugs, with night vision problems, or by fatigue.

Night driving tips include:

- Drive defensively.
- Do not drink and drive.
- Reduce headlamp glare by adjusting the inside rearview mirror.
- Slow down and keep more space between you and other vehicles because your headlamps can only light up so much road ahead.
- Watch for animals.
- When tired, pull off the road.
- Do not wear sunglasses.
- Avoid staring directly into approaching headlamps.
- Keep the windshield and all glass on your vehicle clean — inside and out.
- Keep your eyes moving, especially during turns or curves.

No one can see as well at night as in the daytime. But, as we get older, these differences increase. A 50-year-old driver might need at least twice as much light to see the same thing at night as a 20-year-old.

Driving in Rain and on Wet Roads

Rain and wet roads can reduce vehicle traction and affect your ability to stop and accelerate. Always drive slower in these types of driving conditions and avoid driving through large puddles and deep-standing or flowing water.

⚠ CAUTION:

Wet brakes can cause crashes. They might not work as well in a quick stop and could cause pulling to one side. You could lose control of the vehicle.

After driving through a large puddle of water or a car/vehicle wash, lightly apply the brake pedal until the brakes work normally.

Flowing or rushing water creates strong forces. Driving through flowing water could cause your vehicle to be carried away. If this happens, you and other vehicle occupants could drown. Do not ignore police warnings and be very cautious about trying to drive through flowing water.

Hydroplaning

Hydroplaning is dangerous. Water can build up under your vehicle's tires so they actually ride on the water. This can happen if the road is wet enough and you are going fast enough. When your vehicle is hydroplaning, it has little or no contact with the road.

There is no hard and fast rule about hydroplaning. The best advice is to slow down when the road is wet.

Other Rainy Weather Tips

Besides slowing down, other wet weather driving tips include:

- Allow extra following distance.
- Pass with caution.
- Keep windshield wiping equipment in good shape.
- Keep the windshield washer fluid reservoir filled.
- Have good tires with proper tread depth. See *Tires on page 5-49*.

Before Leaving on a Long Trip

To prepare your vehicle for a long trip, consider having it serviced by your dealer/retailer before departing.

Things to check on your own include:

- *Windshield Washer Fluid:* Reservoir full? Windows clean — inside and outside?
- *Wiper Blades:* In good shape?
- *Fuel, Engine Oil, Other Fluids:* All levels checked?
- *Lamps:* Do they all work and are lenses clean?
- *Tires:* Are treads good? Are tires inflated to recommended pressure?
- *Weather and Maps:* Safe to travel? Have up-to-date maps?

Highway Hypnosis

Always be alert and pay attention to your surroundings while driving. If you become tired or sleepy, find a safe place to park your vehicle and rest.

Other driving tips include:

- Keep the vehicle well ventilated.
- Keep interior temperature cool.
- Keep your eyes moving — scan the road ahead and to the sides.
- Check the rearview mirror and vehicle instruments often.

Hill and Mountain Roads

Driving on steep hills or through mountains is different than driving on flat or rolling terrain. Tips for driving in these conditions include:

- Keep your vehicle serviced and in good shape.
- Check all fluid levels and brakes, tires, cooling system, and transmission.
- Going down steep or long hills, shift to a lower gear.

⚠ CAUTION:

If you do not shift down, the brakes could get so hot that they would not work well. You would then have poor braking or even none going down a hill. You could crash. Shift down to let the engine assist the brakes on a steep downhill slope.

⚠ CAUTION:

Coasting downhill in NEUTRAL (N) or with the ignition off is dangerous. The brakes will have to do all the work of slowing down and they could get so hot that they would not work well. You would then have poor braking or even none going down a hill. You could crash. Always have the engine running and your vehicle in gear when you go downhill.

- Stay in your own lane. Do not swing wide or cut across the center of the road. Drive at speeds that let you stay in your own lane.
- Top of hills: Be alert — something could be in your lane (stalled car, accident).
- Pay attention to special road signs (falling rocks area, winding roads, long grades, passing or no-passing zones) and take appropriate action.

Winter Driving

Here are some tips for winter driving:

- Have your vehicle in good shape for winter.
- You might want to put winter emergency supplies in your trunk.

Include an ice scraper, a small brush or broom, a supply of windshield washer fluid, a rag, some winter outer clothing, a small shovel, a flashlight, a red cloth, and a couple of reflective warning triangles. And, if you will be driving under severe conditions, include a small bag of sand, a piece of old carpet, or a couple of burlap bags to help provide traction. Be sure you properly secure these items in your vehicle.

Also see *Tires on page 5-49*.

Driving on Snow or Ice

Most of the time, those places where the tires meet the road probably have good traction.

However, if there is snow or ice between the tires and the road, you can have a very slippery situation. You have a lot less traction, or grip, and need to be very careful.

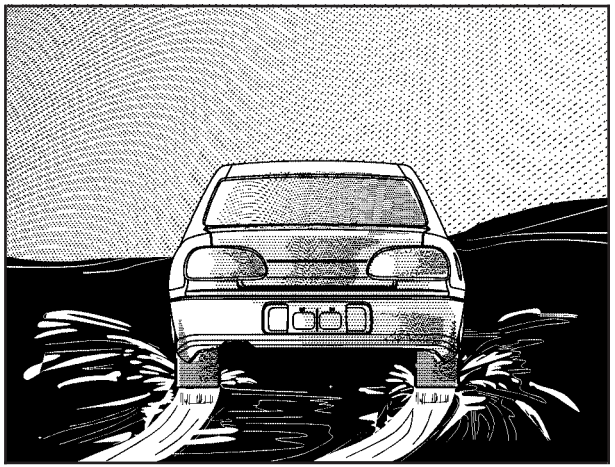

What is the worst time for this? Wet ice. Very cold snow or ice can be slick and hard to drive on. But wet ice can be even more trouble because it can offer the least traction of all. You can get wet ice when it is about freezing, 32°F (0°C), and freezing rain begins to fall. Try to avoid driving on wet ice until salt and sand crews can get there.

Whatever the condition — smooth ice, packed, blowing, or loose snow — drive with caution.

Accelerate gently. Try not to break the fragile traction. If you accelerate too fast, the drive wheels will spin and polish the surface under the tires even more.

Unless your vehicle has the Antilock Brake System (ABS), you want to brake very gently, too. If you do have ABS, see *Antilock Brake System (ABS) on page 4-4*. ABS improves your vehicle's stability when you make a hard stop on a slippery road. Whether your vehicle has ABS or not, begin stopping sooner than you would on dry pavement. Without ABS, if you feel your vehicle begin to slide, let up on the brakes a little. Push the brake pedal down steadily to get the most traction you can.

Remember, unless your vehicle has ABS, if you brake so hard that the wheels stop rolling, you will just slide. Brake so the wheels always keep rolling and you can still steer.

- Whatever your vehicle's braking system, allow greater following distance on any slippery road.
- Watch for slippery spots. The road might be fine until you hit a spot that is covered with ice. On an otherwise clear road, ice patches can appear in shaded areas where the sun cannot reach, such as around clumps of trees, behind buildings, or under bridges. Sometimes the surface of a curve or an overpass can remain icy when the surrounding roads are clear. If you see a patch of ice ahead of you, brake before you are on it. Try not to brake while you are actually on the ice, and avoid sudden steering maneuvers.

If You Are Caught in a Blizzard

If you are stopped by heavy snow, you could be in a serious situation. You should probably stay with your vehicle unless you know for sure that you are near help and you can hike through the snow. Here are some things to do to summon help and keep yourself and your passengers safe:

- Turn on the hazard warning flashers.
- Tie a red cloth to your vehicle to alert police that you have been stopped by the snow.
- Put on extra clothing or wrap a blanket around you. If you do not have blankets or extra clothing, make body insulators from newspapers, burlap bags, rags, floor mats — anything you can wrap around yourself or tuck under your clothing to keep warm.

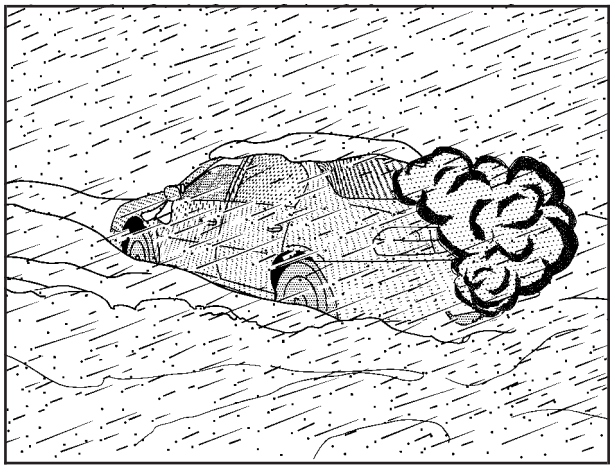

You can run the engine to keep warm, but be careful.

⚠ CAUTION:

Snow can trap exhaust gases under your vehicle. This can cause deadly CO (carbon monoxide) gas to get inside. CO could overcome you and kill you. You cannot see it or smell it, so you might not know it is in your vehicle. Clear away snow from around the base of your vehicle, especially any that is blocking the exhaust pipe. And check around again from time to time to be sure snow does not collect there.

Open a window just a little on the side of the vehicle that is away from the wind. This will help keep CO out.

Run your engine only as long as you must. This saves fuel. When you run the engine, make it go a little faster than just idle. That is, push the accelerator slightly. This uses less fuel for the heat that you get and it keeps the battery charged. You will need a well-charged battery to restart the vehicle, and possibly for signaling later on with the headlamps. Let the heater run for a while.

Then, shut the engine off and close the window almost all the way to preserve the heat. Start the engine again and repeat this only when you feel really uncomfortable from the cold. But do it as little as possible. Preserve the fuel as long as you can. To help keep warm, you can get out of the vehicle and do some fairly vigorous exercises every half hour or so until help comes.

If Your Vehicle is Stuck in Sand, Mud, Ice, or Snow

Slowly and cautiously spin the wheels to free your vehicle when stuck in sand, mud, ice, or snow. See *Rocking Your Vehicle to Get It Out on page 4-18*.

⚠ CAUTION:

If you let your vehicle's tires spin at high speed, they can explode, and you or others could be injured. The vehicle can overheat, causing an engine compartment fire or other damage. Spin the wheels as little as possible and avoid going above 35 mph (55 km/h) as shown on the speedometer.

For information about using tire chains on your vehicle, see *Tire Chains on page 5-67*.

Rocking Your Vehicle to Get It Out

First, turn the steering wheel left and right to clear the area around the front wheels. Then shift back and forth between REVERSE (R) and a forward gear, or with a manual transmission, between FIRST (1) or SECOND (2) and REVERSE (R), spinning the wheels as little as possible. To prevent transmission wear, wait until the wheels stop spinning before shifting gears. Release the accelerator pedal while you shift, and press lightly on the accelerator pedal when the transmission is in gear. By slowly spinning the wheels in the forward and reverse directions, you will cause a rocking motion that could free your vehicle. If that does not get your vehicle out after a few tries, it might need to be towed out. If your vehicle does need to be towed out, see *Towing Your Vehicle on page 4-23*.

Loading Your Vehicle

It is very important to know how much weight your vehicle can carry. This weight is called the Maximum Load weight and includes the weight of all occupants, cargo, and all nonfactory-installed options. Two labels on your vehicle show how much weight it may properly carry; the Tire and Loading Information label and the Certification label.

⚠ CAUTION:

Do not load your vehicle any heavier than the Gross Vehicle Weight Rating (GVWR), or either the maximum front or rear Gross Axle Weight Rating (GAWR). If you do, parts on your vehicle can break, and it can change the way your vehicle handles. These could cause you to lose control and crash. Also, overloading can shorten the life of your vehicle.

Tire and Loading Information Label

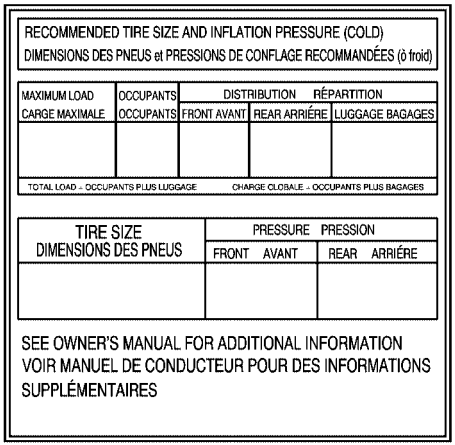
RECOMMENDED TIRE SIZE AND INFLATION PRESSURE (COLD)
DIMENSIONS DES PNEUS et PRESSIONS DE CONFLAGE RECOMMANDÉES (à froid)

MAXIMUM LOAD / CARGE MAXIMALE	OCCUPANTS / OCCUPANTS	DISTRIBUTION RÉPARTITION		
		FRONT AVANT	REAR ARRIÉRE	LUGGAGE BAGAGES

TOTAL LOAD – OCCUPANTS PLUS LUGGAGE CHARGE CLOBALE – OCCUPANTS PLUS BAGAGES

TIRE SIZE DIMENSIONS DES PNEUS	PRESSURE PRESSION	
	FRONT AVANT	REAR ARRIÉRE

SEE OWNER'S MANUAL FOR ADDITIONAL INFORMATION
VOIR MANUEL DE CONDUCTEUR POUR DES INFORMATIONS SUPPLÉMENTAIRES

Label Example – 5 Door Hatchback

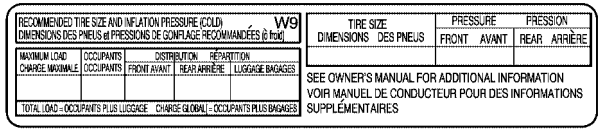
RECOMMENDED TIRE SIZE AND INFLATION PRESSURE (COLD) W9
DIMENSIONS DES PNEUS et PRESSIONS DE CONFLAGE RECOMMANDÉES (à froid)

MAXIMUM LOAD / CHARGE MAXIMALE	OCCUPANTS / OCCUPANTS	DISTRIBUTION RÉPARTITION		
		FRONT AVANT	REAR ARRIÉRE	LUGGAGE BAGAGES

TOTAL LOAD – OCCUPANTS PLUS LUGGAGE CHARGE GLOBAL – OCCUPANTS PLUS BAGAGES

TIRE SIZE DIMENSIONS DES PNEUS	PRESSURE PRESSION	
	FRONT AVANT	REAR ARRIÉRE

SEE OWNER'S MANUAL FOR ADDITIONAL INFORMATION
VOIR MANUEL DE CONDUCTEUR POUR DES INFORMATIONS SUPPLÉMENTAIRES

Label Example – Wagon

A vehicle specific Tire and Loading Information label shows the seating capacity and the maximum load your vehicle can properly carry. This label also contains your vehicle's original equipment tire size and the recommended tire inflation pressure. For more information on tires and inflation see *Tires on page 5-49* and *Inflation - Tire Pressure on page 5-56*. The Tire and Loading Information label is attached inside the glove box of the five door hatchback model. The Tire and Loading Information label for the wagon is attached to the vehicle's center pillar, below the driver's door latch.

There is also important loading information on the Certification label. It tells you the Gross Vehicle Weight Rating (GVWR) and the Gross Axle Weight Rating (GAWR) for the front and rear axle; see "Certification Label" later in this section.

Steps for Determining Correct Load Limit

1. Locate the “Maximum Load” amount printed on the Tire and Loading Information label.
2. Determine the combined weight of the driver and passengers that will be riding in your vehicle.
3. Subtract the combined weight of the driver and passengers from the maximum load amount, shown in pounds and kilograms.
4. The resulting figure equals the available amount of cargo and luggage load capacity. For example, if the “maximum load” amount equals 1400 lbs and there will be five 150 lb passengers in your vehicle, the amount of available cargo and luggage load capacity is 650 lbs (1400 – 750 (5 x 150) = 650 lbs).
5. Determine the combined weight of luggage and cargo being loaded on the vehicle. That weight may not safely exceed the available cargo and luggage load capacity calculated in Step 4.

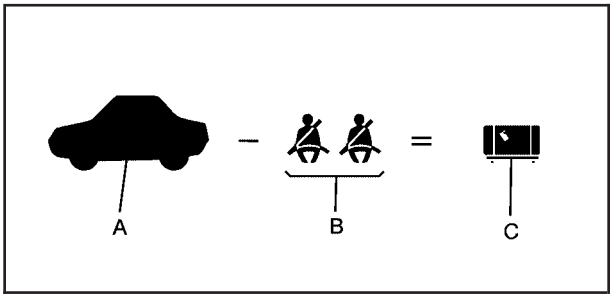

Example 1

Item	Description	Total
A	Vehicle Maximum Load for Example 1 =	1,000 lbs (453 kg)
B	Subtract Occupant Weight 150 lbs (68 kg) × 2 =	300 lbs (136 kg)
C	Available Occupant and Cargo Weight =	700 lbs (317 kg)

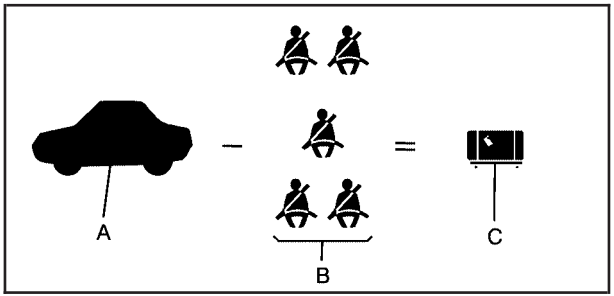

Example 2

Item	Description	Total
A	Vehicle Maximum Load for Example 2 =	1,000 lbs (453 kg)
B	Subtract Occupant Weight 150 lbs (68 kg) × 5 =	750 lbs (340 kg)
C	Available Cargo Weight =	250 lbs (113 kg)

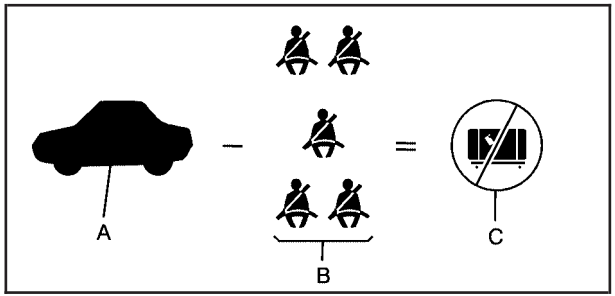

Example 3

Item	Description	Total
A	Vehicle Maximum Load for Example 3 =	1,000 lbs (453 kg)
B	Subtract Occupant Weight 200 lbs (91 kg) × 5 =	1,000 lbs (453 kg)
C	Available Cargo Weight =	0 lbs (0 kg)

Refer to your vehicle's Tire and Loading Information label for specific information about your vehicle's maximum load weight and seating positions.
The combined weight of the driver, passengers, and cargo should never exceed your vehicle's maximum load weight.

Certification Label

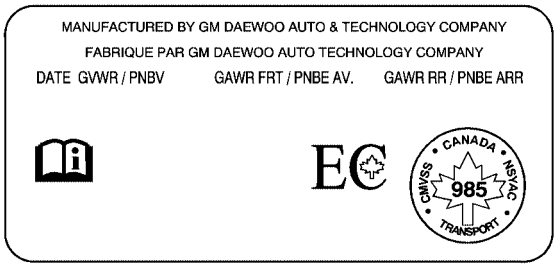

Label Example

A vehicle specific Certification label is attached to the center pillar, near the driver's door latch. This label tells you the gross weight capacity of your vehicle, called the Gross Vehicle Weight Rating (GVWR). The GVWR includes the weight of the vehicle, all occupants, fuel, and cargo. Never exceed the GVWR for your vehicle, or the Gross Axle Weight Rating (GAWR) for either the front or rear axle.

And, if you do have a heavy load, you should spread it out. See "Steps for Determining Correct Load Limit" earlier in this section.

⚠ CAUTION:

Do not load your vehicle any heavier than the Gross Vehicle Weight Rating (GVWR), or either the maximum front or rear Gross Axle Weight Rating (GAWR). If you do, parts on your vehicle can break, and it can change the way your vehicle handles. These could cause you to lose control and crash. Also, overloading can shorten the life of your vehicle.

Notice: **Overloading your vehicle may cause damage. Repairs would not be covered by your warranty. Do not overload your vehicle.**

If you put things inside your vehicle — like suitcases, tools, packages, or anything else — they will go as fast as the vehicle goes. If you have to stop or turn quickly, or if there is a crash, they will keep going.

⚠ CAUTION:

Things you put inside your vehicle can strike and injure people in a sudden stop or turn, or in a crash.

- **Put things in the trunk of your vehicle. In a trunk, put them as far forward as you can. Try to spread the weight evenly.**
- **Never stack heavier things, like suitcases, inside the vehicle so that some of them are above the tops of the seats.**
- **Do not leave an unsecured child restraint in your vehicle.**
- **When you carry something inside the vehicle, secure it whenever you can.**
- **Do not leave a seat folded down unless you need to.**

Towing

Towing Your Vehicle

Consult your dealer/retailer or a professional towing service if you need to have your disabled vehicle towed. See *Roadside Assistance Program on page 7-6*.

If you want to tow your vehicle behind another vehicle for recreational purposes (such as behind a motorhome), see “Recreational Vehicle Towing” following.

Recreational Vehicle Towing

Recreational vehicle towing means towing your vehicle behind another vehicle, such as behind a motorhome. The two most common types of recreational vehicle towing are known as “dinghy towing” (towing your vehicle with all four wheels on the ground) and “dolly towing” (towing your vehicle with two wheels on the ground and two wheels up on a device known as a “dolly”).

With the proper preparation and equipment, many vehicles can be towed in these ways. See “Dinghy Towing” and “Dolly Towing,” following.

Here are some important things to consider before you do recreational vehicle towing:

- What is the towing capacity of the towing vehicle? Be sure you read the tow vehicle manufacturer’s recommendations.
- How far will you tow? Some vehicles have restrictions on how far and how long they can tow.
- Do you have the proper towing equipment? See your dealer/retailer or trailering professional for additional advice and equipment recommendations.
- Is your vehicle ready to be towed? Just as you would prepare your vehicle for a long trip, you will want to make sure your vehicle is prepared to be towed. See *Before Leaving on a Long Trip on page 4-11*.

Dinghy Towing

Notice: **If you tow your vehicle with all four wheels on the ground, the drivetrain components could be damaged. The repairs would not be covered by your warranty. Do not tow your vehicle with all four wheels on the ground.**

Your vehicle was not designed to be towed with all four wheels on the ground. If your vehicle must be towed, you should use a dolly. See “Dolly Towing” that follows for more information.

Dolly Towing

Notice: **Towing your vehicle from the rear with the front wheels on the ground could cause transmission damage. Do not tow the vehicle from the rear with the front wheels on the road.**

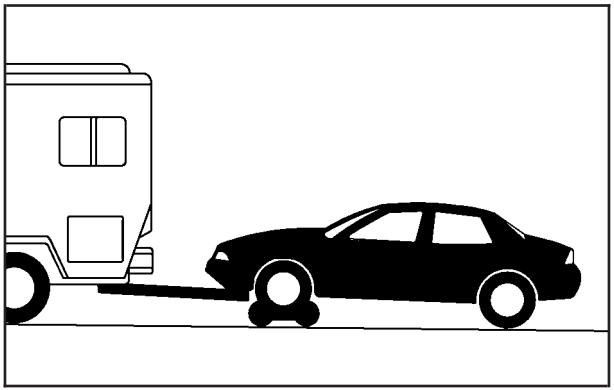

Your vehicle can be towed using a dolly. To tow your vehicle using a dolly, follow these steps:

1. Put the front wheels on a dolly.
2. Turn the ignition to ACC/ACCESSORY.
3. Put the vehicle in NEUTRAL (N).
4. Set the parking brake and then remove the key.
5. Clamp the steering wheel in a straight-ahead position.
6. Release the parking brake.

Towing a Trailer

Do not use your vehicle to tow a trailer. The vehicle is not designed or intended for such a use. Towing a trailer can adversely affect handling, durability and fuel economy.

NOTES

Section 5 Service and Appearance Care

Service 5-4
- Accessories and Modifications 5-4
- California Proposition 65 Warning 5-4
- California Perchlorate Materials Requirements 5-5
- Doing Your Own Service Work 5-5
- Adding Equipment to the Outside of Your Vehicle 5-5

Fuel 5-6
- Gasoline Octane 5-6
- Gasoline Specifications 5-6
- California Fuel 5-6
- Additives 5-6
- Fuels in Foreign Countries 5-7
- Filling the Tank 5-8
- Filling a Portable Fuel Container 5-10

Checking Things Under the Hood 5-10
- Hood Release 5-11
- Engine Compartment Overview 5-12
- Engine Oil 5-13
- Engine Air Cleaner/Filter 5-16
- Automatic Transmission Fluid 5-18
- Manual Transmission Fluid 5-18
- Hydraulic Clutch 5-18
- Engine Coolant 5-19
- Coolant Surge Tank Pressure Cap 5-22
- Engine Overheating 5-22
- Cooling System 5-24
- Power Steering Fluid 5-29
- Windshield Washer Fluid 5-30
- Brakes 5-31
- Battery 5-34
- Jump Starting 5-35

Headlamp Aiming 5-40

Bulb Replacement 5-40
- Halogen Bulbs 5-40
- Headlamps 5-41
- Front Turn Signal and Parking Lamps 5-42
- Turn Signal Lamps (Side) 5-43
- Sidemarker Lamps (Front) 5-44
- Sidemarker Lamps (Rear) 5-44
- Center High-Mounted Stoplamp (CHMSL) (Hatchback) 5-45
- Center High-Mounted Stoplamp (CHMSL) (Wagon) 5-45
- Taillamps, Turn Signal, and Stoplamps (Hatchback) 5-46

Section 5 Service and Appearance Care

Taillamps, Turn Signal, Stoplamps and Back-up Lamps (Wagon) 5-46
Taillamps, Stoplamps and Back-up Lamps (Hatchback) 5-47
License Plate Lamp 5-47
Replacement Bulbs 5-48

Windshield Wiper Blade Replacement 5-48

Tires 5-49
Tire Sidewall Labeling 5-50
Tire Terminology and Definitions 5-53
Inflation - Tire Pressure 5-56
Tire Pressure Monitor System 5-57
Tire Pressure Monitor Operation 5-59
Tire Inspection and Rotation 5-60
When It Is Time for New Tires 5-62
Buying New Tires 5-62
Different Size Tires and Wheels 5-64
Uniform Tire Quality Grading 5-64
Wheel Alignment and Tire Balance 5-66
Wheel Replacement 5-66
Tire Chains 5-67
If a Tire Goes Flat 5-68
Changing a Flat Tire 5-69
Removing the Spare Tire and Tools 5-70
Removing the Flat Tire and Installing the Spare Tire 5-73
Storing a Flat or Spare Tire and Tools 5-78
Compact Spare Tire 5-78

Appearance Care 5-79
Interior Cleaning 5-79
Fabric/Carpet 5-80
Leather 5-81
Instrument Panel, Vinyl, and Other Plastic Surfaces 5-81
Care of Safety Belts 5-81
Weatherstrips 5-82
Washing Your Vehicle 5-82
Cleaning Exterior Lamps/Lenses 5-82
Finish Care 5-82
Windshield and Wiper Blades 5-83
Aluminum Wheels 5-84
Tires 5-84
Sheet Metal Damage 5-84
Finish Damage 5-85
Underbody Maintenance 5-85
Chemical Paint Spotting 5-85
Vehicle Care/Appearance Materials 5-86

Section 5 Service and Appearance Care

Vehicle Identification 5-87
Vehicle Identification Number (VIN) 5-87
Service Parts Identification Label 5-87
Electrical System 5-88
Add-On Electrical Equipment 5-88
Headlamp Wiring 5-88
Windshield Wiper Fuses 5-88
Power Windows and Other Power Options 5-88
Fuses and Circuit Breakers 5-89
Instrument Panel Fuse Block 5-89
Engine Compartment Fuse Block 5-91
Capacities and Specifications 5-94
Maintenance Replacement Parts 5-95
Engine Drive Belt Routing 5-96

Service

For service and parts needs, visit your dealer/retailer. You will receive genuine GM parts and GM-trained and supported service people.

Genuine GM parts have one of these marks:

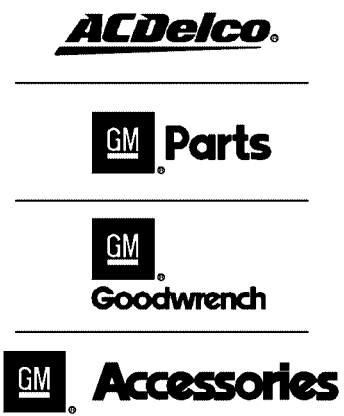

Accessories and Modifications

When non-dealer/non-retailer accessories are added to your vehicle they can affect your vehicle's performance and safety, including such things as, airbags, braking, stability, ride and handling, emissions systems, aerodynamics, durability, and electronic systems like antilock brakes, traction control and stability control. Some of these accessories could even cause malfunction or damage not covered by warranty.

GM Accessories are designed to complement and function with other systems on your vehicle. Your GM dealer/retailer can accessorize your vehicle using genuine GM Accessories. When you go to your GM dealer/retailer and ask for GM Accessories, you will know that GM-trained and supported service technicians will perform the work using genuine GM Accessories.

Also, see *Adding Equipment to Your Airbag-Equipped Vehicle on page 1-64*.

California Proposition 65 Warning

Most motor vehicles, including this one, contain and/or emit chemicals known to the State of California to cause cancer and birth defects or other reproductive harm. Engine exhaust, many parts and systems (including some inside the vehicle), many fluids, and some component wear by-products contain and/or emit these chemicals.

California Perchlorate Materials Requirements

Certain types of automotive applications, such as airbag initiators, seat belt pretensioners, and lithium batteries contained in remote keyless entry transmitters, may contain perchlorate materials. Special handling may be necessary. For additional information, see www.dtsc.ca.gov/hazardouswaste/perchlorate.

Doing Your Own Service Work

⚠ CAUTION:

You can be injured and your vehicle could be damaged if you try to do service work on a vehicle without knowing enough about it.

- **Be sure you have sufficient knowledge, experience, the proper replacement parts, and tools before you attempt any vehicle maintenance task.**
- **Be sure to use the proper nuts, bolts, and other fasteners. English and metric fasteners can be easily confused. If you use the wrong fasteners, parts can later break or fall off. You could be hurt.**

If you want to do some of your own service work, you will want to use the proper service manual. It tells you much more about how to service your vehicle than this manual can. To order the proper service manual, see *Service Publications Ordering Information on page 7-15*.

Your vehicle has an airbag system. Before attempting to do your own service work, see *Servicing Your Airbag-Equipped Vehicle on page 1-64*.

You should keep a record with all parts receipts and list the mileage and the date of any service work you perform. See *Part E: Maintenance Record on page 6-28*.

Adding Equipment to the Outside of Your Vehicle

Things you might add to the outside of your vehicle can affect the airflow around it. This can cause wind noise and can affect fuel economy and windshield washer performance. Check with your dealer/retailer before adding equipment to the outside of your vehicle.

Fuel

Use of the recommended fuel is an important part of the proper maintenance of your vehicle. To help keep the engine clean and maintain optimum vehicle performance, we recommend the use of gasoline advertised as TOP TIER Detergent Gasoline.

Gasoline Octane

Use regular unleaded gasoline with a posted octane rating of 87 or higher. If the octane rating is less than 87, you might notice an audible knocking noise when you drive, commonly referred to as spark knock. If this occurs, use a gasoline rated at 87 octane or higher as soon as possible. If you are using gasoline rated at 87 octane or higher and you hear heavy knocking, the engine needs service.

Gasoline Specifications

At a minimum, gasoline should meet ASTM specification D 4814 in the United States or CAN/CGSB-3.5 or 3.511 in Canada. Some gasolines contain an octane-enhancing additive called methylcyclopentadienyl manganese tricarbonyl (MMT). We recommend against the use of gasolines containing MMT. See *Additives on page 5-6* for additional information.

California Fuel

If your vehicle is certified to meet California Emissions Standards, it is designed to operate on fuels that meet California specifications. See the underhood emission control label. If this fuel is not available in states adopting California emissions standards, your vehicle will operate satisfactorily on fuels meeting federal specifications, but emission control system performance might be affected. The malfunction indicator lamp could turn on and your vehicle might fail a smog-check test. See *Malfunction Indicator Lamp on page 3-34*. If this occurs, return to your authorized dealer/retailer for diagnosis. If it is determined that the condition is caused by the type of fuel used, repairs might not be covered by your warranty.

Additives

To provide cleaner air, all gasolines in the United States are now required to contain additives that help prevent engine and fuel system deposits from forming, allowing the emission control system to work properly. In most cases, you should not have to add anything to the fuel.

However, some gasolines contain only the minimum amount of additive required to meet U.S. Environmental Protection Agency regulations. To help keep fuel injectors and intake valves clean, or if your vehicle experiences problems due to dirty injectors or valves, look for gasoline that is advertised as TOP TIER Detergent Gasoline. Also, your dealer/retailer has additives that will help correct and prevent most deposit-related problems.

Gasolines containing oxygenates, such as ethers and ethanol, and reformulated gasolines might be available in your area. We recommend that you use these gasolines, if they comply with the specifications described earlier. However, E85 (85% ethanol) and other fuels containing more than 10% ethanol must not be used in vehicles that were not designed for those fuels.

Notice: **Your vehicle was not designed for fuel that contains methanol. Do not use fuel containing methanol. It can corrode metal parts in the fuel system and also damage plastic and rubber parts. That damage would not be covered under your warranty.**

Some gasolines that are not reformulated for low emissions can contain an octane-enhancing additive called methylcyclopentadienyl manganese tricarbonyl (MMT); ask the attendant where you buy gasoline whether the fuel contains MMT. We recommend against the use of such gasolines. Fuels containing MMT can reduce the life of spark plugs and the performance of the emission control system could be affected. The malfunction indicator lamp might turn on. If this occurs, return to your dealer/retailer for service.

Fuels in Foreign Countries

If you plan on driving in another country outside the United States or Canada, the proper fuel might be hard to find. Never use leaded gasoline or any other fuel not recommended in the previous text on fuel. Costly repairs caused by use of improper fuel would not be covered by your warranty.

To check the fuel availability, ask an auto club, or contact a major oil company that does business in the country where you will be driving.

Filling the Tank

⚠ CAUTION:

Fuel vapor burns violently and a fuel fire can cause bad injuries. To help avoid injuries to you and others, read and follow all the instructions on the pump island. Turn off your engine when you are refueling. Do not smoke if you are near fuel or refueling your vehicle. Do not use cellular phones. Keep sparks, flames, and smoking materials away from fuel. Do not leave the fuel pump unattended when refueling your vehicle. This is against the law in some places. Do not re-enter the vehicle while pumping fuel. Keep children away from the fuel pump; never let children pump fuel.

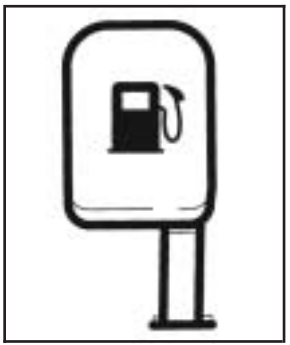

To open the fuel filler door, pull up on the release lever located on the floor on the outboard side of the driver's seat.

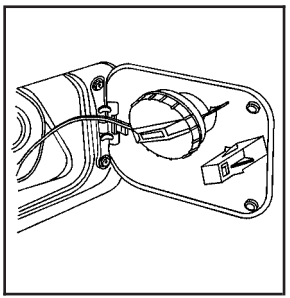

The tethered fuel cap is located behind a hinged fuel door on the passenger's side of the vehicle.

To remove the fuel cap, turn it slowly to the left (counterclockwise). The fuel cap has a spring in it; if the cap is released too soon, it will spring back to the right.

⚠ CAUTION:

Fuel can spray out on you if you open the fuel cap too quickly. If you spill fuel and then something ignites it, you could be badly burned. This spray can happen if your tank is nearly full, and is more likely in hot weather. Open the fuel cap slowly and wait for any hiss noise to stop. Then unscrew the cap all the way.

Be careful not to spill fuel. Do not top off or overfill the tank and wait a few seconds after you have finished pumping before removing the nozzle. Clean fuel from painted surfaces as soon as possible.
See *Washing Your Vehicle on page 5-82*.

When replacing the fuel cap, turn it to the right (clockwise) until it clicks. Make sure the cap is fully installed. The diagnostic system can determine if the fuel cap has been left off or improperly installed. This would allow fuel to evaporate into the atmosphere.
See *Malfunction Indicator Lamp on page 3-34*.

⚠ CAUTION:

If a fire starts while you are refueling, do not remove the nozzle. Shut off the flow of fuel by shutting off the pump or by notifying the station attendant. Leave the area immediately.

Notice: **If you need a new fuel cap, be sure to get the right type. Your dealer/retailer can get one for you. If you get the wrong type, it may not fit properly. This may cause your malfunction indicator lamp to light and may damage your fuel tank and emissions system. See *Malfunction Indicator Lamp on page 3-34*.**

Filling a Portable Fuel Container

⚠ CAUTION:

Never fill a portable fuel container while it is in your vehicle. Static electricity discharge from the container can ignite the fuel vapor. You can be badly burned and your vehicle damaged if this occurs. To help avoid injury to you and others:

- **Dispense fuel only into approved containers.**
- **Do not fill a container while it is inside a vehicle, in a vehicle's trunk, pickup bed, or on any surface other than the ground.**
- **Bring the fill nozzle in contact with the inside of the fill opening before operating the nozzle. Contact should be maintained until the filling is complete.**
- **Do not smoke while pumping fuel.**
- **Do not use a cellular phone while pumping fuel.**

Checking Things Under the Hood

⚠ CAUTION:

An electric fan under the hood can start up and injure you even when the engine is not running. Keep hands, clothing, and tools away from any underhood electric fan.

⚠ CAUTION:

Things that burn can get on hot engine parts and start a fire. These include liquids like fuel, oil, coolant, brake fluid, windshield washer and other fluids, and plastic or rubber. You or others could be burned. Be careful not to drop or spill things that will burn onto a hot engine.

Hood Release

To open the hood, do the following:

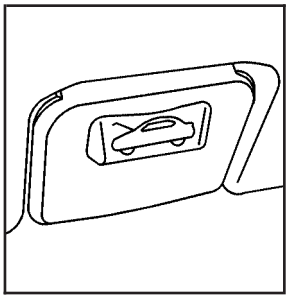

1. Pull the hood release handle inside the vehicle. It is located on the lower left side of the instrument panel.

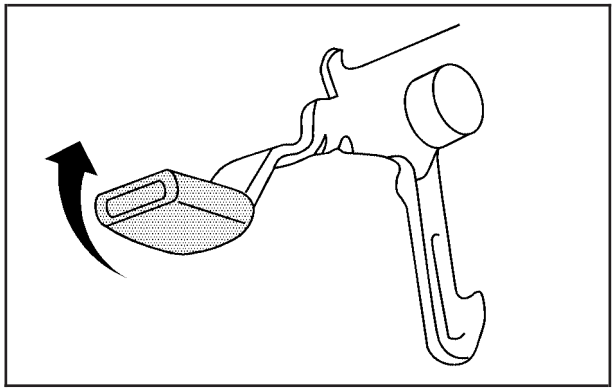

2. Then go to the front of the vehicle and lift up the secondary hood release lever. The secondary hood release lever is located under the front center of the hood.
3. Lift the hood, release the hood prop from its retainer and place the hood prop into the slot in the hood.
4. Before closing the hood, be sure all the filler caps are on properly. Then lift the hood to relieve pressure on the hood prop. Remove the hood prop from the slot in the hood and return the prop to its retainer. Lower the hood 12 inches (30 cm) above the vehicle and release it to latch fully. Check to make sure the hood is closed and repeat the process if necessary.

Engine Compartment Overview

When you open the hood on the engine, here is what you will see:

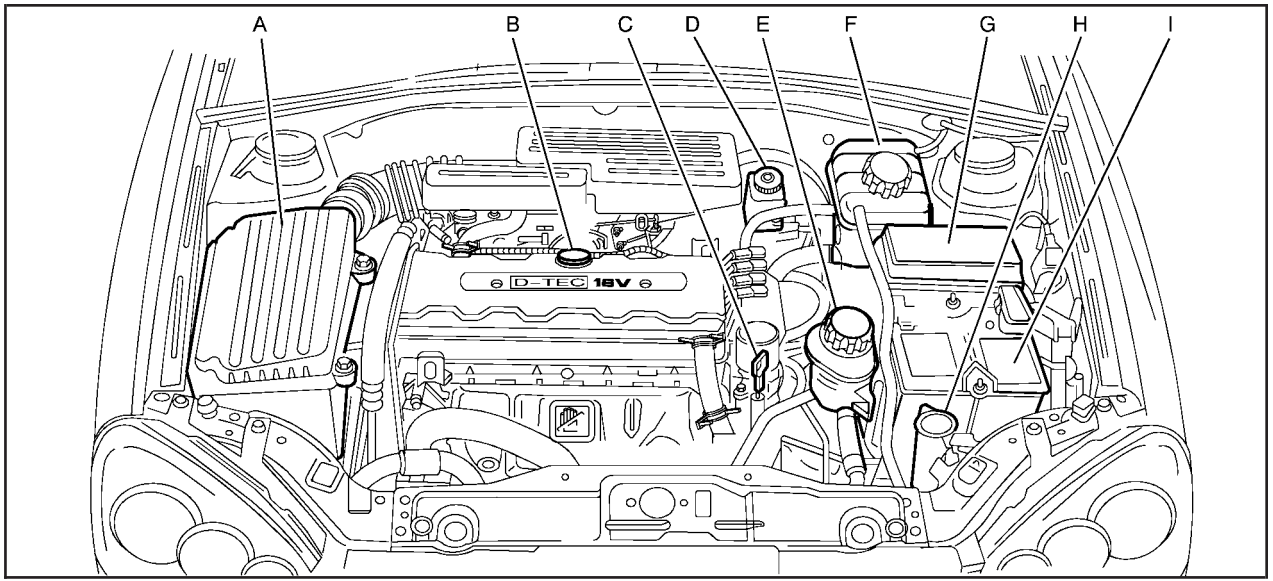

A. Engine Air Cleaner/Filter. See *Engine Air Cleaner/Filter on page 5-16*.

B. Engine Oil Fill Cap. See “When to Add Engine Oil” under *Engine Oil on page 5-13*.

C. Engine Oil Dipstick. See “Checking Engine Oil” under *Engine Oil on page 5-13*.

D. Brake Fluid/Hydraulic Clutch Fluid Reservoir. See “Brake Fluid” under *Brakes on page 5-31* and *Hydraulic Clutch on page 5-18*.

E. Power Steering Fluid Reservoir. See *Power Steering Fluid on page 5-29*.

F. Engine Coolant Surge Tank. See *Cooling System on page 5-24*.

G. Engine Compartment Fuse Block. See *Engine Compartment Fuse Block on page 5-91*.

H. Windshield Washer Fluid Reservoir. See “Adding Washer Fluid” under *Windshield Washer Fluid on page 5-30*.

I. Battery. See *Battery on page 5-34*.

Engine Oil

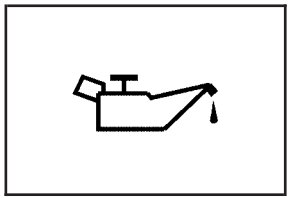

If the engine oil pressure light appears on the instrument cluster, check the engine oil level right away.

For more information, see *Oil Pressure Light on page 3-38*. You should check the engine oil level regularly; this is an added reminder.

Checking Engine Oil

It is a good idea to check the engine oil every time you get fuel. In order to get an accurate reading, the oil must be warm and the vehicle must be on level ground.

The engine oil dipstick handle is a yellow loop. See *Engine Compartment Overview on page 5-12* for the location of the engine oil dipstick.

1. Turn off the engine and give the oil several minutes to drain back into the oil pan. If you do not do this, the oil dipstick might not show the actual level.
2. Pull the dipstick and clean it with a paper towel or cloth, then push it back in all the way. Remove it again, keeping the tip down and check the level.

When to Add Engine Oil

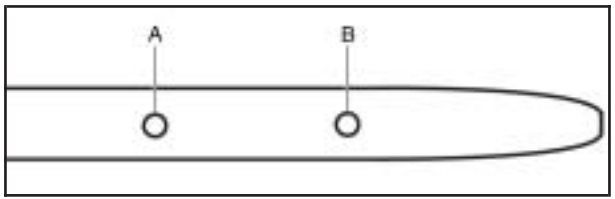

If the oil is below the lower hole at the tip of the dipstick (B), add at least one quart/liter of the recommended oil. This section explains what kind of oil to use. For engine oil crankcase capacity, see *Capacities and Specifications on page 5-94*.

Notice: **Do not add too much oil. If the engine has so much oil that the oil level gets above the upper hole (A) that shows the proper operating range, the engine could be damaged.**

See *Engine Compartment Overview on page 5-12* for the location of the engine oil fill cap.

Be sure to add enough oil to put the level somewhere in the proper operating range, between the holes on the dipstick. Push the dipstick all the way back in when you are through.

What Kind of Engine Oil to Use

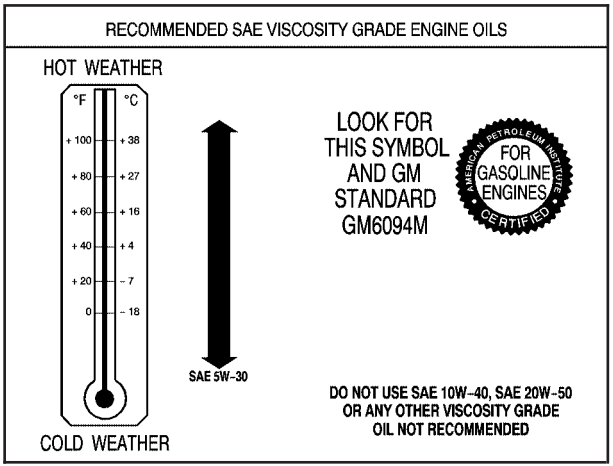

Look for three things:

- GM6094M

  Your vehicle's engine requires oil meeting GM Standard GM6094M. Look for and use only an oil that meets GM Standard GM6094M.

- SAE 5W-30

  As shown in the viscosity chart, SAE 5W-30 is best for your vehicle.

These numbers on an oil container show its viscosity, or thickness. Do not use other viscosity oils such as SAE 20W-50.

- American Petroleum Institute (API) starburst symbol



Oils meeting these requirements should have the starburst symbol on the container. This symbol indicates that the oil has been certified by the American Petroleum Institute (API).

Look for this information on the oil container, and use only those oils that are identified as meeting GM Standard GM6094M and have the starburst symbol on the front of the oil container.

Notice: **Use only engine oil identified as meeting GM Standard GM6094M and showing the American Petroleum Institute Certified For Gasoline Engines starburst symbol. Failure to use the recommended oil can result in engine damage not covered by your warranty.**

If you are in an area of extreme cold, where the temperature falls below –20°F (–29°C), it is recommended that you use either an SAE 5W-30 synthetic oil or an SAE 0W-30 oil. Both provide easier cold starting and better protection for the engine at extremely low temperatures.

Engine Oil Additives

Do not add anything to the oil. The recommended oils with the starburst symbol that meet GM Standard GM6094M are all you need for good performance and engine protection.

When to Change Engine Oil

If any one of these is true for you, use the short trip/city maintenance schedule:

- Most trips are less than 5 miles (8 km). This is particularly important when outside temperatures are below freezing.
- Most trips include extensive idling, such as frequent driving in stop-and-go traffic.
- You frequently tow a trailer or use a carrier on top of your vehicle.
- The vehicle is used for delivery service, police, taxi, or other commercial application.

Driving under these conditions causes engine oil to break down sooner. If any one of these is true for your vehicle, change the oil and filter every 3,000 miles (5 000 km) or 3 months, whichever occurs first.

If none of them is true, use the long trip/highway maintenance schedule. Change the oil and filter every 7,500 miles (12 500 km) or 12 months, whichever occurs first. Driving a vehicle with a fully warmed engine under highway conditions will cause engine oil to break down slower.

What to Do with Used Oil

Used engine oil contains certain elements that may be unhealthy for your skin and could even cause cancer. Do not let used oil stay on your skin for very long. Clean your skin and nails with soap and water, or a good hand cleaner. Wash or properly dispose of clothing or rags containing used engine oil. See the manufacturer's warnings about the use and disposal of oil products.

Used oil can be a threat to the environment. If you change your own oil, be sure to drain all the oil from the filter before disposal. Never dispose of oil by putting it in the trash, pouring it on the ground, into sewers, or into streams or bodies of water. Instead, recycle it by taking it to a place that collects used oil. If you have a problem properly disposing of used oil, ask your dealer/retailer, a service station, or a local recycling center for help.

Engine Air Cleaner/Filter

The engine air cleaner/filter is located in the engine compartment on the passenger's side of the vehicle. See *Engine Compartment Overview on page 5-12* for more information on location.

When to Inspect the Engine Air Cleaner/Filter

Inspect the engine air cleaner/filter every 15,000 miles (25 000 km) and replace it every 30,000 miles (50 000 km). If you are driving in dusty/dirty conditions, inspect the filter at each engine oil change.

How to Inspect the Engine Air Cleaner/Filter

To inspect the engine air cleaner/filter remove the filter from the vehicle and lightly shake the filter to release loose dust and dirt. If the filter remains caked with dirt, a new filter is required.

To inspect or replace the filter, do the following:

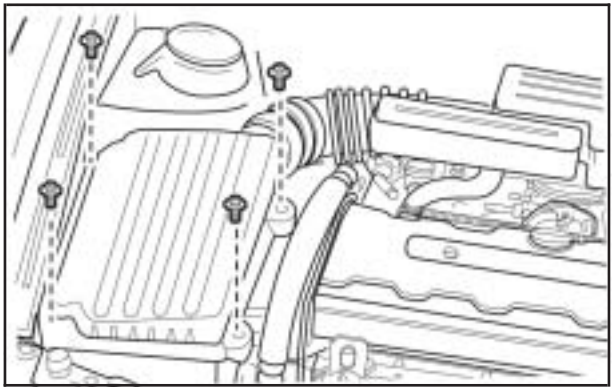

1. Remove the four screws that hold the cover on.
2. Lift off the cover.
3. Inspect or replace the engine air cleaner/filter.
4. Put the cover back on tightly and tighten the screws.

See *Part A: Scheduled Maintenance Services on page 6-4* for replacement intervals.

⚠ CAUTION:

Operating the engine with the air cleaner/filter off can cause you or others to be burned. The air cleaner not only cleans the air; it helps to stop flames if the engine backfires. If it is not there and the engine backfires, you could be burned. Do not drive with it off, and be careful working on the engine with the air cleaner/filter off.

Notice: **If the air cleaner/filter is off, a backfire can cause a damaging engine fire. And, dirt can easily get into your engine, which will damage it. Always have the air cleaner/filter in place when you are driving.**

Automatic Transmission Fluid

It is not necessary to check the transmission fluid level. If a leak occurs, take the vehicle to the dealer/retailer service department and have it repaired as soon as possible. You may also have your fluid level checked by your dealer/retailer or service center when you have your oil changed.

Notice: **Use of automatic transmission fluid labeled other than ESSO LT71141 or TOTAL ATF H50235 may damage your vehicle, and the damages may not be covered by your warranty. Always use ESSO LT71141 or TOTAL ATF H50235 labeled automatic transmission fluid.**

Manual Transmission Fluid

It is not necessary to check the manual transmission fluid level. A transmission fluid leak is the only reason for fluid loss. If a leak occurs, take the vehicle to the dealer/retailer service department and have it repaired as soon as possible. You may also have your fluid level checked by your dealer/retailer when you have your oil changed. See *Part D: Recommended Fluids and Lubricants on page 6-26* for the proper fluid to use.

Hydraulic Clutch

There is one reservoir for both the brake and the hydraulic clutch fluid. See *Brakes on page 5-31* for more information.

The hydraulic clutch linkage in your vehicle is self-adjusting. The master cylinder reservoir is filled with hydraulic fluid.

It is not necessary to regularly check the fluid unless you suspect there is a leak in the system. Adding fluid will not correct a leak.

A fluid loss in this system could indicate a problem. Have the system inspected and repaired.

When to Check and What to Use

Refer to the Maintenance Schedule to determine how often you should check the fluid level in your master cylinder reservoir and for the proper fluid. See *Part B: Owner Checks and Services on page 6-19* and *Part D: Recommended Fluids and Lubricants on page 6-26*.

How to Check and Add Fluid

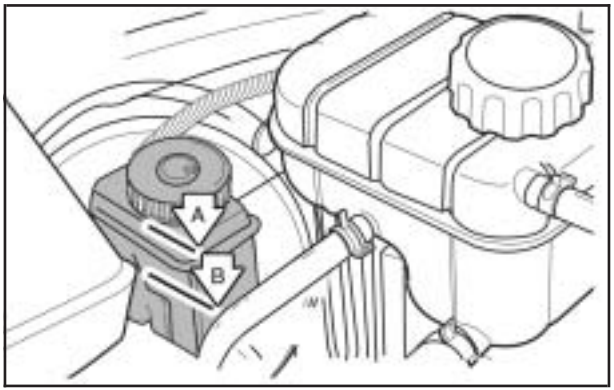

You do not need to check the fluid level unless you suspect a clutch problem. To check the fluid level, look on the side of the reservoir. If the fluid reaches the MAX (A) mark on the reservoir, the fluid level is correct. If the fluid does not reach the MIN (B) mark, then fluid needs to be added. The reservoir is located near the back of the engine compartment on the driver's side of the vehicle. See *Engine Compartment Overview on page 5-12* for more information on location.

Engine Coolant

The cooling system in your vehicle is filled with DEX-COOL® engine coolant. This coolant is designed to remain in your vehicle for five years or 150,000 miles (240 000 km), whichever occurs first, if you add only DEX-COOL® extended life coolant.

The following explains your cooling system and how to add coolant when it is low. If you have a problem with engine overheating, see *Engine Overheating on page 5-22*.

A 50/50 mixture of clean, drinkable water and DEX-COOL® coolant will:

- Give freezing protection down to –34°F (–37°C).
- Give boiling protection up to 265°F (129°C).
- Protect against rust and corrosion.
- Help keep the proper engine temperature.
- Let the warning lights and gages work as they should.

Notice: **Using coolant other than DEX-COOL® may cause premature engine, heater core, or radiator corrosion. In addition, the engine coolant may require changing sooner, at the first maintenance service after each 30,000 miles (50 000 km) or 24 months, whichever occurs first. Any repairs would not be covered by your warranty. Always use DEX-COOL® (silicate-free) coolant in your vehicle.**

What to Use

Use a mixture of one-half clean, drinkable water and one-half DEX-COOL® coolant which will not damage aluminum parts. If you use this coolant mixture, you do not need to add anything else.

⚠ CAUTION:

Adding only plain water to your cooling system can be dangerous. Plain water, or some other liquid such as alcohol, can boil before the proper coolant mixture will. Your vehicle's coolant warning system is set for the proper coolant mixture. With plain water or the wrong mixture, your engine could get too hot but you would not get the overheat warning. Your engine could catch fire and you or others could be burned. Use a 50/50 mixture of clean, drinkable water and DEX-COOL® coolant.

Notice: **If you use an improper coolant mixture, your engine could overheat and be badly damaged. The repair cost would not be covered by your warranty. Too much water in the mixture can freeze and crack the engine, radiator, heater core, and other parts.**

If you have to add coolant more than four times a year, have your dealer/retailer check your cooling system.

Notice: **If you use extra inhibitors and/or additives in your vehicle's cooling system, you could damage your vehicle. Use only the proper mixture of the engine coolant listed in this manual for the cooling system. See *Part D: Recommended Fluids and Lubricants on page 6-26* for more information.**

Checking Coolant

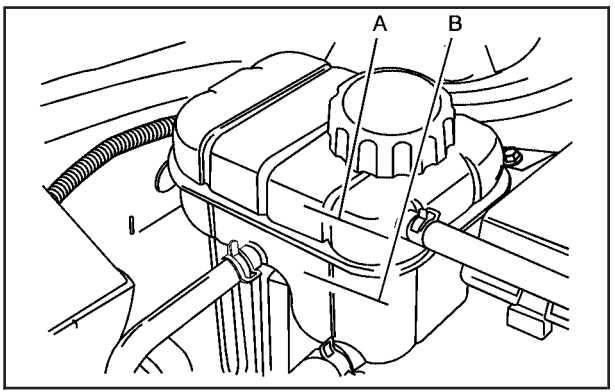

The engine coolant surge tank is located in the rear of the engine compartment on the driver's side of the vehicle. See *Engine Compartment Overview on page 5-12* for more information on location.

> **⚠ CAUTION:**
>
> **Turning the surge tank pressure cap when the engine and radiator are hot can allow steam and scalding liquids to blow out and burn you badly. Never turn the surge tank pressure cap — even a little — when the engine and radiator are hot.**

To check the engine coolant, the vehicle must be on a level surface. When your engine is cold, the coolant level should be between the Maximum (A) and Minimum (B) marks on the coolant surge tank. The level rises at engine operation temperature and drops again when the engine cools down.

Adding Coolant

If you need more coolant, add the proper DEX-COOL® coolant mixture at the coolant surge tank, but only when the engine is cool. If the coolant surge tank is empty, a special fill procedure is necessary. See *Engine Overheating on page 5-22* for instructions on "How to Add Coolant to the Coolant Surge Tank."

> **⚠ CAUTION:**
>
> **You can be burned if you spill coolant on hot engine parts. Coolant contains ethylene glycol, and it will burn if the engine parts are hot enough. Do not spill coolant on a hot engine.**

When replacing the pressure cap, make sure it is hand-tight and fully seated.

Coolant Surge Tank Pressure Cap

Notice: **If the pressure cap is not tightly installed, coolant loss and possible engine damage may occur. Be sure the cap is properly and tightly secured.**

The coolant surge tank pressure cap must be fully installed on the coolant surge tank. See *Engine Compartment Overview on page 5-12* for more information on location.

Engine Overheating

You will find a coolant temperature gage on your vehicle's instrument panel cluster. See *Engine Coolant Temperature Gage on page 3-33*.

If Steam Is Coming From Your Engine

⚠ CAUTION:

Steam from an overheated engine can burn you badly, even if you just open the hood. Stay away from the engine if you see or hear steam coming from it. Just turn it off and get everyone away from the vehicle until it cools down. Wait until there is no sign of steam or coolant before you open the hood.

If you keep driving when your engine is overheated, the liquids in it can catch fire. You or others could be badly burned. Stop your engine if it overheats, and get out of the vehicle until the engine is cool.

Notice: **If your engine catches fire because you keep driving with no coolant, your vehicle can be badly damaged. The costly repairs would not be covered by your warranty.**

If No Steam Is Coming From Your Engine

If you get an engine overheat warning, but see or hear no steam, the problem may not be too serious. Sometimes the engine can get a little too hot when you:

- Climb a long hill on a hot day.
- Stop after high-speed driving.
- Idle for long periods in traffic.

If you get the overheat warning with no sign of steam, try this for a minute or so:

1. In heavy traffic, let the engine idle in NEUTRAL (N) while stopped. If it is safe to do so, pull off the road, shift to PARK (P) or NEUTRAL (N) and let the engine idle.
2. Turn on your heater to full hot at the highest fan speed and open the windows as necessary.

If you no longer have the overheat warning, you can drive. Just to be safe, drive slower for about 10 minutes. If the warning does not come back on, you can drive normally.

If the warning continues and you have not stopped, pull over, stop, and park your vehicle right away.

If there is still no sign of steam, you can idle the engine for three minutes while you are parked. If you still have the warning, turn off the engine and get everyone out of the vehicle until it cools down.

You may decide not to lift the hood, but to get service help right away.

Cooling System

When you decide it is safe to lift the hood, here is what you will see:

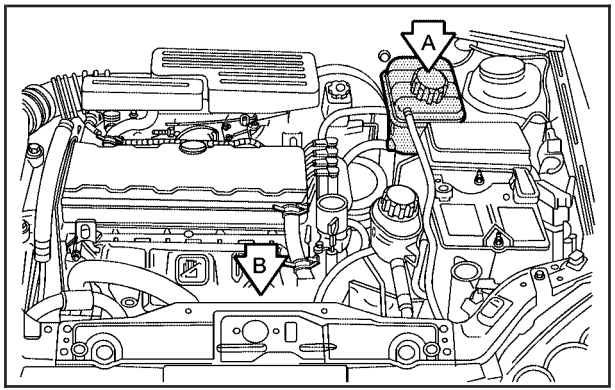

A. Coolant Surge Tank with Pressure Cap
B. Electric Engine Cooling Fan

⚠ CAUTION:

An electric engine cooling fan under the hood can start up even when the engine is not running and can injure you. Keep hands, clothing, and tools away from any underhood electric fan.

If the coolant inside the coolant surge tank is boiling, do not do anything else until it cools down. The vehicle should be parked on a level surface. Make sure that the air conditioning is turned off.

The coolant level should be between the Minimum and Maximum marks on the coolant surge tank when the engine is cool. If it is not, you may have a leak at the pressure cap or in the radiator hoses, heater hoses, radiator, water pump, or somewhere else in the cooling system.

⚠ CAUTION:

Heater and radiator hoses, and other engine parts, can be very hot. Do not touch them. If you do, you can be burned.

Do not run the engine if there is a leak. If you run the engine, it could lose all coolant. That could cause an engine fire, and you could be burned. Get any leak fixed before you drive the vehicle.

If there seems to be no leak, with the engine on, check to see if the electric engine cooling fan is running. If the engine is overheating, the fan should be running. If it is not, your vehicle needs service.

Notice: **Engine damage from running the engine without coolant is not covered by the warranty.**

How to Add Coolant to the Coolant Surge Tank

Notice: **This vehicle has a specific coolant fill procedure. Failure to follow this procedure could cause your engine to overheat and be severely damaged.**

If you have not found a problem yet, check to see if coolant is visible in the surge tank. If coolant is visible but the coolant level is not between the Minimum and Maximum marks, add a 50/50 mixture of clean, drinkable water and proper coolant at the coolant surge tank, but be sure the cooling system, including the coolant surge tank pressure cap, is cool before you do it. See *Engine Coolant on page 5-19* for more information.

If no coolant is visible in the surge tank, add coolant as follows:

⚠ CAUTION:

Steam and scalding liquids from a hot cooling system can blow out and burn you badly. They are under pressure, and if you turn the coolant surge tank pressure cap — even a little — they can come out at high speed. Never turn the cap when the cooling system, including the coolant surge tank pressure cap, is hot. Wait for the cooling system and coolant surge tank pressure cap to cool if you ever have to turn the pressure cap.

⚠ CAUTION:

Adding only plain water to your cooling system can be dangerous. Plain water, or some other liquid such as alcohol, can boil before the proper coolant mixture will. Your vehicle's coolant warning system is set for the proper coolant mixture. With plain water or the wrong mixture, your engine could get too hot but you would not get the overheat warning. Your engine could catch fire and you or others could be burned. Use a 50/50 mixture of clean, drinkable water and a proper coolant.

Notice: **In cold weather, water can freeze and crack the engine, radiator, heater core and other parts. Use the recommended coolant and the proper coolant mixture.**

⚠ CAUTION:

You can be burned if you spill coolant on hot engine parts. Coolant contains ethylene glycol and it will burn if the engine parts are hot enough. Do not spill coolant on a hot engine.

1. You can remove the coolant surge tank pressure cap when the cooling system, including the coolant surge tank pressure cap and upper radiator hose, is no longer hot. Turn the pressure cap slowly counterclockwise about two or two and one-half turns.

   If you hear a hiss, wait for that to stop. This will allow any pressure still left to be vented out the discharge hose.

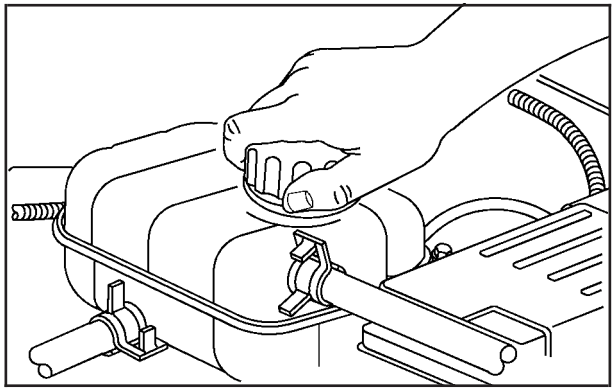

2. Then keep turning the pressure cap slowly, and remove it.

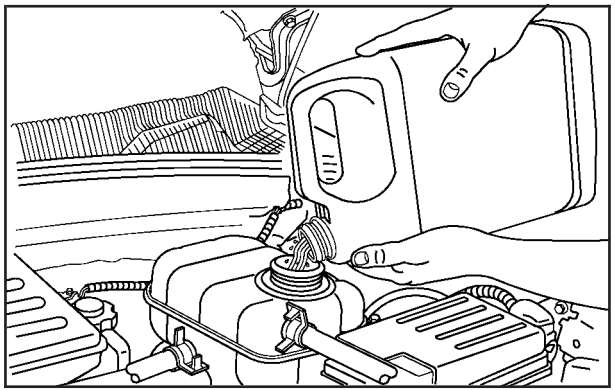

3. Fill the coolant surge tank with the proper mixture to the Maximum mark on the coolant surge tank. Wait about five minutes, then check to see if the level is below the mark. If the level is below the Maximum mark, add additional coolant to bring the level up to the mark. Repeat this procedure until the level remains constant at the Maximum mark for at least five minutes.
4. With the coolant surge tank pressure cap off, start the engine and let it run until you can feel the upper radiator hose getting hot. Watch out for the engine cooling fan.

   By this time, the coolant level inside the coolant surge tank may be lower. If the level is lower than the Maximum mark, add more of the proper mixture to the coolant surge tank until the level reaches the mark.
5. Then replace the pressure cap. Be sure the pressure cap is hand-tight and fully seated.

   See your dealer/retailer, if necessary.

Power Steering Fluid

When to Check Power Steering Fluid

The power steering fluid reservoir is located toward the front of the engine compartment on the driver's side of the vehicle. See *Engine Compartment Overview on page 5-12* for reservoir location.

It is not necessary to regularly check power steering fluid unless you suspect there is a leak in the system or you hear an unusual noise. A fluid loss in this system could indicate a problem. Have the system inspected and repaired.

How to Check Power Steering Fluid

Turn the key off and let the engine compartment cool down. Then check the fluid level.

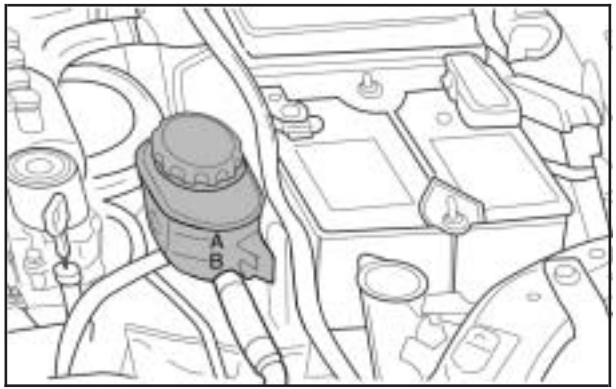

The level should be between the MIN (B) and MAX (A) marks on the reservoir. If the level is below the MIN (B) mark, add the power steering fluid to the appropriate level. Replace the cap and completely tighten it.

What to Use

To determine what kind of fluid to use, see *Part D: Recommended Fluids and Lubricants on page 6-26*. Always use the proper fluid. Failure to use the proper fluid can cause leaks and damage hoses and seals.

Windshield Washer Fluid

What to Use

When you need windshield washer fluid, be sure to read the manufacturer's instructions before use. If you will be operating your vehicle in an area where the temperature may fall below freezing, use a fluid that has sufficient protection against freezing.

Adding Washer Fluid

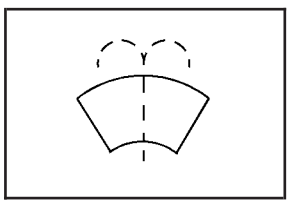

Open the cap with the washer symbol on it. Add washer fluid until the tank is full. See *Engine Compartment Overview on page 5-12* for reservoir location.

Notice:

- **When using concentrated washer fluid, follow the manufacturer's instructions for adding water.**
- **Do not mix water with ready-to-use washer fluid. Water can cause the solution to freeze and damage your washer fluid tank and other parts of the washer system. Also, water does not clean as well as washer fluid.**
- **Fill the washer fluid tank only three-quarters full when it is very cold. This allows for fluid expansion if freezing occurs, which could damage the tank if it is completely full.**
- **Do not use engine coolant (antifreeze) in your windshield washer. It can damage the vehicle's windshield washer system and paint.**

Brakes

Brake Fluid

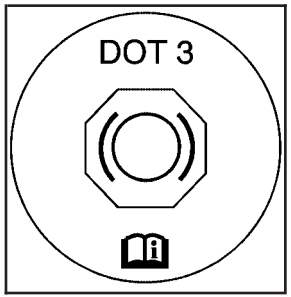

The master cylinder reservoir is filled with DOT-3 brake fluid. See *Engine Compartment Overview on page 5-12* for the location of the reservoir.

There are only two reasons why the brake fluid level in the reservoir might go down. The first is that the brake fluid goes down to an acceptable level during normal brake lining wear. When new linings are put in, the fluid level goes back up. The other reason is that fluid is leaking out of the brake hydraulic system. If it is, you should have the brake hydraulic system fixed, since a leak means that sooner or later the brakes will not work well.

It is not a good idea to top off the brake fluid. Adding brake fluid will not correct a leak. If fluid is added when the linings are worn, there will be too much fluid when new brake linings are installed. Add or remove brake fluid, as necessary, only when work is done on the brake hydraulic system

⚠ CAUTION:

If your vehicle has too much brake fluid, it can spill on the engine. The fluid will burn if the engine is hot enough. You or others could be burned, and your vehicle could be damaged. Add brake fluid only when work is done on the brake hydraulic system.

When the brake fluid falls to a low level, the brake warning light will come on. See *Brake System Warning Light on page 3-31*.

What to Add

When you do need brake fluid, use only DOT-3 brake fluid. Use new brake fluid from a sealed container only. See *Part D: Recommended Fluids and Lubricants on page 6-26*.

Always clean the brake fluid reservoir cap and the area around the cap before removing it. This helps keep dirt from entering the reservoir.

⚠ CAUTION:

With the wrong kind of fluid in the brake hydraulic system, the brakes might not work well. This could cause a crash. Always use the proper brake fluid.

Notice:

- **Using the wrong fluid can badly damage brake hydraulic system parts. For example, just a few drops of mineral-based oil, such as engine oil, in the brake hydraulic system can damage brake hydraulic system parts so badly that they will have to be replaced. Do not let someone put in the wrong kind of fluid.**
- **If you spill brake fluid on your vehicle's painted surfaces, the paint finish can be damaged. Be careful not to spill brake fluid on your vehicle. If you do, wash it off immediately. See *Washing Your Vehicle on page 5-82*.**

Brake Wear

Your vehicle has disc brakes. Disc brake pads have built-in wear indicators that make a high-pitched warning sound when the brake pads are worn and new pads are needed. The sound can come and go or be heard all the time your vehicle is moving, except when you are pushing on the brake pedal firmly.

> **⚠ CAUTION:**
>
> **The brake wear warning sound means that soon the brakes will not work well. That could lead to an accident. When you hear the brake wear warning sound, have your vehicle serviced.**

Notice: **Continuing to drive with worn-out brake pads could result in costly brake repair.**

Some driving conditions or climates can cause a brake squeal when the brakes are first applied or lightly applied. This does not mean something is wrong with the brakes.

Properly torqued wheel nuts are necessary to help prevent brake pulsation. When tires are rotated, inspect brake pads for wear and evenly tighten wheel nuts in the proper sequence to torque specifications in *Capacities and Specifications on page 5-94*.

Brake linings should always be replaced as complete axle sets.

See *Brake System Inspection on page 6-25*.

Brake Pedal Travel

See your dealer/retailer if the brake pedal does not return to normal height, or if there is a rapid increase in pedal travel. This could be a sign that brake service might be required.

Brake Adjustment

Every time you apply the brakes, with or without the vehicle moving, the brakes adjust for wear.

Replacing Brake System Parts

The braking system on a vehicle is complex. Its many parts have to be of top quality and work well together if the vehicle is to have really good braking. Your vehicle was designed and tested with top-quality brake parts. When you replace parts of the braking system — for example, when the brake linings wear down and you need new ones put in — be sure you get new approved replacement parts. If you do not, the brakes might not work properly. For example, if someone puts in brake linings that are wrong for your vehicle, the balance between the front and rear brakes can change — for the worse. The braking performance you have come to expect can change in many other ways if someone puts in the wrong replacement brake parts.

Battery

Your vehicle has a maintenance free battery. When it is time for a new battery, see your dealer/retailer for one that has the replacement number shown on the original battery's label. See *Engine Compartment Overview on page 5-12* for battery location.

Warning: Battery posts, terminals, and related accessories contain lead and lead compounds, chemicals known to the State of California to cause cancer and reproductive harm. Wash hands after handling.

Vehicle Storage

⚠ CAUTION:

Batteries have acid that can burn you and gas that can explode. You can be badly hurt if you are not careful. See *Jump Starting on page 5-35* for tips on working around a battery without getting hurt.

Infrequent Usage: If you drive your vehicle infrequently, remove the black, negative (–) cable from the battery. This will help keep the battery from running down.

Extended Storage: For extended storage of your vehicle, remove the black, negative (–) cable from the battery or use a battery trickle charger. This will help maintain the charge of the battery over an extended period of time.

Jump Starting

If your battery has run down, you may want to use another vehicle and some jumper cables to start your vehicle. Be sure to use the following steps to do it safely.

⚠ CAUTION:

Batteries can hurt you. They can be dangerous because:

- **They contain acid that can burn you.**
- **They contain gas that can explode or ignite.**
- **They contain enough electricity to burn you.**

If you do not follow these steps exactly, some or all of these things can hurt you.

Notice: **Ignoring these steps could result in costly damage to your vehicle that would not be covered by your warranty.**

Trying to start your vehicle by pushing or pulling it will not work, and it could damage your vehicle.

1. Check the other vehicle. It must have a 12-volt battery with a negative ground system.

Notice: **If the other vehicle's system is not a 12-volt system with a negative ground, both vehicles can be damaged. Only use vehicles with 12-volt systems with negative grounds to jump start your vehicle.**

2. Get the vehicles close enough so the jumper cables can reach, but be sure the vehicles are not touching each other. If they are, it could cause a ground connection you do not want. You would not be able to start your vehicle, and the bad grounding could damage the electrical systems.

   To avoid the possibility of the vehicles rolling, set the parking brake firmly on both vehicles involved in the jump start procedure. Put an automatic transmission in PARK (P) or a manual transmission in NEUTRAL before setting the parking brake.

Notice: **If you leave your radio or other accessories on during the jump starting procedure, they could be damaged. The repairs would not be covered by your warranty. Always turn off your radio and other accessories when jump starting your vehicle.**

3. Turn off the ignition on both vehicles. Unplug unnecessary accessories plugged into the cigarette lighter or the accessory power outlet. Turn off the radio and all lamps that are not needed. This will avoid sparks and help save both batteries. And it could save the radio!
4. Open the hoods and locate the batteries. Find the positive (+) and negative (–) terminal locations on each vehicle. Your vehicle's positive (+) terminal is located under a red tethered cap on the battery. The negative (–) terminal is located under a black tethered cap on the battery. See *Engine Compartment Overview on page 5-12* for more information on location. Flip the caps up to access the positive (+) and negative (–) terminals.

⚠ CAUTION:

An electric fan can start up even when the engine is not running and can injure you. Keep hands, clothing and tools away from any underhood electric fan.

⚠ CAUTION:

Using a match near a battery can cause battery gas to explode. People have been hurt doing this, and some have been blinded. Use a flashlight if you need more light.

Be sure the battery has enough water. You do not need to add water to the battery installed in your new vehicle. But if a battery has filler caps, be sure the right amount of fluid is there. If it is low, add water to take care of that first. If you don't, explosive gas could be present.

CAUTION: (Continued)

CAUTION: (Continued)

Battery fluid contains acid that can burn you. Do not get it on you. If you accidentally get it in your eyes or on your skin, flush the place with water and get medical help immediately.

⚠ CAUTION:

Fans or other moving engine parts can injure you badly. Keep your hands away from moving parts once the engine is running.

5. Check that the jumper cables do not have loose or missing insulation. If they do, you could get a shock. The vehicles could be damaged too.

   Before you connect the cables, here are some things you should know. Positive (+) will go to positive (+) or to a remote positive (+) terminal if the vehicle has one. Negative (–) will go to a heavy, unpainted metal engine part or to a remote negative (–) terminal if the vehicle has one.

   Do not connect positive (+) to negative (–) or you will get a short that would damage the battery and maybe other parts too. And do not connect the negative (–) cable to the negative (–) terminal on the dead battery because this can cause sparks.

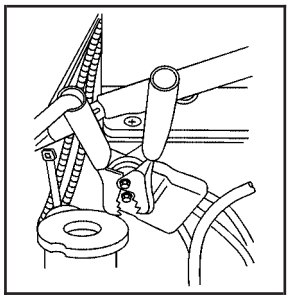

6. Connect the red positive (+) cable to the positive (+) terminal of the dead battery.

   Use a remote positive (+) terminal if the vehicle has one.

7. Do not let the other end touch metal. Connect it to the positive (+) terminal of the good battery. Use a remote positive (+) terminal if the vehicle has one.
8. Now connect the black negative (–) cable to the negative (–) terminal of the good battery. Use a remote negative (–) terminal if the vehicle has one.

   Do not let the other end touch anything until the next step. The other end of the negative (–) cable *does not* go to the dead battery. It goes to a heavy, unpainted metal engine part or to a remote negative (–) terminal on the vehicle with the dead battery.

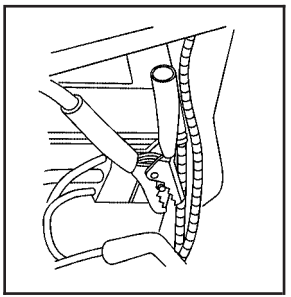

9. Connect the other end of the negative (–) cable at least 18 inches (45 cm) away from the dead battery, but not near engine parts that move.

   The electrical connection is just as good there, and the chance of sparks getting back to the battery is much less.

10. Now start the vehicle with the good battery and run the engine for a while.
11. Try to start the vehicle that had the dead battery. If it will not start after a few tries, it probably needs service.

Notice: **If the jumper cables are connected or removed in the wrong order, electrical shorting may occur and damage the vehicle. The repairs would not be covered by your warranty. Always connect and remove the jumper cables in the correct order, making sure that the cables do not touch each other or other metal.**

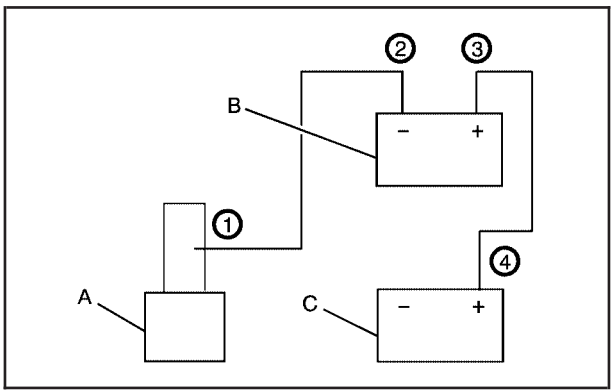

Jumper Cable Removal

A. Heavy, Unpainted Metal Engine Part or Remote Negative (–) Terminal

B. Good Battery or Remote Positive (+) and Remote Negative (–) Terminals

C. Dead Battery or Remote Positive (+) Terminal

To disconnect the jumper cables from both vehicles, do the following:

1. Disconnect the black negative (–) cable from the vehicle that had the dead battery.
2. Disconnect the black negative (–) cable from the vehicle with the good battery.
3. Disconnect the red positive (+) cable from the vehicle with the good battery.
4. Disconnect the red positive (+) cable from the other vehicle.
5. Return the caps over the positive (+) and negative (–) terminals to their original positions.

Headlamp Aiming

Headlamp aim has been preset at the factory and should need no further adjustment.

However, if your vehicle is damaged in a crash, the headlamp aim may be affected. Aim adjustment to the low-beam headlamps may be necessary if oncoming drivers flash their high-beam headlamps at you (for vertical aim).

If the headlamps need to be re-aimed, it is recommended that you take the vehicle to your dealer/retailer for service.

Bulb Replacement

For the proper type of replacement bulbs, see *Replacement Bulbs on page 5-48*.

For any bulb changing procedure not listed in this section, contact your dealer/retailer.

Halogen Bulbs

⚠ CAUTION:

Halogen bulbs have pressurized gas inside and can burst if you drop or scratch the bulb. You or others could be injured. Be sure to read and follow the instructions on the bulb package.

Headlamps

To replace a headlamp bulb:

1. Open the hood. See *Hood Release on page 5-11* for more information.
2. For wagon models, remove the two bolts from the top of the headlamp assembly and one nut on the inside that retains the headlamp assembly.
   For hatchback models, remove the four screws and the radiator grill. Then remove the three bolts and the headlamp assembly.
3. Disconnect the wiring harness connector from the rear of the bulb.

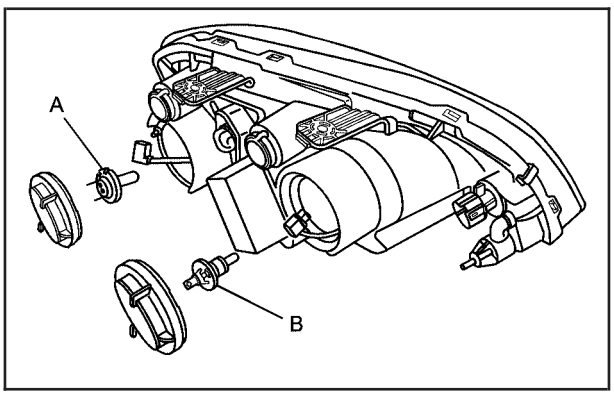

Wagon Models

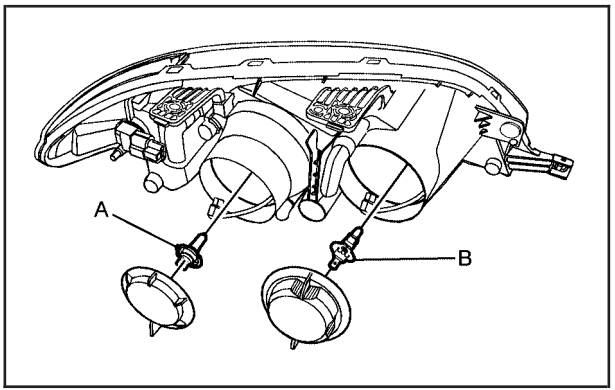

Hatchback Models

4. Remove the headlamp cap (A for the low-beam or B for the high-beam headlamp) by turning it counterclockwise.
5. Release the spring that retains the bulb.
6. Remove the old bulb.
7. Install a new bulb.
8. Reverse Steps 1 through 5 to install the headlamp assembly.

Front Turn Signal and Parking Lamps

To replace a front turn signal or parking lamp bulb:

1. Open the hood. See *Hood Release on page 5-11* for more information.
2. Remove the two bolts from the top of the headlamp assembly and one nut on the inside that retains the headlamp assembly.

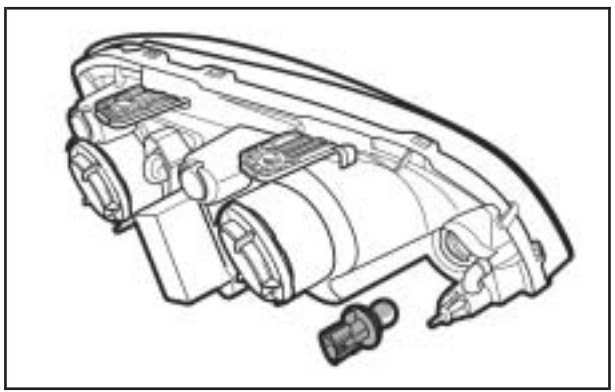

Wagon Models

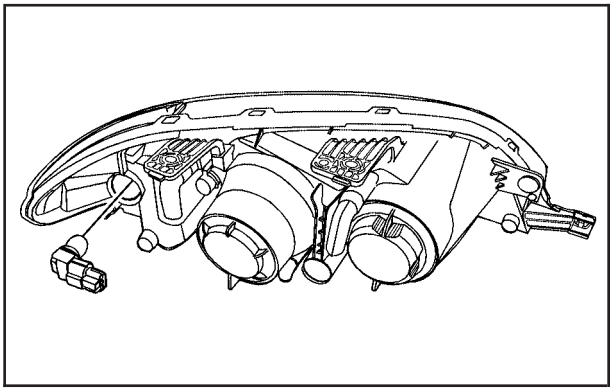

Hatchback Models

3. Turn the bulb socket counterclockwise.
4. Pull the bulb socket out of the lamp housing.
5. Press the bulb inward and turn it counterclockwise to remove it from the bulb socket.
6. Install the new bulb into the bulb socket by pressing it in and turning it clockwise.
7. Reinstall the bulb socket into the lamp housing by turning it clockwise.
8. Reverse Steps 1 through 2 to install the assembly.

Turn Signal Lamps (Side)

Your vehicle may have this side turn signal lamp. It will be located between the front door and the wheel well. To replace this bulb:

1. Locate the bulb by reaching underneath the vehicle where the side turn signal lamp is located.
2. Remove the side turn signal lamp assembly by pulling it forward.
3. Turn the bulb socket counterclockwise.

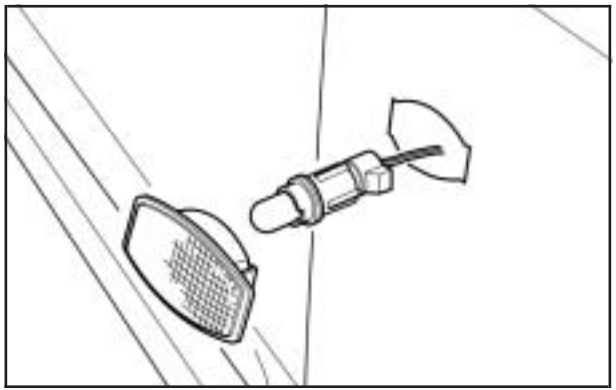

4. Remove the bulb from the lamp housing by pulling the bulb straight out of the socket.
5. Install the new bulb into the bulb socket by pushing it in and turning it clockwise.
6. Push the side turn signal lamp assembly back into its original position.

Sidemarker Lamps (Front)

To replace a front sidemarker bulb:

1. Open the hood. See *Hood Release on page 5-11* for more information.
2. Remove the headlamp assembly.
3. Turn the front sidemarker bulb socket counterclockwise.
4. Pull the front sidemarker bulb socket out of the front bumper.

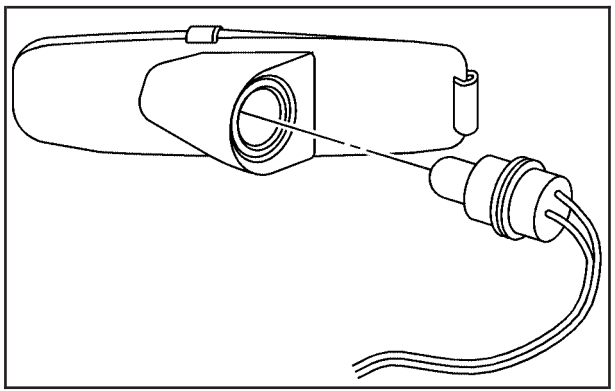

5. Pull the old bulb straight out of the bulb socket
6. Push the new bulb straight into the socket.
7. Reverse Steps 1 through 5 to install the assembly.

Sidemarker Lamps (Rear)

To replace a rear sidemarker bulb:

1. Reach inside of the rear bumper and locate the socket.

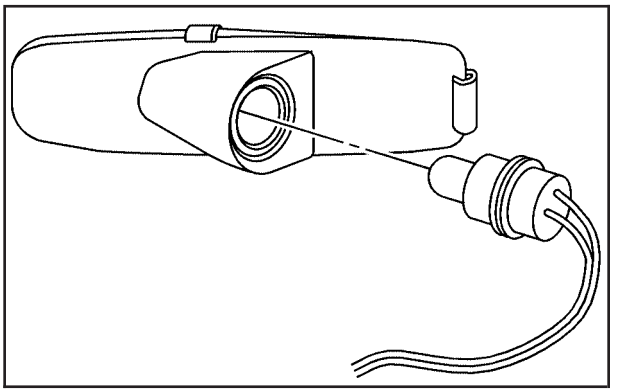

2. Turn the rear sidemarker bulb socket counterclockwise.
3. Pull the rear sidemarker bulb socket out of the rear bumper.
4. Pull the old bulb straight out from the bulb socket.
5. Push the new bulb straight into the socket.
6. Reverse Steps 1 through 3 to install the bulb socket.

Center High-Mounted Stoplamp (CHMSL) (Hatchback)

To replace a CHMSL bulb on a hatchback model:

1. Open the liftgate. See *Liftgate on page 2-10* for more information.

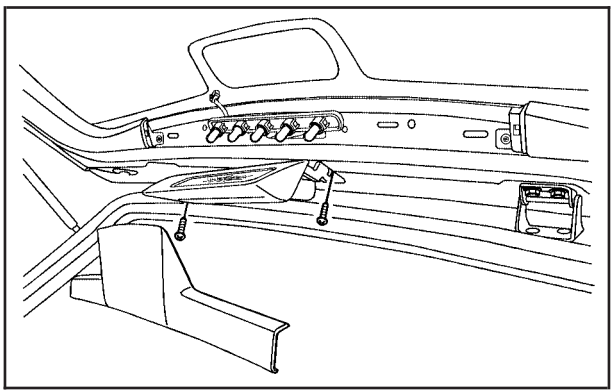

2. Pry off the trim from the liftgate and remove the two screws.
3. Remove the bulb socket from the lamp housing.
4. Remove the bulb by pulling it straight out of the bulb socket.
5. Install the new bulb.
6. Reverse Steps 1 through 3 to reinstall the lamp assembly.

Center High-Mounted Stoplamp (CHMSL) (Wagon)

To replace a CHMSL bulb on a wagon model:

1. Open the liftgate. See *Liftgate on page 2-10* for more information.

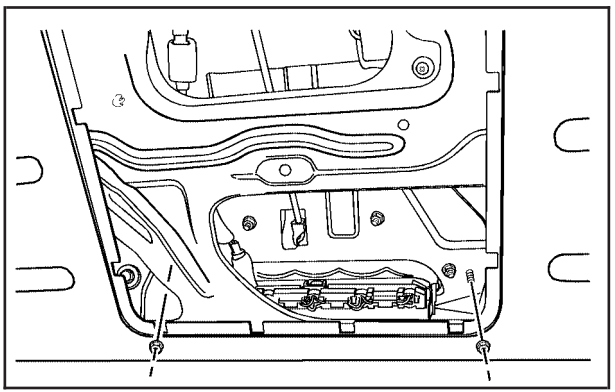

2. Remove the two screws and the liftgate trim cover.
3. Remove the bulb socket from the lamp housing.
4. Remove the bulb by pulling it straight out of the bulb socket.
5. Install the new bulb.
6. Reinstall the liftgate trim cover and secure with the two screws to secure.

Taillamps, Turn Signal, and Stoplamps (Hatchback)

To replace one of these bulbs:

1. Open the liftgate. See *Liftgate on page 2-10* for more information.
2. Remove the two screws and the taillamp assembly.

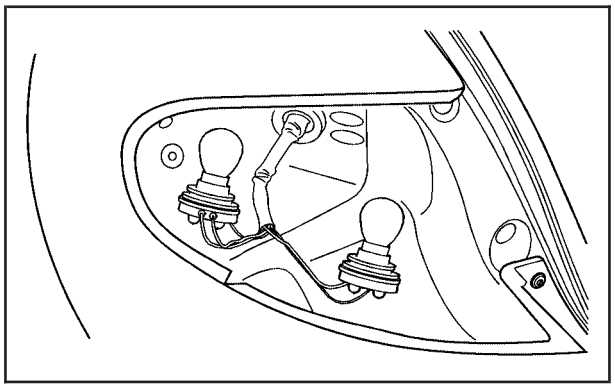

3. Remove the bulb socket by turning it counterclockwise from the taillamp assembly.
4. Remove the bulb from the socket by pressing the bulb and turning it counterclockwise.
5. Install the appropriate new bulb into the socket.
6. Reverse Steps 1 through 3 to install the lamp assembly.

Taillamps, Turn Signal, Stoplamps and Back-up Lamps (Wagon)

To replace one of these bulbs:

1. Open the liftgate. See *Liftgate on page 2-10* for more information.

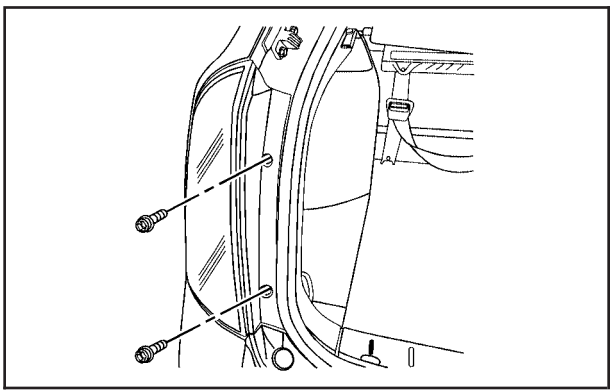

2. Remove the two screws from the taillamp assembly.
3. Remove the taillamp assembly from the vehicle.
4. Remove the bulb socket by turning it counterclockwise from the taillamp assembly.
5. Remove the bulb from the socket by pressing the bulb and turning it counterclockwise.

6. Install the appropriate new bulb into the socket.
7. Reverse Steps 1 through 4 to install the lamp assembly.

Taillamps, Stoplamps and Back-up Lamps (Hatchback)

To replace one of these bulbs:

1. Open the liftgate. See *Liftgate on page 2-10* for more information.
2. Remove the protective cover.

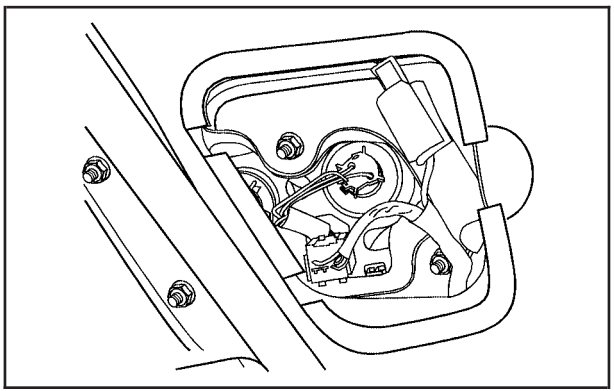

3. Remove the bulb socket by turning it counterclockwise.
4. Remove the bulb from the socket by pressing the bulb and turning it counterclockwise.
5. Install the appropriate new bulb into the socket.
6. Reinstall the protective cover.

License Plate Lamp

To replace one of these bulbs:

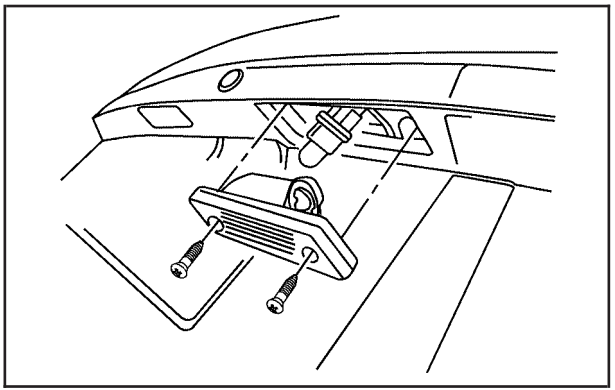

1. Remove the two screws holding each of the license plate lamps.
2. Turn and pull the license plate lamp toward you through the opening.

3. Turn the bulb socket counterclockwise and pull the bulb straight out of the socket.
4. Install the new bulb.
5. Reverse Steps 1 through 3 to reinstall the license plate lamp.

Replacement Bulbs

Exterior Lamps	Bulb Number
Back-up	94535571
CHMSL, Front and Rear Sidemarker	94535587
License Plate Lamp	94535587
Headlamps	
High-Beam	94535541
Low-Beam	94535546
Stoplamp and Taillamp	94535574
Turn Signal - Front and Parking Lamp	94535578
Turn Signal - Rear	94535572

For replacement bulbs not listed here, contact your dealer/retailer.

Windshield Wiper Blade Replacement

Windshield wiper blades should be inspected for wear or cracking. See “Wiper Blade Check” for more information.

Replacement blades come in different types and are removed in different ways. For the proper type, see *Maintenance Replacement Parts on page 5-95*.

Here is how to remove and replace the windshield wiper blade:

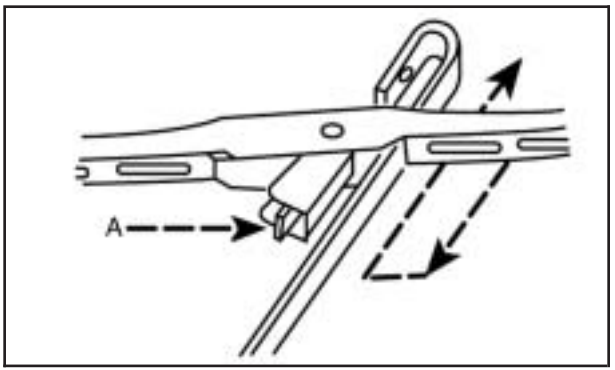

1. Pull the windshield wiper arm away from the windshield.
2. Press the retaining clip (A) and pull the wiper blade off the arm.
3. Install a new blade by reversing Steps 1 and 2.

Tires

Your new vehicle comes with high-quality tires made by a leading tire manufacturer. If you ever have questions about your tire warranty and where to obtain service, see your vehicle Warranty booklet for details.

⚠ CAUTION:

Poorly maintained and improperly used tires are dangerous.

- **Overloading your vehicle's tires can cause overheating as a result of too much flexing. You could have an air-out and a serious accident. See *Loading Your Vehicle on page 4-18*.**

CAUTION: (Continued)

CAUTION: (Continued)

- **Underinflated tires pose the same danger as overloaded tires. The resulting accident could cause serious injury. Check all tires frequently to maintain the recommended pressure. Tire pressure should be checked when your vehicle's tires are cold. See *Inflation - Tire Pressure on page 5-56*.**
- **Overinflated tires are more likely to be cut, punctured, or broken by a sudden impact — such as when you hit a pothole. Keep tires at the recommended pressure.**
- **Worn, old tires can cause accidents. If the tire's tread is badly worn, or if your vehicle's tires have been damaged, replace them.**

Tire Sidewall Labeling

Useful information about a tire is molded into its sidewall. The examples below show a typical passenger car tire and a compact spare tire sidewall.

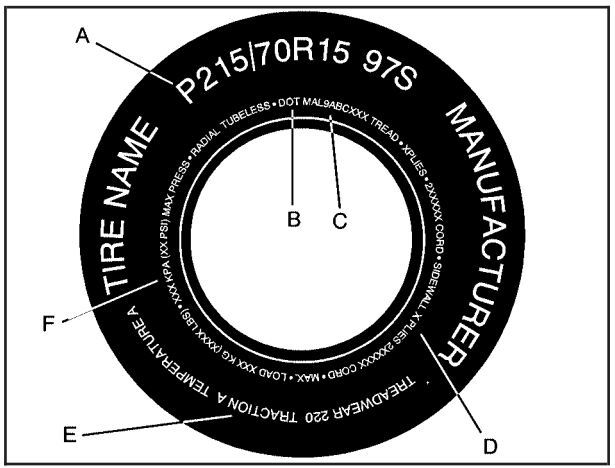

Passenger Car Tire Example

(A) Tire Size: The tire size is a combination of letters and numbers used to define a particular tire's width, height, aspect ratio, construction type and service description. See the "Tire Size" illustration later in this section for more detail.

(B) DOT (Department of Transportation): The Department of Transportation (DOT) code indicates that the tire is in compliance with the U.S. Department of Transportation Motor Vehicle Safety Standards.

(C) Tire Identification Number (TIN): The letters and numbers following DOT code are the Tire Identification Number (TIN). The TIN shows the manufacturer and plant code, tire size, and date the tire was manufactured. The TIN is molded onto both sides of the tire, although only one side may have the date of manufacture.

(D) Tire Ply Material: The type of cord and number of plies in the sidewall and under the tread.

(E) Uniform Tire Quality Grading (UTQG): Tire manufacturers are required to grade tires based on three performance factors: treadwear, traction and temperature resistance. For more information see *Uniform Tire Quality Grading on page 5-64*.

(F) Maximum Cold Inflation Load Limit: Maximum load that can be carried and the maximum pressure needed to support that load. For information on recommended tire pressure see *Inflation - Tire Pressure on page 5-56* and *Loading Your Vehicle on page 4-18*.

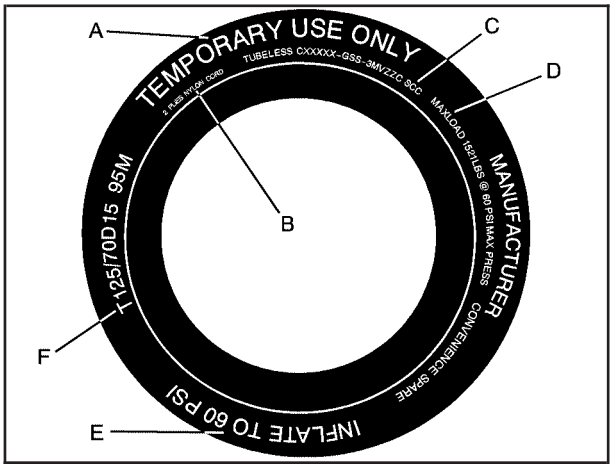

Compact Spare Tire Example

(A) Temporary Use Only: The compact spare tire or temporary use tire has a tread life of approximately 3,000 miles (5 000 km) and should not be driven at speeds over 65 mph (105 km/h). The compact spare tire is for emergency use when a regular road tire has lost air and gone flat. See *Compact Spare Tire on page 5-78* and *If a Tire Goes Flat on page 5-68*.

(B) Tire Ply Material: The type of cord and number of plies in the sidewall and under the tread.

(C) Tire Identification Number (TIN): The Tire Identification Number (TIN). The TIN shows the manufacturer and plant code, tire size, and date the tire was manufactured. The TIN is molded onto both sides of the tire, although only one side may have the date of manufacture.

(D) Maximum Cold Inflation Load Limit: Maximum load that can be carried and the maximum pressure needed to support that load. See *Compact Spare Tire on page 5-78* and *Loading Your Vehicle on page 4-18*.

(E) Tire Inflation: The temporary use tire or compact spare tire should be inflated to 60 psi (420 kPa). For more information on tire pressure and inflation see *Inflation - Tire Pressure on page 5-56*.

(F) Tire Size : A combination of letters and numbers define a tire's width, height, aspect ratio, construction type and service description. The letter T as the first character in the tire size means the tire is for temporary use only.

Tire Size

The following illustration shows an example of a typical passenger car tire size.

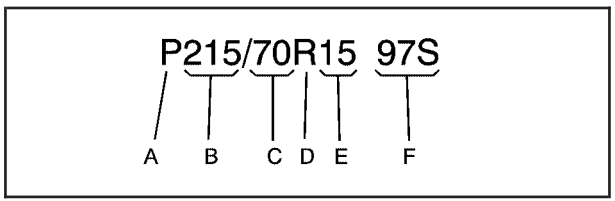

(A) Passenger (P-Metric) Tire: The United States version of a metric tire sizing system. The letter P as the first character in the tire size means a passenger vehicle tire engineered to standards set by the U. S. Tire and Rim Association.

(B) Tire Width: The three-digit number indicates the tire section width in millimeters from sidewall to sidewall.

(C) Aspect Ratio: A two-digit number that indicates the tire height-to-width measurements. For example, if the tire size aspect ratio is 70, as shown in item C of the illustration, it would mean that the tire's sidewall is 70% as high as it is wide.

(D) Construction Code: A letter code is used to indicate the type of ply construction in the tire. The letter R means radial ply construction; the letter D means diagonal or bias ply construction; and the letter B means belted-bias ply construction.

(E) Rim Diameter: Diameter of the wheel in inches.

(F) Service Description: These characters represent the load range and the speed rating of a tire. The load range represents the load carry capacity a tire is certified to carry. The speed rating is the maximum speed a tire is certified to carry a load. Speed ratings range from A to Z.

Tire Terminology and Definitions

Air Pressure: The amount of air inside the tire pressing outward on each square inch of the tire. Air pressure is expressed in pounds per square inch (psi) or kilopascal (kPa).

Accessory Weight: This means the combined weight of optional accessories. Some examples of optional accessories are, automatic transmission, power steering, power brakes, power windows, power seats, and air conditioning.

Aspect Ratio: The relationship of a tire's height to its width.

Belt: A rubber coated layer of cords that is located between the plies and the tread. Cords may be made from steel or other reinforcing materials.

Bead: The tire bead contains steel wires wrapped by steel cords that hold the tire onto the rim.

Bias Ply Tire: A pneumatic tire in which the plies are laid at alternate angles less than 90 degrees to the centerline of the tread.

Cold Tire Pressure: The amount of air pressure in a tire, measured in pounds per square inch (psi) or kilopascals (kPa) before a tire has built up heat from driving. See *Inflation - Tire Pressure on page 5-56*.

Curb Weight: The weight of a motor vehicle with standard and optional equipment including the maximum capacity of fuel, oil, and coolant, but without passengers and cargo.

DOT Markings: A code molded into the sidewall of a tire signifying that the tire is in compliance with the U.S. Department of Transportation (DOT) motor vehicle safety standards. The DOT code includes the Tire Identification Number (TIN), an alphanumeric designator which can also identify the tire manufacturer, production plant, brand, and date of production.

GVWR: Gross Vehicle Weight Rating. See *Loading Your Vehicle on page 4-18*.

GAWR FRT: Gross Axle Weight Rating for the front axle. See *Loading Your Vehicle on page 4-18*.

GAWR RR: Gross Axle Weight Rating for the rear axle. See *Loading Your Vehicle on page 4-18*.

Intended Outboard Sidewall: The side of an asymmetrical tire, that must always face outward when mounted on a vehicle.

Kilopascal (kPa): The metric unit for air pressure.

Light Truck (LT-Metric) Tire: A tire used on light duty trucks and some multipurpose passenger vehicles.

Load Index: An assigned number ranging from 1 to 279 that corresponds to the load carrying capacity of a tire.

Maximum Inflation Pressure: The maximum air pressure to which a cold tire can be inflated. The maximum air pressure is molded onto the sidewall.

Maximum Load Rating: The load rating for a tire at the maximum permissible inflation pressure for that tire.

Maximum Loaded Vehicle Weight: The sum of curb weight, accessory weight, vehicle capacity weight, and production options weight.

Normal Occupant Weight: The number of occupants a vehicle is designed to seat multiplied by 150 lbs (68 kg). See *Loading Your Vehicle on page 4-18*.

Occupant Distribution: Designated seating positions.

Outward Facing Sidewall: The side of an asymmetrical tire that has a particular side that faces outward when mounted on a vehicle. The side of the tire that contains a whitewall, bears white lettering, or bears manufacturer, brand, and/or model name molding that is higher or deeper than the same moldings on the other sidewall of the tire.

Passenger (P-Metric) Tire: A tire used on passenger cars and some light duty trucks and multipurpose vehicles.

Recommended Inflation Pressure: Vehicle manufacturer's recommended tire inflation pressure as shown on the tire placard. See *Inflation - Tire Pressure on page 5-56* and *Loading Your Vehicle on page 4-18*.

Radial Ply Tire: A pneumatic tire in which the ply cords that extend to the beads are laid at 90 degrees to the centerline of the tread.

Rim: A metal support for a tire and upon which the tire beads are seated.

Sidewall: The portion of a tire between the tread and the bead.

Speed Rating: An alphanumeric code assigned to a tire indicating the maximum speed at which a tire can operate.

Traction: The friction between the tire and the road surface. The amount of grip provided.

Tread: The portion of a tire that comes into contact with the road.

Treadwear Indicators: Narrow bands, sometimes called wear bars, that show across the tread of a tire when only 1/16 inch (1.6 mm) of tread remains. See *When It Is Time for New Tires on page 5-62*.

UTQGS (Uniform Tire Quality Grading Standards): A tire information system that provides consumers with ratings for a tire's traction, temperature, and treadwear. Ratings are determined by tire manufacturers using government testing procedures. The ratings are molded into the sidewall of the tire. See *Uniform Tire Quality Grading on page 5-64*.

Vehicle Capacity Weight: The number of designated seating positions multiplied by 150 lbs (68 kg) plus the rated cargo load. See *Loading Your Vehicle on page 4-18*.

Vehicle Maximum Load on the Tire: Load on an individual tire due to curb weight, accessory weight, occupant weight, and cargo weight.

Vehicle Placard: A label permanently attached to a vehicle showing the vehicle's capacity weight and the original equipment tire size and recommended inflation pressure. See "Tire and Loading Information Label" under *Loading Your Vehicle on page 4-18*.

Inflation - Tire Pressure

Tires need the correct amount of air pressure to operate effectively.

Notice: **Do not let anyone tell you that under-inflation or over-inflation is all right. It is not. If your tires do not have enough air (under-inflation), you can get the following:**

- **Too much flexing**
- **Too much heat**
- **Tire overloading**
- **Premature or irregular wear**
- **Poor handling**
- **Reduced fuel economy**

If your tires have too much air (over-inflation), you can get the following:

- **Unusual wear**
- **Poor handling**
- **Rough ride**
- **Needless damage from road hazards**

A vehicle specific tire and loading information label is attached to your vehicle. This label shows your vehicle's original equipment tires and the correct inflation pressures for your tires when they are cold. The recommended cold tire inflation pressure, shown on the label, is the minimum amount of air pressure needed to support your vehicle's maximum load carrying capacity.

For additional information regarding how much weight your vehicle can carry, and an example of the tire and loading information label, see *Loading Your Vehicle on page 4-18*. How you load your vehicle affects vehicle handling and ride comfort. Never load your vehicle with more weight than it was designed to carry.

When to Check

Check your tires once a month or more. Do not forget to check the compact spare tire. For additional information regarding the compact spare tire, see *Compact Spare Tire on page 5-78*.

How to Check

Use a good quality pocket-type gage to check tire pressure. You cannot tell if your tires are properly inflated simply by looking at them. Radial tires may look properly inflated even when they are under-inflated. Check the tire's inflation pressure when the tires are cold. Cold means your vehicle has been sitting for at least three hours or driven no more than 1 mile (1.6 km).

Remove the valve cap from the tire valve stem. Press the tire gage firmly onto the valve to get a pressure measurement. If the cold tire inflation pressure matches the recommended pressure on the Tire and Loading Information label, no further adjustment is necessary. If the inflation pressure is low, add air until you reach the recommended amount.

If you overfill the tire, release air by pushing on the metal stem in the center of the tire valve. Re-check the tire pressure with the tire gage.

Be sure to put the valve caps back on the valve stems. They help prevent leaks by keeping out dirt and moisture.

Tire Pressure Monitor System

The Tire Pressure Monitor System (TPMS) uses radio and sensor technology to check tire pressure levels. The TPMS sensors monitor the air pressure in your vehicle's tires and transmit tire pressure readings to a receiver located in the vehicle.

Each tire, including the spare (if provided), should be checked monthly when cold and inflated to the inflation pressure recommended by the vehicle manufacturer on the vehicle placard or tire inflation pressure label. (If your vehicle has tires of a different size than the size indicated on the vehicle placard or tire inflation pressure label, you should determine the proper tire inflation pressure for those tires.)

As an added safety feature, your vehicle has been equipped with a tire pressure monitoring system (TPMS) that illuminates a low tire pressure telltale when one or more of your tires is significantly under-inflated.

Accordingly, when the low tire pressure telltale illuminates, you should stop and check your tires as soon as possible, and inflate them to the proper pressure. Driving on a significantly under-inflated tire causes the tire to overheat and can lead to tire failure. Under-inflation also reduces fuel efficiency and tire tread life, and may affect the vehicle's handling and stopping ability.

Please note that the TPMS is not a substitute for proper tire maintenance, and it is the driver's responsibility to maintain correct tire pressure, even if under-inflation has not reached the level to trigger illumination of the TPMS low tire pressure telltale.

Your vehicle has also been equipped with a TPMS malfunction indicator to indicate when the system is not operating properly. The TPMS malfunction indicator is combined with the low tire pressure telltale. When the system detects a malfunction, the telltale will flash for approximately one minute and then remain continuously illuminated. This sequence will continue upon subsequent vehicle start-ups as long as the malfunction exists.

When the malfunction indicator is illuminated, the system may not be able to detect or signal low tire pressure as intended. TPMS malfunctions may occur for a variety of reasons, including the installation of replacement or alternate tires or wheels on the vehicle that prevent the TPMS from functioning properly. Always check the TPMS malfunction telltale after replacing one or more tires or wheels on your vehicle to ensure that the replacement or alternate tires and wheels allow the TPMS to continue to function properly.

See *Tire Pressure Monitor Operation on page 5-59*, for additional information.

Federal Communications Commission (FCC) and Industry and Science Canada

The Tire Pressure Monitor System (TPMS) operates on a radio frequency and complies with Part 15 of the FCC Rules. Operation is subject to the following two conditions:

1. This device may not cause harmful interference.
2. This device must accept any interference received, including interference that may cause undesired operation.

The Tire Pressure Monitor System (TPMS) operates on a radio frequency and complies with RSS-210 of Industry and Science Canada. Operation is subject to the following two conditions:

1. This device may not cause interference.
2. This device must accept any interference received, including interference that may cause undesired operation of the device.

Changes or modifications to this system by other than an authorized service facility could void authorization to use this equipment.

Tire Pressure Monitor Operation

The Tire Pressure Monitor System (TPMS) is designed to warn the driver when a low tire pressure condition exists. If your vehicle has this feature, the TPMS sensors are mounted onto each tire and wheel assembly, excluding the spare tire and wheel assembly. The TPMS sensors monitor the air pressure in your vehicle's tires and transmit tire pressure readings to a receiver located in the vehicle.

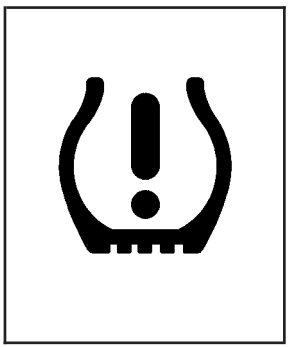

When a low tire pressure condition is detected, the TPMS illuminates the low tire pressure warning light on the instrument panel cluster.

The low tire pressure warning light comes on at each ignition cycle until the tires are inflated to the correct inflation pressure.

The tire pressure warning light may come on in cool weather when the vehicle is first started, and then turn off as you start to drive. This could be an early indicator that the tire pressures are getting low and need to be inflated to the proper pressure.

A Tire and Loading Information label, attached to your vehicle, shows the size of your vehicle's original equipment tires and the correct inflation pressure for your vehicle's tires when they are cold. See *Loading Your Vehicle on page 4-18*, for an example of the tire information label and its location on your vehicle. Also see *Inflation - Tire Pressure on page 5-56*.

Your vehicle's TPMS system can warn you about a low tire pressure condition but it does not replace normal tire maintenance. See *Tire Inspection and Rotation on page 5-60* and *Tires on page 5-49*.

Notice: **Liquid tire sealants could damage the Tire Pressure Monitor System (TPMS) sensors. Sensor damage caused by using a tire sealant is not covered by your warranty. Do not use liquid tire sealants.**

TPMS Malfunction Light

The TPMS will not function properly if one or more of the TPMS sensors are missing or inoperable. When the system detects a malfunction, the low tire warning light flashes for about one minute and then stays on for the remainder of the ignition cycle. The low tire warning light comes on at each ignition cycle until the problem is corrected. Some of the conditions that can cause the malfunction light to come on are:

- One of the road tires has been replaced with the spare tire. The spare tire does not have a TPMS sensor. The TPMS malfunction light and DIC message should go off once you re-install the road tire containing the TPMS sensor.
- One or more TPMS sensors are missing or damaged. The TPMS malfunction light should go off when the TPMS sensors are installed and the sensor matching process is performed successfully. See your dealer/retailer for service.
- Replacement tires or wheels do not match your vehicle's original equipment tires or wheels. Tires and wheels other than those recommended for your vehicle could prevent the TPMS from functioning properly. See *Buying New Tires on page 5-62*.
- Operating electronic devices or being near facilities using radio wave frequencies similar to the TPMS could cause the TPMS sensors to malfunction.

If the TPMS is not functioning it cannot detect or signal a low tire condition. See your dealer/retailer for service if the TPMS malfunction light and DIC message comes on and stays on.

TPMS Sensor Identification Codes

Each TPMS sensor has a unique identification code. Any time you replace one or more of the TPMS sensors, or rotate the vehicle's tires, the identification codes need to be matched to the new tire/wheel position. The sensors are matched, to the tire/wheel positions, in the following order: driver side front tire, passenger side front tire, passenger side rear tire, and driver side rear tire using a TPMS diagnostic tool. See your dealer/retailer for service.

Tire Inspection and Rotation

We recommend that you regularly inspect your vehicle's tires, including the spare tire, for signs of wear or damage. See *When It Is Time for New Tires on page 5-62* for more information.

Tires should be rotated every 5,000 to 8,000 miles (8 000 to 13 000 km). See *Part A: Scheduled Maintenance Services on page 6-4*.

The purpose of a regular tire rotation is to achieve a uniform wear for all tires on the vehicle. This will ensure that your vehicle continues to perform most like it did when the tires were new.

Any time you notice unusual wear, rotate your tires as soon as possible and check wheel alignment. Also check for damaged tires or wheels. See *When It Is Time for New Tires on page 5-62* and *Wheel Replacement on page 5-66* for more information.

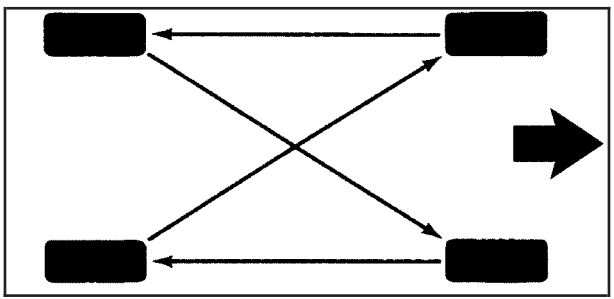

When rotating your tires, always use the correct rotation pattern shown here.

Do not include the compact spare tire in the tire rotation.

After the tires have been rotated, adjust the front and rear inflation pressures as shown on the tire and loading information label. See *Loading Your Vehicle on page 4-18* for an example of the tire and loading information label and where it is located on your vehicle. Make certain that all wheel nuts are properly tightened. See “Wheel Nut Torque” under *Capacities and Specifications on page 5-94*.

⚠ CAUTION:

Rust or dirt on a wheel, or on the parts to which it is fastened, can make wheel nuts become loose after time. The wheel could come off and cause an accident. When you change a wheel, remove any rust or dirt from places where the wheel attaches to the vehicle. In an emergency, you can use a cloth or a paper towel to do this; but be sure to use a scraper or wire brush later, if needed, to get all the rust or dirt off. See *Changing a Flat Tire on page 5-69*.

When It Is Time for New Tires

Various factors, such as maintenance, temperatures, driving speeds, vehicle loading, and road conditions influence when you need new tires.

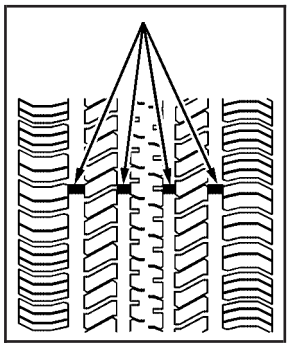

One way to tell when it is time for new tires is to check the treadwear indicators, which will appear when your tires have only 1/16 inch (1.6 mm) or less of tread remaining.

You need new tires if any of the following statements are true:

- You can see the indicators at three or more places around the tire.
- You can see cord or fabric showing through the tire's rubber.
- The tread or sidewall is cracked, cut, or snagged deep enough to show cord or fabric.
- The tire has a bump, bulge, or split.
- The tire has a puncture, cut, or other damage that cannot be repaired well because of the size or location of the damage.

The rubber in tires degrades over time, even if they are not being used. This is also true for the spare tire, if your vehicle has one. Multiple conditions affect how fast this aging takes place, including temperatures, loading conditions, and inflation pressure maintenance. With proper care and maintenance tires will typically wear out before they degrade due to age. If you are unsure about the need to replace your tires as they get older, consult the tire manufacturer for more information.

Buying New Tires

GM has developed and matched specific tires for your vehicle. If you need replacement tires, GM strongly recommends that you get tires that are the same size, brand, load range, speed rating, and construction type (radial and bias-belted tires) as your vehicle's original tires. This way, your vehicle will continue to have tires that are designed to give the same performance and vehicle safety, during normal use, as the original tires. See *Tire Sidewall Labeling on page 5-50* for additional information.

GM recommends replacing tires in sets of four. This is because uniform tread depth on all tires will help keep your vehicle performing most like it did when the tires were new. Replacing less than a full set of tires can affect the braking and handling performance of your vehicle. See *Tire Inspection and Rotation on page 5-60*.

⚠ CAUTION:

Mixing tires could cause you to lose control while driving. If you mix tires of different sizes, brands, or types (radial and bias-belted tires), the vehicle may not handle properly, and you could have a crash. Using tires of different sizes, brands, or types may also cause damage to your vehicle. Be sure to use the correct size, brand, and type of tires on all wheels. It is all right to drive with your compact spare temporarily, as it was developed for use on your vehicle. See *Compact Spare Tire on page 5-78*.

⚠ CAUTION:

If you use bias-ply tires on your vehicle, the wheel rim flanges could develop cracks after many miles of driving. A tire and/or wheel could fail suddenly, causing a crash. Use only radial-ply tires with the wheels on your vehicle.

Your vehicle's original equipment tires are listed on the Tire and Loading Information Label. See *Loading Your Vehicle on page 4-18*, for more information about the Tire and Loading Information label and its location on your vehicle.

Different Size Tires and Wheels

If you add wheels or tires that are a different size than your original equipment wheels and tires, this may affect the way your vehicle performs, including its braking, ride and handling characteristics, stability, and resistance to rollover. Additionally, if your vehicle has electronic systems such as, anti-lock brakes, traction control, and electronic stability control, the performance of these systems can be affected.

⚠ CAUTION:

If you add different sized wheels, your vehicle may not provide an acceptable level of performance and safety if tires not recommended for those wheels are selected. You may increase the chance that you will crash and suffer serious injury. Only use GM specific wheel and tire systems developed for your vehicle, and have them properly installed by a GM certified technician.

See *Buying New Tires on page 5-62* and *Accessories and Modifications on page 5-4* for additional information.

Uniform Tire Quality Grading

Quality grades can be found where applicable on the tire sidewall between tread shoulder and maximum selection width. For example:

Treadwear 200 Traction AA Temperature A

The following information relates to the system developed by the Unites States National Highway Traffic Safety Administration (NHTSA), which grades tires by treadwear, traction, and temperature performance. This applies only to vehicles sold in the United States. The grades are molded on the sidewalls of most passenger car tires. The Uniform Tire Quality Grading (UTQG) system does not apply to deep tread, winter-type snow tires, space-saver, or temporary use spare tires, tires with nominal rim diameters of 10 to 12 inches (25 to 30 cm), or to some limited-production tires.

While the tires available on General Motors passenger cars and light trucks may vary with respect to these grades, they must also conform to federal safety requirements.

Treadwear

The treadwear grade is a comparative rating based on the wear rate of the tire when tested under controlled conditions on a specified government test course. For example, a tire graded 150 would wear one and a half (1½) times as well on the government course as a tire graded 100. The relative performance of tires depends upon the actual conditions of their use, however, and may depart significantly from the norm due to variations in driving habits, service practices, and differences in road characteristics and climate.

Traction — AA, A, B, C

The traction grades, from highest to lowest, are AA, A, B, and C. Those grades represent the tire's ability to stop on wet pavement as measured under controlled conditions on specified government test surfaces of asphalt and concrete. A tire marked C may have poor traction performance.

Warning: **The traction grade assigned to this tire is based on straight-ahead braking traction tests, and does not include acceleration, cornering, hydroplaning, or peak traction characteristics.**

Temperature — A, B, C

The temperature grades are A (the highest), B, and C, representing the tire's resistance to the generation of heat and its ability to dissipate heat when tested under controlled conditions on a specified indoor laboratory test wheel. Sustained high temperature can cause the material of the tire to degenerate and reduce tire life, and excessive temperature can lead to sudden tire failure. The grade C corresponds to a level of performance which all passenger car tires must meet under the Federal Motor Vehicle Safety Standard No. 109. Grades B and A represent higher levels of performance on the laboratory test wheel than the minimum required by law.

Warning: **The temperature grade for this tire is established for a tire that is properly inflated and not overloaded. Excessive speed, under-inflation, or excessive loading, either separately or in combination, can cause heat buildup and possible tire failure.**

Wheel Alignment and Tire Balance

The tires and wheels on your vehicle were aligned and balanced carefully at the factory to give you the longest tire life and best overall performance. Adjustments to wheel alignment and tire balancing will not be necessary on a regular basis. However, if you notice unusual tire wear or your vehicle pulling to one side or the other, the alignment might need to be checked. If you notice your vehicle vibrating when driving on a smooth road, the tires and wheels might need to be rebalanced. See your dealer/retailer for proper diagnosis.

Wheel Replacement

Replace any wheel that is bent, cracked, or badly rusted or corroded. If wheel nuts keep coming loose, the wheel, wheel bolts, and wheel nuts should be replaced. If the wheel leaks air, replace it (except some aluminum wheels, which can sometimes be repaired). See your dealer/retailer if any of these conditions exist.

Your dealer/retailer will know the kind of wheel you need.

Each new wheel should have the same load-carrying capacity, diameter, width, offset, and be mounted the same way as the one it replaces.

If you need to replace any of your wheels, wheel bolts, wheel nuts, or Tire Pressure Monitor System (TPMS) sensors, replace them only with new GM original equipment parts. This way, you will be sure to have the right wheel, wheel bolts, wheel nuts, and TPMS sensors for your vehicle.

⚠ CAUTION:

Using the wrong replacement wheels, wheel bolts, or wheel nuts on your vehicle can be dangerous. It could affect the braking and handling of your vehicle, make your tires lose air and make you lose control. You could have a collision in which you or others could be injured. Always use the correct wheel, wheel bolts, and wheel nuts for replacement.

Notice: **The wrong wheel can also cause problems with bearing life, brake cooling, speedometer or odometer calibration, headlamp aim, bumper height, vehicle ground clearance, and tire or tire chain clearance to the body and chassis.**

See *Changing a Flat Tire on page 5-69* for more information.

Used Replacement Wheels

⚠ CAUTION:

Putting a used wheel on your vehicle is dangerous. You cannot know how it has been used or how far it has been driven. It could fail suddenly and cause a crash. If you have to replace a wheel, use a new GM original equipment wheel.

Tire Chains

Notice: **Use tire chains only where legal and only when you must. Use only SAE Class "S" type chains that are the proper size for your tires. Install them on the front tires and tighten them as tightly as possible with the ends securely fastened. Drive slowly and follow the chain manufacturer's instructions. If you can hear the chains contacting your vehicle, stop and retighten them. If the contact continues, slow down until it stops. Driving too fast or spinning the wheels with chains on will damage your vehicle.**

If a Tire Goes Flat

It is unusual for a tire to blowout while you are driving, especially if you maintain your vehicle's tires properly. If air goes out of a tire, it is much more likely to leak out slowly. But if you should ever have a blowout, here are a few tips about what to expect and what to do:

If a front tire fails, the flat tire creates a drag that pulls the vehicle toward that side. Take your foot off the accelerator pedal and grip the steering wheel firmly. Steer to maintain lane position, and then gently brake to a stop well out of the traffic lane.

A rear blowout, particularly on a curve, acts much like a skid and may require the same correction you would use in a skid. In any rear blowout remove your foot from the accelerator pedal. Get the vehicle under control by steering the way you want the vehicle to go. It may be very bumpy and noisy, but you can still steer. Gently brake to a stop, well off the road if possible.

⚠ CAUTION:

Lifting a vehicle and getting under it to do maintenance or repairs is dangerous without the appropriate safety equipment and training. The jack provided with your vehicle is designed only for changing a flat tire. If it is used for anything else, you or others could be badly injured or killed if the vehicle slips off the jack. Use the jack provided with your vehicle only for changing a flat tire.

If a tire goes flat, the next part shows how to use the jacking equipment to change a flat tire safely.

Changing a Flat Tire

If a tire goes flat, avoid further tire and wheel damage by driving slowly to a level place. Turn on the hazard warning flashers. See *Hazard Warning Flashers on page 3-6* for more information.

⚠ CAUTION:

Changing a tire can be dangerous. The vehicle can slip off the jack and roll over or fall on you or other people. You and they could be badly injured or even killed. Find a level place to change your tire. To help prevent the vehicle from moving:

1. **Set the parking brake firmly.**
2. **Put an automatic transmission shift lever in PARK (P), or shift a manual transmission to FIRST (1) or REVERSE (R).**
3. **Turn off the engine and do not restart while the vehicle is raised.**
4. **Do not allow passengers to remain in the vehicle.**

CAUTION: (Continued)

CAUTION: (Continued)

To be certain the vehicle will not move, put blocks at the front and rear of the tire farthest away from the one being changed. That would be the tire on the other side, at the opposite end of the vehicle.

When you have a flat tire, use the following example as a guide to assist you in the placement of wheel blocks.

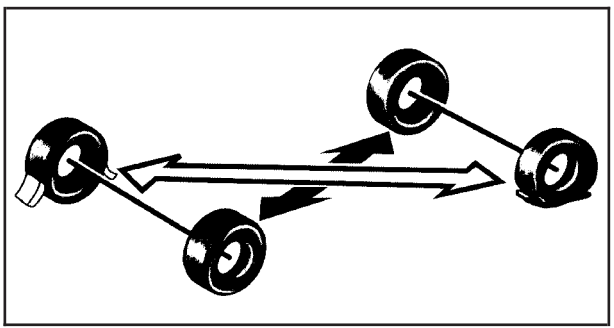

The following information tells you how to use the jack and change a tire.

Removing the Spare Tire and Tools

The tools you will be using to change a flat tire are shown below. Refer to your vehicle model to access the spare tire and tools.

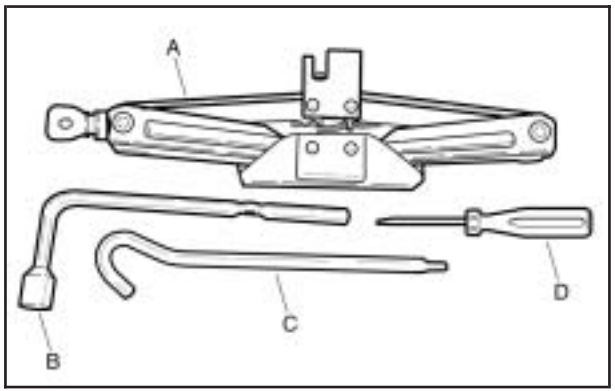

A. Jack
B. Wheel Wrench
C. Jack Handle
D. Screwdriver

Wagon Models

To access the spare tire and tools:

1. Open the liftgate. See *Liftgate on page 2-10* for more information.
2. Fold the floor cover by pulling the handle upward.
3. Lift the floor tray.

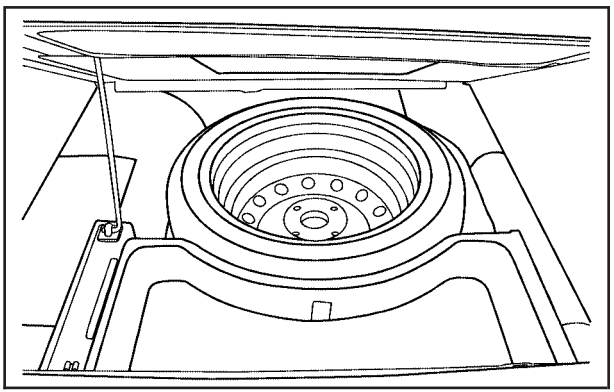

4. Release the prop from its retainer and put the prop into the slot.

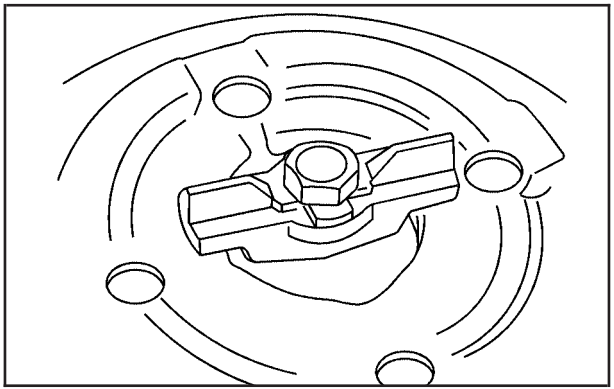

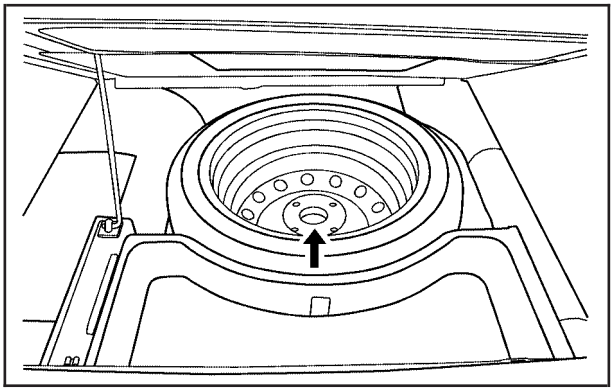

5. Turn the retainer on the compact spare tire counterclockwise and remove the retainer.
6. Remove the compact spare tire. See *Compact Spare Tire on page 5-78* for more information.
7. To access the tools, pull the strap on the tool box cover upward. The tools are located inside the foam tray.

Hatchback Models

To access the spare tire and tools:

1. Open the liftgate. See *Liftgate on page 2-10* for more information.
2. Remove the trim cover by pulling up on the tab.
3. Remove the foam tray that contains the tools.

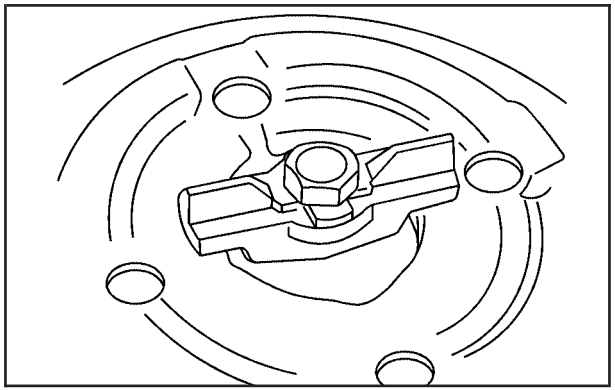

4. Turn the retainer on the compact spare tire counterclockwise and remove the retainer.
5. Remove the compact spare tire. See *Compact Spare Tire on page 5-78* for more information.

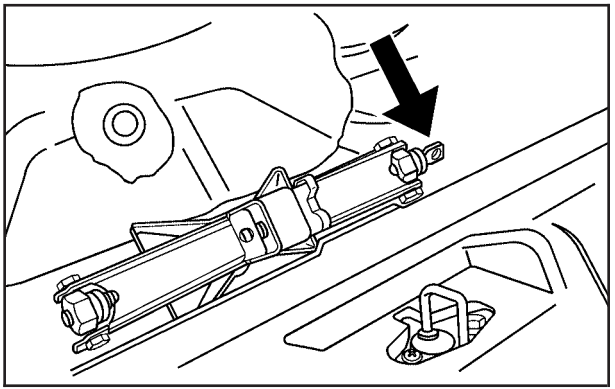

6. Remove the jack by turning the jack retainer, located on the right side of the jack, counterclockwise to release it. The jack is located in the trunk, in front of the compact spare tire.
7. Then remove the jack handle and the wheel wrench. The jack handle and the wheel wrench are located inside the foam tray.

Removing the Flat Tire and Installing the Spare Tire

1. Do a safety check before proceeding. See *Changing a Flat Tire on page 5-69* for more information.
2. If your vehicle has wheel covers, use the jack handle to begin loosening the wheel covers. Using the flat end of the jack handle or the screwdriver, pry along the edge of the wheel cover until it comes off.

   Store the wheel cover in the cargo area until you have the flat tire repaired or replaced.

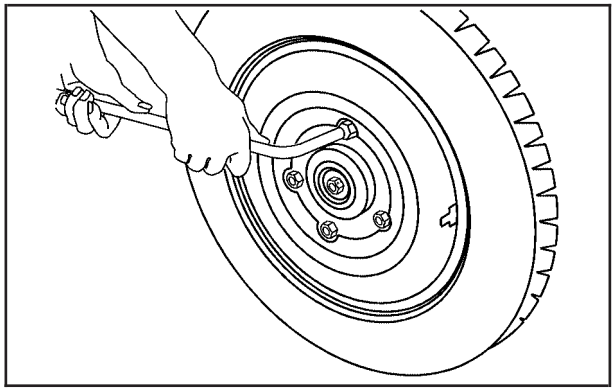

3. Use the wheel wrench to loosen all the wheel nuts. Do not remove them yet.

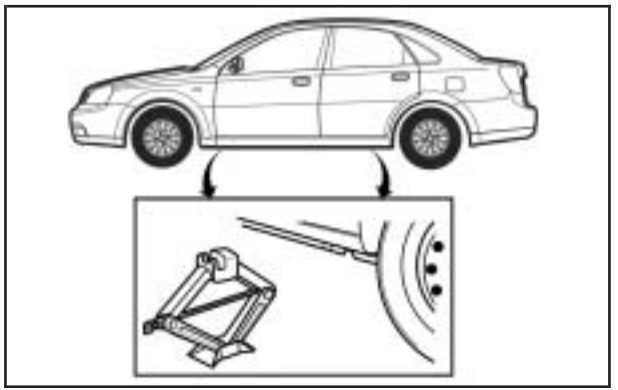

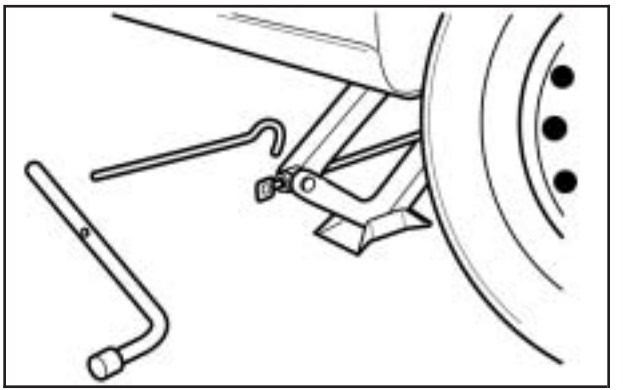

4. Locate the notch near each wheel in the frame which the jack head fits in.

   Position the jack and raise the jack head until it fits firmly into the notch in the vehicle's frame nearest the flat tire.

5. Put the compact spare tire near you.

6. Insert the jack handle into the jack and the wheel wrench onto the end of the jack handle.

⚠ CAUTION:

Getting under a vehicle when it is jacked up is dangerous. If the vehicle slips off the jack, you could be badly injured or killed. Never get under a vehicle when it is supported only by a jack.

⚠ CAUTION:

Raising your vehicle with the jack improperly positioned can damage the vehicle and even make the vehicle fall. To help avoid personal injury and vehicle damage, be sure to fit the jack lift head into the proper location before raising the vehicle.

7. Raise the vehicle by turning the wheel wrench clockwise. Raise the vehicle far enough off the ground so there is enough room for the compact spare tire to fit underneath the wheel well.
8. Remove all of the wheel nuts by turning them counterclockwise.
9. Remove the flat tire.

⚠ CAUTION:

Rust or dirt on a wheel, or on the parts to which it is fastened, can make wheel nuts become loose after time. The wheel could come off and cause an accident. When you change a wheel, remove any rust or dirt from places where the wheel attaches to the vehicle. In an emergency, you can use a cloth or a paper towel to do this; but be sure to use a scraper or wire brush later, if needed, to get all the rust or dirt off. See *Changing a Flat Tire on page 5-69*.

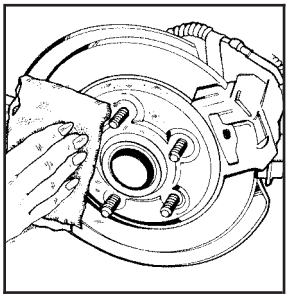

10. Remove any rust or dirt from the wheel bolts, mounting surfaces and spare wheel.

11. Place the compact spare tire on the wheel-mounting surface.

⚠ CAUTION:

Never use oil or grease on studs or nuts. Because the nuts might come loose. The vehicle's wheel could fall off, causing a crash.

12. Install the wheel nuts with the rounded end of the nuts toward the wheel. Tighten each nut by hand clockwise until the wheel is held against the hub.
13. Lower the vehicle by turning the wheel wrench counterclockwise. Lower the jack completely.

⚠ CAUTION:

Incorrect or improperly tightened wheel nuts can cause the wheel to come loose and even come off. This could lead to a crash. If you have to replace them, be sure to get new original equipment wheel nuts. Stop somewhere as soon as you can and have the nuts tightened with a torque wrench to the proper torque specification. See *Capacities and Specifications on page 5-94* for wheel nut torque specification.

Notice: **Improperly tightened wheel nuts can lead to brake pulsation and rotor damage. To avoid expensive brake repairs, evenly tighten the wheel nuts in the proper sequence and to the proper torque specification. See *Capacities and Specifications on page 5-94* for the wheel nut torque specification.**

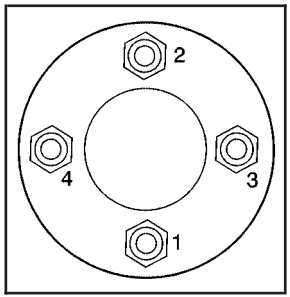

14. Tighten the wheel nuts firmly in a crisscross sequence, as shown.

Notice: **Wheel covers will not fit on your vehicle's compact spare. If you try to put a wheel cover on the compact spare, the cover or the spare could be damaged.**

Storing a Flat or Spare Tire and Tools

⚠ CAUTION:

Storing a jack, a tire, or other equipment in the passenger compartment of the vehicle could cause injury. In a sudden stop or collision, loose equipment could strike someone. Store all these in the proper place.

To store a flat or compact spare tire and tools:

1. Store the flat tire or the compact spare in the compact spare tire compartment.
2. Secure the retainer.
3. Store the tools securely in the foam tray and place the tray back in the cargo area.
4. Replace the trim cover.

The compact spare tire is for temporary use only. Replace the compact spare tire with a full-size tire as soon as you can. See *Compact Spare Tire on page 5-78*.

Compact Spare Tire

Although the compact spare tire was fully inflated when your vehicle was new, it can lose air after a time. Check the inflation pressure regularly. It should be 60 psi (420 kPa).

After installing the compact spare on your vehicle, you should stop as soon as possible and make sure your spare tire is correctly inflated. The compact spare is made to perform well at speeds up to 50 mph (80 km/h), so you can finish your trip and have your full-size tire repaired or replaced where you want. Of course, it is best to replace your spare with a full-size tire as soon as you can. Your spare will last longer and be in good shape in case you need it again.

Notice: **When the compact spare is installed, do not take your vehicle through an automatic car wash with guide rails. The compact spare can get caught on the rails. That can damage the tire and wheel, and maybe other parts of your vehicle.**

Do not use your compact spare on other vehicles.

And do not mix your compact spare tire or wheel with other wheels or tires. They will not fit. Keep your spare tire and its wheel together.

Notice: **Tire chains will not fit your compact spare. Using them can damage your vehicle and can damage the chains too. Do not use tire chains on your compact spare.**

Appearance Care

Interior Cleaning

Your vehicle's interior will continue to look its best if it is cleaned often. Although not always visible, dust and dirt can accumulate on your upholstery. Dirt can damage carpet, fabric, leather, and plastic surfaces. Regular vacuuming is recommended to remove particles from your upholstery. It is important to keep your upholstery from becoming and remaining heavily soiled. Soils should be removed as quickly as possible. Your vehicle's interior may experience extremes of heat that could cause stains to set rapidly.

Lighter colored interiors may require more frequent cleaning. Use care because newspapers and garments that transfer color to your home furnishings may also transfer color to your vehicle's interior.

When cleaning your vehicle's interior, only use cleaners specifically designed for the surfaces being cleaned. Permanent damage may result from using cleaners on surfaces for which they were not intended. Use glass cleaner only on glass. Remove any accidental over-spray from other surfaces immediately. To prevent over-spray, apply cleaner directly to the cleaning cloth.

Notice: **If you use abrasive cleaners when cleaning glass surfaces on your vehicle, you could scratch the glass and/or cause damage to the rear window defogger. When cleaning the glass on your vehicle, use only a soft cloth and glass cleaner.**

Many cleaners contain solvents that may become concentrated in your vehicle's breathing space. Before using cleaners, read and adhere to all safety instructions on the label. While cleaning your vehicle's interior, maintain adequate ventilation by opening your vehicle's doors and windows.

Dust may be removed from small buttons and knobs using a small brush with soft bristles.

Your dealer/retailer has a product for cleaning your vehicle's glass. Should it become necessary, you can also obtain a product from your dealer/retailer to remove odors from your vehicle's upholstery.

Do not clean your vehicle using the following cleaners or techniques:

- Never use a knife or any other sharp object to remove a soil from any interior surface.
- Never use a stiff brush. It can cause damage to your vehicle's interior surfaces.
- Never apply heavy pressure or rub aggressively with a cleaning cloth. Use of heavy pressure can damage your interior and does not improve the effectiveness of soil removal.

- Use only mild, neutral-pH soaps. Avoid laundry detergents or dishwashing soaps with degreasers. Using too much soap will leave a residue that leaves streaks and attracts dirt. For liquid cleaners, about 20 drops per gallon (3.78 L) of water is a good guide.
- Do not heavily saturate your upholstery while cleaning.
- Damage to your vehicle's interior may result from the use of many organic solvents such as naptha, alcohol, etc.

Fabric/Carpet

Use a vacuum cleaner with a soft brush attachment frequently to remove dust and loose dirt. A canister vacuum with a beater bar in the nozzle may only be used on floor carpet and carpeted floor mats. For soils, always try to remove them first with plain water or club soda. Before cleaning, gently remove as much of the soil as possible using one of the following techniques:

- For liquids: gently blot the remaining soil with a paper towel. Allow the soil to absorb into the paper towel until no more can be removed.
- For solid dry soils: remove as much as possible and then vacuum.

To clean, use the following instructions:

1. Saturate a lint-free, clean white cloth with water or club soda.
2. Wring the cloth to remove excess moisture.
3. Start on the outside edge of the soil and gently rub toward the center. Continue cleaning, using a clean area of the cloth each time it becomes soiled.
4. Continue to gently rub the soiled area until the cleaning cloth remains clean.
5. If the soil is not completely removed, use a mild soap solution and repeat the cleaning process that was used with plain water.

If any of the soil remains, a commercial fabric cleaner or spot lifter may be necessary. When a commercial upholstery cleaner or spot lifter is to be used, test a small hidden area for colorfastness first. If the locally cleaned area gives any impression that a ring formation may result, clean the entire surface.

After the cleaning process has been completed, a paper towel can be used to blot excess moisture from the fabric or carpet.

Leather

A soft cloth dampened with water can be used to remove dust. If a more thorough cleaning is necessary, a soft cloth dampened with a mild soap solution can be used. Allow the leather to dry naturally. Do not use heat to dry. Never use steam to clean leather. Never use spot lifters or spot removers on leather. Many commercial leather cleaners and coatings that are sold to preserve and protect leather may permanently change the appearance and feel of your leather and are not recommended. Do not use silicone or wax-based products, or those containing organic solvents to clean your vehicle's interior because they can alter the appearance by increasing the gloss in a non-uniform manner. Never use shoe polish on leather.

Instrument Panel, Vinyl, and Other Plastic Surfaces

A soft cloth dampened with water may be used to remove dust. If a more thorough cleaning is necessary, a clean soft cloth dampened with a mild soap solution can be used to gently remove dust and dirt. Never use spot lifters or removers on plastic surfaces. Many commercial cleaners and coatings that are sold to preserve and protect soft plastic surfaces may permanently change the appearance and feel of your interior and are not recommended. Do not use silicone or wax-based products, or those containing organic solvents to clean your vehicle's interior because they can alter the appearance by increasing the gloss in a non-uniform manner.

Some commercial products may increase gloss on your instrument panel. The increase in gloss may cause annoying reflections in the windshield and even make it difficult to see through the windshield under certain conditions.

Care of Safety Belts

Keep belts clean and dry.

⚠ CAUTION:

Do not bleach or dye safety belts. If you do, it may severely weaken them. In a crash, they might not be able to provide adequate protection. Clean safety belts only with mild soap and lukewarm water.

Weatherstrips

Silicone grease on weatherstrips will make them last longer, seal better, and not stick or squeak. Apply silicone grease with a clean cloth. During very cold, damp weather frequent application may be required.

Washing Your Vehicle

The best way to preserve your vehicle's finish is to keep it clean by washing it often.

Notice: **Certain cleaners contain chemicals that can damage the emblems or nameplates on your vehicle. Check the cleaning product label. If it states that it should not be used on plastic parts, do not use it on your vehicle or damage may occur and it would not be covered by the warranty.**

Do not wash the vehicle in direct sunlight. Use a car washing soap. Do not use cleaning agents that are petroleum based or that contain acid or abrasives, as they can damage the paint, metal or plastic on your vehicle. Approved cleaning products can be obtained from your dealer/retailer. See *Vehicle Care/Appearance Materials on page 5-86*. Follow all manufacturers' directions regarding correct product usage, necessary safety precautions and appropriate disposal of any vehicle care product.

Rinse the vehicle well, before washing and after to remove all cleaning agents completely. If they are allowed to dry on the surface, they could stain.

Dry the finish with a soft, clean chamois or an all-cotton towel to avoid surface scratches and water spotting

High pressure car washes may cause water to enter the vehicle. Avoid using high pressure washes closer than 12 inches (30 cm) to the surface of the vehicle. Use of power washers exceeding 1,200 psi (8 274 kPa) can result in damage or removal of paint and decals.

Cleaning Exterior Lamps/Lenses

Use only lukewarm or cold water, a soft cloth and a car washing soap to clean exterior lamps and lenses. Follow instructions under *Washing Your Vehicle on page 5-82*.

Finish Care

Occasional waxing or mild polishing of your vehicle by hand may be necessary to remove residue from the paint finish. You can get approved cleaning products from your dealer/retailer. See *Vehicle Care/Appearance Materials on page 5-86*.

If your vehicle has a basecoat/clearcoat paint finish, the clearcoat gives more depth and gloss to the colored basecoat. Always use waxes and polishes that are non-abrasive and made for a basecoat/clearcoat paint finish.

Notice: **Machine compounding or aggressive polishing on a basecoat/clearcoat paint finish may damage it. Use only non-abrasive waxes and polishes that are made for a basecoat/clearcoat paint finish on your vehicle.**

Foreign materials such as calcium chloride and other salts, ice melting agents, road oil and tar, tree sap, bird droppings, chemicals from industrial chimneys, etc., can damage your vehicle's finish if they remain on painted surfaces. Wash the vehicle as soon as possible. If necessary, use non-abrasive cleaners that are marked safe for painted surfaces to remove foreign matter.

Exterior painted surfaces are subject to aging, weather and chemical fallout that can take their toll over a period of years. You can help to keep the paint finish looking new by keeping your vehicle garaged or covered whenever possible.

Protecting Exterior Bright Metal Parts

Bright metal parts should be cleaned regularly to keep their luster. Washing with water is all that is usually needed. However, you may use chrome polish on chrome or stainless steel trim, if necessary.

Use special care with aluminum trim. To avoid damaging protective trim, never use auto or chrome polish, steam or caustic soap to clean aluminum. A coating of wax, rubbed to high polish, is recommended for all bright metal parts.

Windshield and Wiper Blades

Clean the outside of the windshield with glass cleaner.

Clean the rubber blades using a lint free cloth or paper towel soaked with windshield washer fluid or a mild detergent. Wash the windshield thoroughly when cleaning the blades. Bugs, road grime, sap, and a buildup of vehicle wash/wax treatments may cause wiper streaking. Replace the wiper blades if they are worn or damaged.

Wipers can be damaged by:

- Extreme dusty conditions
- Sand and salt
- Heat and sun
- Snow and ice, without proper removal

Aluminum Wheels

Notice: **If you use strong soaps, chemicals, abrasive polishes, cleaners, brushes, or cleaners that contain acid on aluminum or chrome-plated wheels, you could damage the surface of the wheel(s). The repairs would not be covered by your warranty. Use only approved cleaners on aluminum or chrome-plated wheels.**

Keep the wheels clean using a soft clean cloth with mild soap and water. Rinse with clean water. After rinsing thoroughly, dry with a soft clean towel. A wax may then be applied.

Notice: **Using chrome polish on aluminum wheels could damage the wheels. The repairs would not be covered by your warranty. Use chrome polish on chrome wheels only.**

The surface of these wheels is similar to the painted surface of the vehicle. Do not use strong soaps, chemicals, abrasive polishes, abrasive cleaners, cleaners with acid, or abrasive cleaning brushes on them because the surface could be damaged. Do not use chrome polish on aluminum wheels.

Notice: **If you drive your vehicle through an automatic car wash that has silicone carbide tire cleaning brushes, you could damage the aluminum or chrome-plated wheels. The repairs would not be covered by your warranty. Never drive a vehicle equipped with aluminum or chrome-plated wheels through an automatic car wash that uses silicone carbide tire cleaning brushes.**

Tires

To clean the tires, use a stiff brush with tire cleaner.

Notice: **Using petroleum-based tire dressing products on your vehicle may damage the paint finish and/or tires. When applying a tire dressing, always wipe off any overspray from all painted surfaces on your vehicle.**

Sheet Metal Damage

If the vehicle is damaged and requires sheet metal repair or replacement, make sure the body repair shop applies anti-corrosion material to parts repaired or replaced to restore corrosion protection.

Original manufacturer replacement parts will provide the corrosion protection while maintaining the warranty.

Finish Damage

Any stone chips, fractures or deep scratches in the finish should be repaired right away. Bare metal will corrode quickly and may develop into major repair expense.

Minor chips and scratches can be repaired with touch-up materials available from your dealer/retailer. Larger areas of finish damage can be corrected in your dealer's/retailer's body and paint shop.

Underbody Maintenance

Chemicals used for ice and snow removal and dust control can collect on the underbody. If these are not removed, corrosion and rust can develop on the underbody parts such as fuel lines, frame, floor pan, and exhaust system even though they have corrosion protection.

At least every spring, flush these materials from the underbody with plain water. Clean any areas where mud and debris can collect. Dirt packed in close areas of the frame should be loosened before being flushed. Your dealer/retailer or an underbody car washing system can do this for you.

Chemical Paint Spotting

Some weather and atmospheric conditions can create a chemical fallout. Airborne pollutants can fall upon and attack painted surfaces on the vehicle. This damage can take two forms: blotchy, ring-shaped discolorations, and small, irregular dark spots etched into the paint surface.

Although no defect in the paint job causes this, we will repair, at no charge to the owner, the surfaces of new vehicles damaged by this fallout condition within 12 months or 12,000 miles (20 000 km) of purchase, whichever occurs first.

Vehicle Care/Appearance Materials

Description	Usage
Polishing Cloth Wax-Treated	Interior and exterior polishing cloth.
Tar and Road Oil Remover	Removes tar, road oil and asphalt.
Chrome Cleaner and Polish	Use on chrome or stainless steel.
White Sidewall Tire Cleaner	Removes soil and black marks from whitewalls.
Vinyl Cleaner	Cleans vinyl.
Glass Cleaner	Removes dirt, grime, smoke and fingerprints.
Chrome and Wire Wheel Cleaner	Removes dirt and grime from chrome wheels and wire wheel covers.
Finish Enhancer	Removes dust, fingerprints, and surface contaminants. Spray on wipe off.
Swirl Remover Polish	Removes swirl marks, fine scratches and other light surface contamination.
Cleaner Wax	Removes light scratches and protects finish.
Foaming Tire Shine Low Gloss	Cleans, shines and protects tires. No wiping necessary.
Wash Wax Concentrate	Medium foaming shampoo. Cleans and lightly waxes. Biodegradable and phosphate free.
Spot Lifter	Removes spots and stains from carpets, vinyl and cloth upholstery.
Odor Eliminator	Odorless spray odor eliminator used on fabrics, vinyl, leather and carpet.

Vehicle Identification

Vehicle Identification Number (VIN)



This is the legal identifier for your vehicle. It appears on a plate in the front corner of the instrument panel, on the driver side. You can see it if you look through the windshield from outside your vehicle. The VIN also appears on the Vehicle Certification and Service Parts labels and the certificates of title and registration.

Engine Identification

The eighth character in your VIN is the engine code. This code helps you identify your vehicle's engine, specifications, and replacement parts. See *Capacities and Specifications on page 5-94* for your vehicle's engine code.

Service Parts Identification Label

This label is on the inside of the glove box. It is very helpful if you ever need to order parts. The label has the following information:

- Vehicle Identification Number (VIN)
- Model designation
- Paint information
- Production options and special equipment

Do not remove this label from the vehicle.

Electrical System

Add-On Electrical Equipment

Notice: **Do not add anything electrical to your vehicle unless you check with your dealer/retailer first. Some electrical equipment can damage your vehicle and the damage would not be covered by your warranty. Some add-on electrical equipment can keep other components from working as they should.**

Add-on equipment can drain your vehicle's battery, even if your vehicle is not operating.

Your vehicle has an airbag system. Before attempting to add anything electrical to your vehicle, see *Servicing Your Airbag-Equipped Vehicle on page 1-64*.

Headlamp Wiring

The headlamp wiring is protected by fuses in the fuse block. An electrical overload will cause the lamps to turn off. If this happens, have your headlamp wiring checked right away.

Windshield Wiper Fuses

The windshield wiper motor is protected by a circuit breaker and a fuse. If the motor overheats due to heavy snow, etc., the wiper will stop until the motor cools. If the overload is caused by some electrical problem, have it fixed.

Power Windows and Other Power Options

Circuit breakers in the fuse block protect the power windows and other power accessories. When the current load is too heavy, the circuit breaker opens and closes, protecting the circuit until the problem is fixed or goes away.

Fuses and Circuit Breakers

The wiring circuits in your vehicle are protected from short circuits by a combination of fuses, circuit breakers and fusible thermal links. This greatly reduces the chance of fires caused by electrical problems.

Look at the silver-colored band inside the fuse. If the band is broken or melted, replace the fuse. Be sure you replace a bad fuse with a new one of the identical size and rating.

If you ever have a problem on the road and don't have a spare fuse, you can borrow one that has the same amperage. Just pick some feature of your vehicle that you can get along without – like the radio or cigarette lighter – and use its fuse, if it is the correct amperage. Replace it as soon as you can.

Instrument Panel Fuse Block

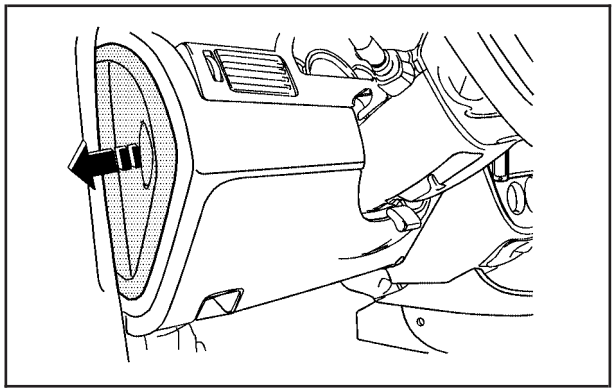

The instrument panel fuse block is located on the end of the instrument panel, on the driver side of the vehicle. To access the fuses, open the fuse panel door by pulling it out.

To reinstall the door, insert the tabs at the back end first, then push the door into the instrument panel to secure it.

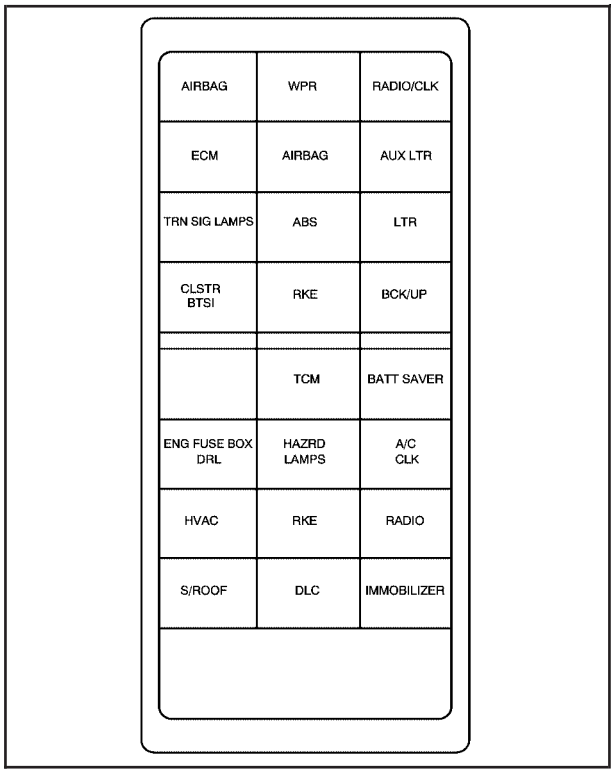

Fuses	Usage
AIRBAG	Airbag
WPR	Wiper
RADIO/CLK	Radio/Clock
ECM	Engine Control Module
AIRBAG	Airbag
AUX LTR	Extra Jack
TRN SIG LAMPS	Turn Signal Lamps
ABS	Antilock Brake System
LTR	Cigarette Lighter
CLSTR, BTSI	Cluster, Brake Transmission Shift Interlock/Automatic Transmission Shift Lock (BTSI) Solenoid
RKE	Remote Keyless Entry
BCK/UP	Back-up
BLANK	Not Used
TCM	Transmission Control Module
BATT SAVER	Battery Saver
ENG FUSE BOX DRL	Engine Fuse Box, Daytime Running Lamps

Fuses	Usage
HAZRD LAMPS	Hazard Lamps
A/C, CLK	Air Conditioning Switch, Clock
HVAC	Heating, Ventilation and Air Conditioning
RKE	Remote Keyless Entry
RADIO	Radio
S/ROOF	Sunroof
DLC	Data Link Connector
IMMOBILIZER	Immobilizer

Engine Compartment Fuse Block

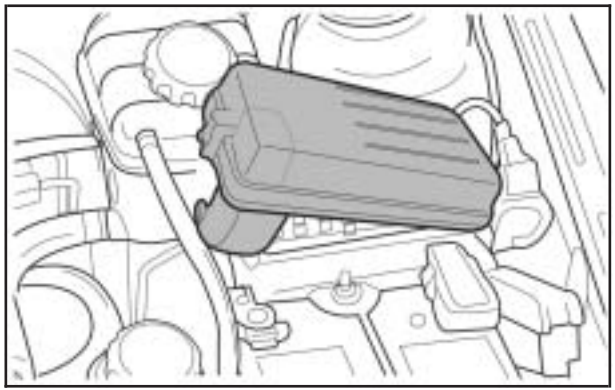

The engine compartment fuse block is located on the driver side of the vehicle, near the battery. See *Engine Compartment Overview on page 5-12* for more information on location. To access the fuses, press in the top flap to release the cover.

To reinstall the cover, push the cover until it is secure.

Notice: **Spilling liquid on any electrical components on your vehicle may damage it. Always keep the covers on any electrical component.**

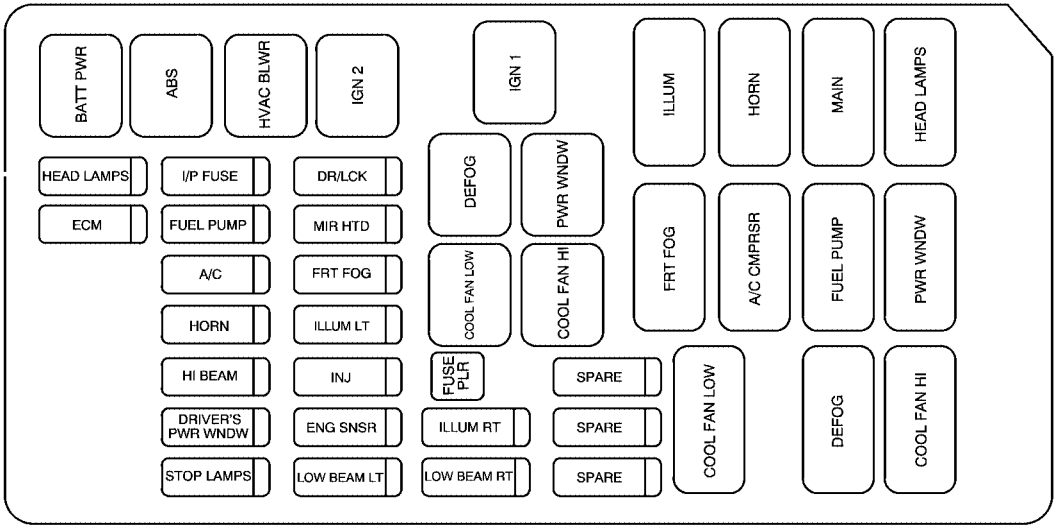

Fuses	Usage
HEAD LAMPS	Headlamps
ECM	Engine Control Module
I/P FUSE	Instrument Panel Fuse
FUEL PUMP	Fuel Pump

Fuses	Usage
A/C	Air Conditioning
HORN	Horn
HI BEAM	Headlamp High-Beam
DRIVER'S PWR WNDW	Driver Power Window

Fuses	Usage
STOP LAMPS	Stoplamps
DR/LCK	Door Lock
MIR HTD	Heated Mirror
FRT FOG	Front Fog
ILLUM LT	License Plate Lamp, Parking Lamp Left
INJ	Injector
ENG SNSR	Evaporative Emission (EVAP) Canister Purge Solenoid, Heated Oxygen Sensor (HO2S), Cooling Fan Relay, CMP Sensor
LOW BEAM LT	Headlamp Low-Beam Left
ILLUM RT	Illumination Circuit, Parking Lamp Right
LOW BEAM RT	Headlamp Low-Beam Right
SPARE	Spare
SPARE	Spare
SPARE	Spare
BATT PWR	Battery Power
ABS	Antilock Brake System
HVAC BLWR	HVAC Blower
IGN 2	Ignition 2

Fuses	Usage
IGN 1	Ignition 1
FUSE PLR	Fuse Puller
COOL FAN LOW	Cooling Fan Low
DEFOG	Defog
COOL FAN HI	Cooling Fan High
PWR WNDW	Power Window

Relays	Usage
COOL FAN LOW	Cooling Fan Low
FRT FOG	Front Fog
ILLUM	Illumination Relay
A/C CMPRSR	Air Conditioning Compressor
HORN	Horn
DEFOG	Defog
FUEL PUMP	Fuel Pump
MAIN	Main Relay
COOL FAN HI	Cooling Fan High
PWR WNDW	Power Window
HEAD LAMPS	Headlamp Relay

Capacities and Specifications

The following approximate capacities are given in English and metric conversions. See *Part D: Recommended Fluids and Lubricants on page 6-26* for more information.

Application	Capacities	
	English	Metric
Air Conditioning Refrigerant R134a	For the air conditioning system refrigerant charge amount, see the refrigerant caution label located under the hood. See your dealer/retailer for more information.	
Cooling System	7.9 qt	7.5 L
Engine Oil with Filter	4.2 qt	4.0 L
Fuel Tank	14.5 gal	55.0 L
Transmission, Automatic	7.3 qt	6.9 L
Transmission, Manual	1.9 qt	1.8 L
Wheel Nut Torque	81 lb ft	110 N•m
All capacities are approximate. When adding, be sure to fill to the appropriate level, as recommended in this manual. Recheck fluid level after filling.		

Engine Specifications

Engine	VIN Code	Transmission	Spark Plug Gap
2.0L L4 (L34)	Z	Automatic and Manual	0.039 inch (1.0mm)

Maintenance Replacement Parts

Replacement parts identified below by name, part number, or specification can be obtained from your dealer/retailer.

Part	GM Part Number
Engine Air Cleaner/Filter	96553450
Engine Oil Filter	96458873
Fuel Filter	96335719
A/C Filter	96554378
Spark Plugs	93742299
Windshield Wiper Blades	
Driver's Side	96478670
Passenger's Side	96498696
Rear	96341429

Engine Drive Belt Routing

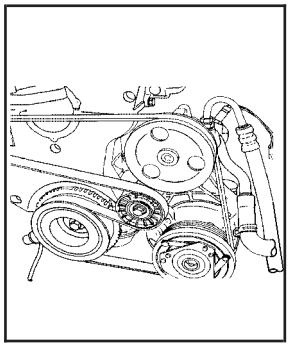

Section 6 Maintenance Schedule

Maintenance Schedule 6-2
Introduction 6-2
Maintenance Requirements 6-2
Your Vehicle and the Environment 6-2
How This Section is Organized 6-3
Part A: Scheduled Maintenance Services 6-4
Using the Maintenance Schedule 6-4
Selecting the Right Schedule 6-5
Short Trip/City Scheduled Maintenance 6-7
Long Trip/Highway Scheduled Maintenance 6-14
Part B: Owner Checks and Services 6-19
At Each Fuel Fill 6-19
At Least Once a Month 6-19
At Least Twice a Year 6-20
At Least Once a Year 6-21
Part C: Periodic Maintenance Inspections 6-24
Steering, Suspension and Front Drive Axle Boot and Seal Inspection 6-24
Exhaust System Inspection 6-24
Fuel System Inspection 6-24
Engine Cooling System Inspection 6-24
Throttle System Inspection 6-25
Brake System Inspection 6-25
Part D: Recommended Fluids and Lubricants 6-26
Part E: Maintenance Record 6-28

Maintenance Schedule

Introduction

Important: Keep engine oil at the proper level and change as recommended.



Have you purchased the GM Protection Plan? The Plan supplements your new vehicle warranties. See your Warranty and Owner Assistance booklet or your dealer/retailer for details.

Maintenance Requirements

Maintenance intervals, checks, inspections and recommended fluids and lubricants as prescribed in this manual are necessary to keep your vehicle in good working condition. Any damage caused by failure to follow scheduled maintenance may not be covered by warranty.

Your Vehicle and the Environment

Proper vehicle maintenance not only helps to keep your vehicle in good working condition, but also helps the environment. Improper vehicle maintenance can even affect the quality of the air we breathe. Improper fluid levels or the wrong tire inflation can increase the level of emissions from your vehicle. To help protect our environment, and to keep your vehicle in good condition, be sure to maintain your vehicle properly.

How This Section is Organized

This maintenance schedule is divided into five parts:

“Part A: Scheduled Maintenance Services” explains what to have done and how often. Some of these services can be complex, so unless you are technically qualified and have the necessary equipment, you should let your dealer/retailer do these jobs.

Your dealer/retailer has trained and supported service people that will perform the work using genuine parts.

⚠ CAUTION:

Performing maintenance work on a vehicle can be dangerous. In trying to do some jobs, you can be seriously injured. Do your own maintenance work only if you have the required know-how and the proper tools and equipment for the job. If you have any doubt, have a qualified technician do the work. See *Doing Your Own Service Work on page 5-5*.

If you want to purchase service information, see *Service Publications Ordering Information on page 7-15*.

“Part B: Owner Checks and Services” tells you what should be checked and when. It also explains what you can easily do to help keep your vehicle in good condition.

“Part C: Periodic Maintenance Inspections” explains important inspections that your dealer/retailer can perform for you.

“Part D: Recommended Fluids and Lubricants” lists some recommended products necessary to help keep your vehicle properly maintained. These products, or their equivalents, should be used whether you do the work yourself or have it done.

“Part E: Maintenance Record” is a place for you to record and keep track of the maintenance performed on your vehicle. Keep your maintenance receipts. They may be needed to qualify your vehicle for warranty repairs.

Part A: Scheduled Maintenance Services

In this part are scheduled maintenance services which are to be performed at the mileage intervals specified.

Using the Maintenance Schedule

We want to keep your vehicle in good working condition. But we do not know exactly how you will drive it. You might drive short distances only a few times a week. Or you might drive long distances all the time in very hot, dusty weather. You might use your vehicle in making deliveries. Or you might drive it to work, to do errands, or in many other ways.

Because of the different ways people use their vehicles, maintenance needs vary. You might need more frequent checks and replacements. So please read the following and note how you drive. If you have questions on how to keep your vehicle in good condition, see your dealer/retailer.

This part tells you the maintenance services you should have done and when to schedule them.

When you go to your dealer/retailer for your service needs, you will know that trained and supported service people will perform the work using genuine parts.

The proper fluids and lubricants to use are listed in Part D. Make sure whoever services your vehicle uses these. All parts should be replaced and all necessary repairs done before you or anyone else drives the vehicle.

These schedules are for vehicles that:

- carry passengers and cargo within recommended limits. You will find these on the Tire and Loading Information label. See *Loading Your Vehicle on page 4-18*.
- are driven on reasonable road surfaces within legal driving limits.
- use the recommended fuel. See *Gasoline Octane on page 5-6*.

Selecting the Right Schedule

First you will need to decide which of the two schedules is right for your vehicle. Here is how to decide which schedule to follow:

Short Trip/City Definition

Follow the Short Trip/City Scheduled Maintenance if any one of these conditions is true for your vehicle:

- Most trips are less than 5 miles (8 km). This is particularly important when outside temperatures are below freezing.
- Most trips include extensive idling, such as frequent driving in stop-and-go traffic.
- If the vehicle is used for delivery service, police, taxi, or other commercial application.

One of the reasons you should follow this schedule if you operate your vehicle under any of these conditions is that these conditions cause engine oil to break down sooner.

Short Trip/City Intervals

Every 3,000 Miles (5 000 km): Engine Oil and Filter Change (or 3 months, whichever occurs first).

Every 6,000 Miles (10 000 km): Tire Rotation.

Every 15,000 Miles (25 000 km): Engine Air Cleaner Filter Inspection. Passenger Compartment Air Filter Replacement. Drive Belt(s) Inspection.

Every 30,000 Miles (50 000 km): Engine Air Cleaner Filter Replacement. Spark Plug Replacement. EVAP System Service. PCV System Service. Restraint System Check.

Every 37,500 Miles (60 000 km): Automatic Transmission Fluid Change (severe service only).

Every 60,000 Miles (100 000 km): Spark Plug Wire Replacement. Timing Belt Replacement. EVAP System Solenoid Valve Replacement.

Every 90,000 Miles (150 000 km): Fuel Filter Replacement.

Every 150,000 Miles (240 000 km): Cooling System Service.

These intervals only summarize maintenance services. Be sure to follow the complete scheduled maintenance on the following pages.

Long Trip/Highway Definition

Follow this scheduled maintenance *only* if none of the conditions from the Short Trip/City Scheduled Maintenance are true. Do not use this schedule if the vehicle is driven in a dusty area or used off paved roads. Use the Short Trip/City schedule for these conditions.

Driving a vehicle with a fully warmed engine under highway conditions will cause engine oil to break down slower.

Long Trip/Highway Intervals

Every 7,500 Miles (12 500 km): Engine Oil and Filter Change (or every 12 months, whichever occurs first). Tire Rotation.

Every 15,000 Miles (25 000 km): Engine Air Cleaner Filter Inspection. Passenger Compartment Air Filter Replacement. Drive Belt(s) Inspection.

Every 30,000 Miles (50 000 km): Engine Air Cleaner Filter Replacement. Spark Plug Replacement. EVAP System Service. PCV System Service. Restraint System Check.

Every 37,500 Miles (60 000 km): Automatic Transmission Fluid Change (severe service only).

Every 60,000 Miles (100 000 km): Spark Plug Wire Replacement. Timing Belt Replacement. EVAP System Solenoid Valve Replacement.

Every 90,000 Miles (150 000 km): Fuel Filter Replacement.

Every 150,000 Miles (240 000 km): Cooling System Service.

These intervals only summarize maintenance services. Be sure to follow the complete scheduled maintenance on the following pages.

Short Trip/City Scheduled Maintenance

The services shown in this schedule up to 100,000 miles (166 000 km) should be repeated after 100,000 miles (166 000 km) at the same intervals for the life of this vehicle. The services shown at 150,000 miles (240 000 km) should be repeated at the same interval after 150,000 miles (240 000 km) for the life of this vehicle.

See *Part B: Owner Checks and Services on page 6-19* and *Part C: Periodic Maintenance Inspections on page 6-24*.

Footnotes

† *The U.S. Environmental Protection Agency or the California Air Resources Board has determined that the failure to perform this maintenance item will not nullify the emission warranty or limit recall liability prior to the completion of the vehicle's useful life. We, however, urge that all recommended maintenance services be performed at the indicated intervals and the maintenance be recorded.*

+ A good time to check your brakes is during tire rotation. See Brake System Inspection on page 6-25.

3,000 Miles (5 000 km)

- ❑ Change engine oil and filter (or every 3 months, whichever occurs first). *An Emission Control Service.*

6,000 Miles (10 000 km)

- ❑ Change engine oil and filter (or every 3 months, whichever occurs first). *An Emission Control Service.*
- ❑ Rotate tires. See *Tire Inspection and Rotation on page 5-60* for proper rotation pattern and additional information. *(See footnote +.)*

9,000 Miles (15 000 km)

- ❑ Change engine oil and filter (or every 3 months, whichever occurs first). *An Emission Control Service.*

12,000 Miles (20 000 km)

- ❑ Change engine oil and filter (or every 3 months, whichever occurs first). *An Emission Control Service.*
- ❑ Rotate tires. See *Tire Inspection and Rotation on page 5-60* for proper rotation pattern and additional information. *(See footnote +.)*

15,000 Miles (25 000 km)

- ❑ Change engine oil and filter (or every 3 months, whichever occurs first). *An Emission Control Service.*
- ❑ Replace passenger compartment air filter. If you drive regularly under dusty conditions, the filter may require replacement more often.
- ❑ Inspect engine air cleaner filter and replace engine oil pan drain plug washer. If necessary, replace the filter. If vehicle is driven in dusty/dirty conditions, inspect filter at every engine oil change. See *Engine Air Cleaner/Filter on page 5-16* for more information.
- ❑ Inspect drive belt(s).

18,000 Miles (30 000 km)

- ❑ Change engine oil and filter (or every 3 months, whichever occurs first). *An Emission Control Service.*
- ❑ Rotate tires. See *Tire Inspection and Rotation on page 5-60* for proper rotation pattern and additional information. *(See footnote +.)*

21,000 Miles (35 000 km)

- ❑ Change engine oil and filter (or every 3 months, whichever occurs first). *An Emission Control Service.*

24,000 Miles (40 000 km)

- ❑ Change engine oil and filter (or every 3 months, whichever occurs first). *An Emission Control Service.*
- ❑ Rotate tires. See *Tire Inspection and Rotation on page 5-60* for proper rotation pattern and additional information. *(See footnote +.)*

27,000 Miles (45 000 km)

- ❑ Change engine oil and filter (or every 3 months, whichever occurs first). *An Emission Control Service.*

30,000 Miles (50 000 km)

- ❑ Change engine oil and filter (or every 3 months, whichever occurs first). *An Emission Control Service.*
- ❑ Replace passenger compartment air filter. If you drive regularly under dusty conditions, the filter may require replacement more often.
- ❑ Replace engine air cleaner filter. See *Engine Air Cleaner/Filter on page 5-16* for more information.
- ❑ Rotate tires. See *Tire Inspection and Rotation on page 5-60* for proper rotation pattern and additional information. *(See footnote +.)*
- ❑ Replace spark plugs. *An Emission Control Service.*

- ❑ Check restraint system. Make sure the safety belt reminder light and safety belt assemblies are working properly. Look for any other loose or damaged safety belt system parts. If you see anything that might keep a safety belt system from doing its job, have it repaired. Have any torn or frayed safety belts replaced. Also see *Checking the Restraint Systems on page 1-66*.
- ❑ Inspect drive belt(s).
- ❑ Inspect EVAP canister, vapor lines, and EVAP vent solenoid valve. *An Emission Control Service. (See footnote †.)*
- ❑ Inspect PCV system. *An Emission Control Service. (See footnote †.)*

33,000 Miles (55 000 km)

- ❑ Change engine oil and filter (or every 3 months, whichever occurs first). *An Emission Control Service.*

36,000 Miles (60 000 km)

- ❑ Change engine oil and filter (or every 3 months, whichever occurs first). *An Emission Control Service.*
- ❑ Rotate tires. See *Tire Inspection and Rotation on page 5-60* for proper rotation pattern and additional information. *(See footnote +.)*

37,500 Miles (60 000 km)

- ❑ Change automatic transmission fluid if the vehicle is mainly driven under one or more of these conditions:
  - In heavy city traffic where the outside temperature regularly reaches 90°F (32°C) or higher.
  - In hilly or mountainous terrain.
  - Uses such as found in taxi, police, or delivery service.

If you do not use your vehicle under any of these conditions, the fluid does not require changing.

39,000 Miles (65 000 km)

- ❑ Change engine oil and filter (or every 3 months, whichever occurs first). *An Emission Control Service.*

42,000 Miles (70 000 km)

- ❑ Change engine oil and filter (or every 3 months, whichever occurs first). *An Emission Control Service.*
- ❑ Rotate tires. See *Tire Inspection and Rotation on page 5-60* for proper rotation pattern and additional information. *(See footnote +.)*

45,000 Miles (75 000 km)

- ❑ Change engine oil and filter (or every 3 months, whichever occurs first). *An Emission Control Service.*
- ❑ Replace passenger compartment air filter. If you drive regularly under dusty conditions, the filter may require replacement more often.
- ❑ Inspect engine air cleaner filter. If necessary, replace the filter. If vehicle is driven in dusty/dirty conditions, inspect filter at every engine oil change. See *Engine Air Cleaner/Filter on page 5-16* for more information.
- ❑ Inspect drive belt(s).

48,000 Miles (80 000 km)

- ❑ Change engine oil and filter (or every 3 months, whichever occurs first). *An Emission Control Service.*
- ❑ Rotate tires. See *Tire Inspection and Rotation on page 5-60* for proper rotation pattern and additional information. *(See footnote +.)*

51,000 Miles (85 000 km)

- ❑ Change engine oil and filter (or every 3 months, whichever occurs first). *An Emission Control Service.*

54,000 Miles (90 000 km)

- ❑ Change engine oil and filter (or every 3 months, whichever occurs first). *An Emission Control Service.*
- ❑ Rotate tires. See *Tire Inspection and Rotation on page 5-60* for proper rotation pattern and additional information. *(See footnote +.)*

57,000 Miles (95 000 km)

- ❑ Change engine oil and filter (or every 3 months, whichever occurs first). *An Emission Control Service.*

60,000 Miles (100 000 km)

- ❑ Change engine oil and filter (or every 3 months, whichever occurs first). *An Emission Control Service.*
- ❑ Replace passenger compartment air filter. If you drive regularly under dusty conditions, the filter may require replacement more often.
- ❑ Replace engine air cleaner filter. See *Engine Air Cleaner/Filter on page 5-16* for more information.
- ❑ Rotate tires. See *Tire Inspection and Rotation on page 5-60* for proper rotation pattern and additional information. *(See footnote +.)*
- ❑ Replace spark plugs. *An Emission Control Service.*
- ❑ Replace spark plug wires. *An Emission Control Service.*

- ❑ Check restraint system. Make sure the safety belt reminder light and safety belt assemblies are working properly. Look for any other loose or damaged safety belt system parts. If you see anything that might keep a safety belt system from doing its job, have it repaired. Have any torn or frayed safety belts replaced. Also see *Checking the Restraint Systems on page 1-66*.
- ❑ Inspect drive belt(s).
- ❑ Replace timing belt.
- ❑ Inspect EVAP canister and vapor lines. Replace EVAP vent solenoid valve. *An Emission Control Service. (See footnote †.)*
- ❑ Inspect PCV system. *An Emission Control Service. (See footnote †.)*

63,000 Miles (105 000 km)

- ❑ Change engine oil and filter (or every 3 months, whichever occurs first). *An Emission Control Service.*

66,000 Miles (110 000 km)

- ❑ Change engine oil and filter (or every 3 months, whichever occurs first). *An Emission Control Service.*
- ❑ Rotate tires. See *Tire Inspection and Rotation on page 5-60* for proper rotation pattern and additional information. *(See footnote +.)*

69,000 Miles (115 000 km)

- ❑ Change engine oil and filter (or every 3 months, whichever occurs first). *An Emission Control Service.*

72,000 Miles (120 000 km)

- ❑ Change engine oil and filter (or every 3 months, whichever occurs first). *An Emission Control Service.*
- ❑ Rotate tires. See *Tire Inspection and Rotation on page 5-60* for proper rotation pattern and additional information. *(See footnote +.)*

75,000 Miles (125 000 km)

- ❑ Change engine oil and filter (or every 3 months, whichever occurs first). *An Emission Control Service.*
- ❑ Replace passenger compartment air filter. If you drive regularly under dusty conditions, the filter may require replacement more often.
- ❑ Inspect engine air cleaner filter. If necessary, replace the filter. If vehicle is driven in dusty/dirty conditions, inspect filter at every engine oil change. See *Engine Air Cleaner/Filter on page 5-16* for more information.
- ❑ Inspect drive belt(s).

- ❑ Change automatic transmission fluid if the vehicle is mainly driven under one or more of these conditions:
  - − In heavy city traffic where the outside temperature regularly reaches 90°F (32°C) or higher.
  - − In hilly or mountainous terrain.
  - − Uses such as found in taxi, police, or delivery service.

If you do not use your vehicle under any of these conditions, the fluid does not require changing.

78,000 Miles (130 000 km)

- ❑ Change engine oil and filter (or every 3 months, whichever occurs first). *An Emission Control Service.*
- ❑ Rotate tires. See *Tire Inspection and Rotation on page 5-60* for proper rotation pattern and additional information. *(See footnote +.)*

81,000 Miles (135 000 km)

- ❑ Change engine oil and filter (or every 3 months, whichever occurs first). *An Emission Control Service.*

84,000 Miles (140 000 km)

- ❑ Change engine oil and filter (or every 3 months, whichever occurs first). *An Emission Control Service.*
- ❑ Rotate tires. See *Tire Inspection and Rotation on page 5-60* for proper rotation pattern and additional information. *(See footnote +.)*

87,000 Miles (145 000 km)

- ❑ Change engine oil and filter (or every 3 months, whichever occurs first). *An Emission Control Service.*

90,000 Miles (150 000 km)

- ❑ Change engine oil and filter (or every 3 months, whichever occurs first). *An Emission Control Service.*
- ❑ Replace passenger compartment air filter. If you drive regularly under dusty conditions, the filter may require replacement more often.
- ❑ Replace engine air cleaner filter. See *Engine Air Cleaner/Filter on page 5-16* for more information.
- ❑ Rotate tires. See *Tire Inspection and Rotation on page 5-60* for proper rotation pattern and additional information. *(See footnote +.)*

- ❑ Replace spark plugs. *An Emission Control Service.*
- ❑ Replace fuel filter. *An Emission Control Service. (See footnote †.)*
- ❑ Check restraint system. Make sure the safety belt reminder light and safety belt assemblies are working properly. Look for any other loose or damaged safety belt system parts. If you see anything that might keep a safety belt system from doing its job, have it repaired. Have any torn or frayed safety belts replaced. Also see *Checking the Restraint Systems on page 1-66*.
- ❑ Inspect drive belt(s).
- ❑ Inspect EVAP canister, vapor lines, and EVAP vent solenoid valve. *An Emission Control Service. (See footnote †.)*
- ❑ Inspect PCV system. *An Emission Control Service. (See footnote †.)*

93,000 Miles (155 000 km)

- ❑ Change engine oil and filter (or every 3 months, whichever occurs first). *An Emission Control Service.*

96,000 Miles (160 000 km)

- ❑ Change engine oil and filter (or every 3 months, whichever occurs first). *An Emission Control Service.*
- ❑ Rotate tires. See *Tire Inspection and Rotation on page 5-60* for proper rotation pattern and additional information. *(See footnote +.)*

99,000 Miles (165 000 km)

- ❑ Change engine oil and filter (or every 3 months, whichever occurs first). *An Emission Control Service.*

150,000 Miles (240 000 km)

- ❑ Drain, flush, and refill cooling system. This service can be complex; you should have your dealer/retailer perform this service. See *Engine Coolant on page 5-19* for what to use. Inspect hoses. Clean radiator, condenser, pressure cap, and neck. Pressure test the cooling system and pressure cap. *An Emission Control Service.*

Long Trip/Highway Scheduled Maintenance

The services shown in this schedule up to 100,000 miles (166 000 km) should be repeated after 100,000 miles (166 000 km) at the same intervals for the life of this vehicle. The services shown at 150,000 miles (240 000 km) should be repeated at the same interval after 150,000 miles (240 000 km) for the life of this vehicle.

See *Part B: Owner Checks and Services on page 6-19* and *Part C: Periodic Maintenance Inspections on page 6-24*.

Footnotes

† *The U.S. Environmental Protection Agency or the California Air Resources Board has determined that the failure to perform this maintenance item will not nullify the emission warranty or limit recall liability prior to the completion of the vehicle's useful life. We, however, urge that all recommended maintenance services be performed at the indicated intervals and the maintenance be recorded.*

+ A good time to check your brakes is during tire rotation. See Brake System Inspection on page 6-25.

7,500 Miles (12 500 km)

- ❑ Change engine oil and filter (or every 12 months, whichever occurs first). *An Emission Control Service.*
- ❑ Rotate tires. See *Tire Inspection and Rotation on page 5-60* for proper rotation pattern and additional information. *(See footnote +.)*

15,000 Miles (25 000 km)

- ❑ Change engine oil and filter (or every 12 months, whichever occurs first). *An Emission Control Service.*
- ❑ Replace passenger compartment air filter. If you drive regularly under dusty conditions, the filter may require replacement more often.
- ❑ Inspect engine air cleaner filter. See *Engine Air Cleaner/Filter on page 5-16* for more information.
- ❑ Rotate tires. See *Tire Inspection and Rotation on page 5-60* for proper rotation pattern and additional information. *(See footnote +.)*
- ❑ Inspect drive belt(s).

22,500 Miles (37 500 km)

- ❑ Change engine oil and filter (or every 12 months, whichever occurs first). *An Emission Control Service.*
- ❑ Rotate tires. See *Tire Inspection and Rotation on page 5-60* for proper rotation pattern and additional information. *(See footnote +.)*

30,000 Miles (50 000 km)

- ❑ Change engine oil and filter (or every 12 months, whichever occurs first). *An Emission Control Service.*
- ❑ Replace passenger compartment air filter. If you drive regularly under dusty conditions, the filter may require replacement more often.
- ❑ Replace engine air cleaner filter. See *Engine Air Cleaner/Filter on page 5-16* for more information.
- ❑ Rotate tires. See *Tire Inspection and Rotation on page 5-60* for proper rotation pattern and additional information. *(See footnote +.)*
- ❑ Replace spark plugs. *An Emission Control Service.*
- ❑ Check restraint system. Make sure the safety belt reminder light and safety belt assemblies are working properly. Look for any other loose or damaged safety belt system parts. If you see anything that might keep a safety belt system from doing its job, have it repaired. Have any torn or frayed safety belts replaced. Also see *Checking the Restraint Systems on page 1-66*.
- ❑ Inspect drive belt(s).
- ❑ Inspect EVAP canister, vapor lines, and EVAP vent solenoid valve. *An Emission Control Service. (See footnote †.)*
- ❑ Inspect PCV system. *An Emission Control Service. (See footnote †.)*

37,500 Miles (62 500 km)

- ❑ Change engine oil and filter (or every 12 months, whichever occurs first). *An Emission Control Service.*
- ❑ Rotate tires. See *Tire Inspection and Rotation on page 5-60* for proper rotation pattern and additional information. *(See footnote +.)*
- ❑ Change automatic transmission fluid if the vehicle is mainly driven under one or more of these conditions:
  - In heavy city traffic where the outside temperature regularly reaches 90°F (32°C) or higher.
  - In hilly or mountainous terrain.
  - Uses such as found in taxi, police, or delivery service.

If you do not use your vehicle under any of these conditions, the fluid does not require changing.

45,000 Miles (75 000 km)

- ❑ Change engine oil and filter (or every 12 months, whichever occurs first). *An Emission Control Service.*
- ❑ Replace passenger compartment air filter. If you drive regularly under dusty conditions, the filter may require replacement more often.
- ❑ Inspect engine air cleaner filter. See *Engine Air Cleaner/Filter on page 5-16* for more information.
- ❑ Rotate tires. See *Tire Inspection and Rotation on page 5-60* for proper rotation pattern and additional information. *(See footnote +.)*
- ❑ Inspect drive belt(s).

52,500 Miles (87 500 km)

- ❑ Change engine oil and filter (or every 12 months, whichever occurs first). *An Emission Control Service.*
- ❑ Rotate tires. See *Tire Inspection and Rotation on page 5-60* for proper rotation pattern and additional information. *(See footnote +.)*

60,000 Miles (100 000 km)

- ❑ Change engine oil and filter (or every 12 months, whichever occurs first). *An Emission Control Service.*
- ❑ Replace passenger compartment air filter. If you drive regularly under dusty conditions, the filter may require replacement more often.
- ❑ Replace engine air cleaner filter. See *Engine Air Cleaner/Filter on page 5-16* for more information.
- ❑ Rotate tires. See *Tire Inspection and Rotation on page 5-60* for proper rotation pattern and additional information. *(See footnote +.)*
- ❑ Replace spark plugs. *An Emission Control Service.*
- ❑ Replace spark plug wires. *An Emission Control Service.*
- ❑ Check restraint system. Make sure the safety belt reminder light and safety belt assemblies are working properly. Look for any other loose or damaged safety belt system parts. If you see anything that might keep a safety belt system from doing its job, have it repaired. Have any torn or frayed safety belts replaced. Also see *Checking the Restraint Systems on page 1-66*.
- ❑ Inspect drive belt(s).
- ❑ Replace timing belt.
- ❑ Inspect EVAP canister and vapor lines. Replace EVAP vent solenoid valve. *An Emission Control Service. (See footnote †.)*
- ❑ Inspect PCV system. *An Emission Control Service. (See footnote †.)*

67,500 Miles (112 500 km)

- ❑ Change engine oil and filter (or every 12 months, whichever occurs first). *An Emission Control Service.*
- ❑ Rotate tires. See *Tire Inspection and Rotation on page 5-60* for proper rotation pattern and additional information. *(See footnote +.)*

75,000 Miles (125 000 km)

- ❑ Change engine oil and filter (or every 12 months, whichever occurs first). *An Emission Control Service.*
- ❑ Replace passenger compartment air filter. If you drive regularly under dusty conditions, the filter may require replacement more often.
- ❑ Inspect engine air cleaner filter. See *Engine Air Cleaner/Filter on page 5-16* for more information.
- ❑ Rotate tires. See *Tire Inspection and Rotation on page 5-60* for proper rotation pattern and additional information. *(See footnote +.)*
- ❑ Inspect drive belt(s).
- ❑ Change automatic transmission fluid if the vehicle is mainly driven under one or more of these conditions:
  - − In heavy city traffic where the outside temperature regularly reaches 90°F (32°C) or higher.
  - − In hilly or mountainous terrain.
  - − Uses such as found in taxi, police, or delivery service.

If you do not use your vehicle under any of these conditions, the fluid does not require changing.

82,500 Miles (137 500 km)

- ❑ Change engine oil and filter (or every 12 months, whichever occurs first). *An Emission Control Service.*
- ❑ Rotate tires. See *Tire Inspection and Rotation on page 5-60* for proper rotation pattern and additional information. *(See footnote +.)*

90,000 Miles (150 000 km)

- ❑ Change engine oil and filter (or every 12 months, whichever occurs first). *An Emission Control Service.*
- ❑ Replace passenger compartment air filter. If you drive regularly under dusty conditions, the filter may require replacement more often.
- ❑ Replace engine air cleaner filter. See *Engine Air Cleaner/Filter on page 5-16* for more information.
- ❑ Rotate tires. See *Tire Inspection and Rotation on page 5-60* for proper rotation pattern and additional information. *(See footnote +.)*
- ❑ Replace spark plugs. *An Emission Control Service.*
- ❑ Replace fuel filter. *An Emission Control Service. (See footnote †.)*
- ❑ Check restraint system. Make sure the safety belt reminder light and safety belt assemblies are working properly. Look for any other loose or damaged safety belt system parts. If you see anything that might keep a safety belt system from doing its job, have it repaired. Have any torn or frayed safety belts replaced. Also see *Checking the Restraint Systems on page 1-66*.
- ❑ Inspect drive belt(s).
- ❑ Inspect EVAP canister, vapor lines and EVAP vent solenoid valve. *An Emission Control Service. (See footnote †.)*
- ❑ Inspect PCV system. *An Emission Control Service. (See footnote †.)*

97,500 Miles (162 500 km)

- ❑ Change engine oil and filter (or every 12 months, whichever occurs first). *An Emission Control Service.*
- ❑ Rotate tires. See *Tire Inspection and Rotation on page 5-60* for proper rotation pattern and additional information. *(See footnote +.)*

150,000 Miles (240 000 km)

- ❑ Drain, flush, and refill cooling system. This service can be complex; you should have your dealer/retailer perform this service. See *Engine Coolant on page 5-19* for what to use. Inspect hoses. Clean radiator, condenser, pressure cap, and neck. Pressure test the cooling system and pressure cap. *An Emission Control Service.*

Part B: Owner Checks and Services

Listed in this part are owner checks and services which should be performed at the intervals specified to help ensure the safety, dependability and emission control performance of your vehicle.

Be sure any necessary repairs are completed at once. Whenever any fluids or lubricants are added to your vehicle, make sure they are the proper ones, as shown in Part D.

At Each Fuel Fill

It is important to perform these underhood checks at each fuel fill.

Engine Oil Level Check

Notice: **It is important to check the engine oil regularly and keep it at the proper level. Failure to keep the engine oil at the proper level can cause damage to the engine not covered by your warranty.**

Check the engine oil level and add the proper oil if necessary. See *Engine Oil on page 5-13*.

Engine Coolant Level Check

Check the engine coolant level and add DEX-COOL® coolant mixture if necessary. See *Engine Coolant on page 5-19*.

Windshield Washer Fluid Level Check

Check the windshield washer fluid level in the windshield washer fluid reservoir and add the proper fluid if necessary.

At Least Once a Month

Tire Inflation Check

Inspect the tires and make sure the tires are inflated to the correct pressures. Do not forget to check the spare tire. See *Inflation - Tire Pressure on page 5-56*.

At Least Twice a Year

Wiper Blade Check

Inspect wiper blades for wear, cracking, or contamination. Clean the windshield and wiper blades, if contaminated. Replace wiper blades that are worn or damaged. See *Windshield Wiper Blade Replacement on page 5-48* and *Windshield and Wiper Blades on page 5-83* for more information.

Weatherstrip Lubrication

Silicone grease on weatherstrips will make them last longer, seal better, and not stick or squeak. Apply silicone grease with a clean cloth. During very cold, damp weather more frequent application may be required. See *Part D: Recommended Fluids and Lubricants on page 6-26*.

Automatic Transmission Check

It is not necessary to check the transmission fluid level. A transmission fluid leak is the only reason for fluid loss. Check for leaks. If a leak occurs, take the vehicle to your dealer/retailer and have it repaired as soon as possible.

Manual Transmission Check

It is not necessary to check the transmission fluid level. Check for leaks. A fluid leak is the only reason for fluid loss. Have the system inspected and repaired if needed.

Clutch and Brake Pedal Free Play Check

Check the clutch pedal and brake pedal for free play and adjust as necessary.

At Least Once a Year

Key Lock Cylinders Service

Lubricate the key lock cylinders with the lubricant specified in Part D.

Body Lubrication Service

Lubricate all hood latch assemblies, secondary latch, pivots, spring anchor, release pawl, hood and body door hinges, rear compartment, and any folding seat hardware. Part D tells you what to use. More frequent lubrication may be required when exposed to a corrosive environment.

Starter Switch Check

⚠ CAUTION:

When you are doing this inspection, the vehicle could move suddenly. If the vehicle moves, you or others could be injured.

1. Before you start, be sure you have enough room around the vehicle.
2. Firmly apply both the parking brake and the regular brake. See *Parking Brake on page 2-28* if necessary.

   Do not use the accelerator pedal, and be ready to turn off the engine immediately if it starts.
3. On automatic transmission vehicles, try to start the engine in each gear. The starter should work only in PARK (P) or NEUTRAL (N). If the starter works in any other position, your vehicle needs service.

   On manual transmission vehicles, put the shift lever in NEUTRAL, push the clutch pedal down halfway and try to start the engine. The starter should work only when the clutch pedal is pushed down all the way to the floor. If the starter works when the clutch pedal is not pushed all the way down, your vehicle needs service.

Automatic Transmission Shift Lock Control System Check

⚠ CAUTION:

When you are doing this inspection, the vehicle could move suddenly. If the vehicle moves, you or others could be injured.

1. Before you start, be sure you have enough room around the vehicle. It should be parked on a level surface.
2. Firmly apply the parking brake. See *Parking Brake on page 2-28* if necessary.

   Be ready to apply the regular brake immediately if the vehicle begins to move.
3. With the engine off, turn the ignition to ON/RUN, but do not start the engine. Without applying the regular brake, try to move the shift lever out of PARK (P) with normal effort. If the shift lever moves out of PARK (P), your vehicle needs service.

Ignition Transmission Lock Check

While parked, and with the parking brake set, try to turn the ignition to LOCK/OFF in each shift lever position.

- With an automatic transmission, the ignition should turn to LOCK/OFF only when the shift lever is in PARK (P).
- With a manual transmission, the ignition should turn to LOCK/OFF only when you press the key release button.

On all vehicles, the ignition key should come out only in LOCK/OFF.

Turn the steering wheel to the left and to the right. It should only lock when turned to the right.

Parking Brake and Automatic Transmission Park (P) Mechanism Check

⚠ CAUTION:

When you are doing this check, your vehicle could begin to move. You or others could be injured and property could be damaged. Make sure there is room in front of your vehicle in case it begins to roll. Be ready to apply the regular brake at once should the vehicle begin to move.

Park on a fairly steep hill, with the vehicle facing downhill. Keeping your foot on the regular brake, set the parking brake.

- To check the parking brake's holding ability: With the engine running and transmission in NEUTRAL (N), slowly remove foot pressure from the regular brake pedal. Do this until the vehicle is held by the parking brake only.
- To check the PARK (P) mechanism's holding ability: With the engine running, shift to PARK (P). Then release the parking brake followed by the regular brake.

Underbody Flushing Service

At least every spring, use plain water to flush any corrosive materials from the underbody. Take care to clean thoroughly any areas where mud and other debris can collect.

Part C: Periodic Maintenance Inspections

Listed in this part are inspections and services which should be performed at least twice a year, for instance, each spring and fall. *You should let your dealer/retailer do these jobs. Make sure any necessary repairs are completed at once.*

Proper procedures to perform these services can be found in a service manual. See *Service Publications Ordering Information on page 7-15*.

Steering, Suspension and Front Drive Axle Boot and Seal Inspection

Inspect the front and rear suspension and steering system for damaged, loose or missing parts, signs of wear or lack of lubrication. Inspect the power steering lines and hoses for proper hook-up, binding, leaks, cracks, chafing, etc. Clean and then inspect the drive axle boot seals for damage, tears or leakage. Replace seals if necessary.

Exhaust System Inspection

Inspect the complete exhaust system. Inspect the body near the exhaust system. Look for broken, damaged, missing, or out-of-position parts as well as open seams, holes, loose connections, or other conditions which could cause a heat build-up in the floor pan or could let exhaust fumes into the vehicle. See *Engine Exhaust on page 2-32*.

Fuel System Inspection

Inspect the complete fuel system for damage or leaks.

Engine Cooling System Inspection

Inspect the hoses and have them replaced if they are cracked, swollen or deteriorated. Inspect all pipes, fittings and clamps; replace as needed. Clean the outside of the radiator and air conditioning condenser. To help ensure proper operation, a pressure test of the cooling system and pressure cap is recommended at least once a year.

Throttle System Inspection

Inspect the throttle system for interference or binding, and for damaged or missing parts. Replace parts as needed. Replace any components that have high effort or excessive wear. Do not lubricate accelerator and cruise control cables.

Brake System Inspection

Inspect the complete system. Inspect brake lines and hoses for proper hook-up, binding, leaks, cracks, chafing, etc. Inspect disc brake pads for wear and rotors for surface condition. Inspect other brake parts, including calipers, parking brake, etc. You may need to have your brakes inspected more often if your driving habits or conditions result in frequent braking.

Part D: Recommended Fluids and Lubricants

Fluids and lubricants identified below by name, part number, or specification can be obtained from your dealer/retailer.

Usage	Fluid/Lubricant
Engine Oil	Engine oil which meets GM Standard GM6094M and displays the American Petroleum Institute Certified for Gasoline Engines starburst symbol. To determine the proper viscosity for your vehicle's engine, see *Engine Oil on page 5-13*.
Engine Coolant	50/50 mixture of clean, drinkable water and use only DEX-COOL® Coolant. See *Engine Coolant on page 5-19*
Hydraulic Brake System	Delco® Supreme 11 Brake Fluid or equivalent DOT-3 brake fluid.
Windshield Washer Solvent	Optikleen® Washer Solvent.
Power Steering System	DEXRON®-VI Automatic Transmission Fluid.
Automatic Transmission	Automatic Transmission Fluid ESSO LT 71141 or TOTAL ATF H50235 (GM Part No. in Canada 89021903).
Manual Transmission	Manual Transmission Fluid (GM Part No. U.S. 89021806, in Canada 89021807).
Key Lock Cylinders	Multi-Purpose Lubricant, Superlube (GM Part No. U.S. 12346241, in Canada 10953474).
Manual Transmission Shift Linkage	Chassis Lubricant (GM Part No. U.S. 12377985, in Canada 88901242) or lubricant meeting requirements of NLGI #2, Category LB or GC-LB.

Usage	Fluid/Lubricant
Chassis Lubrication	Chassis Lubricant (GM Part No. U.S. 12377985, in Canada 88901242) or lubricant meeting requirements of NLGI #2, Category LB or GC-LB.
Hood Latch Assembly, Secondary Latch, Pivots, Spring Anchor, and Release Pawl	Lubriplate Lubricant Aerosol (GM Part No. U.S. 12346293, in Canada 992723) or lubricant meeting requirements of NLGI #2, Category LB or GC-LB.
Hood and Door Hinges	Multi-Purpose Lubricant, Superlube (GM Part No. U.S. 12346241, in Canada 10953474).
Weatherstrip Conditioning	Weatherstrip Lubricant (GM Part No. U.S. 3634770, in Canada 10953518) or Dielectric Silicone Grease (GM Part No. U.S. 12345579, in Canada 992887).

Part E: Maintenance Record

After the scheduled services are performed, record the date, odometer reading, and who performed the service and any additional information from “Owner Checks and Services” or “Periodic Maintenance” on the following record pages. Also, you should retain all maintenance receipts.

Maintenance Record

Date	Odometer Reading	Serviced By	Maintenance Record

Maintenance Record (cont'd)

Date	Odometer Reading	Serviced By	Maintenance Record

Maintenance Record (cont'd)

Date	Odometer Reading	Serviced By	Maintenance Record

Section 7 Customer Assistance Information

Customer Assistance and Information 7-2
- Customer Satisfaction Procedure 7-2
- Online Owner Center 7-4
- Customer Assistance for Text Telephone (TTY) Users 7-4
- Customer Assistance Offices 7-5
- GM Mobility Reimbursement Program 7-6
- Roadside Assistance Program 7-6
- Scheduling Service Appointments 7-8
- Courtesy Transportation 7-9
- Collision Damage Repair 7-10

Reporting Safety Defects 7-13
- Reporting Safety Defects to the United States Government 7-13
- Reporting Safety Defects to the Canadian Government 7-14
- Reporting Safety Defects to General Motors 7-14
- Service Publications Ordering Information 7-15

Vehicle Data Recording and Privacy 7-16
- Event Data Recorders 7-16
- OnStar® 7-17
- Navigation System 7-17
- Radio Frequency Identification (RFID) 7-17

Customer Assistance and Information

Customer Satisfaction Procedure

Your satisfaction and goodwill are important to your dealer and to Chevrolet. Normally, any concerns with the sales transaction or the operation of your vehicle will be resolved by your dealer's sales or service departments. Sometimes, however, despite the best intentions of all concerned, misunderstandings can occur. If your concern has not been resolved to your satisfaction, the following steps should be taken:

STEP ONE: Discuss your concern with a member of dealership management. Normally, concerns can be quickly resolved at that level. If the matter has already been reviewed with the sales, service, or parts manager, contact the owner of the dealership or the general manager.

STEP TWO: If after contacting a member of dealership management, it appears your concern cannot be resolved by the dealership without further help, in the U.S., contact the Chevrolet Customer Assistance Center by calling 1-800-222-1020. In Canada, contact General Motors of Canada Customer Communication Centre by calling 1-800-263-3777 (English) or 1-800-263-7854 (French).

We encourage you to call the toll-free number in order to give your inquiry prompt attention. Please have the following information available to give the Customer Assistance Representative:

- Vehicle Identification Number (VIN). This is available from the vehicle registration or title, or the plate at the top left of the instrument panel and visible through the windshield.
- Dealership name and location.
- Vehicle delivery date and present mileage (kilometers).

When contacting Chevrolet, please remember that your concern will likely be resolved at a dealer's facility. That is why we suggest you follow Step One first if you have a concern.

STEP THREE — U.S. Owners: Both General Motors and your dealer are committed to making sure you are completely satisfied with your new vehicle. However, if you continue to remain unsatisfied after following the procedure outlined in Steps One and Two, you should file with the Better Business Bureau (BBB) Auto Line Program to enforce your rights.

The BBB Auto Line Program is an out of court program administered by the Council of Better Business Bureaus to settle automotive disputes regarding vehicle repairs or the interpretation of the New Vehicle Limited Warranty. Although you may be required to

resort to this informal dispute resolution program prior to filing a court action, use of the program is free of charge and your case will generally be heard within 40 days. If you do not agree with the decision given in your case, you may reject it and proceed with any other venue for relief available to you.

You may contact the BBB Auto Line Program using the toll-free telephone number or write them at the following address:

BBB Auto Line Program
Council of Better Business Bureaus, Inc.
4200 Wilson Boulevard
Suite 800
Arlington, VA 22203-1838

Telephone: 1-800-955-5100

This program is available in all 50 states and the District of Columbia. Eligibility is limited by vehicle age, mileage, and other factors. General Motors reserves the right to change eligibility limitations and/or discontinue its participation in this program.

STEP THREE — Canadian Owners: In the event that you do not feel your concerns have been addressed after following the procedure outlined in Steps 1 and 2, General Motors of Canada Limited wants you to be aware of its participation in a no-charge Mediation/Arbitration Program. General Motors of Canada Limited has committed to binding arbitration of owner disputes involving factory-related vehicle service claims. The program provides for the review of the facts involved by an impartial third party arbiter, and may include an informal hearing before the arbiter. The program is designed so that the entire dispute settlement process, from the time you file your complaint to the final decision, should be completed in about 70 days. We believe our impartial program offers advantages over courts in most jurisdictions because it is informal, quick, and free of charge.

For further information concerning eligibility in the Canadian Motor Vehicle Arbitration Plan (CAMVAP), call toll-free 1-800-207-0685. Alternatively, you may call the General Motors Customer Communication Centre, 1-800-263-3777 (English), 1-800-263-7854 (French), or you may write to:

The Mediation/Arbitration Program
c/o Customer Communication Centre
General Motors of Canada Limited
Mail Code: CA1-163-005
1908 Colonel Sam Drive
Oshawa, Ontario L1H 8P7

Your inquiry should be accompanied by your Vehicle Identification Number (VIN).

Online Owner Center

(United States only)

The Owner Center is a resource for your GM ownership needs. Specific vehicle information can be found in one place.

The Online Owner Center allows you to:

- Get e-mail service reminders.
- Access information about your specific vehicle, including tips and videos and an electronic version of this owner manual.
- Keep track of your vehicle's service history and maintenance schedule.
- Find GM dealers/retailers for service nationwide.
- Receive special promotions and privileges only available to members.

Refer to www.MyGMLink.com on the web for updated information and to register your vehicle.

My GM Canada (Canada only)

My GM Canada is a password-protected section of gmcanada.com where you can save information on GM vehicles, get personalized offers, and use handy tools and forms with greater ease.

Here are a few of the valuable tools and services you will have access to:

- My Showroom: Find and save information on vehicles and current offers in your area.
- My Dealers/Retailers: Save details such as address and phone number for each of your preferred GM Dealers or Retailers.
- My Driveway: Receive service reminders and helpful advice on owning and maintaining your vehicle.
- My Preferences: Manage your profile, subscribe to E-News and use tools and forms with greater ease.

To sign up to My GM Canada, visit the My GM Canada section within www.gmcanada.com.

Customer Assistance for Text Telephone (TTY) Users

To assist customers who are deaf, hard of hearing, or speech-impaired and who use Text Telephones (TTYs), Chevrolet has TTY equipment available at its Customer Assistance Center. Any TTY user in the U.S. can communicate with Chevrolet by dialing: 1-800-833-CHEV (2438). (TTY users in Canada can dial 1-800-263-3830.)

Customer Assistance Offices

Chevrolet encourages customers to call the toll-free number for assistance. However, if a customer wishes to write or e-mail Chevrolet, the letter should be addressed to:

United States — Customer Assistance

Chevrolet Motor Division
Chevrolet Customer Assistance Center
P.O. Box 33170
Detroit, MI 48232-5170

www.Chevrolet.com
1-800-222-1020
1-800-833-2438 (For Text Telephone devices (TTYs))
Roadside Assistance: 1-800-CHEV-USA (243-8872)
Fax Number: 313-381-0022

From Puerto Rico:
1-800-496-9992 (English)
1-800-496-9993 (Spanish)
Fax Number: 313-381-0022

From U.S. Virgin Islands:
1-800-496-9994
Fax Number: 313-381-0022

Canada — Customer Assistance

General Motors of Canada Limited
Customer Communication Centre, CA1-163-005
1908 Colonel Sam Drive
Oshawa, Ontario L1H 8P7

www.gmcanada.com
1-800-263-3777 (English)
1-800-263-7854 (French)
1-800-263-3830 (For Text Telephone devices (TTYs))
Roadside Assistance: 1-800-268-6800

Overseas — Customer Assistance

Please contact the local General Motors Business Unit.

Mexico, Central America and Caribbean Islands/Countries (Except Puerto Rico and U.S. Virgin Islands) — Customer Assistance

General Motors de Mexico, S. de R.L. de C.V.
Customer Assistance Center
Paseo de la Reforma # 2740
Col. Lomas de Bezares
C.P. 11910, Mexico, D.F.
01-800-508-0000
Long Distance: 011-52-53 29 0 800

GM Mobility Reimbursement Program

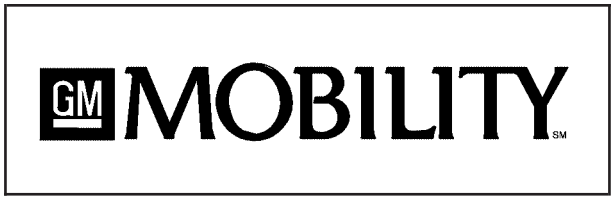

This program, available to qualified applicants, can reimburse you up to $1,000 of the cost of eligible aftermarket adaptive equipment required for your vehicle, such as hand controls or a wheelchair/scooter lift.

The offer is available for a very limited period of time from the date of vehicle purchase/lease. For more details, or to determine your vehicle's eligibility, visit gmmobility.com or call the GM Mobility Assistance Center at 1-800-323-9935. Text telephone (TTY) users, call 1-800-833-9935.

General Motors of Canada also has a Mobility Program. Call 1-800-GM-DRIVE (463-7483) for details. TTY users call 1-800-263-3830.

Roadside Assistance Program

For vehicles purchased in the U.S., call **1-800-CHEV-USA (1-800-243-8872); (Text telephone (TTY): 1-888-889-2438)**.

For vehicles purchased in Canada, call **1-800-268-6800**.

Service is available 24 hours a day, 365 days a year.

As the owner of a new Chevrolet vehicle, you are automatically enrolled in the Chevrolet Roadside Assistance program.

Who is Covered?

Roadside Assistance coverage is for the vehicle operator, regardless of ownership. In Canada, a person driving this vehicle without the consent of the owner is not eligible for coverage.

Services Provided

The following services are provided in the U.S. and Canada up to 5 years/100,000 miles (160 000 km), whichever occurs first, and, in Canada only, up to a maximum coverage of $100.

- **Fuel Delivery:** Delivery of enough fuel for the vehicle to get to the nearest service station (approximately $5 in Canada). In Canada, service to provide diesel may be restricted. For safety reasons, propane and other alternative fuels will not be provided through this service.
- **Lock-out Service:** Lock-out service will be covered at no charge if you are unable to gain entry into your vehicle. A remote unlock may be available if you have an active OnStar® subscription. To ensure security, the driver must present personal identification before lock-out service is provided. In Canada, the vehicle registration is also required.
- **Emergency Tow From a Public Roadway or Highway:** Tow to the nearest dealership for warranty service or in the event of a vehicle-disabling crash. Winch-out assistance is provided when the vehicle is mired in sand, mud, or snow.
- **Flat Tire Change:** Installation of a spare tire in good condition, when equipped and properly inflated, is covered at no charge. The customer is responsible for the repair or replacement of the tire if not covered by a warrantable failure.
- **Jump Start:** A battery jump start is covered at no charge if the vehicle does not start.
- **Trip Routing Service (Canada only):** Upon request, Roadside Assistance will send you detailed, computer personalized maps, highlighting your choice of either the most direct route or the most scenic route to your destination, anywhere in North America, along with helpful travel information pertaining to your trip.

  Please allow three weeks before your planned departure date. Trip routing requests will be limited to six per calendar year.
- **Trip Interruption Benefits and Assistance (Canada only):** In the event of a warranty related vehicle disablement, while en route and over 250 kilometres from the original point of departure, you may qualify for trip interruption expense assistance. This assistance covers reasonable reimbursement of up to a maximum of $500 (Canadian) for (A) meals (maximum of $50/day), (B) lodging (maximum of $100/night) and (C) alternate ground transportation (maximum of $40/day). This benefit is to assist you with some of the unplanned expense you may incur while waiting for your vehicle to be repaired.

  Pre-authorization, original detailed receipts and a copy of the repair order are required.

Once authorization has been given, your advisor will help you make any necessary arrangements and explain how to claim for trip interruption expense assistance.

- **Alternative Service (Canada only):** There may be times, when Roadside Assistance cannot provide timely assistance. Your advisor may authorize you to secure local emergency road service, and you will be reimbursed up to $100 upon submission of the original receipt to Roadside Assistance.

In many instances, mechanical failures may be covered. However, any cost for parts and labor for non-warranty repairs are the responsibility of the driver.

Chevrolet and General Motors of Canada Limited reserve the right to limit services or reimbursement to an owner or driver when, in their sole discretion, the claims become excessive in frequency or type of occurrence.

Calling for Assistance

For prompt and efficient assistance when calling, please provide the following to the Roadside Assistance Representative:

- Your name, home address, and home telephone number
- Telephone number of your location
- Location of the vehicle
- Model, year, color, and license plate number of the vehicle
- Odometer reading, Vehicle Identification Number (VIN), and delivery date of the vehicle
- Description of the problem

Towing and Road Service Exclusions

Specifically excluded from Roadside Assistance coverage are towing or services for vehicles operated on a non-public roadway or highway, fines, impound towing caused by a violation of local, Municipal, State, Provincial, or Federal law, and mounting, dismounting or changing of snow tires, chains, or other traction devices.

Roadside Assistance is not part of or included in the coverage provided by the New Vehicle Limited Warranty. Chevrolet and General Motors of Canada Limited reserve the right to make any changes or discontinue the Roadside Assistance program at any time without notification.

Scheduling Service Appointments

When your vehicle requires warranty service, contact your dealer/retailer and request an appointment. By scheduling a service appointment and advising your service consultant of your transportation needs, your dealer/retailer can help minimize your inconvenience.

If your vehicle cannot be scheduled into the service department immediately, keep driving it until it can be scheduled for service, unless, of course, the problem is safety-related. If it is, please call your dealership/retailer, let them know this, and ask for instructions.

If the dealer/retailer requests that you simply drop the vehicle off for service, you are urged to do so as early in the work day as possible to allow for the same day repair.

Courtesy Transportation

To enhance your ownership experience, we and our participating dealers are proud to offer Courtesy Transportation, a customer support program for vehicles with the Bumper to Bumper (Base Warranty Coverage period in Canada) and extended powertrain warranty in both the U.S. and Canada.

Several courtesy transportation options are available to assist in reducing your inconvenience when warranty repairs are required.

Courtesy Transportation is not a part of the New Vehicle Limited Warranty. A separate booklet entitled “Warranty and Owner Assistance Information” furnished with each new vehicle provides detailed warranty coverage information.

Transportation Options

Warranty service can generally be completed while you wait. However, if you are unable to wait, GM helps to minimize your inconvenience by providing several transportation options. Depending on the circumstances, your dealer can offer you one of the following:

Shuttle Service

Shuttle service is the preferred means of offering Courtesy Transportation. Dealers may provide you with shuttle service to get you to your destination with minimal interruption of your daily schedule. This includes one-way or round trip shuttle service within reasonable time and distance parameters of the dealer’s area.

Public Transportation or Fuel Reimbursement

If your vehicle requires overnight warranty repairs, and public transportation is used instead of the dealer’s shuttle service, the expense must be supported by original receipts and can only be up to the maximum amount allowed by GM for shuttle service. In addition, for U.S. customers, should you arrange transportation through a friend or relative, limited reimbursement for reasonable fuel expenses may be available.

Claim amounts should reflect actual costs and be supported by original receipts. See your dealer for information regarding the allowance amounts for reimbursement of fuel or other transportation costs.

Courtesy Rental Vehicle

Your dealer may arrange to provide you with a courtesy rental vehicle or reimburse you for a rental vehicle that you obtain if your vehicle is kept for an overnight warranty repair. Rental reimbursement will be limited and must be supported by original receipts. This requires that you sign and complete a rental agreement and meet state/provincial, local, and rental vehicle provider requirements. Requirements vary and may include minimum age requirements, insurance coverage, credit card, etc. You are responsible for fuel usage charges and may also be responsible for taxes, levies, usage fees, excessive mileage, or rental usage beyond the completion of the repair.

It may not be possible to provide a like-vehicle as a courtesy rental.

Additional Program Information

All program options, such as shuttle service, may not be available at every dealer. Please contact your dealer for specific information about availability. All Courtesy Transportation arrangements will be administered by appropriate dealer personnel.

General Motors reserves the right to unilaterally modify, change or discontinue Courtesy Transportation at any time and to resolve all questions of claim eligibility pursuant to the terms and conditions described herein at its sole discretion.

Collision Damage Repair

If your vehicle is involved in a collision and it is damaged, have the damage repaired by a qualified technician using the proper equipment and quality replacement parts. Poorly performed collision repairs diminish your vehicle's resale value, and safety performance can be compromised in subsequent collisions.

Collision Parts

Genuine GM Collision parts are new parts made with the same materials and construction methods as the parts with which your vehicle was originally built. Genuine GM Collision parts are your best choice to ensure that your vehicle's designed appearance, durability, and safety are preserved. The use of Genuine GM parts can help maintain your GM New Vehicle Warranty.

Recycled original equipment parts may also be used for repair. These parts are typically removed from vehicles that were total losses in prior crashes. In most cases, the parts being recycled are from undamaged sections of the vehicle. A recycled original equipment GM part, may be an acceptable choice to maintain your vehicle's originally designed appearance and safety performance, however, the history of these parts is not known. Such parts are not covered by your GM New Vehicle Limited Warranty, and any related failures are not covered by that warranty.

Aftermarket collision parts are also available. These are made by companies other than GM and may not have been tested for your vehicle. As a result, these parts may fit poorly, exhibit premature durability/corrosion problems, and may not perform properly in subsequent collisions. Aftermarket parts are not covered by your GM New Vehicle Limited Warranty, and any vehicle failure related to such parts are not covered by that warranty.

Repair Facility

GM also recommends that you choose a collision repair facility that meets your needs before you ever need collision repairs. Your dealer/retailer may have a collision repair center with GM-trained technicians and state of the art equipment, or be able to recommend a collision repair center that has GM-trained technicians and comparable equipment.

Insuring Your Vehicle

Protect your investment in your GM vehicle with comprehensive and collision insurance coverage. There are significant differences in the quality of coverage afforded by various insurance policy terms. Many insurance policies provide reduced protection to your GM vehicle by limiting compensation for damage repairs by using aftermarket collision parts. Some insurance companies will not specify aftermarket collision parts. When purchasing insurance, we recommend that you assure your vehicle will be repaired with GM original equipment collision parts. If such insurance coverage is not available from your current insurance carrier, consider switching to another insurance carrier.

If your vehicle is leased, the leasing company may require you to have insurance that assures repairs with Genuine GM Original Equipment Manufacturer (OEM) parts or Genuine Manufacturer replacement parts. Read your lease carefully, as you may be charged at the end of your lease for poor quality repairs.

If a Crash Occurs

Here is what to do if you are involved in a crash.

- Try to relax and then check to make sure you are all right. If you are uninjured, make sure that no one else in your vehicle, or the other vehicle, is injured.
- If there has been an injury, call emergency services for help. Do not leave the scene of a crash until all matters have been taken care of. Move your vehicle only if its position puts you in danger or you are instructed to move it by a police officer.
- Give only the necessary and requested information to police and other parties involved in the crash. Do not discuss your personal condition, mental frame of mind, or anything unrelated to the crash. This will help guard against post-crash legal action.
- If you need roadside assistance, call GM Roadside Assistance. See *Roadside Assistance Program on page 7-6* for more information.
- If your vehicle cannot be driven, know where the towing service will be taking it. Get a card from the tow truck operator or write down the driver's name, the service's name, and the phone number.
- Remove any valuables from your vehicle before it is towed away. Make sure this includes your insurance information and registration if you keep these items in your vehicle.
- Gather the important information you will need from the other driver. Things like name, address, phone number, driver's license number, vehicle license plate, vehicle make, model and model year, Vehicle Identification Number (VIN), insurance company and policy number, and a general description of the damage to the other vehicle.
- If possible, call your insurance company from the scene of the crash. They will walk you through the information they will need. If they ask for a police report, phone or go to the police department headquarters the next day and you can get a copy of the report for a nominal fee. In some states/provinces with "no fault" insurance laws, a report may not be necessary. This is especially true if there are no injuries and both vehicles are driveable.
- Choose a reputable collision repair facility for your vehicle. Whether you select a dealer/retailer or a private collision repair facility to fix the damage, make sure you are comfortable with them. Remember, you will have to feel comfortable with their work for a long time.

- Once you have an estimate, read it carefully and make sure you understand what work will be performed on your vehicle. If you have a question, ask for an explanation. Reputable shops welcome this opportunity.

Managing the Vehicle Damage Repair Process

In the event that your vehicle requires damage repairs, GM recommends that you take an active role in its repair. If you have a pre-determined repair facility of choice, take your vehicle there, or have it towed there. Specify to the facility that any required replacement collision parts be original equipment parts, either new Genuine GM parts or recycled original GM parts. Remember, recycled parts will not be covered by your GM vehicle warranty.

Insurance pays the bill for the repair, but you must live with the repair. Depending on your policy limits, your insurance company may initially value the repair using aftermarket parts. Discuss this with your repair professional, and insist on Genuine GM parts. Remember if your vehicle is leased you may be obligated to have the vehicle repaired with Genuine GM parts, even if your insurance coverage does not pay the full cost.

If another party's insurance company is paying for the repairs, you are not obligated to accept a repair valuation based on that insurance company's collision policy repair limits, as you have no contractual limits with that company. In such cases, you can have control of the repair and parts choices as long as cost stays within reasonable limits.

Reporting Safety Defects

Reporting Safety Defects to the United States Government

If you believe that your vehicle has a defect which could cause a crash or could cause injury or death, you should immediately inform the National Highway Traffic Safety Administration (NHTSA) in addition to notifying General Motors.

If NHTSA receives similar complaints, it may open an investigation, and if it finds that a safety defect exists in a group of vehicles, it may order a recall and remedy campaign. However, NHTSA cannot become involved in individual problems between you, your dealer/retailer, or General Motors.

To contact NHTSA, you may call the Vehicle Safety Hotline toll-free at 1-888-327-4236 (TTY: 1-800-424-9153); go to http://www.safercar.gov; or write to:

Administrator, NHTSA
400 Seventh Street, SW.
Washington D.C., 20590

You can also obtain other information about motor vehicle safety from http://www.safercar.gov.

Reporting Safety Defects to the Canadian Government

If you live in Canada, and you believe that your vehicle has a safety defect, notify Transport Canada immediately, in addition to notifying General Motors of Canada Limited. Call them at 1-800-333-0510 or write to:

Transport Canada
Road Safety Branch
2780 Sheffield Road
Ottawa, Ontario K1B 3V9

Reporting Safety Defects to General Motors

In addition to notifying NHTSA (or Transport Canada) in a situation like this, please notify General Motors.

Call 1-800-222-1020, or write:

Chevrolet Motor Division
Chevrolet Customer Assistance Center
P.O. Box 33170
Detroit, MI 48232-5170

In Canada, call 1-800-263-3777 (English) or 1-800-263-7854 (French), or write:

General Motors of Canada Limited
Customer Communication Centre, CA1-163-005
1908 Colonel Sam Drive
Oshawa, Ontario L1H 8P7

Service Publications Ordering Information

Service Manuals

Service Manuals have the diagnosis and repair information on engines, transmission, axle suspension, brakes, electrical, steering, body, etc.

Service Bulletins

Service Bulletins' give additional technical service information needed to knowledgeably service General Motors cars and trucks. Each bulletin contains instructions to assist in the diagnosis and service of your vehicle.

Owner Information

Owner publications are written specifically for owners and intended to provide basic operational information about the vehicle. The owner manual includes the Maintenance Schedule for all models.

In-Portfolio: Includes a Portfolio, Owner Manual, and Warranty Booklet.

RETAIL SELL PRICE: $35.00 (U.S.) plus processing fee

Without Portfolio: Owner Manual only.

RETAIL SELL PRICE: $25.00 (U.S.) plus processing fee

Current and Past Model Order Forms

Technical Service Bulletins and Manuals are available for current and past model GM vehicles. To request an order form, specify year and model name of the vehicle.

ORDER TOLL FREE: 1-800-551-4123 Monday-Friday 8:00 AM - 6:00 PM Eastern Time

For Credit Card Orders Only (VISA-MasterCard-Discover), visit Helm, Inc. on the World Wide Web at: www.helminc.com

Or you can write to:

Helm, Incorporated
P.O. Box 07130
Detroit, MI 48207

Prices are subject to change without notice and without incurring obligation. Allow ample time for delivery.

Note to Canadian Customers: All listed prices are quoted in U.S. funds. Canadian residents are to make checks payable in U.S. funds.

Vehicle Data Recording and Privacy

Your GM vehicle has a number of sophisticated computers that record information about the vehicle's performance and how it is driven. For example, your vehicle uses computer modules to monitor and control engine and transmission performance, to monitor the conditions for airbag deployment and deploy airbags in a crash and, if so equipped, to provide antilock braking to help the driver control the vehicle. These modules may store data to help your dealer/retailer technician service your vehicle. Some modules may also store data about how you operate the vehicle, such as rate of fuel consumption or average speed. These modules may also retain the owner's personal preferences, such as radio pre-sets, seat positions, and temperature settings.

Event Data Recorders

This vehicle has an Event Data Recorder (EDR). The main purpose of an EDR is to record, in certain crash or near crash-like situations, such as an airbag deployment or hitting a road obstacle, data that will assist in understanding how a vehicle's systems performed. The EDR is designed to record data related to vehicle dynamics and safety systems for a short period of time, typically 30 seconds or less. The EDR in this vehicle is designed to record such data as:

- How various systems in your vehicle were operating
- Whether or not the driver and passenger safety belts were buckled/fastened
- How far, if at all, the driver was pressing the accelerator and/or brake pedal
- How fast the vehicle was traveling

This data can help provide a better understanding of the circumstances in which crashes and injuries occur.

Important: EDR data is recorded by your vehicle only if a non-trivial crash situation occurs; no data is recorded by the EDR under normal driving conditions and no personal data (e.g., name, gender, age, and crash location) is recorded. However, other parties, such as law enforcement, could combine the EDR data with the type of personally identifying data routinely acquired during a crash investigation.

To read data recorded by an EDR, special equipment is required, and access to the vehicle or the EDR is needed. In addition to the vehicle manufacturer, other parties, such as law enforcement, that have the special equipment, can read the information if they have access to the vehicle or the EDR.

GM will not access this data or share it with others except: with the consent of the vehicle owner or, if the vehicle is leased, with the consent of the lessee; in response to an official request of police or similar government office; as part of GM's defense of litigation through the discovery process; or, as required by law. Data that GM collects or receives may also be used for GM research needs or may be made available to others for research purposes, where a need is shown and the data is not tied to a specific vehicle or vehicle owner.

OnStar®

If your vehicle has OnStar and you subscribe to the OnStar services, please refer to the OnStar Terms and Conditions for information on data collection and use.

Navigation System

If your vehicle has a navigation system, use of the system may result in the storage of destinations, addresses, telephone numbers, and other trip information. Refer to the navigation system operating manual for information on stored data and for deletion instructions.

Radio Frequency Identification (RFID)

RFID technology is used in some vehicles for functions such as tire pressure monitoring and ignition system security, as well as in connection with conveniences such as key fobs for remote door locking/unlocking and starting, and in-vehicle transmitters for garage door openers. RFID technology in GM vehicles does not use or record personal information or link with any other GM system containing personal information.

NOTES

A

Accessories and Modifications 5-4
Adding Equipment to Your Airbag-Equipped Vehicle 1-64
Additives, Fuel 5-6
Add-On Electrical Equipment 5-88
Air Cleaner/Filter, Engine 5-16
Air Conditioning 3-19
Airbag
  Passenger Status Indicator 3-28
  Readiness Light 3-27
Airbag System 1-51
  What Will You See After an Airbag Inflates? 1-58
  When Should an Airbag Inflate? 1-56
  Where Are the Airbags? 1-54
Airbag Systems
  Adding Equipment to Your Airbag-Equipped Vehicle 1-64
  How Does an Airbag Restrain? 1-57
  Passenger Sensing System 1-59
  Servicing Your Airbag-Equipped Vehicle 1-64
  What Makes an Airbag Inflate? 1-57
Antenna, Integrated Windshield 3-63
Antilock Brake System (ABS) 4-4
Antilock Brake, System Warning Light 3-32
Appearance Care
  Aluminum Wheels 5-84
  Care of Safety Belts 5-81
  Chemical Paint Spotting 5-85
  Cleaning Exterior Lamps/Lenses 5-82
  Fabric/Carpet 5-80
  Finish Care 5-82
  Finish Damage 5-85
  Instrument Panel, Vinyl, and Other Plastic Surfaces 5-81
  Interior Cleaning 5-79
  Leather 5-81
  Sheet Metal Damage 5-84
  Tires 5-84
  Underbody Maintenance 5-85
  Vehicle Care/Appearance Materials 5-86
  Washing Your Vehicle 5-82
  Weatherstrips 5-82
  Windshield and Wiper Blades 5-83
Appointments, Scheduling Service 7-8
Ashtray 3-17

Audio System 3-41
Audio Steering Wheel Controls 3-61
Care of Your CD Player 3-63
Care of Your CDs 3-63
Integrated Windshield Antenna 3-63
Radio Reception 3-62
Radio with CD 3-42
Radio with Six-Disc CD 3-48
Automatic Transmission
Fluid 5-18
Operation 2-22

B

Battery 5-34
Inadvertent Power Saver 3-16
Brake
Emergencies 4-5
System Inspection 6-25
Brakes 5-31
System Warning Light 3-31
Braking 4-3
Braking in Emergencies 4-5
Break-In, New Vehicle 2-17
Bulb Replacement 5-40
Center High-Mounted Stoplamp (CHMSL) 5-45
Front Turn Signal and Parking Lamps 5-42
Halogen Bulbs 5-40
Headlamp Aiming 5-40
Headlamps 5-41
License Plate Lamps 5-47
Replacement Bulbs 5-48
Sidemarker Lamps 5-44
Taillamps, Stoplamps and Back-Up Lamps 5-47
Taillamps, Turn Signal, and Stoplamps 5-46
Taillamps, Turn Signal, Stoplamps and Back-up Lamps 5-46
Turn Signal Lamps 5-43
Buying New Tires 5-62

C

California Fuel 5-6
California Perchlorate Materials Requirements 5-5
California Proposition 65 Warning 5-4
Canadian Owners ii

Capacities and Specifications 5-94
Carbon Monoxide 2-32, 4-13, 4-25
Care of
Safety Belts 5-81
Your CD Player 3-63
Your CDs 3-63
Cargo Cover 2-38
CD, MP3 ..... 3-54, 3-58
Center High-Mounted Stoplamp (CHMSL) 5-45
Chains, Tire 5-67
Charging System Light 3-30
Check
Engine Light 3-34
Checking Things Under the Hood 5-10
Chemical Paint Spotting 5-85
Child Restraints
Child Restraint Systems 1-33
Infants and Young Children 1-30
Lower Anchors and Tethers for Children 1-37
Older Children 1-27
Securing a Child Restraint in a Rear Seat Position 1-45
Securing a Child Restraint in the Right Front Seat Position 1-48
Where to Put the Restraint 1-36
Cigarette Lighter 3-17
Cleaning
Aluminum Wheels 5-84
Exterior Lamps/Lenses 5-82
Fabric/Carpet 5-80
Finish Care 5-82
Instrument Panel, Vinyl, and Other Plastic Surfaces 5-81
Interior 5-79
Leather 5-81
Tires 5-84
Underbody Maintenance 5-85
Washing Your Vehicle 5-82
Weatherstrips 5-82
Windshield and Wiper Blades 5-83
Climate Control System 3-19
Air Filter, Passenger Compartment 3-23
Outlet Adjustment 3-22
Clock 3-18
Clutch, Hydraulic 5-18
Collision Damage Repair 7-10
Compact Spare Tire 5-78
Control of a Vehicle 4-3
Convenience Net 2-37

Coolant
Engine Temperature Gage 3-33
Heater, Engine 2-21
Surge Tank Pressure Cap 5-22
Cooling System 5-24
Cruise Control 3-10
Cruise Control Light 3-38
Cupholder(s) 2-36
Customer Assistance Information
Courtesy Transportation 7-9
Customer Assistance for Text Telephone (TTY) Users 7-4
Customer Assistance Offices 7-5
Customer Satisfaction Procedure 7-2
GM Mobility Reimbursement Program 7-6
Reporting Safety Defects to General Motors 7-14
Reporting Safety Defects to the Canadian Government 7-14
Reporting Safety Defects to the United States Government 7-13
Roadside Assistance Program 7-6
Service Publications Ordering Information 7-15

D

Daytime Running Lamps 3-13
Daytime Running Lamps Indicator Light 3-39
Defensive Driving 4-2
Diesel
Running Out of Fuel 2-33
Disc, MP3 ..... 3-54, 3-58
Doing Your Own Service Work 5-5
Dome Lamp 3-15
Door
Ajar Light 3-39
Central Door Unlocking System 2-7
Door Ajar Reminder 2-8
Locks 2-6
Power Door Locks 2-7
Rear Door Security Locks 2-8
Driver
Seat Tilt Adjuster 1-4
Driving
At Night 4-10
Before a Long Trip 4-11
Defensive 4-2

Driving (cont.)
Drunken 4-2
Highway Hypnosis 4-12
Hill and Mountain Roads 4-12
In Rain and on Wet Roads 4-10
Rocking Your Vehicle to Get it Out 4-18
Winter 4-13

E

EDR 7-16
Electrical System
Add-On Equipment 5-88
Engine Compartment Fuse Block 5-91
Fuses and Circuit Breakers 5-89
Headlamp Wiring 5-88
Instrument Panel Fuse Block 5-89
Power Windows and Other Power Options 5-88
Windshield Wiper Fuses 5-88
Engine
Air Cleaner/Filter 5-16
Check and Service Engine Soon Light 3-34
Coolant 5-19
Coolant Heater 2-21
Coolant Temperature Gage 3-33
Cooling System Inspection 6-24
Engine (cont.)
Drive Belt Routing 5-96
Engine Compartment Overview 5-12
Exhaust 2-32
Oil 5-13
Overheating 5-22
Starting 2-19
Event Data Recorders 7-16
Extender, Safety Belt 1-26
Exterior Lamps 3-13

F

Filter
Engine Air Cleaner 5-16
Finish Damage 5-85
Flashers, Hazard Warning 3-6
Flash-to-Pass 3-8
Flat Tire 5-68
Flat Tire, Changing 5-69
Flat Tire, Storing 5-78
Fluid 5-18
Power Steering 5-29
Windshield Washer 5-30
Fog Lamp
Fog 3-14

Fog Lamp Light 3-38
Front Armrest Storage Area 2-36
Fuel 5-6
  Additives 5-6
  California Fuel 5-6
  Filling a Portable Fuel Container 5-10
  Filling the Tank 5-8
  Fuels in Foreign Countries 5-7
  Gage 3-40
  Gasoline Octane 5-6
  Gasoline Specifications 5-6
  Low Warning Light 3-40
  Running Out of 2-33
  System Inspection 6-24
Fuses
  Engine Compartment Fuse Block 5-91
  Fuses and Circuit Breakers 5-89
  Instrument Panel Fuse Block 5-89
  Windshield Wiper 5-88

G

Gage
  Engine Coolant Temperature 3-33
  Fuel 3-40
  Speedometer 3-26
  Tachometer 3-26
Gasoline
  Octane 5-6
  Specifications 5-6
Glove Box 2-36
GM Mobility Reimbursement Program 7-6

H

Hazard Warning Flashers 3-6
Head Restraints 1-7
Headlamp
  Aiming 5-40
Headlamp Wiring 5-88

Headlamps 5-41
Bulb Replacement 5-40
Daytime Running Lamps 3-13
Exterior Lamps 3-13
Flash-to-Pass 3-8
Front Turn Signal and Parking Lamps 5-42
Halogen Bulbs 5-40
High/Low Beam Changer 3-8
On Reminder 3-13
Sidemarker Lamps 5-44
Turn Signal Lamps 5-43
Heater 3-19
Hideaway Rear Storage Bins 2-38
Highbeam On Light 3-39
Highway Hypnosis 4-12
Hill and Mountain Roads 4-12
Hold Mode Light 3-33
Hood
Checking Things Under 5-10
Release 5-11
Horn 3-6
How to Wear Safety Belts Properly 1-15
Hydraulic Clutch 5-18

I

Ignition Positions 2-18
Immobilizer 2-16
Immobilizer Operation 2-16
Inadvertent Power Battery Saver 3-16
Infants and Young Children, Restraints 1-30
Inflation - Tire Pressure 5-56
Inspection
Brake System 6-25
Engine Cooling System 6-24
Exhaust System 6-24
Fuel System 6-24
Part C - Periodic Maintenance 6-24
Steering, Suspension and Front Drive Axle Boot and Seal 6-24
Throttle System 6-25
Instrument Panel
Overview 3-4
Instrument Panel (I/P)
Brightness 3-15
Cluster 3-25
Integrated Windshield Antenna 3-63

J

Jump Starting 5-35

K

Keyless Entry System 2-3
Keys 2-2

L

Labeling, Tire Sidewall 5-50
Lamps
  Dome 3-15
  Inadvertent Power Battery Saver 3-16
  Map 3-16
Lap-Shoulder Belt 1-23
LATCH System
  Child Restraints 1-37
License Plate Lamps 5-47
Liftgate
  Carbon Monoxide 2-10
Light
  Airbag Readiness 3-27
  Antilock Brake System Warning 3-32
  Brake System Warning 3-31
  Charging System 3-30
  Cruise Control 3-38
  Daytime Running Lamps Indicator 3-39
  Door Ajar 3-39
  Fog Lamp 3-38
  Highbeam On 3-39
  Hold Mode 3-33
  Low Fuel Warning 3-40
  Malfunction Indicator 3-34
  Oil Pressure 3-38
  Passenger Airbag Status Indicator 3-28
  Safety Belt Reminders 3-27
  Speed Sensitive Power Steering (SSPS)
    Warning Light 3-32
  Tire Pressure 3-34
  Trunk Ajar 3-39
Lights
  Exterior Lamps 3-13
  Flash-to-Pass 3-8
  High/Low Beam Changer 3-8
  On Reminder 3-13

Loading Your Vehicle 4-18
Lockout Protection 2-9
Locks
Central Door Unlocking System 2-7
Door 2-6
Lockout Protection 2-9
Power Door 2-7
Rear Door Security Locks 2-8
Long Trip/Highway Scheduled Maintenance 6-14
Loss of Control 4-8
Low Fuel Warning Light 3-40
Luggage Carrier 2-37
Lumbar
Manual Controls 1-4

M

Maintenance, Replacement Parts 5-95
Maintenance Schedule
At Each Fuel Fill 6-19
At Least Once a Month 6-19
At Least Once a Year 6-21
At Least Twice a Year 6-20
Brake System Inspection 6-25
Engine Cooling System Inspection 6-24
Maintenance Schedule (cont.)
Exhaust System Inspection 6-24
Fuel System Inspection 6-24
How This Section is Organized 6-3
Introduction 6-2
Long Trip/Highway Scheduled Maintenance 6-14
Maintenance Requirements 6-2
Part A - Scheduled Maintenance Services 6-4
Part B - Owner Checks and Services 6-19
Part C - Periodic Maintenance Inspections 6-24
Part D - Recommended Fluids and Lubricants . 6-26
Part E - Maintenance Record 6-28
Selecting the Right Schedule 6-5
Short Trip/City Scheduled Maintenance 6-7
Steering, Suspension and Front Drive Axle Boot and Seal Inspection 6-24
Throttle System Inspection 6-25
Using 6-4
Your Vehicle and the Environment 6-2
Malfunction Indicator Light 3-34
Manual Lumbar Controls 1-4
Manual Seats 1-2, 1-3
Manual Transmission
Fluid 5-18
Operation 2-26

Manual, Using iii
Manual Windows 2-11
Map Lamps 3-16
Mirrors
Manual Rearview Mirror 2-34
Outside Convex Mirror 2-35
Outside Heated Mirrors 2-35
Outside Manual Mirrors 2-34
Outside Power Mirrors 2-35
MP3 ..... 3-54, 3-58
MyGMLink.com 7-4

N

Navigation System, Privacy 7-17
New Vehicle Break-In 2-17

O

Odometer 3-26
Odometer, Trip 3-26
Off-Road Recovery 4-8
Oil
Engine 5-13
Pressure Light 3-38
Older Children, Restraints 1-27
Online Owner Center 7-4
OnStar, Privacy 7-17
Other Warning Devices 3-6
Outlet Adjustment 3-22
Outlets
Accessory Power 3-16
Outside
Convex Mirror 2-35
Heated Mirrors 2-35
Manual Mirrors 2-34
Power Mirrors 2-35
Owners, Canadian ii

P

Paint, Damage 5-85
Park Brake 2-28
Park (P)
Shifting Into 2-29
Shifting Out of 2-30
Parking
Over Things That Burn 2-32
Parking Your Vehicle 2-31
Part A - Scheduled Maintenance Services 6-4
Part B - Owner Checks and Services 6-19
Part C - Periodic Maintenance Inspections 6-24

Part D - Recommended Fluids and Lubricants 6-26
Part E - Maintenance Record 6-28
Passenger Airbag Status Indicator 3-28
Passenger Compartment Air Filter 3-23
Passenger Sensing System 1-59
Passing 4-8
Perchlorate Materials Requirements, California 5-5
Power
  Door Locks 2-7
  Electrical System 5-88
  Inadvertent Battery Saver 3-16
  Steering Fluid 5-29
  Windows 2-12
Privacy 7-16
  Event Data Recorders 7-16
  Navigation System 7-17
  OnStar 7-17
  Radio Frequency Identification 7-17

R

Radio Frequency Identification (RFID), Privacy 7-17
Radios 3-41
  Care of Your CD Player 3-63
  Care of Your CDs 3-63
  Radio with CD 3-42
  Radio with Six-Disc CD 3-48
  Reception 3-62
Rear Door Security Locks 2-8
Rear Seat Armrest 2-37
Rear Seat Operation 1-8
Rear Windshield Washer/Wiper 3-10
Rearview Mirrors 2-34
Reclining Seatbacks 1-5
Recreational Vehicle Towing 4-23
Remote Keyless Entry (RKE) System 2-3
Remote Keyless Entry (RKE) System,
  Operation 2-4
Removing the Flat Tire and Installing the
  Spare Tire 5-73
Removing the Spare Tire and Tools 5-70
Replacement Bulbs 5-48
Replacement Parts, Maintenance 5-95
Reporting Safety Defects
  Canadian Government 7-14
  General Motors 7-14
  United States Government 7-13
Restraint System Check
  Checking the Restraint Systems 1-66
  Replacing Restraint System Parts After
    a Crash 1-67
Roadside
  Assistance Program 7-6
Rocking Your Vehicle to Get it Out 4-18
Routing, Engine Drive Belt 5-96
Running Out of Fuel 2-33

S

Safety Belt
Reminder Light 3-27
Safety Belts
Care of 5-81
How to Wear Safety Belts Properly 1-15
Lap-Shoulder Belt 1-23
Safety Belt Extender 1-26
Safety Belt Use During Pregnancy 1-26
Safety Belts Are for Everyone 1-10
Safety Warnings and Symbols iii
Seats
Driver Seat Tilt Adjuster 1-4
Head Restraints 1-7
Manual Lumbar 1-4
Rear Seat Operation 1-8
Reclining Seatbacks 1-5
Securing a Child Restraint
Rear Seat Position 1-45
Right Front Seat Position 1-48
Selecting the Right Schedule, Maintenance 6-5
Service 5-4
Accessories and Modifications 5-4
Adding Equipment to the Outside of Your Vehicle 5-5
California Pershlorate Materials Requirements 5-5
California Proposition 65 Warning 5-4
Doing Your Own Work 5-5
Service (cont.)
Engine Soon Light 3-34
Publications Ordering Information 7-15
Service, Scheduling Appointments 7-8
Servicing Your Airbag-Equipped Vehicle 1-64
Sheet Metal Damage 5-84
Shifting Into Park (P) 2-29
Shifting Out of Park (P) 2-30
Short Trip/City Scheduled Maintenance 6-7
Signals, Turn and Lane-Change 3-7
Spare Tire
Compact 5-78
Installing 5-73
Removing 5-70
Storing 5-78
Specifications, Capacities 5-94
Speed Sensitive Power Steering (SSPS)
Warning Light 3-32
Speedometer 3-26
Starting the Engine 2-19
Steering 4-6
Steering, Suspension and Front Drive Axle Boot and Seal Inspection 6-24
Steering Wheel Controls, Audio 3-61
Steering Wheel, Tilt Wheel 3-6
Storage Areas 2-36
Convenience Net 2-37
Cupholder(s) 2-36
Front Armrest Storage Area 2-36
Glove Box 2-36

Storage Areas (cont.)
Hideaway Rear Storage Bins 2-38
Luggage Carrier 2-37
Rear Seat Armrest 2-37
Sunglasses Storage Compartment 2-36
Stuck in Sand, Mud, Ice, or Snow 4-17
Sun Visors 2-13
Sunroof 2-39

T

Tachometer 3-26
Taillamps
Stoplamps, and Back-Up Lamps 5-47
Turn Signal, and Stoplamps 5-46
Turn Signal, Stoplamps and Back-up Lamps 5-46
Theft-Deterrent System 2-14
Theft-Deterrent Systems 2-14
Immobilizer 2-16
Immobilizer Operation 2-16
Throttle System Inspection 6-25
Tilt Adjuster, Driver Seat 1-4
Tilt Wheel 3-6
Time 3-18
Tire
Pressure Light 3-34
Tires 5-49
Aluminum Wheels, Cleaning 5-84
Buying New Tires 5-62
Chains 5-67
Changing a Flat Tire 5-69
Cleaning 5-84
Compact Spare Tire 5-78
Different Size 5-64
If a Tire Goes Flat 5-68
Inflation - Tire Pressure 5-56
Inspection and Rotation 5-60
Installing the Spare Tire 5-73
Pressure Monitor Operation 5-59
Pressure Monitor System 5-57
Removing the Flat Tire 5-73
Removing the Spare Tire and Tools 5-70
Storing a Flat or Spare Tire and Tools 5-78
Tire Sidewall Labeling 5-50
Tire Terminology and Definitions 5-53
Uniform Tire Quality Grading 5-64
Wheel Alignment and Tire Balance 5-66
Wheel Replacement 5-66
When It Is Time for New Tires 5-62
Towing
Recreational Vehicle 4-23
Towing a Trailer 4-25
Your Vehicle 4-23

Transmission
Fluid, Automatic 5-18
Fluid, Manual 5-18
Transmission Operation, Automatic 2-22
Transmission Operation, Manual 2-26
Trip Odometer 3-26
Trunk Ajar Light 3-39
Turn and Lane-Change Signals 3-7
Turn Signal/Multifunction Lever 3-7

U

Uniform Tire Quality Grading 5-64
Using this Manual iii

V

Vehicle
Control 4-3
Damage Warnings iv
Loading 4-18
Parking Your 2-31
Symbols iv
Vehicle Data Recording and Privacy 7-16
Vehicle Identification
Number (VIN) 5-87
Service Parts Identification Label 5-87
Ventilation Adjustment 3-22
Visors 2-13

W

Warning Lights, Gages and Indicators 3-24
Warnings
Hazard Warning Flashers 3-6
Other Warning Devices 3-6
Safety and Symbols iii
Vehicle Damage iv
Wheels
Alignment and Tire Balance 5-66
Different Size 5-64
Replacement 5-66
Where to Put the Restraint 1-36
Windows 2-11
Manual 2-11
Power 2-12
Windshield
Washer 3-9
Washer Fluid 5-30
Wiper Blade Replacement 5-48
Wiper Blades, Cleaning 5-83
Wiper Fuses 5-88
Wipers 3-8
Windshield, Rear Washer/Wiper 3-10
Winter Driving 4-13

Y

Your Vehicle and the Environment 6-2