NISSAN Sentra 1.8 16V QG18DE

Timing chain: removal/installation (-> 2003)

General
Before disconnecting the battery cable, check the audio system security code
Clean off the old sealant
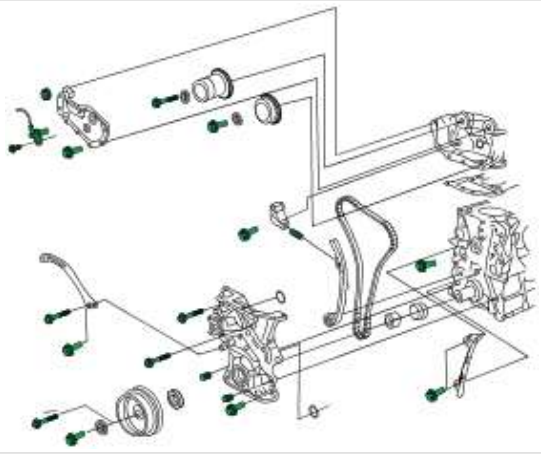
Removal
Drain the coolant from the engine block and radiator
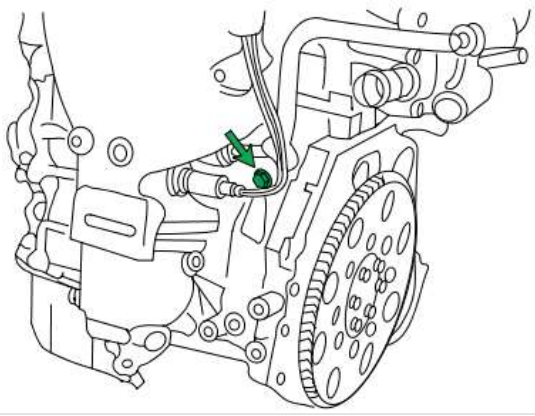
Remove the coolant expansion tank and place it aside
Release the fuel pressure
Remove the fuel pump fuse
Run the engine
When the engine has stopped switch off, and refit the fuse
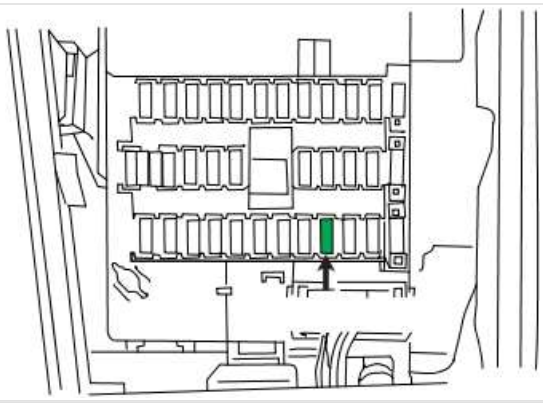
Disconnect the battery
Drain the engine oil
Remove the ancillary drive belt(s)
Remove the front wheels
Remove the right wheel arch liner
Remove the front exhaust pipe
Remove the vacuum hoses
Disconnect the fuel hoses
Remove the ignition coils
Remove the spark plugs
Remove the cylinder head cover
Removal sequence:
Engines with variable valve timing:

Timing chain: removal/installation (-> 2003)

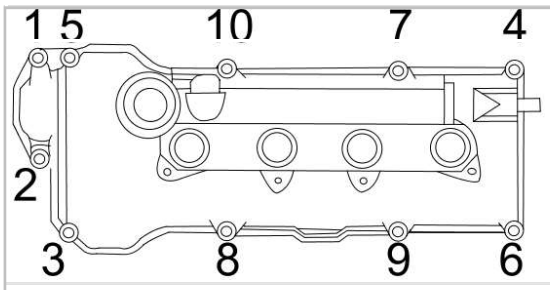

Engines without variable valve timing:

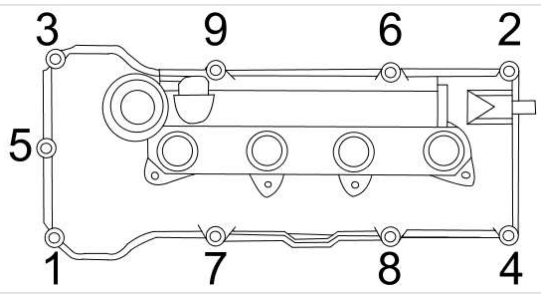

Turn the crankshaft to TDC for cylinder 1

Turn the crankshaft clockwise to align the timing marks

Align the timing marks on the crankshaft pulley and timing cover

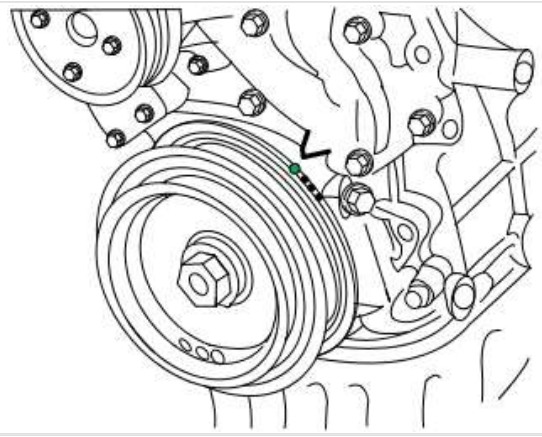

Align the camshaft gearwheel marks as shown

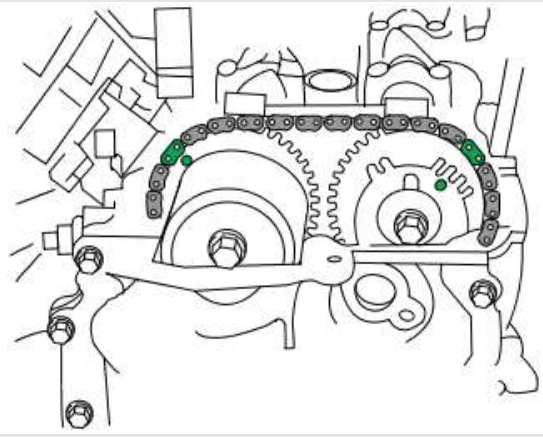

Remove the camshaft position sensor(s)

Remove the cylinder head front cover

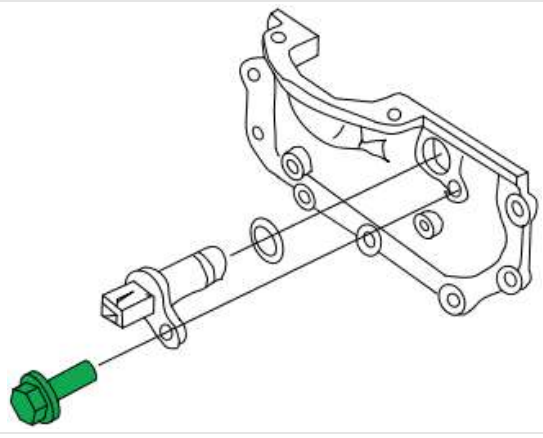

Remove the upper timing chain guide

Lock the chain tensioner with a locking pin

Remove the chain tensioner

Timing chain: removal/installation (-> 2003)

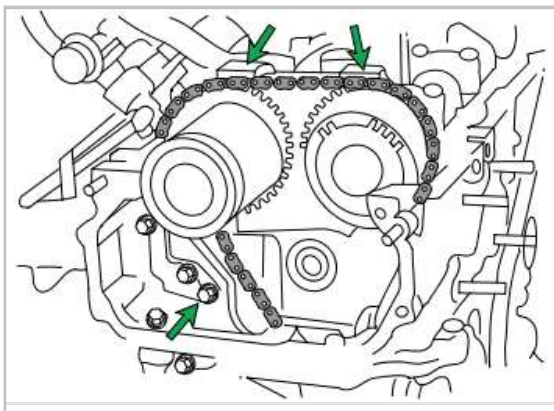

Remove the camshaft gearwheels

Remove the cylinder head bolts

Removal sequence: (A, B, C, D)

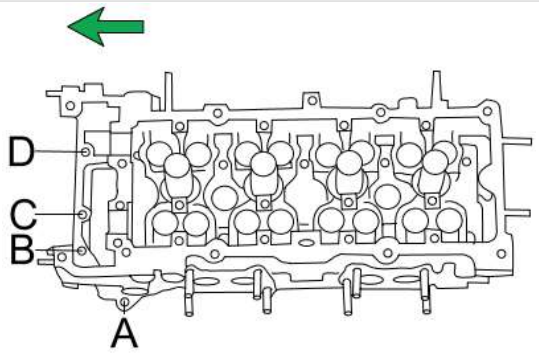

Remove the oil sump

Use the special tool (KV10111100)

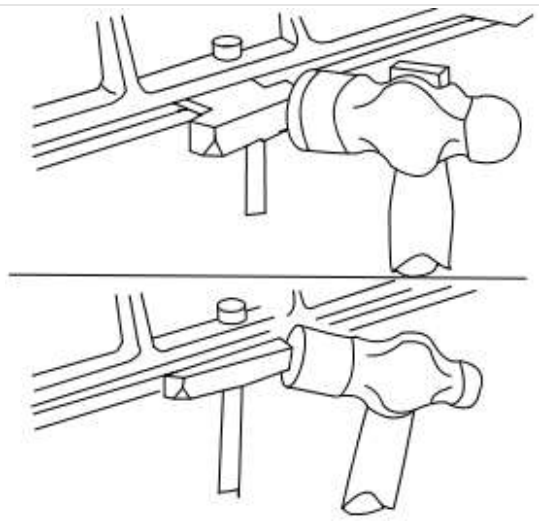

Remove the oil strainer

Remove the starter motor

Lock the flywheel

Use the special tool (KV10105610, KV10105620)

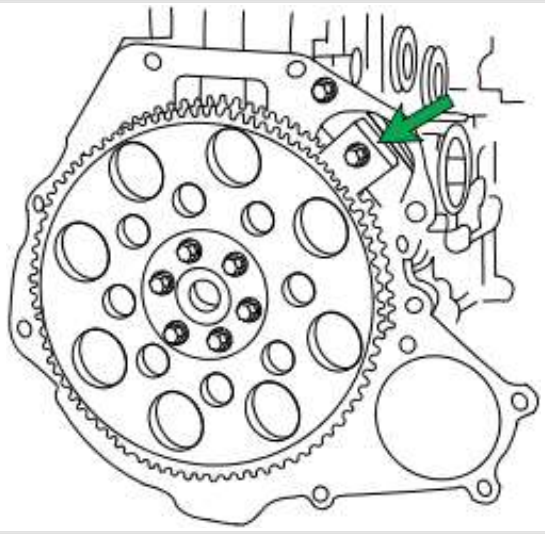

Loosen the crankshaft pulley centre bolt

Remove the crankshaft pulley

Timing chain: removal/installation (-> 2003)

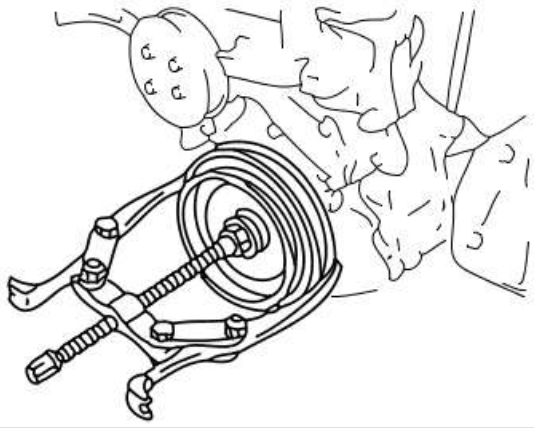

Remove the right-hand engine support (A, B, C)

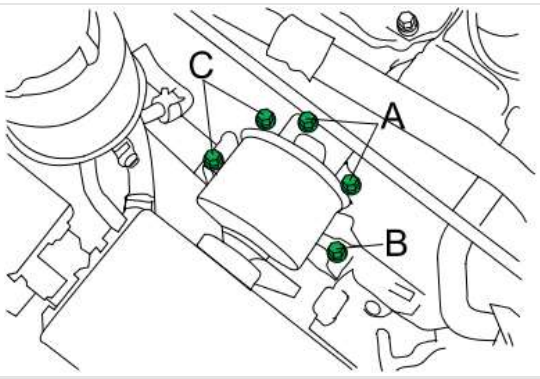

Remove the right-hand engine support bracket (A, B)

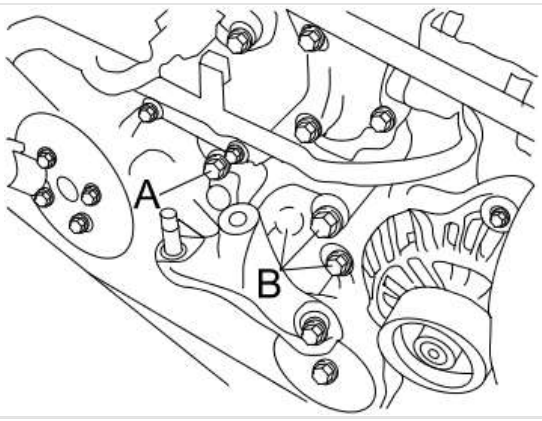

Remove the idler pulley

Remove the idler pulley bracket

Remove the coolant pump pulley

Remove the coolant pump (A)

Remove the power steering pump bracket (B)

Remove the timing chain cover (C)

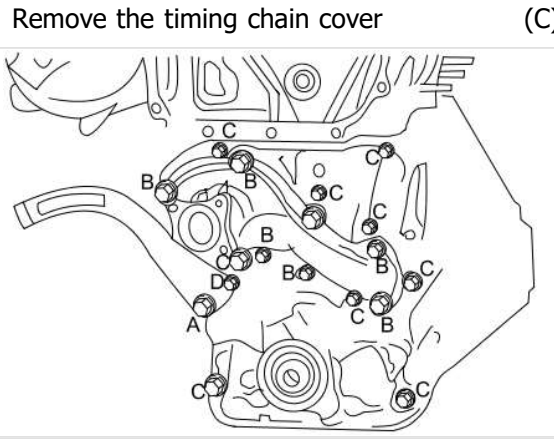

Remove the crankshaft oil seal and discard

Remove the timing chain

Remove the oil pump drive spacer

Remove the chain tensioner guide

Remove the chain guide rail

Remove the crankshaft gearwheel

Remove the O-ring(s)

Timing chain: removal/installation (-> 2003)

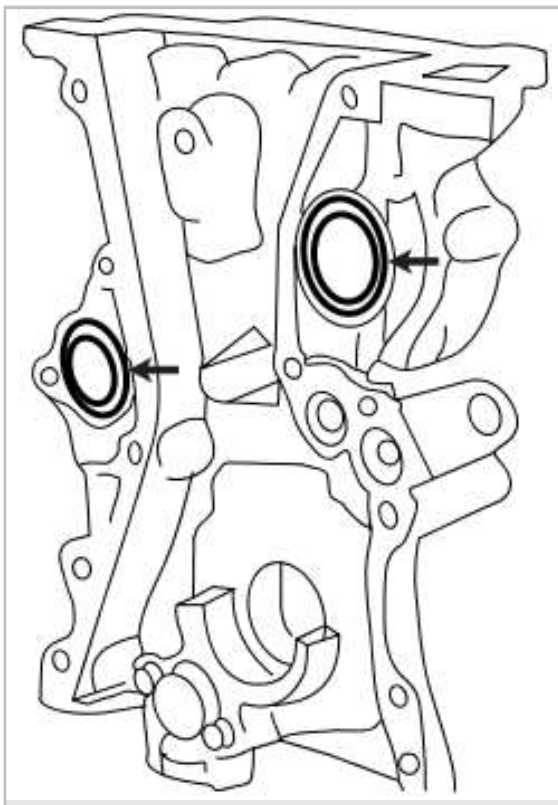

Installation

Check that cylinder 1 is still at TDC

Check that the position is correct as shown

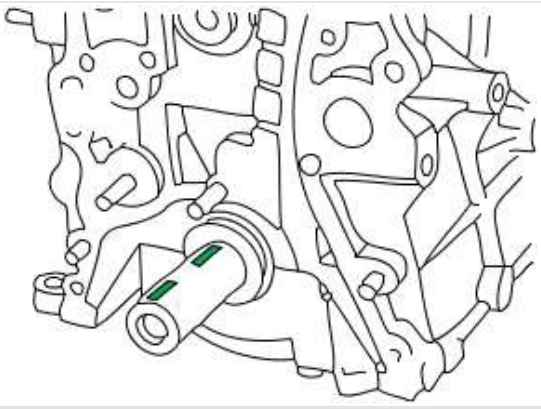

Fit the chain tensioner guide

Refit the chain guide rail (16 - 21 Nm)

Fit the timing chain onto the crankshaft gearwheel

Align the timing marks

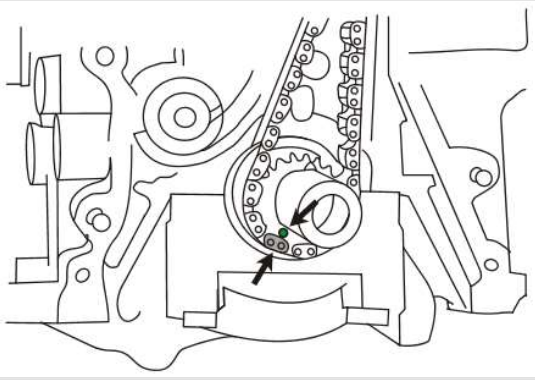

Refit the camshaft gearwheels

Align the timing marks

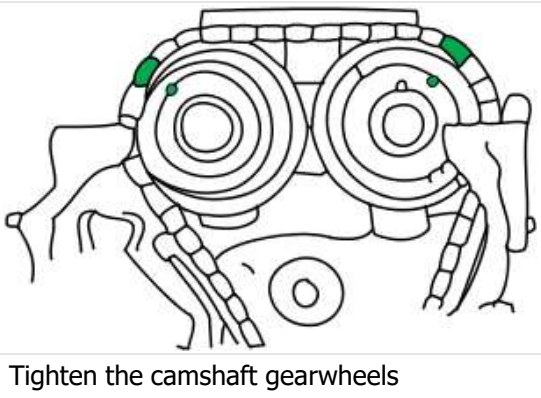

Tighten the camshaft gearwheels

Threads lightly oiled

Camshaft gearwheel (inlet): (108 - 118 Nm)

Timing chain: removal/installation (-> 2003)

Camshaft gearwheel (exhaust): (98 - 128 Nm)

Fit the chain tensioner (8 Nm)

Remove the tensioner locking pin

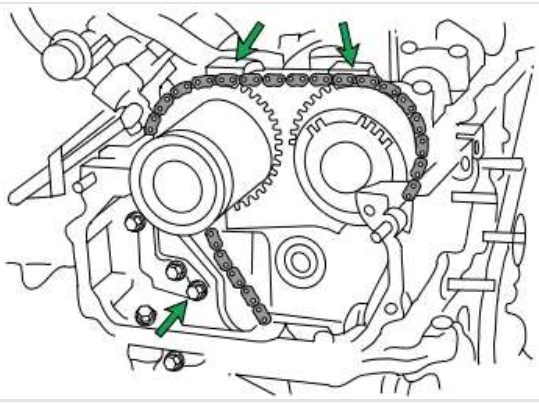

Fit the O-rings

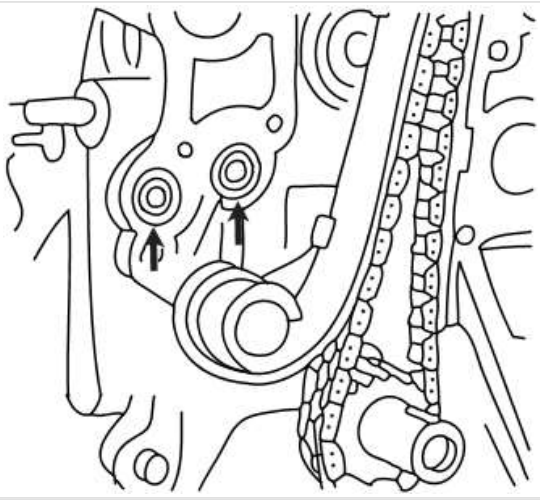

Refit the timing chain cover (C: 7 - 10 Nm)

Clean off the old sealant

Note: Apply sealant before fitting

Fit the power steering pump bracket (A: 17 - 24 Nm, D: 7 - 10 Nm)

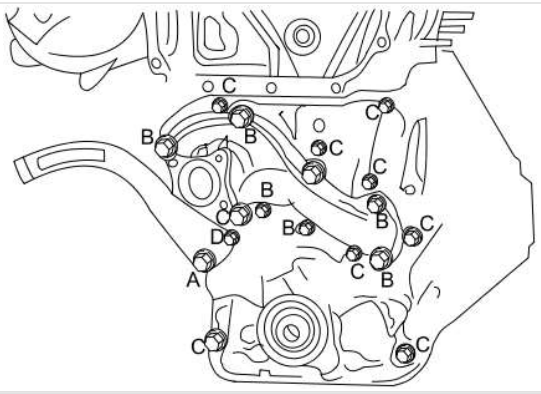

Caution! Do not damage the oil seal

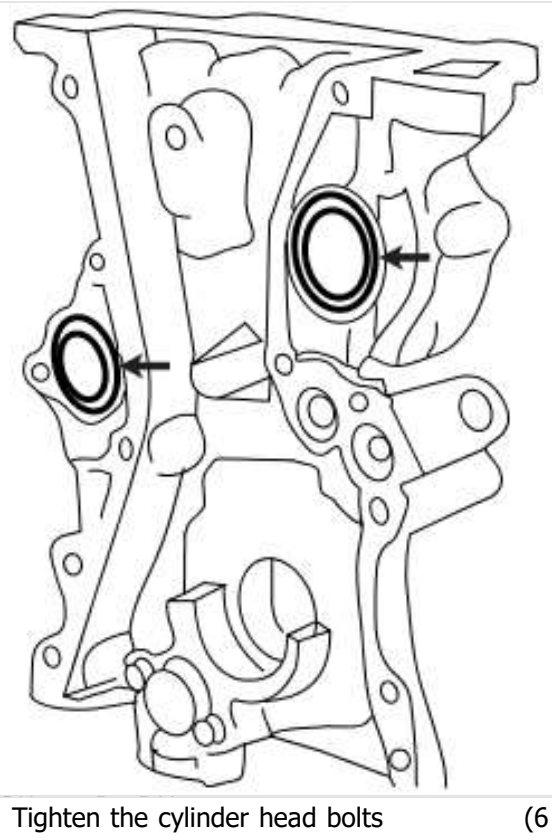

Tighten the cylinder head bolts (6 - 8 Nm)

Timing chain: removal/installation (-> 2003)

Installation sequence: (D, C, B, A)

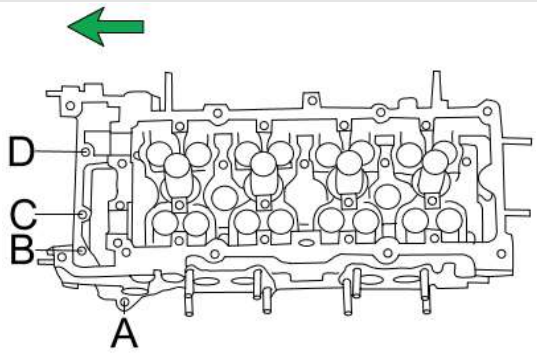

Refit the oil pump drive spacer

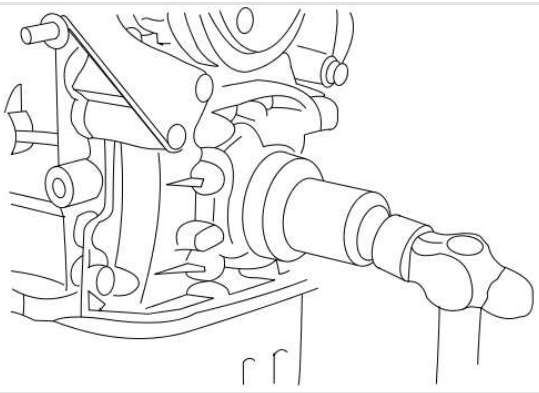

Fit the coolant pump (B: 17 - 24 Nm)

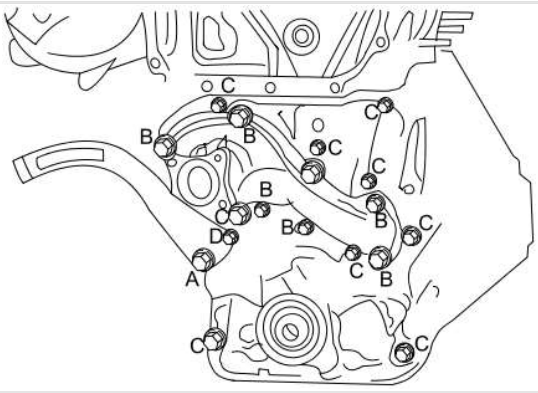

Refit the coolant pump pulley (6 - 8 Nm)

Refit the idler pulley (24 - 31 Nm)

Refit the idler pulley bracket

Refit the right-hand engine support bracket (A: 31 - 40 Nm, B: 45 - 53 Nm)

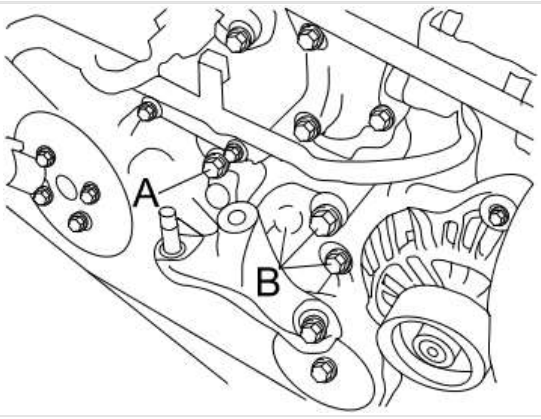

Refit the right-hand engine support (A: 55 - 64 Nm, B: 60 - 69 Nm, C: 16 - 20 Nm)

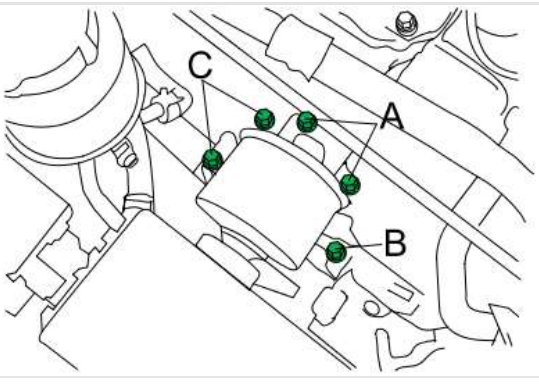

Refit the oil strainer

Refit the oil sump

Note: Apply sealant before fitting

Fit the crankshaft pulley (132 - 152 Nm)

Remove the flywheel locking tool (KV10105610, KV10105620)

Timing chain: removal/installation (-> 2003)

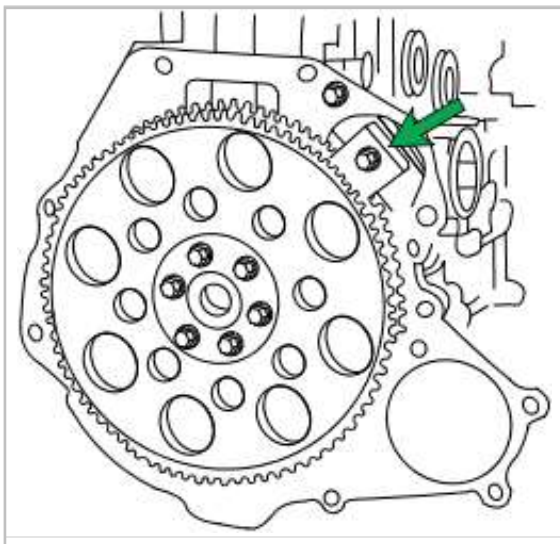

Refit the starter motor (33 - 46 Nm)

Refit the cylinder head front cover (7 - 10 Nm)

Reconnect the camshaft position sensor(s) (7 - 11 Nm)

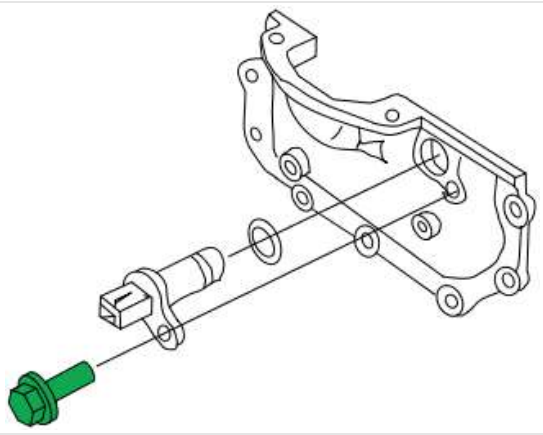

Refit the cylinder head cover

Note: Apply sealant before fitting

Renew the gasket

Installation sequence:

Engines with variable valve timing: (10 - 1)

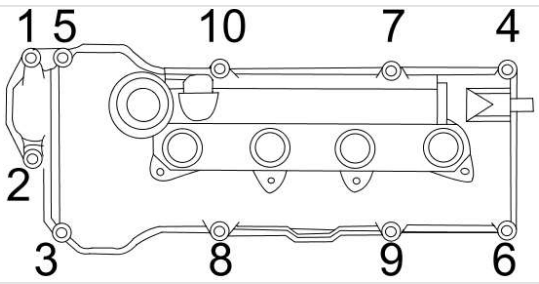

Engines without variable valve timing: (9 - 1)

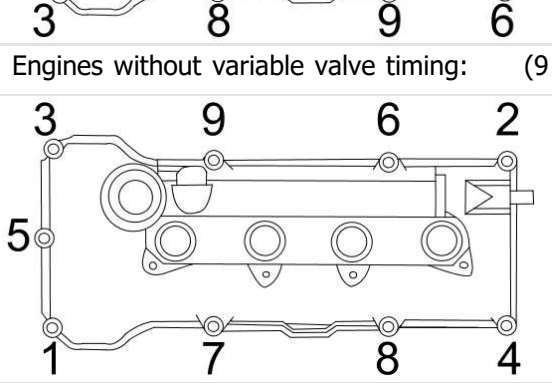

Refit the spark plugs

Refit and connect the ignition coils

Refit the front exhaust pipe

Refit the right wheel arch liner

Refit the front wheels

Refit the ancillary drive belt

Refit the coolant expansion tank

Refill the engine oil

Refill the cooling system

Reconnect the battery

Torque settings

Timing chain: removal/installation (-> 2003)

Chain guide:	(16 - 21 Nm)
Camshaft gearwheel (inlet):	(108 - 118 Nm)
Camshaft gearwheel (exhaust):	(98 - 128 Nm)
Chain tensioner:	(8 Nm)
Timing chain cover:	(7 - 10 Nm)
Coolant pump:	(17 - 24 Nm)
Coolant pump pulley:	(6 - 8 Nm)
Idler pulley:	(24 - 31 Nm)
Engine support bracket:	(A: 31 - 40 Nm, B: 45 - 53 Nm)

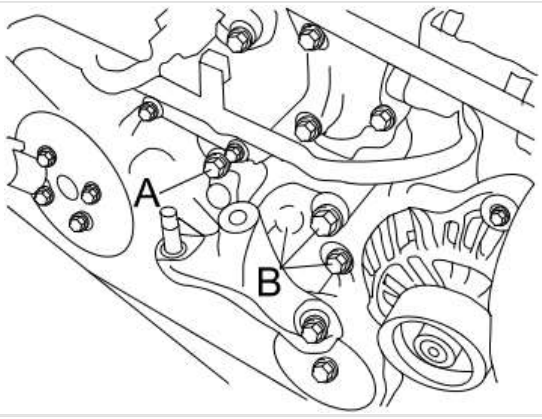

Engine support (bolts):	(A: 55 - 64 Nm, B: 60 - 69 Nm, C: 16 - 20 Nm)

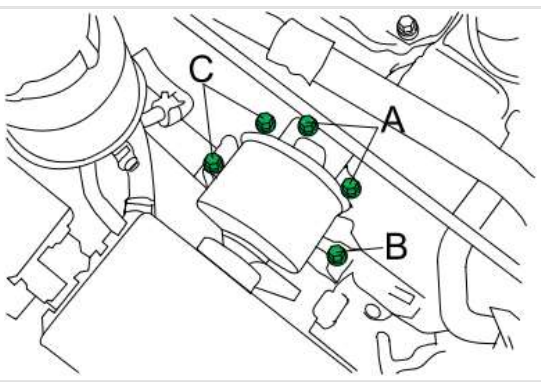

Crankshaft pulley:	(132 - 152 Nm)
Starter motor:	(33 - 46 Nm)
Exhaust front pipe/manifold:	(60 - 69 Nm)
Catalytic converter/exhaust pipe:	(51 - 64 Nm)

Special tools

Flywheel locking tool:	(KV10105610, KV10105620)