# Service Manual for Chery QQ6

**(QR513 Transmission Case)**

After Sales Service Department of Chery
Automobile Sales Co., Ltd

# CONTENTS


Foreword ..... 2
Chapter One Introduction of QR513 Transmission ..... 3
I. Assembly Drawing of QR513 Transmission ..... 3
II. Driving Characteristics of QR513 Transmission ..... 4
III. SN of QR513 Transmission ..... 4
1. Print position of SN of QR513 transmission ..... 4
2. Composition and connotation of SN of QR513 transmission ..... 4
IV. Specification of QR513 Transmission ..... 6
V. Maintenance Instruction ..... 7
Chapter Two Decomposition of QR513 Transmission ..... 8
I. Decomposition Process for QR513 Transmission ..... 8
1. Bleeding lubricant in transmission ..... 8
2. Disassembly of external parts of transmission ..... 8
3. Separation of gear shift mechanism and transmission ..... 9
4. Disassembly of the connecting bolts for clutch and transmission housings ..... 10
5. Separation of transmission and clutch housings ..... 10
6. Separation of interior transmission parts and fork module from the housing ..... 11
7. Separation of differential assembly and clutch housing ..... 12
8. Disassembly of gearshift fork mechanism ..... 12
9. Disassembly of gearshift mechanism ..... 13
10. Disassembly of input shaft ..... 13
11. Disassembly of output shaft ..... 15
12. Disassembly of differential ..... 15
13. Disassembly of release mechanism of clutch ..... 16
14. Disassembly of transmission housing ..... 17
Chapter Three Assembly and Regulation of QR513 Transmission ..... 18
I. Assembly of QR513 Transmission ..... 18
1. Assembly of differential assembly ..... 18
2. Assembly of clutch housing ..... 19
3. Assembly of transmission housing ..... 23
4. Assembly of gearshift mechanism assembly ..... 23
5. Assembly of gearshift fork assembly ..... 24
6. Regulation and assembly of input shaft assembly ..... 24
7. Regulation and assembly of output shaft assembly ..... 26
8. Assembly and regulation of transmission assembly ..... 28
9. Disassembly of external accessories of transmission ..... 31
10. Refilling and volume regulation of transmission lubricant ..... 32
II. Tightening Torque Table for Fasteners ..... 34
Chapter Four General Failures and Troubleshooting ..... 35

# Foreword

1. This service manual applies to use and maintenance of QR513 transmission manufactured by Chery Automobile Co., Ltd.

2. ***Service Manual for QR513 Transmission*** describes relations among various parts and assemblies of this transmission, which provide the maintenance personnel with a reference when maintaining and repairing QR513 transmission.

3. Due to restrictions of the compiler's level and other conditions, errors and imperfections may exist in this service manual. During maintenance and use, please inform us of any problem in and improvement idea on QR513 transmission and this service manual, so that we can correct and perfect this service manual, for which we express our thanks herein.

# Chapter One Introduction of QR513 Transmission

## I. Assembly Drawing of QR513 Transmission

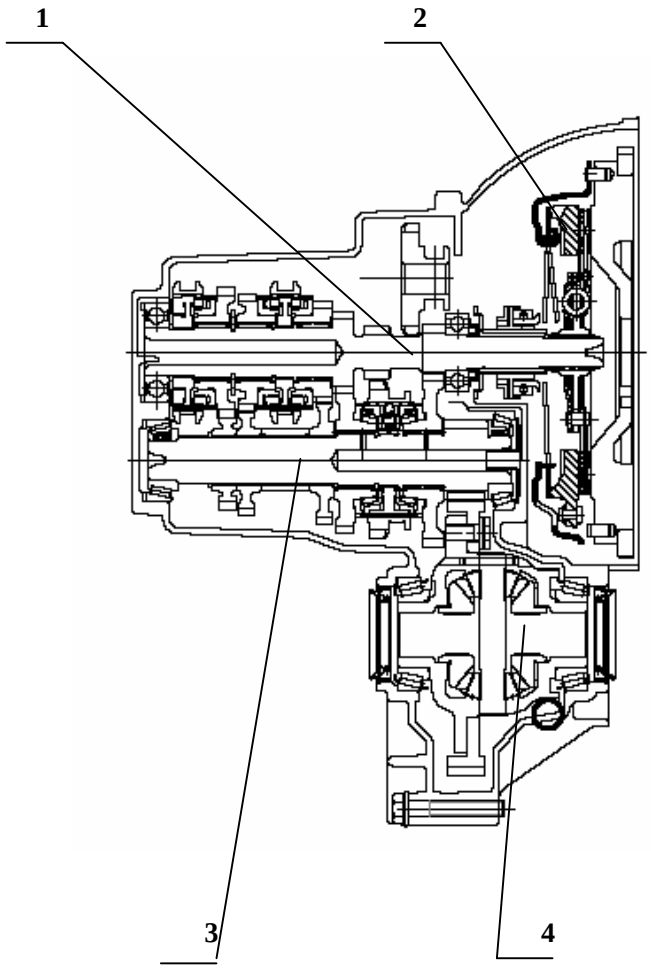


1. Input shaft 2. Clutch 3. Output shaft 4. Differential

# II. Driving Characteristics of QR513 Transmission

This transmission achieves five forward gears and one reverse gear through three groups of synchronizers and two shafts-input shaft and output shaft; all forward gears adopt conventional engagement system while reverse gear adopts a gliding idler device. The synchronizers of the first and second gears are installed on output shaft while the synchronizers of the third, fourth and fifth gears are installed on input shaft. When the transmission is shifted to various gears, these synchronizers will engage with corresponding gear hub to enable transmission of power, and then the driving gear of main decelerator will drive the driven gear of main decelerator and differential assembly to rotate, which will drive the drive shaft to drive the wheels to rotate.

# III. SN of QR513 Transmission

## 1. Print position of SN of QR513 transmission

The print position of SN of QR513 series transmission is as shown in the figure:

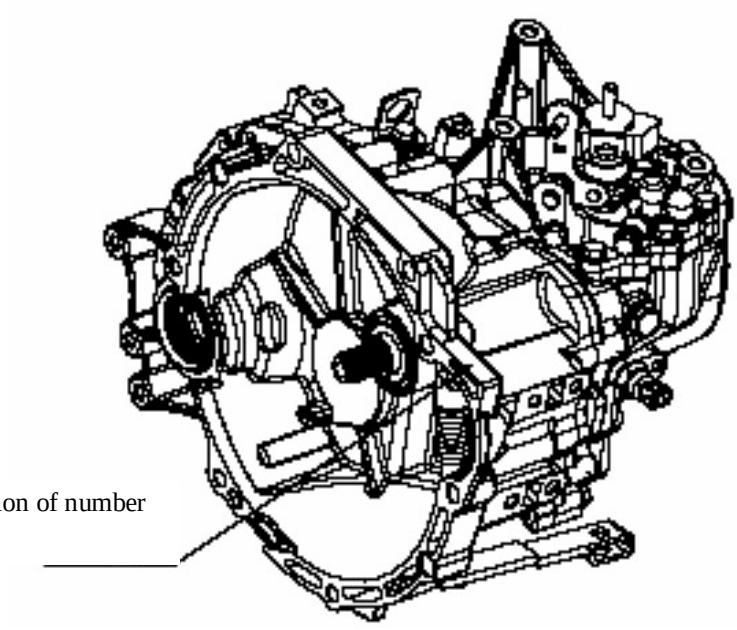


## 2. Composition and connotation of SN of QR513 transmission

SN of QR513 series transmission is consisted of model and leaving factory number of the transmission case.

1) Model of the transmission case

Model of the transmission case is composed of code QR, number of shift gears of the transmission, maximum transmission torque, characteristic code and structure specification number.

A complete transmission case model is as follows:

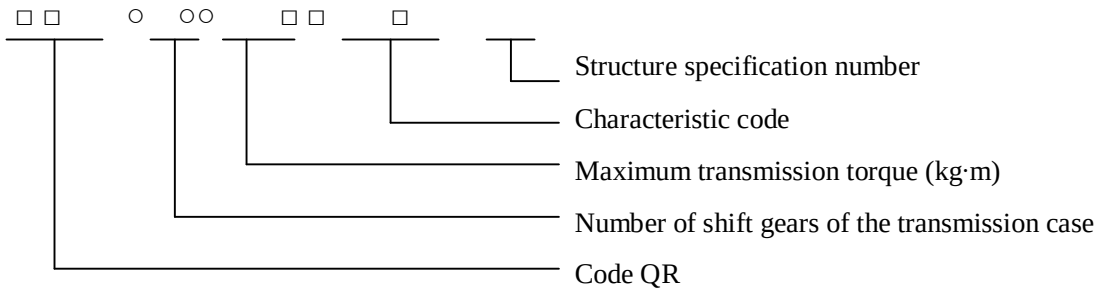


Among which, ○ indicates an Arabic numeral while □ indicates a letter.

2) Leaving factory number

Leaving factory number is composed of endnote of assembly part number (for that without endnote, us AA), character code of the year of production, character code of the month of production, sequence number of this transmission case among the transmission cases manufactured in that month and start stop sign "*". See Table 1 and Table 2 for check list of character codes of the year and of the month.

Complete form of leaving factory number of a transmission case is as follows:

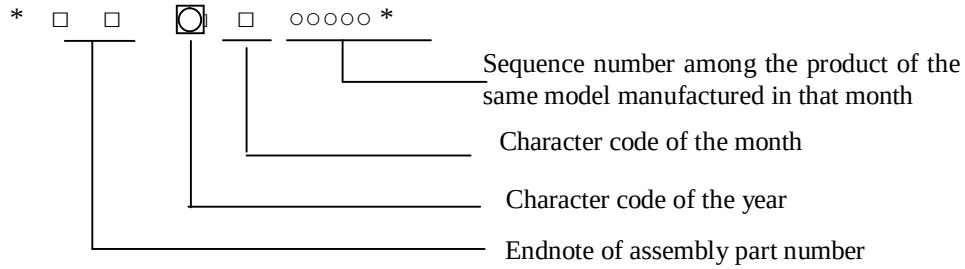


Among which, ○ indicates an Arabic numeral, □ indicates a letter and  indicates an Arabic numeral or a letter. The endnote locates at tail end of the part code, for a fundamental model, no endnote. The endnote should be modified when modification is made to structure, dimension, material, heat treatment requirements and surface treatment etc. of the part or assembly on the basis of original product. The English letter in the code should be upper case letter (use in sequence with "A" as the first), in order to avoid confusion, do not use "I", "O" and "X". When the modification does not affect interchangeability, use "A" as the first; when the modification affects interchangeability, skip "A", use "B" as the first.

Table 1 Character Codes Indicating the Years

| Year | Code | Year | Code |
|---|---|---|---|
| 1999 | X | 2015 | F |
| 2000 | Y | 2016 | G |
| 2001 | 1 | 2017 | H |
| 2002 | 2 | 2018 | J |
| 2003 | 3 | 2019 | K |

| | | | |
|---|---|---|---|
| 2004 | 4 | 2020 | L |
| 2005 | 5 | 2021 | M |
| 2006 | 6 | 2022 | N |
| 2007 | 7 | 2023 | P |
| 2008 | 8 | 2024 | R |
| 2009 | 9 | 2025 | S |
| 2010 | A | 2026 | T |
| 2011 | B | 2027 | V |
| 2012 | C | 2028 | W |
| 2013 | D | 2029 | X |
| 2014 | E | 2030 | Y |

Table 2 Character Codes Indicating the Months

| Month | Code | Month | Code |
|---|---|---|---|
| January | A | July | G |
| February | B | August | H |
| March | C | September | J |
| April | D | October | K |
| May | E | November | L |
| June | F | December | M |

3) Illustration

For example: QR513MHA MH5H00001 indicates the first transmission case with the model as QR513MHA manufactured in August, 2005.

# IV. Specification of QR513 Transmission

| | QR513 Series Transmission | | | |
|---|---|---|---|---|
| Type | Machine Gear Mesh | | | |
| Model | QR513MHA | | QR513MHB | |
| Gear shift | Velocity Ratio | Teeth Ratio | Velocity Ratio | Teeth Ratio |
| First Gear | 3.545 | 39/11 | 3.167 | 38/12 |
| Second Gear | 2.05 | 41/20 | 2.05 | 41/20 |
| Third Gear | 1.423 | 37/26 | 1.423 | 37/26 |
| Fourth Gear | 1.065 | 33/31 | 1.065 | 33/31 |
| Fifth Gear | 0.865 | 32/37 | 0.865 | 32/37 |
| Reverse Gear | 3.364 | 37/11 | 3.364 | 37/11 |
| Main reduction ratio | 4.056 | 73/18 | 75 | 16 |

| | | | | |
|---|---|---|---|---|
| Speedometer | 0.806 | 29/36 | 0.806 | 29/36 |
| Largest input torque | 130 Nm | | | |
| Lubricant oil type | GL-4 75W-90 | | | |
| Volume of lubricant | 1.8L | | | |

# V. Maintenance Instruction

- In order to ensure maintenance quality of the transmission, when operating, please be careful and ensure cleanness of each part of the transmission.
- Use appropriate tools or special tools.
- Strictly follow the specification to assembly or adjustment to maintain so as to ensure that the transmission can accomplish a favorable working position.

# Chapter Two Decomposition of QR513 Transmission

## I. Decomposition Process for QR513 Transmission

### 1. Bleeding lubricant in transmission

First, drive the vehicle onto a maintenance platform or hoist the vehicle and keep it on a horizontal plane, screw off the bleeding plug as shown by the arrowhead, and then use a clean container to accommodate lubricant of the transmission to completely bleed the lubricant in the transmission.



**Figure 1**

### 2. Disassembly of external parts of transmission

Switch the transmission to NEUTRAL position; use an appropriate tool to remove the locating seat of the fork shaft as shown in Figure 2; Connecting bolts for gearshift housing and transmission housing and the screws for backup lamp switch and idler shaft.

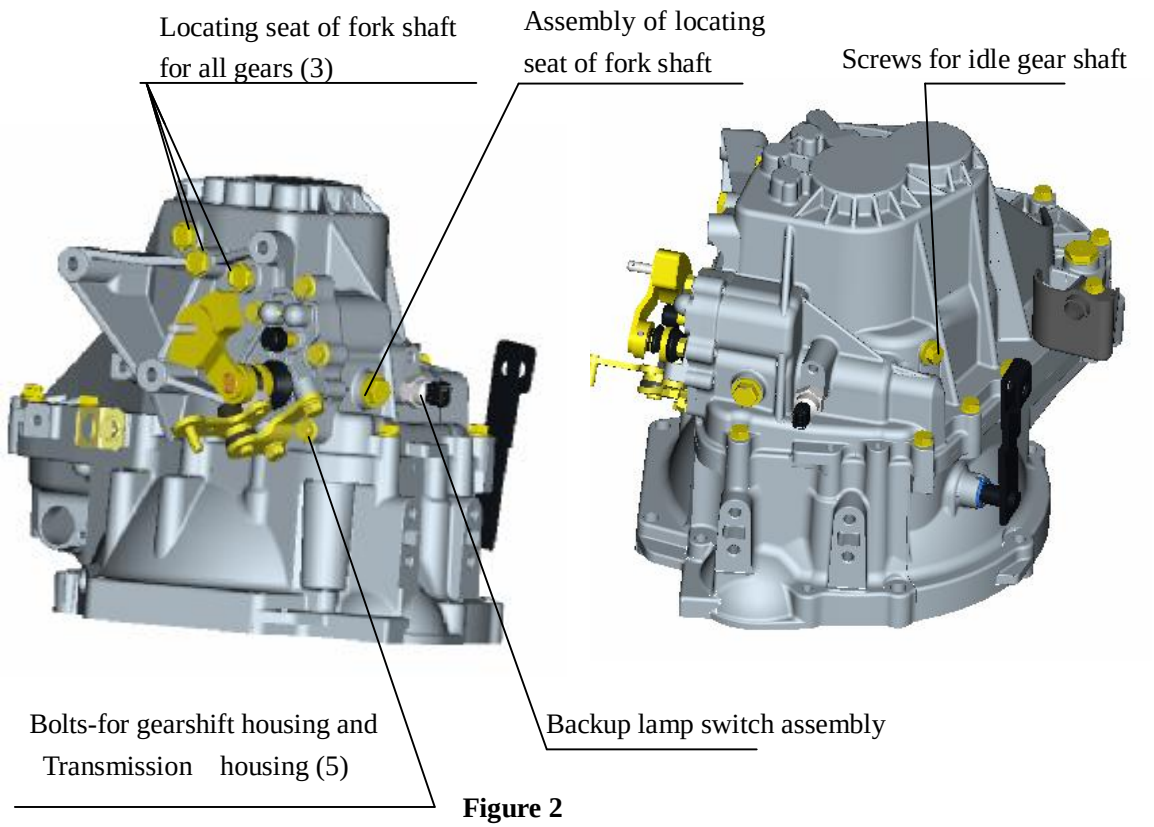


**Figure 2**

## 3. Separation of gear shift mechanism and transmission

Remove the gearshift mechanism assembly from the place as shown in Figure 3; as a result of sealant, the disassembly process may be difficult, so, use such tools as a hand hammer etc. to knock on the bulge at flank of housing of the gearshift mechanism, and then take out the whole gearshift mechanism assembly until the two housings completely separate; remember to be slow when taking out the gearshift mechanism assembly, so as to prevent the return spring as shown in the figure from dropping out inside the transmission; during disassembly, be careful not to damage the junction planes of the two housings, so as to avoid oil leak after re-assembly.

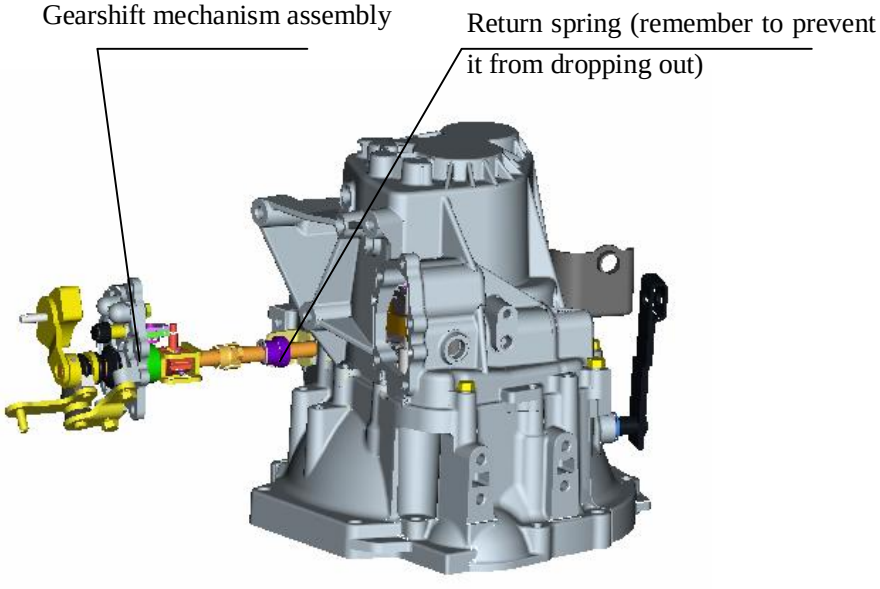

**Figure 3**

## 4. Disassembly of the connecting bolts for clutch and transmission housings

Use a tool to remove the connecting bolts for transmission and clutch housings as shown in Figure 4. Remember to remove the bolts both inside and outside the clutch housing when disassembling, and a sleeve with long connecting rod is required when removing the bolts inside the clutch.

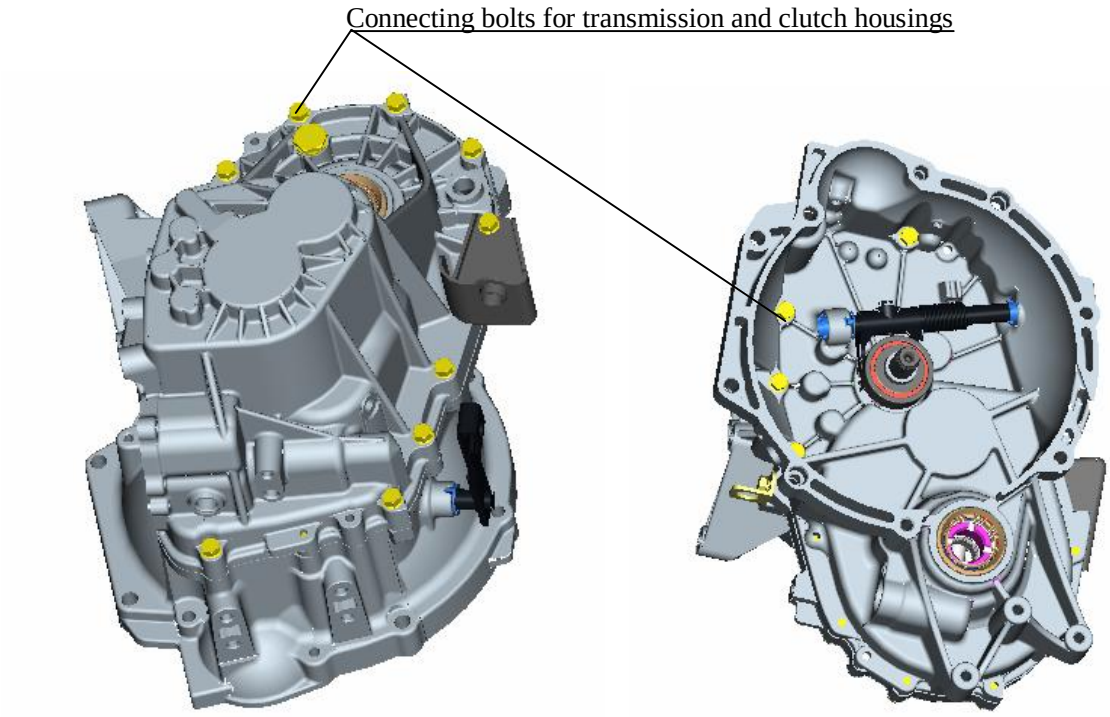


**Figure 4**

## 5. Separation of transmission and clutch housings

After the bolts for transmission and clutch housings are removed, separate clutch housing and transmission housing (Figure 5). as a result of sealant, the separation process may be difficult, so, use such tools as a hand hammer etc. to knock on the bulge at flank of housing of the transmission, and then take out the whole transmission housing until the two housings completely separate; during disassembly, be careful not to damage the junction planes of the two housings, so as to avoid oil leak of the transmission after re-assembly.

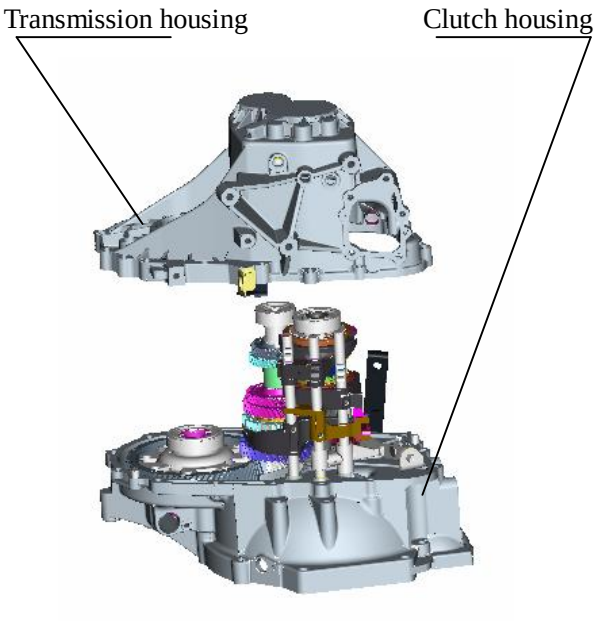


**Figure 5**

## 6. Separation of interior transmission parts and fork module from the housing

After transmission housing and clutch housing are separated, keep the clutch housing flat at the place as shown in Figure 6, remove the bolts for bracket of reverse gear rocker arm, take out the reverse gear rocker arm assembly and the pin on idler drive, and then take out input shaft, output shaft and fork mechanism together (when taking out, gently shake, meanwhile, press the driven gear of main decelerator along the direction of arrowhead as shown in the figure to take out the assembly of input shaft, output shaft and idler as well as fork mechanism); when taking out, remember to avoid interference between bearing retainer of output shaft and big gear ring of differential and prevent the bearing retainer from damage.

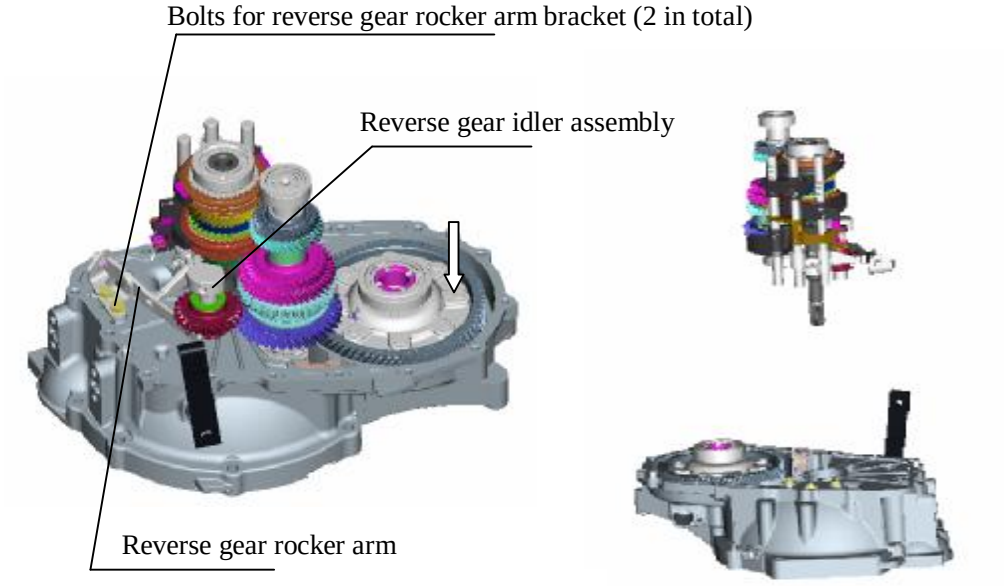


**Figure 6**

## 7. Separation of differential assembly and clutch housing

Separate differential assembly and clutch housing, and then simply take out the differential assembly as shown in Figure 7.

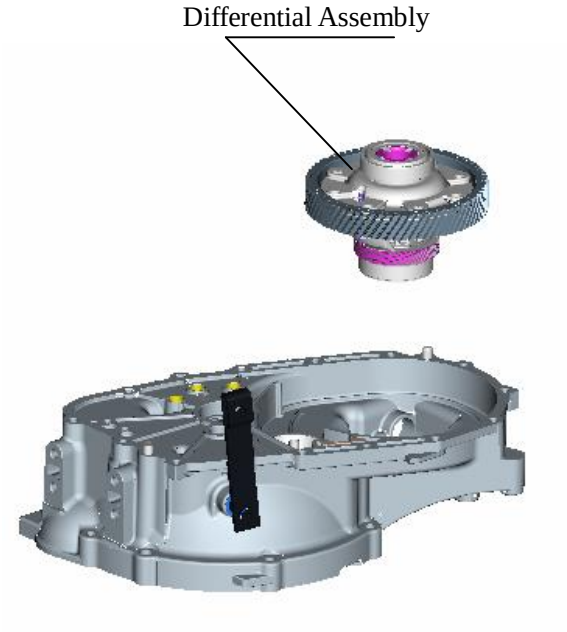


**Figure 7**

## 8. Disassembly of gearshift fork mechanism

Use a hammer and a special tool to knock off all spring pins and then use a snap ring pliers or other special tool to take the split washer off the fork shaft (when taking off the split washer, prevent it from deformation), and then disassemble each part of the gearshift mechanism.

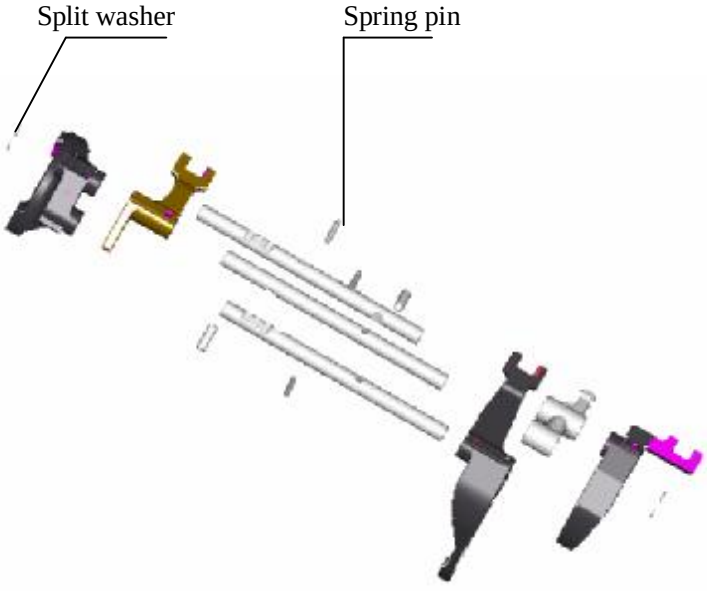

**Figure 8**

## 9. Disassembly of gearshift mechanism

As shown in Figure 9, remove the gearshift arm bracket bolts and reverse gear lockup mechanism bolts first, use a hammer and a special tool to knock off all spring pins, use a special tool to remove the split washer, and then disassemble each part of the gearshift mechanism.

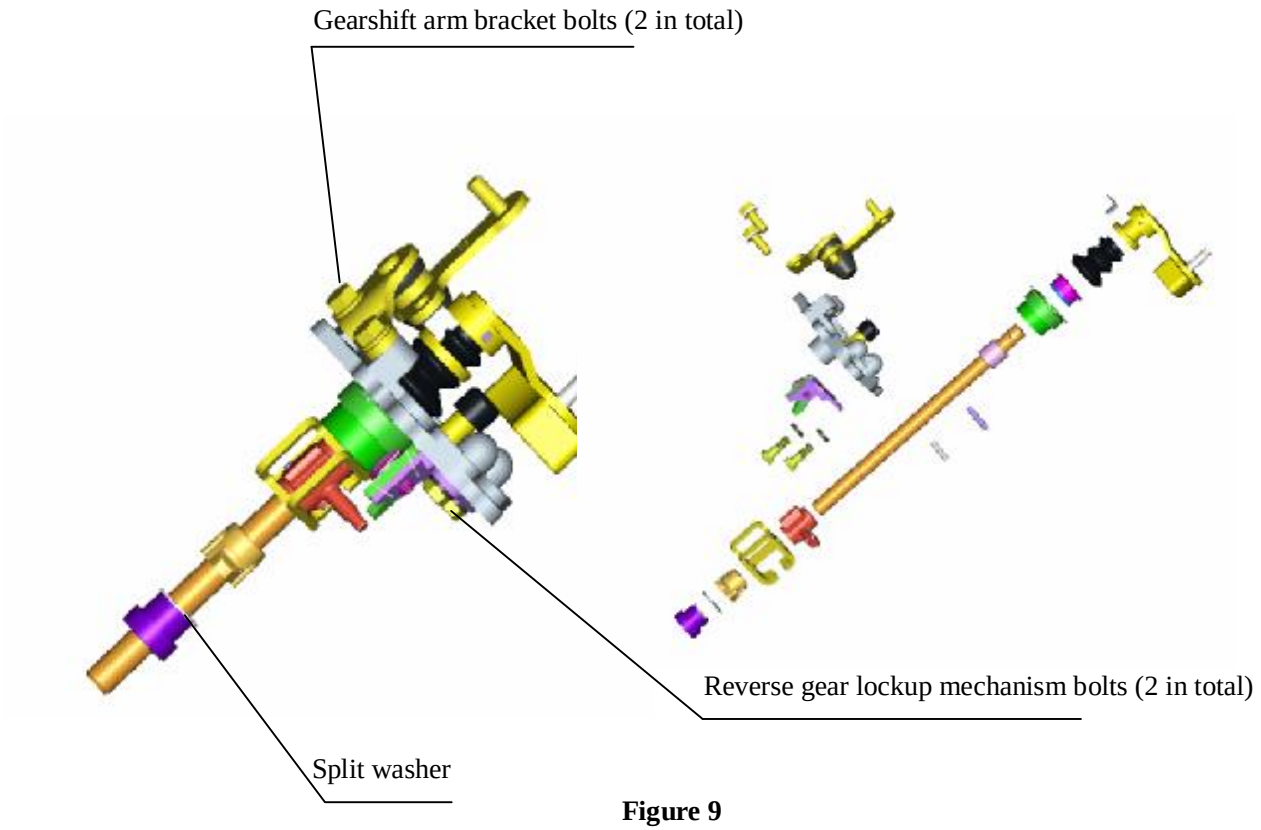


**Figure 9**

## 10. Disassembly of input shaft

As shown in Figure 10, Use a special tool (such as bearing remover etc.) to remove the two bearings on the input shaft first, use a special tool to remove the rear snap ring, and then take off the fifth gear synchronizer assembly.

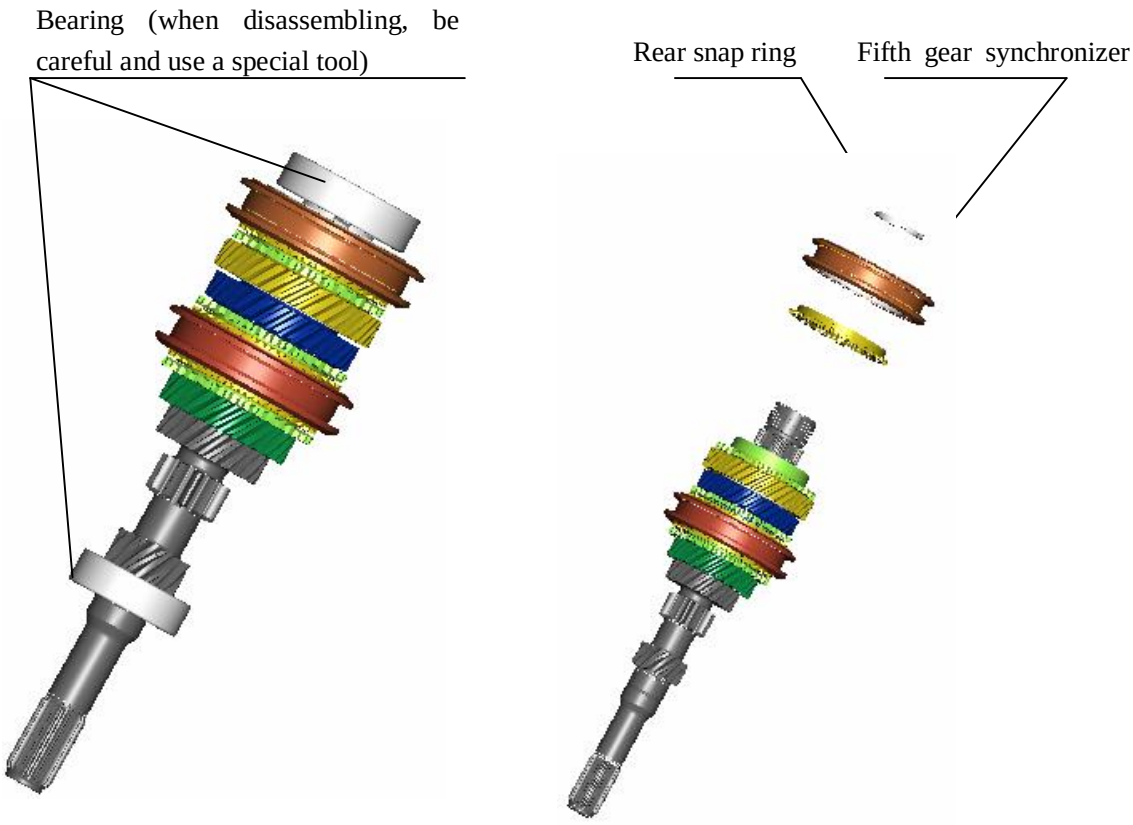


**Figure 10**

After the fifth gear synchronizer assembly is removed, remove the remaining parts such as shift gears, needle bearings and synchronizers in turn as shown in Figure 11; when disassembling, be sure to keep the synchronizer of each gear concurrent with its corresponding synchronizer ring.

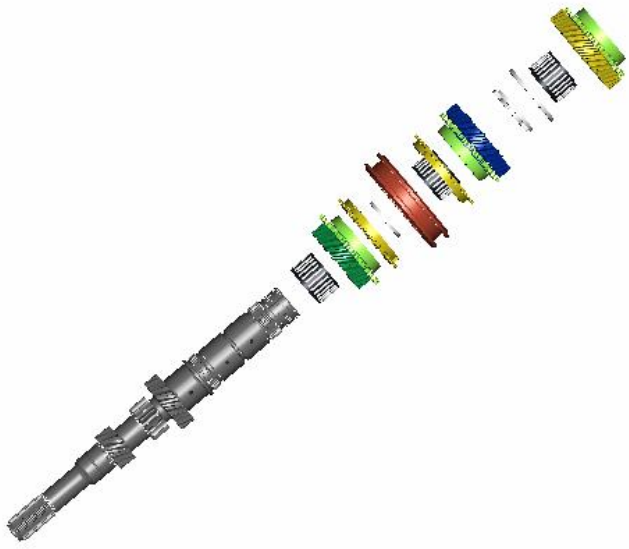

**Figure 11**

## 11. Disassembly of output shaft

The method and process for disassembly of output shaft are basically the same as those for input shaft and the output shaft can be disassembled to the status as shown in Figure 12.



**Figure 12**

## 12. Disassembly of differential

As shown in Figure 13, use a special tool to take off the two bearings first, remove the bolts for driven gear and differential housing, remove the driven gear, knock off the fixing pin of the planetary gear, and then take out every part inside the differential (Figure 14).

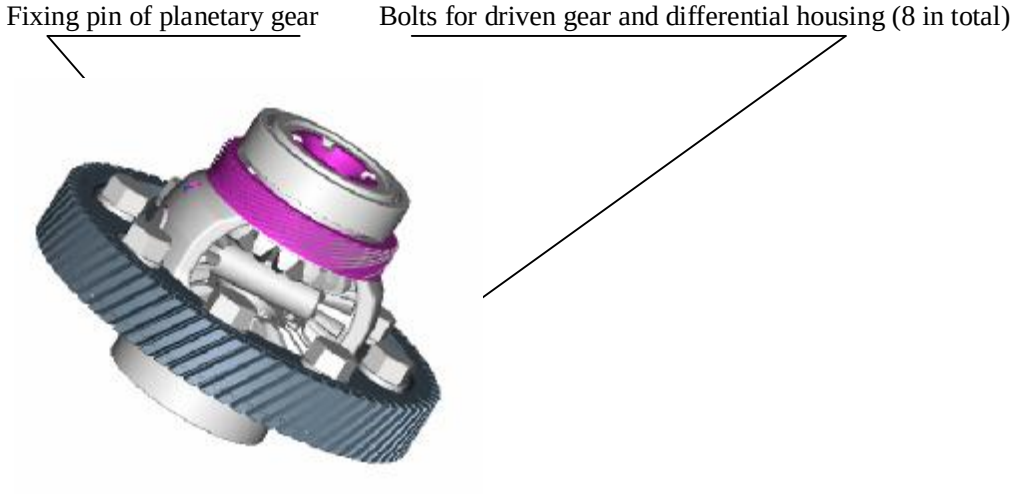


Figure 13

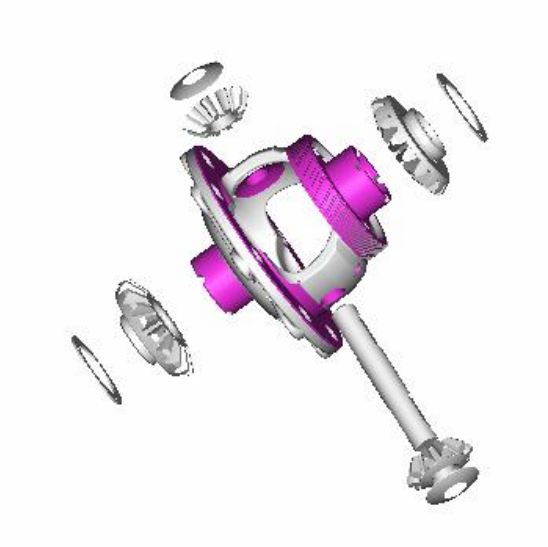

Figure 14

## 13. Disassembly of release mechanism of clutch

As shown in Figure 15, take off release bearing of the clutch first, remove the bolts for release fork, and then draw the release shaft assembly off the clutch housing (during the drawing off process, be sure to prevent the release return spring from ejection); also, remove the bush and dismount release mechanism of the clutch from the clutch housing.

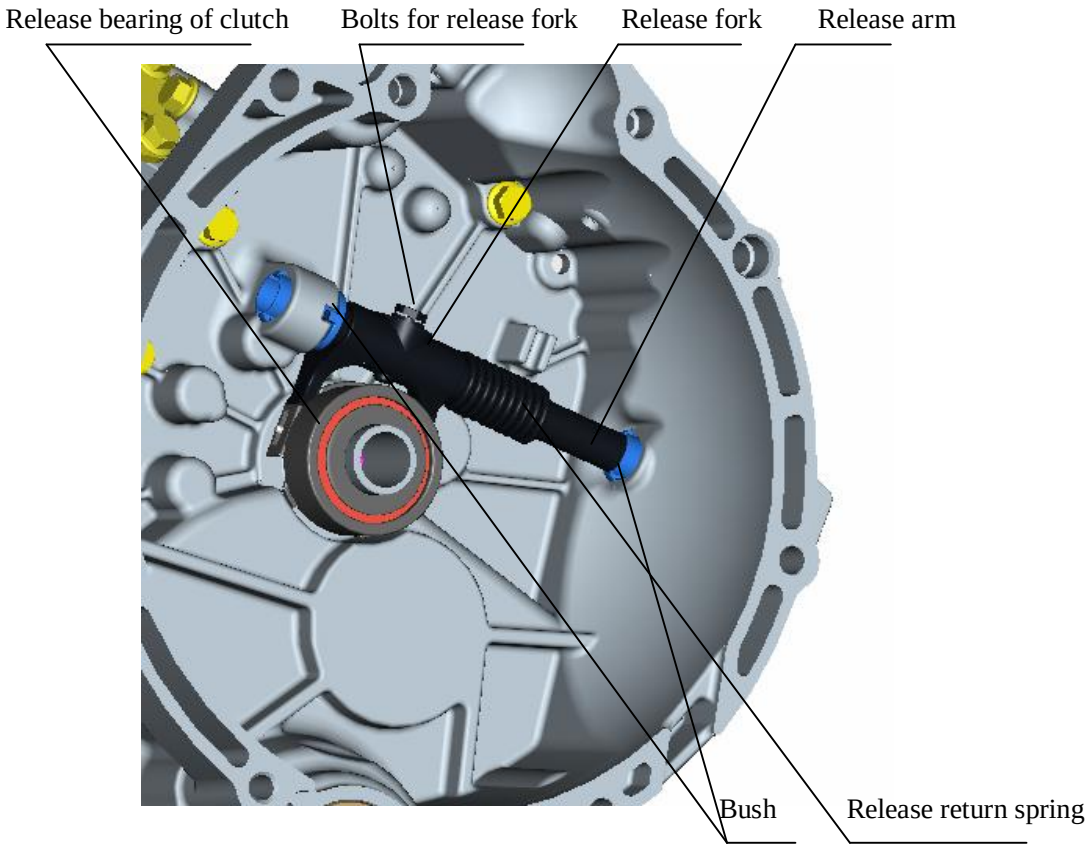

**Figure 15**

Be sure to use special tool and be careful to remove the oil seal on the clutch housing, because excessive deformation or damage of the oil seal may result in oil leak of the transmission. Use a special tool to remove the two oil seals on the clutch housing, and then remove the remaining bushes, oil ducts and outer rings of bearings as shown in Figure 16. Replacing with new oil seals after the former ones are removed is recommended.

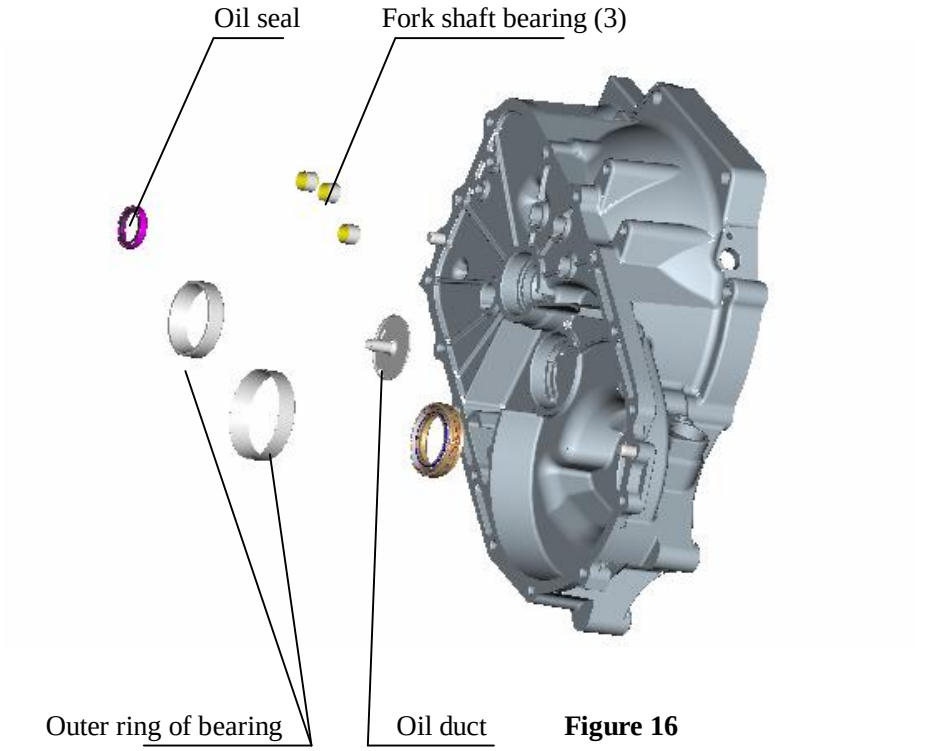


**Figure 16**

## 14. Disassembly of transmission housing

As shown in Figure 17, use a special tool to remove the oil seal of transmission housing, and then remove oil drain channel, fork shaft bush and linear bearing.

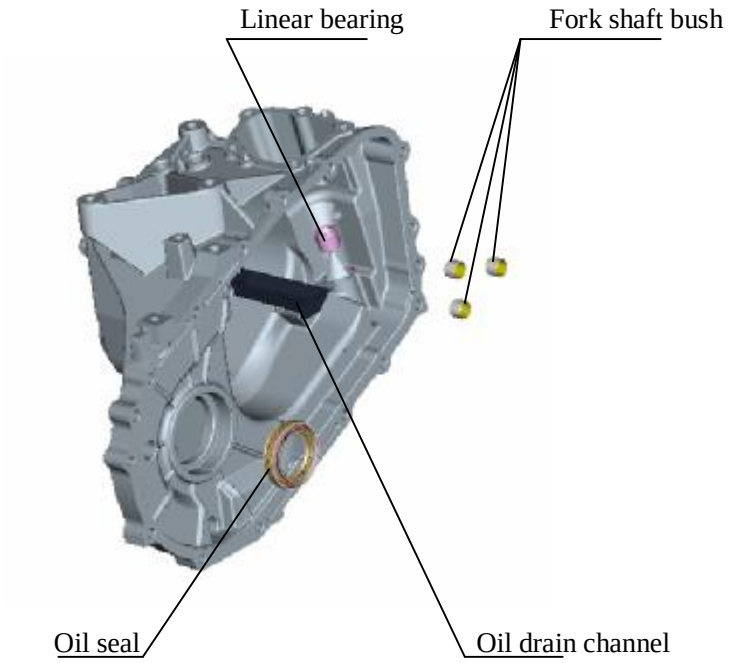


**Figure 17**

# Chapter Three Assembly and Regulation of QR513 Transmission

## I. Assembly of QR513 Transmission

After disassembly, visually inspect parts for any abnormal condition such as deformation etc, and make records; Replace the damaged parts, clean and wash all parts, then reassemble.

### 1. Assembly of differential assembly

Fit adjustment gaskets respectively at backsides of the two half axle gears, and then install the two half axle gears together with their gaskets into the differential. When fitting adjustment gaskets for the half axle gears, select the gasket with thickness as 1.2mm first. Fit spherical washers for the planetary gear, and then simultaneously engage the two planetary gears with the two half axle gears (fit them to correct positions while turning the gears). Insert the planetary gear shaft; note that the fixing pin hole on the shaft should align correctly with that on the differential housing both in the position and along the direction. Measure the clearance between the half axle gear and the planetary gear, and the normalized value should be **0.025~0.150mm**; if the clearance does not conform to the normalized value, replace the adjustment gaskets for the half axle gear, and then re-measure the clearance until it conforms to the standard with uniform clearance at both sides. Drive down the fixing pin of planetary gear shaft from the fixing pin hole at the side of differential housing with flange with the pin with end surface of the pin hole. Install driven gear of main decelerator and ensure that the installation end surface of the gear fits well with the end surface of the differential housing, and then fix the driven gear of main decelerator with bolts (apply sealant to full thread

of the bolt before installation); screw the bolts home with the torque as **130±5Nm** cornerwise and alternately; respectively press in an inner ring of front and rear bearings from each of both ends of the differential housing and check if it has been pressed to the designated position. Note that the lubricant applied onto adjustment gaskets for half axle gears, planetary gear gaskets, junction surface of planetary gear and planetary gear shaft, junction surface of half axle gear and differential housing should be the same as that used inside the transmission. Refer to Figure 18.

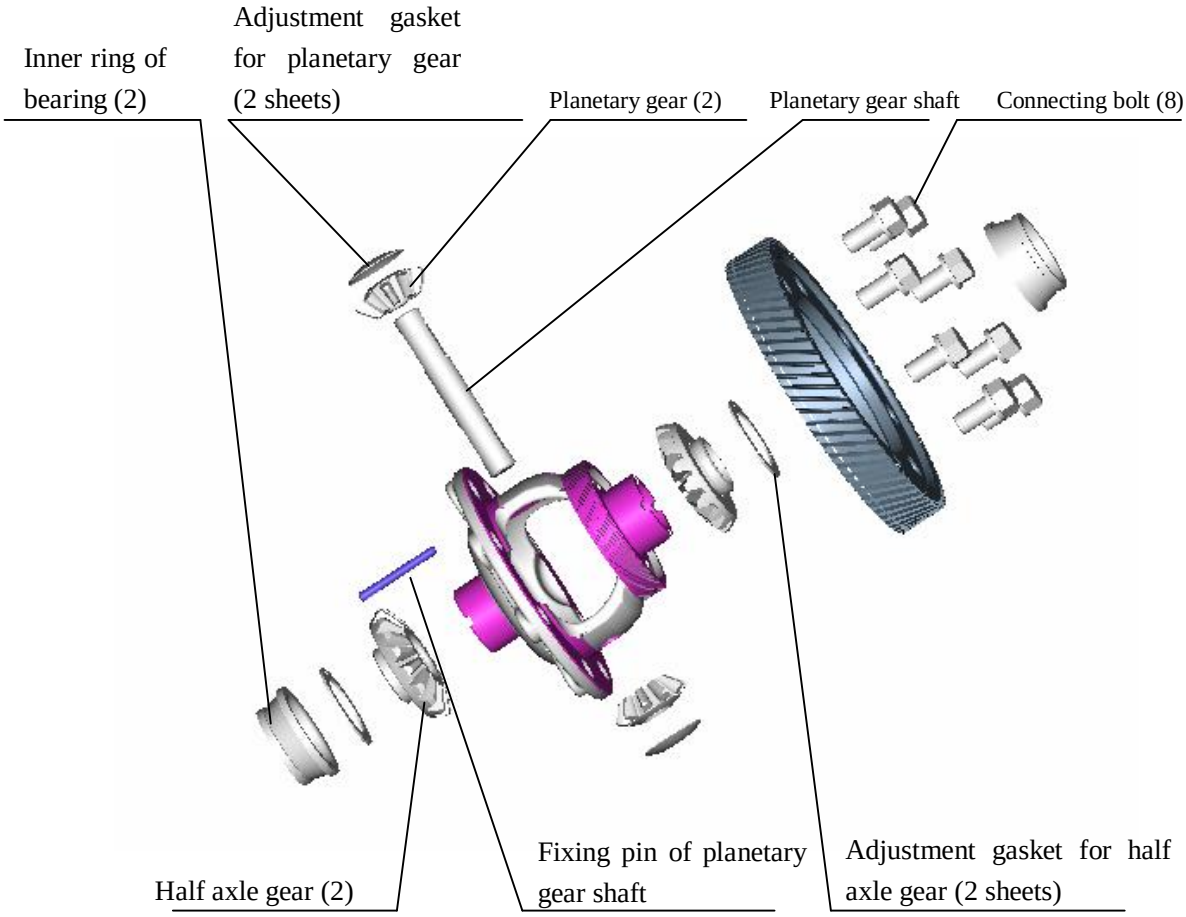


**Figure 18**

## 2. Assembly of clutch housing

Use a hammer and a special tool to fit oil seal of input shaft with spring side of the oil seal up and grease applied to lip of the oil seal. Use a special tool and a hamper to fit right side oil seal of differential with end surface of the oil seal flush with the housing surface, and then apply grease to lip of the oil seal. See Figure 19.

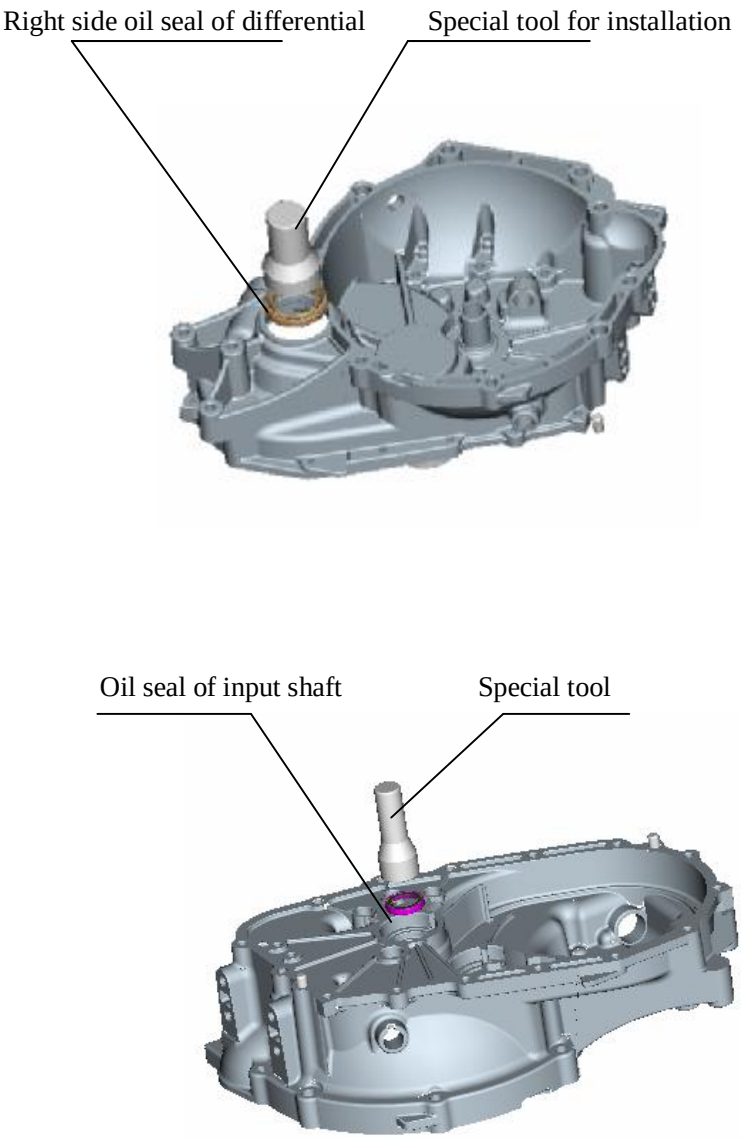


**Figure 19**

First, install the oil duct of output shaft to its designated position as shown in Figure 20 (note that the oil inlet and outlet of the oil duct should align with those on the housing), and then use a special tool to respectively install the outer rings of the front bearing of output shaft and the differential bearing.

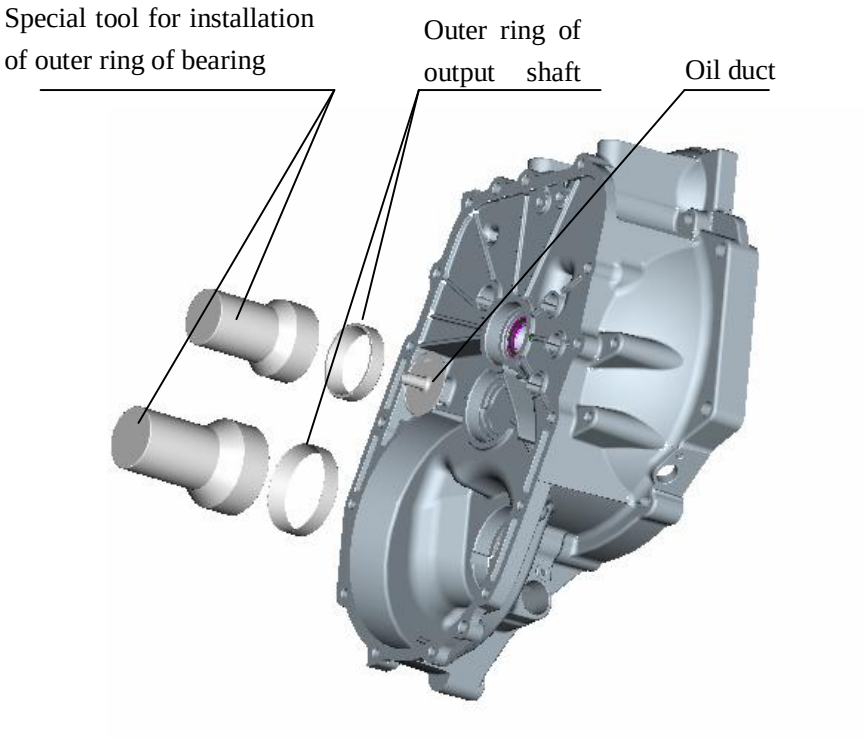


**Figure 20**

The tool for installation of oil seal can be used to install the three bushes. When installing the bushes, stagger the gap on the bush and that on the clutch housing (the two gaps can not coincide), as shown in Figure 21.

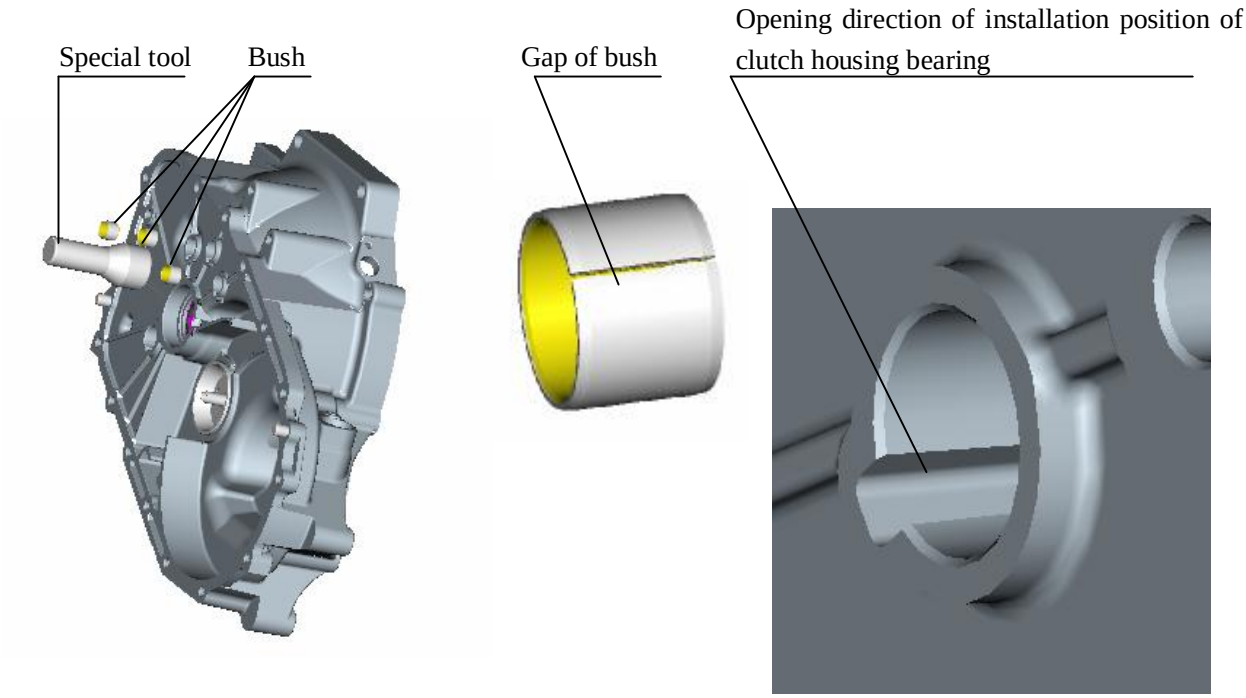


**Figure 21**

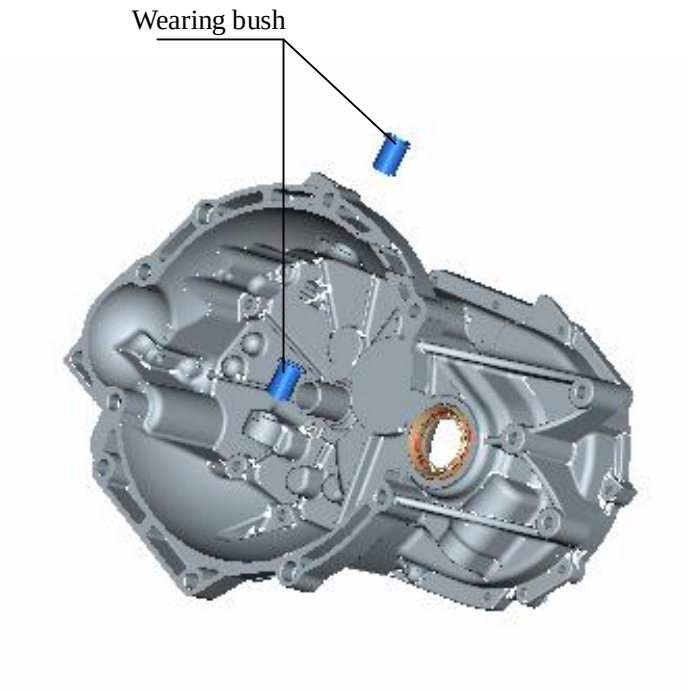


Now start to install release bearing assembly and release bearing as shown in Figure 22. First, install the two wearing bushes to their designated positions, and then put the release bearing through bush, release return torsion spring, release fork (release fork and release bearing should be assembled properly in advance, and then set the release bearing onto the housing) and bush in turn up to its designated position, finally, tighten the release arm bolts (with torque as **20±2Nm**). See Figure 23.

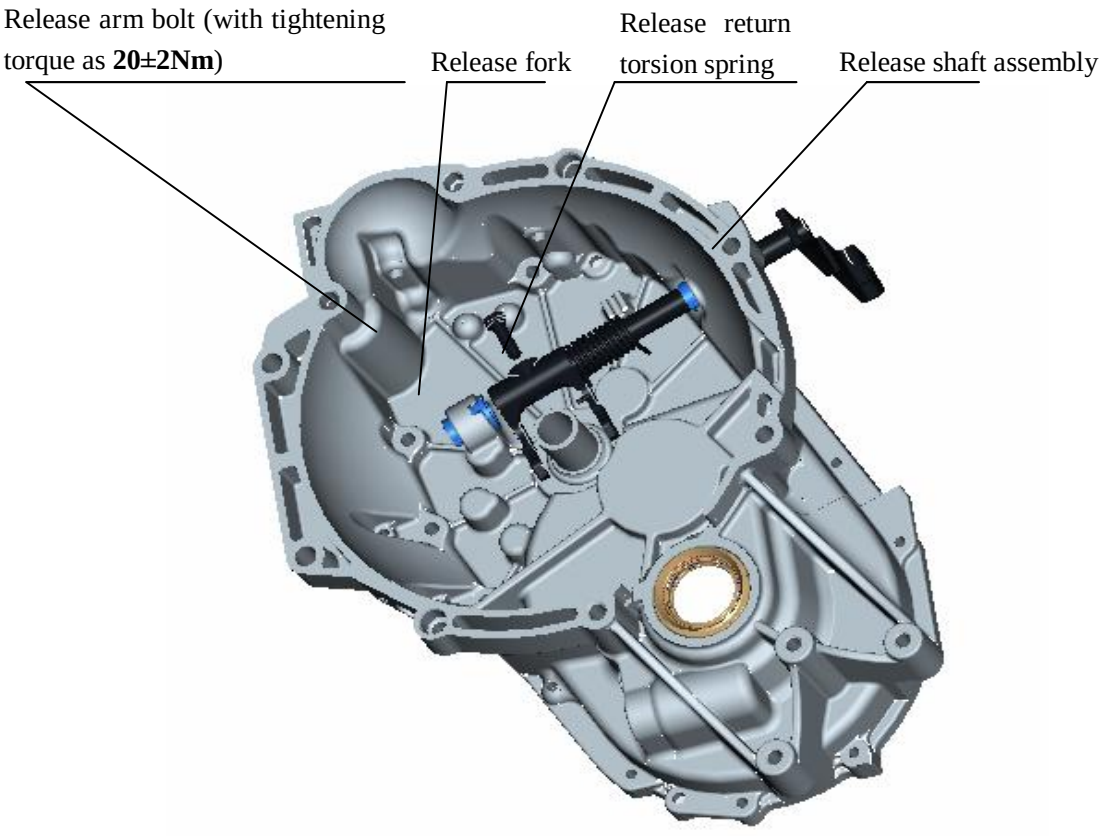

**Figure 23**

## 3. Assembly of transmission housing

First, use a special tool to fit oil seal of the differential to its designated position (when fitting the oil seal, care should be taken to prevent oil leak in the future, and replacement with new oil seal is recommended), and then respectively install oil drain channel, bush (**note:** the installation process for this bush is the same as that for the bush of clutch housing above), linear bearing etc. to their designated positions. See Figure 24.

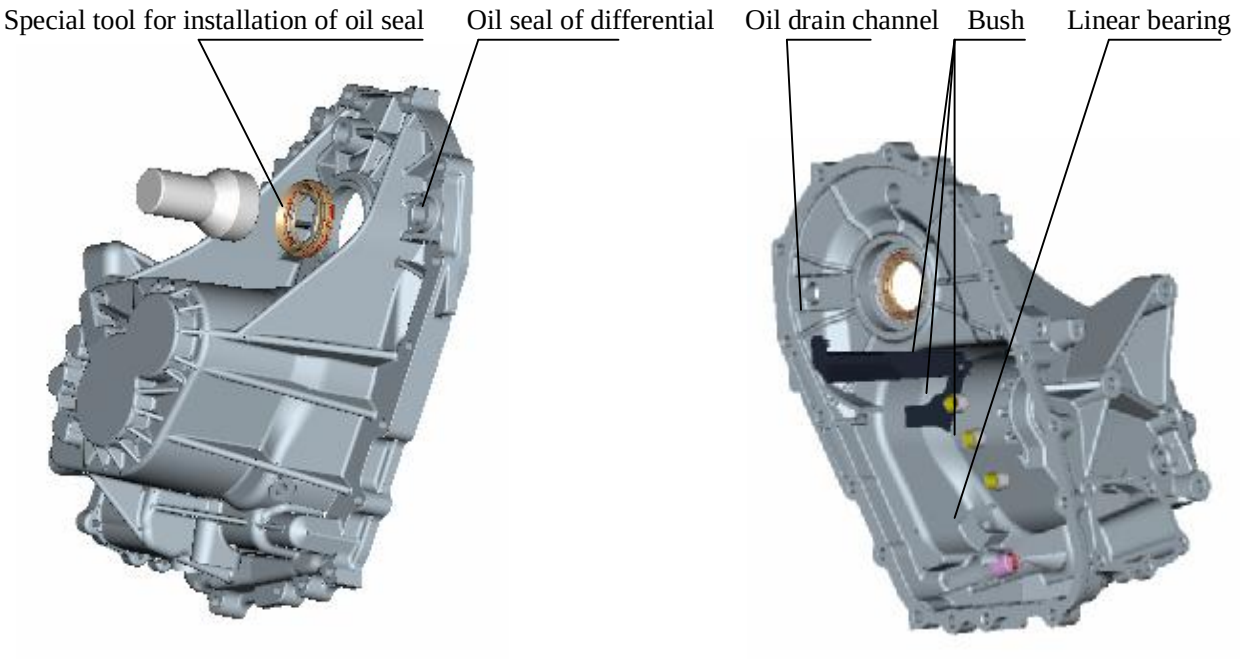


**Figure 24**

## 4. Assembly of gearshift mechanism assembly

Assembly of gearshift mechanism assembly is comparatively simple, which can refer to the disassembly process of the gearshift mechanism assembly. Remember to check the amount of parts to prevent neglected installation. Please refer to Figure 25 for tightening torque of the bolt.

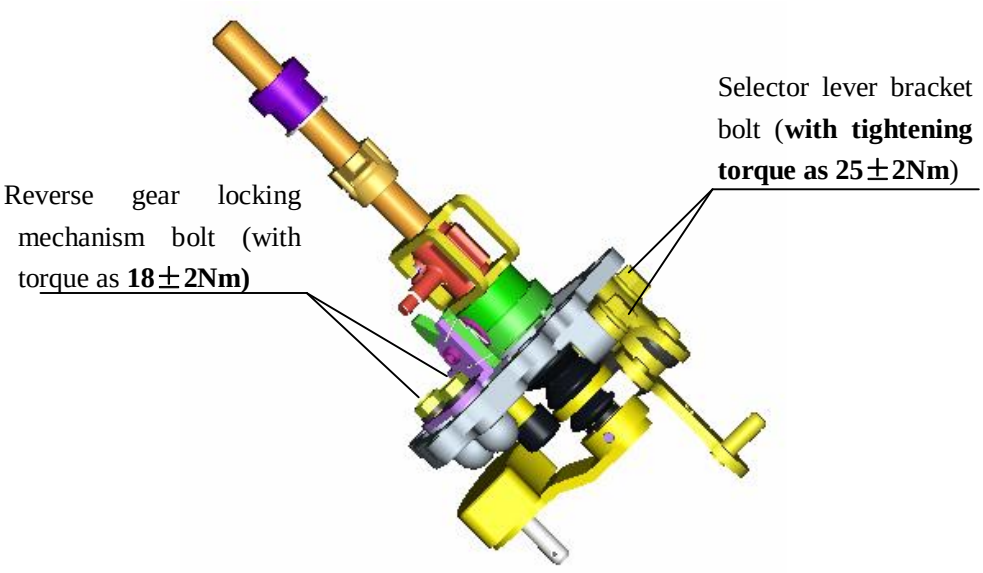


**Figure 25**

## 5. Assembly of gearshift fork assembly

Assembly of gearshift fork assembly is comparatively simple, which can be assembled with reference to the disassembly drawing.

## 6. Regulation and assembly of input shaft assembly

Place the input shaft with its end with clutch spline down, and then set the third gear needle bearing applied with the gear oil of the same designation as that used inside the transmission assembly onto the input shaft. Set the third gear driving gear assembly in from upside of input shaft with the end with synchronizer cone of the gear assembly up, and then check and make sure that the gear assembly can rotate freely. Set a 3/4/5 gears synchronizer ring in from upside of input shaft with conical surface of the synchronizer ring applied with the gear oil of the same designation as that used inside the transmission assembly, and then check and make sure that the synchronizer ring should envelop loosely on synchronizer cone of the third gear driving gear assembly and can rotate relative to the synchronizer cone. Press 3/4 gears synchronizer assembly onto the input shaft with the end surface of gear hub with two oil grooves down, turn the synchronizer ring to make its guide block completely enter the groove corresponding to the gear hub, and then make sure that the synchronizer ring is not locked. Fit front snap ring of input shaft; when fitting, try to use the thicker snap ring, if really unsuitable, select the snap ring of next thinner level, and then check if the snap ring has really enter the groove with the clearance between the snap ring and the groove not exceeding 0.05mm. Set a 3/4 gears needle bearing applied with the gear oil of the same designation as that used inside the transmission assembly onto the input shaft from upside of the input shaft. Set a 3/4/5 gears synchronizer ring applied with the gear oil of the same designation as that used inside the transmission assembly in from upside of the input shaft. Set the fourth gear driving gear assembly in from upside of input shaft with the end with synchronizer cone of the gear assembly down (the guide block of 3/4 gears synchronizer ring should completely enter the groove corresponding to the gear hub), and then make sure that the gear assembly can

rotate freely. Set friction ball of gear, fender and clamp in from upside of input shaft, and then perform axial orientation for the fourth gear driving gear. Set fifth gear needle bearing applied with the gear oil of the same designation as that used inside the transmission assembly onto the input shaft from upside of the input shaft. Set fifth gear driving gear assembly in from upside of input shaft with the end with synchronizer cone of the gear assembly up, and then make sure that the gear assembly can rotate freely. Set a 3/4/5 gears synchronizer ring in from upside of input shaft with conical surface of the synchronizer ring applied with the gear oil of the same designation as that used inside the transmission assembly, and then check and make sure that the synchronizer ring should envelop loosely on synchronizer cone of the fifth gear driving gear assembly and can rotate relative to the synchronizer cone. Press fifth gear synchronizer assembly onto the input shaft with the end surface of gear hub with oil groove down, turn the synchronizer ring to make its guide block completely enter the groove corresponding to the gear hub, and then make sure that the synchronizer ring is not locked. Fit rear snap ring of input shaft; when fitting, try to use the thicker snap ring, if really unsuitable, select the snap ring of next thinner level, and then check if the snap ring has really enter the groove with the clearance between the snap ring and the groove not exceeding 0.07mm. Simultaneously press front and rear bearings of input shaft onto the input shaft with the side of front bearing of input shaft having word down and the side of rear bearing of input shaft having word up, and then check and make sure that the outer rings of the bearings can rotate freely. Refer to Figure 26.

**Note:** There are two friction balls between the bearing baffles (2 sheets). Be careful to install them in full.

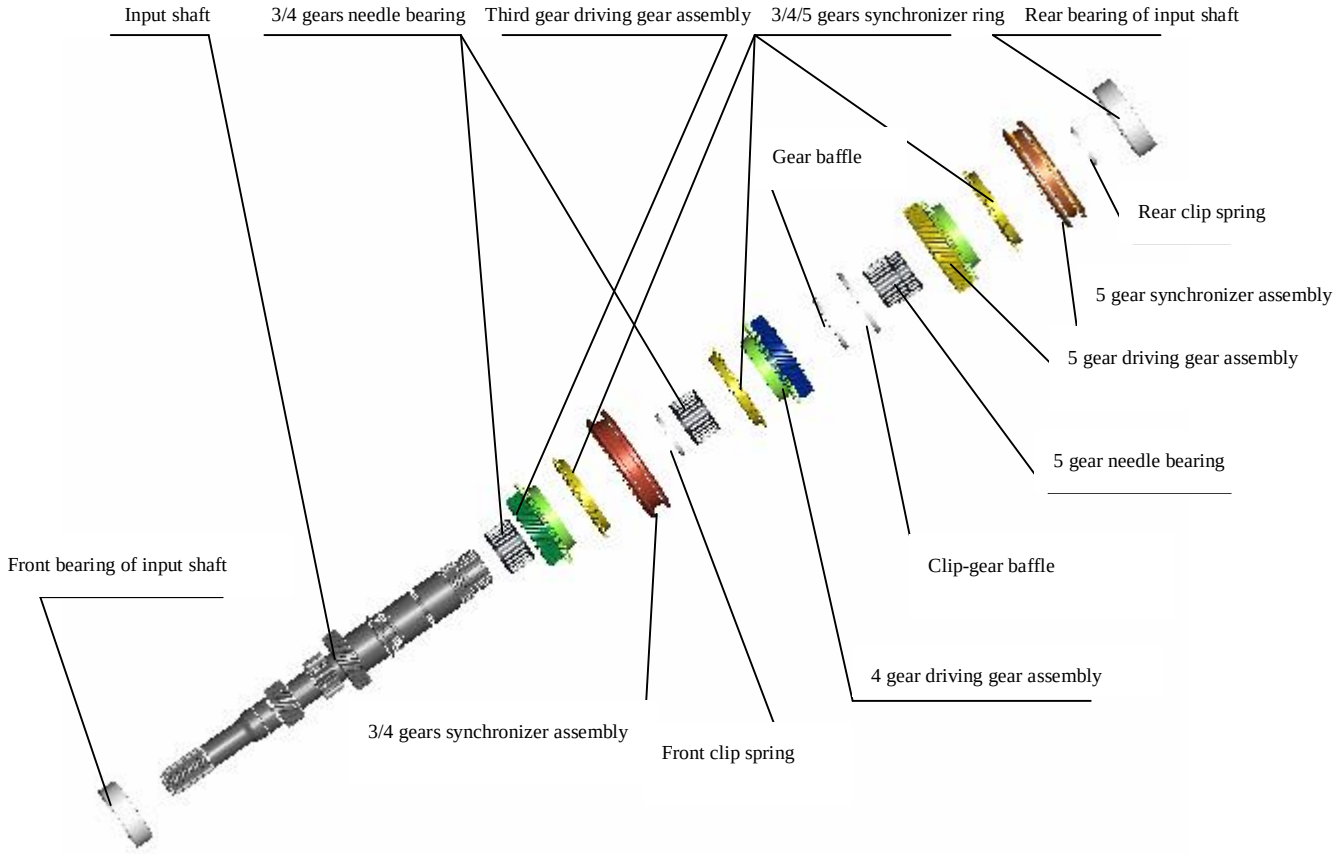

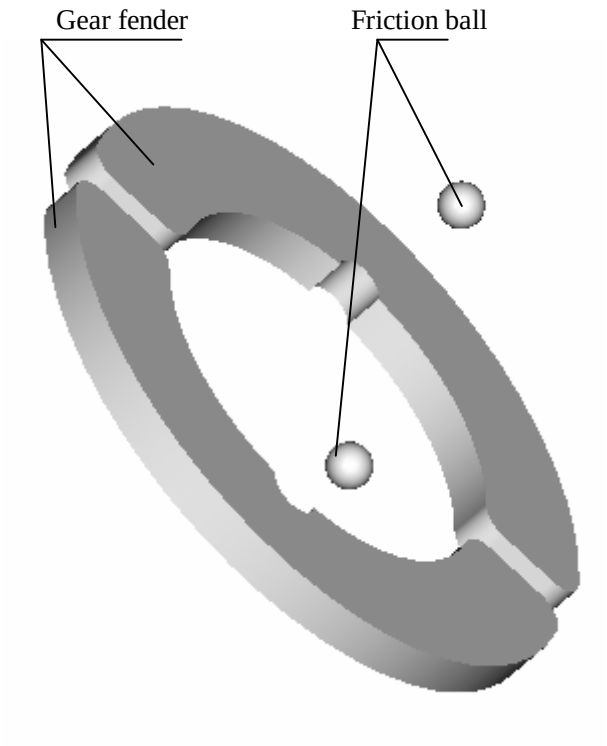


Figure26

## 7. Regulation and assembly of output shaft assembly

With the end of output shaft with driving gear of main decelerator down, set first gear needle bearing in onto output shaft from upside of the output shaft; before installation of the needle bearing, apply the gear oil of the same designation as that used inside the transmission assembly on it. Set first gear driven gear assembly in from upside of output shaft with the end with synchronizer cone of the gear assembly up, and then check if the gear assembly can rotate freely. Set a 1/2 gears synchronizer ring assembly in from upside of output shaft and the three finger jaws of balking ring of the synchronizer ring should completely enter the three corresponding grooves on the first gear driven gear assembly; before installation of the synchronizer ring assembly, apply the gear oil of the same designation as that used inside t Clamp-gear fender bly on three conical surfaces of the synch 3/4 gears synchronizer assembly that the synchronizer ring assembly envelops loosely on the synchronizer cone of the first gear driving and driven gears assembly and can turn a certain angle relative to the synchronizer cone. Press 1/2 gears synchronizer assembly onto the input shaft with the end of external gear of 1/2 gears hub sleeve wit section down, turn the synchronizer ring to make its guide block completely enter the groove correspond Front snap ring and then make sure that the synchronizer ring is not locked. Fit front snap ring of output shaft; when fitting, try to use the thicker snap ring, if really unsuitable, select the snap ring of next thinner level, and then check if the snap ring has really enter the groove with the clearance between the snap ring and the groove not exceeding 0.05mm. Set a 1/2 gears synchronizer ring assembly in from upside of output shaft; before installation of the synchronizer ring assembly, apply the gear oil of the same designation as that used inside the transmission assembly on three conical surfaces of the synchronizer ring. Set a second gear needle bearing onto output shaft from upside of

the output shaft; before installation of the needle bearing, apply the gear oil of the same designation as that used inside the transmission assembly on it. Set second gear driven gear assembly in from upside of output shaft with the end with synchronizer cone of the gear assembly down (the three grooves on the gear assembly should completely envelop the three corresponding finger jaws on 1/2 gears synchronizer cone), and then check and make sure that the gear assembly can rotate freely. Set the third gear driven gear in from upside of output shaft with the end with boss of the gear up, and then check and make sure that the 1/2 gears synchronizer ring assembly is not locked. Set 3/4 gears driven gear bush and then fourth gear driven gear in from upside of output shaft, with the end with boss of the gear down. Set fifth gear driven gear in from upside of output shaft with the end with boss of the gear up. When fitting, try to use the thicker snap ring, if really unsuitable, select the snap ring of next thinner level, and then check if the snap ring has really enter the groove with the clearance between the snap ring and the groove not exceeding 0.05mm. Simultaneously press inner rings of front and rear bearings of output onto the output shaft. See Figure 27.

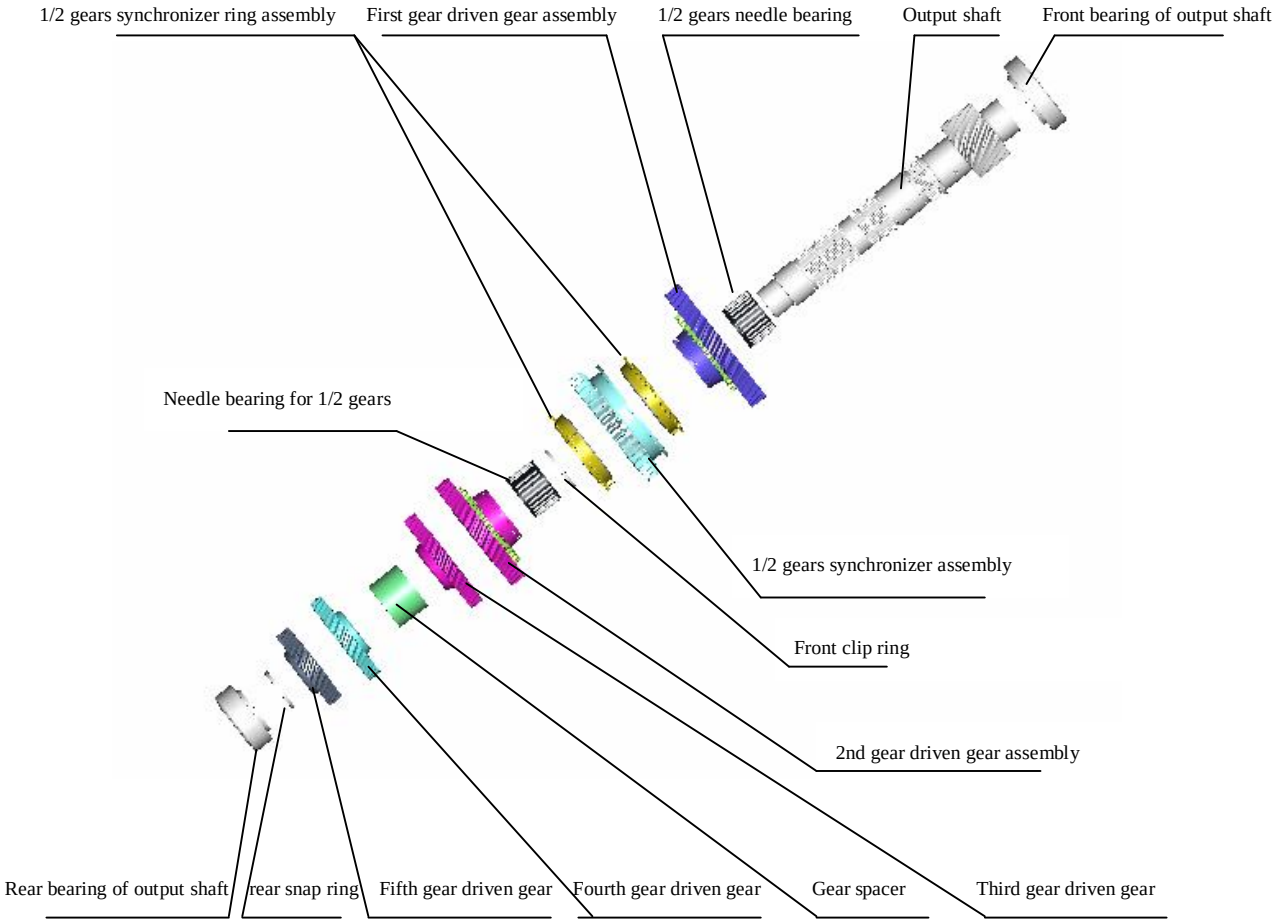


**Figure 27**

## 8. Assembly and regulation of transmission assembly

Place the clutch as shown in Figure 28 first, and then assemble the differential assembly to its designated position.

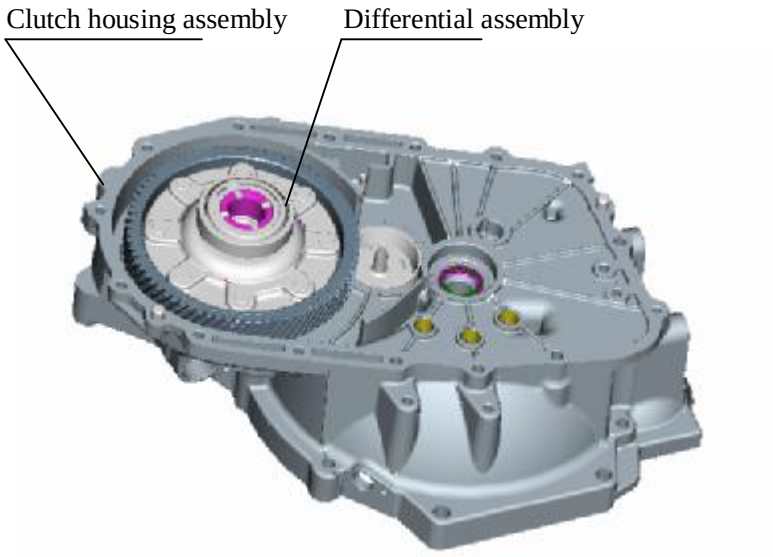


**Figure 28**

Assemble gearshift fork assembly, input shaft assembly and output shaft assembly together as shown in Figure 29, and then install them together onto clutch housing assembly. When assembling, wrap front end spline of input shaft with polyvinyl chloride adhesive tape to prevent damage to oil seal. After installation, turn each gear to ensure favorable engagement.

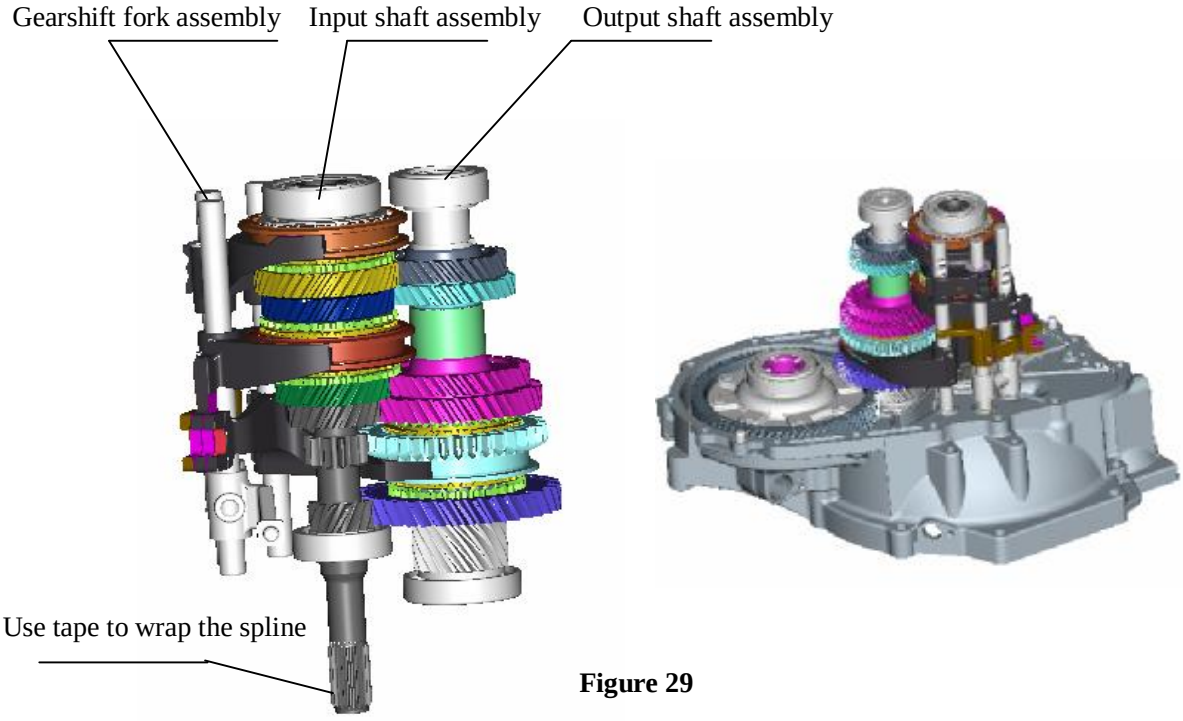


**Figure 29**

Install the assembled idler assembly (assembly of idler assembly is comparatively simple, please refer to its disassembly process) onto clutch housing, and then install reverse gear fork mechanism assembly with tightening torque of the two reverse gear rocker arm bracket bolts as **25±2Nm**. Clean the junction part of clutch and transmission housings and apply sealant (oil resistance silicone sealant, HZ1213Q/320222 YAP02-92) on it, and then install the magnet. See Figure 30.

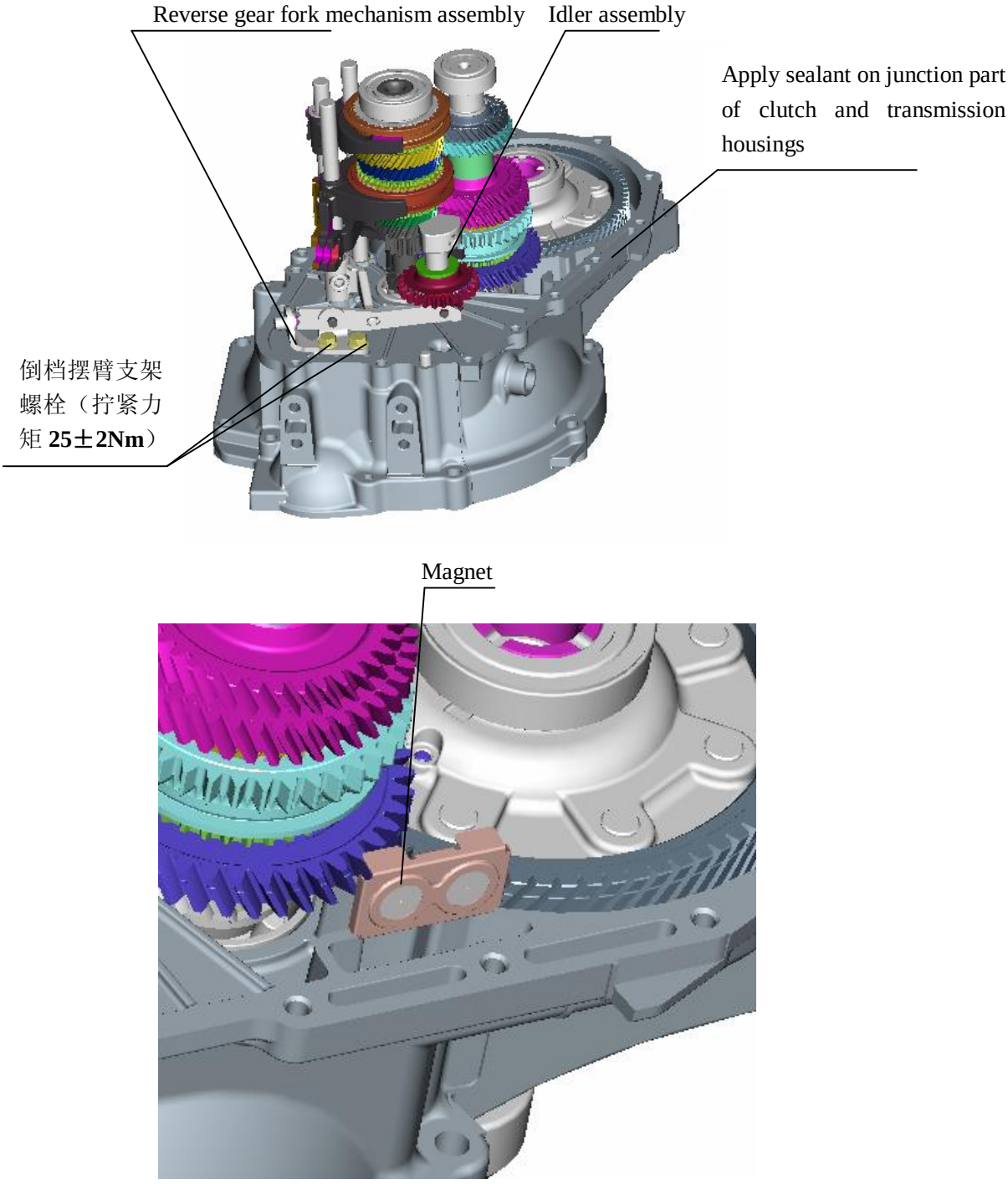


**Figure 30**

Assemble transmission housing and clutch housing together and then fasten them with connecting bolts. Before fastening, apply **thread locking glue (262 type anaerobic adhesive)** on the bolts properly. Tighten the diagonal bolts first as possible to ensure favorable fastening and sealing effects, and the tightening torque for the bolts are **25±2Nm**. **Note: the two connecting bolts at oil drain hole are a little longer than other connecting bolts, and the bracket should be installed first.** See Figure 31.

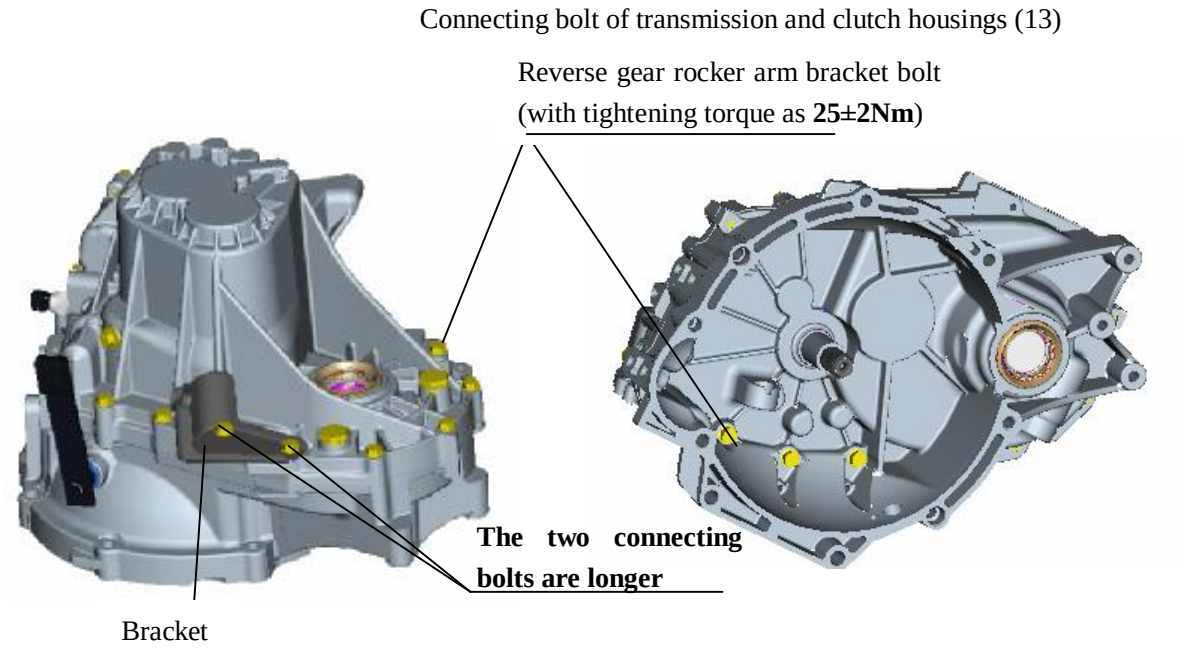


**Figure 31**

To install the assembled gearshift mechanism assembly onto the transmission, clean the junction part of gearshift housing and transmission housing and apply sealant on it (oil resistance silicone sealant, HZ1213Q/320222 YAP02-92), align one end of gearshift shaft with the linear bearing inside the transmission and align the locating hole on gearshift housing with the locating pin on transmission housing, and then tighten the connecting bolts of gearshift housing and transmission housing with the tightening torque as **25±2Nm**. See Figure 32.

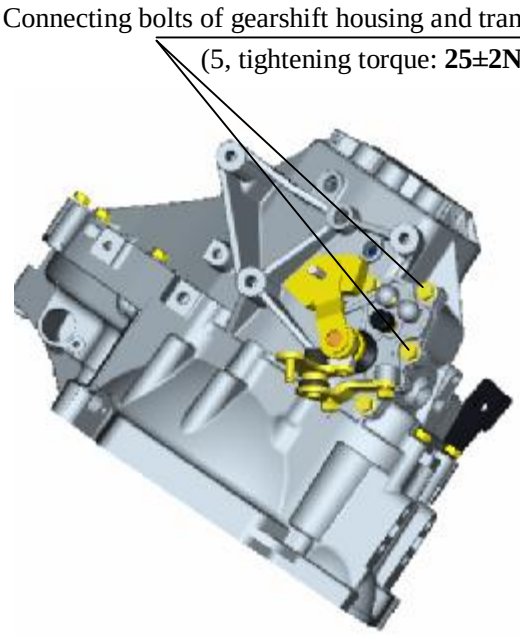


**Figure 32**

## 9. Disassembly of external accessories of transmission

Respectively install locating seats of 1/2 gears fork shaft and 3/4/5 gears fork shaft. Before installation, apply **thread fastening glue (262 type anaerobic adhesive)** on the thread, and the tightening torque for the bolts are **20±2Nm**. **Note: the locating seat of 1/2 gears fork shaft is longer than that of 3/4/5 gears fork shaft.** Then install locating seat of gearshift shaft, before installation, apply **thread fastening glue (262 type anaerobic adhesive)** on the thread, and the tightening torque for the bolts are **32±2.5Nm**; and install backup lamp switch assembly, before installation, apply **thread fastening glue (262 type anaerobic adhesive)** on the thread, and the tightening torque for the bolts are **20±2Nm.** See Figure 33**.**

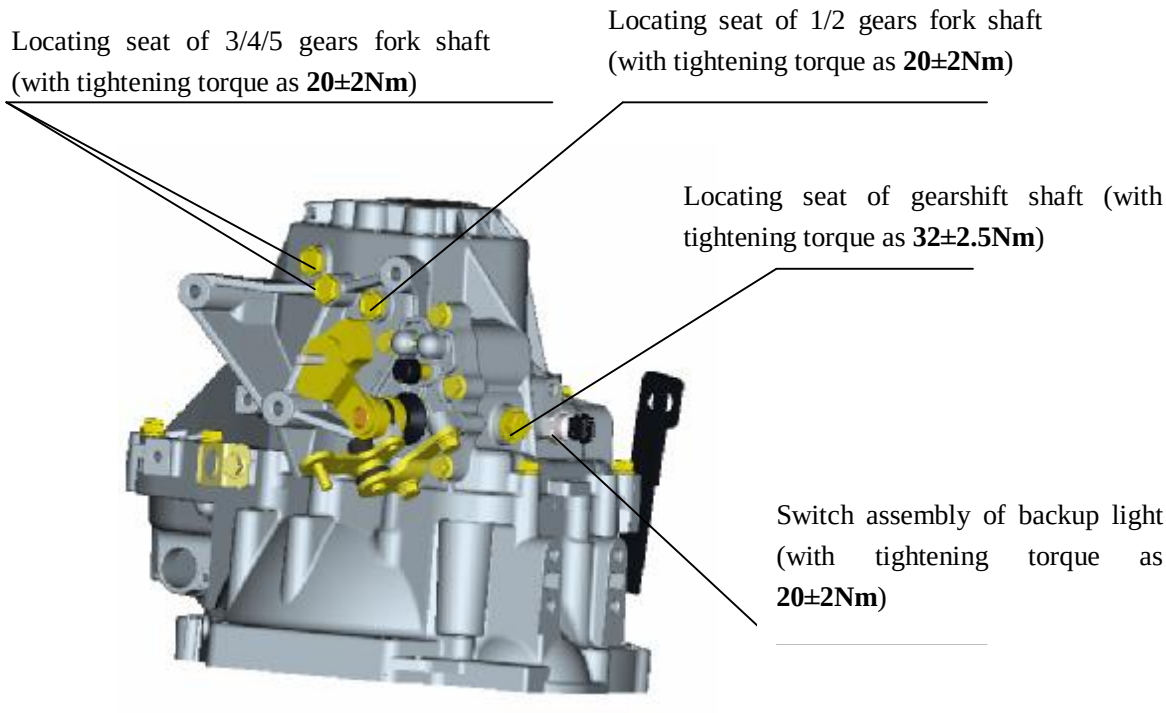

**Figure 33**

Follow by installation of screw of reverse gear idler shaft. Align the screw of reverse gear idler shaft with the threaded hole on the idler shaft, and then tighten it with the tightening torque as **38±2.5Nm**; after that, tighten bleeding plug with tightening torque as **44±3Nm**; finally, install oil limit plug onto the transmission, but do not tighten it then. See Figure 34.

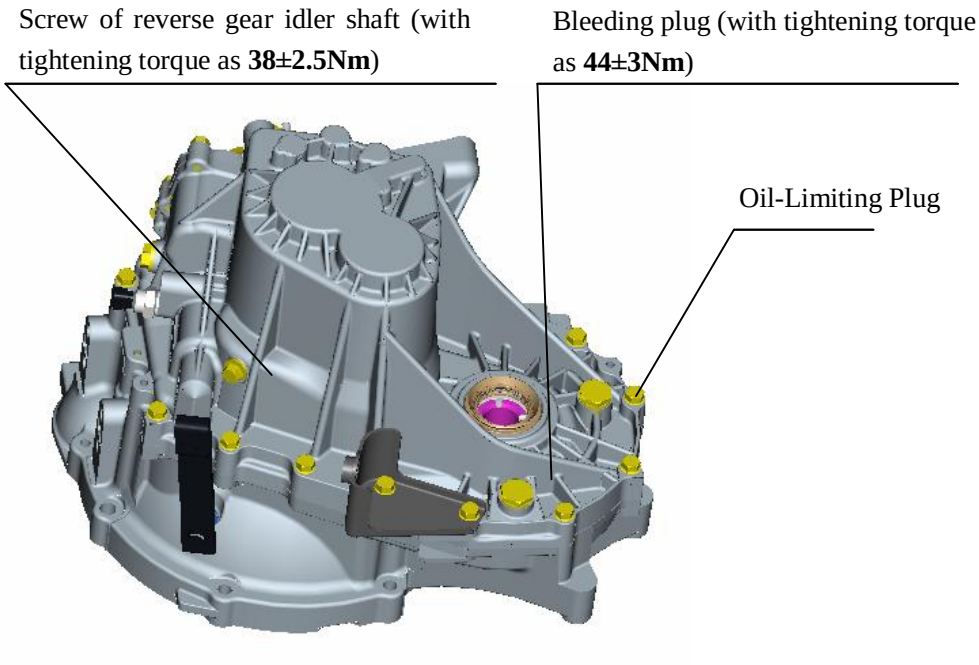


**Figure 34**

## 10. Refilling and volume regulation of transmission lubricant

After the transmission is installed onto the vehicle, park the vehicle on a flat road surface, then use the tool for refilling to refill transmission lubricant. The lubricant refilled should at least conform to API GL-4 SAE 75W-90 specification. Refill through installation hole of speed sensor as shown in Figure 35 with the refilling volume as 1.8L. after refilling, open the oil limit plug to regulate the lubricant to specified volume, and then tighten the oil limit plug with the tightening torque as **44±3Nm**.

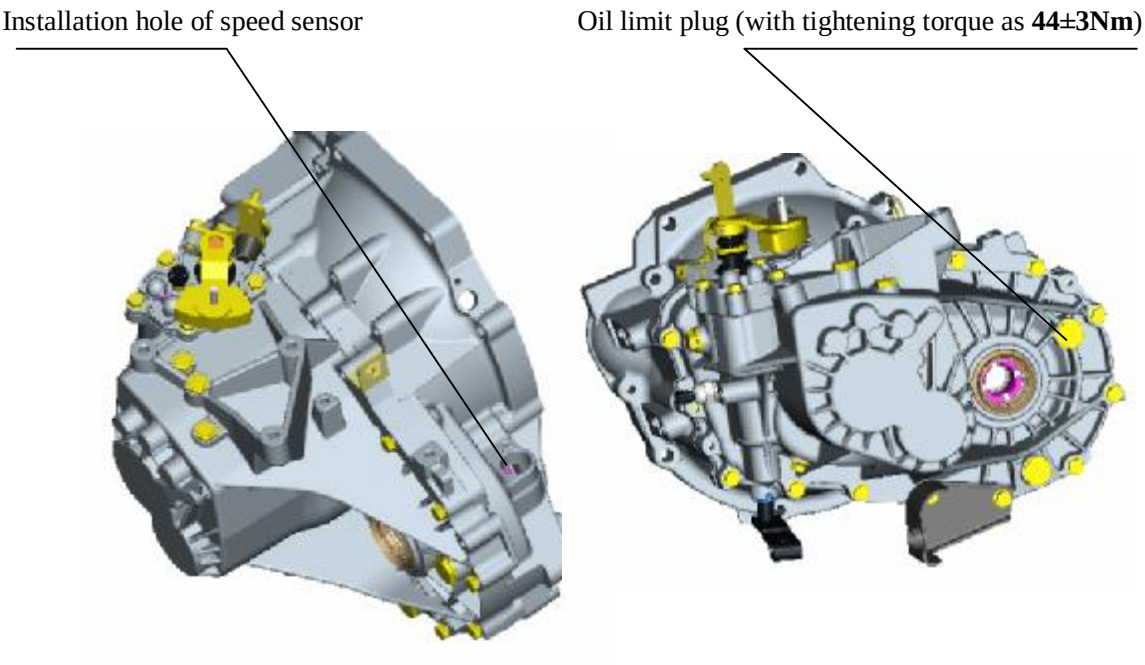


**Figure 35**

After the above steps, assembly and regulation to the transmission assembly are accomplished.

## II. Tightening Torque Table for Fasteners

| Position | Tightening torque (N.m) |
|---|---|
| Reverse gear rocker arm bracket bolt | 25±2 |
| Connecting bolts for clutch and transmission housings | 25±2 |
| Reverse gear idler shaft screw | 38±2.5 |
| Connecting bolts for gearshift and transmission housings | 25±2 |
| Gearshift shaft locating seat assembly | 32±2.5 |
| Reverse switch assembly | 20±2 |
| Fork shaft locating seats of gears | 20±2 |
| Bleeding\oil limit plug | 44±3 |
| Clutch release fork bolt | 20±2 |
| Clutch release arm bolt\nut | 20±2 |
| Selector Lever Bracket Bolt | 25±2 |
| Main decelerator driven gear bolt | 130±5 |
| Reverse gear lockup mechanism bolt | 18±2 |

# Chapter Four General Failures and Troubleshooting

| Failure status | Possible reason | Troubleshooting |
|---|---|---|
| Excessive or abnormal noise | Damaged input or/and output shaft bearing(s) | Replace the bearing |
| | Gear tooth faces damaged due to knocking, burr or pit corrosion existing, or poor contact between them. | Repair or replace the gear |
| | Incorrect gear shaft position and clearance | Check and adjust |
| | Low oil level, insufficient lubrication | Fill oil to the specified level |
| | Foreign matter(s) existing in the assembly | Check and remove |
| Oil leakage | Excessively worn or damaged oil seal(s) | Replace |
| | Uneven sealant smearing or damaged seal gasket(s) | Replace the seal gasket(s) or sealant |
| | Failure to timely recondition junction surface(s) damage due to knocking | Check and repair |
| | Damaged differential bearing | Replace |
| Difficult to implement gear shift | Improper clutch adjustment and incomplete release. | Adjustment |
| | Improper gearshift transmission system adjustment or movement obstruction occurring | Check and adjust |
| | Synchronizer ring(s) fails to work | Replace |
| Gear jump | Worn synchronizer gear sleeve(s) or tooth cone surface(s) of gear junction | Replace related components |
| | Improper gearshift transmission system adjustment | Check and adjust |
| No gear | Loose gearshift transmission system | Overhauling |
| | Loose gearshift arm of transmission | Repair |
| Abnormally damaged bearing(s) | Metal impurities contained in transmission oil | Replace |
| | Insufficient lubrication or unqualified transmission oil | Replace |
| | Using of unqualified bearing(s) | Replace |