ETM (en inglés)

Sistema de gestión de baterías (BMS)

Battery Management System (BMS) (1) SD371-1

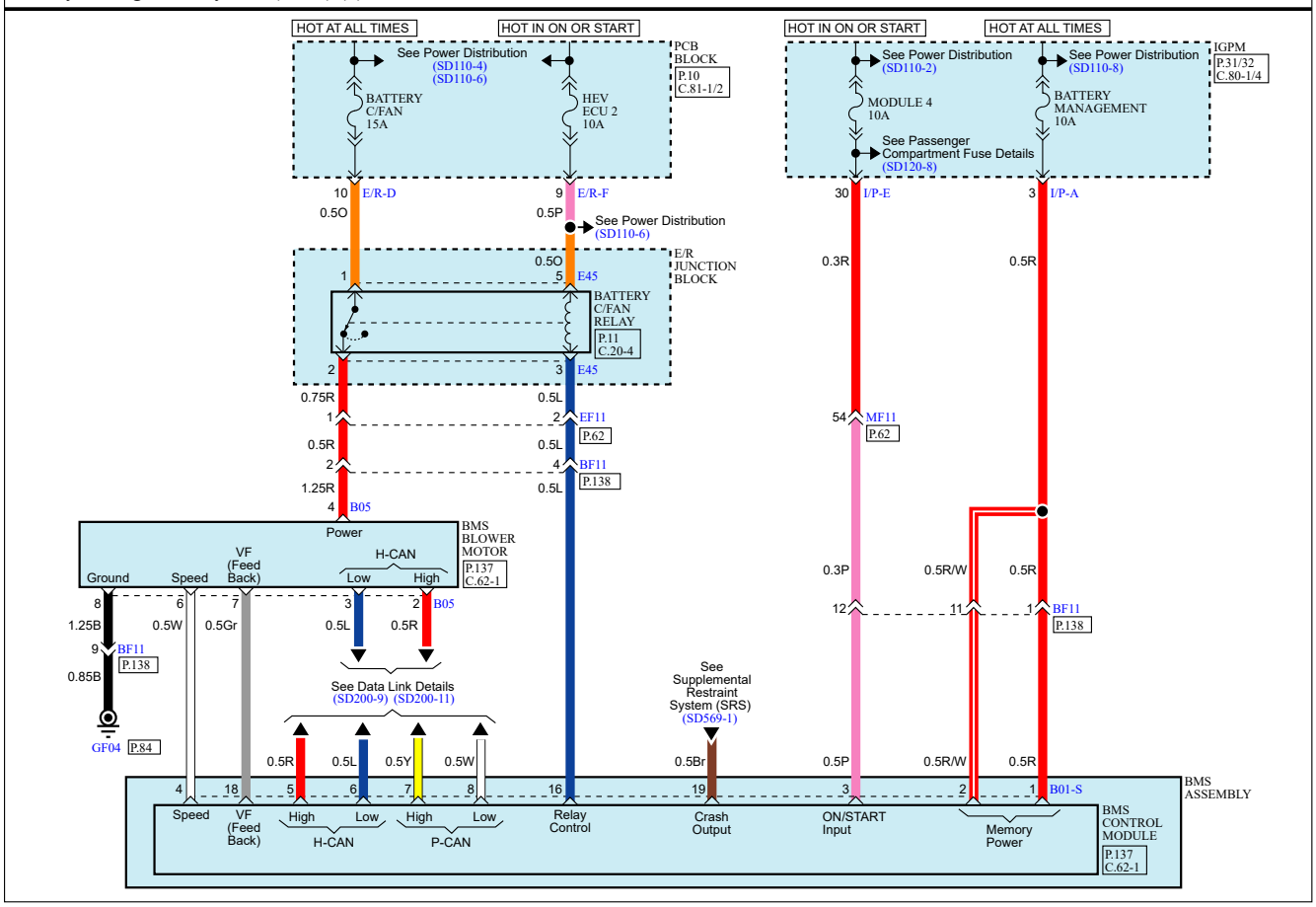

Battery Management System (BMS) (2)

SD371-2

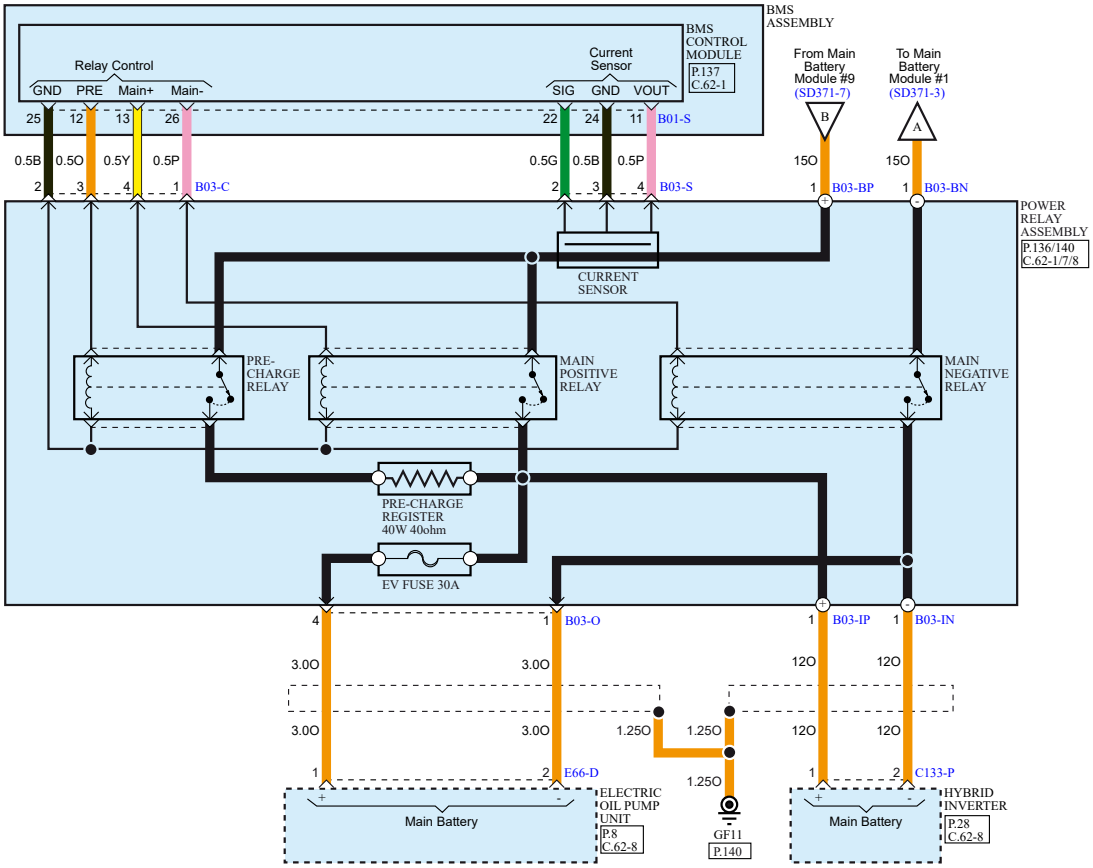

Battery Management System (BMS) (3)

SD371-3

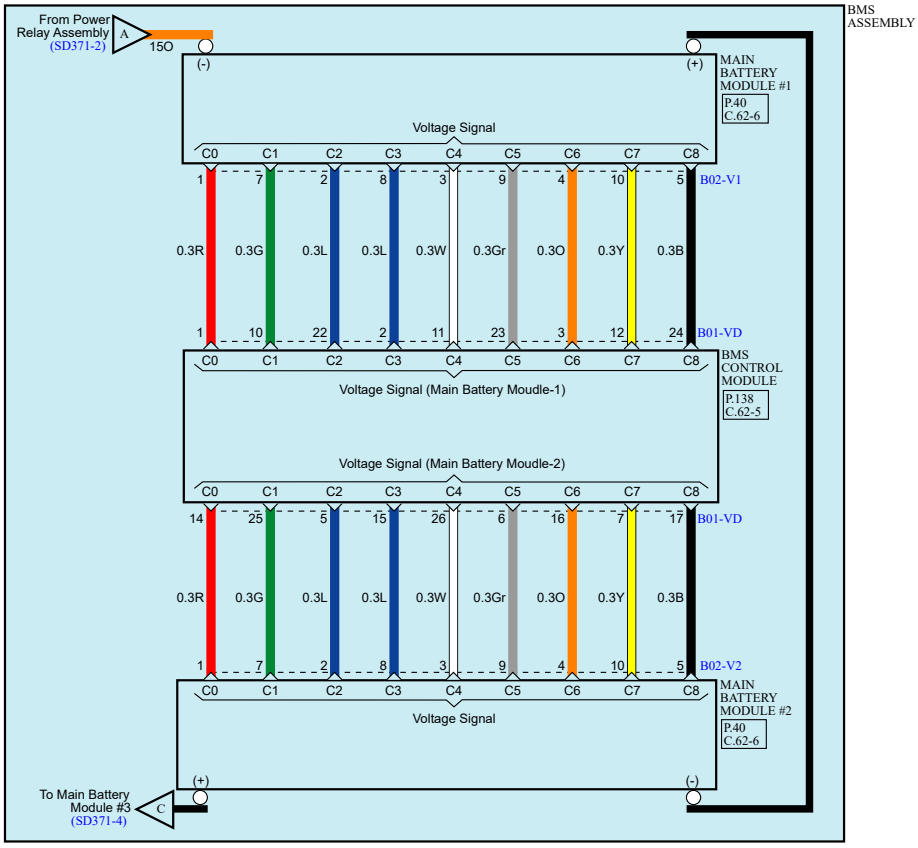

Battery Management System (BMS) (4)

SD371-4

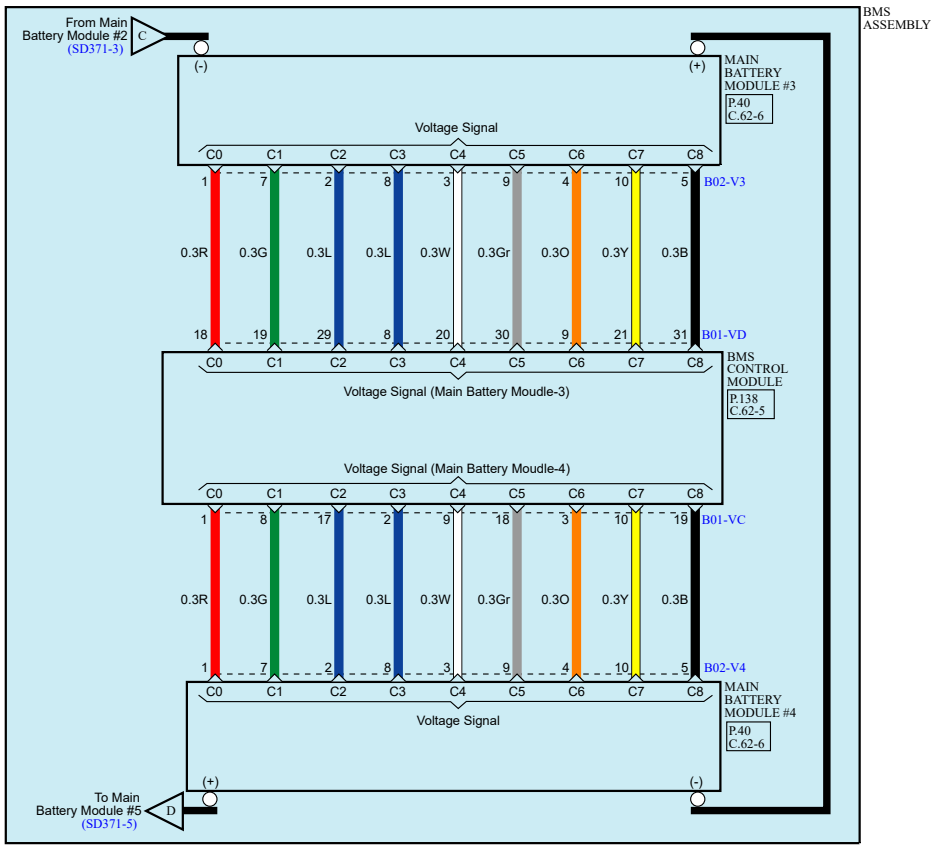

Battery Management System (BMS) (5)

SD371-5

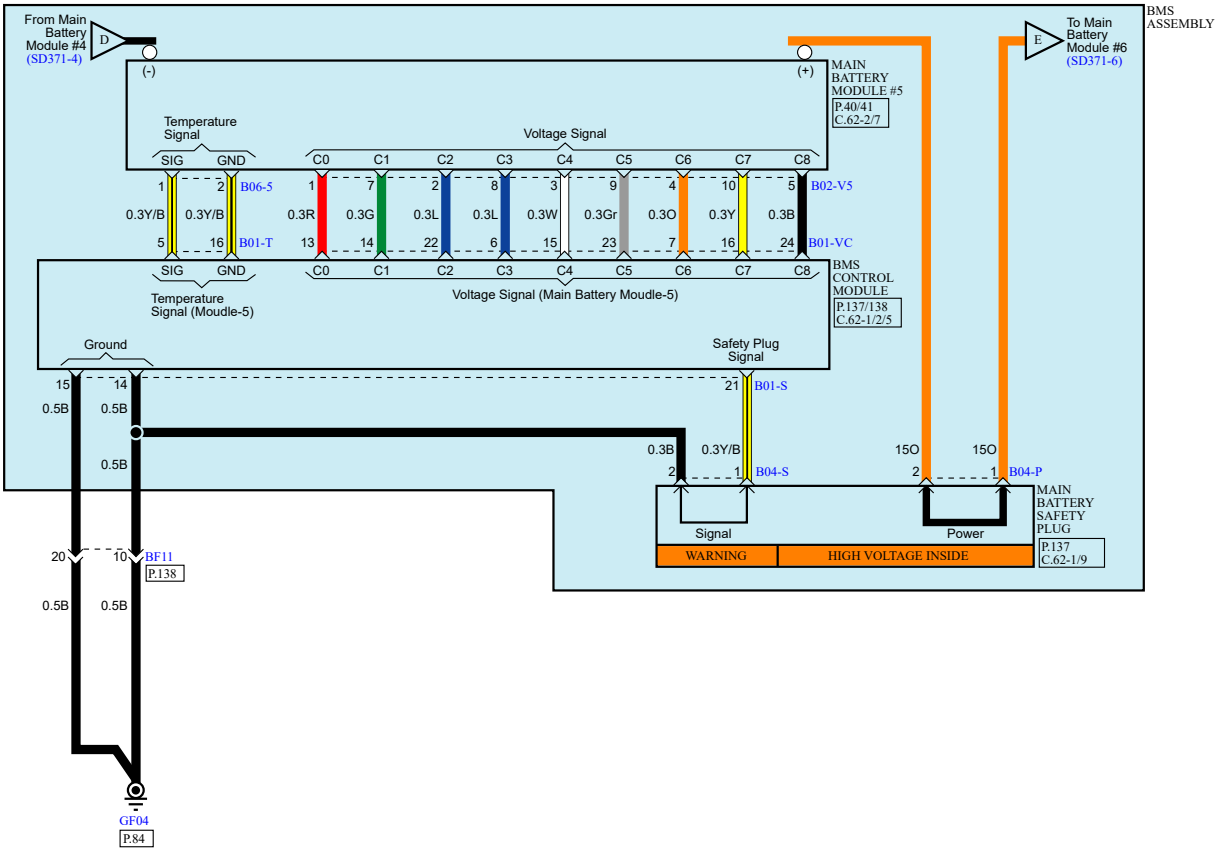

Battery Management System (BMS) (6)

SD371-6

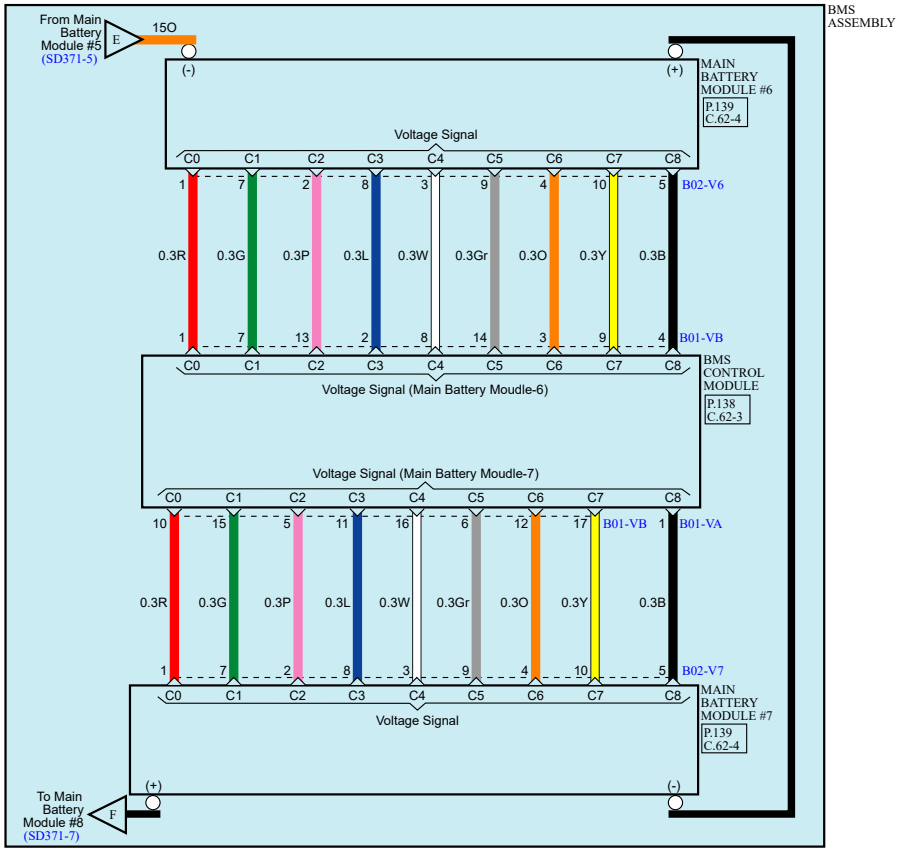

Battery Management System (BMS) (7)

SD371-7

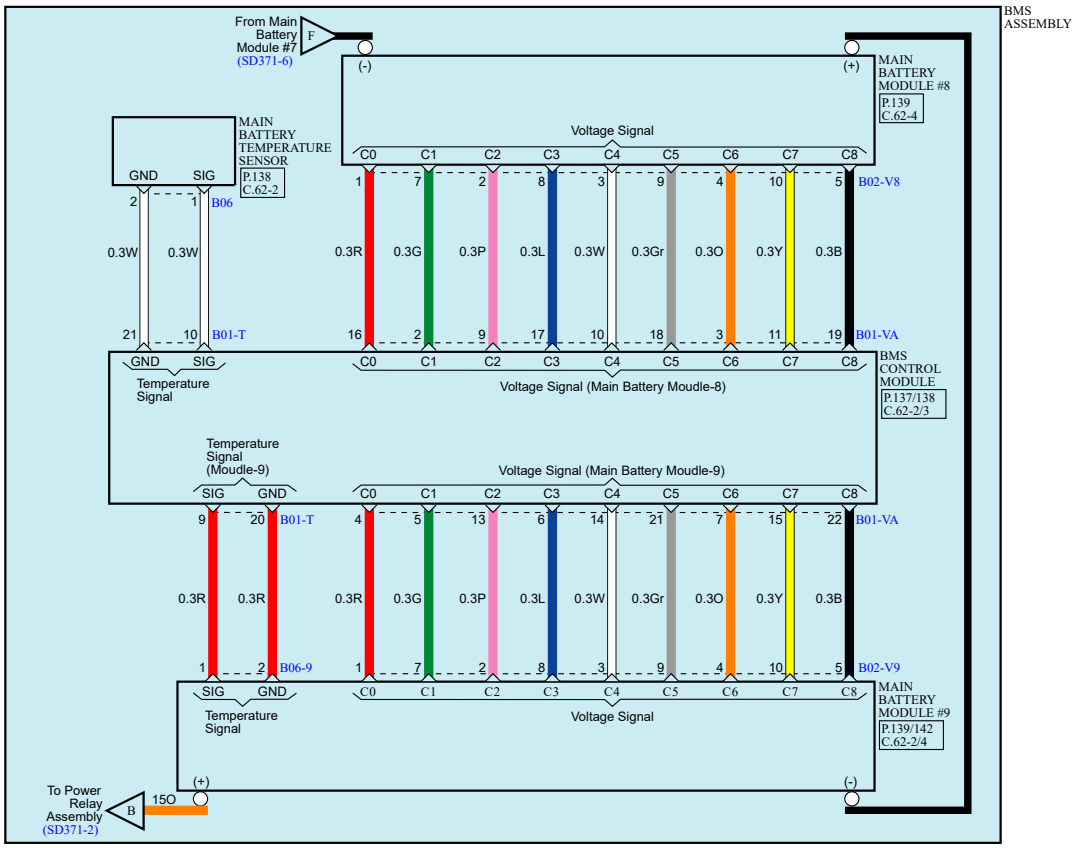

Battery Management System (BMS) (1)

SD371-1

Must follow the safety instructions in "Hybrid System Precaution (SD000) before servicing. Otherwise, there may be a serious injury or electrocution.

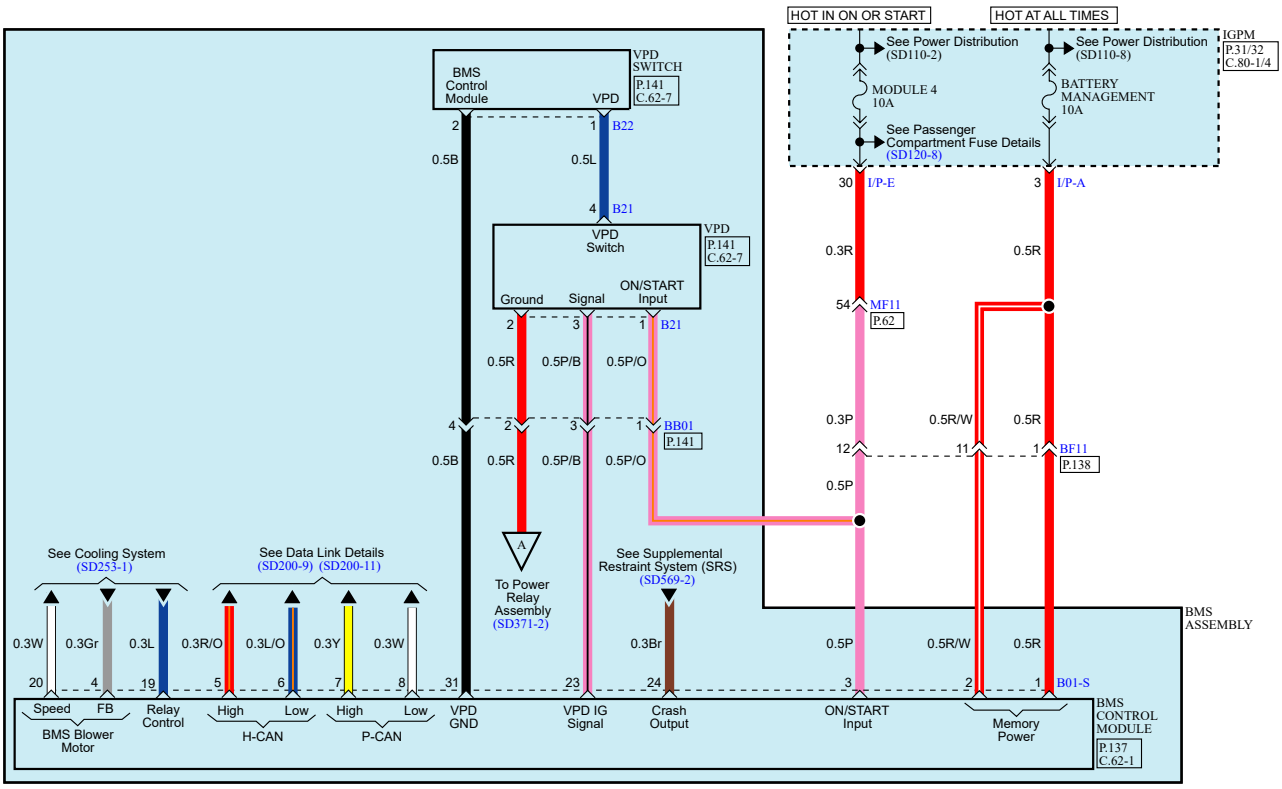

Battery Management System (BMS) (2)

SD371-2

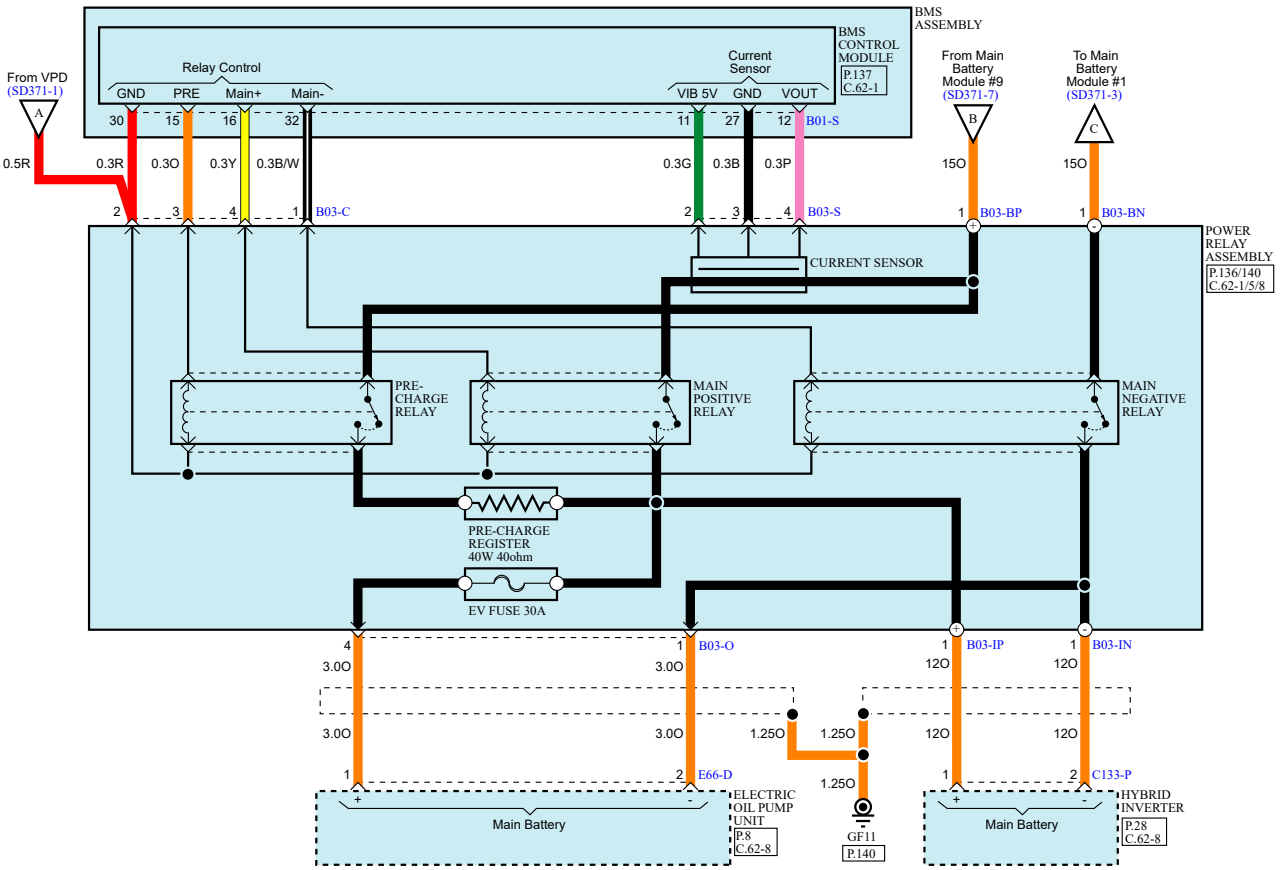

Battery Management System (BMS) (3)

SD371-3

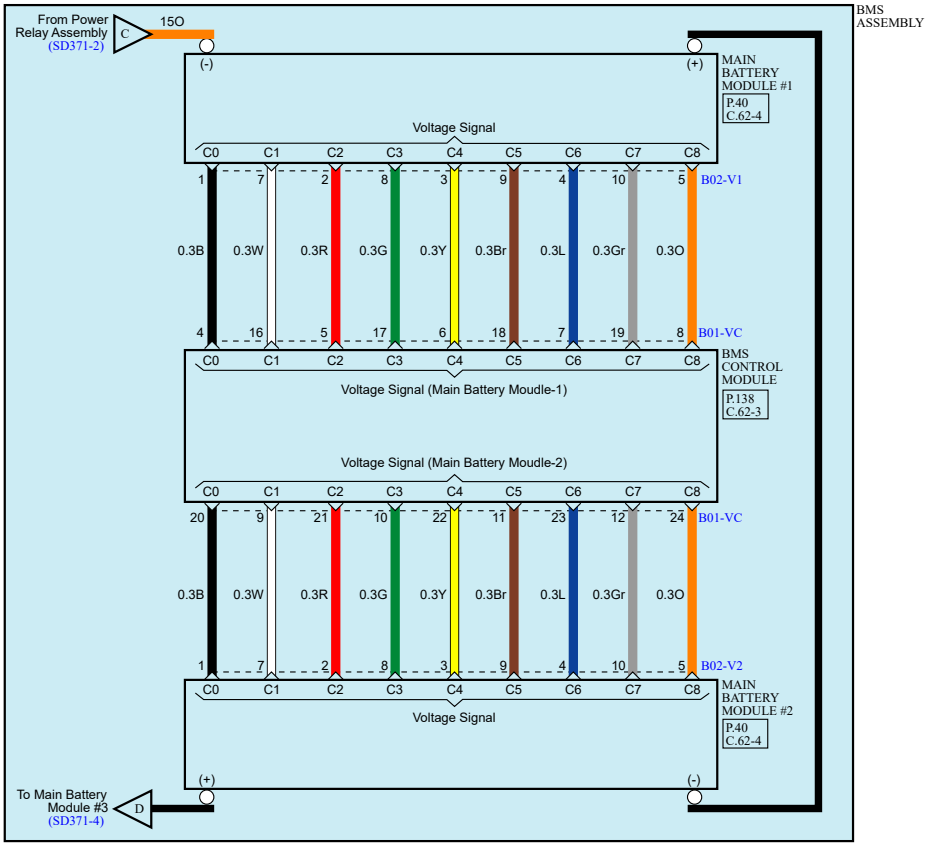

Battery Management System (BMS) (4)

SD371-4

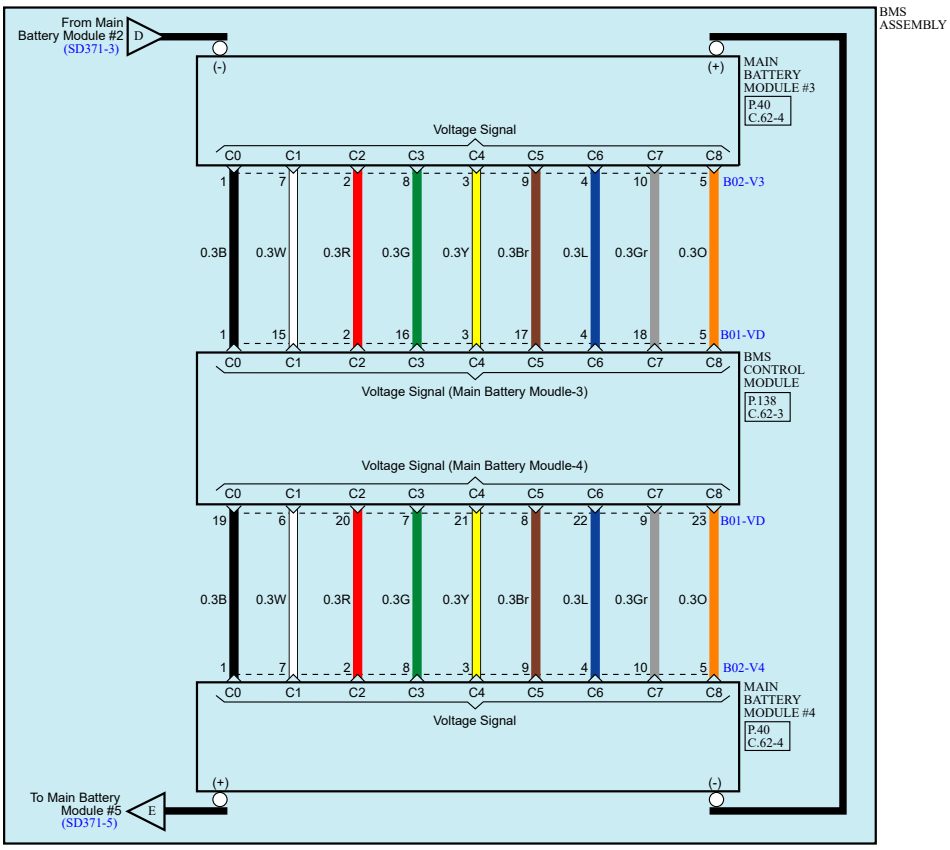

Battery Management System (BMS) (5)

SD371-5

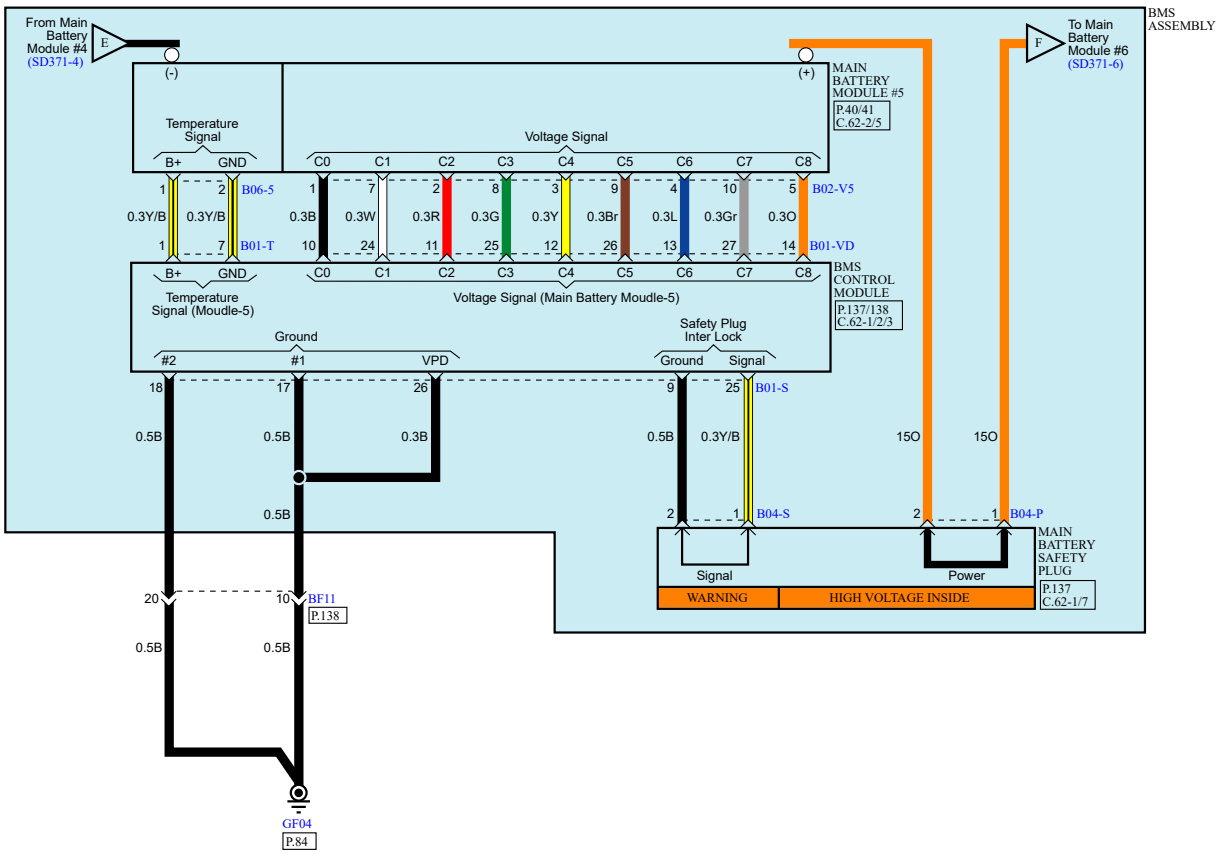

Battery Management System (BMS) (6)

SD371-6

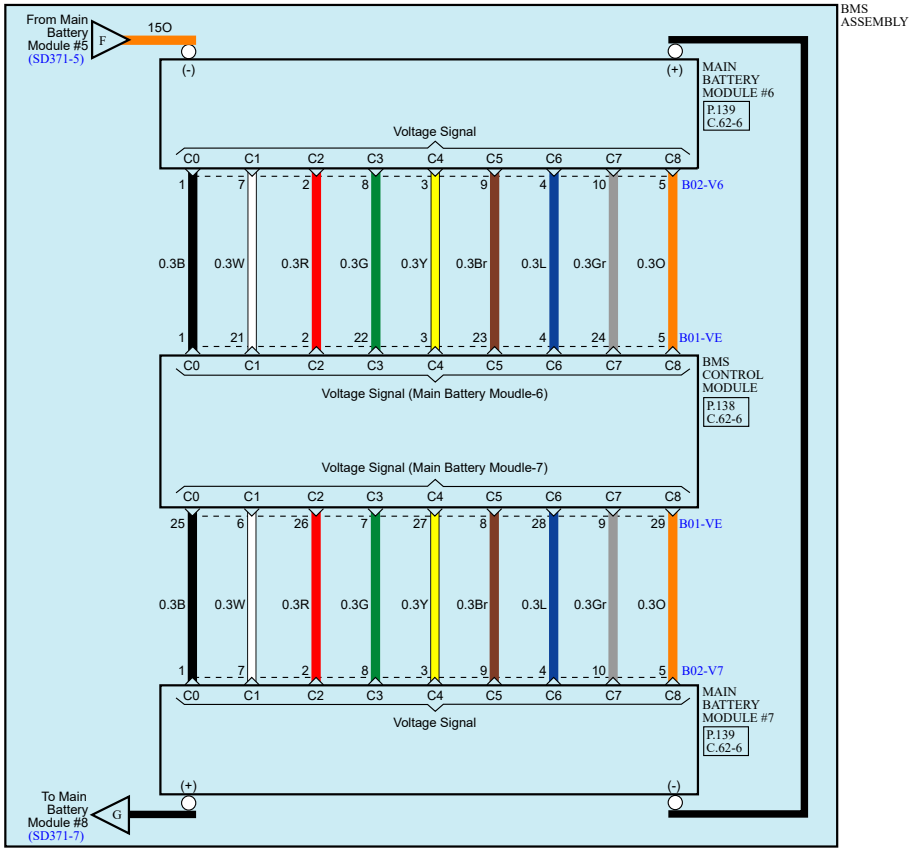

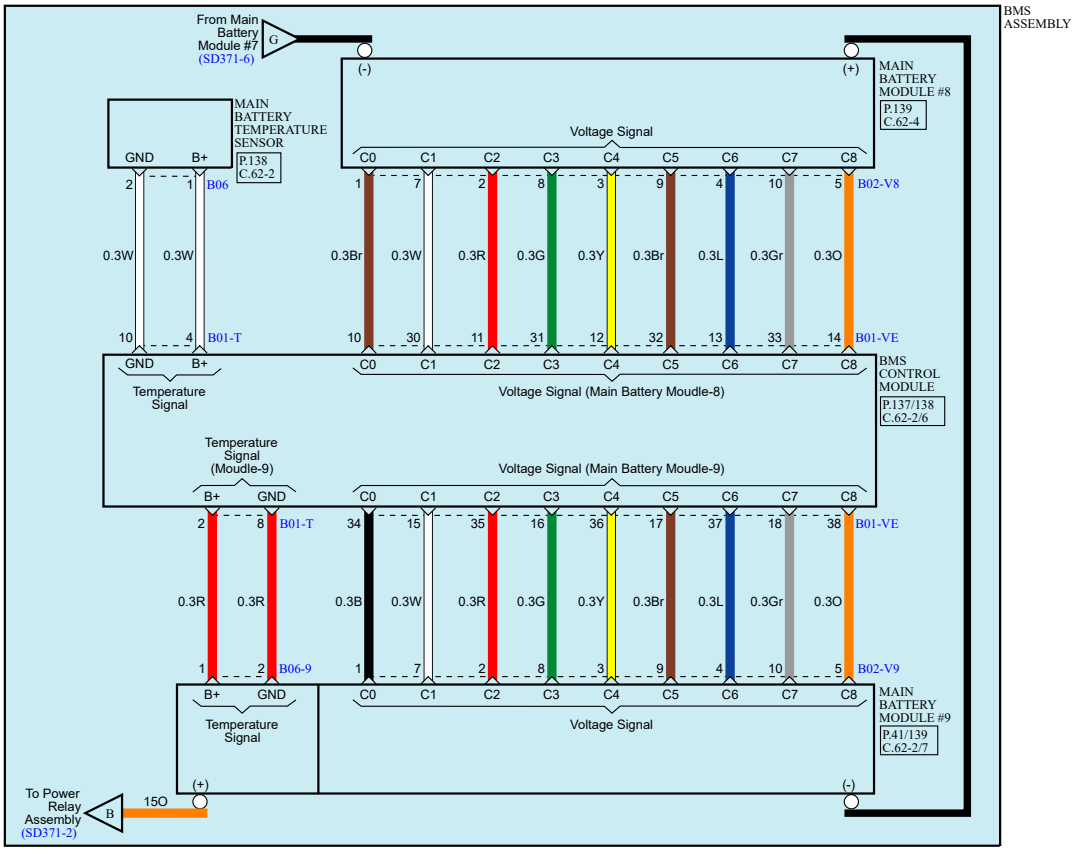
From Main Battery Module #7 (SD371-6)
G
BMS ASSEMBLY
(-)
(+)
MAIN BATTERY MODULE #8
P.139 C.62-4
MAIN BATTERY TEMPERATURE SENSOR
P.138 C.62-2
GND B+
Voltage Signal
C0 C1 C2 C3 C4 C5 C6 C7 C8
2 1 B06
1 7 2 8 3 9 4 10 5 B02-V8
0.3W 0.3W
0.3Br 0.3W 0.3R 0.3G 0.3Y 0.3Br 0.3L 0.3Gr 0.3O
10 4 B01-T
10 30 11 31 12 32 13 33 14 B01-VE
GND B+
Temperature Signal
C0 C1 C2 C3 C4 C5 C6 C7 C8
Voltage Signal (Main Battery Moudle-8)
BMS CONTROL MODULE
P.137/138 C.62-2/6
Temperature Signal (Moudle-9)
Voltage Signal (Main Battery Moudle-9)
B+ GND
C0 C1 C2 C3 C4 C5 C6 C7 C8
2 8 B01-T
34 15 35 16 36 17 37 18 38 B01-VE
0.3R 0.3R
0.3B 0.3W 0.3R 0.3G 0.3Y 0.3Br 0.3L 0.3Gr 0.3O
1 2 B06-9
1 7 2 8 3 9 4 10 5 B02-V9
B+ GND
Temperature Signal
C0 C1 C2 C3 C4 C5 C6 C7 C8
Voltage Signal
MAIN BATTERY MODULE #9
P.41/139 C.62-2/7
(+)
(-)
To Power Relay Assembly (SD371-2)
B
15O