Standard equipment , (AW0)

from April 2010

Protected by copyright. Copying for private or commercial purposes, in part or in whole, is not permitted unless authorised by Volkswagen AG. Volkswagen AG does not guarantee or accept any liability with respect to the correctness of information in this document. Copyright by Volkswagen AG.

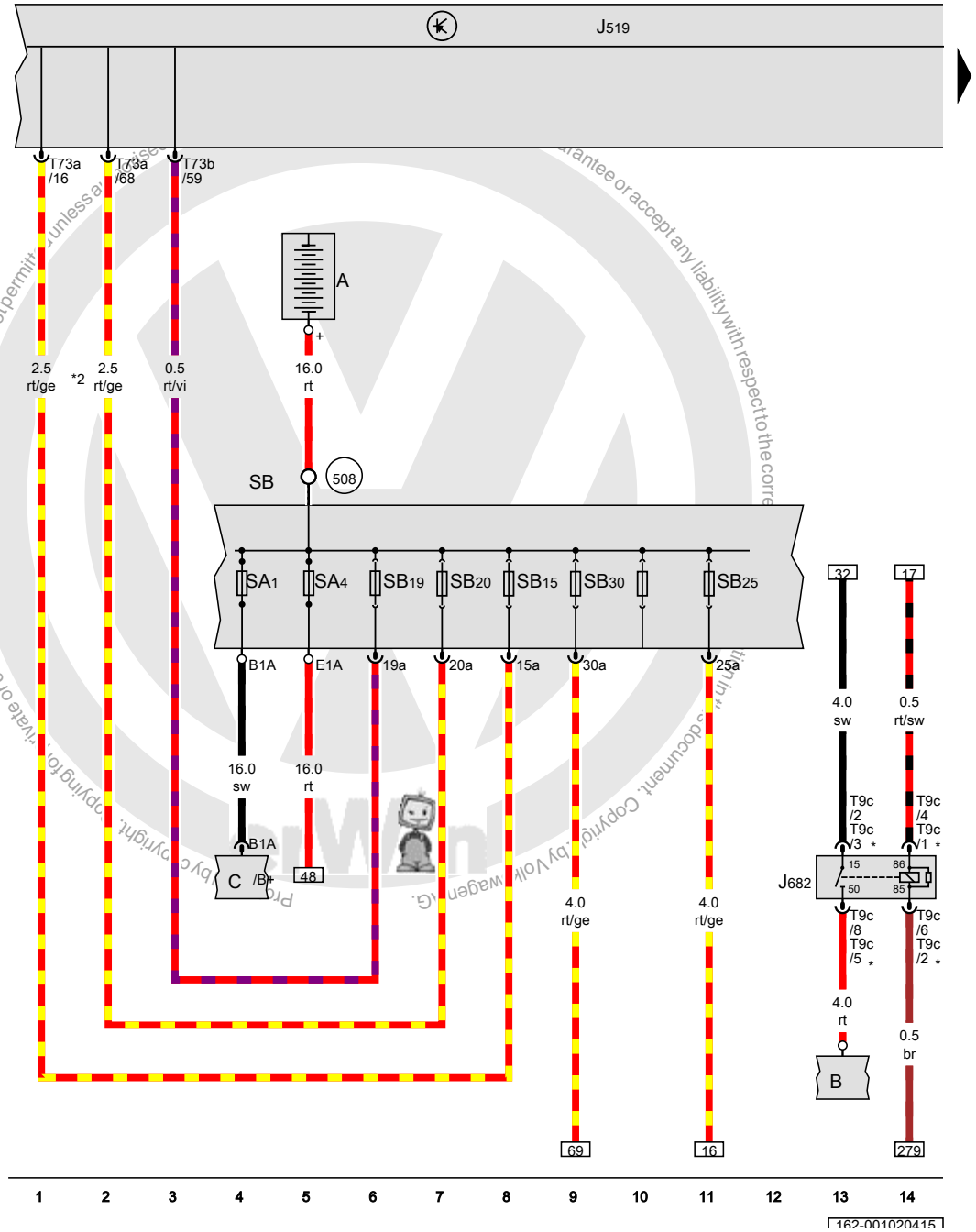

Vehicle electrical control module system, Terminal 50 power supply relay, Fuse 1 (on fuse panel A), Fuse 4 (on fuse panel A), Fuse panel B

A	Battery
B	Starter
C	Generator
J519	Vehicle electrical control module system
J682	Terminal 50 power supply relay
SA1	Fuse 1 (on fuse panel A)
SA4	Fuse 4 (on fuse panel A)
SB	Fuse panel B
SB15	Fuse 15 (on fuse panel B)
SB19	Fuse 19 (on fuse panel B)
SB20	Fuse 20 (on fuse panel B)
SB25	Fuse 25 (on fuse panel B)
SB30	Fuse 30 (on fuse panel B)
T9c	9-pin connector
T73a	73-pin connector
T73b	73-pin connector
508	Terminal 30 threaded connection (on E-box)
*	Running change
*2	Omitted as a running change

ws	=	white
sw	=	black
ro	=	red
rt	=	red
br	=	brown
gn	=	green
bl	=	blue
gr	=	grey
li	=	lilac
vi	=	lilac
ge	=	yellow
or	=	orange
rs	=	pink

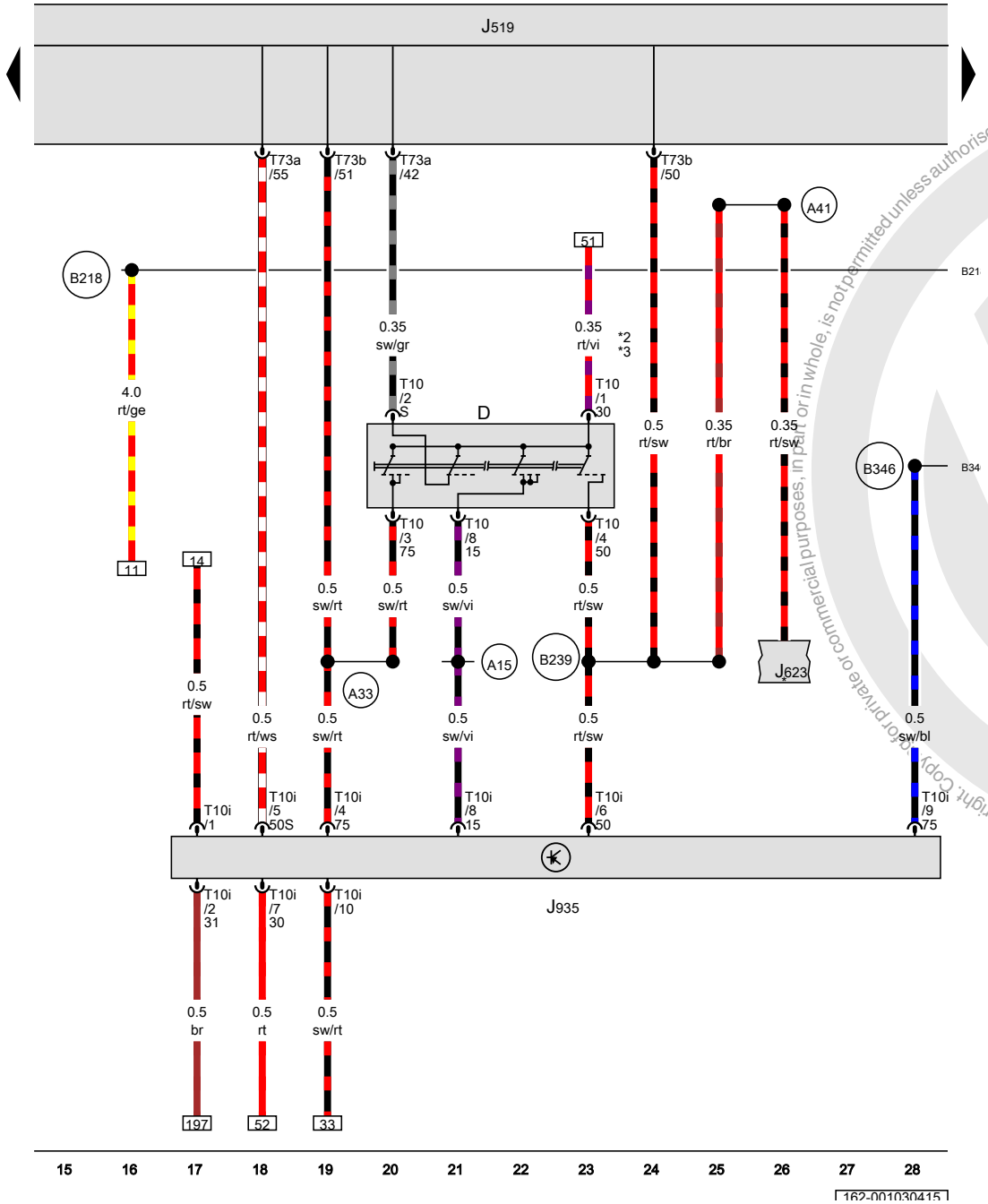

Ignition/starter switch, Vehicle electrical control module system, Converter box

D	Ignition/starter switch
J519	Vehicle electrical control module system
J623	Engine control module
J935	Converter box
T10	10-pin connector
T10i	10-pin connector
T73a	73-pin connector
T73b	73-pin connector
A15	Plus connection (15) (in instrument cluster wiring harness)
A33	Connection 75 (in instrument panel wiring harness)
A41	Positive connection (50) (in instrument panel wiring harness)
B218	Positive connection 6 (30) (in interior wiring harness)
B239	Positive connection 1 (50) (in interior wiring harness)
B346	Connection 75 (in main wiring harness) 1
*	Refer to applicable engine wiring diagram
*2	The color of the wires depends on vehicle equipment
*3	Diameter depends on equipment

ws	=	white
sw	=	black
ro	=	red
rt	=	red
br	=	brown
gn	=	green
bl	=	blue
gr	=	grey
li	=	lilac
vi	=	lilac
ge	=	yellow
or	=	orange
rs	=	pink

Protected by copyright. Copy for private or commercial purposes, in part or in whole, is not permitted unless authorised by Volkswagen AG. Volkswagen AG does not guarantee or accept any liability with respect to the correctness of information in this document. Copyright by Volkswagen AG.

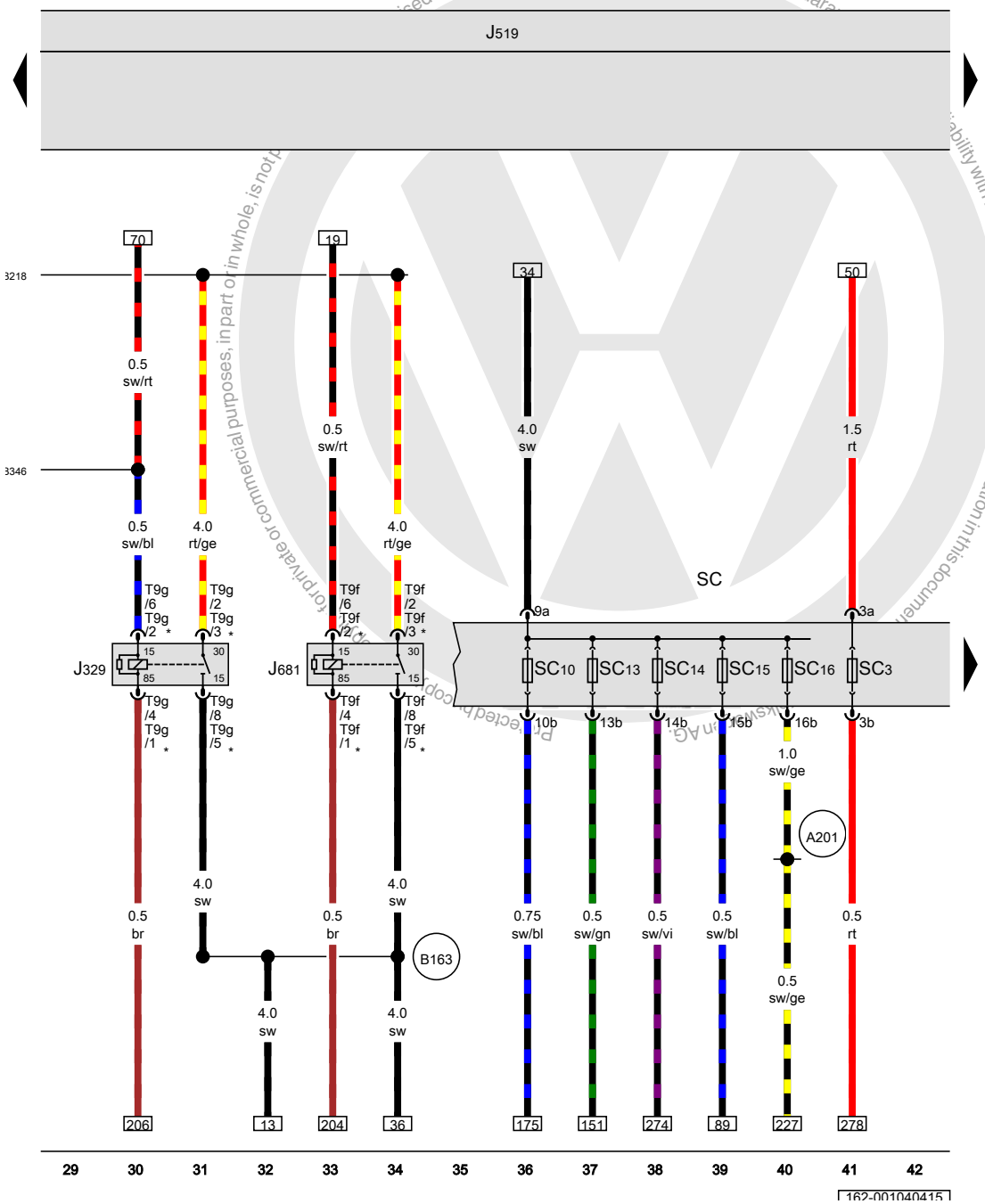

Terminal 15 power supply relay, Vehicle electrical control module system, Terminal 15 power supply relay 2, Fuse panel C

J329	Terminal 15 power supply relay
J519	Vehicle electrical control module system
J681	Terminal 15 power supply relay 2
SC	Fuse panel C
SC3	Fuse 3 (on fuse panel C)
SC10	Fuse 10 (on fuse panel C)
SC13	Fuse 13 (on fuse panel C)
SC14	Fuse 14 (on fuse panel C)
SC15	Fuse 15 (on fuse panel C)
SC16	Fuse 16 (on fuse panel C)
T9f	9-pin connector
T9g	9-pin connector
A201	Positive connection 6 (15a) (in instrument panel wiring harness)
B163	Positive connection 1 (15) (in interior wiring harness)
B218	Positive connection 6 (30) (in interior wiring harness)
B346	Connection 75 (in main wiring harness) 1
*	Running change

ws	=	white
sw	=	black
ro	=	red
rt	=	red
br	=	brown
gn	=	green
bl	=	blue
gr	=	grey
li	=	lilac
vi	=	lilac
ge	=	yellow
or	=	orange
rs	=	pink

Protected by Volkswagen AG. Volkswagen AG does not guarantee the correctness of information in this document for private or commercial purposes, in part or in whole, is not permitted without the consent of Volkswagen AG.

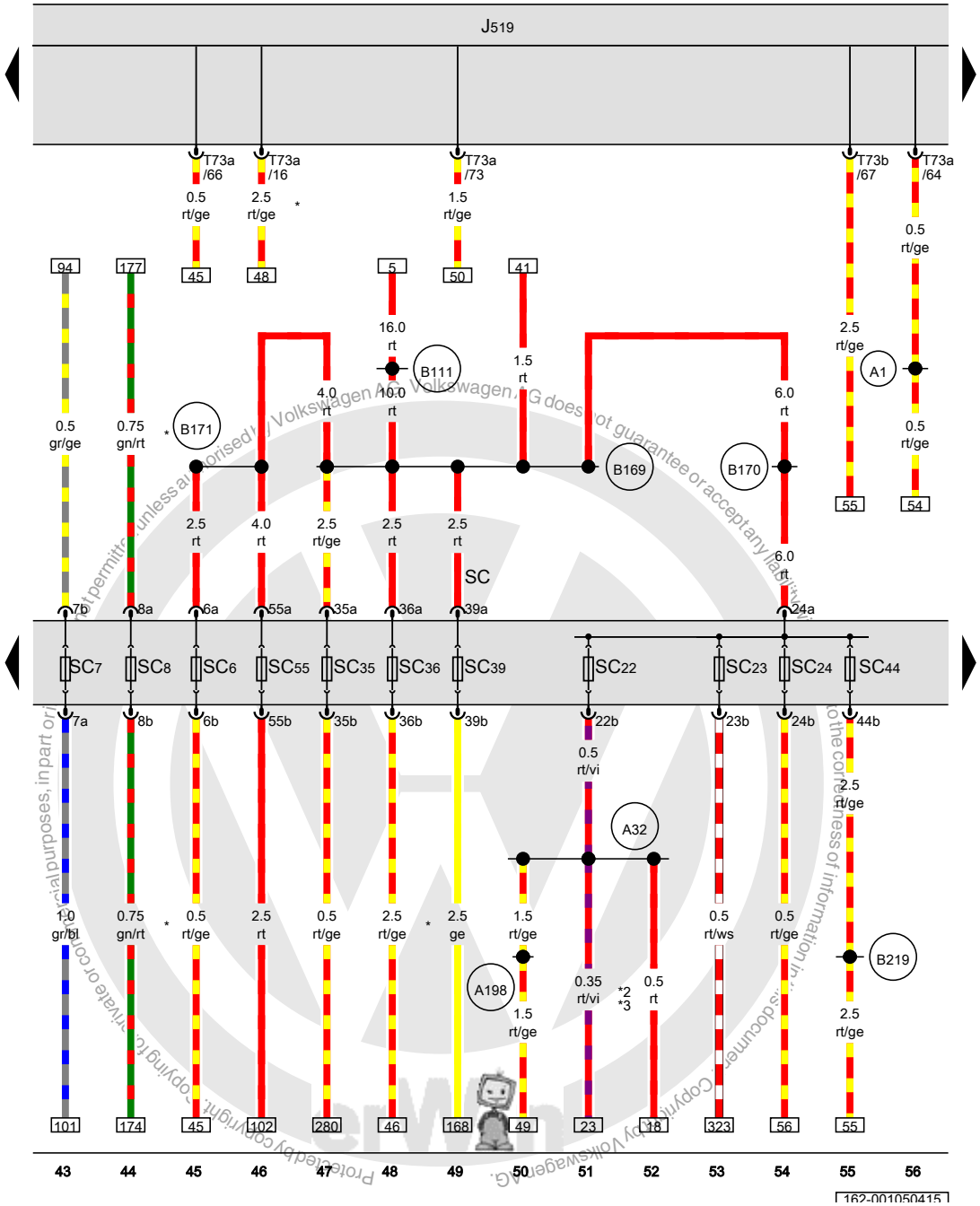

Vehicle electrical control module system, Fuse panel C

J519	Vehicle electrical control module system
SC	Fuse panel C
SC6	Fuse 6 (on fuse panel C)
SC7	Fuse 7 (on fuse panel C)
SC8	Fuse 8 (on fuse panel C)
SC22	Fuse 22 (on fuse panel C)
SC23	Fuse 23 (on fuse panel C)
SC24	Fuse 24 (on fuse panel C)
SC35	Fuse 35 (on fuse panel C)
SC36	Fuse 36 (on fuse panel C)
SC39	Fuse 39 (on fuse panel C)
SC44	Fuse 44 (on fuse panel C)
SC55	Fuse 55 (on fuse panel C)
T73a	73-pin connector
T73b	73-pin connector
A1	Positive connection (30a) (in instrument panel wiring harness)
A32	Positive connection (30) (in instrument panel wiring harness)
A198	Positive connection 6 (30a) (in instrument panel wiring harness)
B111	Positive connection 1 (30a) (in interior wiring harness)
B169	Positive connection 1 (30) (in interior wiring harness)
B170	Positive connection 2 (30) (in interior wiring harness)
B171	Positive connection 3 (30) (in interior wiring harness)
B219	Positive connection 4 (30a) (in interior wiring harness)
*	Running change
*2	The color of the wires depends on vehicle equipment
*3	Diameter depends on equipment

ws	=	white
sw	=	black
ro	=	red
rt	=	red
br	=	brown
gn	=	green
bl	=	blue
gr	=	grey
li	=	lilac
vi	=	lilac
ge	=	yellow
or	=	orange
rs	=	pink

Protected by copyright. Copying for private or commercial purposes, in part or in whole, is not permitted unless authorised by Volkswagen AG. Volkswagen AG does not guarantee or accept any liability with respect to the correctness of information in this document. Copyright by Volkswagen AG.

Vehicle electrical control module system, Terminal 75 power supply relay 1, Fuse panel C

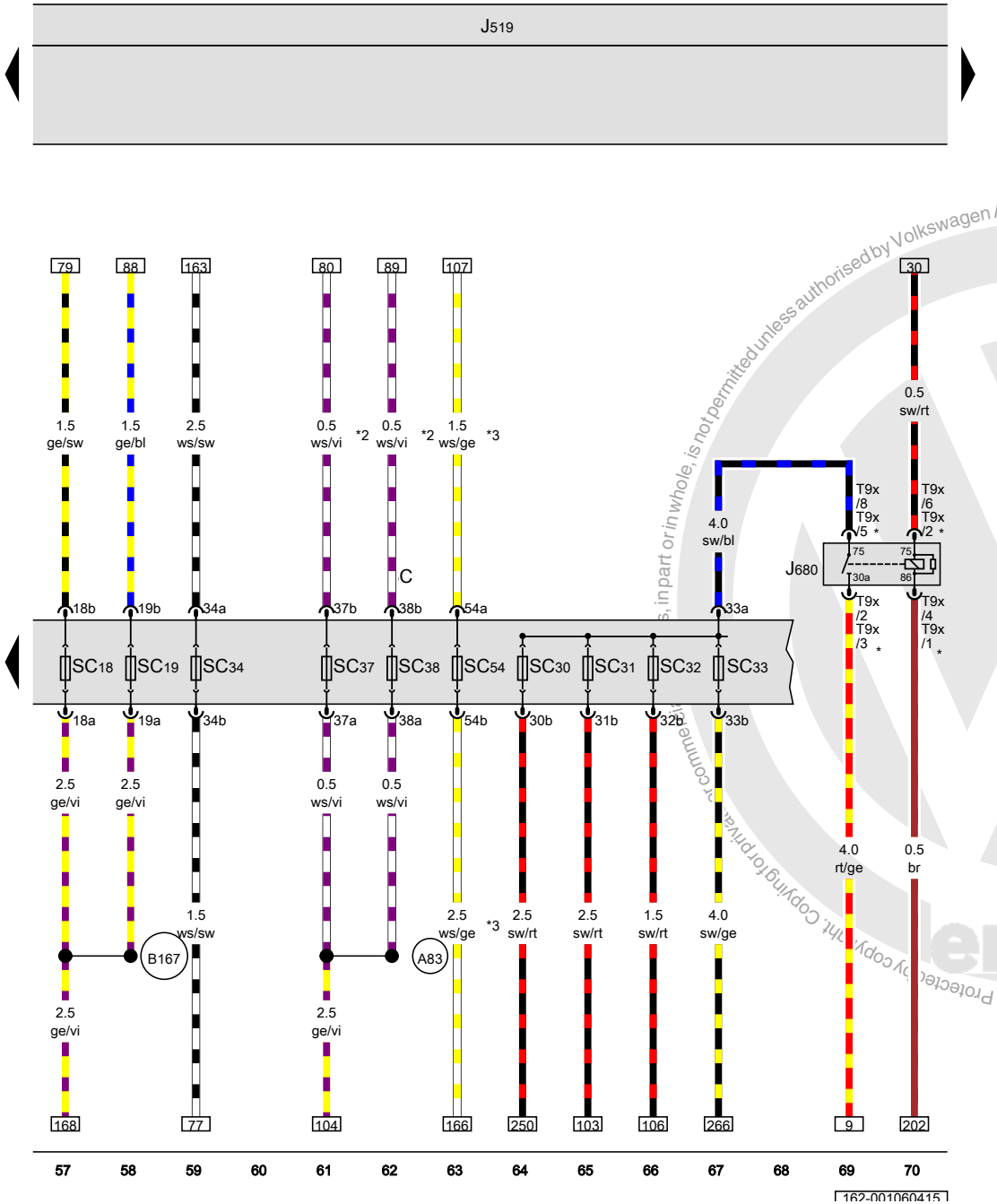

J519	Vehicle electrical control module system
J680	Terminal 75 power supply relay 1
SC	Fuse panel C
SC18	Fuse 18 (on fuse panel C)
SC19	Fuse 19 (on fuse panel C)
SC30	Fuse 30 (on fuse panel C)
SC31	Fuse 31 (on fuse panel C)
SC32	Fuse 32 (on fuse panel C)
SC33	Fuse 33 (on fuse panel C)
SC34	Fuse 34 (on fuse panel C)
SC37	Fuse 37 (on fuse panel C)
SC38	Fuse 38 (on fuse panel C)
SC54	Fuse 54 (on fuse panel C)
T9x	9-pin connector
A83	Daytime running lamps connection (in instrument panel wiring harness)
B167	Connection 56b (in interior wiring harness)
*	Running change
*2	Only for vehicles with daytime running lamps
*3	USA only

ws	=	white
sw	=	black
ro	=	red
rt	=	red
br	=	brown
gn	=	green
bl	=	blue
gr	=	grey
li	=	lilac
vi	=	lilac
ge	=	yellow
or	=	orange
rs	=	pink

Protected by copyright. Copying for private or commercial purposes, in part or in whole, is not permitted unless authorised by Volkswagen AG. Volkswagen AG does not give any warranty with respect to the correctness of information in this document. Copyright by Volkswagen AG.

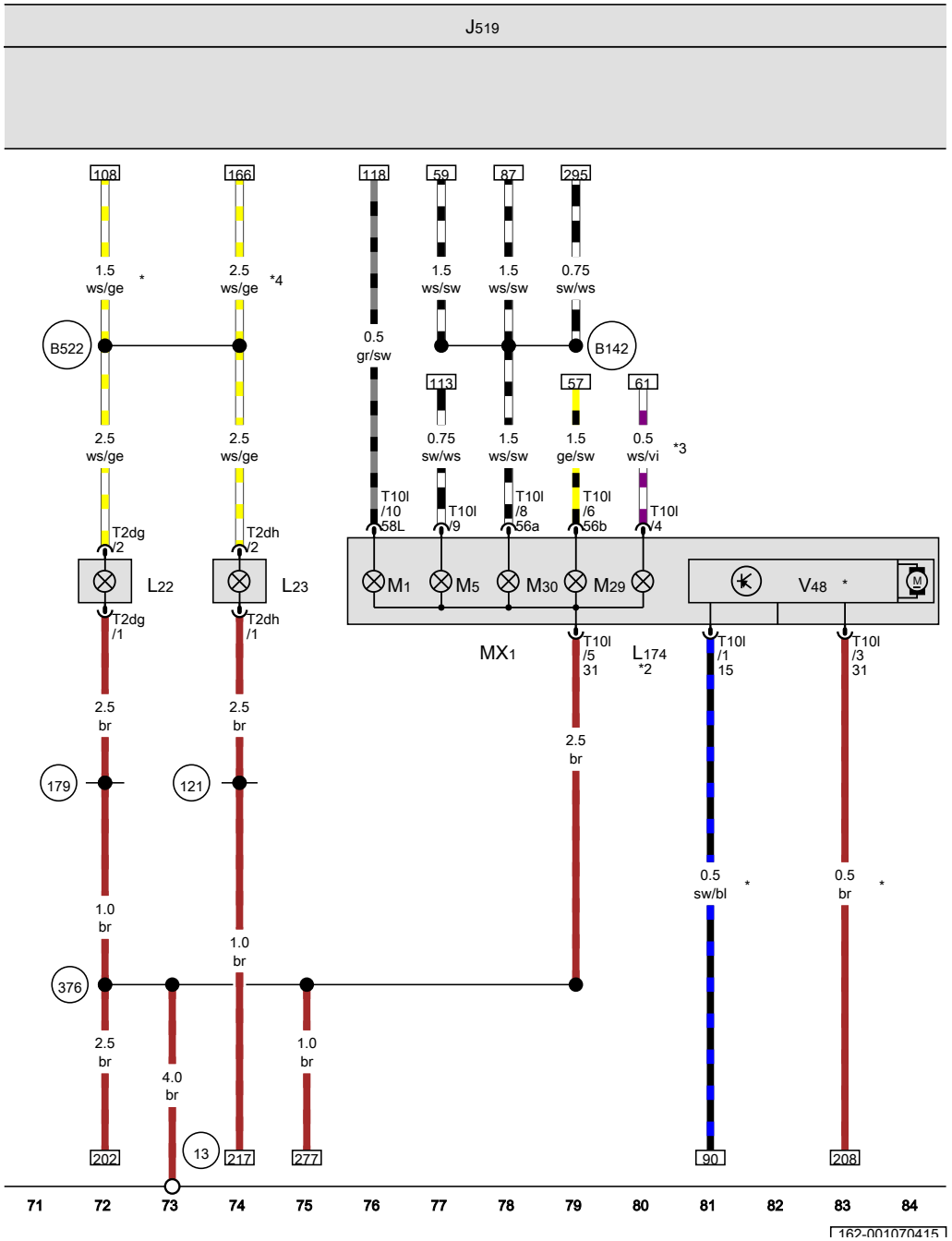

Vehicle electrical control module system, Left front fog lamp bulb, Right front fog lamp bulb, Left position lamp bulb, Left front headlamp, Left front turn signal bulb, Left headlamp beam adjustment motor

J519	Vehicle electrical control module system
L22	Left front fog lamp bulb
L23	Right front fog lamp bulb
L174	Left daytime running lamp bulb
M1	Left position lamp bulb
MX1	Left front headlamp
M5	Left front turn signal bulb
M29	Left low beam headlamp bulb
M30	Left high beam headlamp bulb
T2dg	Double connector
T2dh	Double connector
T10l	10-pin connector
V48	Left headlamp beam adjustment motor
13	Ground connection in engine compartment, right
121	Ground connection 2 (in right front wiring harness)
179	Ground connection (in left headlamp wiring harness)
376	Ground connection 11 (in main wiring harness)
B142	Positive connection 2 (56a) (in interior wiring harness)
B522	Fog lamp connection (in main wiring harness)
*	Not for USA
*2	Depending on equipment
*3	Only for vehicles with daytime running lamps
*4	USA only

ws	=	white
sw	=	black
ro	=	red
rt	=	red
br	=	brown
gn	=	green
bl	=	blue
gr	=	grey
li	=	lilac
vi	=	lilac
ge	=	yellow
or	=	orange
rs	=	pink

Protected by copyright. Copyright by Volkswagen AG. Copying for private or commercial purposes, in part or in whole, is not permitted unless authorised by Volkswagen AG. Volkswagen AG does not guarantee or accept any liability with respect to the correctness of information in this document.

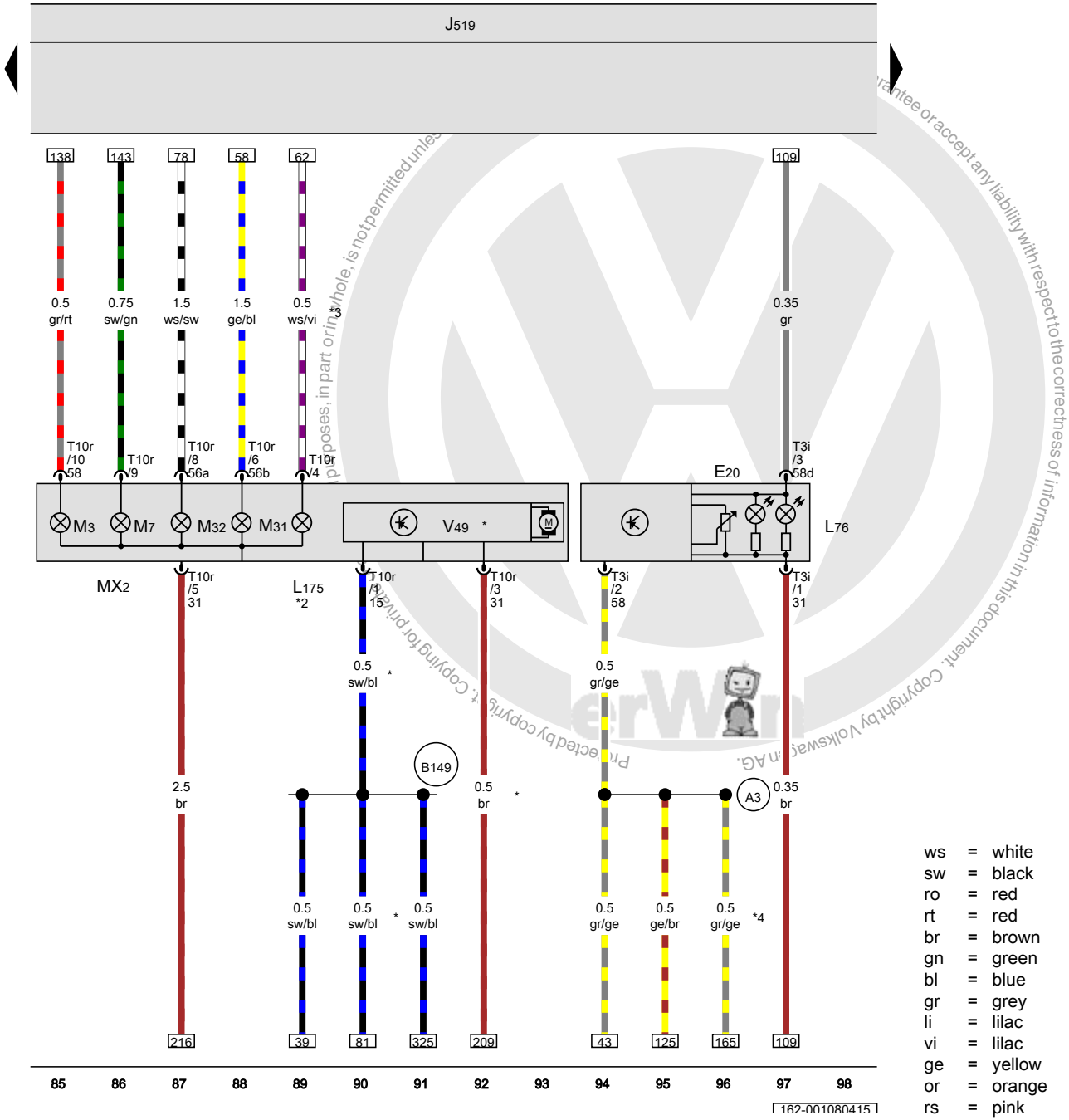

Instrument panel and switch illumination dimmer switch, Vehicle electrical control module system, Right front headlamp, Right position lamp bulb, Right front turn signal bulb, Right headlamp beam adjustment motor

E20	Instrument panel and switch illumination dimmer switch
J519	Vehicle electrical control module system
L76	Push button illumination bulb
L175	Right daytime running lamp bulb
MX2	Right front headlamp
M3	Right position lamp bulb
M7	Right front turn signal bulb
M31	Right low beam headlamp bulb
M32	Right high beam headlamp bulb
T3i	3-pin connector
T10r	10-pin connector
V49	Right headlamp beam adjustment motor
A3	Positive connection (58) (in instrument panel wiring harness)
B149	Positive connection 2 (15a) (in interior wiring harness)
*	Not for USA
*2	Depending on equipment
*3	Only for vehicles with daytime running lamps
*4	USA only

ws	=	white
sw	=	black
ro	=	red
rt	=	red
br	=	brown
gn	=	green
bl	=	blue
gr	=	grey
li	=	lilac
vi	=	lilac
ge	=	yellow
or	=	orange
rs	=	pink

Protected by copyright. Copying for private or commercial purposes, in part or in whole, is not permitted unless authorized. Copyright by Volkswagen AG. We do not guarantee or accept any liability with respect to the correctness of information in this document.

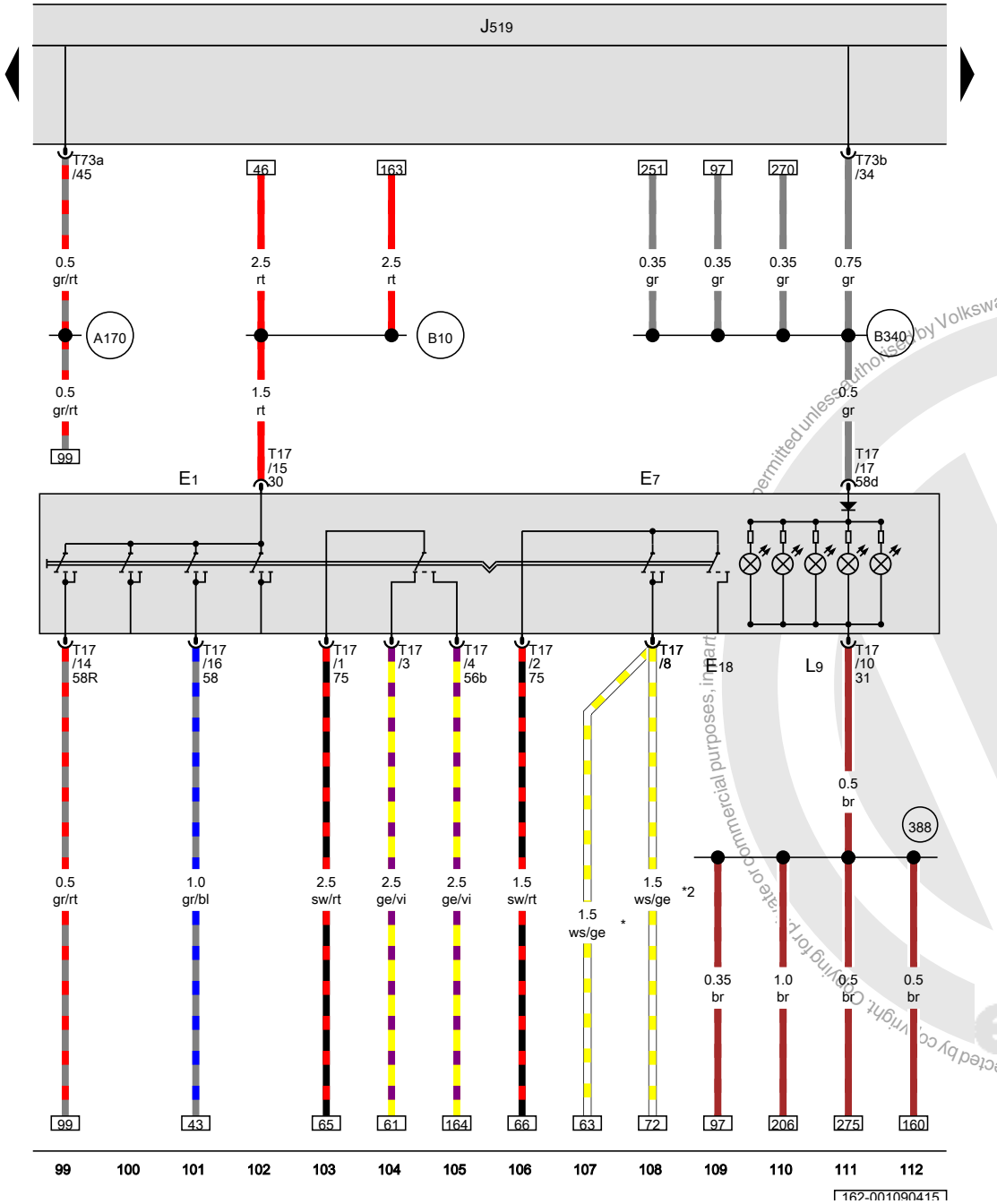

Light switch, Fog lamp switch, Rear fog lamp switch, Vehicle electrical control module system

E1	Light switch
E7	Fog lamp switch
E18	Rear fog lamp switch
J519	Vehicle electrical control module system
L9	Headlamp switch illumination bulb
T17	17-pin connector
T73a	73-pin connector
T73b	73-pin connector
388	Ground connection 23 (in main wiring harness)
A170	Connection 58R (in instrument panel wiring harness) 2
B10	Positive connection (30) (in light switch wiring harness)
B340	Connection 58d (in main wiring harness) 1
*	USA only
*2	Not for USA

ws	=	white
sw	=	black
ro	=	red
rt	=	red
br	=	brown
gn	=	green
bl	=	blue
gr	=	grey
li	=	lilac
vi	=	lilac
ge	=	yellow
or	=	orange
rs	=	pink

Protected by copyright. Copying for private or commercial purposes, in part or in whole, is not permitted unless authorised by Volkswagen AG. Volkswagen AG does not guarantee or accept any liability with respect to the correctness of information in this document. Copyright by Volkswagen AG.

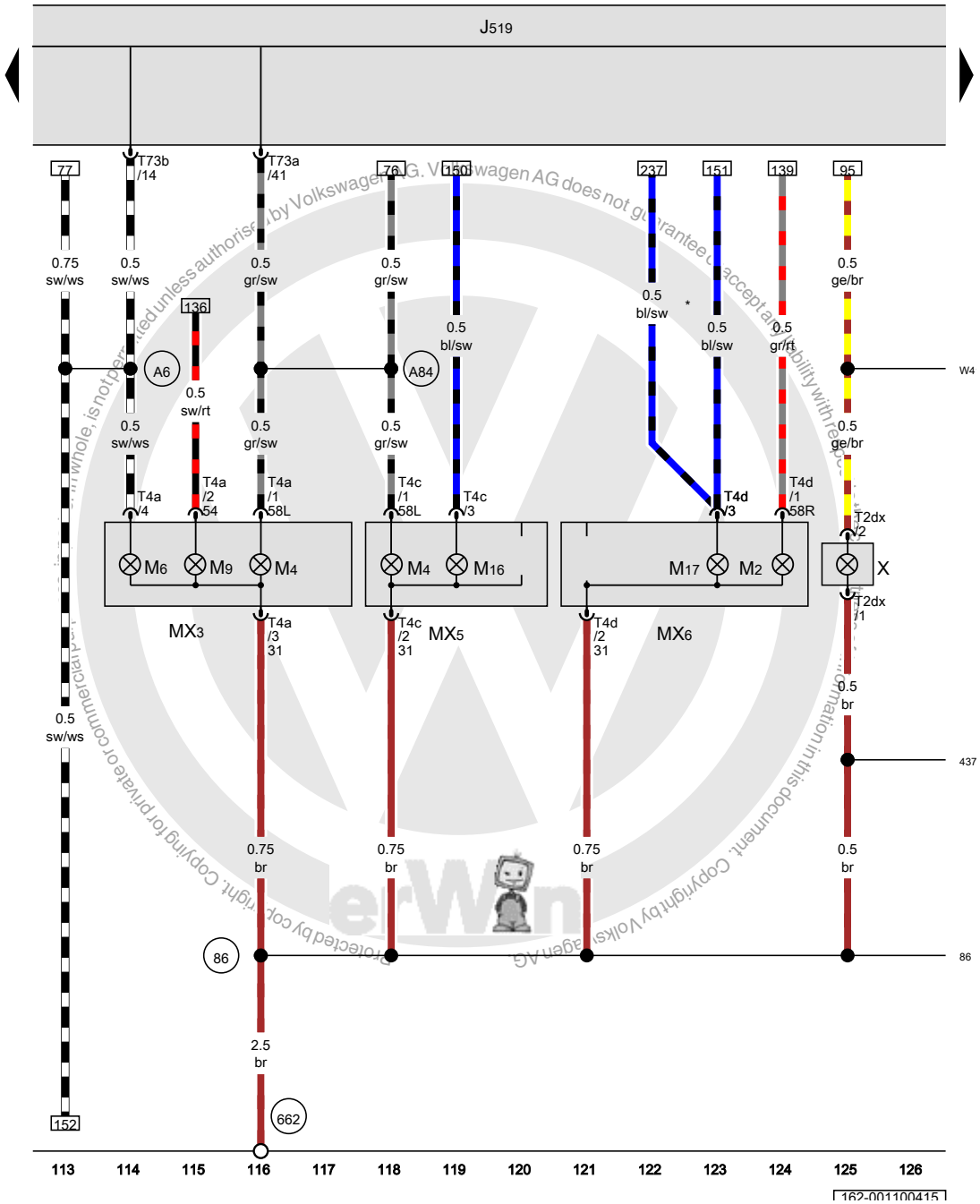

Vehicle electrical control module system, Left tail lamp, Left tail lamp 2, Left rear turn signal bulb, Right tail lamp 2, Left brake lamp bulb, Left back-up lamp bulb, Right back-up lamp bulb

J519	Vehicle electrical control module system
M2	Right tail lamp bulb
MX3	Left tail lamp
M4	Left tail lamp bulb
MX5	Left tail lamp 2
M6	Left rear turn signal bulb
MX6	Right tail lamp 2
M9	Left brake lamp bulb
M16	Left back-up lamp bulb
M17	Right back-up lamp bulb
T2dx	Double connector
T4a	4-pin connector
T4c	4-pin connector
T4d	4-pin connector
T73a	73-pin connector
T73b	73-pin connector
X	License plate lamp
86	Ground connection 1 (in rear wiring harness)
437	Ground connection (in license plate lamp wiring harness)
662	Ground connection in left rear side panel
A6	Left turn signal positive connection (in instrument panel wiring harness)
A84	Connection 58L (in instrument panel wiring harness)
W41	Positive connection (58) (in license plate lamp wiring harness)
*	Only for vehicles with automatic dimming interior rearview mirror

ws	=	white
sw	=	black
ro	=	red
rt	=	red
br	=	brown
gn	=	green
bl	=	blue
gr	=	grey
li	=	lilac
vi	=	lilac
ge	=	yellow
or	=	orange
rs	=	pink

Protected by copyright. Copying for private or commercial purposes, in whole, is not permitted unless authorised by Volkswagen AG. Volkswagen AG does not guarantee or accept any liability with respect to the correctness of information in this document. Copyright by Volkswagen AG

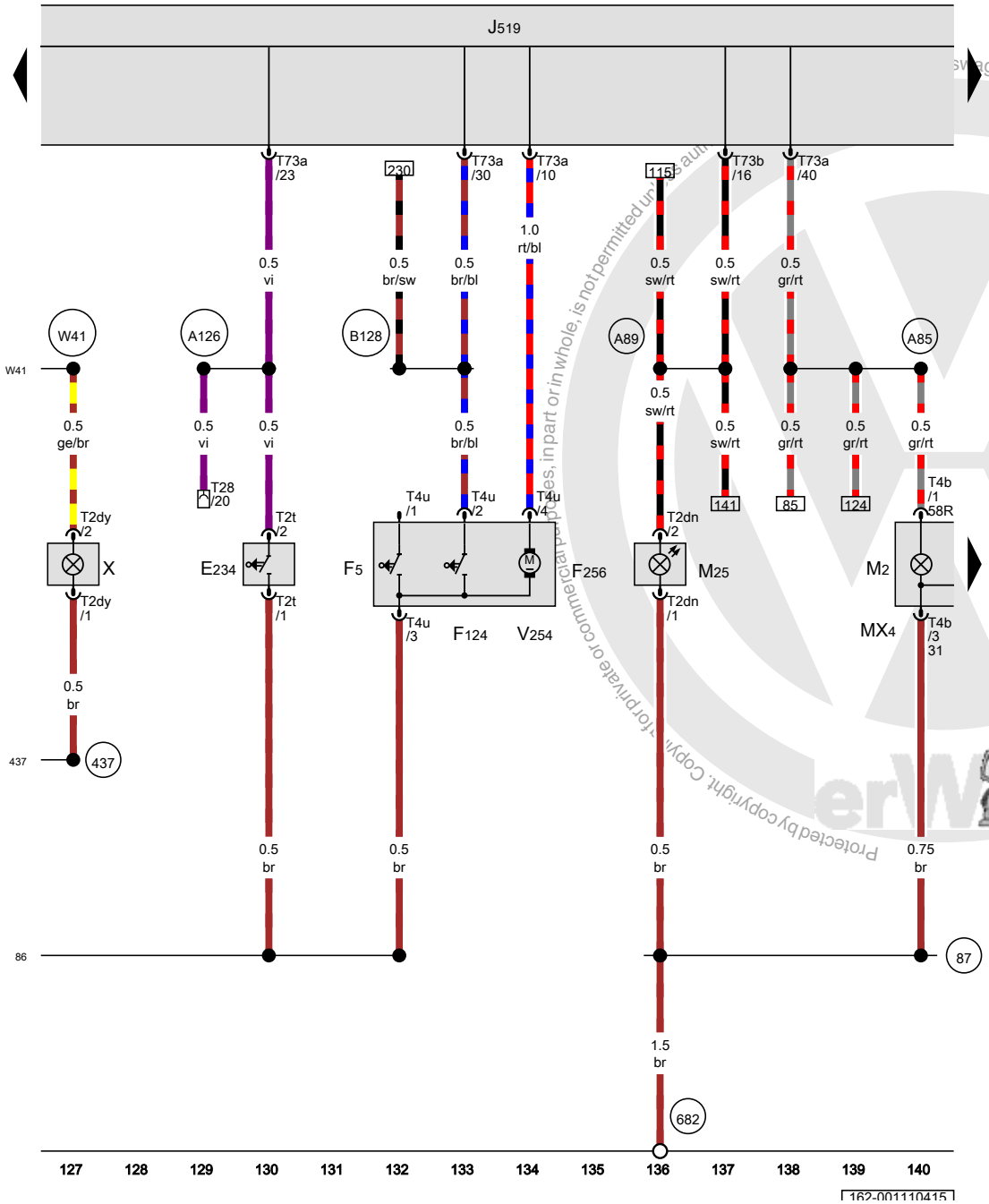

ws = white
sw = black
ro = red
rt = red
br = brown
gn = green
bl = blue
gr = grey
li = lilac
vi = lilac
ge = yellow
or = orange
rs = pink

Release button in rear lid handle, Luggage compartment lamp switch, Rear lid lock/alarm/central locking switch, Rear lid lock unit, Vehicle electrical control module system, Right tail lamp, High-mounted brake lamp bulb, Rear lid opening motor, License plate lamp

E234	Release button in rear lid handle
F5	Luggage compartment lamp switch
F124	Rear lid lock/alarm/central locking switch
F256	Rear lid lock unit
J519	Vehicle electrical control module system
M2	Right tail lamp bulb
MX4	Right tail lamp
M25	High-mounted brake lamp bulb
T2dn	Double connector
T2dy	Double connector
T2t	Double connector
T4b	4-pin connector
T4u	4-pin connector
T28	28-pin connector, Left A-pillar, bottom
T73a	73-pin connector
T73b	73-pin connector
V254	Rear lid opening motor
X	License plate lamp
86	Ground connection 1 (in rear wiring harness)
87	Ground connection 2 (in rear wiring harness)
437	Ground connection (in license plate lamp wiring harness)
682	Ground connection 2 in right rear side panel
A85	Connection 58R (in instrument panel wiring harness)
A89	Connection 54 (in instrument panel wiring harness) 2
A126	Rear lid contact switch connection (in instrument panel wiring harness)
B128	Luggage compartment lamp connection (in interior wiring harness)
W41	Positive connection (58) (in license plate lamp wiring harness)

Volkswagen AG does not guarantee or accept any liability with respect to the correctness of information in this document. Copyright by Volkswagen AG. Protected by copyright. Copying for private or commercial purposes, in part or in whole, is not permitted unless authorized by Volkswagen AG.

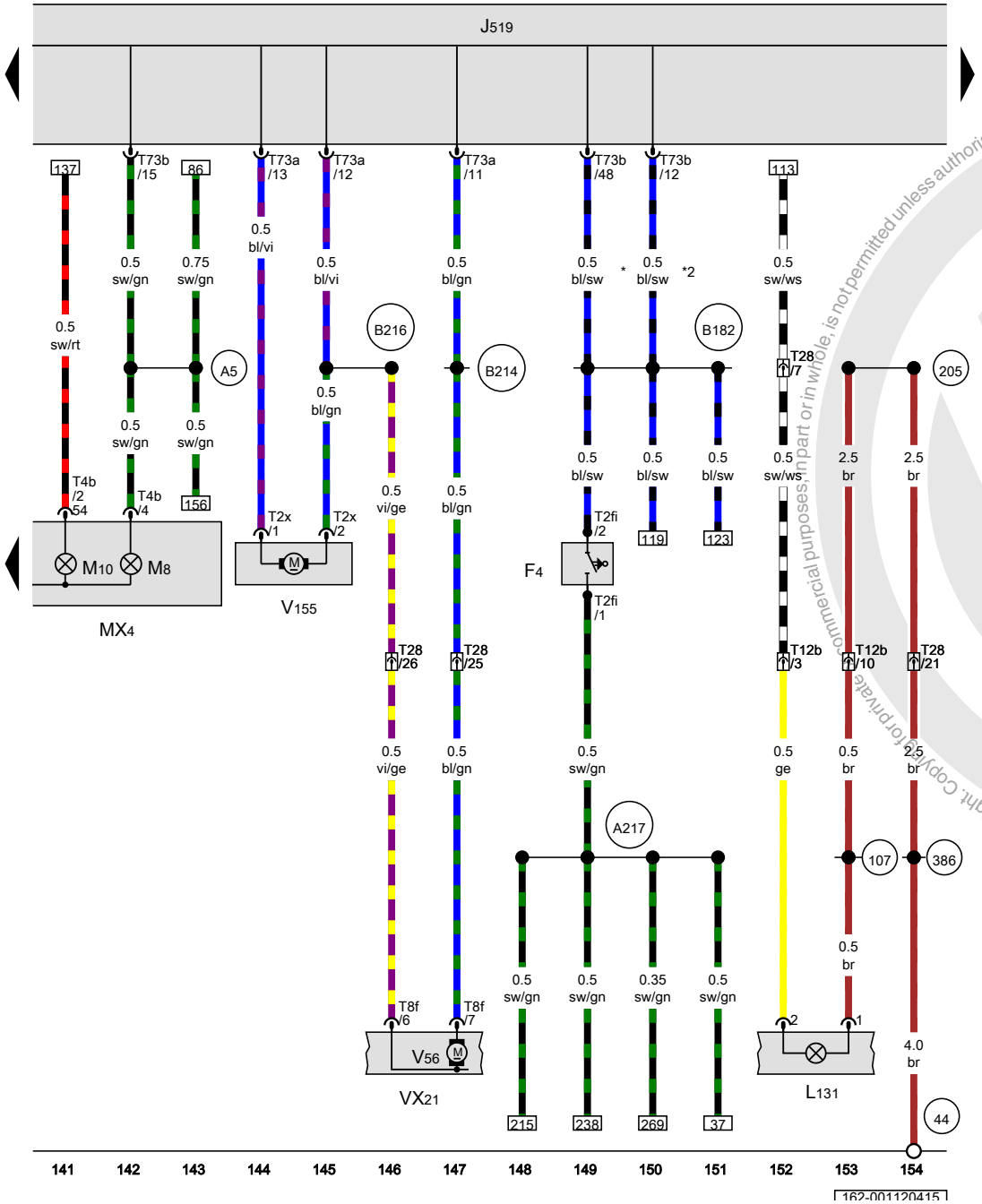

ws = white
sw = black
ro = red
rt = red
br = brown
gn = green
bl = blue
gr = grey
li = lilac
vi = lilac
ge = yellow
or = orange
rs = pink

Back-up lamp switch, Vehicle electrical control module system, Driver exterior rearview mirror turn signal bulb, Right tail lamp, Right rear turn signal bulb, Right brake lamp bulb, Driver door central locking system motor, Fuel filler door unlock motor

F4	Back-up lamp switch
J519	Vehicle electrical control module system
L131	Driver exterior rearview mirror turn signal bulb
MX4	Right tail lamp
M8	Right rear turn signal bulb
M10	Right brake lamp bulb
T2fi	Double connector
T2x	Double connector
T4b	4-pin connector
T8f	8-pin connector
T12b	12-pin connector, in the driver door
T28	28-pin connector, Left A-pillar, bottom
T73a	73-pin connector
T73b	73-pin connector
VX21	Driver door lock unit
V56	Driver door central locking system motor
V155	Fuel filler door unlock motor
44	Ground connection on A-pillar, lower left
107	Ground connection (in exterior mirror wiring harness)
205	Ground connection (in driver door wiring harness)
386	Ground connection 21 (in main wiring harness)
A5	Right turn signal positive connection (in instrument panel wiring harness)
A217	Positive connection 8 (15a) (in instrument panel wiring harness)
B182	Connection RF (in interior wiring harness)
B214	Central locking connection 1 (in interior wiring harness)
B216	Central locking connection 3 (in interior wiring harness)
*	Only for vehicles with a manual transmission
*2	Only for vehicles with automatic transmission

Protected by copyright. Copyright for private or commercial purposes, in part or in whole, is not permitted unless authorised by Volkswagen AG. Volkswagen AG does not guarantee or accept any liability with respect to the correctness of information in this document. Copyright by Volkswagen AG.

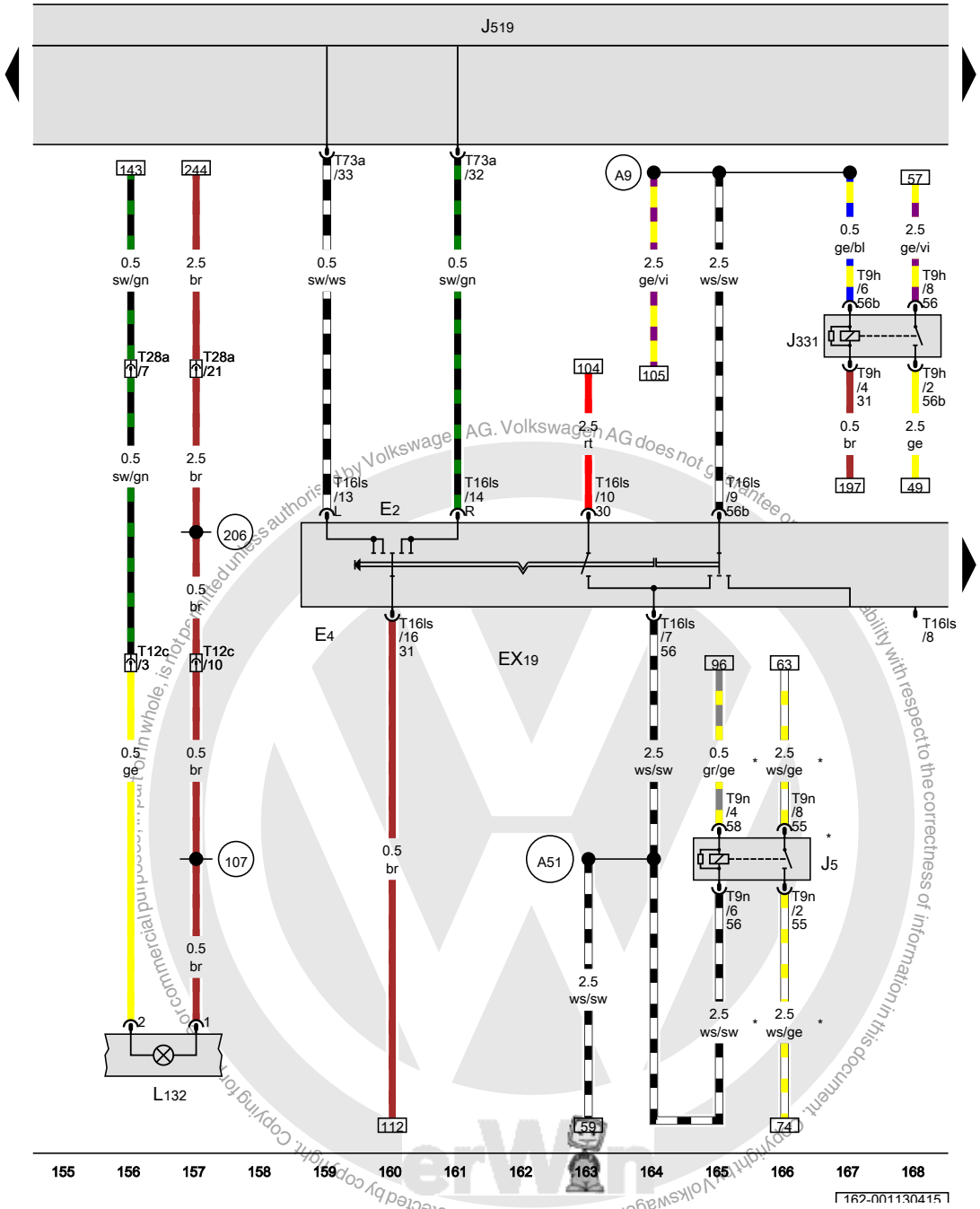

Turn signal switch, Headlamp dimmer/flasher switch, Left steering column switch, Vehicle electrical control module system, Front passenger exterior rearview mirror turn signal bulb

E2	Turn signal switch
E4	Headlamp dimmer/flasher switch
EX19	Left steering column switch
J5	Fog lamp relay
J331	Low beam relay
J519	Vehicle electrical control module system
L132	Front passenger exterior rearview mirror turn signal bulb
T9h	9-pin connector
T9n	9-pin connector
T12c	12-pin connector, in the front passenger door
T16ls	16-pin connector
T28a	28-pin connector, Right A-pillar, bottom
T73a	73-pin connector
107	Ground connection (in exterior mirror wiring harness)
206	Ground connection (in front passenger door wiring harness)
A9	Positive connection (56b) (in instrument cluster wiring harness)
A51	Connection 56 (in instrument panel wiring harness)
*	USA only

ws	=	white
sw	=	black
ro	=	red
rt	=	red
br	=	brown
gn	=	green
bl	=	blue
gr	=	grey
li	=	lilac
vi	=	lilac
ge	=	yellow
or	=	orange
rs	=	pink

Protected by copyright. Copying for commercial purposes, in whole, is not permitted unless authorised by Volkswagen AG. Volkswagen AG does not guarantee or assume any liability with respect to the correctness of information in this document. Copyright by Volkswagen AG.

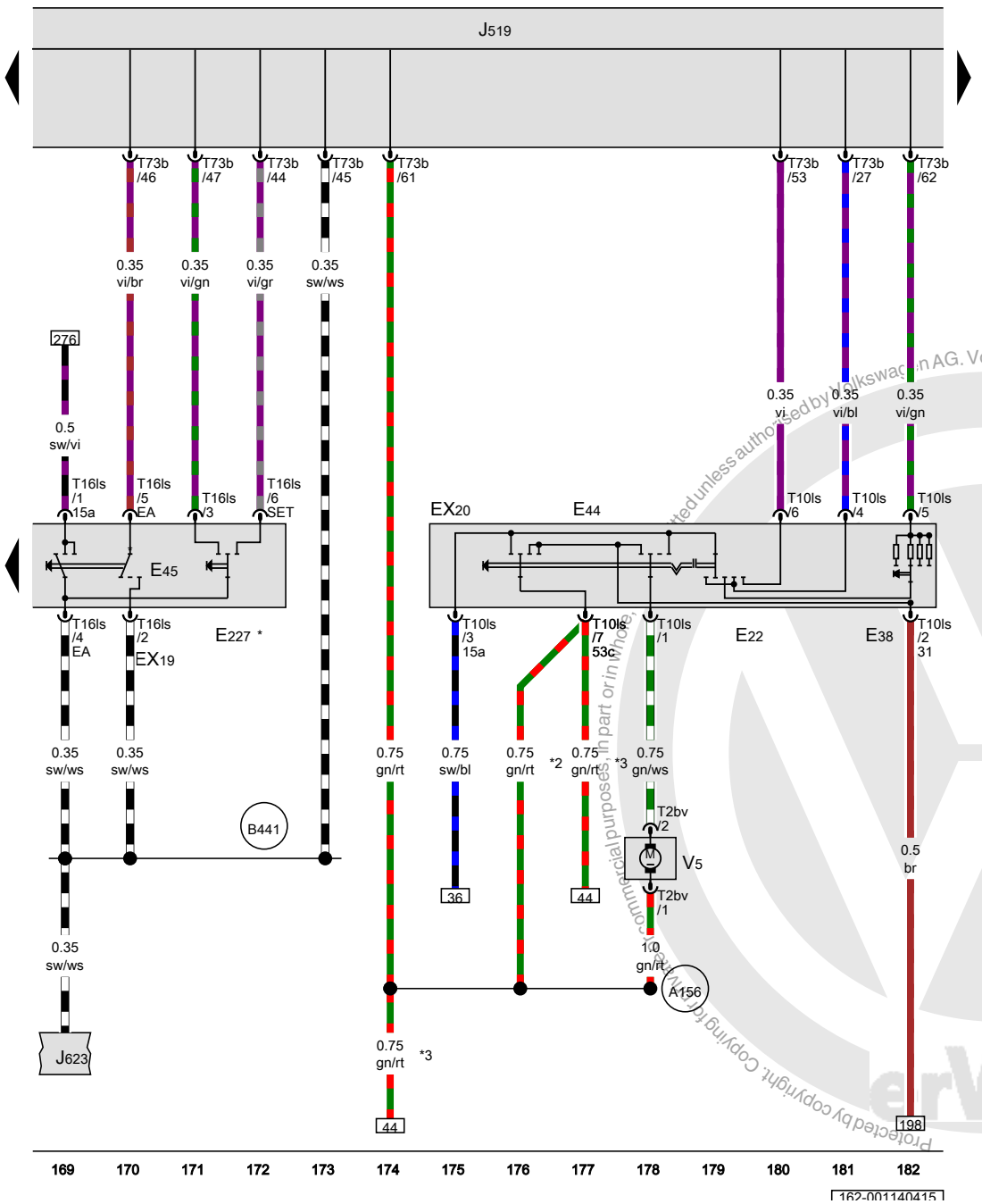

Left steering column switch, Windshield wiper intermittent mode switch, Windshield and headlamp washer pump switch, Cruise control switch, Cruise control -SET- button, Vehicle electrical control module system

EX19	Left steering column switch
EX20	Right steering column switch
E22	Windshield wiper intermittent mode switch
E38	Windshield wiper intermittent regulator
E44	Windshield and headlamp washer pump switch
E45	Cruise control switch
E227	Cruise control -SET- button
J519	Vehicle electrical control module system
J623	Engine control module
T2bv	Double connector
T10ls	10-pin connector
T16ls	16-pin connector
T73b	73-pin connector
V5	Windshield washer pump
A156	Connection (53c) inside instrument panel wiring harness
B441	Cruise control connection (in main wiring harness)
*	Only for vehicles with cruise control
*2	Omitted as a running change
*3	Running change

ws	=	white
sw	=	black
ro	=	red
rt	=	red
br	=	brown
gn	=	green
bl	=	blue
gr	=	grey
li	=	lilac
vi	=	lilac
ge	=	yellow
or	=	orange
rs	=	pink

Protected by copyright. Copying for private or commercial purposes, in part or in whole, is not permitted unless authorised by Volkswagen AG. Volkswagen AG does not guarantee or accept any liability with respect to the correctness of information in this document. Copyright by Volkswagen AG.

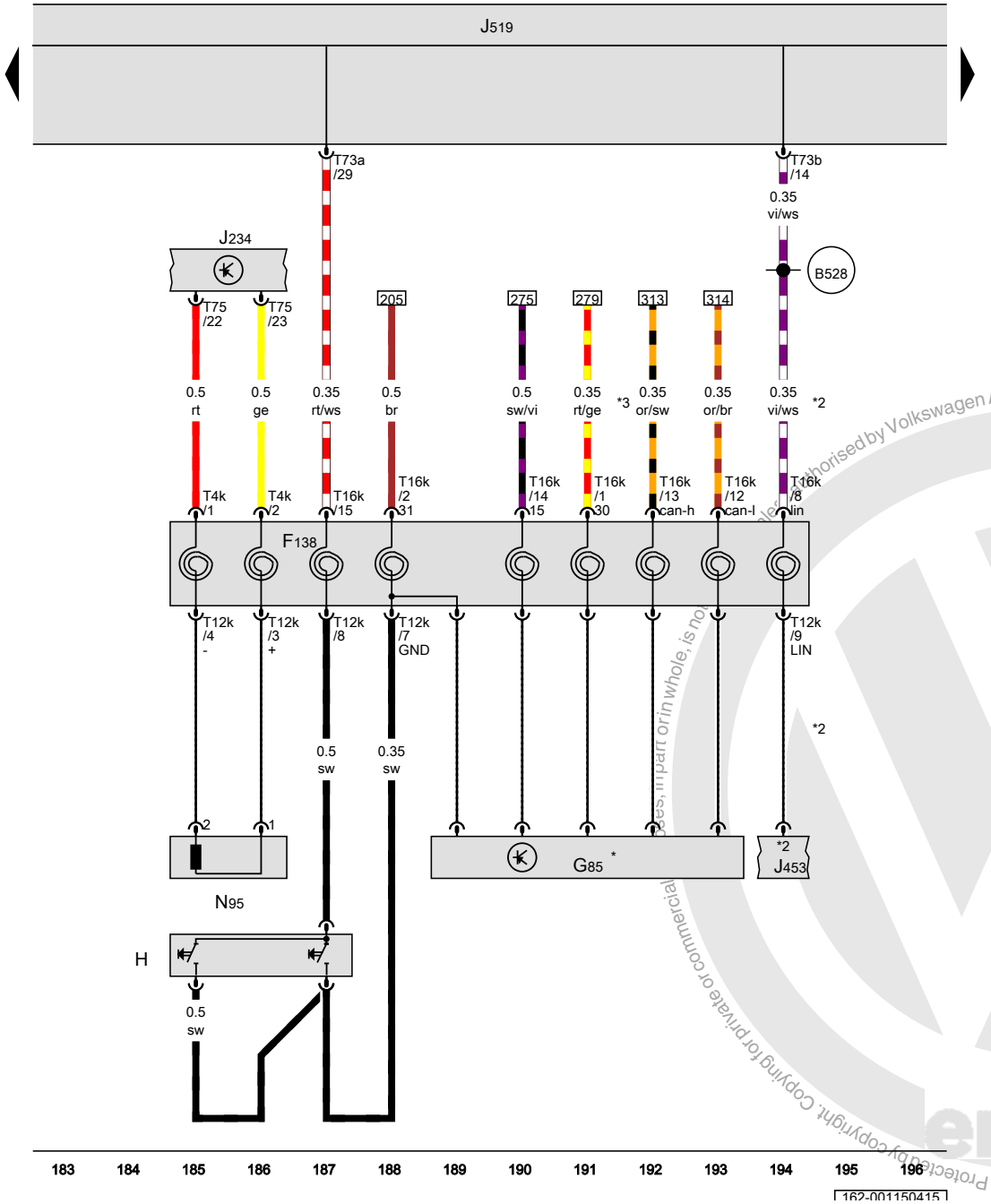

Airbag spiral spring/return spring with slip ring, Steering angle sensor, Vehicle electrical control module system

F138	Airbag spiral spring/return spring with slip ring
G85	Steering angle sensor
H	Signal horn activation
J234	Airbag control module
J453	Multifunction steering wheel control module
J519	Vehicle electrical control module system
N95	Driver airbag igniter
T4k	4-pin connector
T12k	12-pin connector
T16k	16-pin connector
T73a	73-pin connector
T73b	73-pin connector
T75	75-pin connector
B528	LIN bus connection 1 (in main wiring harness)
*	Depending on equipment
*2	Only for vehicles with a multifunction steering wheel
*3	The color of the wires depends on vehicle equipment

ws	=	white
sw	=	black
ro	=	red
rt	=	red
br	=	brown
gn	=	green
bl	=	blue
gr	=	grey
li	=	lilac
vi	=	lilac
ge	=	yellow
or	=	orange
rs	=	pink

Protected by copyright. Copying for private or commercial purposes, in part or in whole, is not permitted unless authorised by Volkswagen AG. Volkswagen AG does not guarantee or accept any liability with respect to the correctness of information in this document. Copyright by Volkswagen AG.

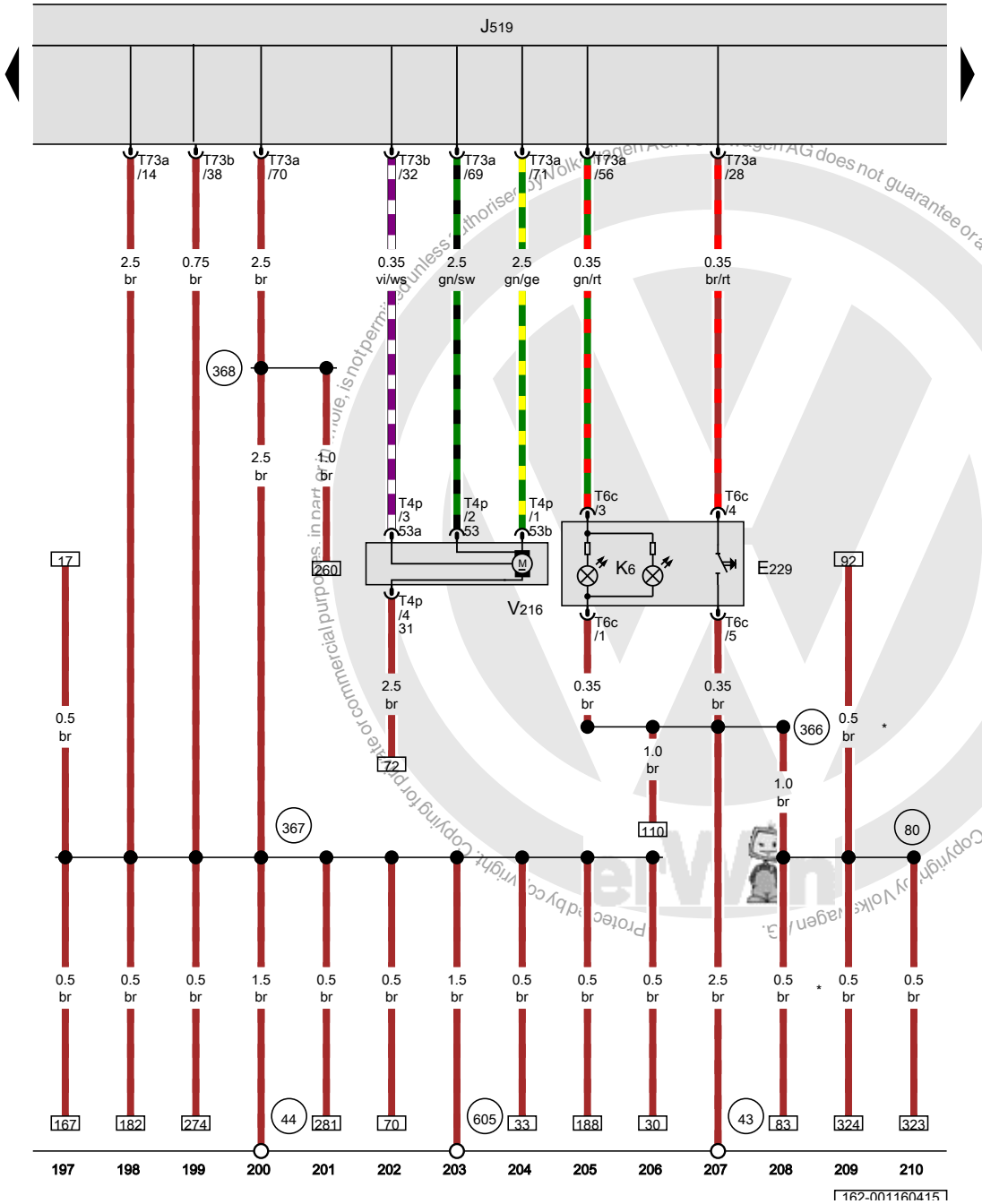

Emergency flasher button, Vehicle electrical control module system, Emergency flasher indicator lamp, Driver windshield wiper motor

E229	Emergency flasher button
J519	Vehicle electrical control module system
K6	Emergency flasher indicator lamp
T4p	4-pin connector
T6c	6-pin connector
T73a	73-pin connector
T73b	73-pin connector
V216	Driver windshield wiper motor
43	Ground connection on A-pillar, lower right
44	Ground connection on A-pillar, lower left
80	Ground connection 1 (in instrument cluster wiring harness)
366	Ground connection 1 (in main wiring harness)
367	Ground connection 2 (in main wiring harness)
368	Ground connection 3 (in main wiring harness)
605	Ground connection on upper steering column
*	Not for USA

ws	=	white
sw	=	black
ro	=	red
rt	=	red
br	=	brown
gn	=	green
bl	=	blue
gr	=	grey
li	=	lilac
vi	=	lilac
ge	=	yellow
or	=	orange
rs	=	pink

Volkswagen AG does not guarantee or accept any liability with respect to the correctness of information in this document. Copyright by Volkswagen AG. Protected by copyright. Copying for private or commercial purposes, in part or in whole, is not permitted unless authorised by Volkswagen AG.

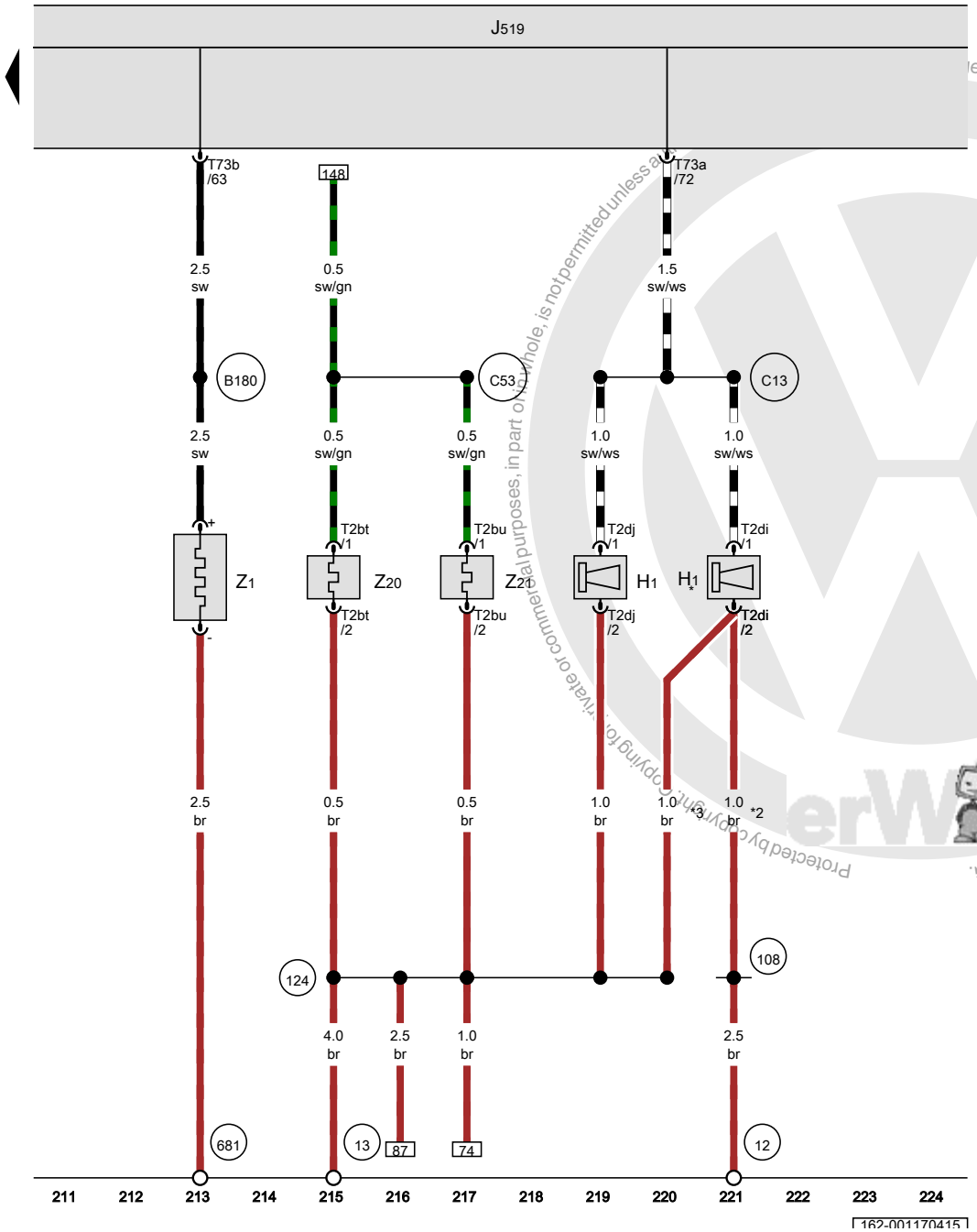

Signal horn and dual tone horn, Vehicle electrical control module system, Rear window defogger, Left washer nozzle heater, Right washer nozzle heater

H1	Signal horn and dual tone horn
J519	Vehicle electrical control module system
T2bt	Double connector
T2bu	Double connector
T2di	Double connector
T2dj	Double connector
T73a	73-pin connector
T73b	73-pin connector
Z1	Rear window defogger
Z20	Left washer nozzle heater
Z21	Right washer nozzle heater
12	Ground connection in engine compartment, left
13	Ground connection in engine compartment, right
108	Ground connection 2 (in left front wiring harness)
124	Ground connection (in right engine compartment wiring harness)
681	Ground connection 1 in right rear side panel
B180	Rear window defogger connection (in interior wiring harness)
C13	Positive connection (in dual tone horn wiring harness)
C53	Positive connection (x) (in heated spray nozzle wiring harness)
*	Only for vehicles with dual tone horn
*2	Running change
*3	Omitted as a running change

ws	=	white
sw	=	black
ro	=	red
rt	=	red
br	=	brown
gn	=	green
bl	=	blue
gr	=	grey
li	=	lilac
vi	=	lilac
ge	=	yellow
or	=	orange
rs	=	pink

Protected by copyright. Copying for private or commercial purposes, in part or in whole, is not permitted unless authorized by Volkswagen AG. Volkswagen AG does not guarantee or accept any liability with respect to the correctness of information in this document. Copyright by Volkswagen AG.

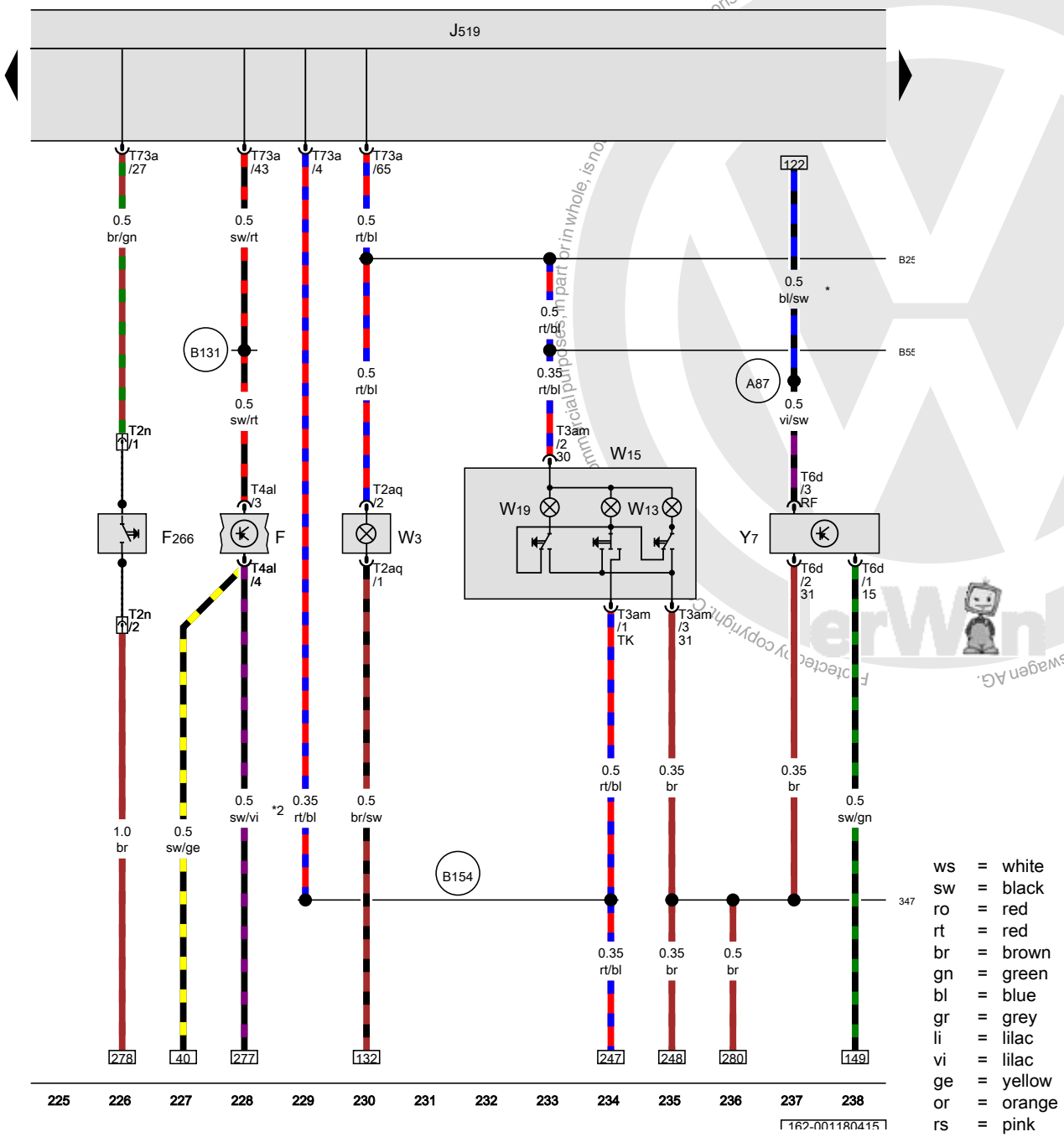

ws	=	white
sw	=	black
ro	=	red
rt	=	red
br	=	brown
gn	=	green
bl	=	blue
gr	=	grey
li	=	lilac
vi	=	lilac
ge	=	yellow
or	=	orange
rs	=	pink

Brake lamp switch, Engine hood contact switch, Vehicle electrical control module system, Luggage compartment lamp, Front passenger reading lamp, Interior lamp with delay switch, Driver reading lamp

F	Brake lamp switch
F266	Engine hood contact switch
J519	Vehicle electrical control module system
T2aq	Double connector
T2n	Double connector, near the headlamps
T3am	3-pin connector
T4al	4-pin connector
T6d	6-pin connector
T73a	73-pin connector
W3	Luggage compartment lamp
W13	Front passenger reading lamp
W15	Interior lamp with delay switch
W19	Driver reading lamp
Y7	Automatic dimming interior rearview mirror
347	Ground connection (in roof wiring harness)
A87	Back-up lamp connection (in instrument panel wiring harness)
B131	Connection 54 (in interior wiring harness)
B154	Connection TK (in interior wiring harness) 1
B250	Positive connection (in roof wiring harness)
B552	Positive connection 2 (in roof wiring harness)
*	Only for vehicles with automatic dimming interior rearview mirror
*2	Omitted as a running change

Protected by copyright. Copyright by Volkswagen AG.

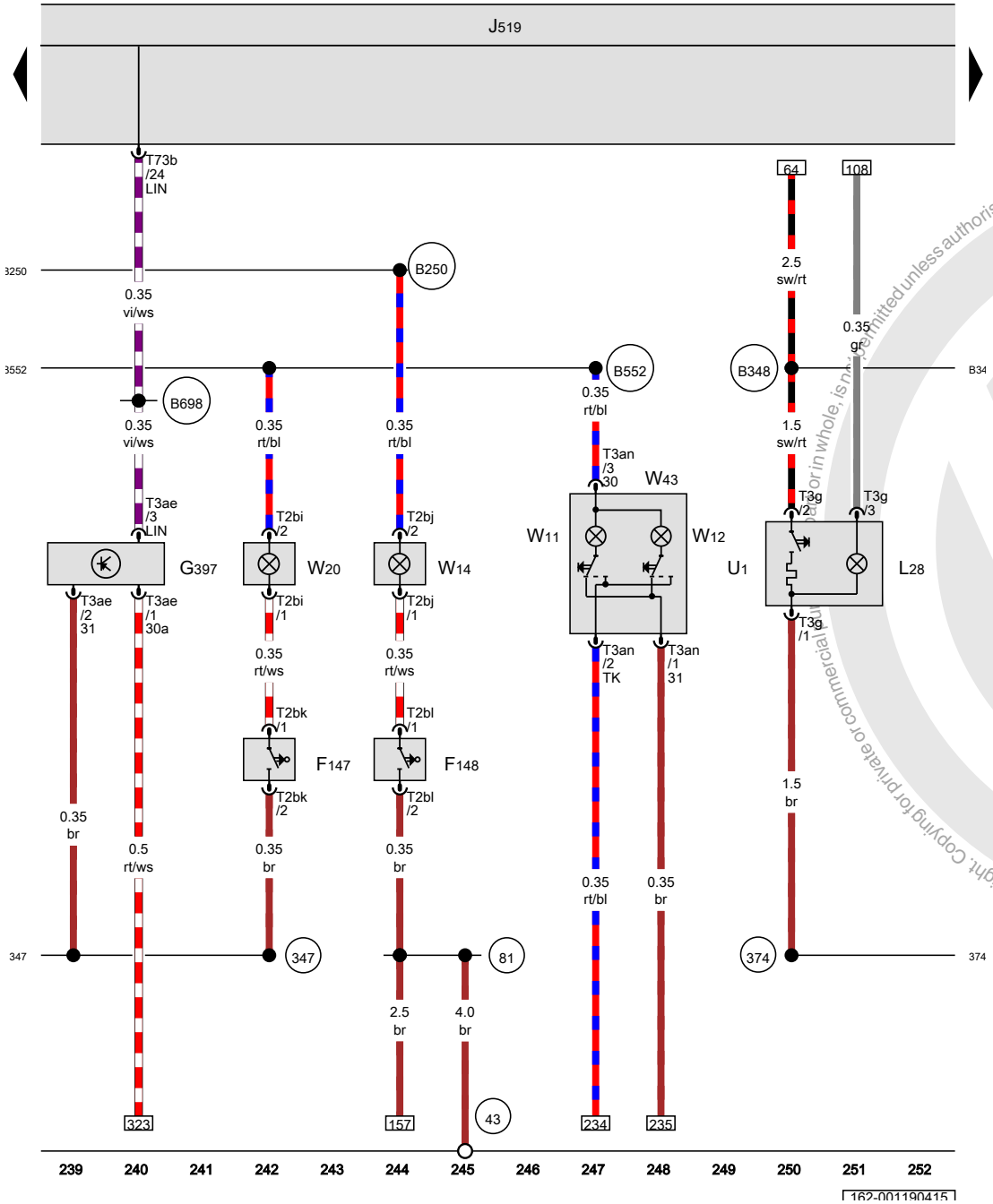

Vehicle electrical control module system, Cigarette lighter illumination bulb, Cigarette lighter, Left rear reading lamp, Right rear reading lamp, Front passenger vanity mirror lamp, Driver vanity mirror lamp, Rear interior lamp

F147	Driver vanity mirror lamp contact switch
F148	Front passenger vanity mirror lamp contact switch
G397	Rain/light recognition sensor
J519	Vehicle electrical control module system
L28	Cigarette lighter illumination bulb
T2bi	Double connector
T2bj	Double connector
T2bk	Double connector
T2bl	Double connector
T3ae	3-pin connector
T3an	3-pin connector
T3g	3-pin connector
T73b	73-pin connector
U1	Cigarette lighter
W11	Left rear reading lamp
W12	Right rear reading lamp
W14	Front passenger vanity mirror lamp
W20	Driver vanity mirror lamp
W43	Rear interior lamp
43	Ground connection on A-pillar, lower right
81	Ground connection 1 (in instrument panel wiring harness)
347	Ground connection (in roof wiring harness)
374	Ground connection 9 (in main wiring harness)
B250	Positive connection (in roof wiring harness)
B348	Connection 75a (in main wiring harness) 1
B552	Positive connection 2 (in roof wiring harness)
B698	LIN bus connection 3 (in main wiring harness)

ws	=	white
sw	=	black
ro	=	red
rt	=	red
br	=	brown
gn	=	green
bl	=	blue
gr	=	grey
li	=	lilac
vi	=	lilac
ge	=	yellow
or	=	orange
rs	=	pink

Copyright Volkswagen AG. Volkswagen AG does not guarantee or accept any liability with respect to the correctness of information in this document. Copying for private or commercial purposes, in part or in whole, is not permitted unless authorised by Volkswagen AG. Copyright by Volkswagen AG.

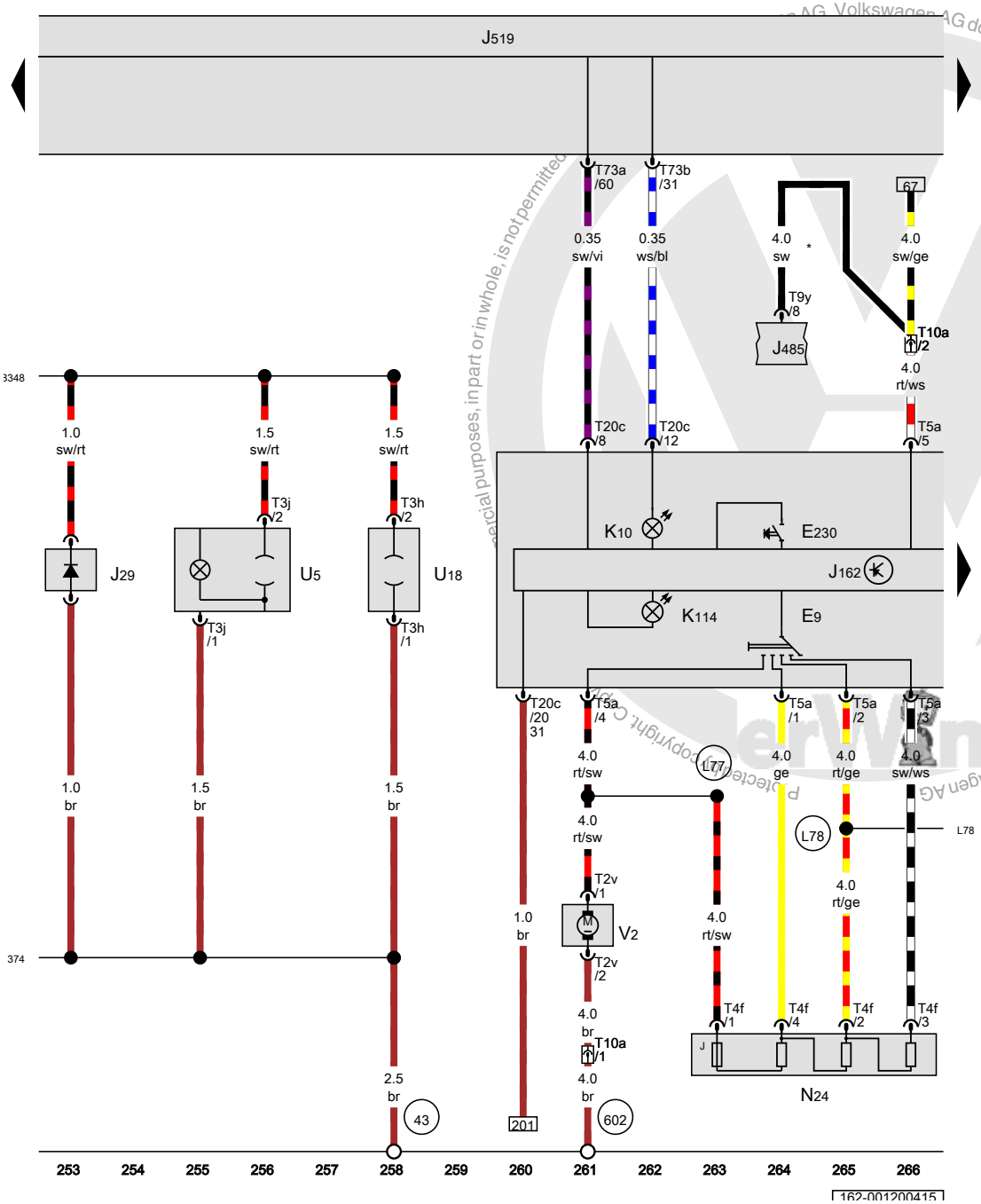

Fresh air blower switch, Blocking diode, Heater control module, Vehicle electrical control module system, Fresh air blower series resistor with fuse, 12 V socket, Fresh air blower

E9	Fresh air blower switch
E230	Rear window defogger button
J29	Blocking diode
J162	Heater control module
J485	Auxiliary heater operation relay
J519	Vehicle electrical control module system
K10	Rear window defogger indicator lamp
K114	Fresh air and recirculation mode indicator lamp
N24	Fresh air blower series resistor with fuse
T2v	Double connector
T3h	3-pin connector
T3j	3-pin connector
T4f	4-pin connector
T5a	5-pin connector
T9y	9-pin connector
T10a	10-pin connector, on the heating and A/C unit
T20c	20-pin connector
T73a	73-pin connector
T73b	73-pin connector
U5	12 V socket
U18	12 V socket 2
V2	Fresh air blower
43	Ground connection on A-pillar, lower right
374	Ground connection 9 (in main wiring harness)
602	Ground connection in left front footwell
B348	Connection 75a (in main wiring harness) 1
L77	Connection (in fresh air blower wiring harness)
L78	Connection 1 (in fresh air blower wiring harness)
*	Only for vehicles with auxiliary coolant heater

ws	=	white
sw	=	black
ro	=	red
rt	=	red
br	=	brown
gn	=	green
bl	=	blue
gr	=	grey
li	=	lilac
vi	=	lilac
ge	=	yellow
or	=	orange
rs	=	pink

Volkswagen AG does not guarantee or accept any liability with respect to the correctness of information in this document. Copyright by Volkswagen AG. Protected by copyright. Copying for private or commercial purposes, in part or in whole, is not permitted.

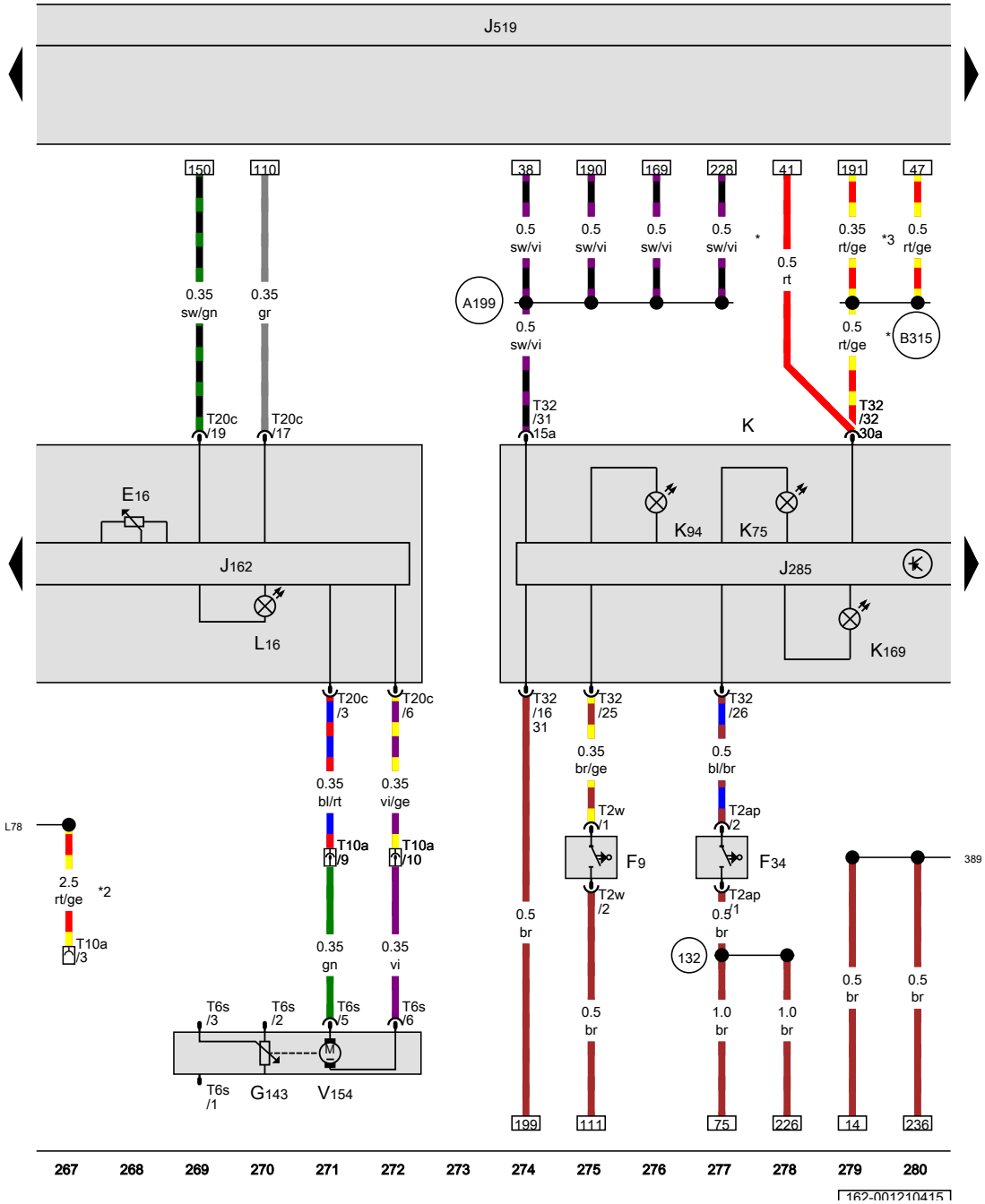

ws	=	white
sw	=	black
ro	=	red
rt	=	red
br	=	brown
gn	=	green
bl	=	blue
gr	=	grey
li	=	lilac
vi	=	lilac
ge	=	yellow
or	=	orange
rs	=	pink

Parking brake indicator lamp switch, Brake fluid level warning switch, Heater control module, Vehicle electrical control module system, Instrument cluster, Fresh/ recirculated air door motor

E16	Heater/heat output switch
F9	Parking brake indicator lamp switch
F34	Brake fluid level warning switch
G143	Recirculation door motor position sensor
J162	Heater control module
J285	Instrument cluster control module
J519	Vehicle electrical control module system
K	Instrument cluster
K75	Airbag indicator lamp
K94	Right turn signal indicator lamp
K169	Shift lock indicator lamp
L16	Fresh air control illumination bulb
T2ap	Double connector
T2w	Double connector
T6s	6-pin connector
T10a	10-pin connector
T20c	20-pin connector
T32	32-pin connector
V154	Fresh/recirculated air door motor
132	Ground connection 3 (in engine compartment wiring harness)
389	Ground connection 24 (in main wiring harness)
A199	Positive connection 4 (15a) (in instrument panel wiring harness)
B315	Positive connection 1 (30a) (in main wiring harness)
L78	Connection 1 (in fresh air blower wiring harness)
*	Omitted as a running change
*2	Only for vehicles with auxiliary coolant heater
*3	The color of the wires depends on vehicle equipment

Copyright by Volkswagen AG. Copying for private or commercial purposes, in part or in whole, is not permitted unless authorised by Volkswagen AG. Volkswagen AG does not guarantee or accept any liability with respect to the correctness of information in this document.

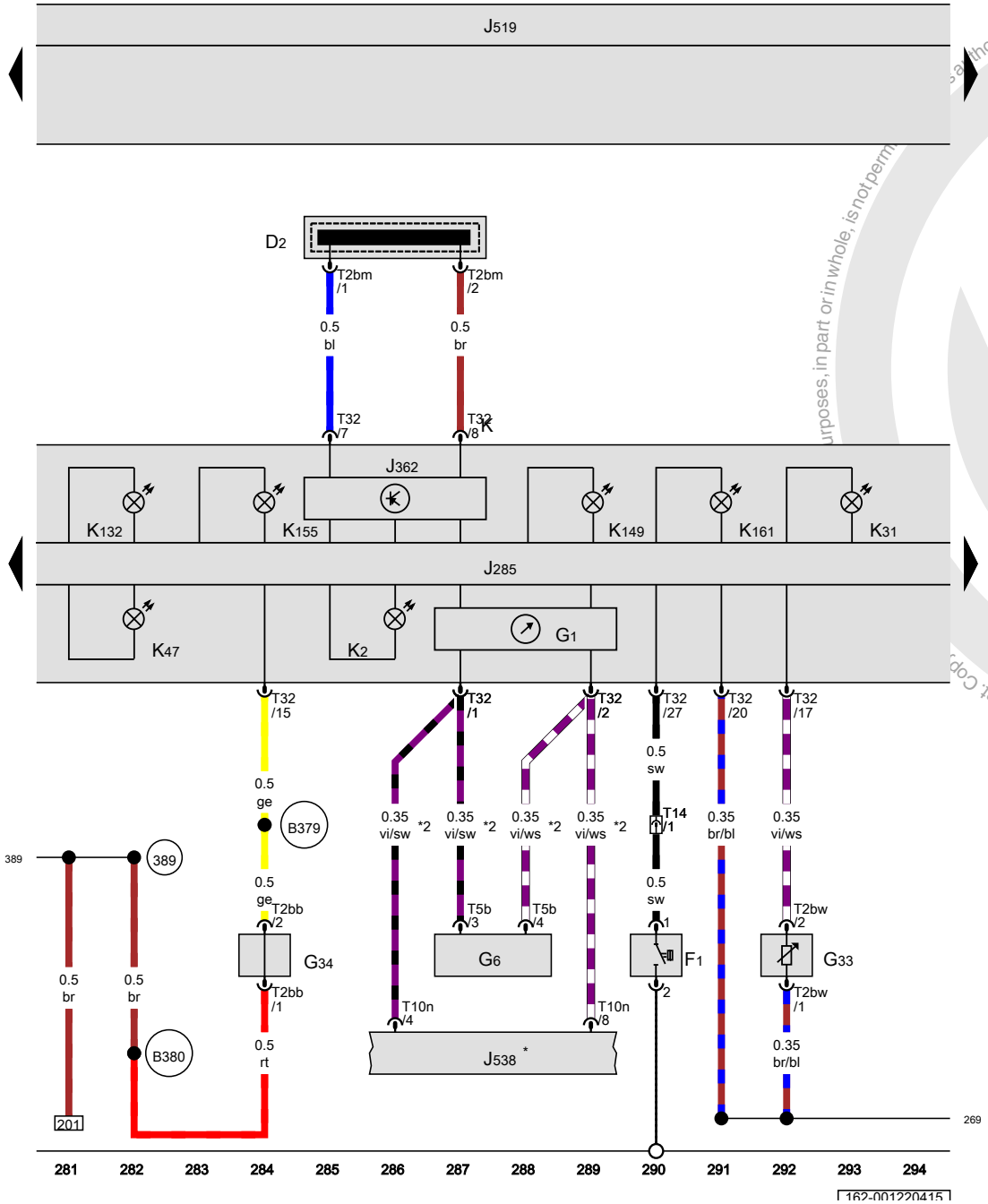

ws	=	white
sw	=	black
ro	=	red
rt	=	red
br	=	brown
gn	=	green
bl	=	blue
gr	=	grey
li	=	lilac
vi	=	lilac
ge	=	yellow
or	=	orange
rs	=	pink

Anti-theft immobilizer reader coil, Oil pressure switch, Windshield washer fluid level sensor, Left front brake pad wear sensor, Anti-theft immobilizer control module, Vehicle electrical control module system, Instrument cluster

D2	Anti-theft immobilizer reader coil
F1	Oil pressure switch
G1	Fuel gauge
G6	Transfer fuel pump
G33	Windshield washer fluid level sensor
G34	Left front brake pad wear sensor
J285	Instrument cluster control module
J362	Anti-theft immobilizer control module
J519	Vehicle electrical control module system
J538	Fuel pump control module
K	Instrument cluster
K2	Generator indicator lamp
K31	Cruise control indicator lamp
K47	ABS indicator lamp
K132	Electronic power control malfunction indicator lamp
K149	Engine electronics indicator lamp
K155	ASR/ESP indicator lamp
K161	Electromechanical power steering indicator lamp
T2bb	Double connector
T2bm	Double connector
T2bw	Double connector
T5b	5-pin connector
T10n	10-pin connector
T14	14-pin connector
T32	32-pin connector
269	Sensor ground connection 1 (in instrument panel wiring harness)
389	Ground connection 24 (in main wiring harness)
B379	Brake wear indicator connection 1 (in main wiring harness)
B380	Brake wear indicator connection 2 (in main wiring harness)
*	Refer to applicable engine wiring diagram
*2	Depending on equipment

Protected by copyright. Copyright by Volkswagen AG. Volkswagen AG does not accept any liability with respect to the correctness of information in this document. Copyright by Volkswagen AG. Protected by copyright. Copyright by Volkswagen AG. Volkswagen AG. authorised by Volkswagen AG. Volkswagen AG. purposes, in part or in whole, is not perm

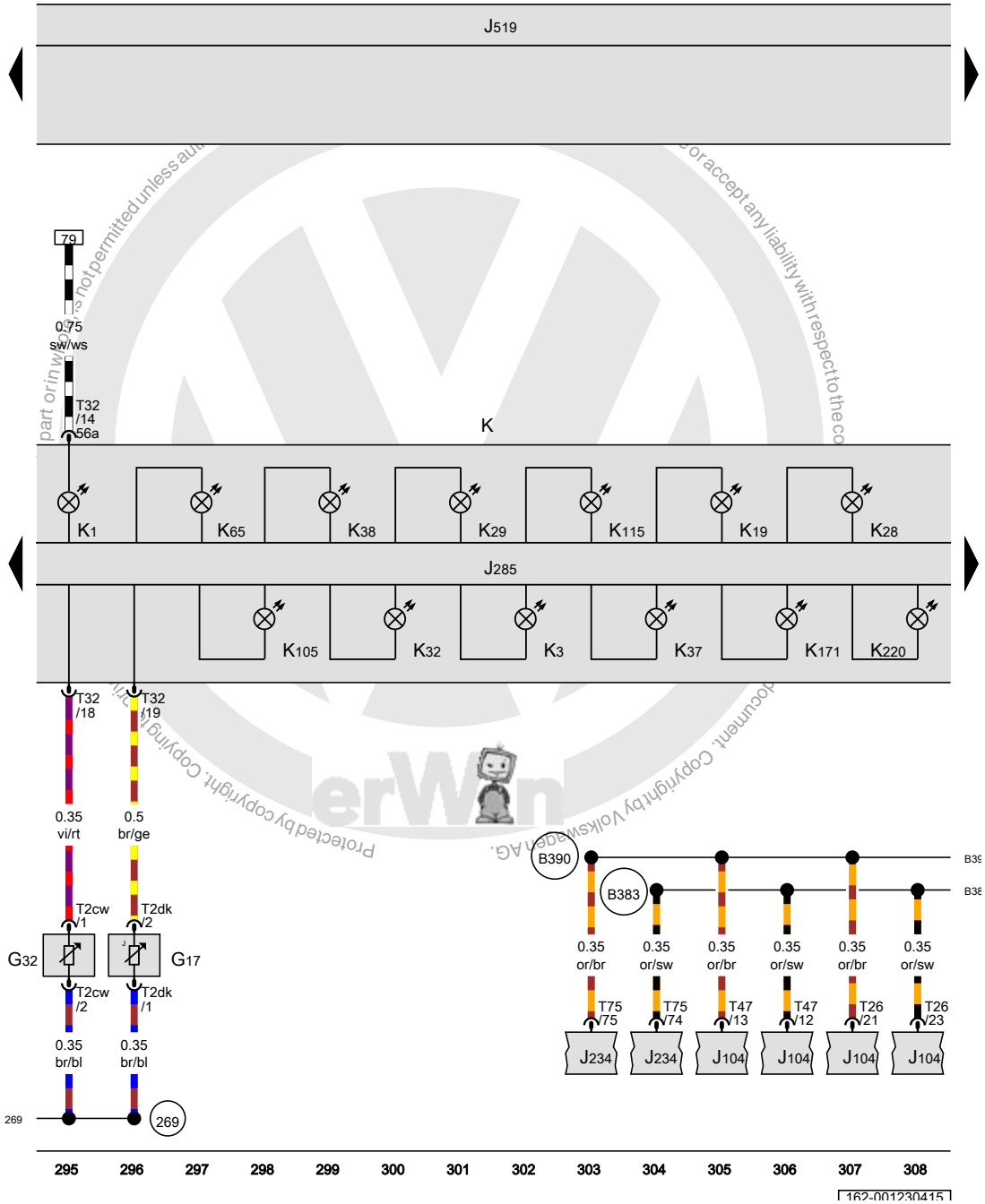

ws = white
sw = black
ro = red
rt = red
br = brown
gn = green
bl = blue
gr = grey
li = lilac
vi = lilac
ge = yellow
or = orange
rs = pink

Outside air temperature sensor, Engine coolant level sensor, Vehicle electrical control module system, Instrument cluster

G17	Outside air temperature sensor
G32	Engine coolant level sensor
J104	ABS control module
J234	Airbag control module
J285	Instrument cluster control module
J519	Vehicle electrical control module system
K	Instrument cluster
K1	High beam indicator lamp
K3	Oil pressure indicator lamp
K19	Seat belt indicator lamp
K28	Engine coolant level/temperature indicator lamp
K29	Glow plug indicator lamp
K32	Brake pad wear indicator lamp
K37	Windshield washer fluid level indicator lamp
K38	Oil level indicator lamp
K65	Indicator lamp for left turn signal
K105	Low fuel level indicator lamp
K115	Anti-theft immobilizer system indicator lamp
K171	Hood -open- indicator lamp
K220	Tire pressure monitoring display indicator lamp
T2cw	Double connector
T2dk	Double connector
T26	26-pin connector
T32	32-pin connector
T47	47-pin connector
T75	75-pin connector
269	Sensor ground connection 1 (in instrument panel wiring harness)
B383	Powertrain CAN bus high connection 1 (in main wiring harness)
B390	Powertrain CAN bus low connection 1 (in main wiring harness)

Protected by copyright. Copying this document. Copyright by Volkswagen AG. is not permitted unless authorised by VW. VW does not guarantee or accept any liability with respect to the correctness of information in this document. Copyright by Volkswagen AG.

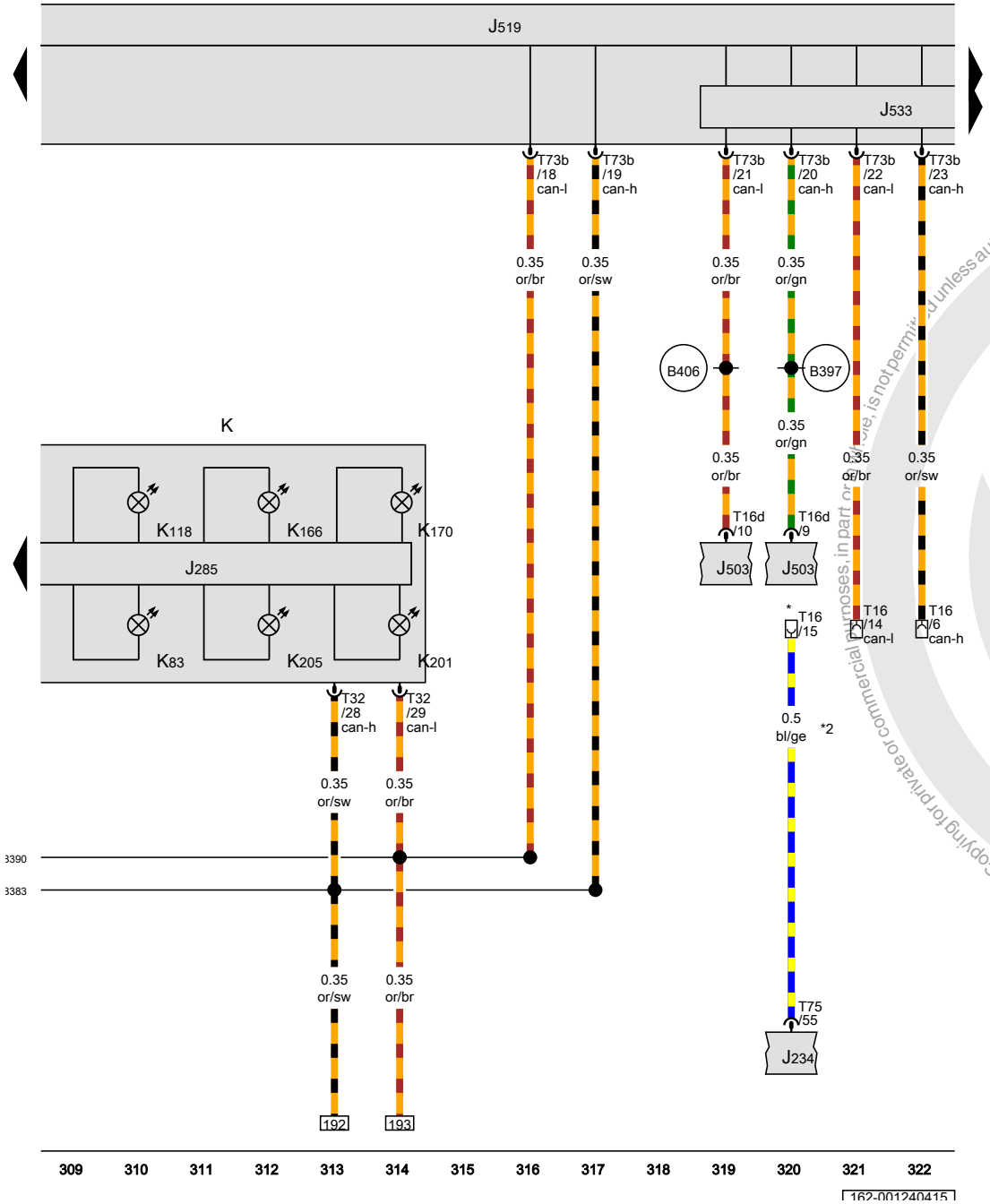

Vehicle electrical control module system, Instrument cluster

J234	Airbag control module
J285	Instrument cluster control module
J503	Radio/navigation display unit control module
J519	Vehicle electrical control module system
J533	Data bus on board diagnostic interface
K	Instrument cluster
K83	Malfunction indicator lamp
K118	Brake system indicator lamp
K166	Door ajar indicator lamp
K170	Lamp failure indicator lamp
K201	Fuel filler door lock indicator lamp
K205	Daytime running lamp indicator lamp
T16	16-pin connector
T16d	16-pin connector
T32	32-pin connector
T73b	73-pin connector
T75	75-pin connector
B383	Powertrain CAN bus high connection 1 (in main wiring harness)
B390	Powertrain CAN bus low connection 1 (in main wiring harness)
B397	Comfort system CAN bus high connection 1 (in main wiring harness)
B406	Comfort system CAN bus low connection 1 (in main wiring harness)
*	Diagnostic connector
*2	USA only

ws	=	white
sw	=	black
ro	=	red
rt	=	red
br	=	brown
gn	=	green
bl	=	blue
gr	=	grey
li	=	lilac
vi	=	lilac
ge	=	yellow
or	=	orange
rs	=	pink

Protected by copyright. Copying for private or commercial purposes, in part or in whole, is not permitted unless authorised by Volkswagen AG. Volkswagen AG does not accept any liability with respect to the correctness of information in this document. Copyright by Volkswagen AG.

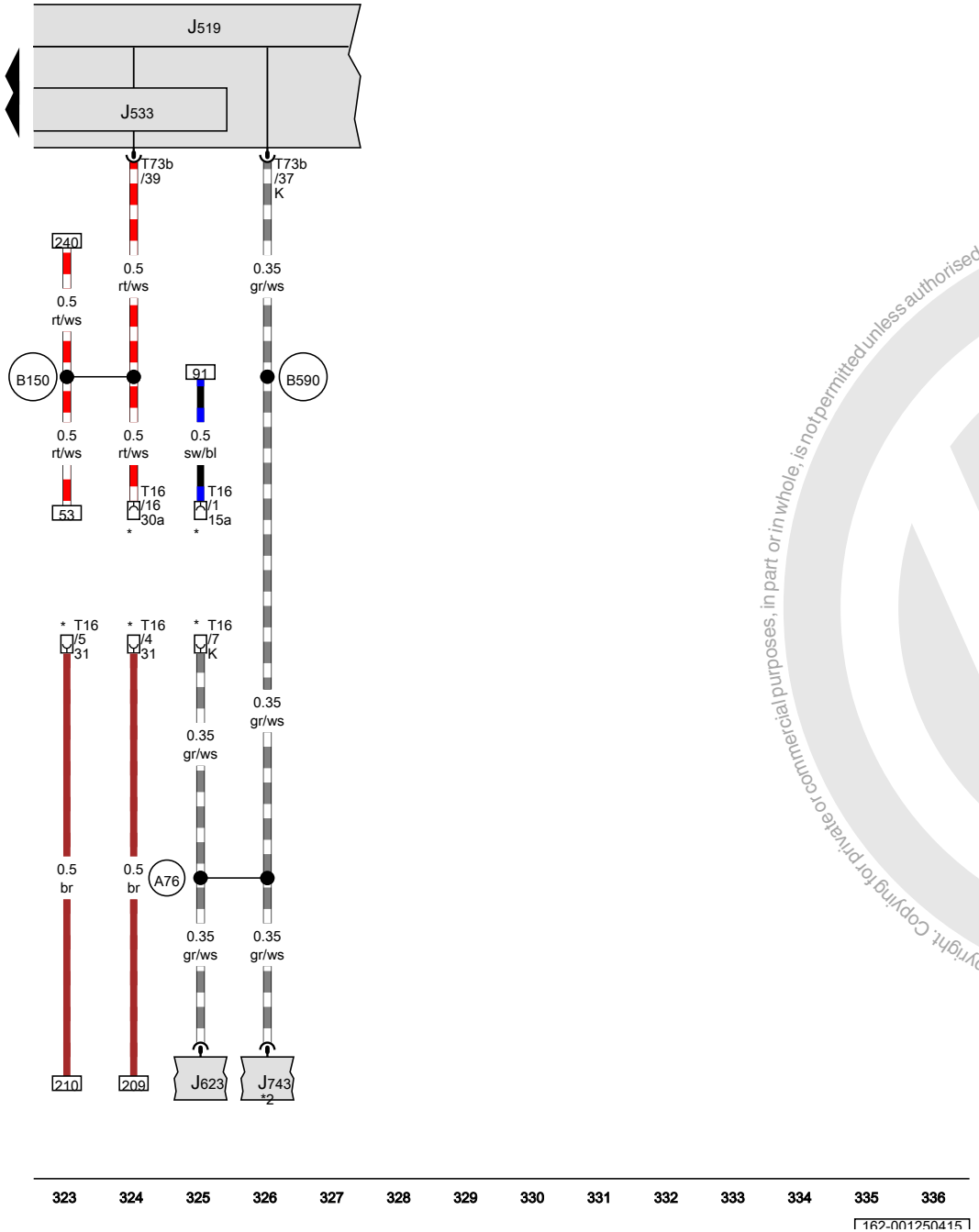

Vehicle electrical control module system

J519	Vehicle electrical control module system
J533	Data bus on board diagnostic interface
J623	Engine control module
J743	DSG transmission Mechatronic
T16	16-pin connector
T73b	73-pin connector
A76	KS-diagnostic lead connection (in instrument panel wiring harness)
B150	Positive connection 2 (30a) (in interior wiring harness)
B590	KS-diagnostic cable connection (in interior wiring harness)
*	Diagnostic connector
*2	Only for vehicles with automatic transmission

Protected by copyright. Copying for private or commercial purposes, in part or in whole, is not permitted unless authorised by Volkswagen AG. Volkswagen AG does not guarantee or accept any liability with respect to the correctness of information in this document. Copyright by Volkswagen AG.

ws	=	white
sw	=	black
ro	=	red
rt	=	red
br	=	brown
gn	=	green
bl	=	blue
gr	=	grey
li	=	lilac
vi	=	lilac
ge	=	yellow
or	=	orange
rs	=	pink

Convenience system , (AW0)

from April 2010

Protected by copyright. Copying for private or commercial purposes, in part or in whole, is not permitted unless authorised by Volkswagen AG. Volkswagen AG does not guarantee or accept any liability with respect to the correctness of information in this document. Copyright by Volkswagen AG.

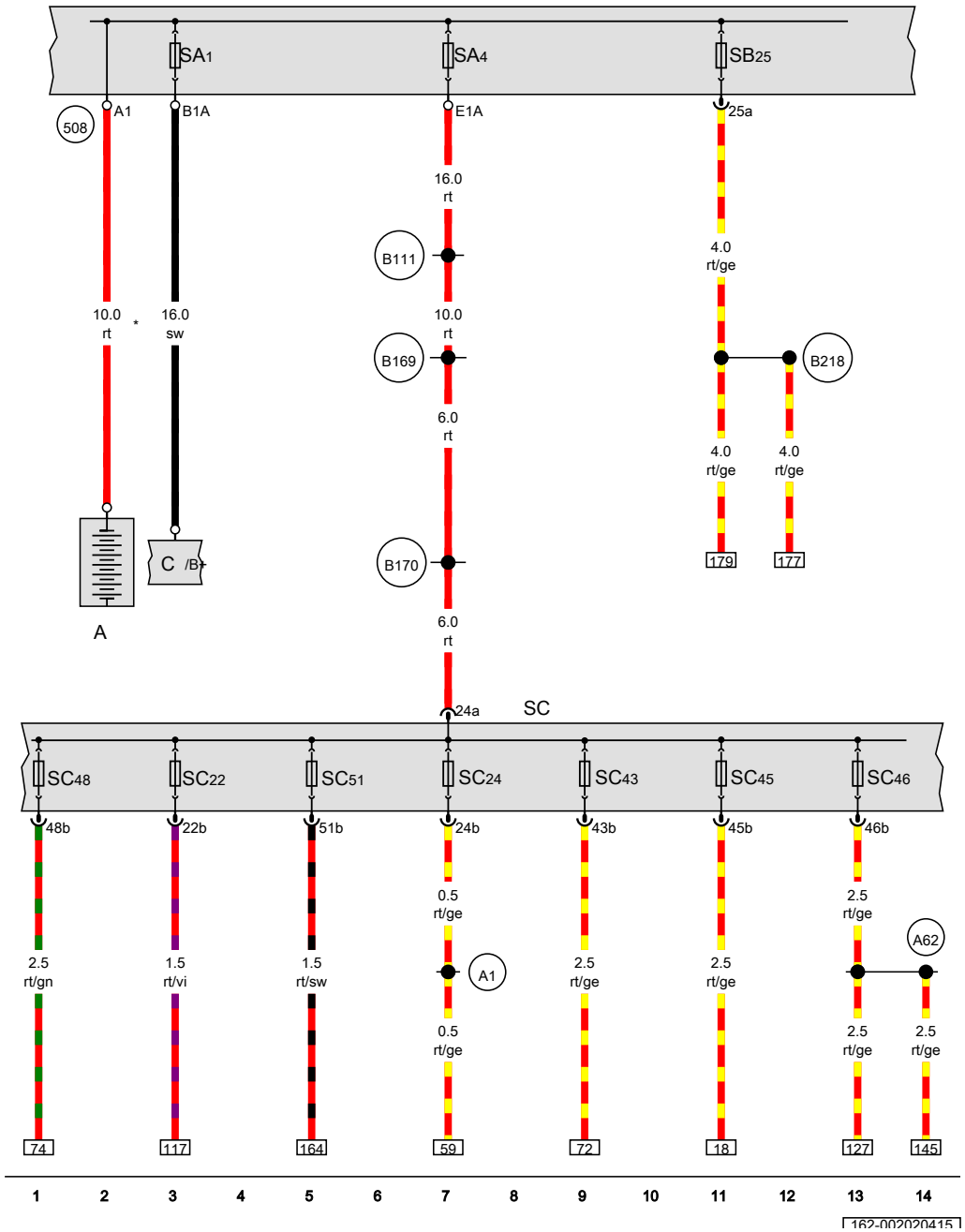

Battery, Fuse 1 (on fuse panel A), Fuse 4 (on fuse panel A), Fuse 25 (on fuse panel B), Fuse panel C

A	Battery
C	Generator
SA1	Fuse 1 (on fuse panel A)
SA4	Fuse 4 (on fuse panel A)
SB25	Fuse 25 (on fuse panel B)
SC	Fuse panel C
SC22	Fuse 22 (on fuse panel C)
SC24	Fuse 24 (on fuse panel C)
SC43	Fuse 43 (on fuse panel C)
SC45	Fuse 45 (on fuse panel C)
SC46	Fuse 46 (on fuse panel C)
SC48	Fuse 48 (on fuse panel C)
SC51	Fuse 51 (on fuse panel C)
508	Terminal 30 threaded connection (on E-box)
A1	Positive connection (30a) (in instrument panel wiring harness)
A62	Power window connection (in instrument panel wiring harness)
B111	Positive connection 1 (30a) (in interior wiring harness)
B169	Positive connection 1 (30) (in interior wiring harness)
B170	Positive connection 2 (30) (in interior wiring harness)
B218	Positive connection 6 (30) (in interior wiring harness)
*	16.0 diameter possible

ws	=	white
sw	=	black
ro	=	red
rt	=	red
br	=	brown
gn	=	green
bl	=	blue
gr	=	grey
li	=	lilac
vi	=	lilac
ge	=	yellow
or	=	orange
rs	=	pink

Protected by copyright. Copying for private or commercial purposes, in part or in whole, is not permitted unless authorised by Volkswagen AG. Volkswagen AG does not guarantee or accept any liability with respect to the correctness of information in this document. Copyright by Volkswagen AG.

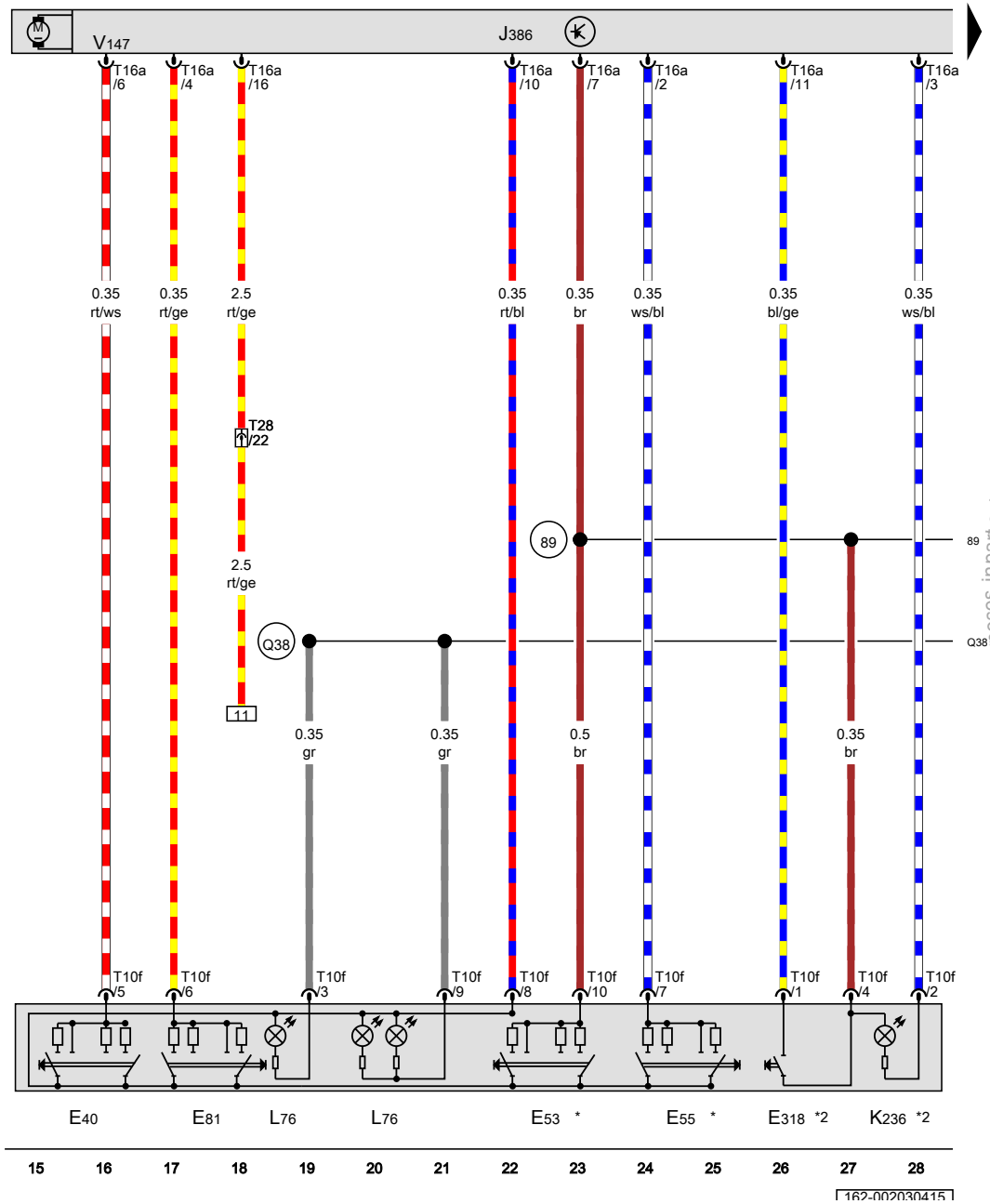

Left front window regulator switch, Left rear window regulator switch in driver door, Right rear window regulator switch in driver door, Right front power window switch in driver door, Child safety lock button, Driver door control module

E40	Left front window regulator switch
E53	Left rear window regulator switch in driver door
E55	Right rear window regulator switch in driver door
E81	Right front power window switch in driver door
E318	Child safety lock button
J386	Driver door control module
K236	Child safety lock -activated- indicator lamp
L76	Push button illumination bulb
T10f	10-pin connector
T16a	16-pin connector
T28	28-pin connector, Left A-pillar, bottom
V147	Driver window regulator motor
89	Ground connection 1 (in power window wiring harness)
Q38	Positive connection 1 (58b) (in power window wiring harness)
*	Only for vehicles with front and rear power windows
*2	Only for vehicles with child safety lock

ws	=	white
sw	=	black
ro	=	red
rt	=	red
br	=	brown
gn	=	green
bl	=	blue
gr	=	grey
li	=	lilac
vi	=	lilac
ge	=	yellow
or	=	orange
rs	=	pink

Protected by copyright. Copying for private or commercial purposes, in part or in whole, is not permitted unless authorised by Volkswagen AG. Volkswagen AG does not guarantee or accept any liability with respect to the correctness of information in this document. Copyright by Volkswagen AG.

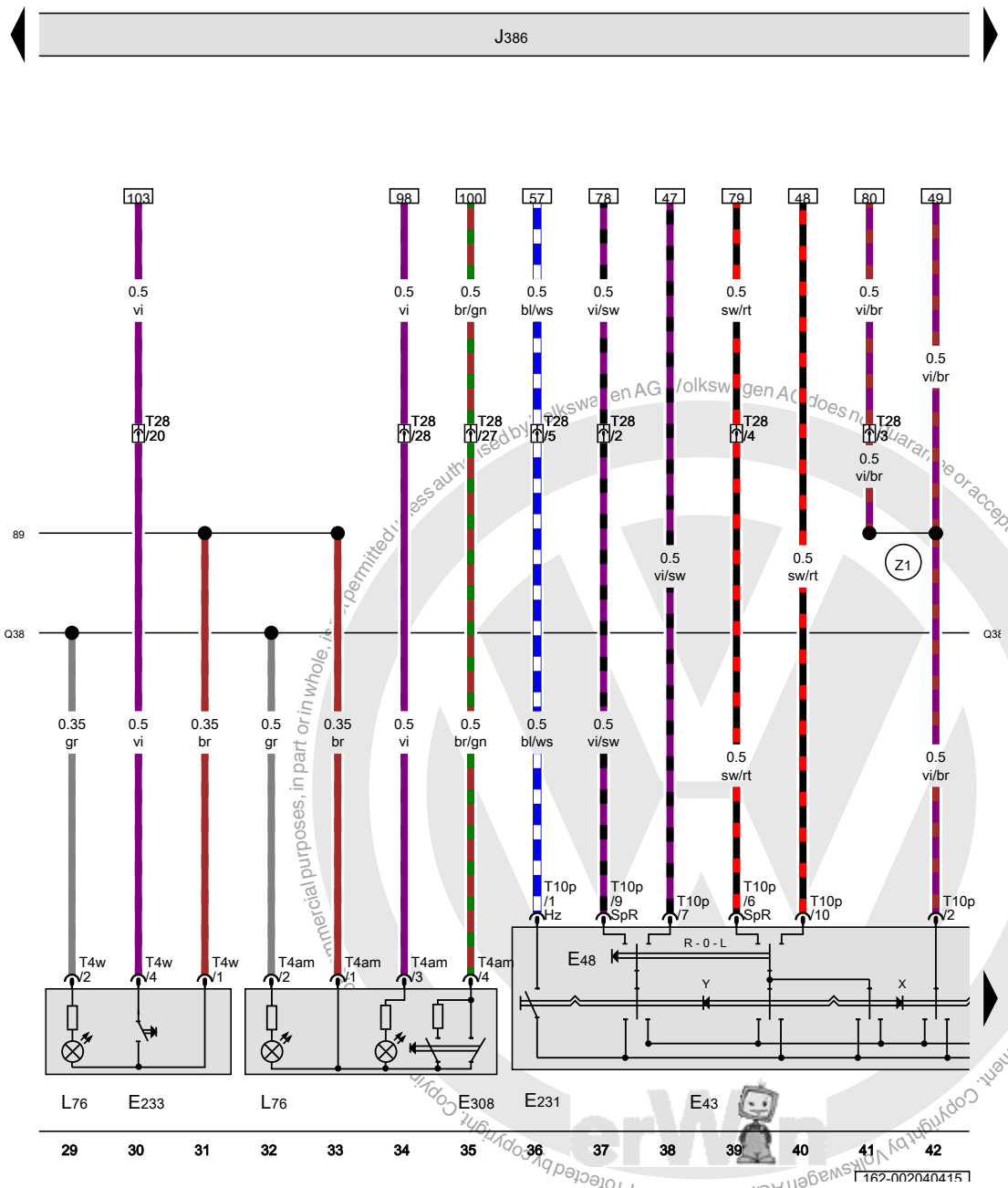

ws = white
sw = black
ro = red
rt = red
br = brown
gn = green
bl = blue
gr = grey
li = lilac
vi = lilac
ge = yellow
or = orange
rs = pink

Mirror adjusting switch, Mirror selector switch, Exterior rearview mirror heating switch, Rear lid remote release button, Driver interior locking button, Driver door control module, Push button illumination bulb

E43	Mirror adjusting switch
E48	Mirror selector switch
E231	Exterior rearview mirror heating switch
E233	Rear lid remote release button
E308	Driver interior locking button
J386	Driver door control module
L76	Push button illumination bulb
T4am	4-pin connector
T4w	4-pin connector
T10p	10-pin connector
T28	28-pin connector, Left A-pillar, bottom
89	Ground connection 1 (in power window wiring harness)
Q38	Positive connection 1 (58b) (in power window wiring harness)
Z1	Connection 1 (in power heated mirror wiring harness)

Protected by copyright. Copyright by Volkswagen AG. Volkswagen AG does not guarantee or accept any liability with respect to the correctness of information in this document. Copyright by Volkswagen AG.

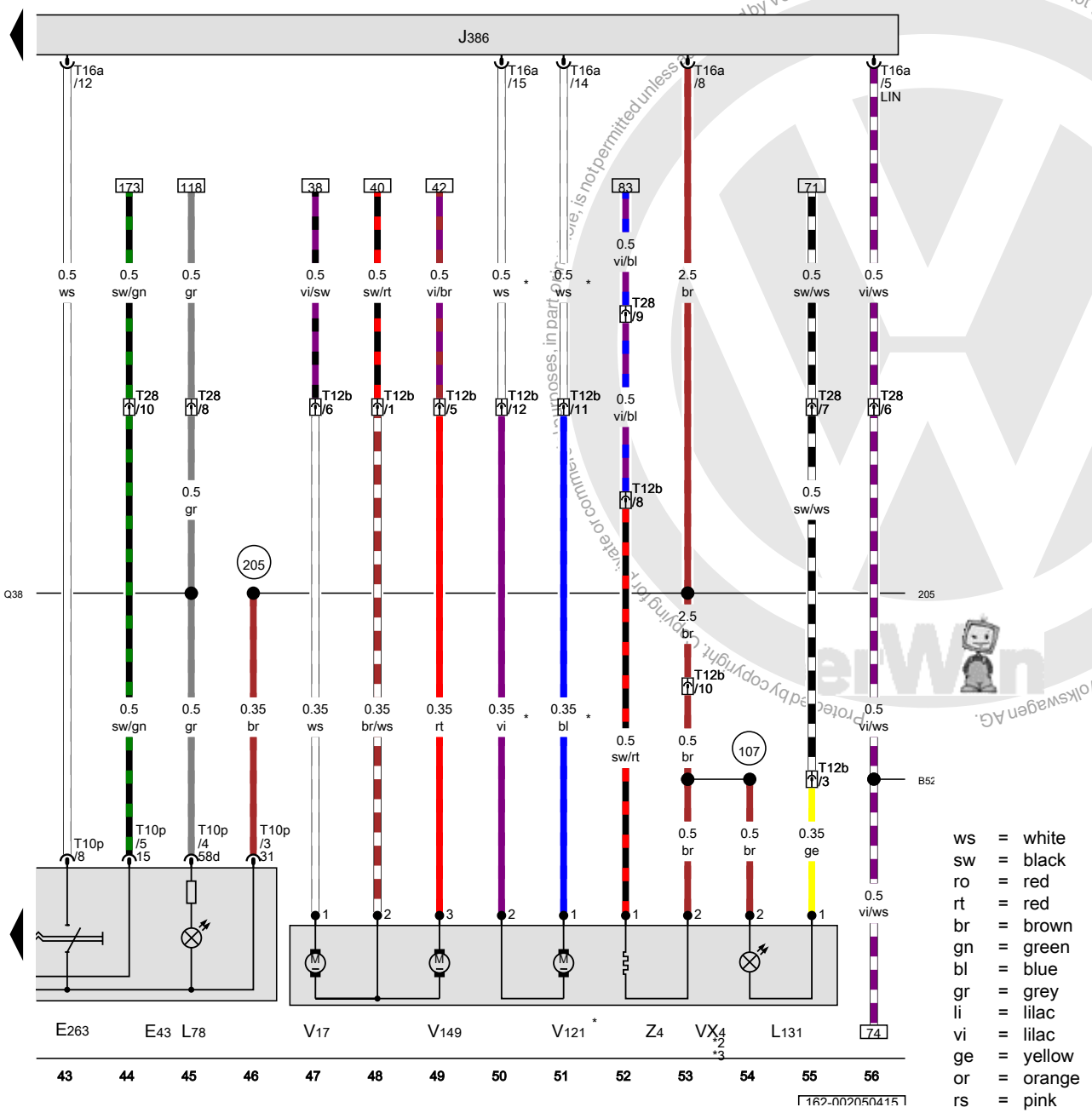

Mirror adjusting switch, Mirror folding switch, Driver door control module, Mirror adjustment switch illumination bulb, Driver exterior rearview mirror, Driver mirror adjustment motor 2, Driver exterior rearview mirror folding motor, Driver mirror adjustment motor

E43	Mirror adjusting switch
E263	Mirror folding switch
J386	Driver door control module
L78	Mirror adjustment switch illumination bulb
L131	Driver exterior rearview mirror turn signal bulb
T10p	10-pin connector
T12b	12-pin connector, in the driver door wiring harness
T16a	16-pin connector
T28	28-pin connector, Left A-pillar, bottom
VX4	Driver exterior rearview mirror
V17	Driver mirror adjustment motor 2
V121	Driver exterior rearview mirror folding motor
V149	Driver mirror adjustment motor
Z4	Heated driver exterior rearview mirror
107	Ground connection (in exterior mirror wiring harness)
205	Ground connection (in driver door wiring harness)
B528	LIN bus connection 1 (in main wiring harness)
Q38	Positive connection 1 (58b) (in power window wiring harness)
*	Omitted as a running change
*2	pre-wired component
*3	Depending on equipment

ws	=	white
sw	=	black
ro	=	red
rt	=	red
br	=	brown
gn	=	green
bl	=	blue
gr	=	grey
li	=	lilac
vi	=	lilac
ge	=	yellow
or	=	orange
rs	=	pink

Protected by copyright. Copying for private or commercial purposes, in part or in whole, is not permitted unless authorized by Volkswagen AG. Volkswagen AG does not guarantee or accept any liability with respect to the suitability of information in this document. Copyright by Volkswagen AG.

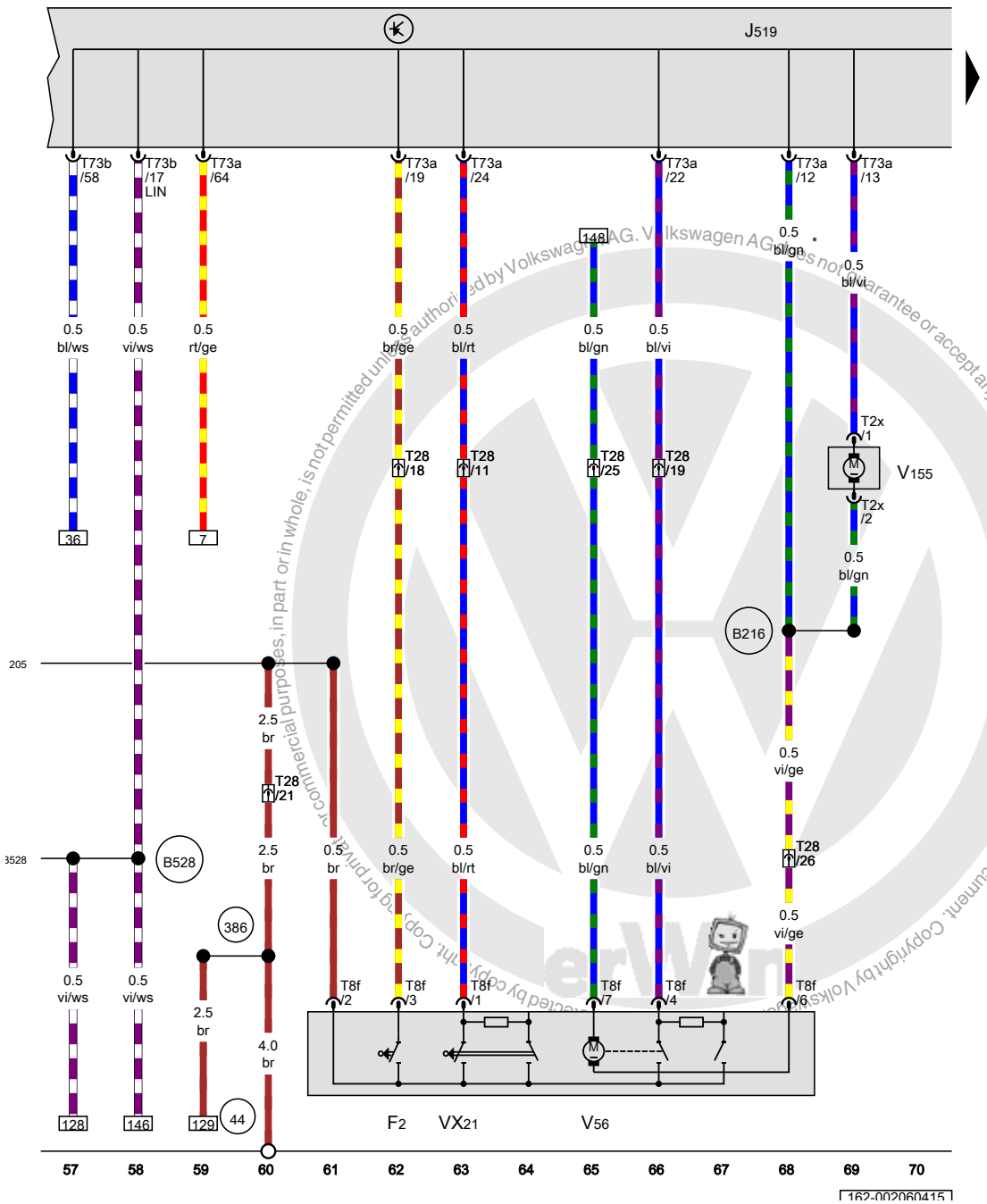

Driver door contact switch, Vehicle electrical control module system, Driver door lock unit, Driver door central locking system motor, Fuel filler door unlock motor

F2	Driver door contact switch
J519	Vehicle electrical control module system
T2x	Double connector
T8f	8-pin connector
T28	28-pin connector, Left A-pillar, bottom
T73a	73-pin connector
T73b	73-pin connector
VX21	Driver door lock unit
V56	Driver door central locking system motor
V155	Fuel filler door unlock motor
44	Ground connection on A-pillar, lower left
205	Ground connection (in driver door wiring harness)
386	Ground connection 21 (in main wiring harness)
B216	Central locking connection 3 (in interior wiring harness)
B528	LIN bus connection 1 (in main wiring harness)
*	The color of the wires depends on vehicle equipment

ws	=	white
sw	=	black
ro	=	red
rt	=	red
br	=	brown
gn	=	green
bl	=	blue
gr	=	grey
li	=	lilac
vi	=	lilac
ge	=	yellow
or	=	orange
rs	=	pink

Copyrighted by Volkswagen AG. Volkswagen AG does not guarantee or accept any liability with respect to the correctness of information in this document. Copyright by Volkswagen AG. Volkswagen AG. Volkswagen AG.

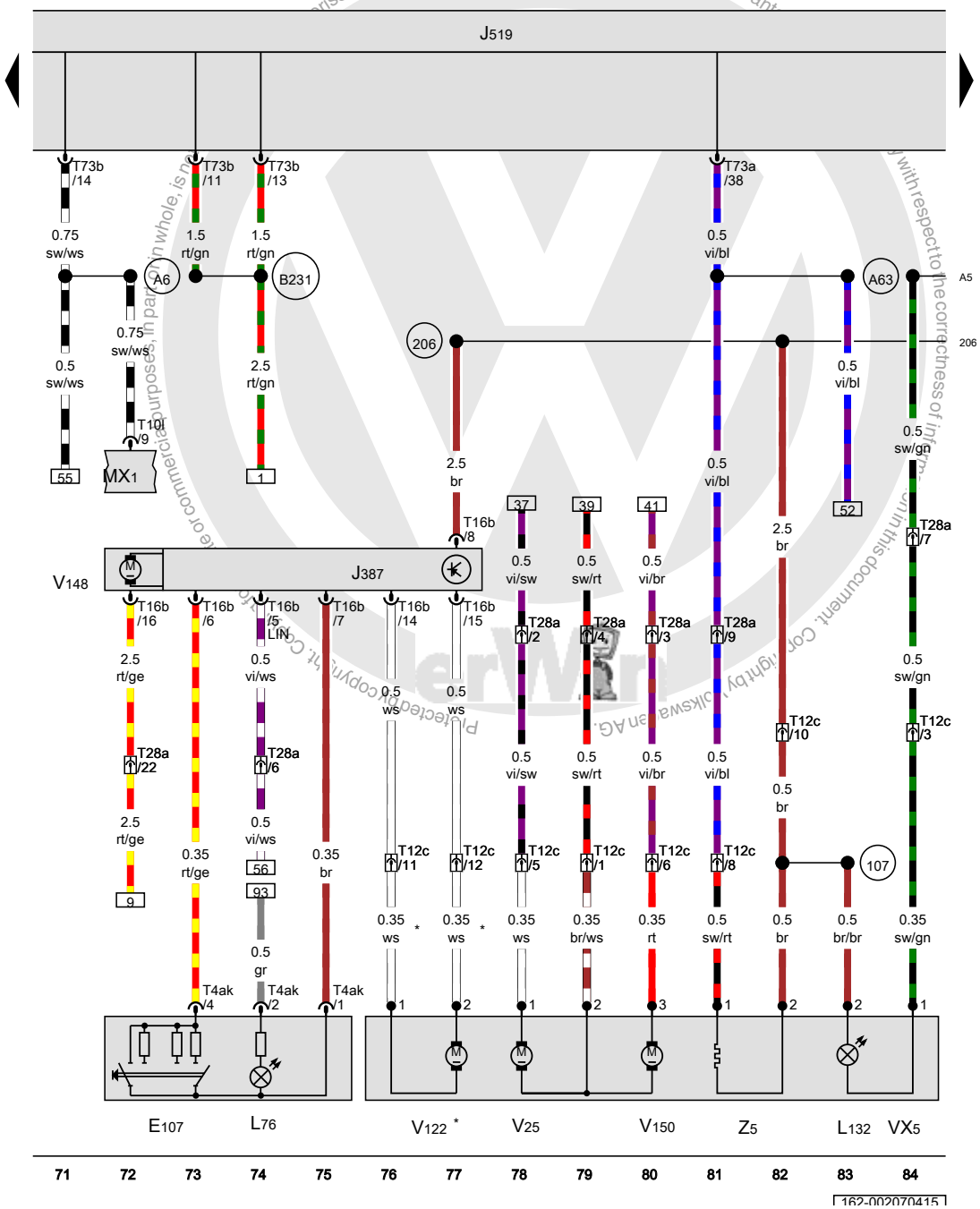

ws	=	white
sw	=	black
ro	=	red
rt	=	red
br	=	brown
gn	=	green
bl	=	blue
gr	=	grey
li	=	lilac
vi	=	lilac
ge	=	yellow
or	=	orange
rs	=	pink

Front passenger door window regulator switch, Front passenger door control module, Vehicle electrical control module system, Front passenger exterior rearview mirror turn signal bulb, Front passenger exterior rearview mirror, Front passenger side mirror adjustment motor 2, Front passenger exterior rearview mirror folding motor, Front passenger window regulator motor, Front passenger mirror adjustment motor

E107	Front passenger door window regulator switch
J387	Front passenger door control module
J519	Vehicle electrical control module system
L76	Push button illumination bulb
L132	Front passenger exterior rearview mirror turn signal bulb
MX1	Left front headlamp
T4ak	4-pin connector
T10l	10-pin connector
T12c	12-pin connector, in the front passenger door
T16b	16-pin connector
T28a	28-pin connector, Right A-pillar, bottom
T73a	73-pin connector
T73b	73-pin connector
VX5	Front passenger exterior rearview mirror
V25	Front passenger side mirror adjustment motor 2
V122	Front passenger exterior rearview mirror folding motor
V148	Front passenger window regulator motor
V150	Front passenger mirror adjustment motor
Z5	Heated front passenger exterior rearview mirror
107	Ground connection (in exterior mirror wiring harness)
206	Ground connection (in front passenger door wiring harness)
A5	Right turn signal positive connection (in instrument panel wiring harness)
A6	Left turn signal positive connection (in instrument panel wiring harness)
A63	Mirror adjustment/heating connection (in instrument panel wiring harness)
B231	Positive connection 5 (30a) (in interior wiring harness)
*	Omitted as a running change

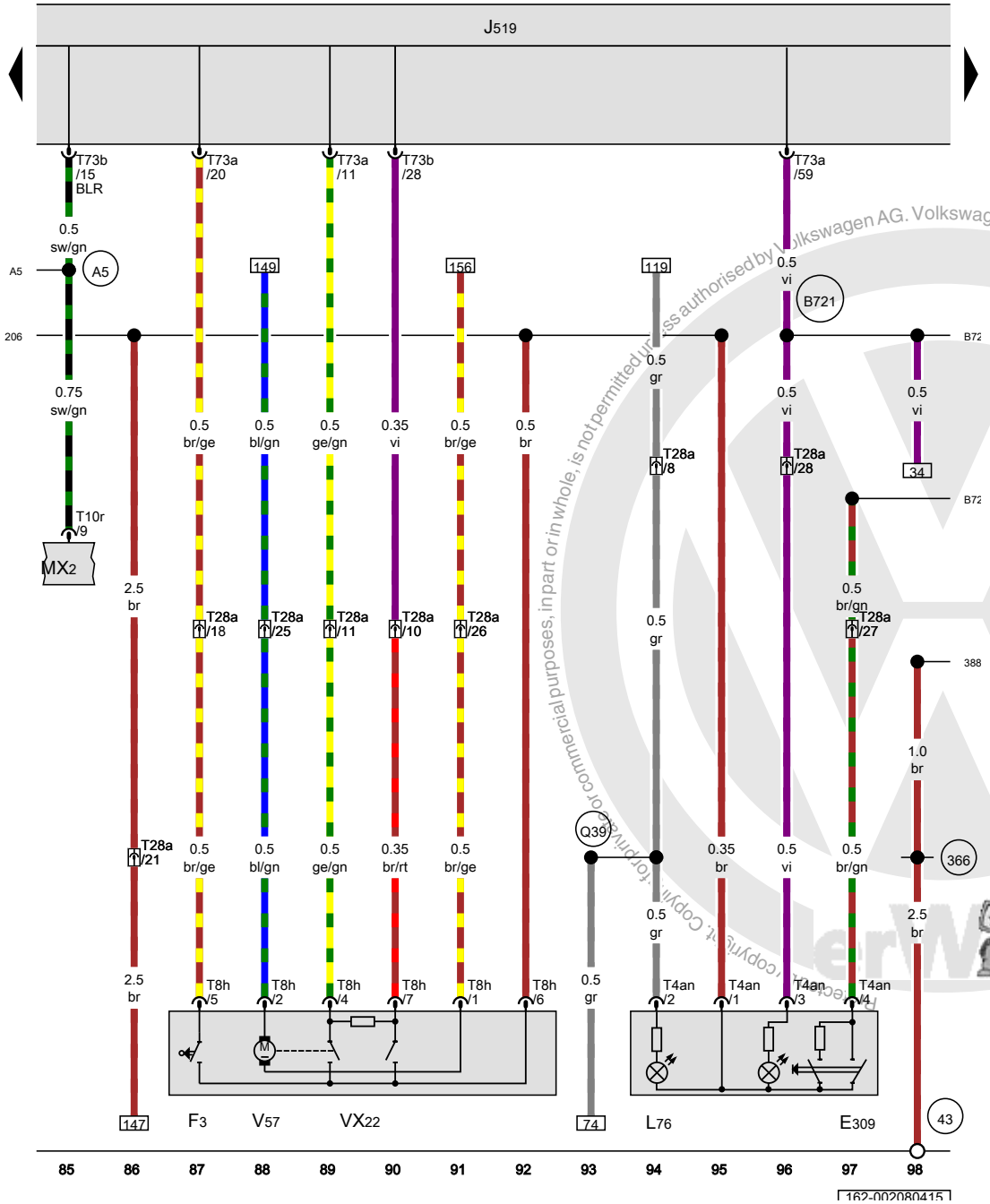

ws = white
sw = black
ro = red
rt = red
br = brown
gn = green
bl = blue
gr = grey
li = lilac
vi = lilac
ge = yellow
or = orange
rs = pink

Front passenger interior locking button, Front passenger door contact switch, Vehicle electrical control module system, Front passenger door lock unit, Front passenger door central locking system motor

E309	Front passenger interior locking button
F3	Front passenger door contact switch
J519	Vehicle electrical control module system
L76	Push button illumination bulb
MX2	Right front headlamp
T4an	4-pin connector
T8h	8-pin connector
T10r	10-pin connector
T28a	28-pin connector, Right A-pillar, bottom
T73a	73-pin connector
T73b	73-pin connector
VX22	Front passenger door lock unit
V57	Front passenger door central locking system motor
43	Ground connection on A-pillar, lower right
206	Ground connection (in front passenger door wiring harness)
366	Ground connection 1 (in main wiring harness)
388	Ground connection 23 (in main wiring harness)
A5	Right turn signal positive connection (in instrument panel wiring harness)
B720	Central locking connection 1 (in main wiring harness)
B721	Central locking connection 2 (in main wiring harness)
Q39	Positive connection 2 (58b) (in power window wiring harness)

Copyright by Volkswagen AG. Volkswagen AG does not guarantee or assume any liability with respect to the correctness of information in this document. Copyright by Volkswagen AG. Reproduction, copying, copyright, copyright, copyright

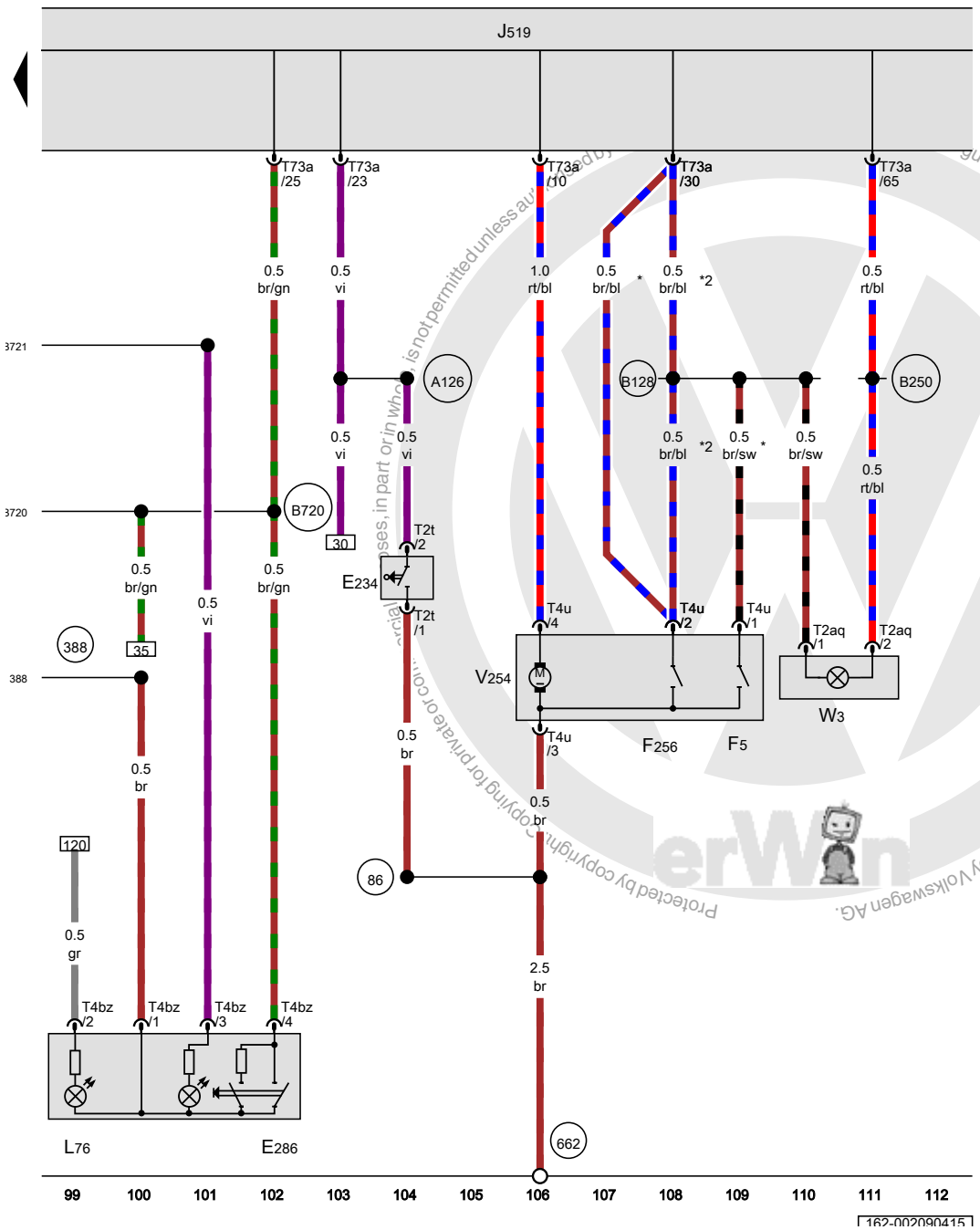

Release button in rear lid handle, Rear center interior locking switch, Luggage compartment lamp switch, Rear lid lock unit, Vehicle electrical control module system, Rear lid opening motor, Luggage compartment lamp

E234	Release button in rear lid handle
E286	Rear center interior locking switch
F5	Luggage compartment lamp switch
F256	Rear lid lock unit
J519	Vehicle electrical control module system
L76	Push button illumination bulb
T2aq	Double connector
T2t	Double connector
T4bz	4-pin connector
T4u	4-pin connector
T73a	73-pin connector
V254	Rear lid opening motor
W3	Luggage compartment lamp
86	Ground connection 1 (in rear wiring harness)
388	Ground connection 23 (in main wiring harness)
662	Ground connection in left rear side panel
A126	Rear lid contact switch connection (in instrument panel wiring harness)
B128	Luggage compartment lamp connection (in interior wiring harness)
B250	Positive connection (in roof wiring harness)
B720	Central locking connection 1 (in main wiring harness)
B721	Central locking connection 2 (in main wiring harness)
*	Omitted as a running change
*2	Running change

ws	=	white
sw	=	black
ro	=	red
rt	=	red
br	=	brown
gn	=	green
bl	=	blue
gr	=	grey
li	=	lilac
vi	=	lilac
ge	=	yellow
or	=	orange
rs	=	pink

Protected by copyright. Copying for private or commercial purposes, in part or in whole, is not permitted unless authorised. Copyright by Volkswagen AG. We guarantee or accept any liability with respect to the correctness of information in this document.

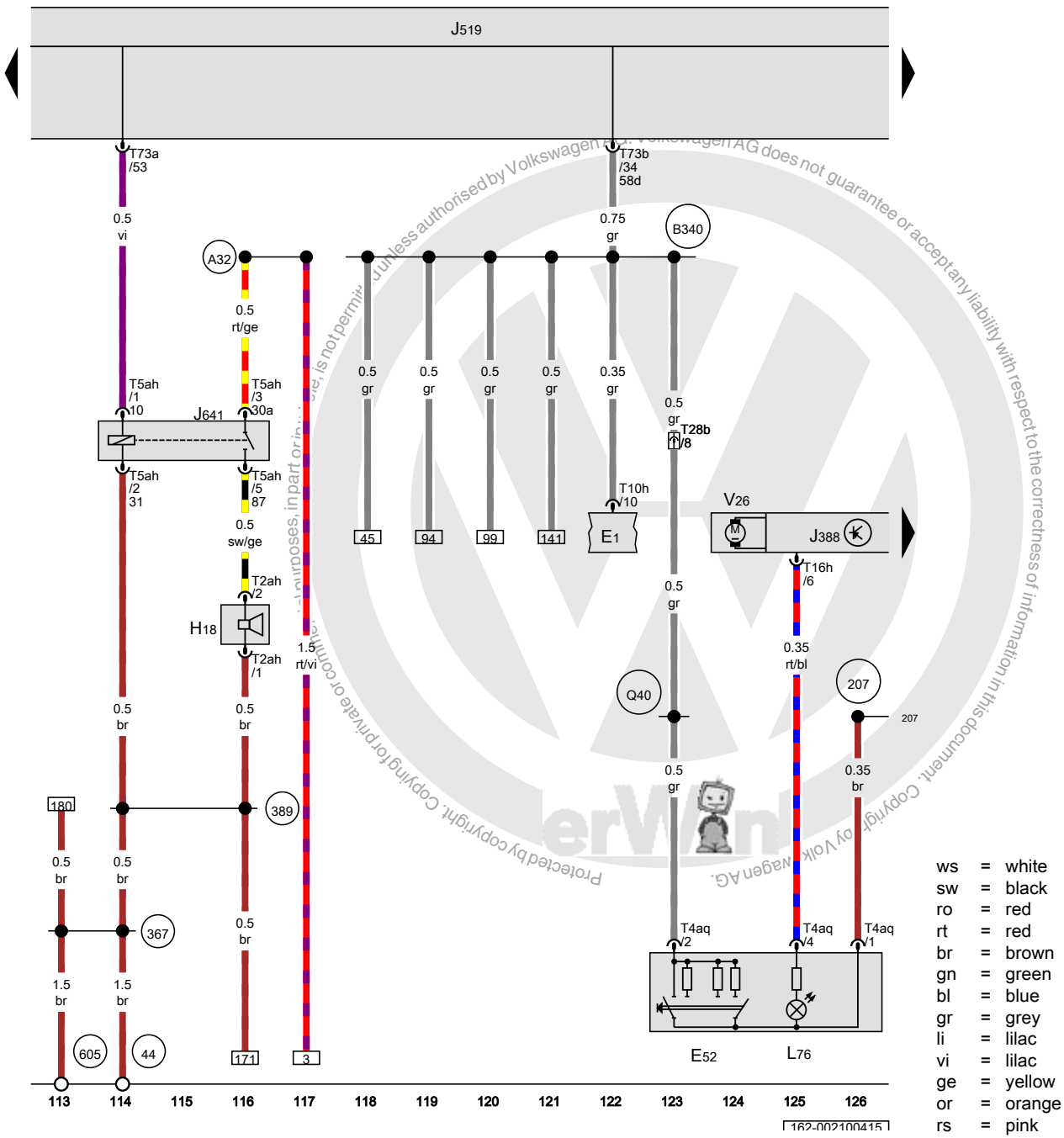

ws = white
sw = black
ro = red
rt = red
br = brown
gn = green
bl = blue
gr = grey
li = lilac
vi = lilac
ge = yellow
or = orange
rs = pink

Left rear power window switch in left rear door, Left rear door control module, Vehicle electrical control module system, Left rear window regulator motor

E1	Light switch
E52	Left rear power window switch in left rear door
H18	Alarm system horn
J388	Left rear door control module
J519	Vehicle electrical control module system
J641	Alarm horn relay
L76	Push button illumination bulb
T2ah	Double connector
T4aq	4-pin connector
T5ah	5-pin connector
T10h	10-pin connector
T16h	16-pin connector
T28b	28-pin connector, on the left B-pillar
T73a	73-pin connector
T73b	73-pin connector
V26	Left rear window regulator motor
44	Ground connection on A-pillar, lower left
207	Ground connection (in left rear door wiring harness)
367	Ground connection 2 (in main wiring harness)
389	Ground connection 24 (in main wiring harness)
605	Ground connection on upper steering column
A32	Positive connection (30) (in instrument panel wiring harness)
B340	Connection 58d (in main wiring harness) 1
Q40	Positive connection 3 (58b) (in power window wiring harness)

Protected by copyright. Copying for private or commercial purposes, in part or in whole, is not permitted unless authorised by Volkswagen AG. Volkswagen AG does not guarantee or accept any liability with respect to the correctness of information in this document. Copyright by Volkswagen AG.

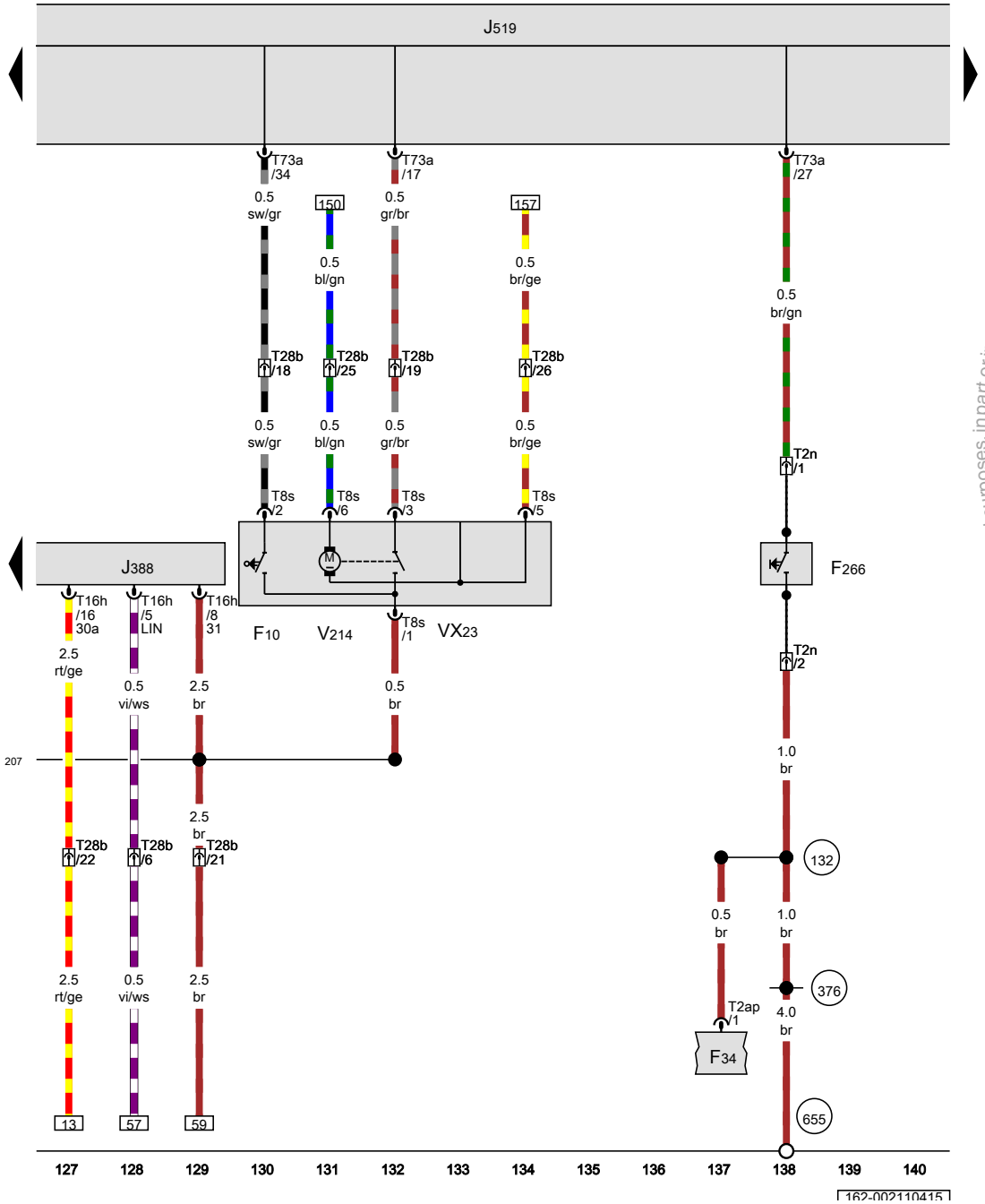

Left rear door contact switch, Engine hood contact switch, Left rear door control module, Vehicle electrical control module system, Left rear door lock unit, Left rear central locking -lock- motor

F10	Left rear door contact switch
F34	Brake fluid level warning switch
F266	Engine hood contact switch
J388	Left rear door control module
J519	Vehicle electrical control module system
T2ap	Double connector
T2n	Double connector
T8s	8-pin connector
T16h	16-pin connector
T28b	28-pin connector, on the left B-pillar
T73a	73-pin connector
VX23	Left rear door lock unit
V214	Left rear central locking -lock- motor
132	Ground connection 3 (in engine compartment wiring harness)
207	Ground connection (in left rear door wiring harness)
376	Ground connection 11 (in main wiring harness)
655	Ground connection on left headlamp

ws	=	white
sw	=	black
ro	=	red
rt	=	red
br	=	brown
gn	=	green
bl	=	blue
gr	=	grey
li	=	lilac
vi	=	lilac
ge	=	yellow
or	=	orange
rs	=	pink

Protected by copyright. Copying for private or commercial purposes, in part or in whole, is not permitted unless authorised by Volkswagen AG. Volkswagen AG does not guarantee or accept any liability with respect to the correctness of information in this document. Copyright by Volkswagen AG.

Right rear window switch in right rear door, Right rear door contact switch, Right rear door control module, Vehicle electrical control module system, Right rear door lock unit, Right rear window regulator motor, Right rear central locking -lock- motor

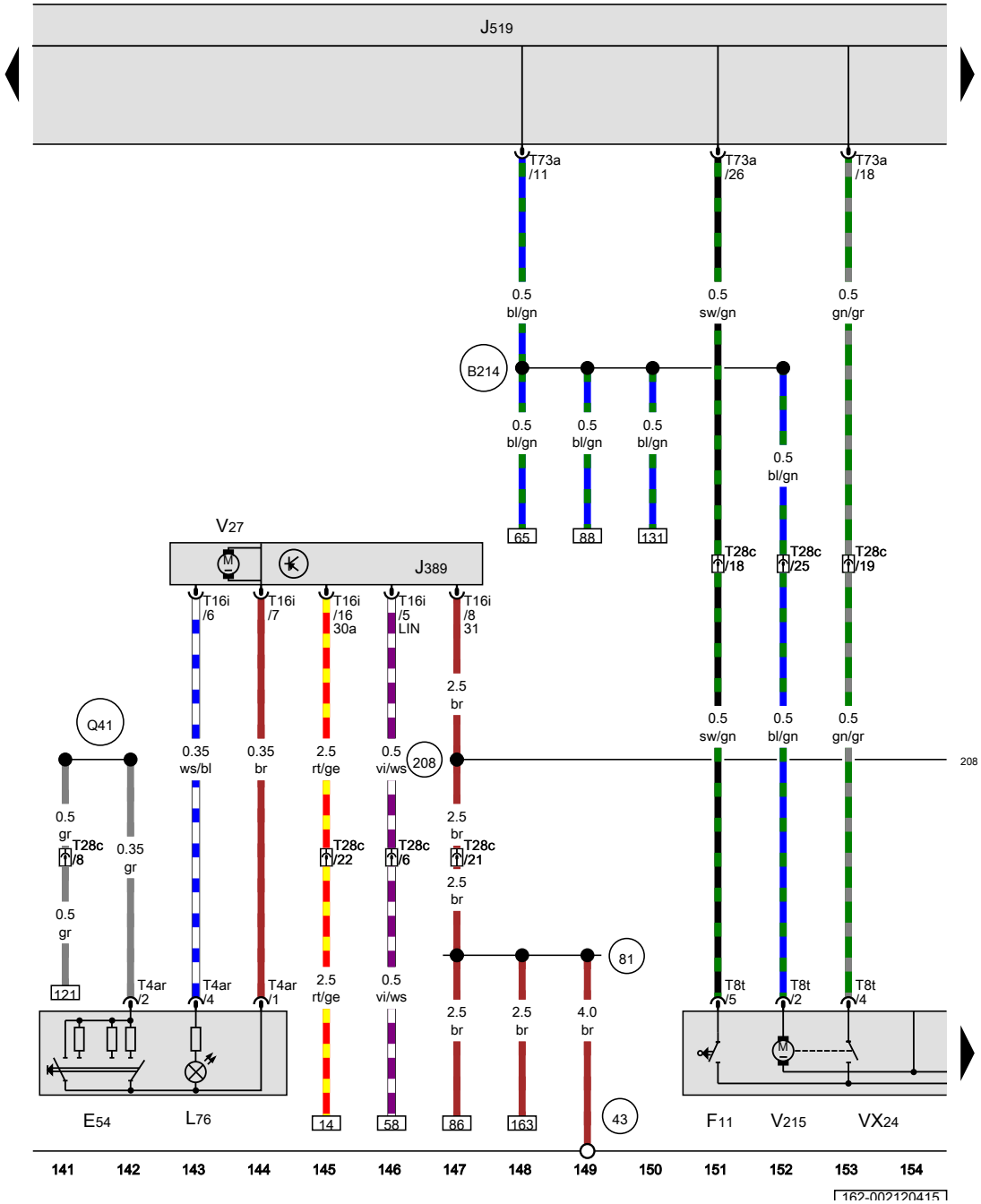

E54	Right rear window switch in right rear door
F11	Right rear door contact switch
J389	Right rear door control module
J519	Vehicle electrical control module system
L76	Push button illumination bulb
T4ar	4-pin connector
T8t	8-pin connector
T16i	16-pin connector
T28c	28-pin connector, on the right B-pillar
T73a	73-pin connector
VX24	Right rear door lock unit
V27	Right rear window regulator motor
V215	Right rear central locking -lock- motor
43	Ground connection on A-pillar, lower right
81	Ground connection 1 (in instrument panel wiring harness)
208	Ground connection (in right rear door wiring harness)
B214	Central locking connection 1 (in interior wiring harness)
Q41	Positive connection 4 (58b) (in power window wiring harness)

ws	=	white
sw	=	black
ro	=	red
rt	=	red
br	=	brown
gn	=	green
bl	=	blue
gr	=	grey
li	=	lilac
vi	=	lilac
ge	=	yellow
or	=	orange
rs	=	pink

Protected by copyright. Copyright by Volkswagen AG. Volkswagen AG does not guarantee or accept any liability with respect to the correctness of information in this document. Copying for private or commercial purposes, in part or in whole, is not permitted unless authorized by Volkswagen AG.

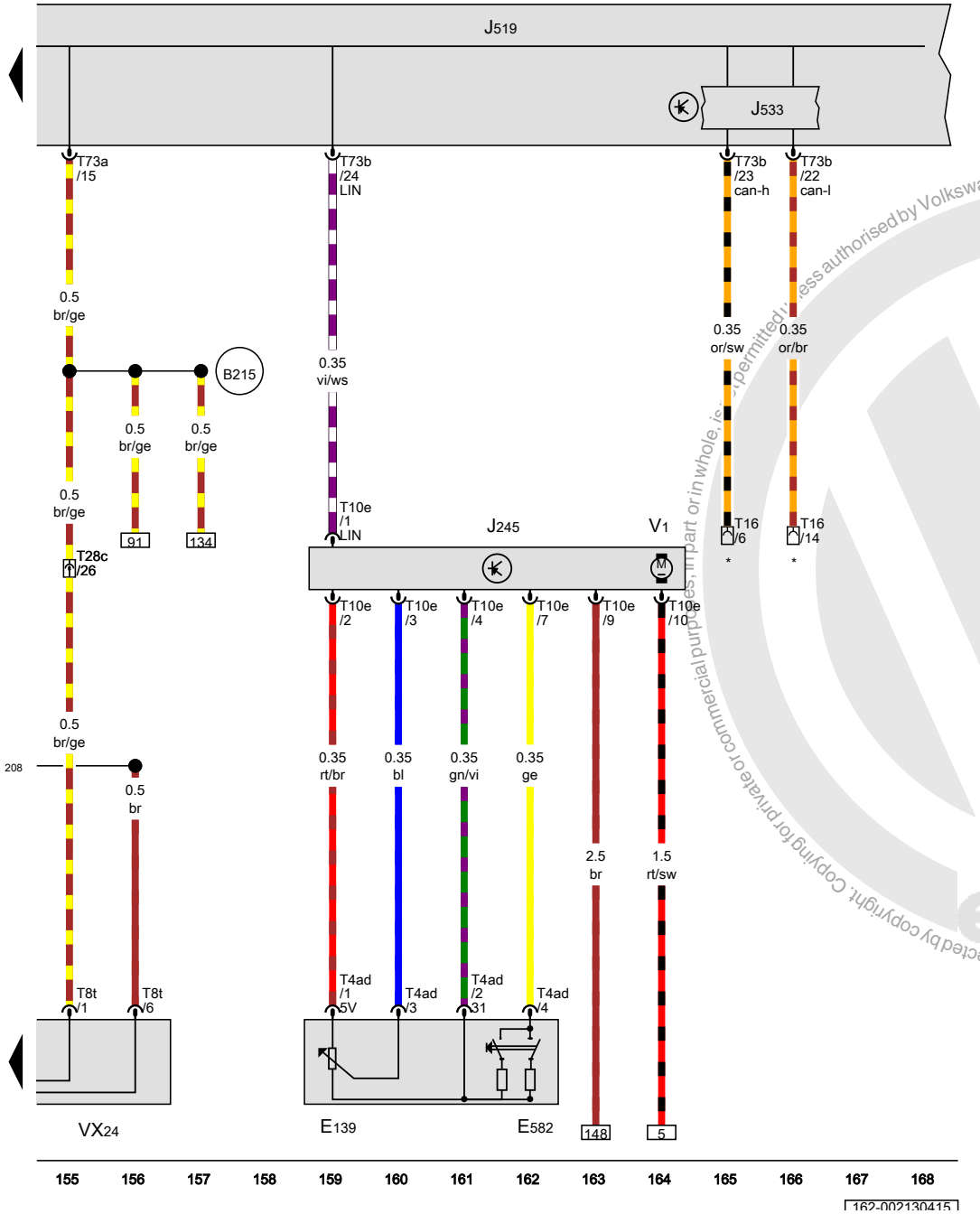

Sunroof adjustment regulator, Sunroof tilt button 1, Power sunroof control module, Vehicle electrical control module system, Data bus on board diagnostic interface, Sunroof motor, Right rear door lock unit

E139	Sunroof adjustment regulator
E582	Sunroof tilt button 1
J245	Power sunroof control module
J519	Vehicle electrical control module system
J533	Data bus on board diagnostic interface
T4ad	4-pin connector
T8t	8-pin connector
T10e	10-pin connector
T16	16-pin connector
T28c	28-pin connector, on the right B-pillar
T73a	73-pin connector
T73b	73-pin connector
V1	Sunroof motor
VX24	Right rear door lock unit
208	Ground connection (in right rear door wiring harness)
B215	Central locking connection 2 (in interior wiring harness)
*	Diagnostic connector

ws	=	white
sw	=	black
ro	=	red
rt	=	red
br	=	brown
gn	=	green
bl	=	blue
gr	=	grey
li	=	lilac
vi	=	lilac
ge	=	yellow
or	=	orange
rs	=	pink

Protected by copyright. Copyright by Volkswagen AG. Volkswagen AG does not guarantee or accept any liability with respect to the correctness of information in this document. Copyright by Volkswagen AG. Copying for private or commercial purposes, in part or in whole, is not permitted unless authorised by Volkswagen AG.

Terminal 15 power supply relay, Terminal 15 power supply relay 2, Automatic dimming interior rearview mirror

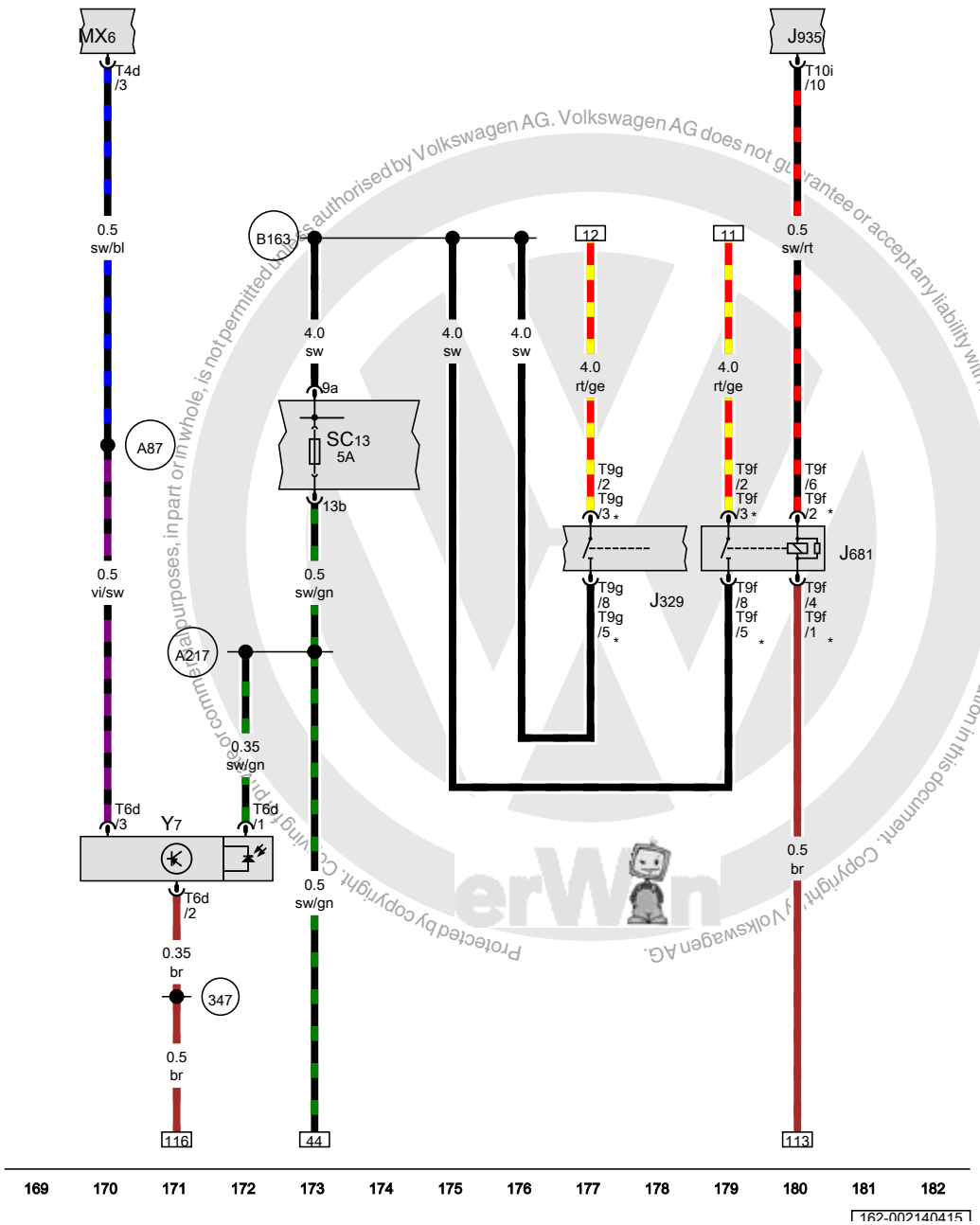

J329	Terminal 15 power supply relay
J681	Terminal 15 power supply relay 2
J935	Converter box
MX6	Right tail lamp 2
SC13	Fuse 13 (on fuse panel C)
T4d	4-pin connector
T6d	6-pin connector
T9f	9-pin connector
T9g	9-pin connector
T10i	10-pin connector
Y7	Automatic dimming interior rearview mirror
347	Ground connection (in roof wiring harness)
A87	Back-up lamp connection (in instrument panel wiring harness)
A217	Positive connection 8 (15a) (in instrument panel wiring harness)
B163	Positive connection 1 (15) (in interior wiring harness)
*	Running change

ws	=	white
sw	=	black
ro	=	red
rt	=	red
br	=	brown
gn	=	green
bl	=	blue
gr	=	grey
li	=	lilac
vi	=	lilac
ge	=	yellow
or	=	orange
rs	=	pink

Protected by copyright. Copying for private or commercial purposes, in part or in whole, is not permitted unless authorised by Volkswagen AG. Volkswagen AG does not guarantee or accept any liability with respect to the correctness of information in this document. Copyright by Volkswagen AG.

Ground concept

from April 2010

Protected by copyright. Copying for private or commercial purposes, in part or in whole, is not permitted unless authorised by Volkswagen AG. Volkswagen AG does not guarantee or accept any liability with respect to the correctness of information in this document. Copyright by Volkswagen AG.

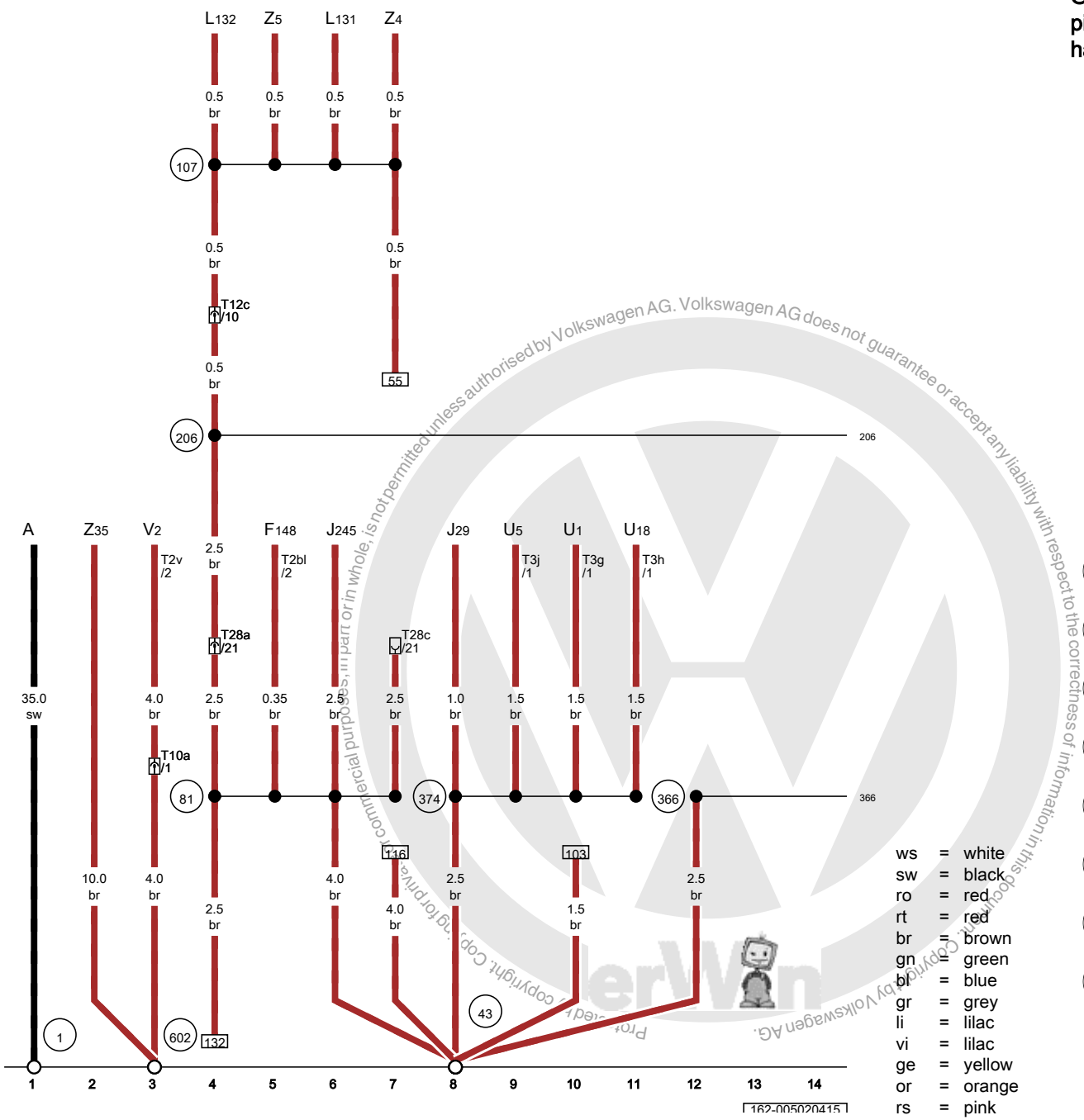

ws	=	white
sw	=	black
ro	=	red
rt	=	red
br	=	brown
gn	=	green
bl	=	blue
gr	=	grey
li	=	lilac
vi	=	lilac
ge	=	yellow
or	=	orange
rs	=	pink

Ground strap, battery to body, Ground connection on A-pillar, lower right, Ground connection 1 (in main wiring harness), Ground connection in left front footwell

A	Battery
F148	Front passenger vanity mirror lamp contact switch
J29	Blocking diode
J245	Power sunroof control module
L131	Driver exterior rearview mirror turn signal bulb
L132	Front passenger exterior rearview mirror turn signal bulb
T2bl	Double connector
T2v	Double connector
T3g	3-pin connector
T3h	3-pin connector
T3j	3-pin connector
T10a	10-pin connector
T12c	12-pin connector
T28a	28-pin connector, behind the lower left A-pillar trim
T28c	28-pin connector
U1	Cigarette lighter
U5	12 V socket
U18	12 V socket 2
V2	Fresh air blower
Z4	Heated driver exterior rearview mirror
Z5	Heated front passenger exterior rearview mirror
Z35	Auxiliary heater heating element
1	Ground strap, battery to body
43	Ground connection on A-pillar, lower right
81	Ground connection 1 (in instrument panel wiring harness)
107	Ground connection (in exterior mirror wiring harness), in the left door, near the exterior rearview mirror
206	Ground connection (in front passenger door wiring harness)
366	Ground connection 1 (in main wiring harness)
374	Ground connection 9 (in main wiring harness)
602	Ground connection in left front footwell

Protected by copyright. Copying for private or commercial purposes, in part or in whole, is not permitted unless authorised by Volkswagen AG. Volkswagen AG does not guarantee or accept any liability with respect to the correctness of information in this document. Copyright by Volkswagen AG.

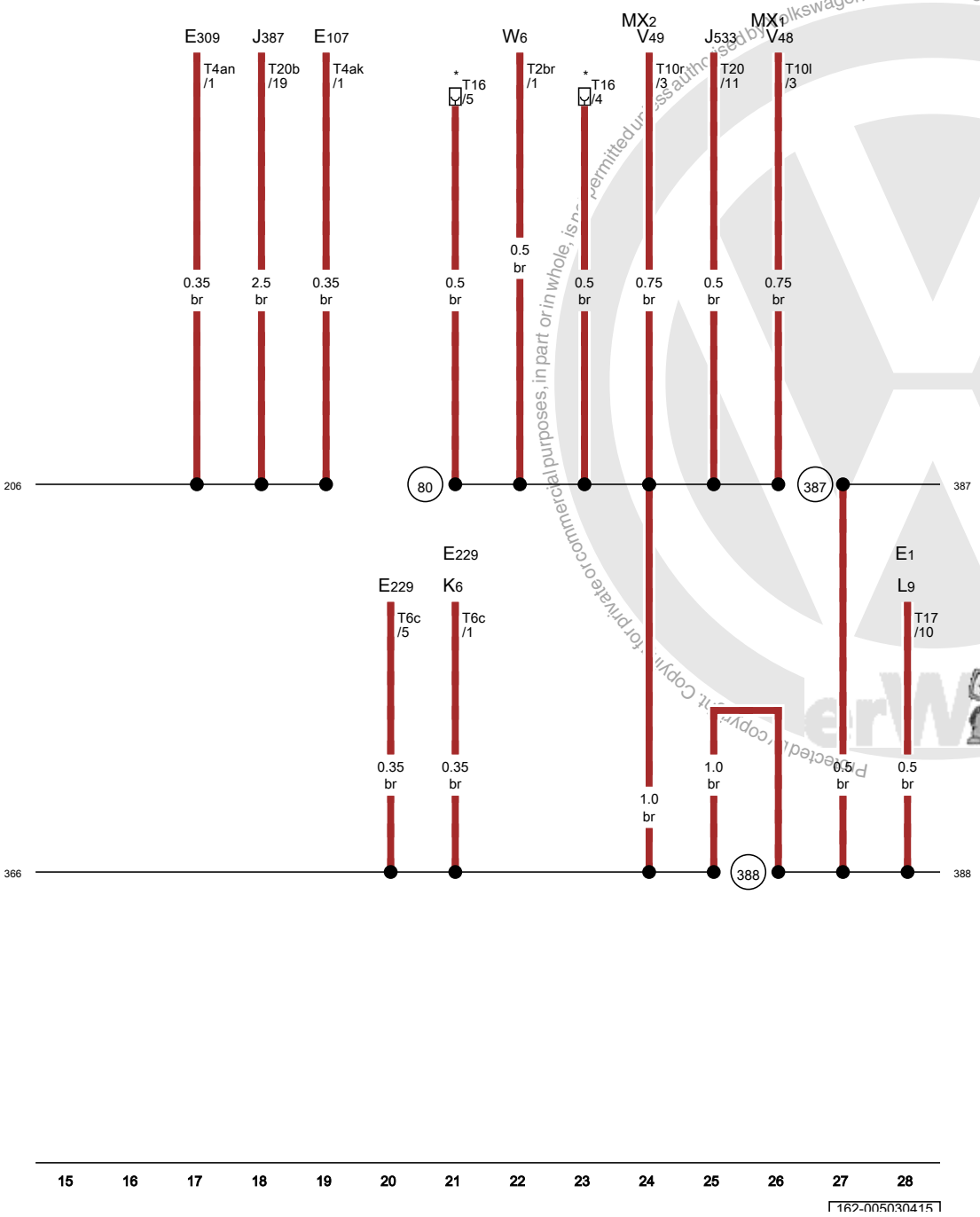

Ground connection 1 (in main wiring harness), Ground connection 23 (in main wiring harness)

E1	Light switch
E107	Front passenger door window regulator switch
E229	Emergency flasher button
E309	Front passenger interior locking button
J387	Front passenger door control module
J533	Data bus on board diagnostic interface
K6	Emergency flasher indicator lamp
L9	Headlamp switch illumination bulb
MX1	Left front headlamp
MX2	Right front headlamp
T2br	Double connector
T4ak	4-pin connector
T4an	4-pin connector
T6c	6-pin connector
T10l	10-pin connector
T10r	10-pin connector
T16	16-pin connector
T17	17-pin connector
T20	20-pin connector
T20b	20-pin connector
V48	Left headlamp beam adjustment motor
V49	Right headlamp beam adjustment motor
W6	Glove compartment lamp
80	Ground connection 1 (in instrument cluster wiring harness)
206	Ground connection (in front passenger door wiring harness)
366	Ground connection 1 (in main wiring harness)
387	Ground connection 22 (in main wiring harness)
388	Ground connection 23 (in main wiring harness)
*	Diagnostic connector

ws	=	white
sw	=	black
ro	=	red
rt	=	red
br	=	brown
gn	=	green
bl	=	blue
gr	=	grey
li	=	lilac
vi	=	lilac
ge	=	yellow
or	=	orange
rs	=	pink

Copyright by Volkswagen AG. Volkswagen AG does not guarantee or accept any liability with respect to the correctness and completeness of this document. Copyrighted by Volkswagen AG. Protected by copyright. Copying for private or commercial purposes, in part or in whole, is not permitted unless authorised by Volkswagen AG.

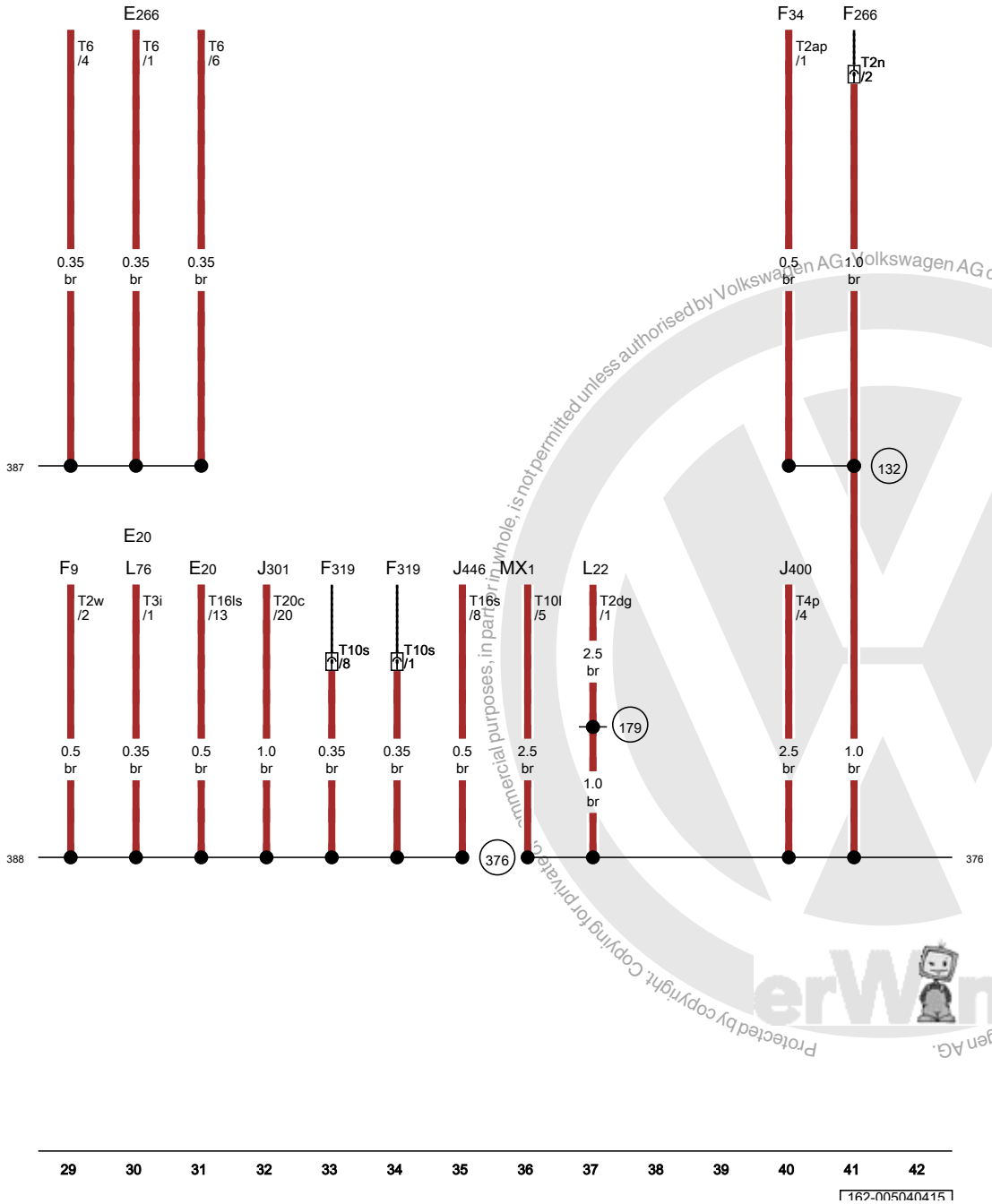

Ground connection 23 (in main wiring harness)

E20	Instrument panel and switch illumination dimmer switch
E266	Parking aid button
F9	Parking brake indicator lamp switch
F34	Brake fluid level warning switch
F266	Engine hood contact switch
F319	Selector lever park position lock switch
J301	A/C control module
J400	Wiper motor control module
J446	Parking aid control module
L22	Left front fog lamp bulb
L76	Push button illumination bulb
MX1	Left front headlamp
T2ap	Double connector
T2dg	Double connector
T2n	Double connector
T2w	Double connector
T3i	3-pin connector
T4p	4-pin connector
T6	6-pin connector
T10l	10-pin connector
T10s	10-pin connector
T16ls	16-pin connector
T16s	16-pin connector
T20c	20-pin connector
132	Ground connection 3 (in engine compartment wiring harness)
179	Ground connection (in left headlamp wiring harness)
376	Ground connection 11 (in main wiring harness)
387	Ground connection 22 (in main wiring harness)
388	Ground connection 23 (in main wiring harness)

ws	=	white
sw	=	black
ro	=	red
rt	=	red
br	=	brown
gn	=	green
bl	=	blue
gr	=	grey
li	=	lilac
vi	=	lilac
ge	=	yellow
or	=	orange
rs	=	pink

Protected by copyright. Copying for private or commercial purposes, in part or in whole, is not permitted unless authorised by Volkswagen AG. Volkswagen AG does not guarantee or accept any liability with respect to the correctness of information in this document. Copyright by Volkswagen AG.

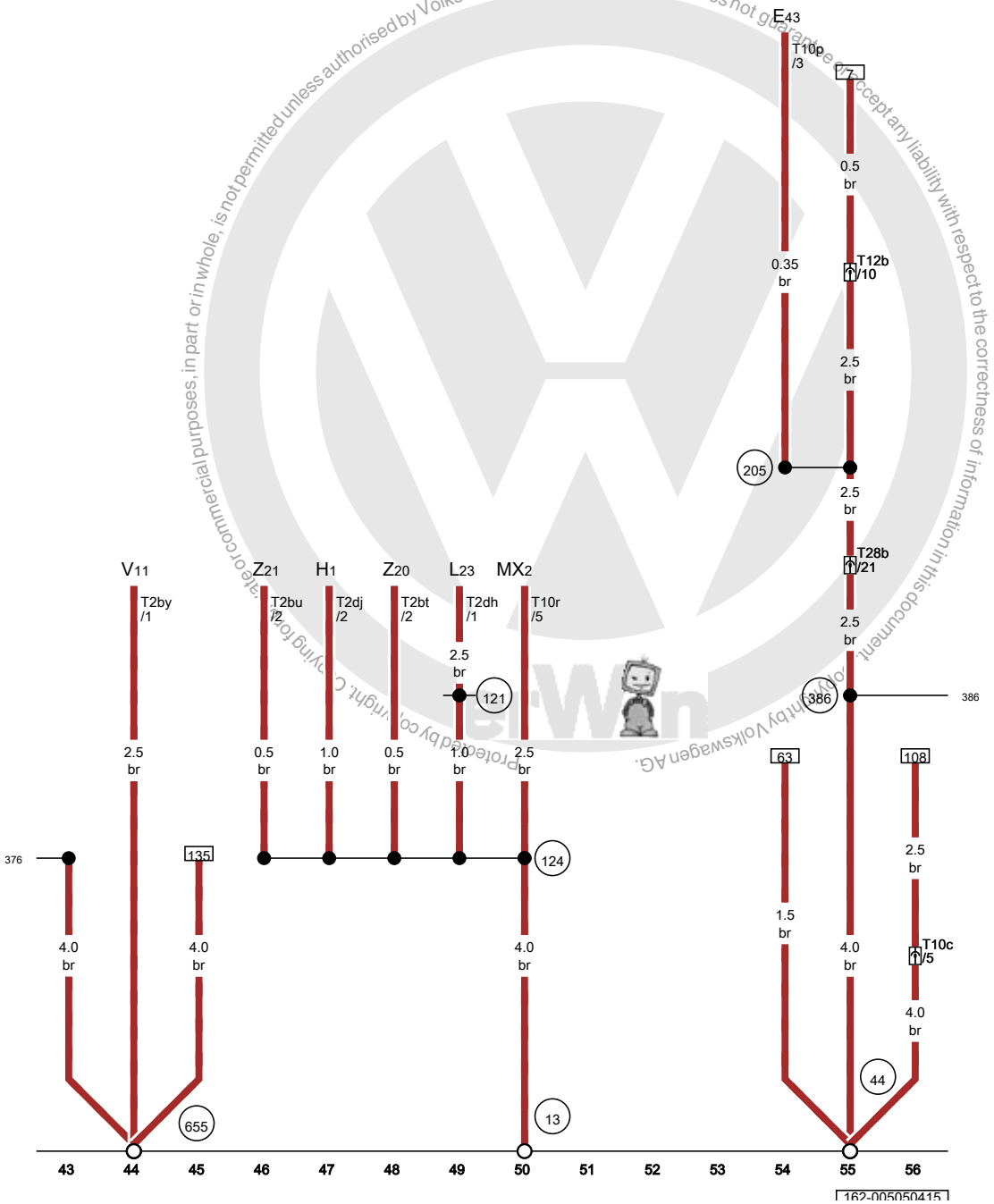

ws	=	white
sw	=	black
ro	=	red
rt	=	red
br	=	brown
gn	=	green
bl	=	blue
gr	=	grey
li	=	lilac
vi	=	lilac
ge	=	yellow
or	=	orange
rs	=	pink

Ground connection in engine compartment, right, Ground connection on A-pillar, lower left, Ground connection on left headlamp

E43	Mirror adjusting switch
H1	Signal horn and dual tone horn
L23	Right front fog lamp bulb
MX2	Right front headlamp
T2bt	Double connector
T2bu	Double connector
T2by	Double connector
T2dh	Double connector
T2dj	Double connector
T10c	10-pin connector
T10p	10-pin connector
T10r	10-pin connector
T12b	12-pin connector
T28b	28-pin connector, on the right B-pillar
V11	Headlamp washer pump
Z20	Left washer nozzle heater
Z21	Right washer nozzle heater
13	Ground connection in engine compartment, right
44	Ground connection on A-pillar, lower left
121	Ground connection 2 (in right front wiring harness)
124	Ground connection (in right engine compartment wiring harness)
205	Ground connection (in driver door wiring harness)
376	Ground connection 11 (in main wiring harness)
386	Ground connection 21 (in main wiring harness)
655	Ground connection on left headlamp

Protected by copyright. Copying for private or commercial purposes, in part or in whole, is not permitted unless authorised by Volkswagen AG. Volkswagen AG does not guarantee or accept any liability with respect to the correctness of information in this document. Copyright by Volkswagen AG.

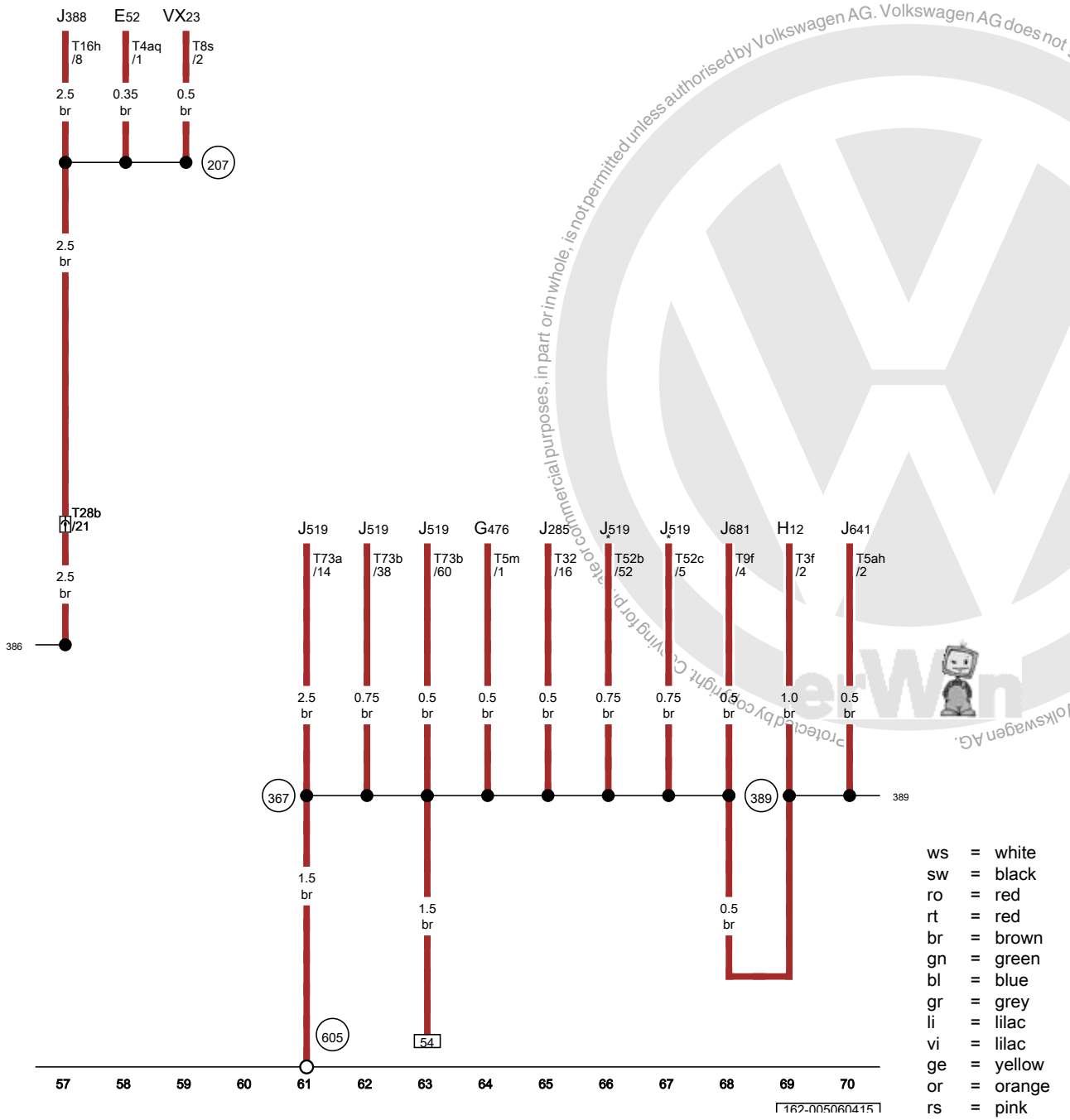

ws	=	white
sw	=	black
ro	=	red
rt	=	red
br	=	brown
gn	=	green
bl	=	blue
gr	=	grey
li	=	lilac
vi	=	lilac
ge	=	yellow
or	=	orange
rs	=	pink

Ground connection 2 (in main wiring harness), Ground connection 24 (in main wiring harness), Ground connection on upper steering column

E52	Left rear power window switch in left rear door
G476	Clutch position sensor
H12	Alarm horn
J285	Instrument cluster control module
J388	Left rear door control module
J519	Vehicle electrical control module system
J641	Alarm horn relay
J681	Terminal 15 power supply relay 2
T3f	3-pin connector
T4aq	4-pin connector
T5ah	5-pin connector
T5m	5-pin connector
T8s	8-pin connector
T9f	9-pin connector
T16h	16-pin connector
T28b	28-pin connector, on the right B-pillar
T32	32-pin connector
T52b	52-pin connector
T52c	52-pin connector
T73a	73-pin connector
T73b	73-pin connector
VX23	Left rear door lock unit
207	Ground connection (in left rear door wiring harness)
367	Ground connection 2 (in main wiring harness)
386	Ground connection 21 (in main wiring harness)
389	Ground connection 24 (in main wiring harness)
605	Ground connection on upper steering column
*	only for vehicles with High equipment (AW1)
*2	Only for vehicles with dual tone horn

Protected by copyright. Copying for private or commercial purposes, in part or in whole, is not permitted unless authorised by Volkswagen AG. Volkswagen AG does not guarantee or accept any liability with respect to the correctness and completeness of this document. Copyright by Volkswagen AG.

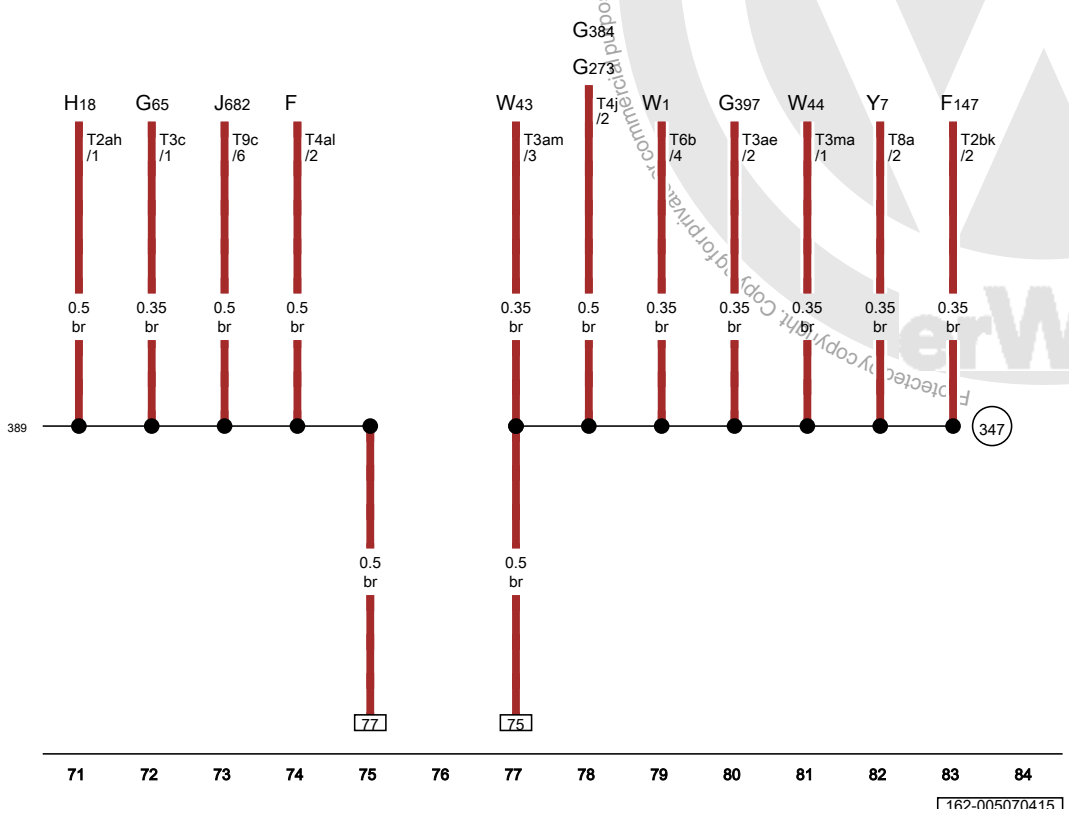

Ground connection (in roof wiring harness), Ground connection 24 (in main wiring harness)

F	Brake lamp switch
F147	Driver vanity mirror lamp contact switch
G65	High pressure sensor
G273	Interior monitoring sensor
G384	Vehicle inclination sensor
G397	Rain/light recognition sensor
H18	Alarm system horn
J682	Terminal 50 power supply relay
T2ah	Double connector
T2bk	Double connector
T3ae	3-pin connector
T3am	3-pin connector
T3c	3-pin connector
T3ma	3-pin connector
T4al	4-pin connector
T4j	4-pin connector
T6b	6-pin connector
T8a	8-pin connector
T9c	9-pin connector
W1	Front interior lamp
W43	Rear interior lamp
W44	Rear center reading lamp
Y7	Automatic dimming interior rearview mirror
347	Ground connection (in roof wiring harness)
389	Ground connection 24 (in main wiring harness)
*	only for vehicles with Low equipment (AW0)

ws	=	white
sw	=	black
ro	=	red
rt	=	red
br	=	brown
gn	=	green
bl	=	blue
gr	=	grey
li	=	lilac
vi	=	lilac
ge	=	yellow
or	=	orange
rs	=	pink

Protected by copyright. Copyright by Volkswagen AG. Volkswagen AG does not guarantee or accept any liability with respect to the correctness of information in this document. Copyright by Volkswagen AG. Protected by copyright. Copying for private or commercial purposes, in part or in whole, is not permitted unless authorised by Volkswagen AG.

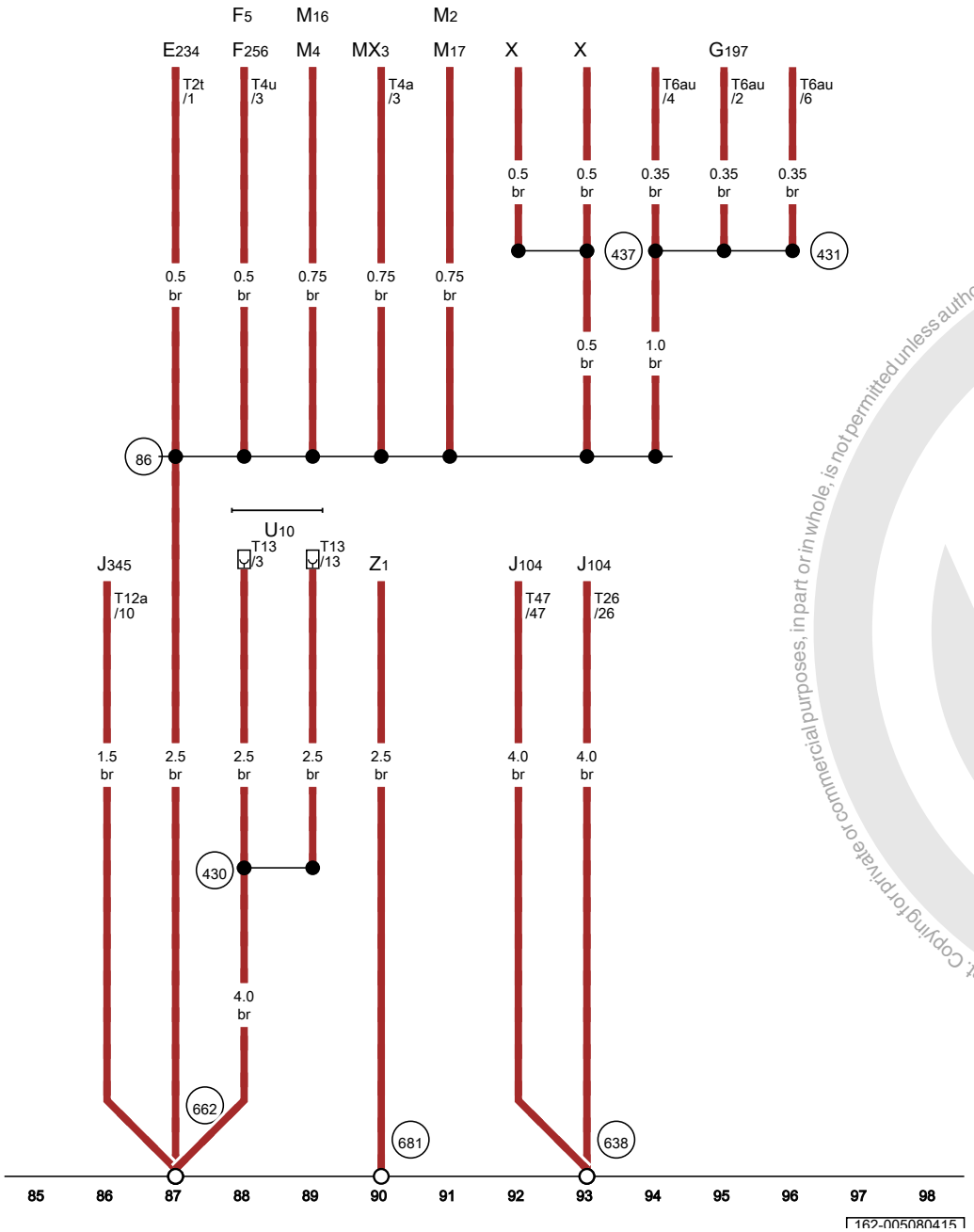

Ground connection on right A-pillar, Ground connection in left rear side panel, Ground connection 1 in right rear side panel

E234	Release button in rear lid handle
F5	Luggage compartment lamp switch
F256	Rear lid lock unit
G197	Compass magnetic field sensor
J104	ABS control module
J345	Towing recognition control module
M2	Right tail lamp bulb
MX3	Left tail lamp
M4	Left tail lamp bulb
M16	Left back-up lamp bulb
M17	Right back-up lamp bulb
T2t	Double connector
T4a	4-pin connector
T4u	4-pin connector
T6au	6-pin connector
T12a	12-pin connector
T13	13-pin connector
T26	26-pin connector
T47	47-pin connector
U10	Trailer socket
X	License plate lamp
Z1	Rear window defogger
86	Ground connection 1 (in rear wiring harness)
430	Ground connection in trailer hitch wiring harness
431	Ground connection 2 (in roof wiring harness)
437	Ground connection (in license plate lamp wiring harness)
638	Ground connection on right A-pillar
662	Ground connection in left rear side panel
681	Ground connection 1 in right rear side panel

ws	=	white
sw	=	black
ro	=	red
rt	=	red
br	=	brown
gn	=	green
bl	=	blue
gr	=	grey
li	=	lilac
vi	=	lilac
ge	=	yellow
or	=	orange
rs	=	pink

Protected by copyright. Copying for private or commercial purposes, in part or in whole, is not permitted unless authorised by Volkswagen AG. Volkswagen AG does not make any representations or accept any liability with respect to the correctness of information in this document. Copyright by Volkswagen AG.

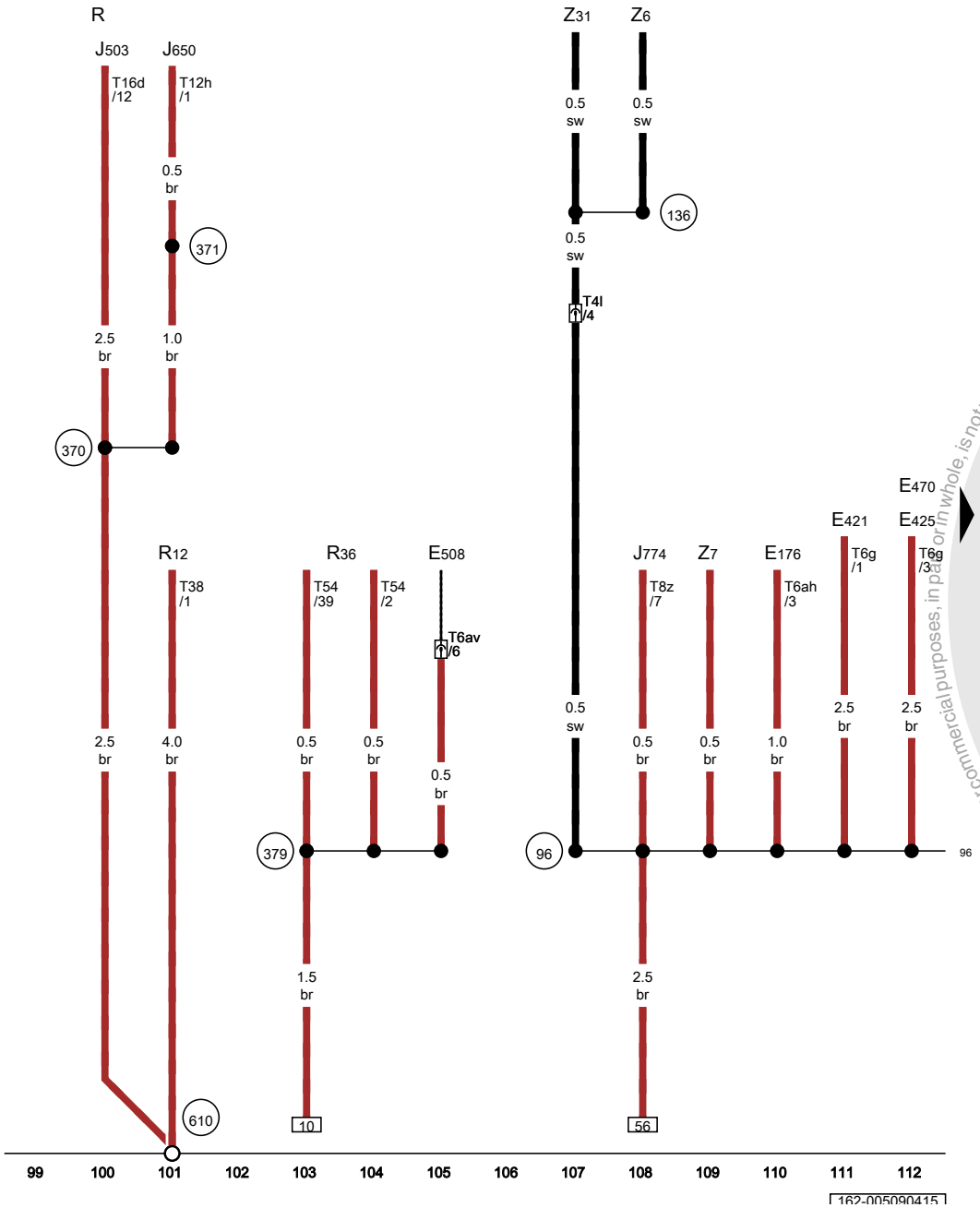

Ground connection 1 (in heated seats wiring harness), Ground connection 14 (in main wiring harness), Audio ground connection under front center console

E176	Driver seat lumbar support adjustment switch
E421	Angle adjustment button
E425	Backrest adjustment button
E470	Driver seat adjustment control head
E508	Cellular telephone preparation control head
J503	Radio/navigation display unit control module
J650	Multimedia system control module
J774	Front seat heating control module
R	Radio
R12	Amplifier
R36	Telephone transceiver
T4l	4-pin connector
T6ah	6-pin connector
T6av	6-pin connector
T6g	6-pin connector
T8z	8-pin connector
T12h	12-pin connector
T16d	16-pin connector
T38	38-pin connector
T54	54-pin connector
Z6	Driver seat heating element
Z7	Driver backrest heating element
Z31	Driver seat bolster heater
96	Ground connection 1 (in heated seats wiring harness)
136	Ground connection 2 (in heated seats wiring harness)
370	Ground connection 5 (in main wiring harness)
371	Ground connection 6 (in main wiring harness)
379	Ground connection 14 (in main wiring harness)
610	Audio ground connection under front center console

ws	=	white
sw	=	black
ro	=	red
rt	=	red
br	=	brown
gn	=	green
bl	=	blue
gr	=	grey
li = lilac
vi = lilac
ge = yellow
or = orange
rs = pink

Protected by copyright. Copying for private or commercial purposes, in part or in whole, is not permitted unless authorised by Volkswagen AG. Volkswagen AG does not guarantee or accept any liability with respect to the correctness of information in this document. Copyright by Volkswagen AG.

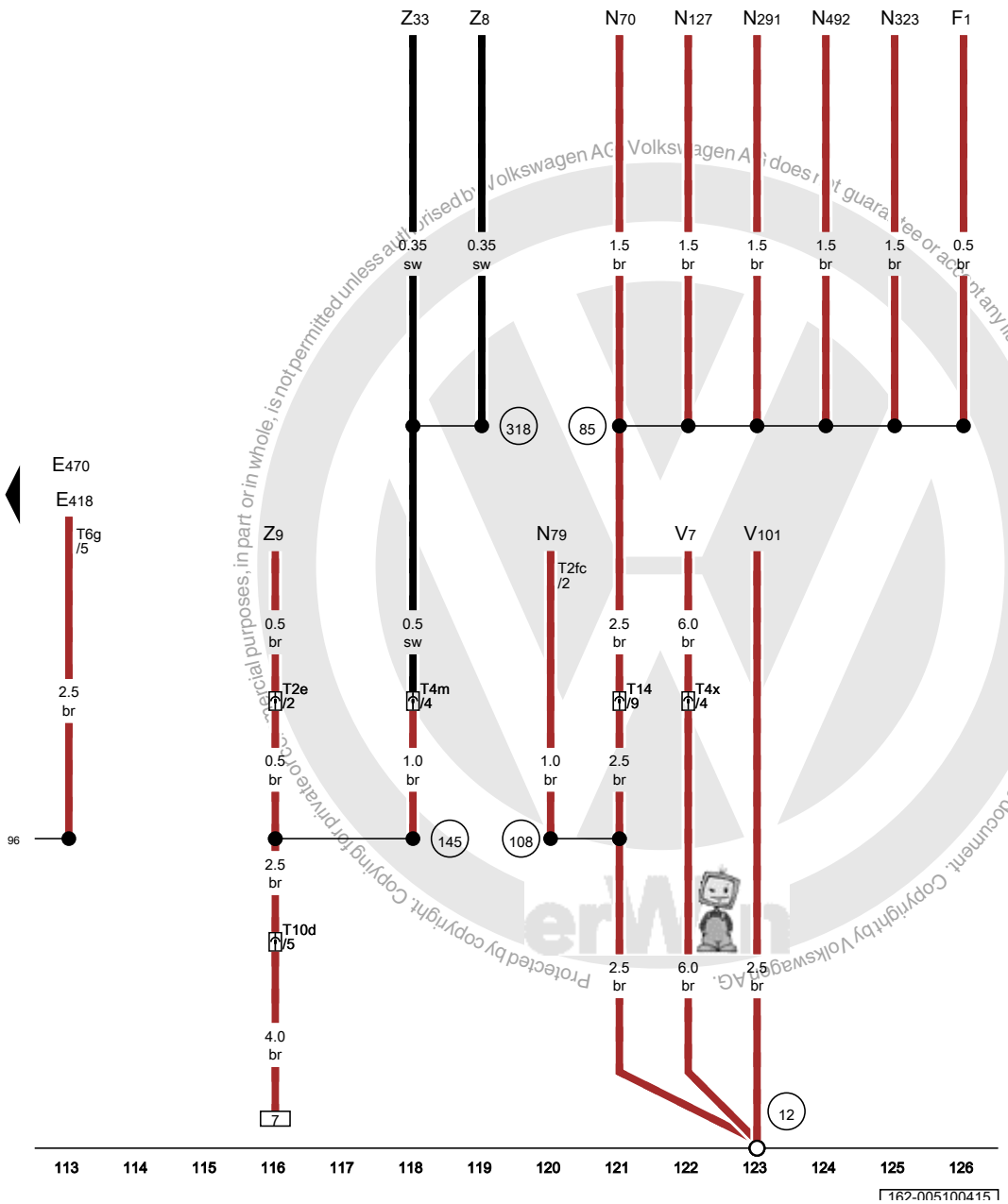

ws	=	white
sw	=	black
ro	=	red
rt	=	red
br	=	brown
gn	=	green
bl	=	blue
gr	=	grey
li	=	lilac
vi	=	lilac
ge	=	yellow
or	=	orange
rs	=	pink

Ground connection in engine compartment, left, Ground connection 1 (in heated seats wiring harness), Ground connection 3 (in heated seats wiring harness), Ground connection 4 (in heated seats wiring harness)

E418	Seat forward/back adjustment button
E470	Driver seat adjustment control head
F1	Oil pressure switch
N70	Ignition coil 1 with power output stage
N79	Positive crankcase ventilation heating element
N127	Ignition coil 2 with power output stage
N291	Ignition coil 3 with power output stage
N323	Ignition coil 5 with power output stage
N492	Cooling circuit solenoid valve
T2e	Double connector
T2fc	Double connector
T4m	4-pin connector
T4x	4-pin connector
T6g	6-pin connector
T10d	10-pin connector
T14	14-pin connector
V7	Radiator fan
V101	Secondary air injection pump motor
Z8	Front passenger seat heating element
Z9	Front passenger backrest heating element
Z33	Front passenger seat bolster heater
12	Ground connection in engine compartment, left
85	Ground connection 1 (in engine compartment wiring harness)
96	Ground connection 1 (in heated seats wiring harness)
108	Ground connection 2 (in left front wiring harness)
145	Ground connection 3 (in heated seats wiring harness)
318	Ground connection 4 (in heated seats wiring harness)

Volkswagen AG. Volkswagen AG does not guarantee or accept any liability with respect to the correctness of information in this document. Copyright by Volkswagen AG. Protected by copyright. Copying for private or commercial purposes, in part or in whole, is not permitted unless authorised by Volkswagen AG.

Protected by copyright. Copying for private or commercial purposes, in part or in whole, is not permitted unless authorised by Volkswagen AG. Volkswagen AG does not guarantee or accept any liability with respect to the suitability and correctness of the information in this document. Copyright by Volkswagen AG.

Ground connection 2 (in engine compartment wiring harness), Ground connection (in right rear door wiring harness), Ground connection 2 in engine compartment, left, Ground connection 2 in right rear side panel

E54	Right rear window switch in right rear door
G6	Transfer fuel pump
J389	Right rear door control module
J500	Power steering control module
J538	Fuel pump control module
J623	Engine control module
T2a	Double connector
T4ar	4-pin connector
T5b	5-pin connector
T8t	8-pin connector
T10n	10-pin connector
T18c	18-pin connector
T28c	28-pin connector
T94	94-pin connector
VX24	Right rear door lock unit
131	Ground connection 2 (in engine compartment wiring harness)
196	Ground connection 3 (in rear wiring harness)
208	Ground connection (in right rear door wiring harness)
640	Ground connection 2 in engine compartment, left
682	Ground connection 2 in right rear side panel

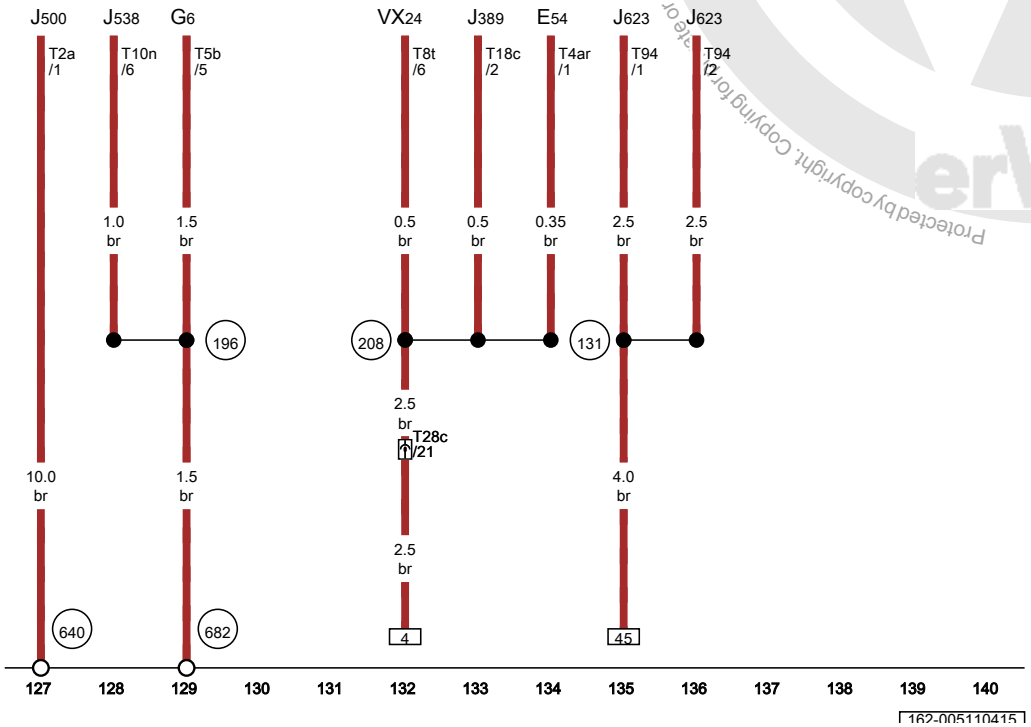

ws	=	white
sw	=	black
ro	=	red
rt	=	red
br	=	brown
gn	=	green
bl	=	blue
gr	=	grey
li	=	lilac
vi	=	lilac
ge	=	yellow
or	=	orange
rs	=	pink

2.0L gasoline engine , CBPA,(AW0)

from April 2010

Protected by copyright. Copying for private or commercial purposes, in part or in whole, is not permitted unless authorised by Volkswagen AG. Volkswagen AG does not guarantee or accept any liability with respect to the correctness of information in this document. Copyright by Volkswagen AG.

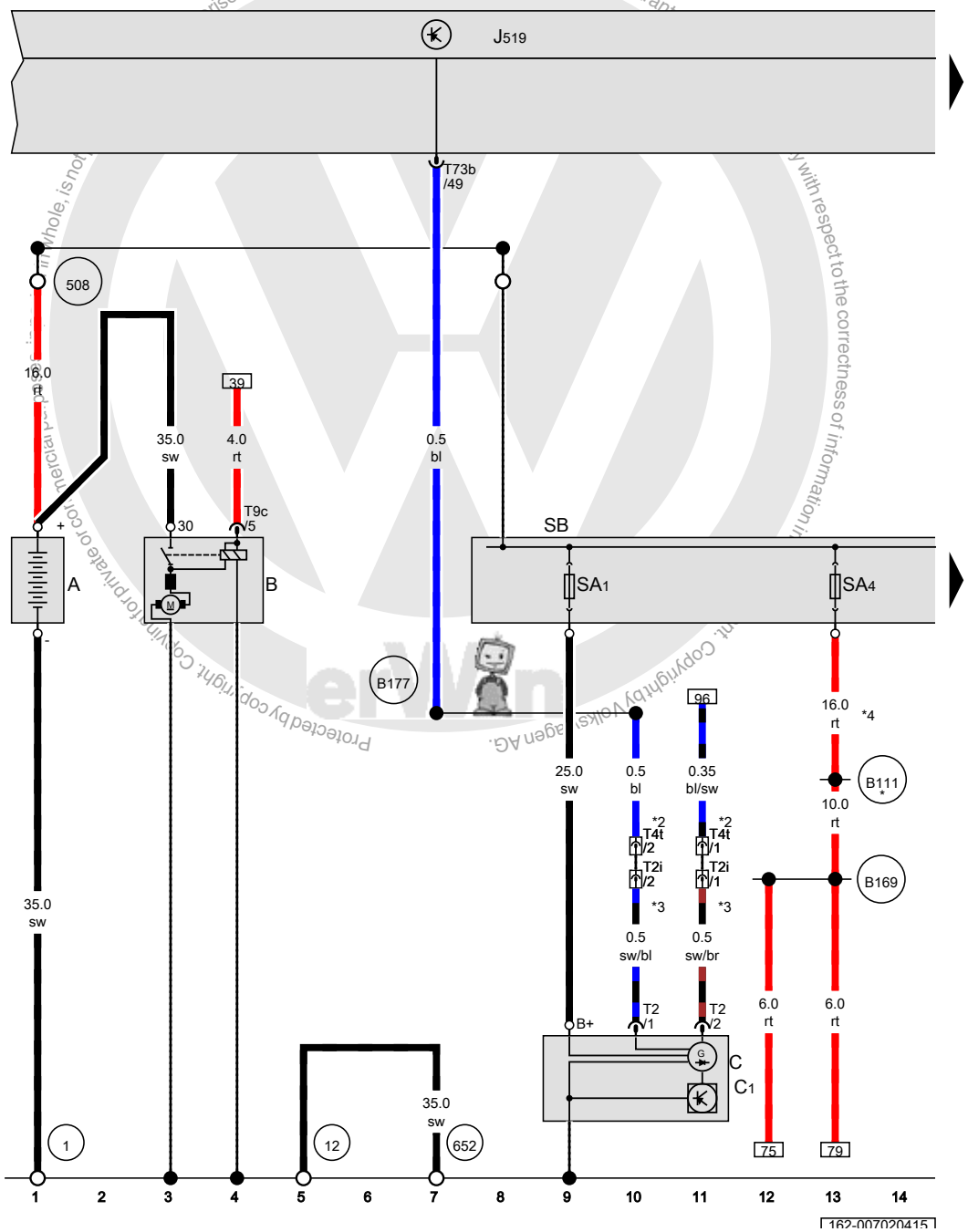

Battery, Starter, Generator, Vehicle electrical control module system, Fuse 1 (on fuse panel A), Fuse 4 (on fuse panel A), Fuse panel B

A	Battery
B	Starter
C	Generator
C1	Voltage regulator
J519	Vehicle electrical control module system
SA1	Fuse 1 (on fuse panel A)
SA4	Fuse 4 (on fuse panel A)
SB	Fuse panel B
T2	Double connector
T2i	Double connector, near the starter
T4t	4-pin connector, near the starter
T73b	73-pin connector
1	Ground strap, battery to body
12	Ground connection in engine compartment, left
508	Terminal 30 threaded connection (on E-box)
652	Transmission/engine ground connection
B111	Positive connection 1 (30a) (in interior wiring harness)
B169	Positive connection 1 (30) (in interior wiring harness)
B177	Connection 61 (in interior wiring harness)
*	Omitted as a running change
*2	Only for vehicles with A/C system
*3	Only for vehicles without an A/C system
*4	Diameter depends on equipment

ws	=	white
sw	=	black
ro	=	red
rt	=	red
br	=	brown
gn	=	green
bl	=	blue
gr	=	grey
li	=	lilac
vi	=	lilac
ge	=	yellow
or	=	orange
rs	=	pink

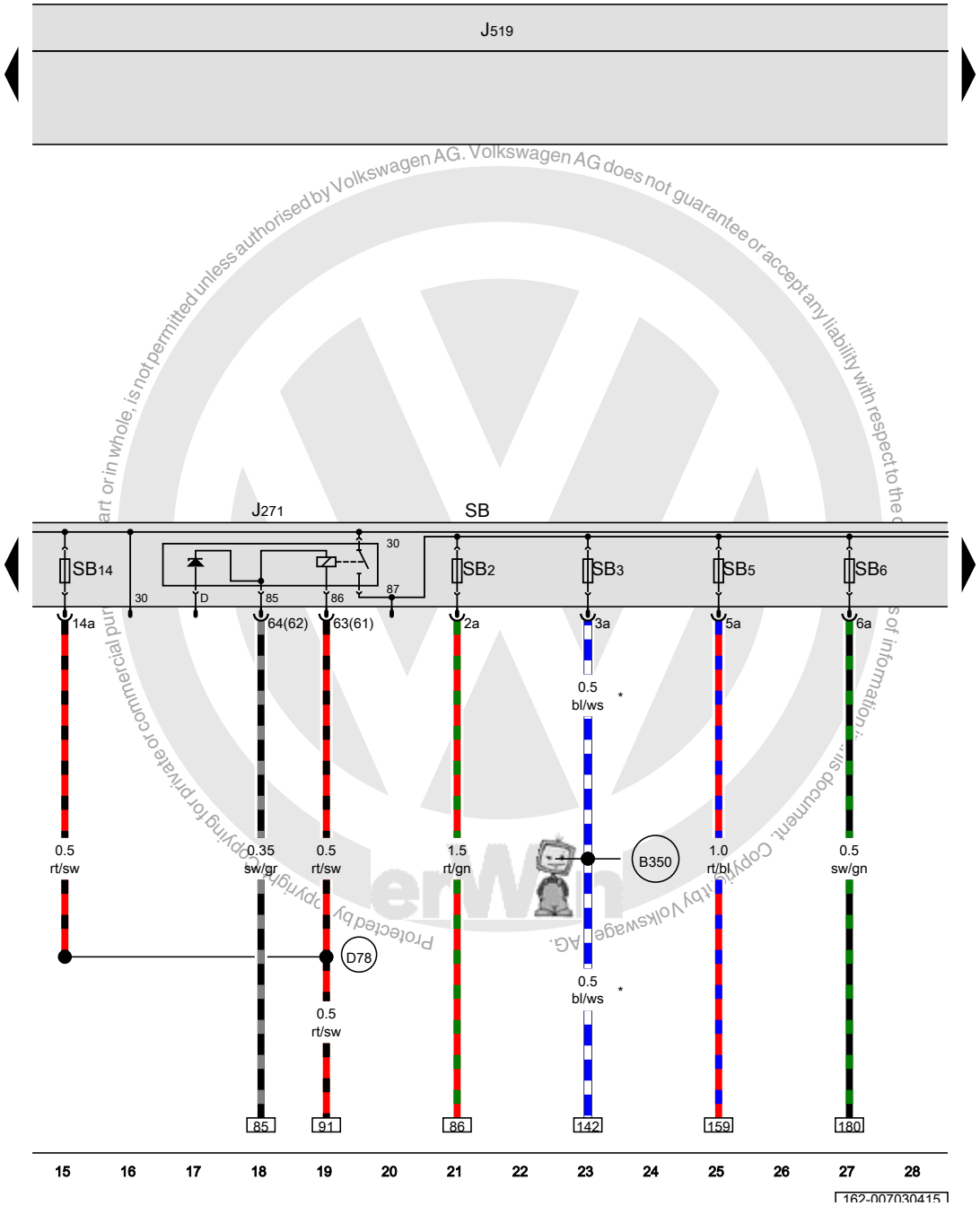

Motronic engine control module power supply relay, Vehicle electrical control module system, Fuse panel B

J271	Motronic engine control module power supply relay
J519	Vehicle electrical control module system
SB	Fuse panel B
SB2	Fuse 2 (on fuse panel B)
SB3	Fuse 3 (on fuse panel B)
SB5	Fuse 5 (on fuse panel B)
SB6	Fuse 6 (on fuse panel B)
SB14	Fuse 14 (on fuse panel B)
B350	Positive connection 1 (87a) (in main wiring harness)
D78	Positive connection 1 (30a) (in engine compartment wiring harness)
*	The color of the wires depends on vehicle equipment

ws	=	white
sw	=	black
ro	=	red
rt	=	red
br	=	brown
gn	=	green
bl	=	blue
gr	=	grey
li	=	lilac
vi	=	lilac
ge	=	yellow
or	=	orange
rs	=	pink

Protected by copyright. Copying for private or commercial purposes, in part or in whole, is not permitted unless authorised by Volkswagen AG. Volkswagen AG does not guarantee or accept any liability with respect to the contents of this document. Copyright by Volkswagen AG.

Vehicle electrical control module system, Terminal 50 power supply relay, Fuse panel B

J519	Vehicle electrical control module system
J682	Terminal 50 power supply relay
SB	Fuse panel B
SB7	Fuse 7 (on fuse panel B)
SB8	Fuse 8 (on fuse panel B)
SB10	Fuse 10 (on fuse panel B)
SB25	Fuse 25 (on fuse panel B)
T9c	9-pin connector
389	Ground connection 24 (in main wiring harness)
*	Running change
*2	Omitted as a running change
*3	Depending on equipment

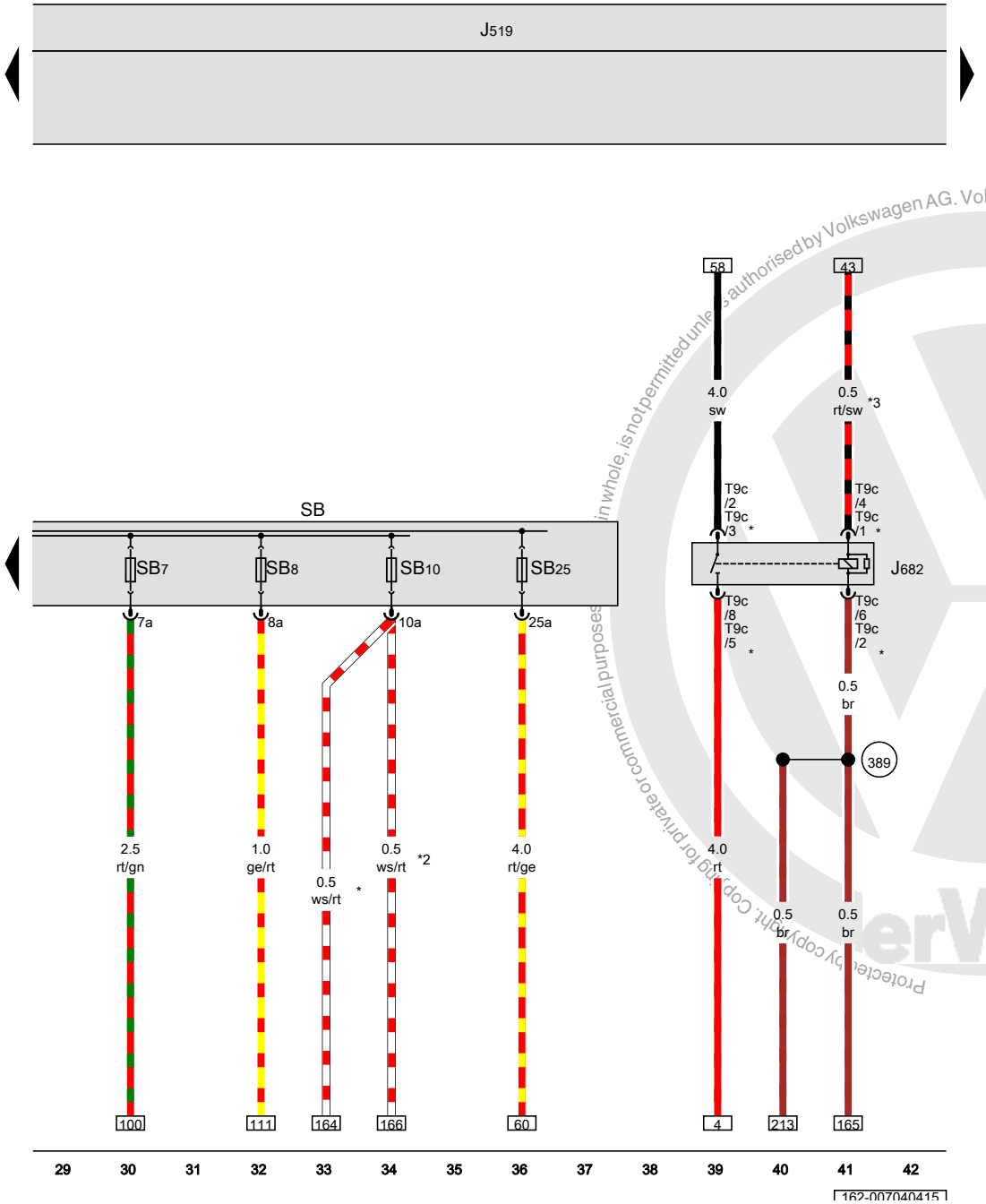

ws	=	white
sw	=	black
ro	=	red
rt	=	red
br	=	brown
gn	=	green
bl	=	blue
gr	=	grey
li	=	lilac
vi	=	lilac
ge	=	yellow
or	=	orange
rs	=	pink

Protected by copyright. Copying for private or commercial purposes, in whole, is not permitted unless authorised by Volkswagen AG. Volkswagen AG does not guarantee or accept any liability with respect to the correctness of information in this document. Copyright by Volkswagen AG.

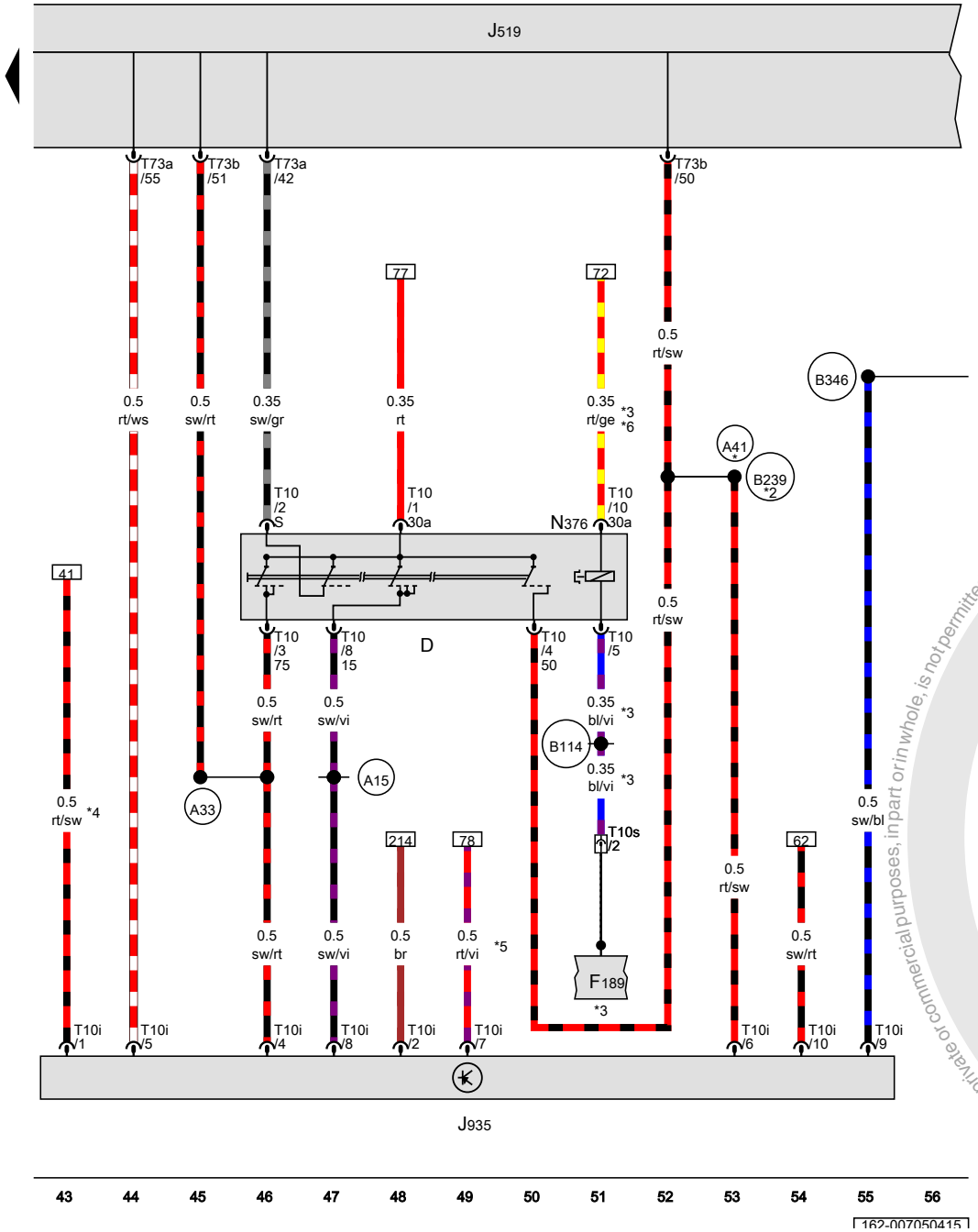

Ignition/starter switch, Vehicle electrical control module system, Converter box

D	Ignition/starter switch
F189	tiptronic switch
J519	Vehicle electrical control module system
J935	Converter box
N376	Ignition switch key lock solenoid
T10	10-pin connector
T10i	10-pin connector
T10s	10-pin connector
T73a	73-pin connector
T73b	73-pin connector
A15	Plus connection (15) (in instrument cluster wiring harness)
A33	Connection 75 (in instrument panel wiring harness)
A41	Positive connection (50) (in instrument panel wiring harness)
B114	Lock switch connection (in interior wiring harness)
B239	Positive connection 1 (50) (in interior wiring harness)
B346	Connection 75 (in main wiring harness) 1
*	from June 2013
*2	Through May 2013
*3	Only for vehicles with automatic transmission
*4	Depending on equipment
*5	The color of the wires depends on vehicle equipment
*6	Diameter depends on equipment

ws	=	white
sw	=	black
ro	=	red
rt	=	red
br	=	brown
gn	=	green
bl	=	blue
gr	=	grey
li	=	lilac
vi	=	lilac
ge	=	yellow
or	=	orange
rs	=	pink

Protected by copyright. Copying for private or commercial purposes, in part or in whole, is not permitted unless authorised by Volkswagen AG. Volkswagen AG does not guarantee or accept any liability with respect to the correctness of information in this document. Copyright by Volkswagen AG.

Terminal 15 power supply relay, Terminal 15 power supply relay 2, Fuse panel C

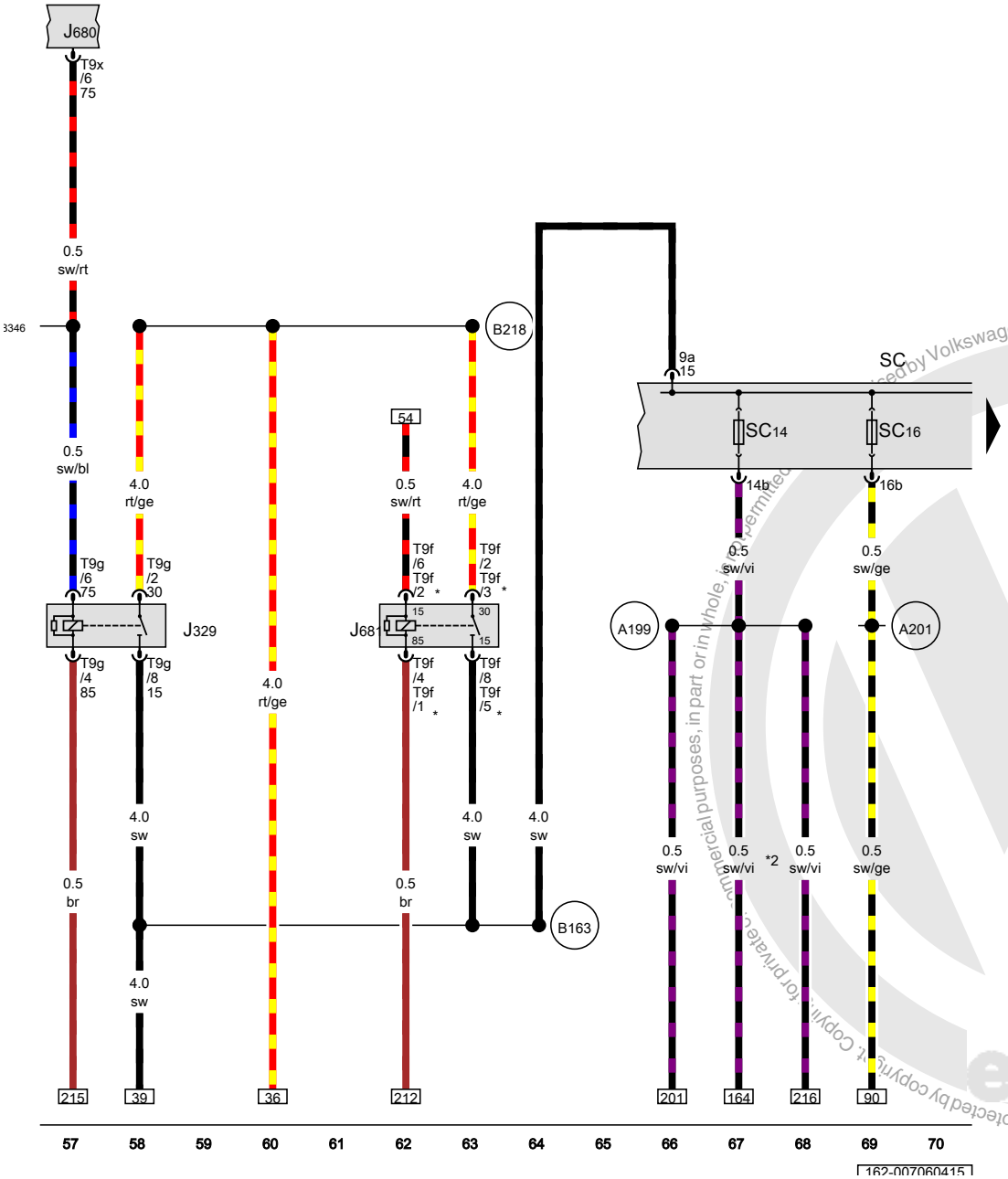

J329	Terminal 15 power supply relay
J680	Terminal 75 power supply relay 1
J681	Terminal 15 power supply relay 2
SC	Fuse panel C
SC14	Fuse 14 (on fuse panel C)
SC16	Fuse 16 (on fuse panel C)
T9f	9-pin connector
T9g	9-pin connector
T9x	9-pin connector
A199	Positive connection 4 (15a) (in instrument panel wiring harness)
A201	Positive connection 6 (15a) (in instrument panel wiring harness)
B163	Positive connection 1 (15) (in interior wiring harness)
B218	Positive connection 6 (30) (in interior wiring harness)
B346	Connection 75 (in main wiring harness) 1
*	Running change
*2	Omitted as a running change

ws	=	white
sw	=	black
ro	=	red
rt	=	red
br	=	brown
gn	=	green
bl	=	blue
gr	=	grey
li	=	lilac
vi	=	lilac
ge	=	yellow
or	=	orange
rs	=	pink

Protected by copyright. Copyright by Volkswagen AG. Volkswagen AG does not guarantee or accept any liability with respect to the correctness of information in this document. Copyright by Volkswagen AG. Reproduced for private or commercial purposes, in part or in whole, is not permitted.

Fuel level sensor, Transfer fuel pump, Fuel pump relay, Fuse panel C

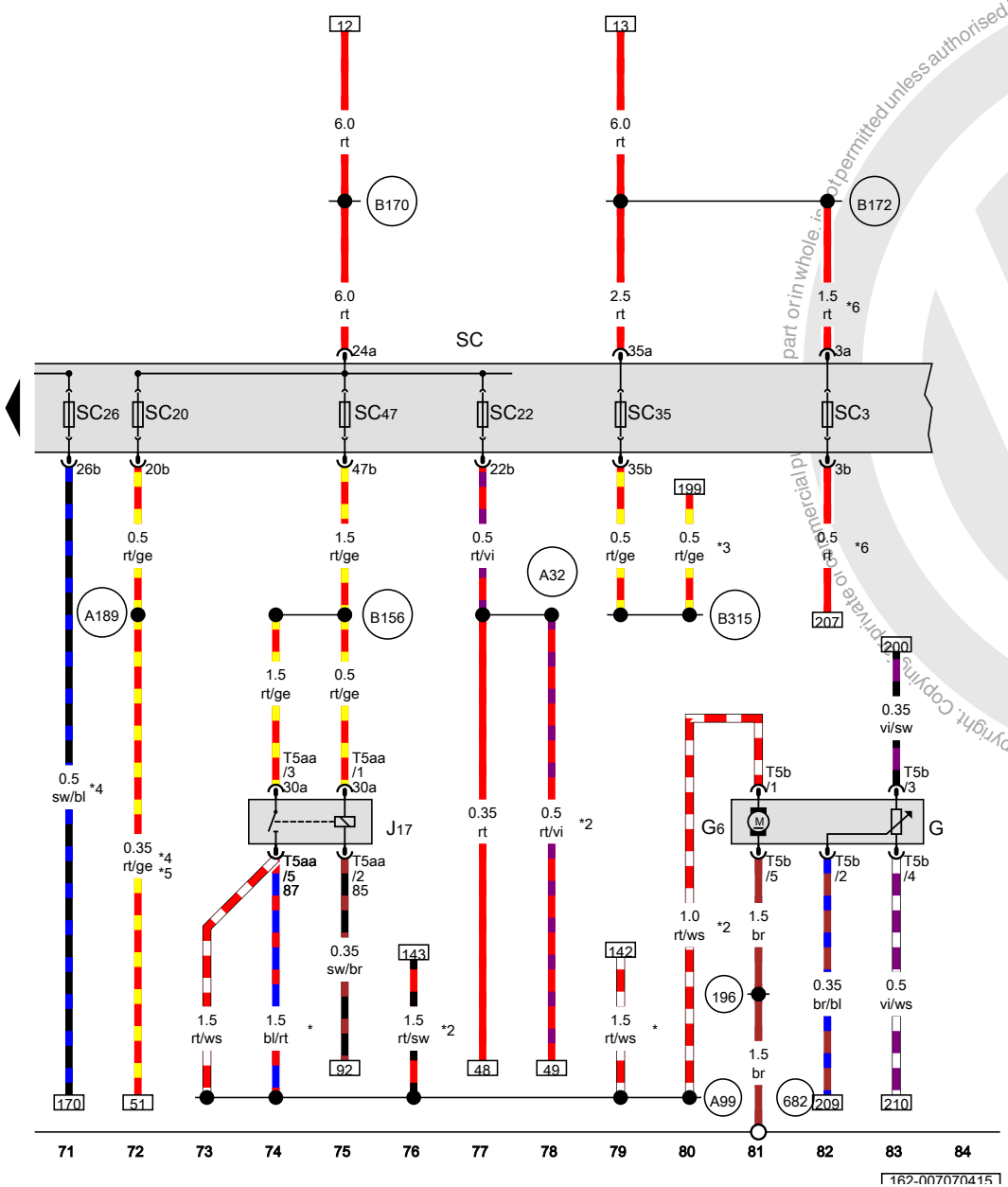

G	Fuel level sensor
G6	Transfer fuel pump
J17	Fuel pump relay
SC	Fuse panel C
SC3	Fuse 3 (on fuse panel C)
SC20	Fuse 20 (on fuse panel C)
SC22	Fuse 22 (on fuse panel C)
SC26	Fuse 26 (on fuse panel C)
SC35	Fuse 35 (on fuse panel C)
SC47	Fuse 47 (on fuse panel C)
T5aa	5-pin connector
T5b	5-pin connector
196	Ground connection 3 (in rear wiring harness)
682	Ground connection 2 in right rear side panel
A32	Positive connection (30) (in instrument panel wiring harness)
A99	Connection 87 (in instrument panel wiring harness) 1
A189	Positive connection 5 (30a) (in instrument panel wiring harness)
B156	Positive connection (30a) (in interior wiring harness)
B170	Positive connection 2 (30) (in interior wiring harness)
B172	Positive connection 4 (30) (in interior wiring harness)
B315	Positive connection 1 (30a) (in main wiring harness)
*	Though July 2013
*2	The color of the wires depends on vehicle equipment
*3	Omitted as a running change
*4	Only for vehicles with automatic transmission
*5	Diameter depends on equipment
*6	Running change

ws	=	white
sw	=	black
ro	=	red
rt	=	red
br	=	brown
gn	=	green
bl	=	blue
gr	=	grey
li	=	lilac
vi	=	lilac
ge	=	yellow
or	=	orange
rs	=	pink

Protected by copyright. Copying or distribution of this document, or part or in whole, is not permitted unless authorised by Volkswagen AG. Volkswagen AG does not make any representation or warranty with respect to the correctness of information in this document. Copyright by Volkswagen AG.

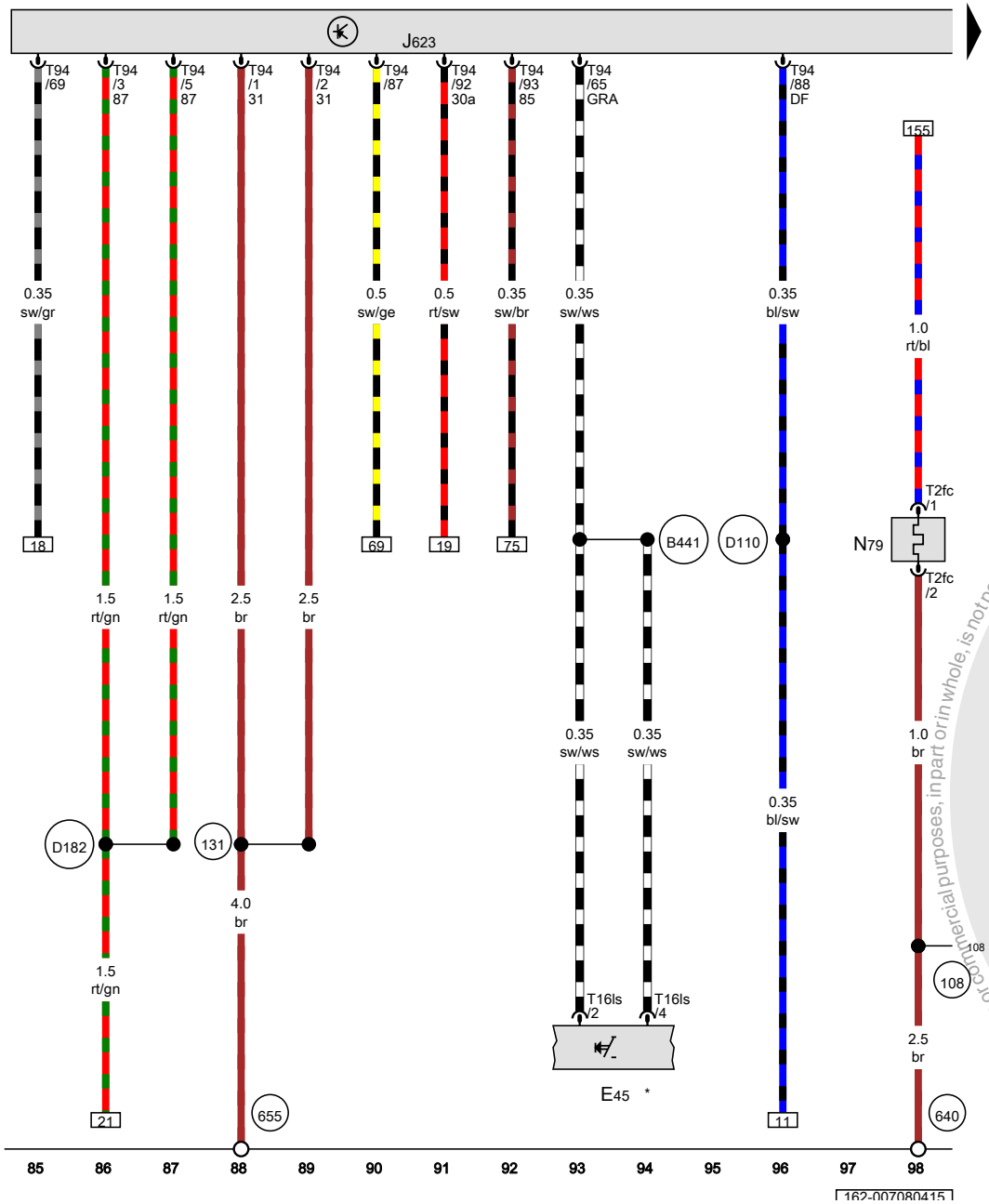

Engine control module

E45	Cruise control switch
J623	Engine control module
N79	Positive crankcase ventilation heating element
T2fc	Double connector
T16ls	16-pin connector
T94	94-pin connector
108	Ground connection 2 (in left front wiring harness)
131	Ground connection 2 (in engine compartment wiring harness)
640	Ground connection 2 in engine compartment, left
655	Ground connection on left headlamp
B441	Cruise control connection (in main wiring harness)
D110	Connection 8 (in engine compartment wiring harness)
D182	Connection 3 (87a) (in engine compartment wiring harness)
*	Only for vehicles with cruise control

ws	=	white
sw	=	black
ro	=	red
rt	=	red
br	=	brown
gn	=	green
bl	=	blue
gr	=	grey
li	=	lilac
vi	=	lilac
ge	=	yellow
or	=	orange
rs	=	pink

Protected by copyright. Copying for private or commercial purposes, in part or in whole, is not permitted unless authorised by Volkswagen AG. Volkswagen AG does not guarantee or accept any liability with respect to the correctness of information in this document. Copyright by Volkswagen AG.

Engine control module, EVAP canister purge regulator valve 1, Spark plug connectors, Spark plugs

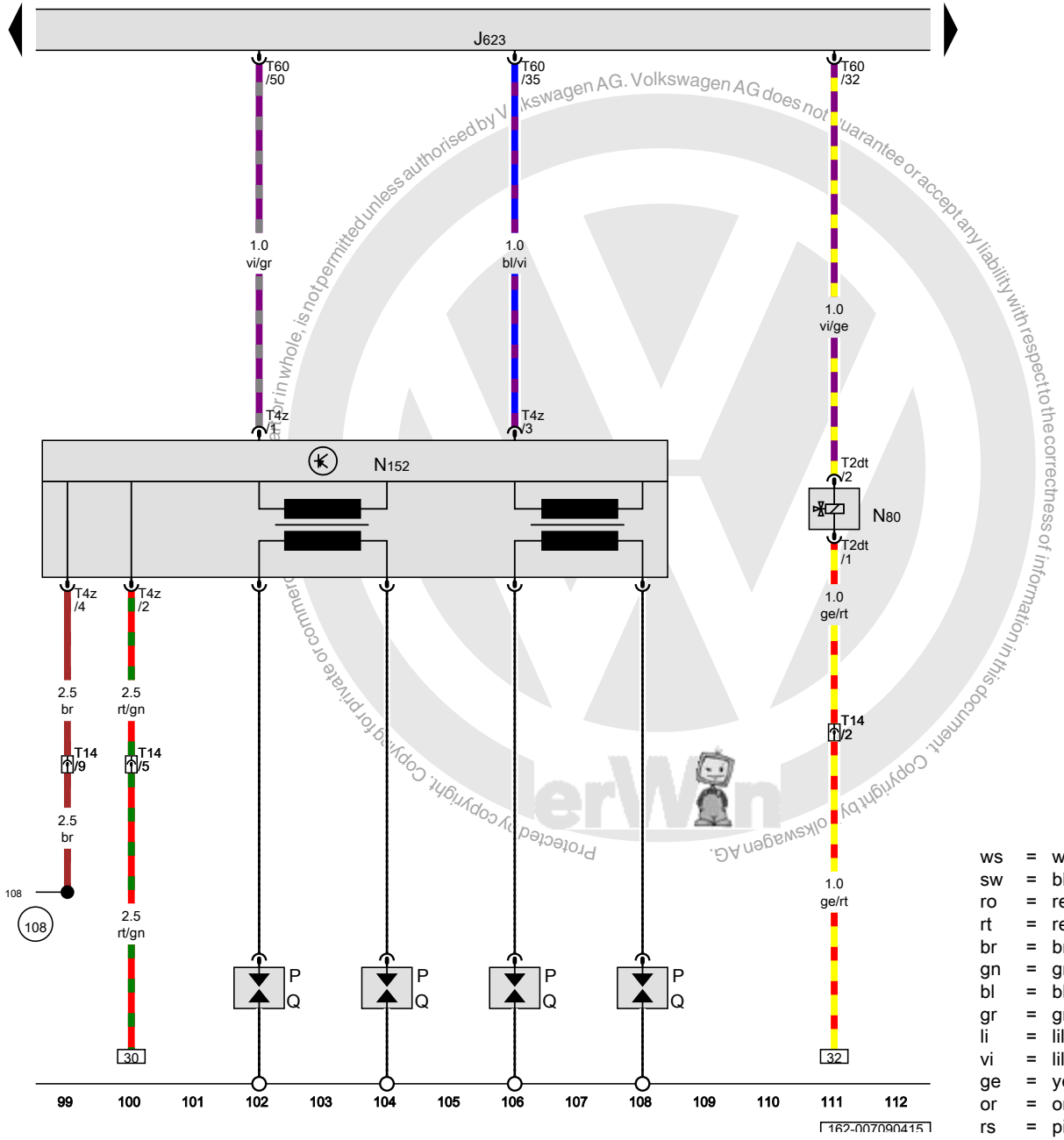

J623	Engine control module
N80	EVAP canister purge regulator valve 1
N152	Ignition coil
P	Spark plug connectors
Q	Spark plugs
T2dt	Double connector
T4z	4-pin connector
T14	14-pin connector, near the battery
T60	60-pin connector
108	Ground connection 2 (in left front wiring harness)

ws	=	white
sw	=	black
ro	=	red
rt	=	red
br	=	brown
gn	=	green
bl	=	blue
gr	=	grey
li	=	lilac
vi	=	lilac
ge	=	yellow
or	=	orange
rs	=	pink

Protected by copyright. Copying for private or commercial purposes, in whole or in part, is not permitted unless authorised by Volkswagen AG. Volkswagen AG does not guarantee or accept any liability with respect to the correctness of information in this document. Copyright by Volkswagen AG.

Accelerator pedal module, Throttle valve control module, Accelerator pedal position sensor, Accelerator pedal position sensor 2, EPC throttle drive, Engine control module

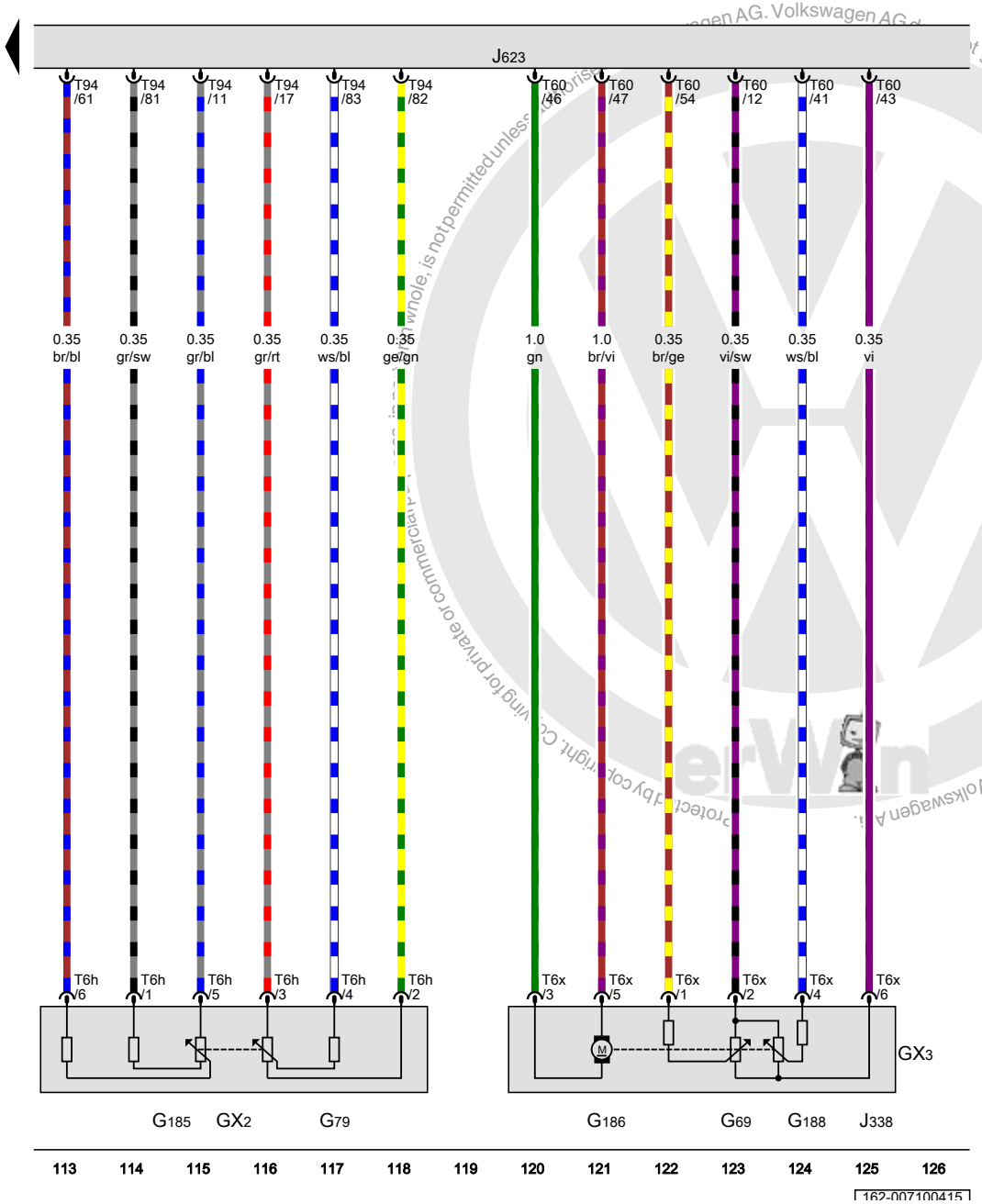

GX2	Accelerator pedal module	
GX3	Throttle valve control module	
G69	Throttle position sensor	
G79	Accelerator pedal position sensor	
G185	Accelerator pedal position sensor 2	
G186	EPC throttle drive	
G188	EPC throttle drive angle sensor 2	
J338	Throttle valve control module	
J623	Engine control module	
T6h	6-pin connector	
T6x	6-pin connector	
T60	60-pin connector	
T94	94-pin connector	

ws	=	white
sw	=	black
ro	=	red
rt	=	red
br	=	brown
gn	=	green
bl	=	blue
gr	=	grey
li	=	lilac
vi	=	lilac
ge	=	yellow
or	=	orange
rs	=	pink

Copyright by Volkswagen AG. Volkswagen AG does not guarantee or accept any liability with respect to the correctness of information in this document. Copyright by Volkswagen AG. Protected by copyright. Copying for private or commercial purposes, in whole, is not permitted unless authorised.

Intake manifold sensor, Engine speed sensor, Camshaft position sensor, Intake air temperature sensor, Knock sensor 1, Engine coolant temperature sensor, Manifold absolute pressure sensor, Engine control module

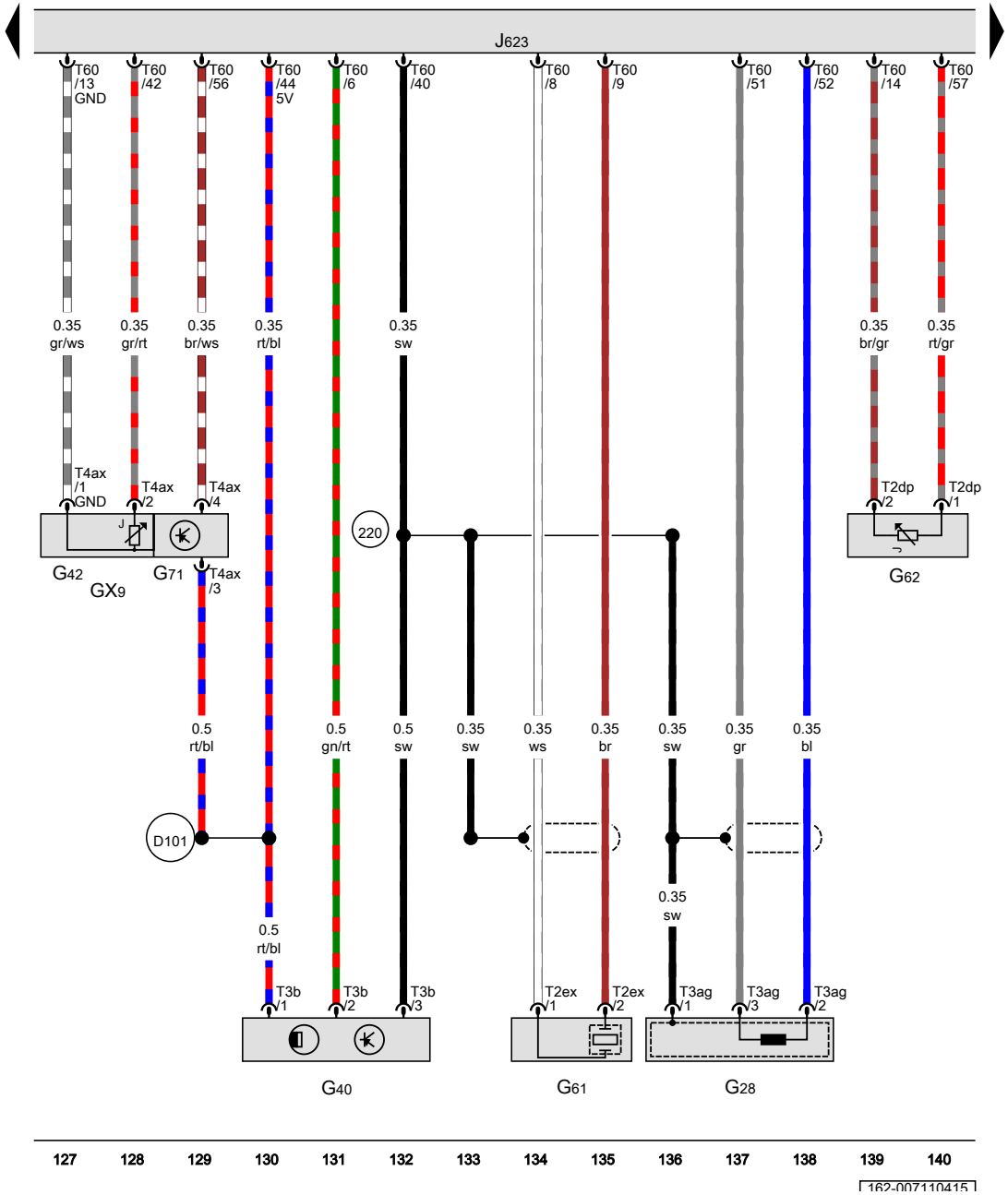

GX9	Intake manifold sensor
G28	Engine speed sensor
G40	Camshaft position sensor
G42	Intake air temperature sensor
G61	Knock sensor 1
G62	Engine coolant temperature sensor
G71	Manifold absolute pressure sensor
J623	Engine control module
T2dp	Double connector
T2ex	Double connector
T3ag	3-pin connector
T3b	3-pin connector
T4ax	4-pin connector
T60	60-pin connector
220	Sensor ground connection (in engine wiring harness)
D101	Connection 1 (in engine compartment wiring harness)

ws	=	white
sw	=	black
ro	=	red
rt	=	red
br	=	brown
gn	=	green
bl	=	blue
gr	=	grey
li	=	lilac
vi	=	lilac
ge	=	yellow
or	=	orange
rs	=	pink

Protected by copyright. Copying for private or commercial purposes, in part or in whole, is not permitted unless authorised by Volkswagen AG. Volkswagen AG does not guarantee or accept any liability with respect to the correctness of information in this document. Copyright by Volkswagen AG.

Heated oxygen sensor, Engine control module, Cylinder 1 fuel injector, Cylinder 2 fuel injector, Cylinder 3 fuel injector, Cylinder 4 fuel injector

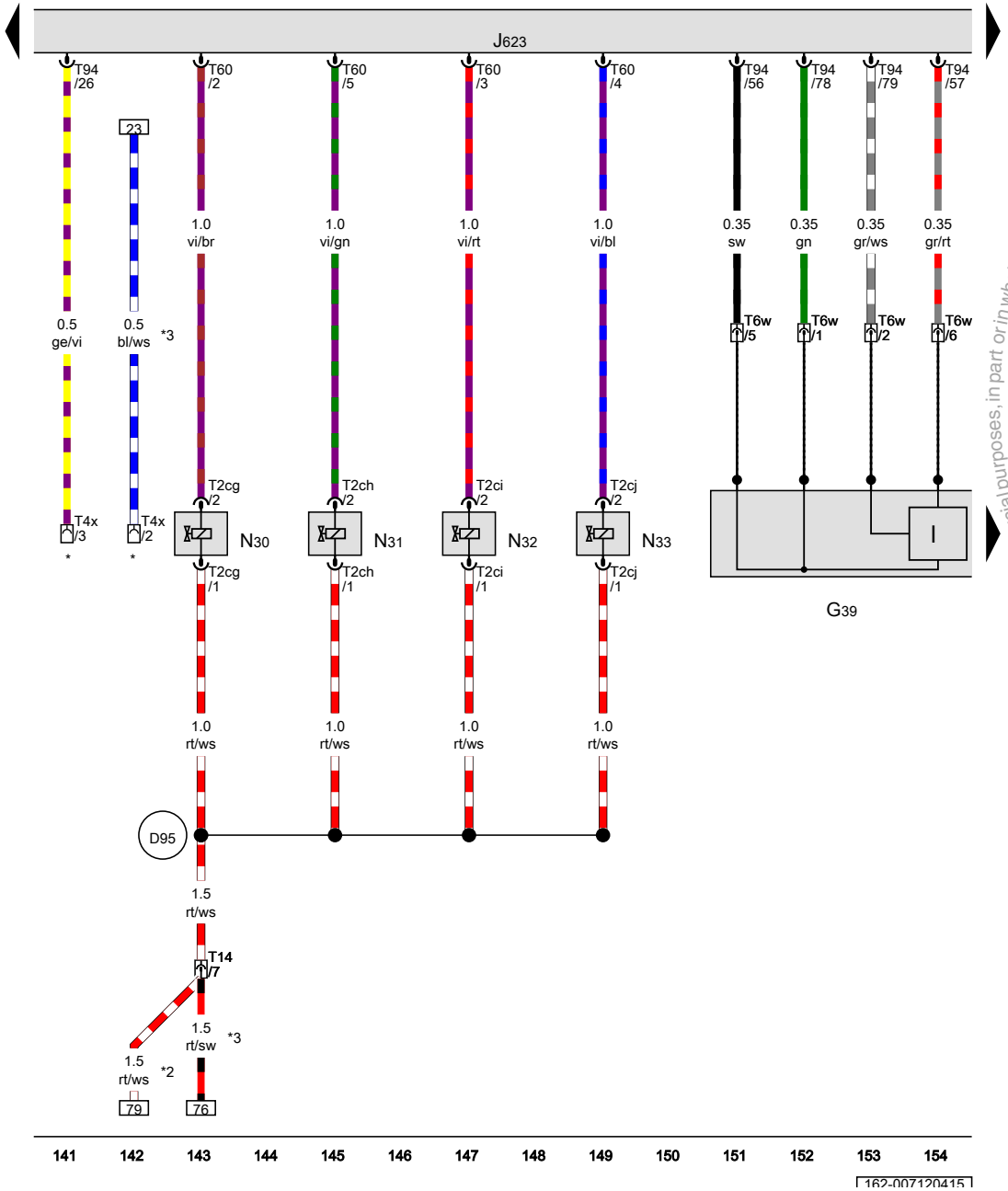

G39	Heated oxygen sensor
J623	Engine control module
N30	Cylinder 1 fuel injector
N31	Cylinder 2 fuel injector
N32	Cylinder 3 fuel injector
N33	Cylinder 4 fuel injector
T2cg	Double connector
T2ch	Double connector
T2ci	Double connector
T2cj	Double connector
T4x	4-pin connector
T6w	6-pin connector
T14	14-pin connector, near the battery
T60	60-pin connector
T94	94-pin connector
D95	Injector connection (in engine compartment wiring harness)
*	Coolant fan connection
*2	Though July 2013
*3	The color of the wires depends on vehicle equipment

ws	=	white
sw	=	black
ro	=	red
rt	=	red
br	=	brown
gn	=	green
bl	=	blue
gr	=	grey
li	=	lilac
vi	=	lilac
ge	=	yellow
or	=	orange
rs	=	pink

Protected by copyright. Copying for private or commercial purposes, in part or in whole, is not permitted unless authorised by Volkswagen AG. Volkswagen AG does not guarantee or accept any liability with respect to the correctness of information in this document. Copyright by Volkswagen AG.

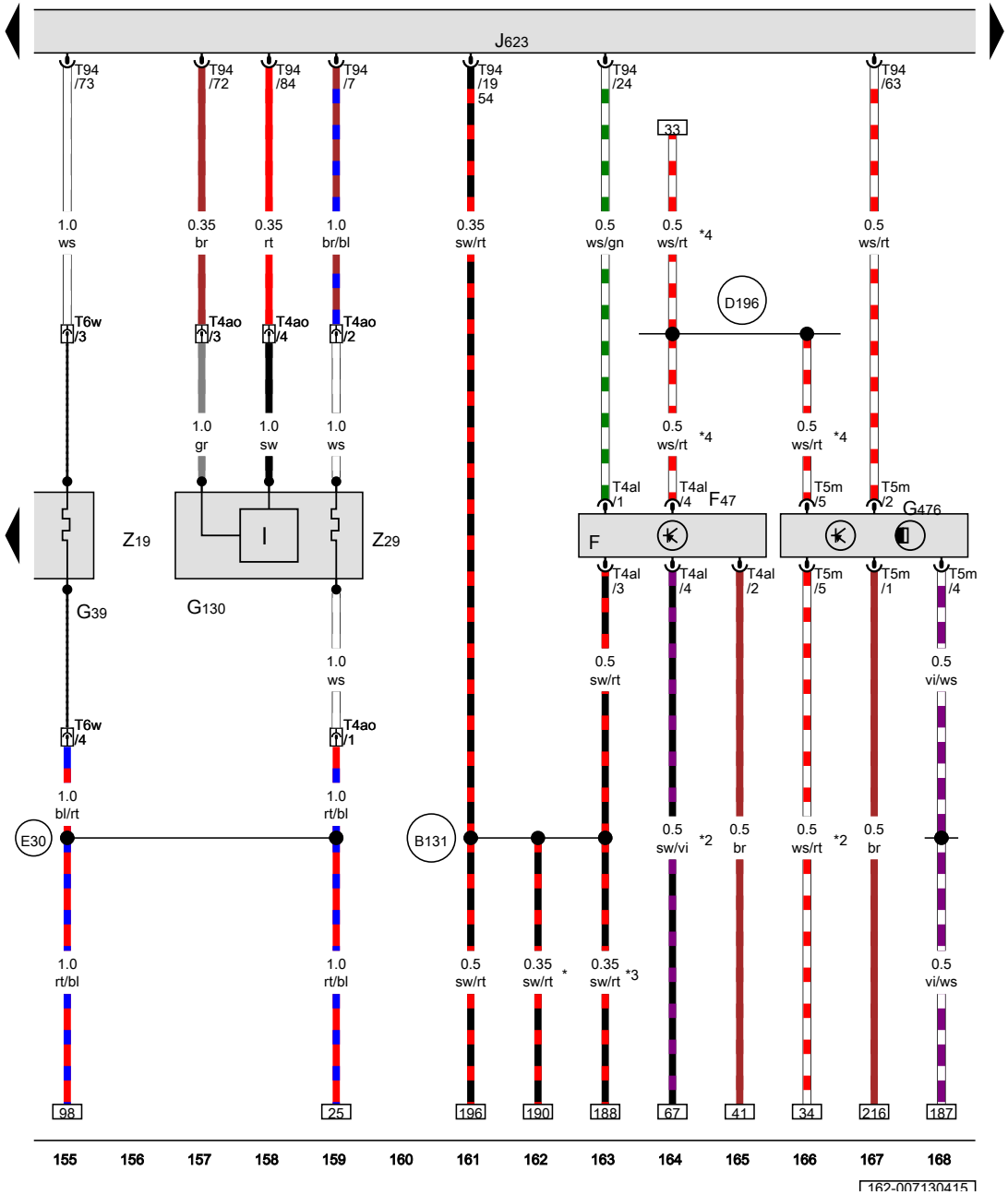

Brake lamp switch, Brake pedal switch, Heated oxygen sensor, Oxygen sensor after three way catalytic converter, Clutch position sensor, Engine control module, Oxygen sensor heater, Heater for oxygen sensor 1 after catalytic converter

F	Brake lamp switch
F47	Brake pedal switch
G39	Heated oxygen sensor
G130	Oxygen sensor after three way catalytic converter
G476	Clutch position sensor
J623	Engine control module
T4al	4-pin connector
T4ao	4-pin connector
T5m	5-pin connector
T6w	6-pin connector
T94	94-pin connector
Z19	Oxygen sensor heater
Z29	Heater for oxygen sensor 1 after catalytic converter
B131	Connection 54 (in interior wiring harness)
D196	Connection 87a (in engine pre-wiring harness) 2
E30	Connection 87a (in engine wiring harness)
*	Only for vehicles with ABS and ESP
*2	Omitted as a running change
*3	Only for vehicles with ABS without ESP
*4	Running change

ws	=	white
sw	=	black
ro	=	red
rt	=	red
br	=	brown
gn	=	green
bl	=	blue
gr	=	grey
li	=	lilac
vi	=	lilac
ge	=	yellow
or	=	orange
rs	=	pink

Volkswagen AG does not guarantee or accept any liability with respect to the correctness of information in this document. Copyright by Volkswagen AG. Protected by copyright. Copying for private or commercial purposes, in part or in whole, is not permitted unless authorised by Volkswagen AG.

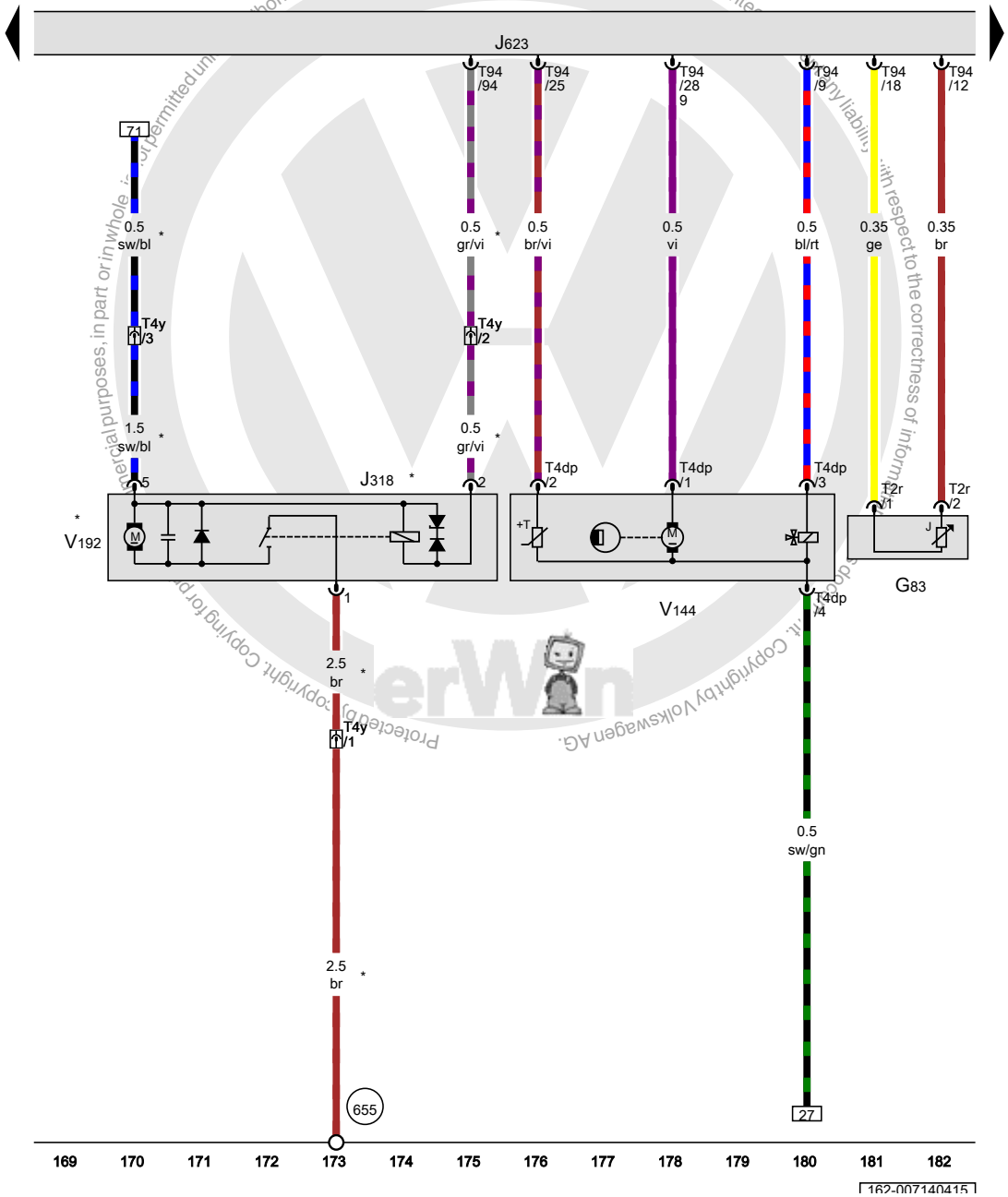

Engine coolant temperature sensor on radiator outlet, Vacuum pump relay, Engine control module, Leak detection pump, Brake system vacuum pump

G83	Engine coolant temperature sensor on radiator outlet
J318	Vacuum pump relay
J623	Engine control module
T2r	Double connector
T4dp	4-pin connector
T4y	4-pin connector
T94	94-pin connector
V144	Leak detection pump
V192	Brake system vacuum pump
655	Ground connection on left headlamp
*	Only for vehicles with automatic transmission

ws	=	white
sw	=	black
ro	=	red
rt	=	red
br	=	brown
gn	=	green
bl	=	blue
gr	=	grey
li	=	lilac
vi	=	lilac
ge	=	yellow
or	=	orange
rs	=	pink

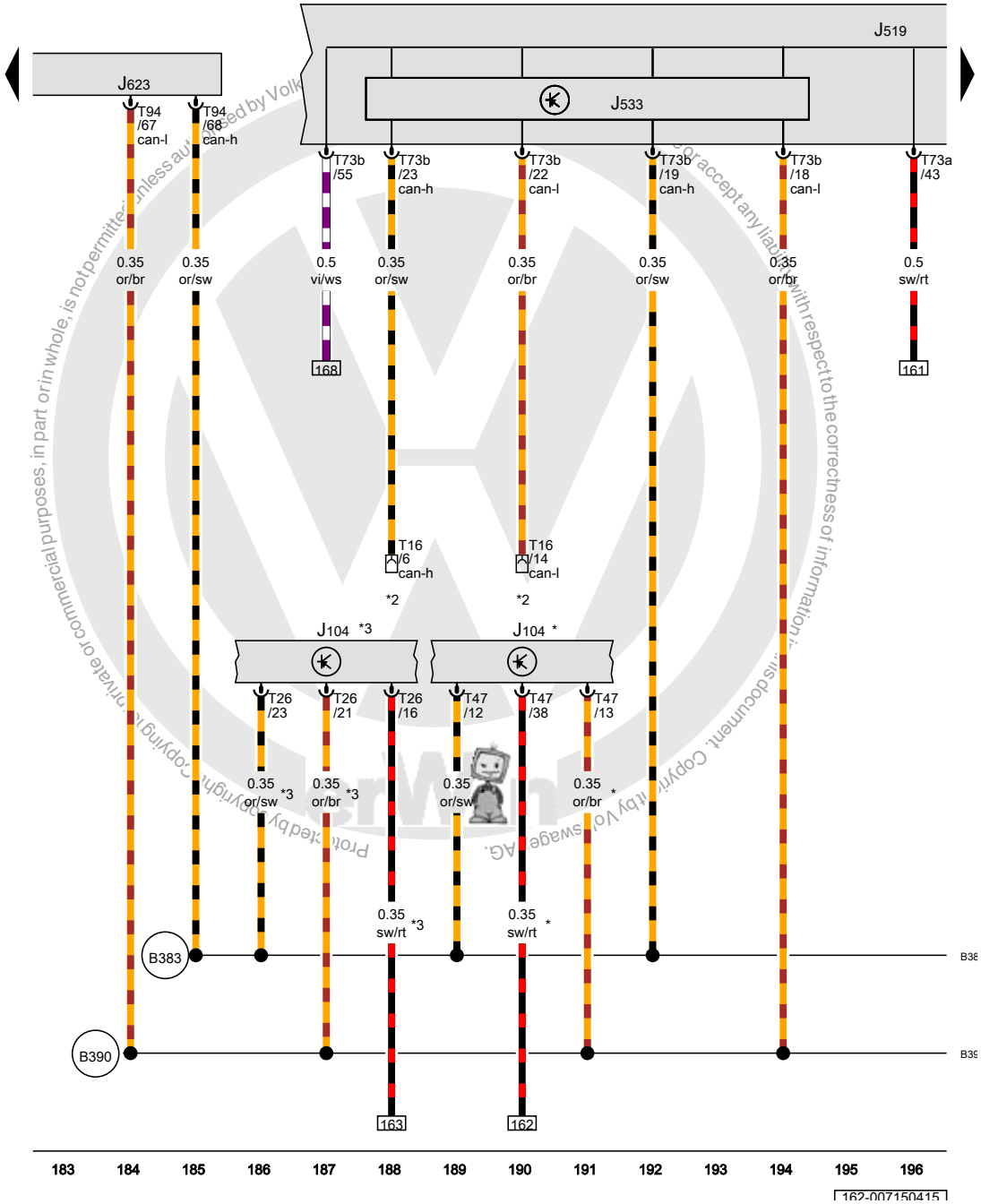

Vehicle electrical control module system, Data bus on board diagnostic interface, Engine control module

J104	ABS control module
J519	Vehicle electrical control module system
J533	Data bus on board diagnostic interface
J623	Engine control module
T16	16-pin connector
T26	26-pin connector
T47	47-pin connector
T73a	73-pin connector
T73b	73-pin connector
T94	94-pin connector
B383	Powertrain CAN bus high connection 1 (in main wiring harness)
B390	Powertrain CAN bus low connection 1 (in main wiring harness)
*	Only for vehicles with ABS and ESP
*2	Diagnostic connector
*3	Only for vehicles with ABS without ESP

ws	=	white
sw	=	black
ro	=	red
rt	=	red
br	=	brown
gn	=	green
bl	=	blue
gr	=	grey
li	=	lilac
vi	=	lilac
ge	=	yellow
or	=	orange
rs	=	pink

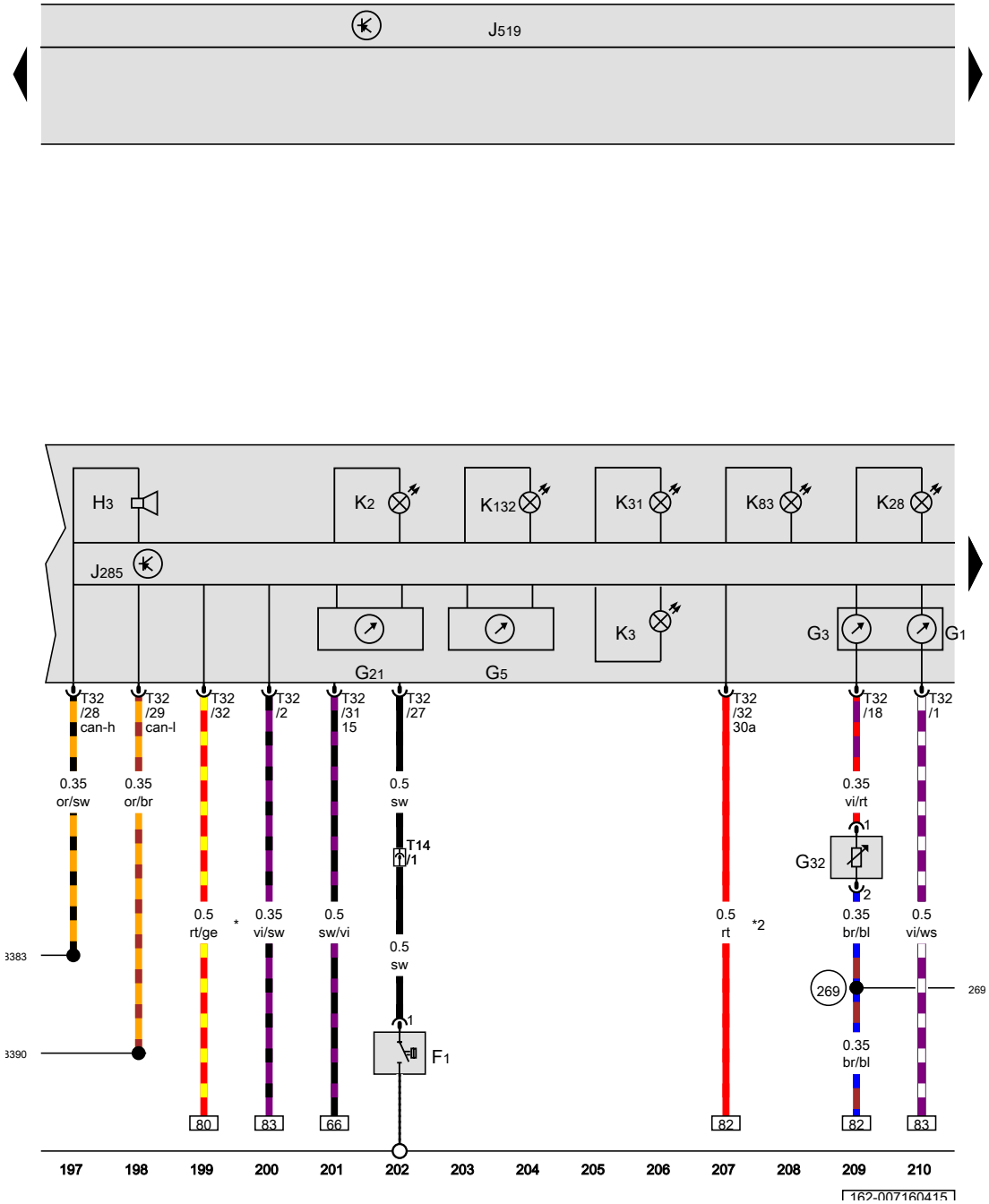

ws = white
sw = black
ro = red
rt = red
br = brown
gn = green
bl = blue
gr = grey
li = lilac
vi = lilac
ge = yellow
or = orange
rs = pink

Oil pressure switch, Fuel gauge, Engine coolant temperature gauge, Tachometer, Speedometer, Instrument cluster control module, Vehicle electrical control module system, Generator indicator lamp, Engine coolant level/ temperature indicator lamp, Cruise control indicator lamp, Electronic power control malfunction indicator lamp

F1	Oil pressure switch
G1	Fuel gauge
G3	Engine coolant temperature gauge
G5	Tachometer
G21	Speedometer
G32	Engine coolant level sensor
H3	Warning buzzer and tone
J285	Instrument cluster control module
J519	Vehicle electrical control module system
K2	Generator indicator lamp
K3	Oil pressure indicator lamp
K28	Engine coolant level/temperature indicator lamp
K31	Cruise control indicator lamp
K83	Malfunction indicator lamp
K132	Electronic power control malfunction indicator lamp
T14	14-pin connector, near the starter
T32	32-pin connector
269	Sensor ground connection 1 (in instrument panel wiring harness)
B383	Powertrain CAN bus high connection 1 (in main wiring harness)
B390	Powertrain CAN bus low connection 1 (in main wiring harness)
*	Omitted as a running change
*2	Running change

Protected by copyright. Copying for private or commercial purposes, in part or in whole, is not permitted unless authorised by Volkswagen AG. Volkswagen AG does not guarantee or accept any liability with respect to the correctness of information in this document. Copyright by Volkswagen AG.

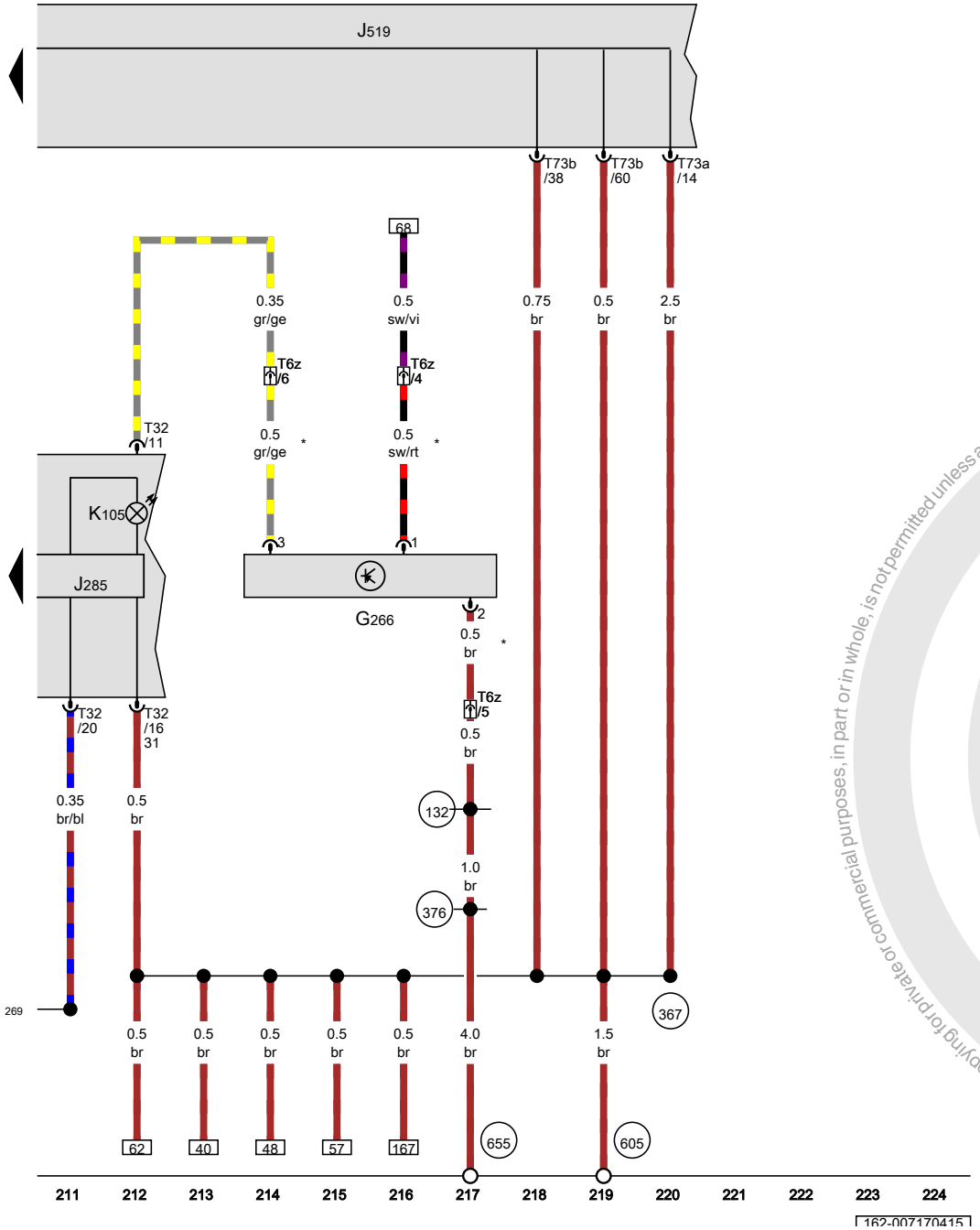

Instrument cluster control module, Vehicle electrical control module system, Low fuel level indicator lamp

G266	Oil level thermal sensor
J285	Instrument cluster control module
J519	Vehicle electrical control module system
K105	Low fuel level indicator lamp
T6z	6-pin connector
T32	32-pin connector
T73a	73-pin connector
T73b	73-pin connector
132	Ground connection 3 (in engine compartment wiring harness)
269	Sensor ground connection 1 (in instrument panel wiring harness)
367	Ground connection 2 (in main wiring harness)
376	Ground connection 11 (in main wiring harness)
605	Ground connection on upper steering column
655	Ground connection on left headlamp
*	Only for vehicles with flexible service interval reminder

ws	=	white
sw	=	black
ro	=	red
rt	=	red
br	=	brown
gn	=	green
bl	=	blue
gr	=	grey
li	=	lilac
vi	=	lilac
ge	=	yellow
or	=	orange
rs	=	pink

Protected by copyright. Copying for private or commercial purposes, in part or in whole, is not permitted unless authorised by Volkswagen AG. Volkswagen AG does not guarantee or accept any liability with respect to the correctness of information in this document. Copyright by Volkswagen AG.

2.0L gasoline engine, CBPA,(AW1)

from April 2010

Protected by copyright. Copying for private or commercial purposes, in part or in whole, is not permitted unless authorised by Volkswagen AG. Volkswagen AG does not guarantee or accept any liability with respect to the correctness of information in this document. Copyright by Volkswagen AG.

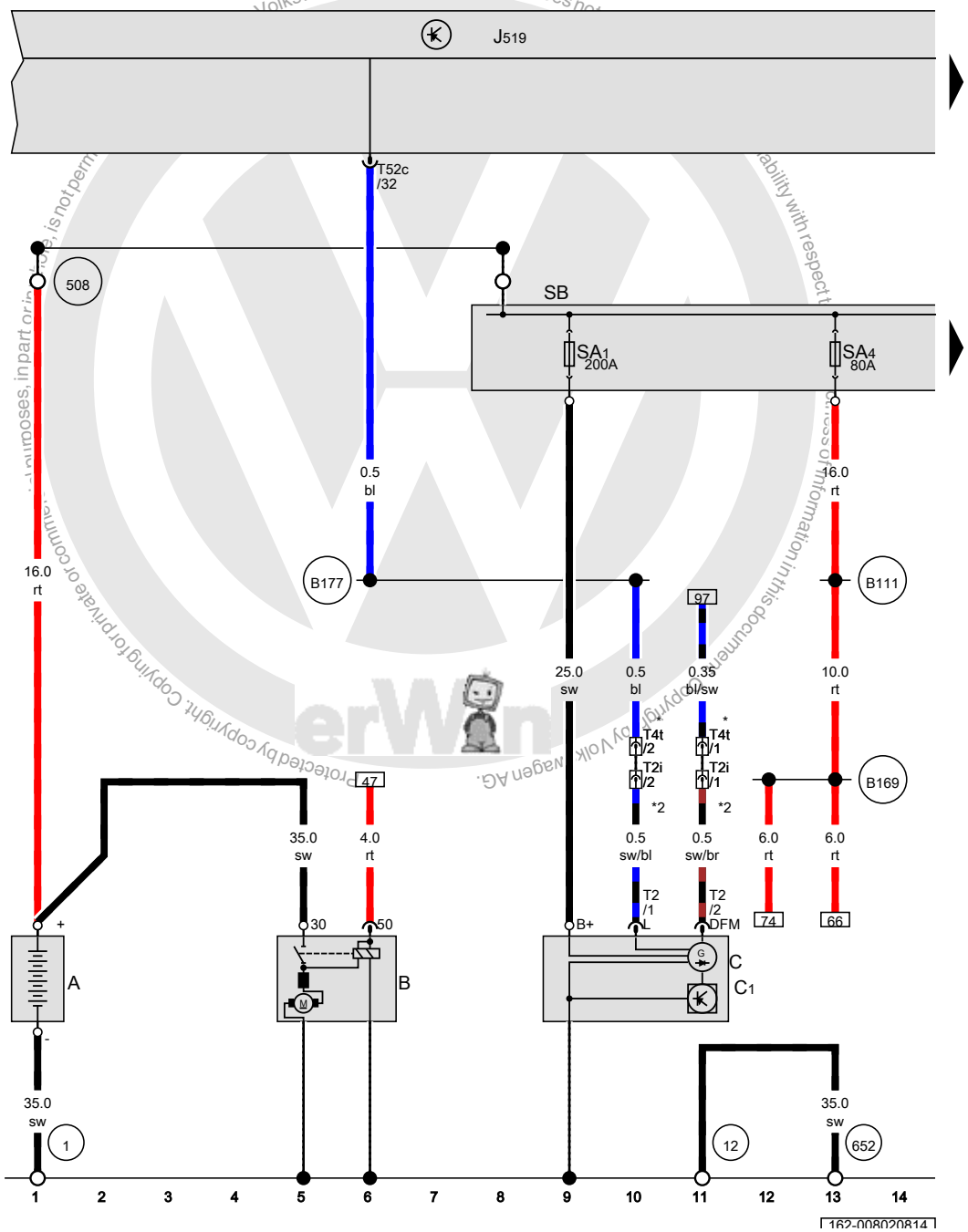

Battery, Starter, Generator, Vehicle electrical control module system, Fuse 1 (on fuse panel A), Fuse 4 (on fuse panel A), Fuse panel B

A	Battery
B	Starter
C	Generator
C1	Voltage regulator
J519	Vehicle electrical control module system
SA1	Fuse 1 (on fuse panel A)
SA4	Fuse 4 (on fuse panel A)
SB	Fuse panel B
T2	Double connector
T2i	Double connector, near the starter
T4t	4-pin connector, near the starter
T52c	52-pin connector
1	Ground strap, battery to body
12	Ground connection in engine compartment, left
508	Terminal 30 threaded connection (on E-box)
652	Transmission/engine ground connection
B111	Positive connection 1 (30a) (in interior wiring harness)
B169	Positive connection 1 (30) (in interior wiring harness)
B177	Connection 61 (in interior wiring harness)
*	Only for vehicles with A/C system
*2	Only for vehicles without an A/C system

ws	=	white
sw	=	black
ro	=	red
rt	=	red
br	=	brown
gn	=	green
bl	=	blue
gr	=	grey
li	=	lilac
vi	=	lilac
ge	=	yellow
or	=	orange
rs	=	pink

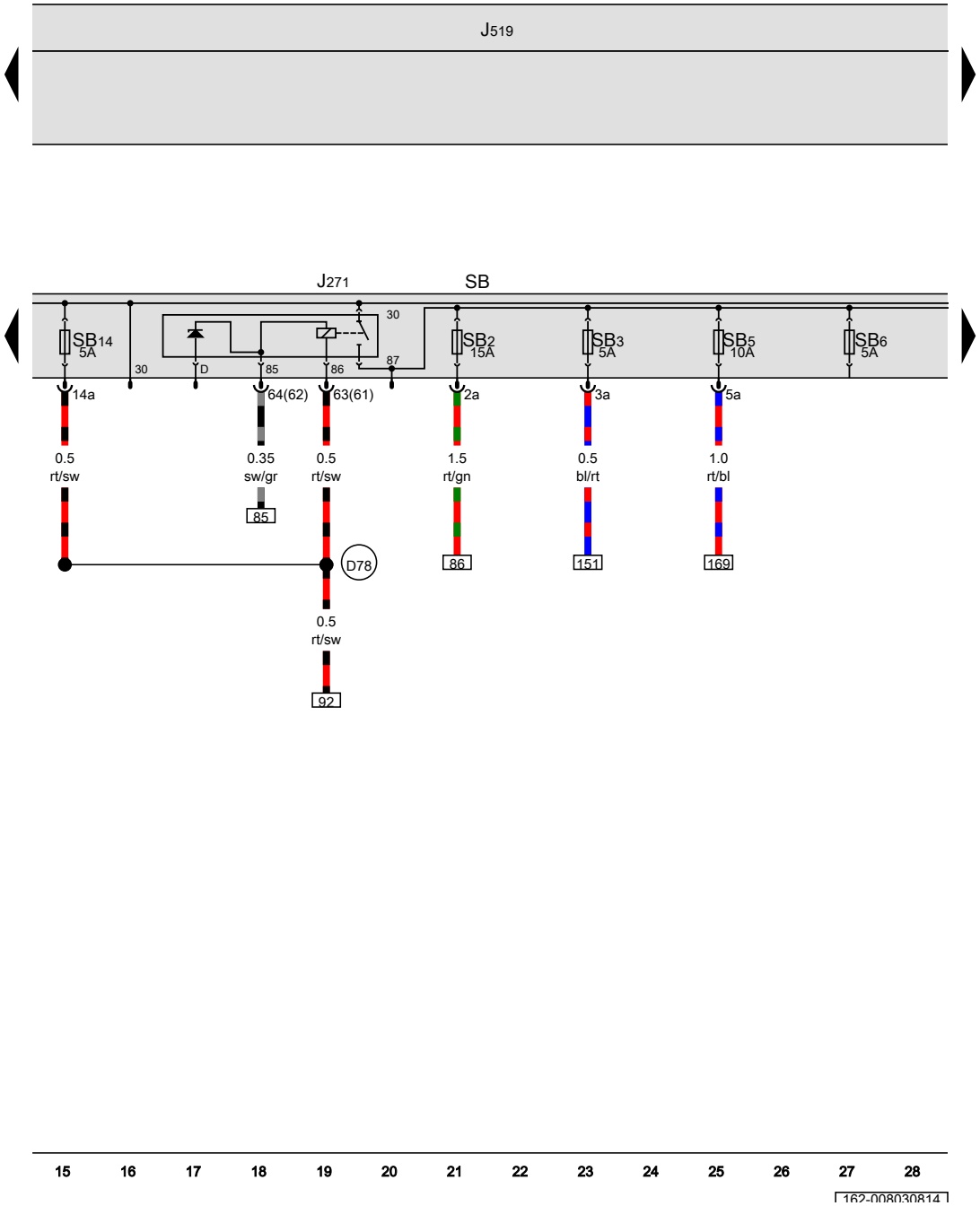

Motronic engine control module power supply relay, Vehicle electrical control module system, Fuse panel B

J271	Motronic engine control module power supply relay
J519	Vehicle electrical control module system
SB	Fuse panel B
SB2	Fuse 2 (on fuse panel B)
SB3	Fuse 3 (on fuse panel B)
SB5	Fuse 5 (on fuse panel B)
SB6	Fuse 6 (on fuse panel B)
SB14	Fuse 14 (on fuse panel B)
D78	Positive connection 1 (30a) (in engine compartment wiring harness)

ws	=	white
sw	=	black
ro	=	red
rt	=	red
br	=	brown
gn	=	green
bl	=	blue
gr	=	grey
li	=	lilac
vi	=	lilac
ge	=	yellow
or	=	orange
rs	=	pink

Protected by copyright. Copyright by Volkswagen AG. Volkswagen AG does not guarantee or accept any liability with respect to the correctness of information in this document. Copyright by Volkswagen AG. Copying for private or commercial purposes, in part or in whole, is not permitted unless authorised by Volkswagen AG.

Vehicle electrical control module system, Fuse panel B

J519	Vehicle electrical control module system
SB	Fuse panel B
SB7	Fuse 7 (on fuse panel B)
SB8	Fuse 8 (on fuse panel B)
SB10	Fuse 10 (on fuse panel B)
SB25	Fuse 25 (on fuse panel B)

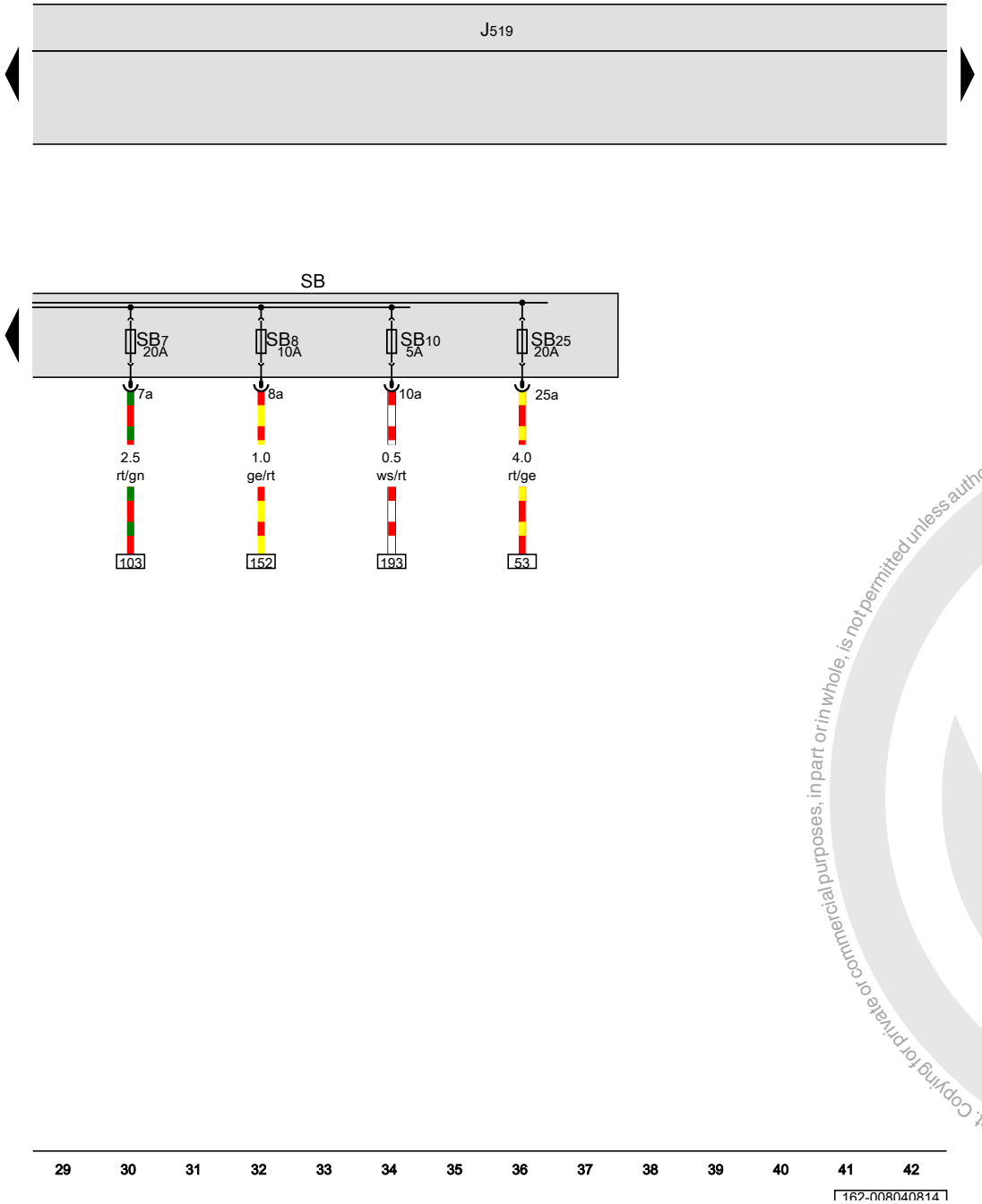

ws	=	white
sw	=	black
ro	=	red
rt	=	red
br	=	brown
gn	=	green
bl	=	blue
gr	=	grey
li	=	lilac
vi	=	lilac
ge	=	yellow
or	=	orange
rs	=	pink

Protected by copyright. Copying for private or commercial purposes, in part or in whole, is not permitted unless authorised by Volkswagen AG. Volkswagen AG does not guarantee or accept any liability with respect to the correctness of information in this document. Copyright by Volkswagen AG.

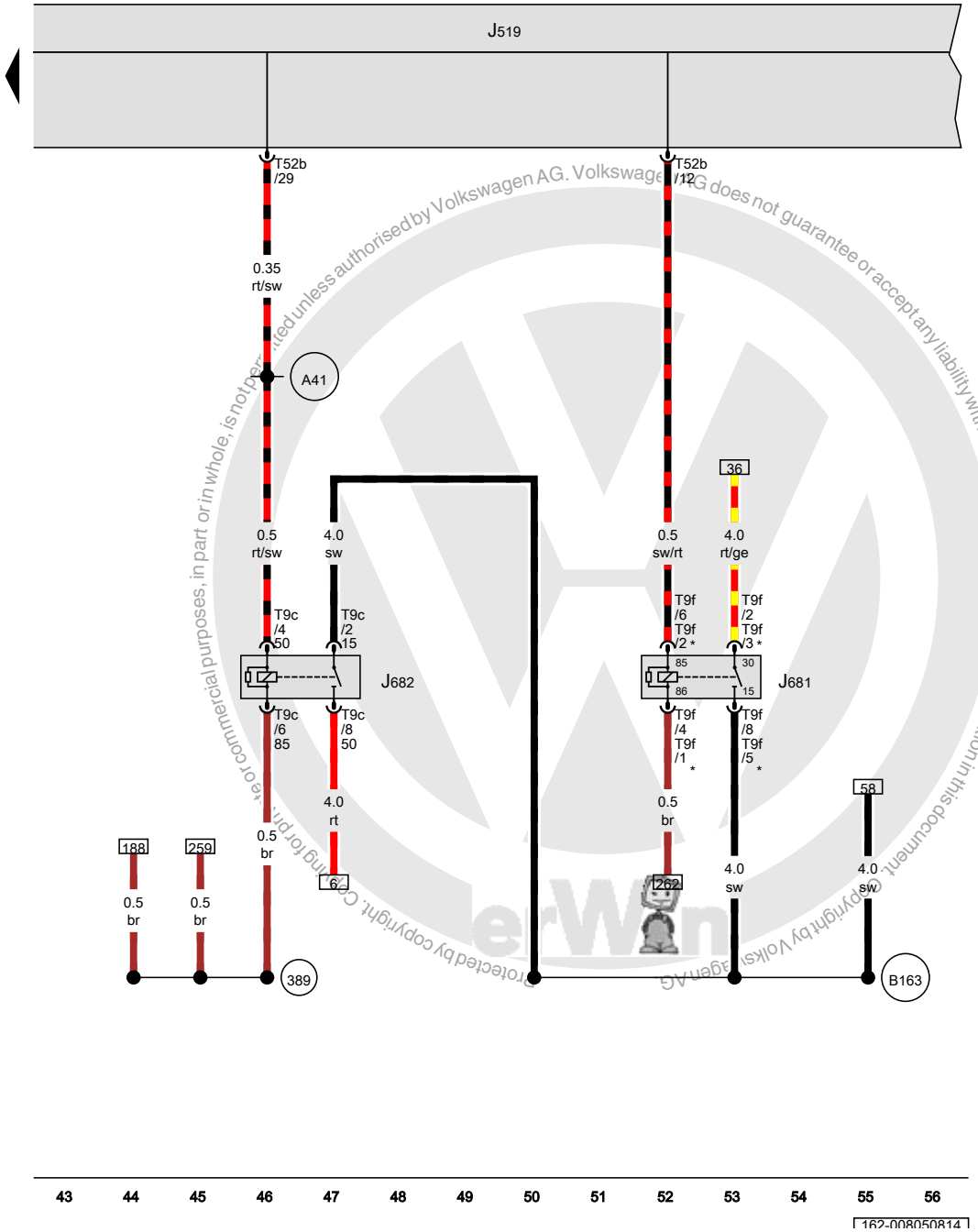

Vehicle electrical control module system, Terminal 15 power supply relay 2, Terminal 50 power supply relay

J519	Vehicle electrical control module system
J681	Terminal 15 power supply relay 2
J682	Terminal 50 power supply relay
T9c	9-pin connector
T9f	9-pin connector
T52b	52-pin connector
389	Ground connection 24 (in main wiring harness)
A41	Positive connection (50) (in instrument panel wiring harness)
B163	Positive connection 1 (15) (in interior wiring harness)
*	Running change

ws	=	white
sw	=	black
ro	=	red
rt	=	red
br	=	brown
gn	=	green
bl	=	blue
gr	=	grey
li	=	lilac
vi	=	lilac
ge	=	yellow
or	=	orange
rs	=	pink

Protected by copyright. Copying for private or commercial purposes, in part or in whole, is not permitted unless authorised by Volkswagen AG. Volkswagen AG does not guarantee or accept any liability with respect to the correctness of information in this document. Copyright by Volkswagen AG

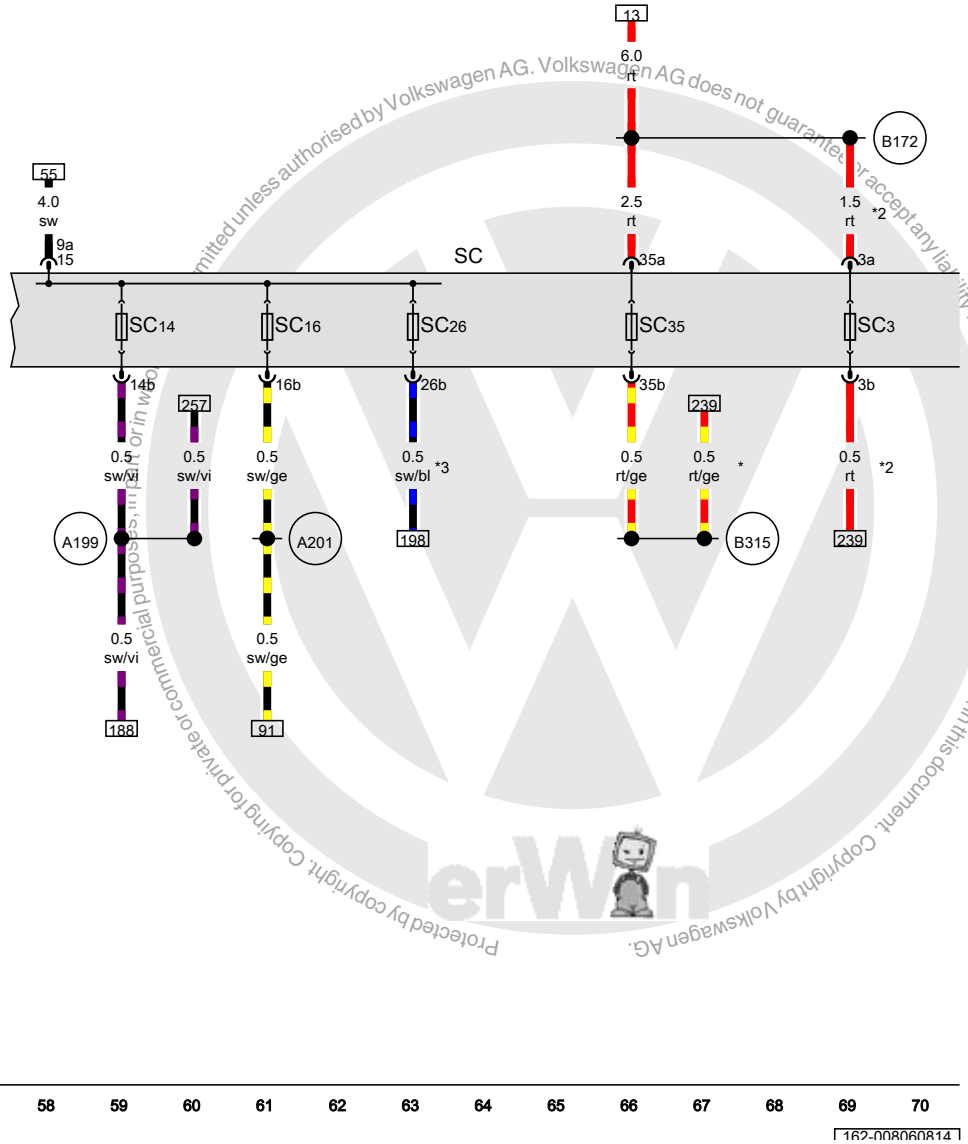

Fuse panel C

SC	Fuse panel C
SC3	Fuse 3 (on fuse panel C)
SC14	Fuse 14 (on fuse panel C)
SC16	Fuse 16 (on fuse panel C)
SC26	Fuse 26 (on fuse panel C)
SC35	Fuse 35 (on fuse panel C)
A199	Positive connection 4 (15a) (in instrument panel wiring harness)
A201	Positive connection 6 (15a) (in instrument panel wiring harness)
B172	Positive connection 4 (30) (in interior wiring harness)
B315	Positive connection 1 (30a) (in main wiring harness)
*	Omitted as a running change
*2	Running change
*3	Only for vehicles with automatic transmission

ws	=	white
sw	=	black
ro	=	red
rt	=	red
br	=	brown
gn	=	green
bl	=	blue
gr	=	grey
li	=	lilac
vi	=	lilac
ge	=	yellow
or	=	orange
rs	=	pink

Protected by copyright. Copying for private or commercial purposes, in whole or in part, is not permitted unless authorised by Volkswagen AG. Volkswagen AG does not guarantee or accept any liability with respect to the correctness of information in this document. Copyright by Volkswagen AG.

Fuel level sensor, Transfer fuel pump, Fuel pump relay, Fuse panel C

G	Fuel level sensor
G6	Transfer fuel pump
J17	Fuel pump relay
SC	Fuse panel C
SC47	Fuse 47 (on fuse panel C)
T5aa	5-pin connector
T5b	5-pin connector
196	Ground connection 3 (in rear wiring harness)
682	Ground connection 2 in right rear side panel
A99	Connection 87 (in instrument panel wiring harness) 1
B156	Positive connection (30a) (in interior wiring harness)
B170	Positive connection 2 (30) (in interior wiring harness)

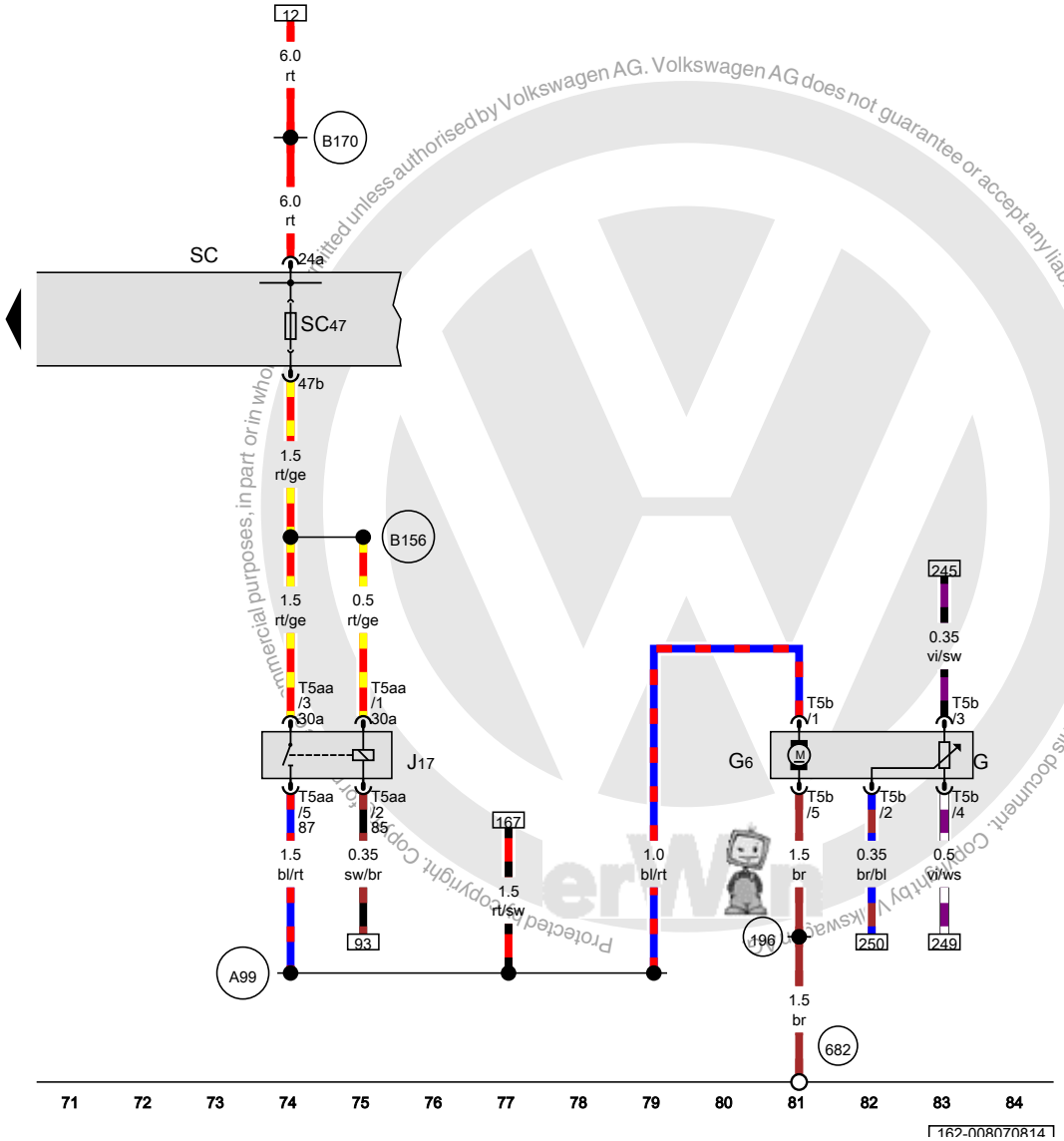

ws	=	white
sw	=	black
ro	=	red
rt	=	red
br	=	brown
gn	=	green
bl	=	blue
gr	=	grey
li	=	lilac
vi	=	lilac
ge	=	yellow
or	=	orange
rs	=	pink

Protected by copyright. Copyright by Volkswagen AG. Volkswagen AG does not guarantee or accept any liability with respect to the correctness of information in this document. Copy for private or commercial purposes, in part or in whole, is not permitted unless authorised by Volkswagen AG.

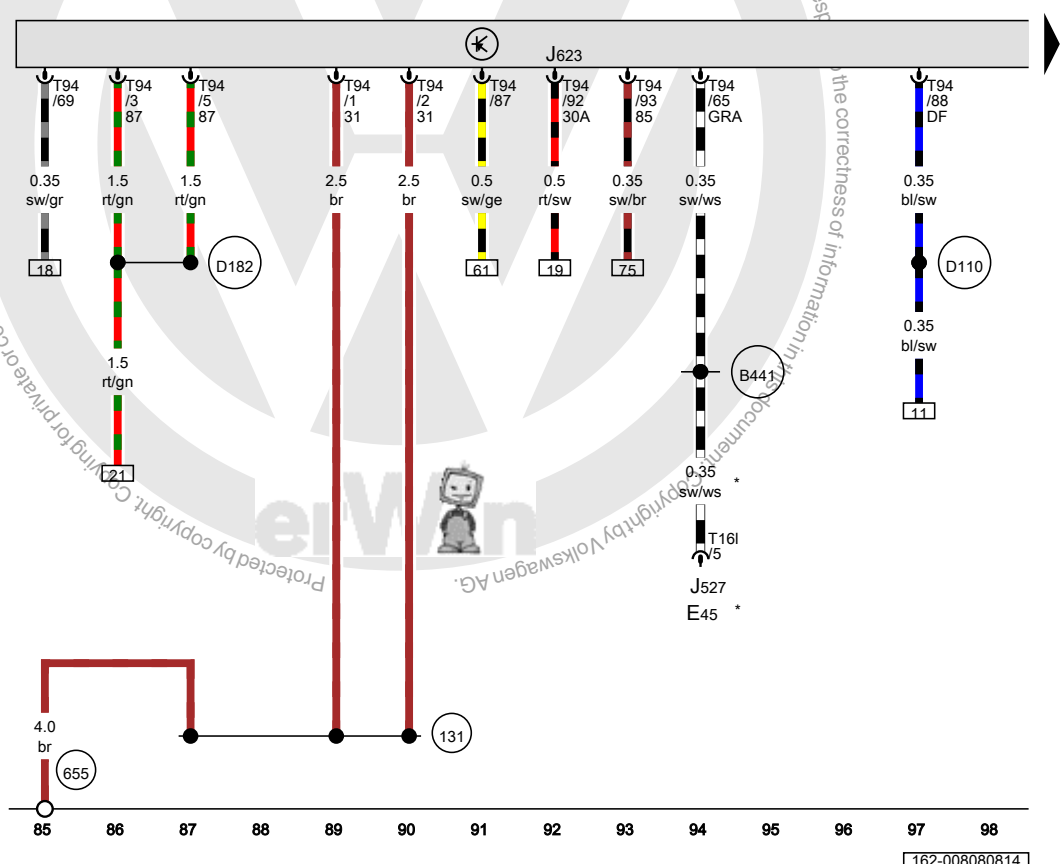

Engine control module

E45	Cruise control switch
J527	Steering column electronics control module
J623	Engine control module
T16l	16-pin connector
T94	94-pin connector
131	Ground connection 2 (in engine compartment wiring harness)
655	Ground connection on left headlamp
B441	Cruise control connection (in main wiring harness)
D110	Connection 8 (in engine compartment wiring harness)
D182	Connection 3 (87a) (in engine compartment wiring harness)
*	Only for vehicles with cruise control

ws	=	white
sw	=	black
ro	=	red
rt	=	red
br	=	brown
gn	=	green
bl	=	blue
gr	=	grey
li	=	lilac
vi	=	lilac
ge	=	yellow
or	=	orange
rs	=	pink

Protected by copyright. Copying for private or commercial purposes, in part or in whole, is not permitted unless authorised by Volkswagen AG. Volkswagen AG does not guarantee or accept any liability with respect to the correctness of information in this document. Copyright by Volkswagen AG.

Engine control module, Spark plug connectors, Spark plugs

J623	Engine control module
N79	Positive crankcase ventilation heating element
N152	Ignition coil
P	Spark plug connectors
Q	Spark plugs
T2fc	Double connector
T4z	4-pin connector
T14	14-pin connector, near the battery
T60	60-pin connector
108	Ground connection 2 (in left front wiring harness)
640	Ground connection 2 in engine compartment, left

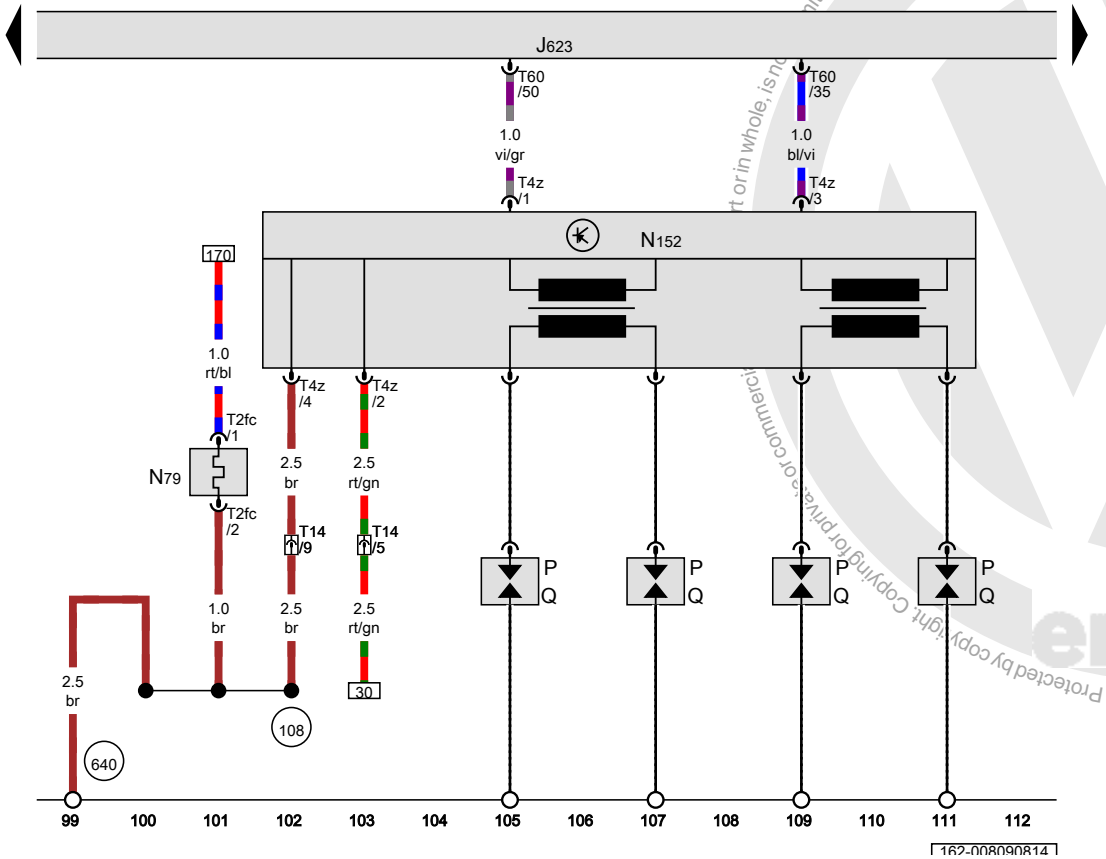

ws	=	white
sw	=	black
ro	=	red
rt	=	red
br	=	brown
gn	=	green
bl	=	blue
gr	=	grey
li	=	lilac
vi	=	lilac
ge	=	yellow
or	=	orange
rs	=	pink

Protected by copyright. Copyright for private or commercial purposes, in part or in whole, is not permitted unless authorised by Volkswagen AG. Volkswagen AG does not guarantee or accept any liability with respect to the correctness of information in this document. Copyright by Volkswagen AG

Accelerator pedal position sensor, Accelerator pedal position sensor 2, EPC throttle drive, Throttle valve control module, Engine control module

G69	Throttle position sensor
G79	Accelerator pedal position sensor
G185	Accelerator pedal position sensor 2
G186	EPC throttle drive
G188	EPC throttle drive angle sensor 2
J338	Throttle valve control module
J623	Engine control module
T6h	6-pin connector
T6x	6-pin connector
T60	60-pin connector
T94	94-pin connector

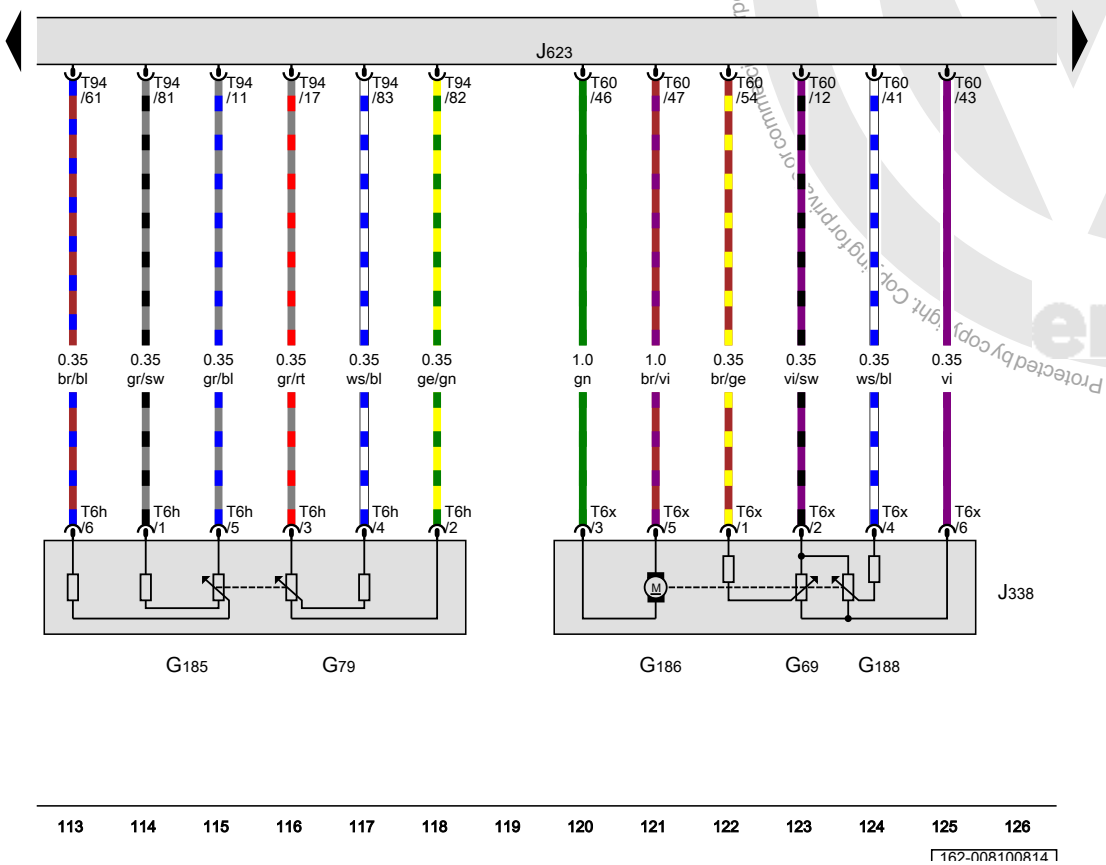

ws	=	white
sw	=	black
ro	=	red
rt	=	red
br	=	brown
gn	=	green
bl	=	blue
gr	=	grey
li	=	lilac
vi	=	lilac
ge	=	yellow
or	=	orange
rs	=	pink

Protected by copyright. Copying for private or commercial purposes, in part or in whole, is not permitted unless authorised by Volkswagen AG. Volkswagen AG does not guarantee or assume any liability with respect to the correctness of information in this document. Copyright by Volkswagen AG.

Camshaft position sensor, Knock sensor 1, Engine coolant temperature sensor, Engine control module

G40	Camshaft position sensor
G61	Knock sensor 1
G62	Engine coolant temperature sensor
J623	Engine control module
T2dp	Double connector
T2ex	Double connector
T3b	3-pin connector
T60	60-pin connector
220	Sensor ground connection (in engine wiring harness)

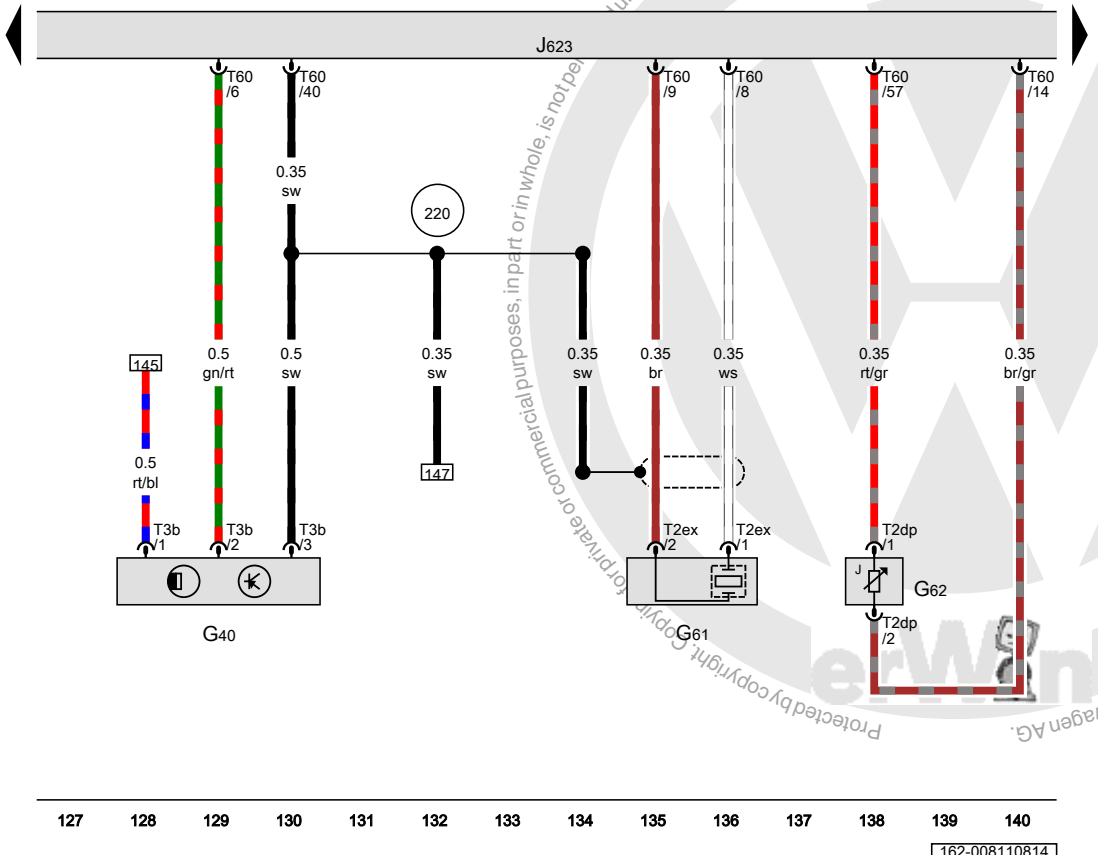

ws	=	white
sw	=	black
ro	=	red
rt	=	red
br	=	brown
gn	=	green
bl	=	blue
gr	=	grey
li	=	lilac
vi	=	lilac
ge	=	yellow
or	=	orange
rs	=	pink

Protected by copyright. Copyright in this document is not private or commercial purposes, in part or in whole, is not permitted unless authorised by Volkswagen AG. Volkswagen AG does not guarantee or accept any liability with respect to the correctness of information in this document. Copyright by Volkswagen AG.

Engine speed sensor, Intake air temperature sensor, Manifold absolute pressure sensor, Engine control module, EVAP canister purge regulator valve 1

G28	Engine speed sensor
G42	Intake air temperature sensor
G71	Manifold absolute pressure sensor
J623	Engine control module
N80	EVAP canister purge regulator valve 1
T2dt	Double connector
T3ag	3-pin connector
T4ax	4-pin connector
T4x	4-pin connector
T14	14-pin connector, near the battery
T60	60-pin connector
T94	94-pin connector
(D101)	Connection 1 (in engine compartment wiring harness)
*	Coolant fan connection

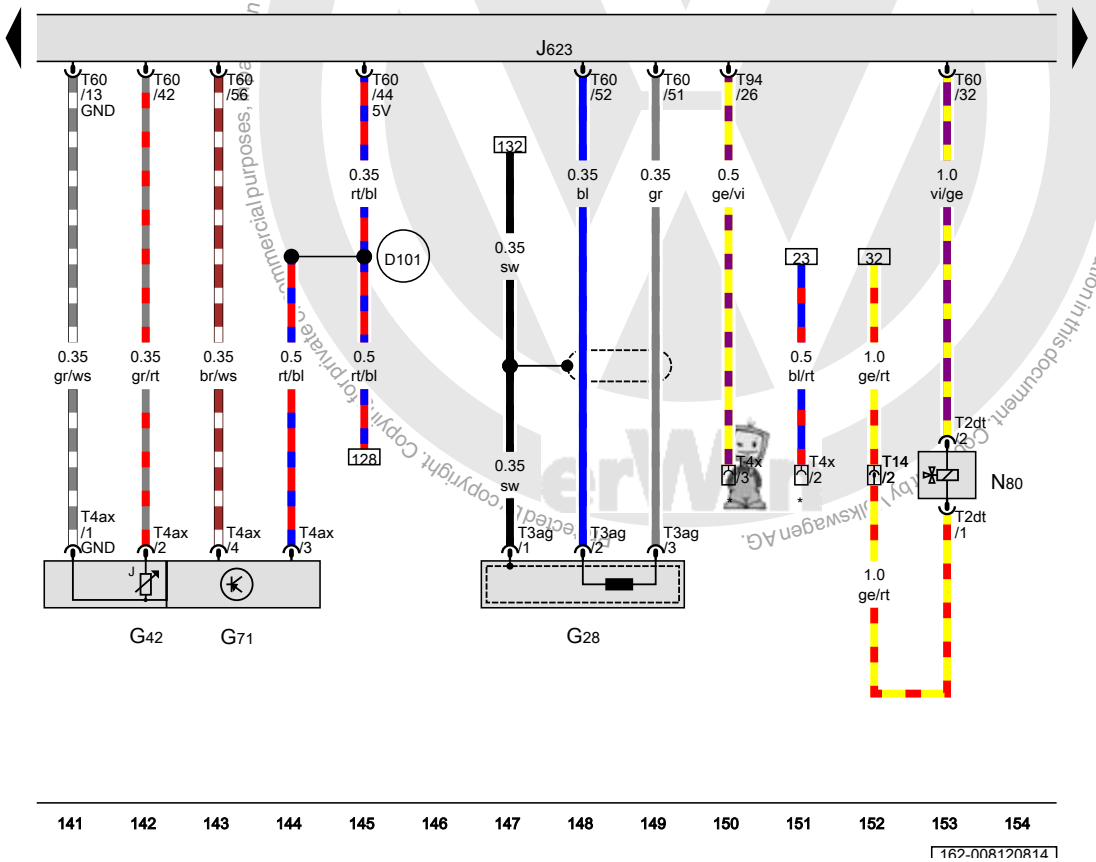

ws	=	white
sw	=	black
ro	=	red
rt	=	red
br	=	brown
gn	=	green
bl	=	blue
gr	=	grey
li	=	lilac
vi	=	lilac
ge	=	yellow
or	=	orange
rs	=	pink

Volkswagen AG. Volkswagen AG does not guarantee or accept any liability with respect to the correctness of information in this document. Copyright by Volkswagen AG.

Engine control module, Cylinder 1 fuel injector, Cylinder 2 fuel injector, Cylinder 3 fuel injector, Cylinder 4 fuel injector

J623	Engine control module
N30	Cylinder 1 fuel injector
N31	Cylinder 2 fuel injector
N32	Cylinder 3 fuel injector
N33	Cylinder 4 fuel injector
T2cg	Double connector
T2ch	Double connector
T2ci	Double connector
T2cj	Double connector
T14	14-pin connector, near the battery
T60	60-pin connector
D95	Injector connection (in engine compartment wiring harness)
*	The color of the wires depends on vehicle equipment

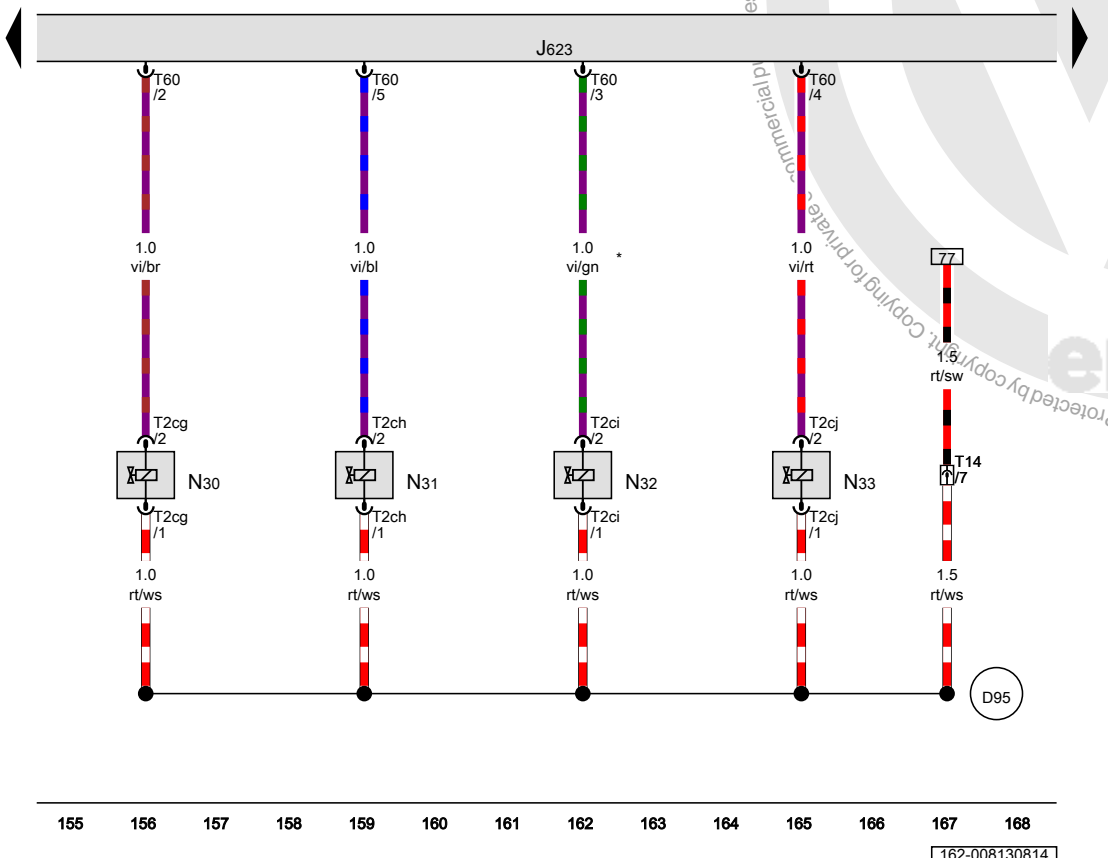

ws	=	white
sw	=	black
ro	=	red
rt	=	red
br	=	brown
gn	=	green
bl	=	blue
gr	=	grey
li	=	lilac
vi	=	lilac
ge	=	yellow
or	=	orange
rs	=	pink

Protected by copyright. Copying for private or commercial purposes, in part or in whole, is not permitted unless authorised by Volkswagen AG. Volkswagen AG does not guarantee or assume any liability with respect to the correctness of information in this document. Copyright by Volkswagen AG.

Heated oxygen sensor, Oxygen sensor after three way catalytic converter, Engine control module, Oxygen sensor heater, Heater for oxygen sensor 1 after catalytic converter

G39	Heated oxygen sensor
G130	Oxygen sensor after three way catalytic converter
J623	Engine control module
T4ao	4-pin connector
T6w	6-pin connector
T94	94-pin connector
Z19	Oxygen sensor heater
Z29	Heater for oxygen sensor 1 after catalytic converter
E30	Connection 87a (in engine wiring harness)

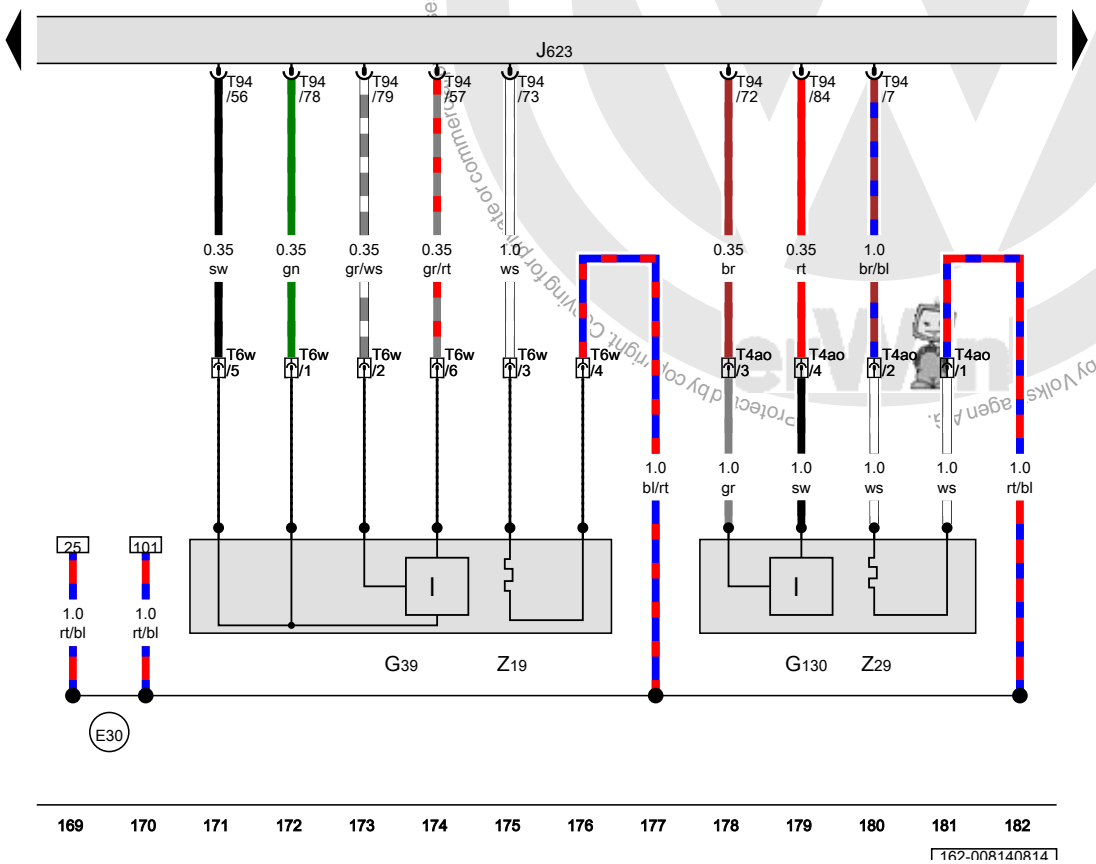

ws	=	white
sw	=	black
ro	=	red
rt	=	red
br	=	brown
gn	=	green
bl	=	blue
gr	=	grey
li	=	lilac
vi	=	lilac
ge	=	yellow
or	=	orange
rs	=	pink

es, in part or in whole, is not permitted unless authorised by Volkswagen AG. Volkswagen AG does not guarantee or accept any liability with respect to the correctness of information in this document. Copyright by Volkswagen AG. Protected by copyright. Copying for private or commercial purposes, in part or in whole, is not permitted unless authorised by Volkswagen AG.

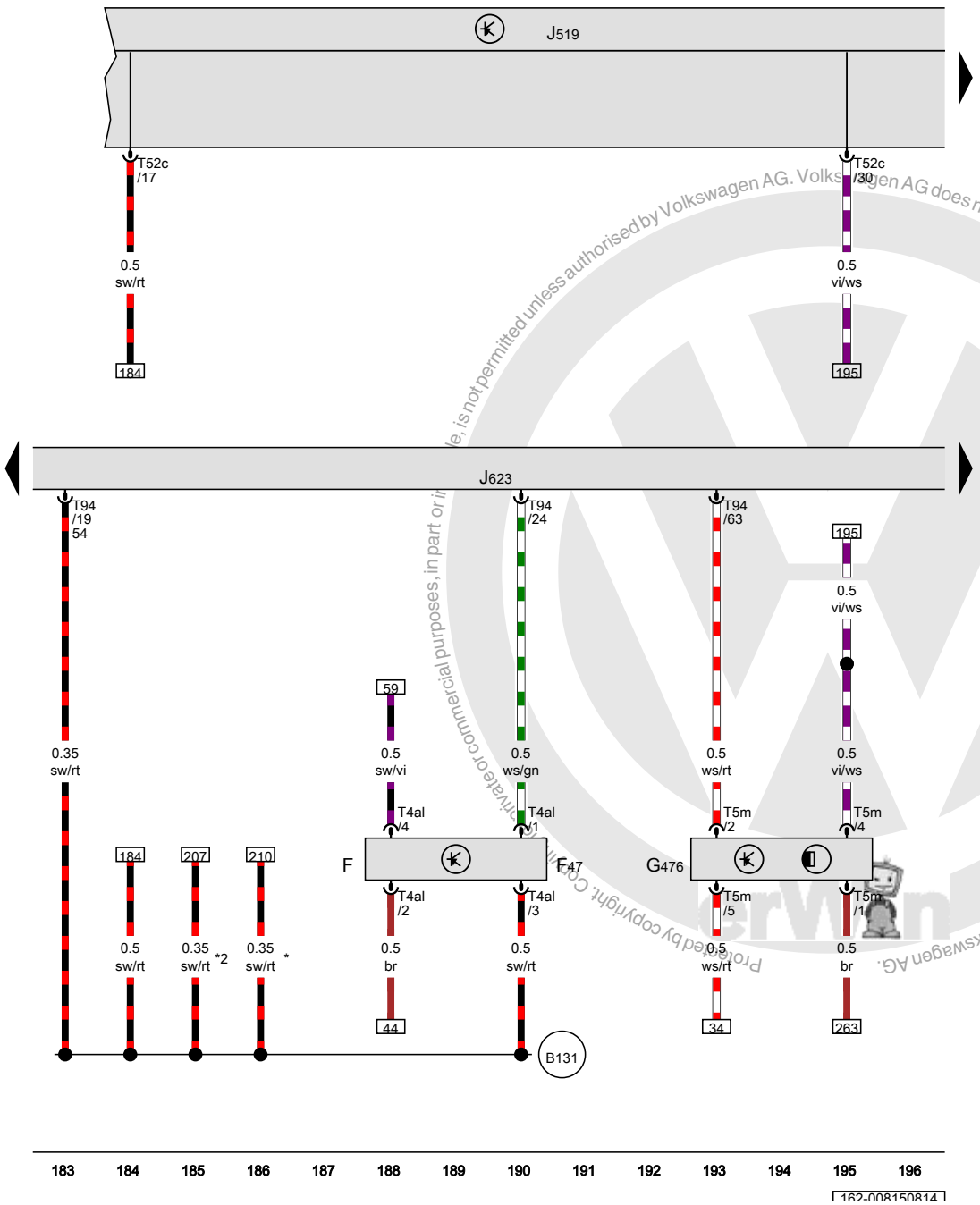

Brake lamp switch, Brake pedal switch, Clutch position sensor, Vehicle electrical control module system, Engine control module

F	Brake lamp switch
F47	Brake pedal switch
G476	Clutch position sensor
J519	Vehicle electrical control module system
J623	Engine control module
T4al	4-pin connector
T5m	5-pin connector
T52c	52-pin connector
T94	94-pin connector
B131	Connection 54 (in interior wiring harness)
*	Only for vehicles with ABS and ESP
*2	Only for vehicles with ABS without ESP

ws	=	white
sw	=	black
ro	=	red
rt	=	red
br	=	brown
gn	=	green
bl	=	blue
gr	=	grey
li	=	lilac
vi	=	lilac
ge	=	yellow
or	=	orange
rs	=	pink

Protected by copyright. Copyright by Volkswagen AG. Volkswagen AG does not guarantee or accept any liability with respect to the correctness of information in this document. Copyright by Volkswagen AG. ...le, is not permitted unless authorised by Volkswagen AG. ...ivate or commercial purposes, in part or in

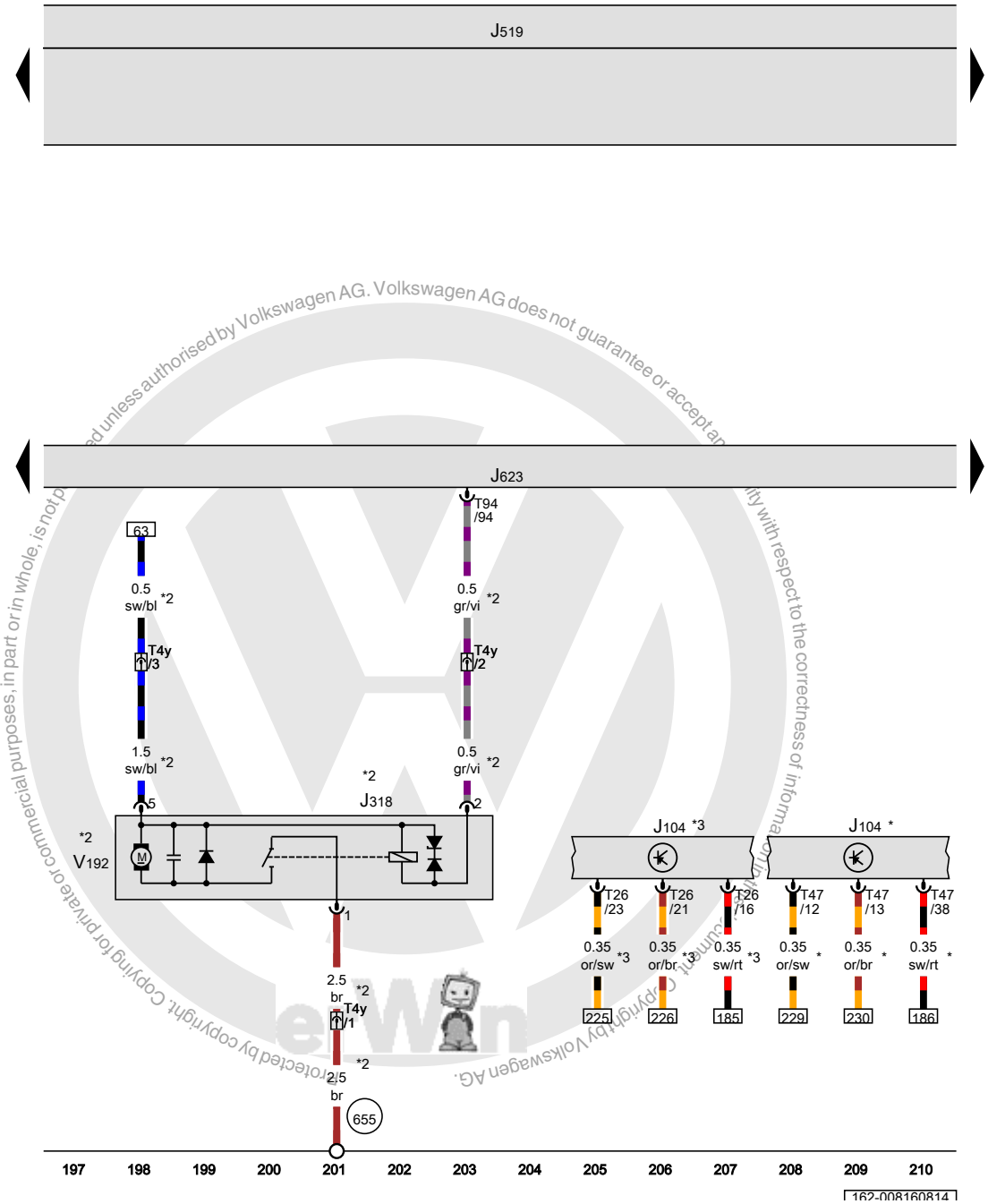

Vacuum pump relay, Vehicle electrical control module system, Engine control module, Brake system vacuum pump

J104	ABS control module
J318	Vacuum pump relay
J519	Vehicle electrical control module system
J623	Engine control module
T4y	4-pin connector
T26	26-pin connector
T47	47-pin connector
T94	94-pin connector
V192	Brake system vacuum pump
655	Ground connection on left headlamp
*	Only for vehicles with ABS and ESP
*2	Only for vehicles with automatic transmission
*3	Only for vehicles with ABS without ESP

ws	=	white
sw	=	black
ro	=	red
rt	=	red
br	=	brown
gn	=	green
bl	=	blue
gr	=	grey
li	=	lilac
vi	=	lilac
ge	=	yellow
or	=	orange
rs	=	pink

Copyright by Volkswagen AG. Volkswagen AG does not guarantee or accept any liability with respect to the correctness of information in this document. Copying for private or commercial purposes, in part or in whole, is not permitted unless authorised by Volkswagen AG. Protected by copyright.

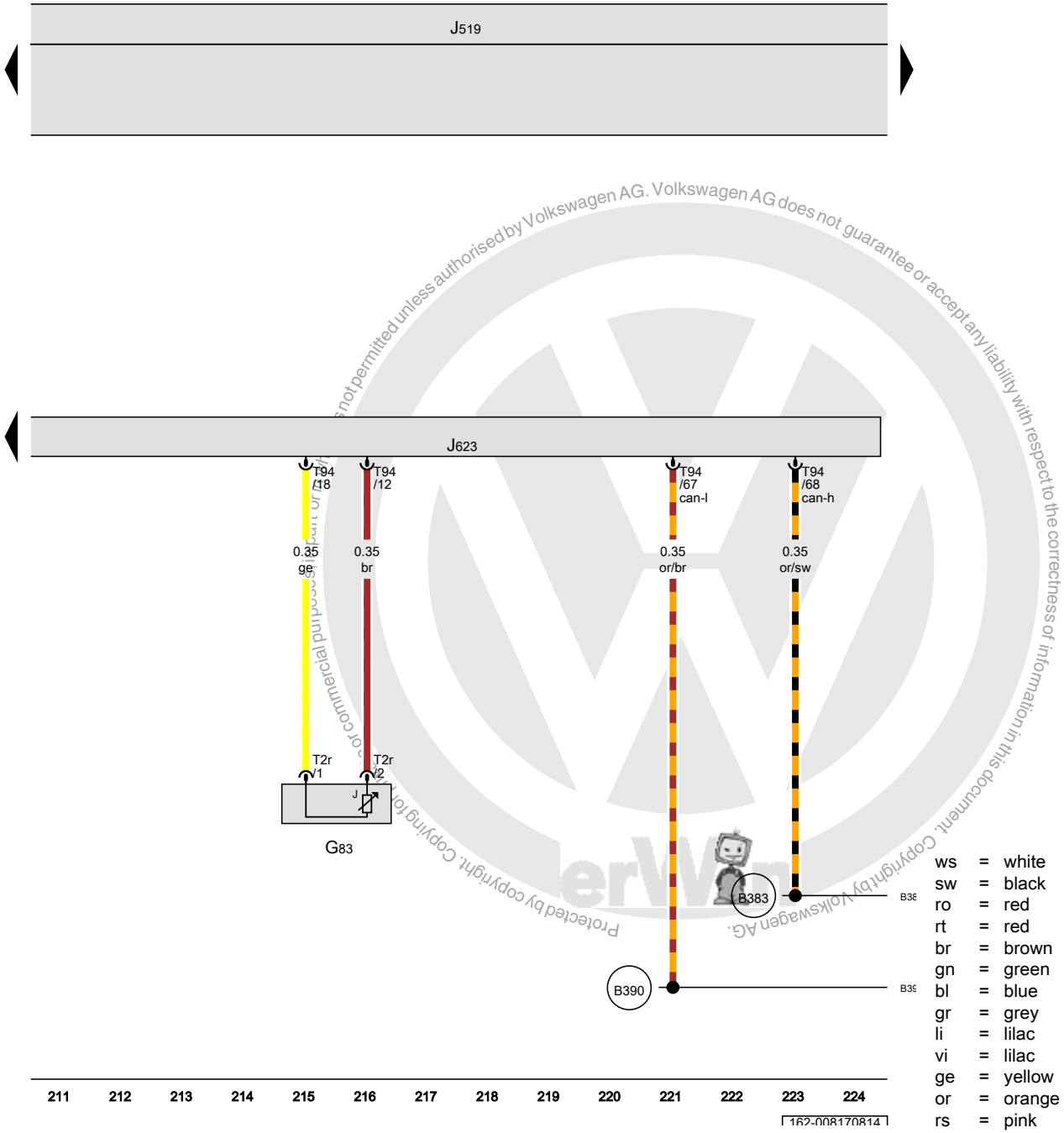

Engine coolant temperature sensor on radiator outlet, Vehicle electrical control module system, Engine control module

G83	Engine coolant temperature sensor on radiator outlet
J519	Vehicle electrical control module system
J623	Engine control module
T2r	Double connector
T94	94-pin connector
B383	Powertrain CAN bus high connection 1 (in main wiring harness)
B390	Powertrain CAN bus low connection 1 (in main wiring harness)

ws	=	white
sw	=	black
ro	=	red
rt	=	red
br	=	brown
gn	=	green
bl	=	blue
gr	=	grey
li	=	lilac
vi	=	lilac
ge	=	yellow
or	=	orange
rs	=	pink

Protected by copyright. Copying for commercial purposes is not permitted unless authorised by Volkswagen AG. Volkswagen AG does not guarantee or accept any liability with respect to the correctness of information in this document. Copyright by Volkswagen AG.

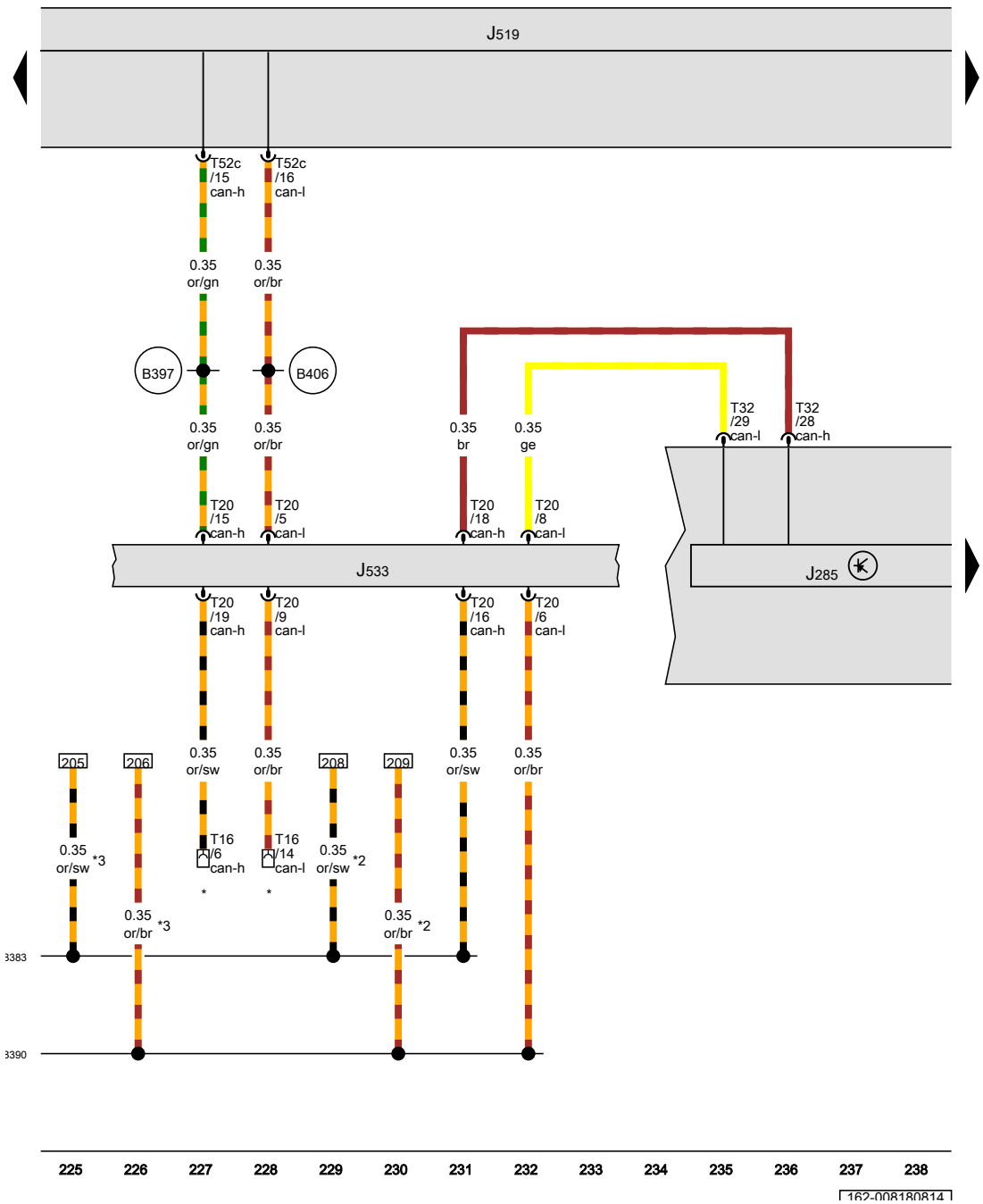

Instrument cluster control module, Vehicle electrical control module system, Data bus on board diagnostic interface

J285	Instrument cluster control module
J519	Vehicle electrical control module system
J533	Data bus on board diagnostic interface
T16	16-pin connector
T20	20-pin connector
T32	32-pin connector
T52c	52-pin connector
B383	Powertrain CAN bus high connection 1 (in main wiring harness)
B390	Powertrain CAN bus low connection 1 (in main wiring harness)
B397	Comfort system CAN bus high connection 1 (in main wiring harness)
B406	Comfort system CAN bus low connection 1 (in main wiring harness)
*	Diagnostic connector
*2	Only for vehicles with ABS and ESP
*3	Only for vehicles with ABS without ESP

ws	=	white
sw	=	black
ro	=	red
rt	=	red
br	=	brown
gn	=	green
bl	=	blue
gr	=	grey
li	=	lilac
vi	=	lilac
ge	=	yellow
or	=	orange
rs	=	pink

Protected by copyright. Copying for private or commercial purposes, in part or in whole, is not permitted unless authorised by Volkswagen AG. Volkswagen AG does not guarantee or accept any liability with respect to the correctness of information in this document. Copyright by Volkswagen AG.

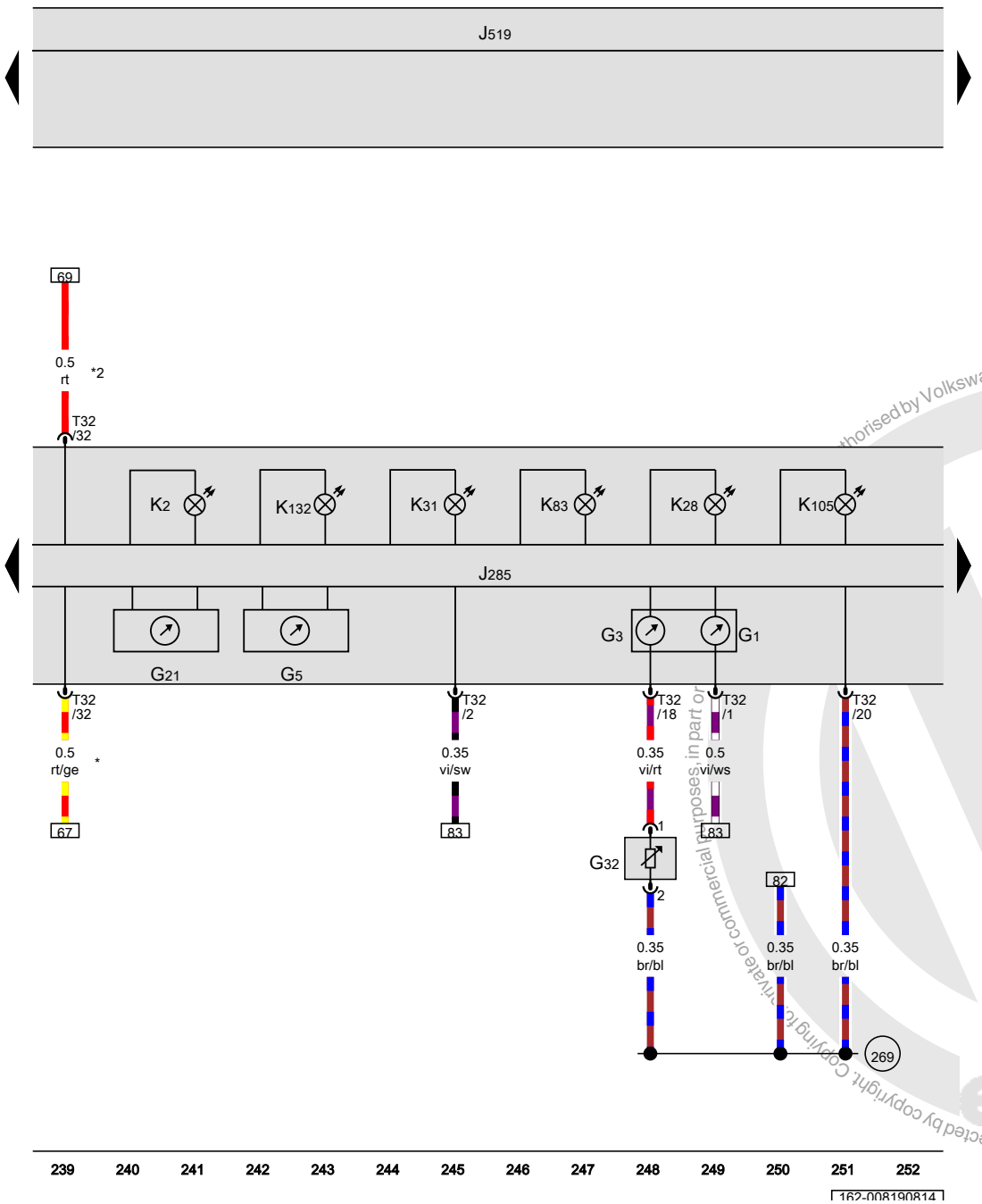

Fuel gauge, Engine coolant temperature gauge, Tachometer, Speedometer, Instrument cluster control module, Vehicle electrical control module system, Generator indicator lamp, Engine coolant level/temperature indicator lamp, Cruise control indicator lamp, Low fuel level indicator lamp, Electronic power control malfunction indicator lamp

G1	Fuel gauge
G3	Engine coolant temperature gauge
G5	Tachometer
G21	Speedometer
G32	Engine coolant level sensor
J285	Instrument cluster control module
J519	Vehicle electrical control module system
K2	Generator indicator lamp
K28	Engine coolant level/temperature indicator lamp
K31	Cruise control indicator lamp
K83	Malfunction indicator lamp
K105	Low fuel level indicator lamp
K132	Electronic power control malfunction indicator lamp
T32	32-pin connector
(269)	Sensor ground connection 1 (in instrument panel wiring harness)
*	Omitted as a running change
*2	Running change

ws	=	white
sw	=	black
ro	=	red
rt	=	red
br	=	brown
gn	=	green
bl	=	blue
gr	=	grey
li	=	lilac
vi	=	lilac
ge	=	yellow
or	=	orange
rs	=	pink

authorised by Volkswagen AG. Volkswagen AG does not give any warranty or assume any liability with respect to the correctness of information in this document. Copyright by Volkswagen AG. Protected by copyright. Copying for private or commercial purposes, in part or in

Oil pressure switch, Instrument cluster control module, Vehicle electrical control module system

F1	Oil pressure switch
H3	Warning buzzer and tone
J285	Instrument cluster control module
J519	Vehicle electrical control module system
K3	Oil pressure indicator lamp
T14	14-pin connector
T32	32-pin connector
T52b	52-pin connector
T52c	52-pin connector
(367)	Ground connection 2 (in main wiring harness)
(605)	Ground connection on upper steering column
*	Running change

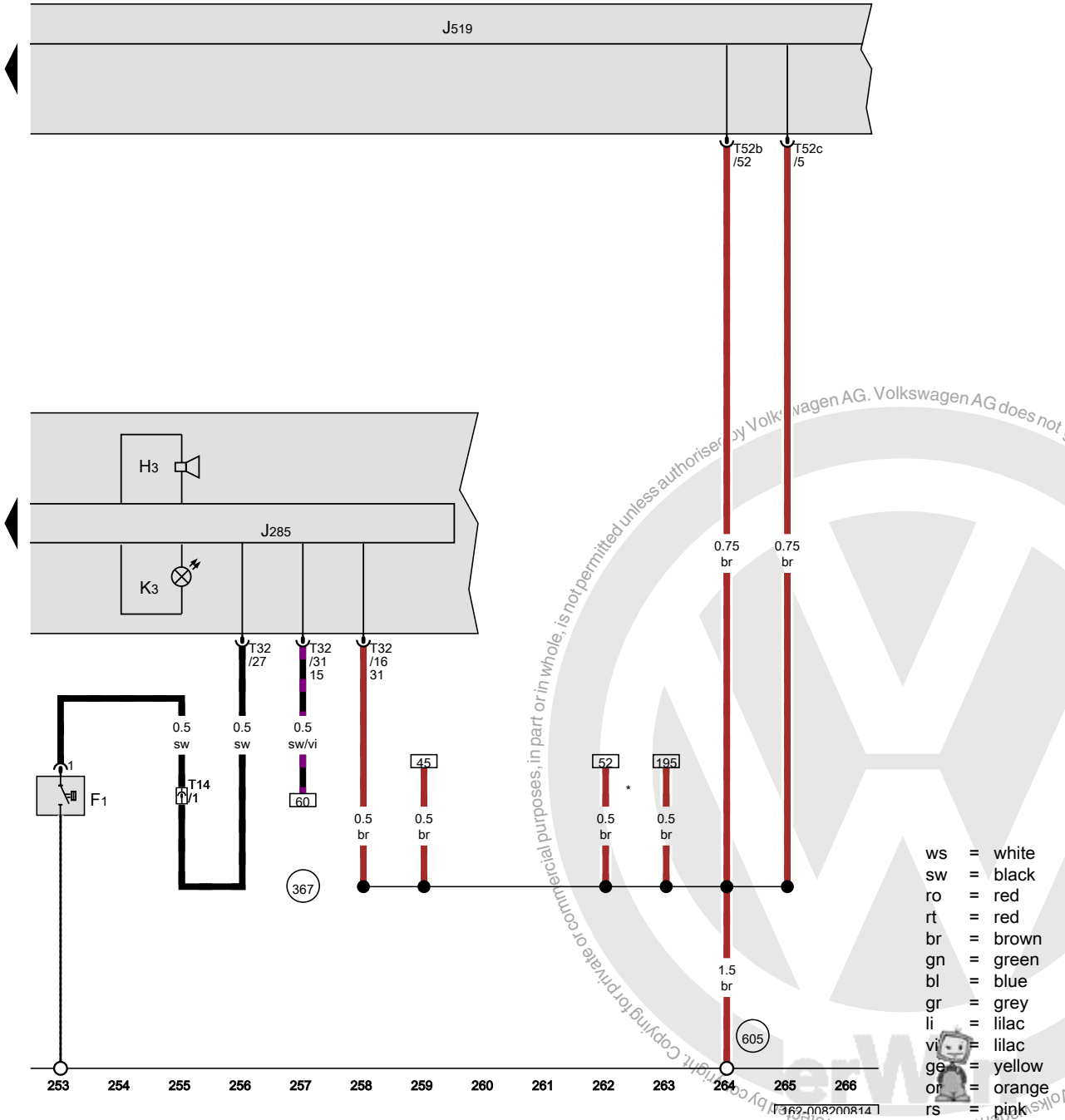

ws	=	white
sw	=	black
ro	=	red
rt	=	red
br	=	brown
gn	=	green
bl	=	blue
gr	=	grey
li	=	lilac
vi	=	lilac
ge	=	yellow
or	=	orange
rs	=	pink

Protected by copyright. Copying for private or commercial purposes, in part or in whole, is not permitted unless authorised by Volkswagen AG. Volkswagen AG does not guarantee or accept any liability with respect to the correctness of information in this document. Copyright by Volkswagen AG.

2.5L gasoline engine , CBTA,CBUA,(AW0)

from April 2010

Protected by copyright. Copying for private or commercial purposes, in part or in whole, is not permitted unless authorised by Volkswagen AG. Volkswagen AG does not guarantee or accept any liability with respect to the correctness of information in this document. Copyright by Volkswagen AG.

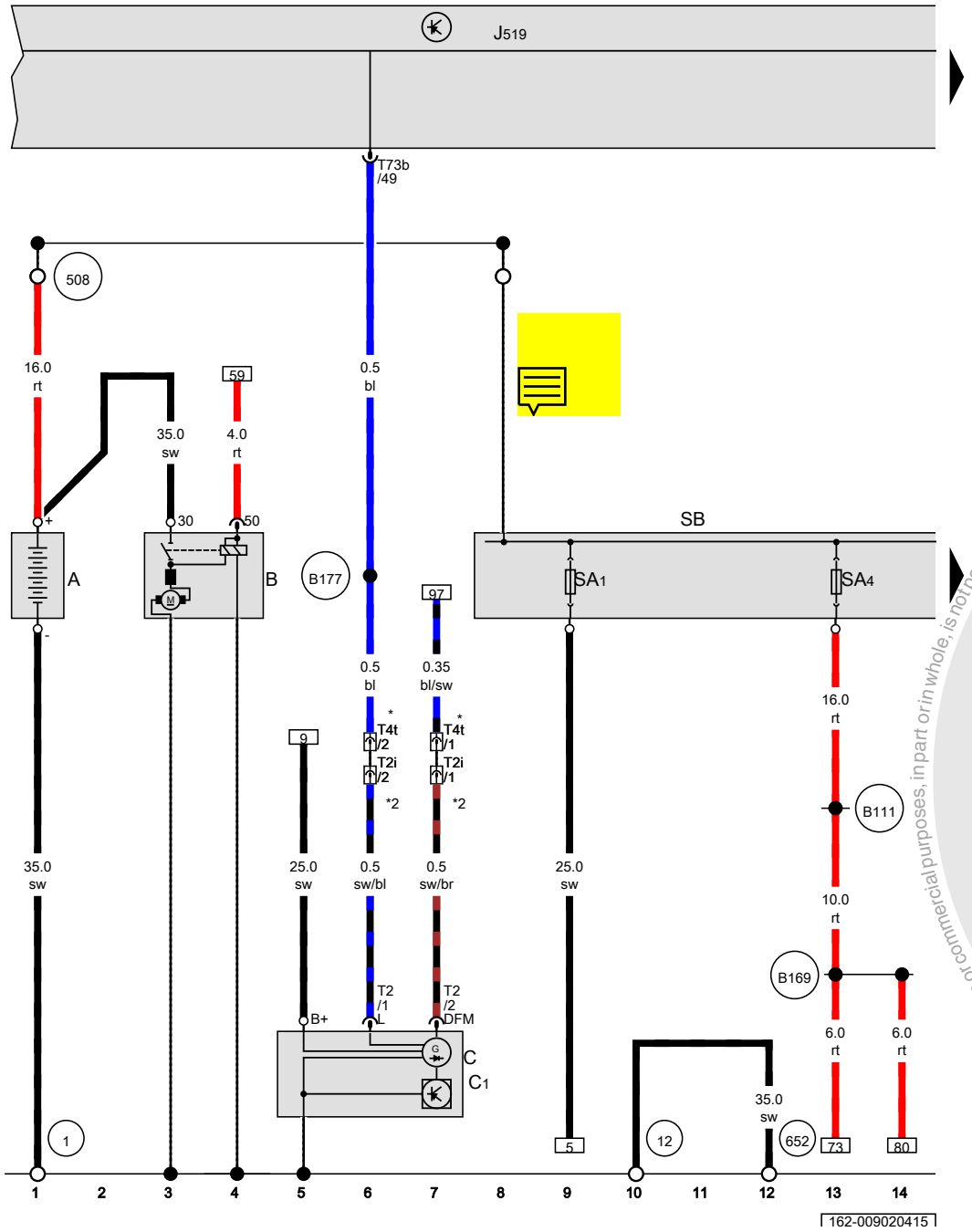

Battery, Starter, Generator, Vehicle electrical control module system, Fuse panel B

A	Battery
B	Starter
C	Generator
C1	Voltage regulator
J519	Vehicle electrical control module system
SA1	Fuse 1 (on fuse panel A)
SA4	Fuse 4 (on fuse panel A)
SB	Fuse panel B
T2	Double connector
T2i	Double connector, near the starter
T4t	4-pin connector, near the starter
T73b	73-pin connector
1	Ground strap, battery to body
12	Ground connection in engine compartment, left
508	Terminal 30 threaded connection (on E-box)
652	Transmission/engine ground connection
B111	Positive connection 1 (30a) (in interior wiring harness)
B169	Positive connection 1 (30) (in interior wiring harness)
B177	Connection 61 (in interior wiring harness)
*	Only for vehicles with A/C system
*2	Only for vehicles without an A/C system

ws	=	white
sw	=	black
ro	=	red
rt	=	red
br	=	brown
gn	=	green
bl	=	blue
gr	=	grey
li	=	lilac
vi	=	lilac
ge	=	yellow
or	=	orange
rs	=	pink

Protected by copyright. Copying for private or commercial purposes, in part or in whole, is not permitted unless authorised by Volkswagen AG. Volkswagen AG does not guarantee or accept any liability with respect to the correctness of information in this document. Copyright by Volkswagen AG.

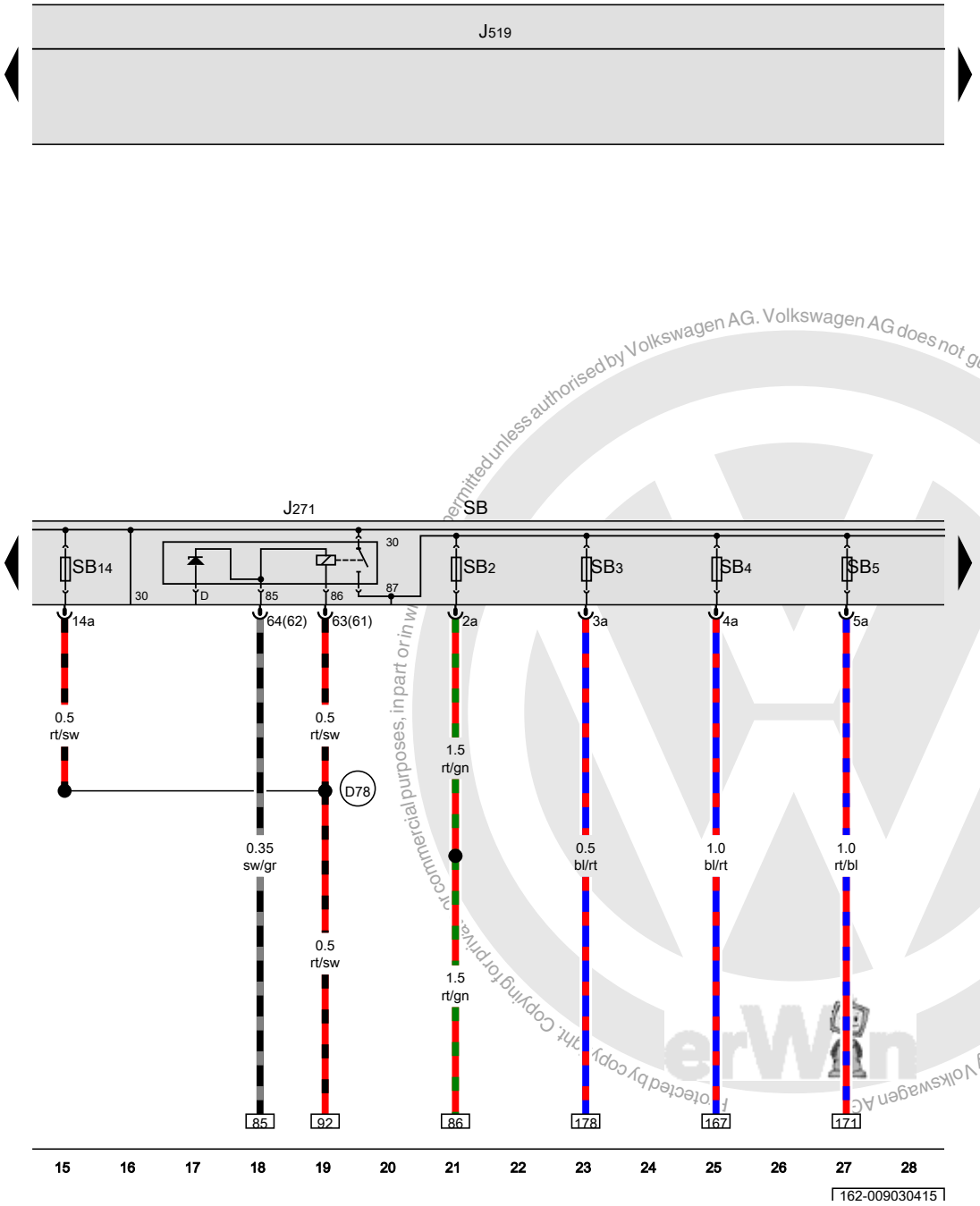

Motronic engine control module power supply relay, Vehicle electrical control module system, Fuse panel B, Fuse 14 (on fuse panel B)

J271	Motronic engine control module power supply relay
J519	Vehicle electrical control module system
SB	Fuse panel B
SB2	Fuse 2 (on fuse panel B)
SB3	Fuse 3 (on fuse panel B)
SB4	Fuse 4 (on fuse panel B)
SB5	Fuse 5 (on fuse panel B)
SB14	Fuse 14 (on fuse panel B)
D78	Positive connection 1 (30a) (in engine compartment wiring harness)

ws	=	white
sw	=	black
ro	=	red
rt	=	red
br	=	brown
gn	=	green
bl	=	blue
gr	=	grey
li	=	lilac
vi	=	lilac
ge	=	yellow
or	=	orange
rs	=	pink

Protected by copyright. Copying for private or commercial purposes, in part or in whole, is not permitted unless authorised by Volkswagen AG. Volkswagen AG does not guarantee or accept any liability with respect to the correctness of information in this document. Copyright by Volkswagen AG.

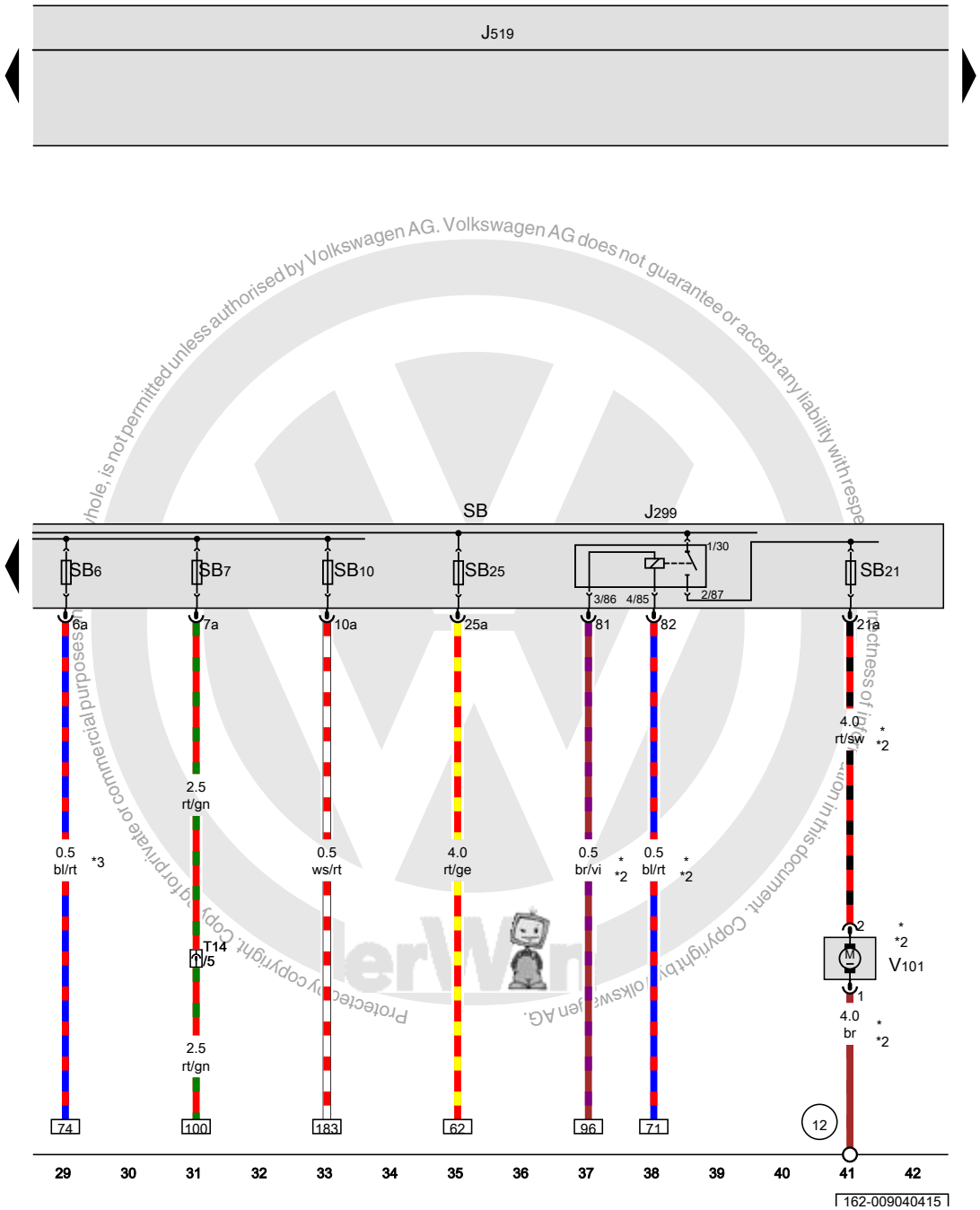

Secondary air injection pump relay, Vehicle electrical control module system, Fuse panel B, Secondary air injection pump motor

J299	Secondary air injection pump relay
J519	Vehicle electrical control module system
SB	Fuse panel B
SB6	Fuse 6 (on fuse panel B)
SB7	Fuse 7 (on fuse panel B)
SB10	Fuse 10 (on fuse panel B)
SB21	Fuse 21 (on fuse panel B)
SB25	Fuse 25 (on fuse panel B)
T14	14-pin connector, near the battery
V101	Secondary air injection pump motor
12	Ground connection in engine compartment, left
*	Depending on equipment
*2	USA only
*3	Running change

ws	=	white
sw	=	black
ro	=	red
rt	=	red
br	=	brown
gn	=	green
bl	=	blue
gr	=	grey
li	=	lilac
vi	=	lilac
ge	=	yellow
or	=	orange
rs	=	pink

Protected by copyright. Copyright by Volkswagen AG. Copy for private or commercial purposes, in whole, is not permitted unless authorised by Volkswagen AG. Volkswagen AG does not guarantee or accept any liability with respect to the correctness of information in this document.

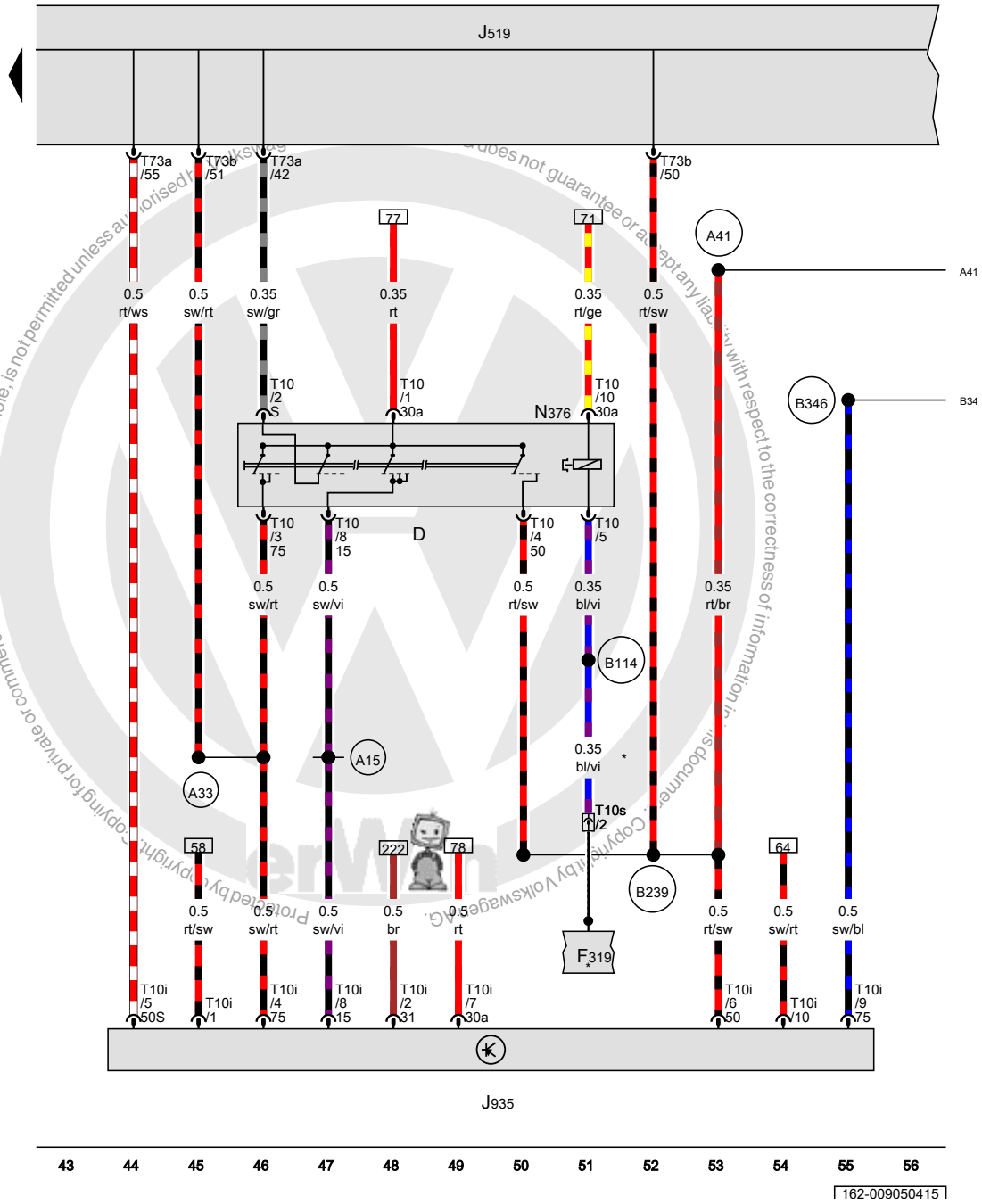

Ignition/starter switch, Vehicle electrical control module system, Converter box

D	Ignition/starter switch
F319	Selector lever park position lock switch
J519	Vehicle electrical control module system
J935	Converter box
N376	Ignition switch key lock solenoid
T10	10-pin connector
T10i	10-pin connector
T10s	10-pin connector
T73a	73-pin connector
T73b	73-pin connector
A15	Plus connection (15) (in instrument cluster wiring harness)
A33	Connection 75 (in instrument panel wiring harness)
A41	Positive connection (50) (in instrument panel wiring harness)
B114	Lock switch connection (in interior wiring harness)
B239	Positive connection 1 (50) (in interior wiring harness)
B346	Connection 75 (in main wiring harness) 1
*	Only for vehicles with automatic transmission

ws	=	white
sw	=	black
ro	=	red
rt	=	red
br	=	brown
gn	=	green
bl	=	blue
gr	=	grey
li	=	lilac
vi	=	lilac
ge	=	yellow
or	=	orange
rs	=	pink

Protected by copyright. Copyright by Volkswagen AG. Copying for private or commercial purposes, in part or in whole, is not permitted unless authorised by Volkswagen AG. Volkswagen AG does not guarantee or accept any liability with respect to the correctness of information in this document.

Terminal 15 power supply relay, Terminal 15 power supply relay 2, Terminal 50 power supply relay, Fuse panel C

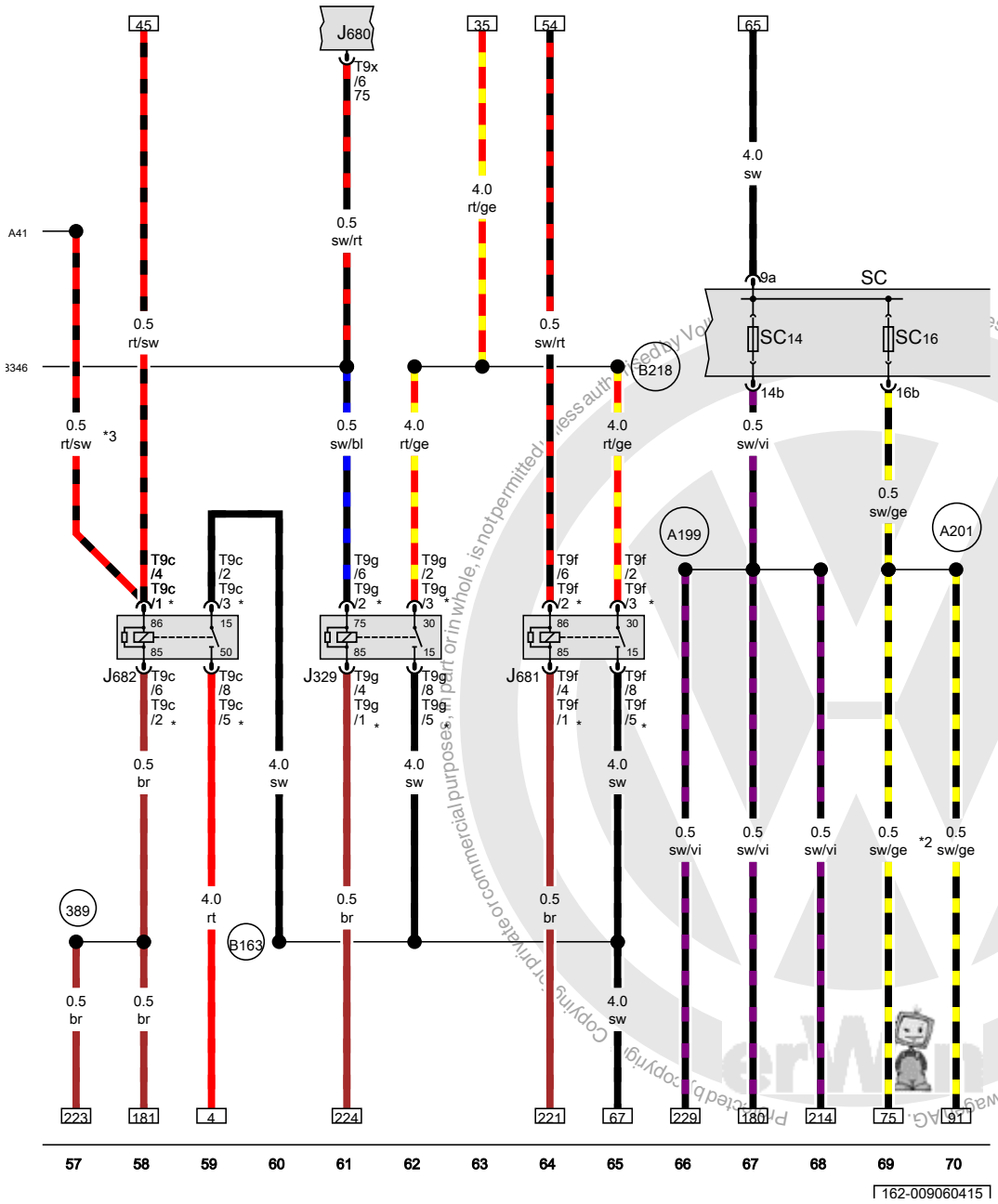

J329	Terminal 15 power supply relay
J680	Terminal 75 power supply relay 1
J681	Terminal 15 power supply relay 2
J682	Terminal 50 power supply relay
SC	Fuse panel C
SC14	Fuse 14 (on fuse panel C)
SC16	Fuse 16 (on fuse panel C)
T9c	9-pin connector
T9f	9-pin connector
T9g	9-pin connector
T9x	9-pin connector
389	Ground connection 24 (in main wiring harness)
A41	Positive connection (50) (in instrument panel wiring harness)
A199	Positive connection 4 (15a) (in instrument panel wiring harness)
A201	Positive connection 6 (15a) (in instrument panel wiring harness)
B163	Positive connection 1 (15) (in interior wiring harness)
B218	Positive connection 6 (30) (in interior wiring harness)
B346	Connection 75 (in main wiring harness) 1
*	Running change
*2	Omitted as a running change
*3	Depending on equipment

ws	=	white
sw	=	black
ro	=	red
rt	=	red
br	=	brown
gn	=	green
bl	=	blue
gr	=	grey
li	=	lilac
vi	=	lilac
ge	=	yellow
or	=	orange
rs	=	pink

Copyright by Volkswagen AG. Copying for private or commercial purposes, in part or in whole, is not permitted unless authorized by Volkswagen AG. Volkswagen does not guarantee or accept any liability with respect to the correctness of information in this document.

Fuel level sensor, Transfer fuel pump, Fuel pump relay, Fuse panel C

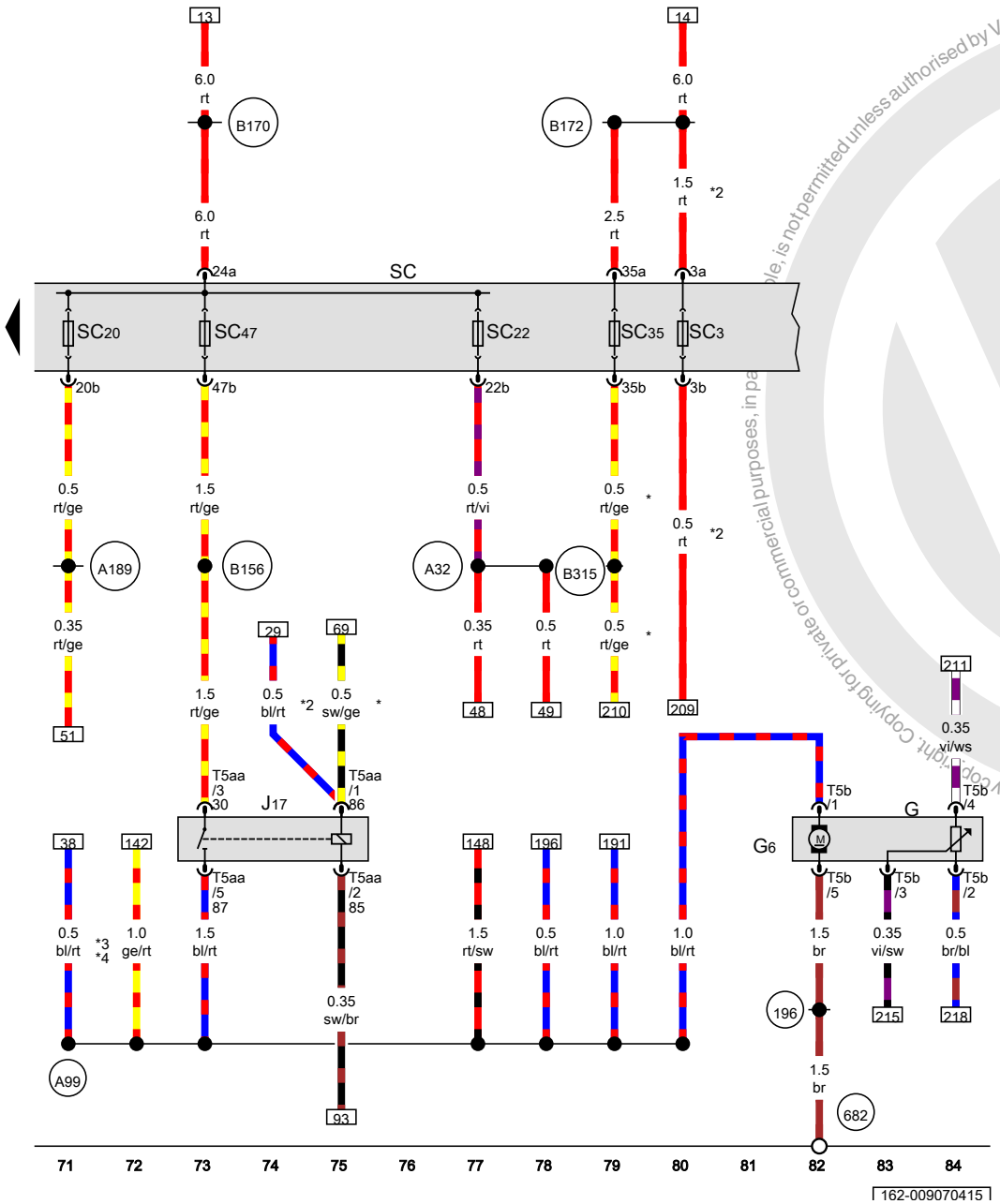

G	Fuel level sensor	
G6	Transfer fuel pump	
J17	Fuel pump relay	
SC	Fuse panel C	
SC3	Fuse 3 (on fuse panel C)	
SC20	Fuse 20 (on fuse panel C)	
SC22	Fuse 22 (on fuse panel C)	
SC35	Fuse 35 (on fuse panel C)	
SC47	Fuse 47 (on fuse panel C)	
T5aa	5-pin connector	
T5b	5-pin connector	
196	Ground connection 3 (in rear wiring harness)	
682	Ground connection 2 in right rear side panel	
A32	Positive connection (30) (in instrument panel wiring harness)	
A99	Connection 87 (in instrument panel wiring harness) 1	
A189	Positive connection 5 (30a) (in instrument panel wiring harness)	
B156	Positive connection (30a) (in interior wiring harness)	
B170	Positive connection 2 (30) (in interior wiring harness)	
B172	Positive connection 4 (30) (in interior wiring harness)	
B315	Positive connection 1 (30a) (in main wiring harness)	
*	Omitted as a running change	
*2	Running change	
*3	Depending on equipment	
*4	USA only	

ws	=	white
sw	=	black
ro	=	red
rt	=	red
br	=	brown
gn	=	green
bl	=	blue
gr	=	grey
li	=	lilac
vi	=	lilac
ge	=	yellow
or	=	orange
rs	=	pink

Protected by copyright. Copying for private or commercial purposes, in part or in whole, is not permitted unless authorised by Volkswagen AG. Volkswagen AG does not guarantee or accept any liability with respect to the correctness of information in this document. Copyright by Volkswagen AG.

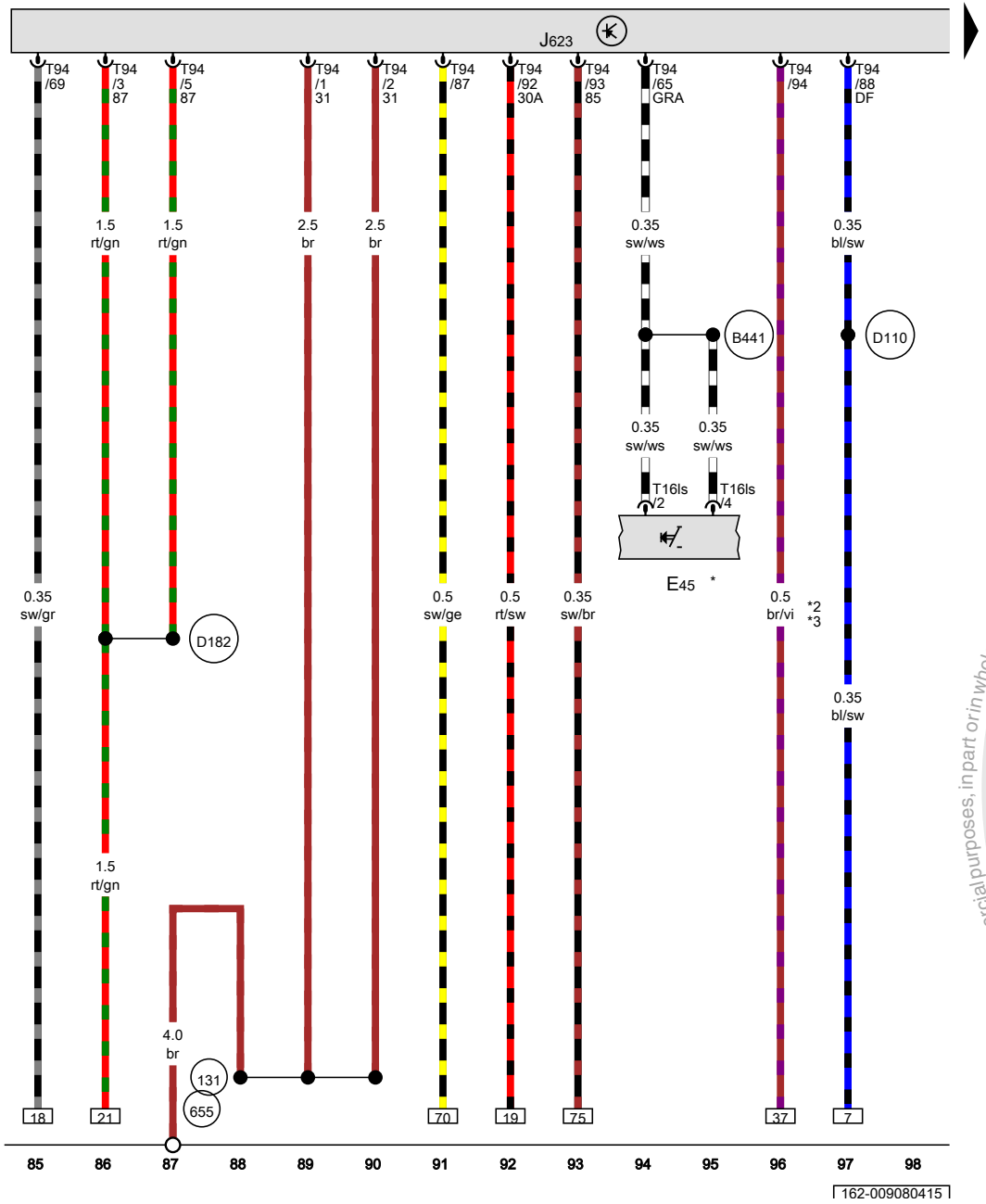

Engine control module

E45	Cruise control switch
J623	Engine control module
T16ls	16-pin connector
T94	94-pin connector
131	Ground connection 2 (in engine compartment wiring harness)
655	Ground connection on left headlamp
B441	Cruise control connection (in main wiring harness)
D110	Connection 8 (in engine compartment wiring harness)
D182	Connection 3 (87a) (in engine compartment wiring harness)
*	Only for vehicles with cruise control
*2	Depending on equipment
*3	USA only

ws	=	white
sw	=	black
ro	=	red
rt	=	red
br	=	brown
gn	=	green
bl	=	blue
gr	=	grey
li	=	lilac
vi	=	lilac
ge	=	yellow
or	=	orange
rs	=	pink

Protected by copyright. Copying for private or commercial purposes, in part or in whole, is not permitted unless authorised by Volkswagen AG. Volkswagen AG does not guarantee or accept any liability with respect to the correctness of information in this document. Copyright by Volkswagen AG.

Engine control module, Ignition coil 1 with power output stage, Ignition coil 2 with power output stage, Ignition coil 3 with power output stage, Ignition coil 4 with power output stage, Spark plug connectors, Spark plugs

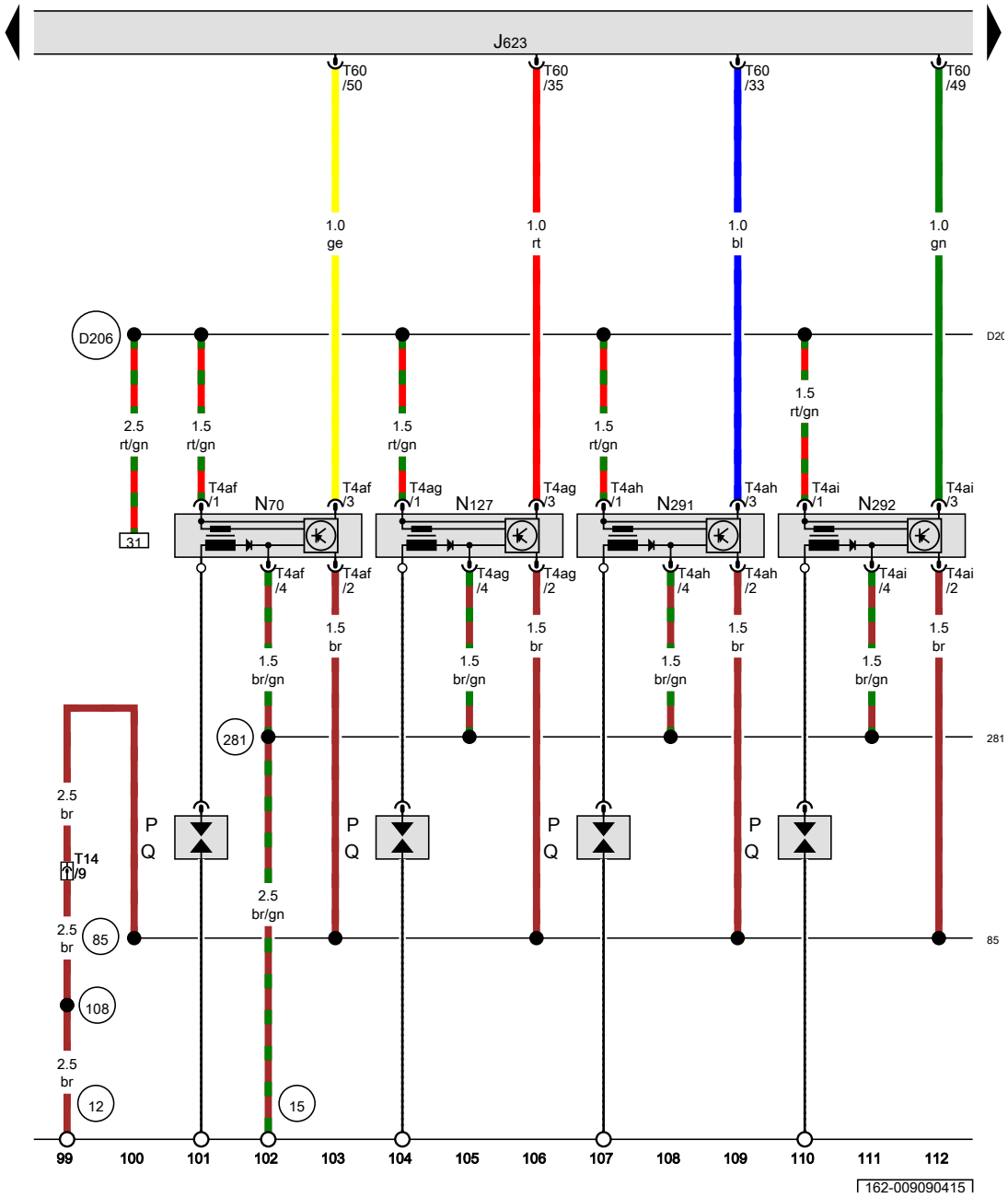

J623	Engine control module
N70	Ignition coil 1 with power output stage
N127	Ignition coil 2 with power output stage
N291	Ignition coil 3 with power output stage
N292	Ignition coil 4 with power output stage
P	Spark plug connectors
Q	Spark plugs
T4af	4-pin connector
T4ag	4-pin connector
T4ah	4-pin connector
T4ai	4-pin connector
T14	14-pin connector, near the battery
T60	60-pin connector
12	Ground connection in engine compartment, left
15	Ground connection on cylinder head
85	Ground connection 1 (in engine compartment wiring harness)
108	Ground connection 2 (in left front wiring harness)
281	Ground connection 1 (in engine pre-wiring harness)
D206	Connection 87a (in engine pre-wiring harness) 4

ws	=	white
sw	=	black
ro	=	red
rt	=	red
br	=	brown
gn	=	green
bl	=	blue
gr	=	grey
li	=	lilac
vi	=	lilac
ge	=	yellow
or	=	orange
rs	=	pink

Protected by copyright. Copying for private or commercial purposes, in part or in whole, is not permitted unless authorised by Volkswagen AG. Volkswagen AG does not guarantee or accept any liability with respect to the correctness of information in this document. Copyright by Volkswagen AG.

Throttle valve control module, Knock sensor 1, Engine coolant temperature sensor, EPC throttle drive, Engine control module, Ignition coil 5 with power output stage, Spark plug connectors

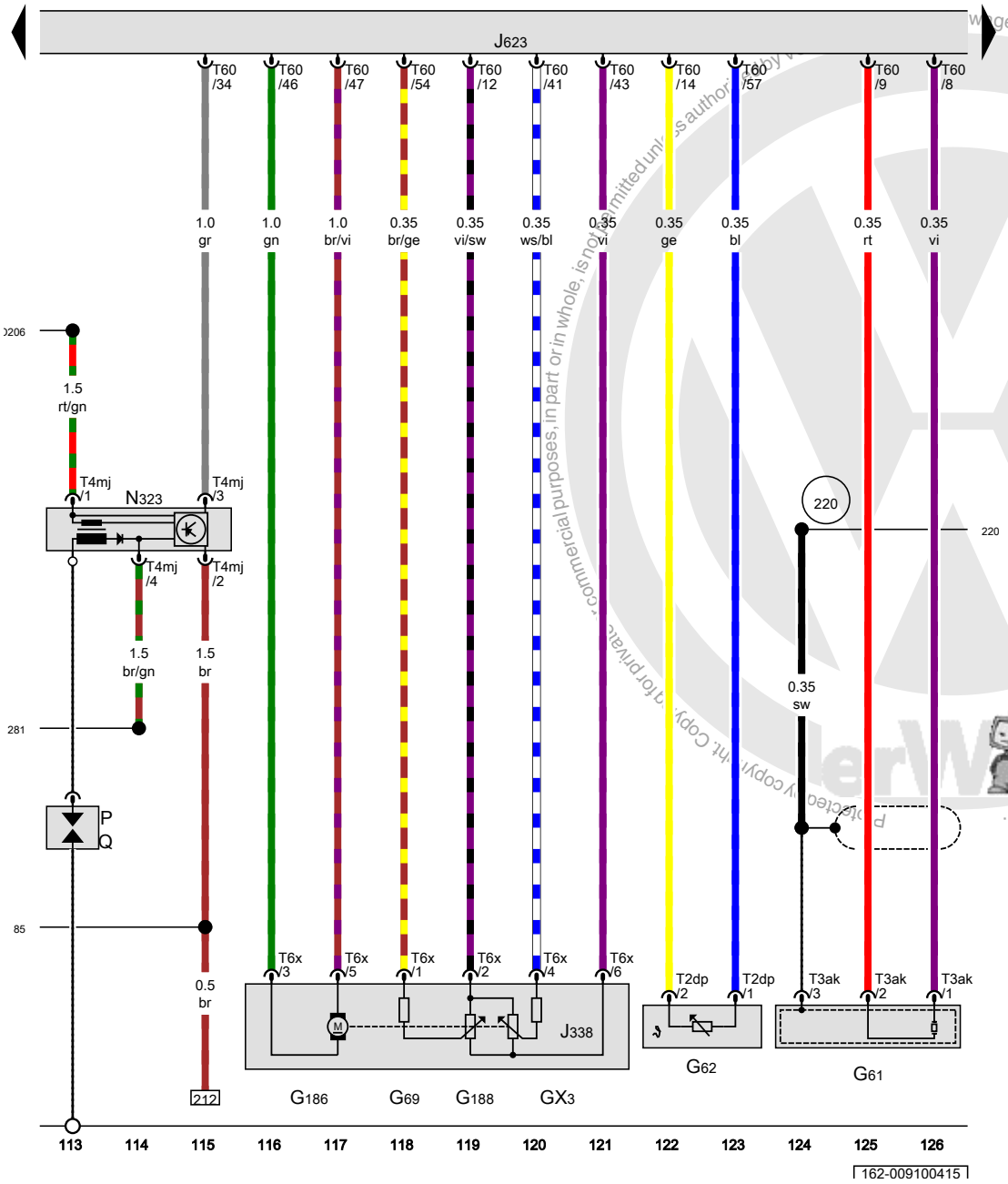

GX3	Throttle valve control module
G61	Knock sensor 1
G62	Engine coolant temperature sensor
G69	Throttle position sensor
G186	EPC throttle drive
G188	EPC throttle drive angle sensor 2
J338	Throttle valve control module
J623	Engine control module
N323	Ignition coil 5 with power output stage
P	Spark plug connectors
Q	Spark plugs
T2dp	Double connector
T3ak	3-pin connector
T4mj	4-pin connector
T6x	6-pin connector
T60	60-pin connector
85	Ground connection 1 (in engine compartment wiring harness)
220	Sensor ground connection (in engine wiring harness)
281	Ground connection 1 (in engine pre-wiring harness)
D206	Connection 87a (in engine pre-wiring harness) 4

ws	=	white
sw	=	black
ro	=	red
rt	=	red
br	=	brown
gn	=	green
bl	=	blue
gr	=	grey
li	=	lilac
vi	=	lilac
ge	=	yellow
or	=	orange
rs	=	pink

Volkswagen AG does not guarantee or accept any liability with respect to the correctness of information in this document. Copyright by Volkswagen AG. Protected by copyright. Copying for private, commercial purposes, in part or in whole, is not permitted unless authorised by Volkswagen AG.

Intake manifold sensor, Engine speed sensor, Camshaft position sensor, Intake air temperature sensor, Knock sensor 2, Engine control module

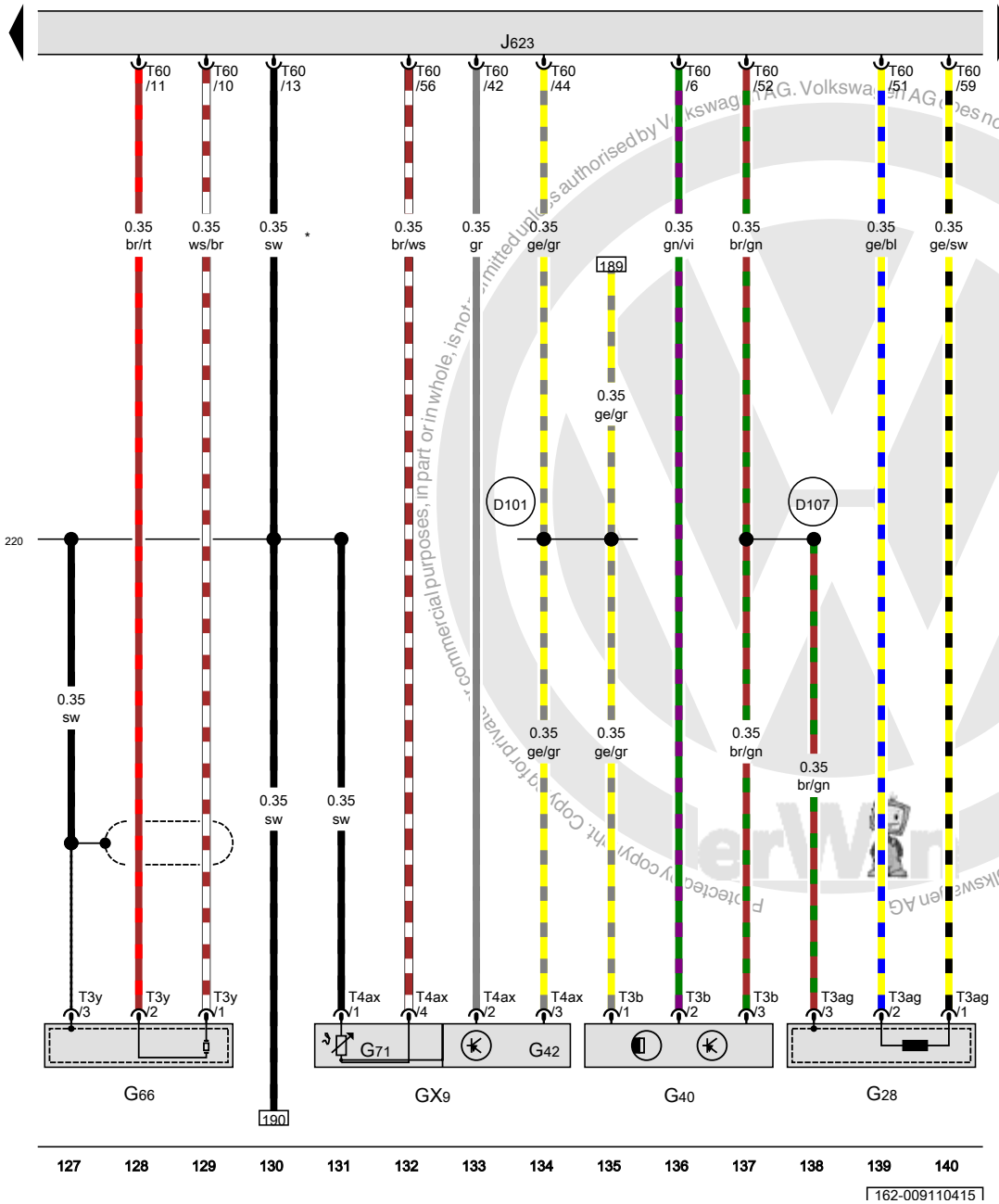

GX9	Intake manifold sensor	
G28	Engine speed sensor	
G40	Camshaft position sensor	
G42	Intake air temperature sensor	
G66	Knock sensor 2	
G71	Manifold absolute pressure sensor	
J623	Engine control module	
T3ag	3-pin connector	
T3b	3-pin connector	
T3y	3-pin connector	
T4ax	4-pin connector	
T60	60-pin connector	
220	Sensor ground connection (in engine wiring harness)	
D101	Connection 1 (in engine compartment wiring harness)	
D107	Connection 5 (in engine compartment wiring harness)	
*	USA only	

ws	=	white
sw	=	black
ro	=	red
rt	=	red
br	=	brown
gn	=	green
bl	=	blue
gr	=	grey
li	=	lilac
vi	=	lilac
ge	=	yellow
or	=	orange
rs	=	pink

Protected by copyright. Copy for private, commercial purposes, in part or in whole, is not permitted unless authorised by Volkswagen AG. Volkswagen AG does not guarantee or accept any liability with respect to the correctness of information in this document. Copyright by Volkswagen AG.

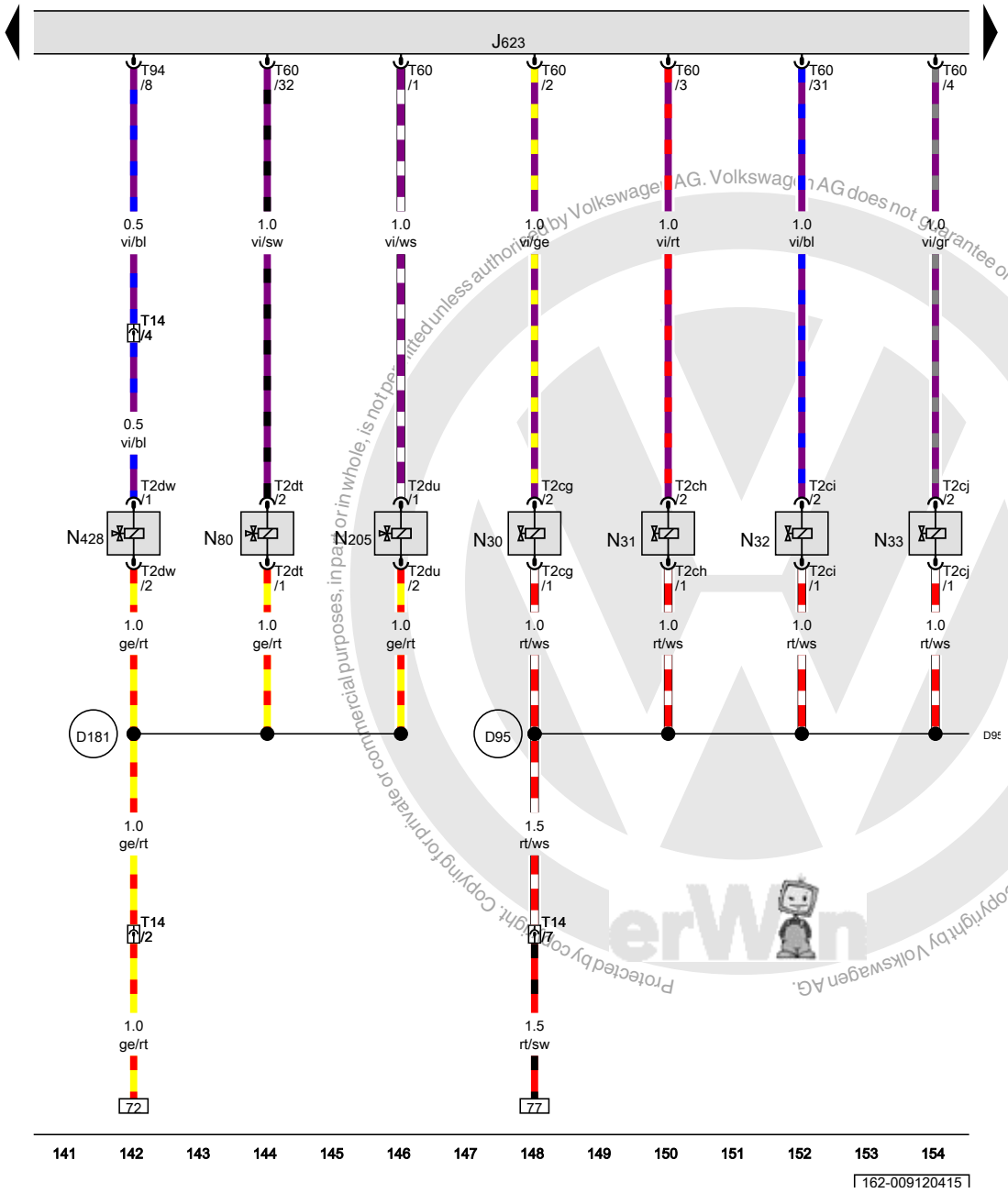

Engine control module, Cylinder 1 fuel injector, Cylinder 2 fuel injector, Cylinder 3 fuel injector, Cylinder 4 fuel injector, EVAP canister purge regulator valve 1, Camshaft adjustment valve 1

J623	Engine control module
N30	Cylinder 1 fuel injector
N31	Cylinder 2 fuel injector
N32	Cylinder 3 fuel injector
N33	Cylinder 4 fuel injector
N80	EVAP canister purge regulator valve 1
N205	Camshaft adjustment valve 1
N428	Oil pressure regulation valve
T2cg	Double connector
T2ch	Double connector
T2ci	Double connector
T2cj	Double connector
T2dt	Double connector
T2du	Double connector
T2dw	Double connector
T14	14-pin connector, near the battery
T60	60-pin connector
T94	94-pin connector
D95	Injector connection (in engine compartment wiring harness)
D181	Connection 2 (87a) (in engine compartment wiring harness)
*	Only for vehicles with flexible service interval reminder

ws	=	white
sw	=	black
ro	=	red
rt	=	red
br	=	brown
gn	=	green
bl	=	blue
gr	=	grey
li	=	lilac
vi	=	lilac
ge	=	yellow
or	=	orange
rs	=	pink

Protected by copyright. Copying for private or commercial purposes, in part or in whole, is not permitted unless authorised by Volkswagen AG. Volkswagen AG does not guarantee or accept any liability with respect to the correctness of information in this document. Copyright by Volkswagen AG.

Accelerator pedal module, Heated oxygen sensor, Accelerator pedal position sensor 2, Engine control module, Cylinder 5 fuel injector, Oxygen sensor heater

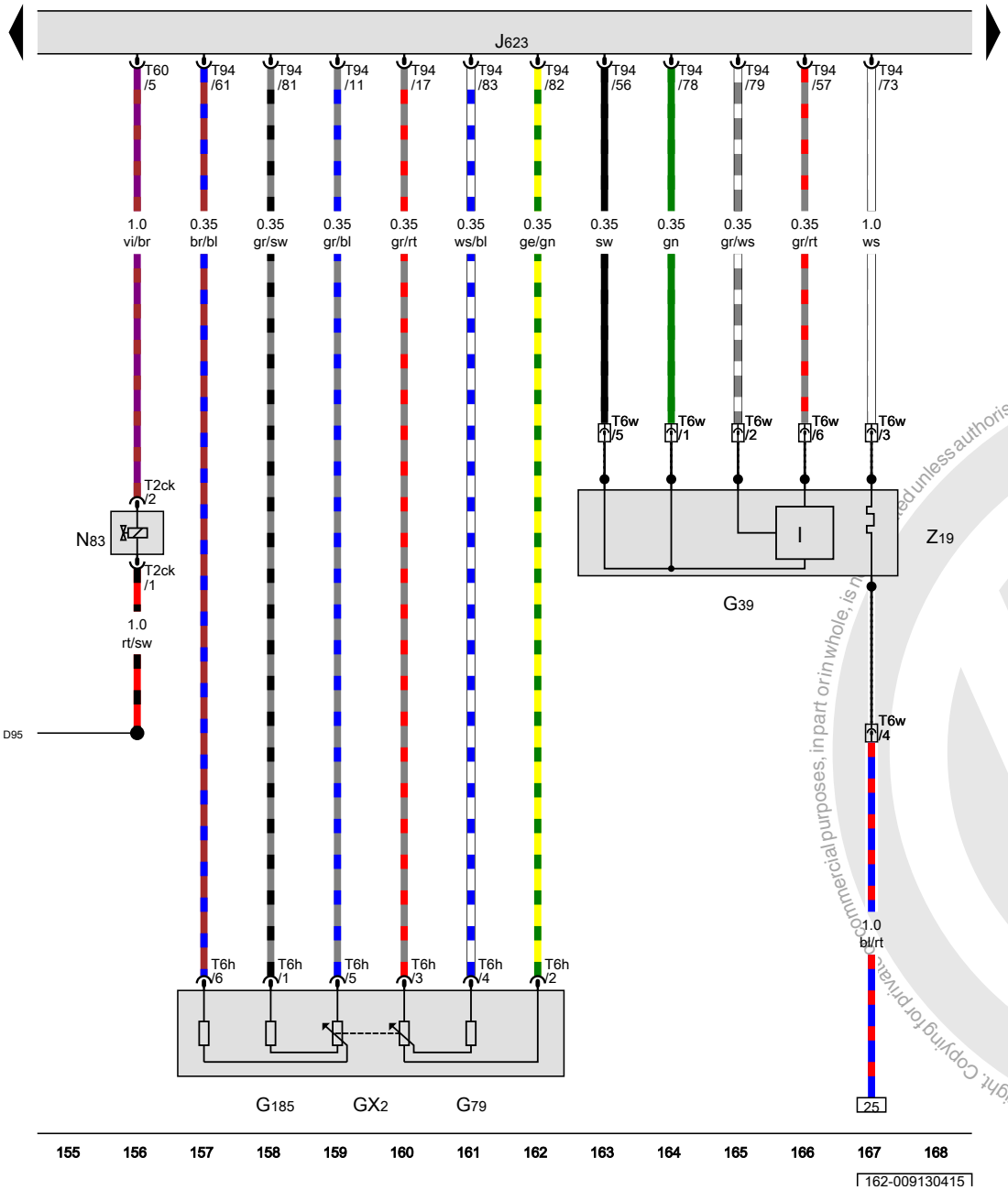

GX2	Accelerator pedal module
G39	Heated oxygen sensor
G79	Accelerator pedal position sensor
G185	Accelerator pedal position sensor 2
J623	Engine control module
N83	Cylinder 5 fuel injector
T2ck	Double connector
T6h	6-pin connector
T6w	6-pin connector
T60	60-pin connector
T94	94-pin connector
Z19	Oxygen sensor heater
D95	Injector connection (in engine compartment wiring harness)

ws	=	white
sw	=	black
ro	=	red
rt	=	red
br	=	brown
gn	=	green
bl	=	blue
gr	=	grey
li	=	lilac
vi	=	lilac
ge	=	yellow
or	=	orange
rs	=	pink

Copyright by Volkswagen AG. Volkswagen does not guarantee or accept any liability with respect to the correctness of information in this document. Copying for private or commercial purposes, in part or in whole, is not permitted unless authorised by Volkswagen AG.

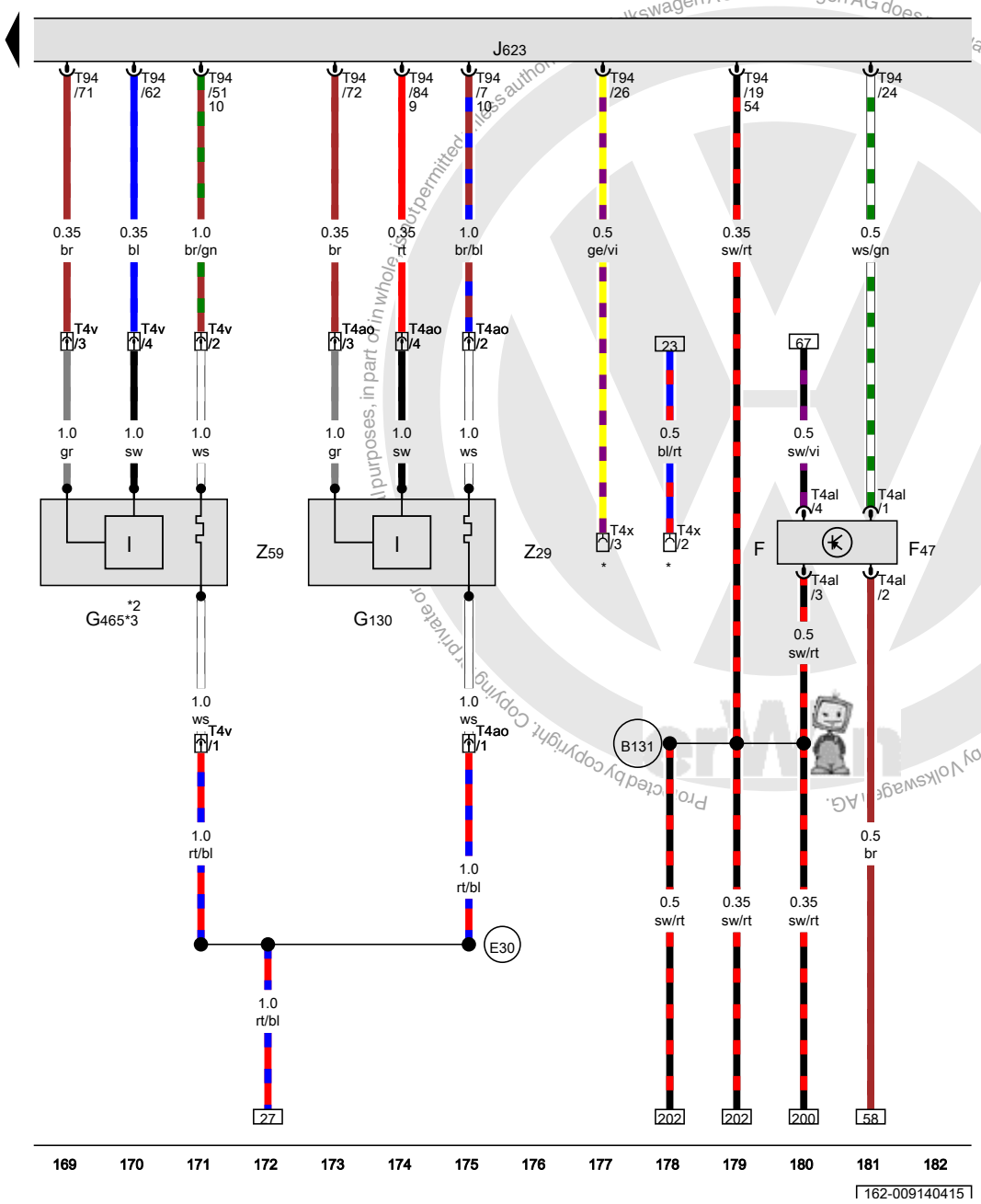

Brake lamp switch, Brake pedal switch, Oxygen sensor after three way catalytic converter, Oxygen sensor in bank 1 center three way catalytic converter, Engine control module, Heater for oxygen sensor 1 after catalytic converter, Heater for oxygen sensor center catalytic converter

F	Brake lamp switch
F47	Brake pedal switch
G130	Oxygen sensor after three way catalytic converter
G465	Oxygen sensor in bank 1 center three way catalytic converter
J623	Engine control module
T4al	4-pin connector
T4ao	4-pin connector
T4v	4-pin connector
T4x	4-pin connector
T94	94-pin connector
Z29	Heater for oxygen sensor 1 after catalytic converter
Z59	Heater for oxygen sensor center catalytic converter
B131	Connection 54 (in interior wiring harness)
E30	Connection 87a (in engine wiring harness)
*	Coolant fan connection
*2	Depending on equipment
*3	USA only

ws	=	white
sw	=	black
ro	=	red
rt	=	red
br	=	brown
gn	=	green
bl	=	blue
gr	=	grey
li	=	lilac
vi	=	lilac
ge	=	yellow
or	=	orange
rs	=	pink

Volkswagen AG. Volkswagen AG does not give a guarantee or accept any liability with respect to the correctness of information in this document. Copyright by Volkswagen AG. Protected by copyright. Copying for private or commercial purposes, in part or in whole, is not permitted unless authorised by Volkswagen AG.

Reduced oil pressure switch, Engine coolant temperature sensor on radiator outlet, Clutch position sensor, Secondary air injection sensor 1, Engine control module, Secondary air injection solenoid valve, Leak detection pump

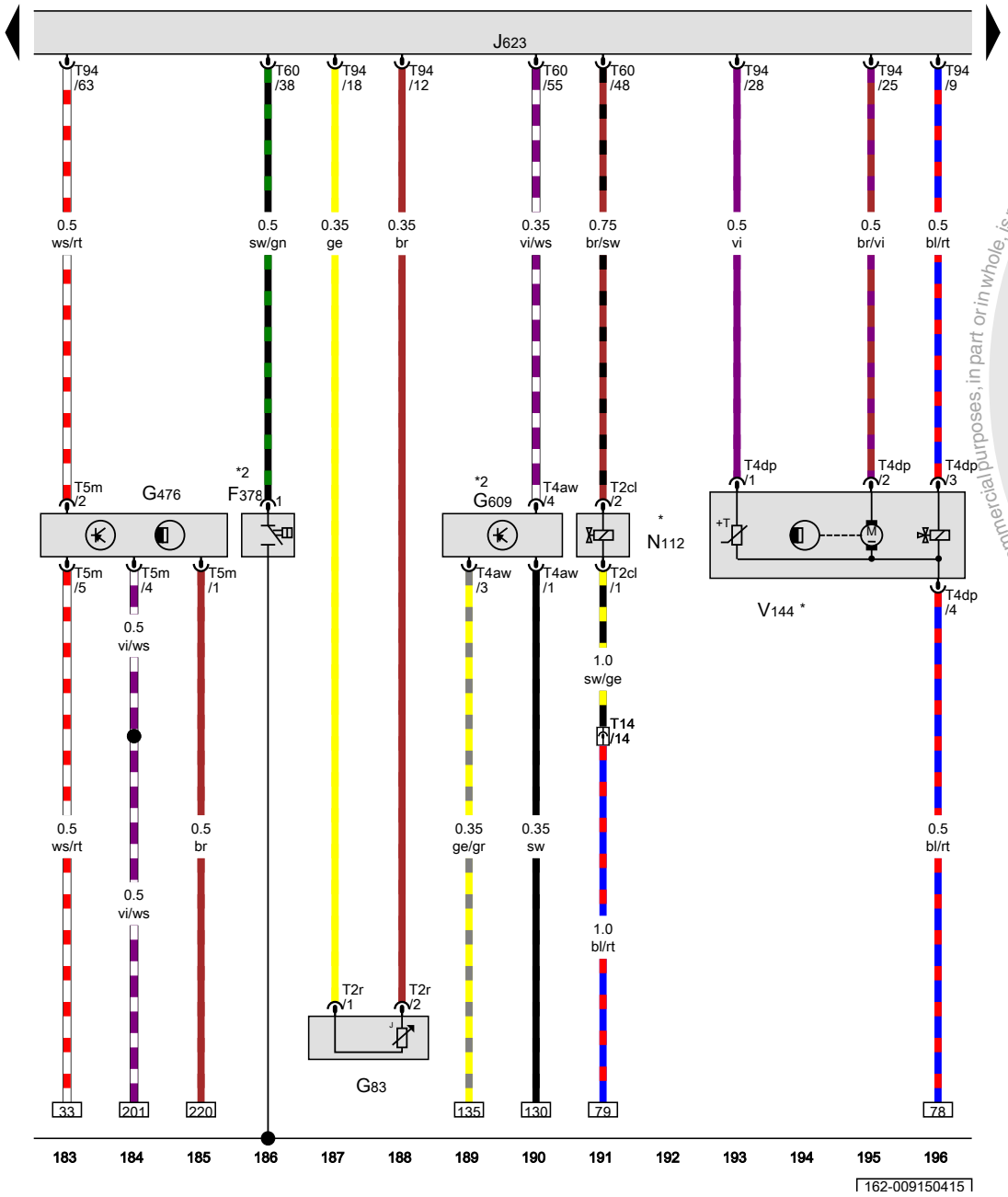

F378	Reduced oil pressure switch
G83	Engine coolant temperature sensor on radiator outlet
G476	Clutch position sensor
G609	Secondary air injection sensor 1
J623	Engine control module
N112	Secondary air injection solenoid valve
T2cl	Double connector
T2r	Double connector
T4aw	4-pin connector
T4dp	4-pin connector
T5m	5-pin connector
T14	14-pin connector
T60	60-pin connector
T94	94-pin connector
V144	Leak detection pump
*	USA only
*2	Depending on equipment

ws	=	white
sw	=	black
ro	=	red
rt	=	red
br	=	brown
gn	=	green
bl	=	blue
gr	=	grey
li	=	lilac
vi	=	lilac
ge	=	yellow
or	=	orange
rs	=	pink

Protected by copyright. Copying for private or commercial purposes, in part or in whole, is not permitted unless authorised by Volkswagen AG. Volkswagen does not give any warranty or accept any liability with respect to the correctness of information in this document. Copyright by Volkswagen AG.

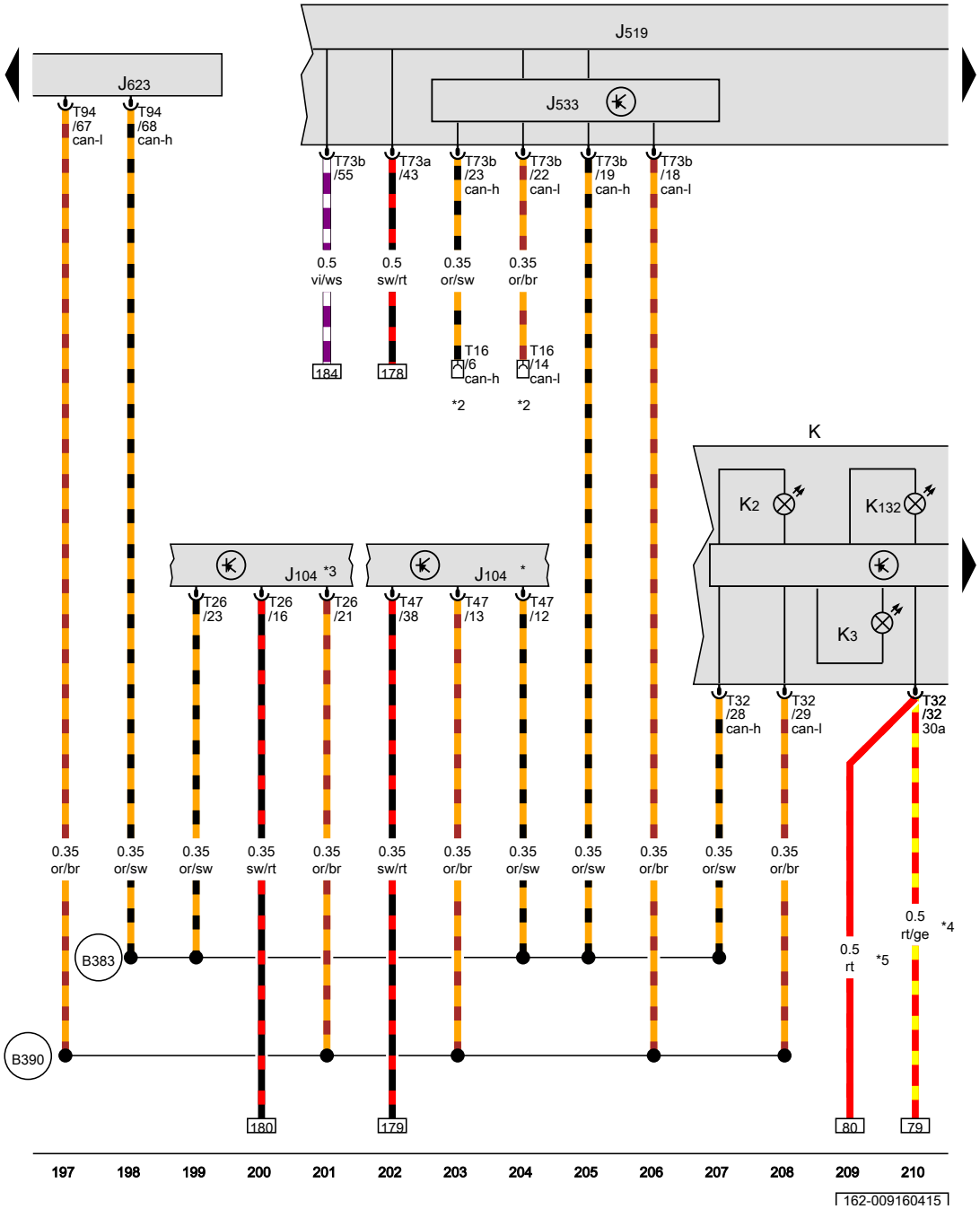

Vehicle electrical control module system, Data bus on board diagnostic interface, Engine control module, Generator indicator lamp, Electronic power control malfunction indicator lamp

J104	ABS control module
J519	Vehicle electrical control module system
J533	Data bus on board diagnostic interface
J623	Engine control module
K	Instrument cluster
K2	Generator indicator lamp
K3	Oil pressure indicator lamp
K132	Electronic power control malfunction indicator lamp
T16	16-pin connector
T26	26-pin connector
T32	32-pin connector
T47	47-pin connector
T73a	73-pin connector
T73b	73-pin connector
T94	94-pin connector
B383	Powertrain CAN bus high connection 1 (in main wiring harness)
B390	Powertrain CAN bus low connection 1 (in main wiring harness)
*	Only for vehicles with ABS and ESP
*2	Diagnostic connector
*3	Only for vehicles with ABS without ESP
*4	Omitted as a running change
*5	Running change

ws	=	white
sw	=	black
ro	=	red
rt	=	red
br	=	brown
gn	=	green
bl	=	blue
gr	=	grey
li	=	lilac
vi	=	lilac
ge	=	yellow
or	=	orange
rs	=	pink

Protected by copyright. Copying for private or commercial purposes, in part or in whole, is not permitted unless authorised. Volkswagen AG does not guarantee or accept any liability with respect to the correctness of information in this document. Copyright by Volkswagen AG.

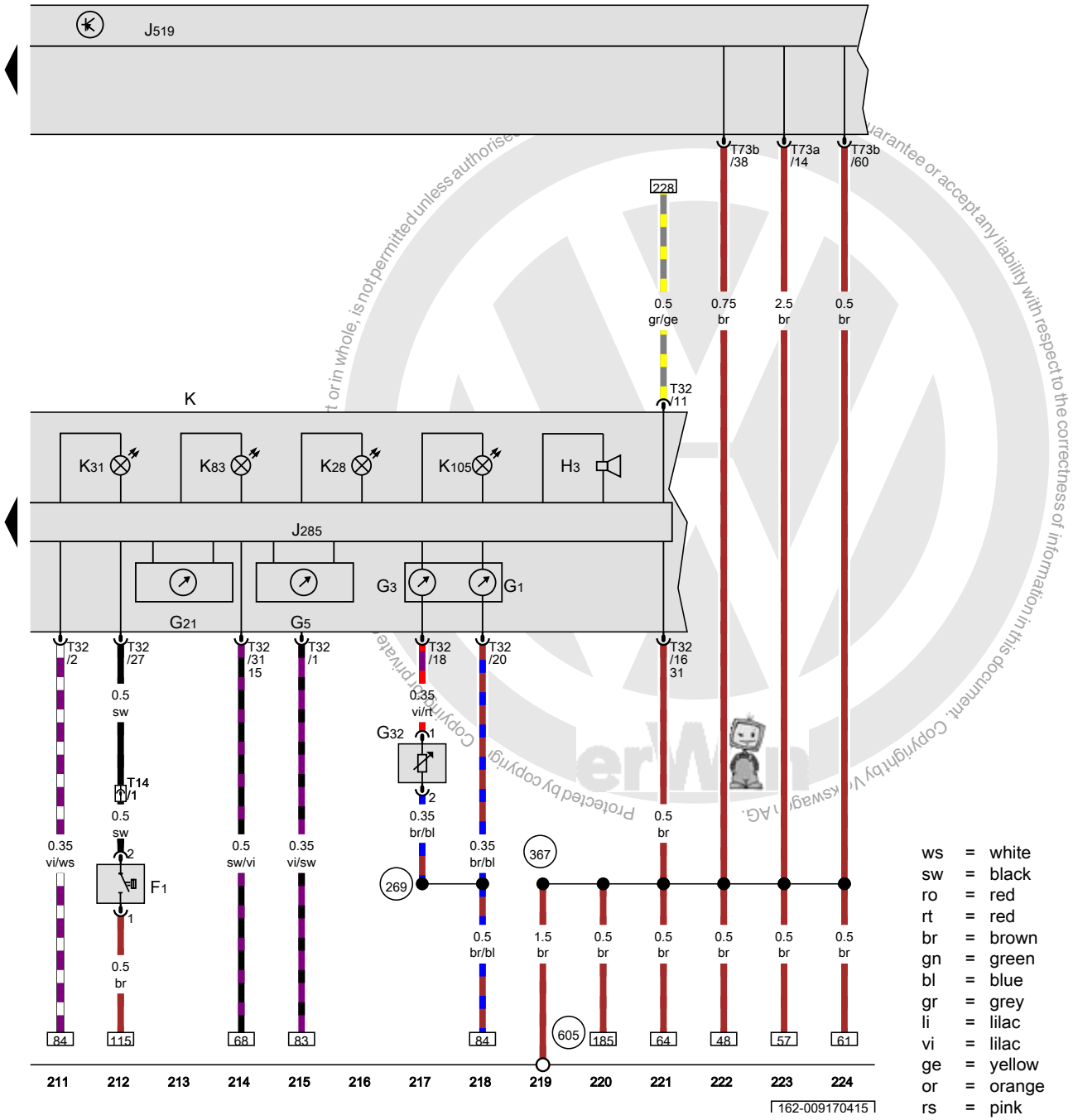

Oil pressure switch, Fuel gauge, Engine coolant temperature gauge, Tachometer, Speedometer, Instrument cluster control module, Vehicle electrical control module system, Engine coolant level/temperature indicator lamp, Cruise control indicator lamp, Low fuel level indicator lamp

F1	Oil pressure switch
G1	Fuel gauge
G3	Engine coolant temperature gauge
G5	Tachometer
G21	Speedometer
G32	Engine coolant level sensor
H3	Warning buzzer and tone
J285	Instrument cluster control module
J519	Vehicle electrical control module system
K	Instrument cluster
K28	Engine coolant level/temperature indicator lamp
K31	Cruise control indicator lamp
K83	Malfunction indicator lamp
K105	Low fuel level indicator lamp
T14	14-pin connector
T32	32-pin connector
T73a	73-pin connector
T73b	73-pin connector
269	Sensor ground connection 1 (in instrument panel wiring harness)
367	Ground connection 2 (in main wiring harness)
605	Ground connection on upper steering column

ws	=	white
sw	=	black
ro	=	red
rt	=	red
br	=	brown
gn	=	green
bl	=	blue
gr	=	grey
li = lilac
vi = lilac
ge = yellow
or = orange
rs = pink

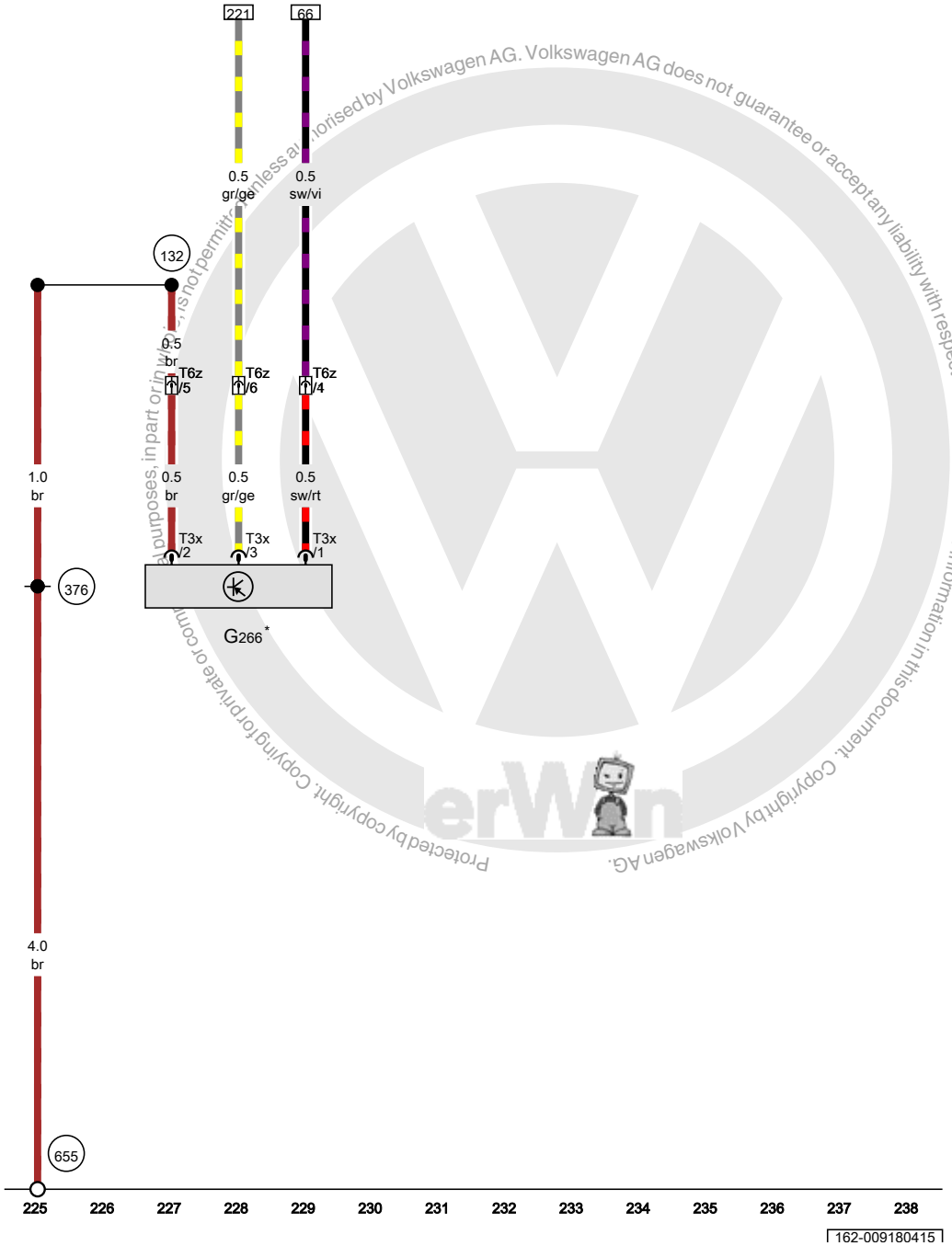

Protected by copyright. Copying for private or commercial purposes, in part or in whole, is not permitted unless authorised by Volkswagen AG. Volkswagen AG does not guarantee or accept any liability with respect to the correctness of information in this document. Copyright by Volkswagen AG.

Oil level thermal sensor

G266	Oil level thermal sensor
T3x	3-pin connector
T6z	6-pin connector, near the left headlamp
132	Ground connection 3 (in engine compartment wiring harness)
376	Ground connection 11 (in main wiring harness)
655	Ground connection on left headlamp
*	Only for vehicles with flexible service interval reminder

ws	=	white
sw	=	black
ro	=	red
rt	=	red
br	=	brown
gn	=	green
bl	=	blue
gr	=	grey
li	=	lilac
vi	=	lilac
ge	=	yellow
or	=	orange
rs	=	pink

2.0L diesel engine , CJAA,(AW0)

from April 2010

Protected by copyright. Copying for private or commercial purposes, in part or in whole, is not permitted unless authorised by Volkswagen AG. Volkswagen AG does not guarantee or accept any liability with respect to the correctness of information in this document. Copyright by Volkswagen AG.

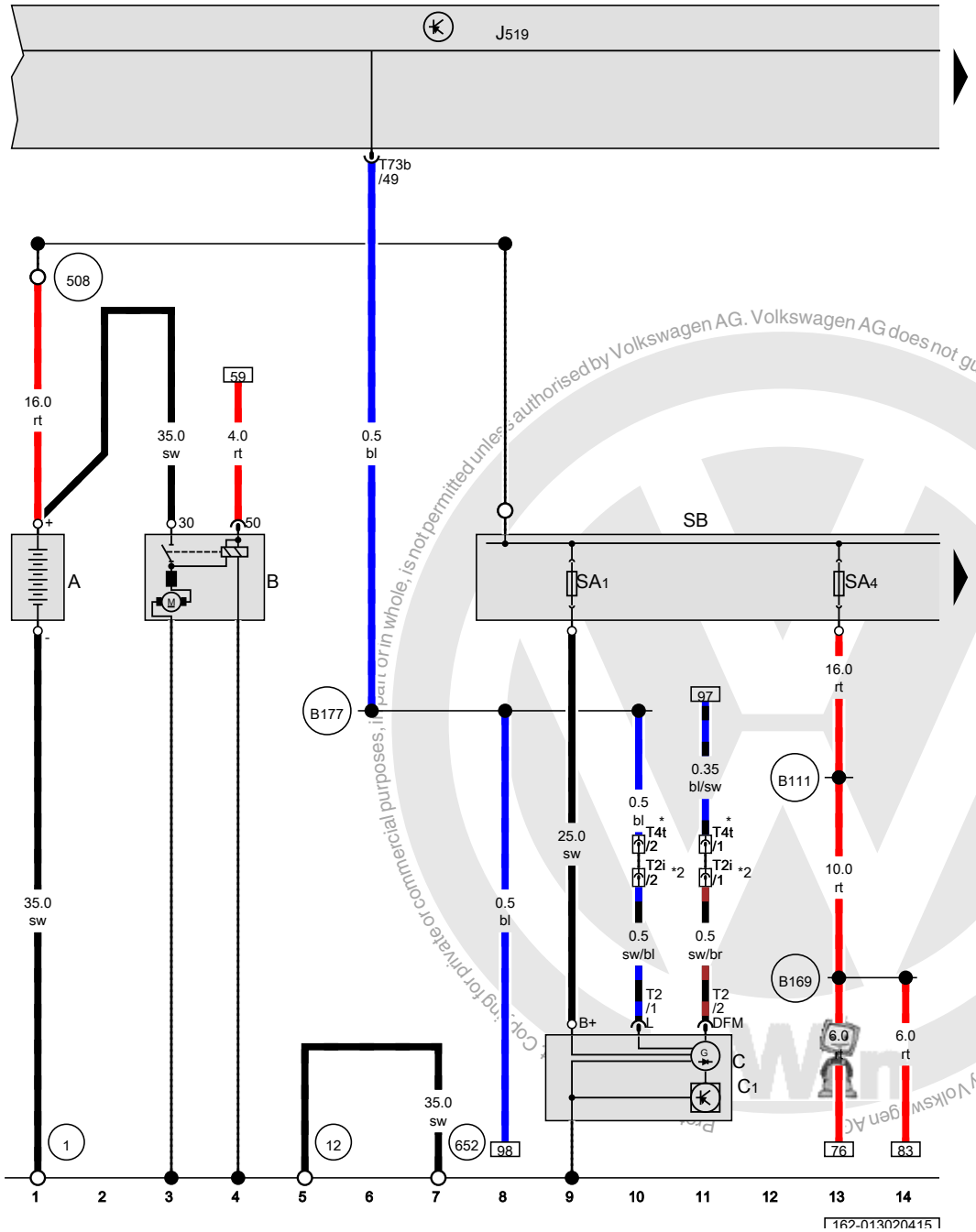

Battery, Starter, Generator, Vehicle electrical control module system, Fuse panel B

A	Battery
B	Starter
C	Generator
C1	Voltage regulator
J519	Vehicle electrical control module system
SA1	Fuse 1 (on fuse panel A)
SA4	Fuse 4 (on fuse panel A)
SB	Fuse panel B
T2	Double connector
T2i	Double connector, near the starter
T4t	4-pin connector, near the starter
T73b	73-pin connector
1	Ground strap, battery to body
12	Ground connection in engine compartment, left
508	Terminal 30 threaded connection (on E-box)
652	Transmission/engine ground connection
B111	Positive connection 1 (30a) (in interior wiring harness)
B169	Positive connection 1 (30) (in interior wiring harness)
B177	Connection 61 (in interior wiring harness)
*	Only for vehicles with A/C system
*2	Only for vehicles without an A/C system

ws	=	white
sw	=	black
ro	=	red
rt	=	red
br	=	brown
gn	=	green
bl	=	blue
gr	=	grey
li	=	lilac
vi	=	lilac
ge	=	yellow
or	=	orange
rs	=	pink

Copyright by Volkswagen AG. Volkswagen AG does not guarantee or accept any liability with respect to the correctness of information in this document. Copying for private or commercial purposes, in part or in whole, is not permitted unless authorised by Volkswagen AG.

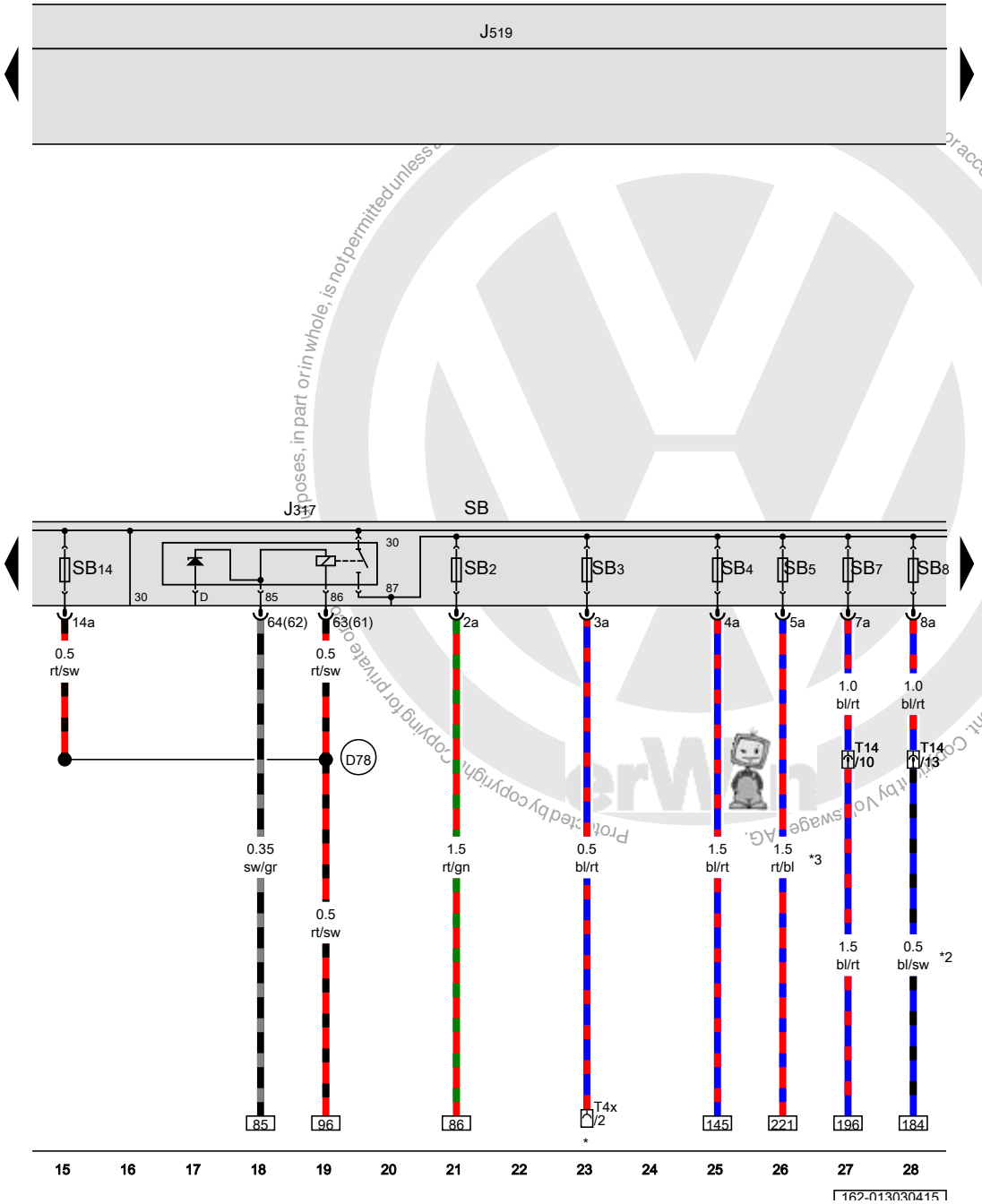

Terminal 30 power supply relay, Vehicle electrical control module system, Fuse panel B, Fuse 14 (on fuse panel B)

J317	Terminal 30 power supply relay
J519	Vehicle electrical control module system
SB	Fuse panel B
SB2	Fuse 2 (on fuse panel B)
SB3	Fuse 3 (on fuse panel B)
SB4	Fuse 4 (on fuse panel B)
SB5	Fuse 5 (on fuse panel B)
SB7	Fuse 7 (on fuse panel B)
SB8	Fuse 8 (on fuse panel B)
SB14	Fuse 14 (on fuse panel B)
T4x	4-pin connector
T14	14-pin connector, near the battery
D78	Positive connection 1 (30a) (in engine compartment wiring harness)
*	Coolant fan connection
*2	Omitted as a running change
*3	The color of the wires depends on vehicle equipment

ws	=	white
sw	=	black
ro	=	red
rt	=	red
br	=	brown
gn	=	green
bl	=	blue
gr	=	grey
li	=	lilac
vi	=	lilac
ge	=	yellow
or	=	orange
rs	=	pink

Protected by copyright. Copying for private or commercial purposes, in part or in whole, is not permitted unless authorized by Volkswagen AG. Volkswagen AG does not guarantee or accept any liability with respect to the correctness of information in this document.

Low heat output relay, High heat output relay, Vehicle electrical control module system, Fuse panel B

J359	Low heat output relay
J360	High heat output relay
J519	Vehicle electrical control module system
SB	Fuse panel B
SB6	Fuse 6 (on fuse panel B)
SB9	Fuse 9 (on fuse panel B)
SB10	Fuse 10 (on fuse panel B)
SB25	Fuse 25 (on fuse panel B)
SB26	Fuse 26 (on fuse panel B)
D183	Connection 4 (87a) (in engine compartment wiring harness)
D197	Connection 5 (87a) (in engine compartment wiring harness)
*	only for vehicles with auxiliary heater
*2	Refer to applicable wiring diagram
*3	Omitted as a running change
*4	The color of the wires depends on vehicle equipment
*5	Running change

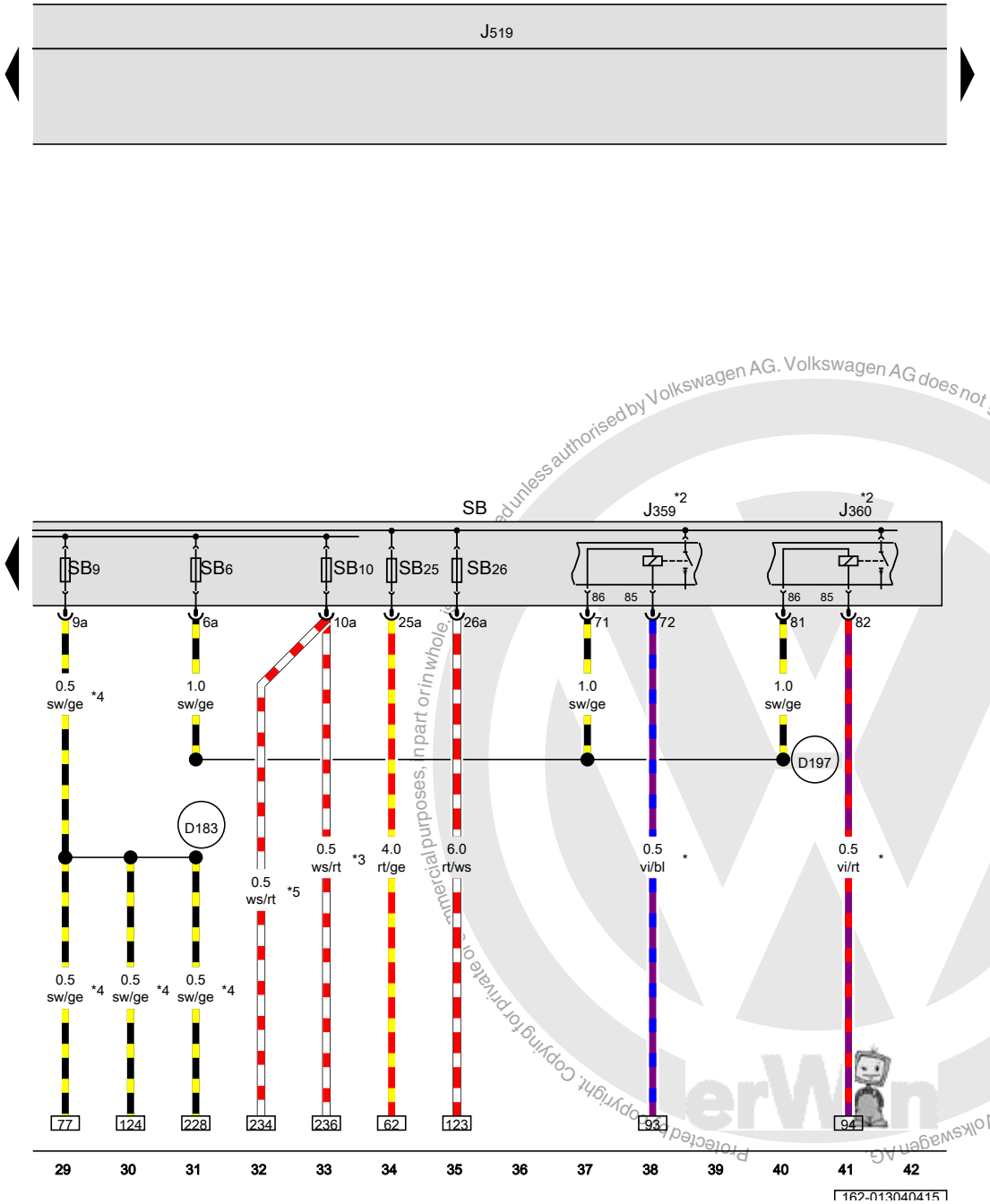

ws	=	white
sw	=	black
ro	=	red
rt	=	red
br	=	brown
gn	=	green
bl	=	blue
gr	=	grey
li	=	lilac
vi	=	lilac
ge	=	yellow
or	=	orange
rs	=	pink

Protected by copyright. Copying for private or commercial purposes, in part or in whole, is not permitted unless authorised by Volkswagen AG. Volkswagen AG does not guarantee or accept any liability with respect to the correctness of information in this document. Copyright by Volkswagen AG.

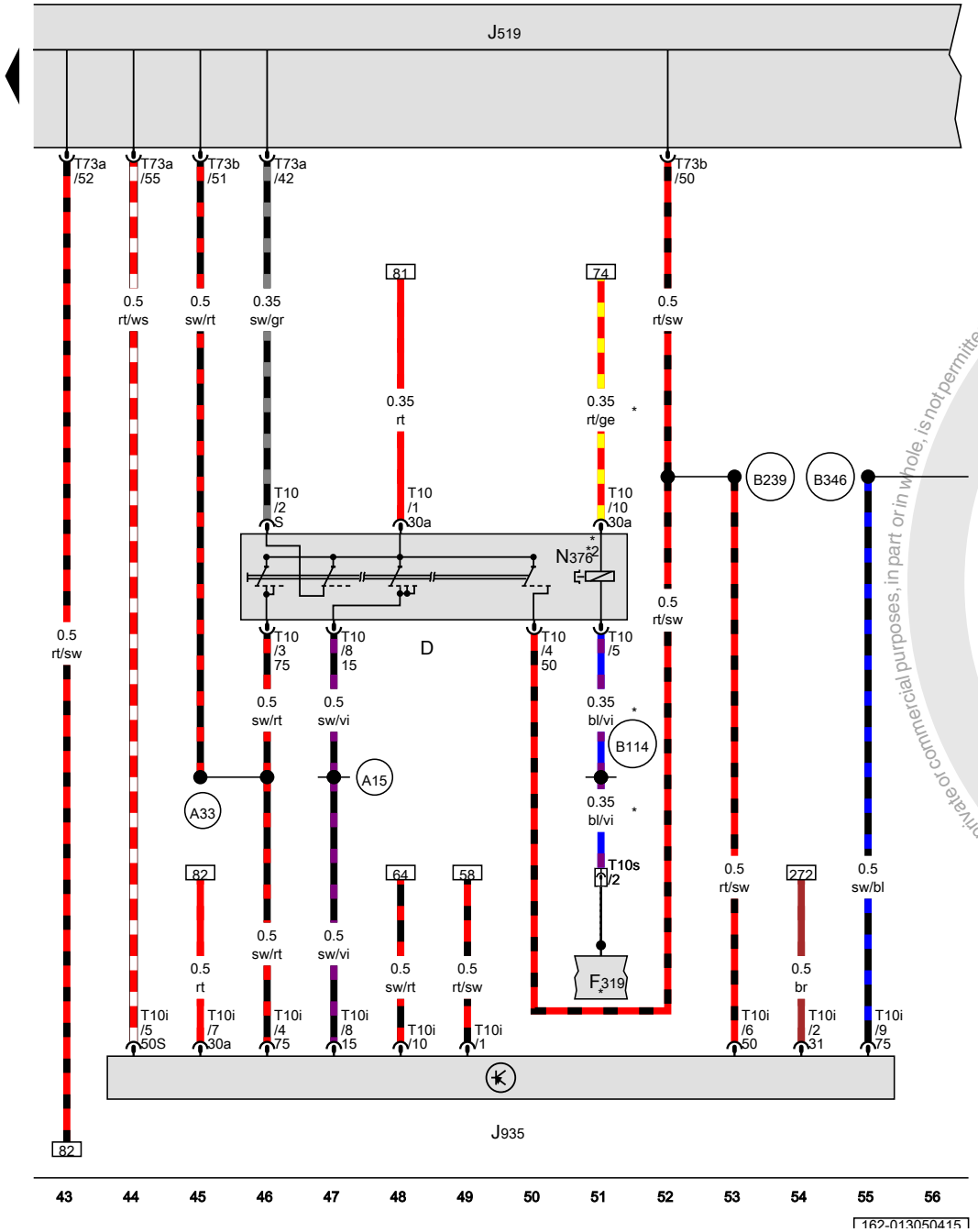

Ignition/starter switch, Vehicle electrical control module system, Converter box

D	Ignition/starter switch
F319	Selector lever park position lock switch
J519	Vehicle electrical control module system
J935	Converter box
N376	Ignition switch key lock solenoid
T10	10-pin connector
T10i	10-pin connector
T10s	10-pin connector
T73a	73-pin connector
T73b	73-pin connector
A15	Plus connection (15) (in instrument cluster wiring harness)
A33	Connection 75 (in instrument panel wiring harness)
B114	Lock switch connection (in interior wiring harness)
B239	Positive connection 1 (50) (in interior wiring harness)
B346	Connection 75 (in main wiring harness) 1
*	Only for vehicles with automatic transmission
*2	Only for vehicles with DSG transmission

ws	=	white
sw	=	black
ro	=	red
rt	=	red
br	=	brown
gn	=	green
bl	=	blue
gr	=	grey
li	=	lilac
vi	=	lilac
ge	=	yellow
or	=	orange
rs	=	pink

Protected by copyright. Copying for private or commercial purposes, in part or in whole, is not permitted unless authorised by Volkswagen AG. Volkswagen AG does not guarantee or accept any liability with respect to the correctness of information in this document. Copyright by Volkswagen AG.

Terminal 15 power supply relay, Terminal 15 power supply relay 2, Terminal 50 power supply relay, Fuse panel C

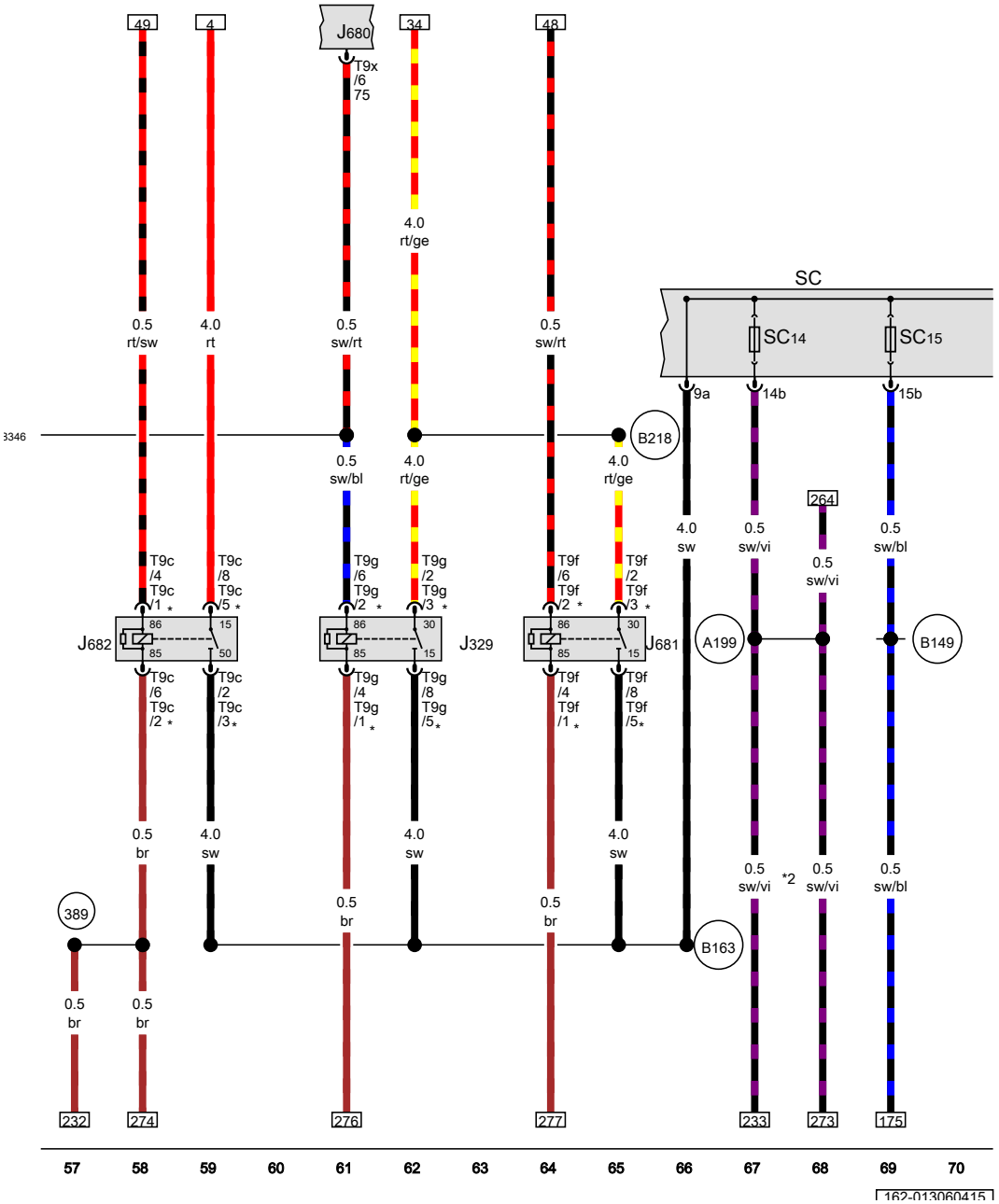

J329	Terminal 15 power supply relay
J680	Terminal 75 power supply relay 1
J681	Terminal 15 power supply relay 2
J682	Terminal 50 power supply relay
SC	Fuse panel C
SC14	Fuse 14 (on fuse panel C)
SC15	Fuse 15 (on fuse panel C)
T9c	9-pin connector
T9f	9-pin connector
T9g	9-pin connector
T9x	9-pin connector
389	Ground connection 24 (in main wiring harness)
A199	Positive connection 4 (15a) (in instrument panel wiring harness)
B149	Positive connection 2 (15a) (in interior wiring harness)
B163	Positive connection 1 (15) (in interior wiring harness)
B218	Positive connection 6 (30) (in interior wiring harness)
B346	Connection 75 (in main wiring harness) 1
*	Running change
*2	Omitted as a running change

ws	=	white
sw	=	black
ro	=	red
rt	=	red
br	=	brown
gn	=	green
bl	=	blue
gr	=	grey
li	=	lilac
vi	=	lilac
ge	=	yellow
or	=	orange
rs	=	pink

Volkswagen AG. Volkswagen AG does not guarantee or accept any liability with respect to the correctness of information in this document. Copyright by Volkswagen AG. Copyright, copying for private or commercial purposes, in part or in whole, is not permitted unless authorised by Volkswagen AG.

Fuel level sensor, Transfer fuel pump, Fuel pump relay, Fuel primer relay, Fuse panel C

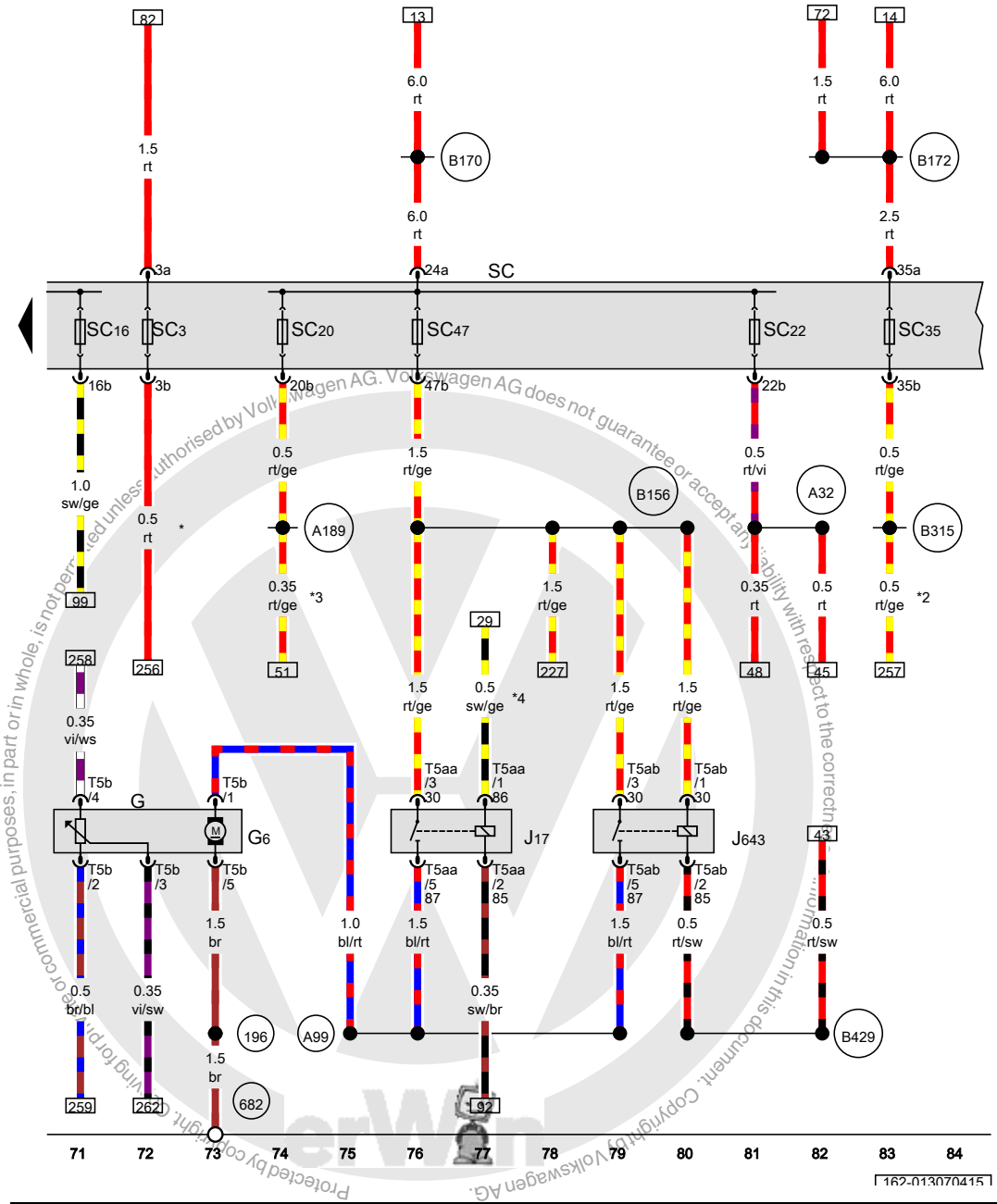

G	Fuel level sensor	
G6	Transfer fuel pump	
J17	Fuel pump relay	
J643	Fuel primer relay	
SC	Fuse panel C	
SC3	Fuse 3 (on fuse panel C)	
SC16	Fuse 16 (on fuse panel C)	
SC20	Fuse 20 (on fuse panel C)	
SC22	Fuse 22 (on fuse panel C)	
SC35	Fuse 35 (on fuse panel C)	
SC47	Fuse 47 (on fuse panel C)	
T5aa	5-pin connector	
T5ab	5-pin connector	
T5b	5-pin connector	
196	Ground connection 3 (in rear wiring harness)	
682	Ground connection 2 in right rear side panel	
A32	Positive connection (30) (in instrument panel wiring harness)	
A99	Connection 87 (in instrument panel wiring harness) 1	
A189	Positive connection 5 (30a) (in instrument panel wiring harness)	
B156	Positive connection (30a) (in interior wiring harness)	
B170	Positive connection 2 (30) (in interior wiring harness)	
B172	Positive connection 4 (30) (in interior wiring harness)	
B315	Positive connection 1 (30a) (in main wiring harness)	
B429	Fuel pump relay connection (in main wiring harness)	
*	Running change	
*2	Omitted as a running change	
*3	Only for vehicles with automatic transmission	
*4	The color of the wires depends on vehicle equipment	

ws	=	white
sw	=	black
ro	=	red
rt	=	red
br	=	brown
gn	=	green
bl	=	blue
gr	=	grey
li	=	lilac
vi	=	lilac
ge	=	yellow
or	=	orange
rs	=	pink

Protected by copyright. Copying for commercial purposes, in part or in whole, is not permitted unless authorised by Volkswagen AG. Volkswagen AG does not guarantee or accept any liability with respect to the correctness of information in this document. Copyright by Volkswagen AG.

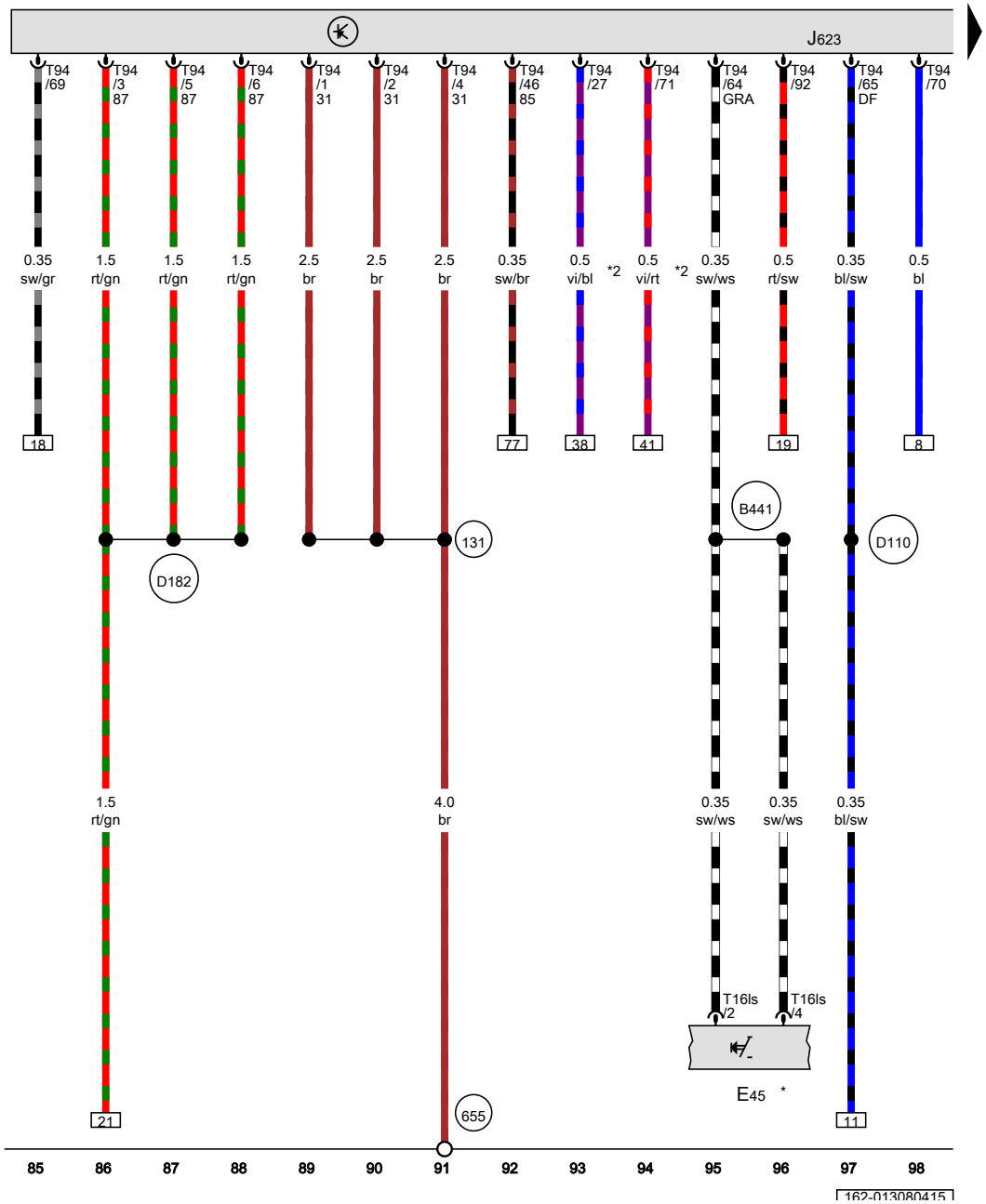

Engine control module

E45	Cruise control switch
J623	Engine control module
T16ls	16-pin connector
T94	94-pin connector
131	Ground connection 2 (in engine compartment wiring harness)
655	Ground connection on left headlamp
B441	Cruise control connection (in main wiring harness)
D110	Connection 8 (in engine compartment wiring harness)
D182	Connection 3 (87a) (in engine compartment wiring harness)
*	Only for vehicles with cruise control
*2	only for vehicles with auxiliary heater

ws	=	white
sw	=	black
ro	=	red
rt	=	red
br	=	brown
gn	=	green
bl	=	blue
gr	=	grey
li	=	lilac
vi	=	lilac
ge	=	yellow
or	=	orange
rs	=	pink

Protected by copyright. Copying for private or commercial purposes, in part or in whole, is not permitted unless authorised by Volkswagen AG. Volkswagen AG does not guarantee or accept any liability with respect to the correctness of information in this document. Copyright by Volkswagen AG.

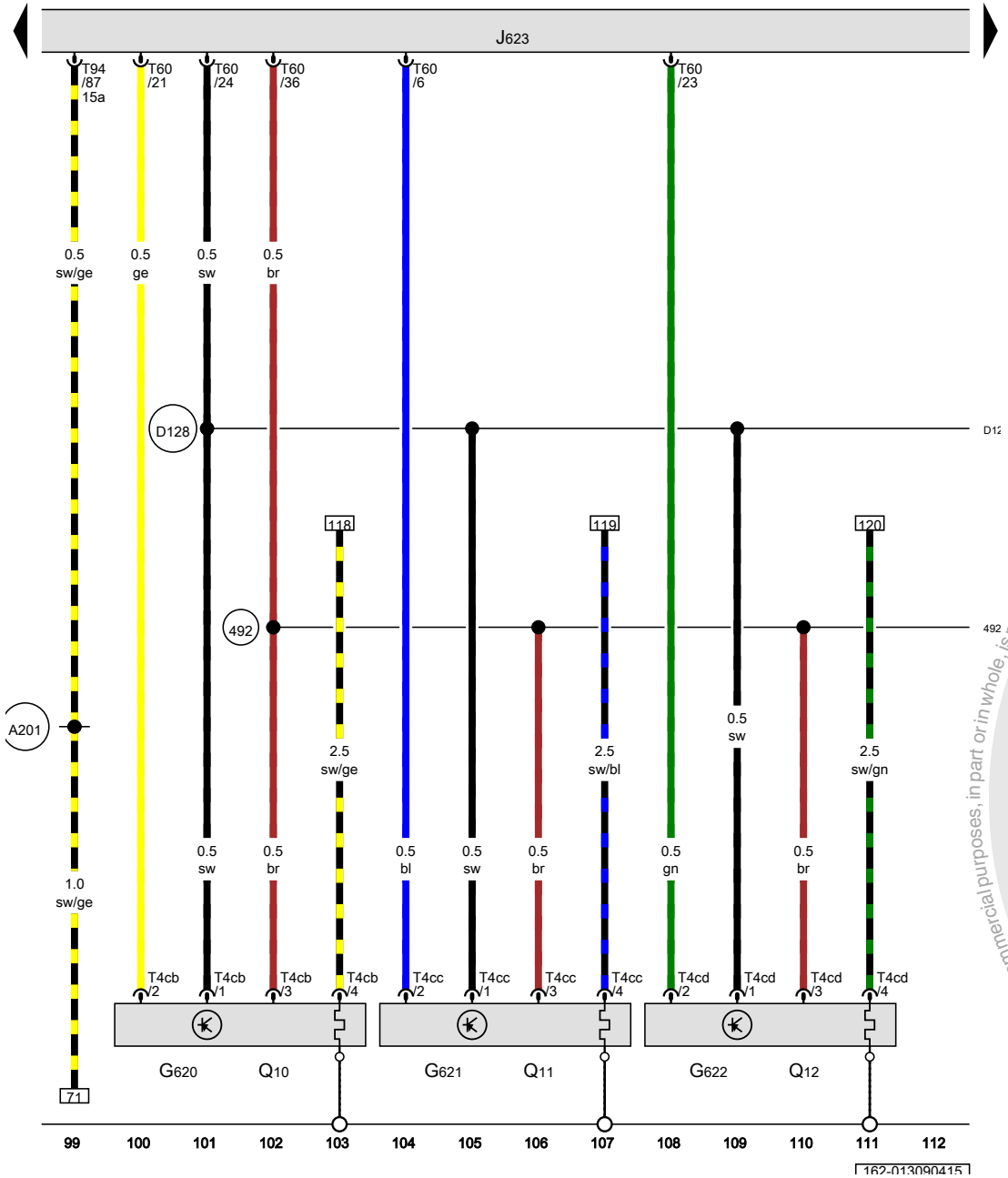

Cylinder 1 internal pressure sensor, Cylinder 2 internal pressure sensor, Cylinder 3 internal pressure sensor, Engine control module, Glow plug 1, Glow plug 2, Glow plug 3

G620	Cylinder 1 internal pressure sensor
G621	Cylinder 2 internal pressure sensor
G622	Cylinder 3 internal pressure sensor
J623	Engine control module
Q10	Glow plug 1
Q11	Glow plug 2
Q12	Glow plug 3
T4cb	4-pin connector
T4cc	4-pin connector
T4cd	4-pin connector
T60	60-pin connector
T94	94-pin connector
492	Sensor ground connection 2 (in fuel injection system wiring harness)
A201	Positive connection 6 (15a) (in instrument panel wiring harness)
D128	Connection 26 (in engine compartment wiring harness)

ws	=	white
sw	=	black
ro	=	red
rt	=	red
br	=	brown
gn	=	green
bl	=	blue
gr	=	grey
li	=	lilac
vi	=	lilac
ge	=	yellow
or	=	orange
rs	=	pink

Protected by copyright. Copying for private or commercial purposes, in part or in whole, is not permitted unless authorised by Volkswagen AG. Volkswagen AG does not guarantee or accept any liability with respect to the correctness of information in this document. Copyright by Volkswagen AG.

Cylinder 4 internal pressure sensor, Automatic glow time control module, Engine control module, Glow plug 4

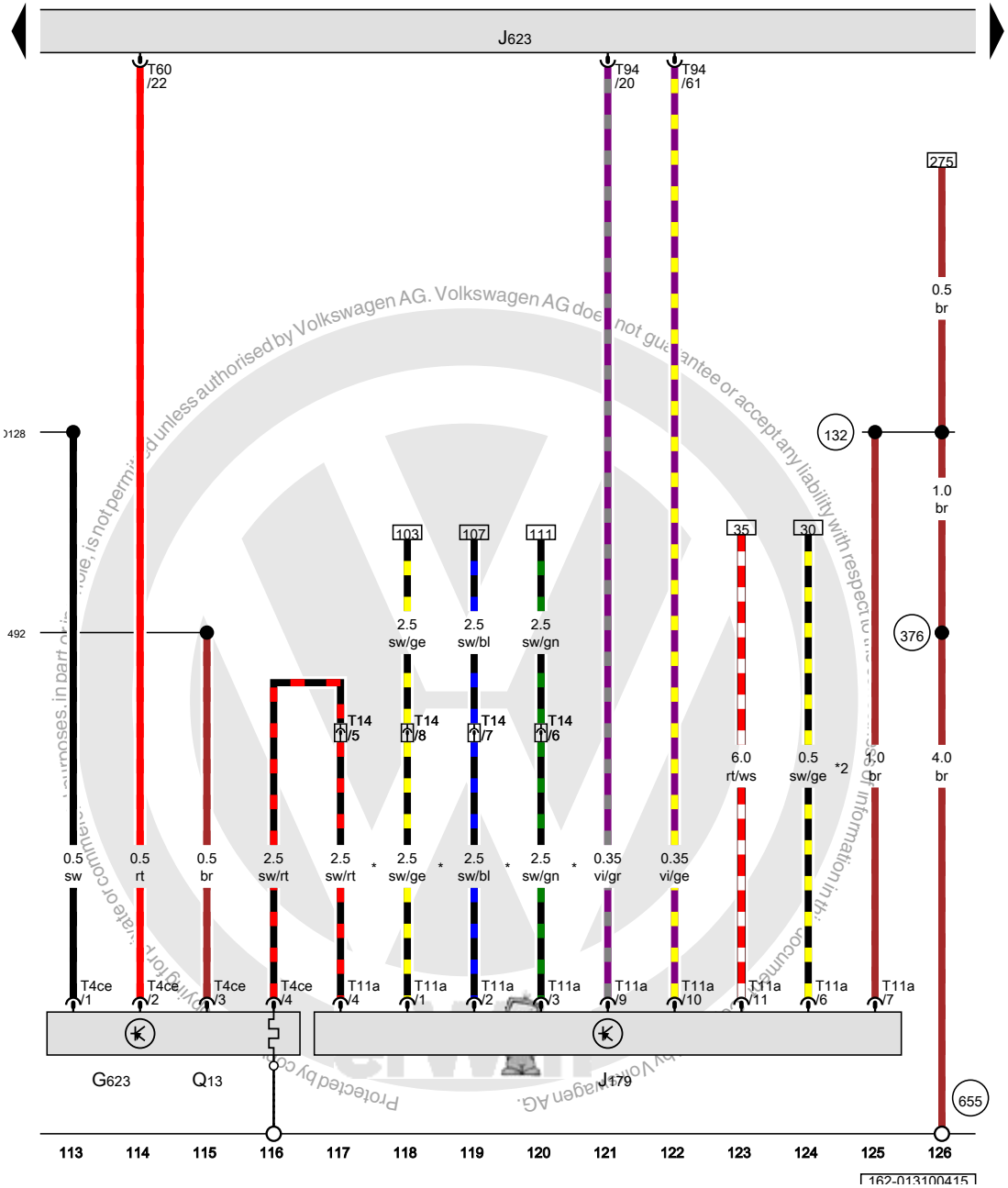

G623	Cylinder 4 internal pressure sensor
J179	Automatic glow time control module
J623	Engine control module
Q13	Glow plug 4
T4ce	4-pin connector
T11a	11-pin connector
T14	14-pin connector, near the battery
T60	60-pin connector
T94	94-pin connector
132	Ground connection 3 (in engine compartment wiring harness)
376	Ground connection 11 (in main wiring harness)
492	Sensor ground connection 2 (in fuel injection system wiring harness)
655	Ground connection on left headlamp
D128	Connection 26 (in engine compartment wiring harness)
*	1.5 diameter possible
*2	The color of the wires depends on vehicle equipment

ws	=	white
sw	=	black
ro	=	red
rt	=	red
br	=	brown
gn	=	green
bl	=	blue
gr	=	grey
li	=	lilac
vi	=	lilac
ge	=	yellow
or	=	orange
rs	=	pink

Protected by copyright. Copying for private or commercial purposes, in part or in whole, is not permitted unless authorised by Volkswagen AG. Volkswagen AG does not guarantee or accept any liability with respect to the correctness of information in this document.

Accelerator pedal module, Intake manifold sensor, Intake air temperature sensor, Accelerator pedal position sensor 2, Engine control module

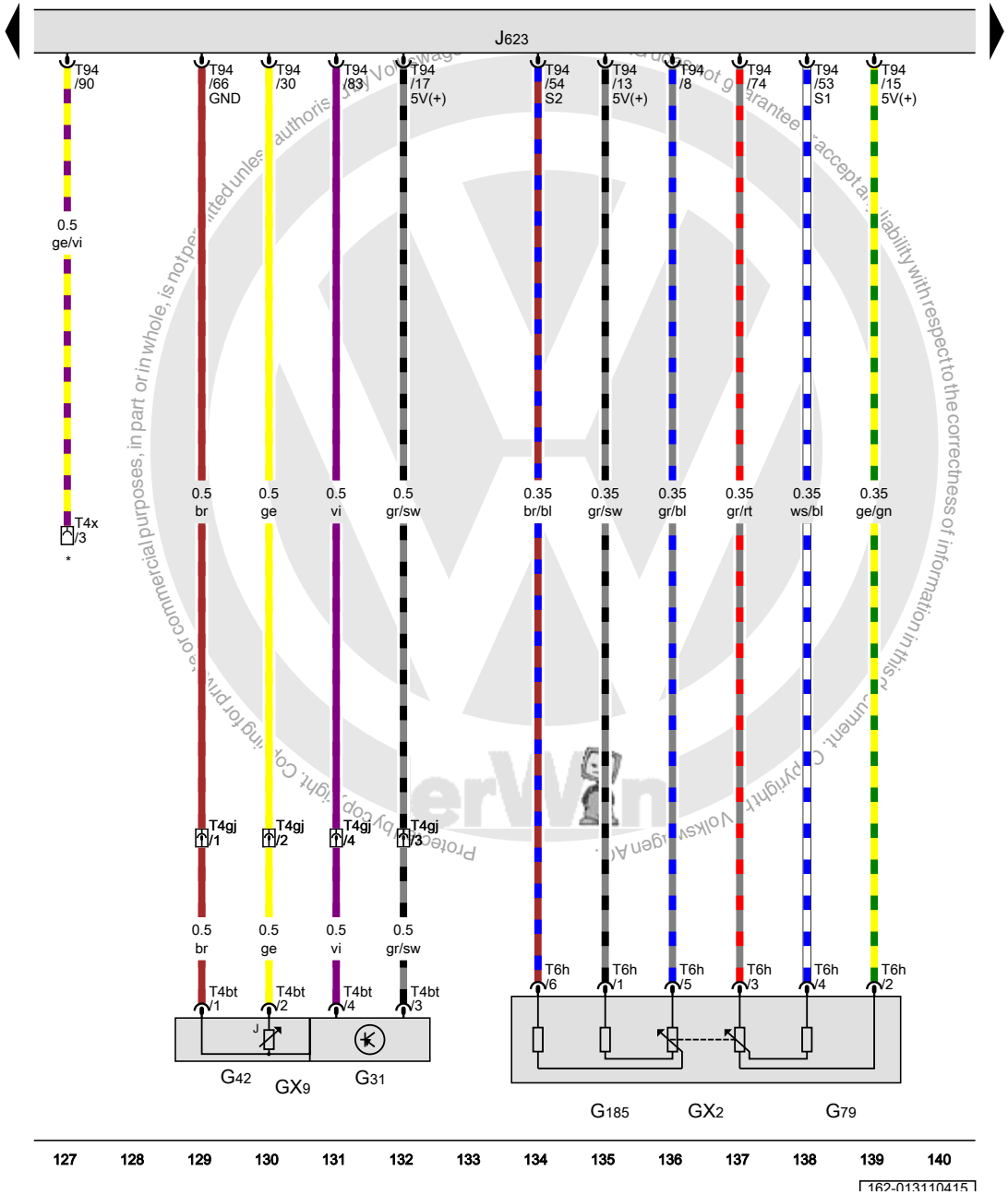

GX2	Accelerator pedal module
GX9	Intake manifold sensor
G31	Charge air pressure sensor
G42	Intake air temperature sensor
G79	Accelerator pedal position sensor
G185	Accelerator pedal position sensor 2
J623	Engine control module
T4bt	4-pin connector
T4gj	4-pin connector
T4x	4-pin connector
T6h	6-pin connector
T94	94-pin connector
*	Coolant fan connection

ws	=	white
sw	=	black
ro	=	red
rt	=	red
br	=	brown
gn	=	green
bl	=	blue
gr	=	grey
li	=	lilac
vi	=	lilac
ge	=	yellow
or	=	orange
rs	=	pink

Heated oxygen sensor, Exhaust gas temperature sensor 1, Exhaust gas temperature sensor 3, Engine control module, Oxygen sensor heater, Heater for oxygen sensor 1 after catalytic converter

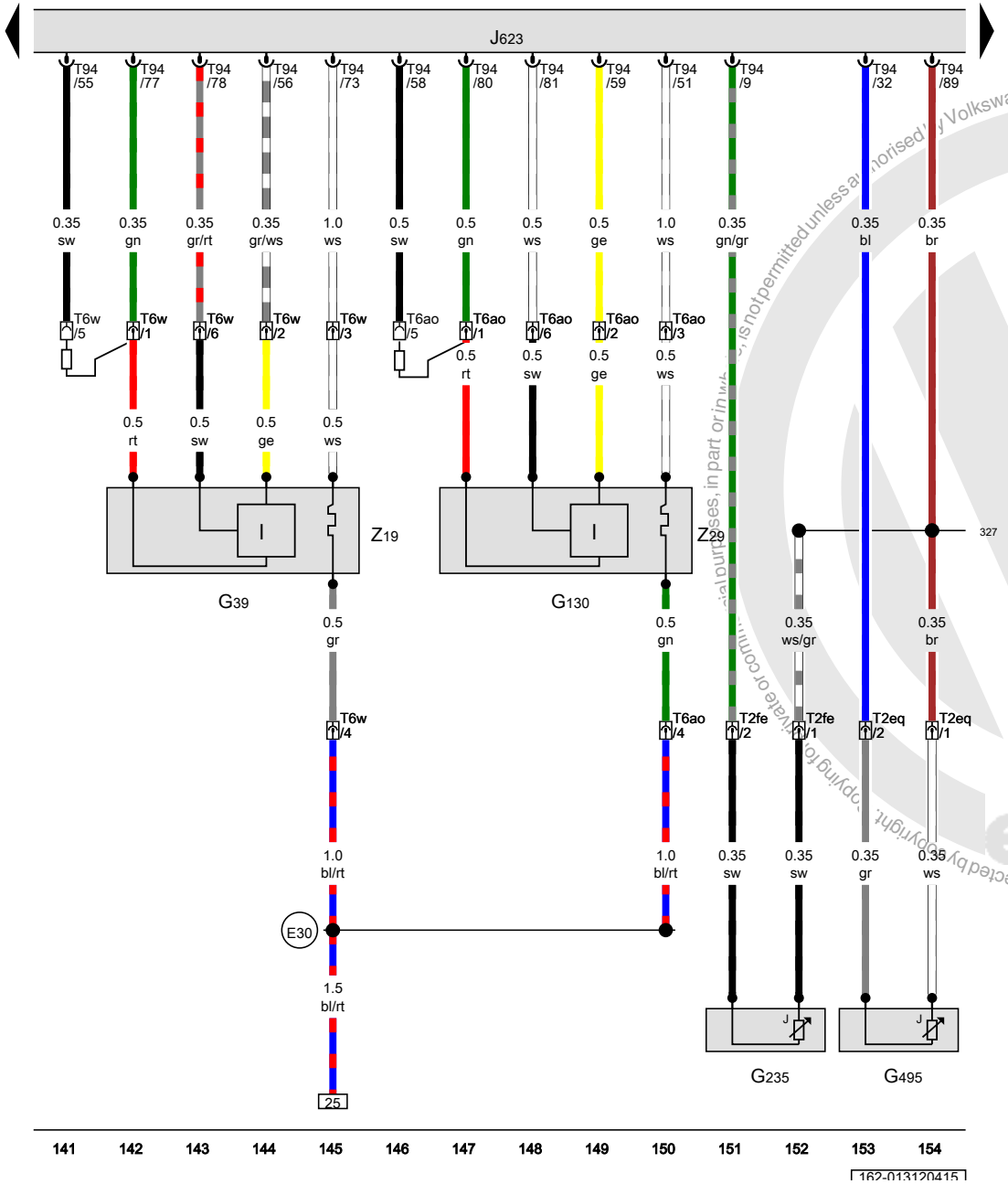

G39	Heated oxygen sensor
G130	Oxygen sensor after three way catalytic converter
G235	Exhaust gas temperature sensor 1
G495	Exhaust gas temperature sensor 3
J623	Engine control module
T2eq	Double connector
T2fe	Double connector
T6ao	6-pin connector
T6w	6-pin connector
T94	94-pin connector
Z19	Oxygen sensor heater
Z29	Heater for oxygen sensor 1 after catalytic converter
327	Sensor ground connection (in engine compartment wiring harness)
E30	Connection 87a (in engine wiring harness)

ws	=	white
sw	=	black
ro	=	red
rt	=	red
br	=	brown
gn	=	green
bl	=	blue
gr	=	grey
li	=	lilac
vi	=	lilac
ge	=	yellow
or	=	orange
rs	=	pink

Protected by copyright. Copying for private or commercial purposes, in part or in whole, is not permitted unless authorised by Volkswagen AG. Volkswagen AG does not guarantee or assume any liability with respect to the correctness of information in this document. Copyright by Volkswagen AG.

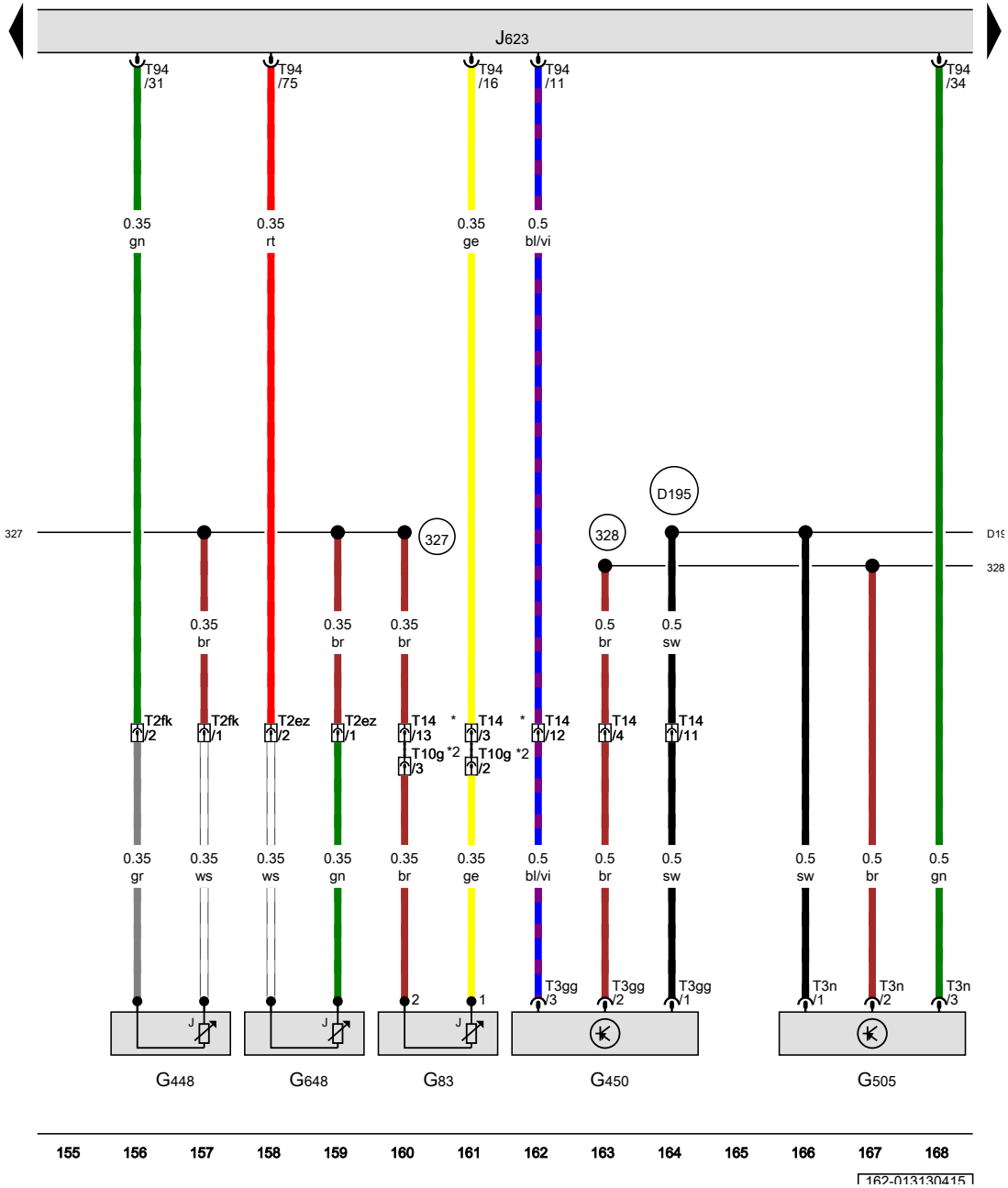

Engine coolant temperature sensor on radiator outlet, Exhaust gas temperature sensor 2, Exhaust pressure sensor 1, Differential pressure sensor, Exhaust gas temperature sensor 4, Engine control module

G83	Engine coolant temperature sensor on radiator outlet
G448	Exhaust gas temperature sensor 2
G450	Exhaust pressure sensor 1
G505	Differential pressure sensor
G648	Exhaust gas temperature sensor 4
J623	Engine control module
T2ez	Double connector
T2fk	Double connector
T3gg	3-pin connector
T3n	3-pin connector
T10g	10-pin connector
T14	14-pin connector, near the battery
T94	94-pin connector
327	Sensor ground connection (in engine compartment wiring harness)
328	Sensor ground connection 2 (in engine compartment wiring harness)
D195	Connection 5V (in engine compartment wiring harness) 1
*	Running change
*2	Omitted as a running change

ws	=	white
sw	=	black
ro	=	red
rt	=	red
br	=	brown
gn	=	green
bl	=	blue
gr	=	grey
li	=	lilac
vi	=	lilac
ge	=	yellow
or	=	orange
rs	=	pink

Protected by copyright. Copyright by Volkswagen AG. Volkswagen AG does not guarantee or accept any liability with respect to the correctness of information in this document. Copyright by Volkswagen AG. Volkswagen AG. Volkswagen AG. is not permitted unless authorised by Volkswagen AG. Volkswagen AG. does not guarantee or accept any liability with respect to the correctness of information in this document. Copyright by Volkswagen AG.

Engine coolant temperature sensor, Mass airflow sensor, EGR temperature sensor, Engine control module, Exhaust door control unit

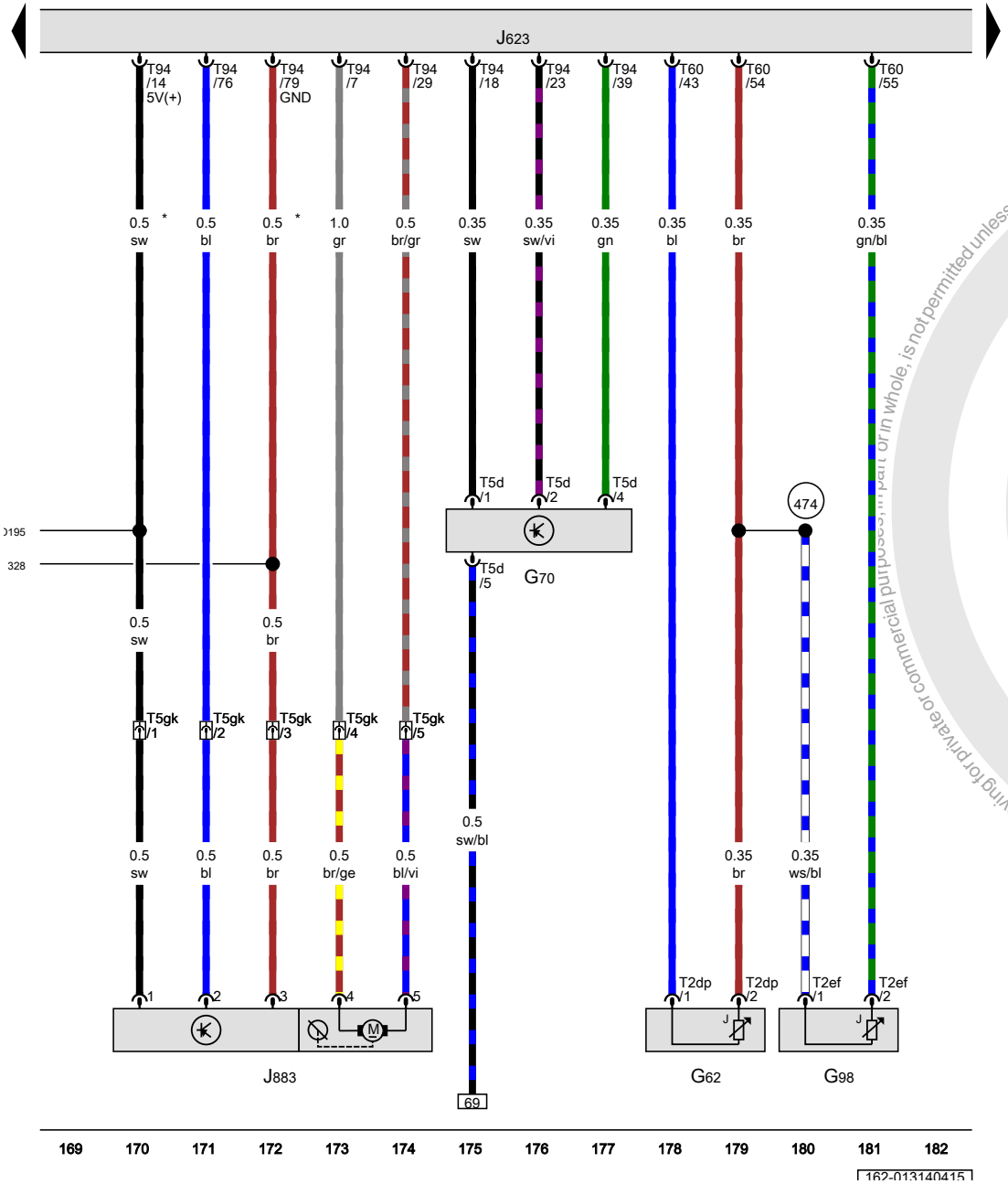

G62	Engine coolant temperature sensor
G70	Mass airflow sensor
G98	EGR temperature sensor
J623	Engine control module
J883	Exhaust door control unit
T2dp	Double connector
T2ef	Double connector
T5d	5-pin connector
T5gk	5-pin connector
T60	60-pin connector
T94	94-pin connector
328	Sensor ground connection 2 (in engine compartment wiring harness)
474	Sensor ground connection (in engine pre-wiring harness)
D195	Connection 5V (in engine compartment wiring harness) 1
*	The color of the wires depends on vehicle equipment

ws	=	white
sw	=	black
ro	=	red
rt	=	red
br	=	brown
gn	=	green
bl	=	blue
gr	=	grey
li	=	lilac
vi	=	lilac
ge	=	yellow
or	=	orange
rs	=	pink

Protected by copyright. Copying for private or commercial purposes, in part or in whole, is not permitted unless authorised by Volkswagen AG. Volkswagen AG does not guarantee or accept any liability with respect to the correctness of information in this document. Copyright by Volkswagen AG.

Throttle position sensor, Throttle valve control module, Engine control module, Cylinder 1 fuel injector, Cylinder 2 fuel injector, Cylinder 3 fuel injector, Cylinder 4 fuel injector, Fuel pressure regulator valve, Fuel metering valve

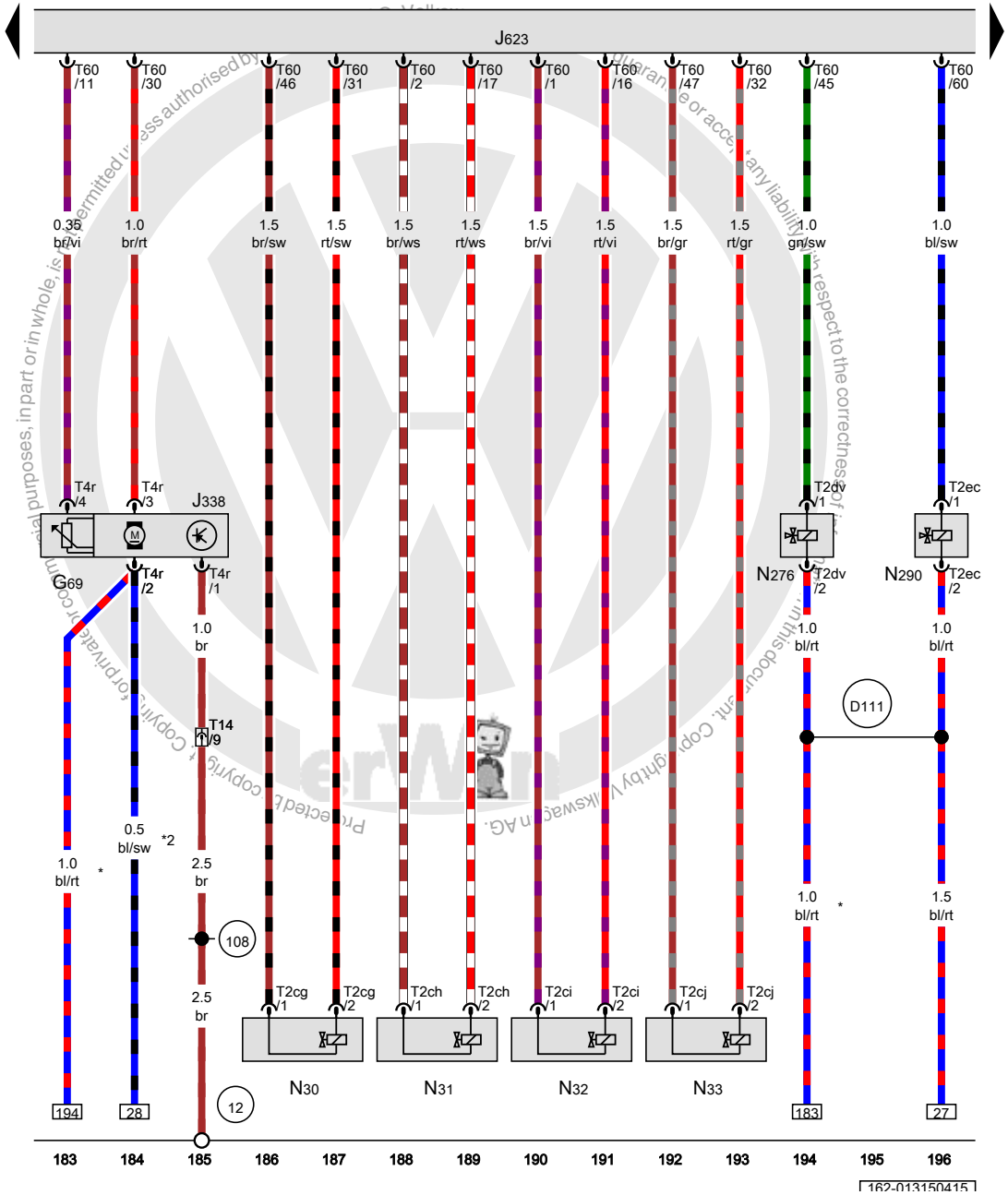

G69	Throttle position sensor	
J338	Throttle valve control module	
J623	Engine control module	
N30	Cylinder 1 fuel injector	
N31	Cylinder 2 fuel injector	
N32	Cylinder 3 fuel injector	
N33	Cylinder 4 fuel injector	
N276	Fuel pressure regulator valve	
N290	Fuel metering valve	
T2cg	Double connector	
T2ch	Double connector	
T2ci	Double connector	
T2cj	Double connector	
T2dv	Double connector	
T2ec	Double connector	
T4r	4-pin connector	
T14	14-pin connector, near the battery	
T60	60-pin connector	
12	Ground connection in engine compartment, left	
108	Ground connection 2 (in left front wiring harness)	
D111	Connection 9 (in engine compartment wiring harness)	
*	Running change	
*2	Omitted as a running change	

ws	=	white
sw	=	black
ro	=	red
rt	=	red
br	=	brown
gn	=	green
bl	=	blue
gr	=	grey
li	=	lilac
vi	=	lilac
ge	=	yellow
or	=	orange
rs	=	pink

EGR valve 1, Engine speed sensor, Fuel temperature sensor, EGR potentiometer, Exhaust gas recirculation position sensor 2, Charge air pressure actuator position sensor, Engine control module, Valve 2 for EGR

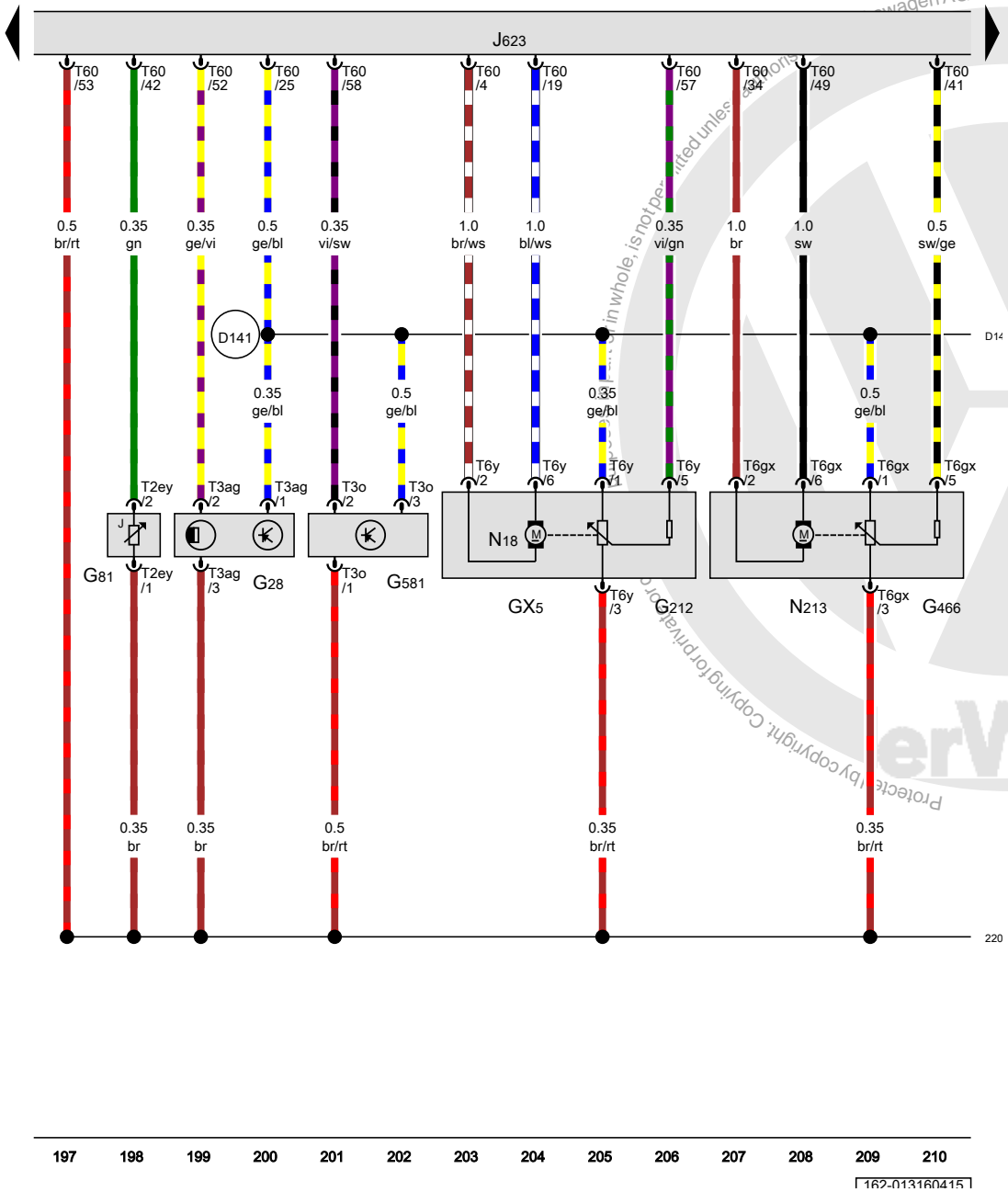

GX5	EGR valve 1
G28	Engine speed sensor
G81	Fuel temperature sensor
G212	EGR potentiometer
G466	Exhaust gas recirculation position sensor 2
G581	Charge air pressure actuator position sensor
J623	Engine control module
N18	EGR vacuum regulator solenoid valve
N213	Valve 2 for EGR
T2ey	Double connector
T3ag	3-pin connector
T3o	3-pin connector
T6gx	6-pin connector
T6y	6-pin connector
T60	60-pin connector
220	Sensor ground connection (in engine wiring harness)
D141	Connection 5V (in engine pre-wiring harness)

ws	=	white
sw	=	black
ro	=	red
rt	=	red
br	=	brown
gn	=	green
bl	=	blue
gr	=	grey
li	=	lilac
vi	=	lilac
ge	=	yellow
or	=	orange
rs	=	pink

Volkswagen AG. Volkswagen AG does not guarantee or accept any liability with respect to the correctness of information in this document. Copyright by Volkswagen AG. Protected by copyright. Copying for private or commercial purposes, in whole, is not permitted unless authorised by Volkswagen AG.

Intake flap control unit, Camshaft position sensor, Fuel pressure sensor, Intake manifold runner position sensor, Engine control module, Wastegate bypass regulator valve, EGR cooler switch-over valve

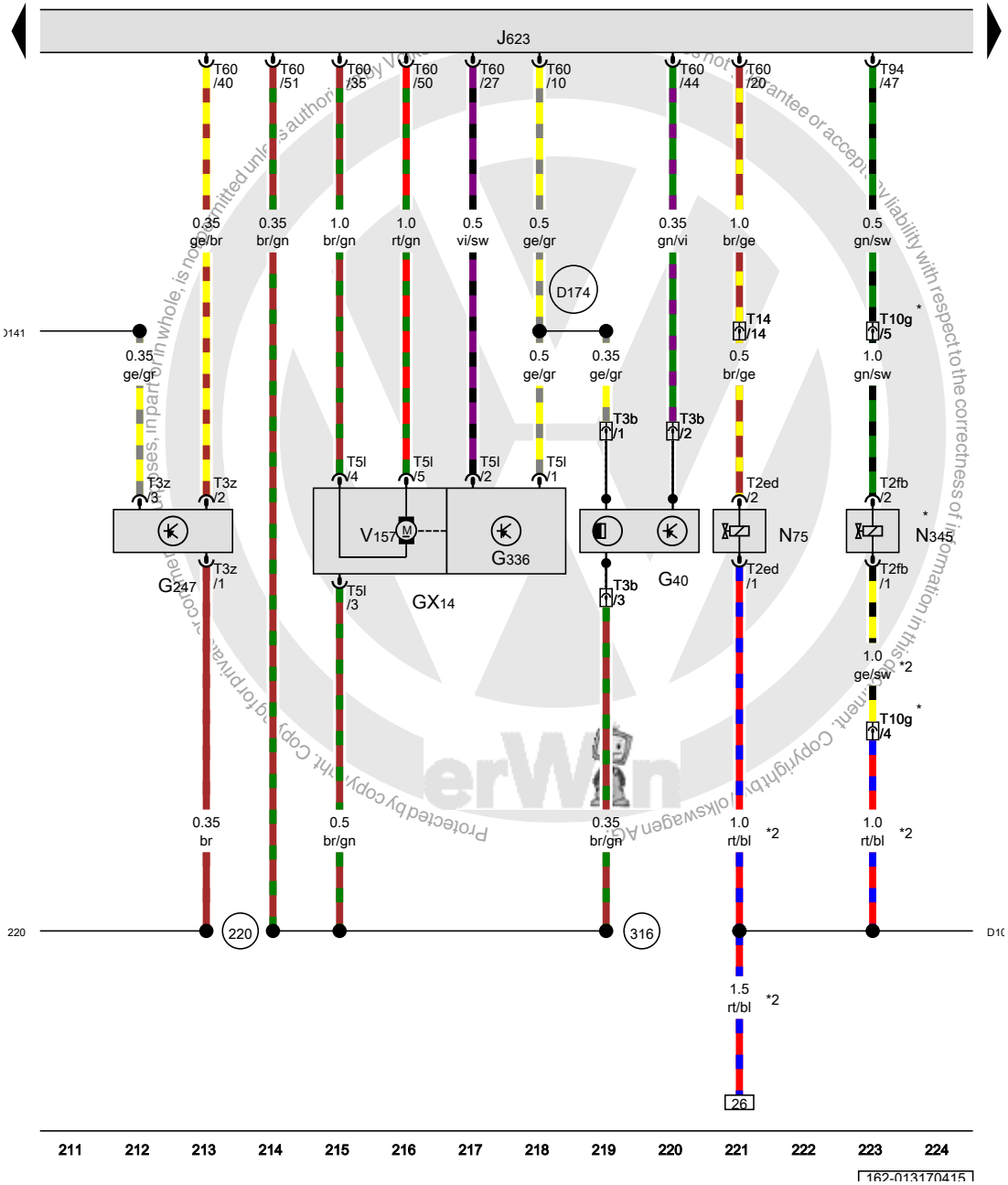

ws	=	white
sw	=	black
ro	=	red
rt	=	red
br	=	brown
gn	=	green
bl	=	blue
gr	=	grey
li	=	lilac
vi	=	lilac
ge	=	yellow
or	=	orange
rs	=	pink

GX14	Intake flap control unit
G40	Camshaft position sensor
G247	Fuel pressure sensor
G336	Intake manifold runner position sensor
J623	Engine control module
N75	Wastegate bypass regulator valve
N345	EGR cooler switch-over valve
T2ed	Double connector
T2fb	Double connector
T3b	3-pin connector
T3z	3-pin connector
T5l	5-pin connector
T10g	10-pin connector
T14	14-pin connector, near the battery
T60	60-pin connector
T94	94-pin connector
V157	Intake flap motor
220	Sensor ground connection (in engine wiring harness)
316	Sensor ground connection 2 (in engine wiring harness)
D102	Connection 2 (in engine compartment wiring harness)
D141	Connection 5V (in engine pre-wiring harness)
D174	Connection 2 (5V) (in engine pre-wiring harness)
*	Depending on equipment
*2	The color of the wires depends on vehicle equipment

Protected by copyright. Copyright by Volkswagen AG.

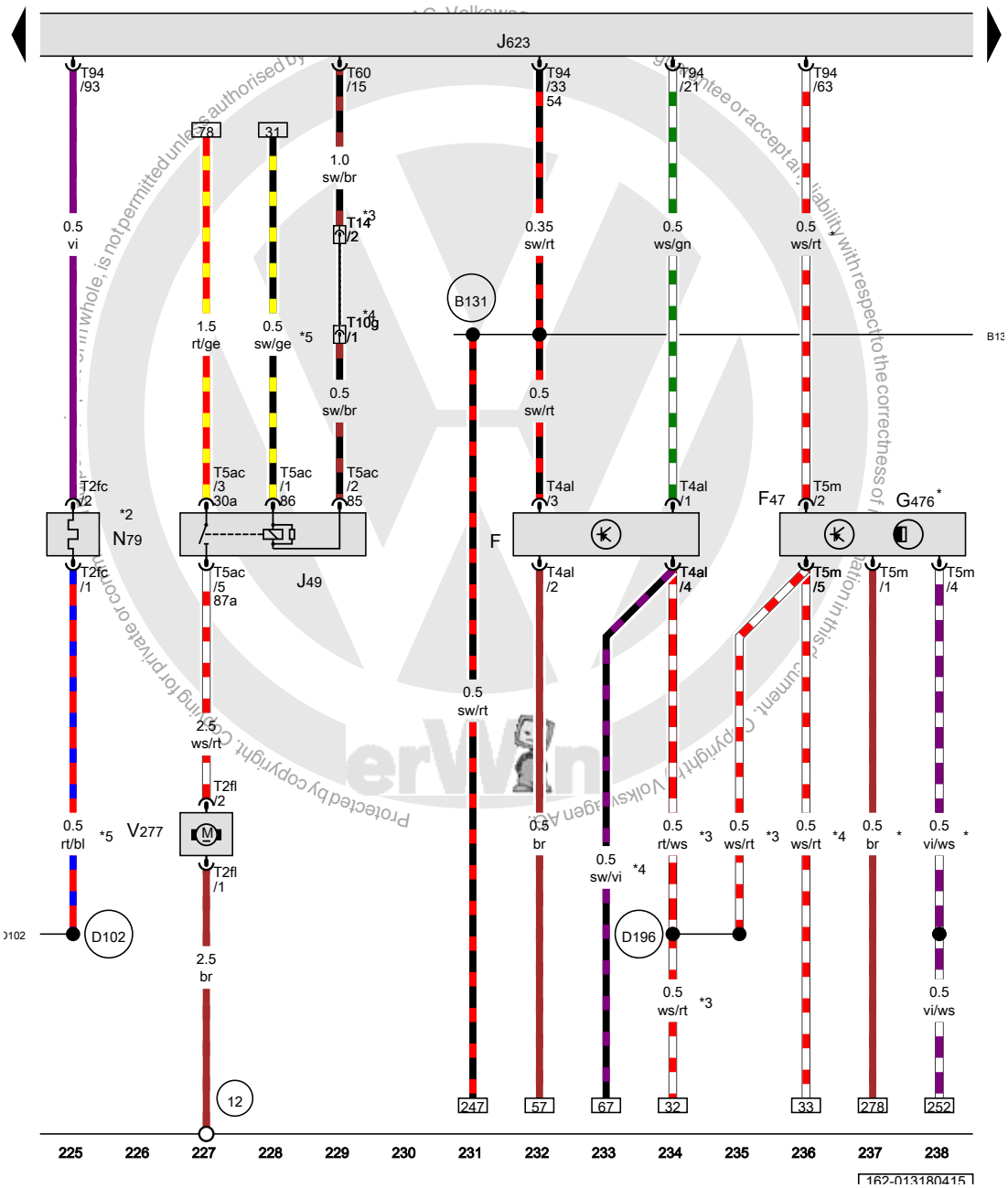

Brake lamp switch, Brake pedal switch, Clutch position sensor, Fuel pump relay 2, Engine control module, Positive crankcase ventilation heating element, Fuel pump 2

F	Brake lamp switch
F47	Brake pedal switch
G476	Clutch position sensor
J49	Fuel pump relay 2
J623	Engine control module
N79	Positive crankcase ventilation heating element
T2fc	Double connector
T2fl	Double connector
T4al	4-pin connector
T5ac	5-pin connector
T5m	5-pin connector
T10g	10-pin connector
T14	14-pin connector, in the engine compartment, left
T60	60-pin connector
T94	94-pin connector
V277	Fuel pump 2
12	Ground connection in engine compartment, left
B131	Connection 54 (in interior wiring harness)
D102	Connection 2 (in engine compartment wiring harness)
D196	Connection 87a (in engine pre-wiring harness) 2
*	Only for vehicles with a manual transmission
*2	Only for vehicles with crankcase ventilation heater
*3	Running change
*4	Omitted as a running change
*5	The color of the wires depends on vehicle equipment

ws	=	white
sw	=	black
ro	=	red
rt	=	red
br	=	brown
gn	=	green
bl	=	blue
gr	=	grey
li	=	lilac
vi	=	lilac
ge	=	yellow
or	=	orange
rs	=	pink

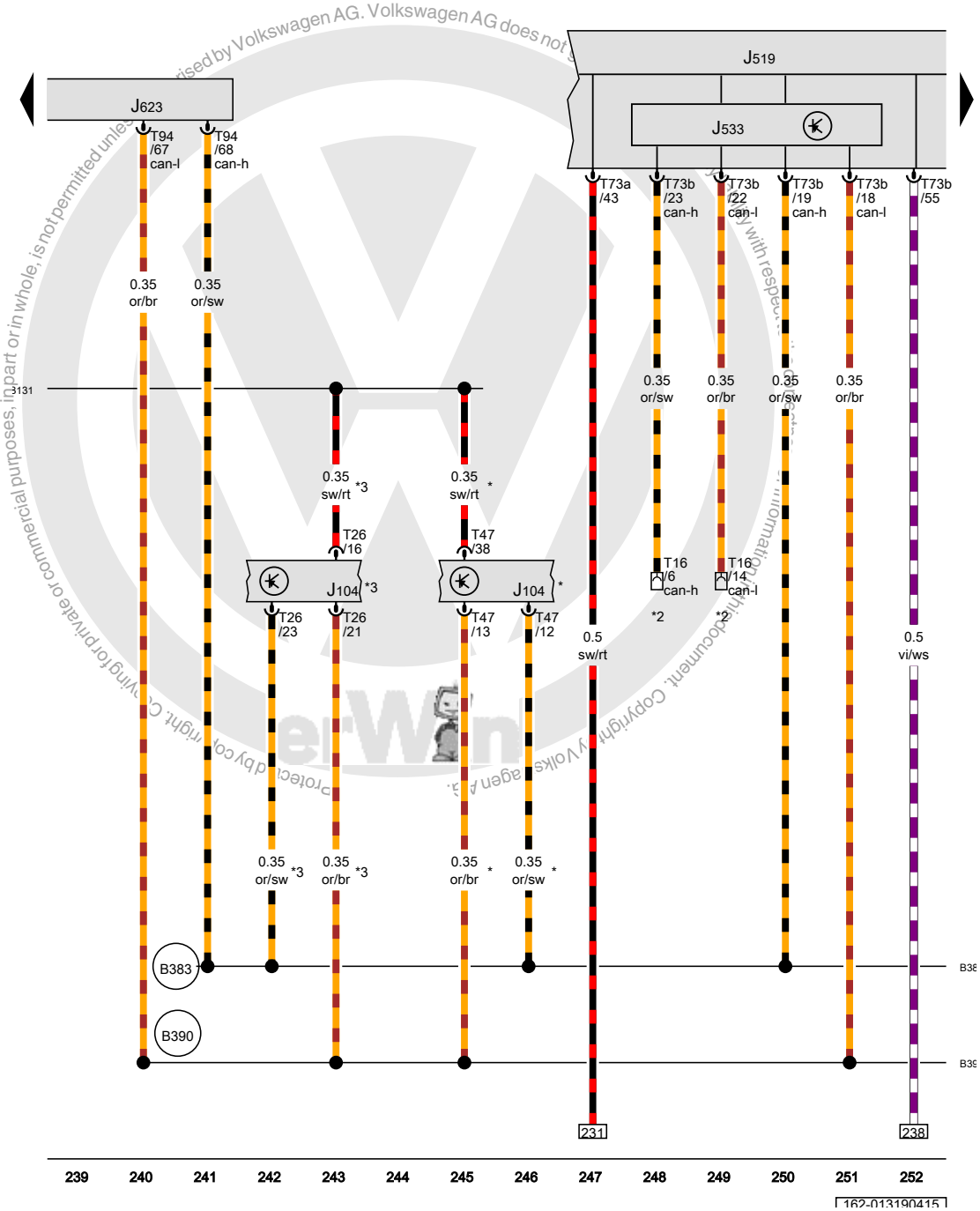

ABS control module, Vehicle electrical control module system, Data bus on board diagnostic interface, Engine control module

J104	ABS control module
J519	Vehicle electrical control module system
J533	Data bus on board diagnostic interface
J623	Engine control module
T16	16-pin connector
T26	26-pin connector
T47	47-pin connector
T73a	73-pin connector
T73b	73-pin connector
T94	94-pin connector
B131	Connection 54 (in interior wiring harness)
B383	Powertrain CAN bus high connection 1 (in main wiring harness)
B390	Powertrain CAN bus low connection 1 (in main wiring harness)
*	Only for vehicles with ABS and ESP
*2	Diagnostic connector
*3	Only for vehicles with ABS without ESP

ws	=	white
sw	=	black
ro	=	red
rt	=	red
br	=	brown
gn	=	green
bl	=	blue
gr	=	grey
li	=	lilac
vi	=	lilac
ge	=	yellow
or	=	orange
rs	=	pink

Protected by copyright. Copying for private or commercial purposes, in part or in whole, is not permitted unless authorised by Volkswagen AG. Volkswagen AG does not guarantee the accuracy of the information contained in this document.

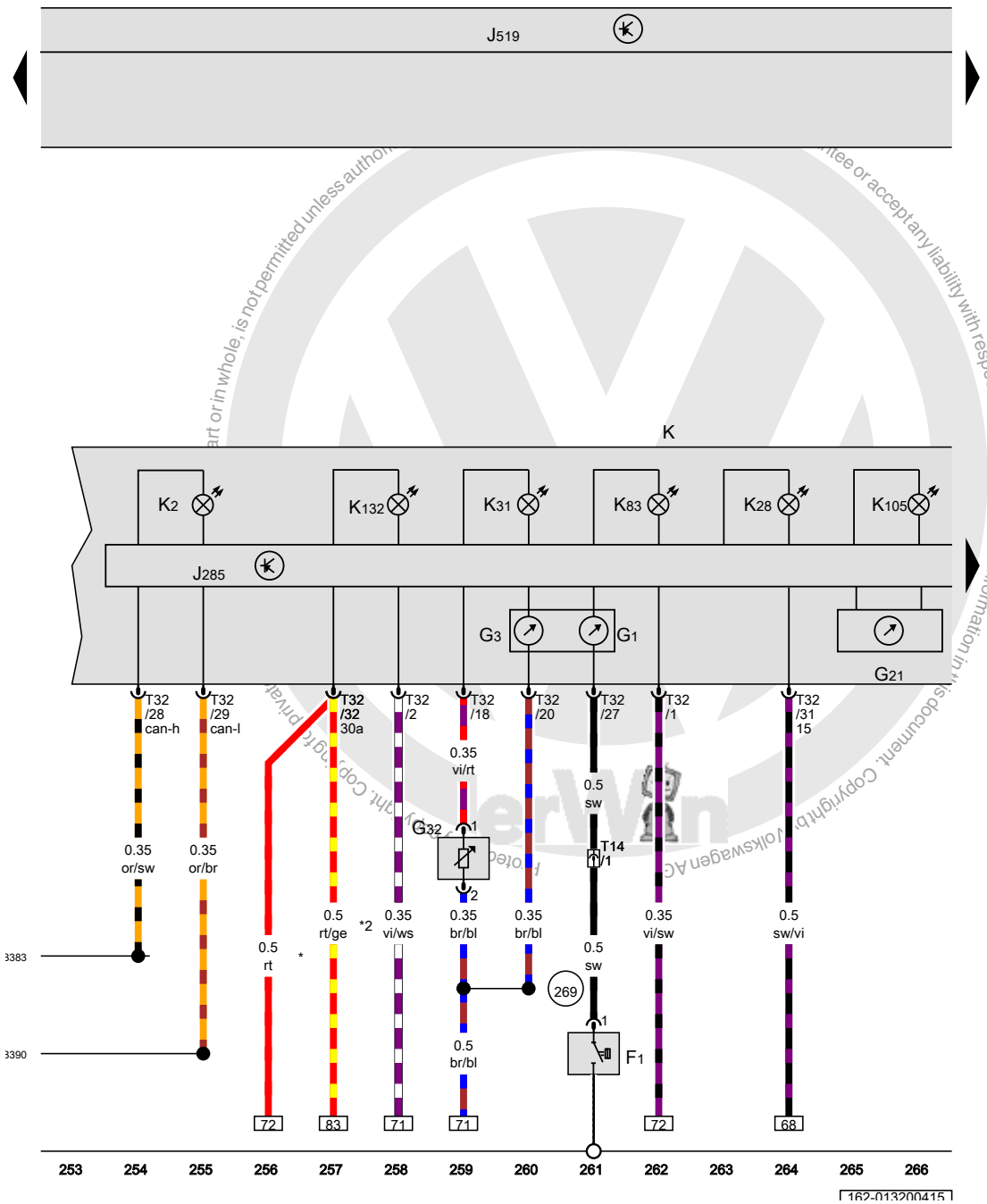

ws = white
sw = black
ro = red
rt = red
br = brown
gn = green
bl = blue
gr = grey
li = lilac
vi = lilac
ge = yellow
or = orange
rs = pink

Oil pressure switch, Fuel gauge, Engine coolant temperature gauge, Speedometer, Instrument cluster control module, Vehicle electrical control module system, Generator indicator lamp, Engine coolant level/temperature indicator lamp, Cruise control indicator lamp, Low fuel level indicator lamp, Electronic power control malfunction indicator lamp

F1	Oil pressure switch
G1	Fuel gauge
G3	Engine coolant temperature gauge
G21	Speedometer
G32	Engine coolant level sensor
J285	Instrument cluster control module
J519	Vehicle electrical control module system
K	Instrument cluster
K2	Generator indicator lamp
K28	Engine coolant level/temperature indicator lamp
K31	Cruise control indicator lamp
K83	Malfunction indicator lamp
K105	Low fuel level indicator lamp
K132	Electronic power control malfunction indicator lamp
T14	14-pin connector
T32	32-pin connector
269	Sensor ground connection 1 (in instrument panel wiring harness)
B383	Powertrain CAN bus high connection 1 (in main wiring harness)
B390	Powertrain CAN bus low connection 1 (in main wiring harness)
*	Running change
*2	Omitted as a running change

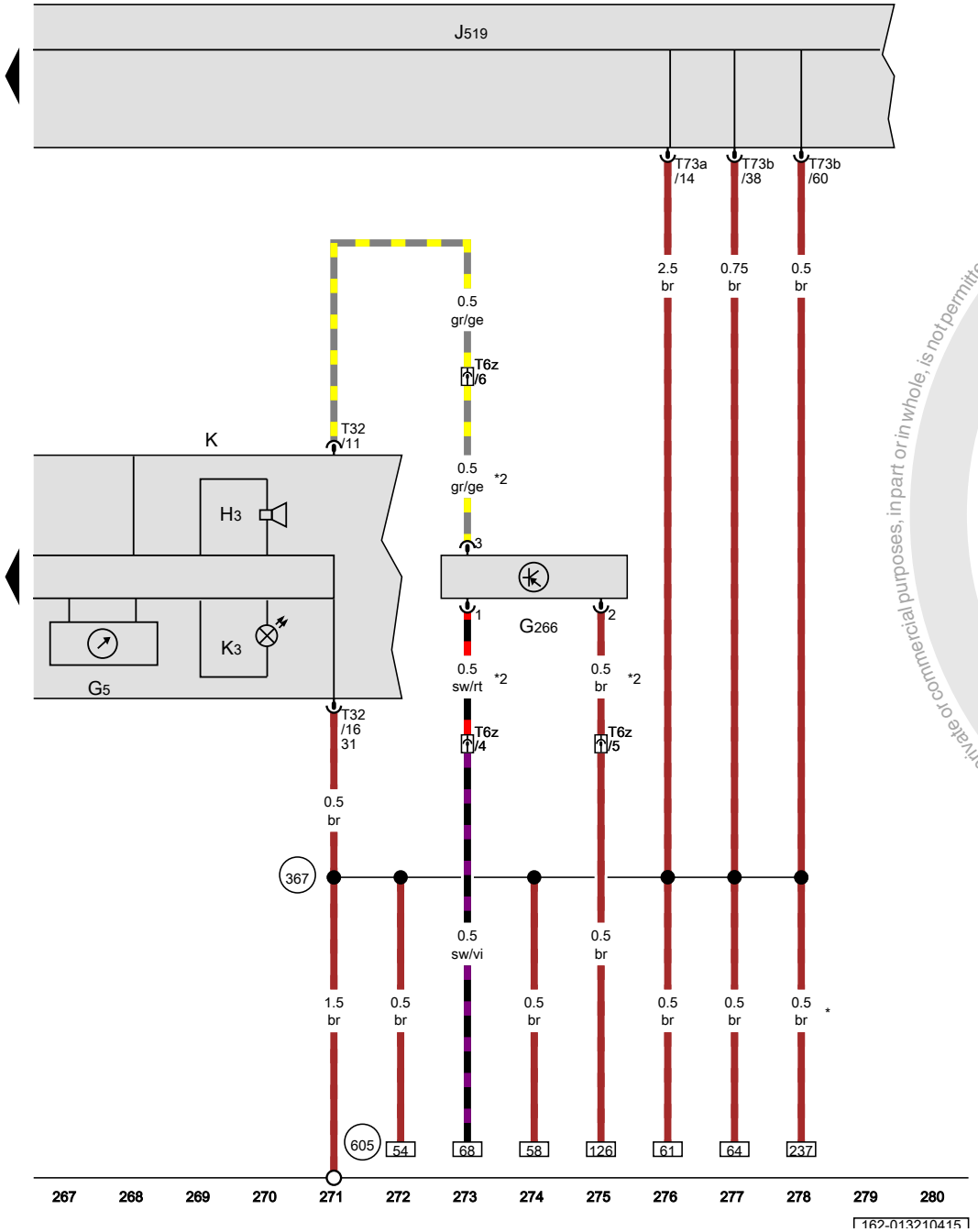

Tachometer, Oil level thermal sensor, Vehicle electrical control module system

G5	Tachometer
G266	Oil level thermal sensor
H3	Warning buzzer and tone
J519	Vehicle electrical control module system
K	Instrument cluster
K3	Oil pressure indicator lamp
T6z	6-pin connector, near the left headlamp
T32	32-pin connector
T73a	73-pin connector
T73b	73-pin connector
367	Ground connection 2 (in main wiring harness)
605	Ground connection on upper steering column
*	Only for vehicles with a manual transmission
*2	Only for vehicles with flexible service interval reminder

ws	=	white
sw	=	black
ro	=	red
rt	=	red
br	=	brown
gn	=	green
bl	=	blue
gr	=	grey
li	=	lilac
vi	=	lilac
ge	=	yellow
or	=	orange
rs	=	pink

Protected by copyright. Copying for private or commercial purposes, in part or in whole, is not permitted unless authorised by Volkswagen AG. Volkswagen AG does not guarantee or accept any liability with respect to the correctness of information in this document. Copyright by Volkswagen AG.

Power steering, electromechanical , (1N3)

from April 2010

Protected by copyright. Copying for private or commercial purposes, in part or in whole, is not permitted unless authorised by Volkswagen AG. Volkswagen AG does not guarantee or accept any liability with respect to the correctness of information in this document. Copyright by Volkswagen AG.

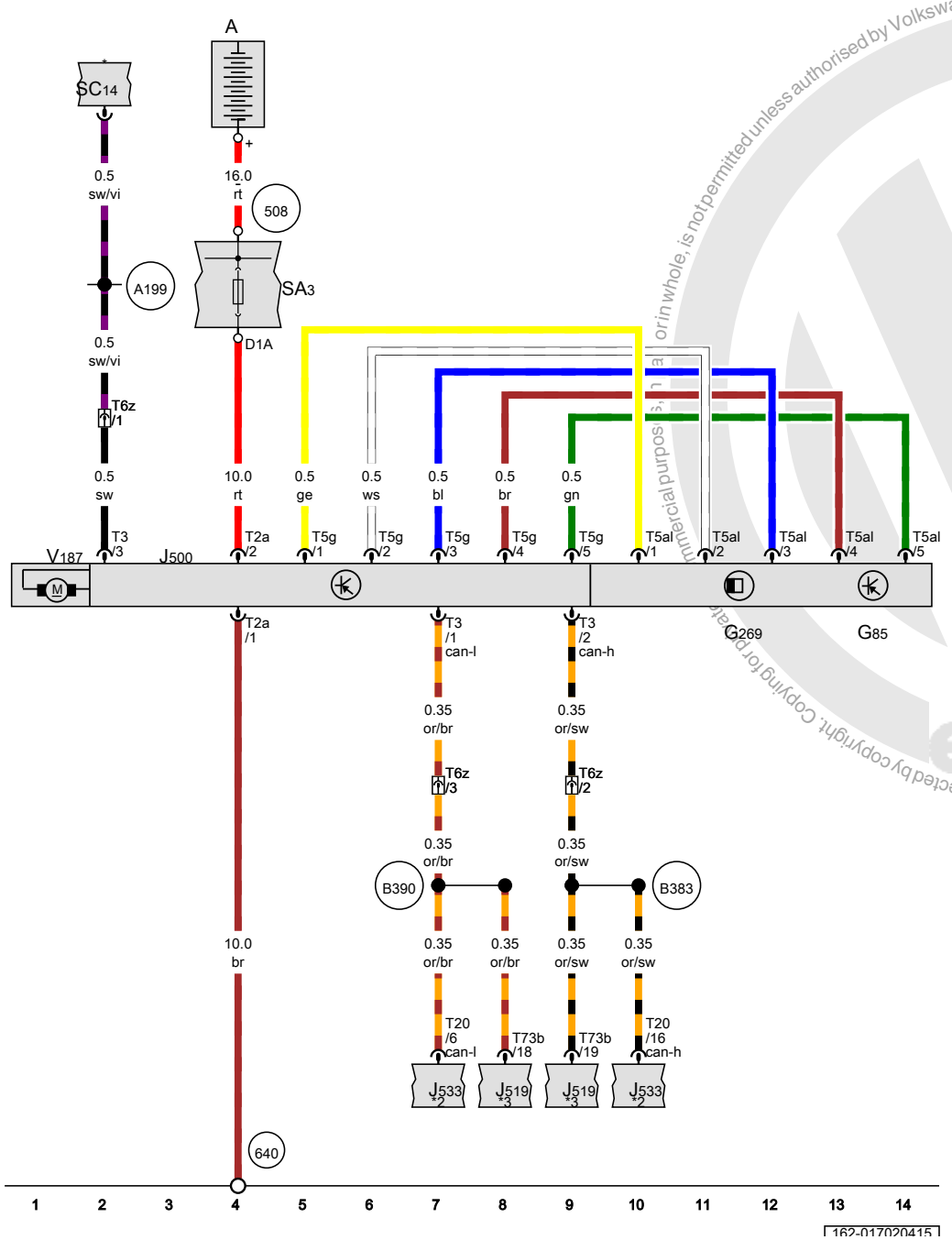

Steering angle sensor, Steering torque sensor, Power steering control module, Data bus on board diagnostic interface, Fuse 3 (on fuse panel A), Fuse 14 (on fuse panel C), Electromechanical power steering motor

A	Battery
G85	Steering angle sensor
G269	Steering torque sensor
J500	Power steering control module, in the left rear side panel
J519	Vehicle electrical control module system
J533	Data bus on board diagnostic interface, under the instrument panel, left
SA3	Fuse 3 (on fuse panel A)
SC14	Fuse 14 (on fuse panel C)
T2a	Double connector
T3	3-pin connector
T5al	5-pin connector
T5g	5-pin connector
T6z	6-pin connector, near the left headlamp
T20	20-pin connector
T73b	73-pin connector
V187	Electromechanical power steering motor
508	Terminal 30 threaded connection (on E-box)
640	Ground connection 2 in engine compartment, left
A199	Positive connection 4 (15a) (in instrument panel wiring harness)
B383	Powertrain CAN bus high connection 1 (in main wiring harness)
B390	Powertrain CAN bus low connection 1 (in main wiring harness)
*	Refer to applicable standard equipment wiring diagram
*2	only for vehicles with High equipment (AW1)
*3	only for vehicles with Low equipment (AW0)

ws	=	white
sw	=	black
ro	=	red
rt	=	red
br	=	brown
gn	=	green
bl	=	blue
gr	=	grey
li	=	lilac
vi	=	lilac
ge	=	yellow
or	=	orange
rs	=	pink

Protected by copyright. Copying for private or commercial purposes, in whole or in part, is not permitted unless authorised by Volkswagen AG. Volkswagen AG does not guarantee or accept any liability with respect to the correctness of information in this document. Copyright by Volkswagen AG.

Automatic transmission - DSG 02E , (0ES)

from November 2010

Protected by copyright. Copying for private or commercial purposes, in part or in whole, is not permitted unless authorised by Volkswagen AG. Volkswagen AG does not guarantee or accept any liability with respect to the correctness of information in this document. Copyright by Volkswagen AG.

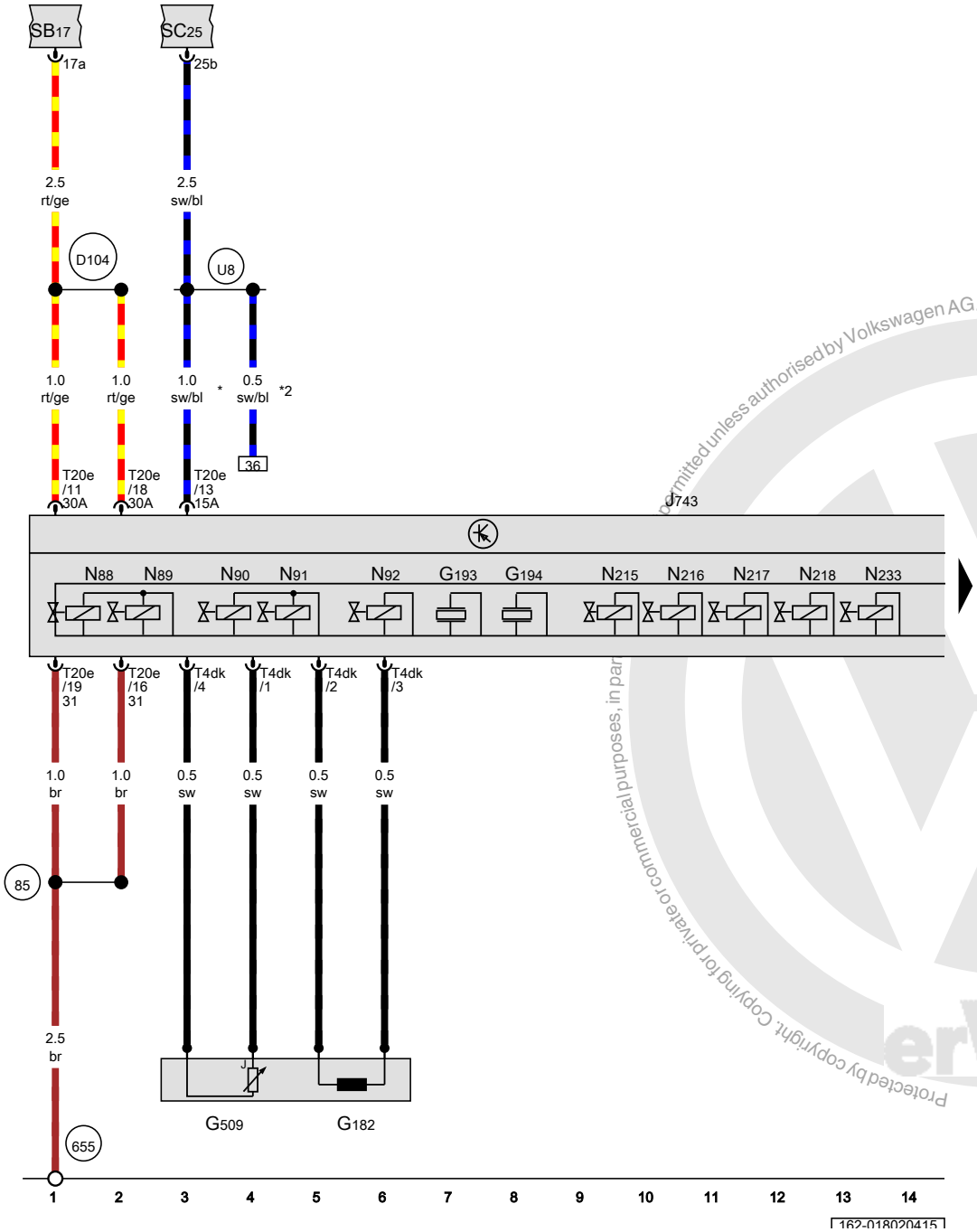

Transmission input speed sensor, Clutch oil temperature sensor, DSG transmission Mechatronic

G182	Transmission input speed sensor
G193	Automatic transmission hydraulic pressure sensor 1
G194	Automatic transmission hydraulic pressure sensor 2
G509	Clutch oil temperature sensor
J743	DSG transmission Mechatronic
N88	Solenoid valve 1
N89	Solenoid valve 2
N90	Solenoid valve 3
N91	Solenoid valve 4
N92	Solenoid valve 5
N215	Automatic transmission pressure regulating valve 1
N216	Automatic transmission pressure regulating valve 2
N217	Automatic transmission pressure regulating valve 3
N218	Automatic transmission pressure regulating valve 4
N233	Automatic transmission pressure regulating valve 5
SB17	Fuse 17 (on fuse panel B)
SC25	Fuse 25 (on fuse panel C)
T4dk	4-pin connector
T20e	20-pin connector
85	Ground connection 1 (in engine compartment wiring harness)
655	Ground connection on left headlamp
D104	Positive connection 2 (30a) (in engine compartment wiring harness)
U8	Positive connection (15a) (in automatic transmission wiring harness)
*	Diameter depends on equipment
*2	Through May 2012

ws	=	white
sw	=	black
ro	=	red
rt	=	red
br	=	brown
gn	=	green
bl	=	blue
gr	=	grey
li	=	lilac
vi	=	lilac
ge	=	yellow
or	=	orange
rs	=	pink

Protected by copyright. Copying for private or commercial purposes, in part or in whole, is not permitted unless authorised by Volkswagen AG. Volkswagen AG does not guarantee or assume any liability with respect to the correctness of information in this document. Copyright by Volkswagen AG.

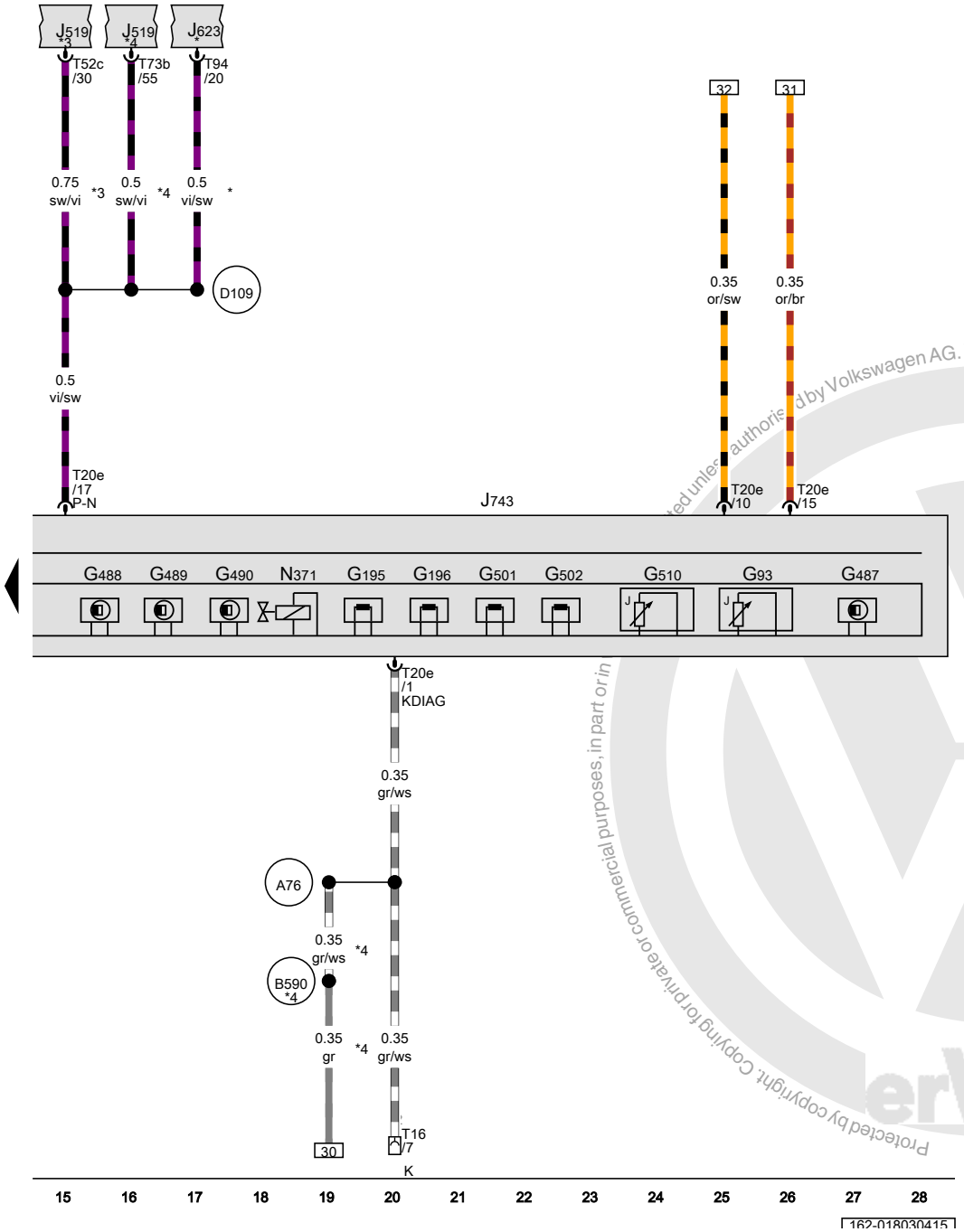

DSG transmission Mechatronic

G93	Transmission fluid temperature sensor
G195	Transmission output speed sensor
G196	Transmission output speed sensor 2
G487	Gear position distance sensor 1
G488	Gear position distance sensor 2
G489	Gear position distance sensor 3
G490	Gear position distance sensor 4
G501	Driveshaft speed sensor 1
G502	Driveshaft speed sensor 2
G510	Temperature sensor in control module
J519	Vehicle electrical control module system
J623	Engine control module
J743	DSG transmission Mechatronic
N371	Automatic transmission pressure regulating valve 6
T16	16-pin connector
T20e	20-pin connector
T52c	52-pin connector
T73b	73-pin connector
T94	94-pin connector
A76	KS-diagnostic lead connection (in instrument panel wiring harness)
B590	KS-diagnostic cable connection (in interior wiring harness)
D109	Connection 7 (in engine compartment wiring harness)
*	Refer to applicable engine wiring diagram
*2	Diagnostic connector
*3	only for vehicles with High equipment (AW1)
*4	only for vehicles with Low equipment (AW0)

ws	=	white
sw	=	black
ro	=	red
rt	=	red
br	=	brown
gn	=	green
bl	=	blue
gr	=	grey
li	=	lilac
vi	=	lilac
ge	=	yellow
or	=	orange
rs	=	pink

Protected by copyright. Copying for private or commercial purposes, in part or in ... authorised by Volkswagen AG. Volkswagen AG does not guarantee or accept any liability with respect to the correctness of information in this document. Copyright by Volkswagen AG.

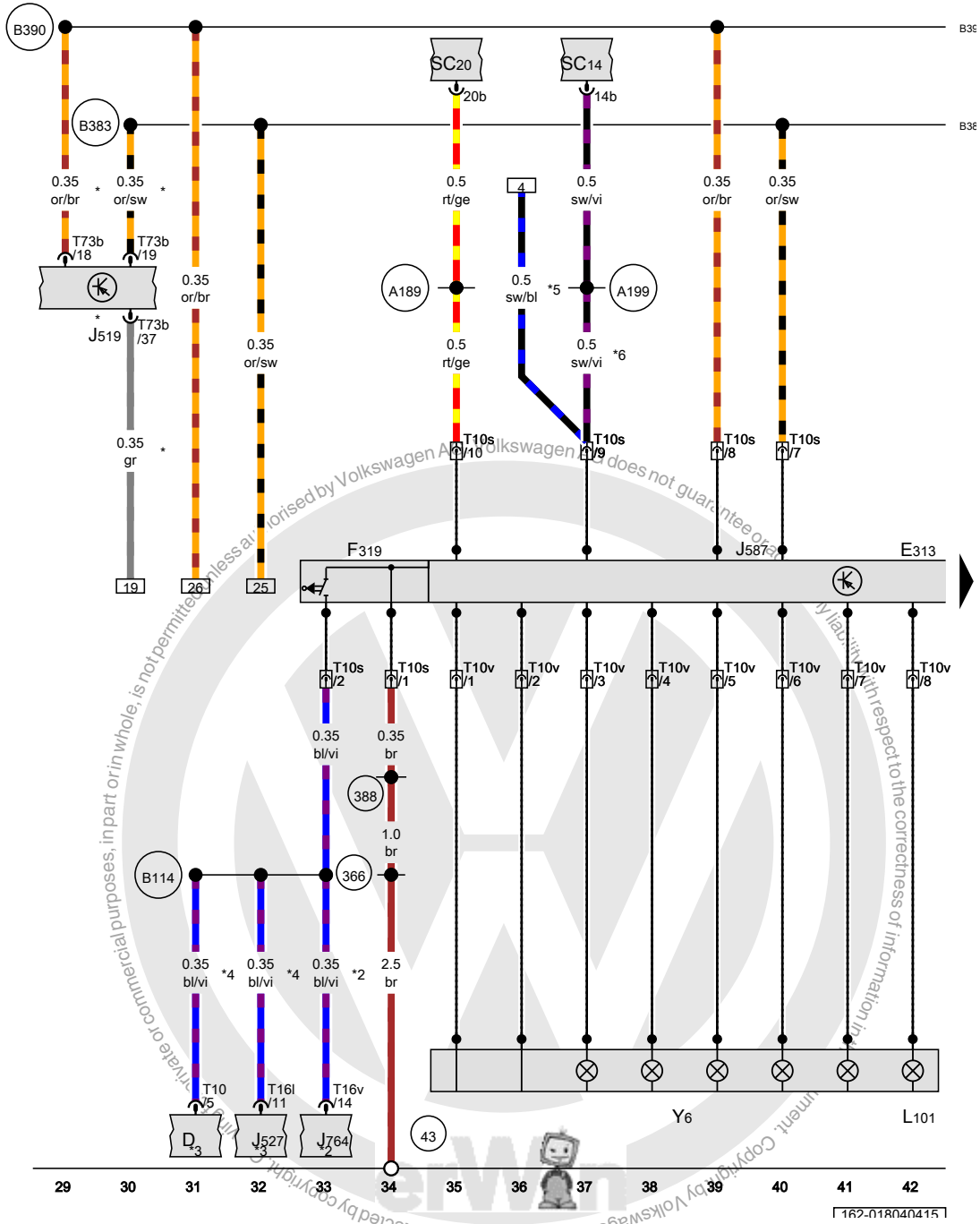

Selector lever sensor system control module, Selector lever scale illumination bulb, Transmission range display

D	Ignition/starter switch
E313	Selector lever
F319	Selector lever park position lock switch
J519	Vehicle electrical control module system
J527	Steering column electronics control module
J587	Selector lever sensor system control module
J764	Electronic steering column lock control module
L101	Selector lever scale illumination bulb
SC14	Fuse 14 (on fuse panel C)
SC20	Fuse 20 (on fuse panel C)
T10	10-pin connector
T10s	10-pin connector
T10v	10-pin connector
T16l	16-pin connector
T16v	16-pin connector
T73b	73-pin connector
Y6	Transmission range display
43	Ground connection on A-pillar, lower right
366	Ground connection 1 (in main wiring harness)
388	Ground connection 23 (in main wiring harness)
A189	Positive connection 5 (30a) (in instrument panel wiring harness)
A199	Positive connection 4 (15a) (in instrument panel wiring harness)
B114	Lock switch connection (in interior wiring harness)
B383	Powertrain CAN bus high connection 1 (in main wiring harness)
B390	Powertrain CAN bus low connection 1 (in main wiring harness)
*	only for vehicles with Low equipment (AW0)
*2	only for vehicles with access/start authorization system
*3	Depending on equipment
*4	Only for vehicles without access/start authorization system
*5	Through May 2012
*6	from June 2012

ws	=	white
sw	=	black
ro	=	red
rt	=	red
br	=	brown
gn	=	green
bl	=	blue
gr	=	grey
li	=	lilac
vi	=	lilac
ge	=	yellow
or	=	orange
rs	=	pink

Protected by copyright. Copyright by Volkswagen AG. Private or commercial purposes, in part or in whole, is not permitted unless authorised by Volkswagen AG. Volkswagen AG does not guarantee or assume any liability with respect to the correctness of information.

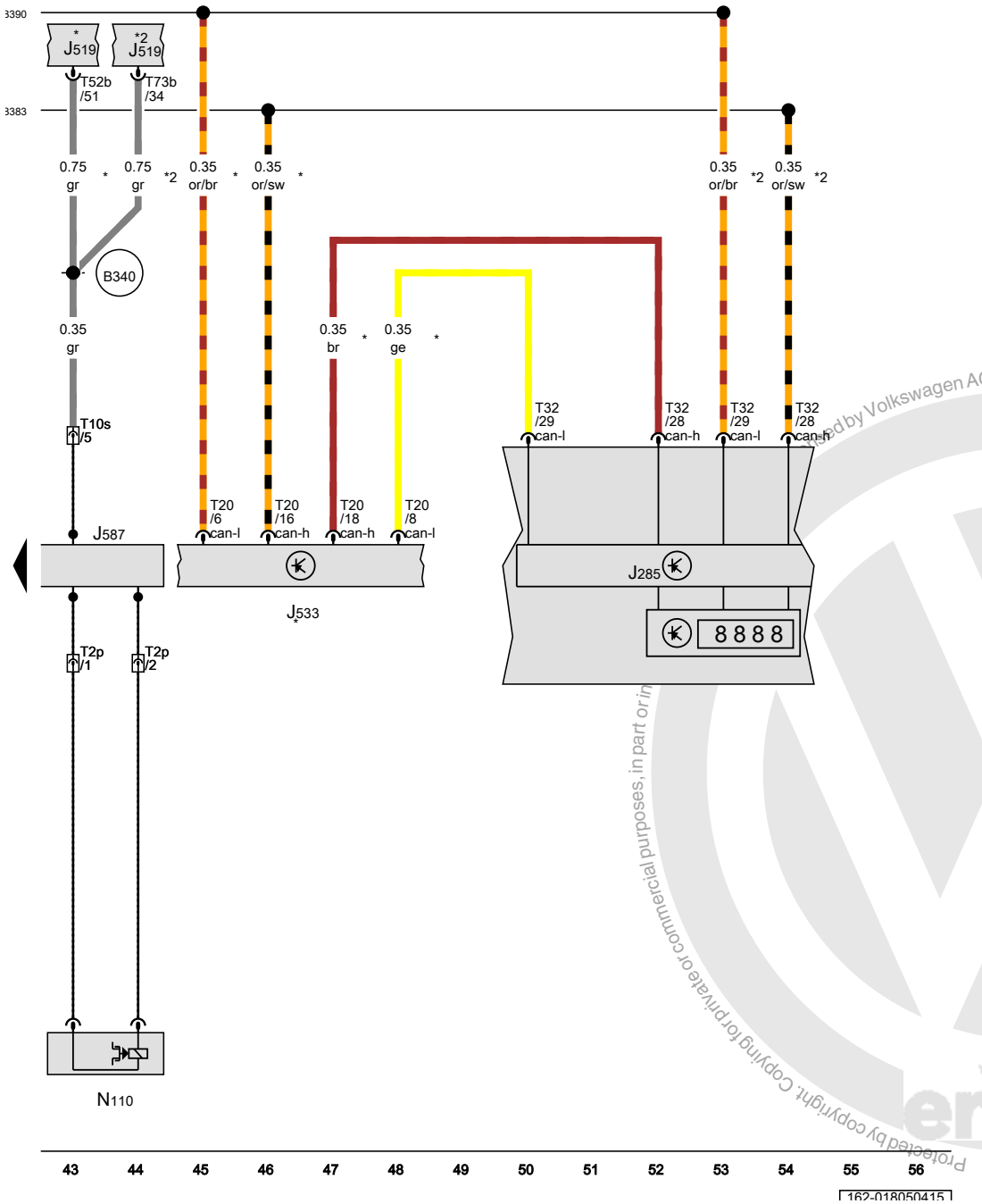

Instrument cluster control module, Data bus on board diagnostic interface, Selector lever sensor system control module, Shift lock solenoid

J285	Instrument cluster control module
J519	Vehicle electrical control module system
J533	Data bus on board diagnostic interface
J587	Selector lever sensor system control module
N110	Shift lock solenoid
T2p	Double connector
T10s	10-pin connector
T20	20-pin connector
T32	32-pin connector
T52b	52-pin connector
T73b	73-pin connector
B340	Connection 58d (in main wiring harness) 1
B383	Powertrain CAN bus high connection 1 (in main wiring harness)
B390	Powertrain CAN bus low connection 1 (in main wiring harness)
*	only for vehicles with High equipment (AW1)
*2	only for vehicles with Low equipment (AW0)

ws	=	white
sw	=	black
ro	=	red
rt	=	red
br	=	brown
gn	=	green
bl	=	blue
gr	=	grey
li	=	lilac
vi	=	lilac
ge	=	yellow
or	=	orange
rs	=	pink

Protected by copyright. Copying for private or commercial purposes, in part or in ... Copyright by Volkswagen AG. Volkswagen AG does not guarantee or accept any liability with respect to the correctness of information in this document.

A/C system , (KH6),(9AP)

from April 2010

Protected by copyright. Copying for private or commercial purposes, in part or in whole, is not permitted unless authorised by Volkswagen AG. Volkswagen AG does not guarantee or accept any liability with respect to the correctness of information in this document. Copyright by Volkswagen AG.

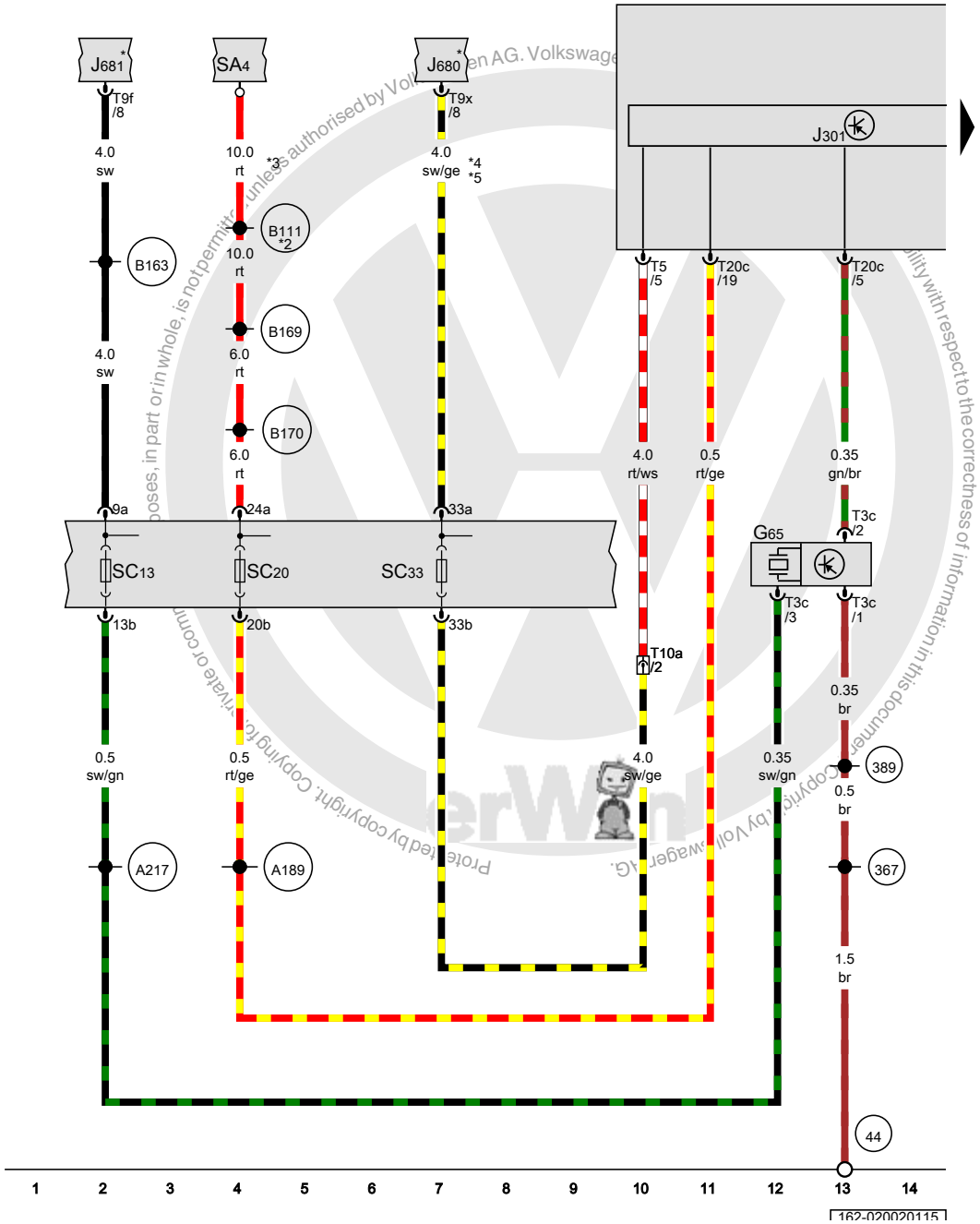

High pressure sensor, A/C control module

G65	High pressure sensor
J301	A/C control module
J680	Terminal 75 power supply relay 1
J681	Terminal 15 power supply relay 2
SA4	Fuse 4 (on fuse panel A)
SC13	Fuse 13 (on fuse panel C)
SC20	Fuse 20 (on fuse panel C)
SC33	Fuse 33 (on fuse panel C)
T3c	3-pin connector
T5	5-pin connector
T9f	9-pin connector
T9x	9-pin connector
T10a	10-pin connector, on the heater
T20c	20-pin connector
44	Ground connection on A-pillar, lower left
367	Ground connection 2 (in main wiring harness)
389	Ground connection 24 (in main wiring harness)
A189	Positive connection 5 (30a) (in instrument panel wiring harness)
A217	Positive connection 8 (15a) (in instrument panel wiring harness)
B111	Positive connection 1 (30a) (in interior wiring harness)
B163	Positive connection 1 (15) (in interior wiring harness)
B169	Positive connection 1 (30) (in interior wiring harness)
B170	Positive connection 2 (30) (in interior wiring harness)
*	Refer to applicable standard equipment wiring diagram
*2	Omitted as a running change
*3	16.0 diameter possible
*4	The color of the wires depends on vehicle equipment
*5	6.0 diameter possible

ws	=	white
sw	=	black
ro	=	red
rt	=	red
br	=	brown
gn	=	green
bl	=	blue
gr	=	grey
li	=	lilac
vi	=	lilac
ge	=	yellow
or	=	orange
rs	=	pink

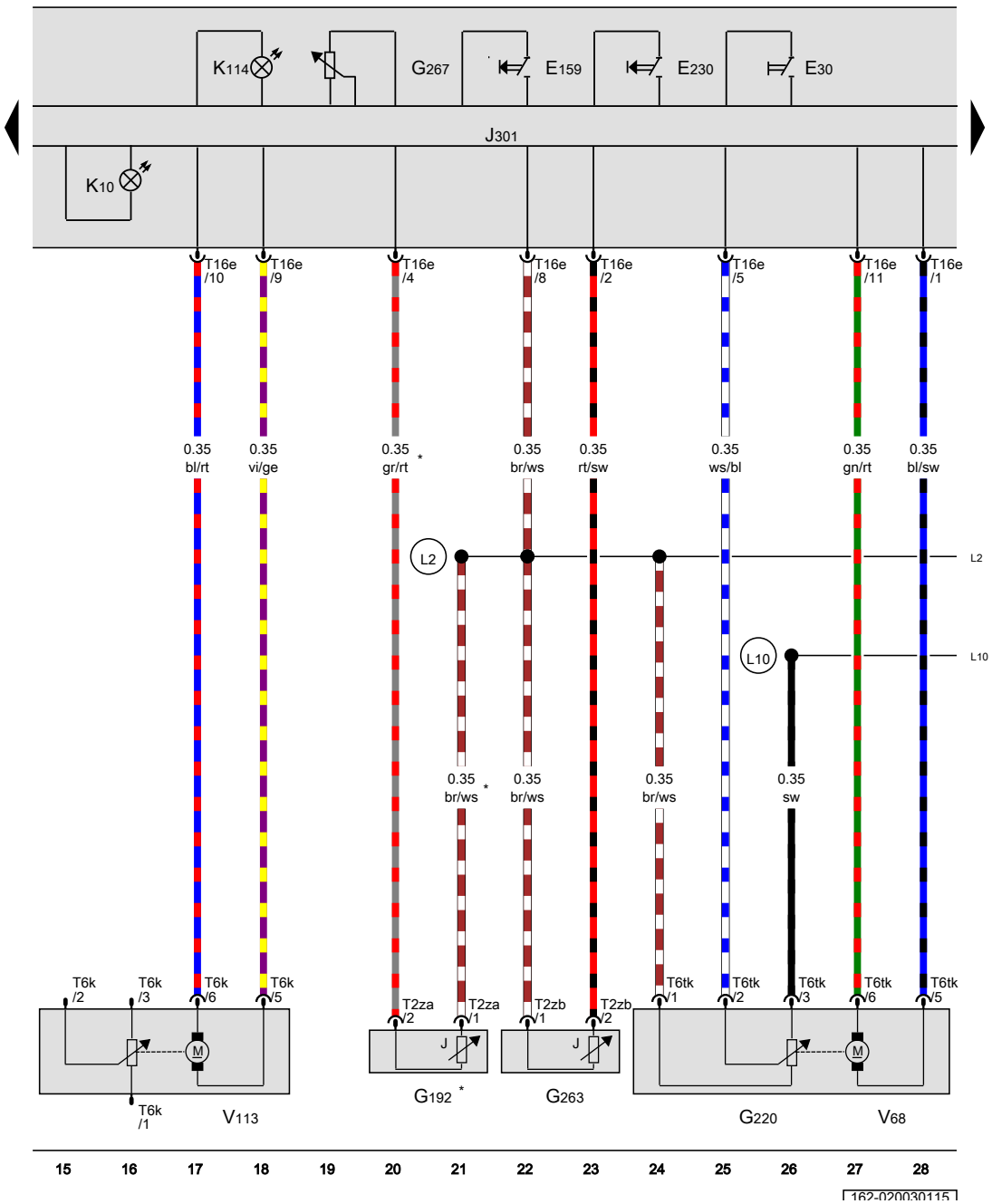

Footwell vent temperature sensor, Left temperature control door motor position sensor, Evaporator vent temperature sensor, A/C control module, Temperature control door motor

E30	A/C switch
E159	Fresh air/recirculation door switch
E230	Rear window defogger button
G192	Footwell vent temperature sensor
G220	Left temperature control door motor position sensor
G263	Evaporator vent temperature sensor
G267	Temperature selector knob potentiometer
J301	A/C control module
K10	Rear window defogger indicator lamp
K114	Fresh air and recirculation mode indicator lamp
T2za	2-pin connector
T2zb	2-pin connector
T6k	6-pin connector
T6tk	6-pin connector
T16e	16-pin connector
V68	Temperature control door motor
V113	Recirculation door motor
L2	Connection (in A/C system wiring harness)
L10	Connection 2 (in A/C system wiring harness)
*	Only for vehicles with Climatic

ws	=	white
sw	=	black
ro	=	red
rt	=	red
br	=	brown
gn	=	green
bl	=	blue
gr	=	grey
li	=	lilac
vi	=	lilac
ge	=	yellow
or	=	orange
rs	=	pink

Protected by copyright. Copying for private or commercial purposes, in part or in whole, is not permitted unless authorised by Volkswagen AG. Volkswagen AG does not guarantee or accept any liability with respect to the correctness of information in this document. Copyright by Volkswagen AG.

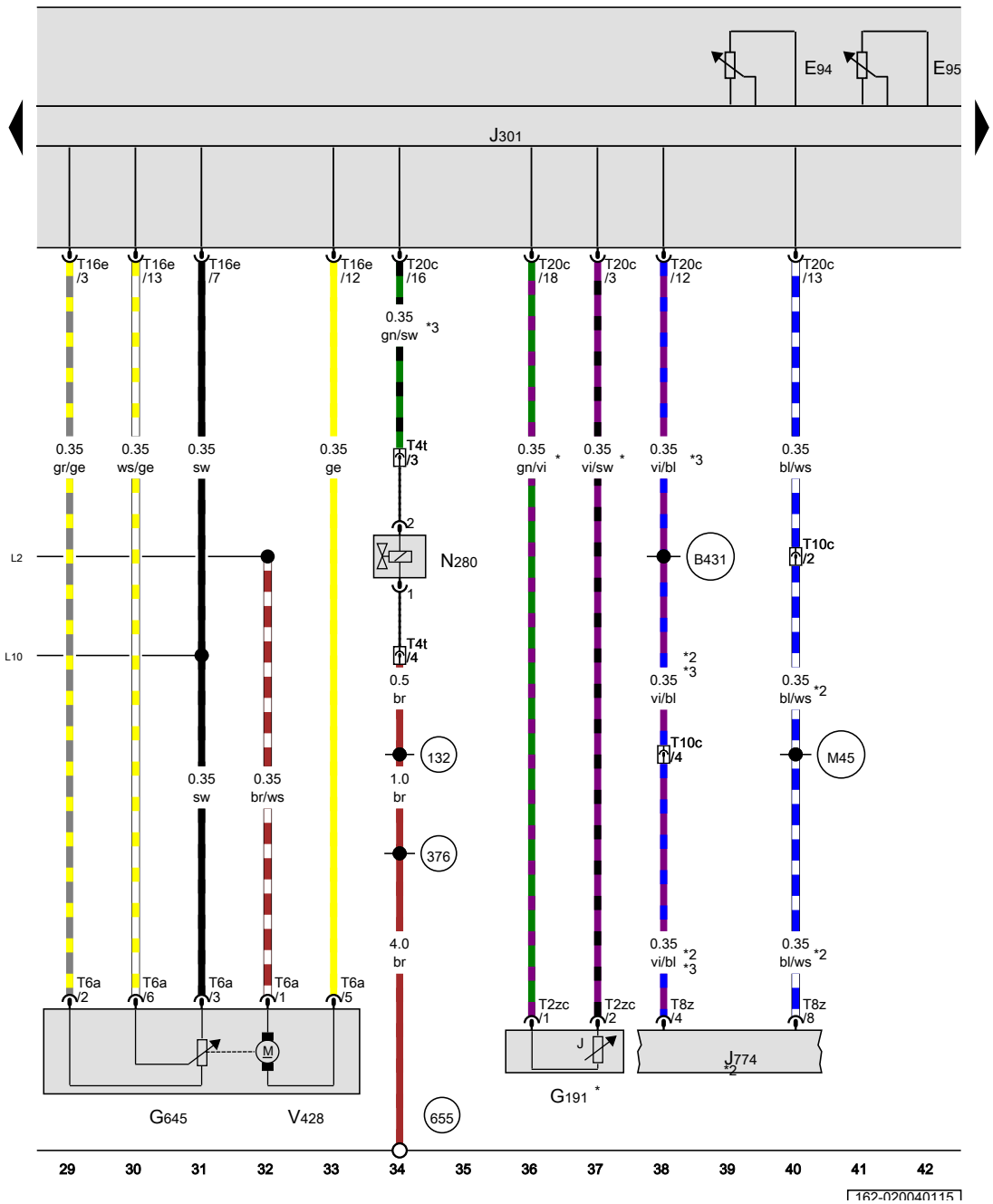

Center vent temperature sensor, Air distribution door motor position sensor, A/C control module, A/C compressor regulator valve, Air distribution door motor

E94	Heated driver seat adjuster
E95	Heated front passenger seat adjuster
G191	Center vent temperature sensor
G645	Air distribution door motor position sensor
J301	A/C control module
J774	Front seat heating control module
N280	A/C compressor regulator valve
T2zc	2-pin connector
T4t	4-pin connector, near the starter
T6a	6-pin connector
T8z	8-pin connector
T10c	10-pin connector, on the heater
T16e	16-pin connector
T20c	20-pin connector
V428	Air distribution door motor
132	Ground connection 3 (in engine compartment wiring harness)
376	Ground connection 11 (in main wiring harness)
655	Ground connection on left headlamp
B431	Seat heating connection (in main wiring harness)
L2	Connection (in A/C system wiring harness)
L10	Connection 2 (in A/C system wiring harness)
M45	Connection 5 (in driver seat wiring harness)
*	Only for vehicles with Climatic
*2	Only for vehicles with an auxiliary heater
*3	The color of the wires depends on vehicle equipment

ws	=	white
sw	=	black
ro	=	red
rt	=	red
br	=	brown
gn	=	green
bl	=	blue
gr	=	grey
li	=	lilac
vi	=	lilac
ge	=	yellow
or	=	orange
rs	=	pink

Protected by copyright. Copying for private or commercial purposes, in part or in whole, is not permitted unless authorised by Volkswagen AG. Volkswagen AG does not guarantee or accept any liability with respect to the correctness of information in this document. Copyright by Volkswagen AG.

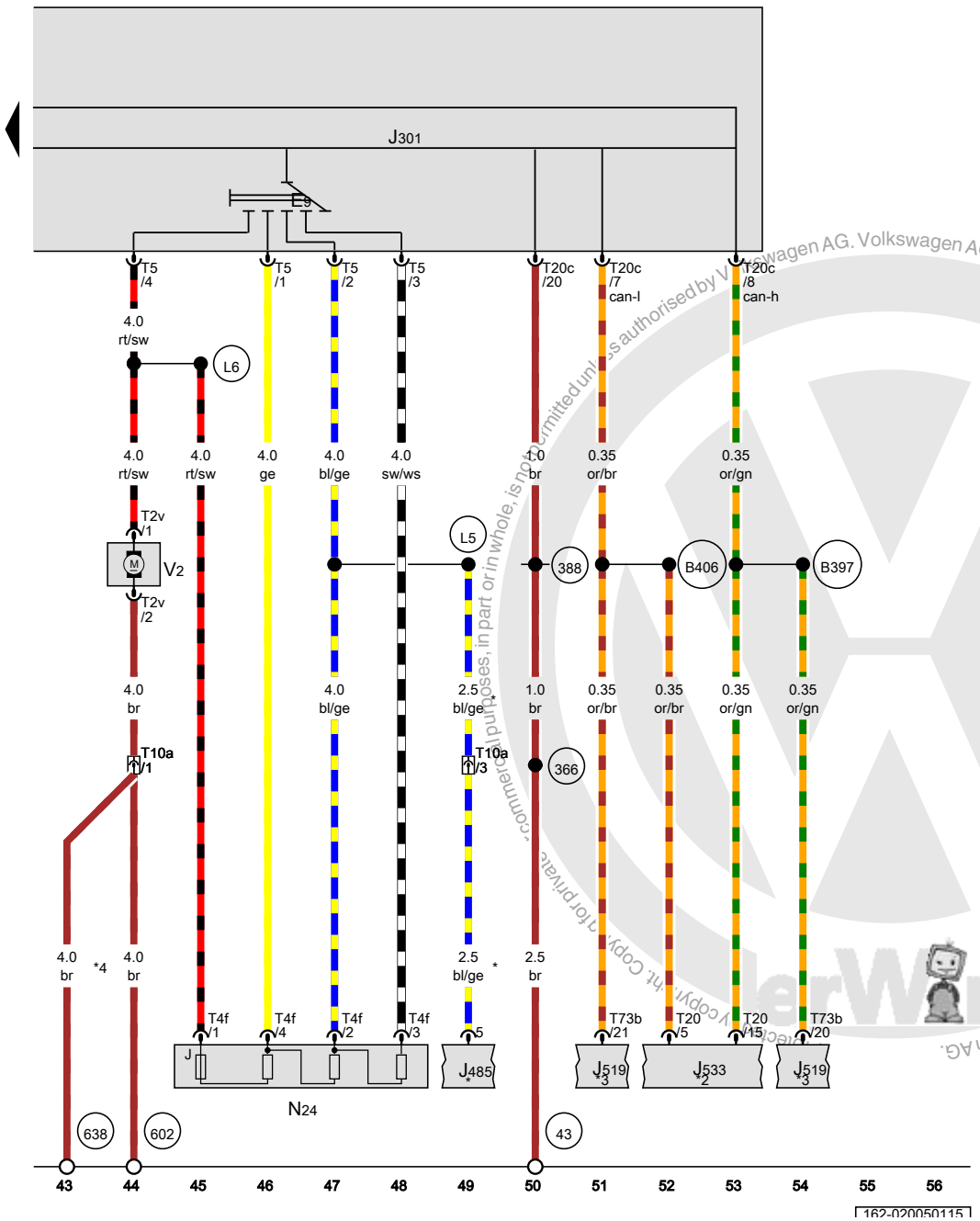

Fresh air blower switch, A/C control module, Fresh air blower series resistor with fuse, Fresh air blower

E9	Fresh air blower switch
J301	A/C control module
J485	Parking heater operation relay
J519	Vehicle electrical system control module
J533	Data bus on board diagnostic interface
N24	Fresh air blower series resistor with fuse
T2v	2-pin connector
T4f	4-pin connector
T5	5-pin connector
T10a	10-pin connector, on the heater
T20	20-pin connector
T20c	20-pin connector
T73b	73-pin connector
V2	Fresh air blower
43	Ground connection on A-pillar, lower right
366	Ground connection 1 (in main wiring harness)
388	Ground connection 23 (in main wiring harness)
602	Ground connection in left front footwell
638	Ground connection on right A-pillar
B397	Comfort system CAN bus high connection 1 (in main wiring harness)
B406	Comfort system CAN bus low connection 1 (in main wiring harness)
L5	Connection 1 (in A/C unit wiring harness)
L6	Connection 2 (in A/C unit wiring harness)
*	Only for vehicles with auxiliary coolant heater
*2	only for vehicles with High equipment (AW1)
*3	only for vehicles with Low equipment (AW0)
*4	Only for right-hand drive vehicles

ws	=	white
sw	=	black
ro	=	red
rt	=	red
br	=	brown
gn	=	green
bl	=	blue
gr	=	grey
li	=	lilac
vi	=	lilac
ge	=	yellow
or	=	orange
rs	=	pink

Volkswagen AG. Volkswagen AG does not guarantee or accept any liability with respect to the correctness of information in this document. Copyright by Volkswagen AG. The copyright for this document, commercial purposes, in part or in whole, is not permitted unless authorised by Volkswagen AG.

Climatronic , (9AK)

from October 2010

Protected by copyright. Copying for private or commercial purposes, in part or in whole, is not permitted unless authorised by Volkswagen AG. Volkswagen AG does not guarantee or accept any liability with respect to the correctness of information in this document. Copyright by Volkswagen AG.

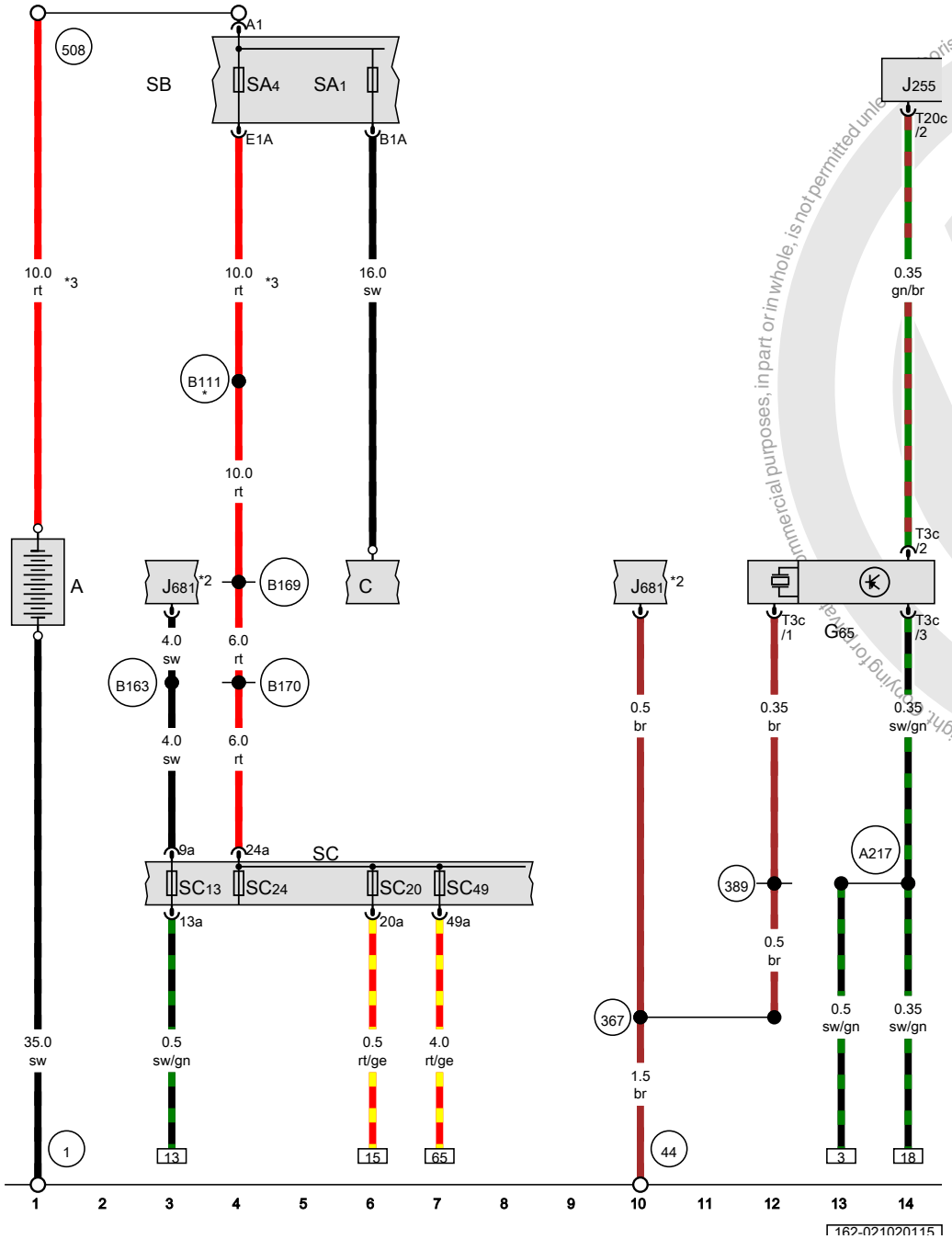

ws	=	white
sw	=	black
ro	=	red
rt	=	red
br	=	brown
gn	=	green
bl	=	blue
gr	=	grey
li	=	lilac
vi	=	lilac
ge	=	yellow
or	=	orange
rs	=	pink

Battery, High pressure sensor, Climatronic control module

A	Battery
C	Generator
G65	High pressure sensor
J255	Climatronic control module
J681	Terminal 15 power supply relay 2
SA1	Fuse 1 (on fuse panel A)
SA4	Fuse 4 (on fuse panel A)
SB	Fuse panel B
SC	Fuse panel C
SC13	Fuse 13 (on fuse panel C)
SC20	Fuse 20 (on fuse panel C)
SC24	Fuse 24 (on fuse panel C)
SC49	Fuse 49 (on fuse panel C)
T3c	3-pin connector
T20c	20-pin connector
1	Ground strap, battery to body
44	Ground connection on A-pillar, lower left
367	Ground connection 2 (in main wiring harness)
389	Ground connection 24 (in main wiring harness)
508	Terminal 30 threaded connection (on E-box)
A217	Positive connection 8 (15a) (in instrument panel wiring harness)
B111	Positive connection 1 (30a) (in interior wiring harness)
B163	Positive connection 1 (15) (in interior wiring harness)
B169	Positive connection 1 (30) (in interior wiring harness)
B170	Positive connection 2 (30) (in interior wiring harness)
*	Omitted as a running change
*2	Refer to applicable standard equipment wiring diagram
*3	16.0 diameter possible

Protected by copyright. Copying for private or commercial purposes, in part or in whole, is not permitted unless authorised by Volkswagen AG. Volkswagen AG does not guarantee or assume any liability with respect to the correctness of information in this document. Copyright by Volkswagen AG.

Sunlight photo sensor, Left vent temperature sensor, Climatronic control module

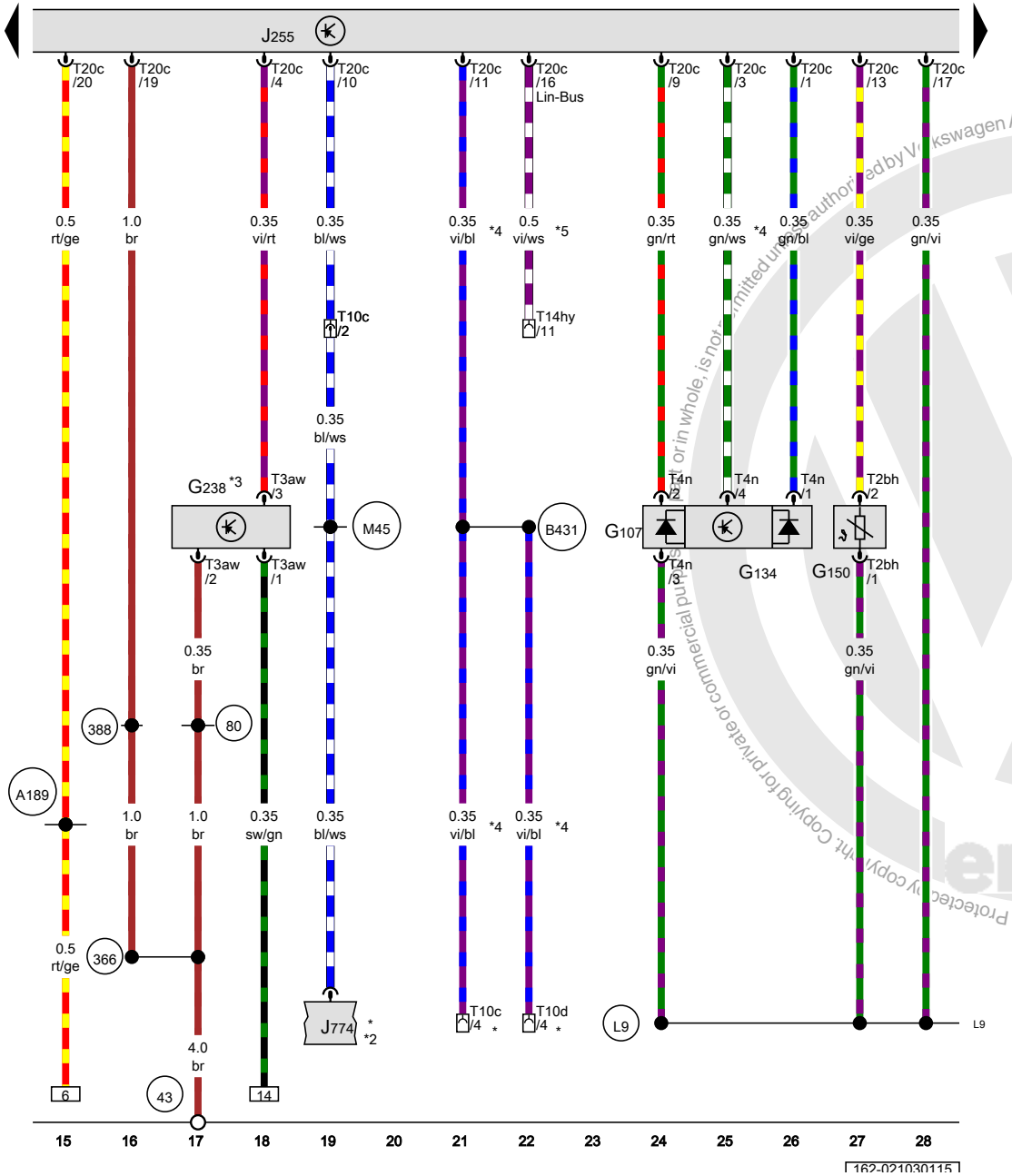

G107	Sunlight photo sensor
G134	Sunlight photo sensor 2
G150	Left vent temperature sensor
G238	Air quality sensor
J255	Climatronic control module
J774	Front seat heating control module
T2bh	2-pin connector
T3aw	3-pin connector
T4n	4-pin connector
T10c	10-pin connector
T10d	10-pin connector
T14hy	14-pin connector
T20c	20-pin connector
43	Ground connection on A-pillar, lower right
80	Ground connection 1 (in instrument cluster wiring harness)
366	Ground connection 1 (in main wiring harness)
388	Ground connection 23 (in main wiring harness)
A189	Positive connection 5 (30a) (in instrument panel wiring harness)
B431	Seat heating connection (in main wiring harness)
L9	Connection 1 (in A/C system wiring harness)
M45	Connection 5 (in driver seat wiring harness)
*	Only for vehicles with an auxiliary heater
*2	Refer to the applicable heated seats wiring diagram
*3	Depending on equipment
*4	The color of the wires depends on vehicle equipment
*5	only for vehicles with hybrid drive

ws	=	white
sw	=	black
ro	=	red
rt	=	red
br	=	brown
gn	=	green
bl	=	blue
gr	=	grey
li	=	lilac
vi	=	lilac
ge	=	yellow
or	=	orange
rs	=	pink

Protected by copyright. Copying for private or commercial purposes, in part or in whole, is not permitted unless authorised by Volkswagen AG. Volkswagen AG does not guarantee or accept any liability with respect to the correctness of information in this document. Copyright by Volkswagen AG.

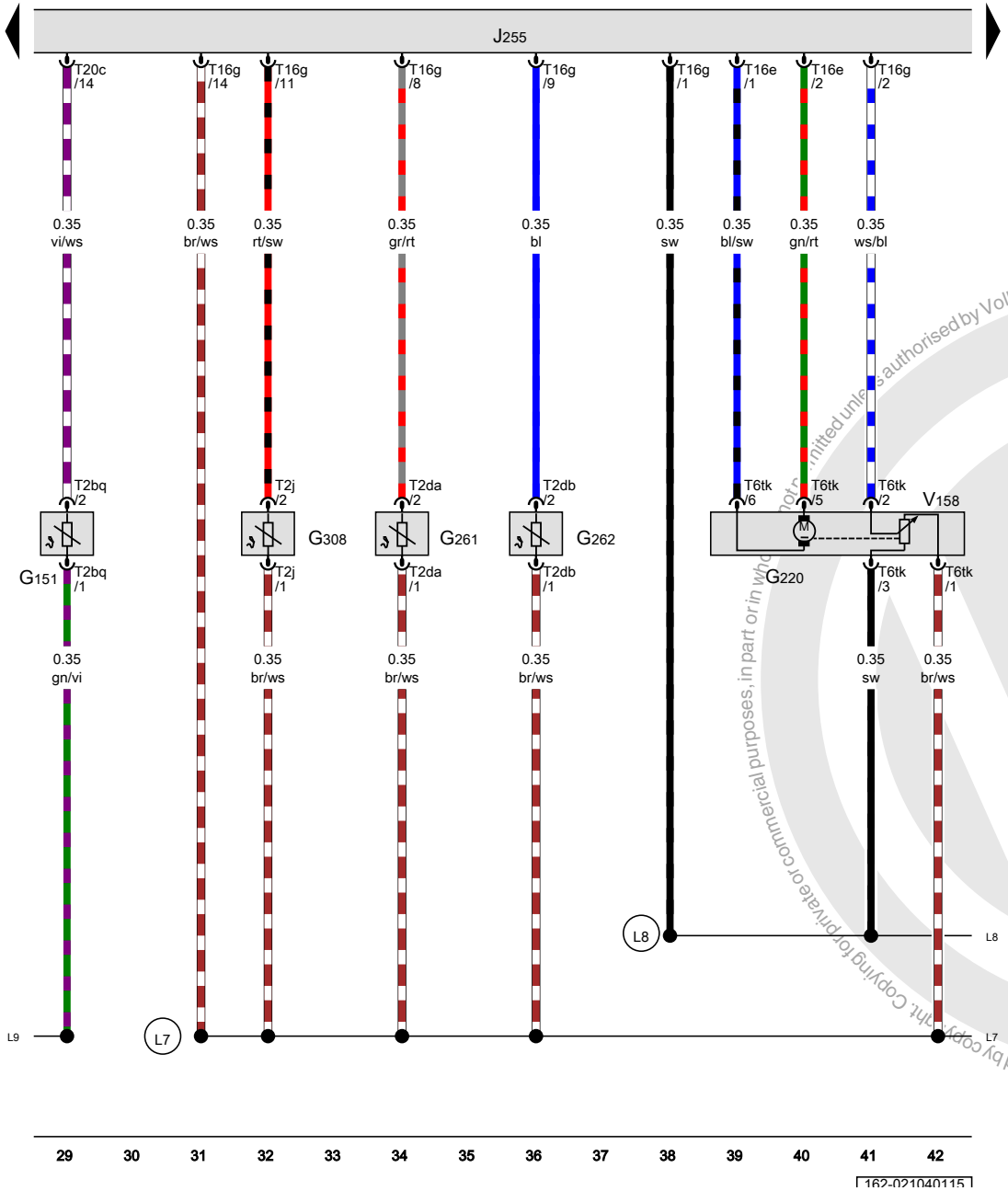

Right vent temperature sensor, Left temperature control door motor position sensor, Left footwell vent temperature sensor, Right footwell vent temperature sensor, Evaporator temperature sensor, Climatronic control module, Left temperature control door motor

G151	Right vent temperature sensor
G220	Left temperature control door motor position sensor
G261	Left footwell vent temperature sensor
G262	Right footwell vent temperature sensor
G308	Evaporator temperature sensor
J255	Climatronic control module
T2bq	2-pin connector
T2da	2-pin connector
T2db	2-pin connector
T2j	2-pin connector
T6tk	6-pin connector
T16e	16-pin connector
T16g	16-pin connector
T20c	20-pin connector
V158	Left temperature control door motor
L7	Connection 3 (in A/C unit wiring harness)
L8	Connection 4 (in A/C unit wiring harness)
L9	Connection 1 (in A/C system wiring harness)

ws	=	white
sw	=	black
ro	=	red
rt	=	red
br	=	brown
gn	=	green
bl	=	blue
gr	=	grey
li	=	lilac
vi	=	lilac
ge	=	yellow
or	=	orange
rs	=	pink

Protected by copyright. Copying for private or commercial purposes, in part or in whole, is not permitted unless authorised by Volkswagen AG. Volkswagen AG does not guarantee or accept any liability with respect to the correctness of information in this document. Copyright by Volkswagen AG.

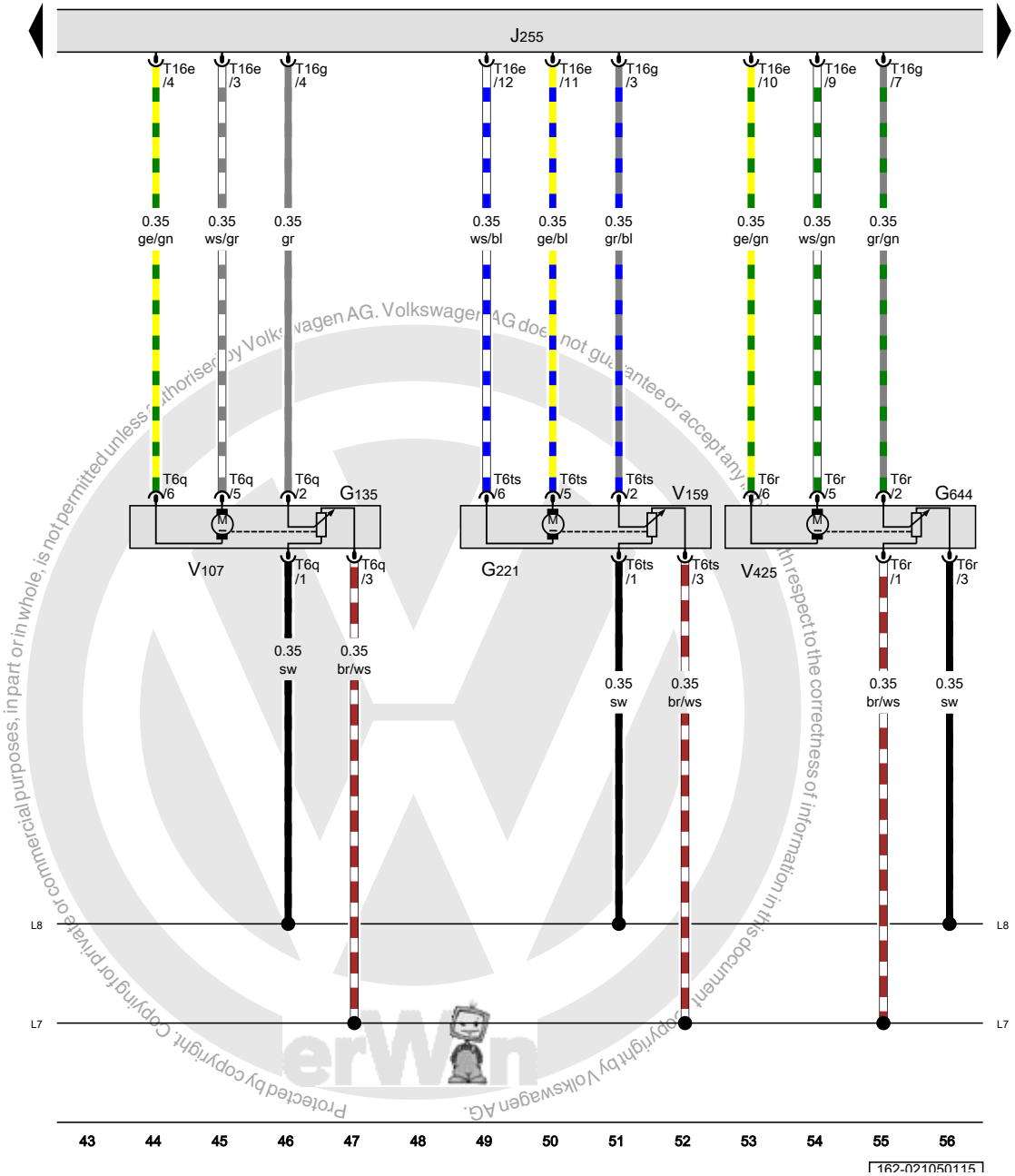

Defroster door motor position sensor, Right temperature control door motor position sensor, Fresh air/recirculating air/back pressure door motor position sensor, Climatronic control module, Defroster door motor, Right temperature control door motor, Fresh air/recirculating air/back pressure door motor

G135	Defroster door motor position sensor
G221	Right temperature control door motor position sensor
G644	Fresh air/recirculating air/back pressure door motor position sensor
J255	Climatronic control module
T6q	6-pin connector
T6r	6-pin connector
T6ts	6-pin connector
T16e	16-pin connector
T16g	16-pin connector
V107	Defroster door motor
V159	Right temperature control door motor
V425	Fresh air/recirculating air/back pressure door motor
L7	Connection 3 (in A/C unit wiring harness)
L8	Connection 4 (in A/C unit wiring harness)

ws	=	white
sw	=	black
ro	=	red
rt	=	red
br	=	brown
gn	=	green
bl	=	blue
gr	=	grey
li	=	lilac
vi	=	lilac
ge	=	yellow
or	=	orange
rs	=	pink

Protected by copyright. Copying for private or commercial purposes, in part or in whole, is not permitted unless authorised by Volkswagen AG. Volkswagen AG does not guarantee or accept any liability with respect to the correctness of information in this document. Copyright by Volkswagen AG.

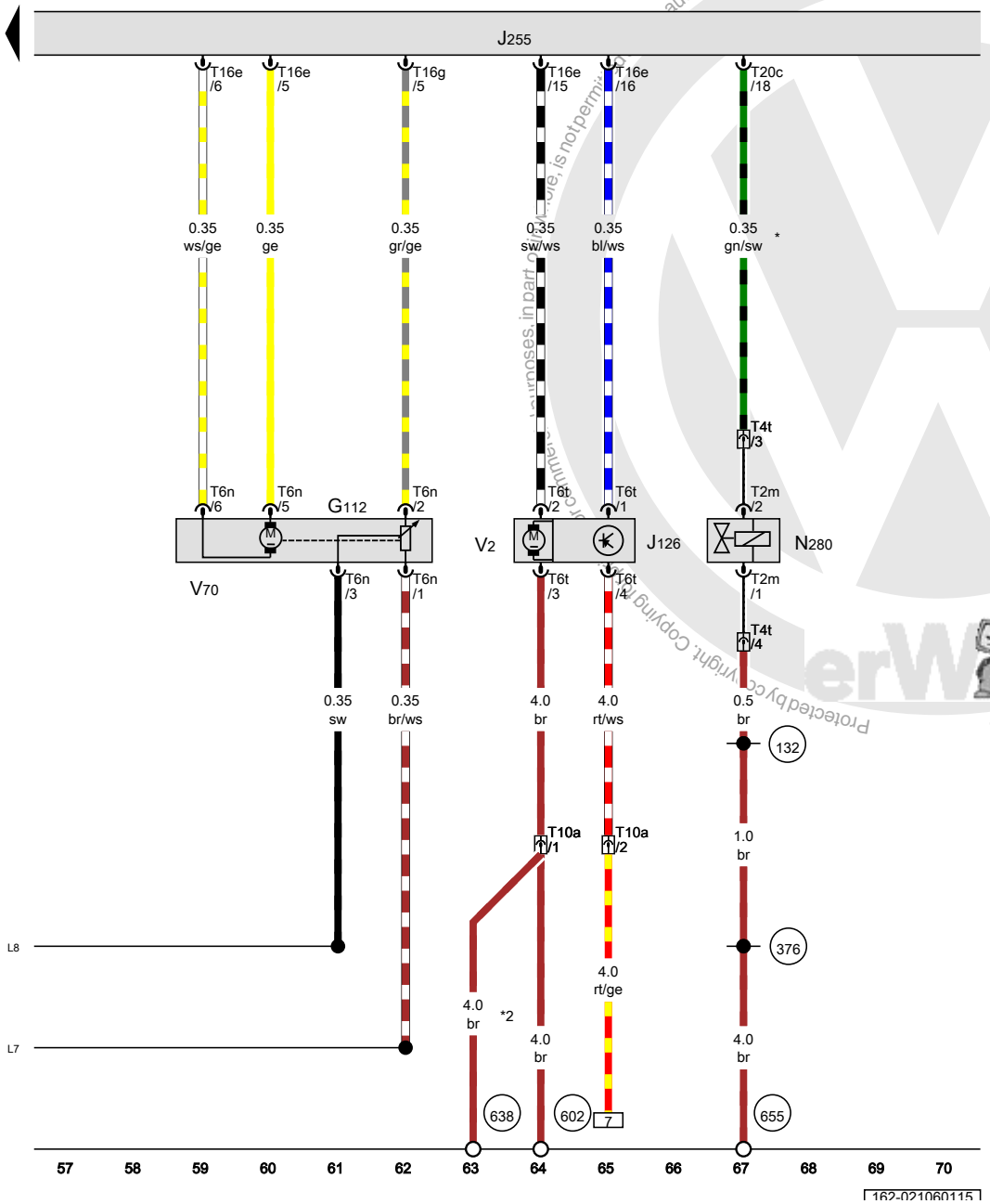

Central door motor position sensor, Fresh air blower control module, Climatronic control module, A/C compressor regulator valve, Fresh air blower, Central air door motor

G112	Central door motor position sensor
J126	Fresh air blower control module
J255	Climatronic control module
N280	A/C compressor regulator valve
T2m	2-pin connector
T4t	4-pin connector
T6n	6-pin connector
T6t	6-pin connector
T10a	10-pin connector
T16e	16-pin connector
T16g	16-pin connector
T20c	20-pin connector
V2	Fresh air blower
V70	Central air door motor
132	Ground connection 3 (in engine compartment wiring harness)
376	Ground connection 11 (in main wiring harness)
602	Ground connection in left front footwell
638	Ground connection on right A-pillar
655	Ground connection on left headlamp
L7	Connection 3 (in A/C unit wiring harness)
L8	Connection 4 (in A/C unit wiring harness)
*	The color of the wires depends on vehicle equipment
*2	Only for right-hand drive vehicles

ws	=	white
sw	=	black
ro	=	red
rt	=	red
br	=	brown
gn	=	green
bl	=	blue
gr	=	grey
li	=	lilac
vi	=	lilac
ge	=	yellow
or	=	orange
rs	=	pink

Protected by copyright. Copying, distribution and publication are not permitted without authorisation by Volkswagen AG. Volkswagen AG does not guarantee or accept any liability with respect to the correctness of information in this document. Copyright by Volkswagen AG.

Climatronic control module, Vehicle electrical system control module

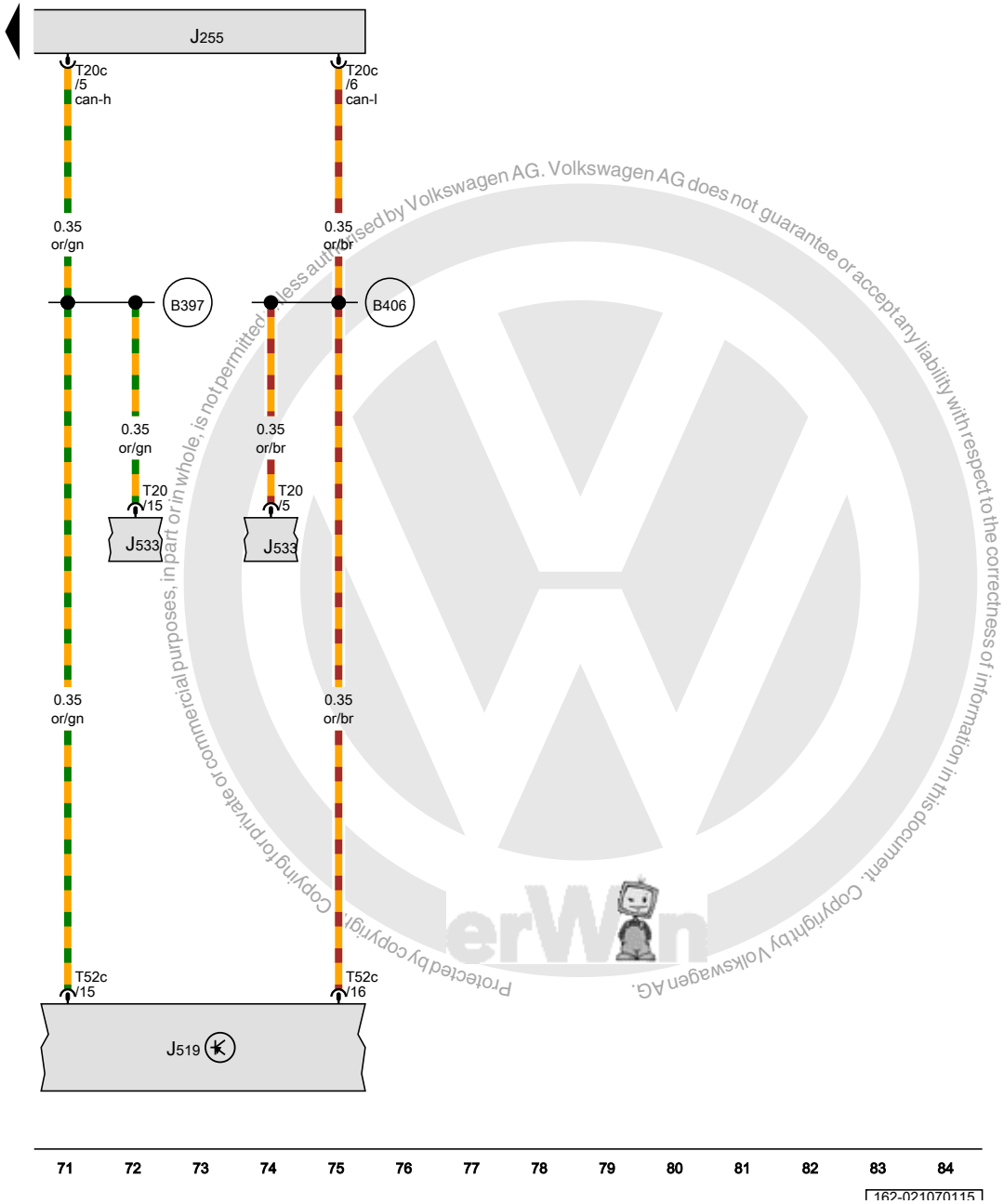

J255 Climatronic control module
J519 Vehicle electrical system control module
J533 Data bus on board diagnostic interface
T20 20-pin connector
T20c 20-pin connector
T52c 52-pin connector
B397 Comfort system CAN bus high connection 1 (in main wiring harness)
B406 Comfort system CAN bus low connection 1 (in main wiring harness)

ws = white
sw = black
ro = red
rt = red
br = brown
gn = green
bl = blue
gr = grey
li = lilac
vi = lilac
ge = yellow
or = orange
rs = pink

Protected by copyright. Copying for private or commercial purposes, in part or in whole, is not permitted unless authorised by Volkswagen AG. Volkswagen AG does not guarantee or accept any liability with respect to the correctness of information in this document. Copyright by Volkswagen AG.

Anti-Lock Brake System (ABS) , (1AC)

from April 2010

Protected by copyright. Copying for private or commercial purposes, in part or in whole, is not permitted unless authorised by Volkswagen AG. Volkswagen AG does not guarantee or accept any liability with respect to the correctness of information in this document. Copyright by Volkswagen AG.

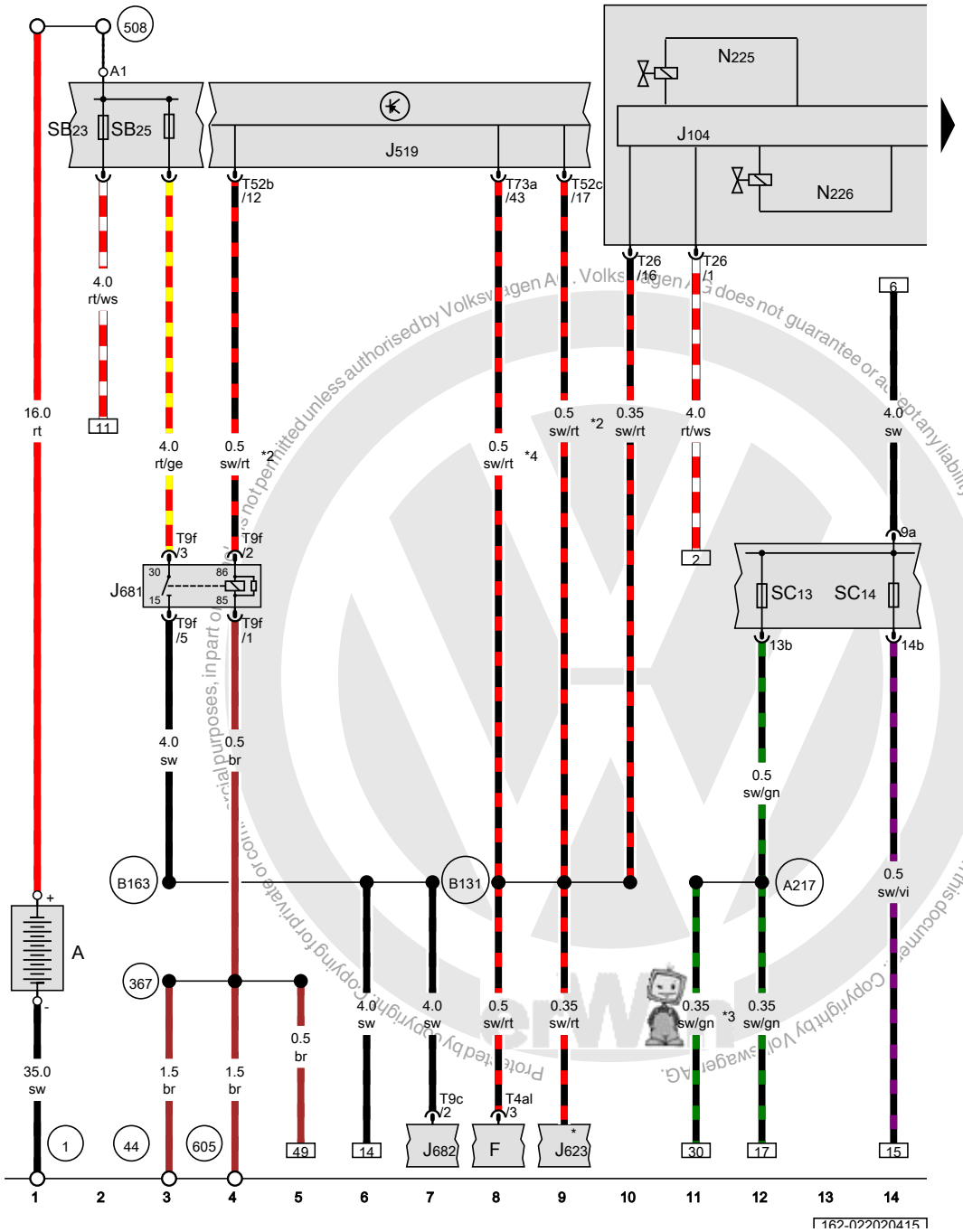

Battery, ABS control module, Vehicle electrical control module system, Terminal 15 power supply relay 2

A	Battery
F	Brake lamp switch
J104	ABS control module
J519	Vehicle electrical control module system
J623	Engine control module
J681	Terminal 15 power supply relay 2
J682	Terminal 50 power supply relay
N225	Driving dynamics regulation switch valve 1
N226	Driving dynamics regulation switch valve 2
SC13	Fuse 13 (on fuse panel C)
SC14	Fuse 14 (on fuse panel C)
SB23	Fuse 23 (on fuse panel B)
SB25	Fuse 25 (on fuse panel B)
T4al	4-pin connector
T9c	9-pin connector
T9f	9-pin connector
T26	26-pin connector
T52b	52-pin connector
T52c	52-pin connector
T73a	73-pin connector
T94	94-pin connector
1	Ground strap, battery to body
44	Ground connection on A-pillar, lower left
367	Ground connection 2 (in main wiring harness)
508	Terminal 30 threaded connection (on E-box)
605	Ground connection on upper steering column
A217	Positive connection 8 (15a) (in instrument panel wiring harness)
B131	Connection 54 (in interior wiring harness)
B163	Positive connection 1 (15) (in interior wiring harness)
*	Refer to applicable engine wiring diagram
*2	only for vehicles with High equipment (AW1)
*3	Only for vehicles with tire pressure monitoring
*4	only for vehicles with Low equipment (AW0)

ws	=	white
sw	=	black
ro	=	red
rt	=	red
br	=	brown
gn	=	green
bl	=	blue
gr	=	grey
li	=	lilac
vi	=	lilac
ge	=	yellow
or	=	orange
rs	=	pink

Protected by copyright. Copying for private or commercial purposes, in part or in whole, is not permitted unless authorised by Volkswagen AG. Volkswagen AG does not guarantee or accept any liability with respect to the correctness of information in this document. Copyright by Volkswagen AG.

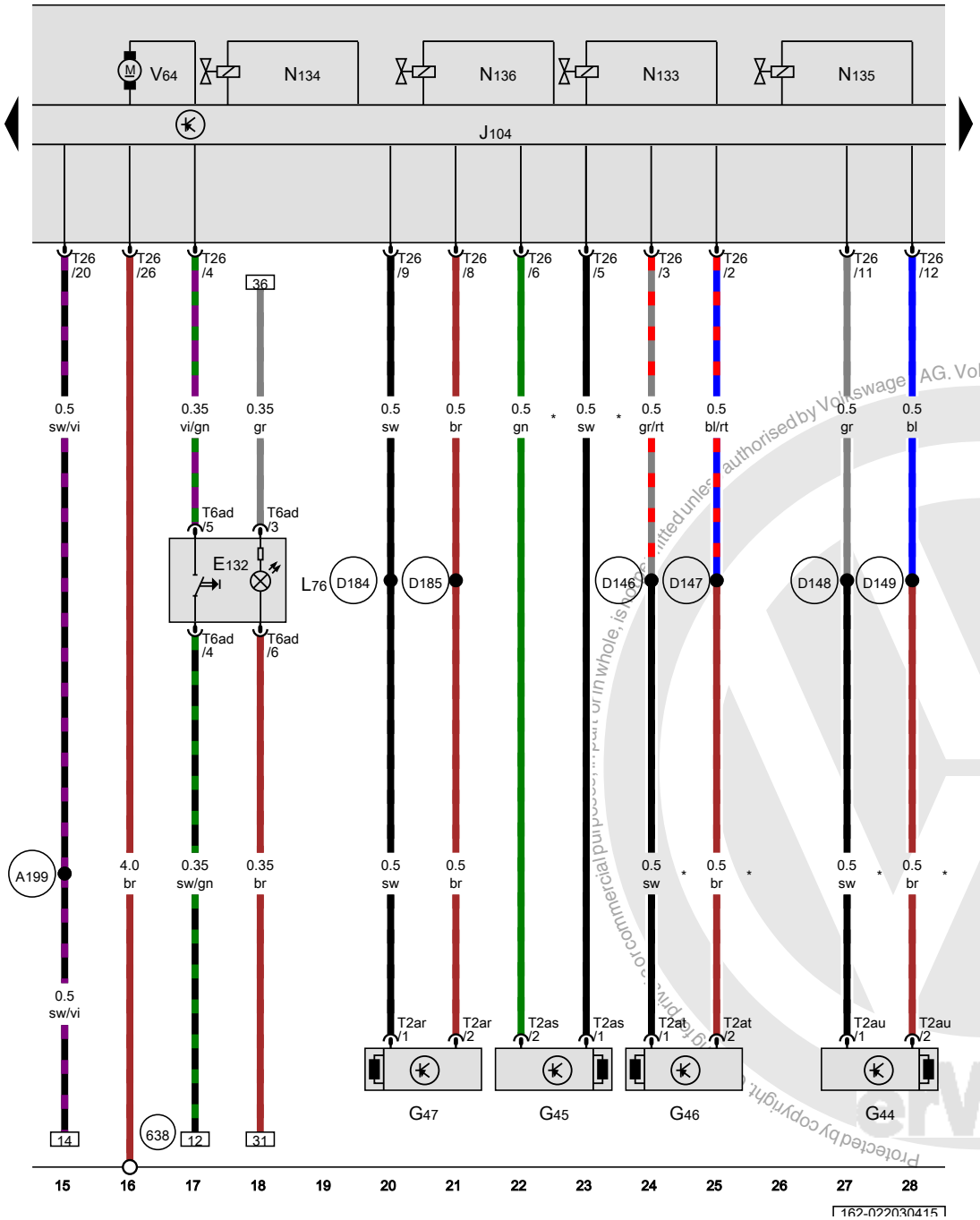

ws = white
sw = black
ro = red
rt = red
br = brown
gn = green
bl = blue
gr = grey
li = lilac
vi = lilac
ge = yellow
or = orange
rs = pink

ASR switch, Right rear ABS wheel speed sensor, Right front ABS wheel speed sensor, Left rear ABS wheel speed sensor, Left front ABS wheel speed sensor, ABS control module

E132	ASR switch
G44	Right rear ABS wheel speed sensor
G45	Right front ABS wheel speed sensor
G46	Left rear ABS wheel speed sensor
G47	Left front ABS wheel speed sensor
J104	ABS control module
L76	Push button illumination bulb
N133	Right rear ABS inlet valve
N134	Left rear ABS inlet valve
N135	Right rear ABS outlet valve
N136	Left rear ABS outlet valve
T2ar	Double connector
T2as	Double connector
T2at	Double connector
T2au	Double connector
T6ad	6-pin connector
T26	26-pin connector
V64	ABS hydraulic pump
638	Ground connection on right A-pillar
A199	Positive connection 4 (15a) (in instrument panel wiring harness)
D146	Left rear speed sensor positive connection (in engine compartment wiring harness)
D147	Left rear speed sensor negative connection (in engine compartment wiring harness)
D148	Right rear speed sensor positive connection (in engine compartment wiring harness)
D149	Right rear speed sensor negative connection (in engine compartment wiring harness)
D184	Left front speed sensor positive connection (in engine compartment wiring harness)
D185	Left front speed sensor negative connection (in engine compartment wiring harness)
*	Diameter depends on equipment

Protected by copyright. Copyright by Volkswagen AG. Volkswagen AG does not guarantee or accept any liability with respect to the correctness of information in this document. Copyright by Volkswagen AG.

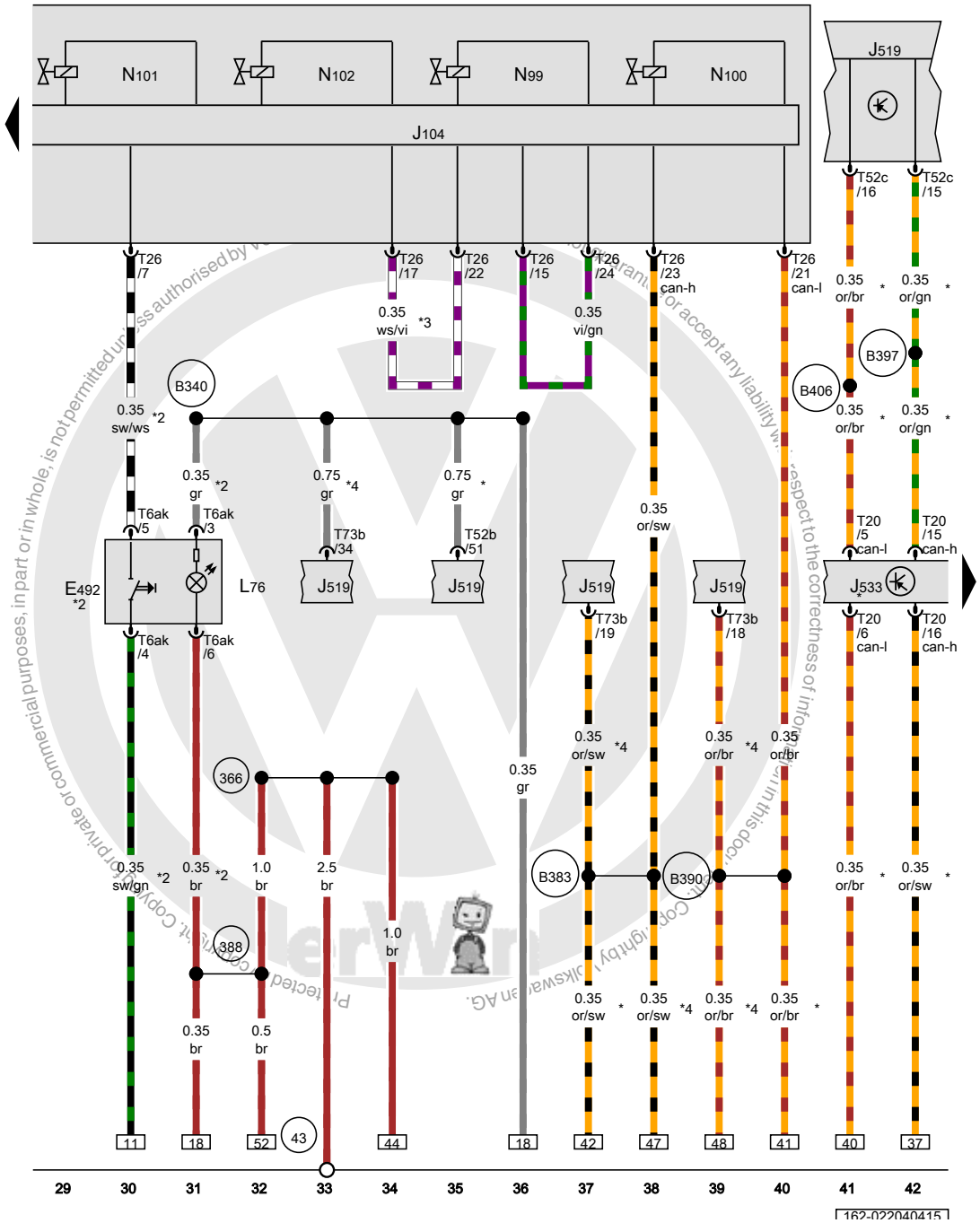

Tire pressure monitoring display button, ABS control module, Vehicle electrical control module system, Data bus on board diagnostic interface

E492	Tire pressure monitoring display button
J104	ABS control module
J519	Vehicle electrical control module system
J533	Data bus on board diagnostic interface, in the left footwell, near the center console
L76	Push button illumination bulb
N99	Right front ABS inlet valve
N100	Right front ABS outlet valve
N101	Left front ABS inlet valve
N102	Left front ABS outlet valve
T6ak	6-pin connector
T20	20-pin connector
T26	26-pin connector
T52b	52-pin connector
T52c	52-pin connector
T73b	73-pin connector
43	Ground connection on A-pillar, lower right
366	Ground connection 1 (in main wiring harness)
388	Ground connection 23 (in main wiring harness)
B340	Connection 58d (in main wiring harness) 1
B383	Powertrain CAN bus high connection 1 (in main wiring harness)
B390	Powertrain CAN bus low connection 1 (in main wiring harness)
B397	Comfort system CAN bus high connection 1 (in main wiring harness)
B406	Comfort system CAN bus low connection 1 (in main wiring harness)
*	only for vehicles with High equipment (AW1)
*2	Only for vehicles with tire pressure monitoring
*3	Omitted as a running change
*4	only for vehicles with Low equipment (AW0)

ws	=	white
sw	=	black
ro	=	red
rt	=	red
br	=	brown
gn	=	green
bl	=	blue
gr	=	grey
li	=	lilac
vi	=	lilac
ge	=	yellow
or	=	orange
rs	=	pink

Protected copyright. Copyright by Volkswagen AG. Copyright by Volkswagen AG.

Parking brake indicator lamp switch, Brake fluid level warning switch, Left front brake pad wear sensor, Warning buzzer and tone, Instrument cluster control module, Data bus on board diagnostic interface, ABS indicator lamp, Brake system indicator lamp, ASR/ESP indicator lamp

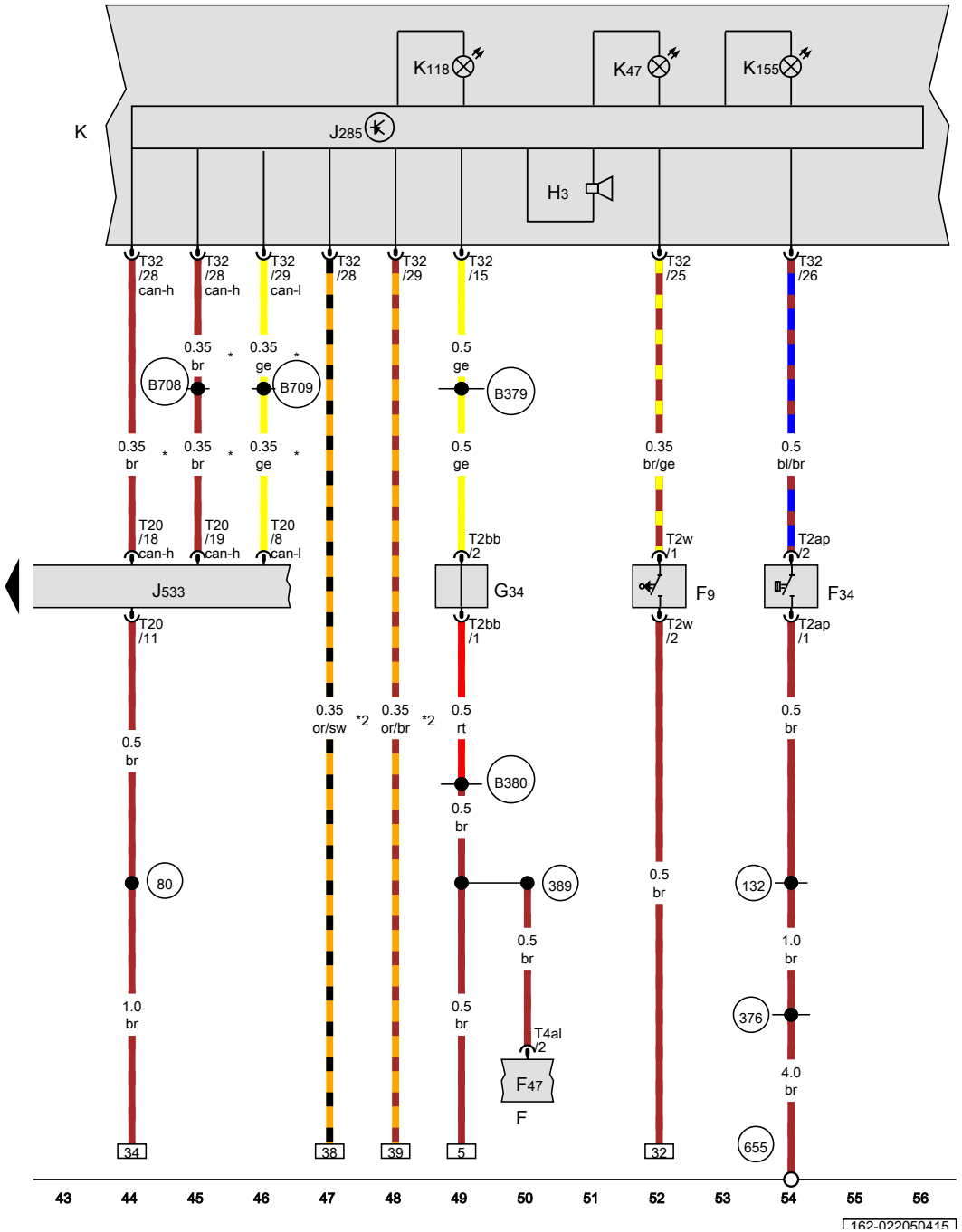

F	Brake lamp switch
F9	Parking brake indicator lamp switch
F34	Brake fluid level warning switch
F47	Brake pedal switch
G34	Left front brake pad wear sensor
H3	Warning buzzer and tone
J285	Instrument cluster control module
J533	Data bus on board diagnostic interface, in the left footwell, near the center console
K	Instrument cluster
K47	ABS indicator lamp
K118	Brake system indicator lamp
K155	ASR/ESP indicator lamp
T2ap	Double connector
T2bb	Double connector
T2w	Double connector
T4al	4-pin connector
T20	20-pin connector
T32	32-pin connector
80	Ground connection 1 (in instrument cluster wiring harness)
132	Ground connection 3 (in engine compartment wiring harness)
376	Ground connection 11 (in main wiring harness)
389	Ground connection 24 (in main wiring harness)
655	Ground connection on left headlamp
B379	Brake wear indicator connection 1 (in main wiring harness)
B380	Brake wear indicator connection 2 (in main wiring harness)
B708	Instrument cluster CAN bus high connection 1 (in main wiring harness)
B709	Instrument cluster CAN bus low connection 1 (in main wiring harness)
*	only for vehicles with High equipment (AW1)
*2	only for vehicles with Low equipment (AW0)

ws	=	white
sw	=	black
ro	=	red
rt	=	red
br	=	brown
gn	=	green
bl	=	blue
gr	=	grey
li	=	lilac
vi	=	lilac
ge	=	yellow
or	=	orange
rs	=	pink

Protected by copyright. Copying for private or commercial purposes, in part or in whole, is not permitted unless authorised by Volkswagen AG. Volkswagen AG does not guarantee or accept any liability with respect to the correctness of information in this document. Copyright by Volkswagen AG.

Anti-Lock Brake System (ABS) with EDL and ASR and ESP , (1AS),(1AT)

from April 2010

Protected by copyright. Copying for private or commercial purposes, in part or in whole, is not permitted unless authorised by Volkswagen AG. Volkswagen AG does not guarantee or accept any liability with respect to the correctness of information in this document. Copyright by Volkswagen AG.

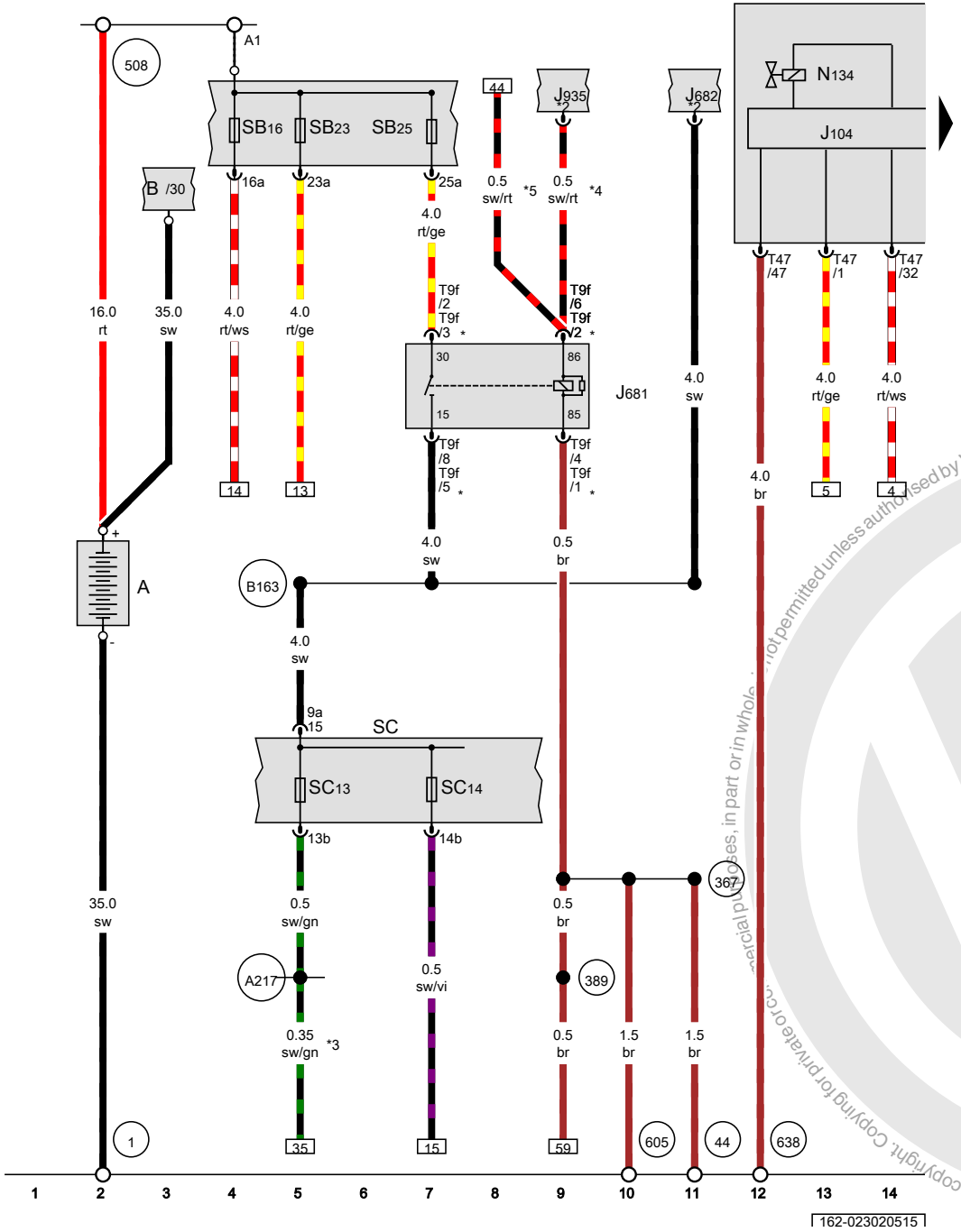

Battery, ABS control module, Terminal 15 power supply relay 2, Fuse panel C

A	Battery
B	Starter
J104	ABS control module
J681	Terminal 15 power supply relay 2
J682	Terminal 50 power supply relay
J935	Converter box
N134	Left rear ABS inlet valve
SC13	Fuse 13 (on fuse panel C)
SC14	Fuse 14 (on fuse panel C)
SB16	Fuse 16 (on fuse panel B)
SB23	Fuse 23 (on fuse panel B)
SB25	Fuse 25 (on fuse panel B)
SC	Fuse panel C
T9f	9-pin connector
T47	47-pin connector
1	Ground strap, battery to body
44	Ground connection on A-pillar, lower left
367	Ground connection 2 (in main wiring harness)
389	Ground connection 24 (in main wiring harness)
508	Terminal 30 threaded connection (on E-box)
605	Ground connection on upper steering column
638	Ground connection on right A-pillar
A217	Positive connection 8 (15a) (in instrument panel wiring harness)
B163	Positive connection 1 (15) (in interior wiring harness)
*	Running change
*2	Refer to applicable standard equipment wiring diagram
*3	Only for vehicles with tire pressure monitoring
*4	only for vehicles with Low equipment (AW0)
*5	only for vehicles with High equipment (AW1)

ws	=	white
sw	=	black
ro	=	red
rt	=	red
br	=	brown
gn	=	green
bl	=	blue
gr	=	grey
li	=	lilac
vi	=	lilac
ge	=	yellow
or	=	orange
rs	=	pink

Copyright by Volkswagen AG. Volkswagen AG does not guarantee or accept any liability with respect to the correctness of information in this document. Copyright by Volkswagen AG. Copying for private or commercial purposes, in part or in whole, is not permitted unless authorised by Volkswagen AG. Copyright by Volkswagen AG.

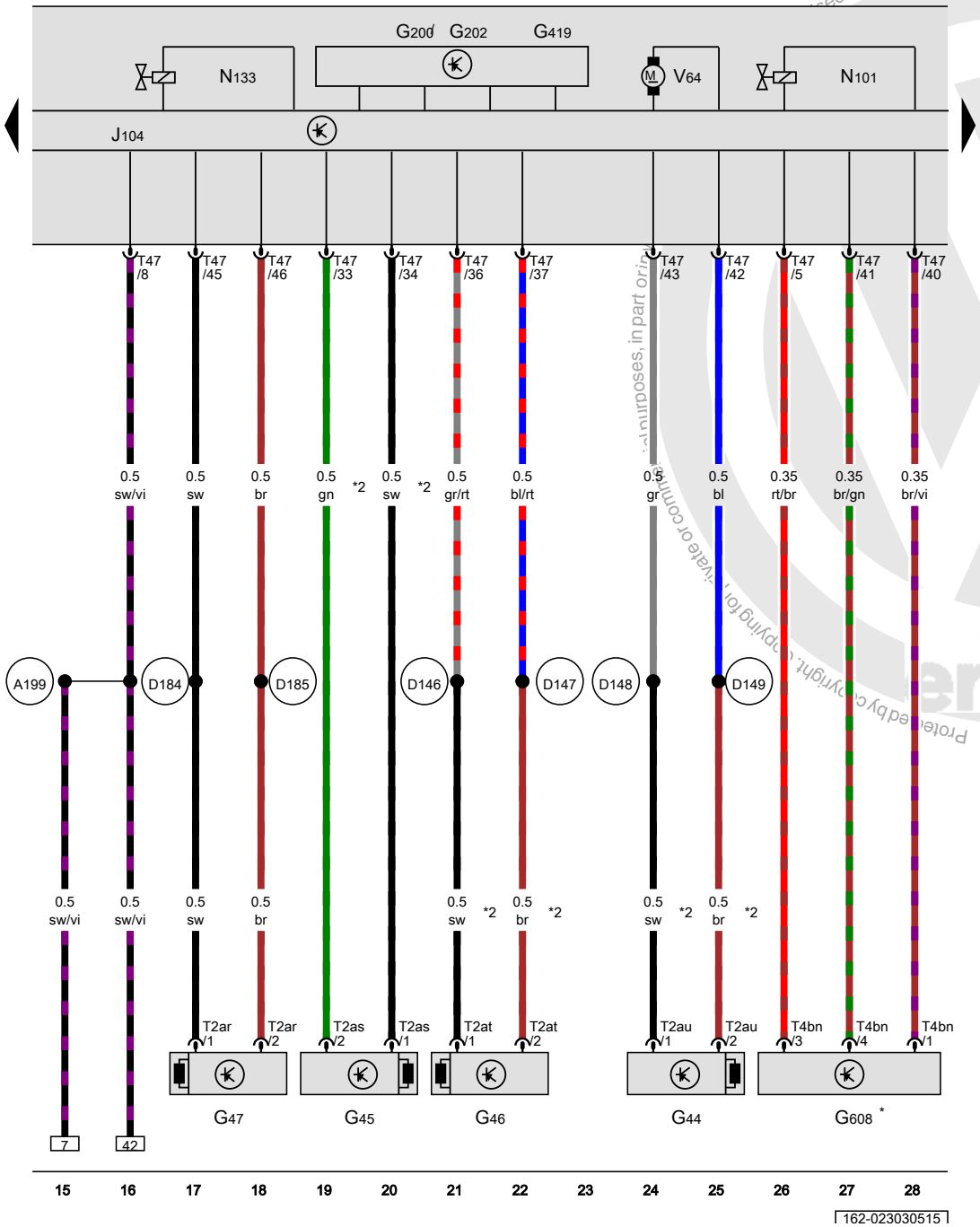

ws	=	white
sw	=	black
ro	=	red
rt	=	red
br	=	brown
gn	=	green
bl	=	blue
gr	=	grey
li	=	lilac
vi	=	lilac
ge	=	yellow
or	=	orange
rs	=	pink

Right rear ABS wheel speed sensor, Right front ABS wheel speed sensor, Left rear ABS wheel speed sensor, Left front ABS wheel speed sensor, Transverse acceleration sensor, Rotation rate sensor, ESP sensor unit, Vacuum sensor, ABS control module

G44	Right rear ABS wheel speed sensor
G45	Right front ABS wheel speed sensor
G46	Left rear ABS wheel speed sensor
G47	Left front ABS wheel speed sensor
G200	Transverse acceleration sensor
G202	Rotation rate sensor
G419	ESP sensor unit
G608	Vacuum sensor
J104	ABS control module
N101	Left front ABS inlet valve
N133	Right rear ABS inlet valve
T2ar	Double connector
T2as	Double connector
T2at	Double connector
T2au	Double connector
T4bn	4-pin connector
T47	47-pin connector
V64	ABS hydraulic pump
A199	Positive connection 4 (15a) (in instrument panel wiring harness)
D146	Left rear speed sensor positive connection (in engine compartment wiring harness)
D147	Left rear speed sensor negative connection (in engine compartment wiring harness)
D148	Right rear speed sensor positive connection (in engine compartment wiring harness)
D149	Right rear speed sensor negative connection (in engine compartment wiring harness)
D184	Left front speed sensor positive connection (in engine compartment wiring harness)
D185	Left front speed sensor negative connection (in engine compartment wiring harness)
*	Only for vehicles with a hydraulic brake booster
*2	Diameter depends on equipment

Protected by copyright. Copying for private or commercial purposes, in part or in whole, is not permitted unless authorized by Volkswagen AG. Volkswagen AG does not guarantee or accept any liability with respect to the correctness and completeness of this document.

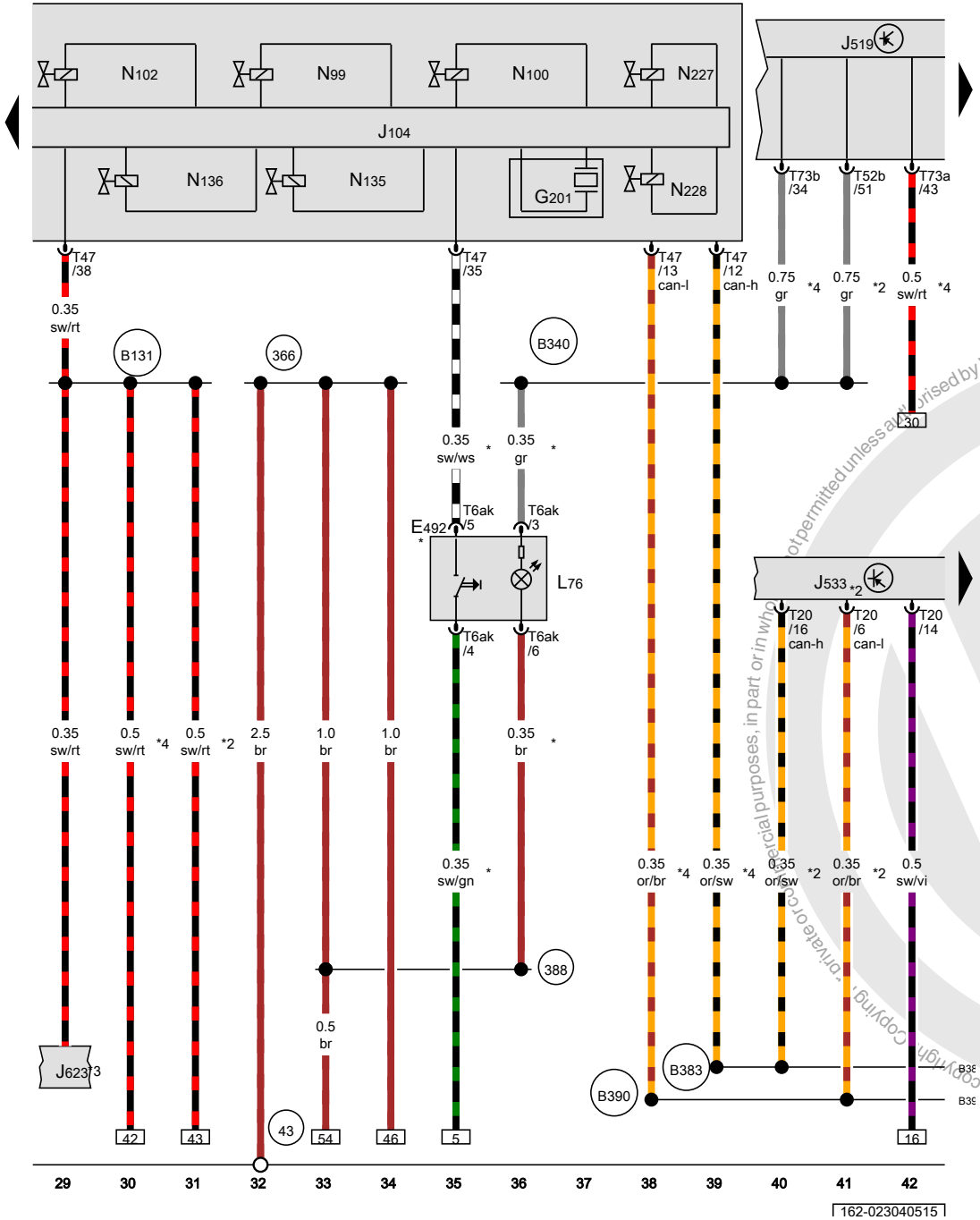

Tire pressure monitoring display button, ABS control module, Vehicle electrical control module system, Data bus on board diagnostic interface

E492	Tire pressure monitoring display button
G201	Brake pressure sensor 1
J104	ABS control module
J519	Vehicle electrical control module system
J533	Data bus on board diagnostic interface, in the left footwell, near the center console
J623	Engine control module
L76	Push button illumination bulb
N99	Right front ABS inlet valve
N100	Right front ABS outlet valve
N102	Left front ABS outlet valve
N135	Right rear ABS outlet valve
N136	Left rear ABS outlet valve
N227	Driving dynamics regulation high pressure switch valve 1
N228	Driving dynamics regulation high pressure switch valve 2
T6ak	6-pin connector
T20	20-pin connector
T47	47-pin connector
T52b	52-pin connector
T73a	73-pin connector
T73b	73-pin connector
43	Ground connection on A-pillar, lower right
366	Ground connection 1 (in main wiring harness)
388	Ground connection 23 (in main wiring harness)
B131	Connection 54 (in interior wiring harness)
B340	Connection 58d (in main wiring harness) 1
B383	Powertrain CAN bus high connection 1 (in main wiring harness)
B390	Powertrain CAN bus low connection 1 (in main wiring harness)

*	Only for vehicles with tire pressure monitoring
*2	only for vehicles with High equipment (AW1)
*3	Refer to applicable engine wiring diagram
*4	only for vehicles with Low equipment (AW0)

ws	=	white
sw	=	black
ro	=	red
rt	=	red
br	=	brown
gn	=	green
bl	=	blue
gr	=	grey
li	=	lilac
vi	=	lilac
ge	=	yellow
or	=	orange
rs	=	pink

Not permitted unless authorised by Volkswagen AG. Volkswagen AG does not accept any liability with respect to the correctness of information in this document. Copyright by Volkswagen AG. Protected by copyright. Copying, private or commercial purposes, in part or in whole, is not permitted unless authorised by Volkswagen AG.

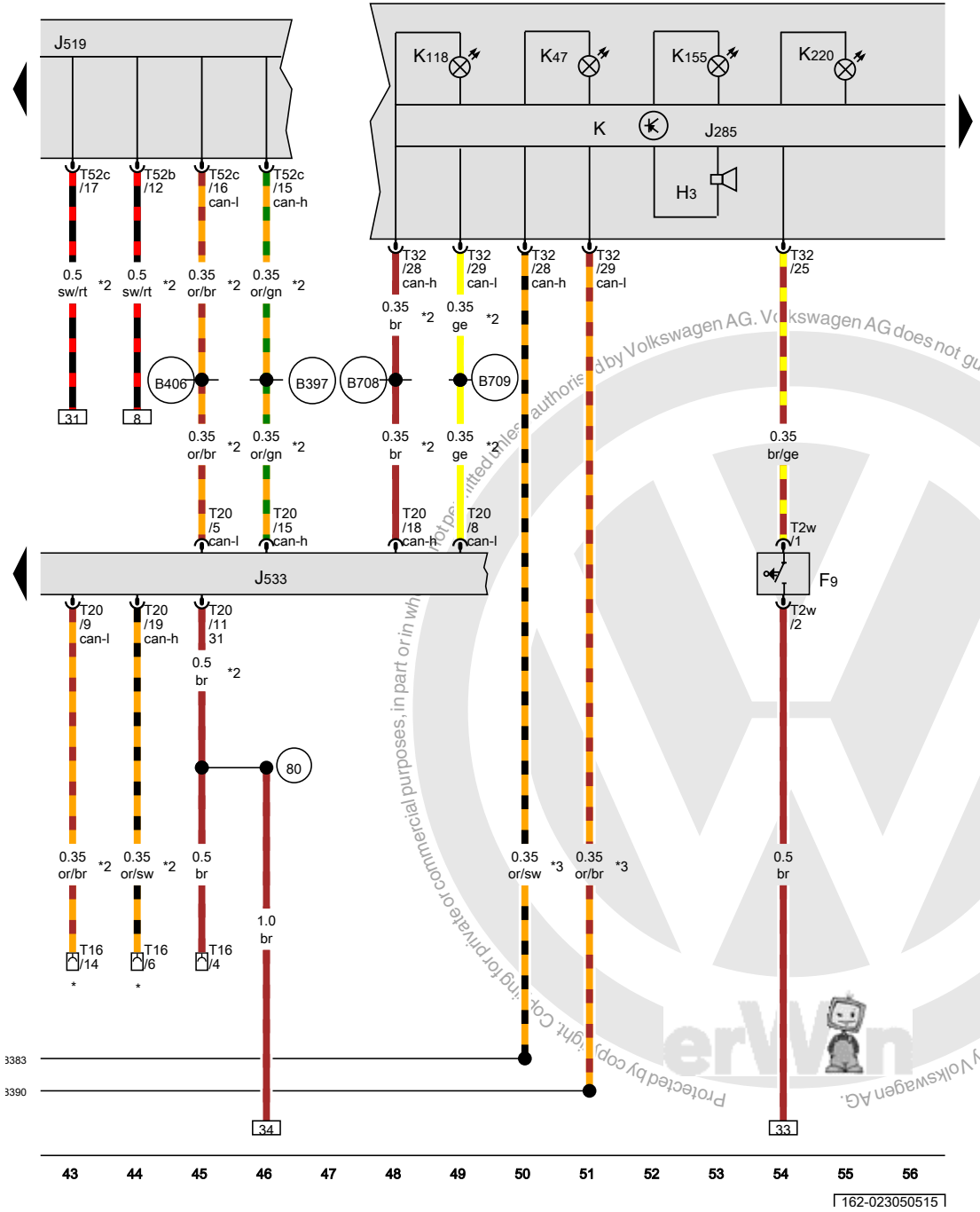

Parking brake indicator lamp switch, Warning buzzer and tone, Instrument cluster control module, Vehicle electrical control module system, Data bus on board diagnostic interface, Instrument cluster, ABS indicator lamp, Brake system indicator lamp, ASR/ESP indicator lamp, Tire pressure monitoring display indicator lamp

F9	Parking brake indicator lamp switch
H3	Warning buzzer and tone
J285	Instrument cluster control module
J519	Vehicle electrical control module system
J533	Data bus on board diagnostic interface, in the left footwell, near the center console
K	Instrument cluster
K47	ABS indicator lamp
K118	Brake system indicator lamp
K155	ASR/ESP indicator lamp
K220	Tire pressure monitoring display indicator lamp
T2w	Double connector
T16	16-pin connector
T20	20-pin connector
T32	32-pin connector
T52b	52-pin connector
T52c	52-pin connector
80	Ground connection 1 (in instrument cluster wiring harness)
B383	Powertrain CAN bus high connection 1 (in main wiring harness)
B390	Powertrain CAN bus low connection 1 (in main wiring harness)
B397	Comfort system CAN bus high connection 1 (in main wiring harness)
B406	Comfort system CAN bus low connection 1 (in main wiring harness)
B708	Instrument cluster CAN bus high connection 1 (in main wiring harness)
B709	Instrument cluster CAN bus low connection 1 (in main wiring harness)
*	Diagnostic connector
*2	only for vehicles with High equipment (AW1)
*3	only for vehicles with Low equipment (AW0)

ws	=	white
sw	=	black
ro	=	red
rt	=	red
br	=	brown
gn	=	green
bl	=	blue
gr	=	grey
li	=	lilac
vi	=	lilac
ge	=	yellow
or	=	orange
rs	=	pink

Protected by copyright. Copying for private or commercial purposes, in part or in whole, is not permitted unless authorised by Volkswagen AG. Volkswagen AG does not guarantee or accept any liability with respect to the correctness of information in this document. Copyright by Volkswagen AG.

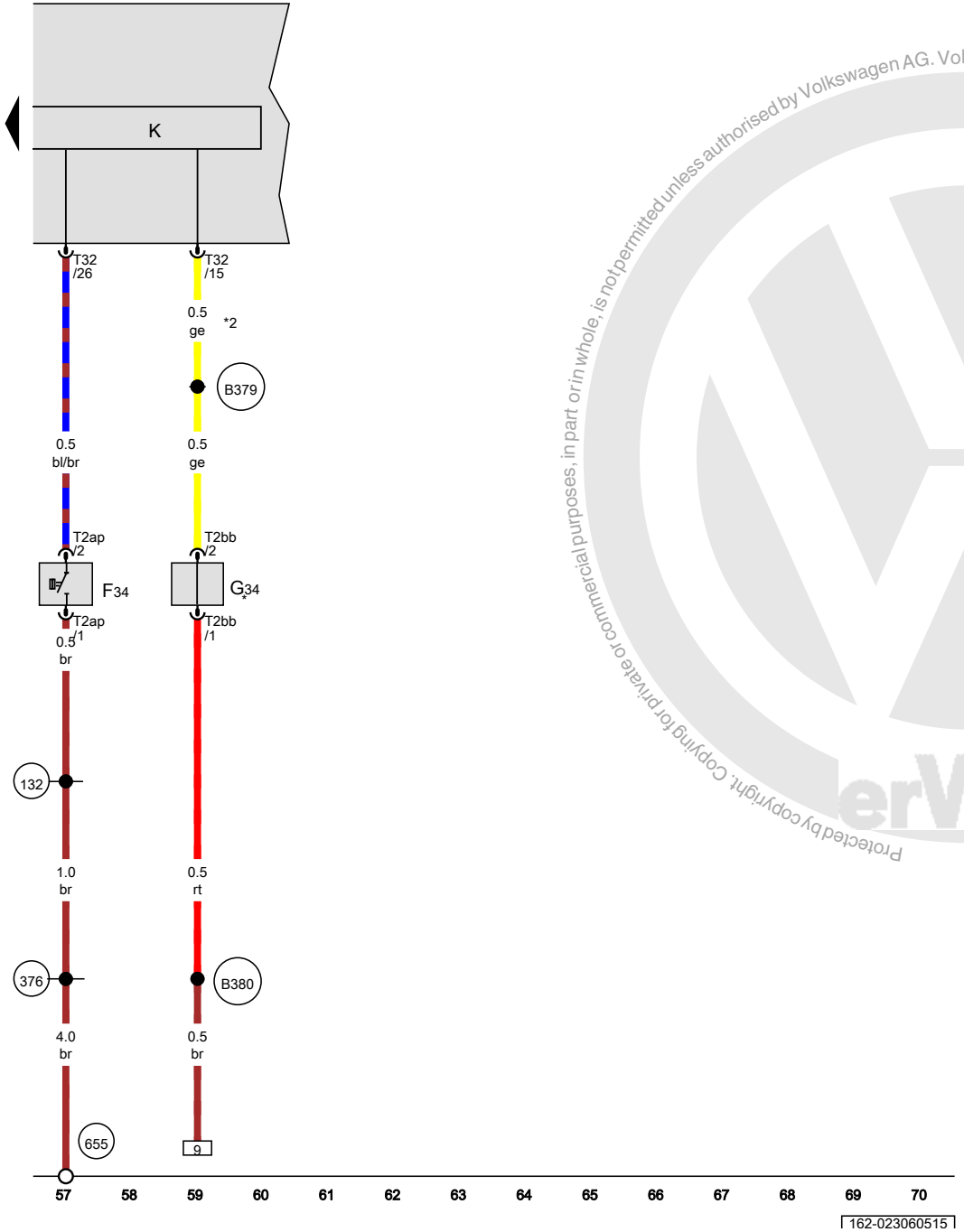

Brake fluid level warning switch, Left front brake pad wear sensor, Instrument cluster

F34	Brake fluid level warning switch
G34	Left front brake pad wear sensor
K	Instrument cluster
T2ap	Double connector
T2bb	Double connector
T32	32-pin connector
132	Ground connection 3 (in engine compartment wiring harness)
376	Ground connection 11 (in main wiring harness)
655	Ground connection on left headlamp
B379	Brake wear indicator connection 1 (in main wiring harness)
B380	Brake wear indicator connection 2 (in main wiring harness)
*	Depending on equipment
*2	Only for vehicles with brake pad wear indicator

ws	=	white
sw	=	black
ro	=	red
rt	=	red
br	=	brown
gn	=	green
bl	=	blue
gr	=	grey
li	=	lilac
vi	=	lilac
ge	=	yellow
or	=	orange
rs	=	pink

Protected by copyright. Copying for private or commercial purposes, in part or in whole, is not permitted unless authorised by Volkswagen AG. Volkswagen AG does not guarantee or accept any liability with respect to the correctness of information in this document. Copyright by Volkswagen AG.

Parking aid, front and rear , (7X2)

from April 2010

Protected by copyright. Copying for private or commercial purposes, in part or in whole, is not permitted unless authorised by Volkswagen AG. Volkswagen AG does not guarantee or accept any liability with respect to the correctness of information in this document. Copyright by Volkswagen AG.

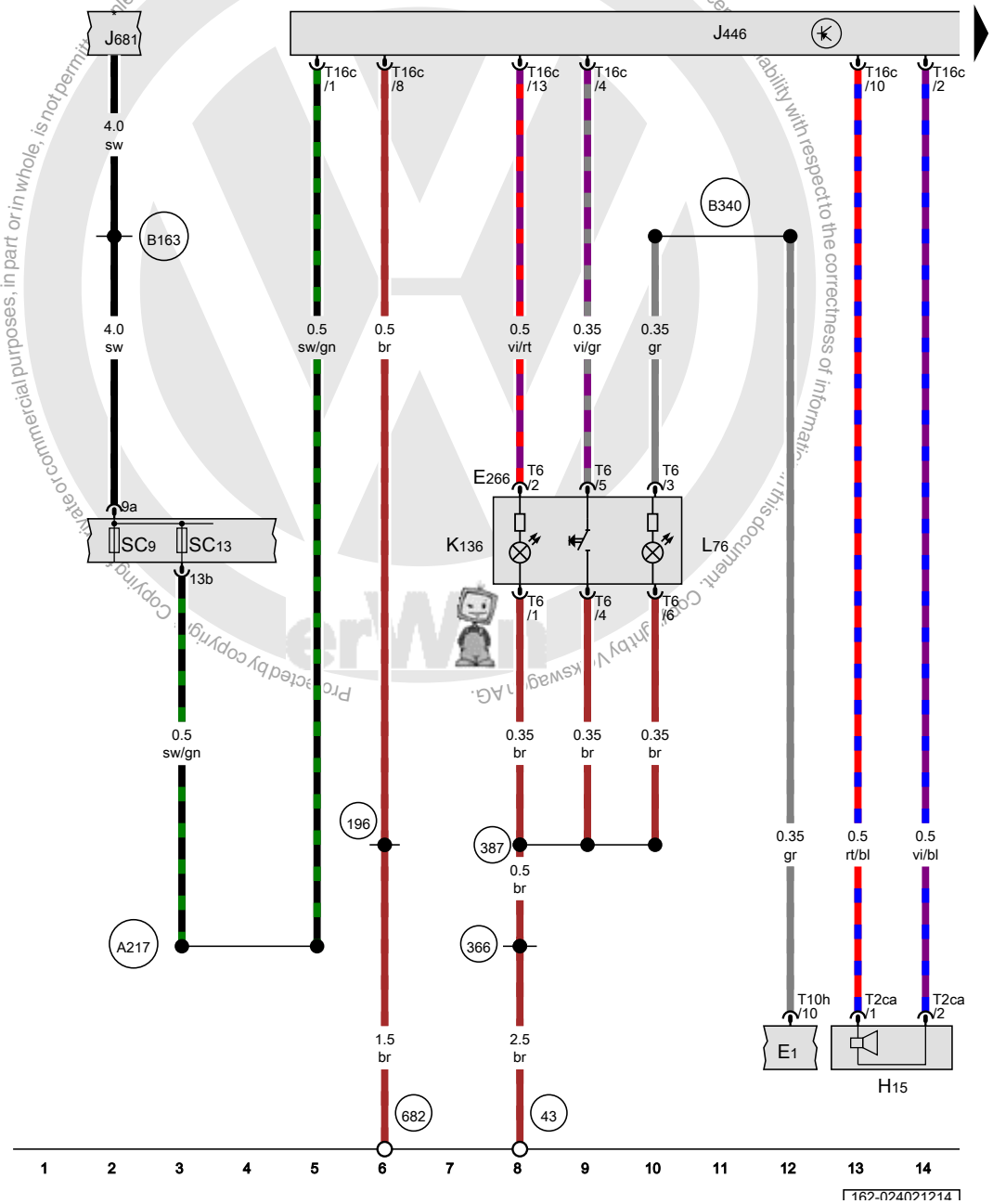

Parking aid button, Rear parking aid warning buzzer, Parking aid control module, Terminal 15 power supply relay 2, Parking aid indicator lamp, Push button illumination bulb

E1	Light switch
E266	Parking aid button
H15	Rear parking aid warning buzzer
J446	Parking aid control module
J681	Terminal 15 power supply relay 2
K136	Parking aid indicator lamp
L76	Push button illumination bulb
SC9	Fuse 9 (on fuse panel C)
SC13	Fuse 13 (on fuse panel C)
T2ca	Double connector
T6	6-pin connector
T10h	10-pin connector
T16c	16-pin connector
43	Ground connection on A-pillar, lower right
196	Ground connection 3 (in rear wiring harness)
366	Ground connection 1 (in main wiring harness)
387	Ground connection 22 (in main wiring harness)
682	Ground connection 2 in right rear side panel
A217	Positive connection 8 (15a) (in instrument panel wiring harness)
B163	Positive connection 1 (15) (in interior wiring harness)
B340	Connection 58d (in main wiring harness) 1
*	Refer to applicable standard equipment wiring diagram

ws	=	white
sw	=	black
ro	=	red
rt	=	red
br	=	brown
gn	=	green
bl	=	blue
gr	=	grey
li	=	lilac
vi	=	lilac
ge	=	yellow
or	=	orange
rs	=	pink

Protected by copyright. Copying for private or commercial purposes, in part or in whole, is not permitted unless authorised by Volkswagen AG. Volkswagen AG does not guarantee or accept any liability with respect to the correctness of information in this document. Copyright by Volkswagen AG.

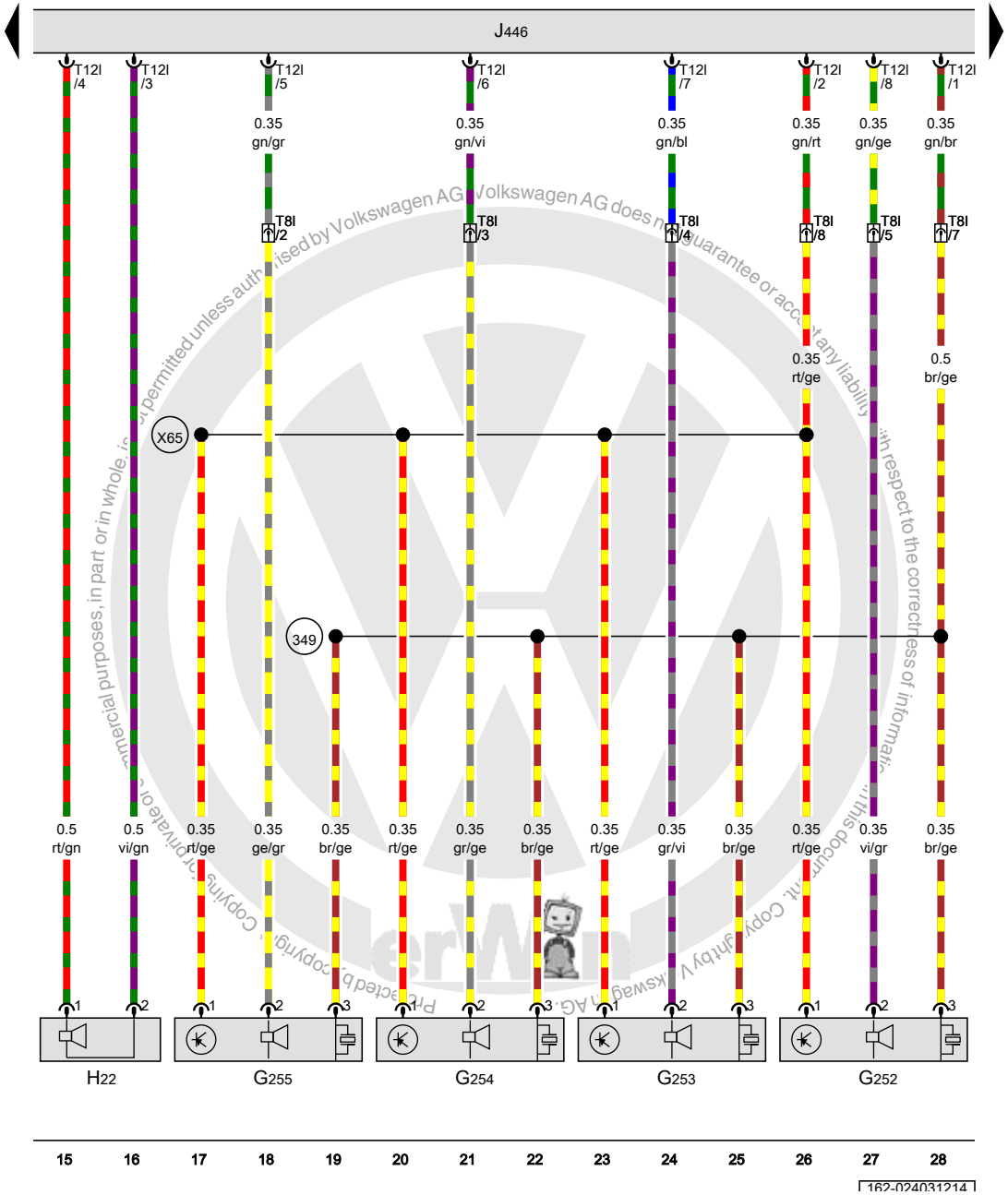

Right front parking aid sensor, Right front center parking aid sensor, Left front center parking aid sensor, Left front parking aid sensor, Front parking aid warning buzzer, Parking aid control module

G252	Right front parking aid sensor
G253	Right front center parking aid sensor
G254	Left front center parking aid sensor
G255	Left front parking aid sensor
H22	Front parking aid warning buzzer
J446	Parking aid control module
T8l	8-pin connector
T12l	12-pin connector
349	Horn ground connection (in front bumper wiring harness)
X65	Parking aid connection (in front bumper wiring harness)

ws	=	white
sw	=	black
ro	=	red
rt	=	red
br	=	brown
gn	=	green
bl	=	blue
gr	=	grey
li	=	lilac
vi	=	lilac
ge	=	yellow
or	=	orange
rs	=	pink

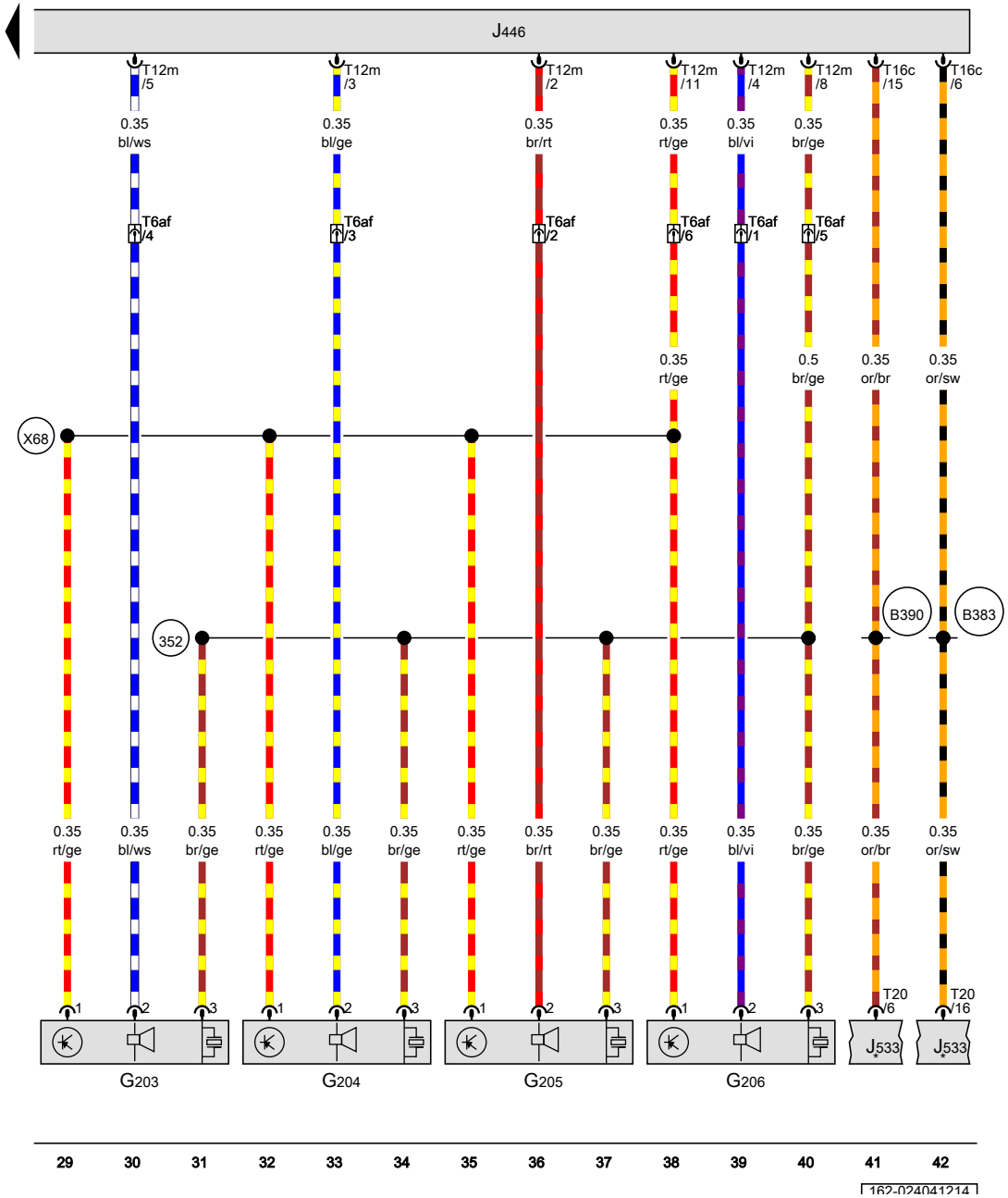

Left rear parking aid sensor, Left rear center parking aid sensor, Right rear center parking aid sensor, Right rear parking aid sensor, Parking aid control module

G203	Left rear parking aid sensor
G204	Left rear center parking aid sensor
G205	Right rear center parking aid sensor
G206	Right rear parking aid sensor
J446	Parking aid control module
J533	Data bus on board diagnostic interface
T6af	6-pin connector
T12m	12-pin connector
T16c	16-pin connector
T20	20-pin connector
352	Parking aid ground connection (in rear bumper wiring harness)
B383	Powertrain CAN bus high connection 1 (in main wiring harness)
B390	Powertrain CAN bus low connection 1 (in main wiring harness)
X68	Parking aid connection (in rear bumper wiring harness)
*	only for vehicles with High equipment (AW1)

ws	=	white
sw	=	black
ro	=	red
rt	=	red
br	=	brown
gn	=	green
bl	=	blue
gr	=	grey
li	=	lilac
vi	=	lilac
ge	=	yellow
or	=	orange
rs	=	pink

Protected by copyright. Copying for private or commercial purposes, in part or in whole, is not permitted unless authorised. Volkswagen AG, Wolfsburg, AG does not guarantee or accept any liability with respect to the correctness of information in this document. Copyright by Volkswagen AG.

Radio navigation system RNS 315 , (7T8),(7UC),(7UK)

from May 2010

Protected by copyright. Copying for private or commercial purposes, in part or in whole, is not permitted unless authorised by Volkswagen AG. Volkswagen AG does not guarantee or accept any liability with respect to the correctness of information in this document. Copyright by Volkswagen AG.

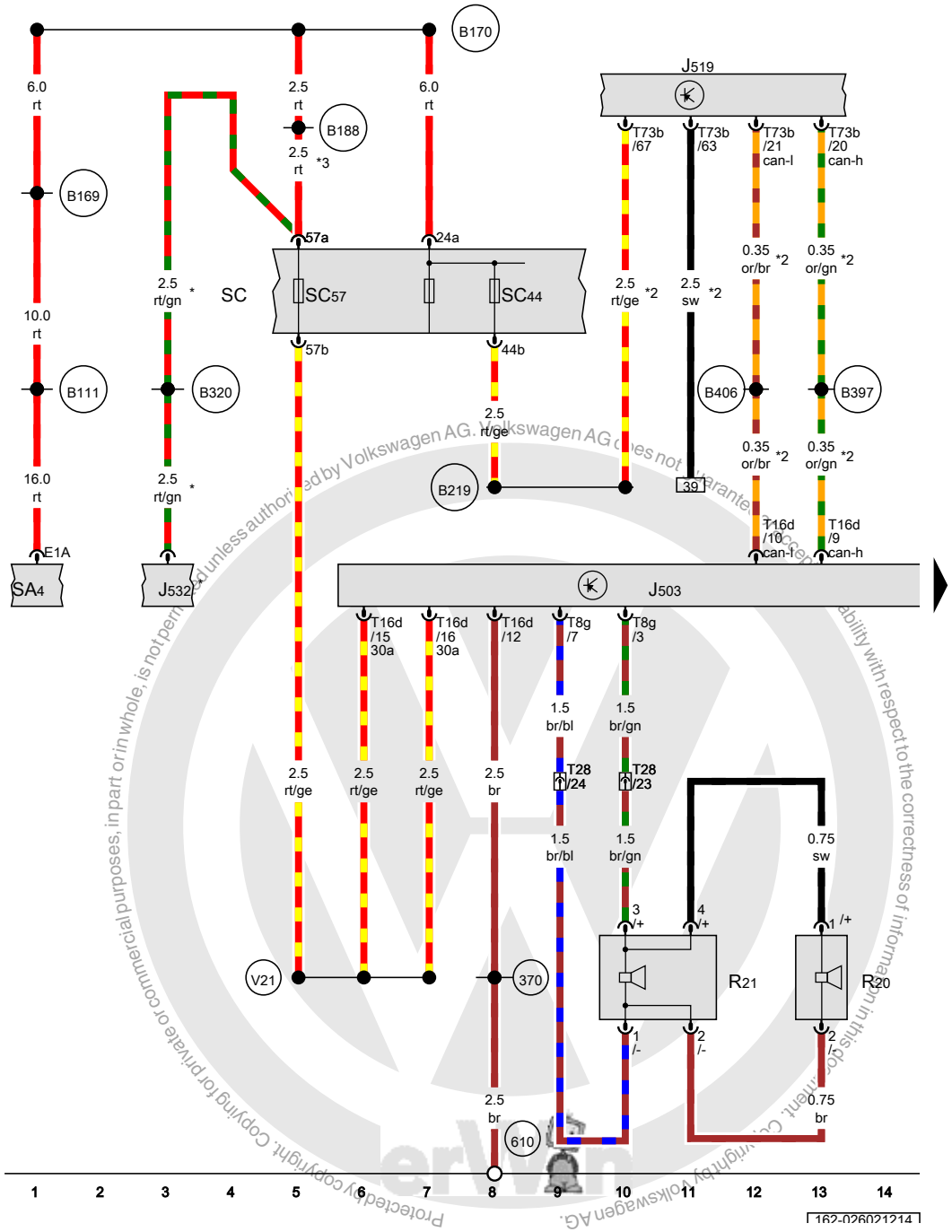

Radio/navigation display unit control module, Vehicle electrical control module system, Left front treble speaker, Left front bass speaker, Fuse 4 (on fuse panel A), Fuse panel C

J503	Radio/navigation display unit control module
J519	Vehicle electrical control module system
J532	Voltage stabilizer
R20	Left front treble speaker
R21	Left front bass speaker
SA4	Fuse 4 (on fuse panel A)
SC	Fuse panel C
SC44	Fuse 44 (on fuse panel C)
SC57	Fuse 57 (on fuse panel C)
T8g	8-pin connector
T16d	16-pin connector
T28	28-pin connector
T73b	73-pin connector
370	Ground connection 5 (in main wiring harness)
610	Audio ground connection under front center console
B111	Positive connection 1 (30a) (in interior wiring harness)
B169	Positive connection 1 (30) (in interior wiring harness)
B170	Positive connection 2 (30) (in interior wiring harness)
B188	Positive connection 5 (30) (in interior wiring harness)
B219	Positive connection 4 (30a) (in interior wiring harness)
B320	Positive connection 6 (30a) (in main wiring harness)
B397	Comfort system CAN bus high connection 1 (in main wiring harness)
B406	Comfort system CAN bus low connection 1 (in main wiring harness)
V21	Positive connection (30) (in wiring radio/amplifier wiring harness)
*	Only for vehicles with Stop/Start system
*2	only for vehicles with Low equipment (AW0)
*3	Only for vehicles without Start/Stop system

ws	=	white
sw	=	black
ro	=	red
rt	=	red
br	=	brown
gn	=	green
bl	=	blue
gr	=	grey
li	=	lilac
vi	=	lilac
ge	=	yellow
or	=	orange
rs	=	pink

Protected by copyright. Copying for private or commercial purposes, in part or in whole, is not permitted unless authorised by Volkswagen AG. Volkswagen AG does not guarantee the accuracy, completeness and reliability with respect to the correctness of information in this document. Copyright by Volkswagen AG.

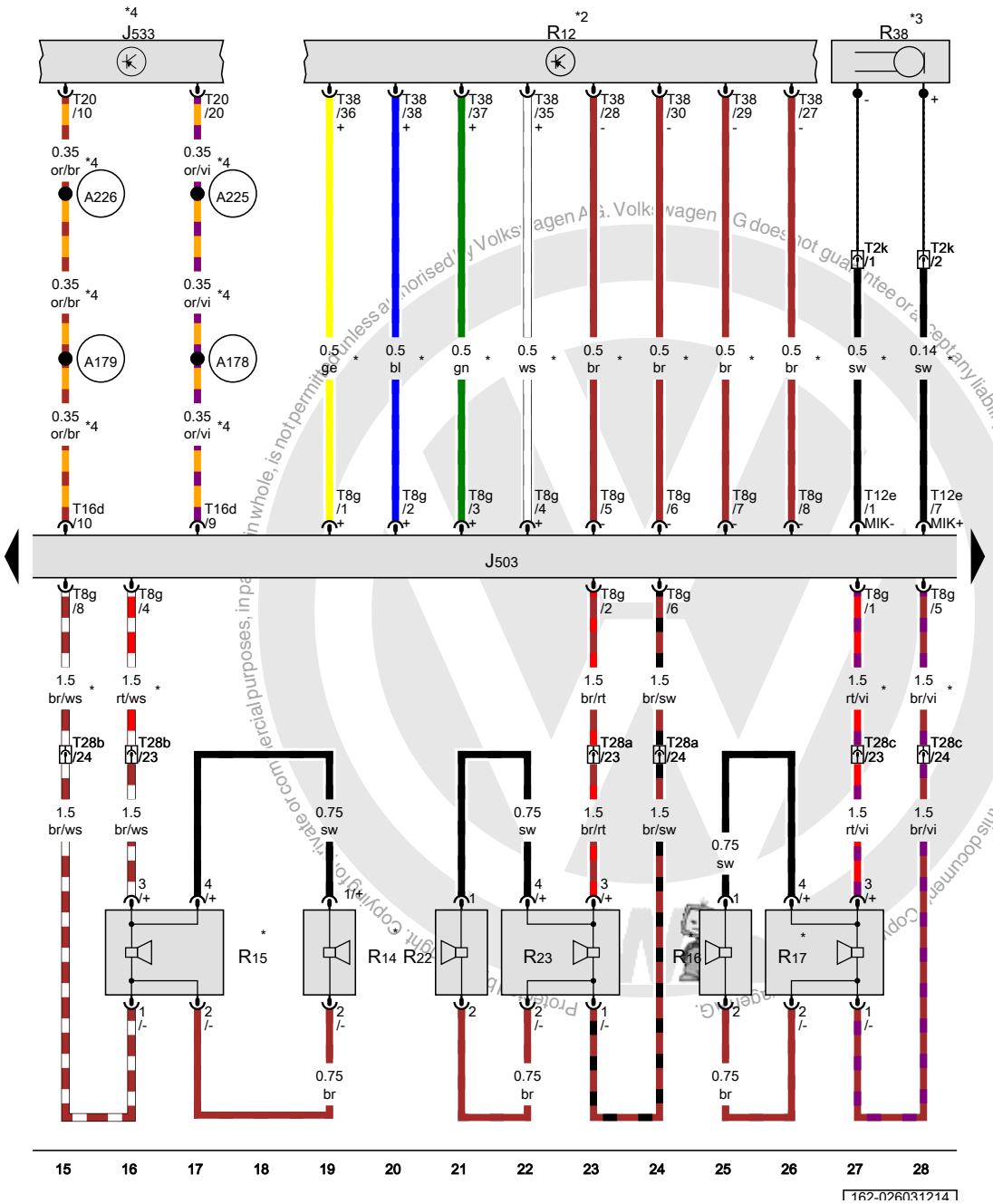

Radio/navigation display unit control module, Right front treble speaker, Right front bass speaker

J503	Radio/navigation display unit control module
J533	Data bus on board diagnostic interface
R12	Amplifier
R14	Left rear treble speaker
R15	Left rear bass speaker
R16	Right rear treble speaker
R17	Right rear bass speaker
R22	Right front treble speaker
R23	Right front bass speaker
R38	Telephone microphone
T2k	Double connector
T8g	8-pin connector
T12e	12-pin connector
T16d	16-pin connector
T20	20-pin connector
T28a	28-pin connector
T28b	28-pin connector
T28c	28-pin connector
T38	38-pin connector
A178	Infotainment CAN bus high connection (in instrument panel wiring harness)
A179	Infotainment CAN bus low connection (in instrument panel wiring harness)
A225	Infotainment CAN bus high connection 2 (in instrument panel wiring harness)
A226	Infotainment CAN bus low connection 2 (in instrument panel wiring harness)
*	Depending on equipment
*2	Refer to applicable sound system wiring diagram
*3	Refer to applicable telephone systems wiring diagram
*4	only for vehicles with High equipment (AW1)

ws	=	white
sw	=	black
ro	=	red
rt	=	red
br	=	brown
gn	=	green
bl	=	blue
gr	=	grey
li	=	lilac
vi	=	lilac
ge	=	yellow
or	=	orange
rs	=	pink

Volkswagen AG. Volkswagen AG does not guarantee or accept any liability with respect to the correctness of information in this document. Copyright by Volkswagen AG. Protected by copyright. Copying for private or commercial purposes, in part or in whole, is not permitted unless authorised by Volkswagen AG.

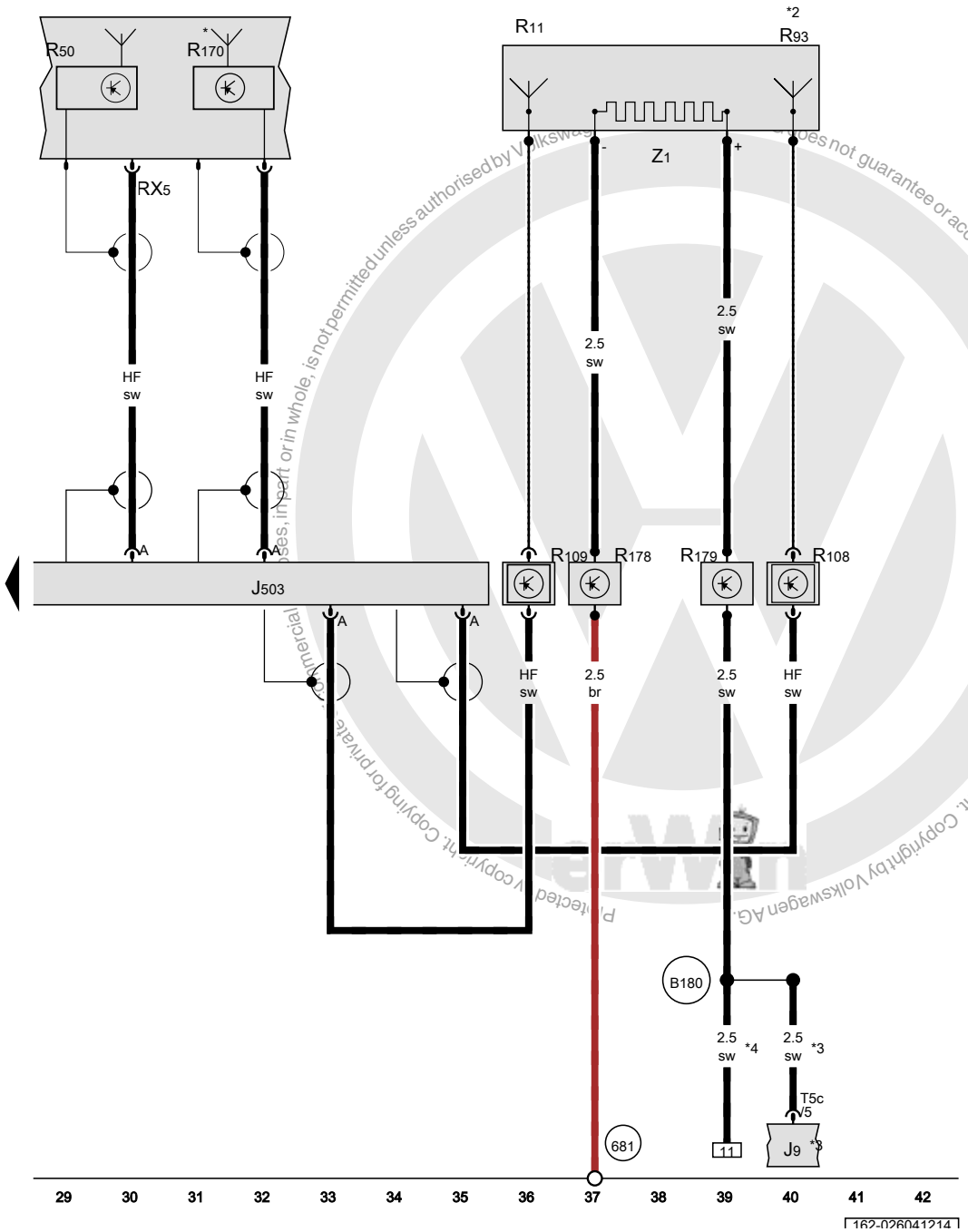

Radio/navigation display unit control module, Left antenna module, Right antenna module, Satellite antenna, Rear window defogger

J9	Rear window defogger relay
J503	Radio/navigation display unit control module
RX5	Roof antenna
R11	Antenna
R50	GPS antenna
R93	Radio antenna 2
R108	Left antenna module
R109	Right antenna module
R170	Satellite antenna
R178	FM frequency filter in negative wire
R179	FM frequency filter in positive wire
T5c	5-pin connector
Z1	Rear window defogger
681	Ground connection 1 in right rear side panel
B180	Rear window defogger connection (in interior wiring harness)
*	USA only
*2	Depending on equipment
*3	only for vehicles with High equipment (AW1)
*4	only for vehicles with Low equipment (AW0)

ws	=	white
sw	=	black
ro	=	red
rt	=	red
br	=	brown
gn	=	green
bl	=	blue
gr	=	grey
li	=	lilac
vi	=	lilac
ge	=	yellow
or	=	orange
rs	=	pink

Protected by copyright. Copying for private, commercial or in whole, is not permitted unless authorised by Volkswagen AG. Volkswagen AG does not guarantee or accept any liability with respect to the correctness of information in this document. Copyright by Volkswagen AG.

Cell phone system

from April 2010

Protected by copyright. Copying for private or commercial purposes, in part or in whole, is not permitted unless authorised by Volkswagen AG. Volkswagen AG does not guarantee or accept any liability with respect to the correctness of information in this document. Copyright by Volkswagen AG.

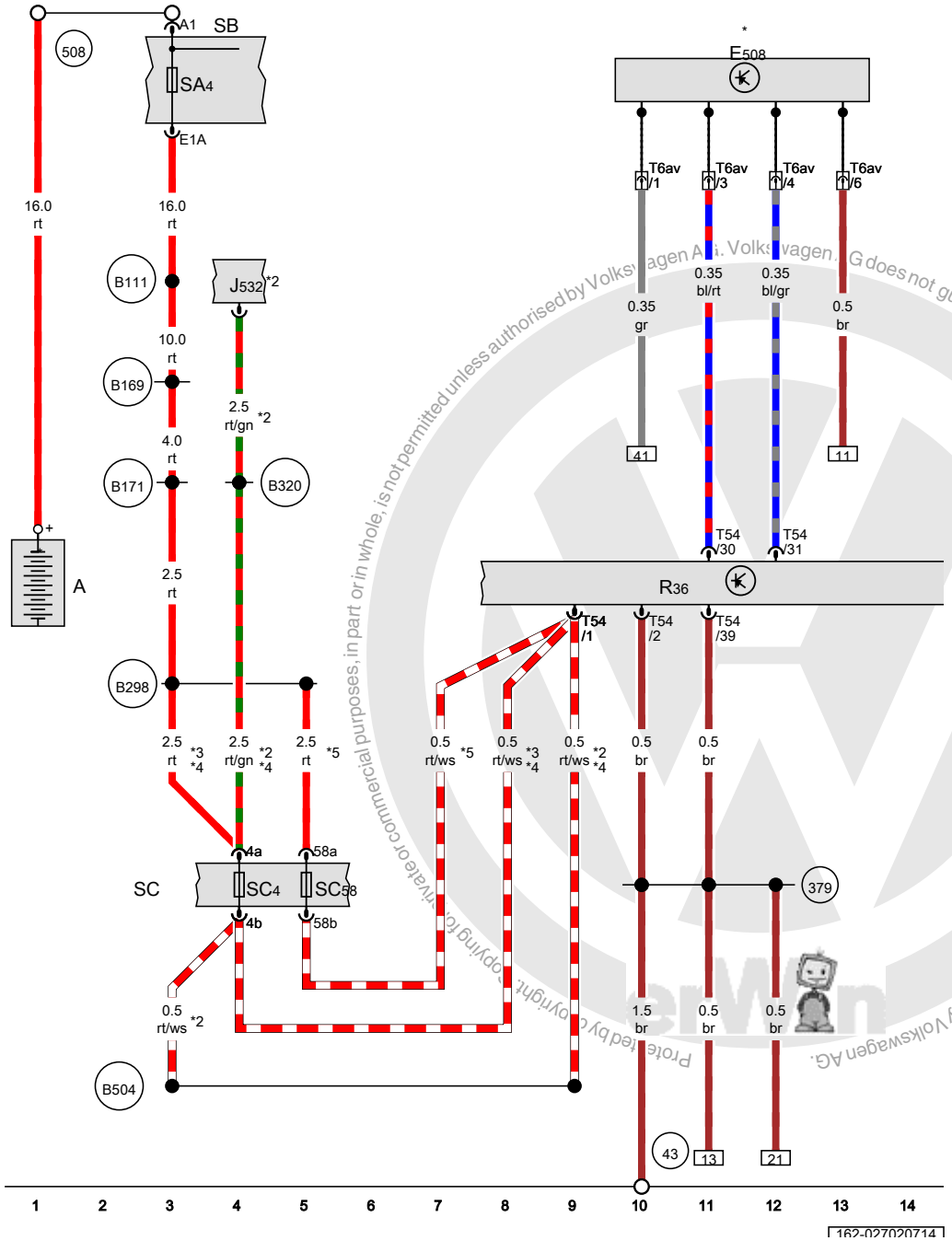

Cellular telephone preparation control head, Telephone transceiver, Fuse panel B, Fuse panel C

A	Battery
E508	Cellular telephone preparation control head
J532	Voltage stabilizer
R36	Telephone transceiver
SA4	Fuse 4 (on fuse panel A)
SB	Fuse panel B
SC	Fuse panel C
SC4	Fuse 4 (on fuse panel C)
SC58	Fuse 58 (on fuse panel C)
T6av	6-pin connector
T54	54-pin connector
43	Ground connection on A-pillar, lower right
379	Ground connection 14 (in main wiring harness)
508	Terminal 30 threaded connection (on E-box)
B111	Positive connection 1 (30a) (in interior wiring harness)
B169	Positive connection 1 (30) (in interior wiring harness)
B171	Positive connection 3 (30) (in interior wiring harness)
B298	Positive connection 2 (30) (in main wiring harness)
B320	Positive connection 6 (30a) (in main wiring harness)
B504	Positive connection 8 (30a) (in interior wiring harness)
*	Component not contained in cell phone prep
*2	Only for vehicles with Stop/Start system
*3	Only for vehicles without Start/Stop system
*4	from November 2010
*5	Through October 2010

ws	=	white
sw	=	black
ro	=	red
rt	=	red
br	=	brown
gn	=	green
bl	=	blue
gr	=	grey
li	=	lilac
vi	=	lilac
ge	=	yellow
or	=	orange
rs	=	pink

Protected by copyright. Copying for private or commercial purposes, in part or in whole, is not permitted unless authorised by Volkswagen AG. Copyright by Volkswagen AG. Volkswagen AG does not guarantee or accept any liability with respect to the correctness of information in this document.

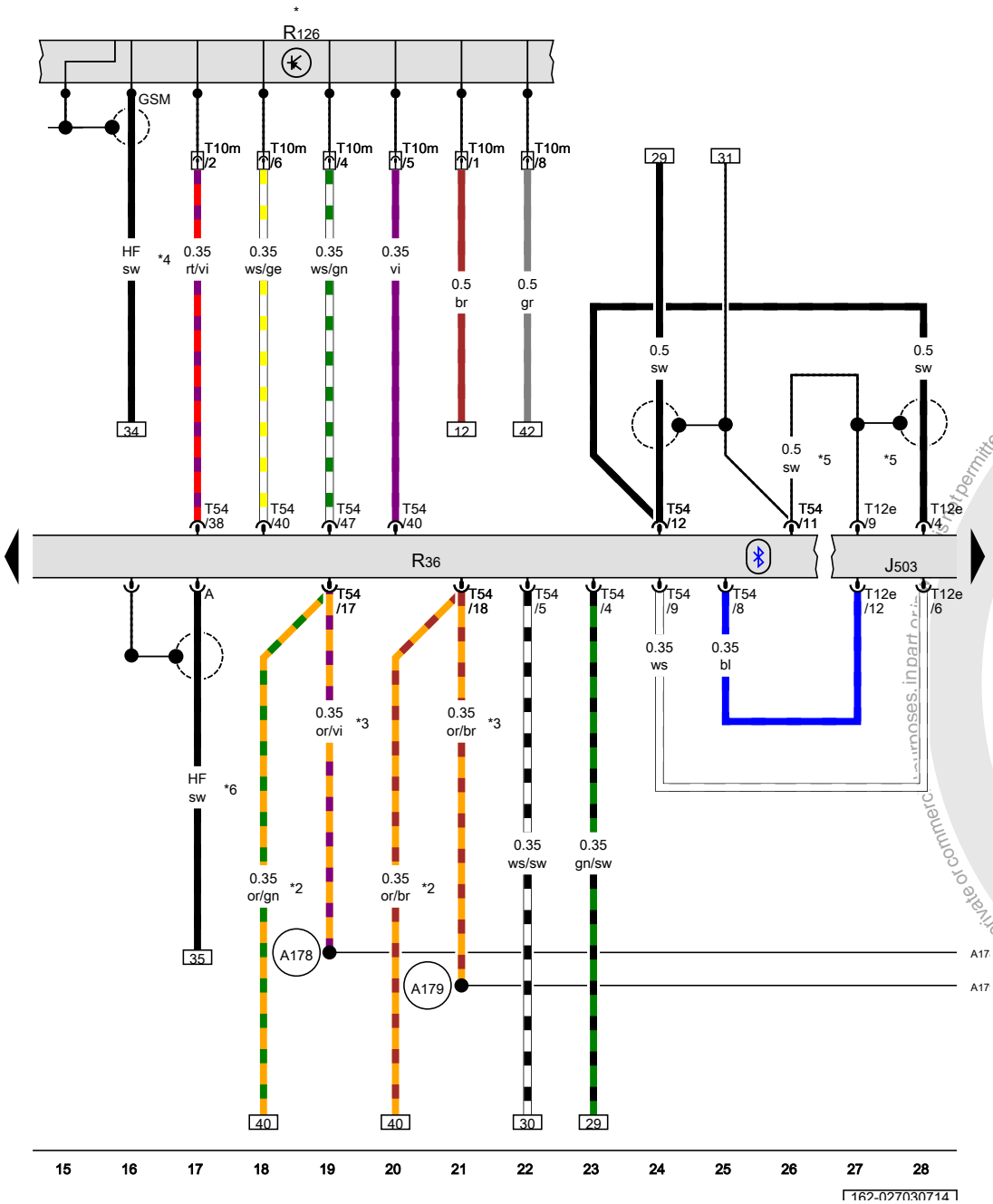

Radio/navigation display unit control module, Telephone transceiver

J503	Radio/navigation display unit control module
R36	Telephone transceiver
R126	Telephone baseplate
T10m	10-pin connector
T12e	12-pin connector
T54	54-pin connector
A178	Infotainment CAN bus high connection (in instrument panel wiring harness)
A179	Infotainment CAN bus low connection (in instrument panel wiring harness)
*	Depending on equipment
*2	only for vehicles with Low equipment (AW0)
*3	only for vehicles with High equipment (AW1)
*4	Only for vehicles with telephone charging station
*5	Only with radio navigation system and voice recognition system
*6	Only for vehicles with telephone charging station and cell phone operating electronics control module

ws	=	white
sw	=	black
ro	=	red
rt	=	red
br	=	brown
gn	=	green
bl	=	blue
gr	=	grey
li	=	lilac
vi	=	lilac
ge	=	yellow
or	=	orange
rs	=	pink

Protected by copyright. Copying for private or commercial purposes, in part or in whole, is not permitted unless authorised by Volkswagen AG. Volkswagen AG does not give any guarantee or accept any liability with respect to the correctness of information in this document. Copyright by Volkswagen AG.

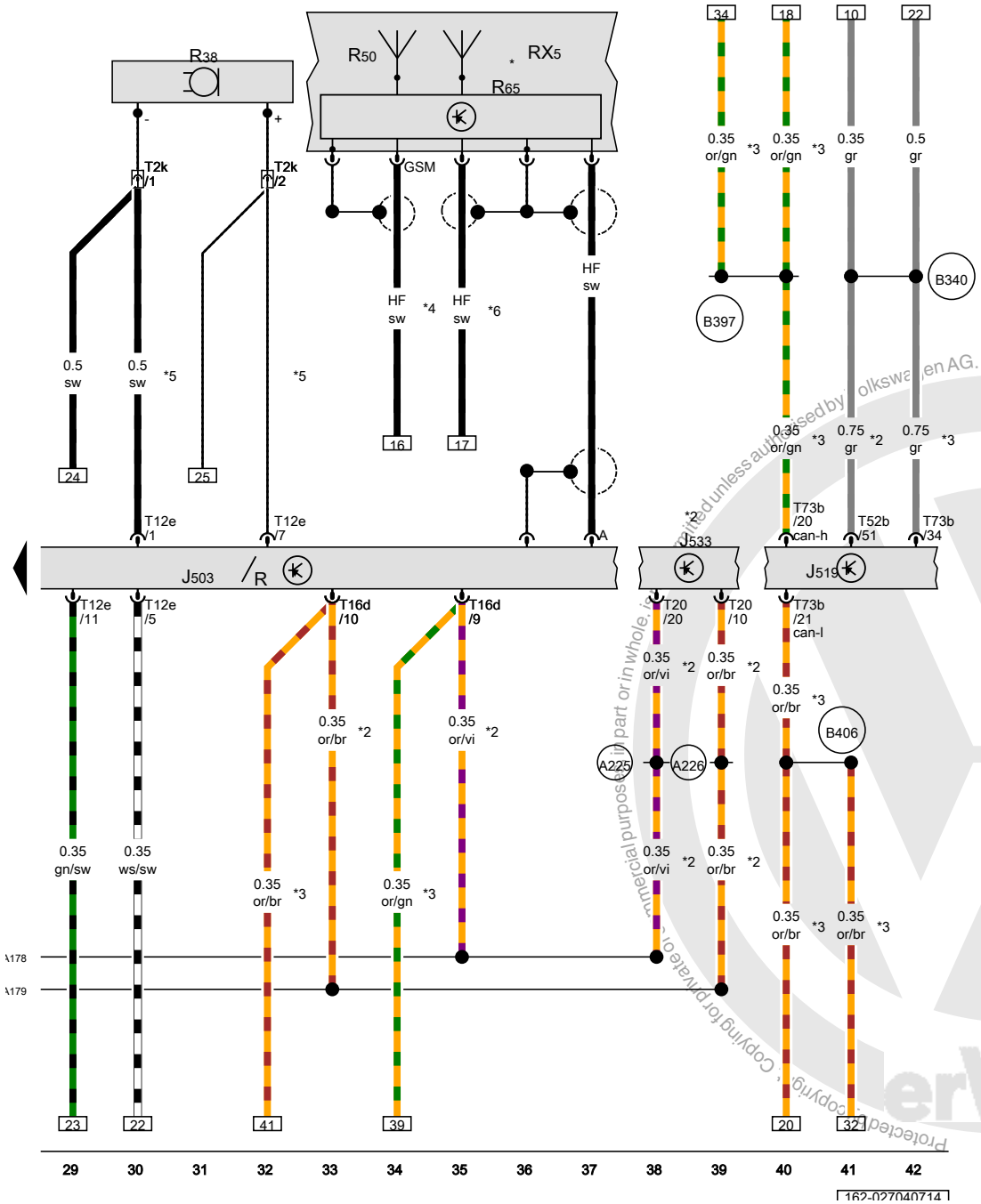

Radio/navigation display unit control module, Vehicle electrical system control module, Data bus on board diagnostic interface, Radio, Roof antenna, Telephone microphone, GPS antenna, Telephone antenna

J503	Radio/navigation display unit control module
J519	Vehicle electrical system control module
J533	Data bus on board diagnostic interface
R	Radio
RX5	Roof antenna
R38	Telephone microphone
R50	GPS antenna
R65	Telephone antenna
T2k	Double connector, near the front interior lamp
T12e	12-pin connector
T16d	16-pin connector
T20	20-pin connector
T52b	52-pin connector
T73b	73-pin connector
A178	Infotainment CAN bus high connection (in instrument panel wiring harness)
A179	Infotainment CAN bus low connection (in instrument panel wiring harness)
A225	Infotainment CAN bus high connection 2 (in instrument panel wiring harness)
A226	Infotainment CAN bus low connection 2 (in instrument panel wiring harness)
B340	Connection 58d (in main wiring harness) 1
B397	Comfort system CAN bus high connection 1 (in main wiring harness)
B406	Comfort system CAN bus low connection 1 (in main wiring harness)
*	Depending on equipment
*2	only for vehicles with High equipment (AW1)
*3	only for vehicles with Low equipment (AW0)
*4	Only for vehicles with telephone charging station
*5	Only with radio navigation system and voice recognition system
*6	Only for vehicles with telephone charging station and cell phone operating electronics control module

ws	=	white
sw	=	black
ro	=	red
rt	=	red
br	=	brown
gn	=	green
bl	=	blue
gr	=	grey
li	=	lilac
vi	=	lilac
ge	=	yellow
or	=	orange
rs	=	pink

Protected copyright. Copying for private or commercial purposes, in part or in whole, is not permitted unless authorised by Volkswagen AG. Volkswagen AG does not guarantee or accept any liability with respect to the correctness of information. Copyright by Volkswagen AG.

Auxiliary air heater (PTC) , CAVA,CAVD,CAXA,CAYC,CBZA,CBZB,CFFB,CJAA,CLCA,CTHA,CTHD,(7E6)

from April 2010

Protected by copyright. Copying for private or commercial purposes, in part or in whole, is not permitted unless authorised by Volkswagen AG. Volkswagen AG does not guarantee or accept any liability with respect to the correctness of information in this document. Copyright by Volkswagen AG.

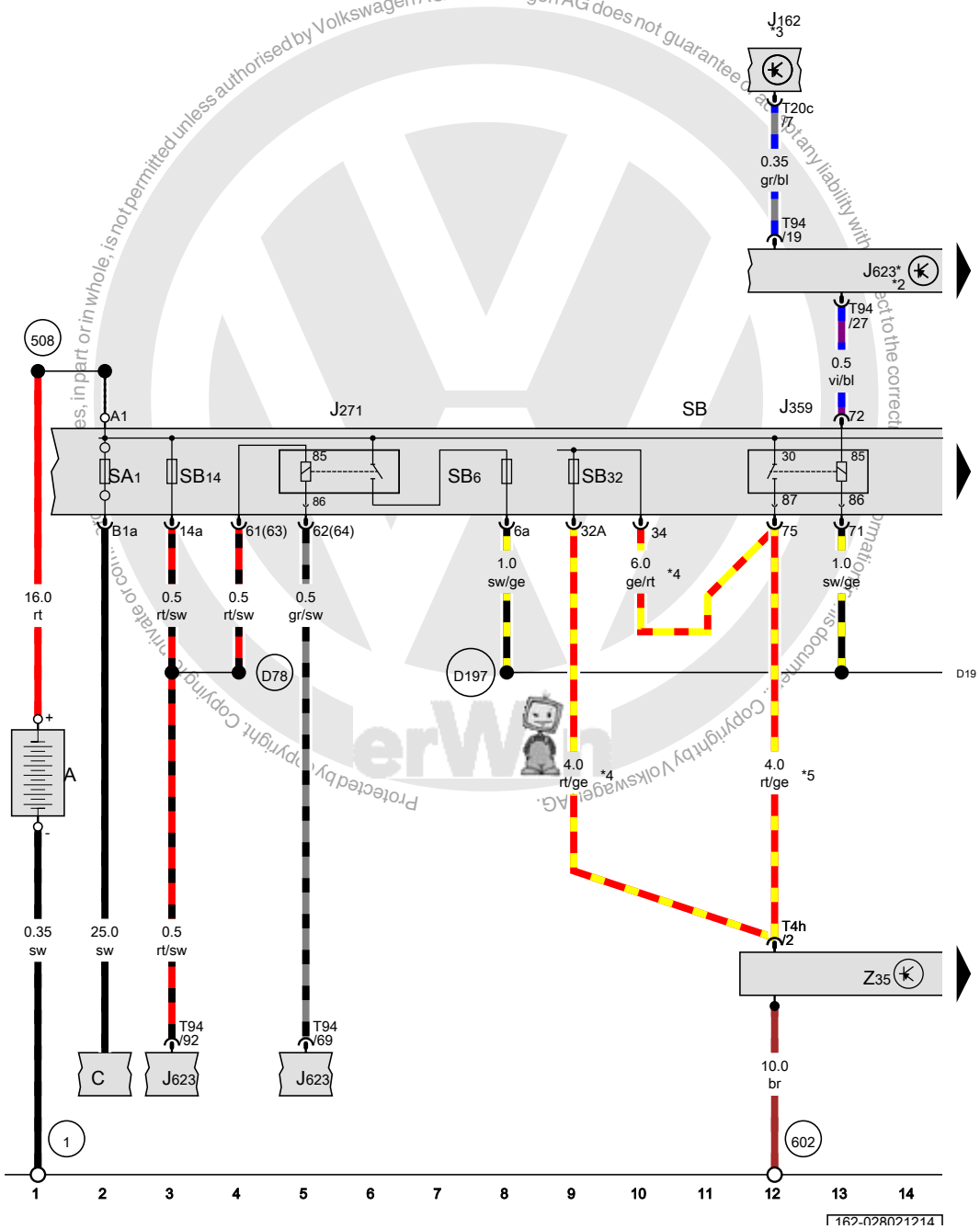

Motronic engine control module power supply relay, Low heat output relay, Auxiliary heater heating element

A	Battery
C	Generator
J162	Heater control module
J271	Motronic engine control module power supply relay
J359	Low heat output relay
J623	Engine control module
SA1	Fuse 1 (on fuse panel A)
SB	Fuse panel B
SB6	Fuse 6 (on fuse panel B)
SB14	Fuse 14 (on fuse panel B)
SB32	Fuse 32 (on fuse panel B)
T4h	4-pin connector
T20c	20-pin connector
T94	94-pin connector
Z35	Auxiliary heater heating element
1	Ground strap, battery to body
508	Terminal 30 threaded connection (on E-box)
602	Ground connection in left front footwell
D78	Positive connection 1 (30a) (in engine compartment wiring harness)
D197	Connection 5 (87a) (in engine compartment wiring harness)
*	Refer to applicable engine wiring diagram
*2	Only for vehicles with a diesel engine
*3	Refer to the applicable wiring diagram for heating with manual control
*4	Running change
*5	Omitted as a running change

ws	=	white
sw	=	black
ro	=	red
rt	=	red
br	=	brown
gn	=	green
bl	=	blue
gr	=	grey
li	=	lilac
vi	=	lilac
ge	=	yellow
or	=	orange
rs	=	pink

Protected by copyright. Copying or distribution, in part or in whole, is not permitted unless authorised by Volkswagen AG. Volkswagen AG does not guarantee or accept any liability with respect to the correctness of information in this document. Copyright by Volkswagen AG.

High heat output relay, Auxiliary heater heating element

J360	High heat output relay
J623	Engine control module
SB	Fuse panel B
SB21	Fuse 21 (on fuse panel B)
SB22	Fuse 22 (on fuse panel B)
T4h	4-pin connector
T94	94-pin connector
Z35	Auxiliary heater heating element
A176	Auxiliary heater connection (in instrument panel wiring harness)
D197	Connection 5 (87a) (in engine compartment wiring harness)
*	Running change
*2	Omitted as a running change

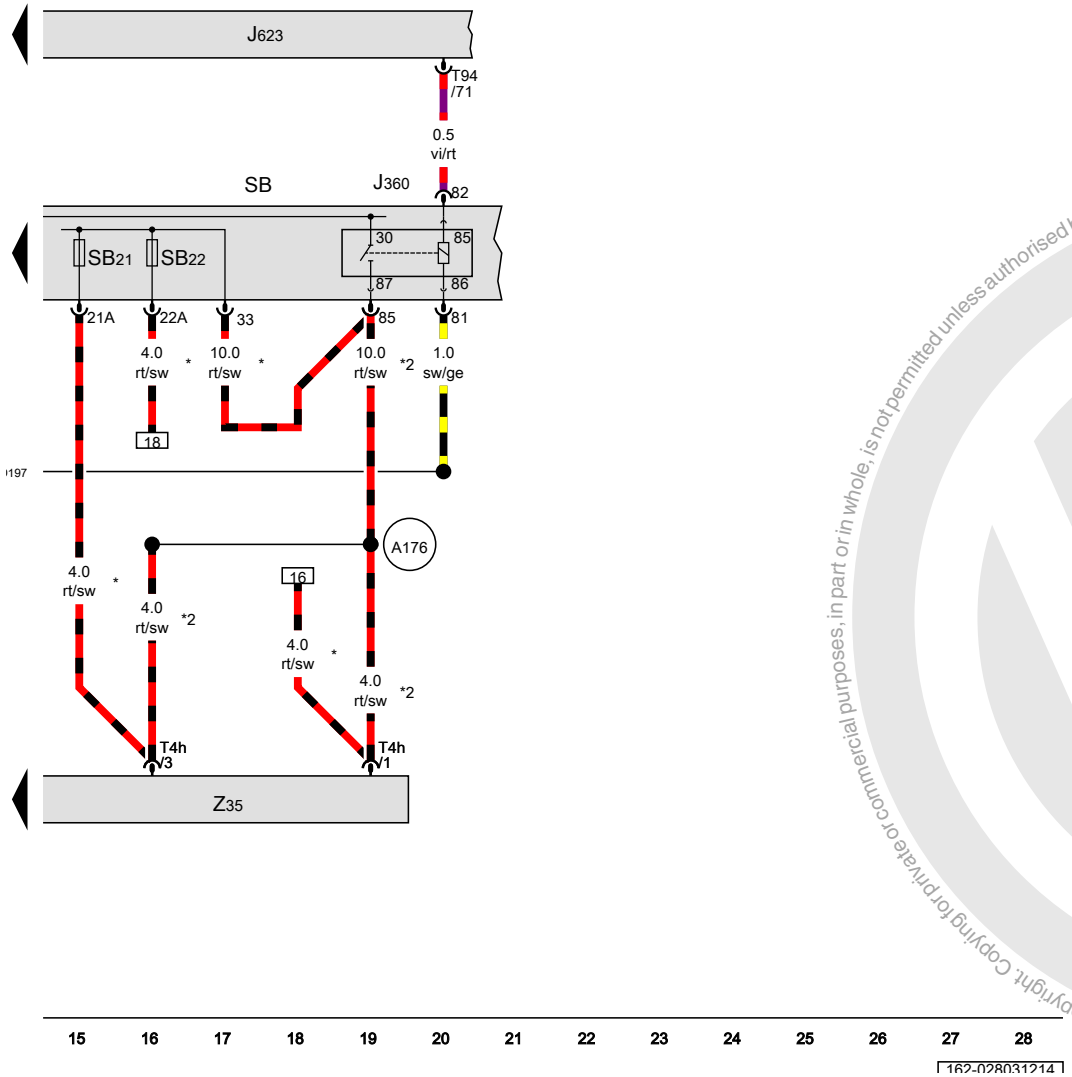

ws	=	white
sw	=	black
ro	=	red
rt	=	red
br	=	brown
gn	=	green
bl	=	blue
gr	=	grey
li	=	lilac
vi	=	lilac
ge	=	yellow
or	=	orange
rs	=	pink

Volkswagen AG. Volkswagen AG does not guarantee or accept any liability with respect to the correctness of information in this document. Copyright by Volkswagen AG. Protected by copyright. Copying for private or commercial purposes, in part or in whole, is not permitted unless authorised by Volkswagen AG.

Washer system, headlamps , (8X1)

from April 2010

Protected by copyright. Copying for private or commercial purposes, in part or in whole, is not permitted unless authorised by Volkswagen AG. Volkswagen AG does not guarantee or accept any liability with respect to the correctness of information in this document. Copyright by Volkswagen AG.

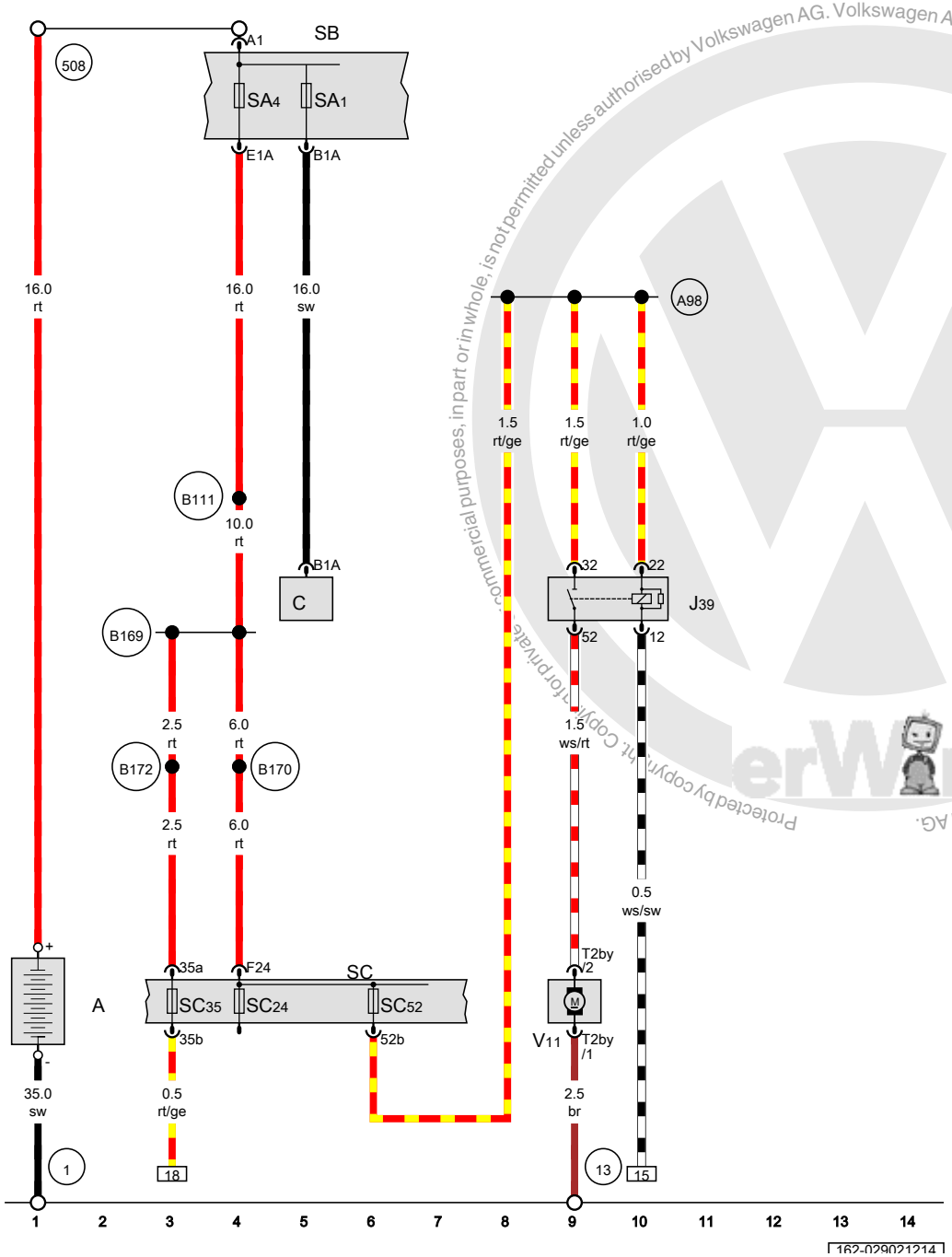

Headlamp washer relay, Headlamp washer pump

A	Battery
C	Generator
J39	Headlamp washer relay
SA1	Fuse 1 (on fuse panel A)
SA4	Fuse 4 (on fuse panel A)
SB	Fuse panel B
SC	Fuse panel C
SC24	Fuse 24 (on fuse panel C)
SC35	Fuse 35 (on fuse panel C)
SC52	Fuse 52 (on fuse panel C)
T2by	Double connector
V11	Headlamp washer pump
1	Ground strap, battery to body
13	Ground connection in engine compartment, right
508	Terminal 30 threaded connection (on E-box)
A98	Positive connection 4 (30) (in instrument panel wiring harness)
B111	Positive connection 1 (30a) (in interior wiring harness)
B169	Positive connection 1 (30) (in interior wiring harness)
B170	Positive connection 2 (30) (in interior wiring harness)
B172	Positive connection 4 (30) (in interior wiring harness)

ws	=	white
sw	=	black
ro	=	red
rt	=	red
br	=	brown
gn	=	green
bl	=	blue
gr	=	grey
li	=	lilac
vi	=	lilac
ge	=	yellow
or	=	orange
rs	=	pink

Protected by copyright. Copying for private or commercial purposes, in part or in whole, is not permitted unless authorised by Volkswagen AG. Volkswagen AG does not guarantee or accept any liability with respect to the correctness of information in this document. Copyright by Volkswagen AG.

Windshield wiper intermittent mode switch, Windshield and headlamp washer pump switch, Vehicle electrical control module system, Steering column electronics control module, Data bus on board diagnostic interface

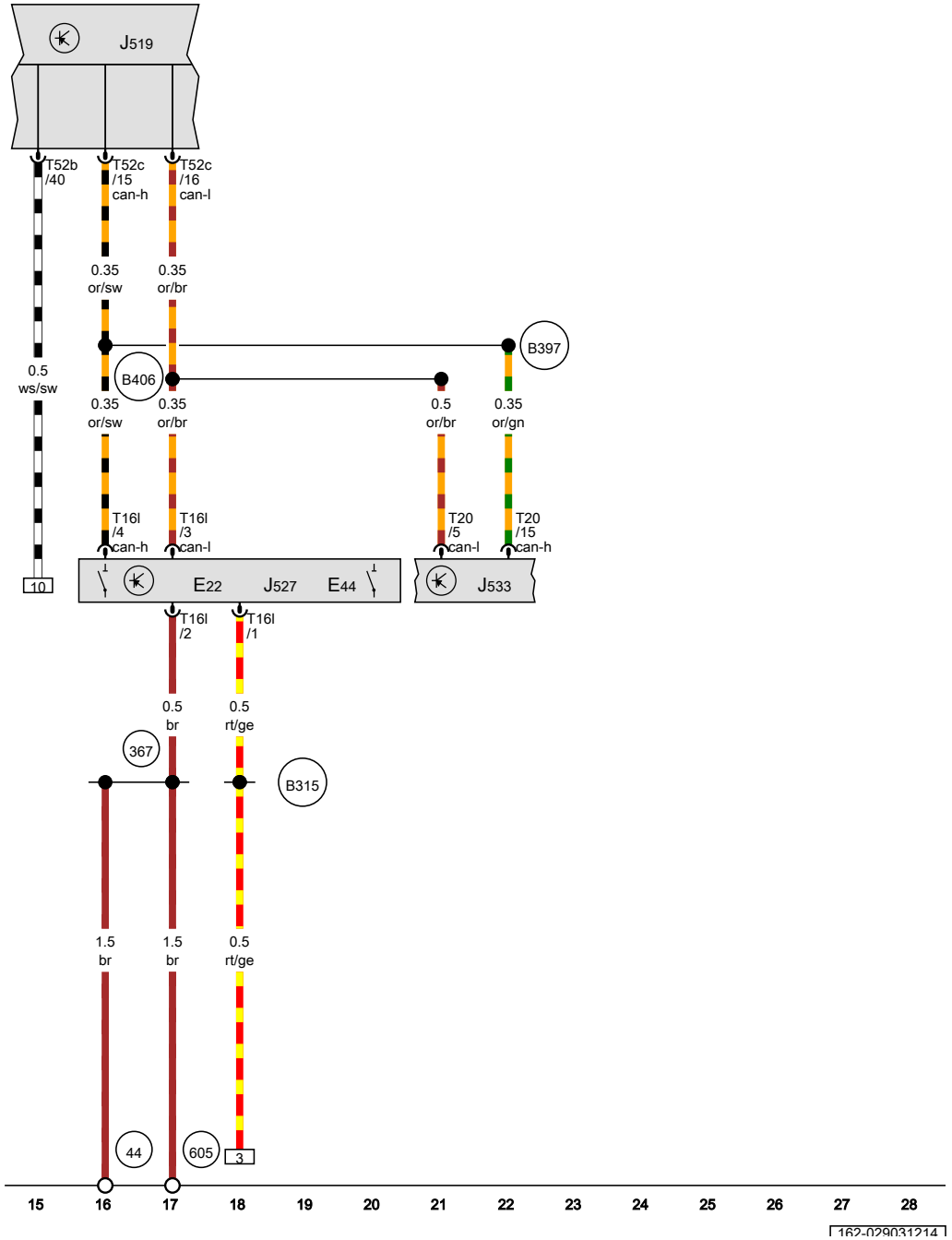

E22	Windshield wiper intermittent mode switch
E44	Windshield and headlamp washer pump switch
J519	Vehicle electrical control module system
J527	Steering column electronics control module
J533	Data bus on board diagnostic interface
T16l	16-pin connector
T20	20-pin connector
T52b	52-pin connector
T52c	52-pin connector
44	Ground connection on A-pillar, lower left
367	Ground connection 2 (in main wiring harness)
605	Ground connection on upper steering column
B315	Positive connection 1 (30a) (in main wiring harness)
B397	Comfort system CAN bus high connection 1 (in main wiring harness)
B406	Comfort system CAN bus low connection 1 (in main wiring harness)

ws	=	white
sw	=	black
ro	=	red
rt	=	red
br	=	brown
gn	=	green
bl	=	blue
gr	=	grey
li	=	lilac
vi	=	lilac
ge	=	yellow
or	=	orange
rs	=	pink

Protected by copyright. Copying for private or commercial purposes, in part or in whole, is not permitted unless authorised by Volkswagen AG. Volkswagen AG does not guarantee or accept any liability with respect to the correctness of information in this document. Copyright by Volkswagen AG.

Seats, heated , (4A3)

from April 2010

Protected by copyright. Copying for private or commercial purposes, in part or in whole, is not permitted unless authorised by Volkswagen AG. Volkswagen AG does not guarantee or accept any liability with respect to the correctness of information in this document. Copyright by Volkswagen AG.

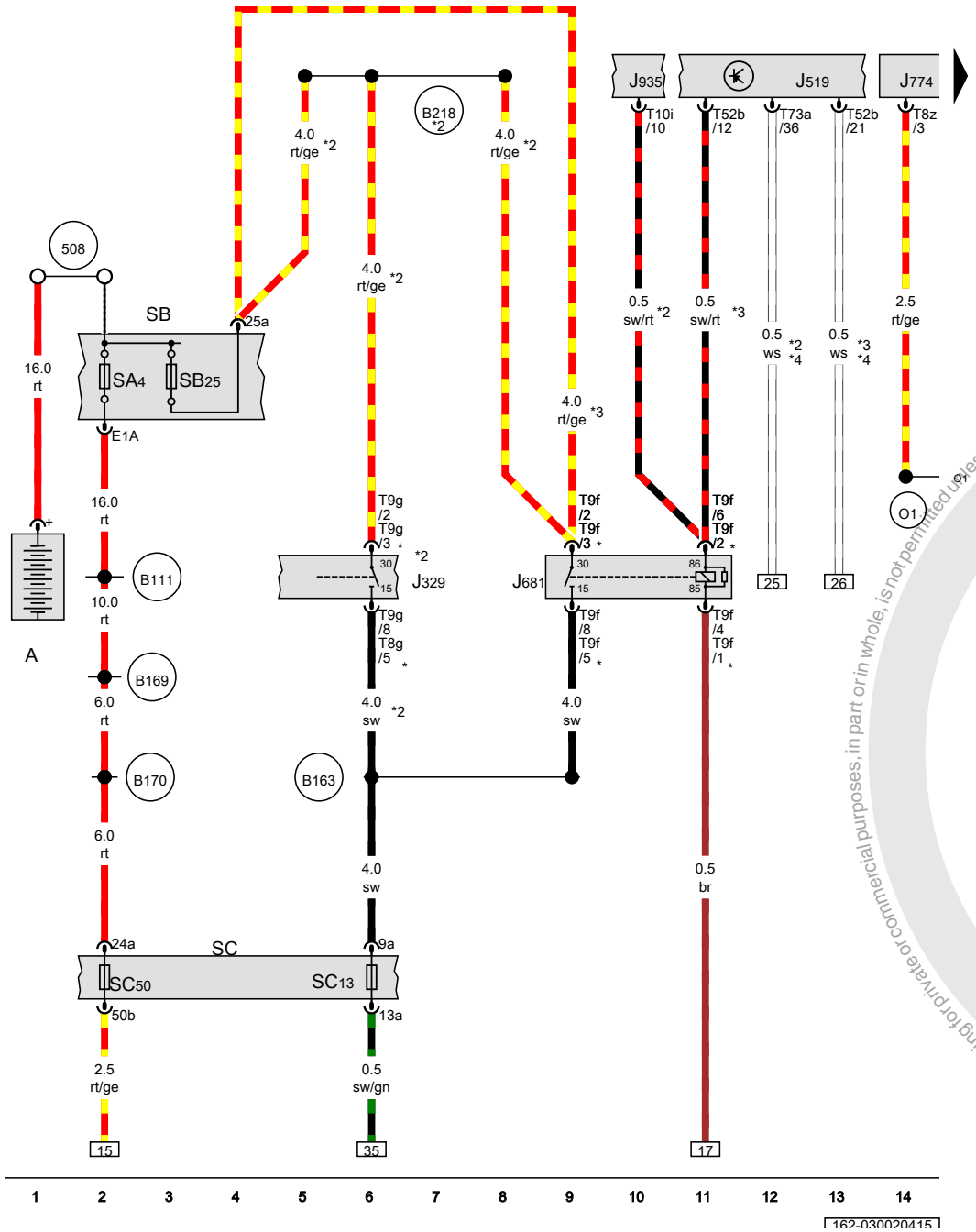

Vehicle electrical control module system, Front seat heating control module, Fuse panel B, Fuse panel C

A	Battery
J329	Terminal 15 power supply relay
J519	Vehicle electrical control module system
J681	Terminal 15 power supply relay 2
J774	Front seat heating control module
J935	Converter box
SA4	Fuse 4 (on fuse panel A)
SB	Fuse panel B
SB25	Fuse 25 (on fuse panel B)
SC	Fuse panel C
SC13	Fuse 13 (on fuse panel C)
SC50	Fuse 50 (on fuse panel C)
T8z	8-pin connector
T9f	9-pin connector
T9g	9-pin connector
T10i	10-pin connector
T52b	52-pin connector
T73a	73-pin connector
508	Terminal 30 threaded connection (on E-box)
B111	Positive connection 1 (30a) (in interior wiring harness)
B163	Positive connection 1 (15) (in interior wiring harness)
B169	Positive connection 1 (30) (in interior wiring harness)
B170	Positive connection 2 (30) (in interior wiring harness)
B218	Positive connection 6 (30) (in interior wiring harness)
O1	Positive connection (30) (in heated seats wiring harness)

ws	=	white
sw	=	black
ro	=	red
rt	=	red
br	=	brown
gn	=	green
bl	=	blue
gr	=	grey
li	=	lilac
vi	=	lilac
ge	=	yellow
or	=	orange
rs	=	pink

*	Running change
*2	only for vehicles with Low equipment (AW0)
*3	only for vehicles with High equipment (AW1)
*4	Diameter depends on equipment

Protected by copyright. Copying for private or commercial purposes, in part or in whole, is not permitted unless authorised by Volkswagen AG. Volkswagen AG does not guarantee or accept any liability with respect to the correctness of information in this document. Copyright by Volkswagen AG.

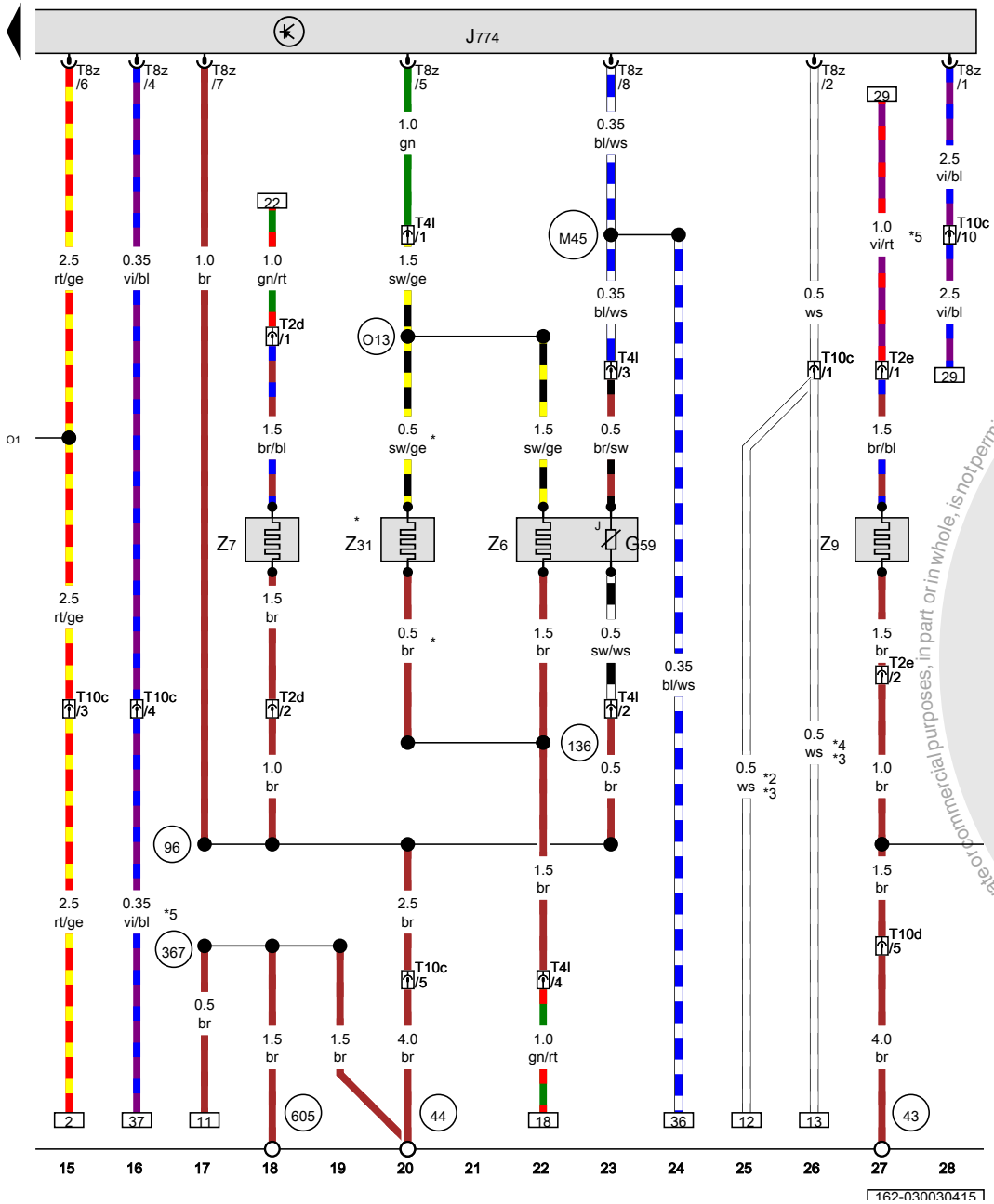

Heated driver seat temperature sensor, Front seat heating control module, Driver backrest heating element, Front passenger backrest heating element

G59	Heated driver seat temperature sensor
J774	Front seat heating control module
T2d	Double connector
T2e	Double connector
T4l	4-pin connector
T8z	8-pin connector
T10c	10-pin connector, under the driver seat
T10d	10-pin connector, under the front passenger seat
Z6	Driver seat heating element
Z7	Driver backrest heating element
Z9	Front passenger backrest heating element
Z31	Driver seat bolster heater
43	Ground connection on A-pillar, lower right
44	Ground connection on A-pillar, lower left
96	Ground connection 1 (in heated seats wiring harness)
136	Ground connection 2 (in heated seats wiring harness)
145	Ground connection 3 (in heated seats wiring harness)
367	Ground connection 2 (in main wiring harness)
605	Ground connection on upper steering column
M45	Connection 5 (in driver seat wiring harness)
O1	Positive connection (30) (in heated seats wiring harness)
O13	Connection 2 (in heated seats wiring harness)
*	Omitted as a running change
*2	only for vehicles with Low equipment (AW0)
*3	Diameter depends on equipment
*4	only for vehicles with High equipment (AW1)
*5	The color of the wires depends on vehicle equipment

ws	=	white
sw	=	black
ro	=	red
rt	=	red
br	=	brown
gn	=	green
bl	=	blue
gr	=	grey
li	=	lilac
vi	=	lilac
ge	=	yellow
or	=	orange
rs	=	pink

Copyright by Volkswagen AG. Volkswagen AG does not guarantee or accept any liability with respect to the correctness of information in this document. Protected by copyright. Copying for private or commercial purposes, in part or in whole, is not permitted unless authorised by Volkswagen AG.

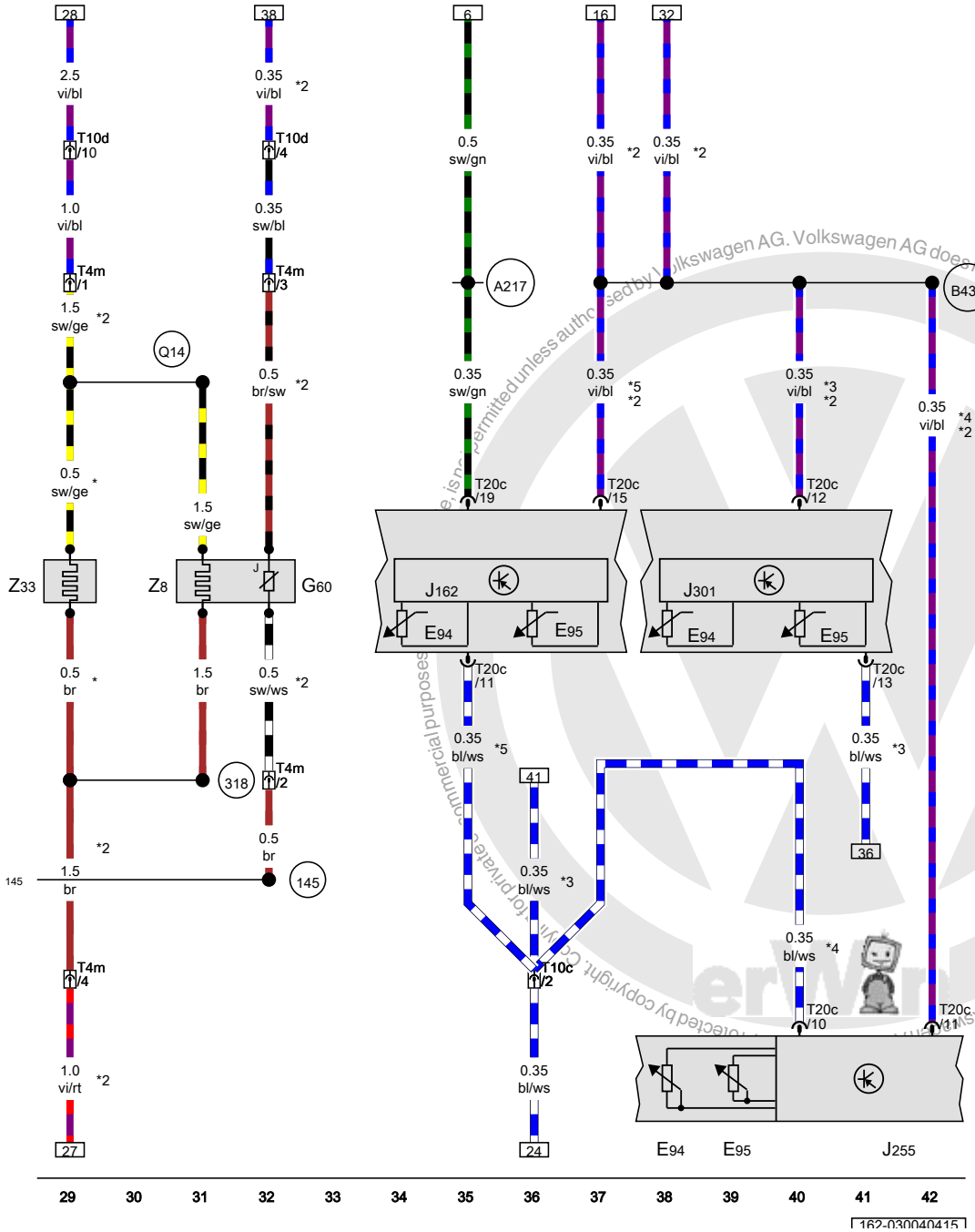

Heated driver seat adjuster, Heated front passenger seat adjuster, Front passenger heated seat temperature sensor

E94	Heated driver seat adjuster
E95	Heated front passenger seat adjuster
G60	Front passenger heated seat temperature sensor
J162	Heater control module
J255	Climatronic control module
J301	A/C control module
T4m	4-pin connector
T10c	10-pin connector, under the driver seat
T10d	10-pin connector, under the front passenger seat
T20c	20-pin connector
Z8	Front passenger seat heating element
Z33	Front passenger seat bolster heater
145	Ground connection 3 (in heated seats wiring harness)
318	Ground connection 4 (in heated seats wiring harness)
A217	Positive connection 8 (15a) (in instrument panel wiring harness)
B431	Seat heating connection (in main wiring harness)
Q14	Lock-out switch connection (in power window/central locking system and door contact switch wiring harness)
*	Omitted as a running change
*2	The color of the wires depends on vehicle equipment
*3	Only for vehicles with Climatic
*4	Only for vehicles with Climatronic
*5	Only for vehicles without an A/C system

ws	=	white
sw	=	black
ro	=	red
rt	=	red
br	=	brown
gn	=	green
bl	=	blue
gr	=	grey
li	=	lilac
vi	=	lilac
ge	=	yellow
or	=	orange
rs	=	pink

Protected by copyright. Copying for private or commercial purposes, is not permitted unless authorised by Volkswagen AG. Volkswagen AG does not guarantee or accept any liability with respect to the correctness of information in this document. Copyright by Volkswagen AG.

Seat adjustment without memory function , (3PB),(3PZ)

from April 2010

Protected by copyright. Copying for private or commercial purposes, in part or in whole, is not permitted unless authorised by Volkswagen AG. Volkswagen AG does not guarantee or accept any liability with respect to the correctness of information in this document. Copyright by Volkswagen AG.

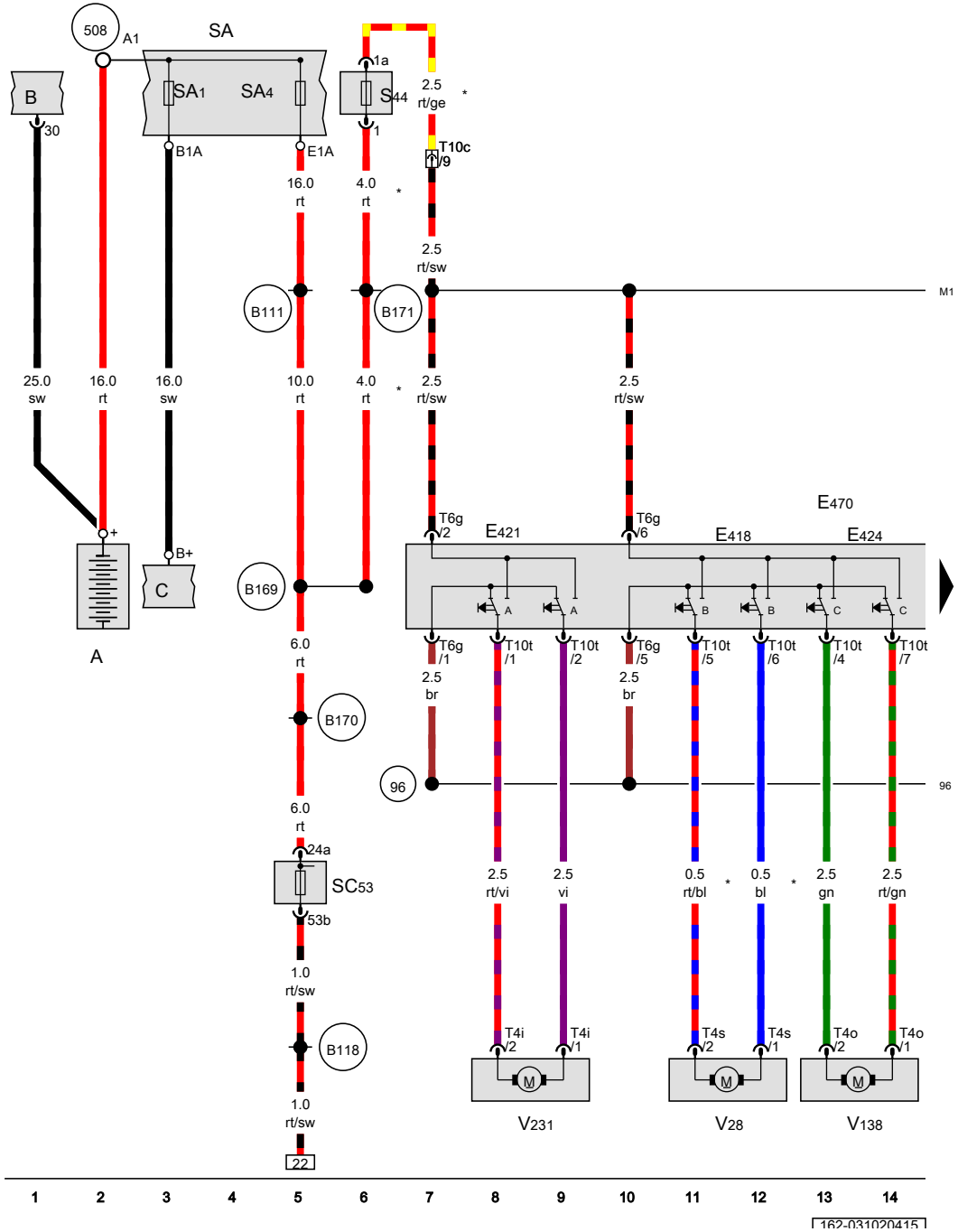

Battery, Starter, Generator, Seat forward/back adjustment button, Seat height adjustment button, Driver seat adjustment control head, Fuse panel A, Fuse 53 (on fuse panel C), Driver seat forward/back adjustment motor, Driver seat height adjustment motor, Seat angle adjustment motor

A	Battery
B	Starter
C	Generator
E418	Seat forward/back adjustment button
E421	Angle adjustment button
E424	Seat height adjustment button
E470	Driver seat adjustment control head
SA	Fuse panel A
SA1	Fuse 1 (on fuse panel A)
SA4	Fuse 4 (on fuse panel A)
S44	Driver power seat adjustment circuit breaker 1
SC53	Fuse 53 (on fuse panel C)
T4i	4-pin connector
T4o	4-pin connector
T4s	4-pin connector
T6g	6-pin connector
T10c	10-pin connector, under the driver seat
T10t	10-pin connector
V28	Driver seat forward/back adjustment motor
V138	Driver seat height adjustment motor
V231	Seat angle adjustment motor
96	Ground connection 1 (in heated seats wiring harness)
508	Terminal 30 threaded connection (on E-box)
B111	Positive connection 1 (30a) (in interior wiring harness)
B118	Driver seat adjustment connection (in interior wiring harness)
B169	Positive connection 1 (30) (in interior wiring harness)
B170	Positive connection 2 (30) (in interior wiring harness)
B171	Positive connection 3 (30) (in interior wiring harness)
M1	Positive connection 1 (30) (in seat adjustment wiring harness)
*	The color of the wires depends on vehicle equipment

ws	=	white
sw	=	black
ro	=	red
rt	=	red
br	=	brown
gn	=	green
bl	=	blue
gr	=	grey
li	=	lilac
vi	=	lilac
ge	=	yellow
or	=	orange
rs	=	pink

Protected by copyright. Copying for private or commercial purposes, in part or in whole, is not permitted unless authorised by Volkswagen AG. Volkswagen AG does not guarantee or accept any liability with respect to the correctness of information in this document. Copyright by Volkswagen AG.

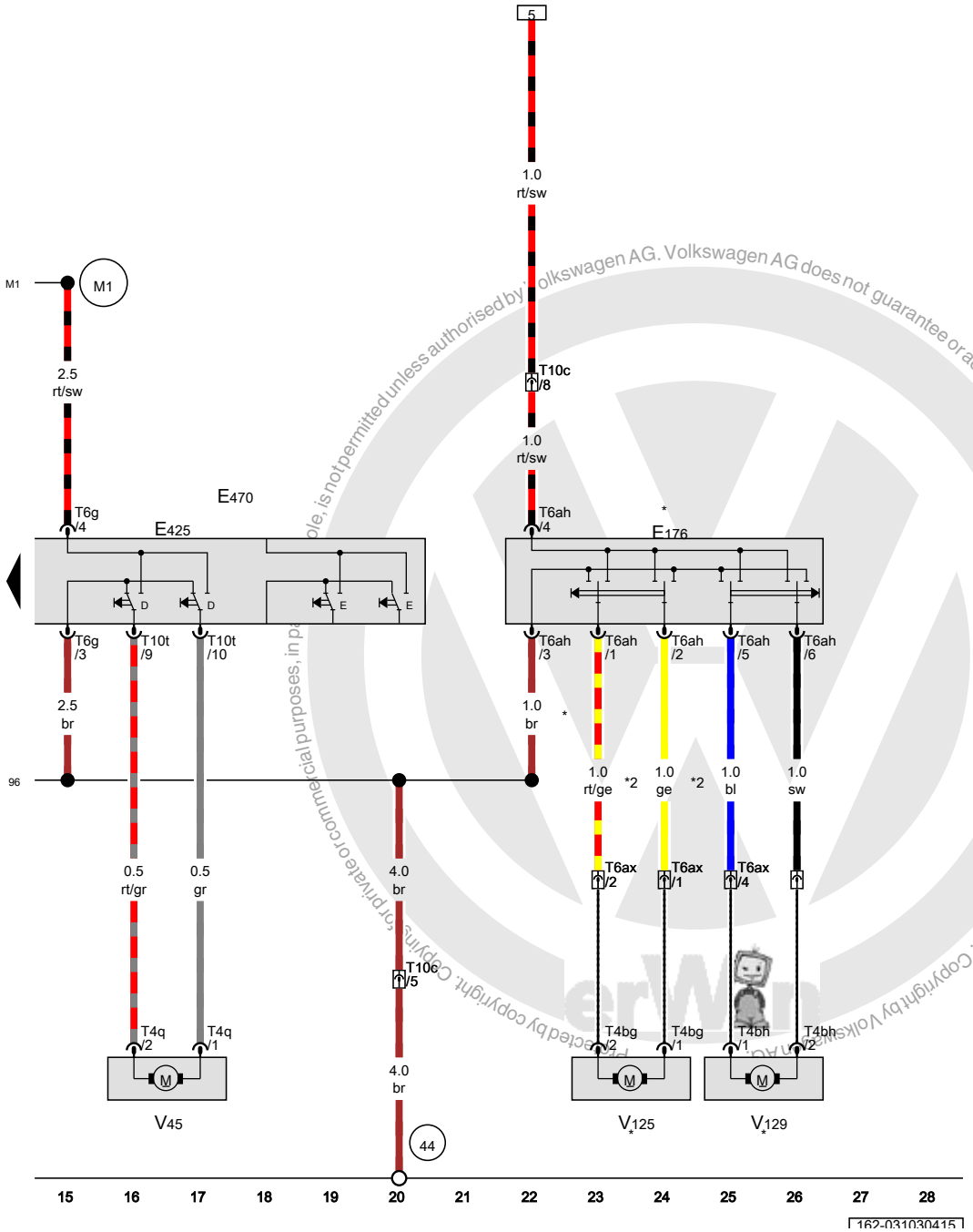

Driver seat lumbar support adjustment switch, Backrest adjustment button, Driver seat adjustment control head, Driver backrest adjustment motor, Driver seat lumbar support curvature adjustment motor, Driver seat lumbar support height adjustment motor

E176	Driver seat lumbar support adjustment switch
E425	Backrest adjustment button
E470	Driver seat adjustment control head
T4bg	4-pin connector
T4bh	4-pin connector
T4n	4-pin connector
T4q	4-pin connector
T6ah	6-pin connector
T6ax	6-pin connector
T6g	6-pin connector
T10c	10-pin connector, under the driver seat
T10t	10-pin connector
V45	Driver backrest adjustment motor
V125	Driver seat lumbar support curvature adjustment motor
V129	Driver seat lumbar support height adjustment motor
44	Ground connection on A-pillar, lower left
96	Ground connection 1 (in heated seats wiring harness)
M1	Positive connection 1 (30) (in seat adjustment wiring harness)
*	Depending on equipment
*2	The color of the wires depends on vehicle equipment

ws	=	white
sw	=	black
ro	=	red
rt	=	red
br	=	brown
gn	=	green
bl	=	blue
gr	=	grey
li	=	lilac
vi	=	lilac
ge	=	yellow
or	=	orange
rs	=	pink

Volkswagen AG. Volkswagen AG does not guarantee or accept any liability with respect to the correctness of information in this document. Copyright by Volkswagen AG. Protected by copyright. Copying for private or commercial purposes, in part or in whole, is not permitted unless authorised by Volkswagen AG.

Seat lumbar adjustment , (7P7)

from April 2010

Protected by copyright. Copying for private or commercial purposes, in part or in whole, is not permitted unless authorised by Volkswagen AG. Volkswagen AG does not guarantee or accept any liability with respect to the correctness of information in this document. Copyright by Volkswagen AG.

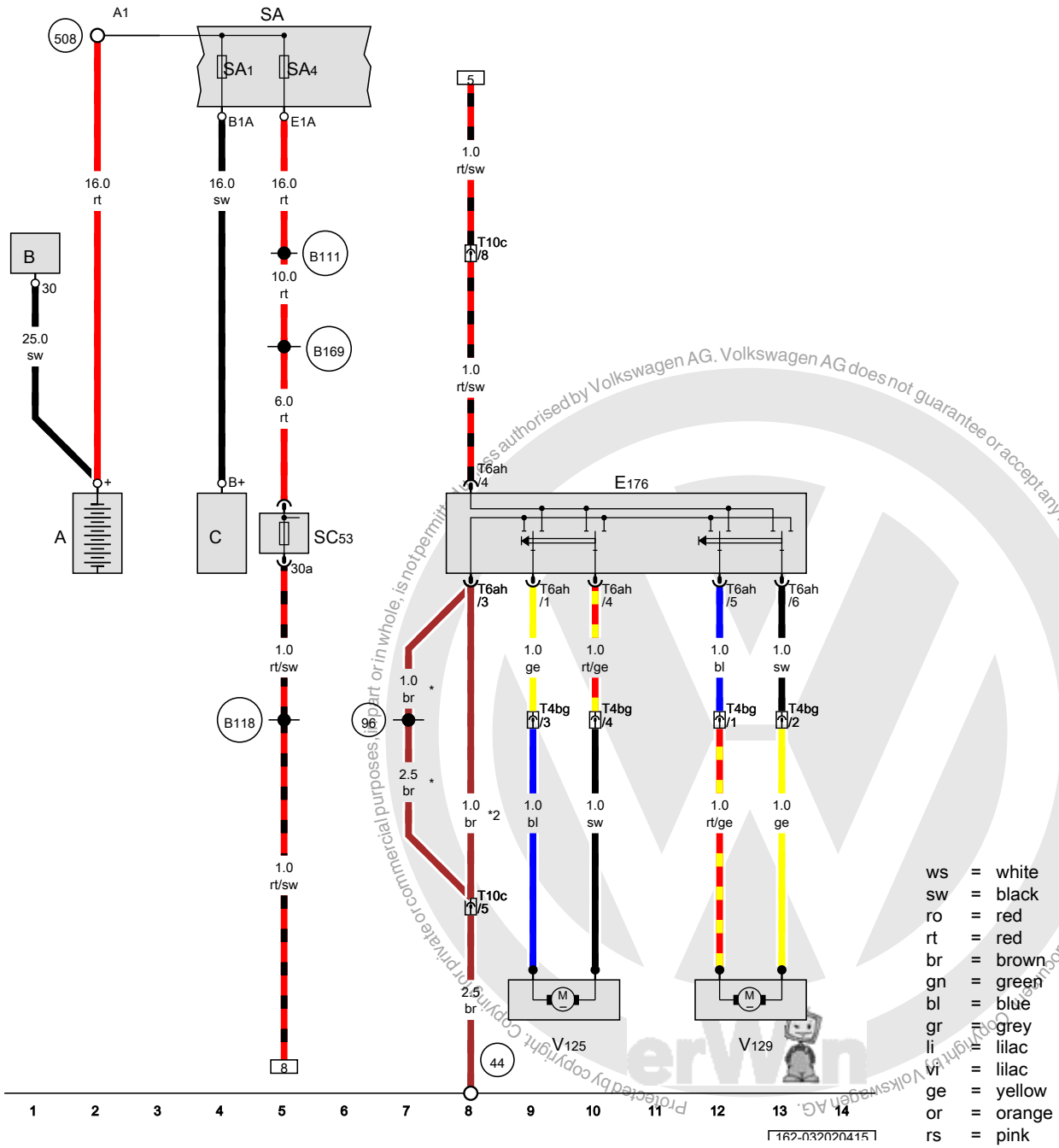

Driver seat lumbar support adjustment switch, Fuse 1 (on fuse panel A), Fuse 4 (on fuse panel A), Fuse 53 (on fuse panel C), Driver seat lumbar support curvature adjustment motor, Driver seat lumbar support height adjustment motor

A	Battery
B	Starter
C	Generator
E176	Driver seat lumbar support adjustment switch
SA	Fuse panel A
SA1	Fuse 1 (on fuse panel A)
SA4	Fuse 4 (on fuse panel A)
SC53	Fuse 53 (on fuse panel C)
T4bg	4-pin connector, in the driver seat backrest
T6ah	6-pin connector
T10c	10-pin connector, under the driver seat
V125	Driver seat lumbar support curvature adjustment motor
V129	Driver seat lumbar support height adjustment motor
44	Ground connection on A-pillar, lower left
96	Ground connection 1 (in heated seats wiring harness)
508	Terminal 30 threaded connection (on E-box)
B111	Positive connection 1 (30a) (in interior wiring harness)
B118	Driver seat adjustment connection (in interior wiring harness)
B169	Positive connection 1 (30) (in interior wiring harness)
*	Only for vehicles with an auxiliary heater
*2	Only for vehicles without heated seats

ws	=	white
sw	=	black
ro	=	red
rt	=	red
br	=	brown
gn	=	green
bl	=	blue
gr	=	grey
li	=	lilac
vi	=	lilac
ge	=	yellow
or	=	orange
rs	=	pink

Protected by copyright. Copyright by Volkswagen AG. Unauthorised by Volkswagen AG. Volkswagen AG does not guarantee or accept any liability with respect to the correctness of information in this document. Copyright by Volkswagen AG. Not for private or commercial purposes, in part or in whole, is not permitted.

Compass , (QR1)

from April 2010

Protected by copyright. Copying for private or commercial purposes, in part or in whole, is not permitted unless authorised by Volkswagen AG. Volkswagen AG does not guarantee or accept any liability with respect to the correctness of information in this document. Copyright by Volkswagen AG.

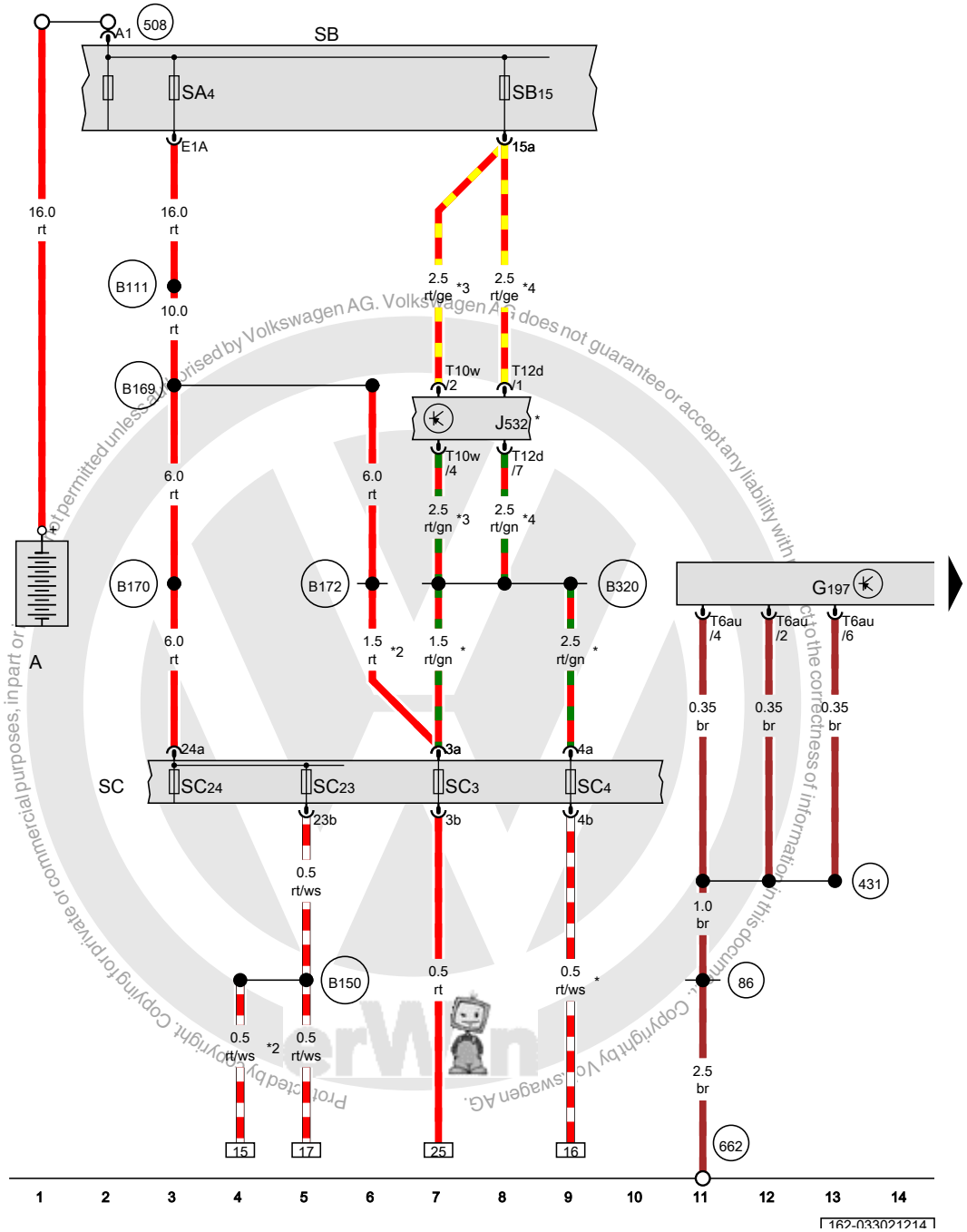

Battery, Compass magnetic field sensor, Voltage stabilizer, Fuse panel B, Fuse panel C

A	Battery
G197	Compass magnetic field sensor
J532	Voltage stabilizer
SB	Fuse panel B
SC3	Fuse 3 (on fuse panel C)
SC4	Fuse 4 (on fuse panel C)
SA4	Fuse 4 (on fuse panel A)
SB15	Fuse 15 (on fuse panel B)
SC	Fuse panel C
SC23	Fuse 23 (on fuse panel C)
SC24	Fuse 24 (on fuse panel C)
T6au	6-pin connector
T10w	10-pin connector
T12d	12-pin connector
86	Ground connection 1 (in rear wiring harness)
431	Ground connection 2 (in roof wiring harness)
508	Terminal 30 threaded connection (on E-box)
662	Ground connection in left rear side panel
B111	Positive connection 1 (30a) (in interior wiring harness)
B150	Positive connection 2 (30a) (in interior wiring harness)
B169	Positive connection 1 (30) (in interior wiring harness)
B170	Positive connection 2 (30) (in interior wiring harness)
B172	Positive connection 4 (30) (in interior wiring harness)
B320	Positive connection 6 (30a) (in main wiring harness)
*	Only for vehicles with Stop/Start system
*2	Only for vehicles without Start/Stop system
*3	Omitted as a running change
*4	Running change

ws	=	white
sw	=	black
ro	=	red
rt	=	red
br	=	brown
gn	=	green
bl	=	blue
gr	=	grey
li	=	lilac
vi	=	lilac
ge	=	yellow
or	=	orange
rs	=	pink

Protected by copyright. Copying for private or commercial purposes, in part or not permitted unless authorised by Volkswagen AG. Volkswagen AG does not guarantee or accept any liability with respect to the correctness of information in this document. Copyright by Volkswagen AG.

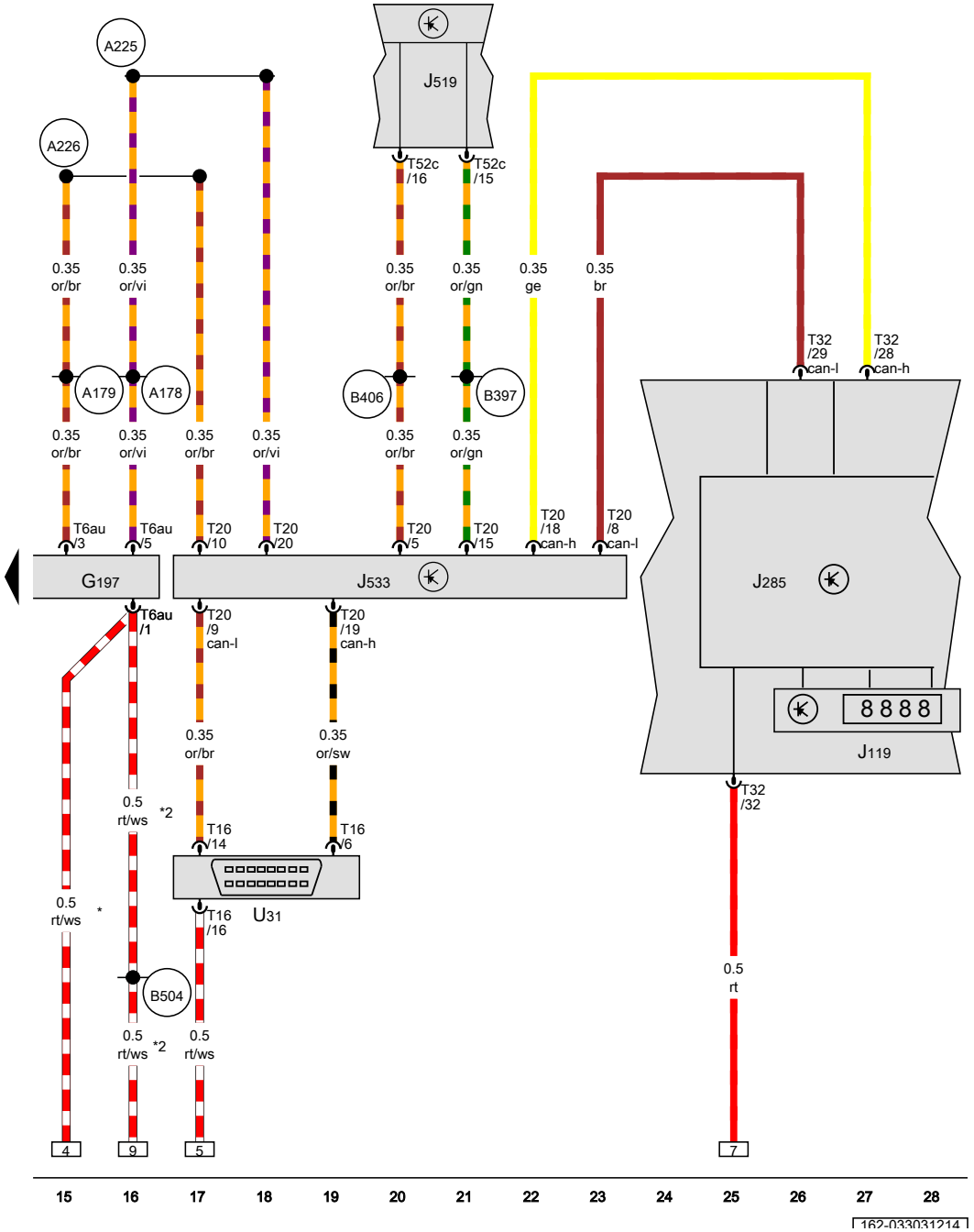

Compass magnetic field sensor, Multifunction indicator, Instrument cluster control module, Vehicle electrical control module system, Data bus on board diagnostic interface

G197	Compass magnetic field sensor
J119	Multifunction indicator
J285	Instrument cluster control module
J519	Vehicle electrical control module system
J533	Data bus on board diagnostic interface
T6au	6-pin connector
T16	16-pin connector
T20	20-pin connector
T32	32-pin connector
T52c	52-pin connector
U31	Diagnostic connection
A178	Infotainment CAN bus high connection (in instrument panel wiring harness)
A179	Infotainment CAN bus low connection (in instrument panel wiring harness)
A225	Infotainment CAN bus high connection 2 (in instrument panel wiring harness)
A226	Infotainment CAN bus low connection 2 (in instrument panel wiring harness)
B397	Comfort system CAN bus high connection 1 (in main wiring harness)
B406	Comfort system CAN bus low connection 1 (in main wiring harness)
B504	Positive connection 8 (30a) (in interior wiring harness)
*	Only for vehicles without Start/Stop system
*2	Only for vehicles with Stop/Start system

ws	=	white
sw	=	black
ro	=	red
rt	=	red
br	=	brown
gn	=	green
bl	=	blue
gr	=	grey
li	=	lilac
vi	=	lilac
ge	=	yellow
or	=	orange
rs	=	pink

Protected by copyright. Copying for private or commercial purposes, in part or in whole, is not permitted unless authorised by Volkswagen AG. Volkswagen AG does not guarantee or accept any liability with respect to the correctness of information in this document. Copyright by Volkswagen AG.

Radio system RCD 310 , (8AE),(8AH),(8AP)

from April 2010

Protected by copyright. Copying for private or commercial purposes, in part or in whole, is not permitted unless authorised by Volkswagen AG. Volkswagen AG does not guarantee or accept any liability with respect to the correctness of information in this document. Copyright by Volkswagen AG.

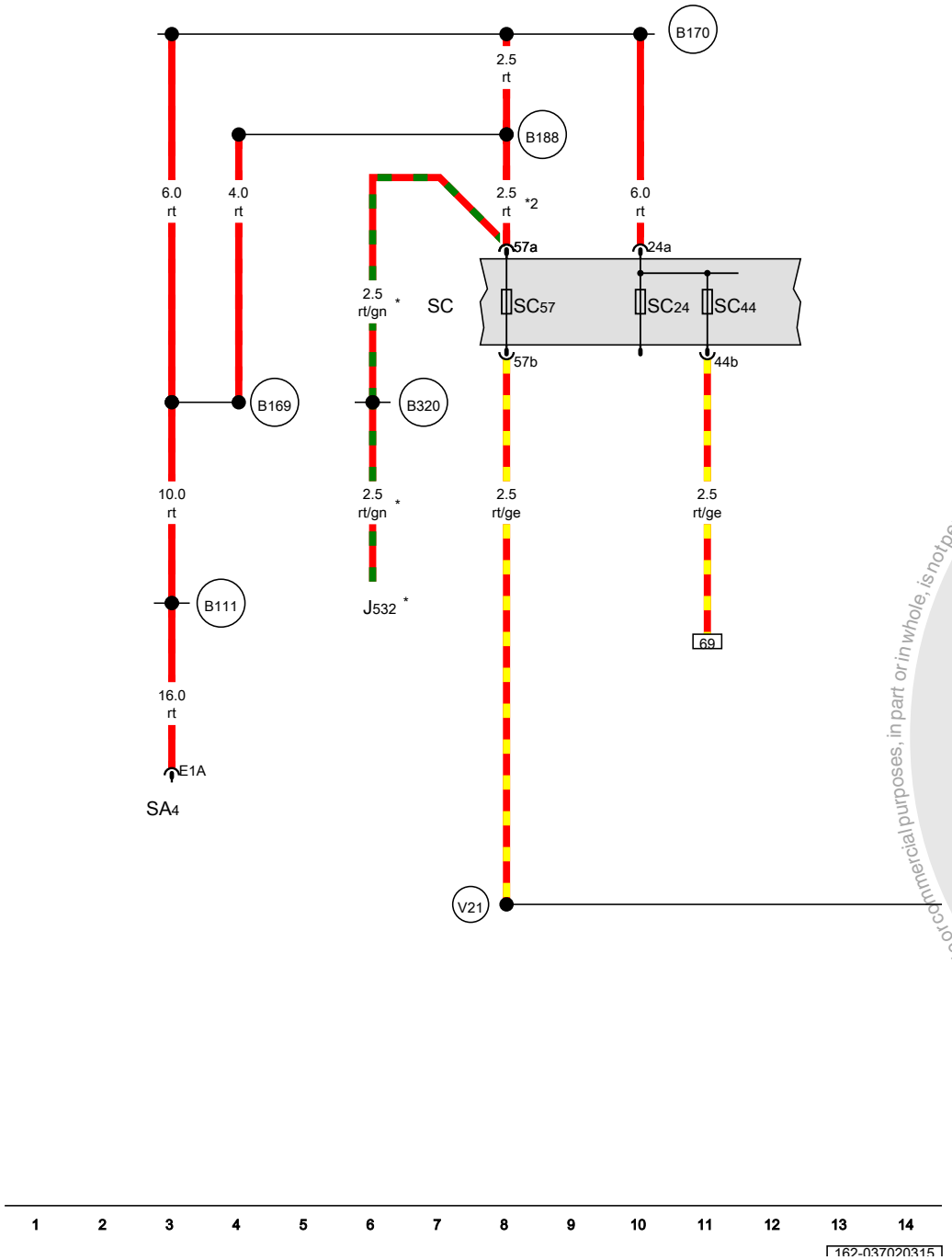

Fuse 4 (on fuse panel A), Fuse panel C

J532	Voltage stabilizer
SA4	Fuse 4 (on fuse panel A)
SC	Fuse panel C
SC24	Fuse 24 (on fuse panel C)
SC44	Fuse 44 (on fuse panel C)
SC57	Fuse 57 (on fuse panel C)
B111	Positive connection 1 (30a) (in interior wiring harness)
B169	Positive connection 1 (30) (in interior wiring harness)
B170	Positive connection 2 (30) (in interior wiring harness)
B188	Positive connection 5 (30) (in interior wiring harness)
B320	Positive connection 6 (30a) (in main wiring harness)
V21	Positive connection (30) (in wiring radio/amplifier wiring harness)
*	Only for vehicles with Stop/Start system
*2	Only for vehicles without Start/Stop system

ws	=	white
sw	=	black
ro	=	red
rt	=	red
br	=	brown
gn	=	green
bl	=	blue
gr	=	grey
li	=	lilac
vi	=	lilac
ge	=	yellow
or	=	orange
rs	=	pink

Protected by copyright. Copying for private or commercial purposes, in part or in whole, is not permitted unless authorised by Volkswagen AG. Volkswagen AG does not guarantee or accept any liability with respect to the correctness of information in this document. Copyright by Volkswagen AG.

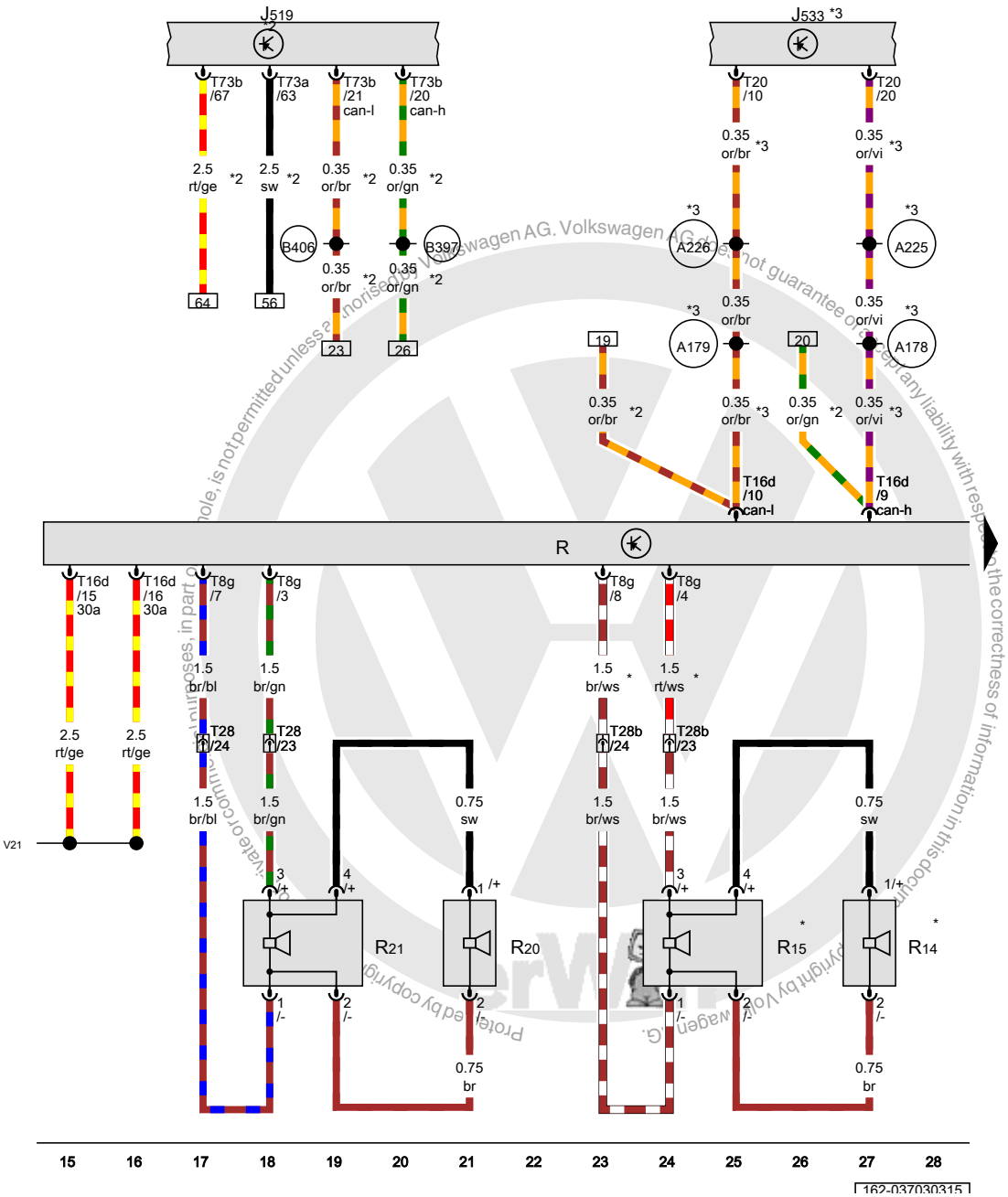

Vehicle electrical control module system, Data bus on board diagnostic interface, Radio, Left front treble speaker, Left front bass speaker

J519	Vehicle electrical control module system
J533	Data bus on board diagnostic interface
R	Radio
R14	Left rear treble speaker
R15	Left rear bass speaker
R20	Left front treble speaker
R21	Left front bass speaker
T8g	8-pin connector
T16d	16-pin connector
T20	20-pin connector
T28	28-pin connector
T28b	28-pin connector
T73a	73-pin connector
T73b	73-pin connector
A178	Infotainment CAN bus high connection (in instrument panel wiring harness)
A179	Infotainment CAN bus low connection (in instrument panel wiring harness)
A225	Infotainment CAN bus high connection 2 (in instrument panel wiring harness)
A226	Infotainment CAN bus low connection 2 (in instrument panel wiring harness)
B397	Comfort system CAN bus high connection 1 (in main wiring harness)
B406	Comfort system CAN bus low connection 1 (in main wiring harness)
V21	Positive connection (30) (in wiring radio/amplifier wiring harness)
*	Depending on equipment
*2	only for vehicles with Low equipment (AW0)
*3	only for vehicles with High equipment (AW1)

ws	=	white
sw	=	black
ro	=	red
rt	=	red
br	=	brown
gn	=	green
bl	=	blue
gr	=	grey
li	=	lilac
vi	=	lilac
ge	=	yellow
or	=	orange
rs	=	pink

Radio, Right front treble speaker, Right front bass speaker

R	Radio
R12	Amplifier
R16	Right rear treble speaker
R17	Right rear bass speaker
R22	Right front treble speaker
R23	Right front bass speaker
R38	Telephone microphone
T2k	Double connector
T8g	8-pin connector
T12e	12-pin connector
T28a	28-pin connector
T28c	28-pin connector
T38	38-pin connector
*	Depending on equipment
*2	Refer to applicable sound system wiring diagram
*3	Refer to applicable telephone systems wiring diagram

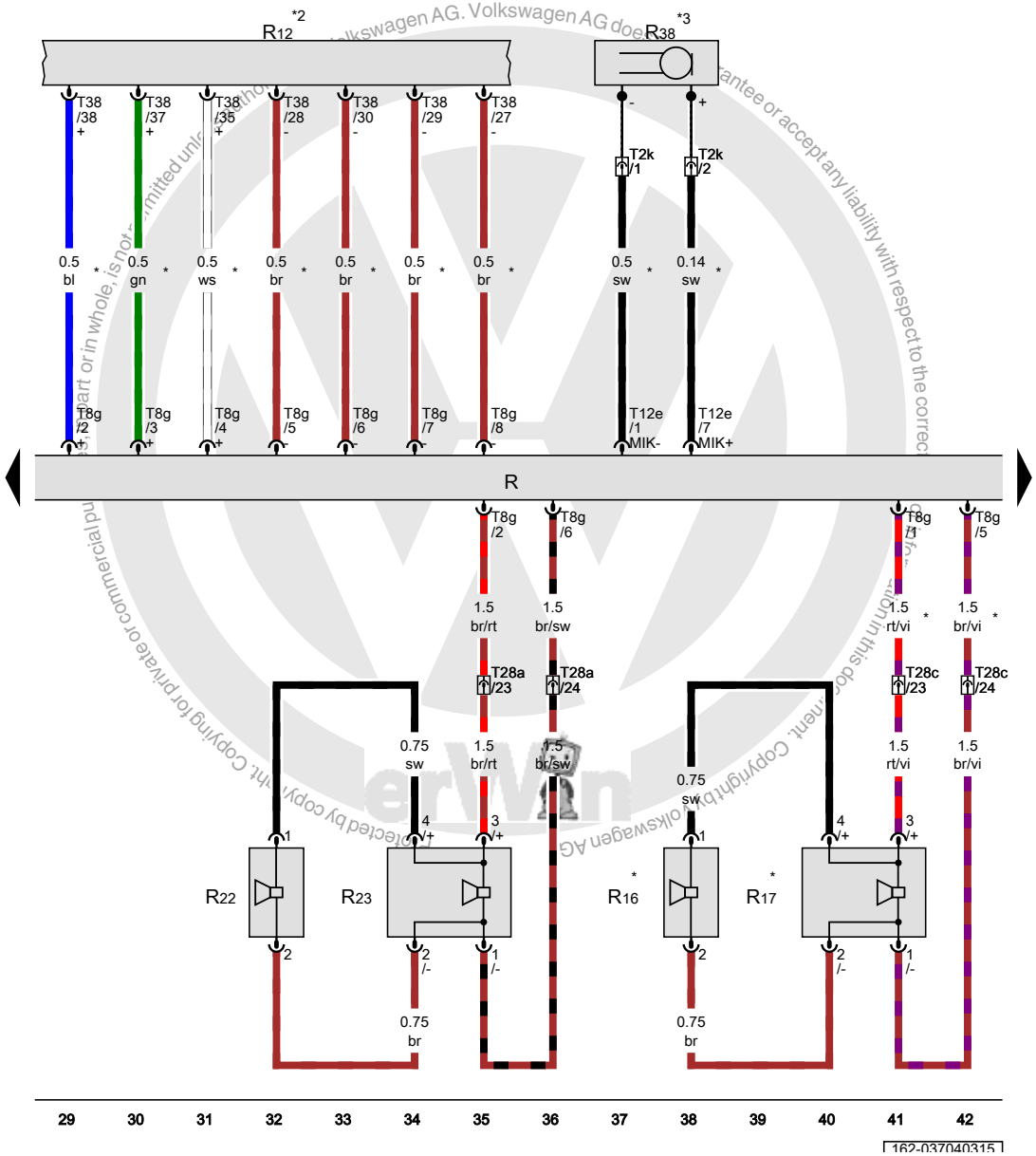

ws	=	white
sw	=	black
ro	=	red
rt	=	red
br	=	brown
gn	=	green
bl	=	blue
gr	=	grey
li	=	lilac
vi	=	lilac
ge	=	yellow
or	=	orange
rs	=	pink

Radio, Left antenna module, Right antenna module, Satellite antenna, Rear window defogger

R	Radio
RX5	Roof antenna
R11	Antenna
R93	Radio antenna 2
R108	Left antenna module
R109	Right antenna module
R170	Satellite antenna
R178	FM frequency filter in negative wire
R179	FM frequency filter in positive wire
T16d	16-pin connector
Z1	Rear window defogger
370	Ground connection 5 (in main wiring harness)
610	Audio ground connection under front center console
681	Ground connection 1 in right rear side panel
B180	Rear window defogger connection (in interior wiring harness)
*	USA only
*2	Depending on equipment
*3	only for vehicles with Low equipment (AW0)

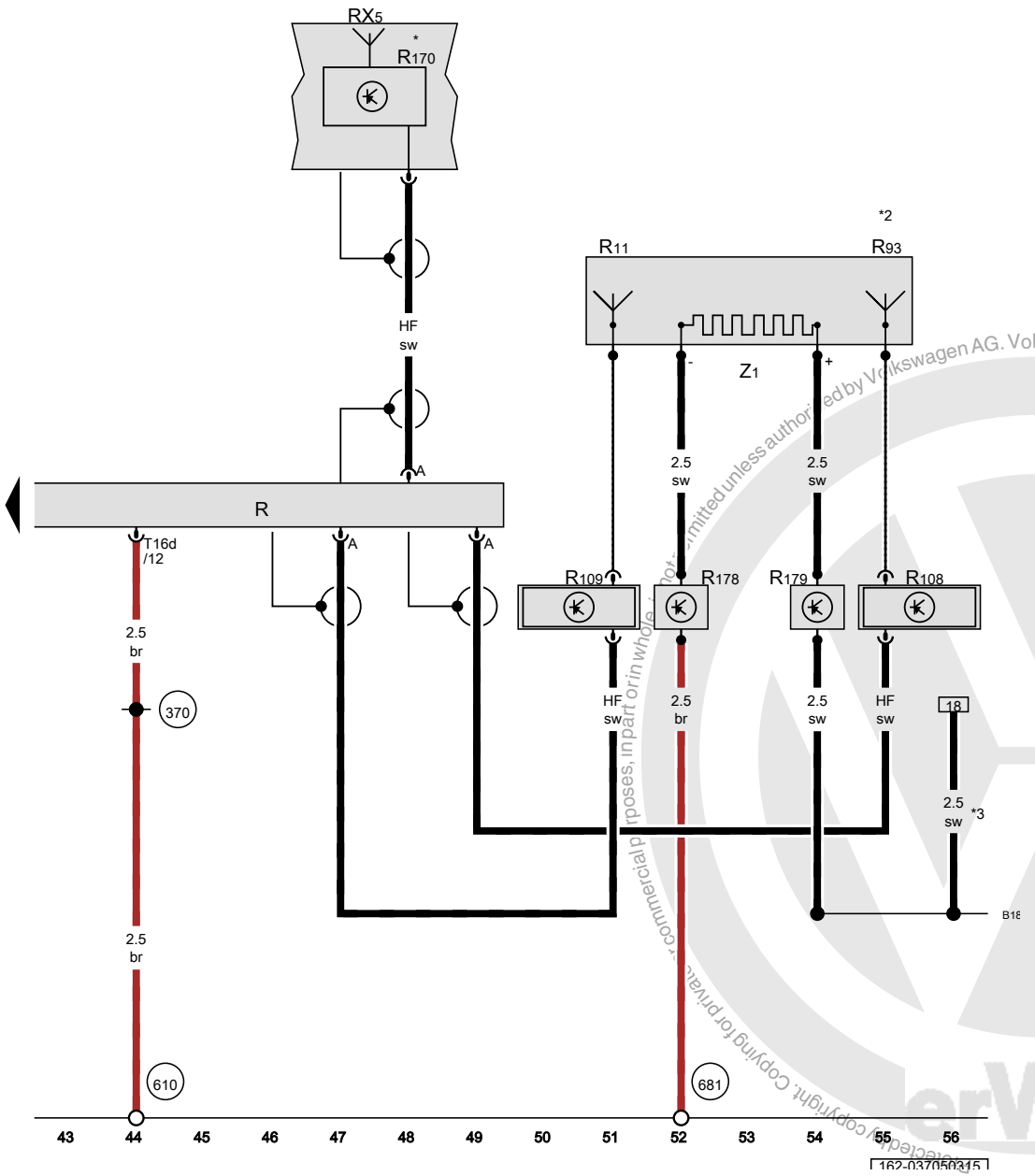

ws	=	white
sw	=	black
ro	=	red
rt	=	red
br	=	brown
gn	=	green
bl	=	blue
gr	=	grey
li	=	lilac
vi	=	lilac
ge	=	yellow
or	=	orange
rs	=	pink

Copyright by Volkswagen AG. Volkswagen AG does not guarantee or accept any liability with respect to the correctness of information in this document. Copyright by Volkswagen AG. Copying for private, commercial purposes, in part or in whole, not permitted unless authorized by Volkswagen AG.

Rear window defogger relay

J9	Rear window defogger relay
J519	Vehicle electrical control module system
T5c	5-pin connector
T52b	52-pin connector
B180	Rear window defogger connection (in interior wiring harness)
B219	Positive connection 4 (30a) (in interior wiring harness)
*	only for vehicles with High equipment (AW1)
*2	only for vehicles with Low equipment (AW0)

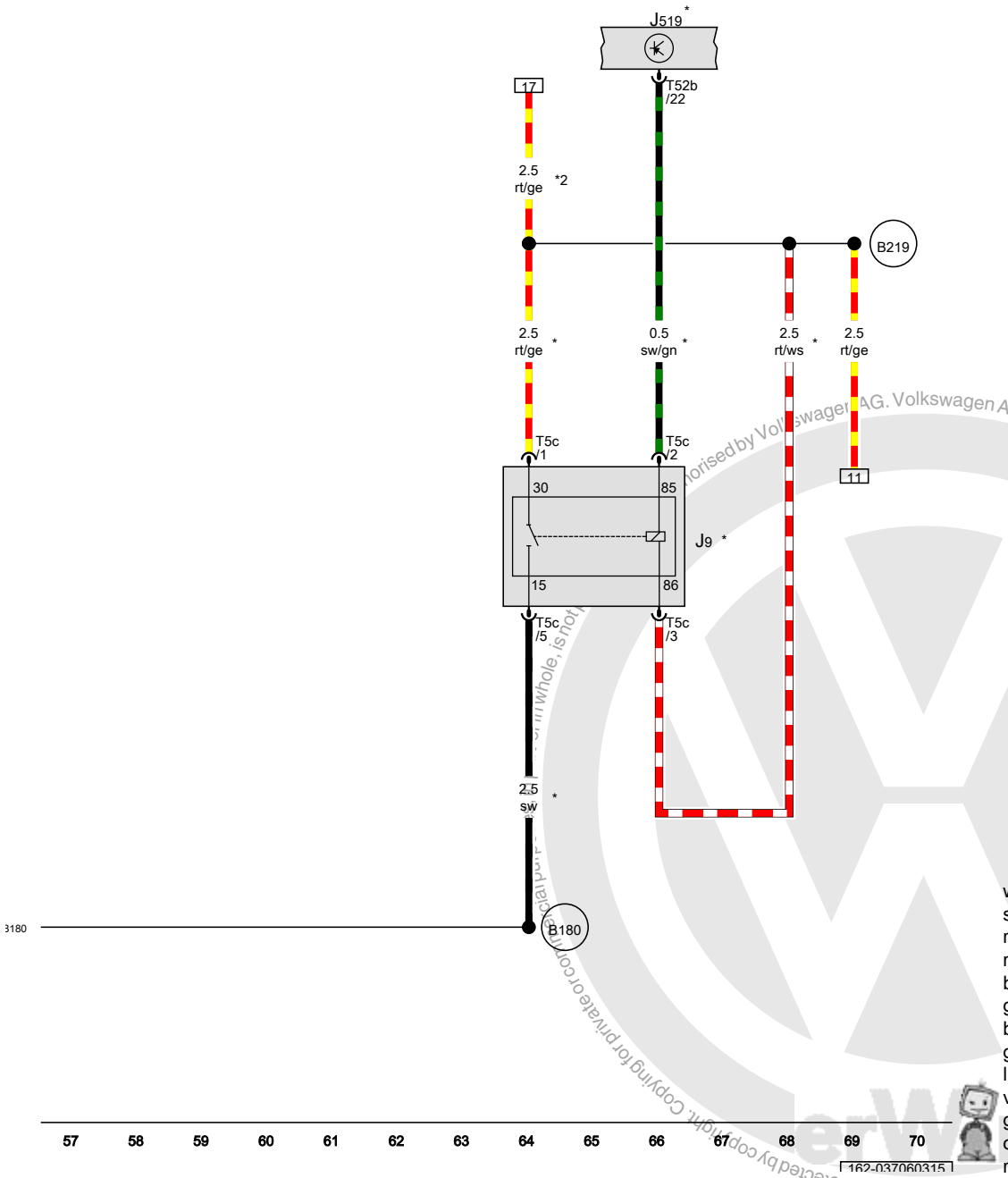

ws	=	white
sw	=	black
ro	=	red
rt	=	red
br	=	brown
gn	=	green
bl	=	blue
gr	=	grey
li	=	lilac
vi	=	lilac
ge	=	yellow
or	=	orange
rs	=	pink

Protected by copyright. Copying for private or commercial purposes, in whole or in part, is not authorised by Volkswagen AG. Volkswagen AG does not guarantee or accept any liability with respect to the correctness of information in this document. Copyright by Volkswagen AG.

Rearview mirror without humidity sensor and with high beam assist , (8G1)

from April 2010

Protected by copyright. Copyright for private or commercial purposes, in part or in whole, is not permitted unless authorised by Volkswagen AG. Volkswagen AG does not guarantee or accept any liability with respect to the correctness of information in this document. Copyright by Volkswagen AG.

Steering column electronics control module, Data bus on board diagnostic interface, Fuse 13 (on fuse panel C), Front interior lamp, Automatic dimming interior rearview mirror

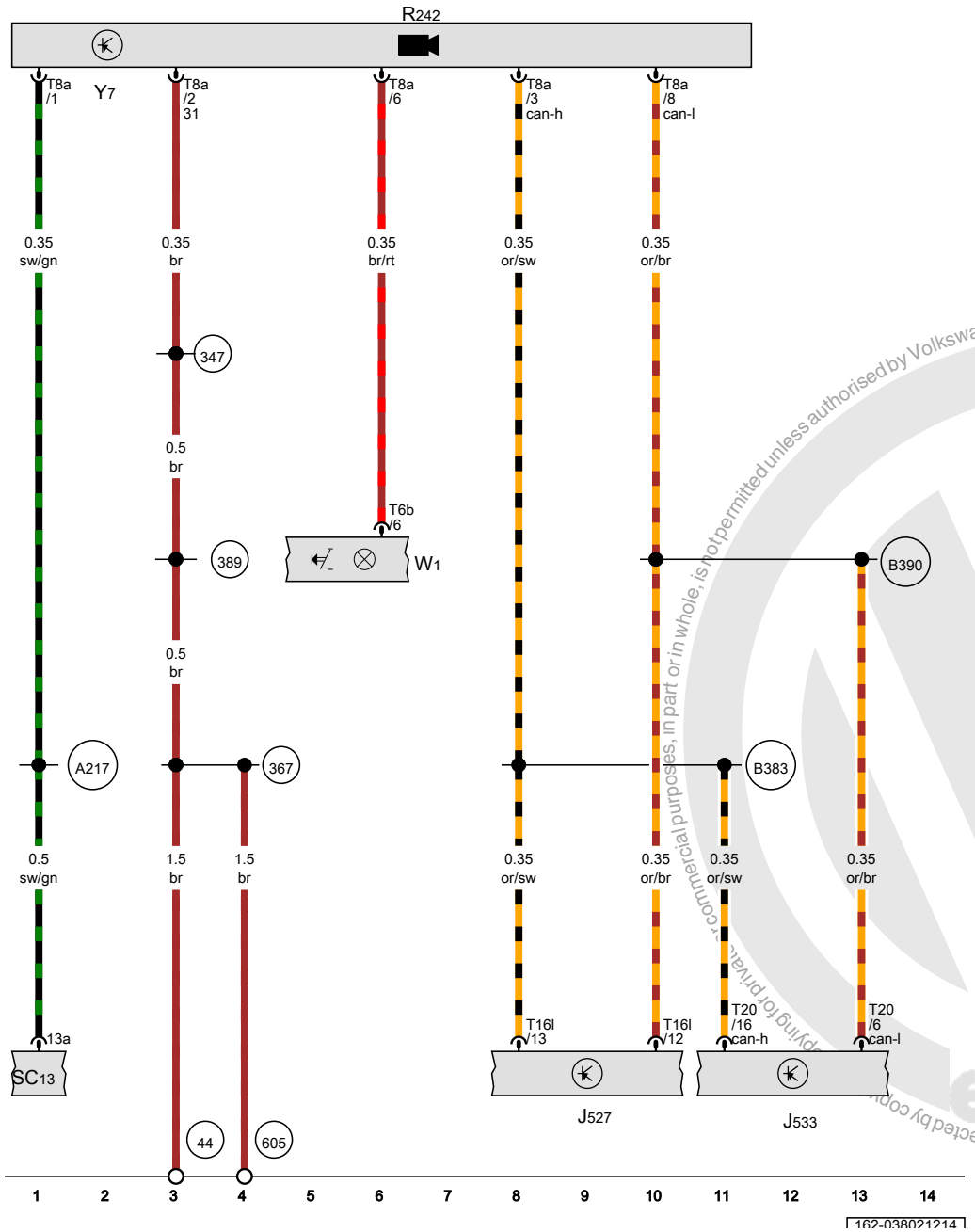

J527	Steering column electronics control module
J533	Data bus on board diagnostic interface
R242	Driver assistance systems front camera
SC13	Fuse 13 (on fuse panel C)
T6b	6-pin connector
T8a	8-pin connector
T16l	16-pin connector
T20	20-pin connector
W1	Front interior lamp
Y7	Automatic dimming interior rearview mirror
44	Ground connection on A-pillar, lower left
347	Ground connection (in roof wiring harness)
367	Ground connection 2 (in main wiring harness)
389	Ground connection 24 (in main wiring harness)
605	Ground connection on upper steering column
A217	Positive connection 8 (15a) (in instrument panel wiring harness)
B383	Powertrain CAN bus high connection 1 (in main wiring harness)
B390	Powertrain CAN bus low connection 1 (in main wiring harness)

ws	=	white
sw	=	black
ro	=	red
rt	=	red
br	=	brown
gn	=	green
bl	=	blue
gr	=	grey
li	=	lilac
vi	=	lilac
ge	=	yellow
or	=	orange
rs	=	pink

Protected by copyright. Copying for private or commercial purposes, in part or in whole, is not permitted unless authorised by Volkswagen AG. Volkswagen AG does not guarantee or accept any liability with respect to the correctness of information in this document. Copyright by Volkswagen AG.

Sound system "Volkswagen Sound" , (8RB),(8RU)

from April 2010

Protected by copyright. Copying for private or commercial purposes, in part or in whole, is not permitted unless authorised by Volkswagen AG. Volkswagen AG does not guarantee or accept any liability with respect to the correctness of information in this document. Copyright by Volkswagen AG.

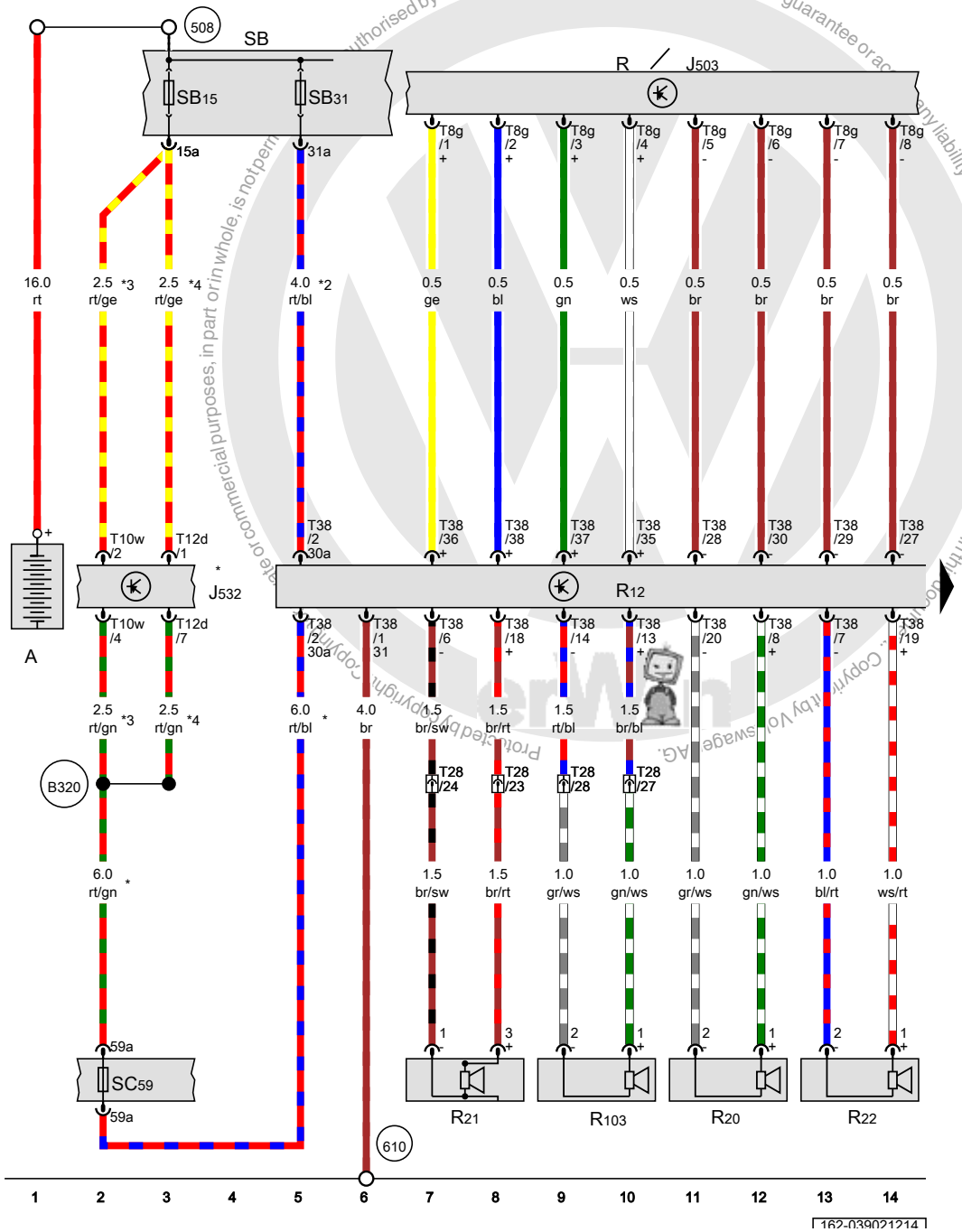

Radio/navigation display unit control module, Voltage stabilizer, Radio, Amplifier, Left front treble speaker, Left front bass speaker, Right front treble speaker, Left front midrange speaker, Fuse panel B

A	Battery
J503	Radio/navigation display unit control module
J532	Voltage stabilizer
R	Radio
R12	Amplifier
R20	Left front treble speaker
R21	Left front bass speaker
R22	Right front treble speaker
R103	Left front midrange speaker
SB	Fuse panel B
SB15	Fuse 15 (on fuse panel B)
SB31	Fuse 31 (on fuse panel B)
SC59	Fuse 59 (on fuse panel C)
T8g	8-pin connector
T10w	10-pin connector
T12d	12-pin connector
T28	28-pin connector, Left A-pillar, bottom
T38	38-pin connector
508	Terminal 30 threaded connection (on E-box)
610	Audio ground connection under front center console
B320	Positive connection 6 (30a) (in main wiring harness)
*	Only for vehicles with Stop/Start system
*2	Only for vehicles without Start/Stop system
*3	Omitted as a running change
*4	Running change

ws	=	white
sw	=	black
ro	=	red
rt	=	red
br	=	brown
gn	=	green
bl	=	blue
gr	=	grey
li	=	lilac
vi	=	lilac
ge	=	yellow
or	=	orange
rs	=	pink

Protected by copyright. Copyright by Volkswagen AG. Volkswagen AG does not guarantee or accept any liability with respect to the correctness of information in this document. Copyright by Volkswagen AG. Authorised by Volkswagen AG. Volkswagen AG does not guarantee or accept any liability with respect to the correctness of information in this document. Copyright by Volkswagen AG. Protected by copyright

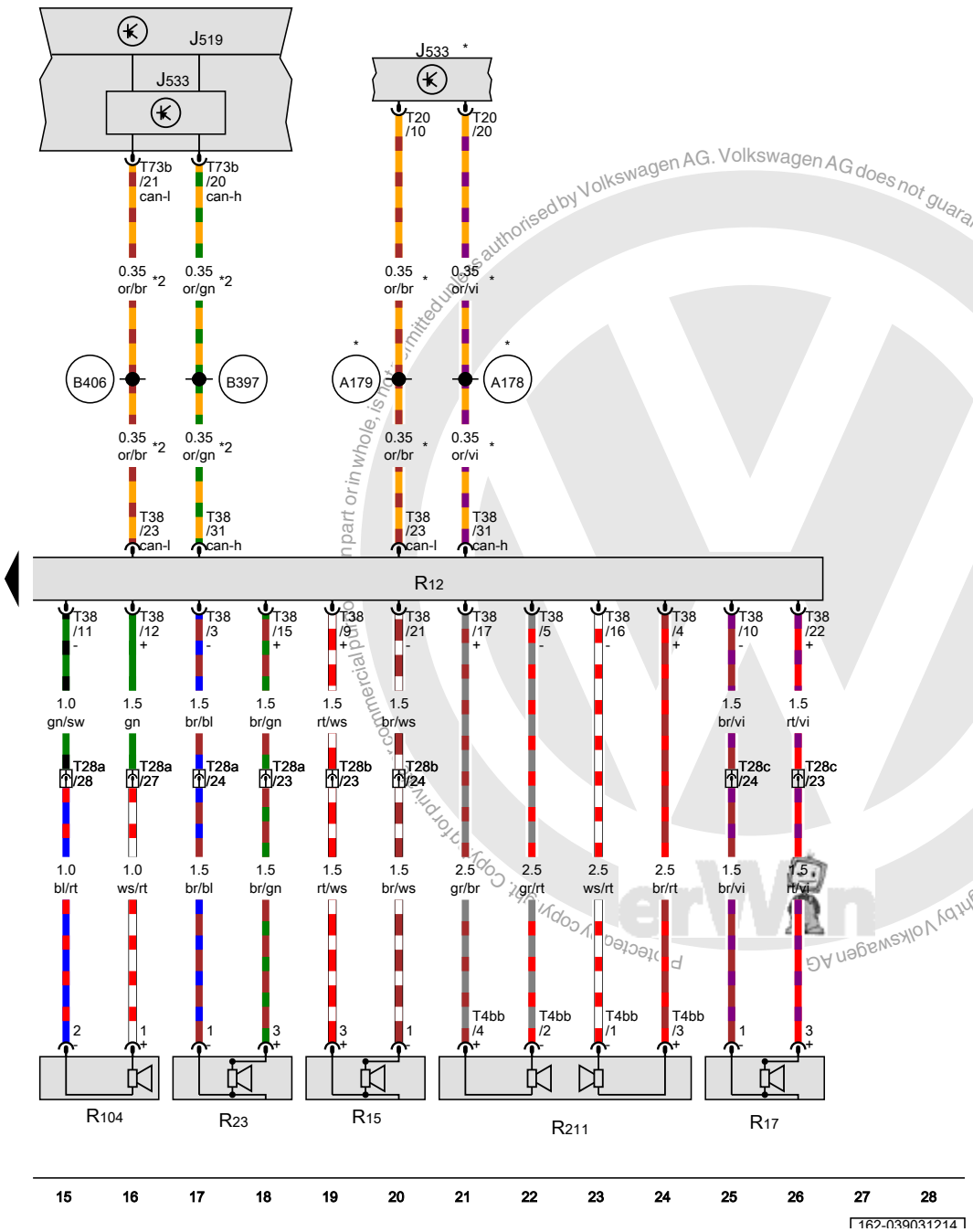

Vehicle electrical control module system, Data bus on board diagnostic interface, Amplifier, Left rear bass speaker, Right rear bass speaker, Right front bass speaker, Right front midrange speaker, Subwoofer

J519	Vehicle electrical control module system
J533	Data bus on board diagnostic interface
R12	Amplifier
R15	Left rear bass speaker
R17	Right rear bass speaker
R23	Right front bass speaker
R104	Right front midrange speaker
R211	Subwoofer
T4bb	4-pin connector
T20	20-pin connector
T28a	28-pin connector, Right A-pillar, bottom
T28b	28-pin connector, on the left B-pillar
T28c	28-pin connector, on the right B-pillar
T38	38-pin connector
T73b	73-pin connector
A178	Infotainment CAN bus high connection (in instrument panel wiring harness)
A179	Infotainment CAN bus low connection (in instrument panel wiring harness)
B397	Comfort system CAN bus high connection 1 (in main wiring harness)
B406	Comfort system CAN bus low connection 1 (in main wiring harness)
*	only for vehicles with High equipment (AW1)
*2	only for vehicles with Low equipment (AW0)

ws	=	white
sw	=	black
ro	=	red
rt	=	red
br	=	brown
gn	=	green
bl	=	blue
gr	=	grey
li	=	lilac
vi	=	lilac
ge	=	yellow
or	=	orange
rs	=	pink

Copyright by Volkswagen AG. Volkswagen AG does not guarantee or accept any liability with respect to the correctness of information in this document. Copyright by Volkswagen AG, in part or in whole, is not permitted unless authorised by Volkswagen AG. Protected by copyright. Copyright by Volkswagen AG. Commercial purposes prohibited.

Keyless access/locking and starting system , (AW0)

from April 2010

Protected by copyright. Copying for private or commercial purposes, in part or in whole, is not permitted unless authorised by Volkswagen AG. Volkswagen AG does not guarantee or accept any liability with respect to the correctness of information in this document. Copyright by Volkswagen AG.

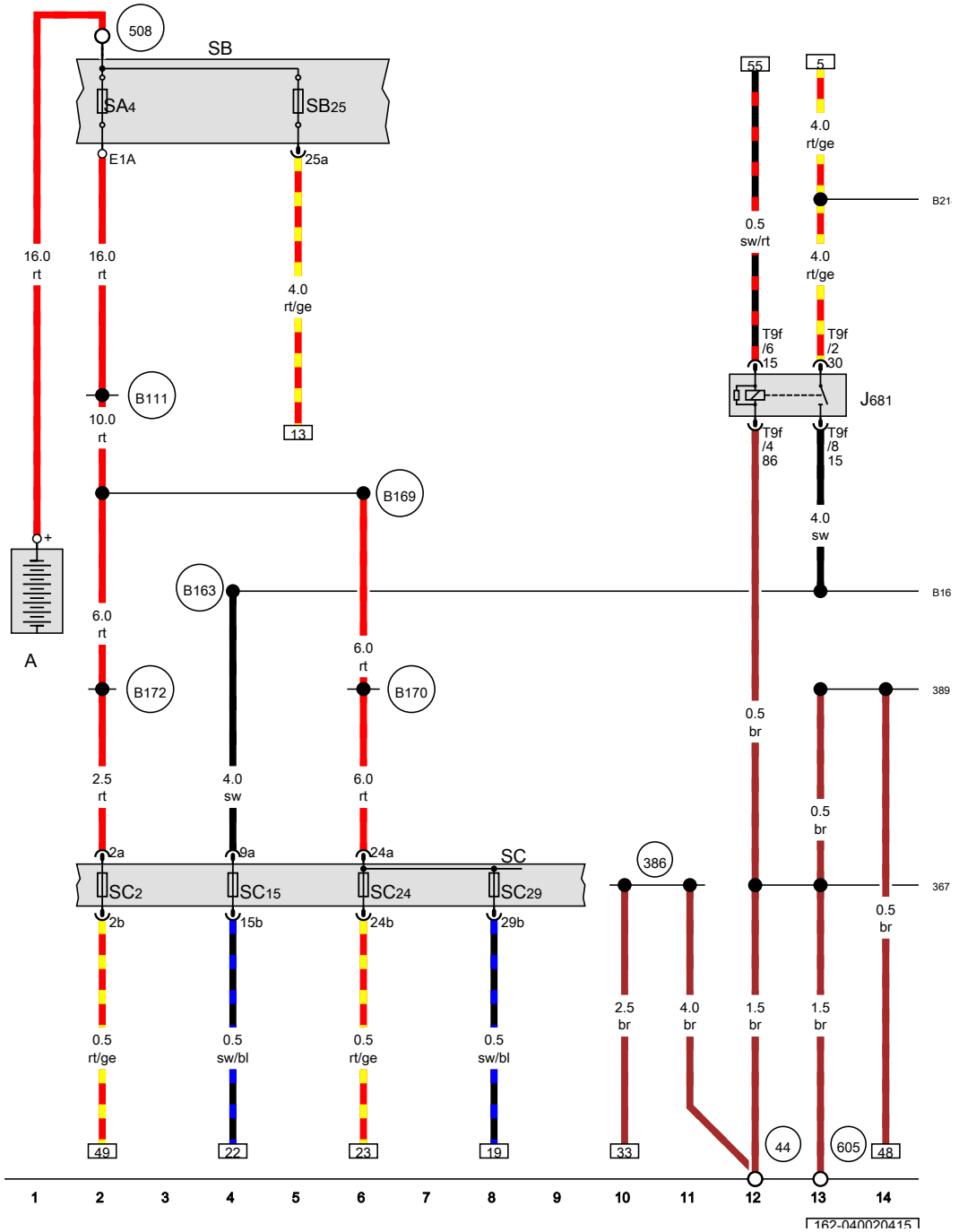

Terminal 15 power supply relay 2, Fuse panel B, Fuse panel C

A	Battery
J681	Terminal 15 power supply relay 2
SC2	Fuse 2 (on fuse panel C)
SA4	Fuse 4 (on fuse panel A)
SB	Fuse panel B
SC15	Fuse 15 (on fuse panel C)
SC24	Fuse 24 (on fuse panel C)
SB25	Fuse 25 (on fuse panel B)
SC	Fuse panel C
SC29	Fuse 29 (on fuse panel C)
T9f	9-pin connector
44	Ground connection on A-pillar, lower left
367	Ground connection 2 (in main wiring harness)
386	Ground connection 21 (in main wiring harness)
389	Ground connection 24 (in main wiring harness)
508	Terminal 30 threaded connection (on E-box)
605	Ground connection on upper steering column
B111	Positive connection 1 (30a) (in interior wiring harness)
B163	Positive connection 1 (15) (in interior wiring harness)
B169	Positive connection 1 (30) (in interior wiring harness)
B170	Positive connection 2 (30) (in interior wiring harness)
B172	Positive connection 4 (30) (in interior wiring harness)
B218	Positive connection 6 (30) (in interior wiring harness)

ws	=	white
sw	=	black
ro	=	red
rt	=	red
br	=	brown
gn	=	green
bl	=	blue
gr	=	grey
li	=	lilac
vi	=	lilac
ge	=	yellow
or	=	orange
rs	=	pink

Protected by copyright. Copying for private or commercial purposes, in part or in whole, is not permitted unless authorised by Volkswagen AG. Volkswagen AG does not guarantee or accept any liability with respect to the correctness of information in this document. Copyright by Volkswagen AG.

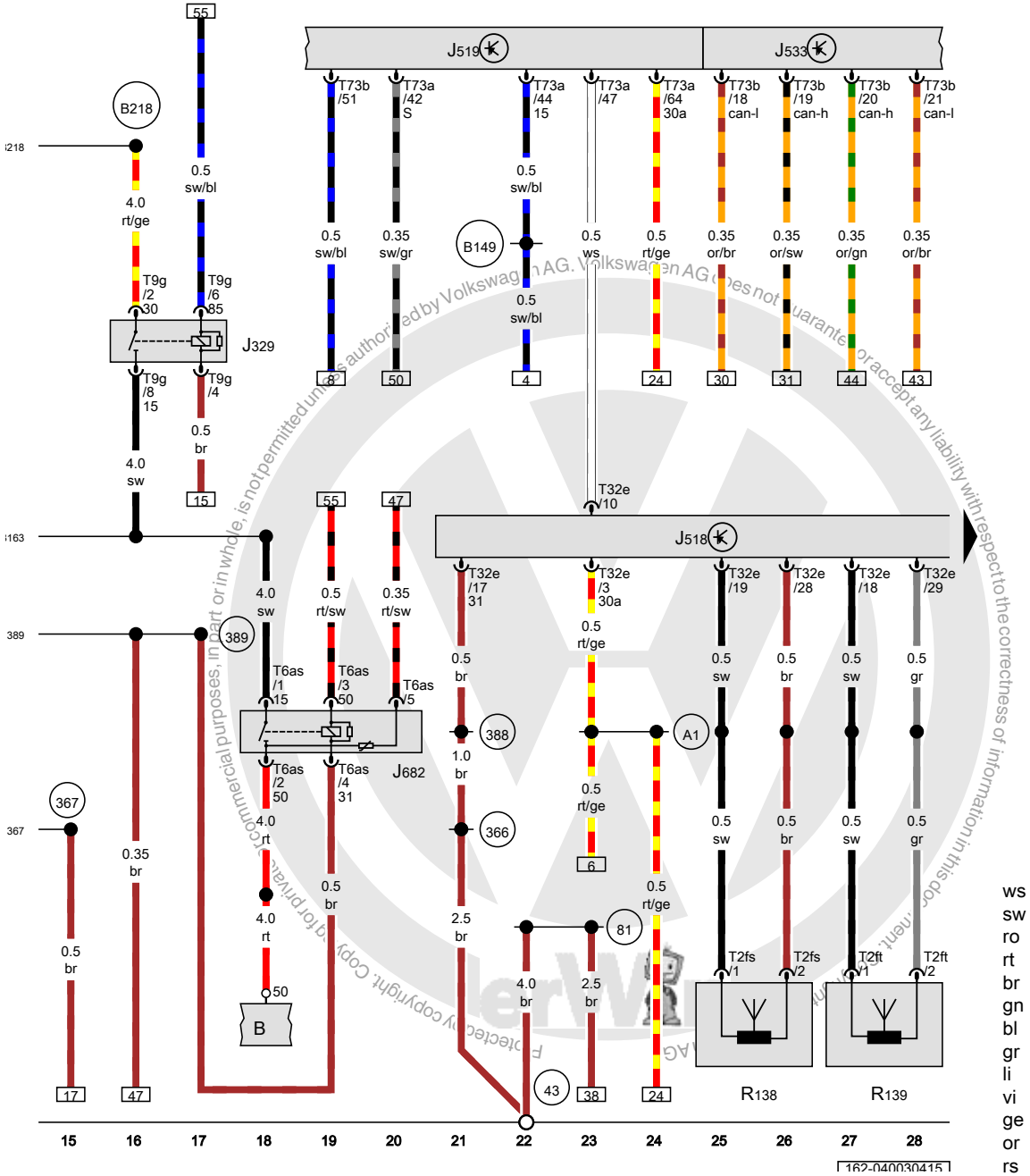

ws	=	white
sw	=	black
ro	=	red
rt	=	red
br	=	brown
gn	=	green
bl	=	blue
gr	=	grey
li	=	lilac
vi	=	lilac
ge	=	yellow
or	=	orange
rs	=	pink

Access/start authorization control module, Vehicle electrical control module system, Terminal 50 power supply relay, Access/start system antenna 1 in vehicle interior, Access/start system antenna 2 in vehicle interior

B	Starter
J329	Terminal 15 power supply relay
J518	Access/start authorization control module
J519	Vehicle electrical control module system
J533	Data bus on board diagnostic interface
J682	Terminal 50 power supply relay
R138	Access/start system antenna 1 in vehicle interior, under the center console
R139	Access/start system antenna 2 in vehicle interior, in the interior
T2fs	Double connector
T2ft	Double connector
T6as	6-pin connector, red
T9g	9-pin connector
T32e	32-pin connector
T73a	73-pin connector
T73b	73-pin connector
43	Ground connection on A-pillar, lower right
81	Ground connection 1 (in instrument panel wiring harness)
366	Ground connection 1 (in main wiring harness)
367	Ground connection 2 (in main wiring harness)
388	Ground connection 23 (in main wiring harness)
389	Ground connection 24 (in main wiring harness)
A1	Positive connection (30a) (in instrument panel wiring harness)
B149	Positive connection 2 (15a) (in interior wiring harness)
B163	Positive connection 1 (15) (in interior wiring harness)
B218	Positive connection 6 (30) (in interior wiring harness)

Protected by copyright. Copying for private or commercial purposes, in part or in whole, is not permitted unless authorised by Volkswagen AG. Volkswagen AG does not guarantee or accept any liability with respect to the correctness of information in this document.

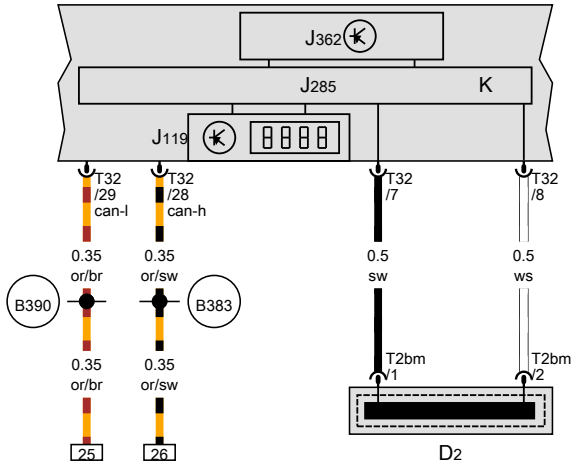

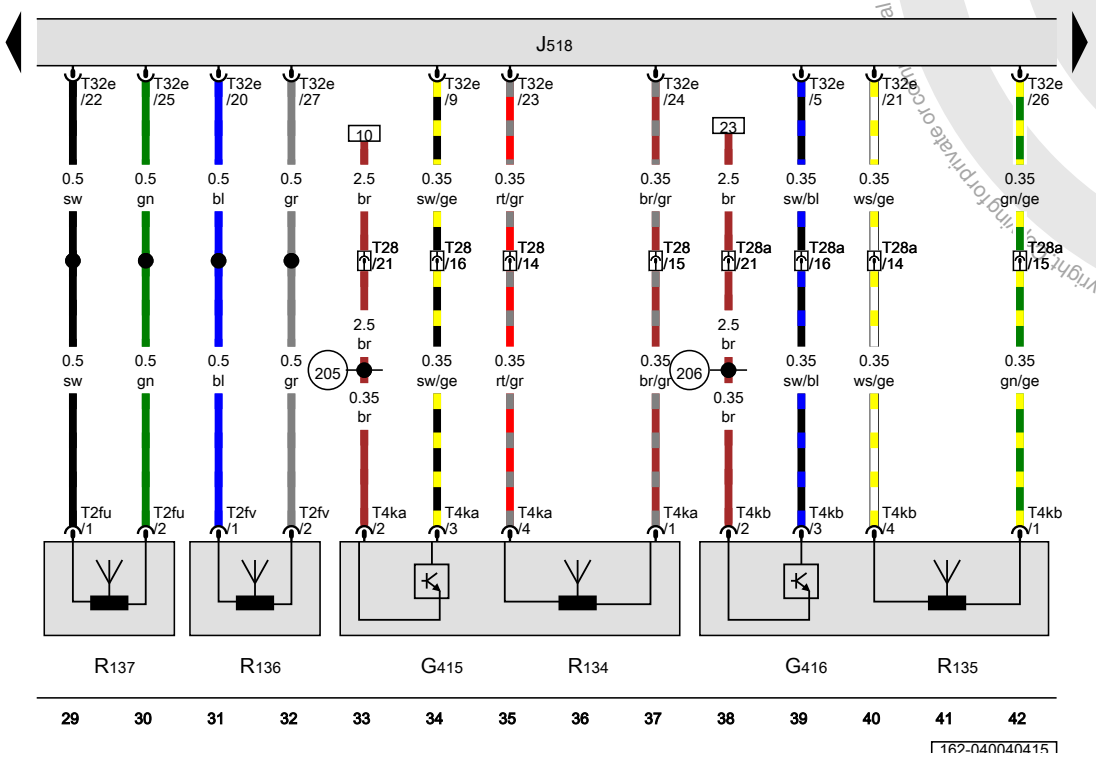

ws = white
sw = black
ro = red
rt = red
br = brown
gn = green
bl = blue
gr = grey
li = lilac
vi = lilac
ge = yellow
or = orange
rs = pink

Anti-theft immobilizer reader coil, Driver exterior door handle touch sensor, Front passenger exterior door handle touch sensor, Multifunction indicator, Anti-theft immobilizer control module, Access/start authorization control module, Instrument cluster, Driver access/start system antenna, Front passenger access/start system antenna, Access/start system antenna in rear bumper, Access/start system antenna in luggage compartment

D2	Anti-theft immobilizer reader coil
G415	Driver exterior door handle touch sensor
G416	Front passenger exterior door handle touch sensor
J119	Multifunction indicator
J285	Instrument cluster control module
J362	Anti-theft immobilizer control module
J518	Access/start authorization control module
K	Instrument cluster
R134	Driver access/start system antenna
R135	Front passenger access/start system antenna
R136	Access/start system antenna in rear bumper
R137	Access/start system antenna in luggage compartment
T2bm	Double connector
T2fu	Double connector
T2fv	Double connector
T4ka	4-pin connector
T4kb	4-pin connector
T28	28-pin connector
T28a	28-pin connector
T32	32-pin connector
T32e	32-pin connector
205	Ground connection (in driver door wiring harness)
206	Ground connection (in front passenger door wiring harness)
B383	Powertrain CAN bus high connection 1 (in main wiring harness)
B390	Powertrain CAN bus low connection 1 (in main wiring harness)

Protected by copyright. Copying for private or commercial purposes, in part or in whole, is not permitted unless authorised by Volkswagen AG. Volkswagen AG does not guarantee or accept any liability with respect to the correctness of information in this document. Copyright by Volkswagen AG.

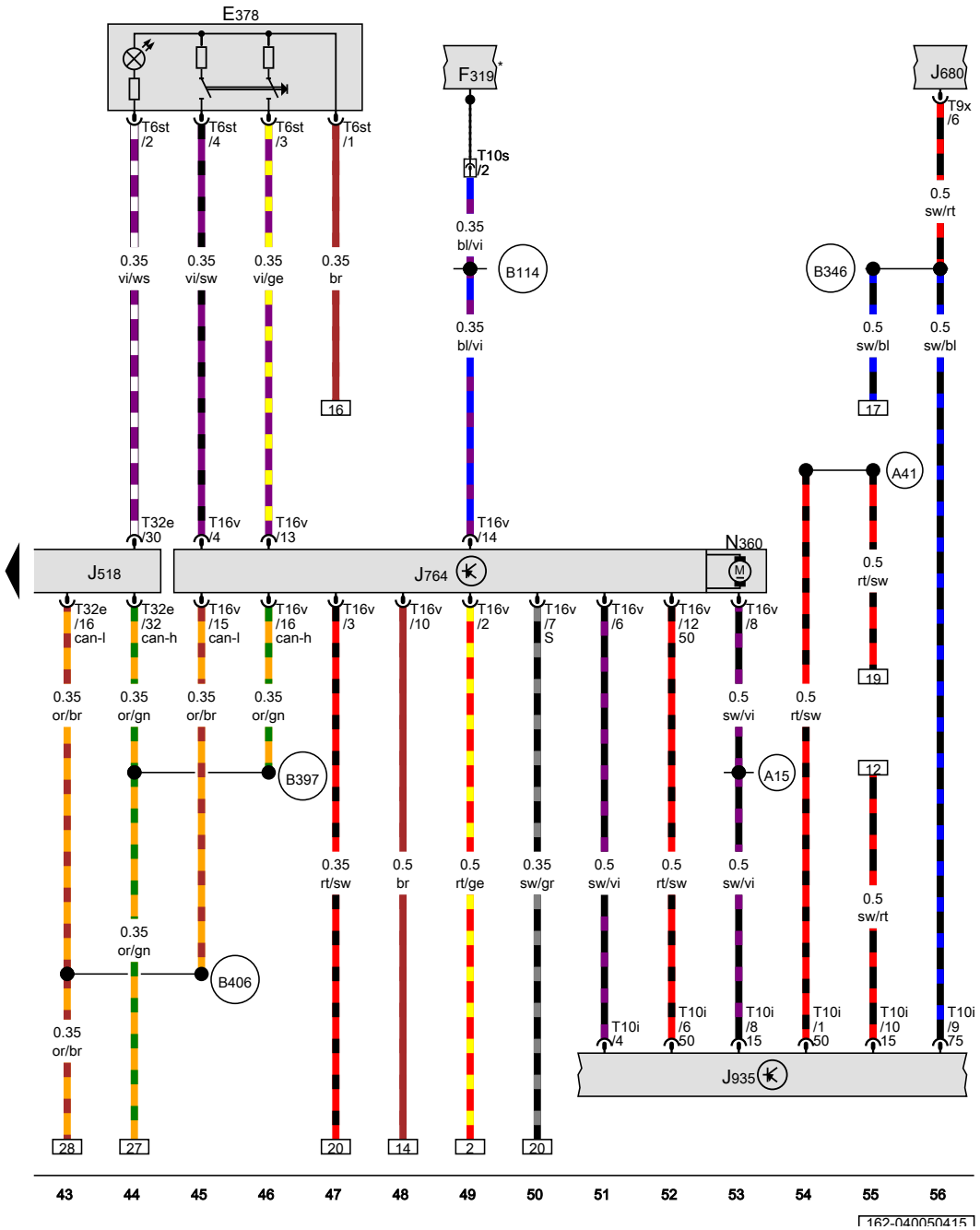

Start system button, Access/start authorization control module, Electronic steering column lock control module, Converter box

E378	Start system button
F319	Selector lever park position lock switch
J518	Access/start authorization control module
J680	Terminal 75 power supply relay 1
J764	Electronic steering column lock control module
J935	Converter box
N360	Steering column lock actuator
T6st	6-pin connector
T9x	9-pin connector
T10i	10-pin connector
T10s	10-pin connector
T16v	16-pin connector
T32e	32-pin connector
A15	Plus connection (15) (in instrument cluster wiring harness)
A41	Positive connection (50) (in instrument panel wiring harness)
B114	Lock switch connection (in interior wiring harness)
B346	Connection 75 (in main wiring harness) 1
B397	Comfort system CAN bus high connection 1 (in main wiring harness)
B406	Comfort system CAN bus low connection 1 (in main wiring harness)
*	Only for vehicles with automatic transmission

ws	=	white
sw	=	black
ro	=	red
rt	=	red
br	=	brown
gn	=	green
bl	=	blue
gr	=	grey
li	=	lilac
vi	=	lilac
ge	=	yellow
or	=	orange
rs	=	pink

Protected by copyright. Copying for private or commercial purposes, in part or in whole, is not permitted unless authorised by Volkswagen AG. Volkswagen AG does not guarantee or accept any liability with respect to the correctness of information in this document. Copyright by Volkswagen AG.

Radio navigation system RNS 510 , (7T3),(7T6)

from April 2010

Protected by copyright. Copying for private or commercial purposes, in part or in whole, is not permitted unless authorised by Volkswagen AG. Volkswagen AG does not guarantee or accept any liability with respect to the correctness of information in this document. Copyright by Volkswagen AG.

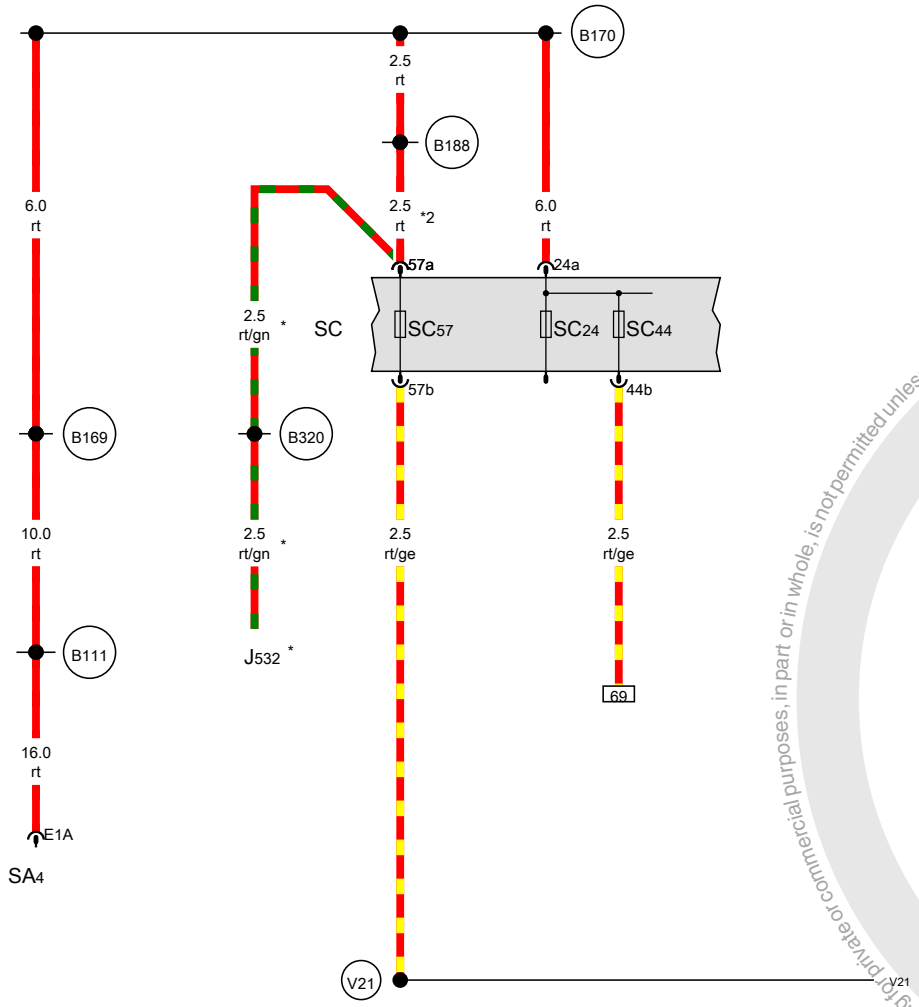

Fuse 4 (on fuse panel A), Fuse panel C

J532	Voltage stabilizer
SA4	Fuse 4 (on fuse panel A)
SC	Fuse panel C
SC24	Fuse 24 (on fuse panel C)
SC44	Fuse 44 (on fuse panel C)
SC57	Fuse 57 (on fuse panel C)
B111	Positive connection 1 (30a) (in interior wiring harness)
B169	Positive connection 1 (30) (in interior wiring harness)
B170	Positive connection 2 (30) (in interior wiring harness)
B188	Positive connection 5 (30) (in interior wiring harness)
B320	Positive connection 6 (30a) (in main wiring harness)
V21	Positive connection (30) (in wiring radio/amplifier wiring harness)
*	Only for vehicles with Stop/Start system
*2	Only for vehicles without Start/Stop system

ws	=	white
sw	=	black
ro	=	red
rt	=	red
br	=	brown
gn	=	green
bl	=	blue
gr	=	grey
li	=	lilac
vi	=	lilac
ge	=	yellow
or	=	orange
rs	=	pink

1 2 3 4 5 6 7 8 9 10 11 12 13 14

162-0410212 14

Protected by copyright. Copying for private or commercial purposes, in part or in whole, is not permitted unless authorised by Volkswagen AG. Volkswagen AG does not guarantee or accept any liability with respect to the correctness of information in this document. Copyright by Volkswagen AG.

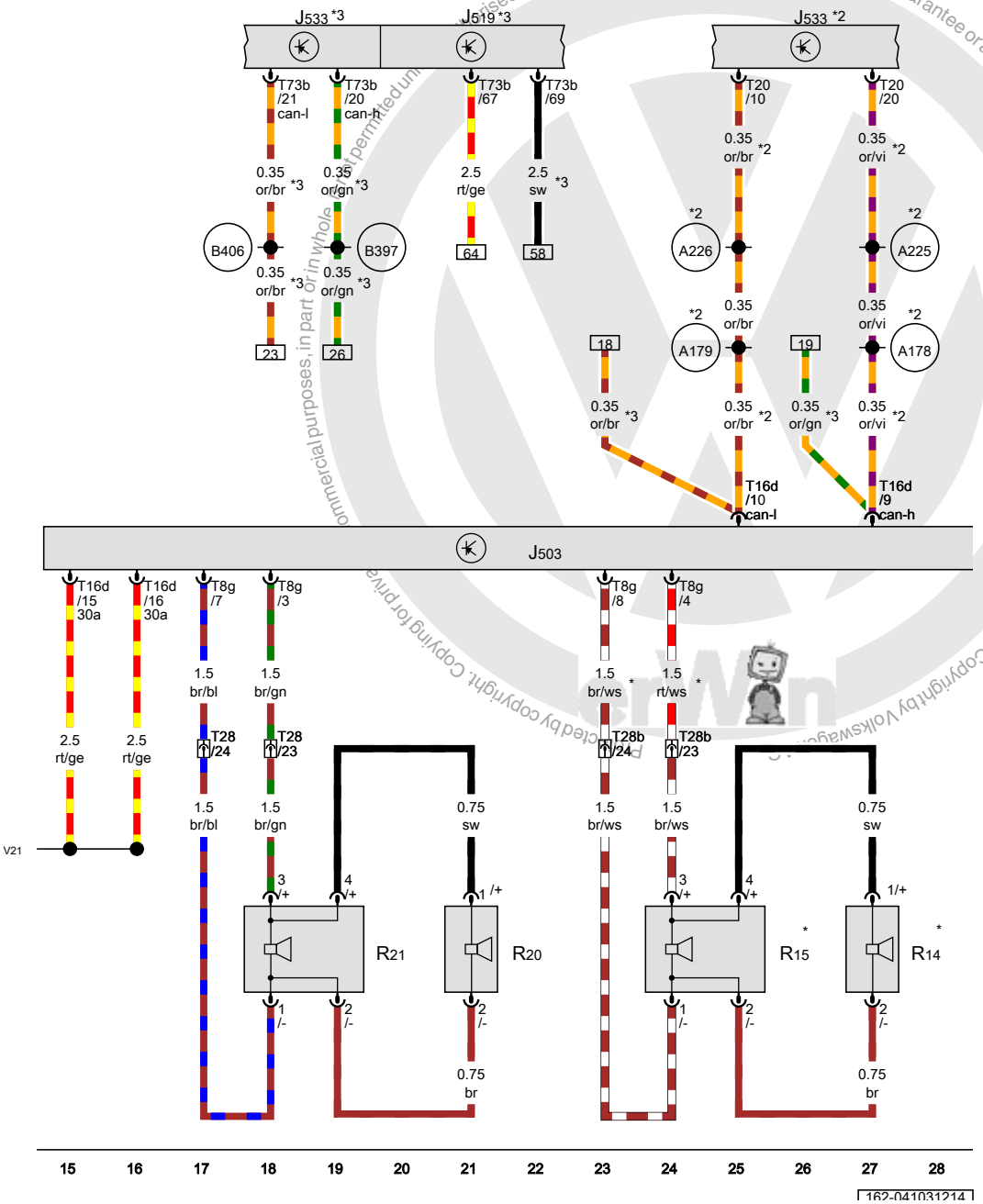

ws	=	white
sw	=	black
ro	=	red
rt	=	red
br	=	brown
gn	=	green
bl	=	blue
gr	=	grey
li	=	lilac
vi	=	lilac
ge	=	yellow
or	=	orange
rs	=	pink

Radio/navigation display unit control module, Vehicle electrical control module system, Data bus on board diagnostic interface, Left front treble speaker, Left front bass speaker

J503	Radio/navigation display unit control module
J519	Vehicle electrical control module system
J533	Data bus on board diagnostic interface
R14	Left rear treble speaker
R15	Left rear bass speaker
R20	Left front treble speaker
R21	Left front bass speaker
T8g	8-pin connector
T16d	16-pin connector
T20	20-pin connector
T28	28-pin connector
T28b	28-pin connector
T73b	73-pin connector
A178	Infotainment CAN bus high connection (in instrument panel wiring harness)
A179	Infotainment CAN bus low connection (in instrument panel wiring harness)
A225	Infotainment CAN bus high connection 2 (in instrument panel wiring harness)
A226	Infotainment CAN bus low connection 2 (in instrument panel wiring harness)
B397	Comfort system CAN bus high connection 1 (in main wiring harness)
B406	Comfort system CAN bus low connection 1 (in main wiring harness)
V21	Positive connection (30) (in wiring radio/amplifier wiring harness)
*	Depending on equipment
*2	only for vehicles with High equipment (AW1)
*3	only for vehicles with Low equipment (AW0)

Commercial purposes, in part or in whole, is not permitted unauthorised by Volkswagen AG. Volkswagen AG does not guarantee or accept any liability with respect to the correctness of information in this document. Copyright by Volkswagen AG. Protected by copyright. Copying for private or

Radio/navigation display unit control module, Right front treble speaker, Right front bass speaker

J503	Radio/navigation display unit control module
R12	Amplifier
R16	Right rear treble speaker
R17	Right rear bass speaker
R22	Right front treble speaker
R23	Right front bass speaker
R38	Telephone microphone
T2k	Double connector
T8g	8-pin connector
T12e	12-pin connector
T28a	28-pin connector
T28c	28-pin connector
T38	38-pin connector
*	Depending on equipment
*2	Refer to applicable sound system wiring diagram
*3	Refer to applicable telephone systems wiring diagram

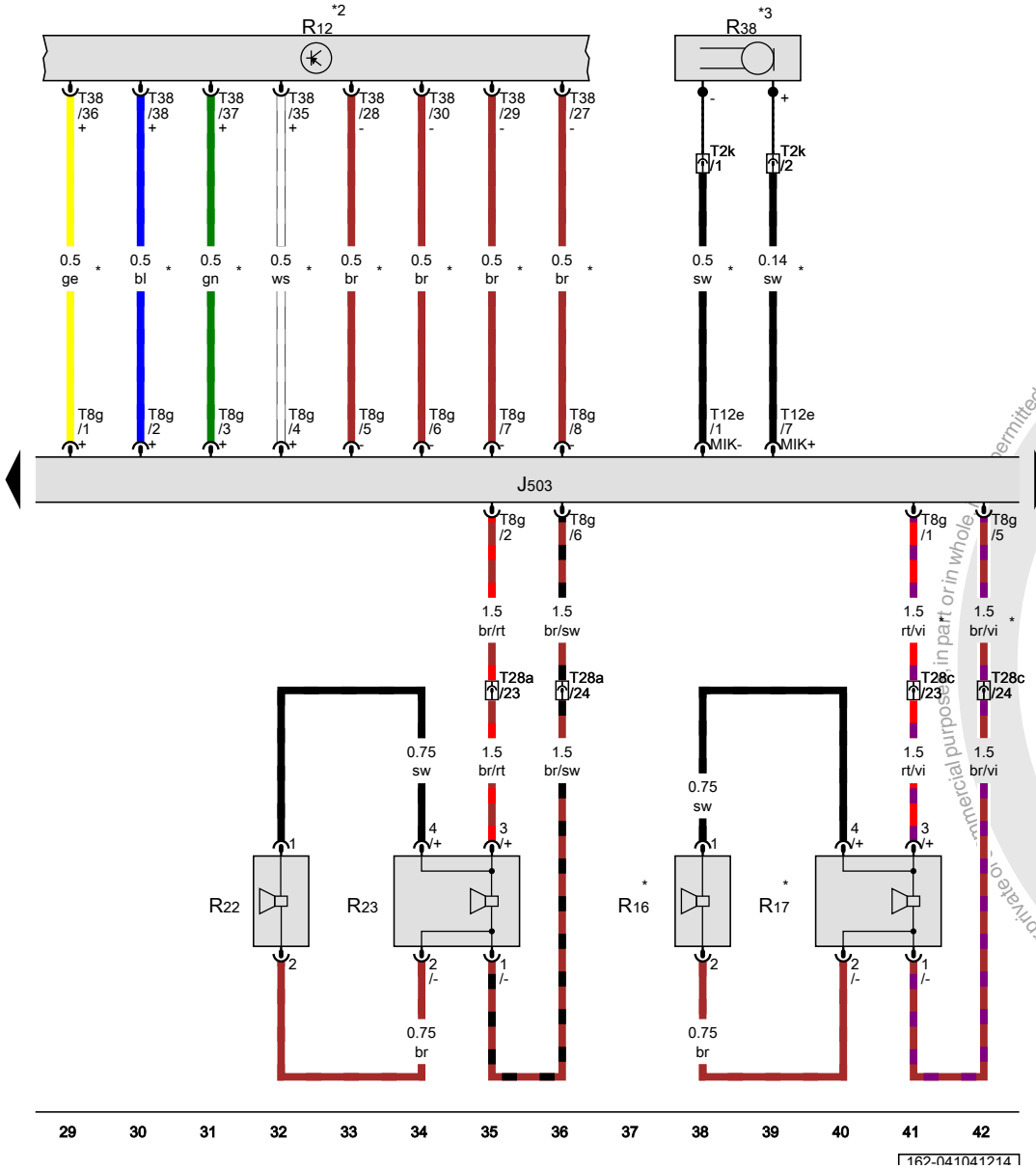

ws	=	white
sw	=	black
ro	=	red
rt	=	red
br	=	brown
gn	=	green
bl	=	blue
gr	=	grey
li	=	lilac
vi	=	lilac
ge	=	yellow
or	=	orange
rs	=	pink

Protected by copyright. Copying for private or commercial purposes, in part or in whole, is not permitted unless authorised by Volkswagen AG. Volkswagen AG does not guarantee or accept any liability with respect to the correctness of information in this document. Copyright by Volkswagen AG.

Radio/navigation display unit control module, GPS antenna, Left antenna module, Right antenna module, Rear window defogger

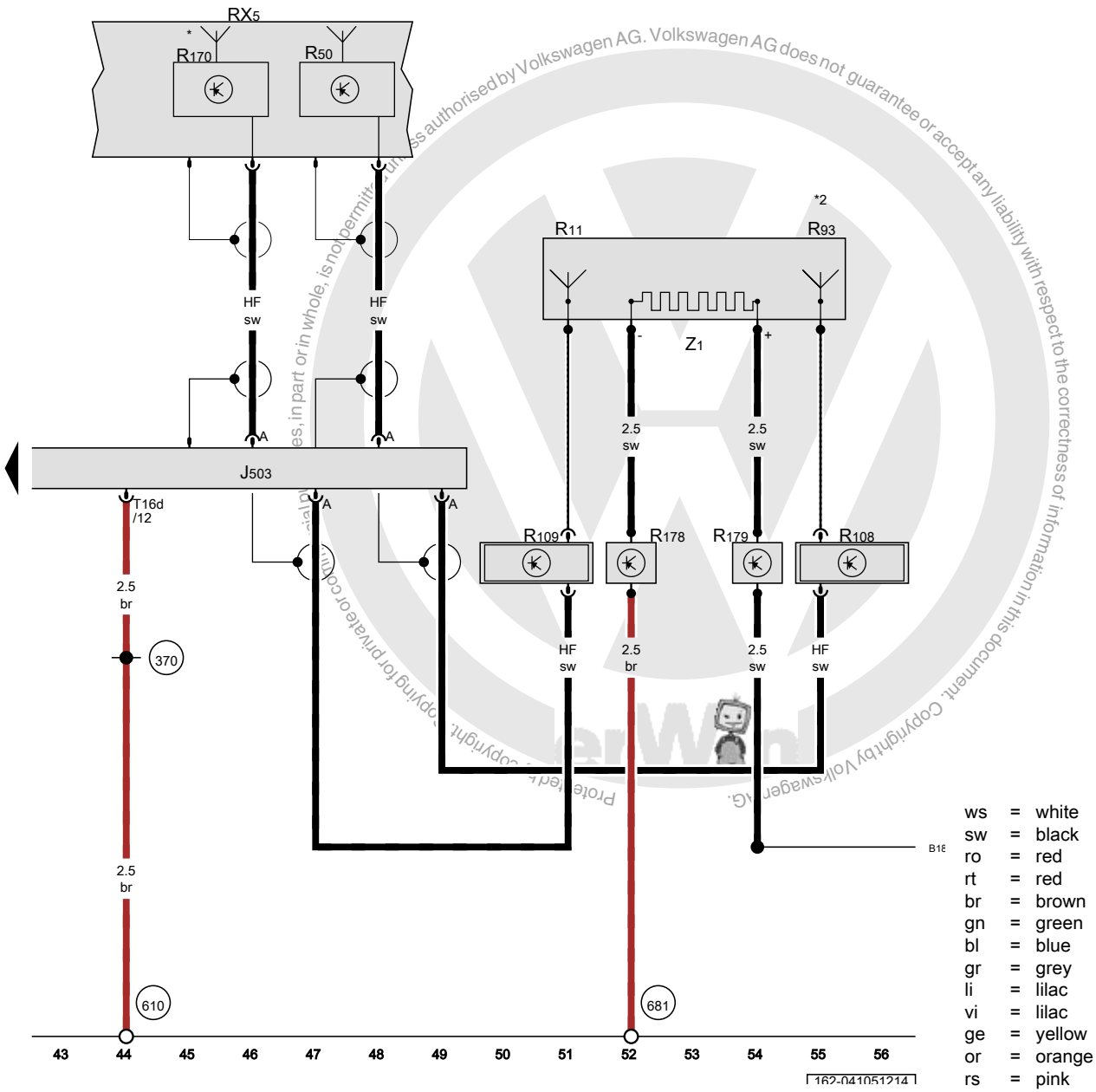

ws	=	white
sw	=	black
ro	=	red
rt	=	red
br	=	brown
gn	=	green
bl	=	blue
gr	=	grey
li	=	lilac
vi	=	lilac
ge	=	yellow
or	=	orange
rs	=	pink

J503	Radio/navigation display unit control module
RX5	Roof antenna
R11	Antenna
R50	GPS antenna
R93	Radio antenna 2
R108	Left antenna module
R109	Right antenna module
R170	Satellite antenna
R178	FM frequency filter in negative wire
R179	FM frequency filter in positive wire
T16d	16-pin connector
Z1	Rear window defogger
370	Ground connection 5 (in main wiring harness)
610	Audio ground connection under front center console
681	Ground connection 1 in right rear side panel
B180	Rear window defogger connection (in interior wiring harness)
*	USA only
*2	Depending on equipment

Protected copyright. Copying for private or commercial purposes, in part or in whole, is not permitted unless authorised by Volkswagen AG. Volkswagen AG does not guarantee or accept any liability with respect to the correctness of information in this document. Copyright by Volkswagen AG.

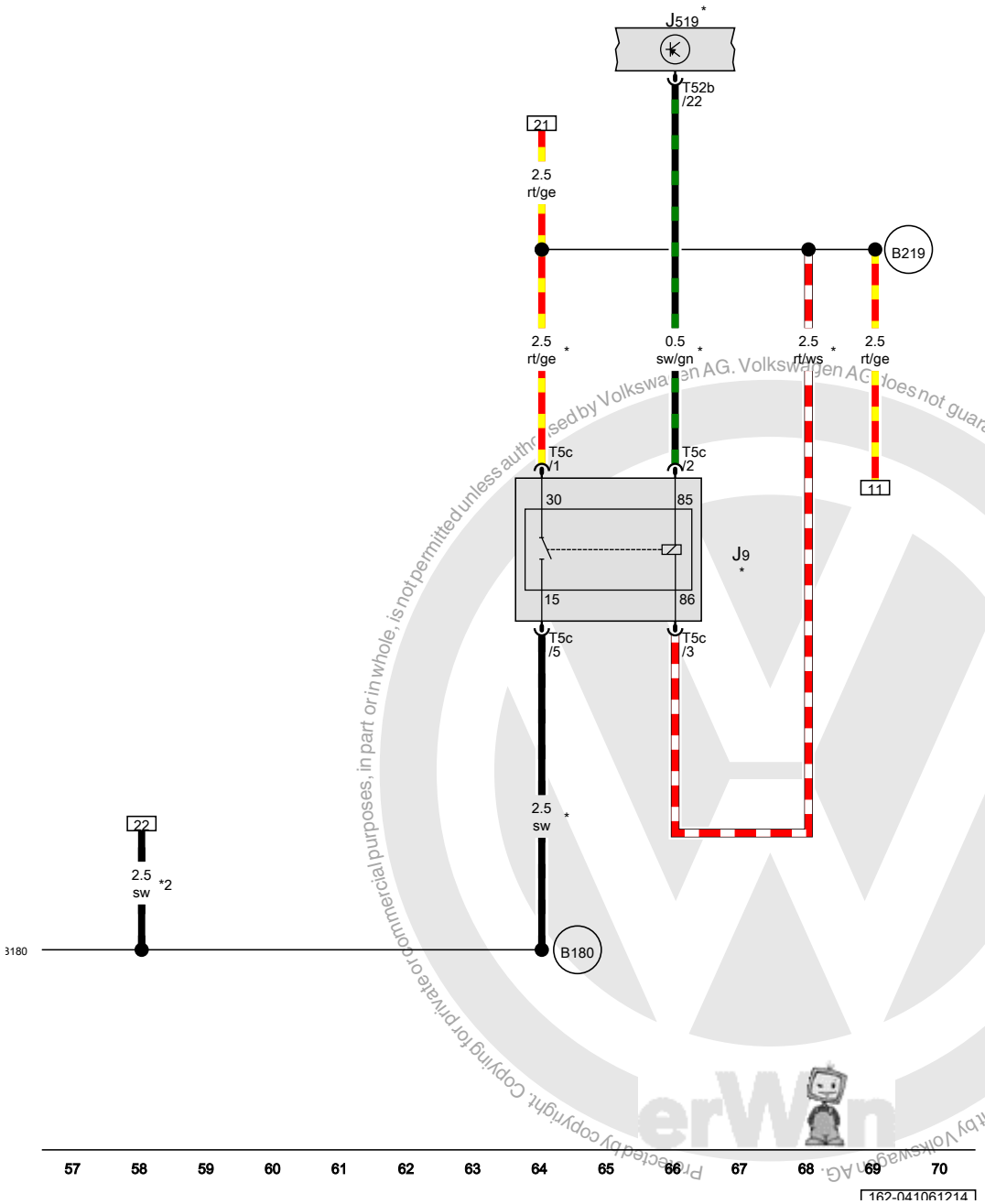

Rear window defogger relay

J9	Rear window defogger relay
J519	Vehicle electrical control module system
T5c	5-pin connector
T52b	52-pin connector
B180	Rear window defogger connection (in interior wiring harness)
B219	Positive connection 4 (30a) (in interior wiring harness)
*	only for vehicles with High equipment (AW1)
*2	only for vehicles with Low equipment (AW0)

ws	=	white
sw	=	black
ro	=	red
rt	=	red
br	=	brown
gn	=	green
bl	=	blue
gr	=	grey
li	=	lilac
vi	=	lilac
ge	=	yellow
or	=	orange
rs	=	pink

Protected by copyright. Copying for private or commercial purposes, in part or in whole, is not permitted unless authorised by Volkswagen AG. Volkswagen AG does not guarantee or accept any liability with respect to the correctness of information. Copyright by Volkswagen AG.

Automatic transmission 6-speed 09G , (0ER)

from April 2010

Protected by copyright. Copying for private or commercial purposes, in part or in whole, is not permitted unless authorised by Volkswagen AG. Volkswagen AG does not guarantee or accept any liability with respect to the correctness of information in this document. Copyright by Volkswagen AG.

Multifunction transmission range switch, Transmission control module, Vehicle electrical control module system, Fuse 20 (on fuse panel C), Fuse 25 (on fuse panel C)

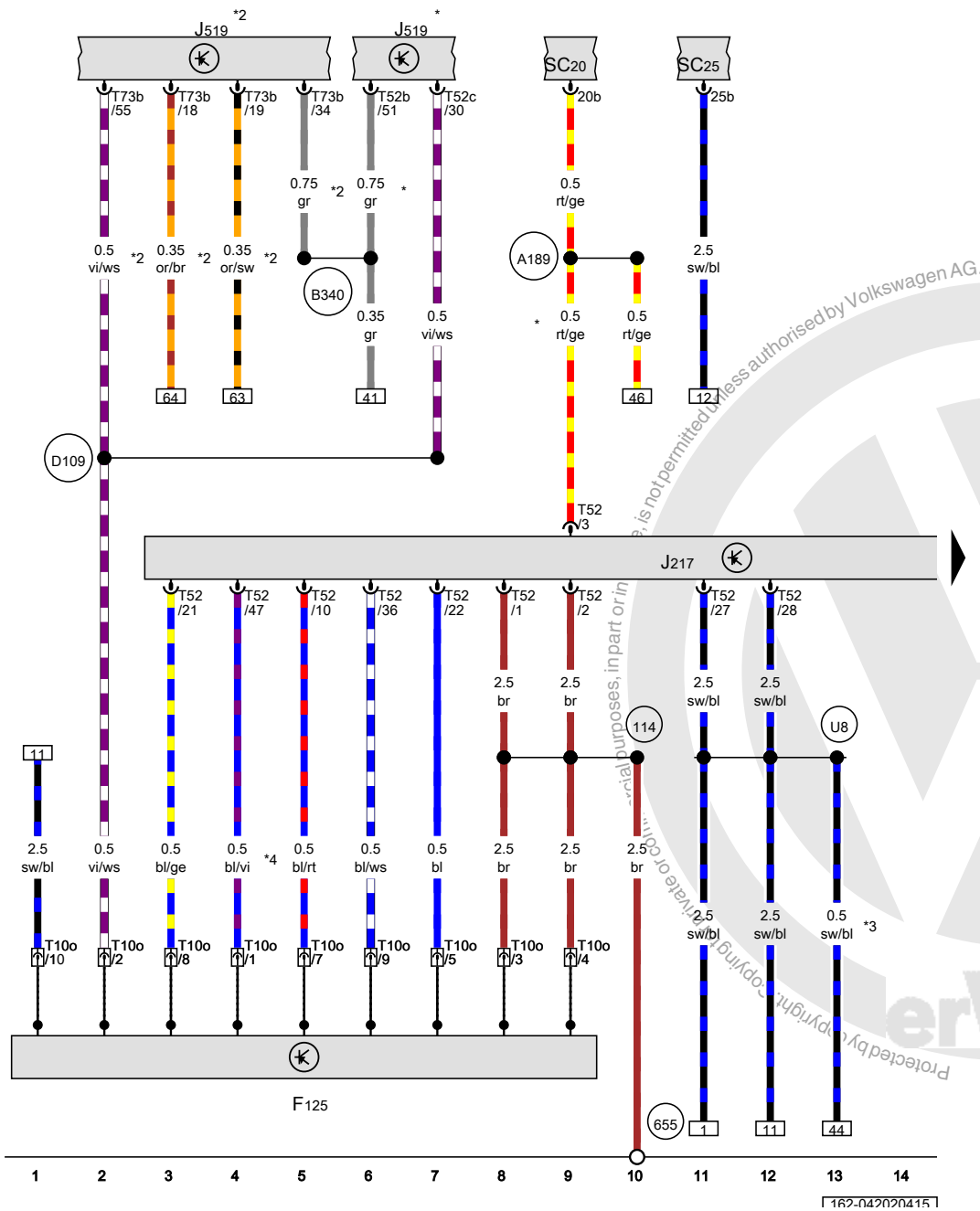

F125	Multifunction transmission range switch
J217	Transmission control module
J519	Vehicle electrical control module system
SC20	Fuse 20 (on fuse panel C)
SC25	Fuse 25 (on fuse panel C)
T10o	10-pin connector
T52	52-pin connector
T52b	52-pin connector
T52c	52-pin connector
T73b	73-pin connector
114	Ground connection (in automatic transmission wiring harness)
655	Ground connection on left headlamp
A189	Positive connection 5 (30a) (in instrument panel wiring harness)
B340	Connection 58d (in main wiring harness) 1
D109	Connection 7 (in engine compartment wiring harness)
U8	Positive connection (15a) (in automatic transmission wiring harness)
*	only for vehicles with High equipment (AW1)
*2	only for vehicles with Low equipment (AW0)
*3	Through May 2012
*4	The color of the wires depends on vehicle equipment

ws	=	white
sw	=	black
ro	=	red
rt	=	red
br	=	brown
gn	=	green
bl	=	blue
gr	=	grey
li	=	lilac
vi	=	lilac
ge	=	yellow
or	=	orange
rs	=	pink

Protected by copyright. Copying, distribution and publication of this document, in whole or in part, is not permitted unless authorised by Volkswagen AG. Volkswagen AG does not guarantee or accept any liability with respect to the correctness of information in this document. Copyright by Volkswagen AG.

Transmission control module, Solenoid valve 1, Solenoid valve 2, Solenoid valve 3, Solenoid valve 4, Solenoid valve 5, Solenoid valve 6, Solenoid valve 9, Solenoid valve 10

J217	Transmission control module
N88	Solenoid valve 1
N89	Solenoid valve 2
N90	Solenoid valve 3
N91	Solenoid valve 4
N92	Solenoid valve 5
N93	Solenoid valve 6
N282	Solenoid valve 9
N283	Solenoid valve 10
T14e	14-pin connector
T52	52-pin connector

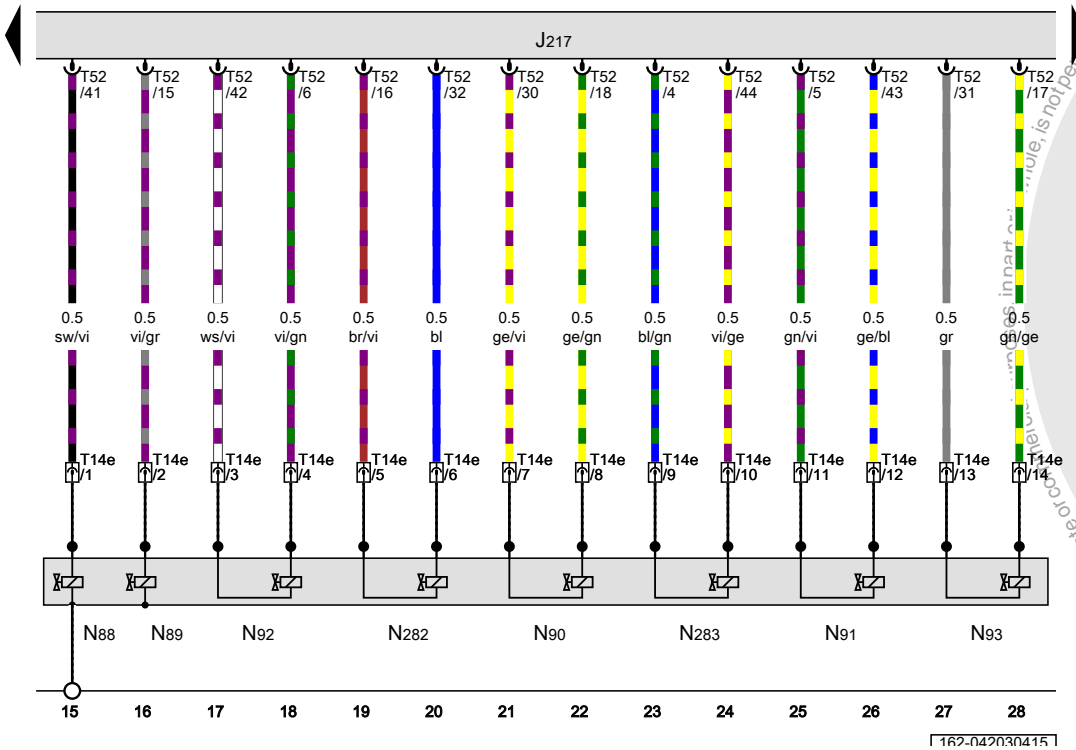

ws	=	white
sw	=	black
ro	=	red
rt	=	red
br	=	brown
gn	=	green
bl	=	blue
gr	=	grey
li	=	lilac
vi	=	lilac
ge	=	yellow
or	=	orange
rs	=	pink

Protected by copyright. Copying for private or commercial purposes, in part or in whole, is not permitted unless authorised by Volkswagen AG. Volkswagen AG does not guarantee or accept any liability with respect to the correctness of information in this document. Copyright by Volkswagen AG.

tiptronic switch, Selector lever park position lock switch, Transmission fluid temperature sensor, Transmission input speed sensor, Transmission output speed sensor, Transmission control module

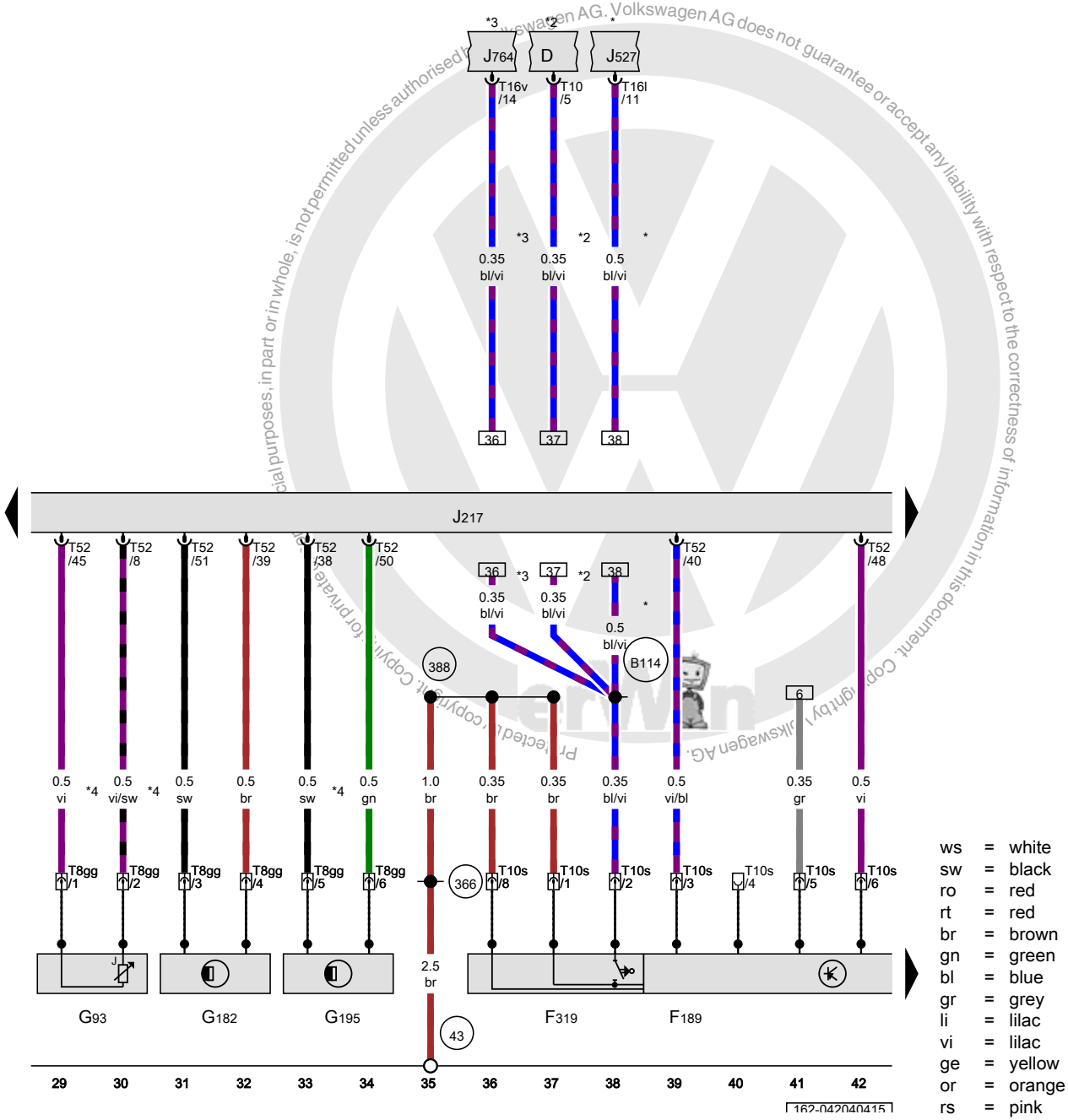

D	Ignition/starter switch
F189	tiptronic switch
F319	Selector lever park position lock switch
G93	Transmission fluid temperature sensor
G182	Transmission input speed sensor
G195	Transmission output speed sensor
J217	Transmission control module
J527	Steering column electronics control module
J764	Electronic steering column lock control module
T8gg	8-pin connector
T10	10-pin connector
T10s	10-pin connector
T16l	16-pin connector
T16v	16-pin connector
T52	52-pin connector
43	Ground connection on A-pillar, lower right
366	Ground connection 1 (in main wiring harness)
388	Ground connection 23 (in main wiring harness)
B114	Lock switch connection (in interior wiring harness)
*	only for vehicles with High equipment (AW1)
*2	only for vehicles with Low equipment (AW0)
*3	only for vehicles with access/start authorization system
*4	The color of the wires depends on vehicle equipment

ws	=	white
sw	=	black
ro	=	red
rt	=	red
br	=	brown
gn	=	green
bl	=	blue
gr	=	grey
li	=	lilac
vi	=	lilac
ge	=	yellow
or	=	orange
rs	=	pink

Volkswagen AG. Volkswagen AG does not guarantee or accept any liability with respect to the correctness of information in this document. Copyright by Volkswagen AG. Protected by copyright. Copying for private, commercial purposes, in part or in whole, is not permitted unless authorised by Volkswagen AG.

tiptronic switch, Transmission control module, Selector lever scale illumination bulb, Shift lock solenoid, Transmission range display

F189	tiptronic switch
J217	Transmission control module
L101	Selector lever scale illumination bulb
N110	Shift lock solenoid
SC14	Fuse 14 (on fuse panel C)
T2p	Double connector
T10s	10-pin connector
T10v	10-pin connector
T52	52-pin connector
Y6	Transmission range display
(A199)	Positive connection 4 (15a) (in instrument panel wiring harness)
*	Through May 2012
*2	from June 2012

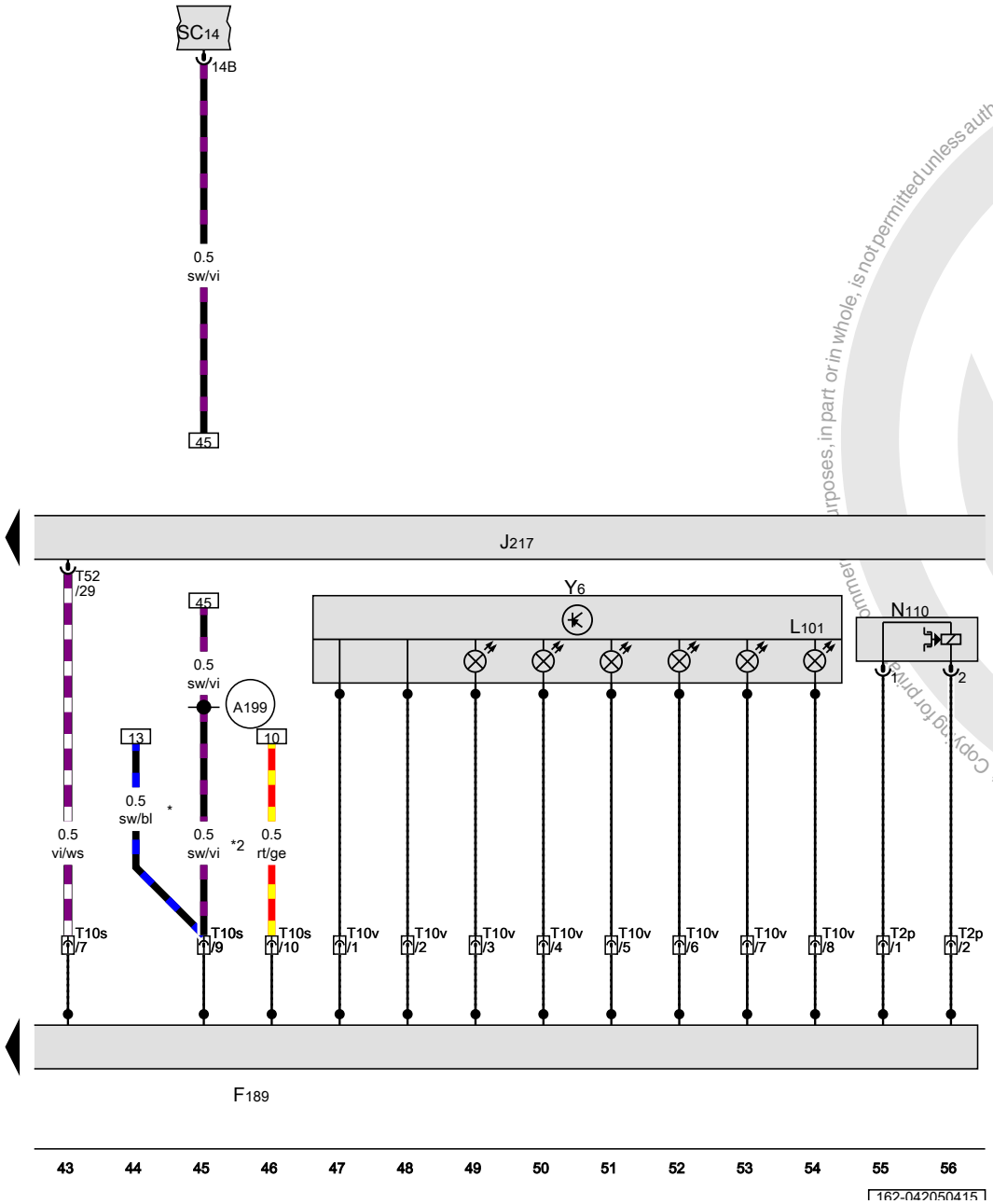

ws	=	white
sw	=	black
ro	=	red
rt	=	red
br	=	brown
gn	=	green
bl	=	blue
gr	=	grey
li	=	lilac
vi	=	lilac
ge	=	yellow
or	=	orange
rs	=	pink

Protected by copyright. Copying for private or commercial purposes, in part or in whole, is not permitted unless authorised by Volkswagen AG. Volkswagen AG does not guarantee or accept any liability with respect to the correctness of information in this document. Copyright by Volkswagen AG.

Multifunction indicator, Transmission control module, Instrument cluster control module, Data bus on board diagnostic interface

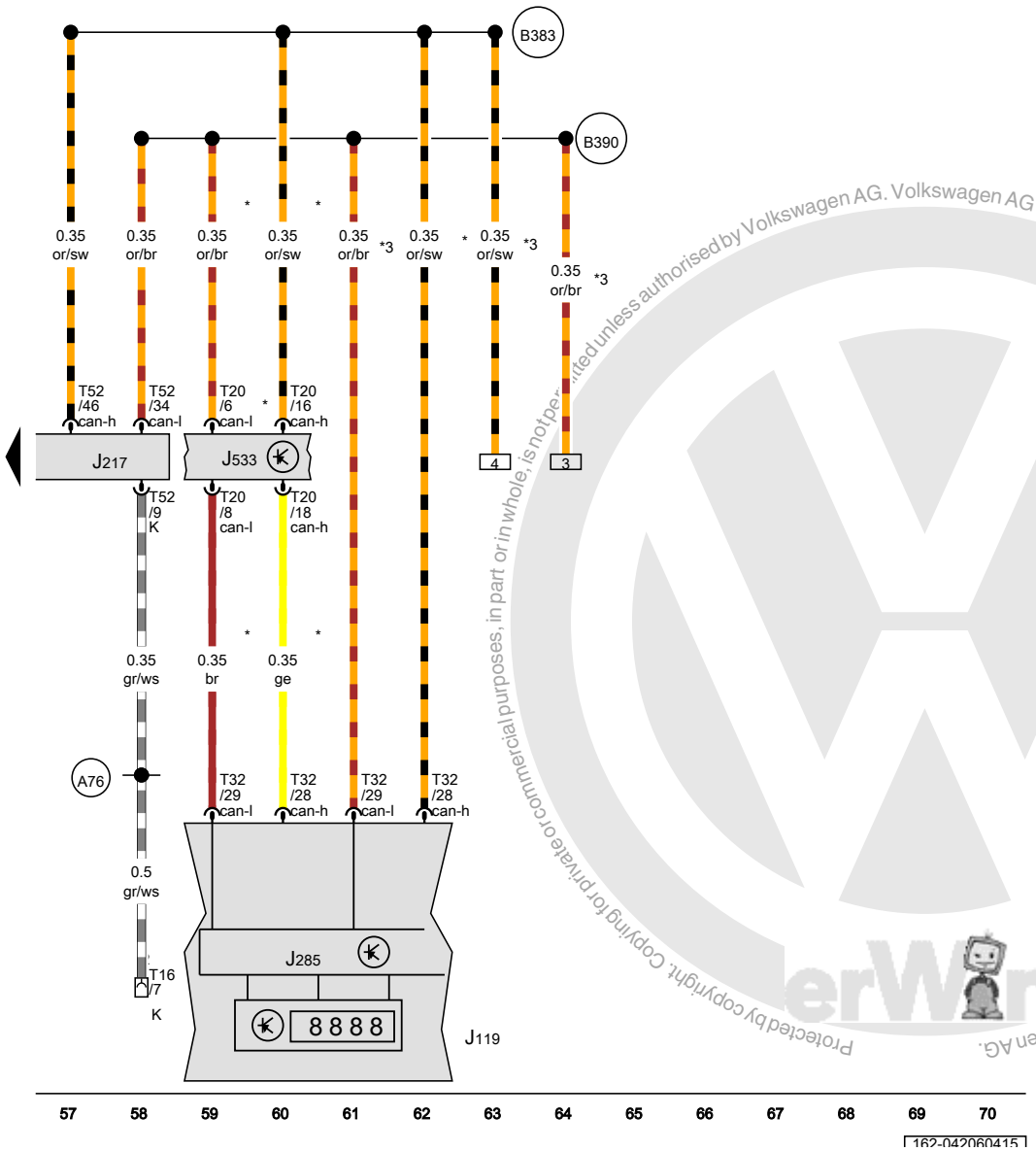

J119	Multifunction indicator
J217	Transmission control module
J285	Instrument cluster control module
J533	Data bus on board diagnostic interface
T16	16-pin connector
T20	20-pin connector
T32	32-pin connector
T52	52-pin connector
A76	KS-diagnostic lead connection (in instrument panel wiring harness)
B383	Powertrain CAN bus high connection 1 (in main wiring harness)
B390	Powertrain CAN bus low connection 1 (in main wiring harness)
*	only for vehicles with High equipment (AW1)
*2	Diagnostic connector
*3	only for vehicles with Low equipment (AW0)

ws	=	white
sw	=	black
ro	=	red
rt	=	red
br	=	brown
gn	=	green
bl	=	blue
gr	=	grey
li	=	lilac
vi	=	lilac
ge	=	yellow
or	=	orange
rs	=	pink

Protected by copyright. Copying for private or commercial purposes, in part or in whole, is not permitted unless authorised by Volkswagen AG. Volkswagen AG does not guarantee or accept any liability with respect to the correctness of information in this document. Copyright by Volkswagen AG.

Radio system RCD 510 , (8AI),(8AU),(8AX),(8DD)

from April 2010

Protected by copyright. Copying for private or commercial purposes, in part or in whole, is not permitted unless authorised by Volkswagen AG. Volkswagen AG does not guarantee or accept any liability with respect to the correctness of information in this document. Copyright by Volkswagen AG.

Protected by copyright. Copying for private or commercial purposes, in part or in whole, is not permitted unless authorised by Volkswagen AG. Volkswagen AG does not guarantee or accept any liability with respect to the correctness of information in this Copyright by Volkswagen AG.

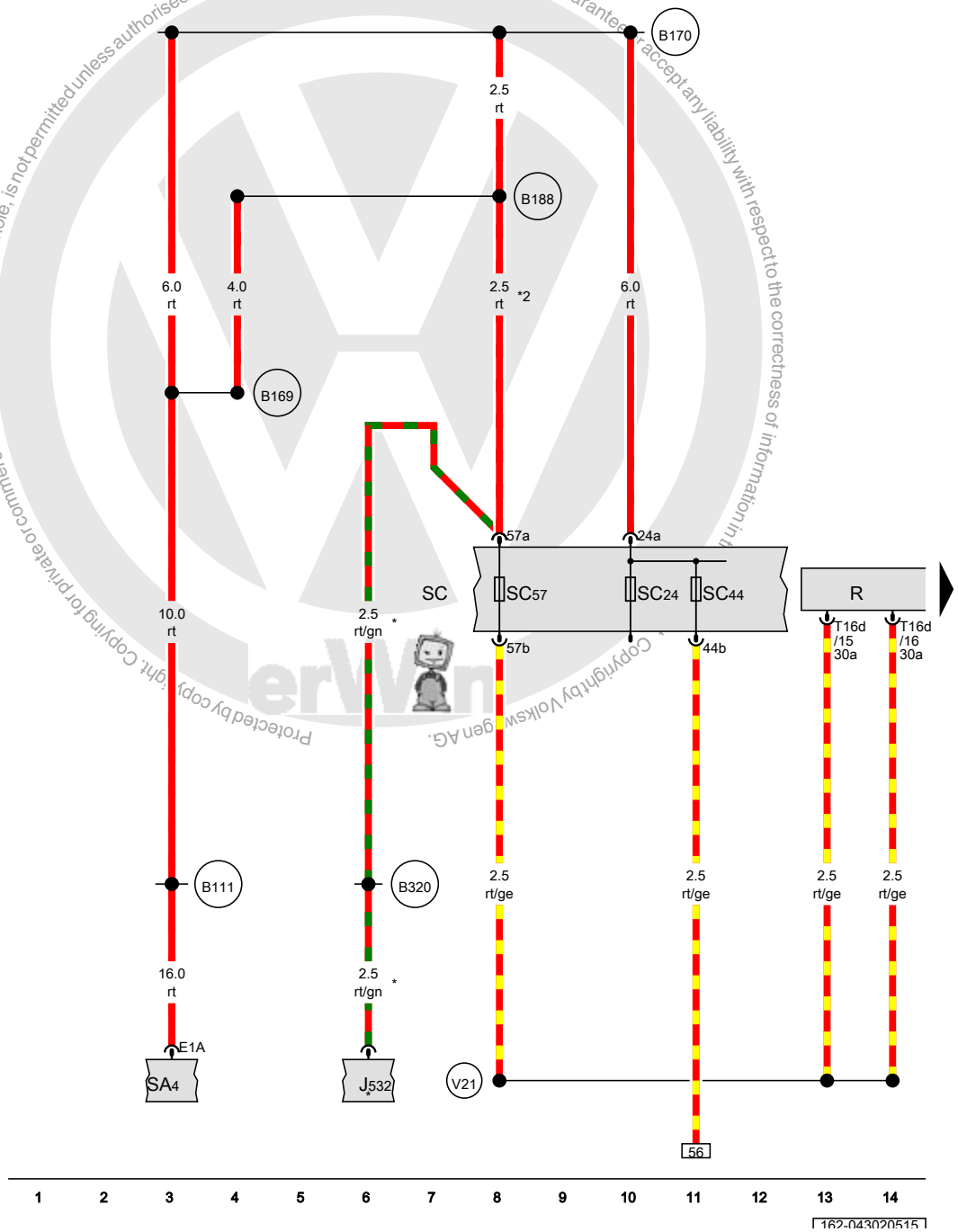

Radio, Fuse 4 (on fuse panel A), Fuse panel C, Fuse 57 (on fuse panel C)

J532	Voltage stabilizer
R	Radio
SA4	Fuse 4 (on fuse panel A)
SC	Fuse panel C
SC24	Fuse 24 (on fuse panel C)
SC44	Fuse 44 (on fuse panel C)
SC57	Fuse 57 (on fuse panel C)
T16d	16-pin connector
B111	Positive connection 1 (30a) (in interior wiring harness)
B169	Positive connection 1 (30) (in interior wiring harness)
B170	Positive connection 2 (30) (in interior wiring harness)
B188	Positive connection 5 (30) (in interior wiring harness)
B320	Positive connection 6 (30a) (in main wiring harness)
V21	Positive connection (30) (in wiring radio/amplifier wiring harness)
*	Only for vehicles with Stop/Start system
*2	Only for vehicles without Start/Stop system

ws	=	white
sw	=	black
ro	=	red
rt	=	red
br	=	brown
gn	=	green
bl	=	blue
gr	=	grey
li	=	lilac
vi	=	lilac
ge	=	yellow
or	=	orange
rs	=	pink

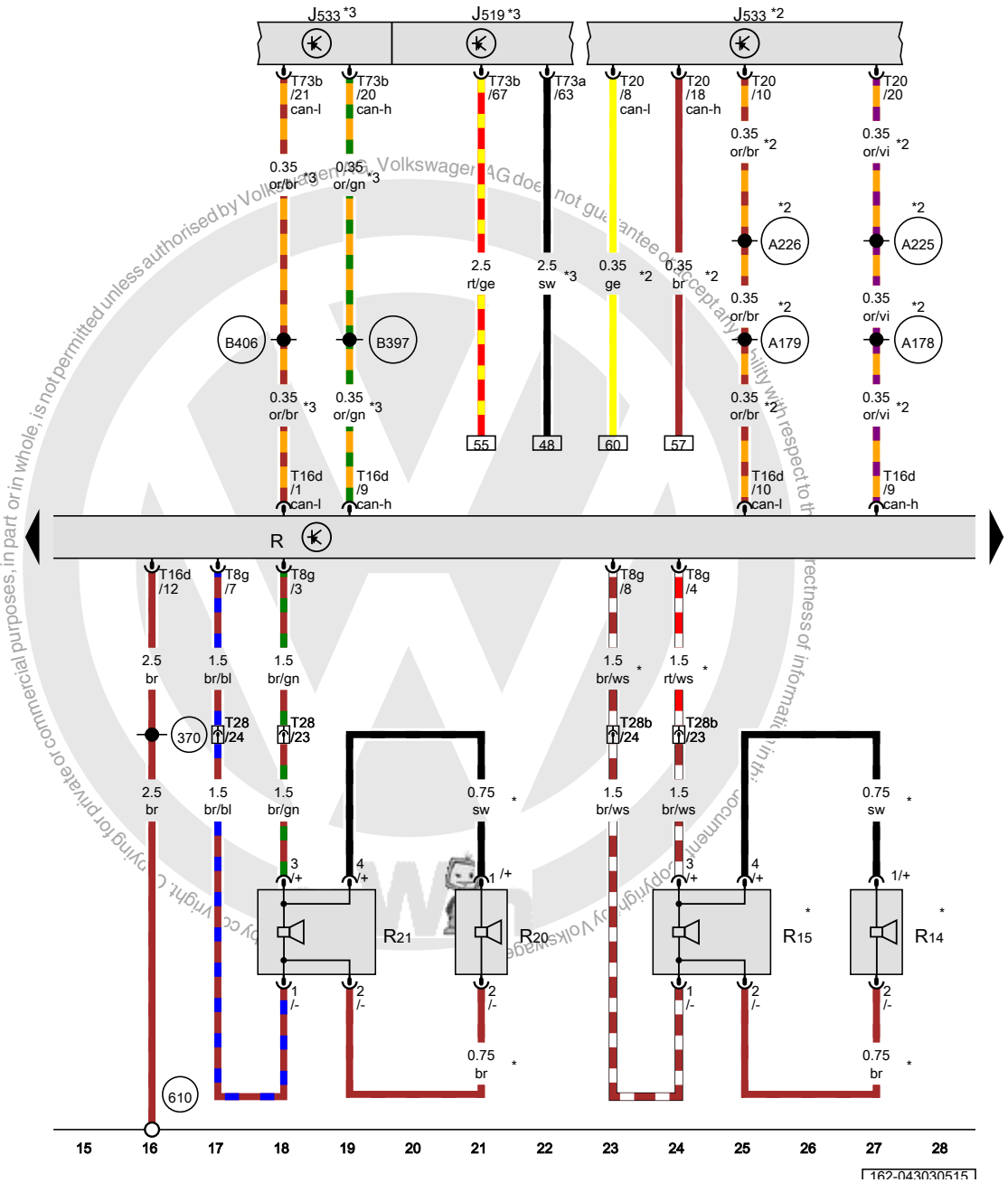

Vehicle electrical control module system, Data bus on board diagnostic interface, Radio, Left front treble speaker, Left front bass speaker

J519	Vehicle electrical control module system
J533	Data bus on board diagnostic interface
R	Radio
R14	Left rear treble speaker
R15	Left rear bass speaker
R20	Left front treble speaker
R21	Left front bass speaker
T8g	8-pin connector
T16d	16-pin connector
T20	20-pin connector
T28	28-pin connector
T28b	28-pin connector
T73a	73-pin connector
T73b	73-pin connector
370	Ground connection 5 (in main wiring harness)
610	Audio ground connection under front center console
A178	Infotainment CAN bus high connection (in instrument panel wiring harness)
A179	Infotainment CAN bus low connection (in instrument panel wiring harness)
A225	Infotainment CAN bus high connection 2 (in instrument panel wiring harness)
A226	Infotainment CAN bus low connection 2 (in instrument panel wiring harness)
B397	Comfort system CAN bus high connection 1 (in main wiring harness)
B406	Comfort system CAN bus low connection 1 (in main wiring harness)
*	Depending on equipment
*2	only for vehicles with High equipment (AW1)
*3	only for vehicles with Low equipment (AW0)

ws	=	white
sw	=	black
ro	=	red
rt	=	red
br	=	brown
gn	=	green
bl	=	blue
gr	=	grey
li	=	lilac
vi	=	lilac
ge	=	yellow
or	=	orange
rs	=	pink

Copyright by Volkswagen AG. Volkswagen AG does not guarantee or accept any liability with respect to the correctness of information in this document. Copying for private or commercial purposes, in part or in whole, is not permitted unless authorised by Volkswagen AG.

Radio, Right front treble speaker, Right front bass speaker

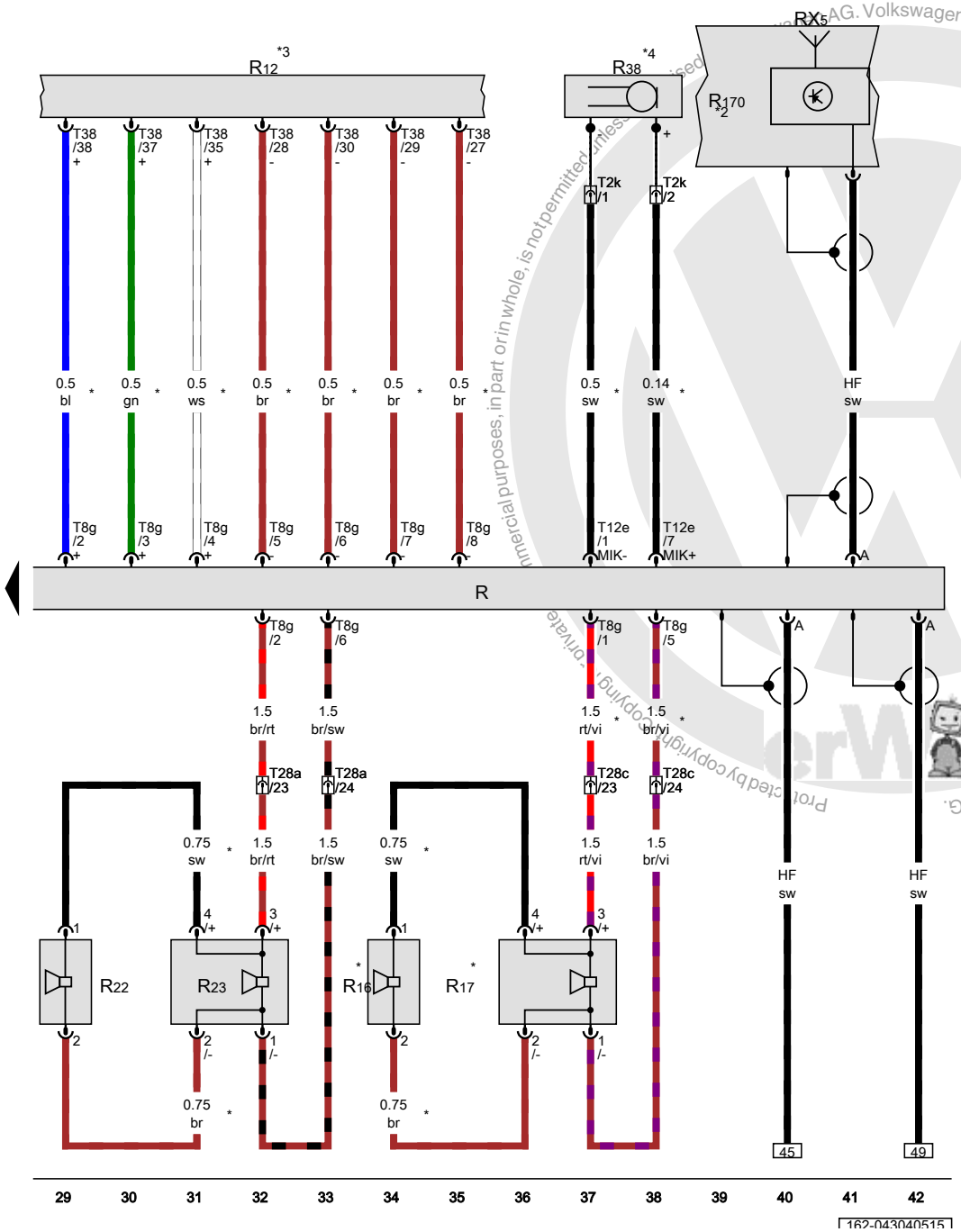

R	Radio
RX5	Roof antenna
R12	Amplifier
R16	Right rear treble speaker
R17	Right rear bass speaker
R22	Right front treble speaker
R23	Right front bass speaker
R38	Telephone microphone
R170	Satellite antenna
T2k	Double connector
T8g	8-pin connector
T12e	12-pin connector
T28a	28-pin connector
T28c	28-pin connector
T38	38-pin connector
*	Depending on equipment
*2	USA only
*3	Refer to applicable sound system wiring diagram
*4	Refer to applicable telephone systems wiring diagram

ws	=	white
sw	=	black
ro	=	red
rt	=	red
br	=	brown
gn	=	green
bl	=	blue
gr	=	grey
li	=	lilac
vi	=	lilac
ge	=	yellow
or	=	orange
rs	=	pink

Protected by copyright. Copying, private or commercial purposes, in part or in whole, is not permitted unless authorised by Volkswagen AG. Volkswagen AG does not guarantee or accept any liability with respect to the correctness of information in this document. Copyright by Volkswagen AG.

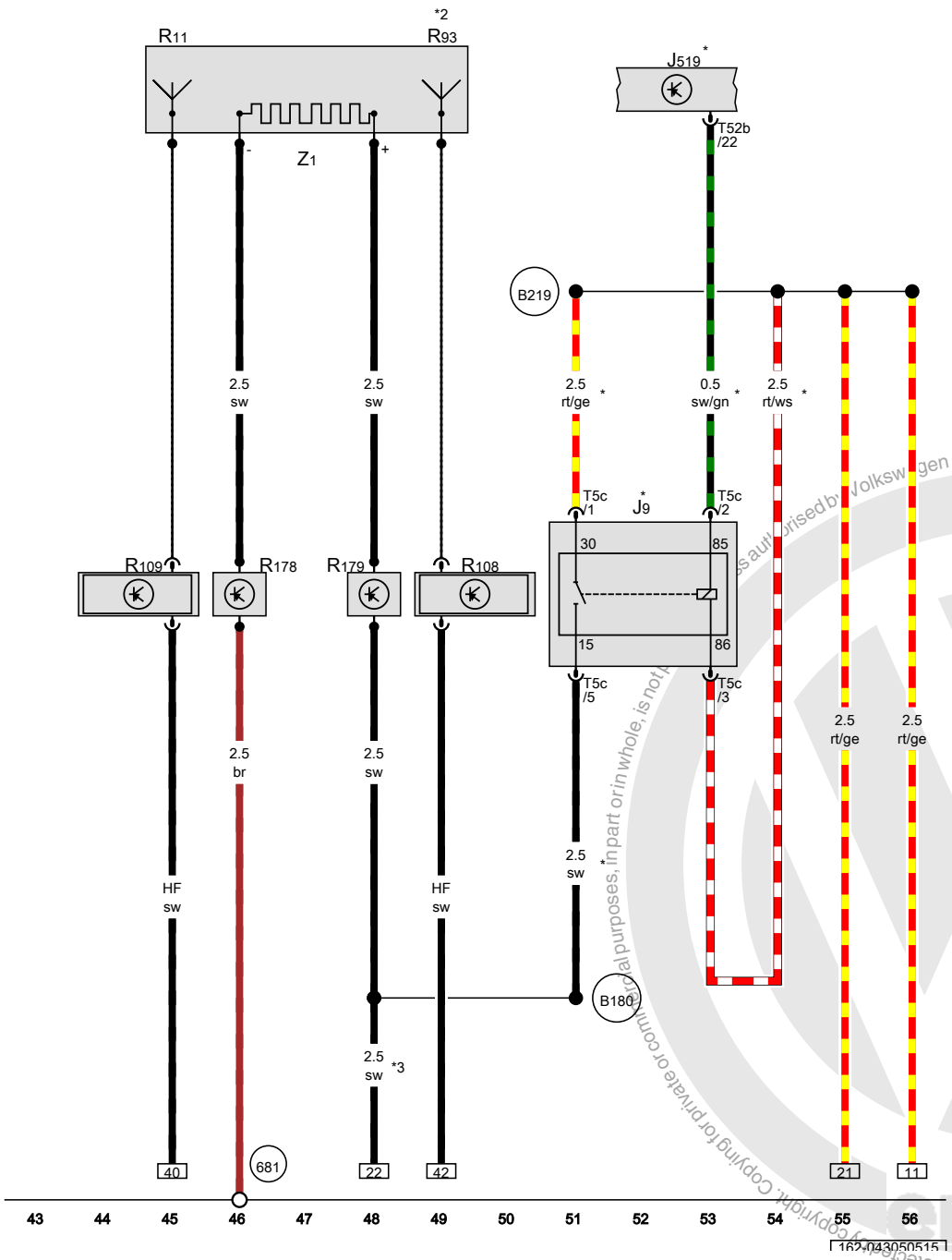

Rear window defogger relay, Left antenna module, Right antenna module, Rear window defogger

J9	Rear window defogger relay
J519	Vehicle electrical control module system
R11	Antenna
R93	Radio antenna 2
R108	Left antenna module
R109	Right antenna module
R178	FM frequency filter in negative wire
R179	FM frequency filter in positive wire
T5c	5-pin connector
T52b	52-pin connector
Z1	Rear window defogger
681	Ground connection 1 in right rear side panel
B180	Rear window defogger connection (in interior wiring harness)
B219	Positive connection 4 (30a) (in interior wiring harness)
*	only for vehicles with High equipment (AW1)
*2	Depending on equipment
*3	only for vehicles with Low equipment (AW0)

ws	=	white
sw	=	black
ro	=	red
rt	=	red
br	=	brown
gn	=	green
bl	=	blue
gr	=	grey
li	=	lilac
vi	=	lilac
ge	=	yellow
or	=	orange
rs	=	pink

Protected by copyright. Copying for private or commercial purposes, in part or in whole, is not permitted unless authorised by Volkswagen AG. Volkswagen AG does not guarantee or accept any liability with respect to the correctness of information in this document. Copyright by Volkswagen AG.

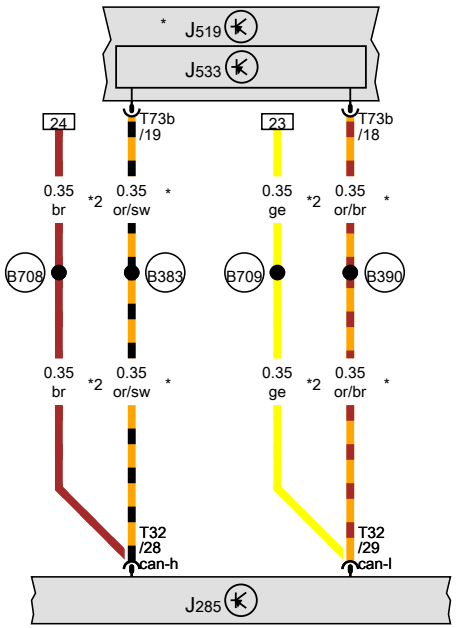

Instrument cluster control module

J285	Instrument cluster control module
J519	Vehicle electrical control module system
J533	Data bus on board diagnostic interface
T32	32-pin connector
T73b	73-pin connector
B383	Powertrain CAN bus high connection 1 (in main wiring harness)
B390	Powertrain CAN bus low connection 1 (in main wiring harness)
B708	Instrument cluster CAN bus high connection 1 (in main wiring harness)
B709	Instrument cluster CAN bus low connection 1 (in main wiring harness)
*	only for vehicles with Low equipment (AW0)
*2	only for vehicles with High equipment (AW1)

Protected by copyright. Copying for private or commercial purposes, in part or in whole, is not permitted unless authorised by Volkswagen AG. Volkswagen AG does not give any guarantee or accept any liability with respect to the correctness of information in this document. Copyright by Volkswagen AG.

ws	=	white
sw	=	black
ro	=	red
rt	=	red
br	=	brown
gn	=	green
bl	=	blue
gr	=	grey
li	=	lilac
vi	=	lilac
ge	=	yellow
or	=	orange
rs	=	pink

57 58 59 60 61 62 63 64 65 66 67 68 69 70

162-043060515

MEDIA-IN multimedia socket , (UF6),(UF8),(UF9)

from April 2010

Protected by copyright. Copying for private or commercial purposes, in part or in whole, is not permitted unless authorised by Volkswagen AG. Volkswagen AG does not guarantee or accept any liability with respect to the correctness of information in this document. Copyright by Volkswagen AG.

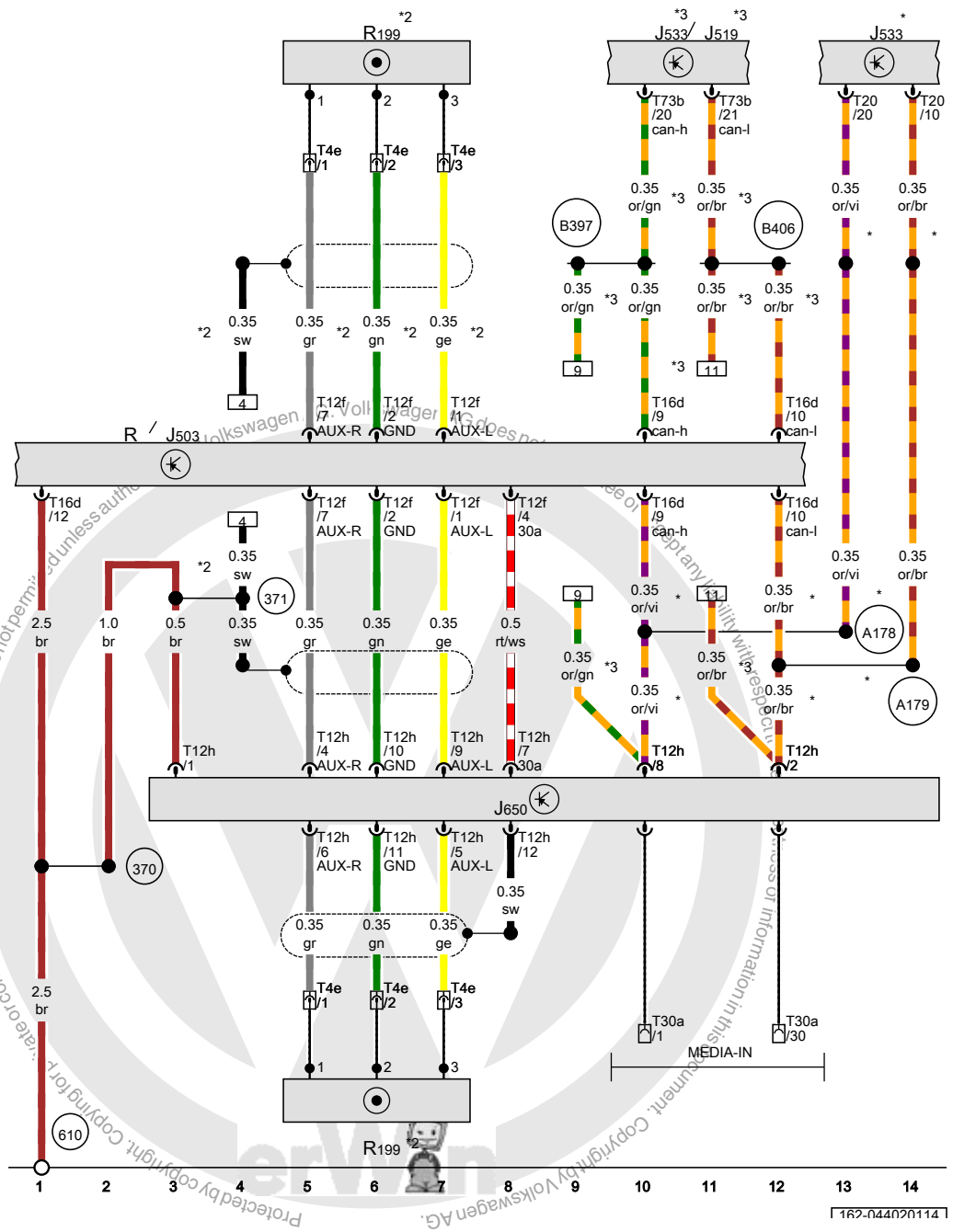

Radio/navigation display unit control module, Vehicle electrical system control module, Multimedia system control module, Radio, External audio source connection

J503	Radio/navigation display unit control module
J519	Vehicle electrical system control module
J533	Data bus on board diagnostic interface
J650	Multimedia system control module
R	Radio
R199	External audio source connection
T4e	4-pin connector
T12f	12-pin connector
T12h	12-pin connector
T16d	16-pin connector
T20	20-pin connector
T30a	30-pin connector
T73b	73-pin connector
370	Ground connection 5 (in main wiring harness)
371	Ground connection 6 (in main wiring harness)
610	Audio ground connection under front center console
A178	Infotainment CAN bus high connection (in instrument panel wiring harness)
A179	Infotainment CAN bus low connection (in instrument panel wiring harness)
B397	Comfort system CAN bus high connection 1 (in main wiring harness)
B406	Comfort system CAN bus low connection 1 (in main wiring harness)
*	only for vehicles with High equipment (AW1)
*2	Depending on equipment
*3	only for vehicles with Low equipment (AW0)

ws	=	white
sw	=	black
ro	=	red
rt	=	red
br	=	brown
gn	=	green
bl	=	blue
gr	=	grey
li	=	lilac
vi	=	lilac
ge	=	yellow
or	=	orange
rs	=	pink

Protected by copyright. Copyright by Volkswagen AG.

Coolant fan , (9AB),(9AK),(9AP),(KH6)

from April 2010

Protected by copyright. Copying for private or commercial purposes, in part or in whole, is not permitted unless authorised by Volkswagen AG. Volkswagen AG does not guarantee or accept any liability with respect to the correctness of information in this document. Copyright by Volkswagen AG.

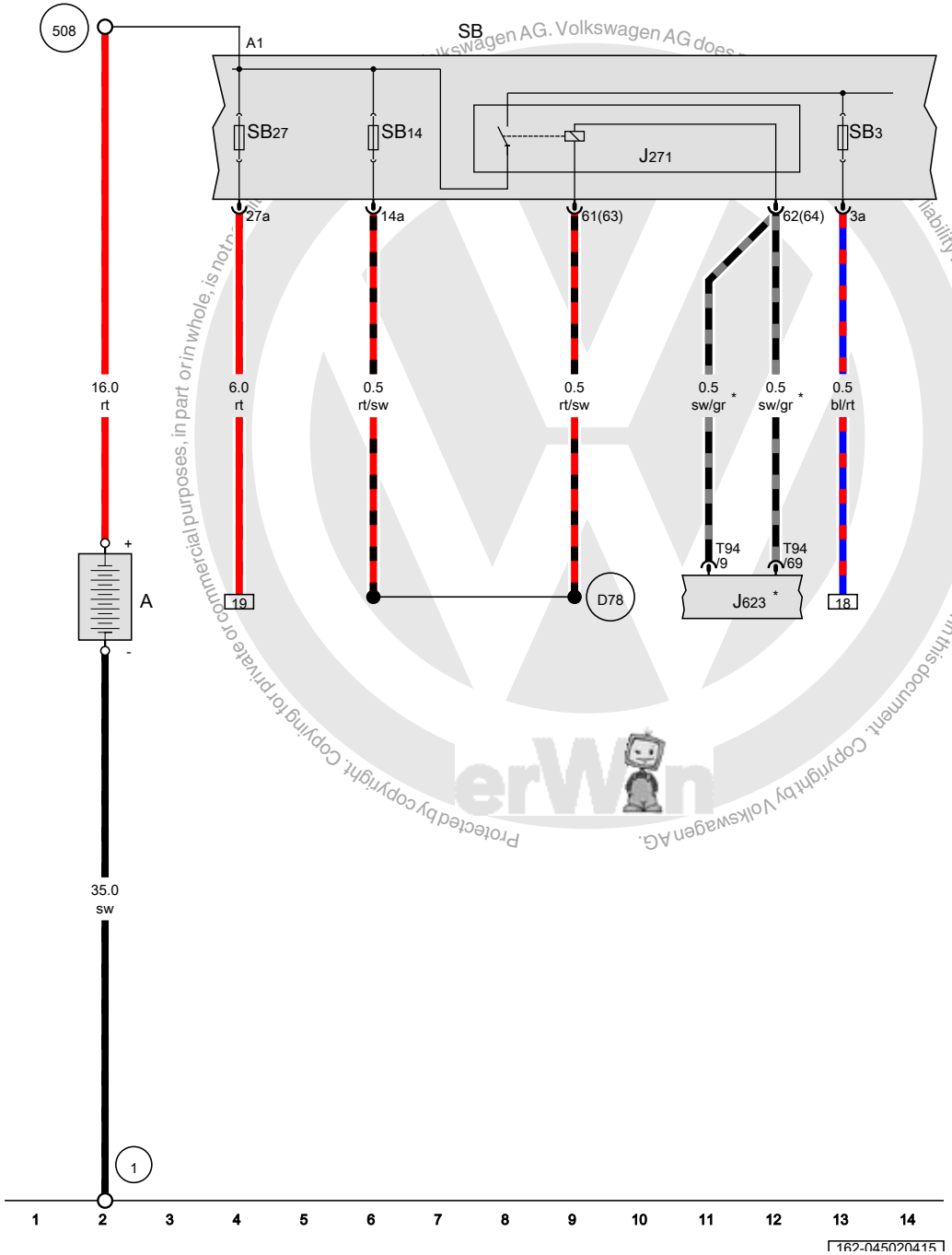

Battery, Motronic engine control module power supply relay

A	Battery
J271	Motronic engine control module power supply relay
J623	Engine control module
SB	Fuse panel B
SB3	Fuse 3 (on fuse panel B)
SB14	Fuse 14 (on fuse panel B)
SB27	Fuse 27 (on fuse panel B)
T94	94-pin connector
1	Ground strap, battery to body
508	Terminal 30 threaded connection (on E-box)
D78	Positive connection 1 (30a) (in engine compartment wiring harness)
*	Refer to applicable engine wiring diagram

ws	=	white
sw	=	black
ro	=	red
rt	=	red
br	=	brown
gn	=	green
bl	=	blue
gr	=	grey
li	=	lilac
vi	=	lilac
ge	=	yellow
or	=	orange
rs	=	pink

Protected by copyright. Copying for private or commercial purposes, in part or in whole, is not permitted. Copyright by Volkswagen AG. Volkswagen AG does not assume liability with respect to the correctness of information in this document.

Radiator fan control module, Radiator fan, Right radiator fan, Radiator fan 2

J293	Radiator fan control module
J623	Engine control module
T2kl	Double connector
T4x	4-pin connector
V7	Radiator fan
V35	Right radiator fan
V177	Radiator fan 2
(12)	Ground connection in engine compartment, left
*	Refer to applicable engine wiring diagram
*2	Depending on equipment
*3	Only for vehicles with two coolant fans

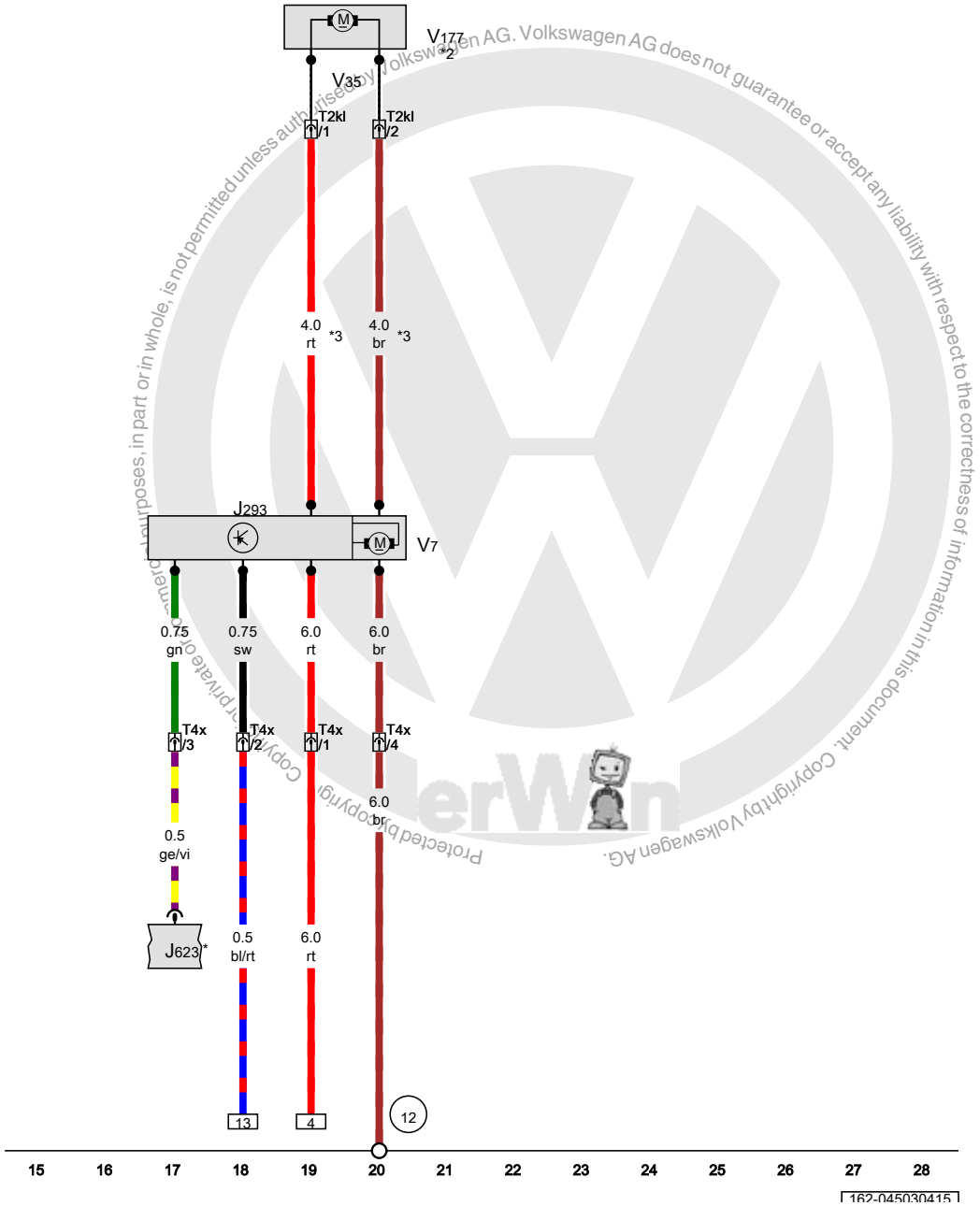

ws	=	white
sw	=	black
ro	=	red
rt	=	red
br	=	brown
gn	=	green
bl	=	blue
gr	=	grey
li	=	lilac
vi	=	lilac
ge	=	yellow
or	=	orange
rs	=	pink

Protected by copyright. Copyright by Volkswagen AG. Volkswagen AG does not guarantee or accept any liability with respect to the correctness of information in this document. Copyright by Volkswagen AG. Copying for private or commercial purposes, in part or in whole, is not permitted unless authorised by Volkswagen AG.

2.0L gasoline engine , CBPA,(AW1)

from February 2011

Protected by copyright. Copying for private or commercial purposes, in part or in whole, is not permitted unless authorised by Volkswagen AG. Volkswagen AG does not guarantee or accept any liability with respect to the correctness of information in this document. Copyright by Volkswagen AG.

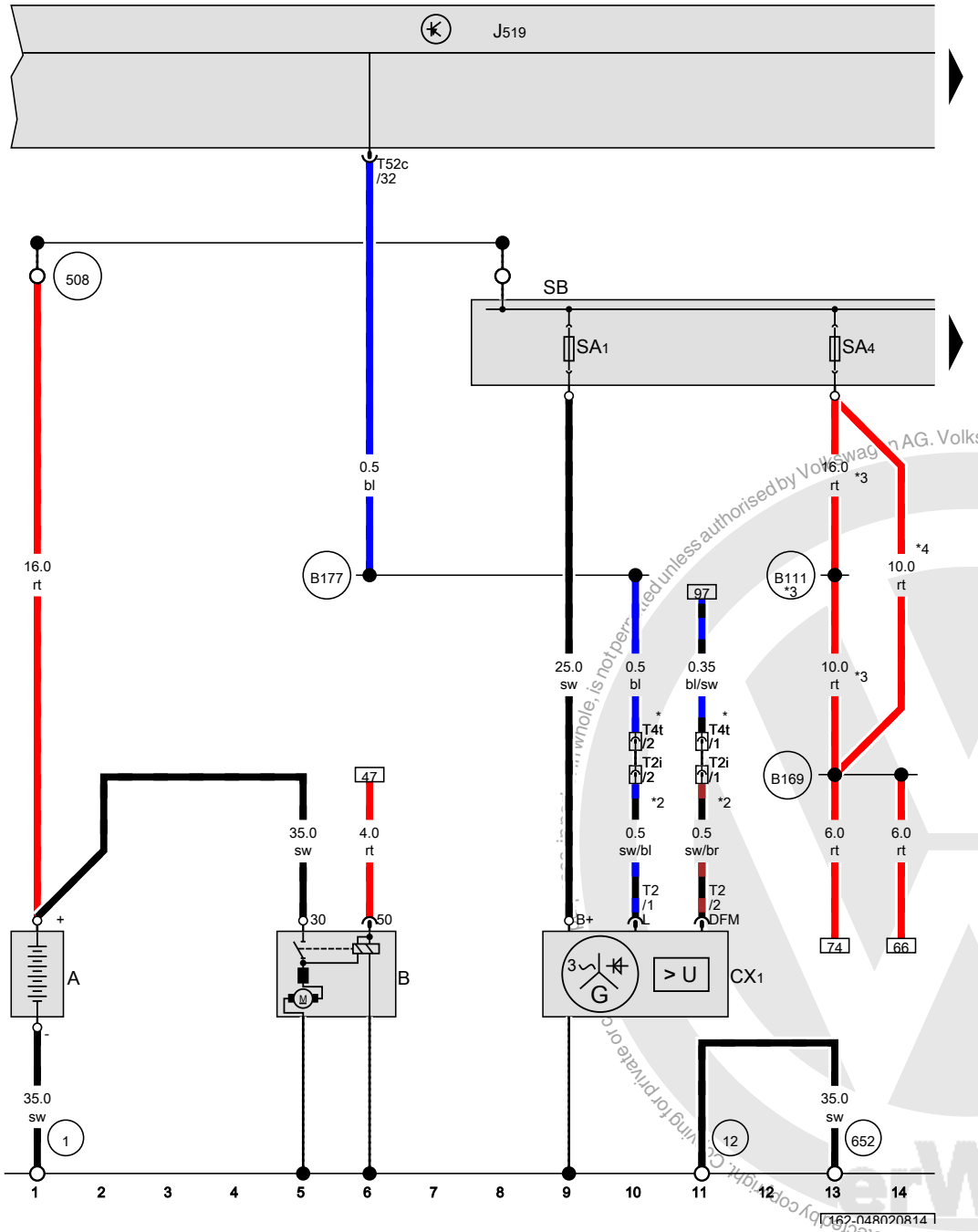

Battery, Starter, Generator with voltage regulator, Vehicle electrical control module system, Fuse 1 (on fuse panel A), Fuse 4 (on fuse panel A), Fuse panel B

A	Battery
B	Starter
CX1	Generator with voltage regulator
J519	Vehicle electrical control module system
SA1	Fuse 1 (on fuse panel A)
SA4	Fuse 4 (on fuse panel A)
SB	Fuse panel B
T2	Double connector
T2i	Double connector, near the starter
T4t	4-pin connector, near the starter
T52c	52-pin connector
1	Ground strap, battery to body
12	Ground connection in engine compartment, left
508	Terminal 30 threaded connection (on E-box)
652	Transmission/engine ground connection
B111	Positive connection 1 (30a) (in interior wiring harness)
B169	Positive connection 1 (30) (in interior wiring harness)
B177	Connection 61 (in interior wiring harness)
*	Only for vehicles with A/C system
*2	Only for vehicles without an A/C system
*3	Omitted as a running change
*4	Running change

ws	=	white
sw	=	black
ro	=	red
rt	=	red
br	=	brown
gn	=	green
bl	=	blue
gr	=	grey
li	=	lilac
vi	=	lilac
ge	=	yellow
or	=	orange
rs	=	pink

Protected by copyright. Copying for private or commercial purposes, in part or in whole, is not permitted unless authorised by Volkswagen AG. Volkswagen AG does not guarantee or accept any liability with respect to the correctness of information in this document. Copyright by Volkswagen AG.

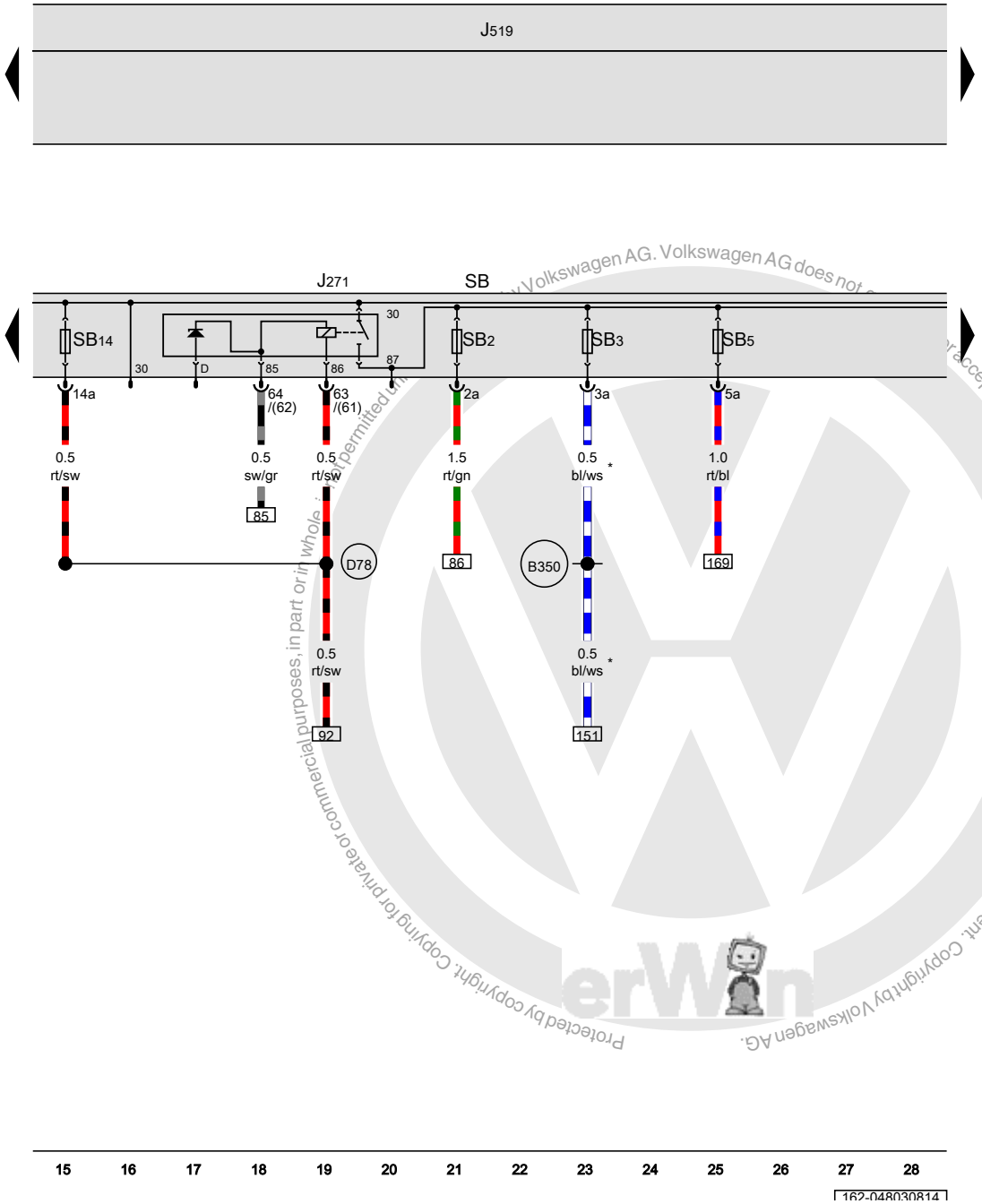

Motronic engine control module power supply relay, Vehicle electrical control module system, Fuse panel B

J271	Motronic engine control module power supply relay
J519	Vehicle electrical control module system
SB	Fuse panel B
SB2	Fuse 2 (on fuse panel B)
SB3	Fuse 3 (on fuse panel B)
SB5	Fuse 5 (on fuse panel B)
SB14	Fuse 14 (on fuse panel B)
B350	Positive connection 1 (87a) (in main wiring harness)
D78	Positive connection 1 (30a) (in engine compartment wiring harness)
*	The color of the wires depends on vehicle equipment

ws	=	white
sw	=	black
ro	=	red
rt	=	red
br	=	brown
gn	=	green
bl	=	blue
gr	=	grey
li	=	lilac
vi	=	lilac
ge	=	yellow
or	=	orange
rs	=	pink

Volkswagen AG. Volkswagen AG does not accept any liability with respect to the correctness of information in this document. Copyright by Volkswagen AG. Protected by copyright. Copying for private or commercial purposes, in part or in whole, is not permitted unless authorised by Volkswagen AG.

Vehicle electrical control module system, Fuse panel B

J519	Vehicle electrical control module system
SB	Fuse panel B
SB7	Fuse 7 (on fuse panel B)
SB8	Fuse 8 (on fuse panel B)
SB10	Fuse 10 (on fuse panel B)
SB25	Fuse 25 (on fuse panel B)
D196	Connection 87a (in engine pre-wiring harness) 2
*	Only for vehicles with a manual transmission

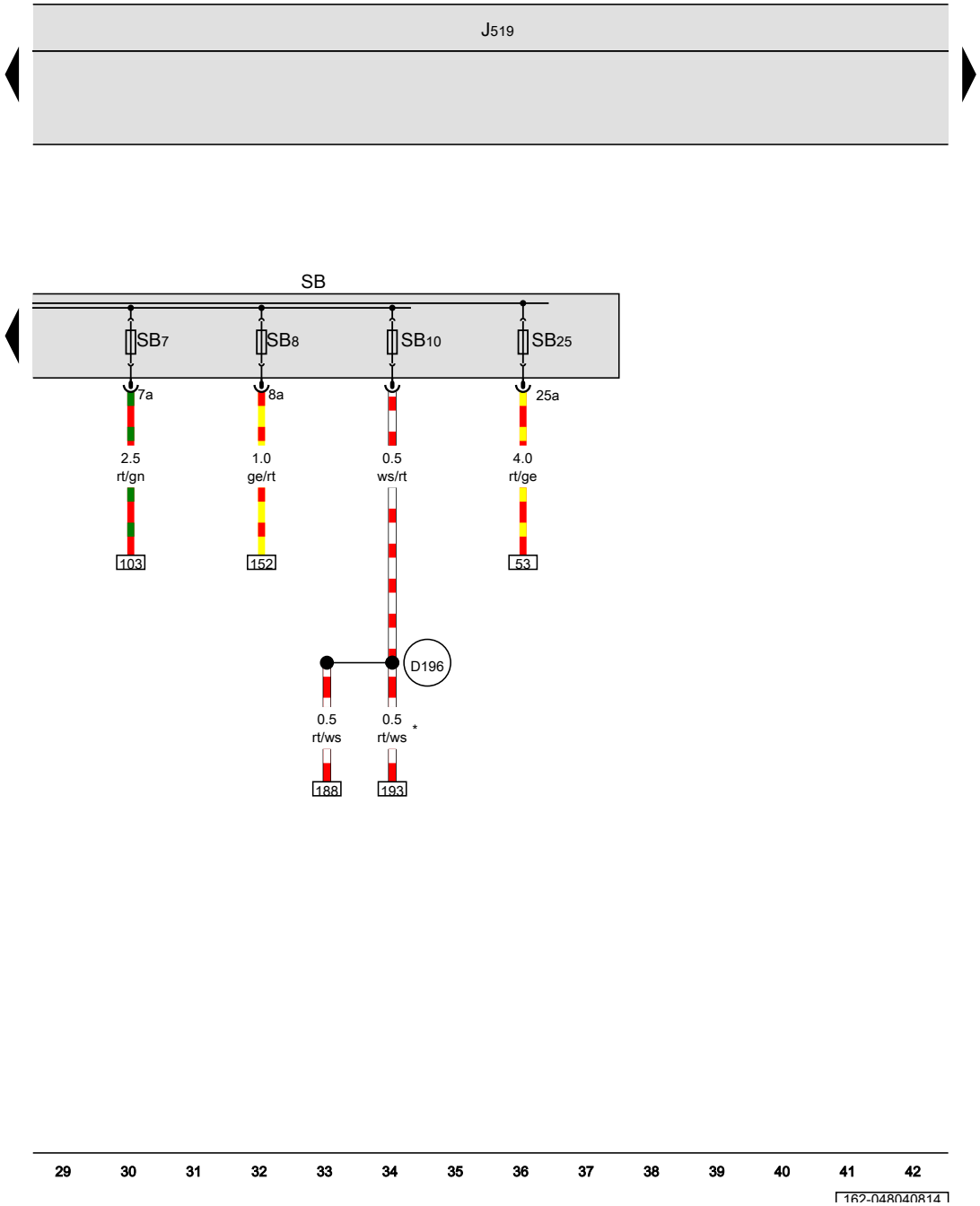

ws	=	white
sw	=	black
ro	=	red
rt	=	red
br	=	brown
gn	=	green
bl	=	blue
gr	=	grey
li	=	lilac
vi	=	lilac
ge	=	yellow
or	=	orange
rs	=	pink

Protected by copyright. Copying for private or commercial purposes, in part or in whole, is not permitted unless authorised by Volkswagen AG. Volkswagen AG does not guarantee or accept any liability with respect to the correctness of information in this document. Copyright by Volkswagen AG.

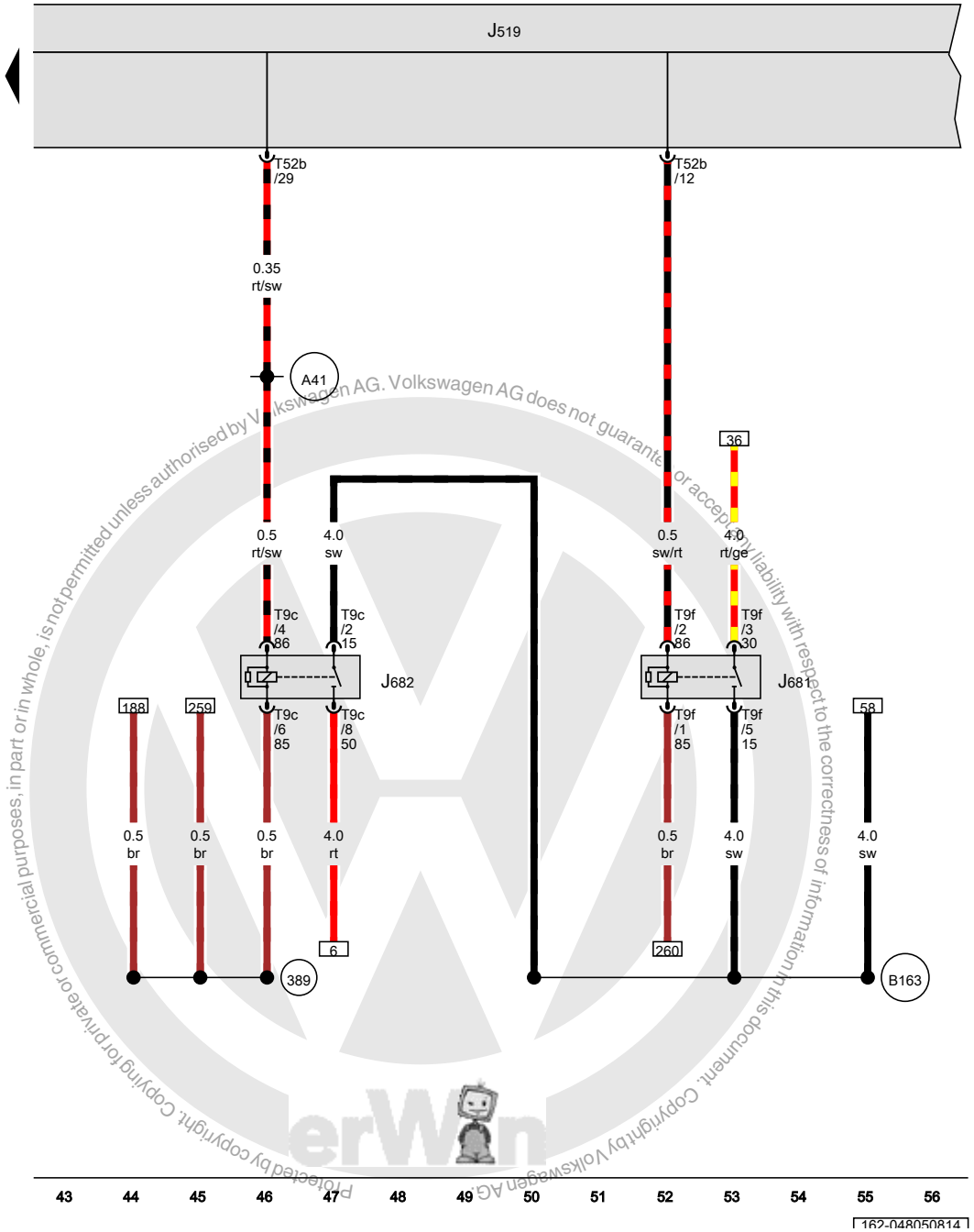

Vehicle electrical control module system, Terminal 15 power supply relay 2, Terminal 50 power supply relay

J519	Vehicle electrical control module system
J681	Terminal 15 power supply relay 2
J682	Terminal 50 power supply relay
T9c	9-pin connector
T9f	9-pin connector
T52b	52-pin connector
389	Ground connection 24 (in main wiring harness)
A41	Positive connection (50) (in instrument panel wiring harness)
B163	Positive connection 1 (15) (in interior wiring harness)

ws	=	white
sw	=	black
ro	=	red
rt	=	red
br	=	brown
gn	=	green
bl	=	blue
gr	=	grey
li	=	lilac
vi	=	lilac
ge	=	yellow
or	=	orange
rs	=	pink

Protected by copyright. Copying for private or commercial purposes, in part or in whole, is not permitted unless authorised by Volkswagen AG. Volkswagen AG does not guarantee or accept any liability with respect to the correctness of information in this document. Copyright by Volkswagen AG.

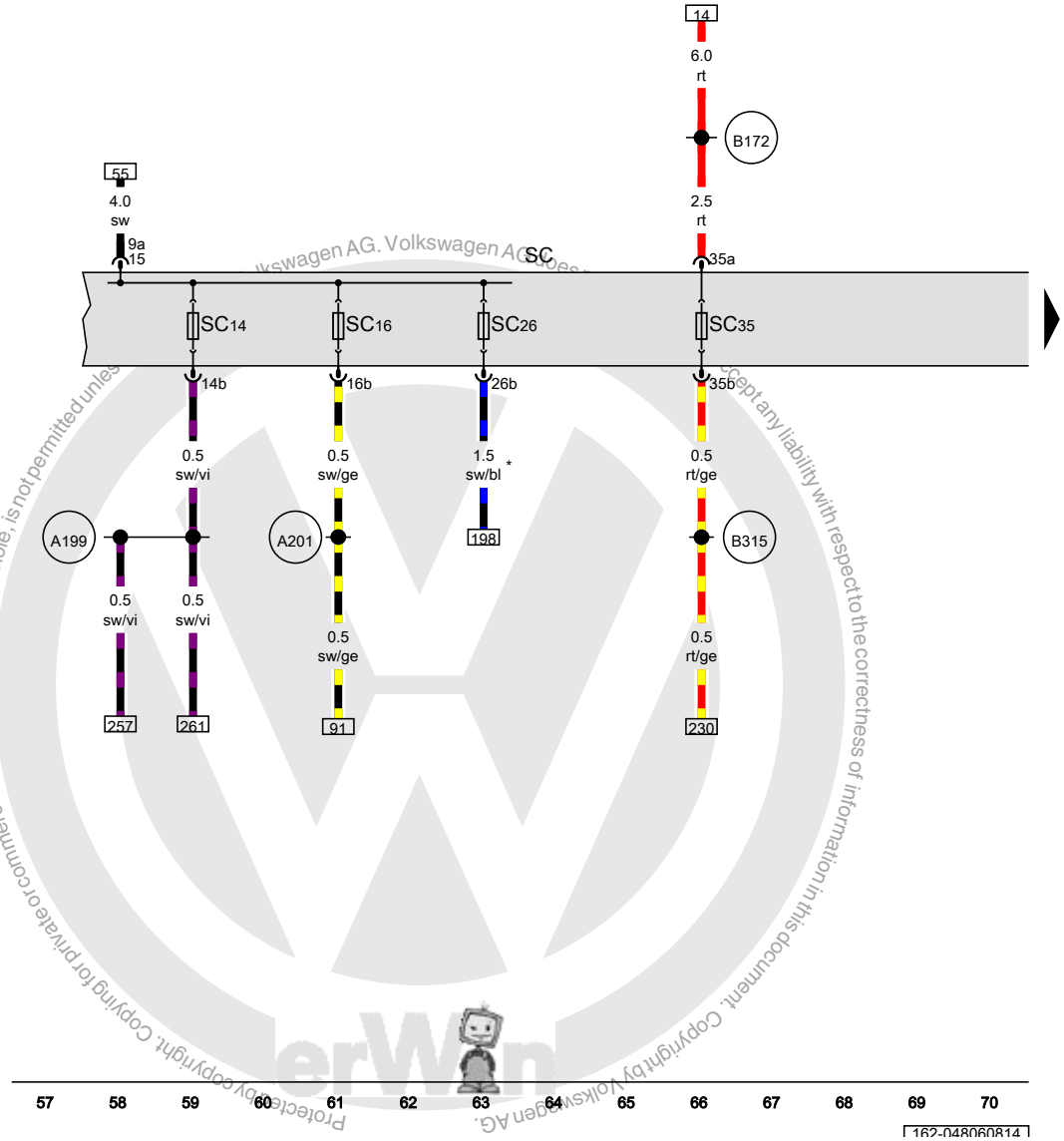

Fuse panel C

SC	Fuse panel C
SC14	Fuse 14 (on fuse panel C)
SC16	Fuse 16 (on fuse panel C)
SC26	Fuse 26 (on fuse panel C)
SC35	Fuse 35 (on fuse panel C)
A199	Positive connection 4 (15a) (in instrument panel wiring harness)
A201	Positive connection 6 (15a) (in instrument panel wiring harness)
B172	Positive connection 4 (30) (in interior wiring harness)
B315	Positive connection 1 (30a) (in main wiring harness)
*	Depending on equipment

ws	=	white
sw	=	black
ro	=	red
rt	=	red
br	=	brown
gn	=	green
bl	=	blue
gr	=	grey
li	=	lilac
vi	=	lilac
ge	=	yellow
or	=	orange
rs	=	pink

Protected by copyright. Copying for private or commercial purposes, in part or in whole, is not permitted unless Volkswagen AG. Volkswagen AG does not accept any liability with respect to the correctness of information in this document. Copyright by Volkswagen AG.

Fuel level sensor, Transfer fuel pump, Fuel pump relay, Fuse panel C

G	Fuel level sensor
G6	Transfer fuel pump
J17	Fuel pump relay
SC	Fuse panel C
SC47	Fuse 47 (on fuse panel C)
T5aa	5-pin connector
T5b	5-pin connector
196	Ground connection 3 (in rear wiring harness)
682	Ground connection 2 in right rear side panel
A99	Connection 87 (in instrument panel wiring harness) 1
B156	Positive connection (30a) (in interior wiring harness)
B170	Positive connection 2 (30) (in interior wiring harness)
*	The color of the wires depends on vehicle equipment

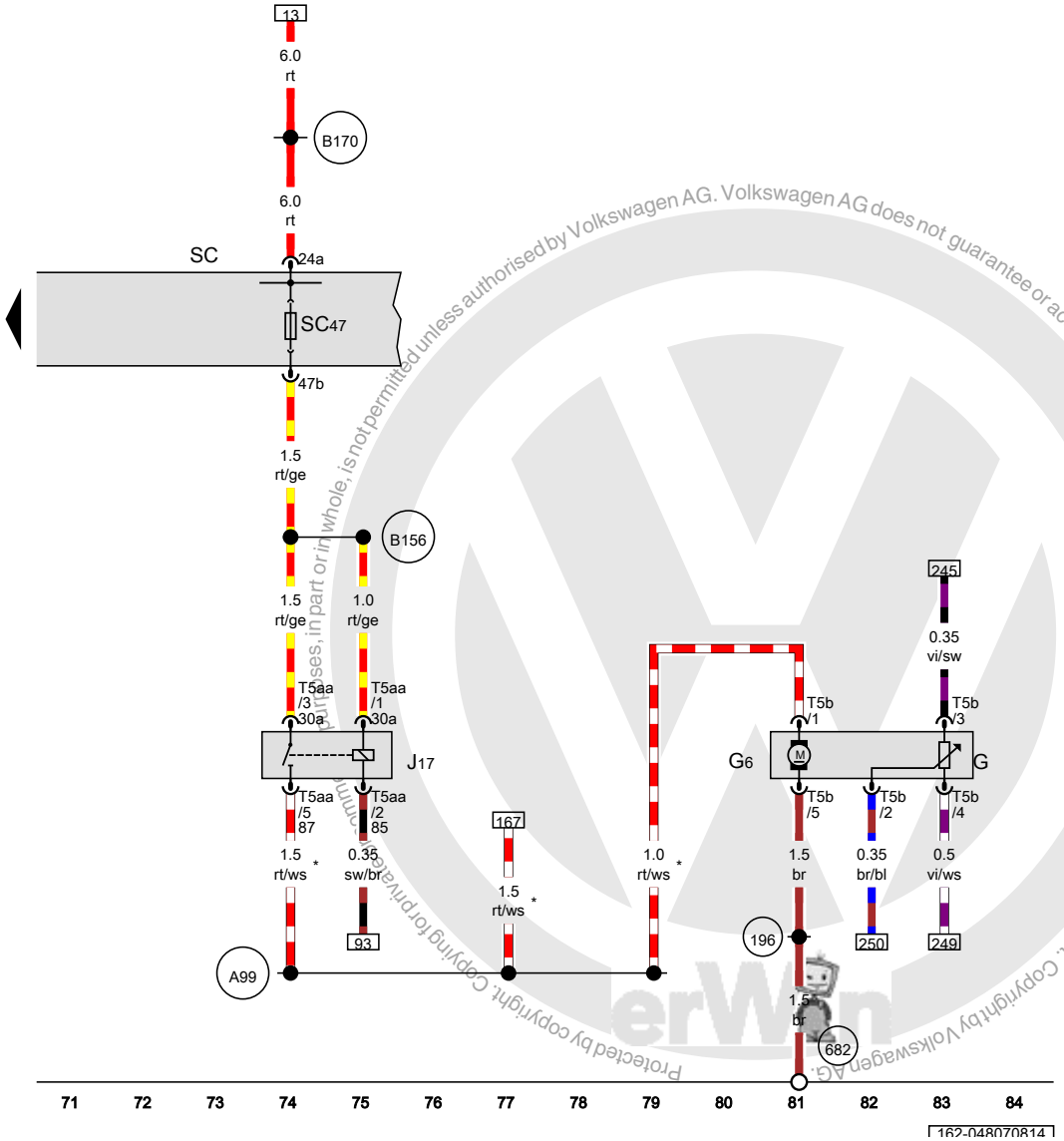

ws	=	white
sw	=	black
ro	=	red
rt	=	red
br	=	brown
gn	=	green
bl	=	blue
gr	=	grey
li	=	lilac
vi	=	lilac
ge	=	yellow
or	=	orange
rs	=	pink

Protected by copyright. Copying for private and commercial purposes, in part or in whole, is not permitted unless authorised by Volkswagen AG. Volkswagen AG does not guarantee or accept any liability with respect to the correctness of information in this document. Copyright by Volkswagen AG.

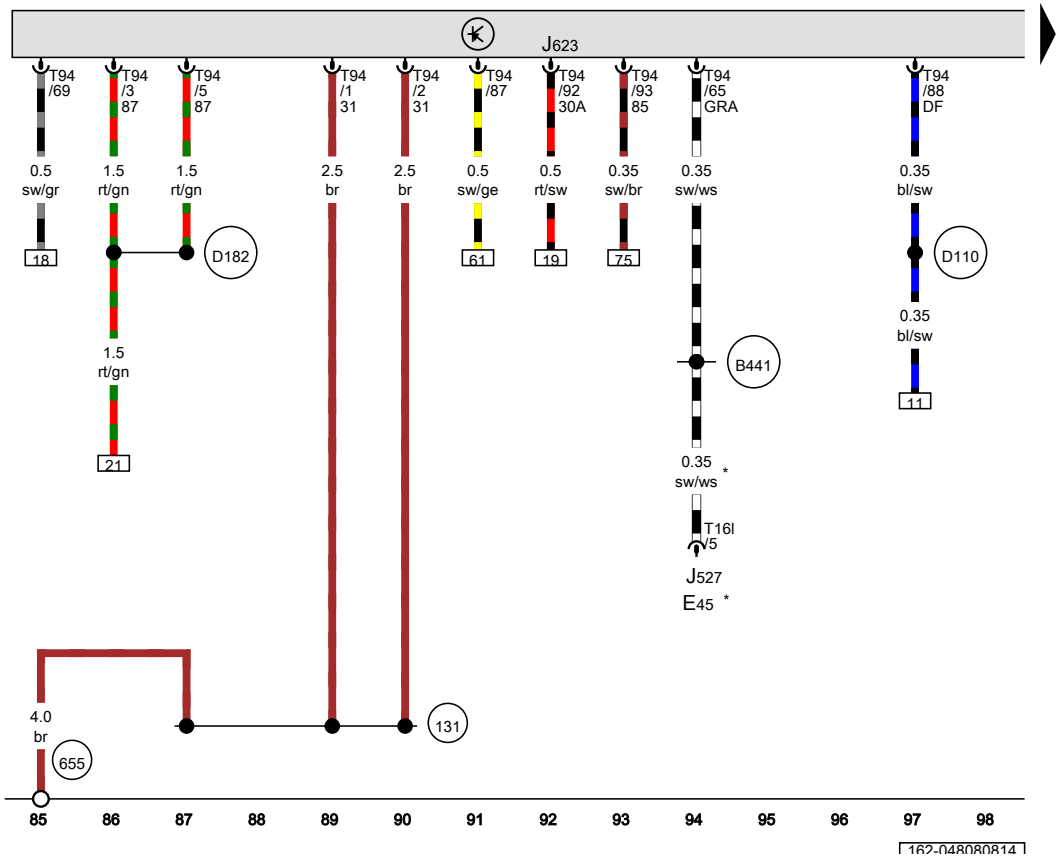

Engine control module

E45	Cruise control switch
J527	Steering column electronics control module
J623	Engine control module
T16l	16-pin connector
T94	94-pin connector
131	Ground connection 2 (in engine compartment wiring harness)
655	Ground connection on left headlamp
B441	Cruise control connection (in main wiring harness)
D110	Connection 8 (in engine compartment wiring harness)
D182	Connection 3 (87a) (in engine compartment wiring harness)
*	Only for vehicles with cruise control

ws	=	white
sw	=	black
ro	=	red
rt	=	red
br	=	brown
gn	=	green
bl	=	blue
gr	=	grey
li	=	lilac
vi	=	lilac
ge	=	yellow
or	=	orange
rs	=	pink

Protected by copyright. Copyright by Volkswagen AG. Volkswagen AG does not guarantee or accept any liability with respect to the correctness of information in this document. Copyright by Volkswagen AG. Copying for commercial purposes, in part or in whole, is not permitted unless authorised by Volkswagen AG.

Engine control module, Spark plug connectors, Spark plugs

J623	Engine control module
N79	Positive crankcase ventilation heating element
N152	Ignition coil
P	Spark plug connectors
Q	Spark plugs
T2fc	Double connector
T4z	4-pin connector
T14	14-pin connector, near the battery
T60	60-pin connector
108	Ground connection 2 (in left front wiring harness)
640	Ground connection 2 in engine compartment, left
*	Only for countries with cold climates

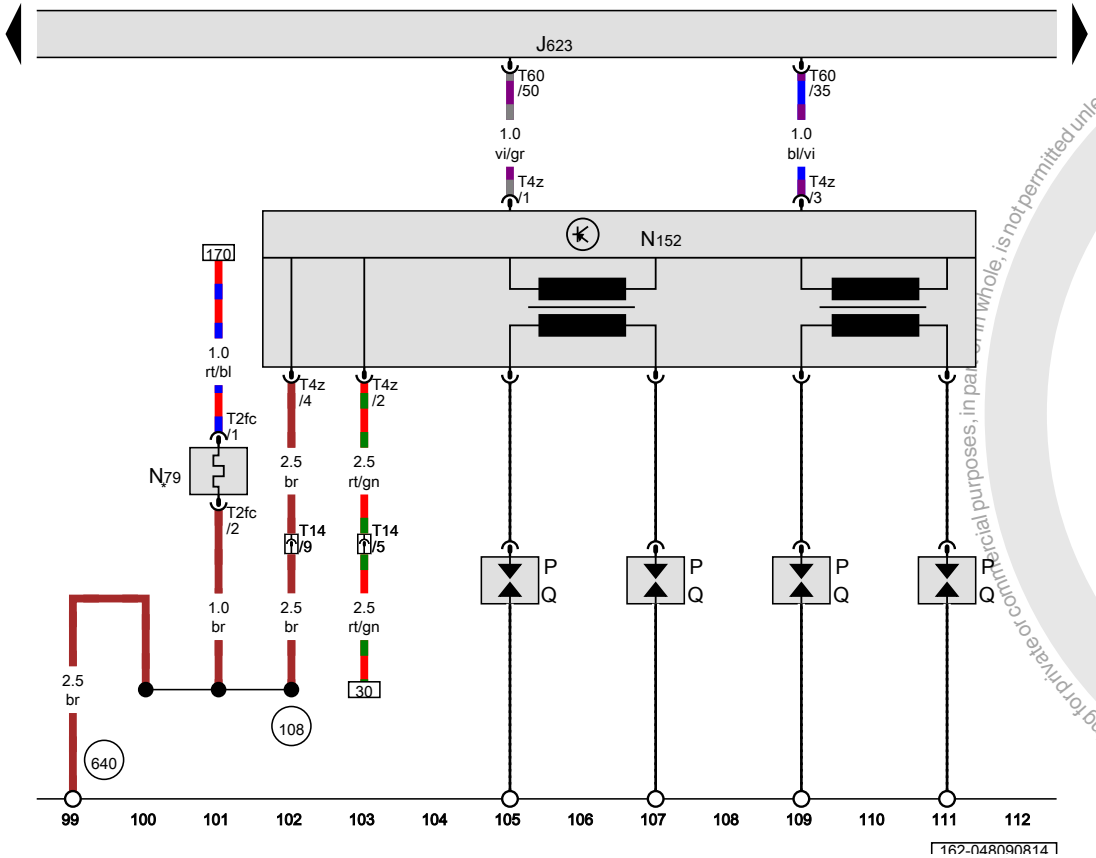

ws	=	white
sw	=	black
ro	=	red
rt	=	red
br	=	brown
gn	=	green
bl	=	blue
gr	=	grey
li	=	lilac
vi	=	lilac
ge	=	yellow
or	=	orange
rs	=	pink

Protected by copyright. Copying for private or commercial purposes, in part or in whole, is not permitted unless authorised by Volkswagen AG. Volkswagen AG does not guarantee or accept any liability with respect to the correctness of information in this document. Copyright by Volkswagen AG.

Protected by copyright. Copying for private or commercial purposes, in part or in whole, is not permitted unless authorised by Volkswagen AG. Volkswagen AG does not guarantee or accept any liability with respect to the correctness of information in this document. Copyright by Volkswagen AG.

Accelerator pedal position sensor, Accelerator pedal position sensor 2, EPC throttle drive, Throttle valve control module, Engine control module

G69	Throttle position sensor
G79	Accelerator pedal position sensor
G185	Accelerator pedal position sensor 2
G186	EPC throttle drive
G188	EPC throttle drive angle sensor 2
J338	Throttle valve control module
J623	Engine control module
T6h	6-pin connector
T6x	6-pin connector
T60	60-pin connector
T94	94-pin connector

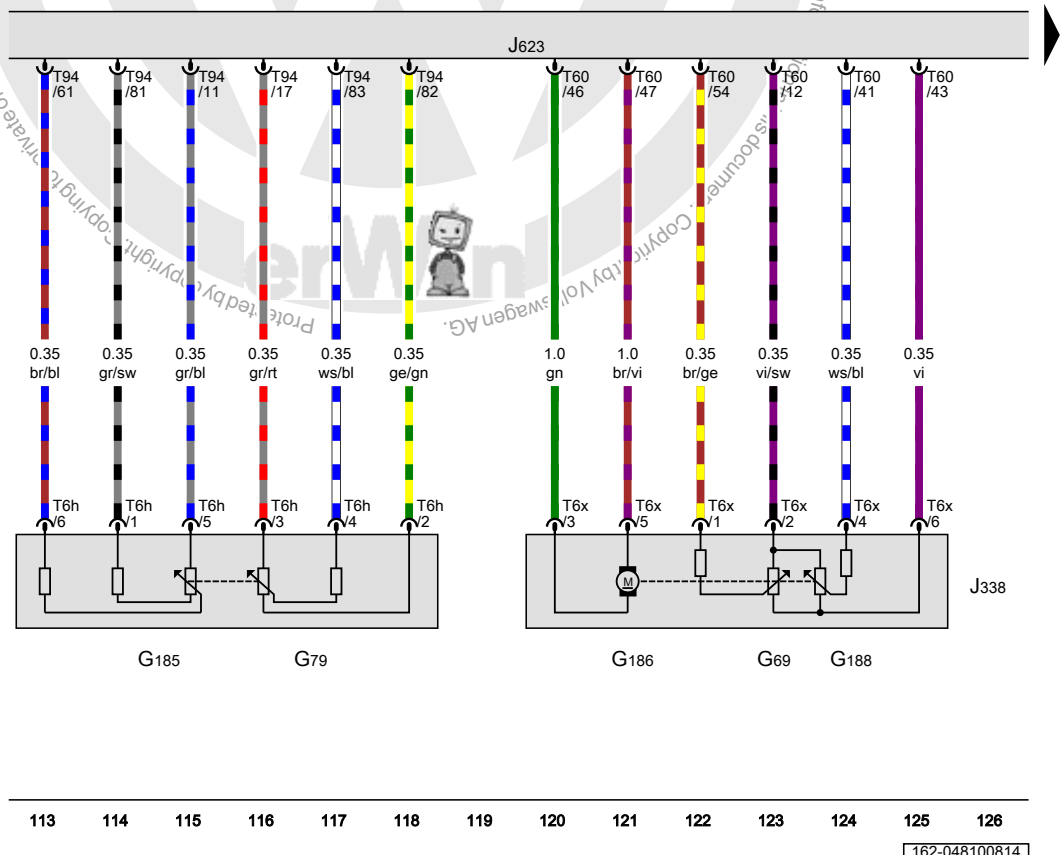

ws	=	white
sw	=	black
ro	=	red
rt	=	red
br	=	brown
gn	=	green
bl	=	blue
gr	=	grey
li	=	lilac
vi	=	lilac
ge	=	yellow
or	=	orange
rs	=	pink

Camshaft position sensor, Knock sensor 1, Engine coolant temperature sensor, Engine control module

G40	Camshaft position sensor
G61	Knock sensor 1
G62	Engine coolant temperature sensor
J623	Engine control module
T2dp	Double connector
T2ex	Double connector
T3b	3-pin connector
T60	60-pin connector
(220)	Sensor ground connection (in engine wiring harness)
*	The color of the wires depends on vehicle equipment

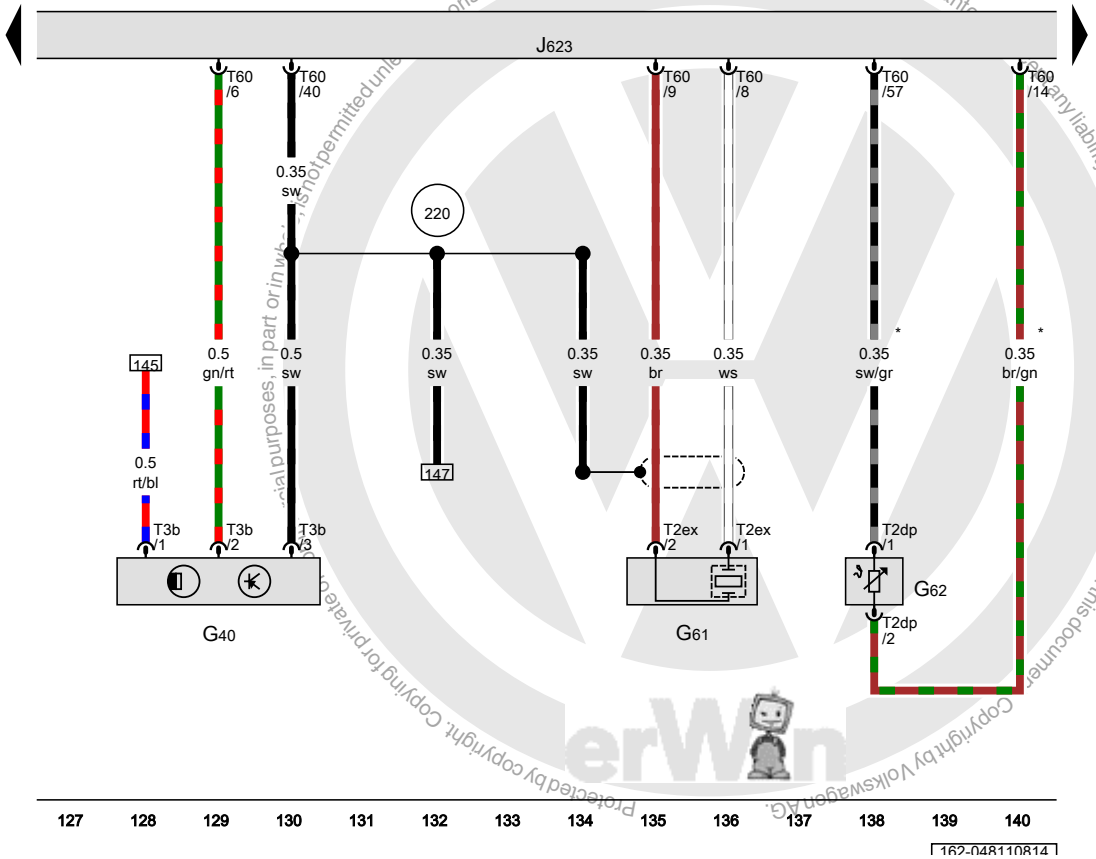

ws	=	white
sw	=	black
ro	=	red
rt	=	red
br	=	brown
gn	=	green
bl	=	blue
gr	=	grey
li	=	lilac
vi	=	lilac
ge	=	yellow
or	=	orange
rs	=	pink

Protected by copyright. Copying for private and commercial purposes, in part or in whole, is not permitted unless authorised by Volkswagen AG. Volkswagen AG does not guarantee or assume any liability with respect to the correctness of information in this document. Copyright by Volkswagen AG.

Engine speed sensor, Intake air temperature sensor, Manifold absolute pressure sensor, Engine control module, EVAP canister purge regulator valve 1

G28	Engine speed sensor
G42	Intake air temperature sensor
G71	Manifold absolute pressure sensor
J623	Engine control module
N80	EVAP canister purge regulator valve 1
T2dt	Double connector
T3ag	3-pin connector
T4ax	4-pin connector
T4x	4-pin connector
T14	14-pin connector, near the battery
T60	60-pin connector
T94	94-pin connector
D101	Connection 1 (in engine compartment wiring harness)
*	Coolant fan connection
*2	Depending on equipment
*3	The color of the wires depends on vehicle equipment

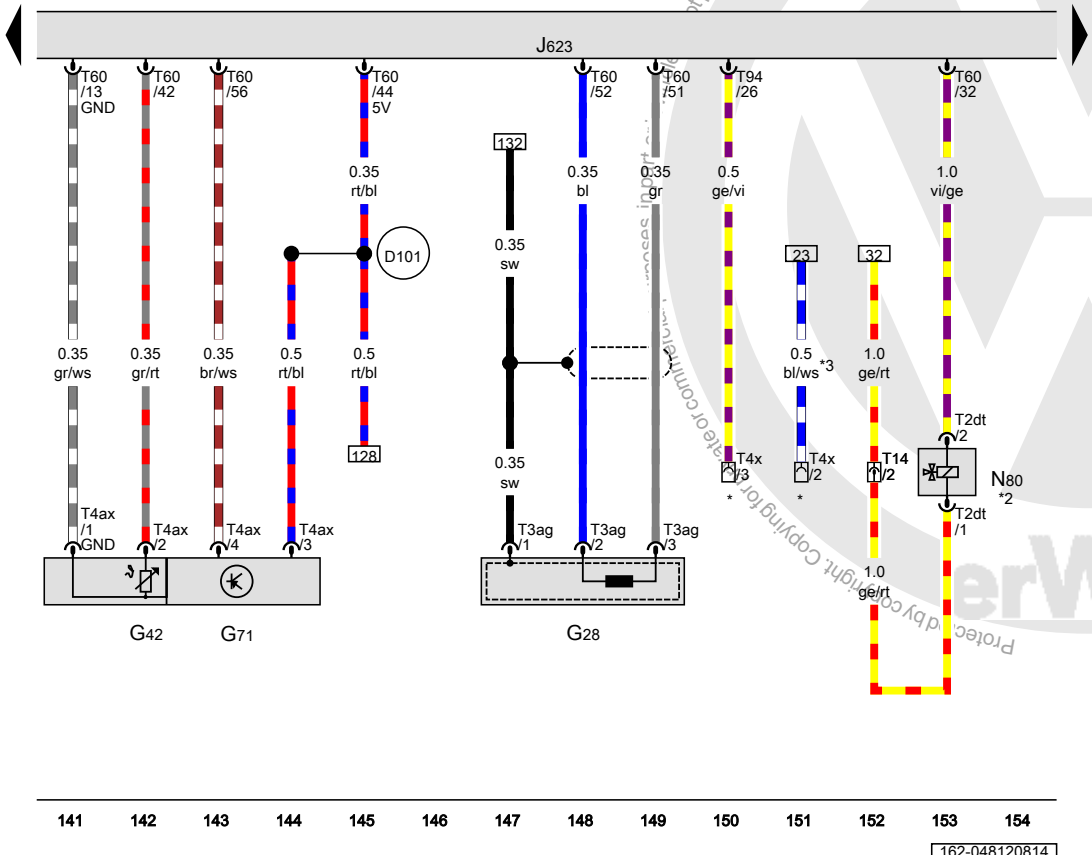

ws	=	white
sw	=	black
ro	=	red
rt	=	red
br	=	brown
gn	=	green
bl	=	blue
gr	=	grey
li	=	lilac
vi	=	lilac
ge	=	yellow
or	=	orange
rs	=	pink

Protected by copyright. Copying for private or commercial purposes, in part or in whole, is not permitted unless authorised by Volkswagen AG. Volkswagen AG does not guarantee or accept any liability with respect to the correctness of information in this document. Copyright by Volkswagen AG.

Engine control module, Cylinder 1 fuel injector, Cylinder 2 fuel injector, Cylinder 3 fuel injector, Cylinder 4 fuel injector

J623	Engine control module
N30	Cylinder 1 fuel injector
N31	Cylinder 2 fuel injector
N32	Cylinder 3 fuel injector
N33	Cylinder 4 fuel injector
T2cg	Double connector
T2ch	Double connector
T2ci	Double connector
T2cj	Double connector
T14	14-pin connector, near the battery
T60	60-pin connector
D95	Injector connection (in engine compartment wiring harness)
*	The color of the wires depends on vehicle equipment

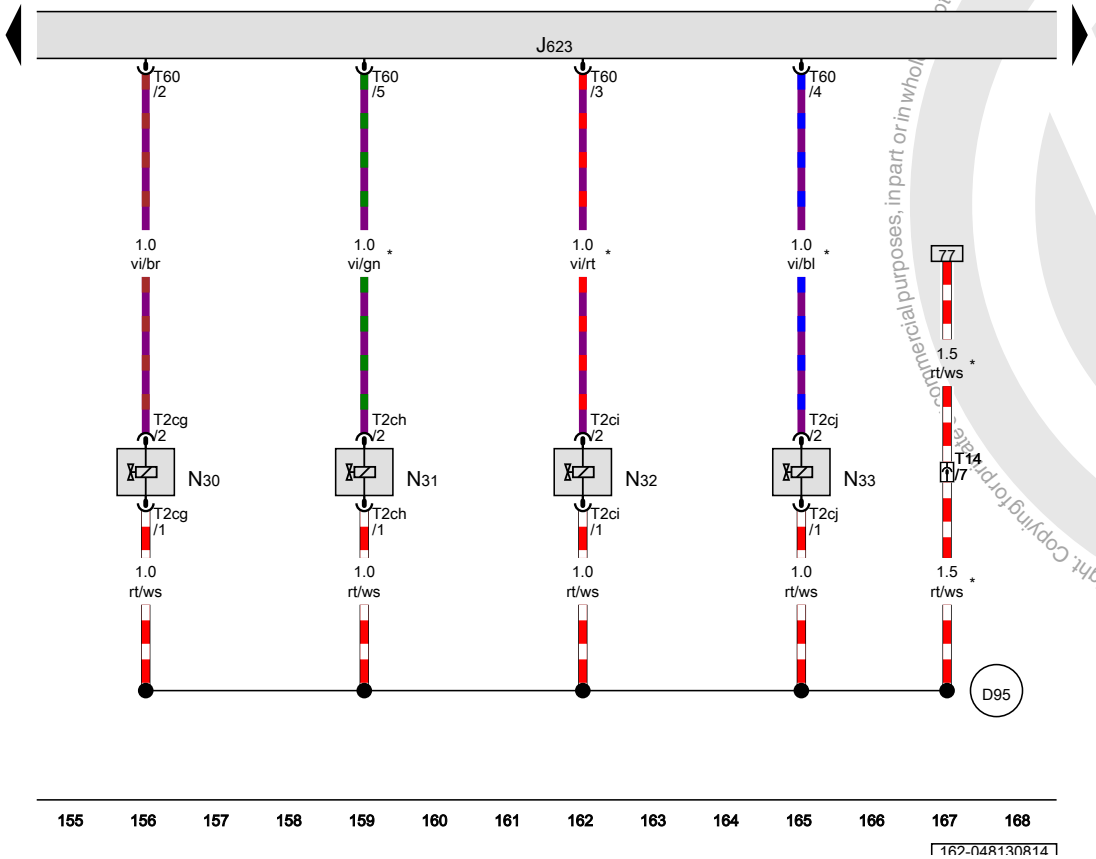

ws	=	white
sw	=	black
ro	=	red
rt	=	red
br	=	brown
gn	=	green
bl	=	blue
gr	=	grey
li	=	lilac
vi	=	lilac
ge	=	yellow
or	=	orange
rs	=	pink

Protected by copyright. Copying for private, commercial purposes, in part or in whole, is not permitted unless authorised by Volkswagen AG. Volkswagen AG does not give any guarantee or accept any liability with respect to the correctness of information in this document. Copyright by Volkswagen AG.

Heated oxygen sensor, Oxygen sensor after three way catalytic converter, Engine control module, Oxygen sensor heater, Heater for oxygen sensor 1 after catalytic converter

G39	Heated oxygen sensor
G130	Oxygen sensor after three way catalytic converter
J623	Engine control module
T4ao	4-pin connector
T6w	6-pin connector
T94	94-pin connector
Z19	Oxygen sensor heater
Z29	Heater for oxygen sensor 1 after catalytic converter
E30	Connection 87a (in engine wiring harness)

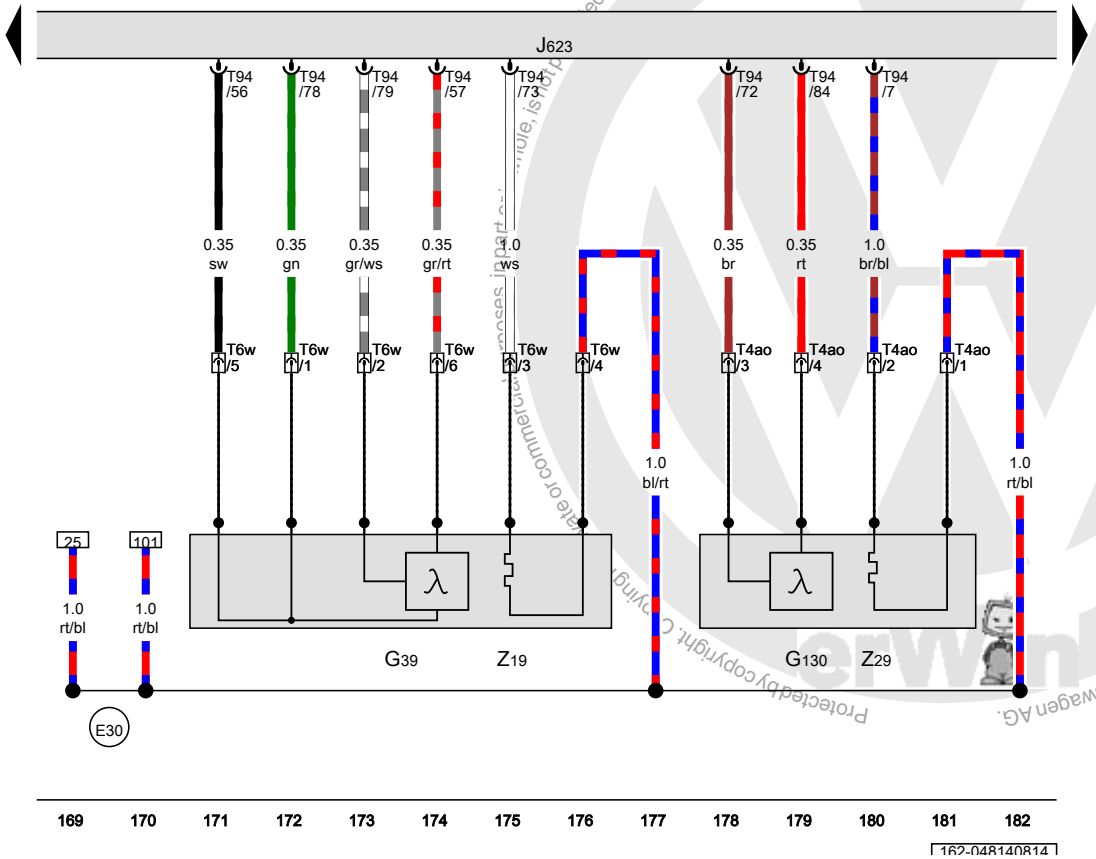

ws	=	white
sw	=	black
ro	=	red
rt	=	red
br	=	brown
gn	=	green
bl	=	blue
gr	=	grey
li	=	lilac
vi	=	lilac
ge	=	yellow
or	=	orange
rs	=	pink

Protected by copyright. Copying for commercial purposes, in part or in whole, is not permitted unless authorised by Volkswagen AG. Volkswagen AG does not guarantee or accept any liability with respect to the correctness of information in this document. Copyright by Volkswagen AG.

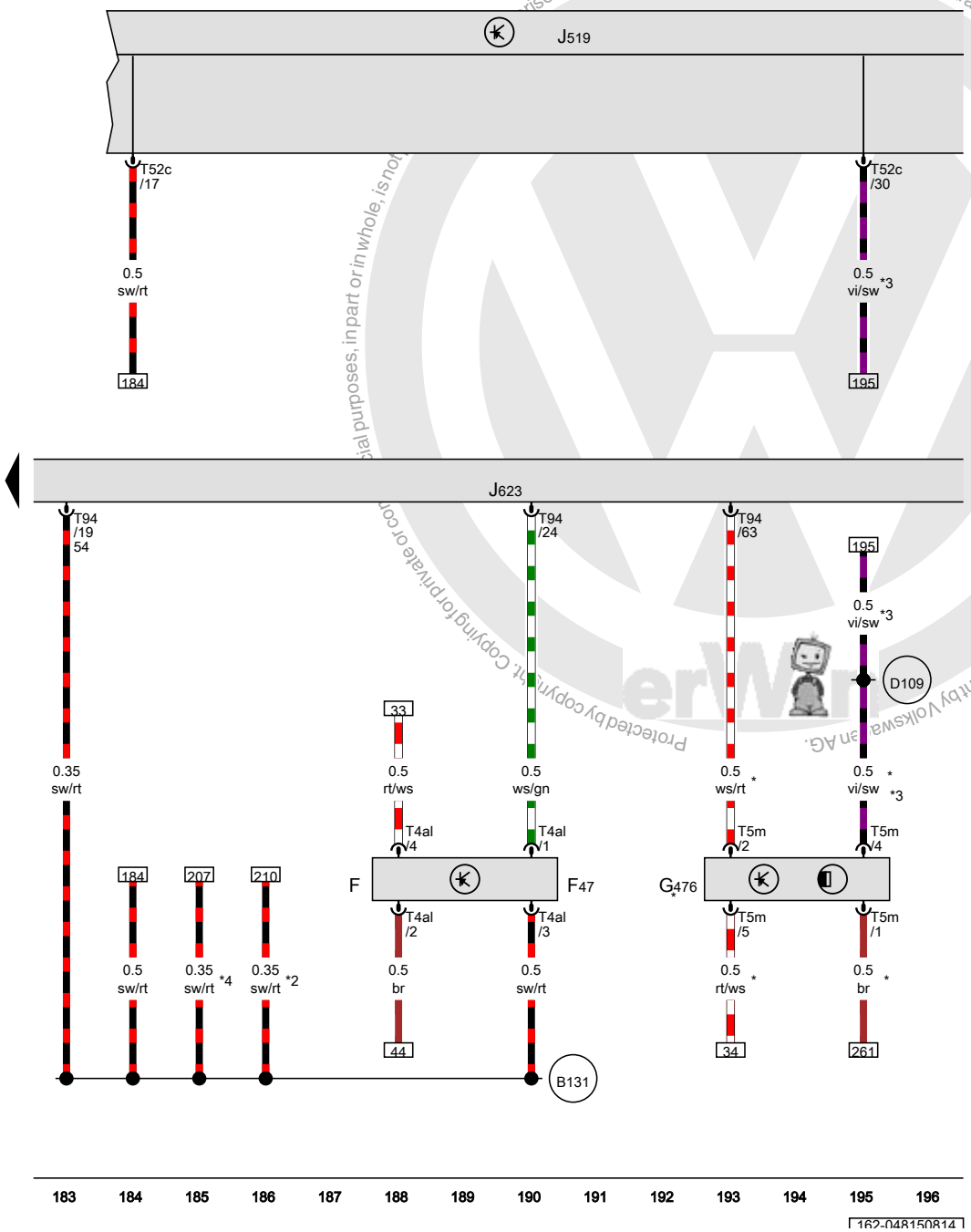

Brake lamp switch, Brake pedal switch, Clutch position sensor, Vehicle electrical control module system, Engine control module

F	Brake lamp switch
F47	Brake pedal switch
G476	Clutch position sensor
J519	Vehicle electrical control module system
J623	Engine control module
T4al	4-pin connector
T5m	5-pin connector
T52c	52-pin connector
T94	94-pin connector
B131	Connection 54 (in interior wiring harness)
D109	Connection 7 (in engine compartment wiring harness)
*	Only for vehicles with a manual transmission
*2	Only for vehicles with ABS and ESP
*3	The color of the wires depends on vehicle equipment
*4	Only for vehicles with ABS without ESP

ws	=	white
sw	=	black
ro	=	red
rt	=	red
br	=	brown
gn	=	green
bl	=	blue
gr	=	grey
li	=	lilac
vi	=	lilac
ge	=	yellow
or	=	orange
rs	=	pink

Protected by copyright. Copying for private or commercial purposes, in part or in whole, is not permitted unless authorised by Volkswagen AG. Volkswagen AG does not guarantee or accept any liability with respect to the correctness of information in this document. Copyright by Volkswagen AG.

Vacuum pump relay, Vehicle electrical control module system, Engine control module, Brake system vacuum pump

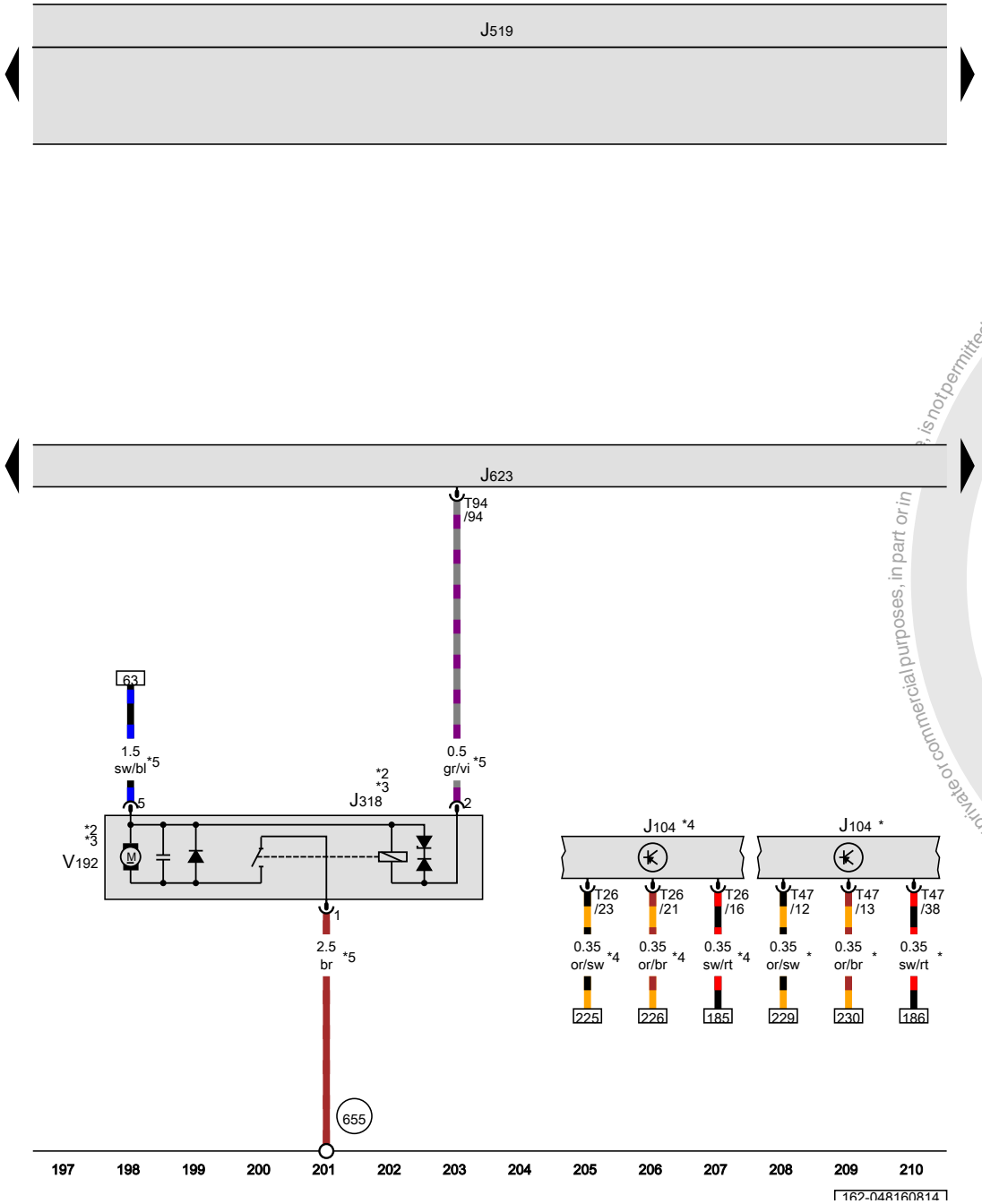

J104	ABS control module
J318	Vacuum pump relay
J519	Vehicle electrical control module system
J623	Engine control module
T26	26-pin connector
T47	47-pin connector
T94	94-pin connector
V192	Brake system vacuum pump
655	Ground connection on left headlamp
*	Only for vehicles with ABS and ESP
*2	Only for vehicles with automatic transmission
*3	Only for vehicles with ABS
*4	Only for vehicles with ABS without ESP
*5	Depending on equipment

ws	=	white
sw	=	black
ro	=	red
rt	=	red
br	=	brown
gn	=	green
bl	=	blue
gr	=	grey
li	=	lilac
vi	=	lilac
ge	=	yellow
or	=	orange
rs	=	pink

Protected by copyright. Copying for private or commercial purposes, in part or in ; is not permitted unless authorised by Volkswagen AG. Volkswagen AG does not guarantee or accept any liability with respect to the correctness of information in this document. Copyright by Volkswagen AG.

Engine coolant temperature sensor on radiator outlet, Vehicle electrical control module system, Engine control module

G83	Engine coolant temperature sensor on radiator outlet
J519	Vehicle electrical control module system
J623	Engine control module
T2r	Double connector
T94	94-pin connector
B383	Powertrain CAN bus high connection 1 (in main wiring harness)
B390	Powertrain CAN bus low connection 1 (in main wiring harness)

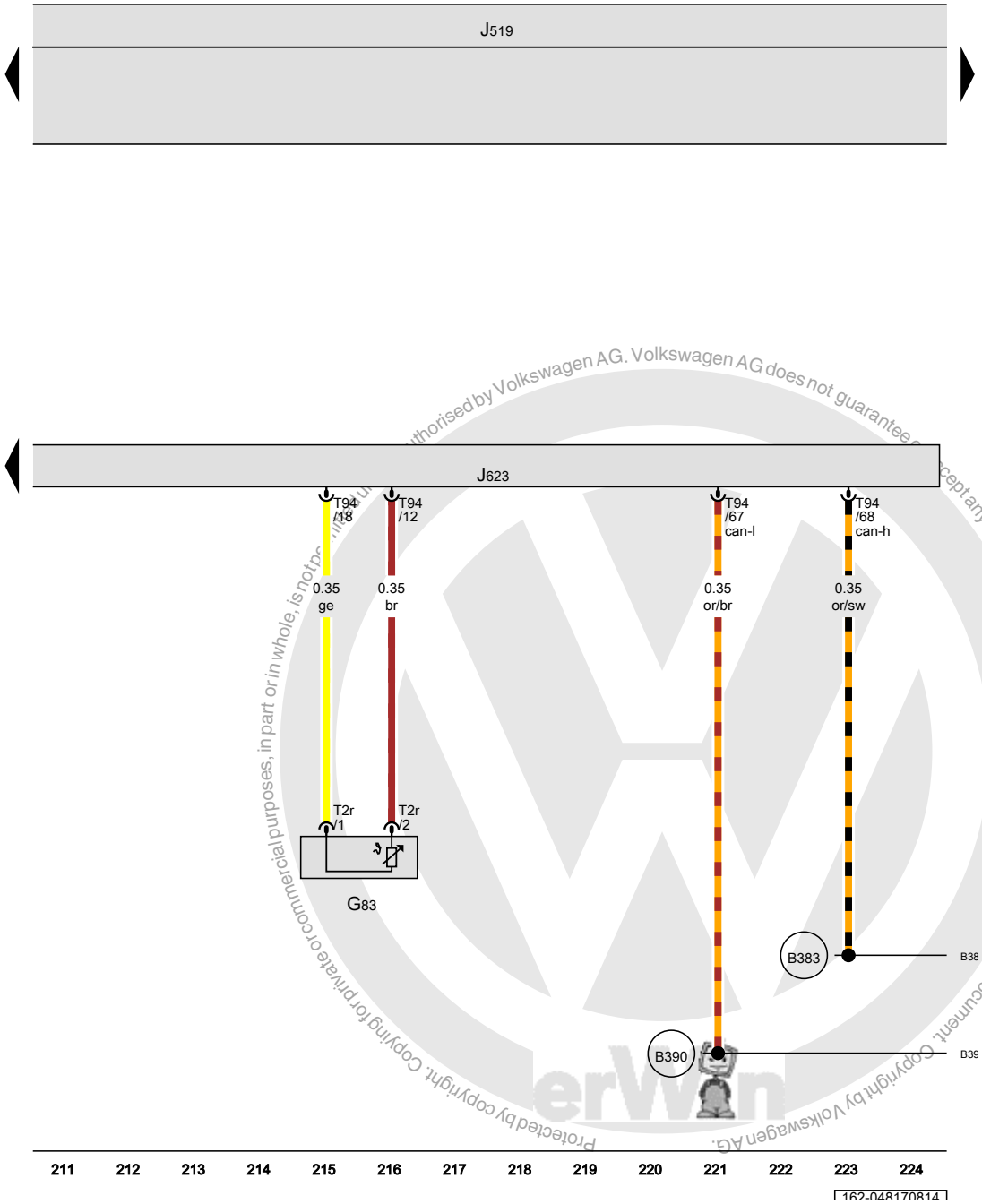

ws	=	white
sw	=	black
ro	=	red
rt	=	red
br	=	brown
gn	=	green
bl	=	blue
gr	=	grey
li	=	lilac
vi	=	lilac
ge	=	yellow
or	=	orange
rs	=	pink

authorised by Volkswagen AG. Volkswagen AG does not guarantee or accept any liability with respect to the correctness of information in this document. Copyright by Volkswagen AG. Protected by copyright. Copying for private or commercial purposes, in part or in whole, is not permitted.

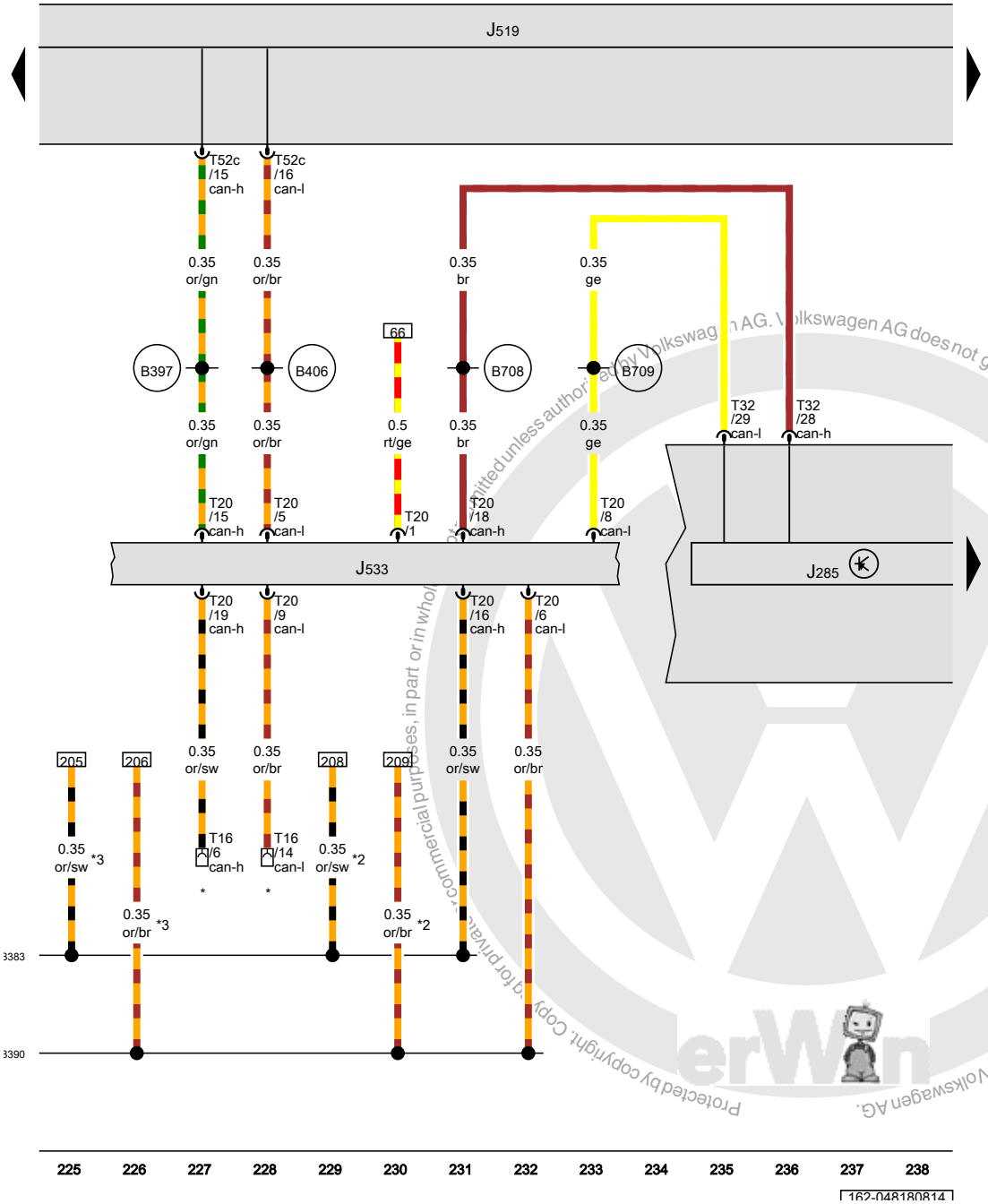

Instrument cluster control module, Vehicle electrical control module system, Data bus on board diagnostic interface

J285	Instrument cluster control module
J519	Vehicle electrical control module system
J533	Data bus on board diagnostic interface
T16	16-pin connector
T20	20-pin connector
T32	32-pin connector
T52c	52-pin connector
B383	Powertrain CAN bus high connection 1 (in main wiring harness)
B390	Powertrain CAN bus low connection 1 (in main wiring harness)
B397	Comfort system CAN bus high connection 1 (in main wiring harness)
B406	Comfort system CAN bus low connection 1 (in main wiring harness)
B708	Instrument cluster CAN bus high connection 1 (in main wiring harness)
B709	Instrument cluster CAN bus low connection 1 (in main wiring harness)
*	Diagnostic connector
*2	Only for vehicles with ABS and ESP
*3	Only for vehicles with ABS without ESP

ws	=	white
sw	=	black
ro	=	red
rt	=	red
br	=	brown
gn	=	green
bl	=	blue
gr	=	grey
li	=	lilac
vi	=	lilac
ge	=	yellow
or	=	orange
rs	=	pink

Protected by copyright. Copy for private, commercial purposes, in part or in whole, not permitted unless authorised by Volkswagen AG. Volkswagen AG does not guarantee or accept any liability with respect to the correctness of information in this document. Copyright by Volkswagen AG.

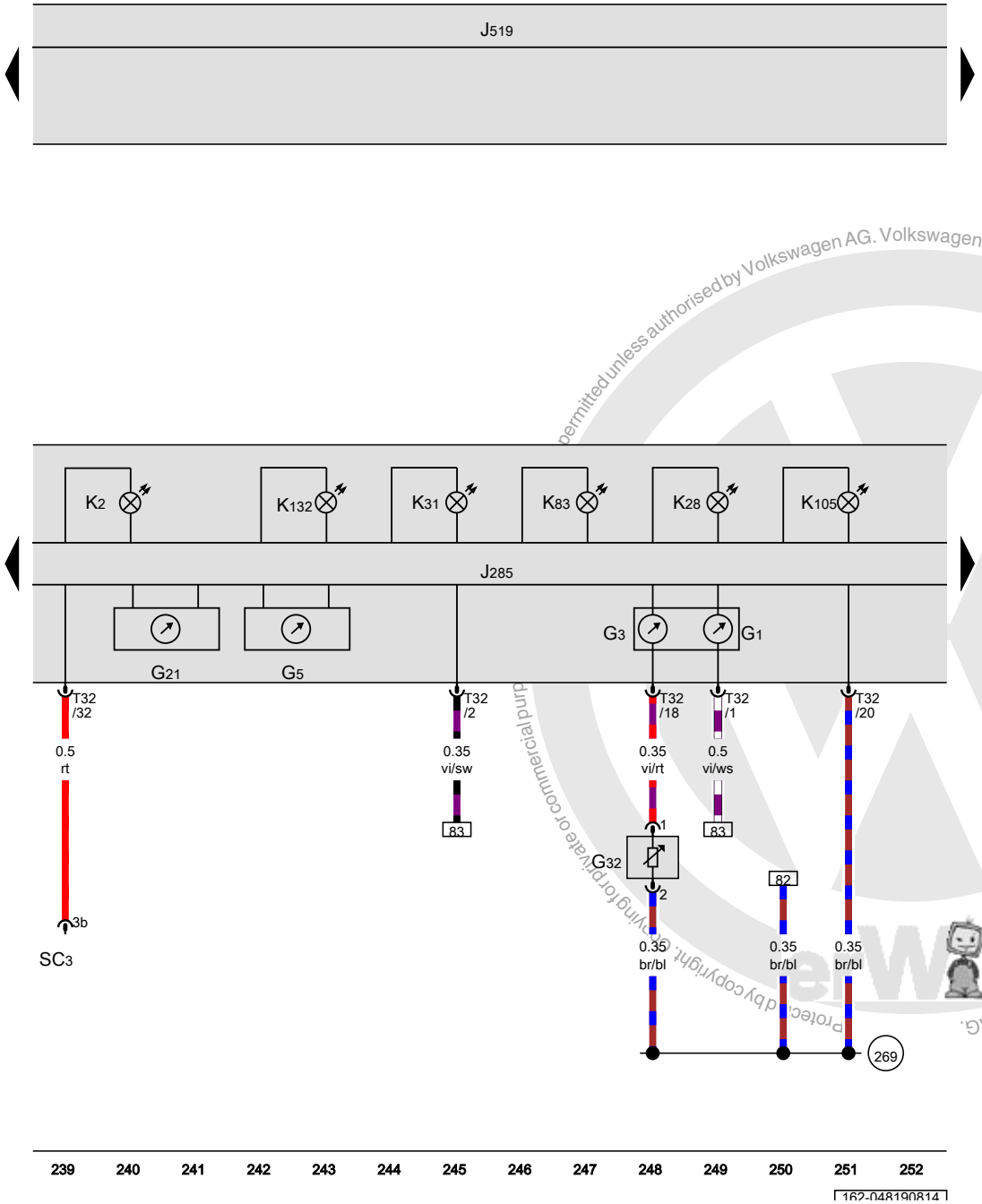

Fuel gauge, Engine coolant temperature gauge, Tachometer, Speedometer, Instrument cluster control module, Vehicle electrical control module system, Generator indicator lamp, Engine coolant level/temperature indicator lamp, Cruise control indicator lamp, Low fuel level indicator lamp, Electronic power control malfunction indicator lamp

G1	Fuel gauge
G3	Engine coolant temperature gauge
G5	Tachometer
G21	Speedometer
G32	Engine coolant level sensor
J285	Instrument cluster control module
J519	Vehicle electrical control module system
K2	Generator indicator lamp
K28	Engine coolant level/temperature indicator lamp
K31	Cruise control indicator lamp
K83	Malfunction indicator lamp
K105	Low fuel level indicator lamp
K132	Electronic power control malfunction indicator lamp
SC3	Fuse 3 (on fuse panel C)
T32	32-pin connector
269	Sensor ground connection 1 (in instrument panel wiring harness)

ws	=	white
sw	=	black
ro	=	red
rt	=	red
br	=	brown
gn	=	green
bl	=	blue
gr	=	grey
li	=	lilac
vi	=	lilac
ge	=	yellow
or	=	orange
rs	=	pink

permitted unless authorised by Volkswagen AG. Volkswagen AG does not guarantee or accept any liability with respect to the correctness of information in this document. Copyright by Volkswagen AG. protected by copyright. copying for private or commercial purposes, in part or in whole, is not

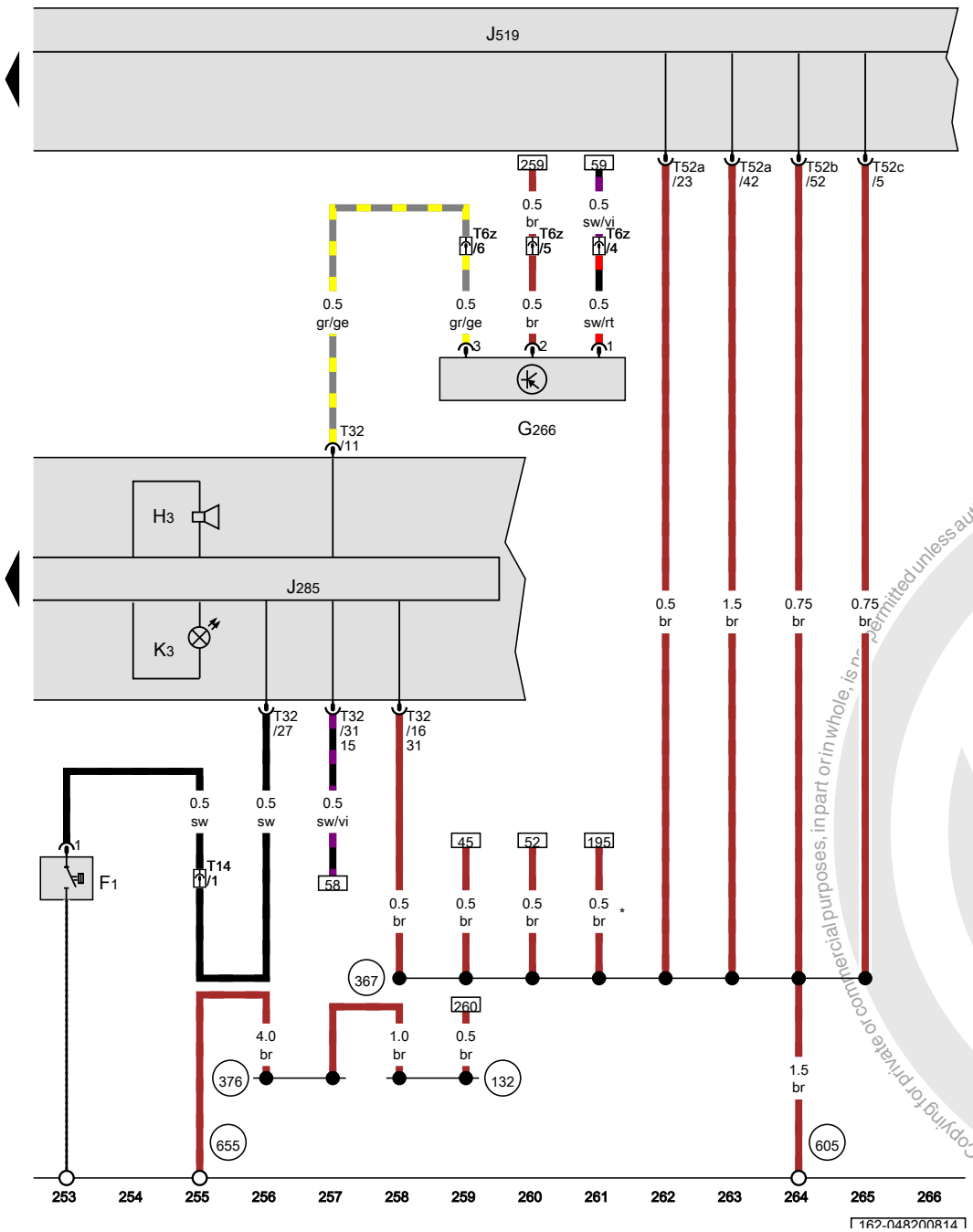

Oil pressure switch, Oil level thermal sensor, Instrument cluster control module, Vehicle electrical control module system

F1	Oil pressure switch
G266	Oil level thermal sensor
H3	Warning buzzer and tone
J285	Instrument cluster control module
J519	Vehicle electrical control module system
K3	Oil pressure indicator lamp
T6z	6-pin connector, near the left headlamp
T14	14-pin connector
T32	32-pin connector
T52a	52-pin connector
T52b	52-pin connector
T52c	52-pin connector
132	Ground connection 3 (in engine compartment wiring harness)
367	Ground connection 2 (in main wiring harness)
376	Ground connection 11 (in main wiring harness)
605	Ground connection on upper steering column
655	Ground connection on left headlamp
*	Only for vehicles with a manual transmission

ws	=	white
sw	=	black
ro	=	red
rt	=	red
br	=	brown
gn	=	green
bl	=	blue
gr	=	grey
li	=	lilac
vi	=	lilac
ge	=	yellow
or	=	orange
rs	=	pink

Protected by copyright. Copying for private or commercial purposes, in part or in whole, is not permitted unless authorised by Volkswagen AG. Volkswagen AG does not guarantee or accept any liability with respect to the correctness of information in this document. Copyright by Volkswagen AG.

2.0L gasoline engine , CCTA,(AW1)

from March 2011

Protected by copyright. Copying for private or commercial purposes, in part or in whole, is not permitted unless authorised by Volkswagen AG. Volkswagen AG does not guarantee or accept any liability with respect to the correctness of information in this document. Copyright by Volkswagen AG.

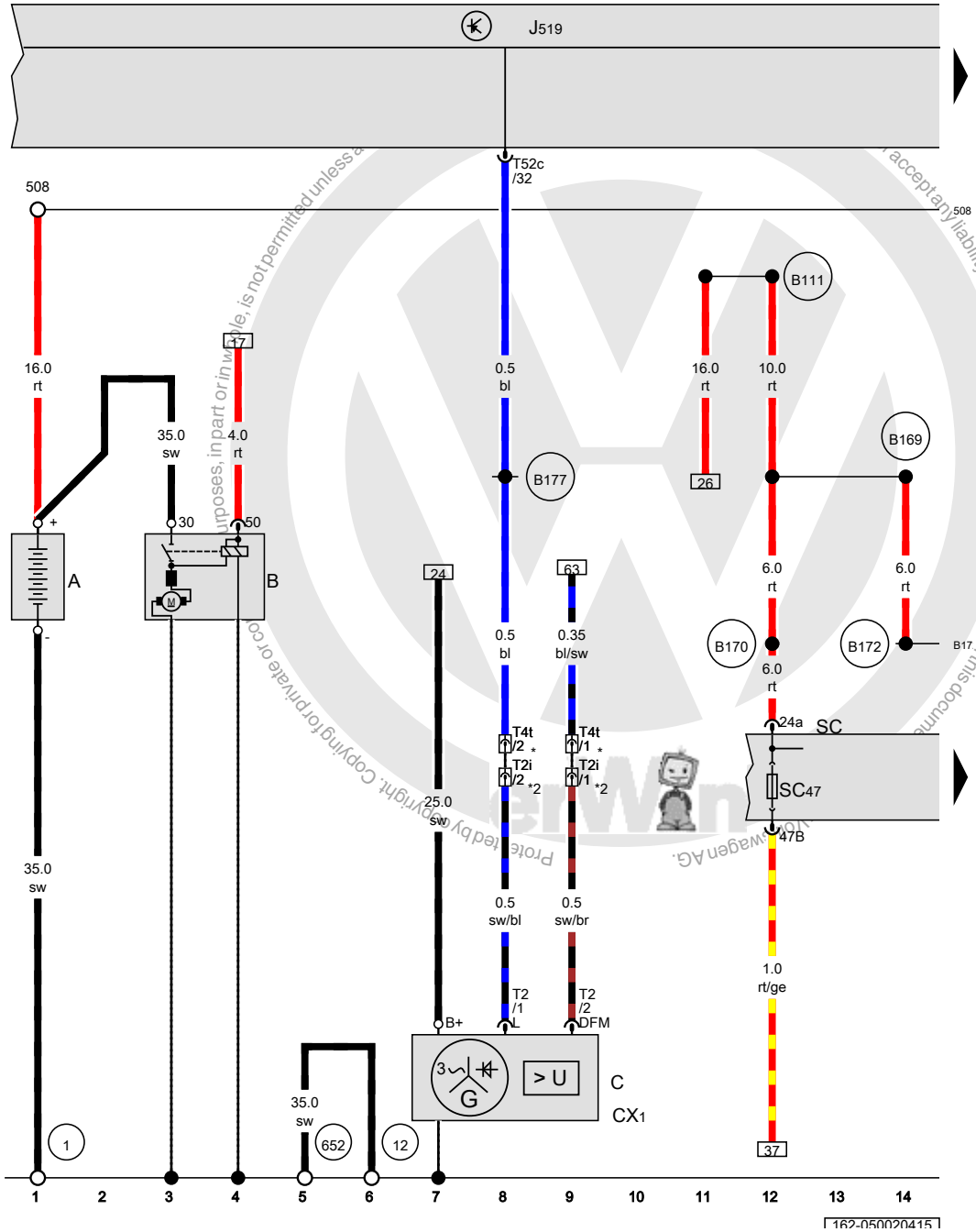

Battery, Starter, Generator, Vehicle electrical control module system, Fuse panel C

A	Battery
B	Starter
C	Generator
CX1	Generator with voltage regulator
J519	Vehicle electrical control module system
SC	Fuse panel C
SC47	Fuse 47 (on fuse panel C)
T2	Double connector
T2i	Double connector, near the starter
T4t	4-pin connector, near the starter
T52c	52-pin connector
1	Ground strap, battery to body
12	Ground connection in engine compartment, left
508	Terminal 30 threaded connection (on E-box)
652	Transmission/engine ground connection
B111	Positive connection 1 (30a) (in interior wiring harness)
B169	Positive connection 1 (30) (in interior wiring harness)
B170	Positive connection 2 (30) (in interior wiring harness)
B172	Positive connection 4 (30) (in interior wiring harness)
B177	Connection 61 (in interior wiring harness)
*	Only for vehicles with A/C system
*2	Only for vehicles without an A/C system

ws	=	white
sw	=	black
ro	=	red
rt	=	red
br	=	brown
gn	=	green
bl	=	blue
gr	=	grey
li	=	lilac
vi	=	lilac
ge	=	yellow
or	=	orange
rs	=	pink

Protected by copyright. Copying for private or commercial purposes, in part or in whole, is not permitted unless authorized by Volkswagen AG. Volkswagen AG does not guarantee or accept any liability with respect to the correctness of information in this document.

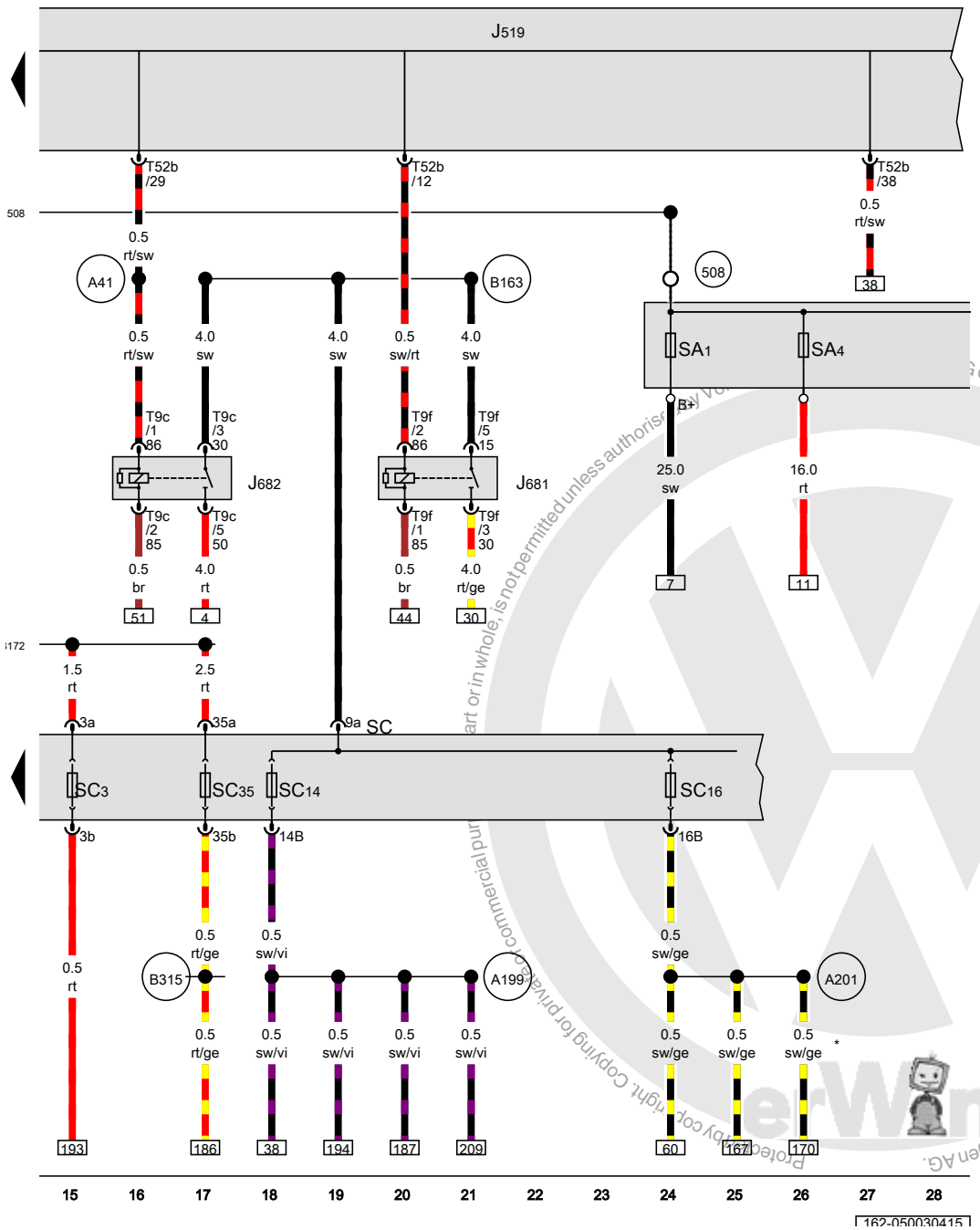

Vehicle electrical control module system, Terminal 15 power supply relay 2, Terminal 50 power supply relay, Fuse panel C

J519	Vehicle electrical control module system
J681	Terminal 15 power supply relay 2
J682	Terminal 50 power supply relay
SA1	Fuse 1 (on fuse panel A)
SC3	Fuse 3 (on fuse panel C)
SA4	Fuse 4 (on fuse panel A)
SC	Fuse panel C
SC14	Fuse 14 (on fuse panel C)
SC16	Fuse 16 (on fuse panel C)
SC35	Fuse 35 (on fuse panel C)
T9c	9-pin connector
T9f	9-pin connector
T52b	52-pin connector
508	Terminal 30 threaded connection (on E-box)
A41	Positive connection (50) (in instrument panel wiring harness)
A199	Positive connection 4 (15a) (in instrument panel wiring harness)
A201	Positive connection 6 (15a) (in instrument panel wiring harness)
B163	Positive connection 1 (15) (in interior wiring harness)
B172	Positive connection 4 (30) (in interior wiring harness)
B315	Positive connection 1 (30a) (in main wiring harness)
*	Depending on equipment

ws	=	white
sw	=	black
ro	=	red
rt	=	red
br	=	brown
gn	=	green
bl	=	blue
gr	=	grey
li	=	lilac
vi	=	lilac
ge	=	yellow
or	=	orange
rs	=	pink

Protected by copyright. Copying for private or commercial purposes, in part or in whole, is not permitted unless authorised by Volkswagen AG. Volkswagen does not guarantee or accept any liability with respect to the correctness of information in this document.

Fuel level sensor, Transfer fuel pump, Coolant circulation pump relay, Fuse 25 (on fuse panel B)

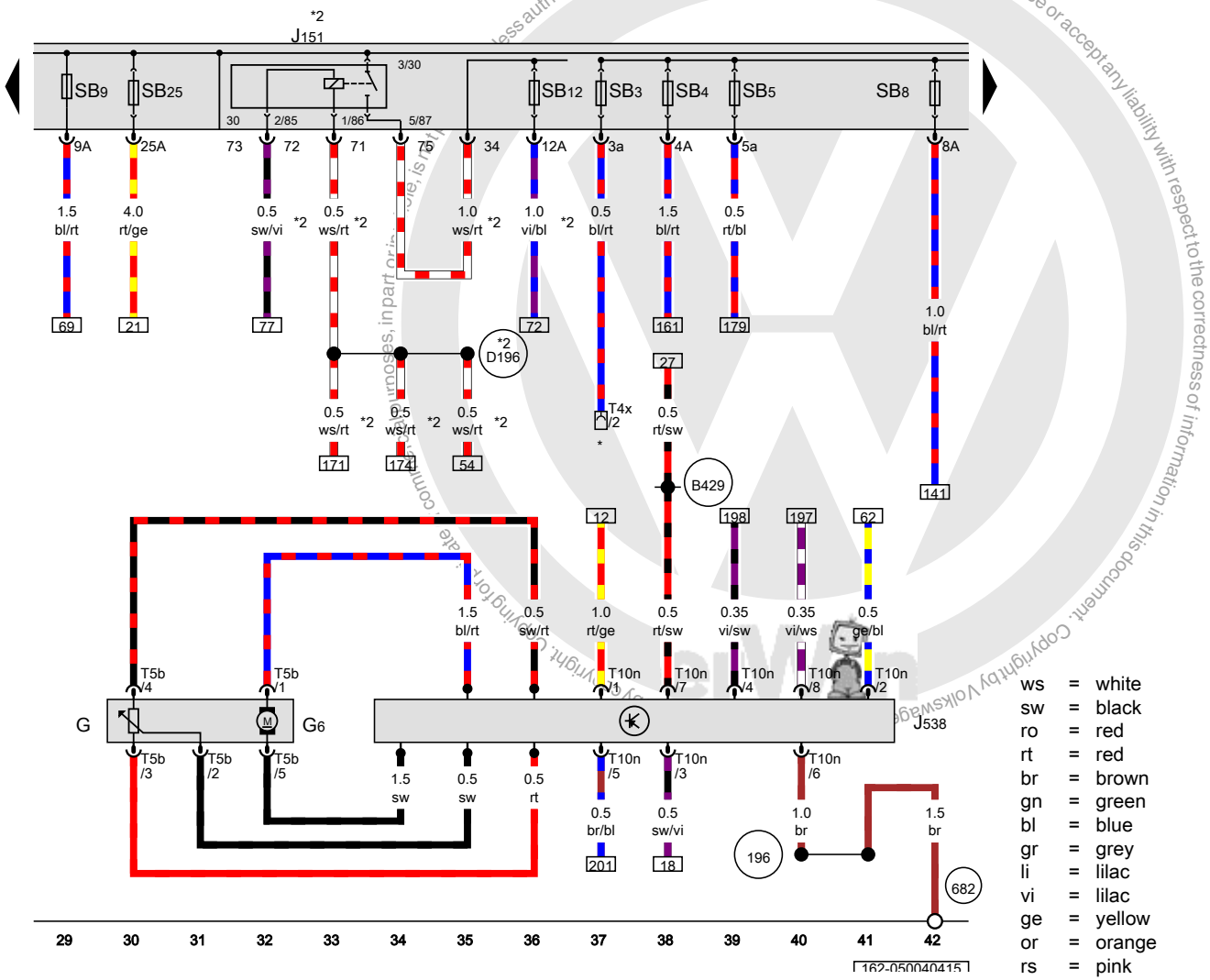

G	Fuel level sensor
G6	Transfer fuel pump
J151	Coolant circulation pump relay
J538	Fuel pump control module
SB3	Fuse 3 (on fuse panel B)
SB4	Fuse 4 (on fuse panel B)
SB5	Fuse 5 (on fuse panel B)
SB8	Fuse 8 (on fuse panel B)
SB9	Fuse 9 (on fuse panel B)
SB12	Fuse 12 (on fuse panel B)
SB25	Fuse 25 (on fuse panel B)
T4x	4-pin connector
T5b	5-pin connector
T10n	10-pin connector
196	Ground connection 3 (in rear wiring harness)
682	Ground connection 2 in right rear side panel
B429	Fuel pump relay connection (in main wiring harness)
D196	Connection 87a (in engine pre-wiring harness) 2
*	Coolant fan connection
*2	Running change

ws	=	white
sw	=	black
ro	=	red
rt	=	red
br	=	brown
gn	=	green
bl	=	blue
gr	=	grey
li	=	lilac
vi	=	lilac
ge	=	yellow
or	=	orange
rs	=	pink

Copyright by Volkswagen. Copying for private, commercial purposes, in part or in whole, is not permitted unless authorised by Volkswagen AG. Volkswagen AG does not guarantee or accept any liability with respect to the correctness of information in this document.

Motronic engine control module power supply relay

J271	Motronic engine control module power supply relay
SB2	Fuse 2 (on fuse panel B)
SB7	Fuse 7 (on fuse panel B)
SB10	Fuse 10 (on fuse panel B)
SB13	Fuse 13 (on fuse panel B)
SB14	Fuse 14 (on fuse panel B)
T14	14-pin connector
44	Ground connection on A-pillar, lower left
367	Ground connection 2 (in main wiring harness)
389	Ground connection 24 (in main wiring harness)
605	Ground connection on upper steering column
D78	Positive connection 1 (30a) (in engine compartment wiring harness)
D182	Connection 3 (87a) (in engine compartment wiring harness)
*	The color of the wires depends on vehicle equipment
*2	Running change
*3	Depending on equipment

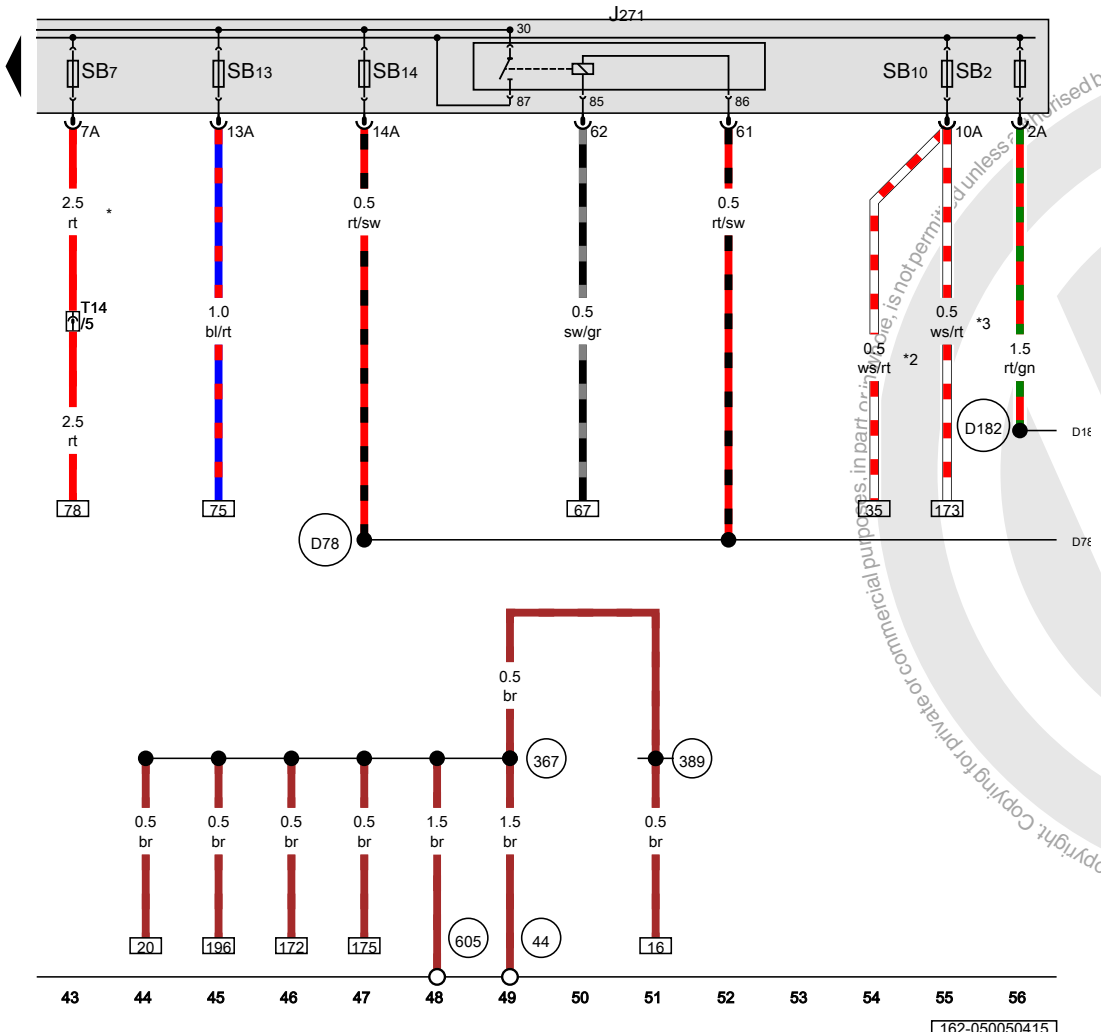

ws	=	white
sw	=	black
ro	=	red
rt	=	red
br	=	brown
gn	=	green
bl	=	blue
gr	=	grey
li	=	lilac
vi	=	lilac
ge	=	yellow
or	=	orange
rs	=	pink

Released by Volkswagen AG. Volkswagen AG does not guarantee or accept any liability with respect to the correctness of information in this document. Copyright by Volkswagen AG. Copying for private or commercial purposes, in part or in whole, is not permitted unless authorised by Volkswagen AG. Copyright.

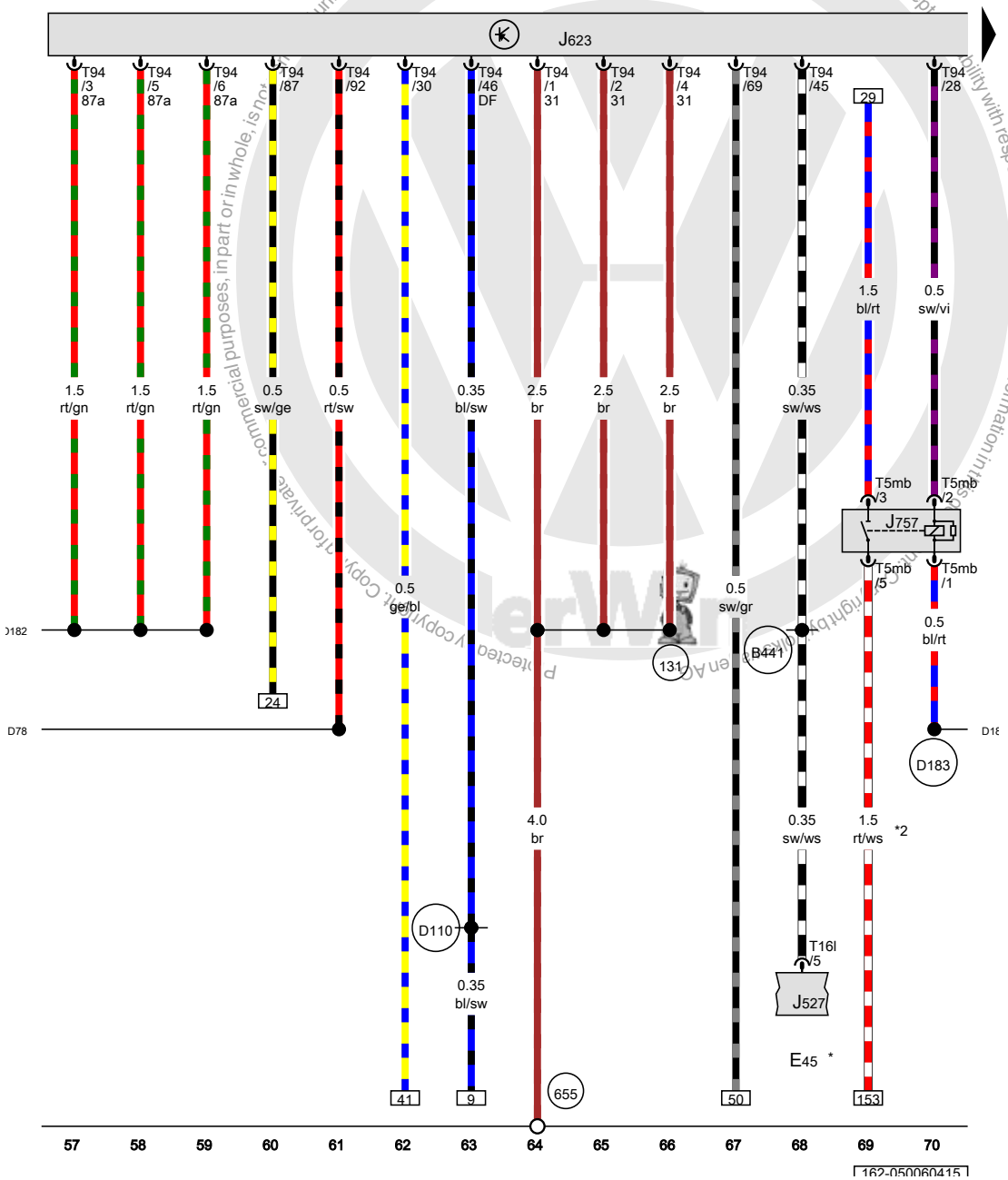

Engine control module, Engine component power supply relay

E45	Cruise control switch
J527	Steering column electronics control module
J623	Engine control module
J757	Engine component power supply relay
T5mb	5-pin connector
T16l	16-pin connector
T94	94-pin connector
131	Ground connection 2 (in engine compartment wiring harness)
655	Ground connection on left headlamp
B441	Cruise control connection (in main wiring harness)
D78	Positive connection 1 (30a) (in engine compartment wiring harness)
D110	Connection 8 (in engine compartment wiring harness)
D182	Connection 3 (87a) (in engine compartment wiring harness)
D183	Connection 4 (87a) (in engine compartment wiring harness)
*	Only for vehicles with cruise control
*2	The color of the wires depends on vehicle equipment

ws	=	white
sw	=	black
ro	=	red
rt	=	red
br	=	brown
gn	=	green
bl	=	blue
gr	=	grey
li	=	lilac
vi	=	lilac
ge	=	yellow
or	=	orange
rs	=	pink

Protected by copyright. Copyright by Volkswagen AG. Volkswagen AG does not guarantee or accept any liability with respect to the correctness of information in this document. Copying for private or commercial purposes, in part or in whole, is not permitted unless authorised by Volkswagen AG.

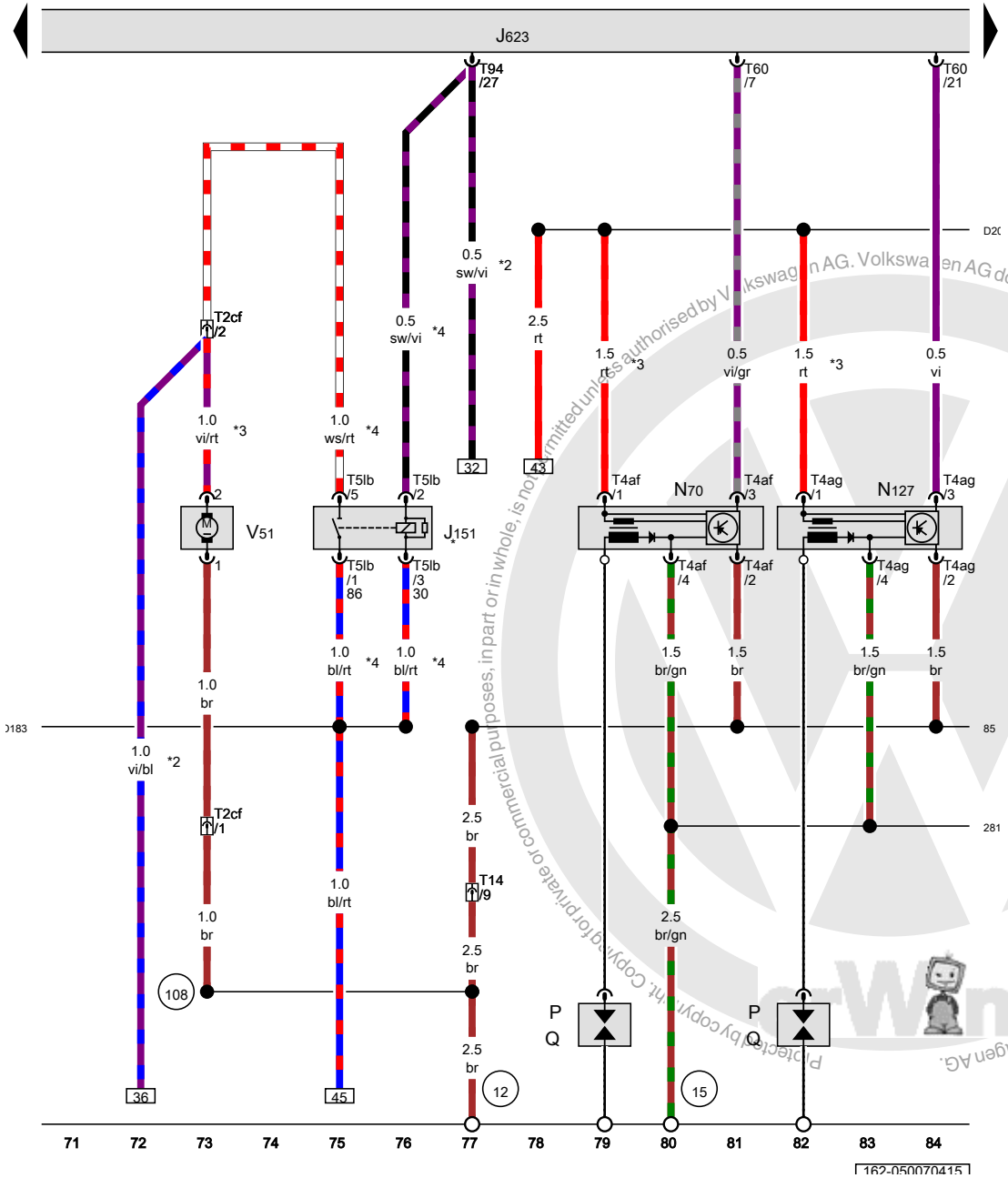

Engine control module, Ignition coil 1 with power output stage, Ignition coil 2 with power output stage, Spark plug connectors, Spark plugs, After-run coolant pump

J151	Coolant circulation pump relay, in the interior
J623	Engine control module
N70	Ignition coil 1 with power output stage
N127	Ignition coil 2 with power output stage
P	Spark plug connectors
Q	Spark plugs
T2cf	Double connector
T4af	4-pin connector
T4ag	4-pin connector
T5lb	5-pin connector
T14	14-pin connector
T60	60-pin connector
T94	94-pin connector
V51	After-run coolant pump
12	Ground connection in engine compartment, left
15	Ground connection on cylinder head
85	Ground connection 1 (in engine compartment wiring harness)
108	Ground connection 2 (in left front wiring harness)
281	Ground connection 1 (in engine pre-wiring harness)
D183	Connection 4 (87a) (in engine compartment wiring harness)
D206	Connection 87a (in engine pre-wiring harness) 4
*	Optional
*2	Running change
*3	The color of the wires depends on vehicle equipment
*4	Depending on equipment

ws	=	white
sw	=	black
ro	=	red
rt	=	red
br	=	brown
gn	=	green
bl	=	blue
gr	=	grey
li	=	lilac
vi	=	lilac
ge	=	yellow
or	=	orange
rs	=	pink

Protected by copyright. Copying for private or commercial purposes, in part or in whole, is not permitted unless authorised by Volkswagen AG. Volkswagen AG does not guarantee or accept any liability with respect to the correctness of information in this document. Copyright by Volkswagen AG.

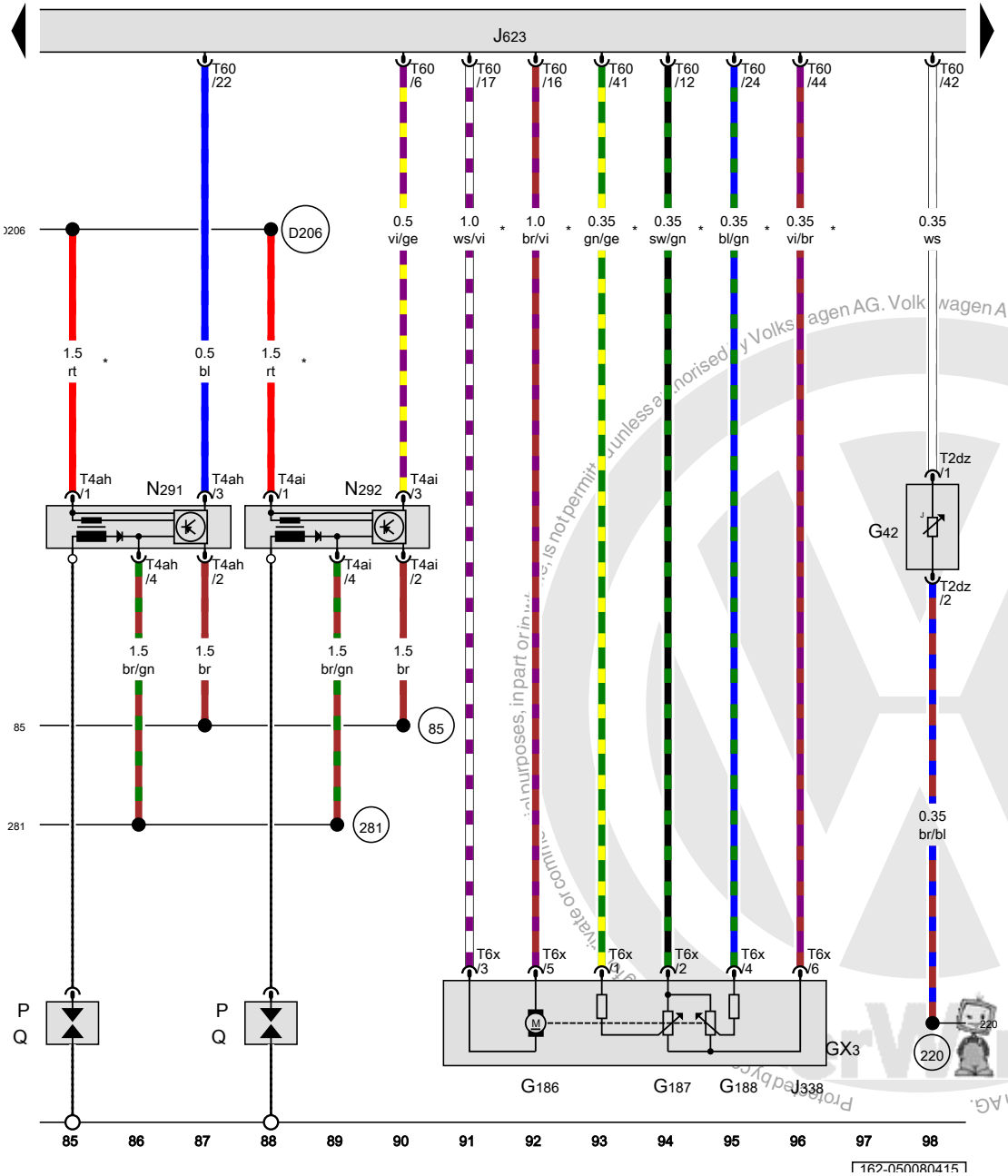

ws	=	white
sw	=	black
ro	=	red
rt	=	red
br	=	brown
gn	=	green
bl	=	blue
gr	=	grey
li	=	lilac
vi	=	lilac
ge	=	yellow
or	=	orange
rs	=	pink

Throttle valve control module, Intake air temperature sensor, Engine control module, Ignition coil 3 with power output stage, Ignition coil 4 with power output stage, Spark plug connectors

GX3	Throttle valve control module
G42	Intake air temperature sensor
G186	EPC throttle drive
G187	EPC throttle drive angle sensor 1
G188	EPC throttle drive angle sensor 2
J338	Throttle valve control module
J623	Engine control module
N291	Ignition coil 3 with power output stage
N292	Ignition coil 4 with power output stage
P	Spark plug connectors
Q	Spark plugs
T2dz	Double connector
T4ah	4-pin connector
T4ai	4-pin connector
T6x	6-pin connector
T60	60-pin connector
85	Ground connection 1 (in engine compartment wiring harness)
220	Sensor ground connection (in engine wiring harness)
281	Ground connection 1 (in engine pre-wiring harness)
D206	Connection 87a (in engine pre-wiring harness) 4
*	The color of the wires depends on vehicle equipment

Protected by Copyright. Volkswagen AG. Volkswagen AG does not guarantee or accept any liability with respect to the correctness of information in this document. Copyright by Volkswagen AG.

Camshaft position sensor, Knock sensor 1, Engine coolant temperature sensor, Engine control module

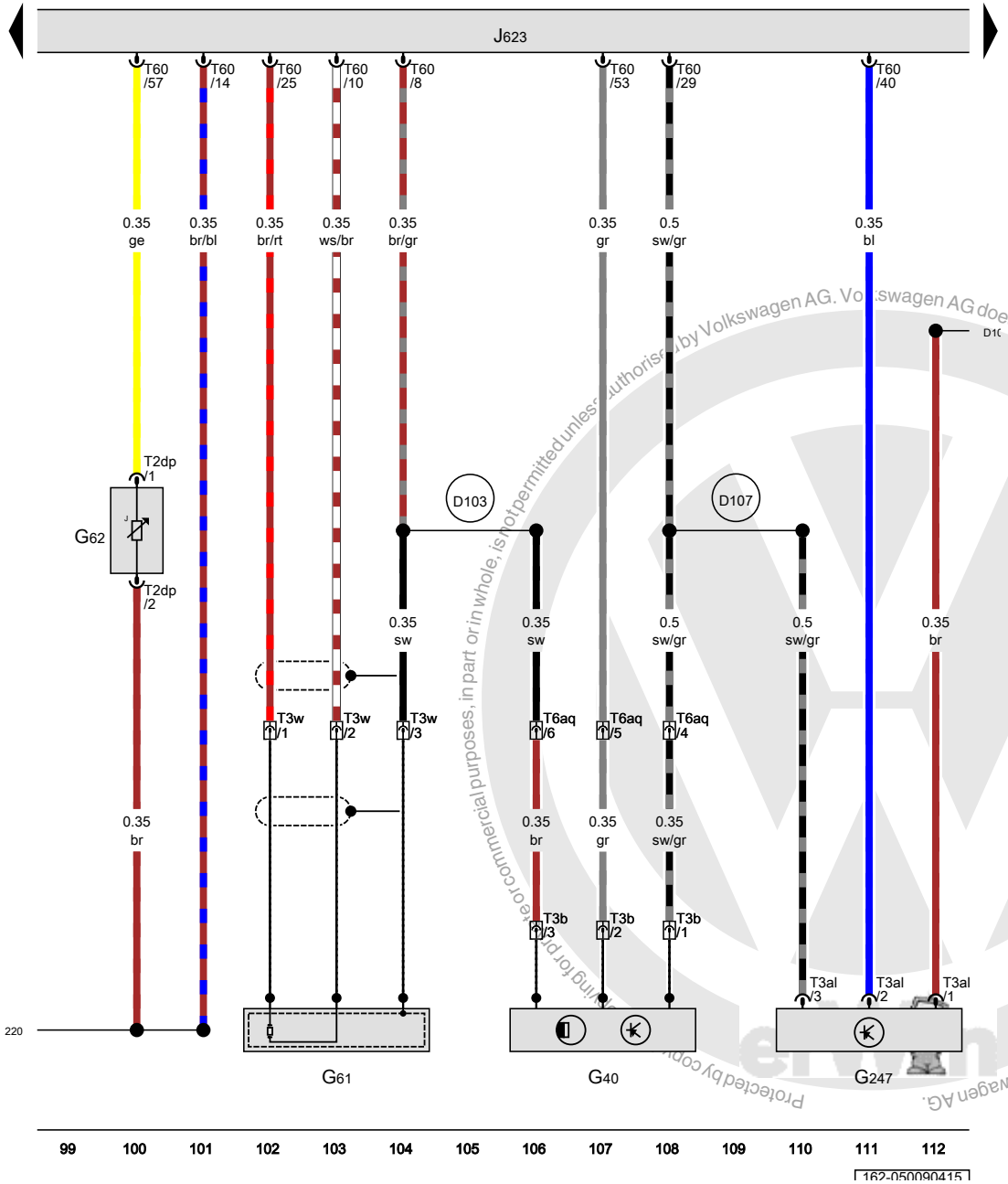

G40	Camshaft position sensor	
G61	Knock sensor 1	
G62	Engine coolant temperature sensor	
G247	Fuel pressure sensor	
J623	Engine control module	
T2dp	Double connector	
T3al	3-pin connector	
T3b	3-pin connector	
T3w	3-pin connector	
T6aq	6-pin connector	
T60	60-pin connector	
220	Sensor ground connection (in engine wiring harness)	
D101	Connection 1 (in engine compartment wiring harness)	
D103	Connection 3 (in engine compartment wiring harness)	
D107	Connection 5 (in engine compartment wiring harness)	

ws	=	white
sw	=	black
ro	=	red
rt	=	red
br	=	brown
gn	=	green
bl	=	blue
gr	=	grey
li	=	lilac
vi	=	lilac
ge	=	yellow
or	=	orange
rs	=	pink

Protected by copyright. Copying for private or commercial purposes, in part or in whole, is not permitted unless authorised by Volkswagen AG. Volkswagen AG does not guarantee or accept any liability with respect to the correctness of information in this document. Copyright by Volkswagen AG.

Engine speed sensor, Charge air pressure sensor, Engine coolant temperature sensor on radiator outlet, Engine control module, Cylinder 1 fuel injector

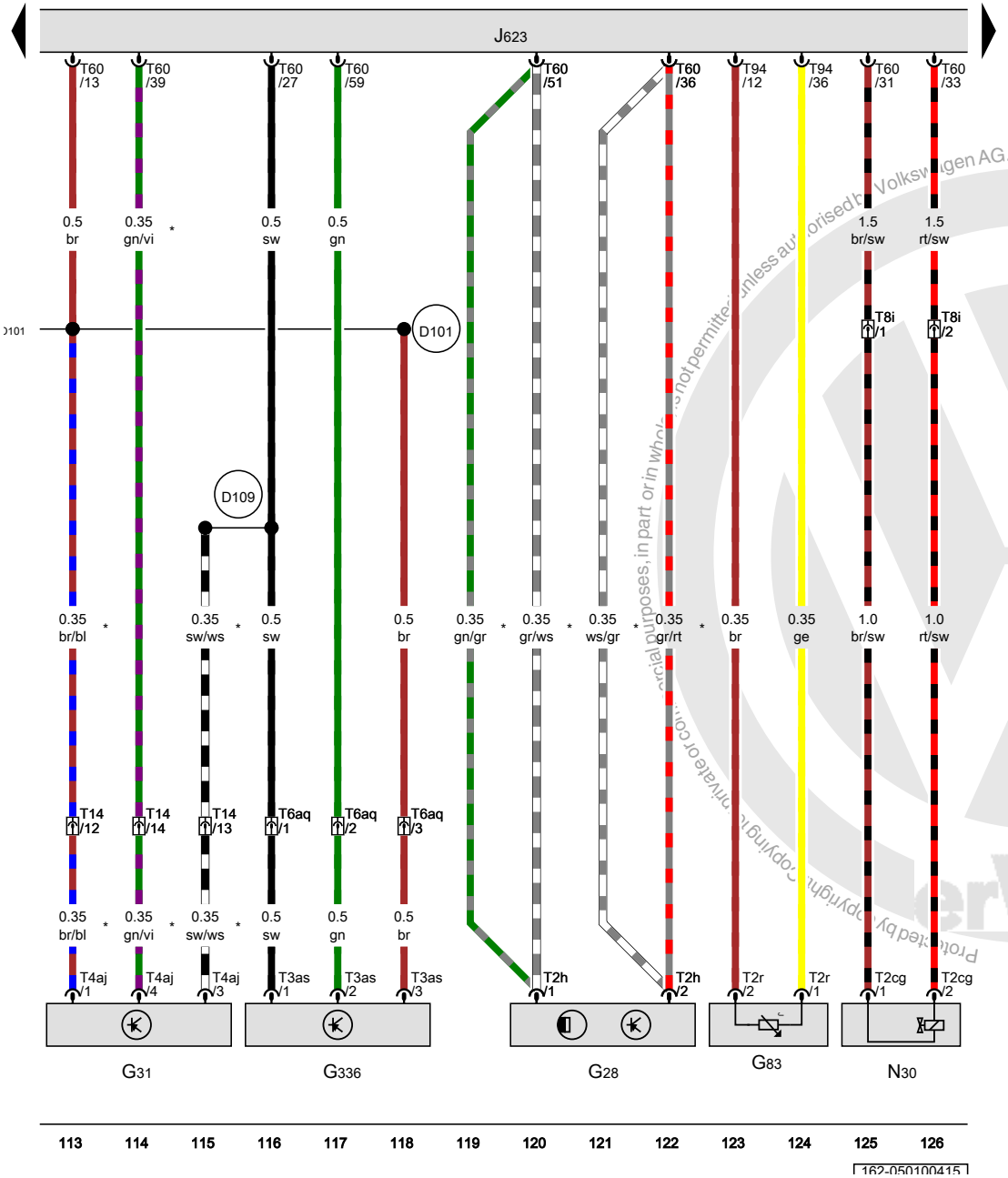

G28	Engine speed sensor
G31	Charge air pressure sensor
G83	Engine coolant temperature sensor on radiator outlet
G336	Intake manifold runner position sensor
J623	Engine control module
N30	Cylinder 1 fuel injector
T2cg	Double connector
T2h	Double connector
T2r	Double connector
T3as	3-pin connector
T4aj	4-pin connector
T6aq	6-pin connector
T8i	8-pin connector
T14	14-pin connector
T60	60-pin connector
T94	94-pin connector
D101	Connection 1 (in engine compartment wiring harness)
D109	Connection 7 (in engine compartment wiring harness)
*	The color of the wires depends on vehicle equipment

ws	=	white
sw	=	black
ro	=	red
rt	=	red
br	=	brown
gn	=	green
bl	=	blue
gr	=	grey
li	=	lilac
vi	=	lilac
ge	=	yellow
or	=	orange
rs	=	pink

Protected by copyright. Copying for private or commercial purposes, in part or in whole, is not permitted unless authorised by Volkswagen AG. Volkswagen AG does not guarantee or accept any liability with respect to the correctness of information in this document. Copyright by Volkswagen AG.

Accelerator pedal module, Engine control module, Cylinder 2 fuel injector, Cylinder 3 fuel injector, Cylinder 4 fuel injector

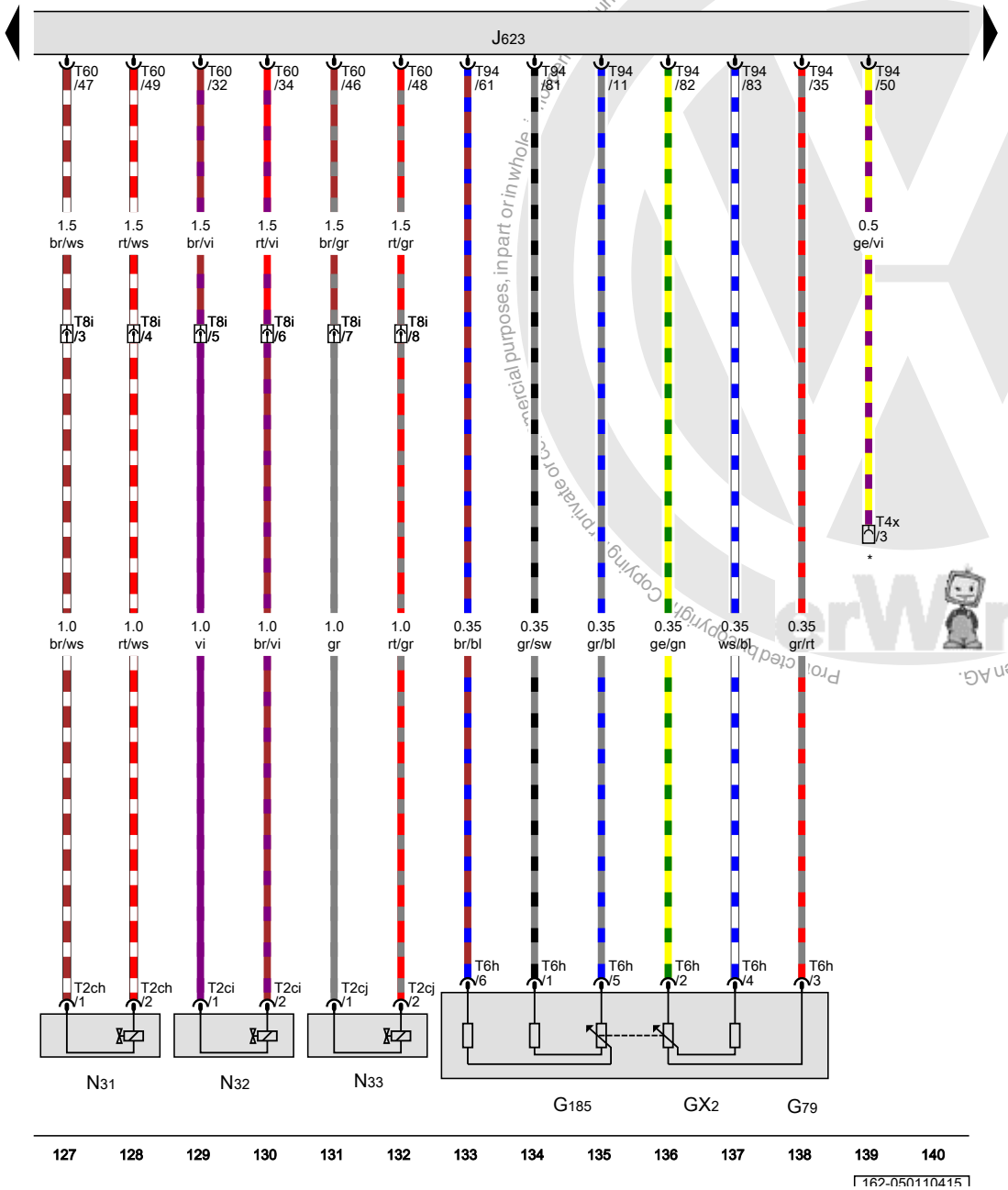

GX2	Accelerator pedal module
G79	Accelerator pedal position sensor
G185	Accelerator pedal position sensor 2
J623	Engine control module
N31	Cylinder 2 fuel injector
N32	Cylinder 3 fuel injector
N33	Cylinder 4 fuel injector
T2ch	Double connector
T2ci	Double connector
T2cj	Double connector
T4x	4-pin connector
T6h	6-pin connector
T8i	8-pin connector
T60	60-pin connector
T94	94-pin connector
*	Coolant fan connection

ws	=	white
sw	=	black
ro	=	red
rt	=	red
br	=	brown
gn	=	green
bl	=	blue
gr	=	grey
li	=	lilac
vi	=	lilac
ge	=	yellow
or	=	orange
rs	=	pink

Volkswagen AG. Volkswagen AG does not guarantee or accept any liability with respect to the correctness of information in this document. Copyright by Volkswagen AG. Protected by copyright. Copying, private or commercial purposes, in part or in whole, unless authorised by Volkswagen AG.

Engine control module, EVAP canister purge regulator valve 1, Camshaft adjustment valve 1, Turbocharger recirculation valve, Fuel pressure regulator valve, Intake manifold runner control valve

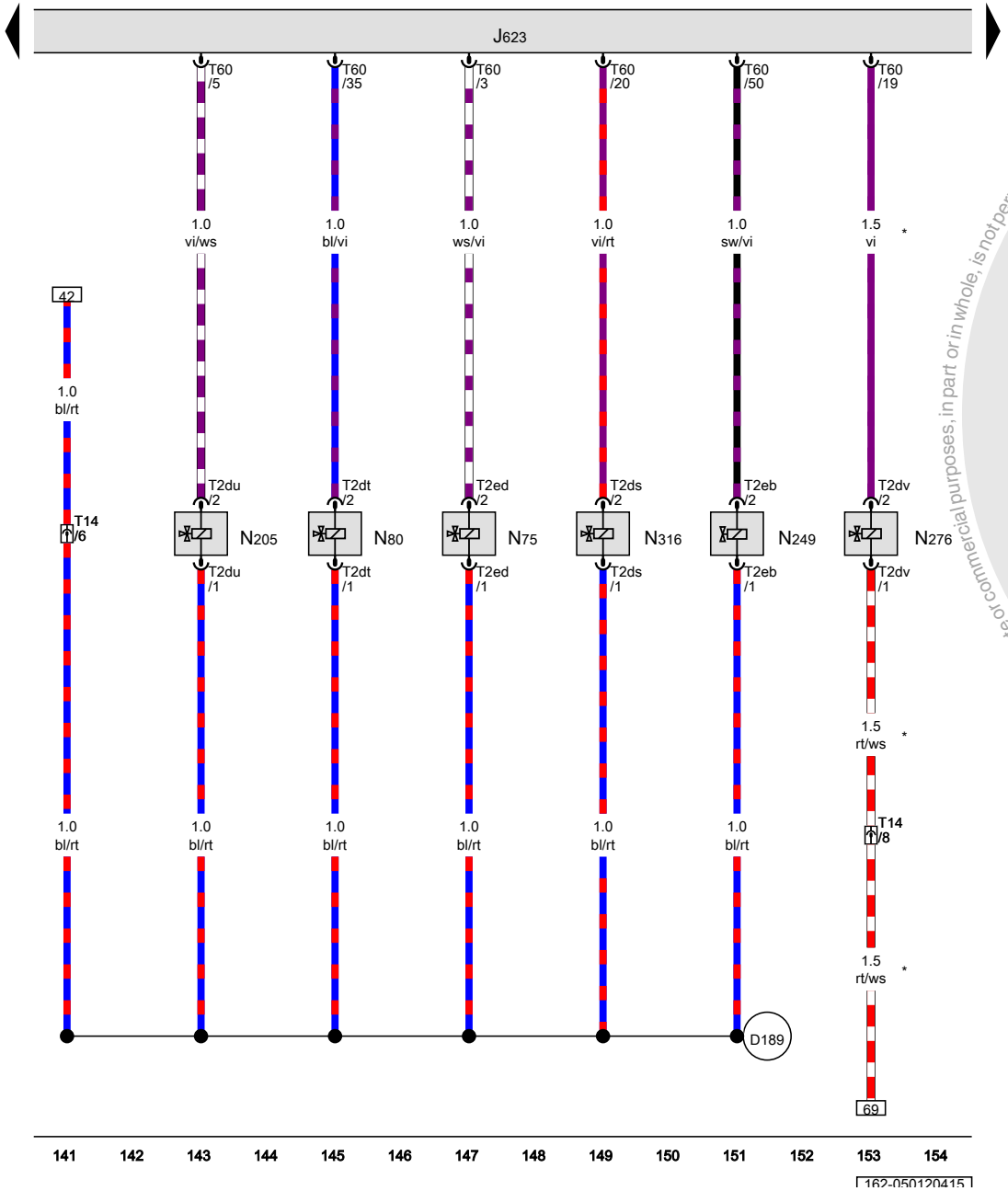

J623	Engine control module
N75	Wastegate bypass regulator valve
N80	EVAP canister purge regulator valve 1
N205	Camshaft adjustment valve 1
N249	Turbocharger recirculation valve
N276	Fuel pressure regulator valve
N316	Intake manifold runner control valve
T2ds	Double connector
T2dt	Double connector
T2du	Double connector
T2dv	Double connector
T2eb	Double connector
T2ed	Double connector
T14	14-pin connector
T60	60-pin connector
D189	Connection 87a (in engine pre-wiring harness)
*	The color of the wires depends on vehicle equipment

ws	=	white
sw	=	black
ro	=	red
rt	=	red
br	=	brown
gn	=	green
bl	=	blue
gr	=	grey
li	=	lilac
vi	=	lilac
ge	=	yellow
or	=	orange
rs	=	pink

Protected by copyright. Copying for private or commercial purposes, in part or in whole, is not permitted unless authorised by Volkswagen AG. Volkswagen AG does not guarantee or accept any liability with respect to the correctness of information in this document. Copyright by Volkswagen AG.

Mass airflow sensor, Oxygen sensor after three way catalytic converter, Engine control module, Oxygen sensor heater, Heater for oxygen sensor 1 after catalytic converter

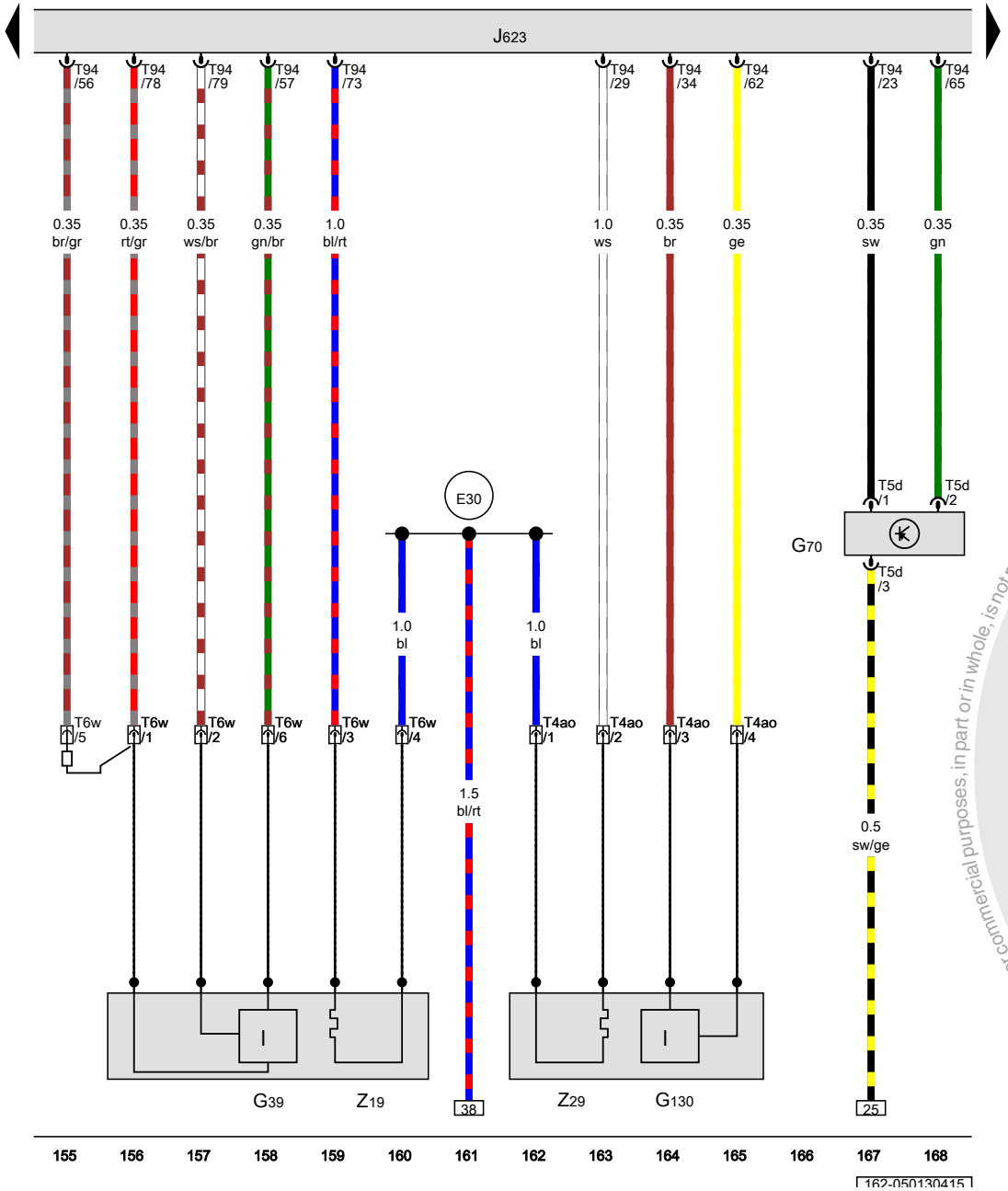

G39	Heated oxygen sensor
G70	Mass airflow sensor
G130	Oxygen sensor after three way catalytic converter
J623	Engine control module
T4ao	4-pin connector
T5d	5-pin connector
T6w	6-pin connector
T94	94-pin connector
Z19	Oxygen sensor heater
Z29	Heater for oxygen sensor 1 after catalytic converter
(E30)	Connection 87a (in engine wiring harness)

ws	=	white
sw	=	black
ro	=	red
rt	=	red
br	=	brown
gn	=	green
bl	=	blue
gr	=	grey
li	=	lilac
vi	=	lilac
ge	=	yellow
or	=	orange
rs	=	pink

Protected by copyright. Copying for private or commercial purposes, in part or in whole, is not permitted unless authorised by Volkswagen AG. Volkswagen AG does not guarantee or accept any liability with respect to the correctness of information in this document. Copyright by Volkswagen AG.

Brake lamp switch, Clutch position sensor, Engine control module, Leak detection pump

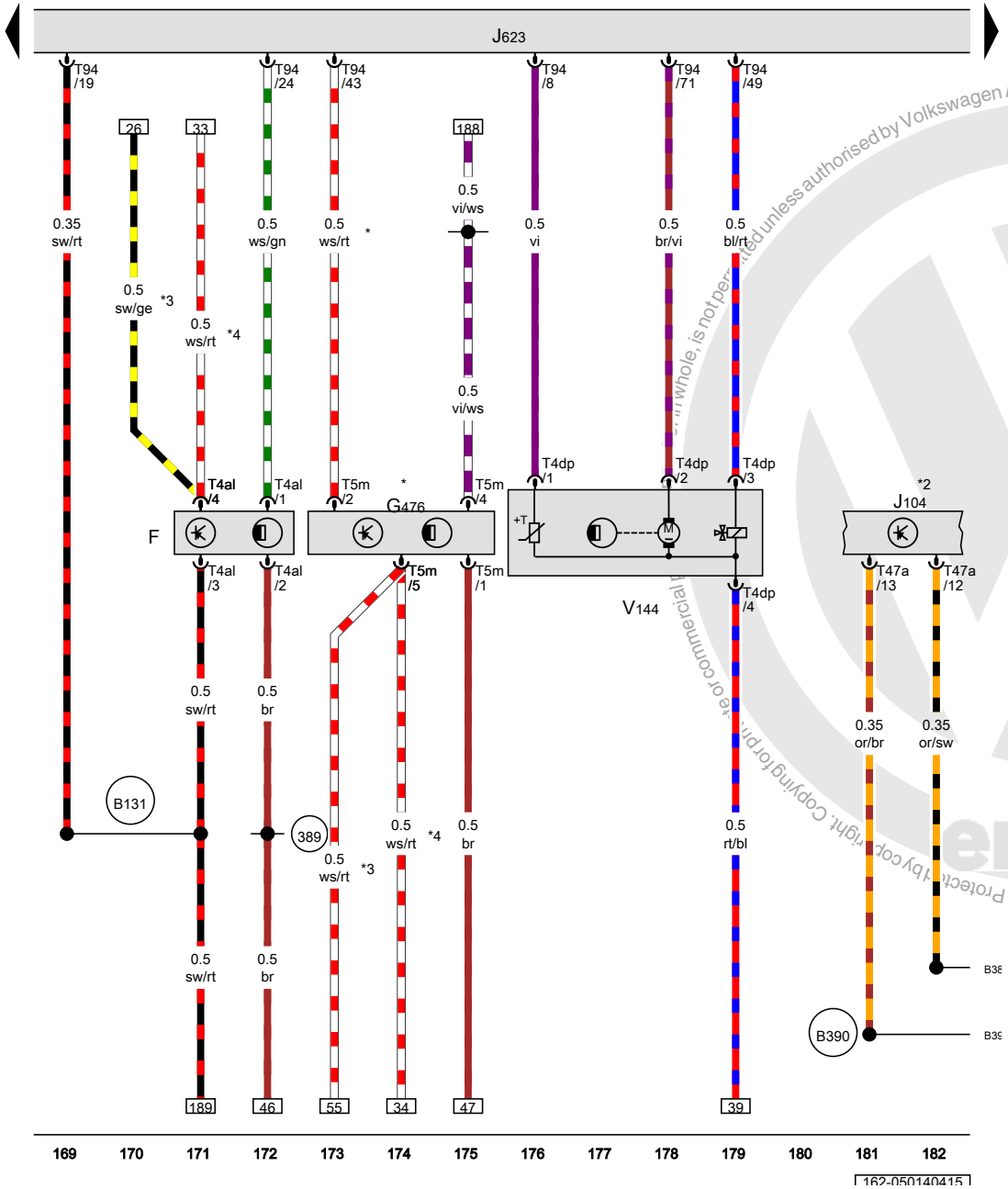

F	Brake lamp switch
G476	Clutch position sensor
J104	ABS control module
J623	Engine control module
T4al	4-pin connector
T4dp	4-pin connector
T5m	5-pin connector
T47a	47-pin connector
T94	94-pin connector
V144	Leak detection pump
389	Ground connection 24 (in main wiring harness)
B131	Connection 54 (in interior wiring harness)
B383	Powertrain CAN bus high connection 1 (in main wiring harness)
B390	Powertrain CAN bus low connection 1 (in main wiring harness)
*	Only for vehicles with a manual transmission
*2	Only for vehicles with ABS and ESP
*3	Depending on equipment
*4	Running change

ws	=	white
sw	=	black
ro	=	red
rt	=	red
br	=	brown
gn	=	green
bl	=	blue
gr	=	grey
li	=	lilac
vi	=	lilac
ge	=	yellow
or	=	orange
rs	=	pink

Protected by copyright. Copying for private or commercial purposes, in whole, is not permitted unless authorised by Volkswagen AG. Volkswagen AG does not guarantee or assume any liability with respect to the correctness of information in this document. Copyright by Volkswagen AG.

Oil pressure switch, Data bus on board diagnostic interface, Engine control module, Instrument cluster

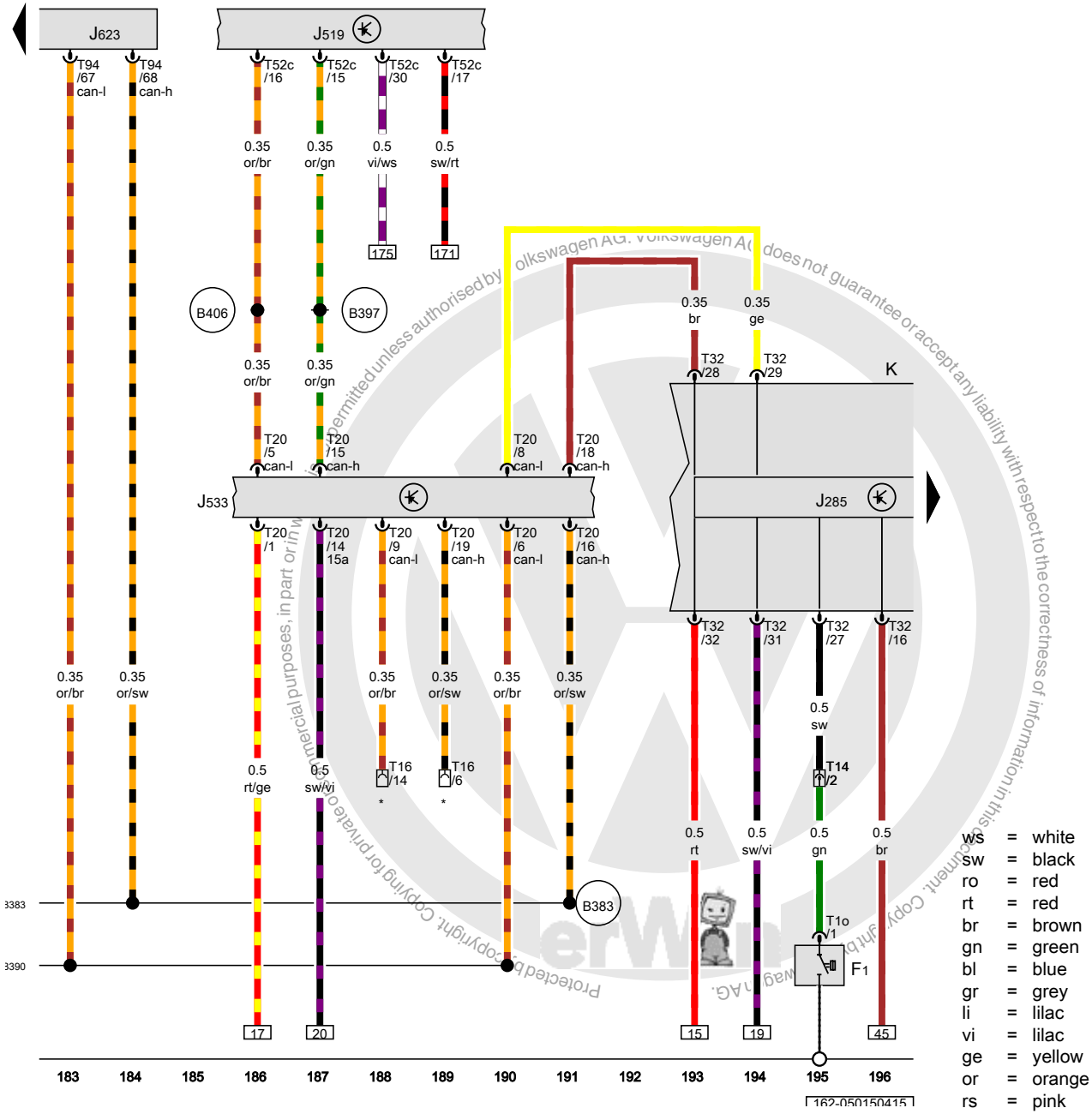

F1	Oil pressure switch
J285	Instrument cluster control module
J519	Vehicle electrical control module system
J533	Data bus on board diagnostic interface
J623	Engine control module
K	Instrument cluster
T1o	Single connector
T14	14-pin connector
T16	16-pin connector
T20	20-pin connector
T32	32-pin connector
T52c	52-pin connector
T94	94-pin connector
B383	Powertrain CAN bus high connection 1 (in main wiring harness)
B390	Powertrain CAN bus low connection 1 (in main wiring harness)
B397	Comfort system CAN bus high connection 1 (in main wiring harness)
B406	Comfort system CAN bus low connection 1 (in main wiring harness)
*	Diagnostic connector

ws	=	white
sw	=	black
ro	=	red
rt	=	red
br	=	brown
gn	=	green
bl	=	blue
gr	=	grey
li	=	lilac
vi	=	lilac
ge	=	yellow
or	=	orange
rs	=	pink

Volkswagen AG. Volkswagen AG does not guarantee or accept any liability with respect to the correctness of information in this document. Copyright by Volkswagen AG. Protected by copyright. Copying for private or commercial purposes, in part or in whole, is not permitted unless authorised by Volkswagen AG.

Fuel gauge, Charge air pressure gauge, Warning buzzer and tone, Instrument cluster, Oil pressure indicator lamp, Cruise control indicator lamp, Oil level indicator lamp, Malfunction indicator lamp, Low fuel level indicator lamp, Electronic power control malfunction indicator lamp

G1	Fuel gauge
G30	Charge air pressure gauge
G32	Engine coolant level sensor
G266	Oil level thermal sensor
H3	Warning buzzer and tone
J119	Multifunction indicator
J285	Instrument cluster control module
K	Instrument cluster
K3	Oil pressure indicator lamp
K31	Cruise control indicator lamp
K38	Oil level indicator lamp
K83	Malfunction indicator lamp
K105	Low fuel level indicator lamp
K132	Electronic power control malfunction indicator lamp
T2cw	Double connector
T3x	3-pin connector
T6z	6-pin connector
T32	32-pin connector
132	Ground connection 3 (in engine compartment wiring harness)
269	Sensor ground connection 1 (in instrument panel wiring harness)
376	Ground connection 11 (in main wiring harness)
655	Ground connection on left headlamp
*	Only for vehicles with maintenance interval extension

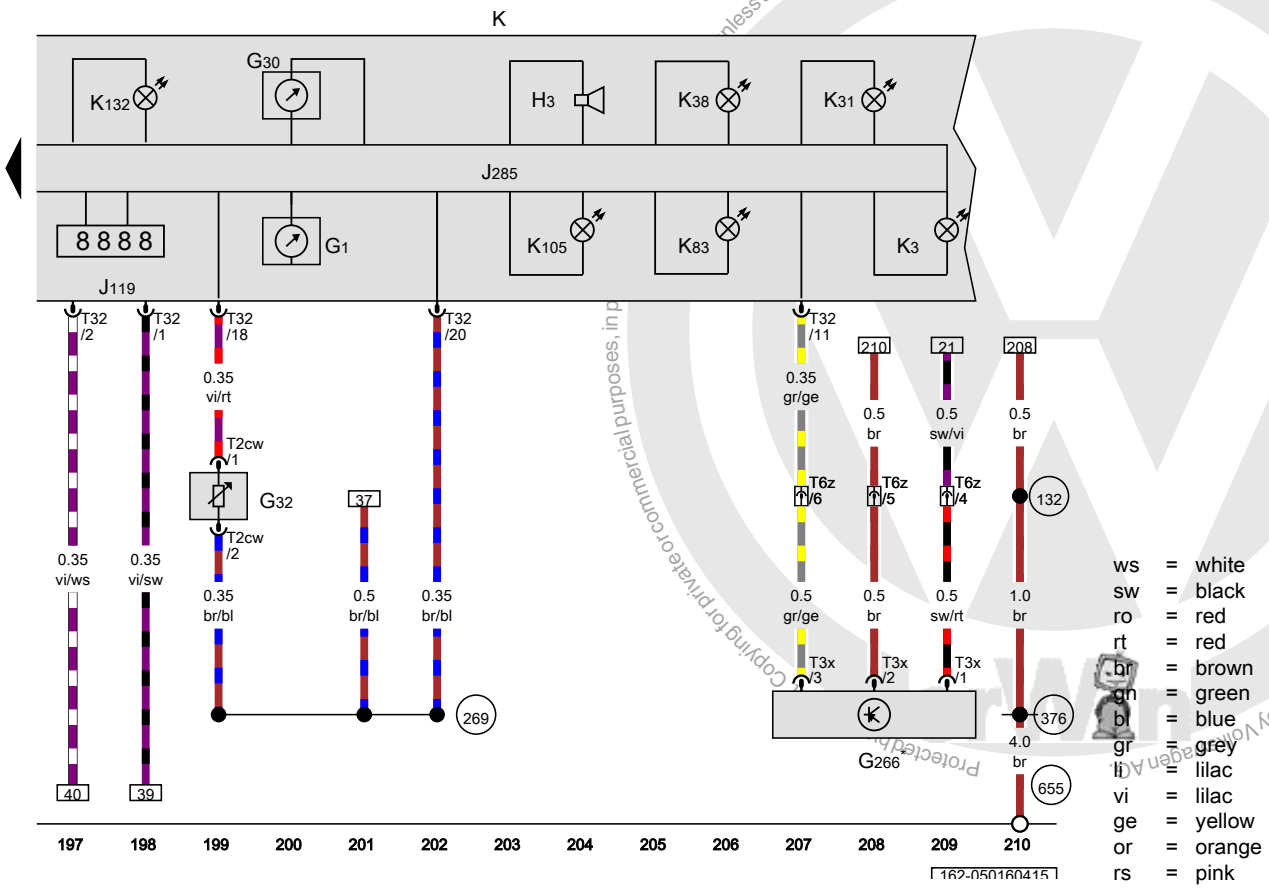

ws	=	white
sw	=	black
ro	=	red
rt	=	red
br	=	brown
gn	=	green
bl	=	blue
gr	=	grey
li	=	lilac
vi	=	lilac
ge	=	yellow
or	=	orange
rs	=	pink

Copyright by Volkswagen AG. Volkswagen AG does not guarantee or assume any liability with respect to the correctness of information in this document. Copying for private or commercial purposes, in part or in whole, is not permitted unless authorised by Volkswagen AG.

2.0L gasoline engine , CBFA,(AW1)

from March 2011

Protected by copyright. Copying for private or commercial purposes, in part or in whole, is not permitted unless authorised by Volkswagen AG. Volkswagen AG does not guarantee or accept any liability with respect to the correctness of information in this document. Copyright by Volkswagen AG.

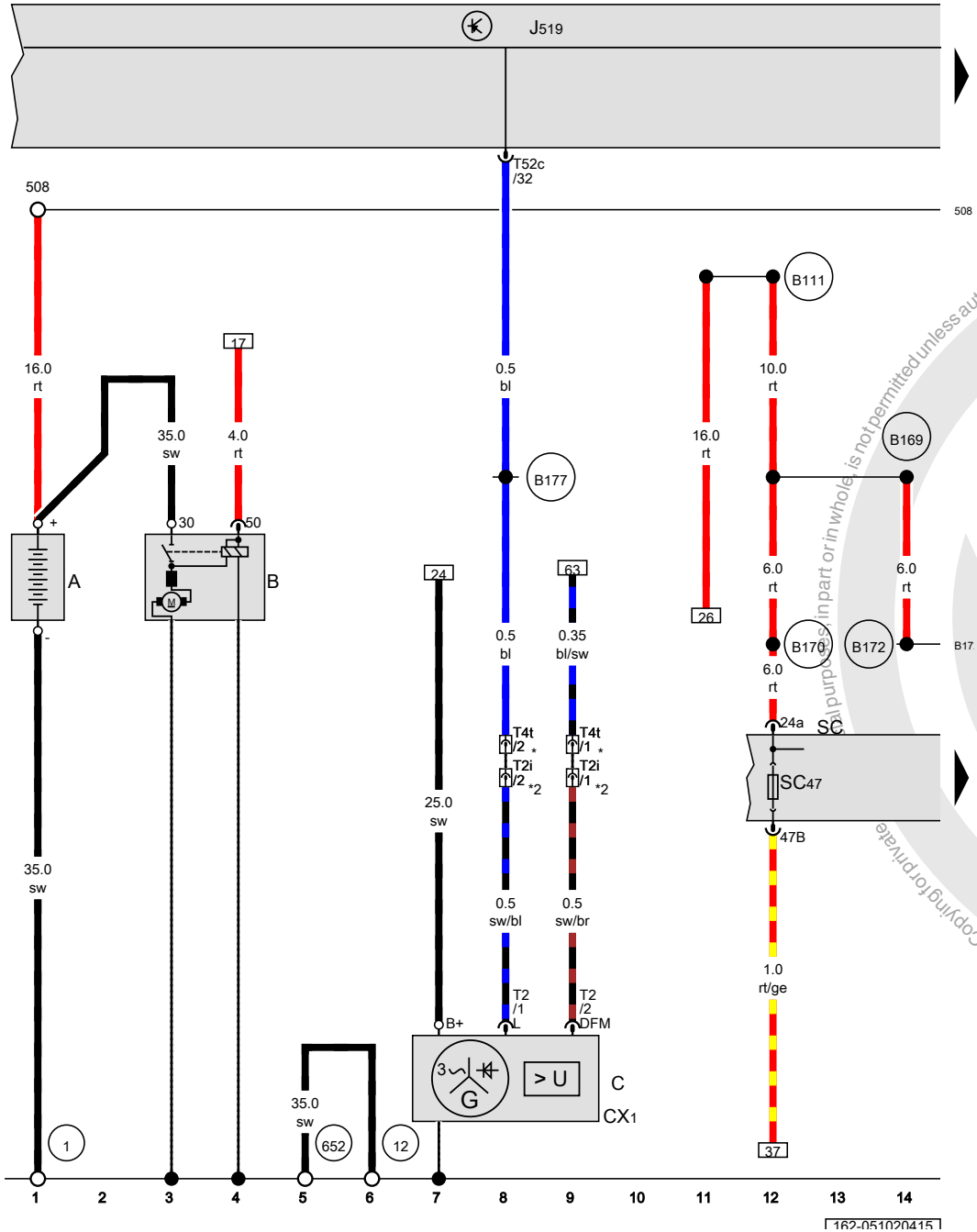

Battery, Starter, Generator, Vehicle electrical control module system, Fuse panel C

A	Battery
B	Starter
C	Generator
CX1	Generator with voltage regulator
J519	Vehicle electrical control module system
SC	Fuse panel C
SC47	Fuse 47 (on fuse panel C)
T2	Double connector
T2i	Double connector, near the starter
T4t	4-pin connector, near the starter
T52c	52-pin connector
1	Ground strap, battery to body
12	Ground connection in engine compartment, left
508	Terminal 30 threaded connection (on E-box)
652	Transmission/engine ground connection
B111	Positive connection 1 (30a) (in interior wiring harness)
B169	Positive connection 1 (30) (in interior wiring harness)
B170	Positive connection 2 (30) (in interior wiring harness)
B172	Positive connection 4 (30) (in interior wiring harness)
B177	Connection 61 (in interior wiring harness)
*	Only for vehicles with A/C system
*2	Only for vehicles without an A/C system

ws	=	white
sw	=	black
ro	=	red
rt	=	red
br	=	brown
gn	=	green
bl	=	blue
gr	=	grey
li	=	lilac
vi	=	lilac
ge	=	yellow
or	=	orange
rs	=	pink

Protected by copyright. Copying for private and commercial purposes, in part or in whole, is not permitted unless authorised by Volkswagen AG. Volkswagen AG does not guarantee or accept any liability with respect to the correctness of information in this document. Copyright by Volkswagen AG.

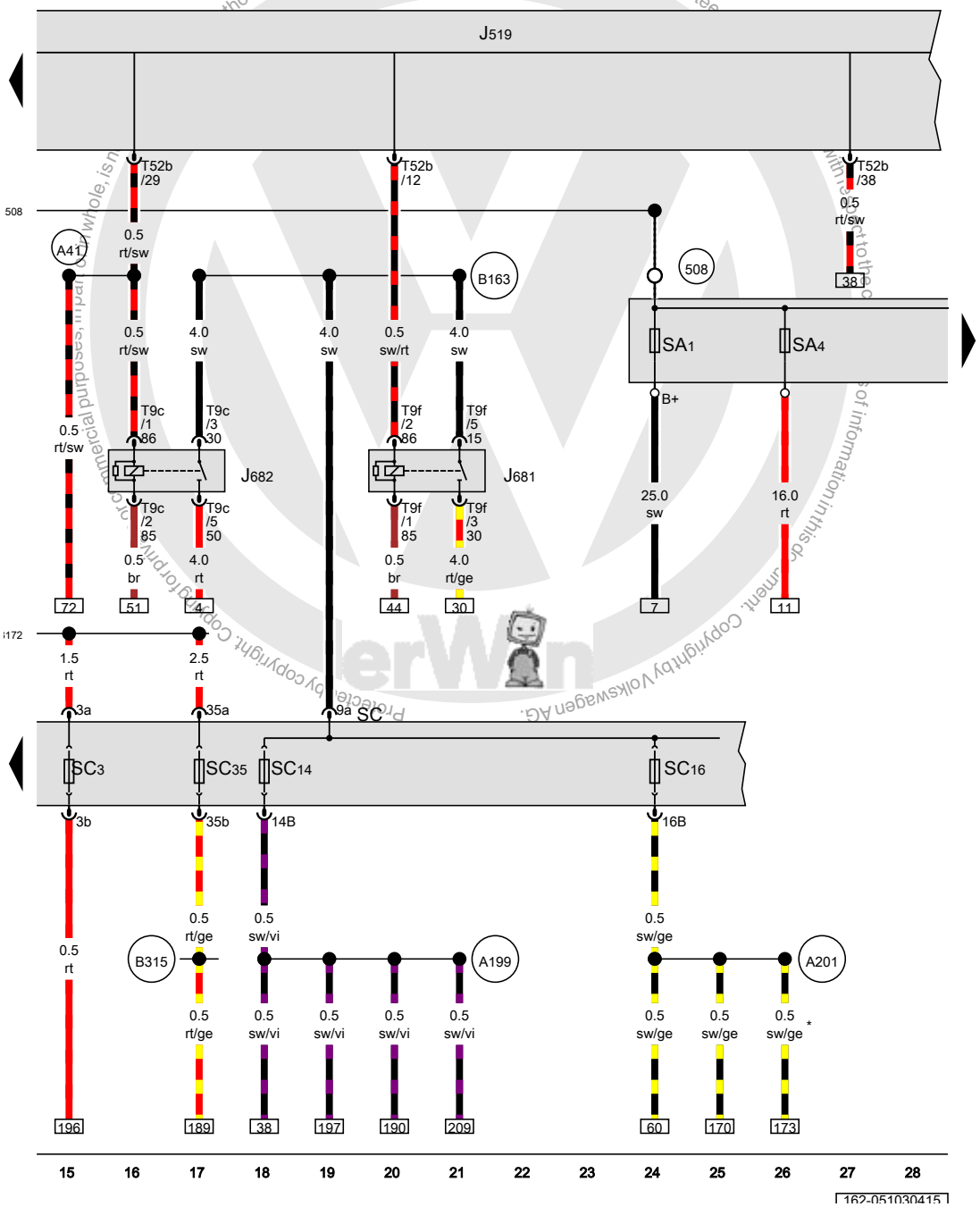

Vehicle electrical control module system, Terminal 15 power supply relay 2, Terminal 50 power supply relay, Fuse panel C

J519	Vehicle electrical control module system
J681	Terminal 15 power supply relay 2
J682	Terminal 50 power supply relay
SA1	Fuse 1 (on fuse panel A)
SC3	Fuse 3 (on fuse panel C)
SA4	Fuse 4 (on fuse panel A)
SC	Fuse panel C
SC14	Fuse 14 (on fuse panel C)
SC16	Fuse 16 (on fuse panel C)
SC35	Fuse 35 (on fuse panel C)
T9c	9-pin connector
T9f	9-pin connector
T52b	52-pin connector
508	Terminal 30 threaded connection (on E-box)
A41	Positive connection (50) (in instrument panel wiring harness)
A199	Positive connection 4 (15a) (in instrument panel wiring harness)
A201	Positive connection 6 (15a) (in instrument panel wiring harness)
B163	Positive connection 1 (15) (in interior wiring harness)
B172	Positive connection 4 (30) (in interior wiring harness)
B315	Positive connection 1 (30a) (in main wiring harness)
*	Depending on equipment

ws	=	white
sw	=	black
ro	=	red
rt	=	red
br	=	brown
gn	=	green
bl	=	blue
gr	=	grey
li	=	lilac
vi	=	lilac
ge	=	yellow
or	=	orange
rs	=	pink

Fuel level sensor, Transfer fuel pump, Coolant circulation pump relay, Fuse 25 (on fuse panel B)

G	Fuel level sensor
G6	Transfer fuel pump
J151	Coolant circulation pump relay
J299	Secondary air injection pump relay
J538	Fuel pump control module
SB4	Fuse 4 (on fuse panel B)
SB9	Fuse 9 (on fuse panel B)
SB12	Fuse 12 (on fuse panel B)
SB21	Fuse 21 (on fuse panel B)
SB25	Fuse 25 (on fuse panel B)
T5b	5-pin connector
T10n	10-pin connector
196	Ground connection 3 (in rear wiring harness)
682	Ground connection 2 in right rear side panel
B429	Fuel pump relay connection (in main wiring harness)
D196	Connection 87a (in engine pre-wiring harness) 2
*	Running change

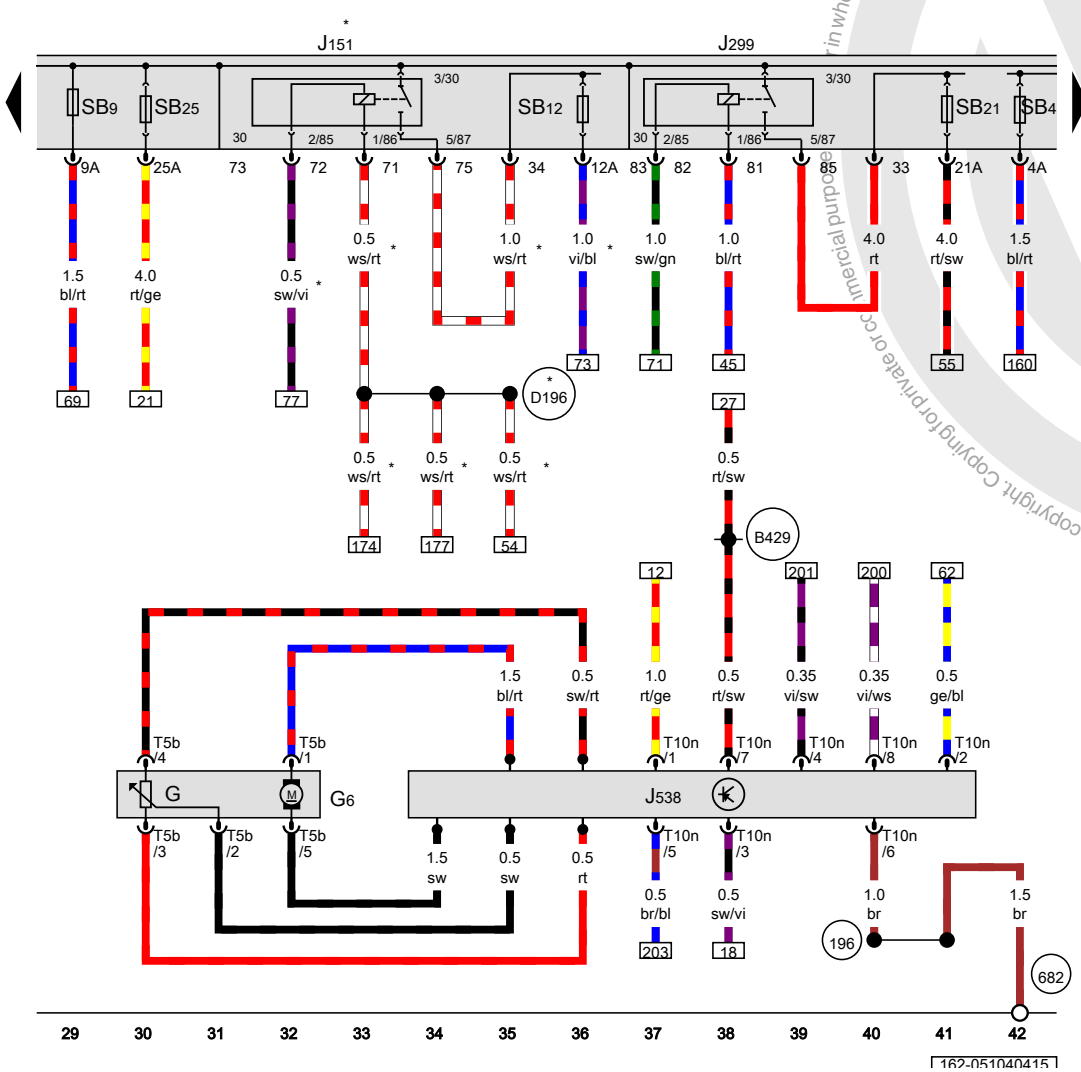

ws	=	white
sw	=	black
ro	=	red
rt	=	red
br	=	brown
gn	=	green
bl	=	blue
gr	=	grey
li	=	lilac
vi	=	lilac
ge	=	yellow
or	=	orange
rs	=	pink

Protected by copyright. Copying for private or commercial purposes, in whole, is not permitted unless authorised by Volkswagen AG. Volkswagen AG does not guarantee or accept any liability with respect to the correctness of information in this document. Copyright by Volkswagen AG.

Motronic engine control module power supply relay

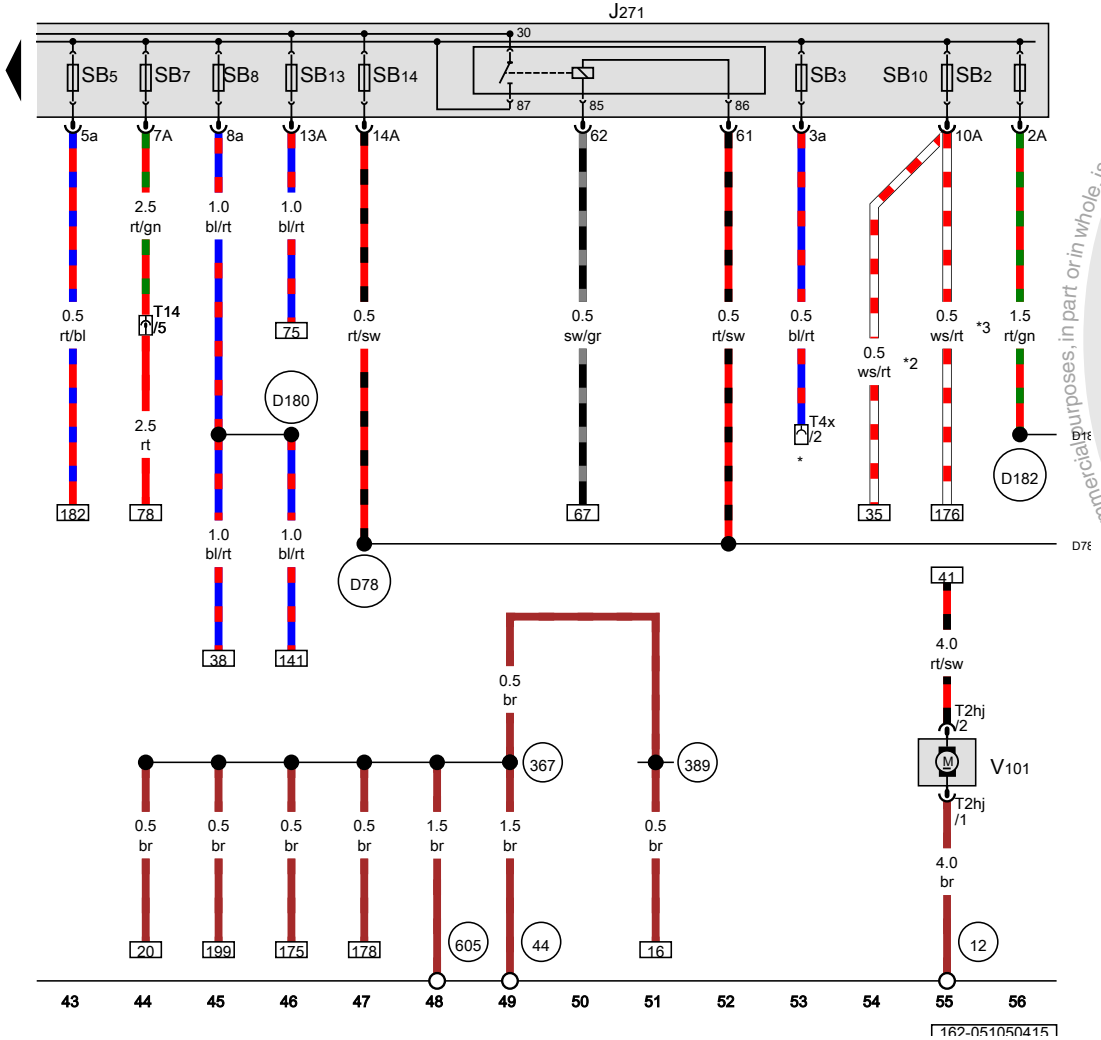

J271	Motronic engine control module power supply relay
SB2	Fuse 2 (on fuse panel B)
SB3	Fuse 3 (on fuse panel B)
SB5	Fuse 5 (on fuse panel B)
SB7	Fuse 7 (on fuse panel B)
SB8	Fuse 8 (on fuse panel B)
SB10	Fuse 10 (on fuse panel B)
SB13	Fuse 13 (on fuse panel B)
SB14	Fuse 14 (on fuse panel B)
T2hj	Double connector
T4x	4-pin connector
T14	14-pin connector
V101	Secondary air injection pump motor
12	Ground connection in engine compartment, left
44	Ground connection on A-pillar, lower left
367	Ground connection 2 (in main wiring harness)
389	Ground connection 24 (in main wiring harness)
605	Ground connection on upper steering column
D78	Positive connection 1 (30a) (in engine compartment wiring harness)
D180	Connection 87a (in engine compartment wiring harness)
D182	Connection 3 (87a) (in engine compartment wiring harness)
*	Coolant fan connection
*2	Running change
*3	Depending on equipment

ws	=	white
sw	=	black
ro	=	red
rt	=	red
br	=	brown
gn	=	green
bl	=	blue
gr	=	grey
li	=	lilac
vi	=	lilac
ge	=	yellow
or	=	orange
rs	=	pink

Protected by copyright. Copying for private or commercial purposes, in part or in whole, is not permitted unless authorised by Volkswagen AG. Volkswagen AG does not guarantee or accept any liability with respect to the correctness of information in this document. Copyright by Volkswagen AG.

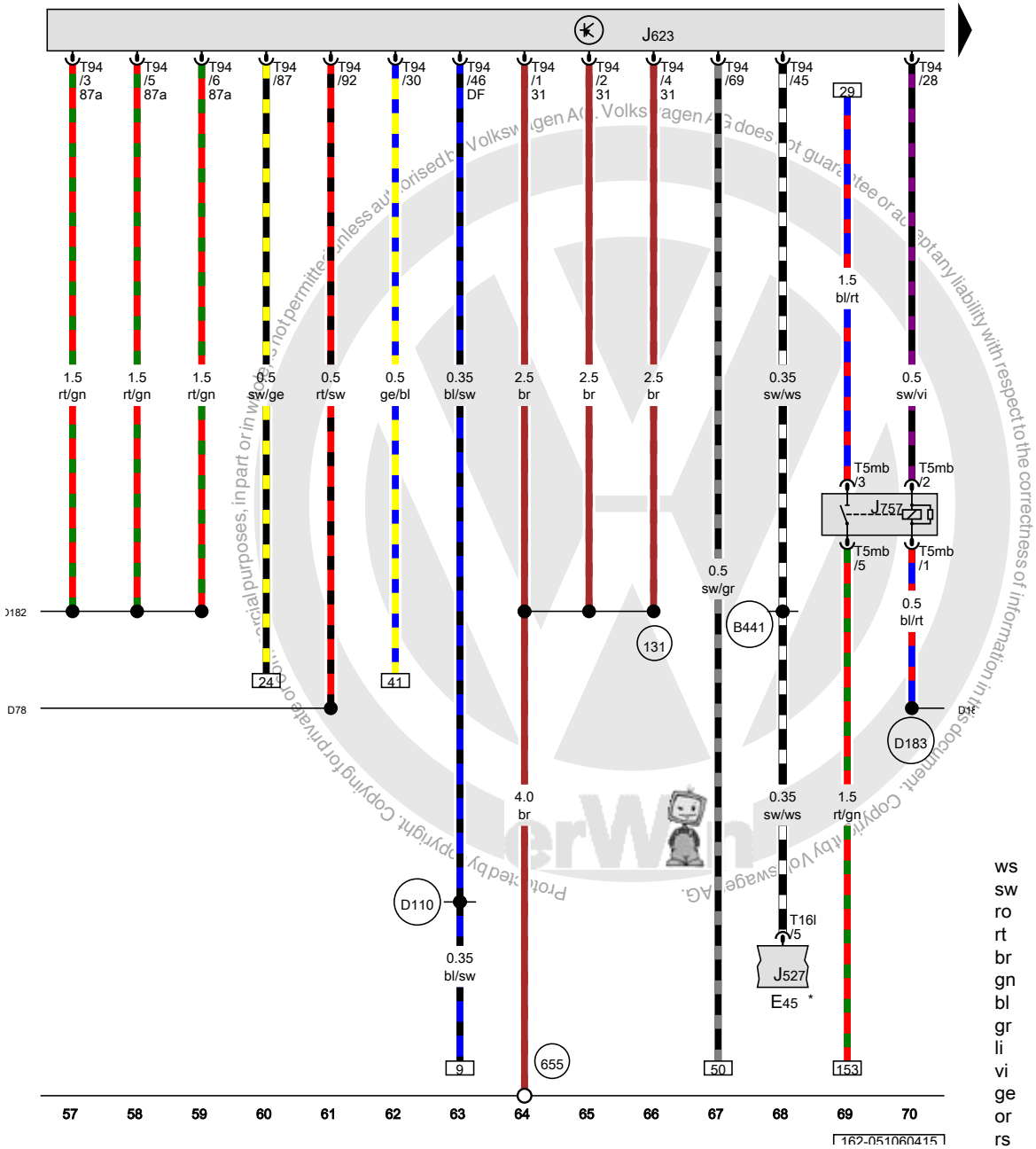

Engine control module, Engine component power supply relay

E45	Cruise control switch
J527	Steering column electronics control module
J623	Engine control module
J757	Engine component power supply relay
T5mb	5-pin connector
T16l	16-pin connector
T94	94-pin connector
131	Ground connection 2 (in engine compartment wiring harness)
655	Ground connection on left headlamp
B441	Cruise control connection (in main wiring harness)
D78	Positive connection 1 (30a) (in engine compartment wiring harness)
D110	Connection 8 (in engine compartment wiring harness)
D182	Connection 3 (87a) (in engine compartment wiring harness)
D183	Connection 4 (87a) (in engine compartment wiring harness)
*	Only for vehicles with cruise control

ws	=	white
sw	=	black
ro	=	red
rt	=	red
br	=	brown
gn	=	green
bl	=	blue
gr	=	grey
li	=	lilac
vi	=	lilac
ge	=	yellow
or	=	orange
rs	=	pink

Protected by copyright. Copying for private or commercial purposes, in part or in whole, is not permitted unless authorised by Volkswagen AG. Volkswagen AG does not guarantee or accept any liability with respect to the correctness of information in this document.

Engine control module, Ignition coil 1 with power output stage, Ignition coil 2 with power output stage, Spark plug connectors, Spark plugs, After-run coolant pump

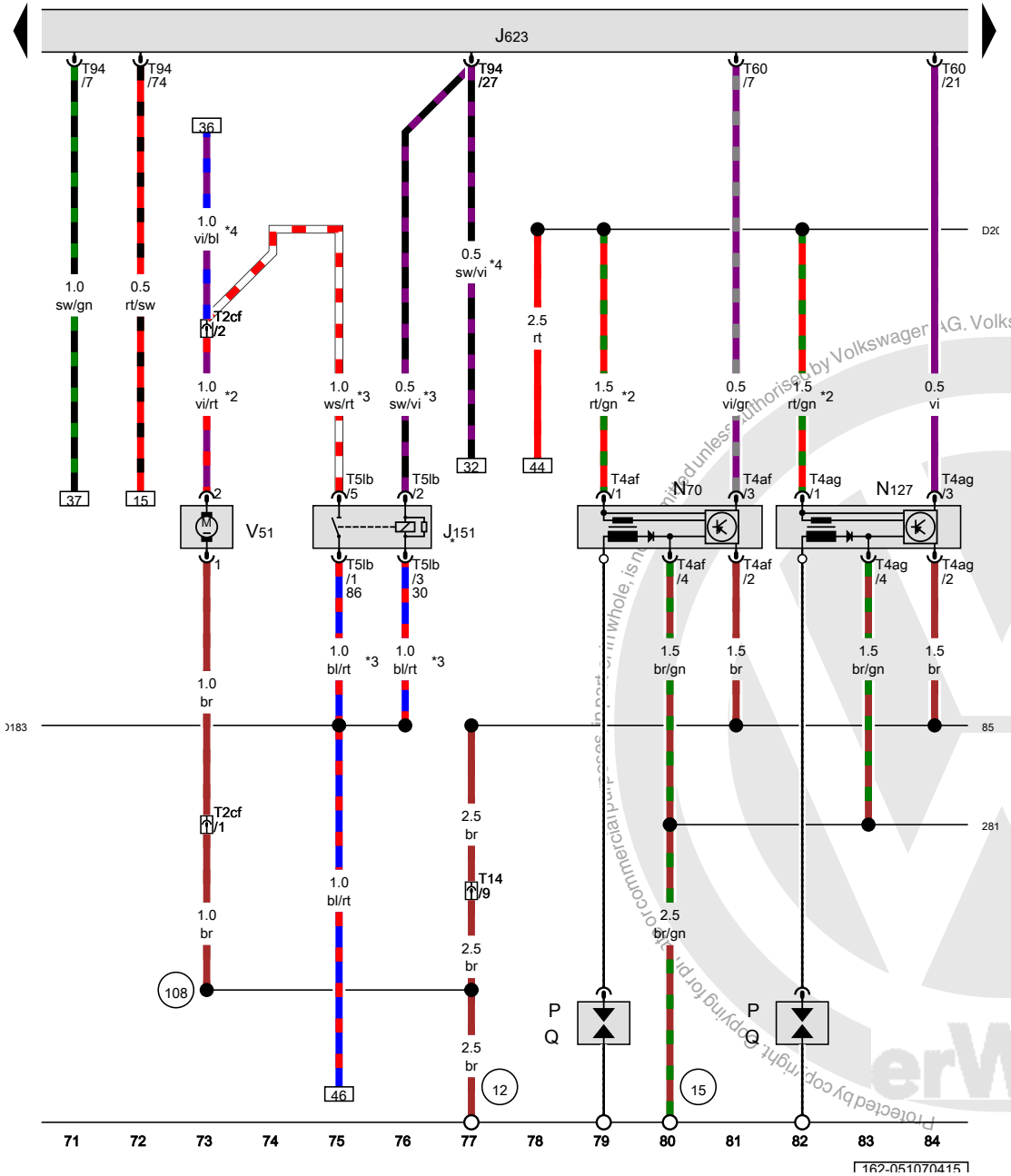

ws	=	white
sw	=	black
ro	=	red
rt	=	red
br	=	brown
gn	=	green
bl	=	blue
gr	=	grey
li	=	lilac
vi	=	lilac
ge	=	yellow
or	=	orange
rs	=	pink

J151	Coolant circulation pump relay, in the interior
J623	Engine control module
N70	Ignition coil 1 with power output stage
N127	Ignition coil 2 with power output stage
P	Spark plug connectors
Q	Spark plugs
T2cf	Double connector
T4af	4-pin connector
T4ag	4-pin connector
T5lb	5-pin connector
T14	14-pin connector
T60	60-pin connector
T94	94-pin connector
V51	After-run coolant pump
12	Ground connection in engine compartment, left
15	Ground connection on cylinder head
85	Ground connection 1 (in engine compartment wiring harness)
108	Ground connection 2 (in left front wiring harness)
281	Ground connection 1 (in engine pre-wiring harness)
D183	Connection 4 (87a) (in engine compartment wiring harness)
D206	Connection 87a (in engine pre-wiring harness) 4
*	Optional
*2	The color of the wires depends on vehicle equipment
*3	Depending on equipment
*4	Running change

Protected by copyright. Copying for private or commercial purposes, in part or in whole, is not permitted unless authorised by Volkswagen AG. Volkswagen AG does not guarantee or accept any liability with respect to the correctness of information in this document. Copyright by Volkswagen AG.

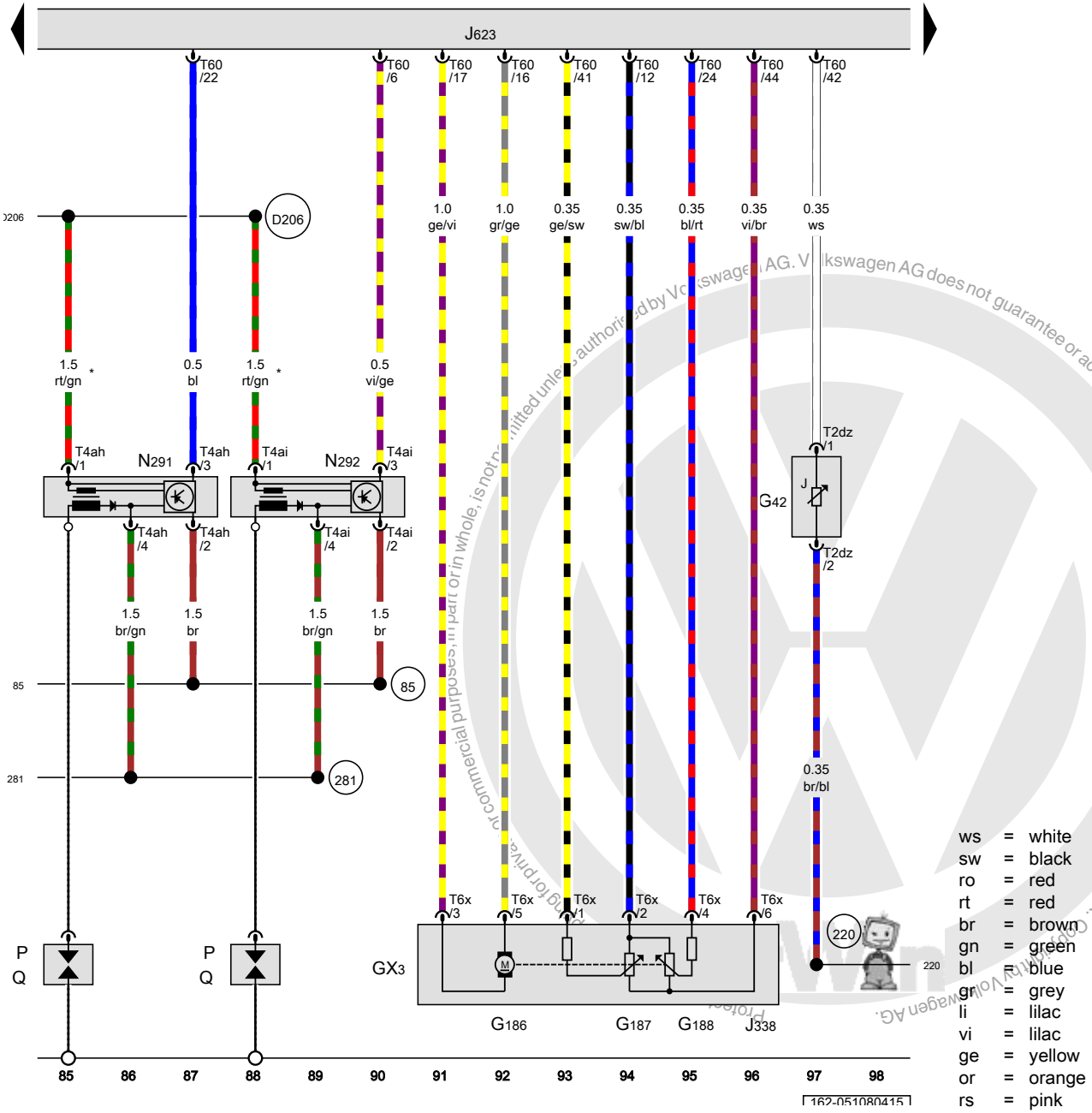

Throttle valve control module, Intake air temperature sensor, Engine control module, Ignition coil 3 with power output stage, Ignition coil 4 with power output stage, Spark plug connectors

GX3	Throttle valve control module
G42	Intake air temperature sensor
G186	EPC throttle drive
G187	EPC throttle drive angle sensor 1
G188	EPC throttle drive angle sensor 2
J338	Throttle valve control module
J623	Engine control module
N291	Ignition coil 3 with power output stage
N292	Ignition coil 4 with power output stage
P	Spark plug connectors
Q	Spark plugs
T2dz	Double connector
T4ah	4-pin connector
T4ai	4-pin connector
T6x	6-pin connector
T60	60-pin connector
85	Ground connection 1 (in engine compartment wiring harness)
220	Sensor ground connection (in engine wiring harness)
281	Ground connection 1 (in engine pre-wiring harness)
D206	Connection 87a (in engine pre-wiring harness) 4
*	The color of the wires depends on vehicle equipment

ws	=	white
sw	=	black
ro	=	red
rt	=	red
br	=	brown
gn	=	green
bl	=	blue
gr	=	grey
li	=	lilac
vi	=	lilac
ge	=	yellow
or	=	orange
rs	=	pink

Volkswagen AG does not guarantee or accept any liability with respect to the correctness of information in this document. Copyright by Volkswagen AG.

Camshaft position sensor, Knock sensor 1, Engine coolant temperature sensor, Engine control module

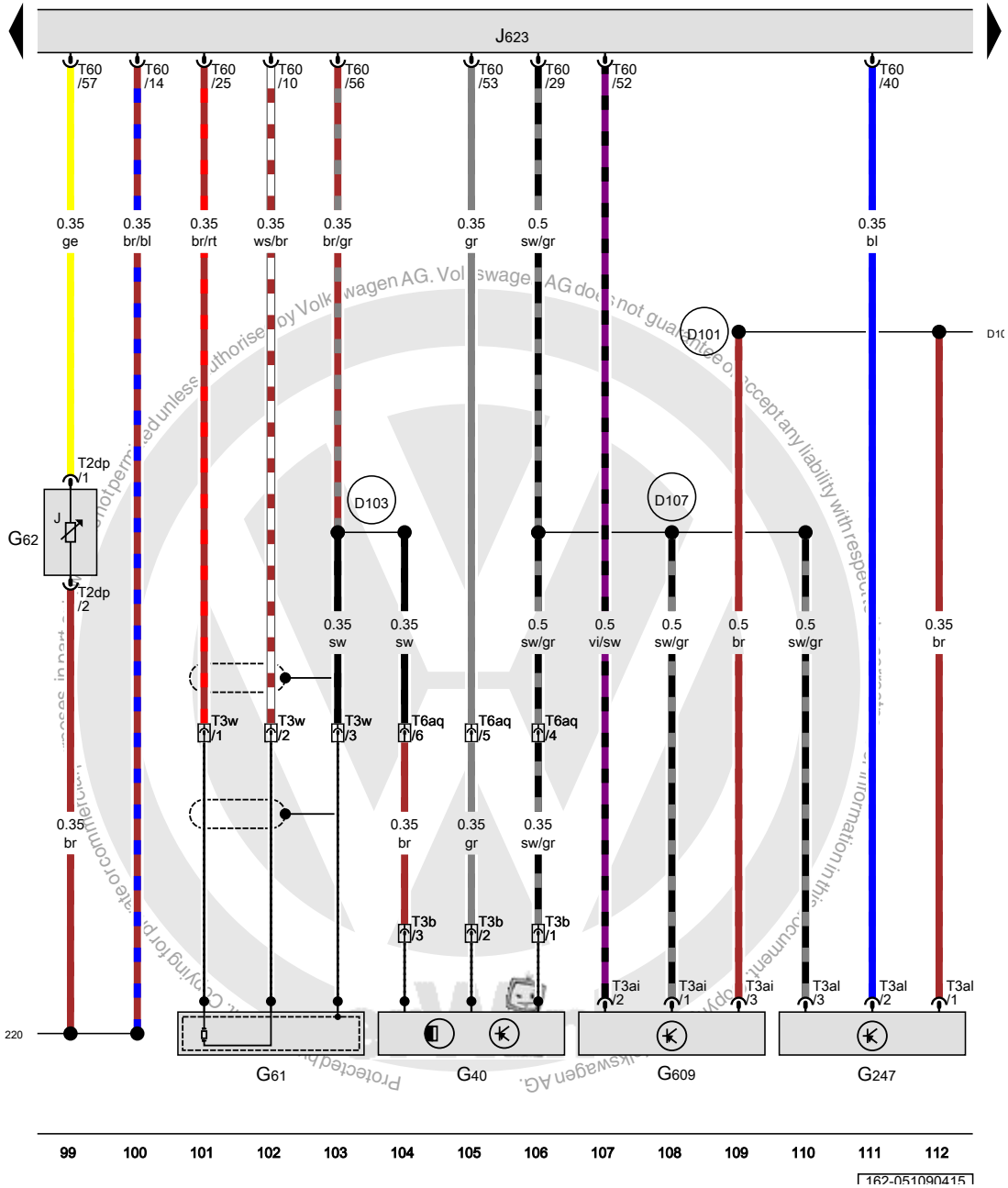

G40	Camshaft position sensor
G61	Knock sensor 1
G62	Engine coolant temperature sensor
G247	Fuel pressure sensor
G609	Secondary air injection sensor 1
J623	Engine control module
T2dp	Double connector
T3ai	3-pin connector
T3al	3-pin connector
T3b	3-pin connector
T3w	3-pin connector
T6aq	6-pin connector
T60	60-pin connector
(220)	Sensor ground connection (in engine wiring harness)
(D101)	Connection 1 (in engine compartment wiring harness)
(D103)	Connection 3 (in engine compartment wiring harness)
(D107)	Connection 5 (in engine compartment wiring harness)

ws	=	white
sw	=	black
ro	=	red
rt	=	red
br	=	brown
gn	=	green
bl	=	blue
gr	=	grey
li	=	lilac
vi	=	lilac
ge	=	yellow
or	=	orange
rs	=	pink

Engine speed sensor, Charge air pressure sensor, Engine coolant temperature sensor on radiator outlet, Engine control module, Cylinder 1 fuel injector

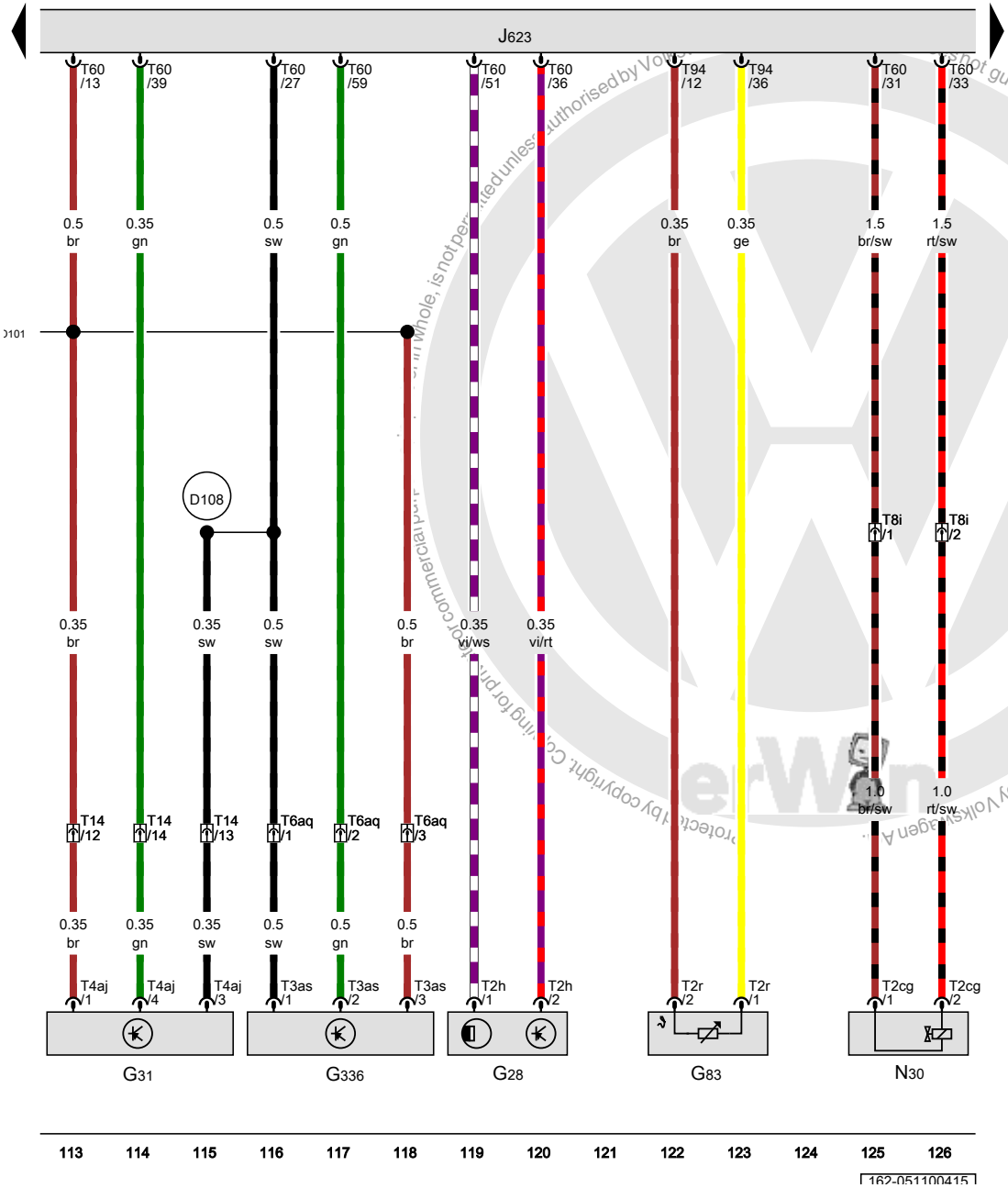

G28	Engine speed sensor
G31	Charge air pressure sensor
G83	Engine coolant temperature sensor on radiator outlet
G336	Intake manifold runner position sensor
J623	Engine control module
N30	Cylinder 1 fuel injector
T2cg	Double connector
T2h	Double connector
T2r	Double connector
T3as	3-pin connector
T4aj	4-pin connector
T6aq	6-pin connector
T8i	8-pin connector
T14	14-pin connector
T60	60-pin connector
T94	94-pin connector
D101	Connection 1 (in engine compartment wiring harness)
D108	Connection 6 (in engine compartment wiring harness)

ws	=	white
sw	=	black
ro	=	red
rt	=	red
br	=	brown
gn	=	green
bl	=	blue
gr	=	grey
li	=	lilac
vi	=	lilac
ge	=	yellow
or	=	orange
rs	=	pink

Copyright by Volkswagen AG. Not guarantee or accept any liability with respect to the correctness of information in this document. Copyright by Volkswagen AG. Protected by copyright. Copying for private or commercial purposes, in whole, is not permitted unless authorised by Volkswagen AG.

Accelerator pedal module, Engine control module, Cylinder 2 fuel injector, Cylinder 3 fuel injector, Cylinder 4 fuel injector

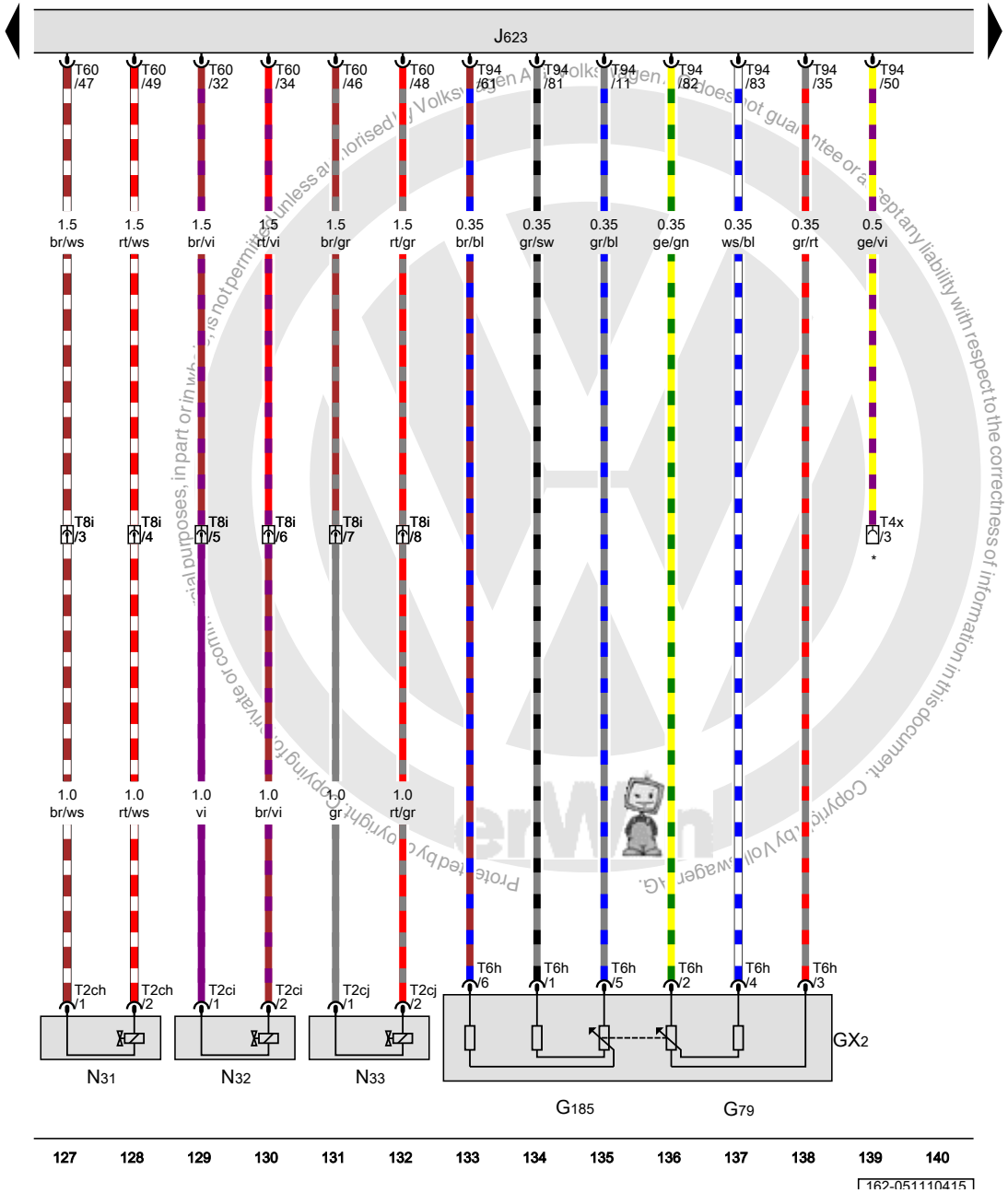

GX2	Accelerator pedal module
G79	Accelerator pedal position sensor
G185	Accelerator pedal position sensor 2
J623	Engine control module
N31	Cylinder 2 fuel injector
N32	Cylinder 3 fuel injector
N33	Cylinder 4 fuel injector
T2ch	Double connector
T2ci	Double connector
T2cj	Double connector
T4x	4-pin connector
T6h	6-pin connector
T8i	8-pin connector
T60	60-pin connector
T94	94-pin connector
*	Coolant fan connection

ws	=	white
sw	=	black
ro	=	red
rt	=	red
br	=	brown
gn	=	green
bl	=	blue
gr	=	grey
li	=	lilac
vi	=	lilac
ge	=	yellow
or	=	orange
rs	=	pink

Protected by copyright. Copying for private or commercial purposes, in part or in whole, is not permitted unless authorised by Volkswagen AG. Volkswagen AG does not guarantee or accept any liability with respect to the correctness of information in this document. Copyright by Volkswagen AG.

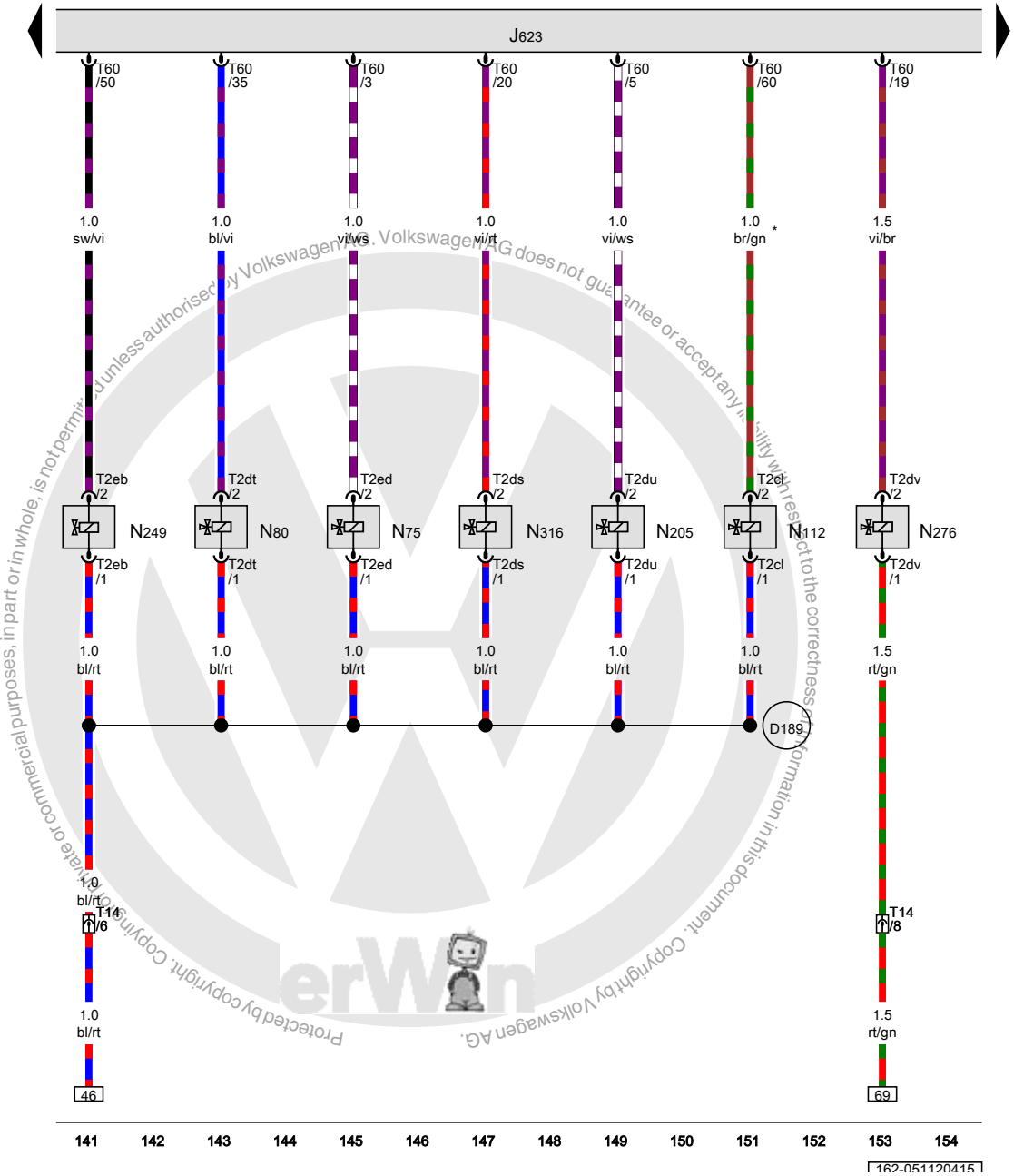

Engine control module, EVAP canister purge regulator valve 1, Secondary air injection solenoid valve, Camshaft adjustment valve 1, Turbocharger recirculation valve, Fuel pressure regulator valve, Intake manifold runner control valve

J623	Engine control module
N75	Wastegate bypass regulator valve
N80	EVAP canister purge regulator valve 1
N112	Secondary air injection solenoid valve
N205	Camshaft adjustment valve 1
N249	Turbocharger recirculation valve
N276	Fuel pressure regulator valve
N316	Intake manifold runner control valve
T2cl	Double connector
T2ds	Double connector
T2dt	Double connector
T2du	Double connector
T2dv	Double connector
T2eb	Double connector
T2ed	Double connector
T14	14-pin connector
T60	60-pin connector
D189	Connection 87a (in engine pre-wiring harness)
*	The color of the wires depends on vehicle equipment

ws	=	white
sw	=	black
ro	=	red
rt	=	red
br	=	brown
gn	=	green
bl	=	blue
gr	=	grey
li	=	lilac
vi	=	lilac
ge	=	yellow
or	=	orange
rs	=	pink

Protected by copyright. Copying for private or commercial purposes, in part or in whole, is not permitted unless authorised by Volkswagen AG. Volkswagen AG does not guarantee or accept any liability with respect to the correctness of information in this document. Copyright by Volkswagen AG.

Heated oxygen sensor 2, Oxygen sensor after three way catalytic converter, Engine control module, Oxygen sensor heater, Heater for oxygen sensor 1 after catalytic converter

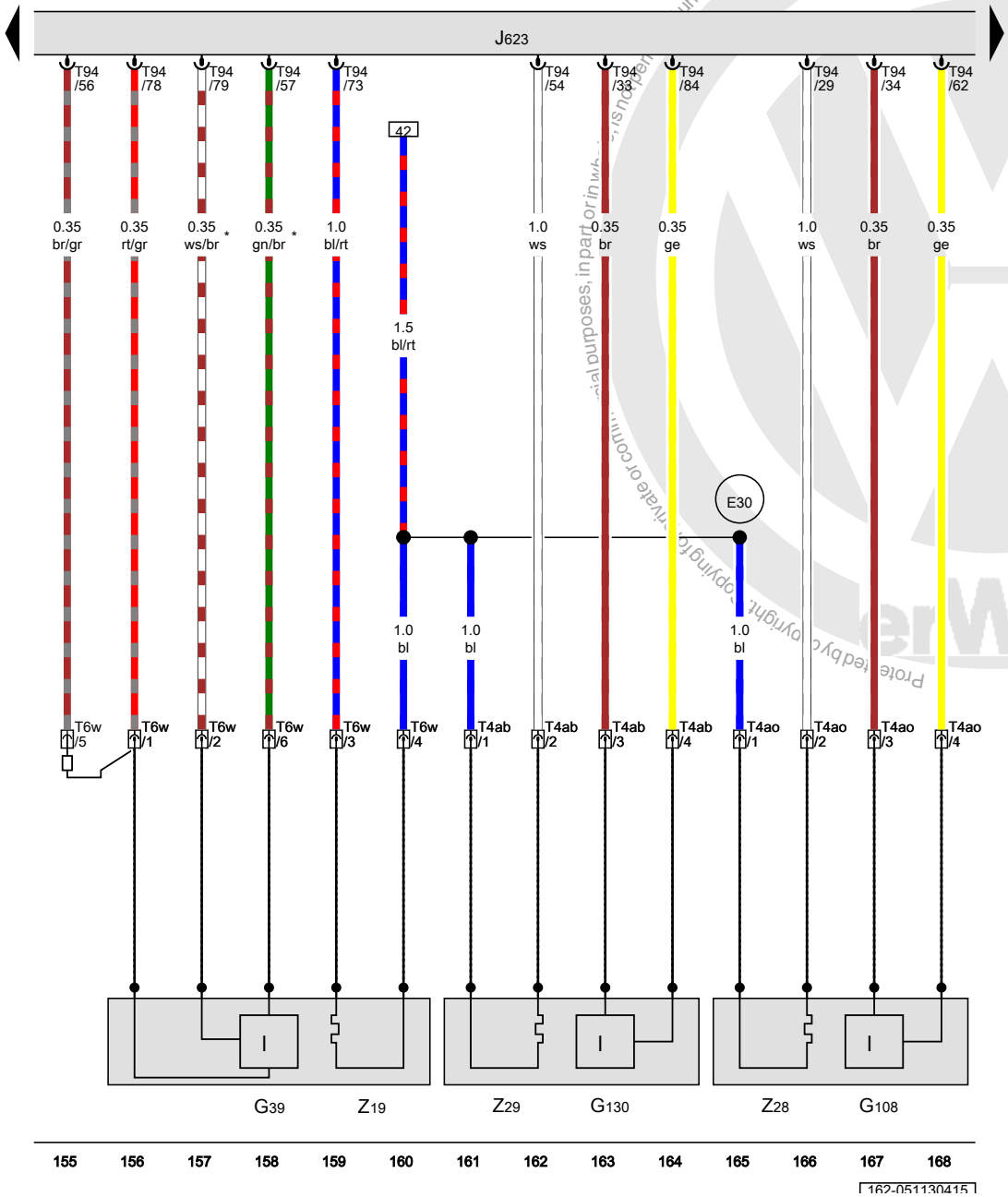

G39	Heated oxygen sensor
G108	Heated oxygen sensor 2
G130	Oxygen sensor after three way catalytic converter
J623	Engine control module
T4ab	4-pin connector
T4ao	4-pin connector
T6w	6-pin connector
T94	94-pin connector
Z19	Oxygen sensor heater
Z28	Oxygen sensor 2 heater
Z29	Heater for oxygen sensor 1 after catalytic converter
E30	Connection 87a (in engine wiring harness)
*	The colon of the wires depends on vehicle equipment

ws	=	white
sw	=	black
ro	=	red
rt	=	red
br	=	brown
gn	=	green
bl	=	blue
gr	=	grey
li	=	lilac
vi	=	lilac
ge	=	yellow
or	=	orange
rs	=	pink

Protected by copyright. Copying for private or commercial purposes, in part or in whole, is not permitted unless authorised by Volkswagen AG. Volkswagen AG does not guarantee or accept any liability with respect to the correctness of information in this document. Copyright by Volkswagen AG.

Brake lamp switch, Mass airflow sensor, Clutch position sensor, Engine control module, Leak detection pump

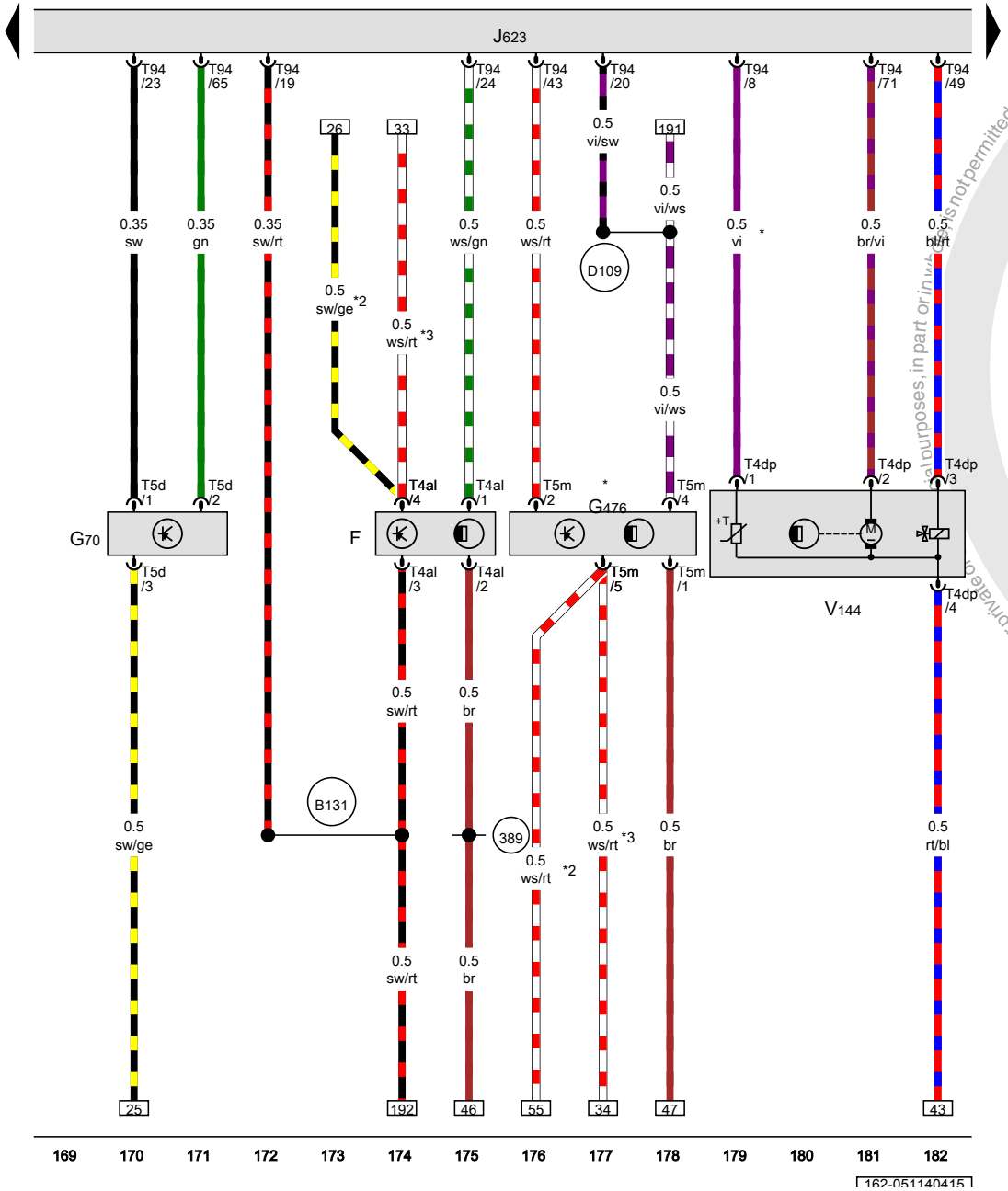

F	Brake lamp switch
G70	Mass airflow sensor
G476	Clutch position sensor
J623	Engine control module
T4al	4-pin connector
T4dp	4-pin connector
T5d	5-pin connector
T5m	5-pin connector
T94	94-pin connector
V144	Leak detection pump
389	Ground connection 24 (in main wiring harness)
B131	Connection 54 (in interior wiring harness)
D109	Connection 7 (in engine compartment wiring harness)
*	Only for vehicles with a manual transmission
*2	Depending on equipment
*3	Running change

ws	=	white
sw	=	black
ro	=	red
rt	=	red
br	=	brown
gn	=	green
bl	=	blue
gr	=	grey
li	=	lilac
vi	=	lilac
ge	=	yellow
or	=	orange
rs	=	pink

Protected by copyright. Copying for private or commercial purposes, in part or in whole, is not permitted unless authorised by Volkswagen AG. Volkswagen AG does not guarantee or accept any liability with respect to the correctness of information in this document. Copyright by Volkswagen AG.

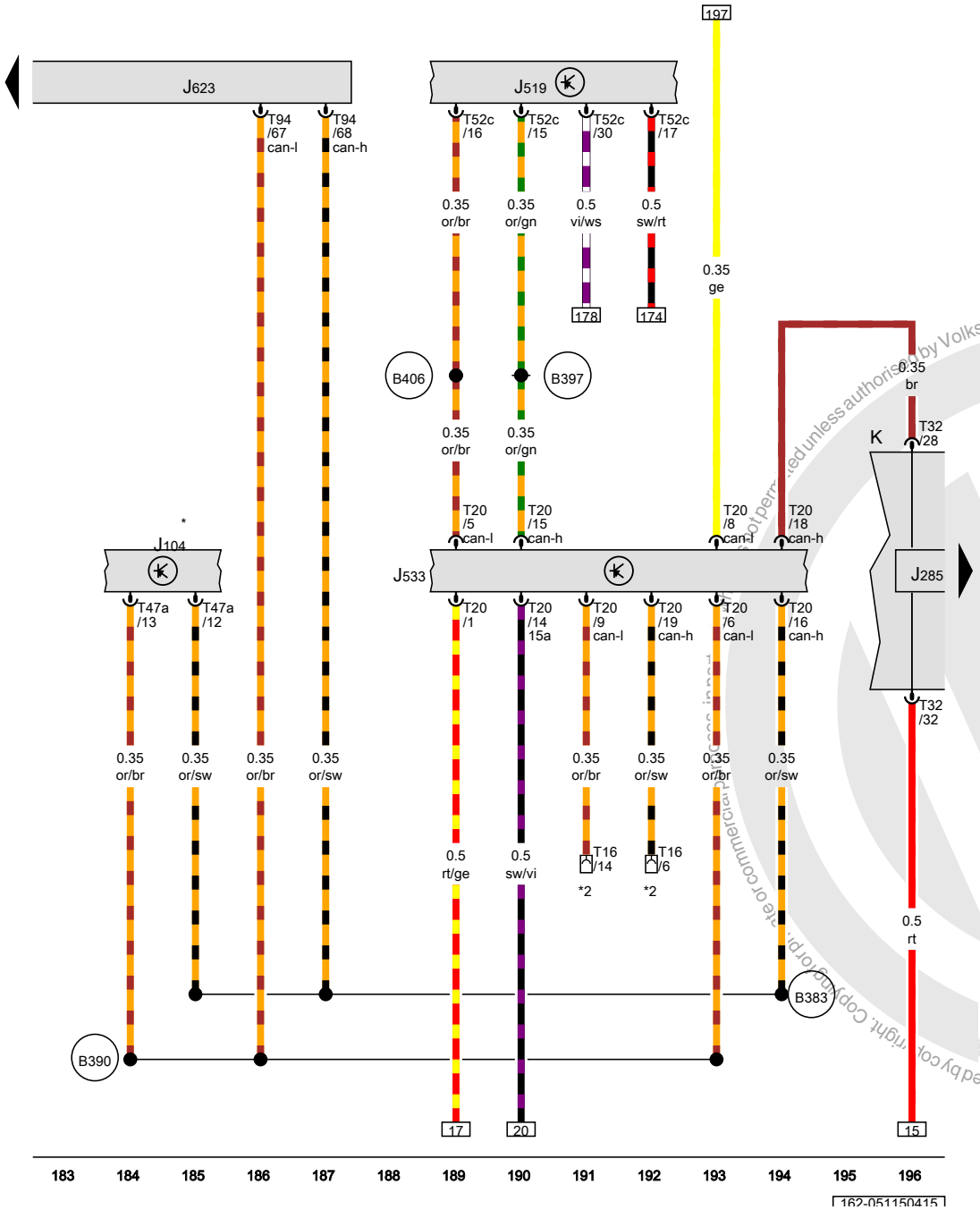

Data bus on board diagnostic interface, Engine control module, Instrument cluster

J104	ABS control module
J285	Instrument cluster control module
J519	Vehicle electrical control module system
J533	Data bus on board diagnostic interface
J623	Engine control module
K	Instrument cluster
T16	16-pin connector
T20	20-pin connector
T32	32-pin connector
T47a	47-pin connector
T52c	52-pin connector
T94	94-pin connector
B383	Powertrain CAN bus high connection 1 (in main wiring harness)
B390	Powertrain CAN bus low connection 1 (in main wiring harness)
B397	Comfort system CAN bus high connection 1 (in main wiring harness)
B406	Comfort system CAN bus low connection 1 (in main wiring harness)
*	Only for vehicles with ABS and ESP
*2	Diagnostic connector

ws	=	white
sw	=	black
ro	=	red
rt	=	red
br	=	brown
gn	=	green
bl	=	blue
gr	=	grey
li	=	lilac
vi	=	lilac
ge	=	yellow
or	=	orange
rs	=	pink

Protected by copyright. Copying or publication or commercial use not permitted unless authorised by Volkswagen AG. Volkswagen AG does not guarantee or accept any liability with respect to the correctness of information in this document. Copyright by Volkswagen AG.

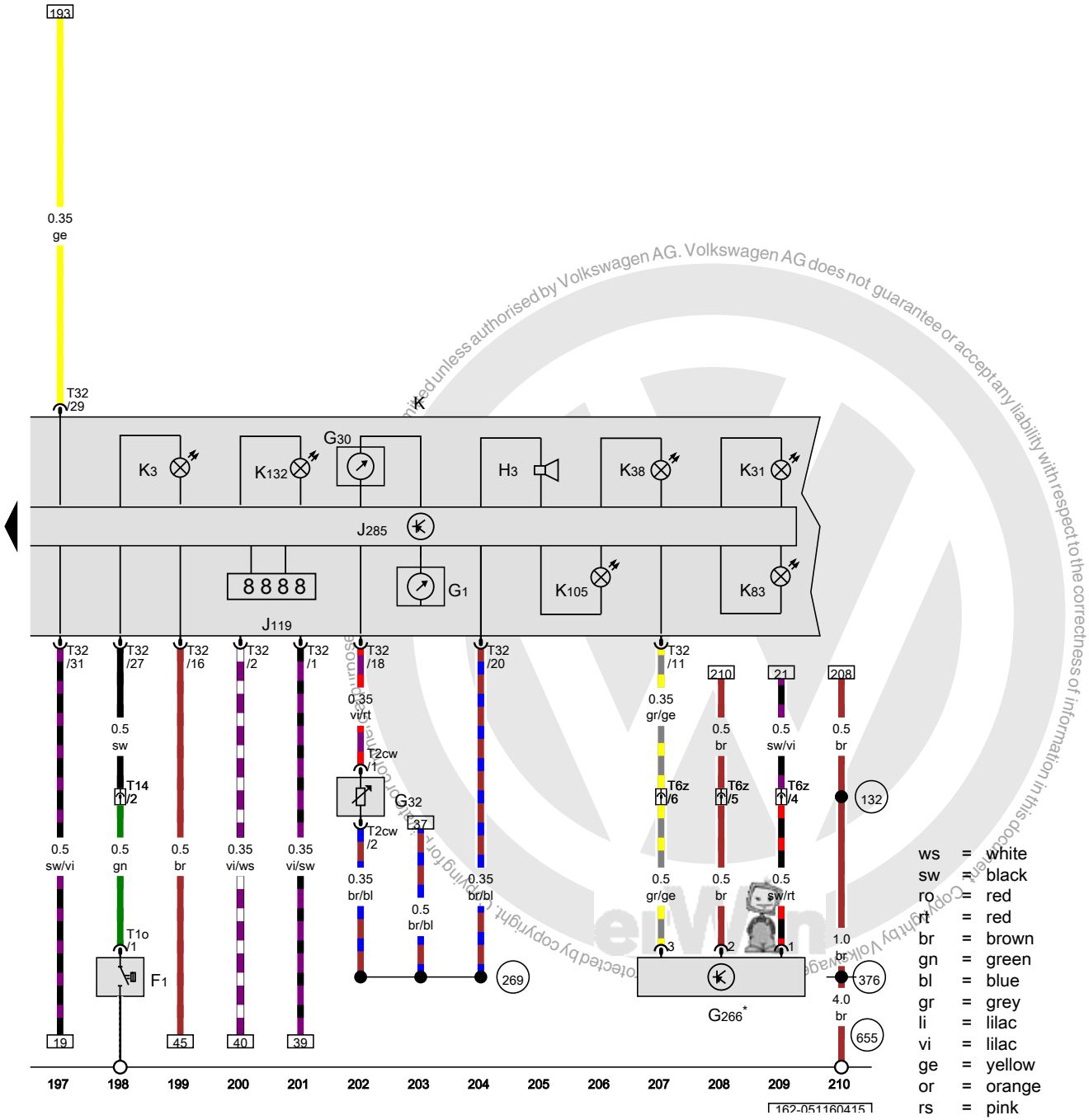

Oil pressure switch, Fuel gauge, Charge air pressure gauge, Warning buzzer and tone, Instrument cluster, Oil pressure indicator lamp, Cruise control indicator lamp, Oil level indicator lamp, Malfunction indicator lamp, Low fuel level indicator lamp, Electronic power control malfunction indicator lamp

F1	Oil pressure switch
G1	Fuel gauge
G30	Charge air pressure gauge
G32	Engine coolant level sensor
G266	Oil level thermal sensor
H3	Warning buzzer and tone
J119	Multifunction indicator
J285	Instrument cluster control module
K	Instrument cluster
K3	Oil pressure indicator lamp
K31	Cruise control indicator lamp
K38	Oil level indicator lamp
K83	Malfunction indicator lamp
K105	Low fuel level indicator lamp
K132	Electronic power control malfunction indicator lamp
T1o	Single connector
T2cw	Double connector
T6z	6-pin connector
T14	14-pin connector
T32	32-pin connector
132	Ground connection 3 (in engine compartment wiring harness)
269	Sensor ground connection 1 (in instrument panel wiring harness)
376	Ground connection 11 (in main wiring harness)
655	Ground connection on left headlamp
*	Only for vehicles with maintenance interval extension

ws	=	white
sw	=	black
ro	=	red
rt	=	red
br	=	brown
gn	=	green
bl	=	blue
gr	=	grey
li	=	lilac
vi	=	lilac
ge	=	yellow
or	=	orange
rs	=	pink

Protected by copyright. Copying for private or commercial purposes, in any form or medium unless authorised by Volkswagen AG. Volkswagen AG does not guarantee or accept any liability with respect to the correctness of information in this document. Copyright by Volkswagen AG.

Structure-borne sound actuator , (A8H)

from April 2010

Protected by copyright. Copying for private or commercial purposes, in part or in whole, is not permitted unless authorised by Volkswagen AG. Volkswagen AG does not guarantee or accept any liability with respect to the correctness of information in this document. Copyright by Volkswagen AG.

Vehicle electrical control module system, Data bus on board diagnostic interface, Structure borne sound control module, Structure-borne sound actuator, Fuse 15 (on fuse panel C)

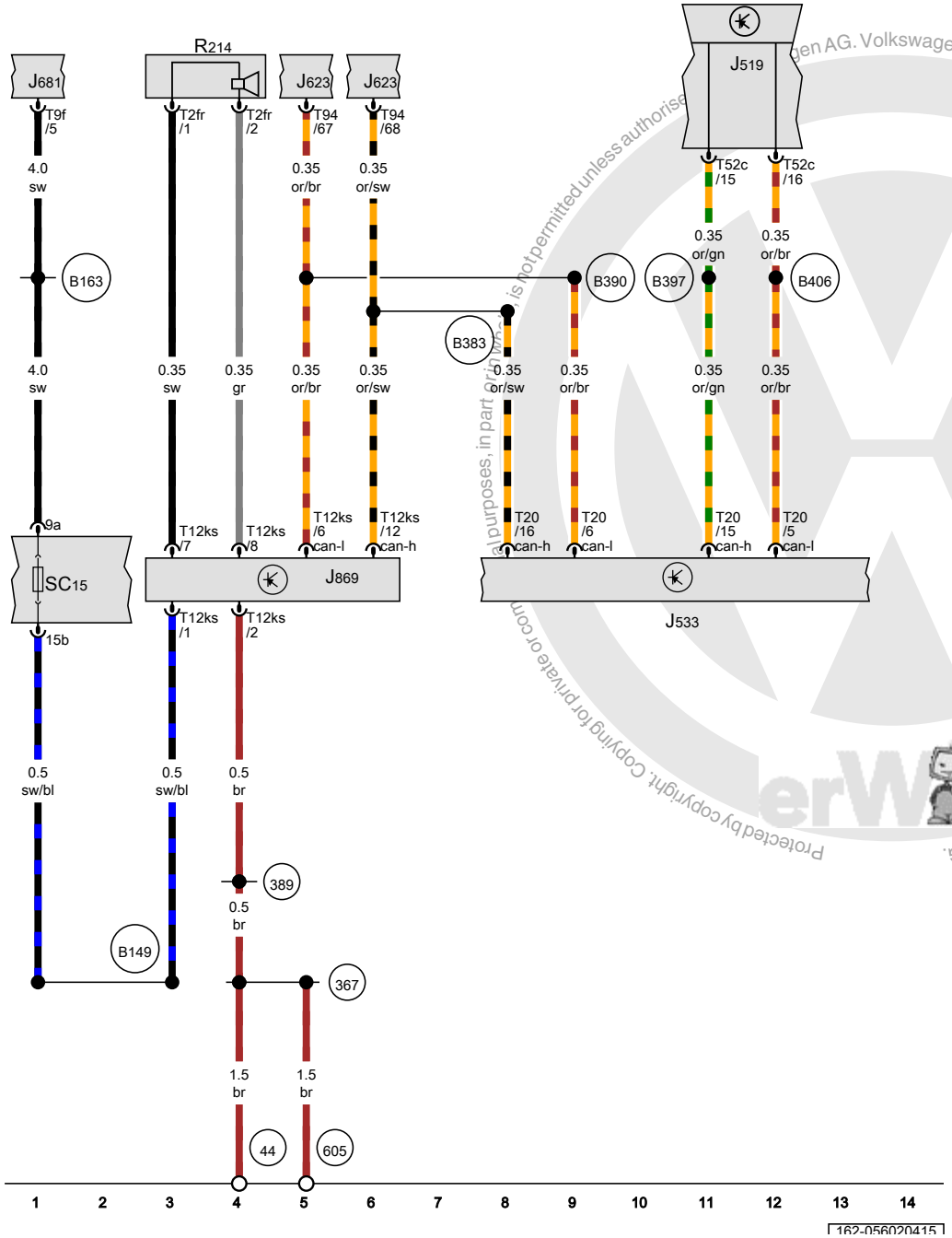

ws	=	white
sw	=	black
ro	=	red
rt	=	red
br	=	brown
gn	=	green
bl	=	blue
gr	=	grey
li	=	lilac
vi	=	lilac
ge	=	yellow
or	=	orange
rs	=	pink

J519	Vehicle electrical control module system
J533	Data bus on board diagnostic interface
J623	Engine control module
J681	Terminal 15 power supply relay 2
J869	Structure borne sound control module
R214	Structure-borne sound actuator
SC15	Fuse 15 (on fuse panel C)
T2fr	Double connector
T9f	9-pin connector
T12ks	12-pin connector
T20	20-pin connector
T52c	52-pin connector
T94	94-pin connector
44	Ground connection on A-pillar, lower left
367	Ground connection 2 (in main wiring harness)
389	Ground connection 24 (in main wiring harness)
605	Ground connection on upper steering column
B149	Positive connection 2 (15a) (in interior wiring harness)
B163	Positive connection 1 (15) (in interior wiring harness)
B383	Powertrain CAN bus high connection 1 (in main wiring harness)
B390	Powertrain CAN bus low connection 1 (in main wiring harness)
B397	Comfort system CAN bus high connection 1 (in main wiring harness)
B406	Comfort system CAN bus low connection 1 (in main wiring harness)

Protected by copyright. Copying for private or commercial purposes, in part or in whole, is not permitted unless authorised by Volkswagen AG. Volkswagen AG does not guarantee or accept any liability with respect to the correctness of information in this document. Copyright by Volkswagen AG.

Standard equipment , (AW0)

from June 2011

Protected by copyright. Copying for private or commercial purposes, in part or in whole, is not permitted unless authorised by Volkswagen AG. Volkswagen AG does not guarantee or accept any liability with respect to the correctness of information in this document. Copyright by Volkswagen AG.

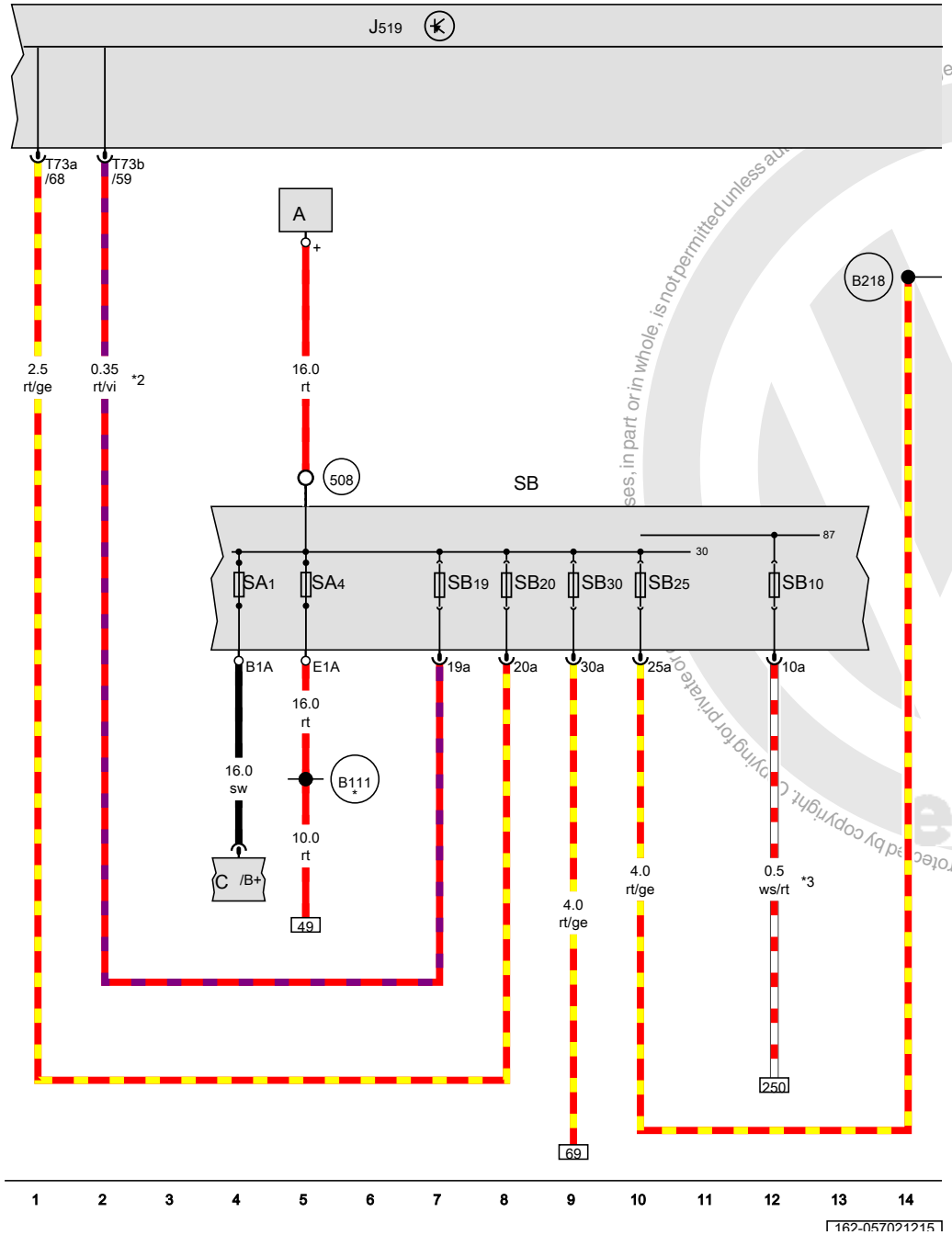

Vehicle electrical control module system, Fuse 1 (on fuse panel A), Fuse 4 (on fuse panel A), Fuse panel B

A	Battery
C	Generator
J519	Vehicle electrical control module system
SA1	Fuse 1 (on fuse panel A)
SA4	Fuse 4 (on fuse panel A)
SB	Fuse panel B
SB10	Fuse 10 (on fuse panel B)
SB19	Fuse 19 (on fuse panel B)
SB20	Fuse 20 (on fuse panel B)
SB25	Fuse 25 (on fuse panel B)
SB30	Fuse 30 (on fuse panel B)
T73a	73-pin connector
T73b	73-pin connector
508	Terminal 30 threaded connection (on E-box)
B111	Positive connection 1 (30a) (in interior wiring harness)
B218	Positive connection 6 (30) (in interior wiring harness)
*	Through May 2013
*2	Diameter depends on equipment
*3	Depending on equipment

ws	=	white
sw	=	black
ro	=	red
rt	=	red
br	=	brown
gn	=	green
bl	=	blue
gr	=	grey
li	=	lilac
vi	=	lilac
ge	=	yellow
or	=	orange
rs	=	pink

Protected by copyright. Copying for private or commercial purposes, in part or in whole, is not permitted unless authorized by Volkswagen AG. Volkswagen AG does not guarantee or assume any liability with respect to the correctness of information in this document. Copyright by Volkswagen AG.

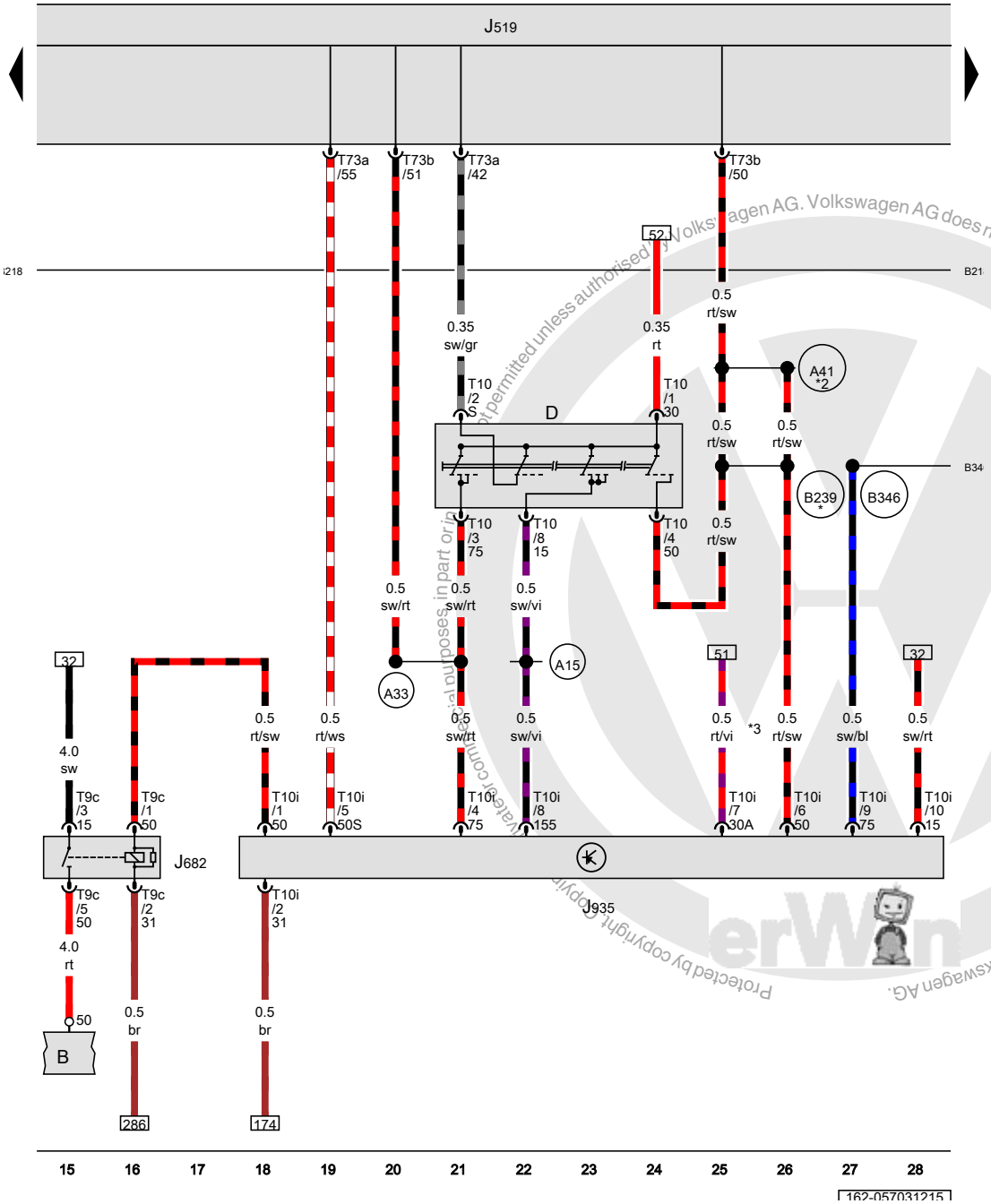

Ignition/starter switch, Vehicle electrical control module system, Terminal 50 power supply relay, Converter box

B	Starter
D	Ignition/starter switch
J519	Vehicle electrical control module system
J682	Terminal 50 power supply relay
J935	Converter box
T9c	9-pin connector
T10	10-pin connector
T10i	10-pin connector
T73a	73-pin connector
T73b	73-pin connector
A15	Plus connection (15) (in instrument cluster wiring harness)
A33	Connection 75 (in instrument panel wiring harness)
A41	Positive connection (50) (in instrument panel wiring harness)
B218	Positive connection 6 (30) (in interior wiring harness)
B239	Positive connection 1 (50) (in interior wiring harness)
B346	Connection 75 (in main wiring harness) 1
*	Through May 2013
*2	from June 2013
*3	The color of the wires depends on vehicle equipment

ws	=	white
sw	=	black
ro	=	red
rt	=	red
br	=	brown
gn	=	green
bl	=	blue
gr	=	grey
li	=	lilac
vi	=	lilac
ge	=	yellow
or	=	orange
rs	=	pink

Protected by copyright. Copyright by Volkswagen AG. Volkswagen AG does not guarantee or accept any liability with respect to the correctness of information in this document. Copying not permitted unless authorised by Volkswagen AG. Volkswagen AG does not guarantee or accept any liability with respect to the correctness of information in this document. Copyright by Volkswagen AG.

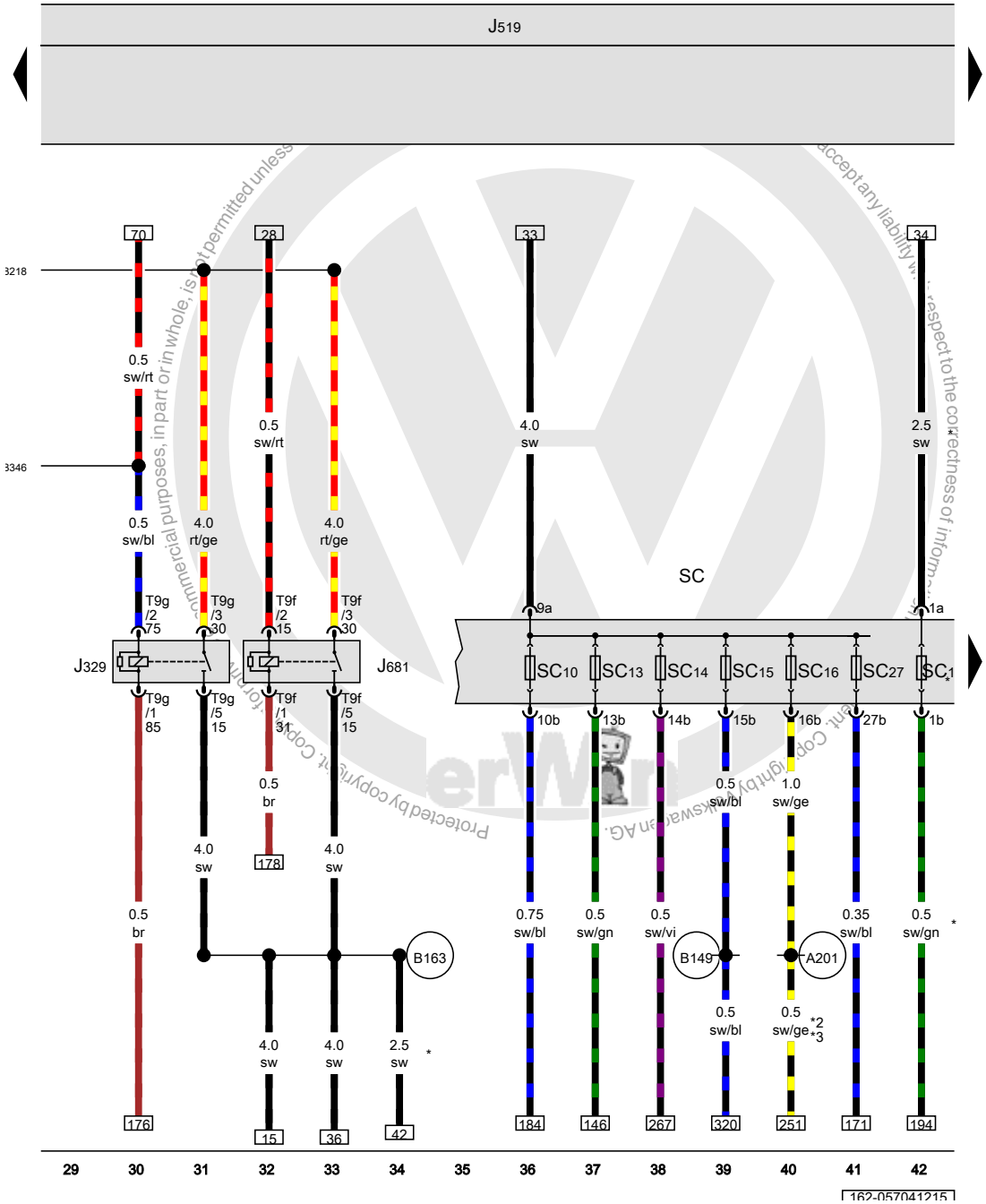

Terminal 15 power supply relay, Vehicle electrical control module system, Fuse panel C

J329	Terminal 15 power supply relay
J519	Vehicle electrical control module system
J681	Terminal 15 power supply relay 2
SC	Fuse panel C
SC1	Fuse 1 (on fuse panel C)
SC10	Fuse 10 (on fuse panel C)
SC13	Fuse 13 (on fuse panel C)
SC14	Fuse 14 (on fuse panel C)
SC15	Fuse 15 (on fuse panel C)
SC16	Fuse 16 (on fuse panel C)
SC27	Fuse 27 (on fuse panel C)
T9f	9-pin connector
T9g	9-pin connector
A201	Positive connection 6 (15a) (in instrument panel wiring harness)
B149	Positive connection 2 (15a) (in interior wiring harness)
B163	Positive connection 1 (15) (in interior wiring harness)
B218	Positive connection 6 (30) (in interior wiring harness)
B346	Connection 75 (in main wiring harness) 1
*	from June 2013
*2	Only for vehicles with a manual transmission
*3	Through May 2013

ws	=	white
sw	=	black
ro	=	red
rt	=	red
br	=	brown
gn	=	green
bl	=	blue
gr	=	grey
li	=	lilac
vi	=	lilac
ge	=	yellow
or	=	orange
rs	=	pink

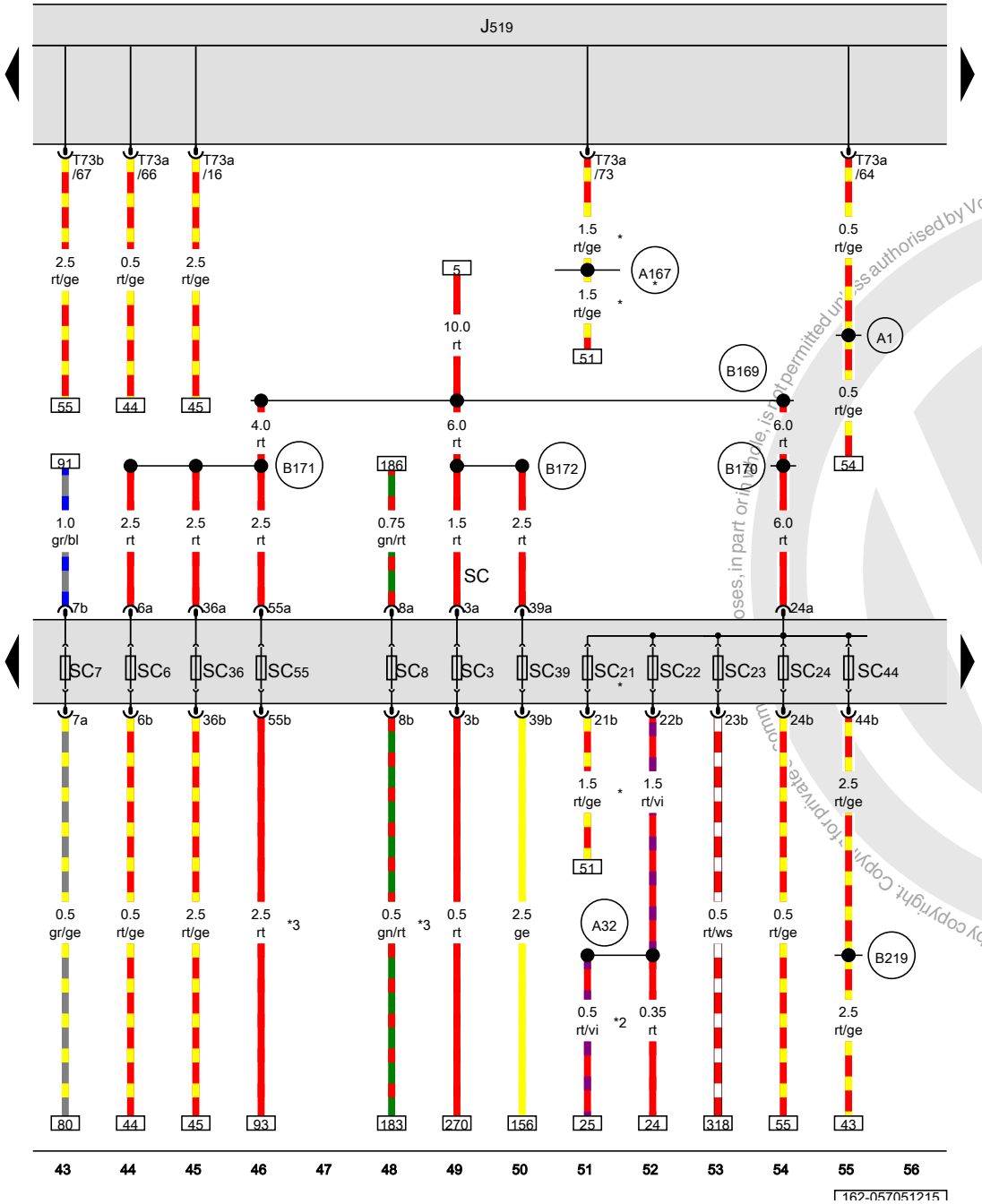

Vehicle electrical control module system, Fuse panel C

J519	Vehicle electrical control module system
SC	Fuse panel C
SC3	Fuse 3 (on fuse panel C)
SC6	Fuse 6 (on fuse panel C)
SC7	Fuse 7 (on fuse panel C)
SC8	Fuse 8 (on fuse panel C)
SC21	Fuse 21 (on fuse panel C)
SC22	Fuse 22 (on fuse panel C)
SC23	Fuse 23 (on fuse panel C)
SC24	Fuse 24 (on fuse panel C)
SC36	Fuse 36 (on fuse panel C)
SC39	Fuse 39 (on fuse panel C)
SC44	Fuse 44 (on fuse panel C)
SC55	Fuse 55 (on fuse panel C)
T73a	73-pin connector
T73b	73-pin connector
A1	Positive connection 30a (in instrument panel wiring harness)
A32	Positive connection (30) (in instrument panel wiring harness)
A167	Positive connection 3 (30a) (in instrument panel wiring harness)
B169	Positive connection 1 (30) (in interior wiring harness)
B170	Positive connection 2 (30) (in interior wiring harness)
B171	Positive connection 3 (30) (in interior wiring harness)
B172	Positive connection 4 (30) (in interior wiring harness)
B219	Positive connection 4 (30a) (in interior wiring harness)

*	from June 2013
*2	The color of the wires depends on vehicle equipment
*3	Diameter depends on equipment

ws	=	white
sw	=	black
ro	=	red
rt	=	red
br	=	brown
gn	=	green
bl	=	blue
gr	=	grey
li	=	lilac
vi	=	lilac
ge	=	yellow
or	=	orange
rs	=	pink

Protected by copyright. Copyright for private use only. Volkswagen AG.
Reproduction, in part or in whole, is not permitted unless authorised by Volkswagen AG. Volkswagen AG does not guarantee or accept any liability with respect to the correctness of information in this document. Copyright by Volkswagen AG.

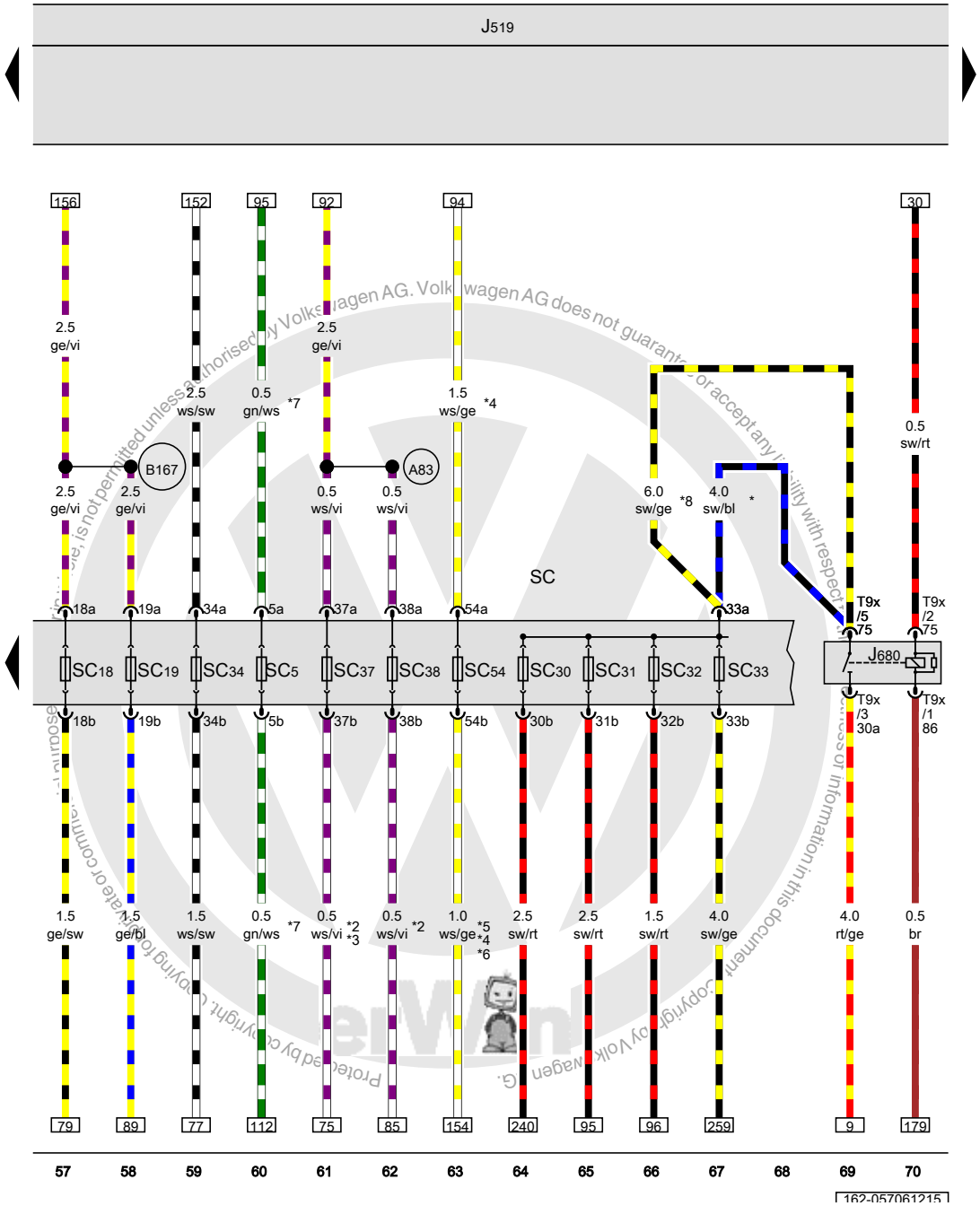

Vehicle electrical control module system, Terminal 75 power supply relay 1, Fuse panel C

J519	Vehicle electrical control module system
J680	Terminal 75 power supply relay 1
SC	Fuse panel C
SC5	Fuse 5 (on fuse panel C)
SC18	Fuse 18 (on fuse panel C)
SC19	Fuse 19 (on fuse panel C)
SC30	Fuse 30 (on fuse panel C)
SC31	Fuse 31 (on fuse panel C)
SC32	Fuse 32 (on fuse panel C)
SC33	Fuse 33 (on fuse panel C)
SC34	Fuse 34 (on fuse panel C)
SC37	Fuse 37 (on fuse panel C)
SC38	Fuse 38 (on fuse panel C)
SC54	Fuse 54 (on fuse panel C)
T9x	9-pin connector
A83	Daytime running lamps connection (in instrument panel wiring harness)
B167	Connection 56b (in interior wiring harness)
*	Through June 2012
*2	Only for vehicles with daytime running lamps
*3	The color of the wires depends on vehicle equipment
*4	Depending on equipment
*5	USA only
*6	Diameter depends on equipment
*7	Only for vehicles with fog lamps
*8	from July 2012

ws	=	white
sw	=	black
ro	=	red
rt	=	red
br	=	brown
gn	=	green
bl	=	blue
gr	=	grey
li	=	lilac
vi	=	lilac
ge	=	yellow
or	=	orange
rs	=	pink

Instrument panel and switch illumination dimmer switch, Vehicle electrical control module system, Left front fog lamp bulb, Right front fog lamp bulb, Left position lamp bulb, Left front headlamp, Left front turn signal bulb

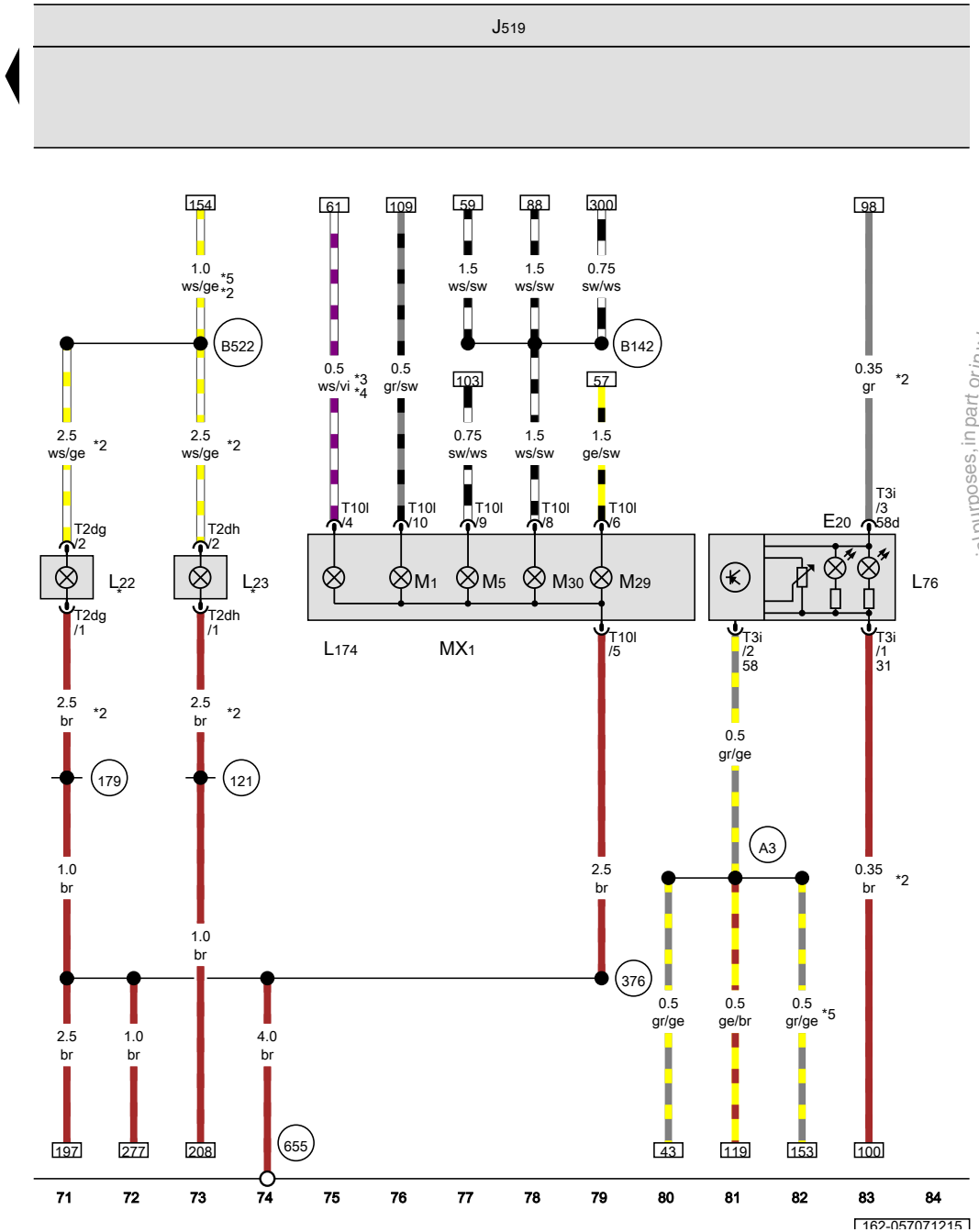

E20	Instrument panel and switch illumination dimmer switch
J519	Vehicle electrical control module system
L22	Left front fog lamp bulb
L23	Right front fog lamp bulb
L76	Push button illumination bulb
L174	Left daytime running lamp bulb
M1	Left position lamp bulb
MX1	Left front headlamp
M5	Left front turn signal bulb
M29	Left low beam headlamp bulb
M30	Left high beam headlamp bulb
T2dg	2-pin connector
T2dh	2-pin connector
T3i	3-pin connector
T10l	10-pin connector
121	Ground connection 2 (in right front wiring harness)
179	Ground connection (in left headlamp wiring harness)
376	Ground connection 11 (in main wiring harness)
655	Ground connection on left headlamp
A3	Positive connection (58) (in instrument panel wiring harness)
B142	Positive connection 2 (56a) (in interior wiring harness)
B522	Fog lamp connection (in main wiring harness)
*	Depending on equipment
*2	Diameter depends on equipment
*3	Only for vehicles with daytime running lamps
*4	The color of the wires depends on vehicle equipment
*5	USA only

ws	=	white
sw	=	black
ro	=	red
rt	=	red
br	=	brown
gn	=	green
bl	=	blue
gr	=	grey
li	=	lilac
vi	=	lilac
ge	=	yellow
or	=	orange
rs	=	pink

Protected by copyright. Copying for private or commercial purposes, in part or in whole, is not permitted unless authorised by Volkswagen AG. Volkswagen AG does not guarantee or accept any liability with respect to the correctness of information in this document. Copyright by Volkswagen AG.

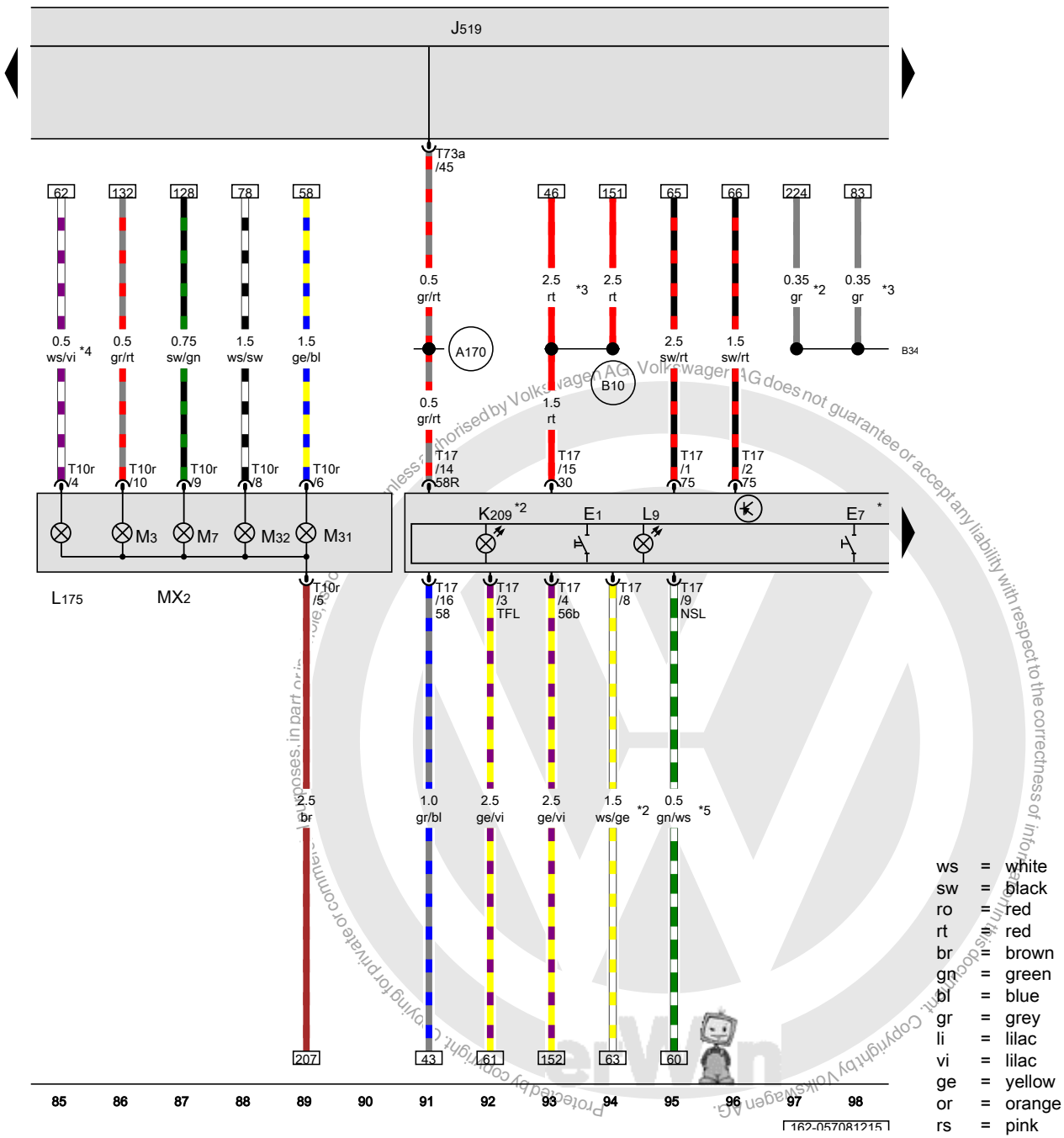

Light switch, Fog lamp switch, Vehicle electrical control module system, Automatic light control indicator lamp, Right front headlamp, Right position lamp bulb, Right front turn signal bulb

E1	Light switch
E7	Fog lamp switch
J519	Vehicle electrical control module system
K209	Automatic light control indicator lamp
L9	Headlamp switch illumination bulb
L175	Right daytime running lamp bulb
MX2	Right front headlamp
M3	Right position lamp bulb
M7	Right front turn signal bulb
M31	Right low beam headlamp bulb
M32	Right high beam headlamp bulb
T10r	10-pin connector
T17	17-pin connector
T73a	73-pin connector
(A170)	Connection 58R (in instrument panel wiring harness) 2
(B10)	Positive connection (30) (in light switch wiring harness)
(B340)	Connection 58d (in main wiring harness) 1
*	If available
*2	Depending on equipment
*3	Diameter depends on equipment
*4	Only for vehicles with daytime running lamps
*5	Only for vehicles with fog lamps

ws	=	white
sw	=	black
ro	=	red
rt	=	red
br	=	brown
gn	=	green
bl	=	blue
gr	=	grey
li	=	lilac
vi	=	lilac
ge	=	yellow
or	=	orange
rs	=	pink

Protected by copyright. Copying for private or commercial purposes, in part or in whole, is not permitted unless authorised by Volkswagen AG. Volkswagen AG does not guarantee or accept any liability with respect to the correctness of information in this document. Copyright by Volkswagen AG.

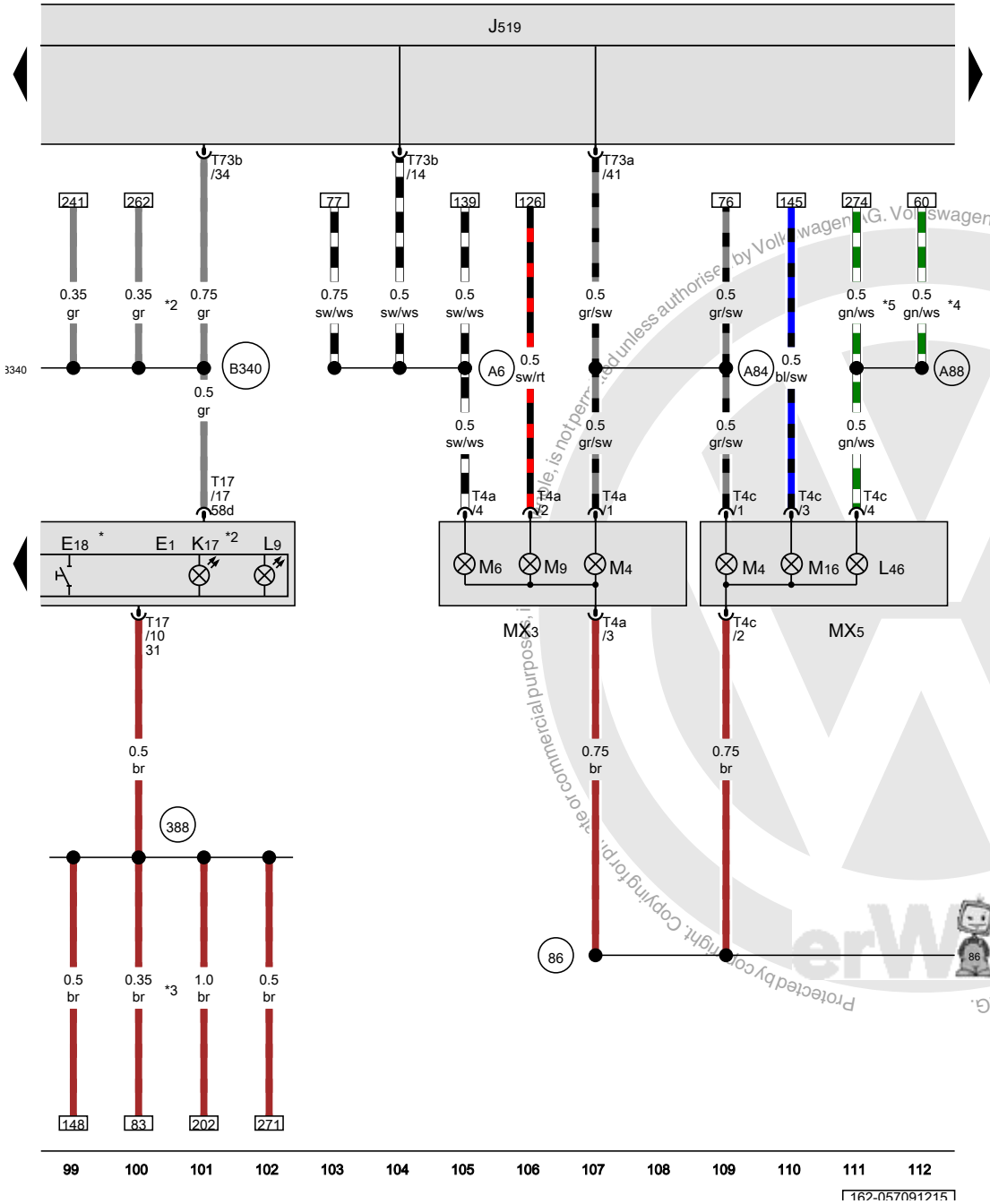

Light switch, Rear fog lamp switch, Vehicle electrical control module system, Fog lamp indicator lamp, Left rear fog lamp bulb, Left tail lamp, Left rear turn signal bulb, Left brake lamp bulb, Left back-up lamp bulb

E1	Light switch
E18	Rear fog lamp switch
J519	Vehicle electrical control module system
K17	Fog lamp indicator lamp
L9	Headlamp switch illumination bulb
L46	Left rear fog lamp bulb
MX3	Left tail lamp
M4	Left tail lamp bulb
MX5	Left tail lamp 2
M6	Left rear turn signal bulb
M9	Left brake lamp bulb
M16	Left back-up lamp bulb
T4a	4-pin connector
T4c	4-pin connector
T17	17-pin connector
T73a	73-pin connector
T73b	73-pin connector
86	Ground connection 1 (in rear wiring harness)
388	Ground connection 23 (in main wiring harness)
A6	Left turn signal positive connection (in instrument panel wiring harness)
A84	Connection 58L (in instrument panel wiring harness)
A88	Fog lamp connection (in instrument panel wiring harness)
B340	Connection 58d (in main wiring harness) 1
*	If available
*2	Depending on equipment
*3	Diameter depends on equipment
*4	Only for vehicles with fog lamps
*5	Only for vehicles without US equipment

ws	=	white
sw	=	black
ro	=	red
rt	=	red
br	=	brown
gn	=	green
bl	=	blue
gr	=	grey
li	=	lilac
vi	=	lilac
ge	=	yellow
or	=	orange
rs	=	pink

Protected by copyright. Copying for private or commercial purposes, in any form, is not permitted unless authorised by Volkswagen AG. Volkswagen AG does not guarantee or accept any liability with respect to the correctness of information in this document. Copyright by Volkswagen AG.

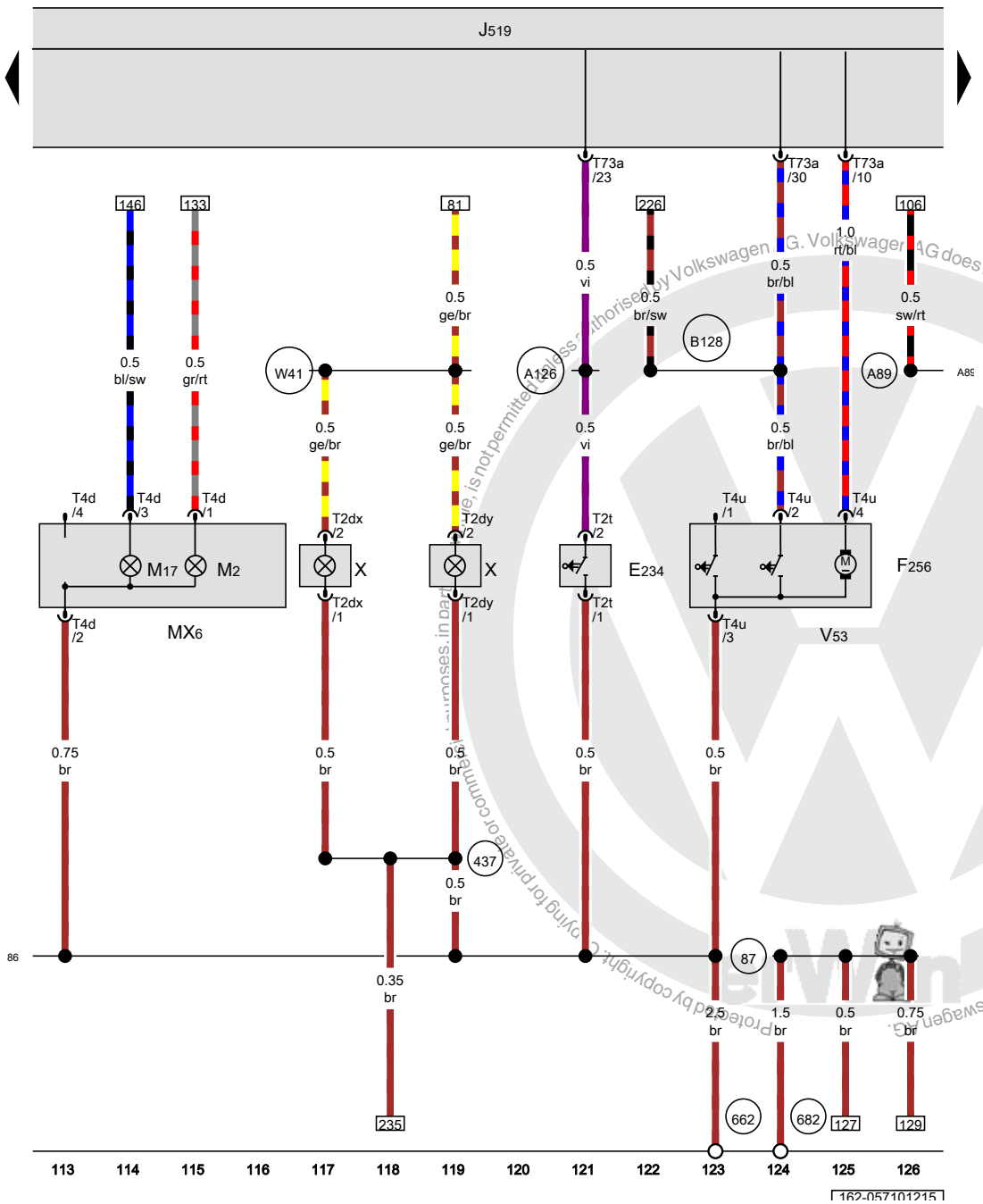

Release button in rear lid handle, Rear lid lock unit, Vehicle electrical control module system, Right back-up lamp bulb, Rear lid central locking system motor, License plate lamp

E234	Release button in rear lid handle
F256	Rear lid lock unit
J519	Vehicle electrical control module system
M2	Right tail lamp bulb
MX6	Right tail lamp 2
M17	Right back-up lamp bulb
T2dx	2-pin connector
T2dy	2-pin connector
T2t	2-pin connector
T4d	4-pin connector
T4u	4-pin connector
T73a	73-pin connector
V53	Rear lid central locking system motor
X	License plate lamp
86	Ground connection 1 (in rear wiring harness)
87	Ground connection 2 (in rear wiring harness)
437	Ground connection (in license plate lamp wiring harness)
662	Ground connection in left rear side panel
682	Ground connection 2 in right rear side panel
A89	Connection 54 (in instrument panel wiring harness) 2
A126	Rear lid contact switch connection (in instrument panel wiring harness)
B128	Luggage compartment lamp connection (in interior wiring harness)
W41	Positive connection (58) (in license plate lamp wiring harness)

ws	=	white
sw	=	black
ro	=	red
rt	=	red
br	=	brown
gn	=	green
bl	=	blue
gr	=	grey
li	=	lilac
vi	=	lilac
ge	=	yellow
or	=	orange
rs	=	pink

Protected by copyright. Copying for private or commercial purposes, in part or in whole, is not permitted unless authorised by Volkswagen AG. Volkswagen AG does not guarantee or accept any liability with respect to the correctness of information in this document.

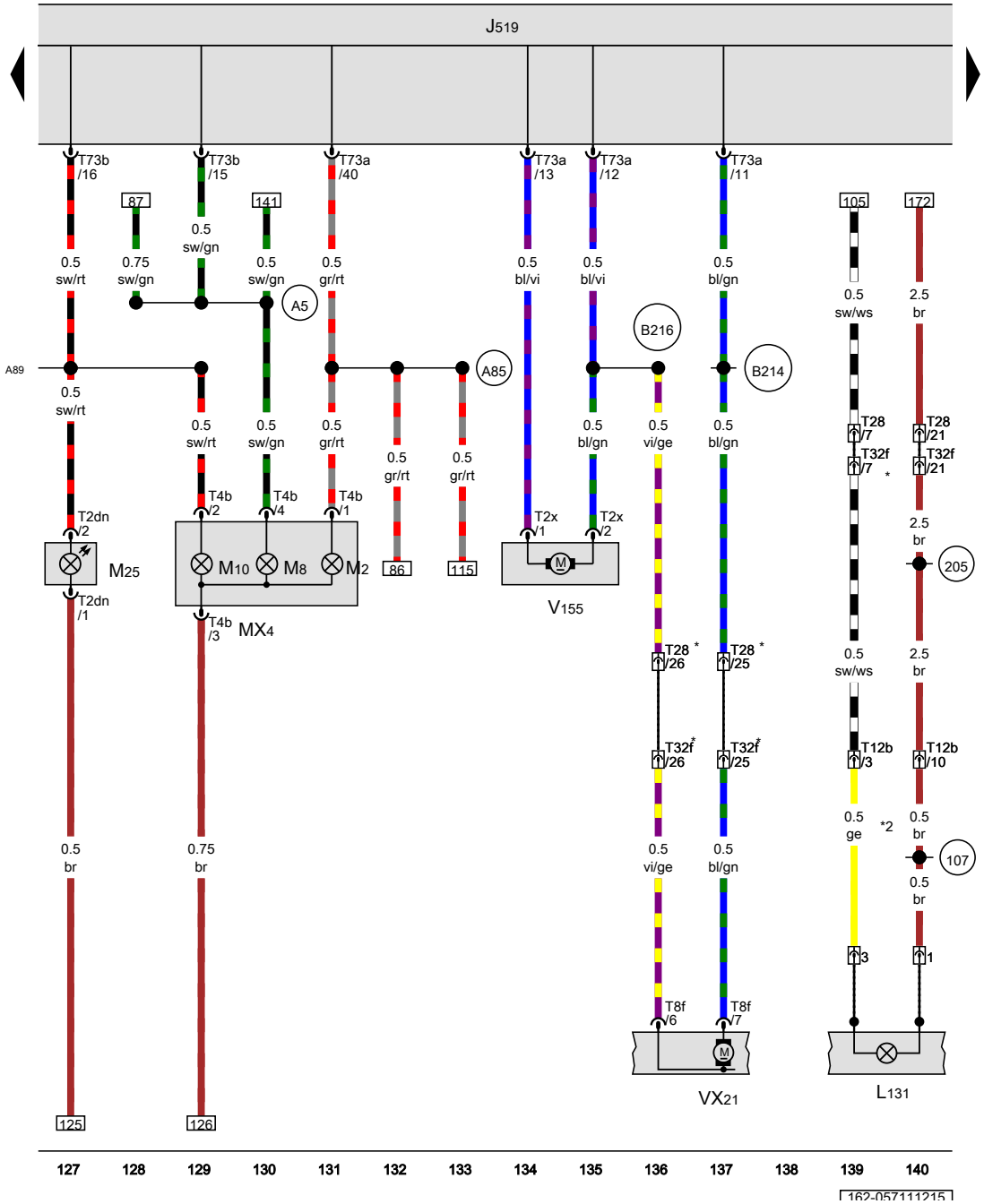

Vehicle electrical control module system, Driver exterior rearview mirror turn signal bulb, Right tail lamp, Right rear turn signal bulb, Right brake lamp bulb, High-mounted brake lamp bulb, Fuel filler door lock motor

J519	Vehicle electrical control module system
L131	Driver exterior rearview mirror turn signal bulb
M2	Right tail lamp bulb
MX4	Right tail lamp
M8	Right rear turn signal bulb
M10	Right brake lamp bulb
M25	High-mounted brake lamp bulb
T2dn	2-pin connector
T2sl	2-pin connector, in the driver exterior rearview mirror housing
T2x	2-pin connector
T4b	4-pin connector
T8f	8-pin connector
T12b	12-pin connector, in the driver door
T28	28-pin connector, Left A-pillar, bottom
T32f	32-pin connector, Left A-pillar, bottom
T73a	73-pin connector
T73b	73-pin connector
VX21	Driver door lock unit
V155	Fuel filler door lock motor
107	Ground connection (in exterior mirror wiring harness)
205	Ground connection (in driver door wiring harness)
A5	Right turn signal positive connection (in instrument panel wiring harness)
A85	Connection 58R (in instrument panel wiring harness)
A89	Connection 54 (in instrument panel wiring harness) 2
B214	Central locking connection 1 (in interior wiring harness)
B216	Central locking connection 3 (in interior wiring harness)
*	Depending on equipment
*2	The color of the wires depends on vehicle equipment

ws	=	white
sw	=	black
ro	=	red
rt	=	red
br	=	brown
gn	=	green
bl	=	blue
gr	=	grey
li	=	lilac
vi	=	lilac
ge	=	yellow
or	=	orange
rs	=	pink

Protected by copyright. Copying for private or commercial purposes, in part or in whole, is not permitted unless authorised by Volkswagen AG. Volkswagen AG does not guarantee or accept any liability with respect to the correctness of information in this document. Copyright by Volkswagen AG.

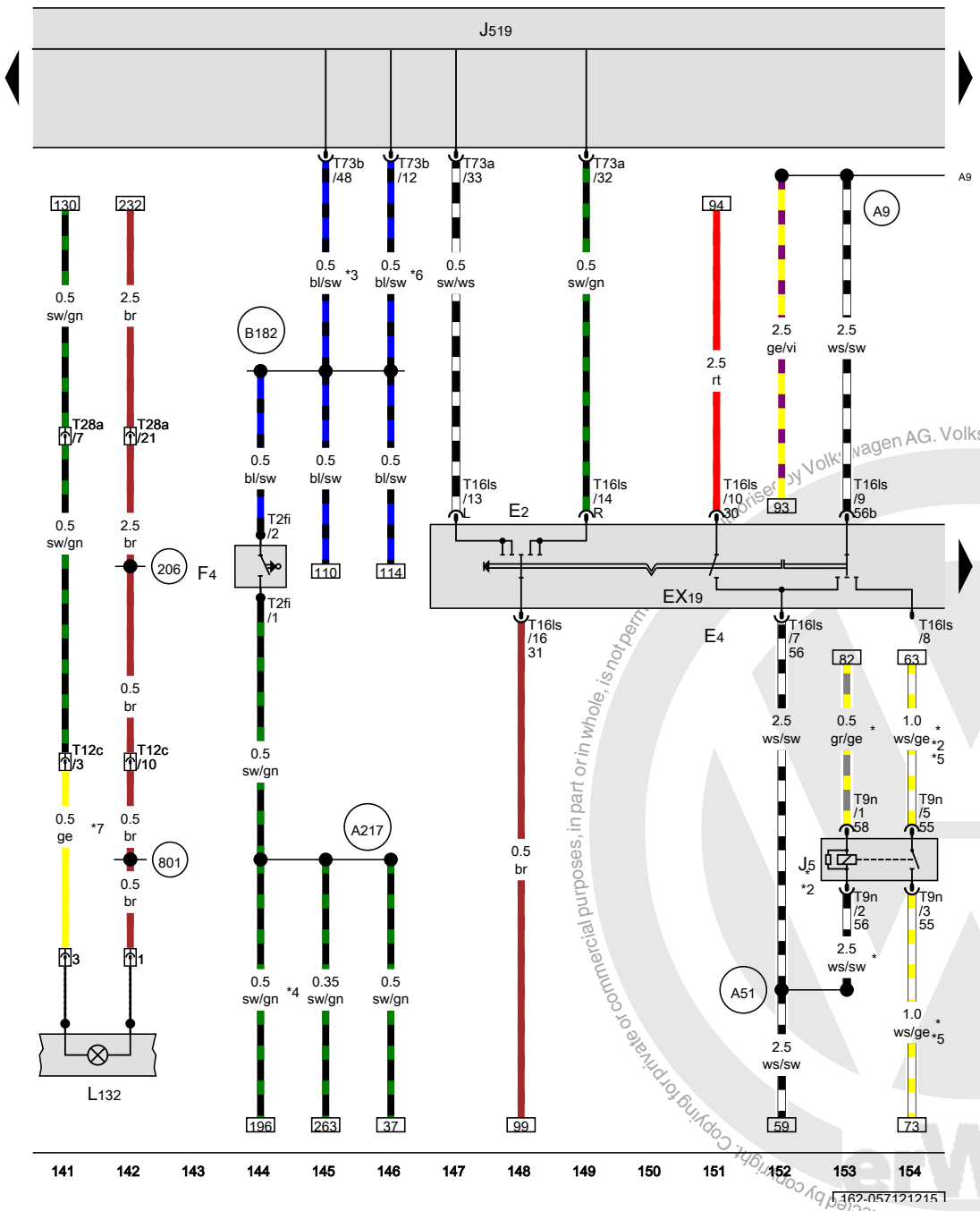

Turn signal switch, Headlamp dimmer/flasher switch, Left steering column switch, Back-up lamp switch, Vehicle electrical control module system, Front passenger exterior rearview mirror turn signal bulb

E2	Turn signal switch
E4	Headlamp dimmer/flasher switch
EX19	Left steering column switch
F4	Back-up lamp switch
J5	Fog lamp relay
J519	Vehicle electrical control module system
L132	Front passenger exterior rearview mirror turn signal bulb
T2fi	2-pin connector
T2sr	2-pin connector
T9n	9-pin connector
T12c	12-pin connector, in the front passenger door
T16ls	16-pin connector
T28a	28-pin connector, Right A-pillar, bottom
T73a	73-pin connector
T73b	73-pin connector
206	Ground connection (in front passenger door wiring harness)
801	Ground connection 2 (in exterior rearview mirror wiring harness)
A9	Positive connection (56b) (in instrument cluster wiring harness)
A51	Connection 56 (in instrument panel wiring harness)
A217	Positive connection 8 (15a) (in instrument panel wiring harness)
B182	Connection RF (in interior wiring harness)
*	USA only
*2	Depending on equipment
*3	Only for vehicles with a manual transmission
*4	Through May 2013
*5	Diameter depends on equipment
*6	Only for vehicles with automatic transmission
*7	The color of the wires depends on vehicle equipment

ws	=	white
sw	=	black
ro	=	red
rt	=	red
br	=	brown
gn	=	green
bl	=	blue
gr	=	grey
li	=	lilac
vi	=	lilac
ge	=	yellow
or	=	orange
rs	=	pink

Protected by copyright. Copying for private or commercial purposes, in part or in whole, is not permitted unless authorised by Volkswagen AG. Volkswagen AG does not guarantee or accept any liability with respect to the correctness of information in this document. Copyright by Volkswagen AG.

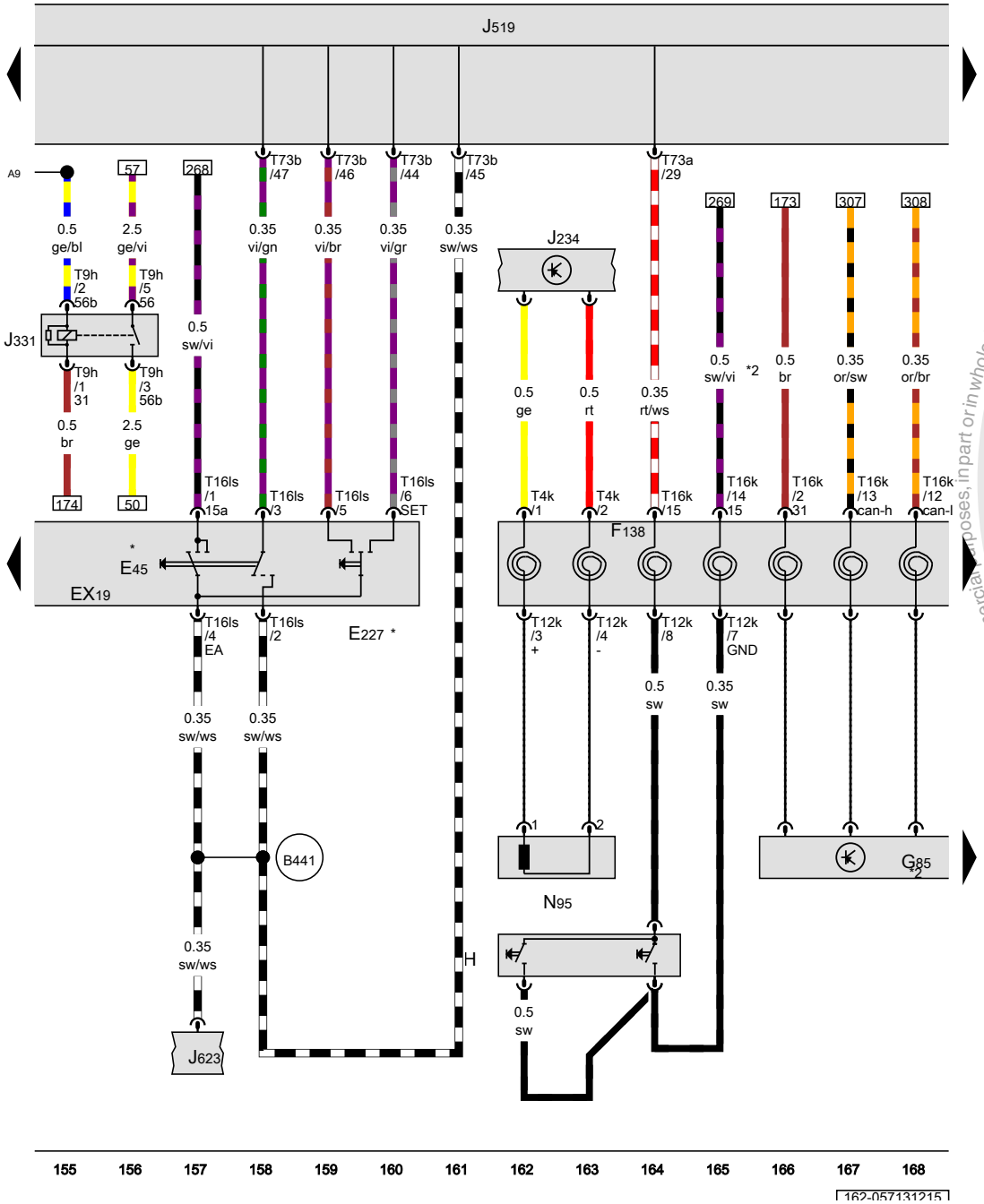

Left steering column switch, Cruise control switch, Cruise control -SET- button, Airbag spiral spring/return spring with slip ring, Steering angle sensor, Vehicle electrical control module system

EX19	Left steering column switch
E45	Cruise control switch
E227	Cruise control -SET- button
F138	Airbag spiral spring/return spring with slip ring
G85	Steering angle sensor
H	Signal horn activation
J234	Airbag control module
J331	Low beam relay
J519	Vehicle electrical control module system
J623	Engine control module
N95	Driver airbag igniter
T4k	4-pin connector
T9h	9-pin connector
T12k	12-pin connector
T16k	16-pin connector
T16ls	16-pin connector
T73a	73-pin connector
T73b	73-pin connector
A9	Positive connection (56b) (in instrument cluster wiring harness)
B441	Cruise control connection (in main wiring harness)
*	Only for vehicles with cruise control
*2	Depending on equipment

ws	=	white
sw	=	black
ro	=	red
rt	=	red
br	=	brown
gn	=	green
bl	=	blue
gr	=	grey
li	=	lilac
vi	=	lilac
ge	=	yellow
or	=	orange
rs	=	pink

Protected by copyright. Copying for private or commercial purposes, in part or in whole, is not permitted unless authorised by Volkswagen AG. Volkswagen AG does not guarantee or accept any liability with respect to the correctness of information in this document. Copyright by Volkswagen AG.

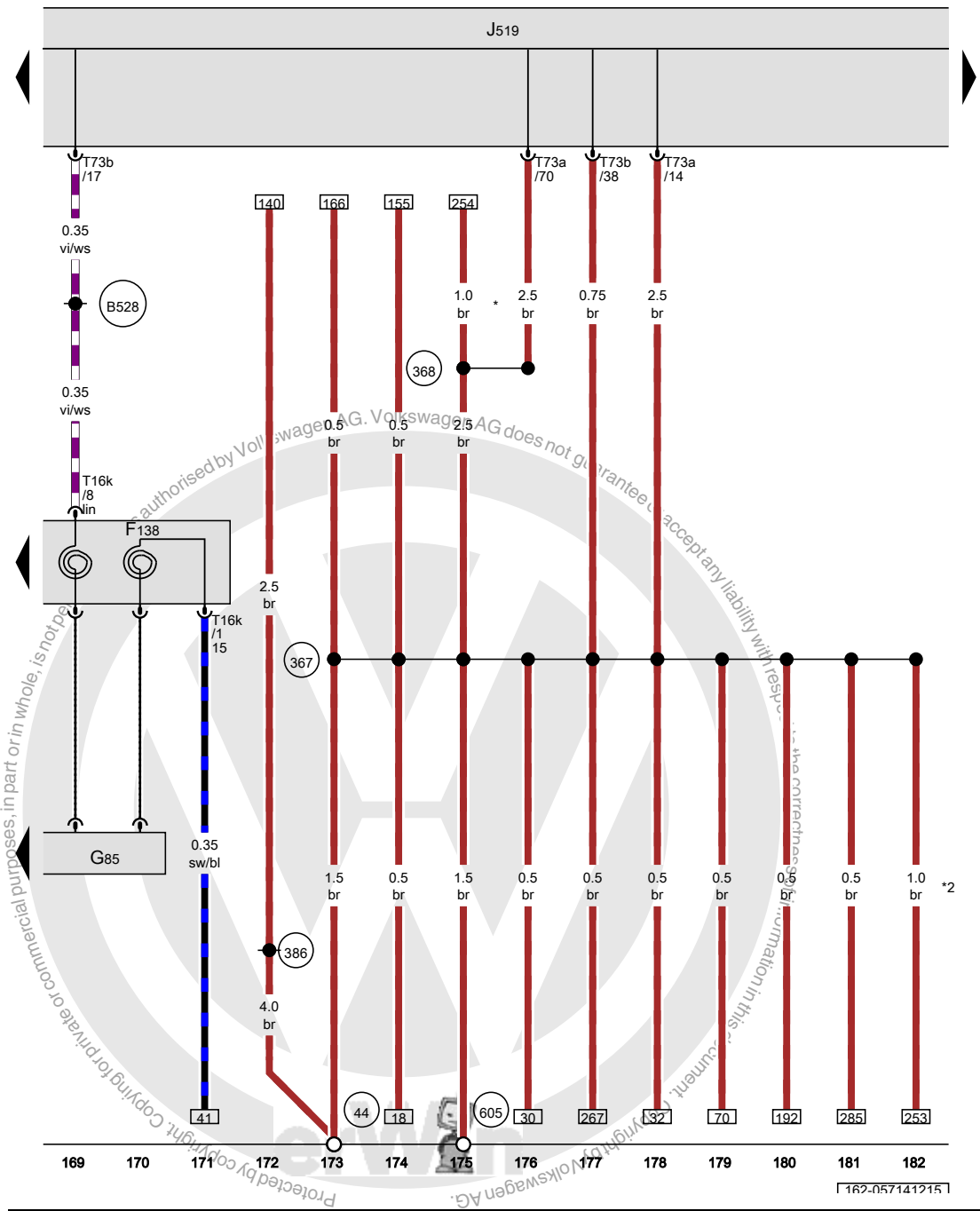

Airbag spiral spring/return spring with slip ring, Steering angle sensor, Vehicle electrical control module system

F138	Airbag spiral spring/return spring with slip ring
G85	Steering angle sensor
J519	Vehicle electrical control module system
T16k	16-pin connector
T73a	73-pin connector
T73b	73-pin connector
44	Ground connection on A-pillar, lower left
367	Ground connection 2 (in main wiring harness)
368	Ground connection 3 (in main wiring harness)
386	Ground connection 21 (in main wiring harness)
605	Ground connection on upper steering column
B528	LIN bus connection 1 (in main wiring harness)
*	Through May 2013
*2	from June 2013

ws	=	white
sw	=	black
ro	=	red
rt	=	red
br	=	brown
gn	=	green
bl	=	blue
gr	=	grey
li	=	lilac
vi	=	lilac
ge	=	yellow
or	=	orange
rs	=	pink

Protected by copyright. Copying for private or commercial purposes, in part or in whole, is not permitted unless authorised by Volkswagen AG. Volkswagen AG does not guarantee or accept any liability with respect to the correctness of information in this document. Copyright by Volkswagen AG.

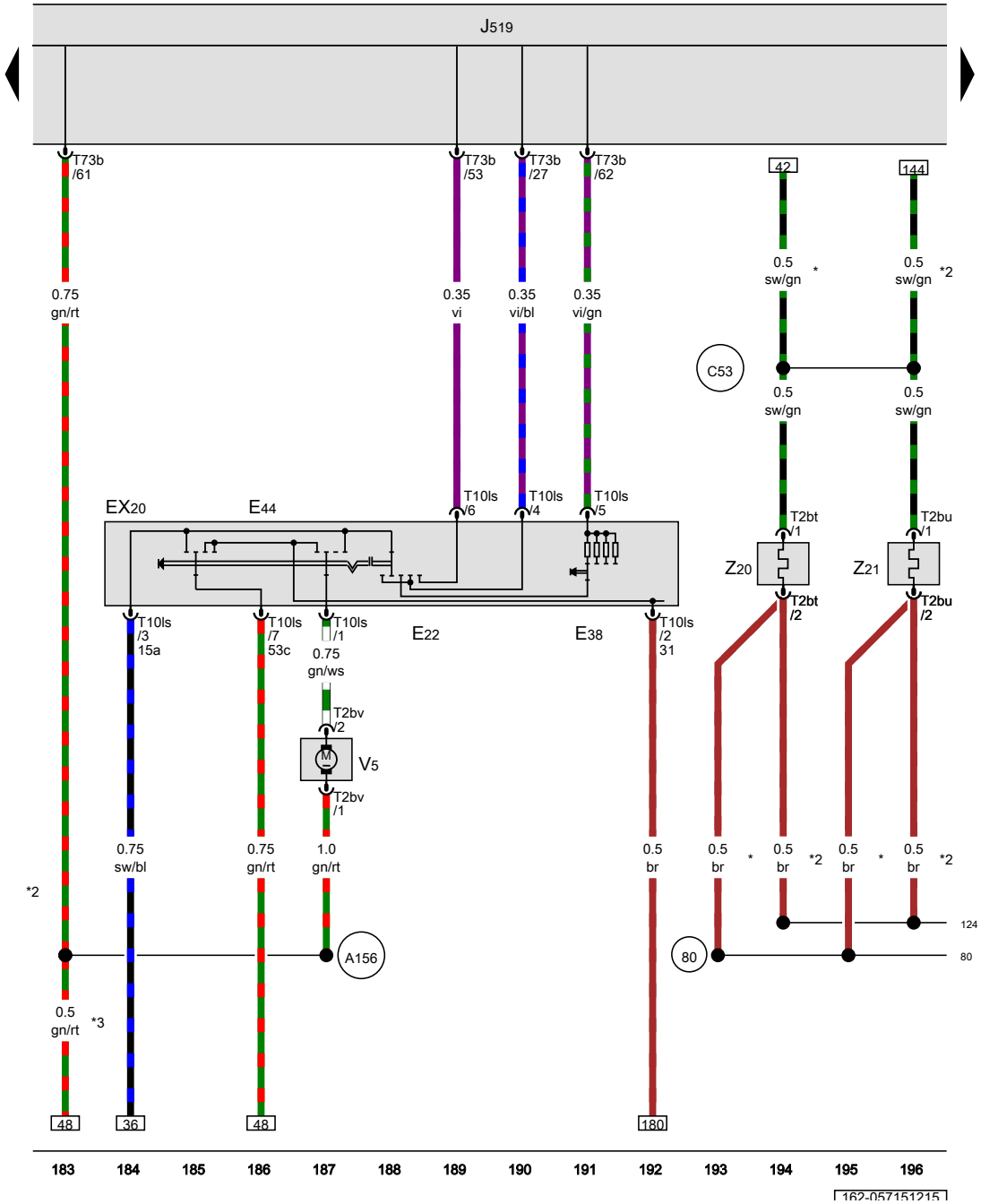

Windshield wiper intermittent mode switch, Windshield and headlamp washer pump switch, Vehicle electrical control module system, Left washer nozzle heater, Right washer nozzle heater

EX20	Right steering column switch
E22	Windshield wiper intermittent mode switch
E38	Windshield wiper intermittent regulator
E44	Windshield and headlamp washer pump switch
J519	Vehicle electrical control module system
T2bt	2-pin connector
T2bu	2-pin connector
T2bv	2-pin connector
T10ls	10-pin connector
T73b	73-pin connector
V5	Windshield washer pump
Z20	Left washer nozzle heater
Z21	Right washer nozzle heater
(80)	Ground connection 1 (in instrument cluster wiring harness)
(124)	Ground connection (in right engine compartment wiring harness)
(A156)	Connection 53c (in instrument panel wiring harness)
(C53)	Positive connection (x) (in heated spray nozzle wiring harness)
*	from June 2013
*2	Through May 2013
*3	Diameter depends on equipment

ws	=	white
sw	=	black
ro	=	red
rt	=	red
br	=	brown
gn	=	green
bl	=	blue
gr	=	grey
li	=	lilac
vi	=	lilac
ge	=	yellow
or	=	orange
rs	=	pink

Protected by copyright. Copying for private or commercial purposes, in part or in whole, is not permitted unless authorised by Volkswagen AG. Volkswagen AG does not guarantee or accept any liability with respect to the correctness of information in this document. Copyright by Volkswagen AG.

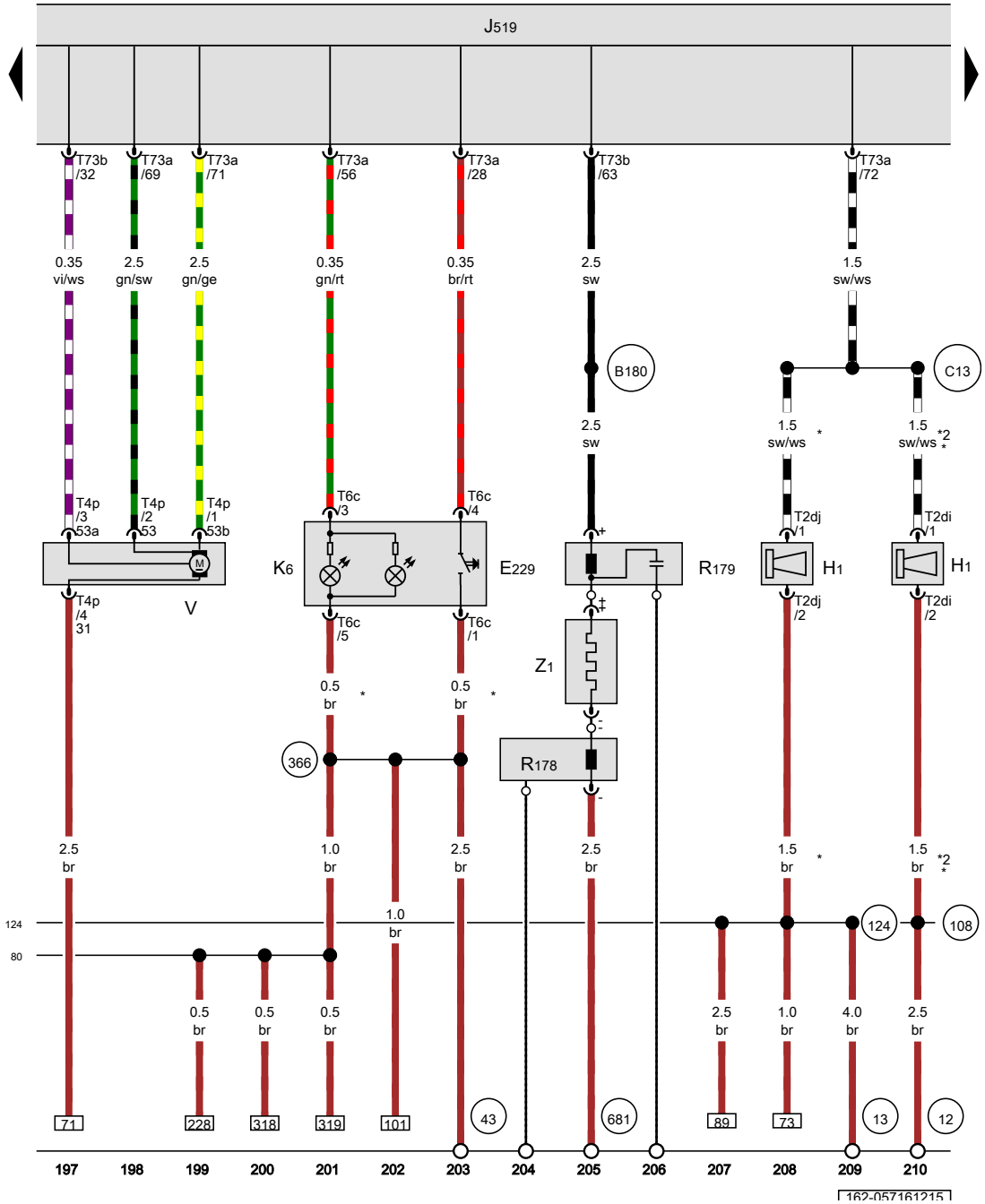

ws = white
sw = black
ro = red
rt = red
br = brown
gn = green
bl = blue
gr = grey
li = lilac
vi = lilac
ge = yellow
or = orange
rs = pink

Emergency flasher button, Signal horn and dual tone horn, Vehicle electrical control module system, Emergency flasher indicator lamp, Windshield wiper motor, Rear window defogger

E229	Emergency flasher button
H1	Signal horn and dual tone horn
J519	Vehicle electrical control module system
K6	Emergency flasher indicator lamp
R178	FM frequency filter in negative wire
R179	FM frequency filter in positive wire
T2di	2-pin connector
T2dj	2-pin connector
T4p	4-pin connector
T6c	6-pin connector
T73a	73-pin connector
T73b	73-pin connector
V	Windshield wiper motor
Z1	Rear window defogger
12	Ground connection in engine compartment, left
13	Ground connection in engine compartment, right
43	Ground connection on A-pillar, lower right
80	Ground connection 1 (in instrument cluster wiring harness)
108	Ground connection 2 (in left front wiring harness)
124	Ground connection (in right engine compartment wiring harness)
366	Ground connection 1 (in main wiring harness)
681	Ground connection 1 in right rear side panel
B180	Rear window defogger connection (in interior wiring harness)
C13	Positive connection (in dual tone horn wiring harness)
*	Diameter depends on equipment
*2	Only for vehicles with dual tone horn

Copyright Volkswagen AG. Volkswagen AG does not give any guarantee or accept any liability with respect to the correctness of information in this document. Copying for private or commercial purposes, in part or in whole, is not permitted unless authorised by Volkswagen AG. Protected by copyright.

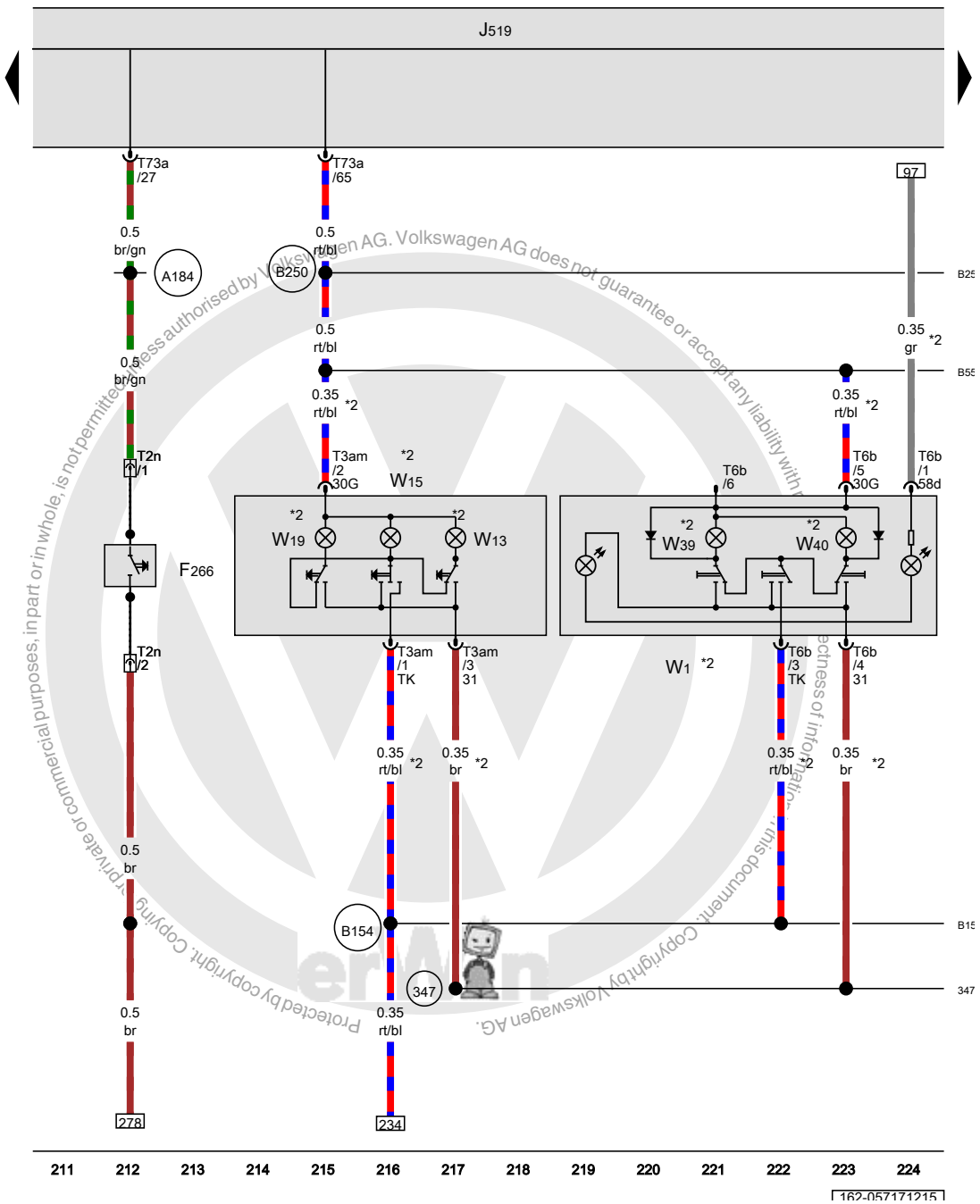

ws	=	white
sw	=	black
ro	=	red
rt	=	red
br	=	brown
gn	=	green
bl	=	blue
gr	=	grey
li	=	lilac
vi	=	lilac
ge	=	yellow
or	=	orange
rs	=	pink

Engine hood contact switch, Vehicle electrical control module system, Front interior lamp, Front passenger reading lamp, Interior lamp with delay switch, Driver reading lamp, Left center reading lamp, Right center reading lamp

F266	Engine hood contact switch
J519	Vehicle electrical control module system
T2n	2-pin connector, near the headlamps
T3am	3-pin connector
T6b	6-pin connector
T73a	73-pin connector
W1	Front interior lamp
W13	Front passenger reading lamp
W15	Interior lamp with delay switch
W19	Driver reading lamp
W39	Left center reading lamp
W40	Right center reading lamp
347	Ground connection (in roof wiring harness)
A184	Hood contact switch connection (in instrument panel wiring harness)
B154	Connection TK (in interior wiring harness) 1
B250	Positive connection (in roof wiring harness)
B552	Positive connection 2 (in roof wiring harness)
*	Only for vehicles with dual tone horn
*2	Depending on equipment

Protected by copyright. Copying for private or commercial purposes, in part or in whole, is not permitted unless authorised by Volkswagen AG. Volkswagen AG does not guarantee or accept any liability with respect to the correctness of information in this document. Copyright by Volkswagen AG.

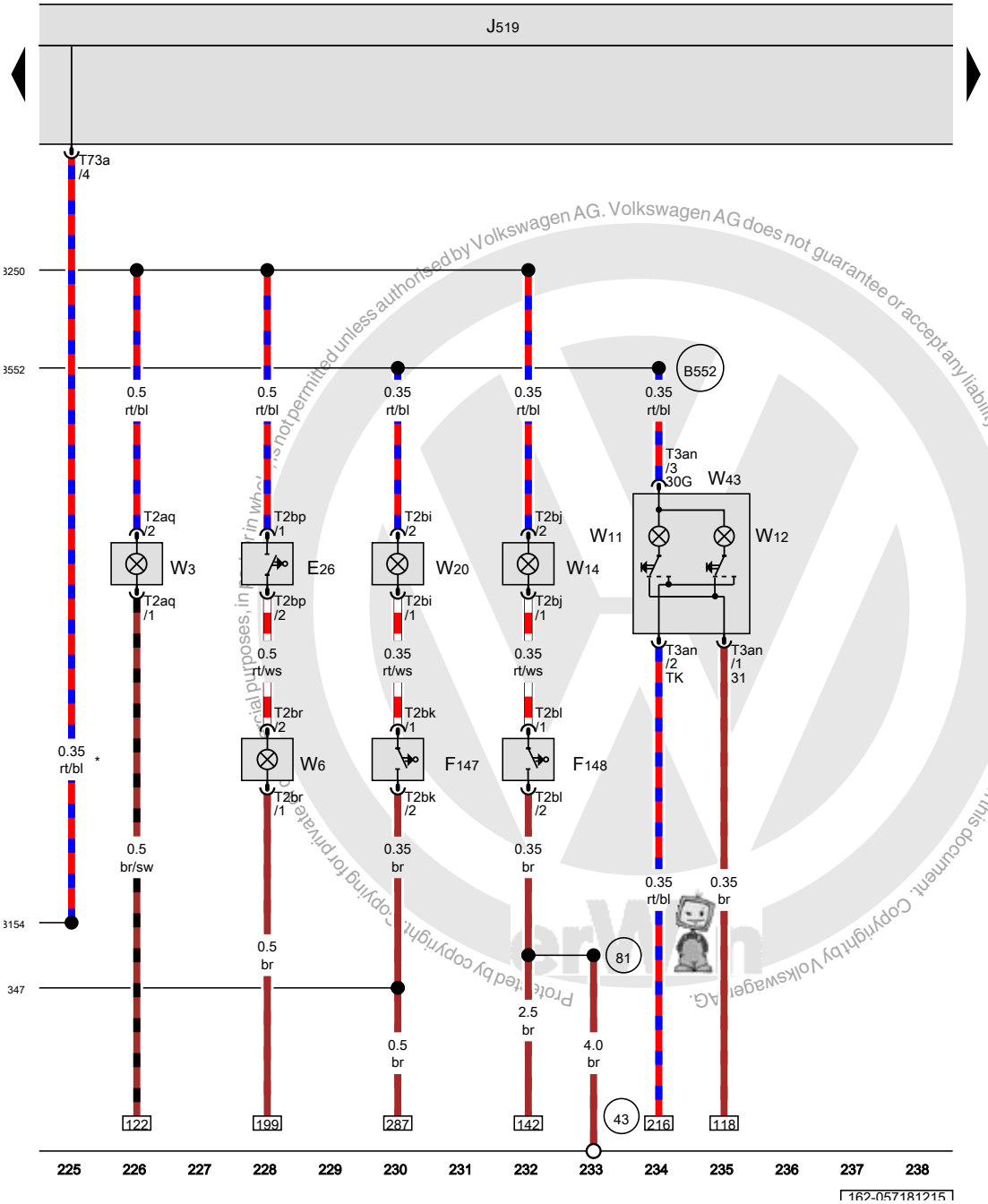

Glove compartment lamp switch, Vehicle electrical control module system, Luggage compartment lamp, Glove compartment lamp, Left rear reading lamp, Right rear reading lamp, Front passenger vanity mirror lamp, Driver vanity mirror lamp, Rear interior lamp

E26	Glove compartment lamp switch
F147	Driver vanity mirror lamp contact switch
F148	Front passenger vanity mirror lamp contact switch
J519	Vehicle electrical control module system
T2aq	2-pin connector
T2bi	2-pin connector
T2bj	2-pin connector
T2bk	2-pin connector
T2bl	2-pin connector
T2bp	2-pin connector
T2br	2-pin connector
T3an	3-pin connector
T73a	73-pin connector
W3	Luggage compartment lamp
W6	Glove compartment lamp
W11	Left rear reading lamp
W12	Right rear reading lamp
W14	Front passenger vanity mirror lamp
W20	Driver vanity mirror lamp
W43	Rear interior lamp
43	Ground connection on A-pillar, lower right
81	Ground connection 1 (in instrument panel wiring harness)
347	Ground connection (in roof wiring harness)
B154	Connection TK (in interior wiring harness) 1
B250	Positive connection (in roof wiring harness)
B552	Positive connection 2 (in roof wiring harness)
*	Depending on equipment

ws	=	white
sw	=	black
ro	=	red
rt	=	red
br	=	brown
gn	=	green
bl	=	blue
gr	=	grey
li	=	lilac
vi	=	lilac
ge	=	yellow
or	=	orange
rs	=	pink

Protected by copyright. Copyright by Volkswagen AG. Volkswagen AG does not guarantee or accept any liability with respect to the correctness of information in this document. Copying for private or commercial purposes, in whole or in part, is not permitted unless authorised by Volkswagen AG.

Brake lamp switch, Blocking diode, Vehicle electrical control module system, Cigarette lighter illumination bulb, Cigarette lighter, 12 V socket

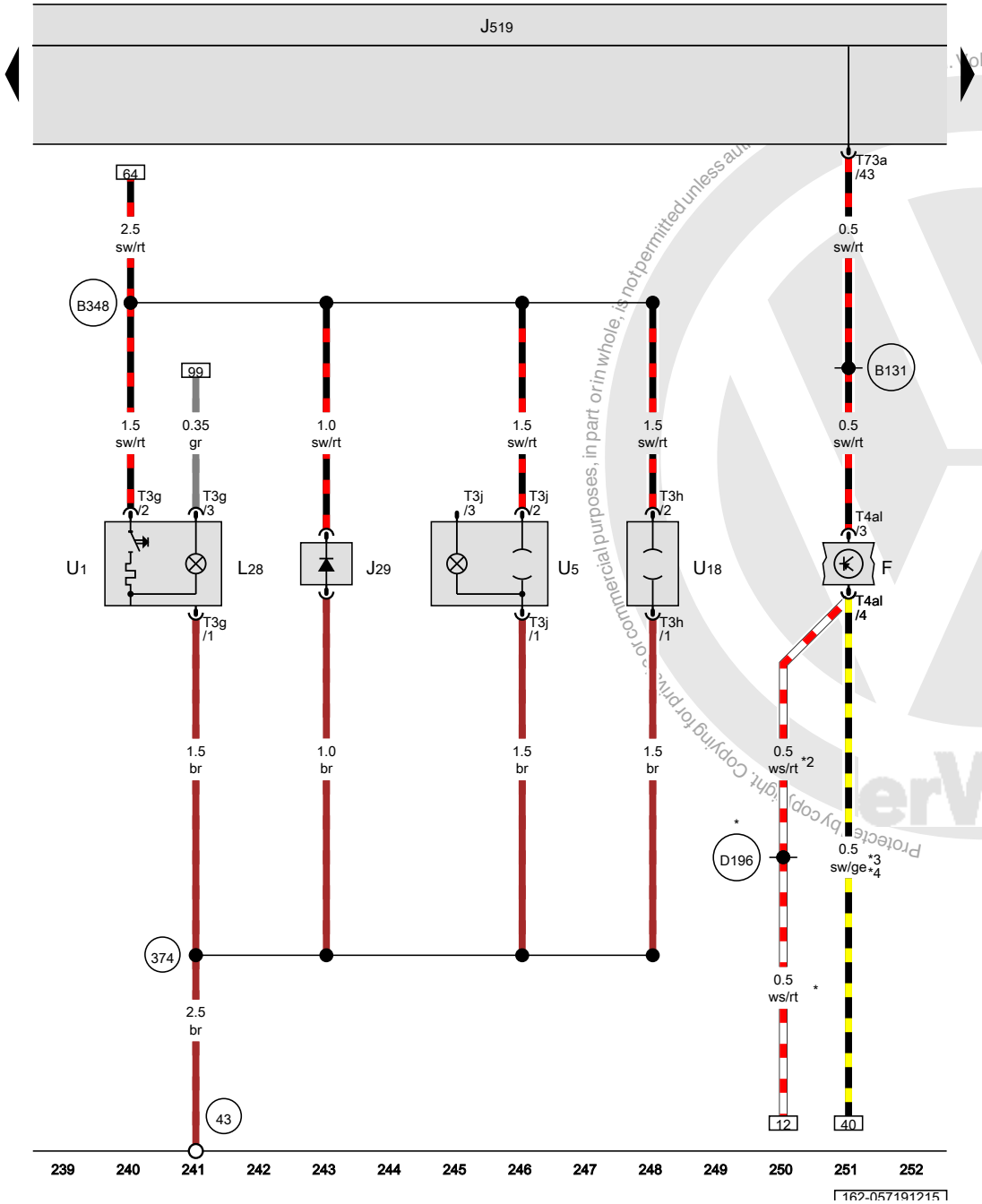

F	Brake lamp switch
J29	Blocking diode
J519	Vehicle electrical control module system
L28	Cigarette lighter illumination bulb
T3g	3-pin connector
T3h	3-pin connector
T3j	3-pin connector
T4al	4-pin connector
T73a	73-pin connector
U1	Cigarette lighter
U5	12 V socket
U18	12 V socket 2
43	Ground connection on A-pillar, lower right
374	Ground connection 9 (in main wiring harness)
B131	Connection 54 (in interior wiring harness)
B348	Connection 1 (75a) (in main wiring harness)
D196	Connection 87a (in engine pre-wiring harness) 2
*	Depending on equipment
*2	Only for vehicles with DSG transmission
*3	Only for vehicles with a manual transmission
*4	Through May 2013

ws	=	white
sw	=	black
ro	=	red
rt	=	red
br	=	brown
gn	=	green
bl	=	blue
gr	=	grey
li	=	lilac
vi	=	lilac
ge	=	yellow
or	=	orange
rs	=	pink

Volkswagen AG does not guarantee or accept any liability with respect to the correctness of information in this repair manual. Copyright by Volkswagen AG. Protected by copyright. Copying for private or commercial purposes, in part or in whole, is not permitted unless authorised by Volkswagen AG.

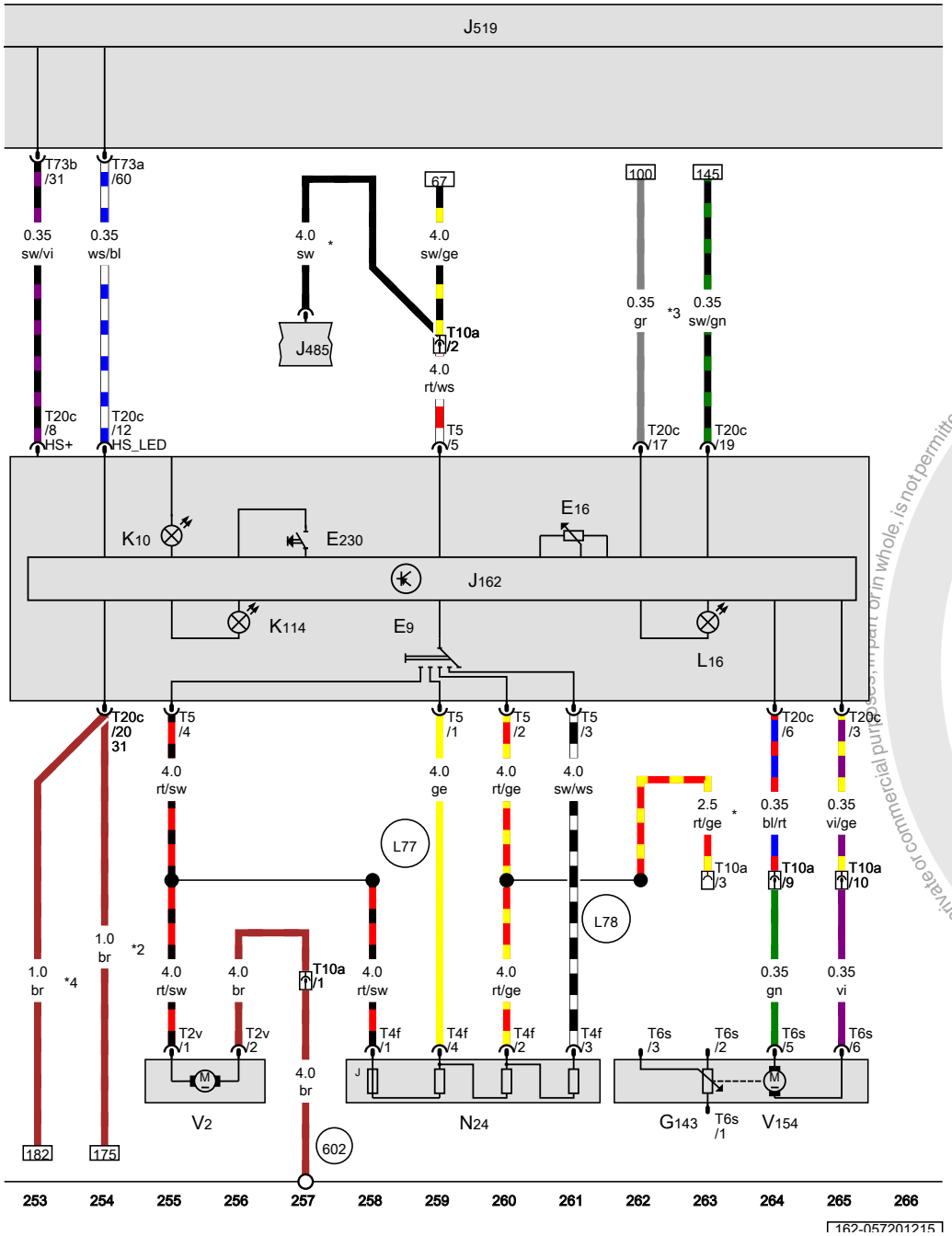

Fresh air blower switch, Heater control module, Vehicle electrical control module system, Fresh air blower series resistor with fuse, Fresh air blower, Fresh/recirculated air door motor

E9	Fresh air blower switch
E16	Heater/heat output switch
E230	Rear window defogger button
G143	Recirculation door motor position sensor
J162	Heater control module
J485	Parking heater operation relay
J519	Vehicle electrical control module system
K10	Rear window defogger indicator lamp
K114	Fresh air and recirculation mode indicator lamp
L16	Fresh air control illumination bulb
N24	Fresh air blower series resistor with fuse
T2v	2-pin connector
T4f	4-pin connector
T5	5-pin connector
T6s	6-pin connector
T10a	10-pin connector, on the heating and A/C unit
T20c	20-pin connector
T73a	73-pin connector
T73b	73-pin connector
V2	Fresh air blower
V154	Fresh/recirculated air door motor
602	Ground connection in left front footwell
L77	Connection (in fresh air blower wiring harness)
L78	Connection 1 (in fresh air blower wiring harness)
*	Only for vehicles with auxiliary coolant heater
*2	Through May 2013
*3	Depending on equipment
*4	from June 2013

ws	=	white
sw	=	black
ro	=	red
rt	=	red
br	=	brown
gn	=	green
bl	=	blue
gr	=	grey
li	=	lilac
vi	=	lilac
ge	=	yellow
or	=	orange
rs	=	pink

Protected by copyright. Copying for private or commercial purposes, in part or in whole, is not permitted unless authorised by Volkswagen AG. Volkswagen AG does not accept any liability with respect to the correctness of information in this document. Copyright by Volkswagen AG.

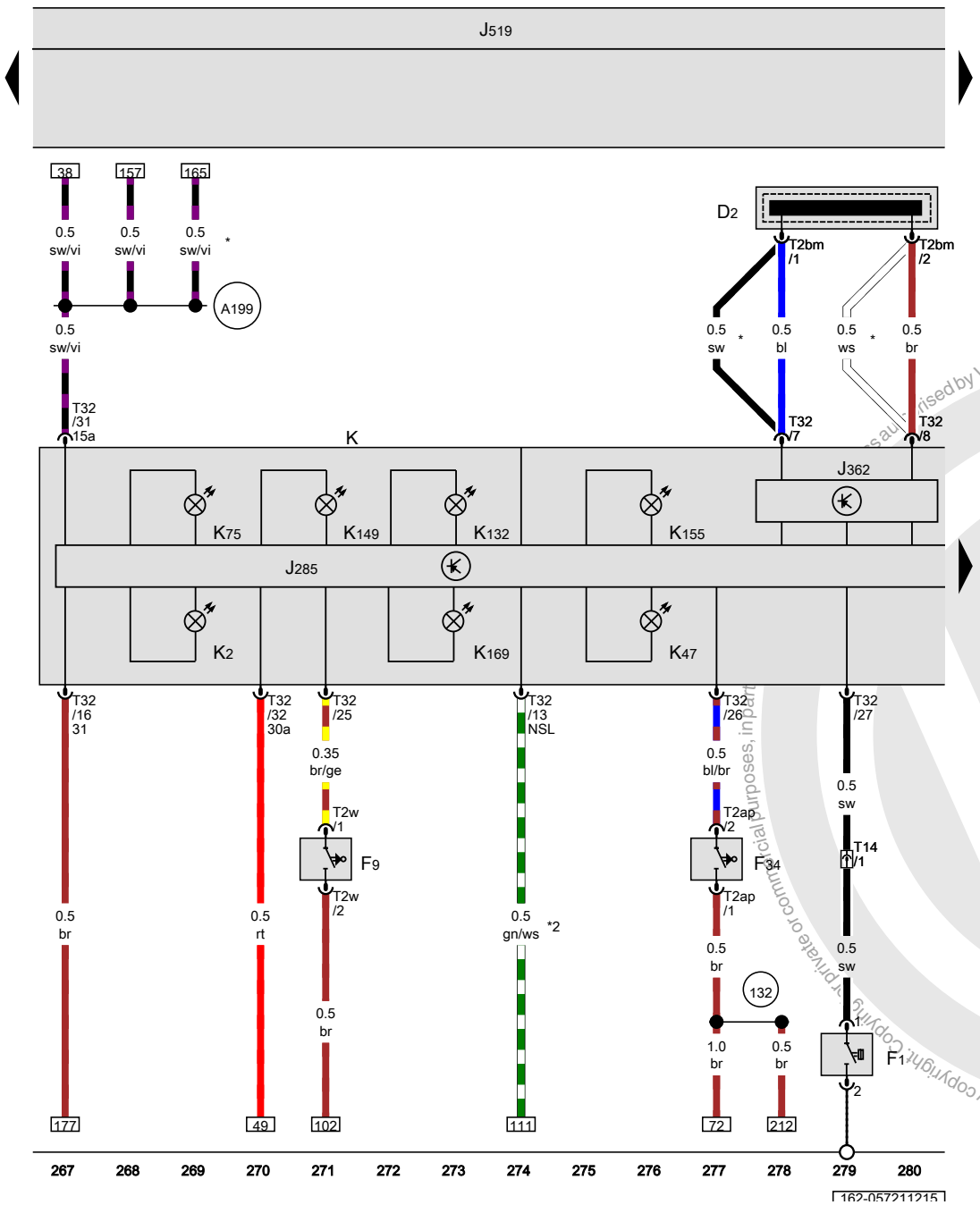

Anti-theft immobilizer reader coil, Oil pressure switch, Parking brake indicator lamp switch, Brake fluid level warning switch, Anti-theft immobilizer control module, Vehicle electrical control module system, Instrument cluster

D2	Anti-theft immobilizer reader coil
F1	Oil pressure switch
F9	Parking brake indicator lamp switch
F34	Brake fluid level warning switch
J285	Instrument cluster control module
J362	Anti-theft immobilizer control module
J519	Vehicle electrical control module system
K	Instrument cluster
K2	Generator indicator lamp
K47	ABS indicator lamp
K75	Airbag indicator lamp
K132	Electronic power control malfunction indicator lamp
K149	Engine electronics indicator lamp
K155	ASR/ESP indicator lamp
K169	Shift lock indicator lamp
T2ap	2-pin connector
T2bm	2-pin connector
T2w	2-pin connector
T14	14-pin connector
T32	32-pin connector
132	Ground connection 3 (in engine compartment wiring harness)
A199	Positive connection 4 (15a) (in instrument panel wiring harness)
*	Depending on equipment
*2	Only for vehicles without US equipment

ws	=	white
sw	=	black
ro	=	red
rt	=	red
br	=	brown
gn	=	green
bl	=	blue
gr	=	grey
li	=	lilac
vi	=	lilac
ge	=	yellow
or	=	orange
rs	=	pink

Reproduced by Volkswagen AG. Volkswagen AG does not guarantee or accept any liability with respect to the correctness of information in this document. Copyright by Volkswagen AG. Protected by copyright. Copying for private or commercial purposes, in part or in whole, is not permitted unless authorised by Volkswagen AG.

Windshield washer fluid level sensor, Left front brake pad wear sensor, Vehicle electrical control module system, Fuel pump control module, Instrument cluster, Rear fog lamp indicator lamp

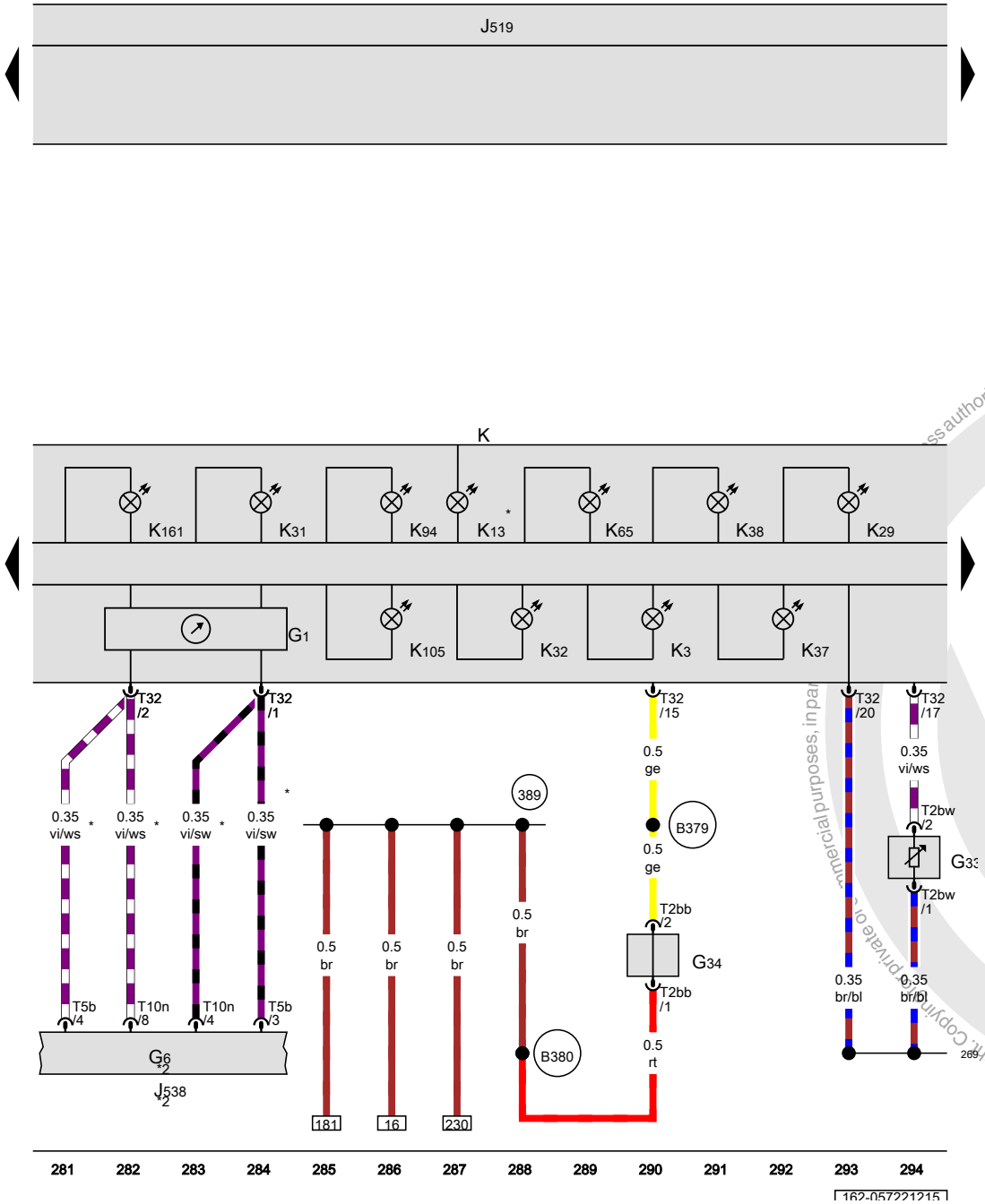

ws	=	white
sw	=	black
ro	=	red
rt	=	red
br	=	brown
gn	=	green
bl	=	blue
gr	=	grey
li	=	lilac
vi	=	lilac
ge	=	yellow
or	=	orange
rs	=	pink

G1	Fuel gauge
G6	Transfer fuel pump
G33	Windshield washer fluid level sensor
G34	Left front brake pad wear sensor
J519	Vehicle electrical control module system
J538	Fuel pump control module
K	Instrument cluster
K3	Oil pressure indicator lamp
K13	Rear fog lamp indicator lamp
K29	Glow plug indicator lamp
K31	Cruise control indicator lamp
K32	Brake pad wear indicator lamp
K37	Windshield washer fluid level indicator lamp
K38	Oil level indicator lamp
K65	Indicator lamp for left turn signal
K94	Right turn signal indicator lamp
K105	Low fuel level indicator lamp
K161	Electromechanical power steering indicator lamp
T2bb	2-pin connector
T2bw	2-pin connector
T5b	5-pin connector
T10n	10-pin connector
T32	32-pin connector
269	Sensor ground connection 1 (in instrument panel wiring harness)
389	Ground connection 24 (in main wiring harness)
B379	Brake wear indicator connection 1 (in main wiring harness)
B380	Brake wear indicator connection 2 (in main wiring harness)
*	Depending on equipment
*2	Refer to applicable engine wiring diagram

Protected by copyright. Copying for private or commercial purposes, in part or in whole, is not permitted unless authorised by Volkswagen AG. Volkswagen AG does not guarantee or accept any liability with respect to the correctness of information in this document. Copyright by Volkswagen AG.

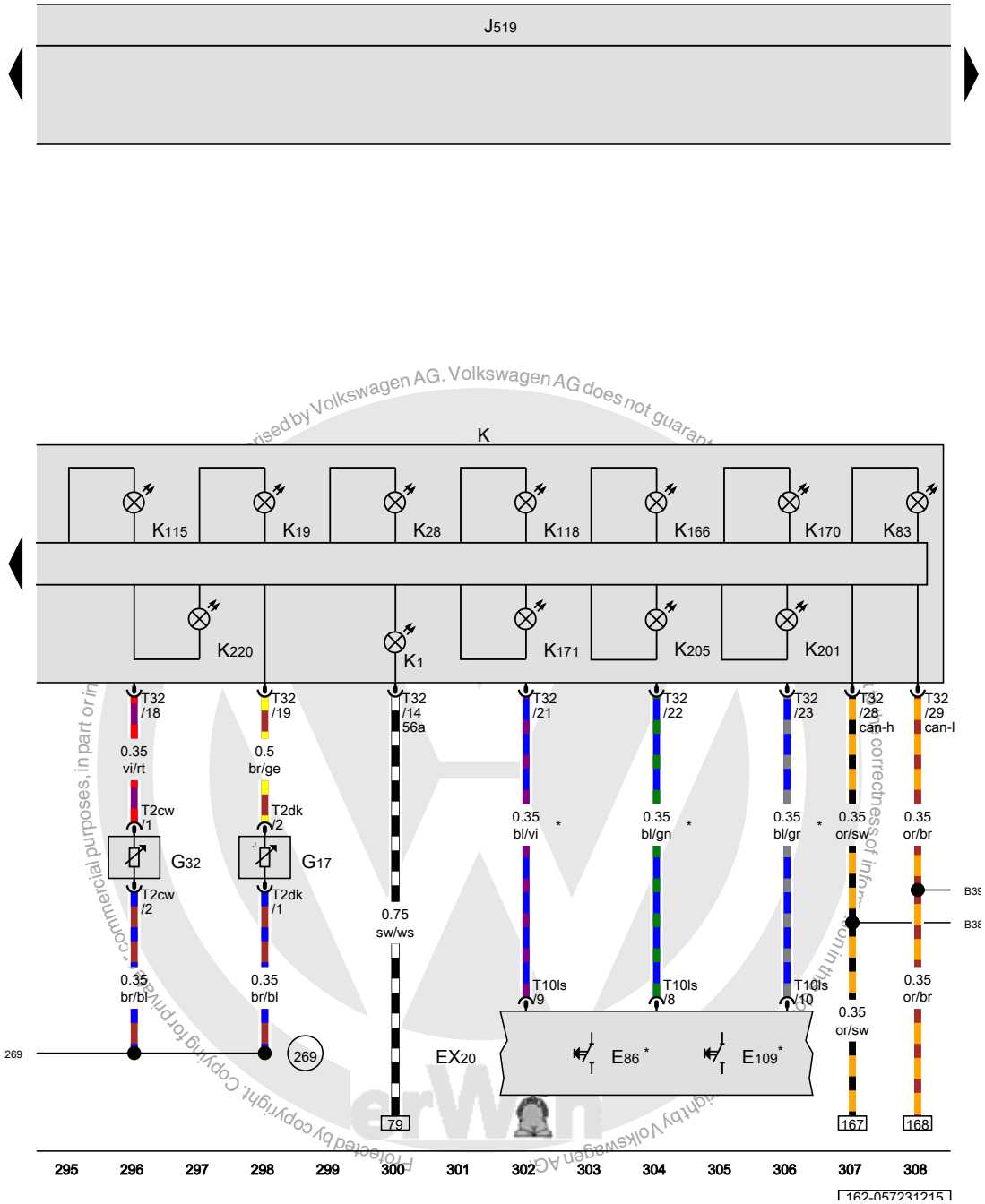

ws = white
sw = black
ro = red
rt = red
br = brown
gn = green
bl = blue
gr = grey
li = lilac
vi = lilac
ge = yellow
or = orange
rs = pink

Outside air temperature sensor, Engine coolant level sensor, Vehicle electrical control module system, Instrument cluster

EX20	Right steering column switch
E86	Multifunction indicator selection switch
E109	Multifunction indicator memory switch
G17	Outside air temperature sensor
G32	Engine coolant level sensor
J519	Vehicle electrical control module system
K	Instrument cluster
K1	High beam indicator lamp
K19	Seat belt indicator lamp
K28	Engine coolant level/temperature indicator lamp
K83	Malfunction indicator lamp
K115	Anti-theft immobilizer system indicator lamp
K118	Brake system indicator lamp
K166	Door ajar indicator lamp
K170	Lamp failure indicator lamp
K171	Hood -open- indicator lamp
K201	Fuel filler door lock indicator lamp
K205	Daytime running lamp indicator lamp
K220	Tire pressure monitoring display indicator lamp
T2cw	2-pin connector
T2dk	2-pin connector
T10ls	10-pin connector
T32	32-pin connector
269	Sensor ground connection 1 (in instrument panel wiring harness)
B383	Powertrain CAN bus high connection 1 (in main wiring harness)
B390	Powertrain CAN bus low connection 1 (in main wiring harness)
*	Only for vehicles with multifunction display

Protected by copyright. Copying for private, commercial purposes, in part or in

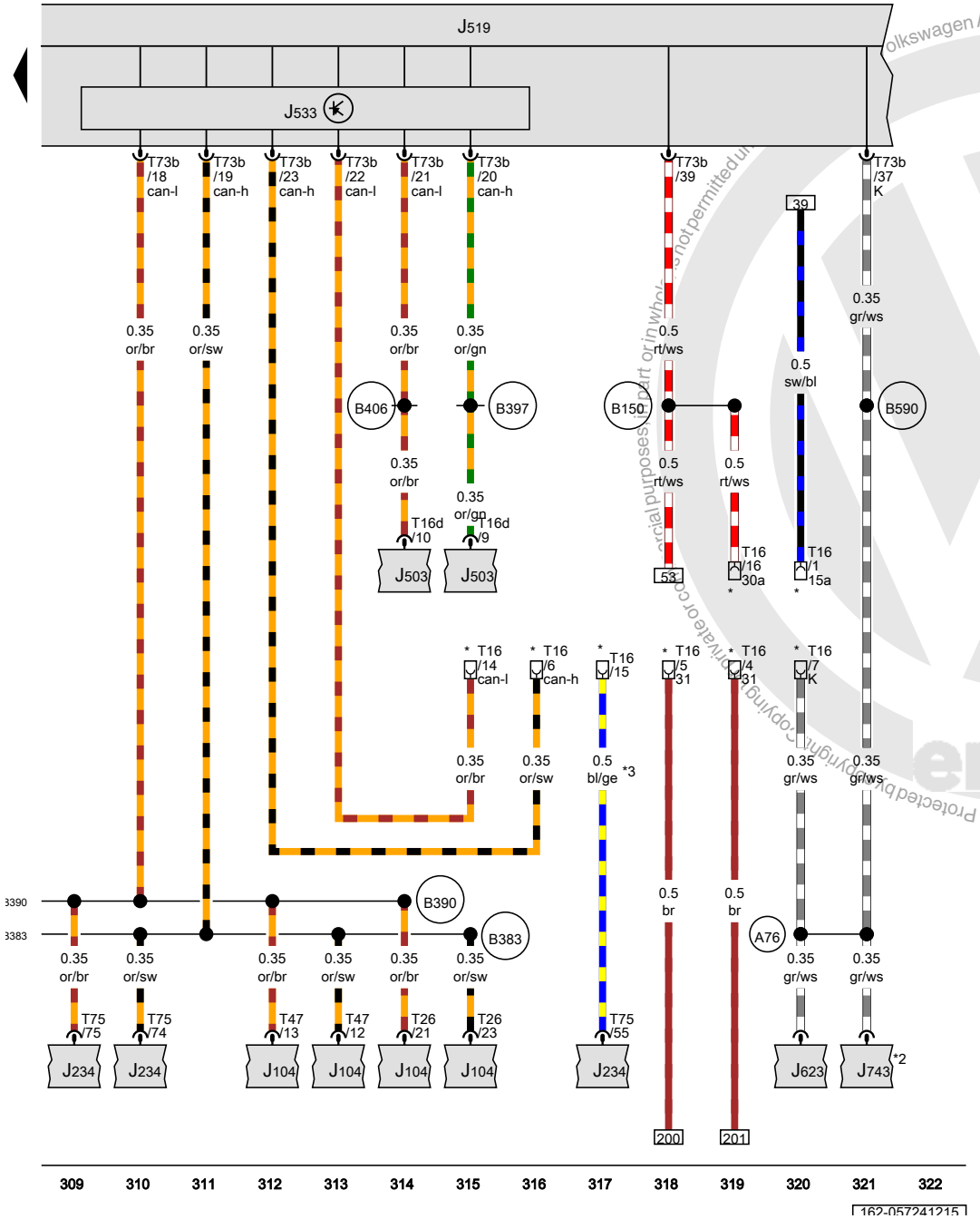

Vehicle electrical control module system

J104	ABS control module
J234	Airbag control module
J503	Radio/navigation display unit control module
J519	Vehicle electrical control module system
J533	Data bus on board diagnostic interface
J623	Engine control module
J743	DSG transmission Mechatronic
T16	16-pin connector
T16d	16-pin connector
T26	26-pin connector
T47	47-pin connector
T73b	73-pin connector
T75	75-pin connector
A76	KS-diagnostic lead connection (in instrument panel wiring harness)
B150	Positive connection 2 (30a) (in interior wiring harness)
B383	Powertrain CAN bus high connection 1 (in main wiring harness)
B390	Powertrain CAN bus low connection 1 (in main wiring harness)
B397	Comfort system CAN bus high connection 1 (in main wiring harness)
B406	Comfort system CAN bus low connection 1 (in main wiring harness)
B590	KS-diagnostic cable connection (in interior wiring harness)
*	Diagnostic connector
*2	Only for vehicles with automatic transmission
*3	USA only

ws	=	white
sw	=	black
ro	=	red
rt	=	red
br	=	brown
gn	=	green
bl	=	blue
gr	=	grey
li	=	lilac
vi	=	lilac
ge	=	yellow
or	=	orange
rs	=	pink

Volkswagen AG. Volkswagen AG does not guarantee the correctness of information in this document. Copyright by Volkswagen AG. Protected by copyright. Copying for private or commercial purposes, in part or in whole, is not permitted unless authorized by Volkswagen AG.

Convenience system , (AW0)

from June 2011

Protected by copyright. Copying for private or commercial purposes, in part or in whole, is not permitted unless authorised by Volkswagen AG. Volkswagen AG does not guarantee or accept any liability with respect to the correctness of information in this document. Copyright by Volkswagen AG.

Battery, Fuse 4 (on fuse panel A), Fuse panel B, Fuse 25 (on fuse panel B), Fuse panel C

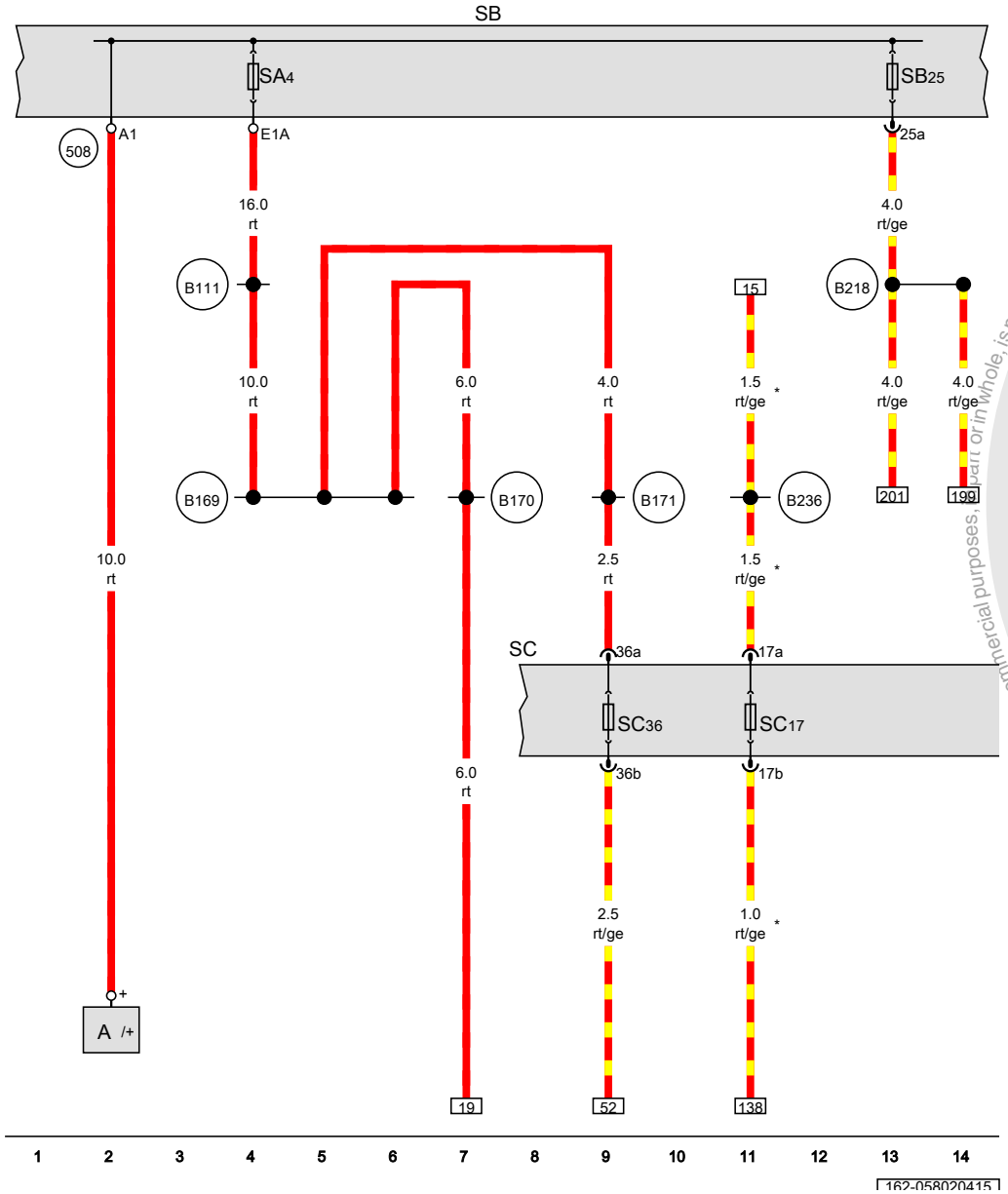

A	Battery
SA4	Fuse 4 (on fuse panel A)
SB	Fuse panel B
SB25	Fuse 25 (on fuse panel B)
SC	Fuse panel C
SC17	Fuse 17 (on fuse panel C)
SC36	Fuse 36 (on fuse panel C)
508	Terminal 30 threaded connection (on E-box)
B111	Positive connection 1 (30a) (in interior wiring harness)
B169	Positive connection 1 (30) (in interior wiring harness)
B170	Positive connection 2 (30) (in interior wiring harness)
B171	Positive connection 3 (30) (in interior wiring harness)
B218	Positive connection 6 (30) (in interior wiring harness)
B236	Positive connection 6 (30a) (in interior wiring harness)
*	Running change

ws	=	white
sw	=	black
ro	=	red
rt	=	red
br	=	brown
gn	=	green
bl	=	blue
gr	=	grey
li	=	lilac
vi	=	lilac
ge	=	yellow
or	=	orange
rs	=	pink

Protected by copyright. Copying for private, commercial purposes, part or in whole, is not permitted unless authorised by Volkswagen AG. Volkswagen AG does not guarantee or accept any liability with respect to the correctness of information in this document. Copyright by Volkswagen AG.

Protected by copyright. Copying for private or commercial purposes, in part or in whole, is not permitted unless authorised by Volkswagen AG. Volkswagen AG does not guarantee or accept any liability with respect to the correctness of information in this document. Copyright by Volkswagen AG.

Fuse panel C

SC	Fuse panel C
SC21	Fuse 21 (on fuse panel C)
SC22	Fuse 22 (on fuse panel C)
SC24	Fuse 24 (on fuse panel C)
SC43	Fuse 43 (on fuse panel C)
SC45	Fuse 45 (on fuse panel C)
SC46	Fuse 46 (on fuse panel C)
SC48	Fuse 48 (on fuse panel C)
SC51	Fuse 51 (on fuse panel C)
A1	Positive connection (30a) (in instrument panel wiring harness)
A62	Power window connection (in instrument panel wiring harness)
A167	Positive connection 3 (30a) (in instrument panel wiring harness)
B231	Positive connection 5 (30a) (in interior wiring harness)
*	Omitted as a running change
*2	Running change

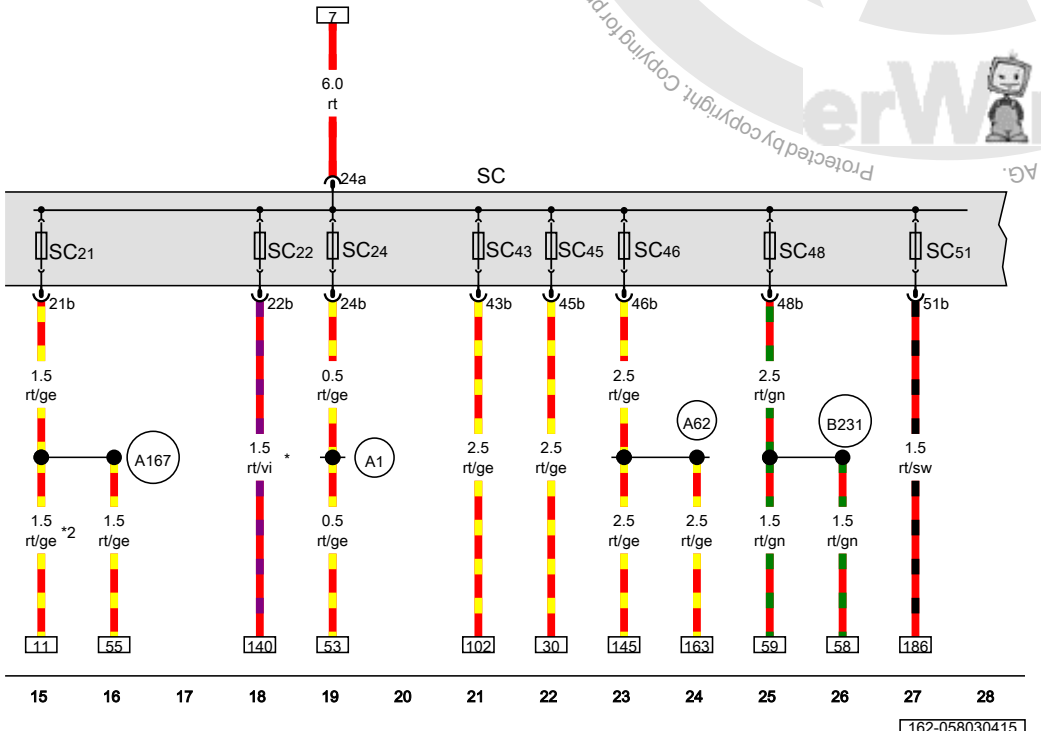

ws	=	white
sw	=	black
ro	=	red
rt	=	red
br	=	brown
gn	=	green
bl	=	blue
gr	=	grey
li	=	lilac
vi	=	lilac
ge	=	yellow
or	=	orange
rs	=	pink

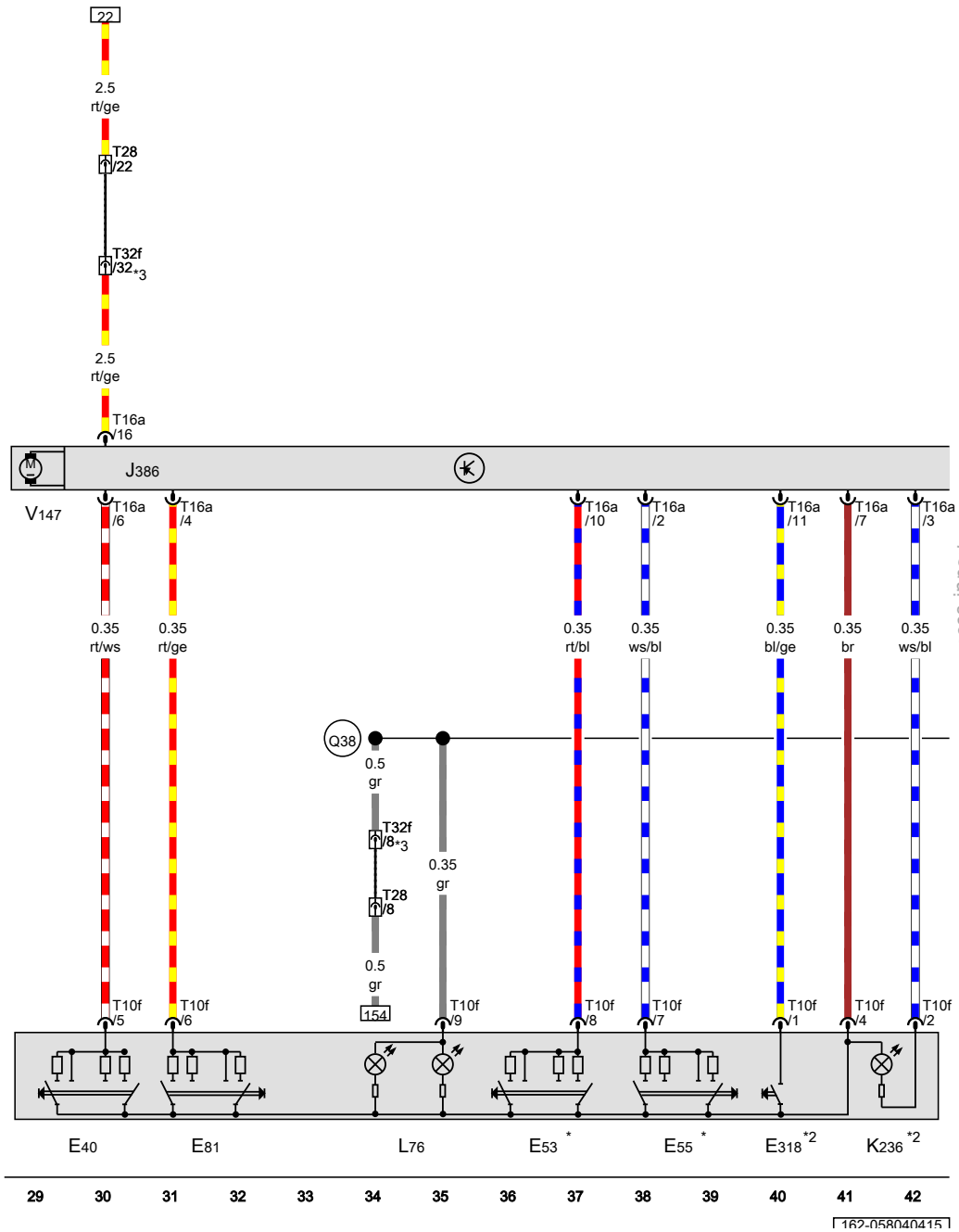

Left front window regulator switch, Left rear window regulator switch in driver door, Right rear window regulator switch in driver door, Right front power window switch in driver door, Child safety lock button, Driver door control module

E40	Left front window regulator switch
E53	Left rear window regulator switch in driver door
E55	Right rear window regulator switch in driver door
E81	Right front power window switch in driver door
E318	Child safety lock button
J386	Driver door control module
K236	Child safety lock -activated- indicator lamp
L76	Push button illumination bulb
T10f	10-pin connector
T16a	16-pin connector
T28	28-pin connector, Left A-pillar, bottom
T32f	32-pin connector, Left A-pillar, bottom
V147	Driver window regulator motor
Q38	Positive connection 1 (58b) (in power window wiring harness)
*	Only for vehicles with front and rear power windows
*2	Only for vehicles with child safety lock
*3	Depending on equipment

ws	=	white
sw	=	black
ro	=	red
rt	=	red
br	=	brown
gn	=	green
bl	=	blue
gr	=	grey
li	=	lilac
vi	=	lilac
ge	=	yellow
or	=	orange
rs	=	pink

Protected by copyright. Copying for private or commercial purposes, in part or in whole, is not permitted unless authorised by Volkswagen AG. Volkswagen AG does not guarantee or accept any liability with respect to the correctness of information in this document. Copyright by Volkswagen AG.

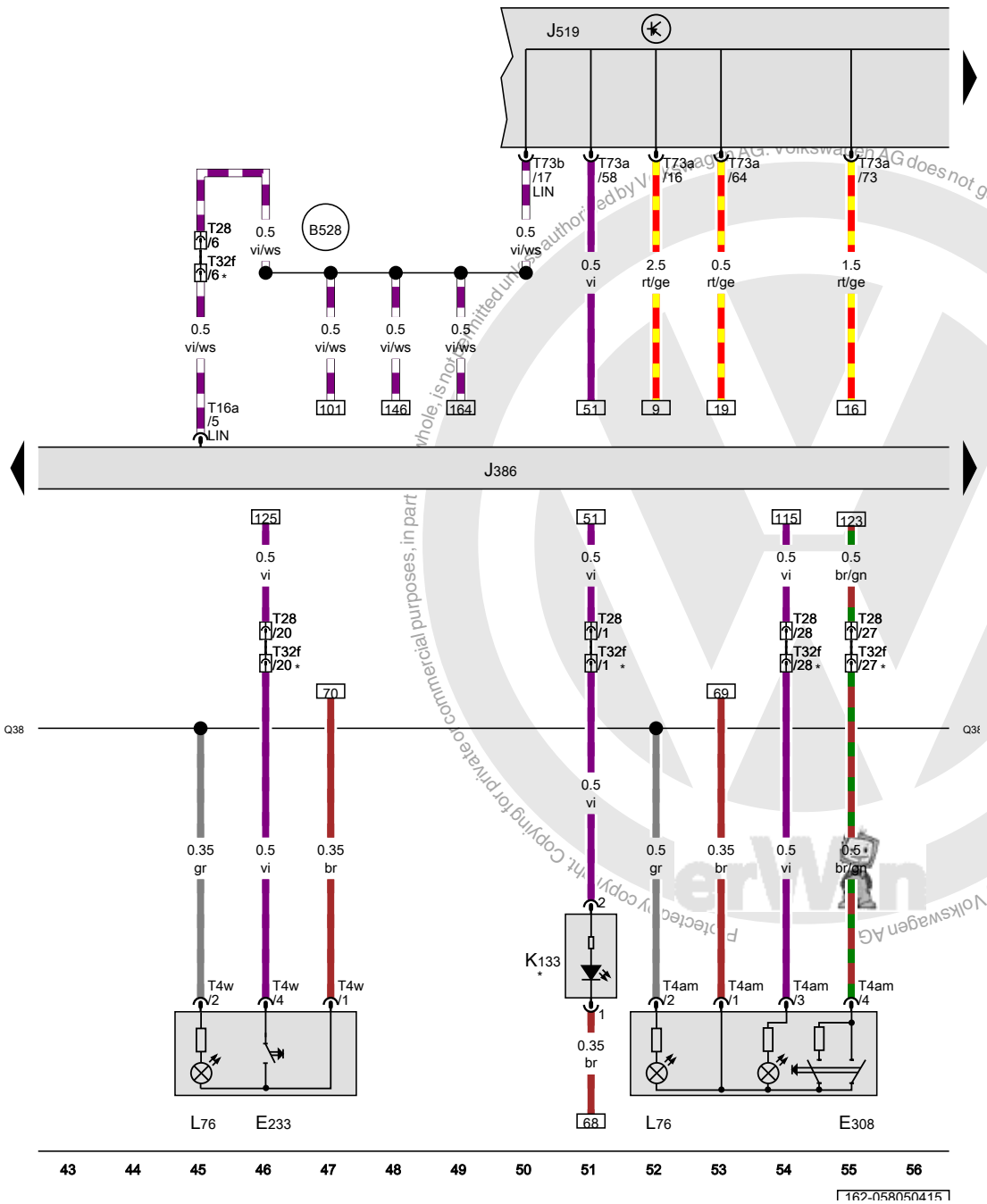

Rear lid remote release button, Driver interior locking button, Driver door control module, Vehicle electrical control module system, Push button illumination bulb

E233	Rear lid remote release button
E308	Driver interior locking button
J386	Driver door control module
J519	Vehicle electrical control module system
K133	Central locking -SAFE- indicator lamp
L76	Push button illumination bulb
T4am	4-pin connector
T4w	4-pin connector
T16a	16-pin connector
T28	28-pin connector, Left A-pillar, bottom
T32f	32-pin connector, Left A-pillar, bottom
T73a	73-pin connector
T73b	73-pin connector
B528	LIN bus connection 1 (in main wiring harness)
Q38	Positive connection 1 (58b) (in power window wiring harness)
*	Depending on equipment

ws	=	white
sw	=	black
ro	=	red
rt	=	red
br	=	brown
gn	=	green
bl	=	blue
gr	=	grey
li	=	lilac
vi	=	lilac
ge	=	yellow
or	=	orange
rs	=	pink

Protected by copyright. Copyright by Volkswagen AG. Volkswagen AG does not guarantee or accept any liability with respect to the correctness of information in this document

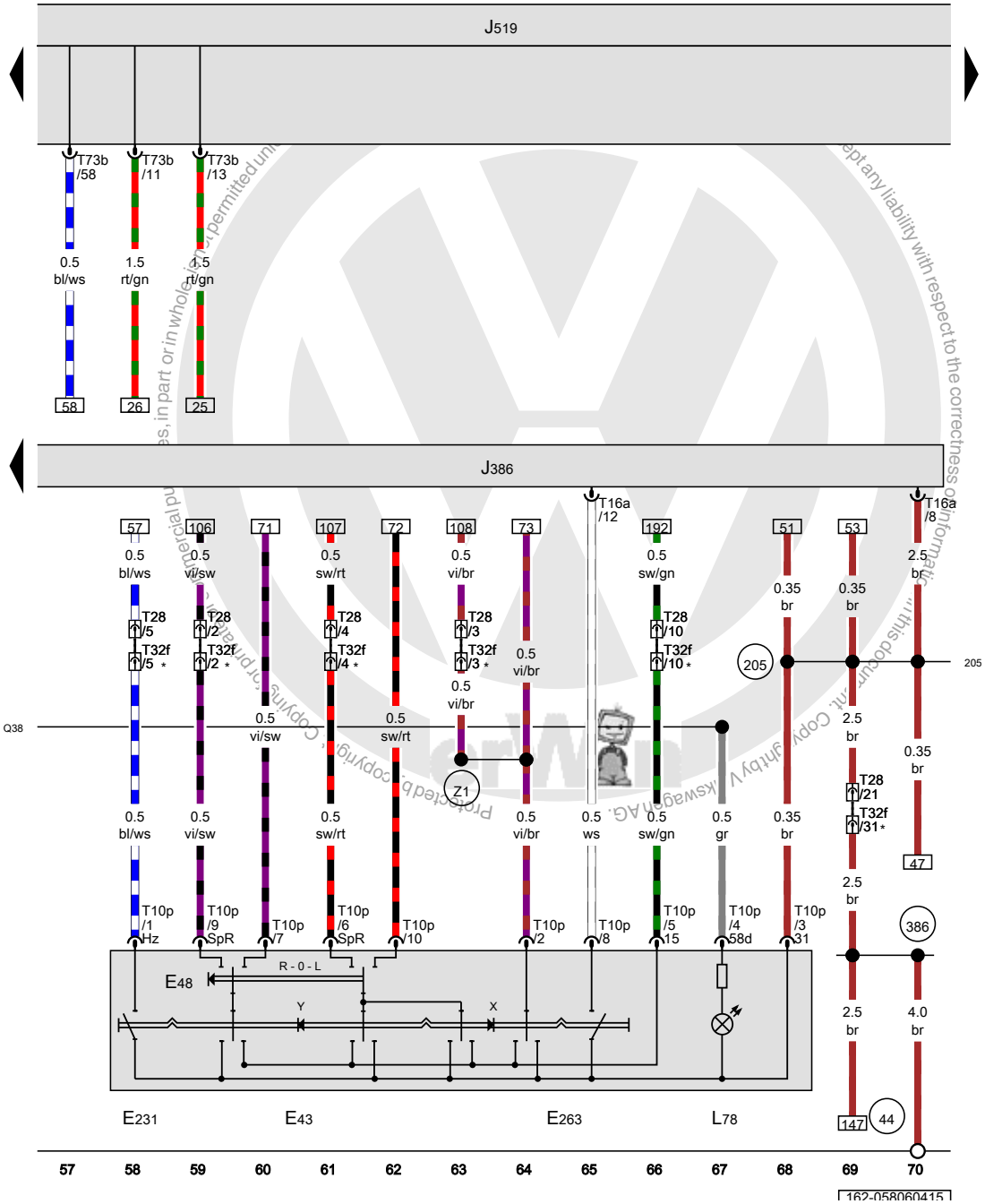

Mirror adjusting switch, Mirror selector switch, Exterior rearview mirror heating switch, Mirror folding switch, Driver door control module, Vehicle electrical control module system, Mirror adjustment switch illumination bulb

E43	Mirror adjusting switch
E48	Mirror selector switch
E231	Exterior rearview mirror heating switch
E263	Mirror folding switch
J386	Driver door control module
J519	Vehicle electrical control module system
L78	Mirror adjustment switch illumination bulb
T10p	10-pin connector
T16a	16-pin connector
T28	28-pin connector, Left A-pillar, bottom
T32f	32-pin connector, Left A-pillar, bottom
T73b	73-pin connector
(44)	Ground connection on A-pillar, lower left
(205)	Ground connection (in driver door wiring harness)
(386)	Ground connection 21 (in main wiring harness)
(Q38)	Positive connection 1 (58b) (in power window wiring harness)
(Z1)	Connection 1 (in power heated mirror wiring harness)
*	Depending on equipment

ws	=	white
sw	=	black
ro	=	red
rt	=	red
br	=	brown
gn	=	green
bl	=	blue
gr	=	grey
li	=	lilac
vi	=	lilac
ge	=	yellow
or	=	orange
rs	=	pink

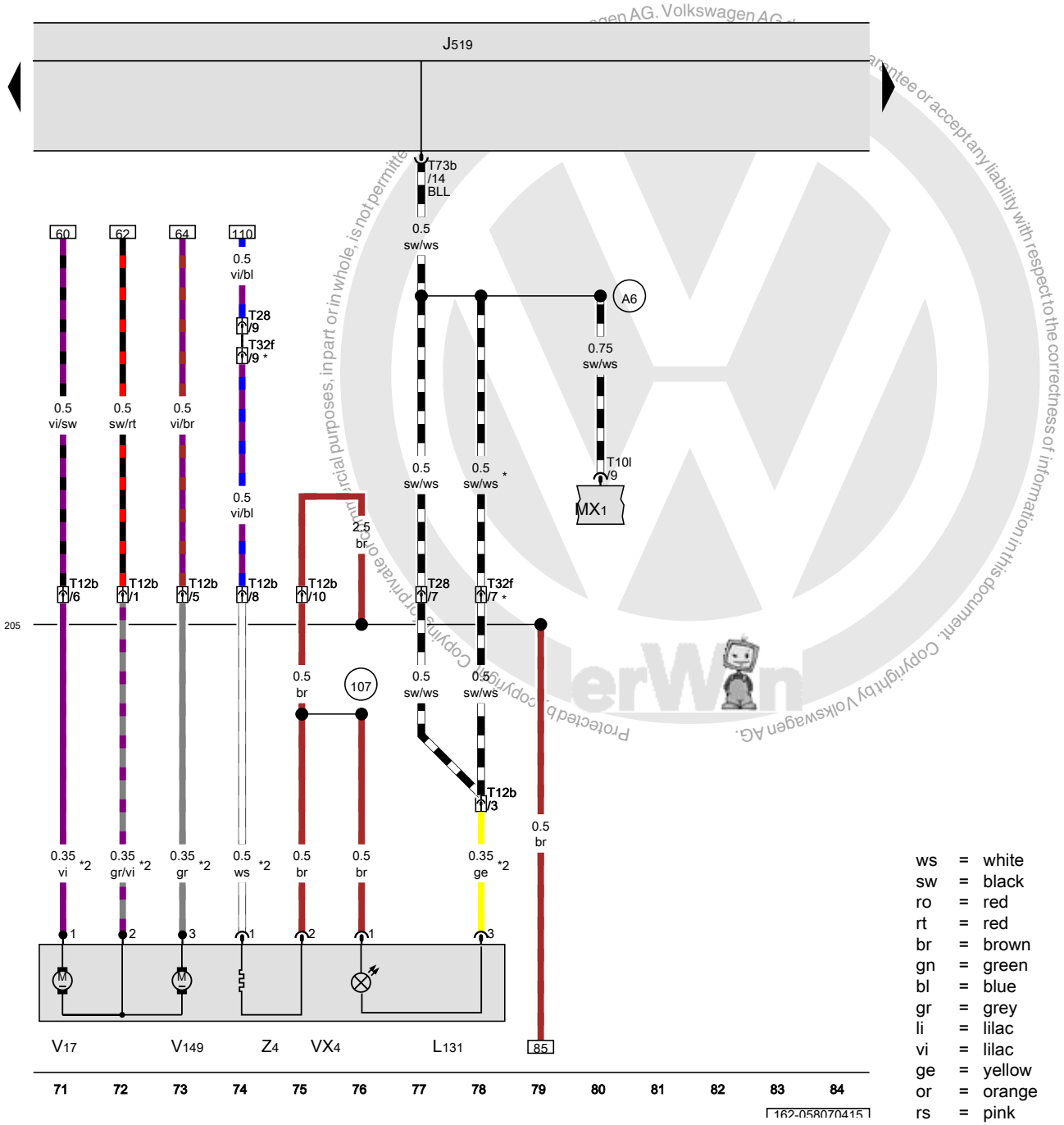

Vehicle electrical control module system, Driver exterior rearview mirror, Driver mirror adjustment motor

J519	Vehicle electrical control module system
L131	Driver exterior rearview mirror turn signal bulb
MX1	Left front headlamp
T10l	10-pin connector
T12b	12-pin connector, in the driver door wiring harness
T28	28-pin connector, Left A-pillar, bottom
T32f	32-pin connector, Left A-pillar, bottom
T73b	73-pin connector
VX4	Driver exterior rearview mirror
V17	Driver mirror adjustment motor 2
V149	Driver mirror adjustment motor
Z4	Heated driver exterior rearview mirror
107	Ground connection (in exterior mirror wiring harness), in the left door, near the exterior rearview mirror
205	Ground connection (in driver door wiring harness)
A6	Left turn signal positive connection (in instrument panel wiring harness)
*	Depending on equipment
*2	The color of the wires depends on vehicle equipment

ws	=	white
sw	=	black
ro	=	red
rt	=	red
br	=	brown
gn	=	green
bl	=	blue
gr	=	grey
li	=	lilac
vi	=	lilac
ge	=	yellow
or	=	orange
rs	=	pink

Protected by copyright. Copying for private or commercial purposes, in part or in whole, is not permitted. Copyright by Volkswagen AG. Volkswagen AG. Volkswagen AG.

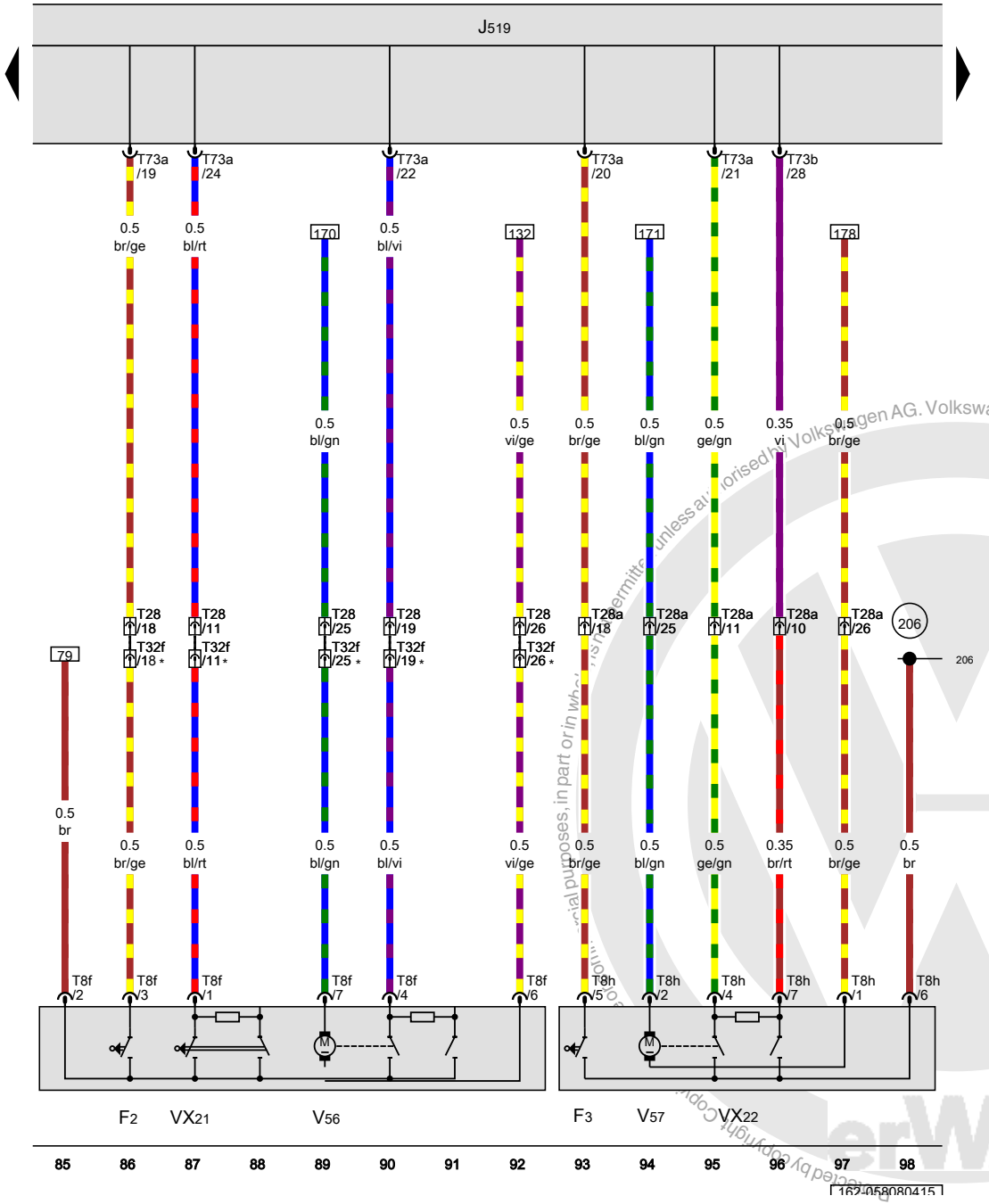

Driver door contact switch, Front passenger door contact switch, Vehicle electrical control module system, Driver door lock unit, Front passenger door lock unit, Driver door central locking system motor, Front passenger door central locking system motor

F2	Driver door contact switch
F3	Front passenger door contact switch
J519	Vehicle electrical control module system
T8f	8-pin connector
T8h	8-pin connector
T28	28-pin connector, Left A-pillar, bottom
T28a	28-pin connector, Right A-pillar, bottom
T32f	32-pin connector, Left A-pillar, bottom
T73a	73-pin connector
T73b	73-pin connector
VX21	Driver door lock unit
VX22	Front passenger door lock unit
V56	Driver door central locking system motor
V57	Front passenger door central locking system motor
206	Ground connection (in front passenger door wiring harness)
*	Depending on equipment

ws	=	white
sw	=	black
ro	=	red
rt	=	red
br	=	brown
gn	=	green
bl	=	blue
gr	=	grey
li	=	lilac
vi	=	lilac
ge	=	yellow
or	=	orange
rs	=	pink

Copyright by Volkswagen AG. Volkswagen AG does not guarantee or accept any liability with respect to the correctness of information in this document. Copyright by Volkswagen AG. Issued by copyright owner. Copyright by Volkswagen AG. Volkswagen AG does not guarantee or accept any liability with respect to the correctness of information in this document. Copyright by Volkswagen AG. Issued by copyright owner. Copyright by Volkswagen AG. Volkswagen AG does not guarantee or accept any liability with respect to the correctness of information in this document. Copyright by Volkswagen AG. Issued by copyright owner. Copyright by Volkswagen AG. Volkswagen AG does not guarantee or accept any liability with respect to the correctness of information in this document. Copyright by Volkswagen AG. Issued by copyright owner.

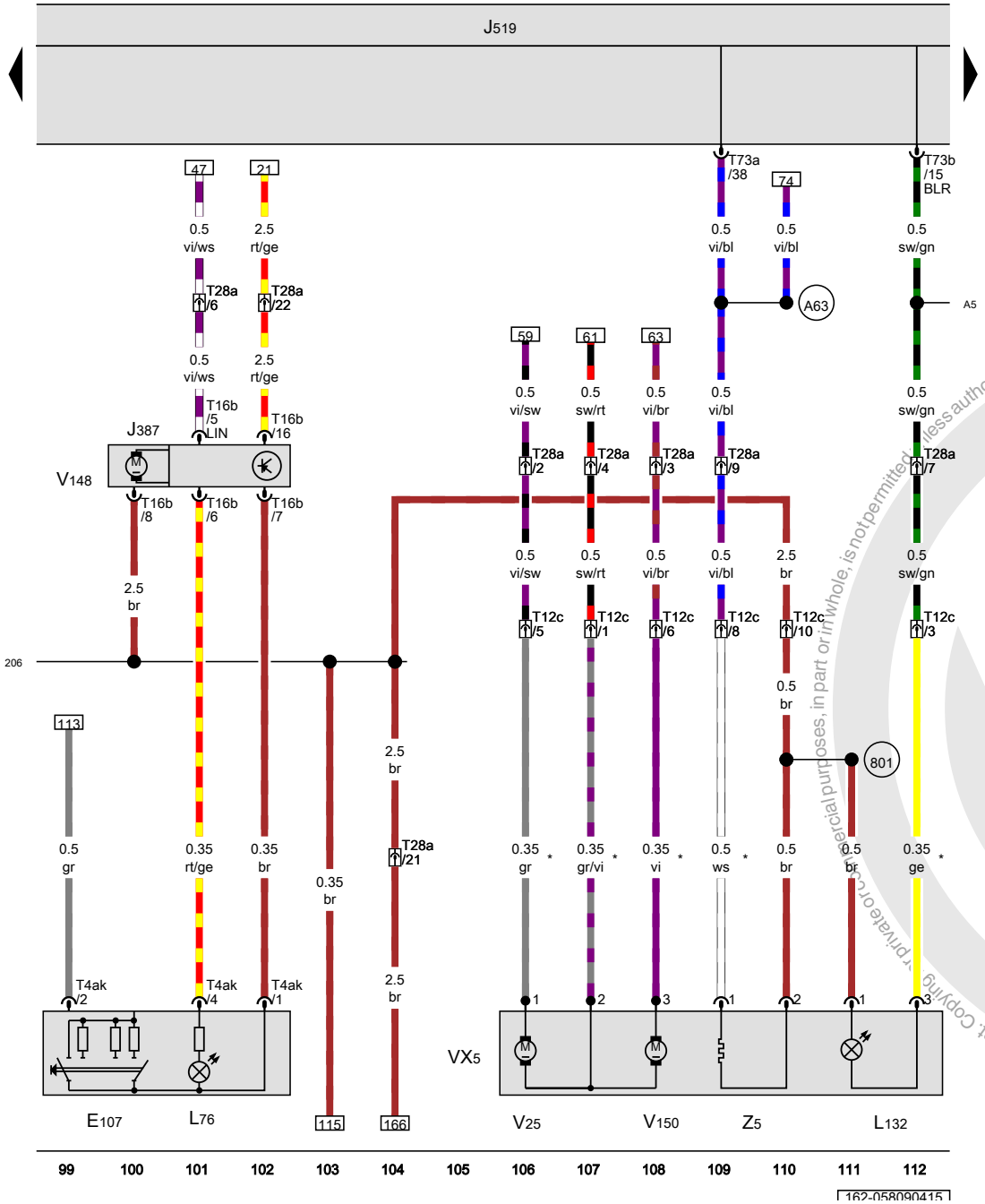

Front passenger door window regulator switch, Front passenger door control module, Vehicle electrical control module system, Front passenger exterior rearview mirror turn signal bulb, Front passenger exterior rearview mirror, Front passenger window regulator motor

E107	Front passenger door window regulator switch
J387	Front passenger door control module
J519	Vehicle electrical control module system
L76	Push button illumination bulb
L132	Front passenger exterior rearview mirror turn signal bulb
T4ak	4-pin connector
T12c	12-pin connector, in the front passenger door
T16b	16-pin connector
T28a	28-pin connector, Right A-pillar, bottom
T73a	73-pin connector
T73b	73-pin connector
VX5	Front passenger exterior rearview mirror
V25	Front passenger side mirror adjustment motor 2
V148	Front passenger window regulator motor
V150	Front passenger mirror adjustment motor
Z5	Heated front passenger exterior rearview mirror
206	Ground connection (in front passenger door wiring harness)
801	Ground connection 2 (in exterior rearview mirror wiring harness), in the right door, near the exterior rearview mirror
A5	Right turn signal positive connection (in instrument panel wiring harness)
A63	Mirror adjustment/heating connection (in instrument panel wiring harness)
*	The color of the wires depends on vehicle equipment

ws	=	white
sw	=	black
ro	=	red
rt	=	red
br	=	brown
gn	=	green
bl	=	blue
gr	=	grey
li	=	lilac
vi	=	lilac
ge	=	yellow
or	=	orange
rs	=	pink

Protected by copyright. Copying for private or commercial purposes, in part or in whole, is not permitted unless authorised by Volkswagen AG. Volkswagen AG does not guarantee or assume any liability with respect to the correctness of information in this document. Copyright by Volkswagen AG.

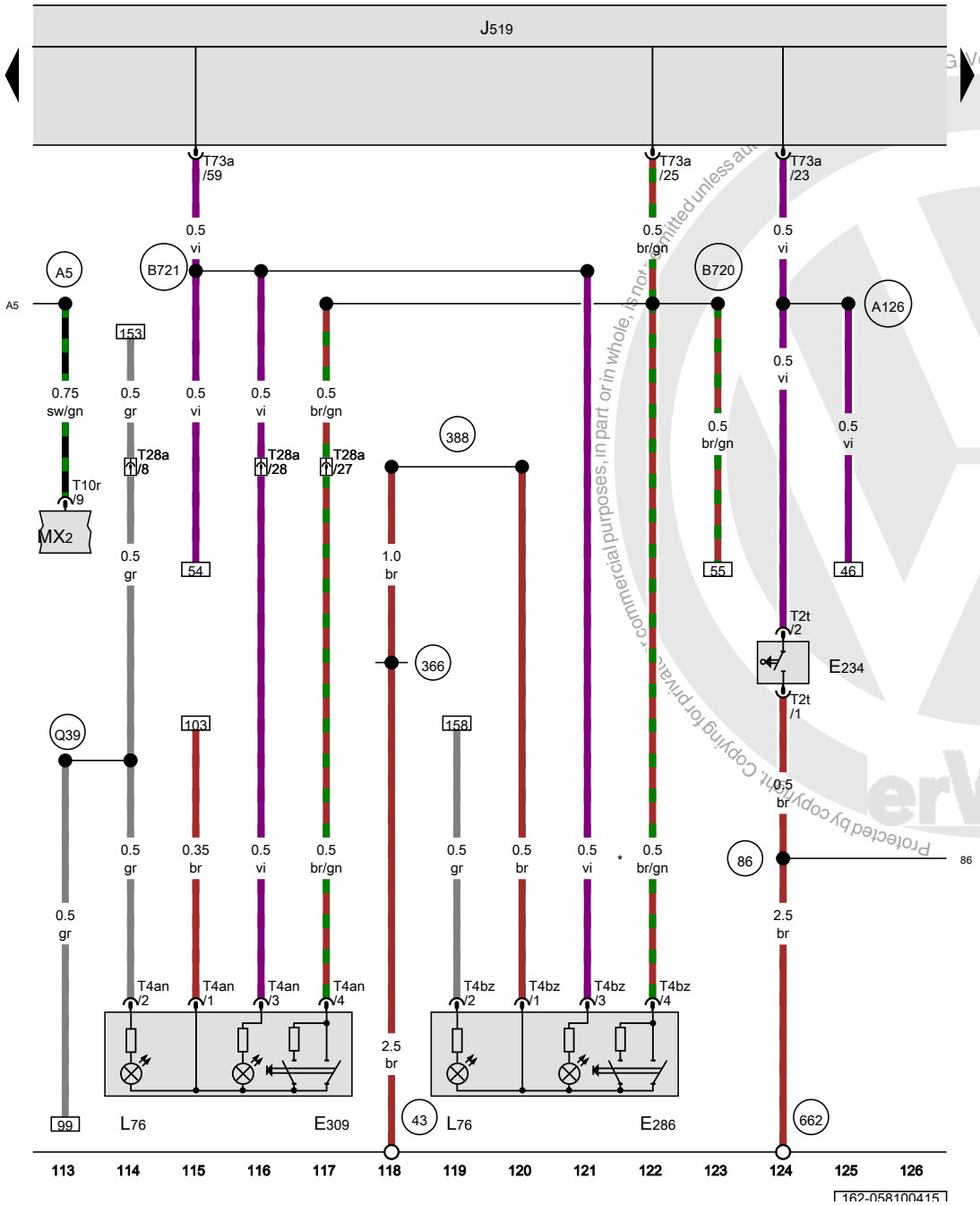

Release button in rear lid handle, Rear center interior locking switch, Front passenger interior locking button, Vehicle electrical control module system

E234	Release button in rear lid handle
E286	Rear center interior locking switch
E309	Front passenger interior locking button
J519	Vehicle electrical control module system
L76	Push button illumination bulb
MX2	Right front headlamp
T2t	Double connector
T4an	4-pin connector
T4bz	4-pin connector
T10r	10-pin connector
T28a	28-pin connector, Right A-pillar, bottom
T73a	73-pin connector
43	Ground connection on A-pillar, lower right
86	Ground connection 1 (in rear wiring harness)
366	Ground connection 1 (in main wiring harness)
388	Ground connection 23 (in main wiring harness)
662	Ground connection in left rear side panel
A5	Right turn signal positive connection (in instrument panel wiring harness)
A126	Rear lid contact switch connection (in instrument panel wiring harness)
B720	Central locking connection 1 (in main wiring harness)
B721	Central locking connection 2 (in main wiring harness)
Q39	Positive connection 2 (58b) (in power window wiring harness)
*	The color of the wires depends on vehicle equipment

ws	=	white
sw	=	black
ro	=	red
rt	=	red
br	=	brown
gn	=	green
bl	=	blue
gr	=	grey
li	=	lilac
vi	=	lilac
ge	=	yellow
or	=	orange
rs	=	pink

Protected by copyright. Copying for private or commercial purposes, in part or in whole, is not permitted unless authorized by Volkswagen AG. Volkswagen AG does not guarantee or accept any liability with respect to the correctness of information in this document. Copyright by Volkswagen AG.

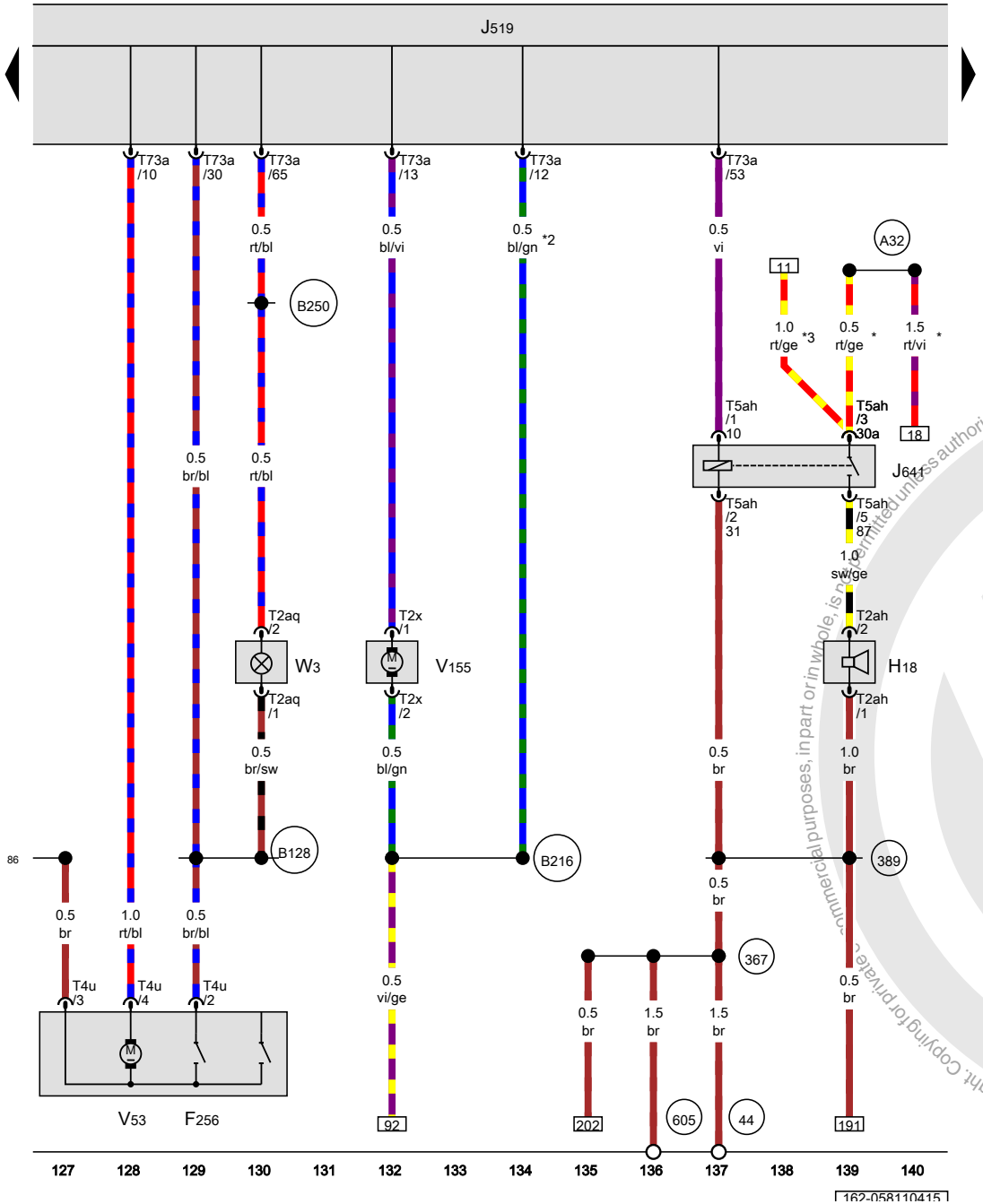

Rear lid lock unit, Vehicle electrical control module system, Rear lid central locking system motor, Fuel filler door unlock motor, Luggage compartment lamp

F256	Rear lid lock unit
H18	Alarm system horn
J519	Vehicle electrical control module system
J641	Alarm horn relay
T2ah	Double connector
T2aq	Double connector
T2x	Double connector
T4u	4-pin connector
T5ah	5-pin connector
T73a	73-pin connector
V53	Rear lid central locking system motor
V155	Fuel filler door unlock motor
W3	Luggage compartment lamp
44	Ground connection on A-pillar, lower left
86	Ground connection 1 (in rear wiring harness)
367	Ground connection 2 (in main wiring harness)
389	Ground connection 24 (in main wiring harness)
605	Ground connection on upper steering column
A32	Positive connection (30) (in instrument panel wiring harness)
B128	Luggage compartment lamp connection (in interior wiring harness)
B216	Central locking connection 3 (in interior wiring harness)
B250	Positive connection (in roof wiring harness)
*	Omitted as a running change
*2	The color of the wires depends on vehicle equipment
*3	Running change

ws	=	white
sw	=	black
ro	=	red
rt	=	red
br	=	brown
gn	=	green
bl	=	blue
gr	=	grey
li	=	lilac
vi	=	lilac
ge	=	yellow
or	=	orange
rs	=	pink

Protected by copyright. Copying for private, commercial purposes, in part or in whole, is not permitted unless authorised by Volkswagen AG. Volkswagen AG does not guarantee or accept any liability with respect to the correctness of information in this document. Copyright by Volkswagen AG.

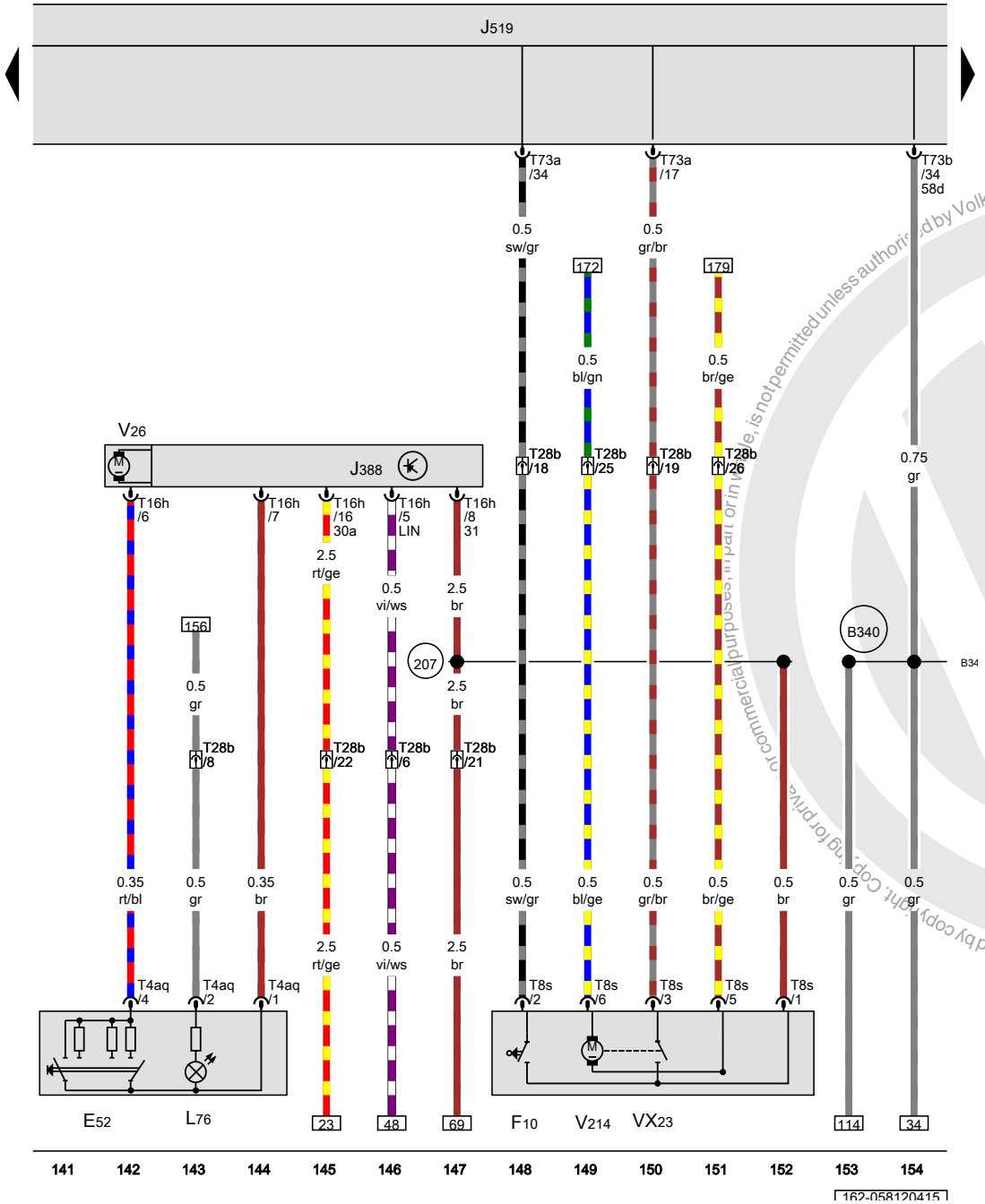

Left rear power window switch in left rear door, Left rear door contact switch, Left rear door control module, Vehicle electrical control module system, Left rear door lock unit, Left rear window regulator motor, Left rear central locking -lock- motor

E52	Left rear power window switch in left rear door
F10	Left rear door contact switch
J388	Left rear door control module
J519	Vehicle electrical control module system
L76	Push button illumination bulb
T4aq	4-pin connector
T8s	8-pin connector
T16h	16-pin connector
T28b	28-pin connector, on the left B-pillar
T73a	73-pin connector
T73b	73-pin connector
VX23	Left rear door lock unit
V26	Left rear window regulator motor
V214	Left rear central locking -lock- motor
207	Ground connection (in left rear door wiring harness)
B340	Connection 58d (in main wiring harness) 1

ws	=	white
sw	=	black
ro	=	red
rt	=	red
br	=	brown
gn	=	green
bl	=	blue
gr	=	grey
li	=	lilac
vi	=	lilac
ge	=	yellow
or	=	orange
rs	=	pink

Copyright by Volkswagen AG. Volkswagen AG does not accept any liability with respect to the correctness of information in this document. Copyright by Volkswagen AG. Protected by copyright. Copying for private or commercial purposes, in part or in whole, is not permitted unless authorised by Volkswagen AG.

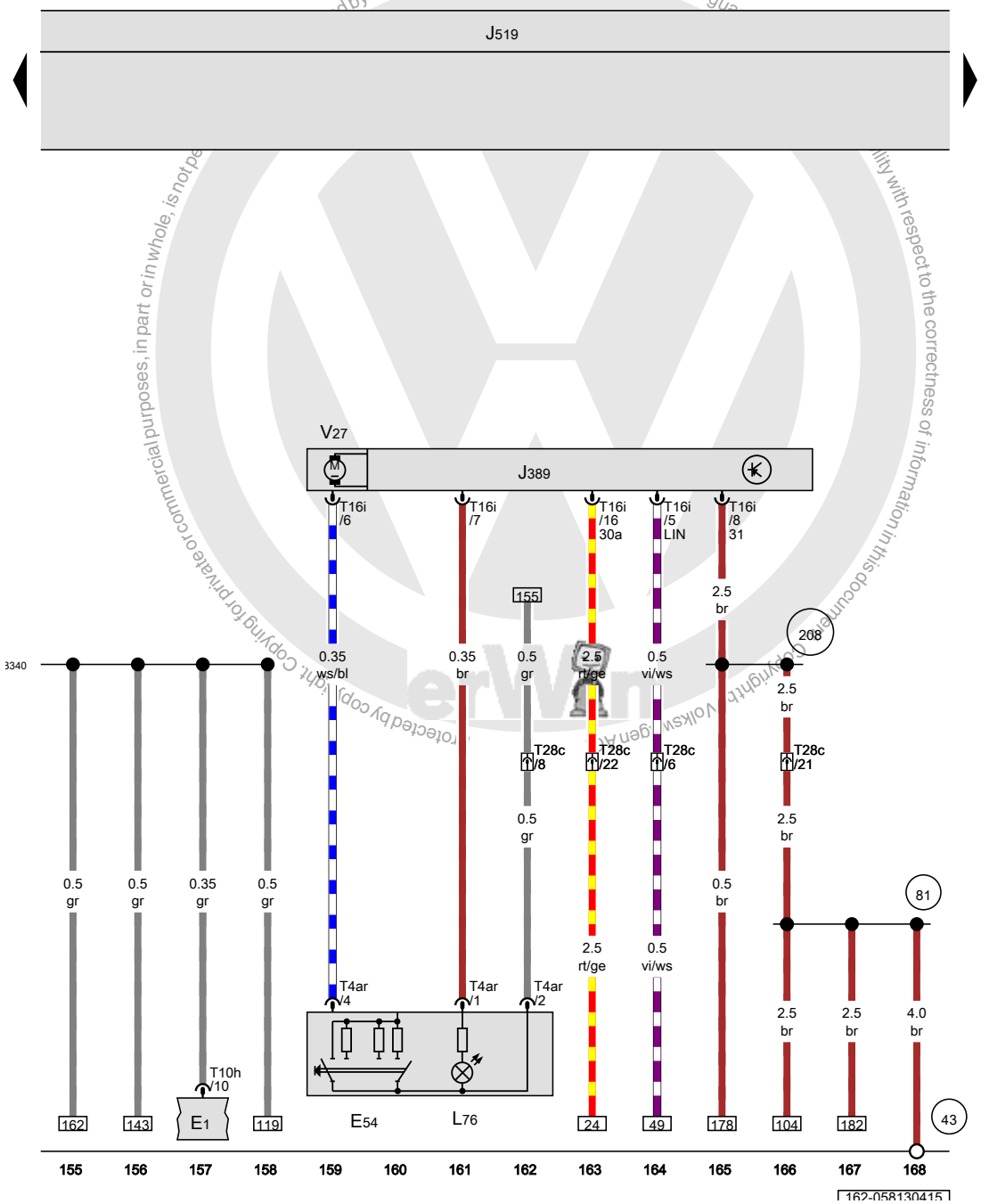

Right rear window switch in right rear door, Right rear door control module, Vehicle electrical control module system, Right rear window regulator motor

E1	Light switch
E54	Right rear window switch in right rear door
J389	Right rear door control module
J519	Vehicle electrical control module system
L76	Push button illumination bulb
T4ar	4-pin connector
T10h	10-pin connector
T16i	16-pin connector
T28c	28-pin connector, on the right B-pillar
V27	Right rear window regulator motor
43	Ground connection on A-pillar, lower right
81	Ground connection 1 (in instrument panel wiring harness)
208	Ground connection (in right rear door wiring harness)
B340	Connection 58d (in main wiring harness) 1

ws	=	white
sw	=	black
ro	=	red
rt	=	red
br	=	brown
gn	=	green
bl	=	blue
gr	=	grey
li = lilac
vi = lilac
ge = yellow
or = orange
rs = pink

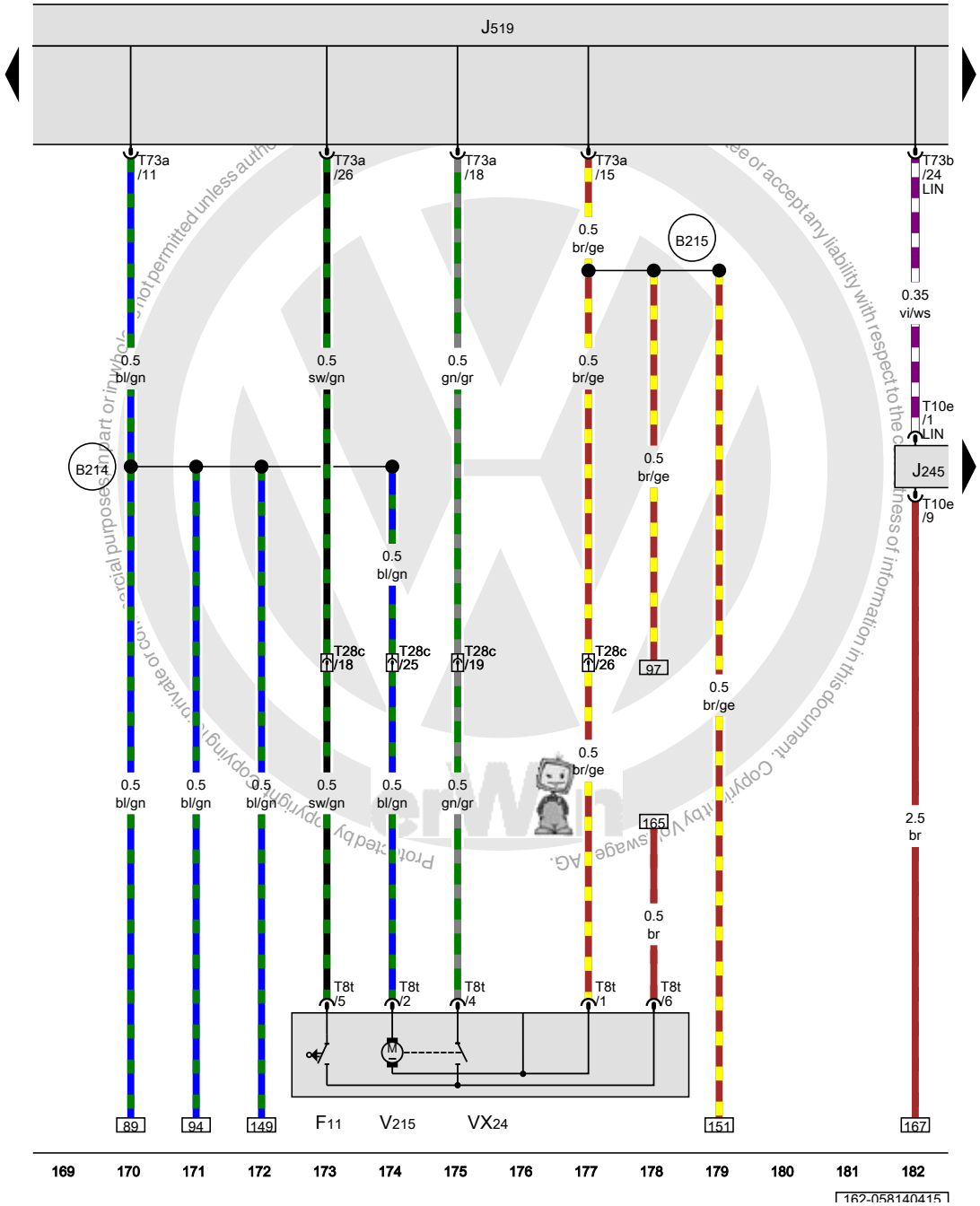

Right rear door contact switch, Power sunroof control module, Vehicle electrical control module system, Right rear door lock unit, Right rear central locking -lock- motor

F11	Right rear door contact switch
J245	Power sunroof control module
J519	Vehicle electrical control module system
T8t	8-pin connector
T10e	10-pin connector
T28c	28-pin connector, on the right B-pillar
T73a	73-pin connector
T73b	73-pin connector
VX24	Right rear door lock unit
V215	Right rear central locking -lock- motor
B214	Central locking connection 1 (in interior wiring harness)
B215	Central locking connection 2 (in interior wiring harness)

ws	=	white
sw	=	black
ro	=	red
rt	=	red
br	=	brown
gn	=	green
bl	=	blue
gr	=	grey
li	=	lilac
vi	=	lilac
ge	=	yellow
or	=	orange
rs	=	pink

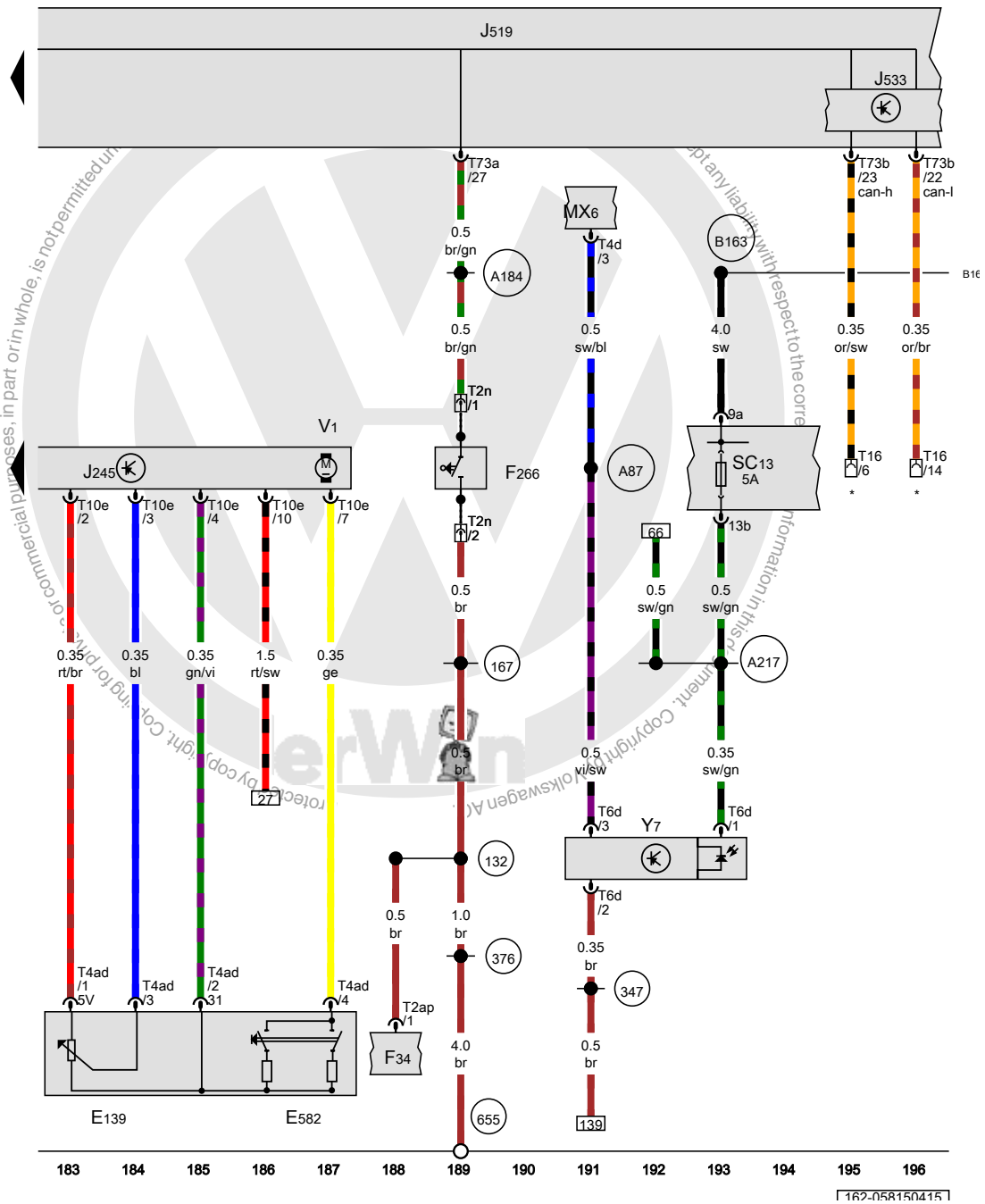

Sunroof adjustment regulator, Sunroof tilt button 1, Engine hood contact switch, Power sunroof control module, Vehicle electrical control module system, Data bus on board diagnostic interface, Sunroof motor, Automatic dimming interior rearview mirror

E139	Sunroof adjustment regulator
E582	Sunroof tilt button 1
F34	Brake fluid level warning switch
F266	Engine hood contact switch
J245	Power sunroof control module
J519	Vehicle electrical control module system
J533	Data bus on board diagnostic interface
MX6	Right tail lamp 2
SC13	Fuse 13 (on fuse panel C)
T2ap	Double connector
T2n	Double connector
T4ad	4-pin connector
T4d	4-pin connector
T6d	6-pin connector
T10e	10-pin connector
T16	16-pin connector
T73a	73-pin connector
T73b	73-pin connector
V1	Sunroof motor
Y7	Automatic dimming interior rearview mirror
132	Ground connection 3 (in engine compartment wiring harness)
167	Ground connection 4 (in engine compartment wiring harness)
347	Ground connection (in roof wiring harness)
376	Ground connection 11 (in main wiring harness)
655	Ground connection on left headlamp
A87	Back-up lamp connection (in instrument panel wiring harness)
A184	Hood contact switch connection (in instrument panel wiring harness)
A217	Positive connection 8 (15a) (in instrument panel wiring harness)
B163	Positive connection 1 (15) (in interior wiring harness)
*	Diagnostic connector

ws	=	white
sw	=	black
ro	=	red
rt	=	red
br	=	brown
gn	=	green
bl	=	blue
gr	=	grey
li	=	lilac
vi	=	lilac
ge	=	yellow
or	=	orange
rs	=	pink

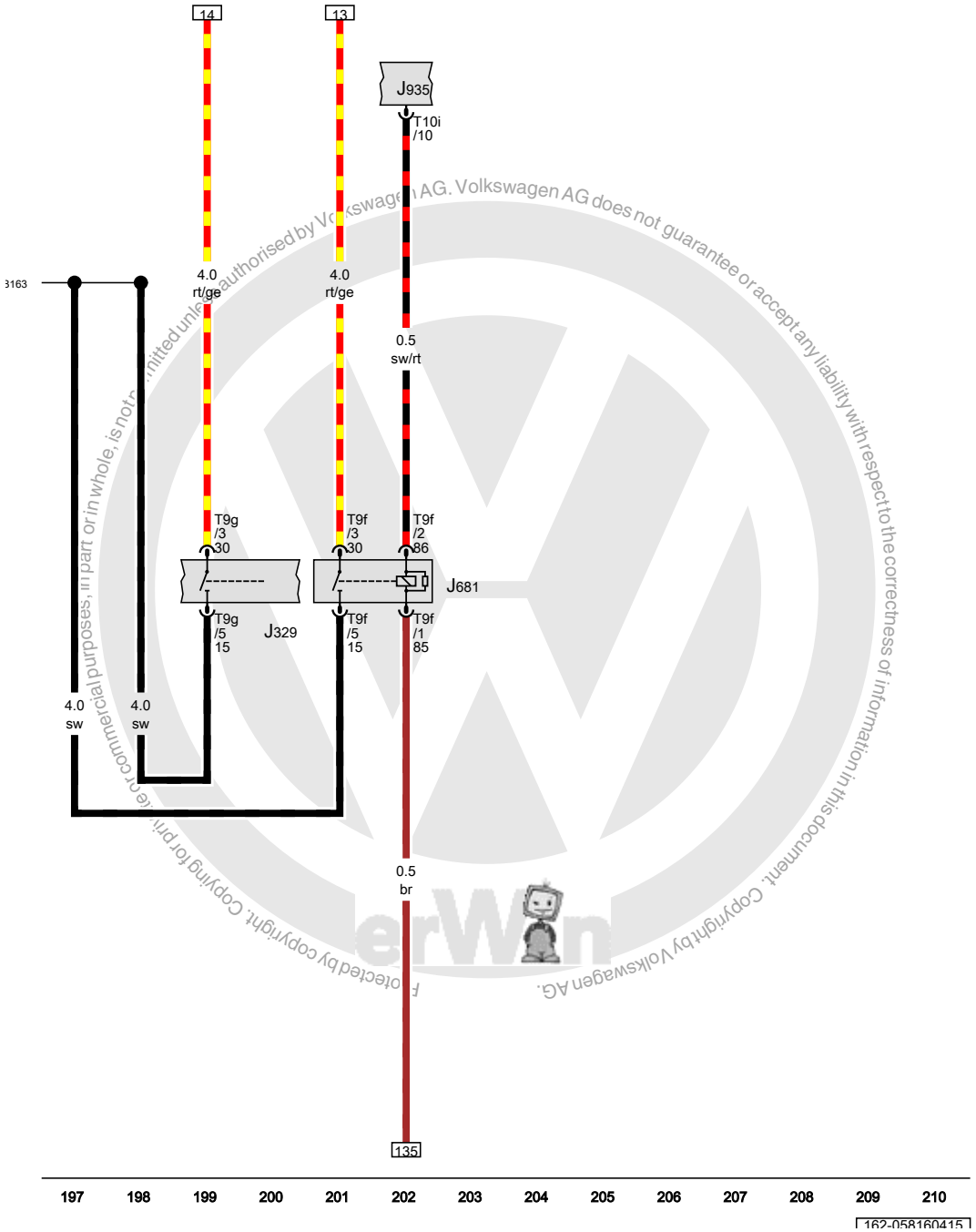

Terminal 15 power supply relay, Terminal 15 power supply relay 2

J329	Terminal 15 power supply relay
J681	Terminal 15 power supply relay 2
J935	Converter box
T9f	9-pin connector
T9g	9-pin connector
T10i	10-pin connector
B163	Positive connection 1 (15) (in interior wiring harness)

ws	=	white
sw	=	black
ro	=	red
rt	=	red
br	=	brown
gn	=	green
bl	=	blue
gr	=	grey
li	=	lilac
vi	=	lilac
ge	=	yellow
or	=	orange
rs	=	pink

Protected by copyright. Copying for private or commercial purposes, in part or in whole, is not permitted unless authorised by Volkswagen AG. Volkswagen AG does not guarantee or accept any liability with respect to the correctness of information in this document. Copyright by Volkswagen AG.

Standard equipment , (AW1)

From June 2011

Protected by copyright. Copying for private or commercial purposes, in part or in whole, is not permitted unless authorised by Volkswagen AG. Volkswagen AG does not guarantee or accept any liability with respect to the correctness of information in this document. Copyright by Volkswagen AG.

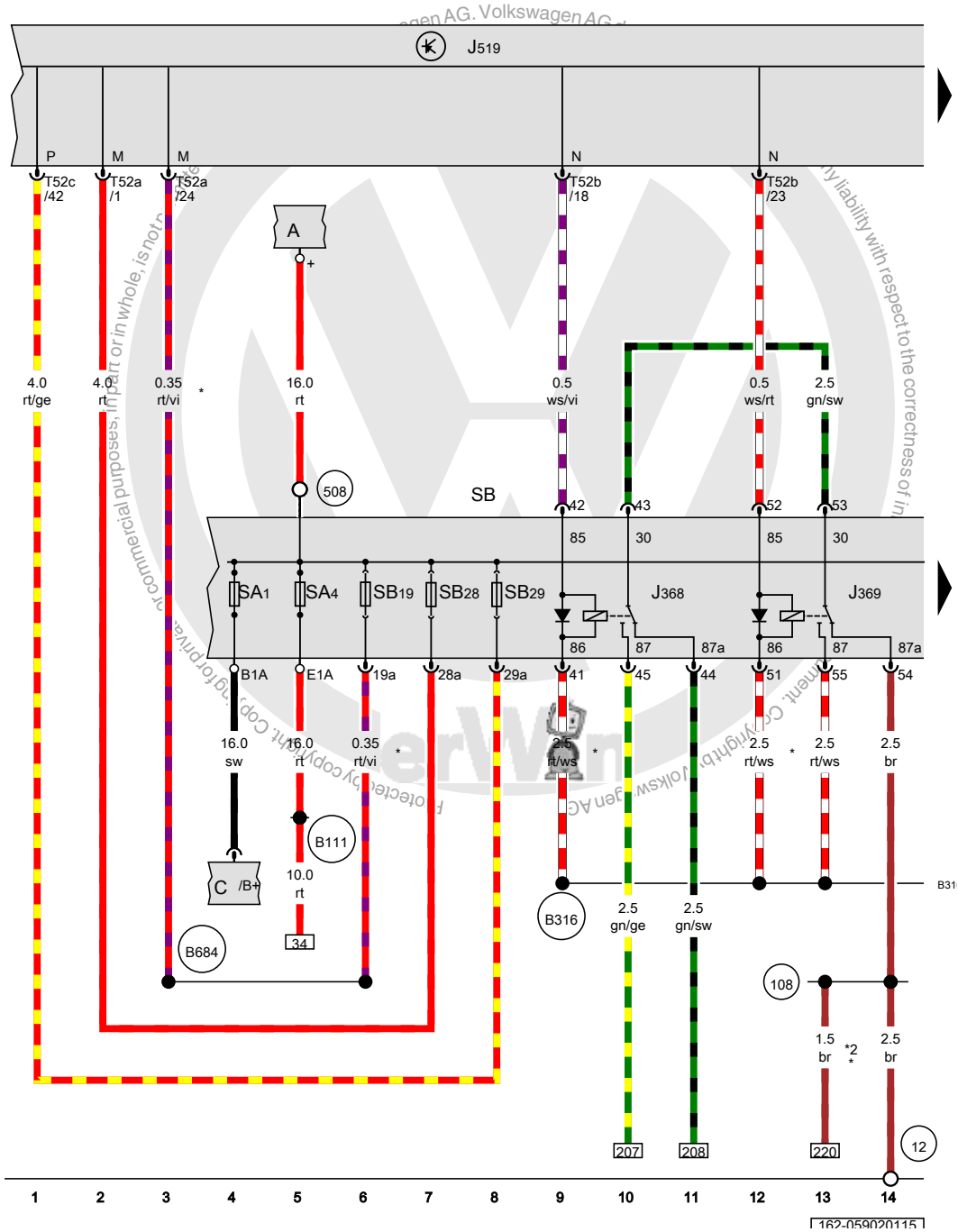

Wiper motor relay 1, Wiper motor relay 2, Vehicle electrical system control module, Fuse 1 (on fuse panel A), Fuse 4 (on fuse panel A), Fuse panel B

A	Battery
C	Generator
J368	Wiper motor relay 1
J369	Wiper motor relay 2
J519	Vehicle electrical system control module
SA1	Fuse 1 (on fuse panel A)
SA4	Fuse 4 (on fuse panel A)
SB	Fuse panel B
SB19	Fuse 19 (on fuse panel B)
SB28	Fuse 28 (on fuse panel B)
SB29	Fuse 29 (on fuse panel B)
T52a	52-pin connector
T52b	52-pin connector
T52c	52-pin connector
12	Ground connection in engine compartment, left
108	Ground connection 2 (in left front wiring harness)
508	Terminal 30 threaded connection (on E-box)
B111	Positive connection 1 (30a) (in interior wiring harness)
B316	Positive connection 2 (30a) (in main wiring harness)
B684	Positive connection 24 (30a) (in main wiring harness)
*	Diameter depends on equipment
*2	Only for vehicles with dual tone horn

ws	=	white
sw	=	black
ro	=	red
rt	=	red
br	=	brown
gn	=	green
bl	=	blue
gr	=	grey
li	=	lilac
vi	=	lilac
ge	=	yellow
or	=	orange
rs	=	pink

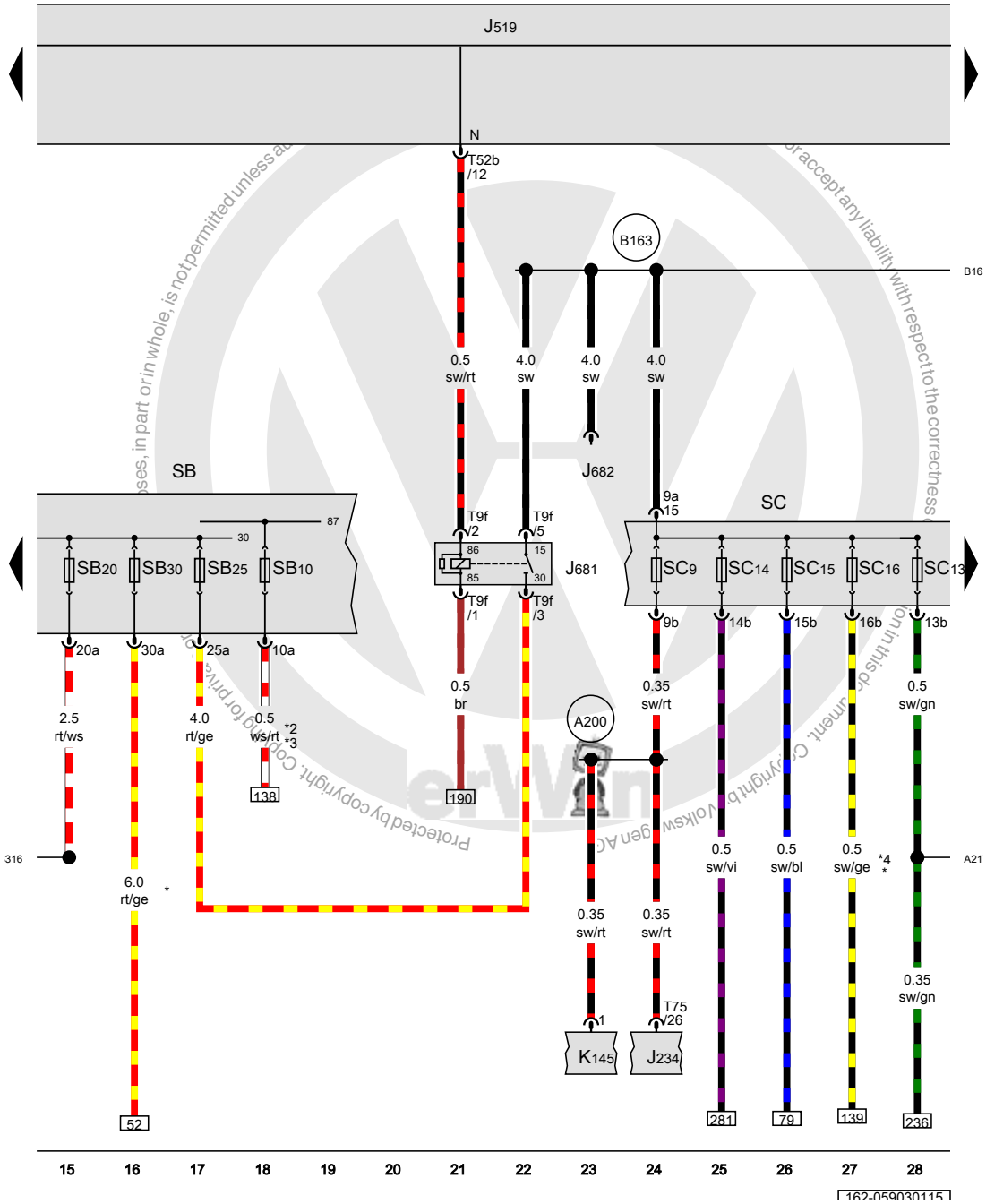

Vehicle electrical system control module, Terminal 15 power supply relay 2, Fuse panel B, Fuse panel C

J234	Airbag control module
J519	Vehicle electrical system control module
J681	Terminal 15 power supply relay 2
J682	Terminal 50 power supply relay
K145	Front passenger airbag -disabled- indicator lamp
SB	Fuse panel B
SB10	Fuse 10 (on fuse panel B)
SB20	Fuse 20 (on fuse panel B)
SB25	Fuse 25 (on fuse panel B)
SB30	Fuse 30 (on fuse panel B)
SC	Fuse panel C
SC9	Fuse 9 (on fuse panel C)
SC13	Fuse 13 (on fuse panel C)
SC14	Fuse 14 (on fuse panel C)
SC15	Fuse 15 (on fuse panel C)
SC16	Fuse 16 (on fuse panel C)
T9f	9-pin connector
T52b	52-pin connector
T75	75-pin connector
A200	Positive connection 5 (15a) (in instrument panel wiring harness)
A217	Positive connection 8 (15a) (in instrument panel wiring harness)
B163	Positive connection 1 (15) (in interior wiring harness)
B316	Positive connection 2 (30a) (in main wiring harness)
*	Diameter depends on equipment
*2	Only for vehicles with DSG transmission
*3	Through May 2013
*4	Depending on equipment

ws	=	white
sw	=	black
ro	=	red
rt	=	red
br	=	brown
gn	=	green
bl	=	blue
gr	=	grey
li	=	lilac
vi	=	lilac
ge	=	yellow
or	=	orange
rs	=	pink

Protected by copyright. Copying for private or commercial purposes, in part or in whole, is not permitted unless authorized. Volkswagen AG does not guarantee or accept any liability with respect to the correctness of information in this document. Copyright by Volkswagen AG.

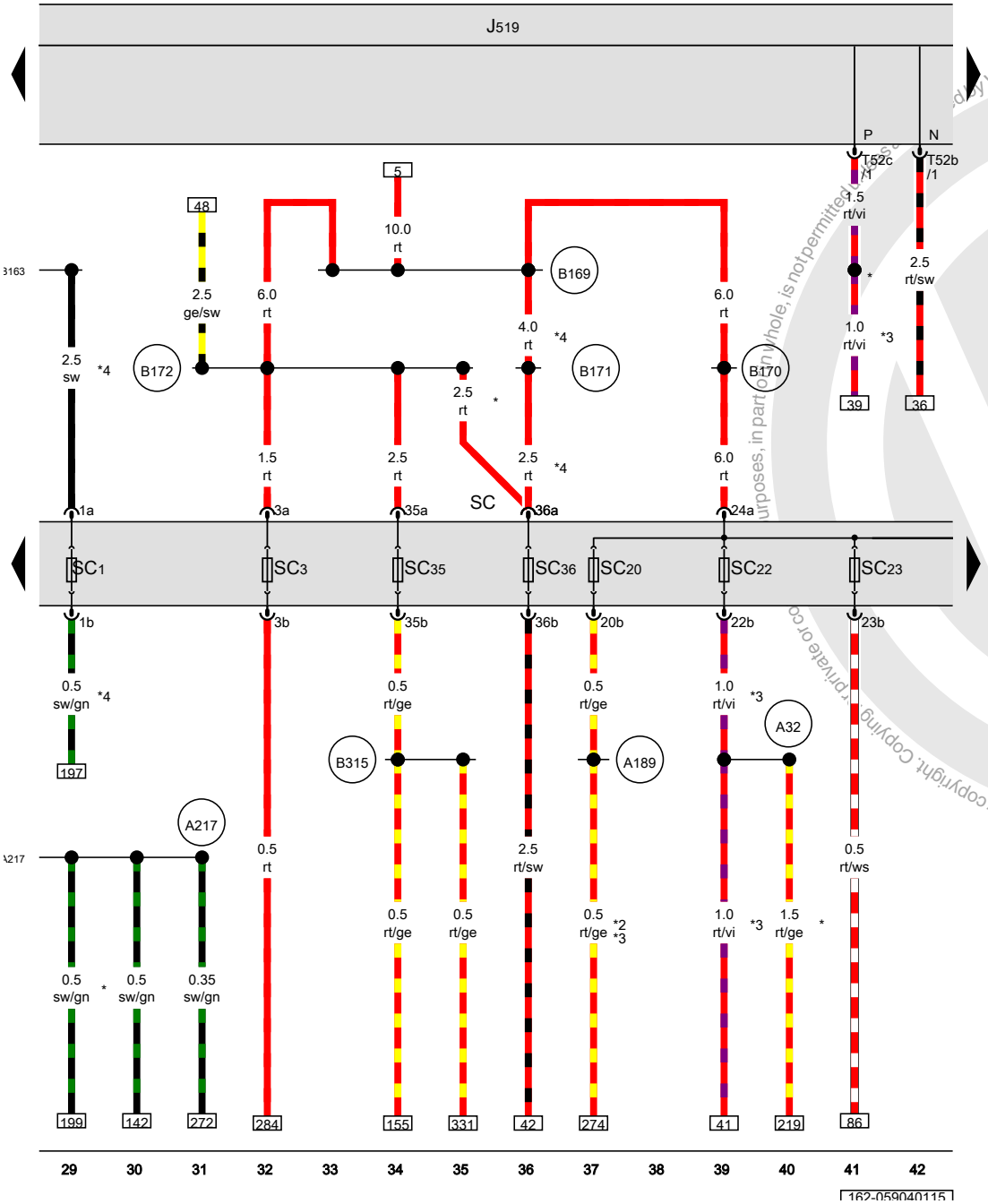

Vehicle electrical system control module, Fuse panel C

J519	Vehicle electrical system control module
SC	Fuse panel C
SC1	Fuse 1 (on fuse panel C)
SC3	Fuse 3 (on fuse panel C)
SC20	Fuse 20 (on fuse panel C)
SC22	Fuse 22 (on fuse panel C)
SC23	Fuse 23 (on fuse panel C)
SC35	Fuse 35 (on fuse panel C)
SC36	Fuse 36 (on fuse panel C)
T52b	52-pin connector
T52c	52-pin connector
A32	Positive connection (30) (in instrument panel wiring harness)
A189	Positive connection 5 (30a) (in instrument panel wiring harness)
A217	Positive connection 8 (15a) (in instrument panel wiring harness)
B163	Positive connection 1 (15) (in interior wiring harness)
B169	Positive connection 1 (30) (in interior wiring harness)
B170	Positive connection 2 (30) (in interior wiring harness)
B171	Positive connection 3 (30) (in interior wiring harness)
B172	Positive connection 4 (30) (in interior wiring harness)
B315	Positive connection 1 (30a) (in main wiring harness)
*	Through May 2013
*2	Only for vehicles with auxiliary coolant heater
*3	Diameter depends on equipment
*4	From June 2013

ws	=	white
sw	=	black
ro	=	red
rt	=	red
br	=	brown
gn	=	green
bl	=	blue
gr	=	grey
li	=	lilac
vi	=	lilac
ge	=	yellow
or	=	orange
rs	=	pink

Protected by copyright. Copying for private or commercial purposes, in part or in whole, is not permitted unless authorized by Volkswagen AG. Volkswagen AG does not guarantee or accept any liability with respect to the correctness of information in this document. Copyright by Volkswagen AG.

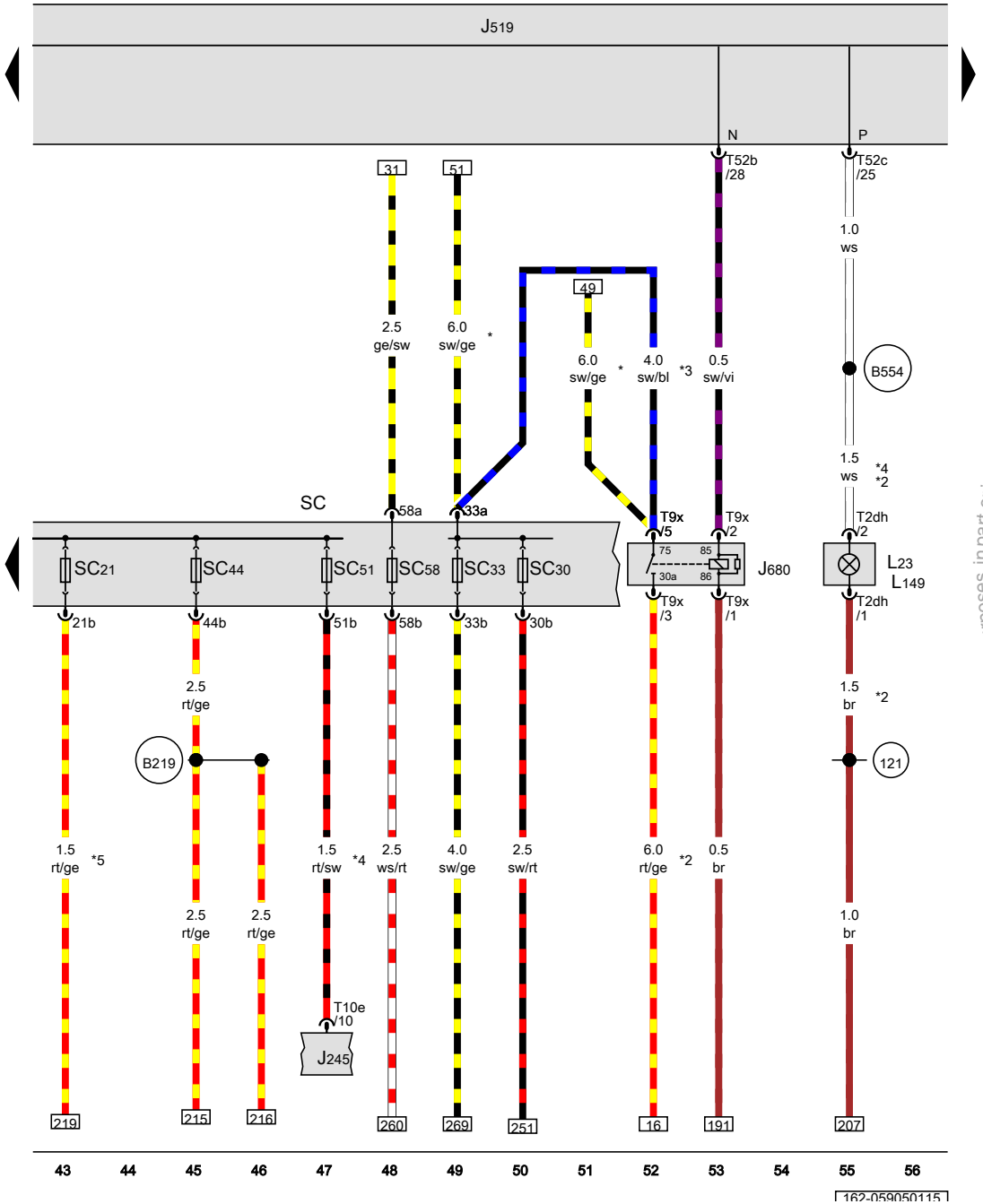

Vehicle electrical system control module, Terminal 75 power supply relay 1, Right front fog lamp bulb, Right cornering lamp bulb, Fuse panel C

J245	Power sunroof control module
J519	Vehicle electrical system control module
J680	Terminal 75 power supply relay 1
L23	Right front fog lamp bulb
L149	Right cornering lamp bulb
SC	Fuse panel C
SC21	Fuse 21 (on fuse panel C)
SC30	Fuse 30 (on fuse panel C)
SC33	Fuse 33 (on fuse panel C)
SC44	Fuse 44 (on fuse panel C)
SC51	Fuse 51 (on fuse panel C)
SC58	Fuse 58 (on fuse panel C)
T2dh	2-pin connector
T9x	9-pin connector
T10e	10-pin connector
T52b	52-pin connector
T52c	52-pin connector
121	Ground connection 2 (in right front wiring harness)
B219	Positive connection 4 (30a) (in interior wiring harness)
B554	Fog lamp connection (in main wiring harness)
*	from July 2012
*2	Diameter depends on equipment
*3	Through June 2012
*4	The color of the wires depends on vehicle equipment
*5	From June 2013

ws	=	white
sw	=	black
ro	=	red
rt	=	red
br	=	brown
gn	=	green
bl	=	blue
gr	=	grey
li	=	lilac
vi	=	lilac
ge	=	yellow
or	=	orange
rs	=	pink

Protected by copyright. Copying for private or commercial purposes, in part or in whole, is not permitted unless authorised by Volkswagen AG. Volkswagen AG does not guarantee or accept any liability with respect to the correctness of information in this document. Copyright by Volkswagen AG.

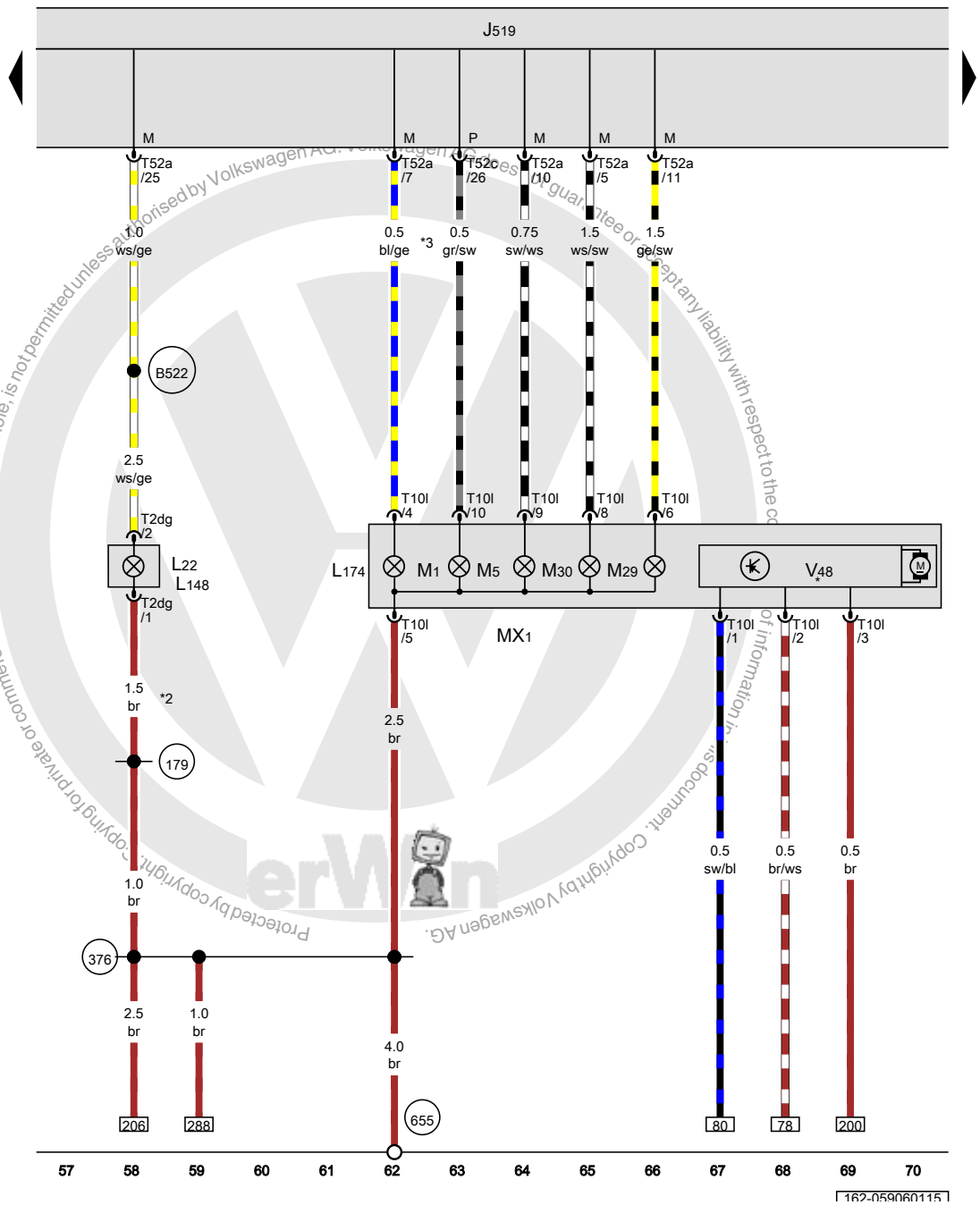

Vehicle electrical system control module, Left front fog lamp bulb, Left cornering lamp bulb, Left daytime running lamp bulb, Left position lamp bulb, Left front headlamp, Left front turn signal bulb, Left headlamp beam adjustment motor

J519	Vehicle electrical system control module
L22	Left front fog lamp bulb
L148	Left cornering lamp bulb
L174	Left daytime running lamp bulb
M1	Left position lamp bulb
MX1	Left front headlamp
M5	Left front turn signal bulb
M29	Left low beam headlamp bulb
M30	Left high beam headlamp bulb
T2dg	2-pin connector
T10l	10-pin connector
T52a	52-pin connector
T52c	52-pin connector
V48	Left headlamp beam adjustment motor
179	Ground connection (in left headlamp wiring harness)
376	Ground connection 11 (in main wiring harness)
655	Ground connection on left headlamp
B522	Fog lamp connection (in main wiring harness)
*	Depending on equipment
*2	Diameter depends on equipment
*3	The color of the wires depends on vehicle equipment

ws	=	white
sw	=	black
ro	=	red
rt	=	red
br	=	brown
gn	=	green
bl	=	blue
gr	=	grey
li	=	lilac
vi	=	lilac
ge	=	yellow
or	=	orange
rs	=	pink

Protected by copyright. Copyright by Volkswagen AG. Volkswagen AG does not guarantee or accept any liability with respect to the correctness of information in this document. Copying for private or commercial purposes, in part or in whole, is not permitted unless authorised by Volkswagen AG.

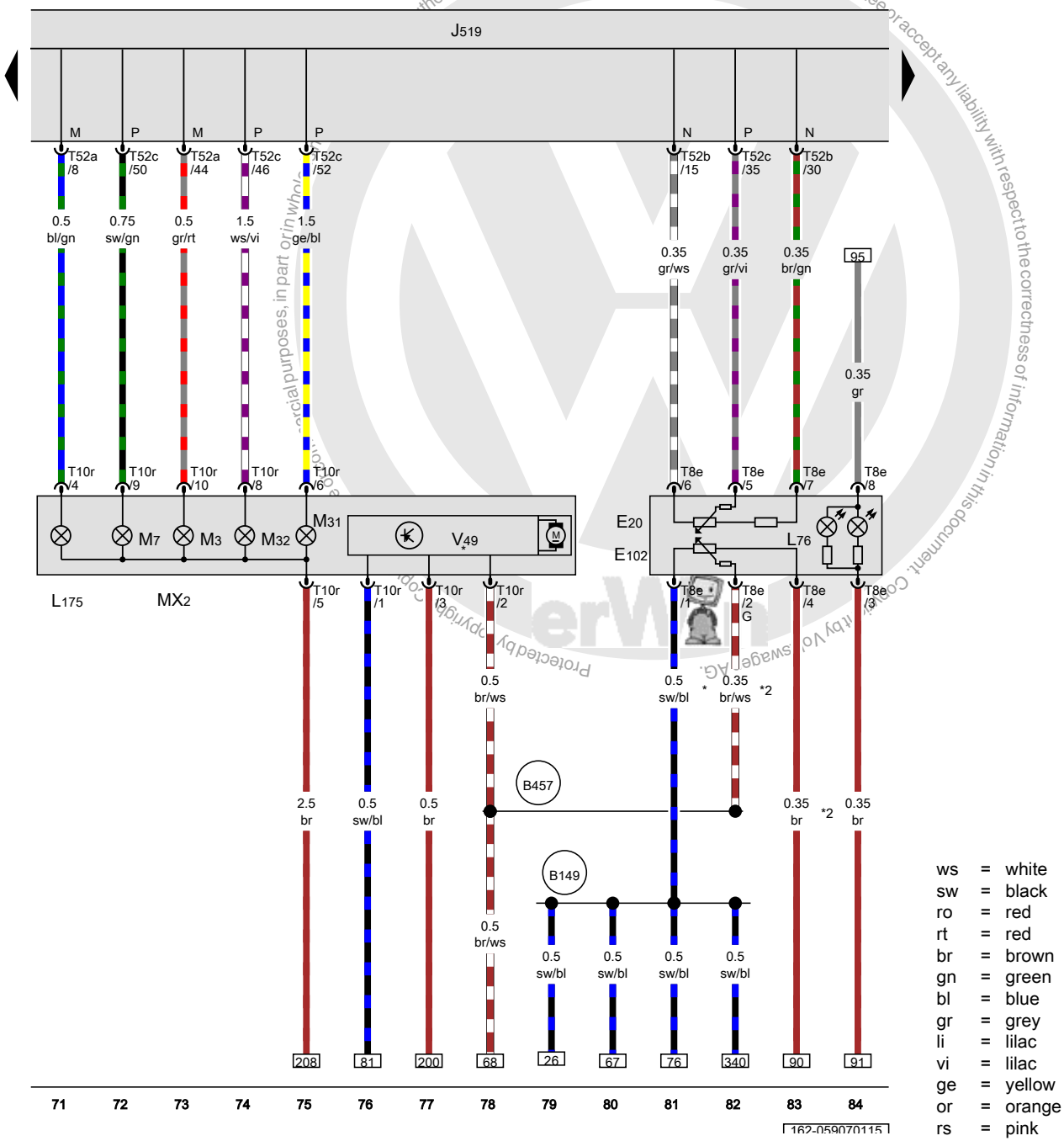

Instrument panel and switch illumination dimmer switch, Headlamp range control adjuster, Vehicle electrical system control module, Right front headlamp, Right position lamp bulb, Right front turn signal bulb, Right headlamp beam adjustment motor

E20	Instrument panel and switch illumination dimmer switch
E102	Headlamp range control adjuster
J519	Vehicle electrical system control module
L76	Push button illumination bulb
L175	Right daytime running lamp bulb
MX2	Right front headlamp
M3	Right position lamp bulb
M7	Right front turn signal bulb
M31	Right low beam headlamp bulb
M32	Right high beam headlamp bulb
T8e	8-pin connector
T10r	10-pin connector
T52a	52-pin connector
T52b	52-pin connector
T52c	52-pin connector
V49	Right headlamp beam adjustment motor
B149	Positive connection 2 (15a) (in interior wiring harness)
B457	Position sensor connection 1 (in main wiring harness)
*	Depending on equipment
*2	Diameter depends on equipment

ws	=	white
sw	=	black
ro	=	red
rt	=	red
br	=	brown
gn	=	green
bl	=	blue
gr	=	grey
li	=	lilac
vi	=	lilac
ge	=	yellow
or	=	orange
rs	=	pink

Protected by copyright. Copyright by Volkswagen AG. Volkswagen AG does not guarantee or accept any liability with respect to the correctness of information in this document. Copyright by Volkswagen AG. Commercial purposes, in part or in whole, are not authorised by Volkswagen AG.

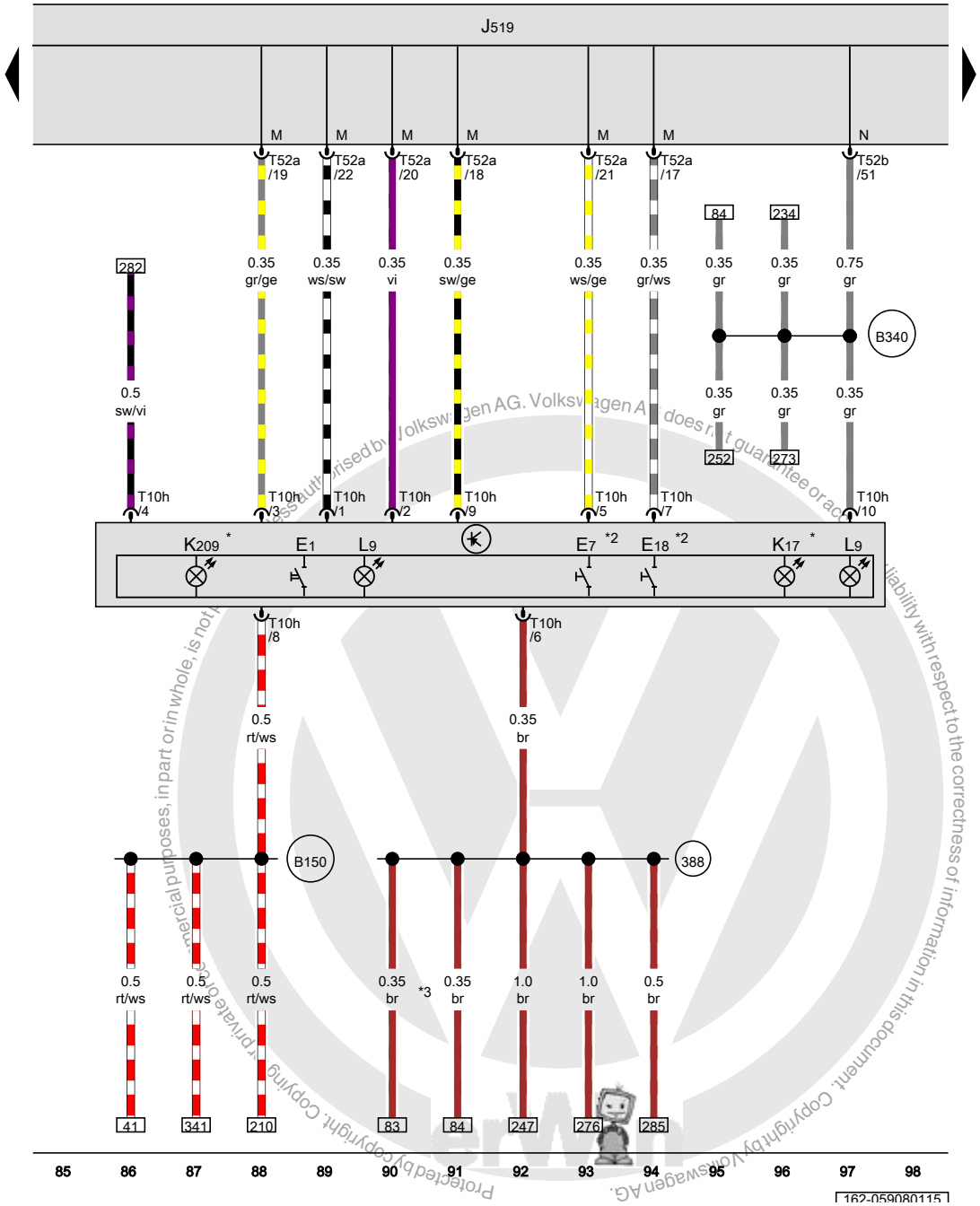

Light switch, Fog lamp switch, Rear fog lamp switch, Vehicle electrical system control module, Fog lamp indicator lamp, Automatic light control indicator lamp

E1	Light switch
E7	Fog lamp switch
E18	Rear fog lamp switch
J519	Vehicle electrical system control module
K17	Fog lamp indicator lamp
K209	Automatic light control indicator lamp
L9	Headlamp switch illumination bulb
T10h	10-pin connector
T52a	52-pin connector
T52b	52-pin connector
388	Ground connection 23 (in main wiring harness)
B150	Positive connection 2 (30a) (in interior wiring harness)
B340	Connection 58d (in main wiring harness) 1
*	Depending on equipment
*2	If available
*3	Diameter depends on equipment

ws	=	white
sw	=	black
ro	=	red
rt	=	red
br	=	brown
gn	=	green
bl	=	blue
gr	=	grey
li	=	lilac
vi	=	lilac
ge	=	yellow
or	=	orange
rs	=	pink

Protected by copyright. Copying for private or commercial purposes, in part or in whole, is not permitted unless authorised by Volkswagen AG. Volkswagen AG does not guarantee or accept any liability with respect to the correctness of information in this document. Copyright by Volkswagen AG.

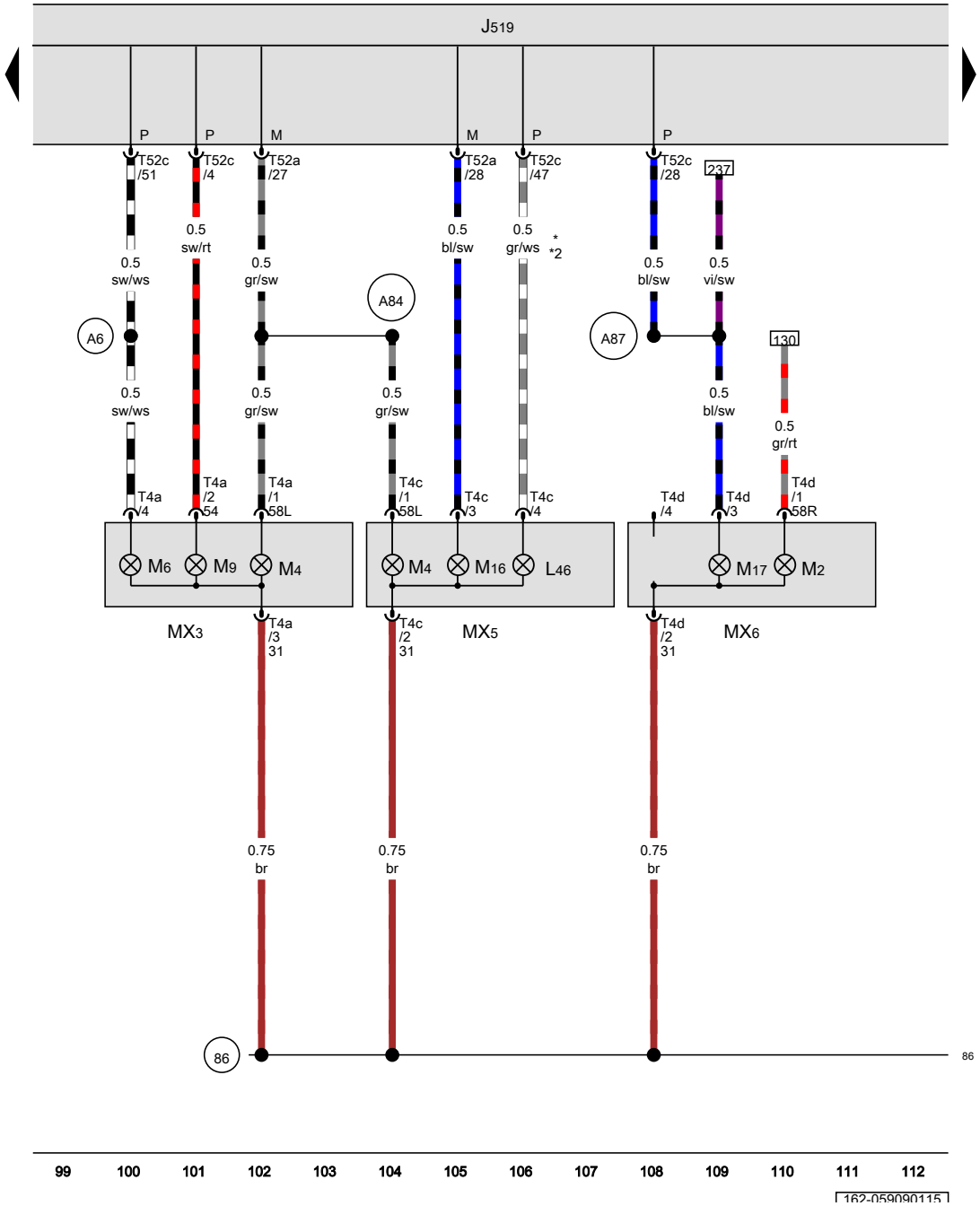

Vehicle electrical system control module, Left rear fog lamp bulb, Right tail lamp bulb, Left tail lamp, Left tail lamp bulb, Left rear turn signal bulb, Left brake lamp bulb, Right back-up lamp bulb

J519	Vehicle electrical system control module
L46	Left rear fog lamp bulb
M2	Right tail lamp bulb
MX3	Left tail lamp
M4	Left tail lamp bulb
MX5	Left tail lamp 2
M6	Left rear turn signal bulb
MX6	Right tail lamp 2
M9	Left brake lamp bulb
M16	Left back-up lamp bulb
M17	Right back-up lamp bulb
T4a	4-pin connector
T4c	4-pin connector
T4d	4-pin connector
T52a	52-pin connector
T52c	52-pin connector
86	Ground connection 1 (in rear wiring harness)
A6	Left turn signal positive connection (in instrument panel wiring harness)
A84	Connection 58L (in instrument panel wiring harness)
A87	Back-up lamp connection (in instrument panel wiring harness)
*	Depending on equipment
*2	Only for vehicles without US equipment

ws	=	white
sw	=	black
ro	=	red
rt	=	red
br	=	brown
gn	=	green
bl	=	blue
gr	=	grey
li	=	lilac
vi	=	lilac
ge	=	yellow
or	=	orange
rs	=	pink

Published by Volkswagen AG. Volkswagen AG does not guarantee or assume any liability with respect to the correctness of information in this document. Copyright by Volkswagen AG. Reproduced by copyright. Copying for private or commercial purposes, in part or in whole, is not permitted unless authorised by Volkswagen AG.

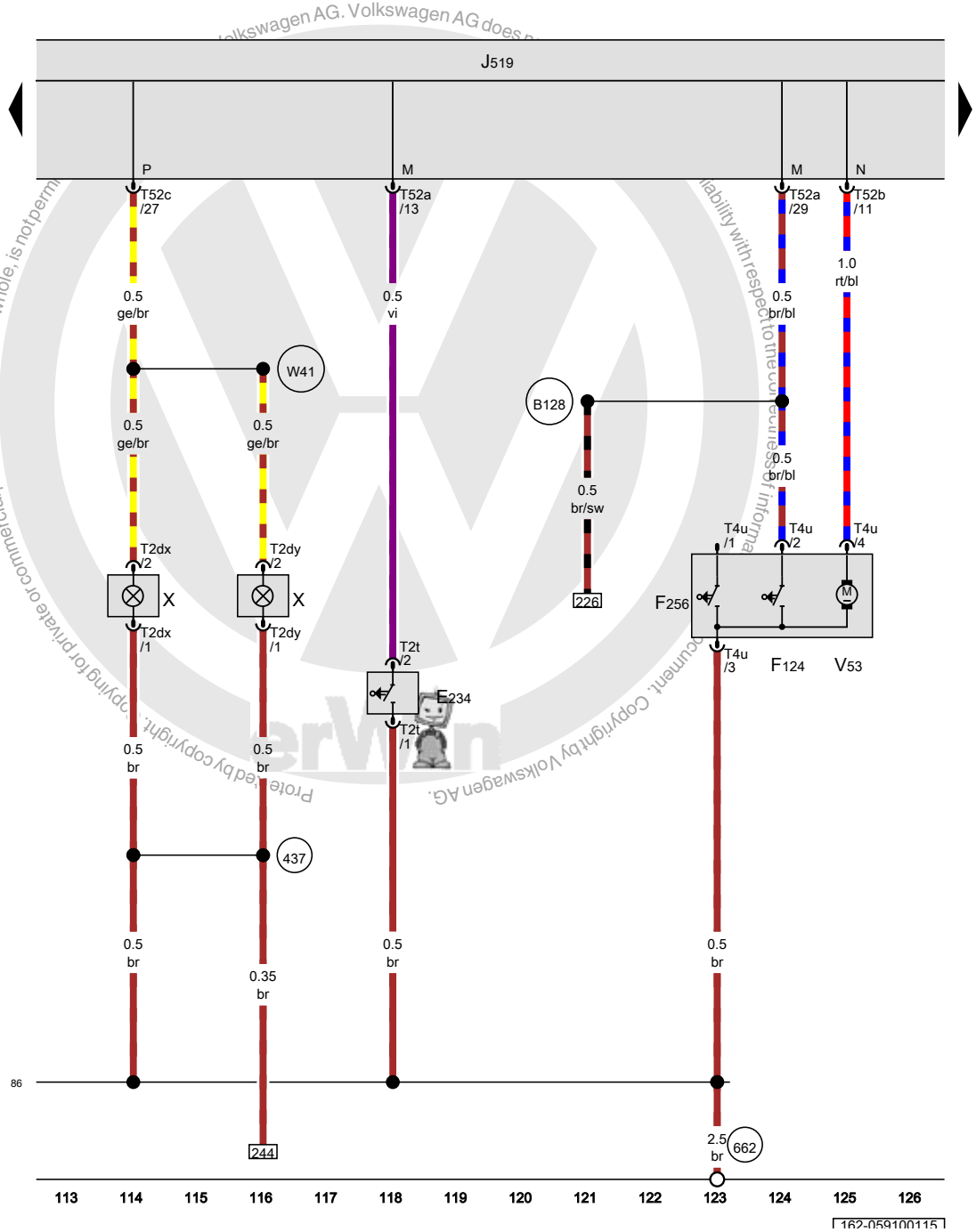

Release button in rear lid handle, Vehicle electrical system control module, Rear lid central locking system motor, License plate lamp

E234	Release button in rear lid handle
F124	Rear lid lock/alarm/central locking switch
F256	Rear lid lock unit
J519	Vehicle electrical system control module
T2dx	2-pin connector
T2dy	2-pin connector
T2t	2-pin connector
T4u	4-pin connector
T52a	52-pin connector
T52b	52-pin connector
T52c	52-pin connector
V53	Rear lid central locking system motor
X	License plate lamp
86	Ground connection 1 (in rear wiring harness)
437	Ground connection (in license plate lamp wiring harness)
662	Ground connection in left rear side panel
B128	Luggage compartment lamp connection (in interior wiring harness)
W41	Positive connection (58) (in license plate lamp wiring harness)

ws	=	white
sw	=	black
ro	=	red
rt	=	red
br	=	brown
gn	=	green
bl	=	blue
gr	=	grey
li	=	lilac
vi	=	lilac
ge	=	yellow
or	=	orange
rs	=	pink

Protected by copyright. Copying for private or commercial purposes, in part or in whole, is not permitted. Copyright by Volkswagen AG. Volkswagen AG does not accept liability with respect to the correctness of information in this document.

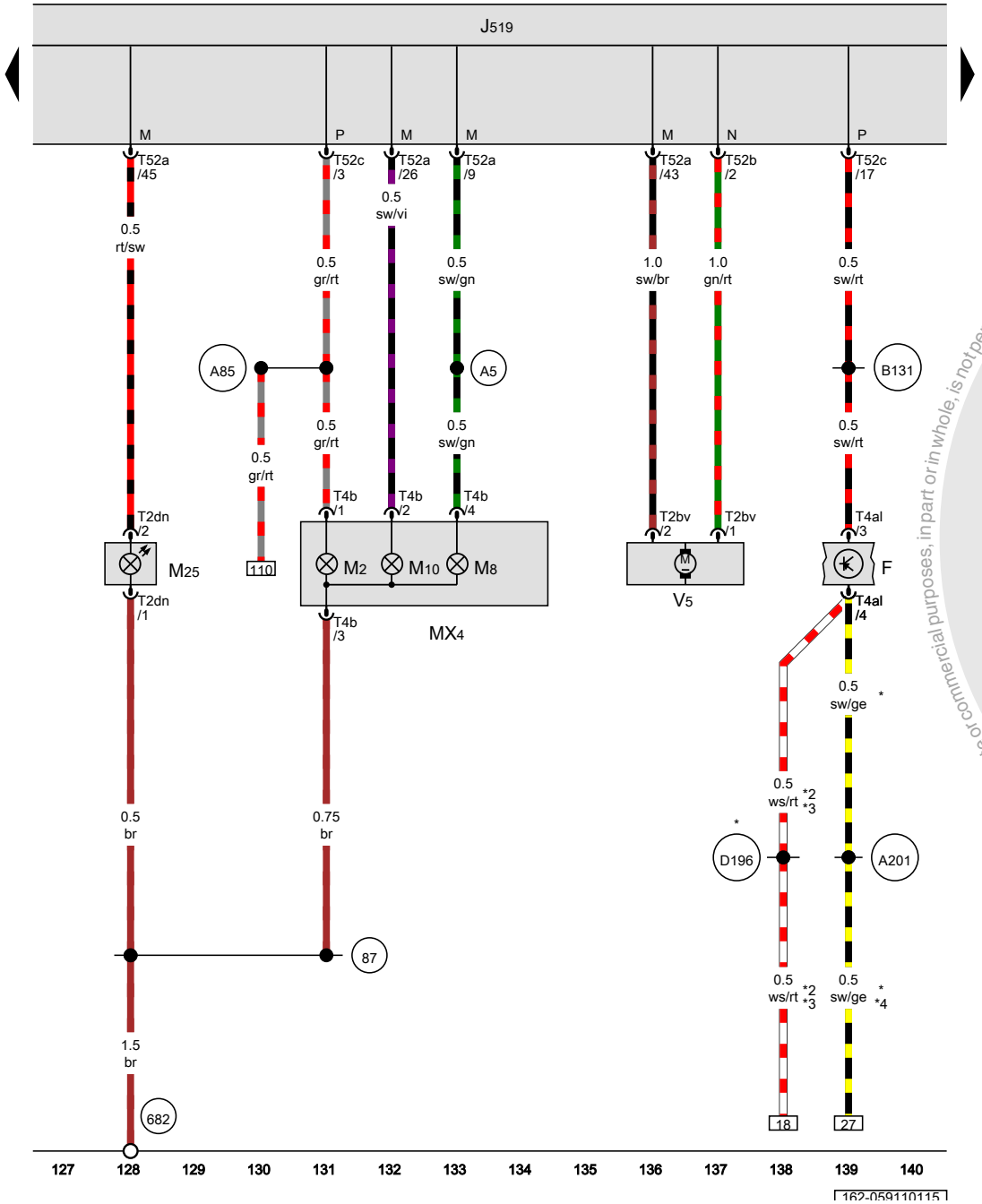

Brake lamp switch, Vehicle electrical system control module, Right tail lamp, Right rear turn signal bulb, Right brake lamp bulb, High-mounted brake lamp bulb

F	Brake lamp switch
J519	Vehicle electrical system control module
M2	Right tail lamp bulb
MX4	Right tail lamp
M8	Right rear turn signal bulb
M10	Right brake lamp bulb
M25	High-mounted brake lamp bulb
T2bv	2-pin connector
T2dn	2-pin connector
T4al	4-pin connector
T4b	4-pin connector
T52a	52-pin connector
T52b	52-pin connector
T52c	52-pin connector
V5	Windshield washer pump
87	Ground connection 2 (in rear wiring harness)
682	Ground connection 2 in right rear side panel
A5	Right turn signal positive connection (in instrument panel wiring harness)
A85	Connection 58R (in instrument panel wiring harness)
A201	Positive connection 6 (15a) (in instrument panel wiring harness)
B131	Connection 54 (in interior wiring harness)
D196	Connection 87a (in engine pre-wiring harness) 2
*	Depending on equipment
*2	Only for vehicles with DSG transmission
*3	Through May 2013
*4	Diameter depends on equipment

ws	=	white
sw	=	black
ro	=	red
rt	=	red
br	=	brown
gn	=	green
bl	=	blue
gr	=	grey
li	=	lilac
vi	=	lilac
ge	=	yellow
or	=	orange
rs	=	pink

Protected by copyright. Copying for private or commercial purposes, in part or in whole, is not permitted unless authorised by Volkswagen AG. Volkswagen AG does not guarantee or accept any liability with respect to the correctness of information in this document. Copyright by Volkswagen AG.

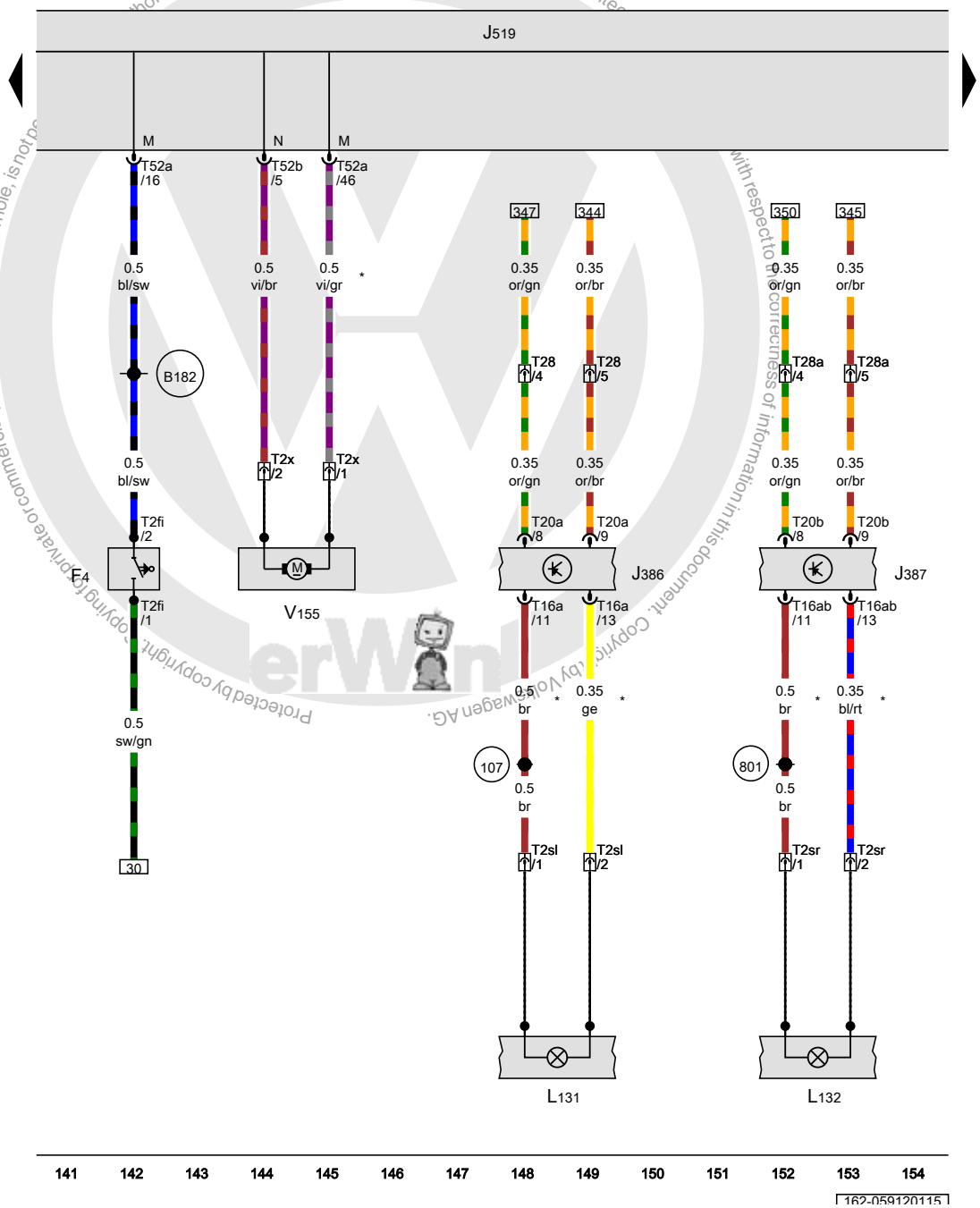

Back-up lamp switch, Driver door control module, Front passenger door control module, Vehicle electrical system control module, Driver exterior rearview mirror turn signal bulb, Front passenger exterior rearview mirror turn signal bulb, Fuel filler door lock motor

F4	Back-up lamp switch
J386	Driver door control module
J387	Front passenger door control module
J519	Vehicle electrical system control module
L131	Driver exterior rearview mirror turn signal bulb
L132	Front passenger exterior rearview mirror turn signal bulb
T2fi	2-pin connector
T2sl	2-pin connector, in the driver exterior rearview mirror housing
T2sr	2-pin connector
T2x	2-pin connector
T16a	16-pin connector
T16ab	16-pin connector
T20a	20-pin connector
T20b	20-pin connector
T28	28-pin connector
T28a	28-pin connector, near the lower right A-pillar
T52a	52-pin connector
T52b	52-pin connector
V155	Fuel filler door lock motor
107	Ground connection (in exterior mirror wiring harness)
801	Ground connection 2 (in exterior rearview mirror wiring harness)
B182	Connection RF (in interior wiring harness)
*	The color of the wires depends on vehicle equipment

ws	=	white
sw	=	black
ro	=	red
rt	=	red
br	=	brown
gn	=	green
bl	=	blue
gr	=	grey
li	=	lilac
vi	=	lilac
ge	=	yellow
or	=	orange
rs	=	pink

Protected by copyright. Copying for private or commercial purposes, in part or in whole, is not permitted without the prior written consent of Volkswagen AG. Volkswagen AG does not guarantee or accept any liability with respect to the correctness of information in this document. Copyright by Volkswagen AG.

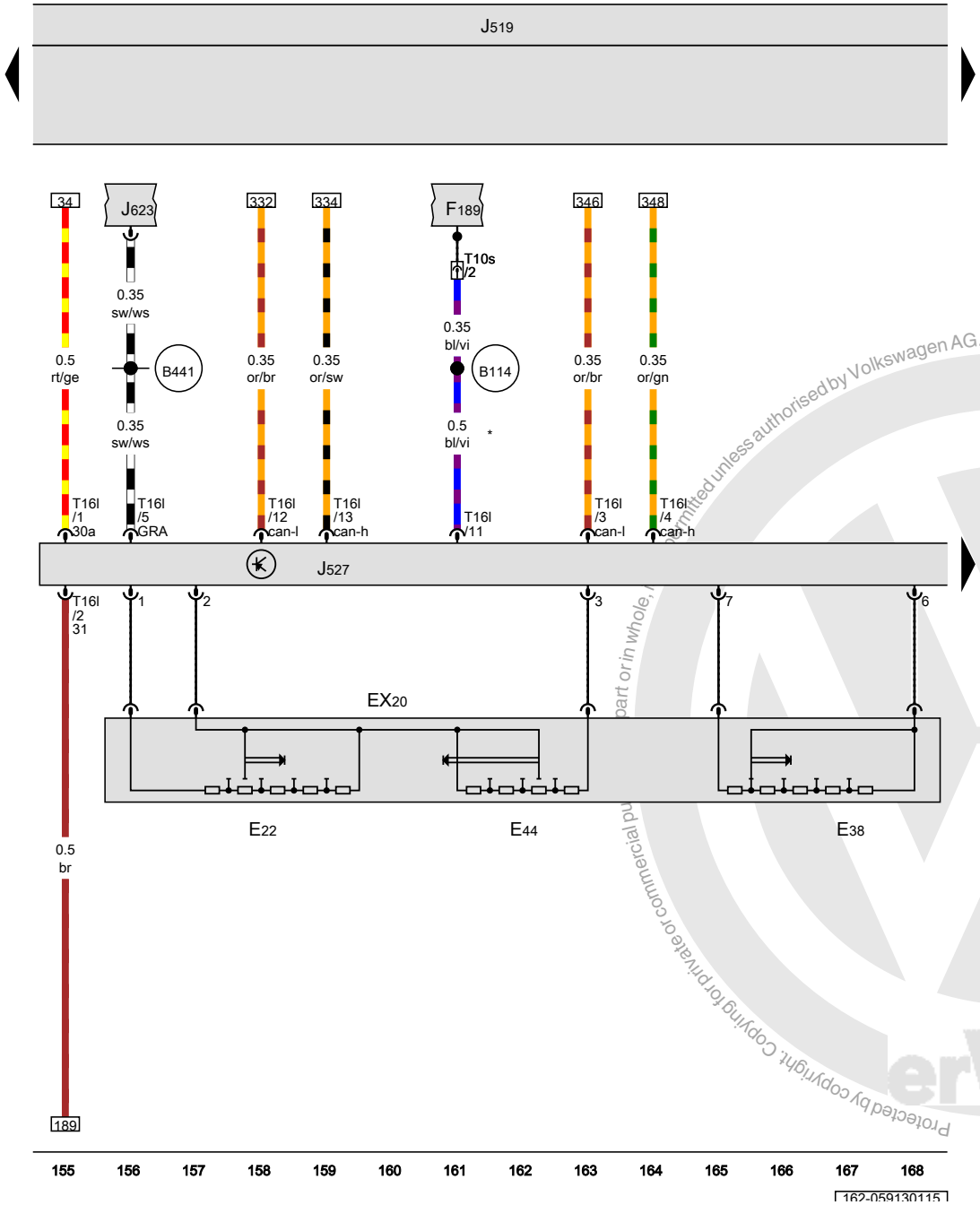

Right steering column switch, Windshield wiper intermittent mode switch, Windshield wiper intermittent regulator, Windshield and headlamp washer pump switch, Vehicle electrical system control module, Steering column electronics control module

EX20	Right steering column switch
E22	Windshield wiper intermittent mode switch
E38	Windshield wiper intermittent regulator
E44	Windshield and headlamp washer pump switch
F189	tiptronic switch
J519	Vehicle electrical system control module
J527	Steering column electronics control module
J623	Engine control module
T10s	10-pin connector
T16l	16-pin connector
B114	Lock switch connection (in interior wiring harness)
B441	Cruise control connection (in main wiring harness)
*	Diameter depends on equipment

ws	=	white
sw	=	black
ro	=	red
rt	=	red
br	=	brown
gn	=	green
bl	=	blue
gr	=	grey
li	=	lilac
vi	=	lilac
ge	=	yellow
or	=	orange
rs	=	pink

Protected by copyright. Copying for private or commercial purposes, in part or in whole, is not permitted unless authorised by Volkswagen AG. Volkswagen AG does not guarantee or accept any liability with respect to the correctness of information in this document. Copyright by Volkswagen AG.

Ignition/starter switch, Turn signal switch, Headlamp dimmer/flasher switch, Left steering column switch, Cruise control switch, Cruise control -SET- button, Vehicle electrical system control module, Steering column electronics control module

D	Ignition/starter switch
E2	Turn signal switch
E4	Headlamp dimmer/flasher switch
EX19	Left steering column switch
E45	Cruise control switch
E227	Cruise control -SET- button
J519	Vehicle electrical system control module
J527	Steering column electronics control module
N376	Ignition switch key lock solenoid
T12j	12-pin connector
*	Only for vehicles with cruise control
*2	Only for vehicles with DSG transmission

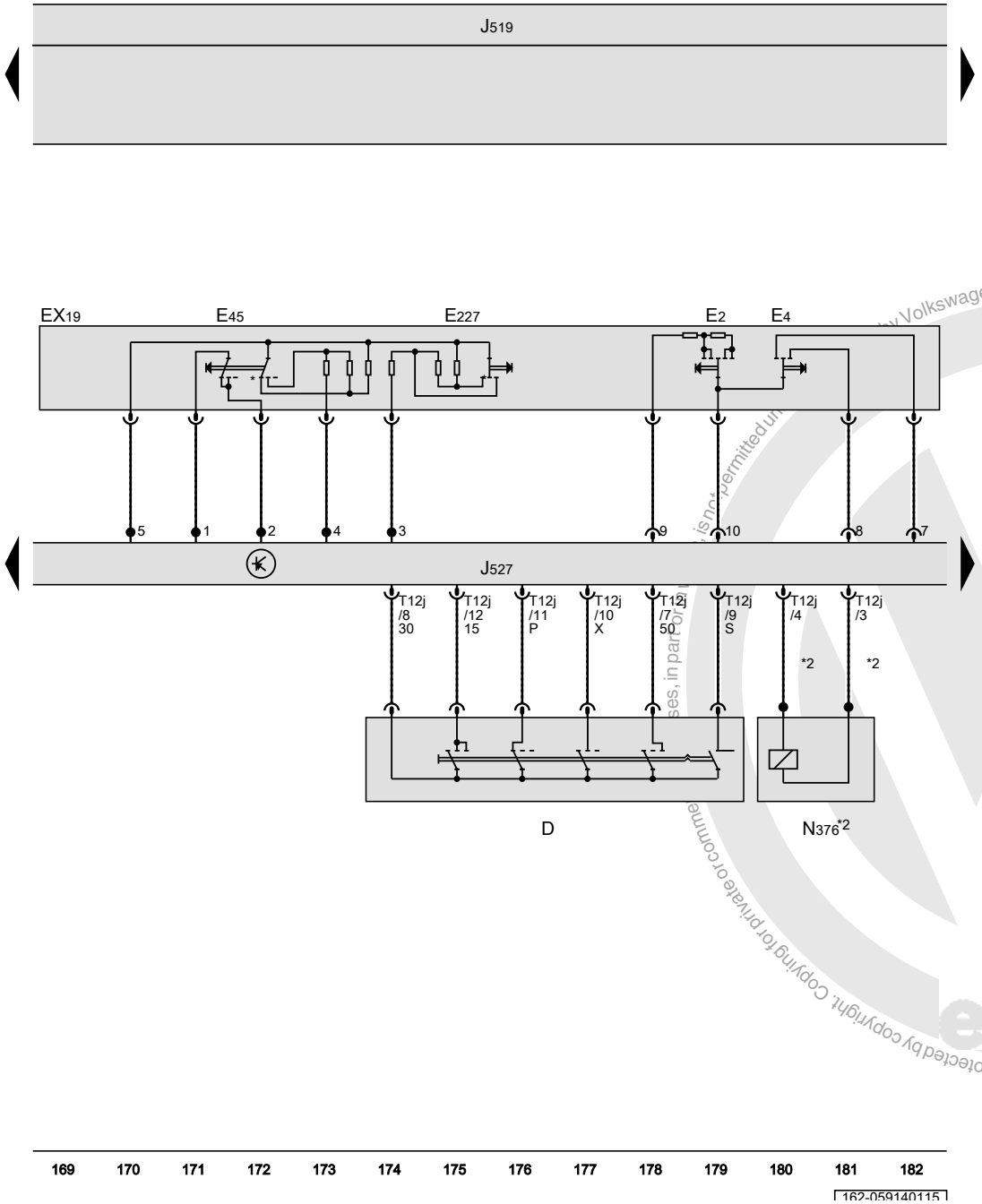

ws	=	white
sw	=	black
ro	=	red
rt	=	red
br	=	brown
gn	=	green
bl	=	blue
gr	=	grey
li	=	lilac
vi	=	lilac
ge	=	yellow
or	=	orange
rs	=	pink

Copyright by Volkswagen AG. Volkswagen AG does not guarantee or accept any liability with respect to the correctness of information in this document. Copyright by Volkswagen AG. Protected by copyright. Copying for private or commercial purposes, in part or in whole, is not permitted unless authorized by Volkswagen AG.

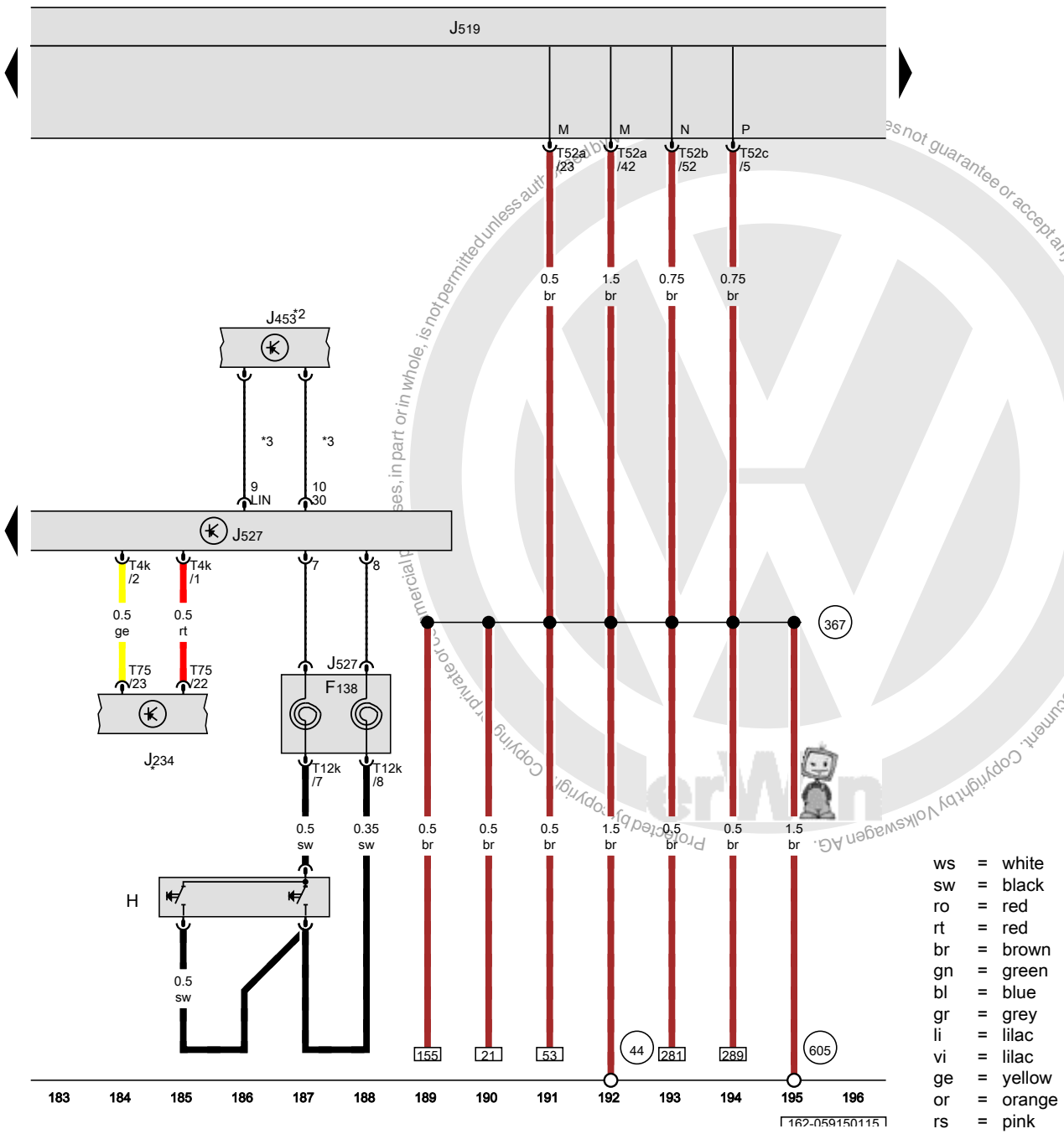

Vehicle electrical system control module, Steering column electronics control module

F138	Airbag spiral spring/return spring with slip ring
H	Signal horn activation
J234	Airbag control module
J453	Multifunction steering wheel control module
J519	Vehicle electrical system control module
J527	Steering column electronics control module
T4k	4-pin connector
T12k	12-pin connector
T52a	52-pin connector
T52b	52-pin connector
T52c	52-pin connector
T75	75-pin connector
44	Ground connection on A-pillar, lower left
367	Ground connection 2 (in main wiring harness)
605	Ground connection on upper steering column
*	Refer to applicable airbag wiring diagram
*2	Refer to applicable wiring diagram for multifunction steering wheel
*3	Only for vehicles with a multifunction steering wheel

ws	=	white
sw	=	black
ro	=	red
rt	=	red
br	=	brown
gn	=	green
bl	=	blue
gr	=	grey
li	=	lilac
vi	=	lilac
ge	=	yellow
or	=	orange
rs	=	pink

Copyright by Volkswagen AG. Protected by copyright. Copying for private or commercial purposes, in part or in whole, is not permitted unless authorised by Volkswagen AG. Volkswagen AG does not guarantee or accept any liability with respect to the correctness of information in this document.

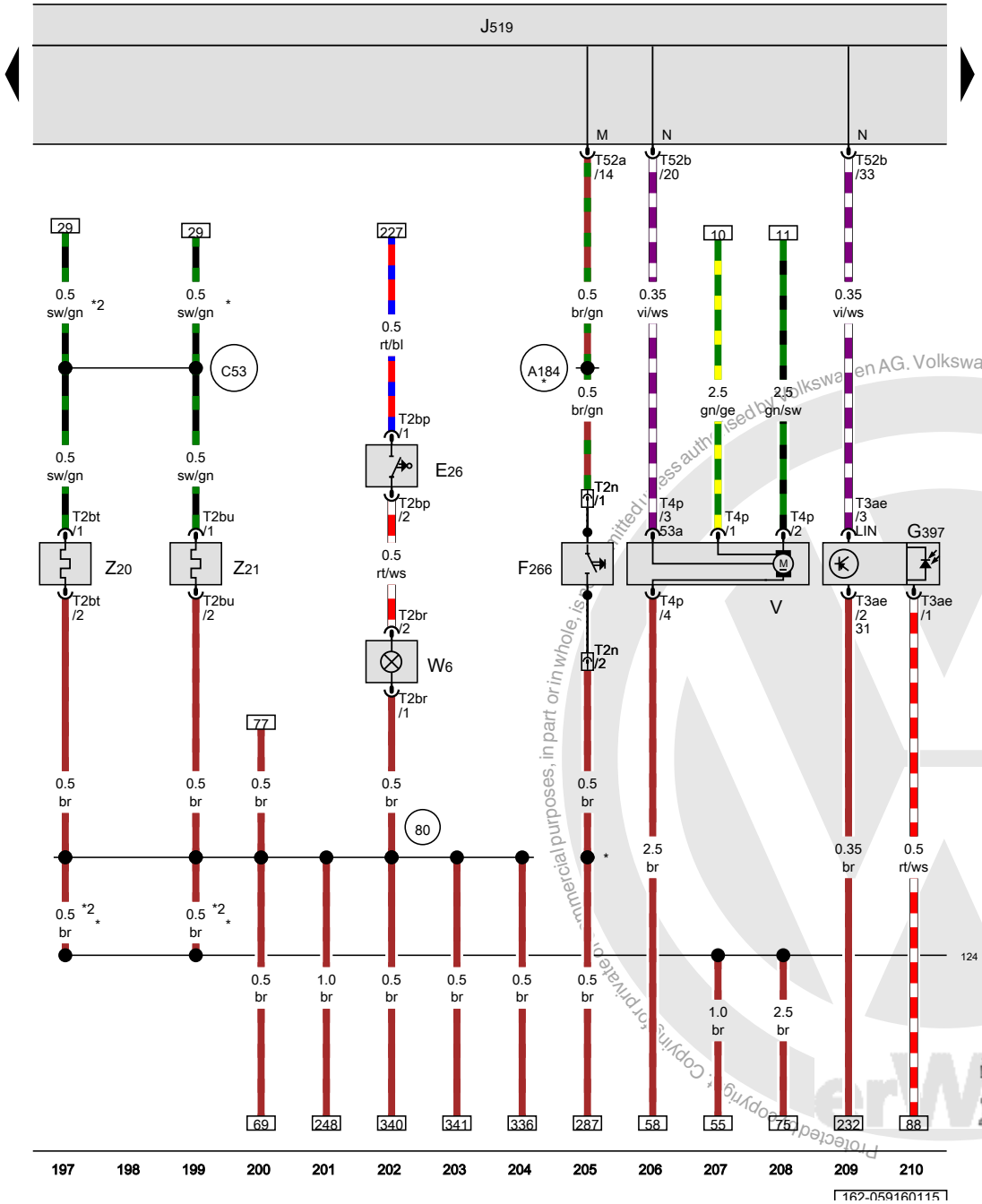

Glove compartment lamp switch, Engine hood contact switch, Vehicle electrical system control module, Windshield wiper motor, Glove compartment lamp, Left washer nozzle heater, Right washer nozzle heater

E26	Glove compartment lamp switch
F266	Engine hood contact switch
G397	Rain/light recognition sensor
J519	Vehicle electrical system control module
T2bp	2-pin connector
T2br	2-pin connector
T2bt	2-pin connector
T2bu	2-pin connector
T2n	2-pin connector, near the headlamps
T3ae	3-pin connector
T4p	4-pin connector
T52a	52-pin connector
T52b	52-pin connector
V	Windshield wiper motor
W6	Glove compartment lamp
Z20	Left washer nozzle heater
Z21	Right washer nozzle heater
80	Ground connection 1 (in instrument cluster wiring harness)
124	Ground connection (in right engine compartment wiring harness)
A184	Hood contact switch connection (in instrument panel wiring harness)
C53	Positive connection (x) (in heated spray nozzle wiring harness)
*	Through May 2013
*2	From June 2013

ws	=	white
sw	=	black
ro	=	red
rt	=	red
br	=	brown
gn	=	green
bl	=	blue
gr	=	grey
li	=	lilac
vi	=	lilac
ge	=	yellow
or	=	orange
rs	=	pink

Protected copyright. Copying, in part or in whole, is prohibited without authorised by Volkswagen AG. Volkswagen AG does not guarantee or accept any liability with respect to the correctness of information in this document. Copyright by Volkswagen AG. For commercial purposes, in part or in whole, is prohibited without authorised by Volkswagen AG. Volkswagen AG does not guarantee or accept any liability with respect to the correctness of information in this document. Copyright by Volkswagen AG.

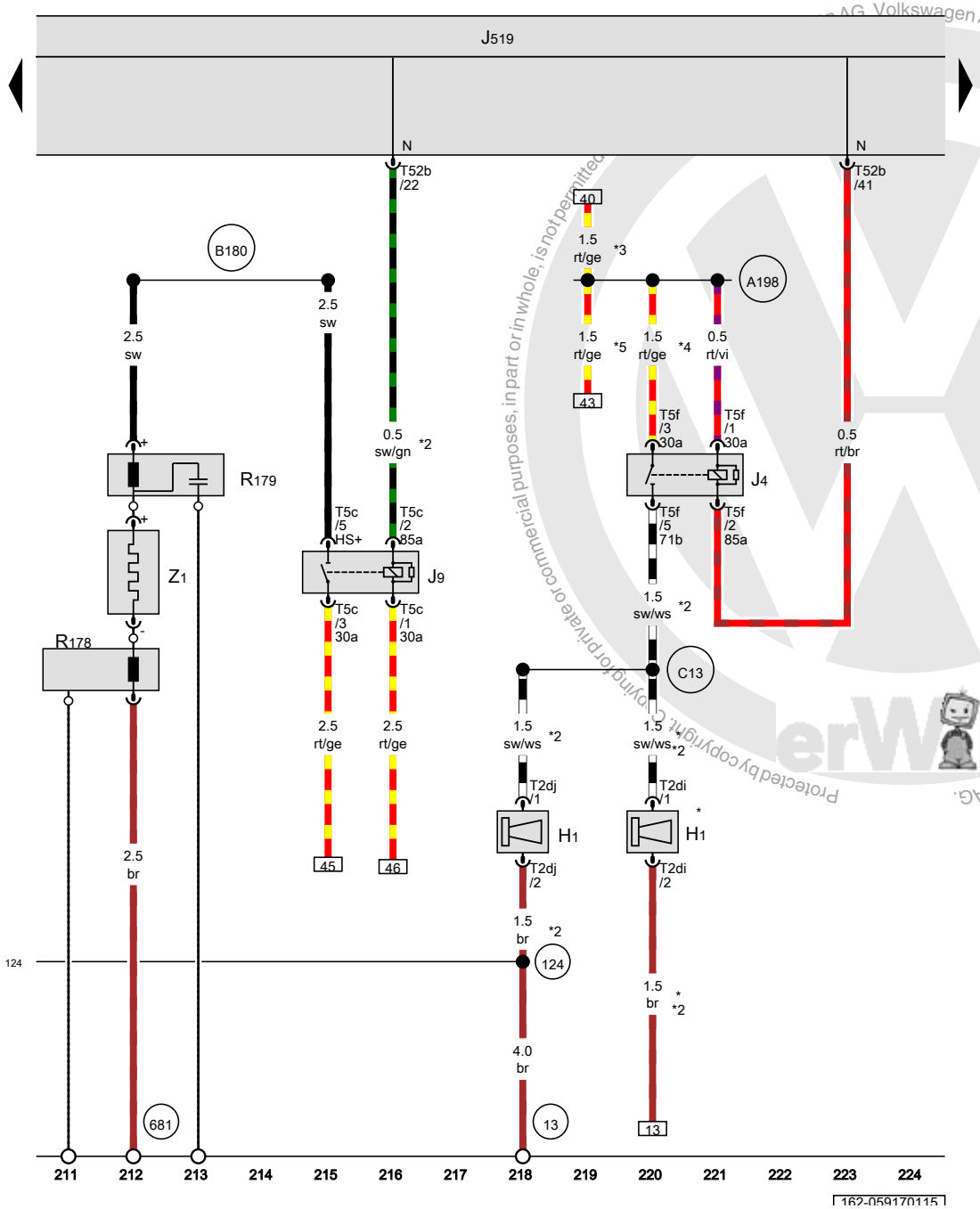

Signal horn and dual tone horn, Dual tone horn relay, Rear window defogger relay, Vehicle electrical system control module, FM frequency filter in negative wire, FM frequency filter in positive wire, Rear window defogger

H1	Signal horn and dual tone horn
J4	Dual tone horn relay
J9	Rear window defogger relay
J519	Vehicle electrical system control module
R178	FM frequency filter in negative wire
R179	FM frequency filter in positive wire
T2di	2-pin connector
T2dj	2-pin connector
T5c	5-pin connector
T5f	5-pin connector
T52b	52-pin connector
Z1	Rear window defogger
13	Ground connection in engine compartment, right
124	Ground connection (in right engine compartment wiring harness)
681	Ground connection 1 in right rear side panel
A198	Positive connection 6 (30a) (in instrument panel wiring harness)
B180	Rear window defogger connection (in interior wiring harness)
C13	Positive connection (in dual tone horn wiring harness)
*	Only for vehicles with dual tone horn
*2	Diameter depends on equipment
*3	Through May 2013
*4	Depending on equipment
*5	From June 2013

ws	=	white
sw	=	black
ro	=	red
rt	=	red
br	=	brown
gn	=	green
bl	=	blue
gr	=	grey
li	=	lilac
vi	=	lilac
ge	=	yellow
or	=	orange
rs	=	pink

Protected by copyright. Copying for private or commercial purposes, in part or in whole, is not permitted. Copyright by Volkswagen AG. Volkswagen AG does not guarantee or accept any liability with respect to the correctness of information in this document.

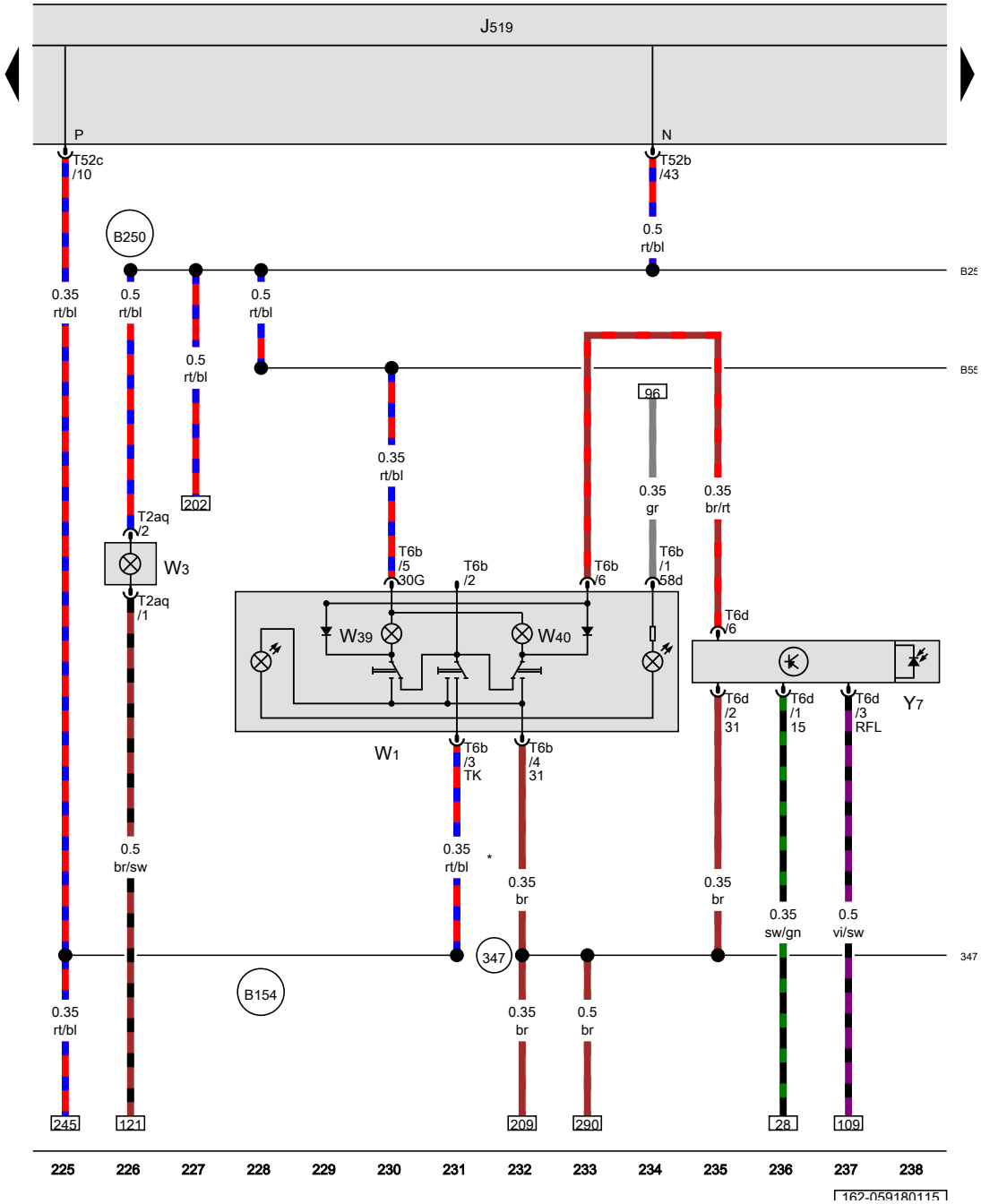

Vehicle electrical system control module, Front interior lamp, Luggage compartment lamp, Right center reading lamp, Automatic dimming interior rearview mirror

J519	Vehicle electrical system control module
T2aq	2-pin connector
T6b	6-pin connector
T6d	6-pin connector
T52b	52-pin connector
T52c	52-pin connector
W1	Front interior lamp
W3	Luggage compartment lamp
W39	Left center reading lamp
W40	Right center reading lamp
Y7	Automatic dimming interior rearview mirror
347	Ground connection (in roof wiring harness)
B154	Connection TK (in interior wiring harness) 1
B250	Positive connection (in roof wiring harness)
B552	Positive connection 2 (in roof wiring harness)
*	The color of the wires depends on vehicle equipment

ws	=	white
sw	=	black
ro	=	red
rt	=	red
br	=	brown
gn	=	green
bl	=	blue
gr	=	grey
li	=	lilac
vi	=	lilac
ge	=	yellow
or	=	orange
rs	=	pink

Protected by copyright. Copying for private or commercial purposes, in part or in whole, is not permitted unless authorised by Volkswagen AG. Volkswagen AG does not guarantee or accept any liability with respect to the correctness of information in this document. Copyright by Volkswagen AG.

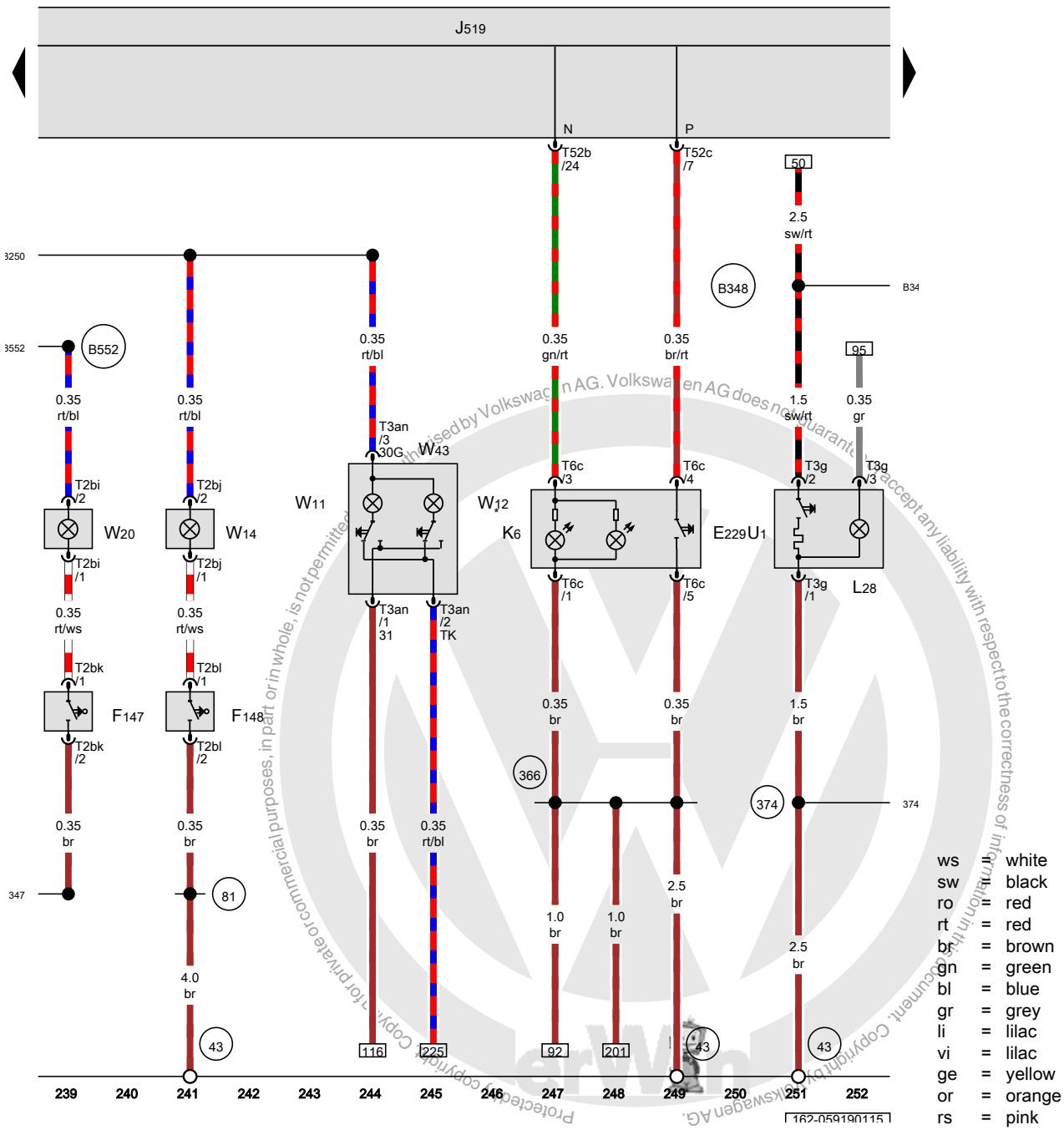

ws = white
sw = black
ro = red
rt = red
br = brown
gn = green
bl = blue
gr = grey
li = lilac
vi = lilac
ge = yellow
or = orange
rs = pink

Emergency flasher button, Vehicle electrical system control module, Cigarette lighter illumination bulb, Cigarette lighter, Front passenger vanity mirror lamp, Driver vanity mirror lamp, Rear interior lamp

E229	Emergency flasher button
F147	Driver vanity mirror lamp contact switch
F148	Front passenger vanity mirror lamp contact switch
J519	Vehicle electrical system control module
K6	Emergency flasher indicator lamp
L28	Cigarette lighter illumination bulb
T2bi	2-pin connector
T2bj	2-pin connector
T2bk	2-pin connector
T2bl	2-pin connector
T3an	3-pin connector
T3g	3-pin connector
T6c	6-pin connector
T52b	52-pin connector
T52c	52-pin connector
U1	Cigarette lighter
W11	Left rear reading lamp
W12	Right rear reading lamp
W14	Front passenger vanity mirror lamp
W20	Driver vanity mirror lamp
W43	Rear interior lamp
43	Ground connection on A-pillar, lower right
81	Ground connection 1 (in instrument panel wiring harness)
347	Ground connection (in roof wiring harness)
366	Ground connection 1 (in main wiring harness)
374	Ground connection 9 (in main wiring harness)
B250	Positive connection (in roof wiring harness)
B348	Connection 1 (75a) (in main wiring harness)
B552	Positive connection 2 (in roof wiring harness)
*	Depending on equipment

Protected by copyright. Copyright by Volkswagen AG. Copyright by Volkswagen AG. Volkswagen AG does not guarantee or accept any liability with respect to the correctness of information in this document. Copyright by Volkswagen AG. Reproduced

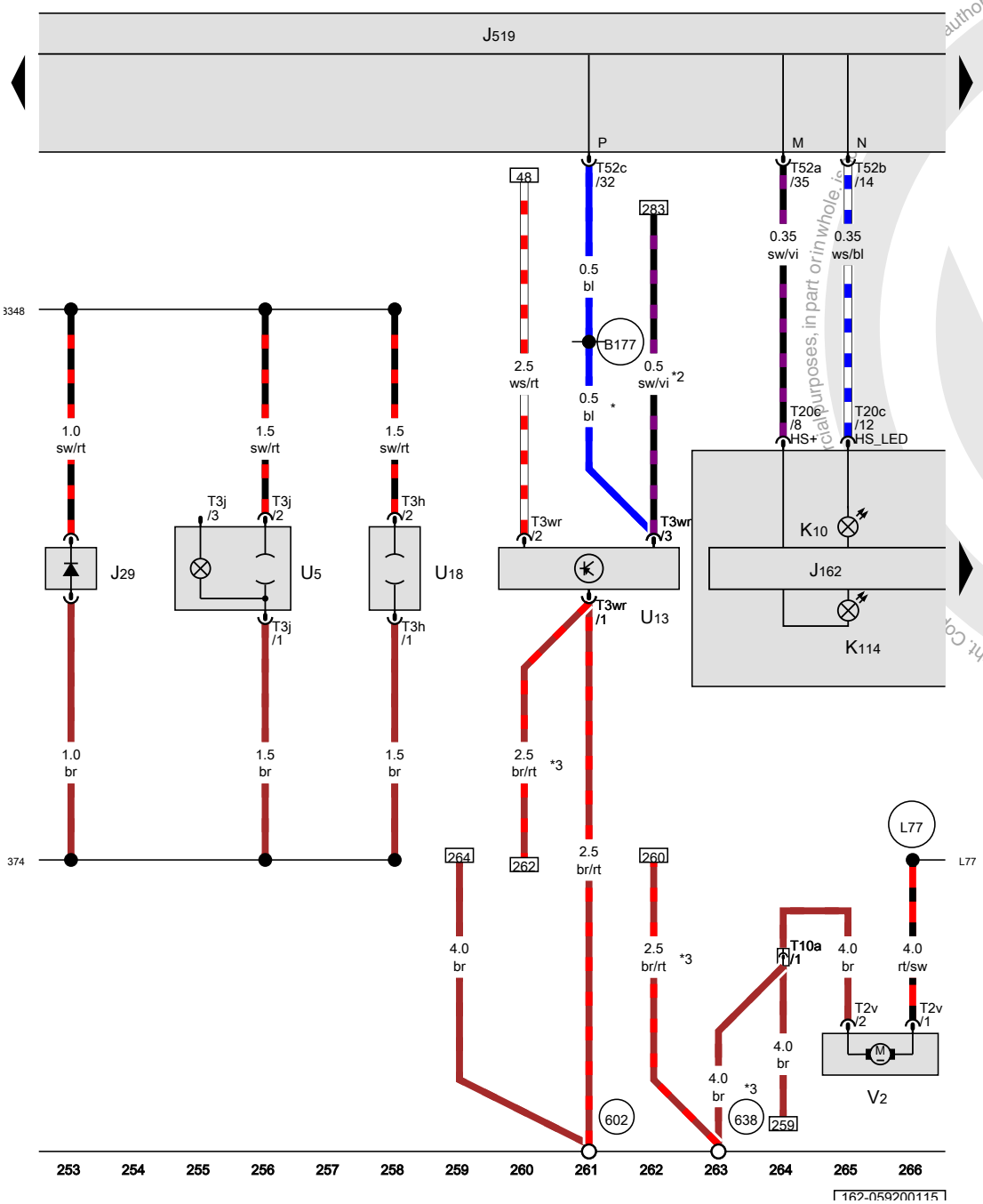

Blocking diode, Heater control module, Vehicle electrical system control module, 12 V socket, Converter with socket, 12 V-230 V, Fresh air blower

J29	Blocking diode, in the interior wiring harness
J162	Heater control module
J519	Vehicle electrical system control module
K10	Rear window defogger indicator lamp
K114	Fresh air and recirculation mode indicator lamp
T2v	2-pin connector
T3h	3-pin connector
T3j	3-pin connector
T3wr	3-pin connector
T10a	10-pin connector, on the heating and A/C unit
T20c	20-pin connector
T52a	52-pin connector
T52b	52-pin connector
T52c	52-pin connector
U5	12 V socket
U13	Converter with socket, 12 V-230 V
U18	12 V socket 2
V2	Fresh air blower
374	Ground connection 9 (in main wiring harness)
602	Ground connection in left front footwell
638	Ground connection on right A-pillar
B177	Connection 61 (in interior wiring harness)
B348	Connection 1 (75a) (in main wiring harness)
L77	Connection (in fresh air blower wiring harness)
*	Only for vehicles without Start/Stop system
*2	Only for vehicles with Start/Stop system
*3	Only for right-hand drive vehicles

ws	=	white
sw	=	black
ro	=	red
rt	=	red
br	=	brown
gn	=	green
bl	=	blue
gr	=	grey
li	=	lilac
vi	=	lilac
ge	=	yellow
or	=	orange
rs	=	pink

Protected by copyright. Copyright by Volkswagen AG. Volkswagen AG does not guarantee or accept any liability with respect to the correctness of information in this document. Copyright by Volkswagen AG.

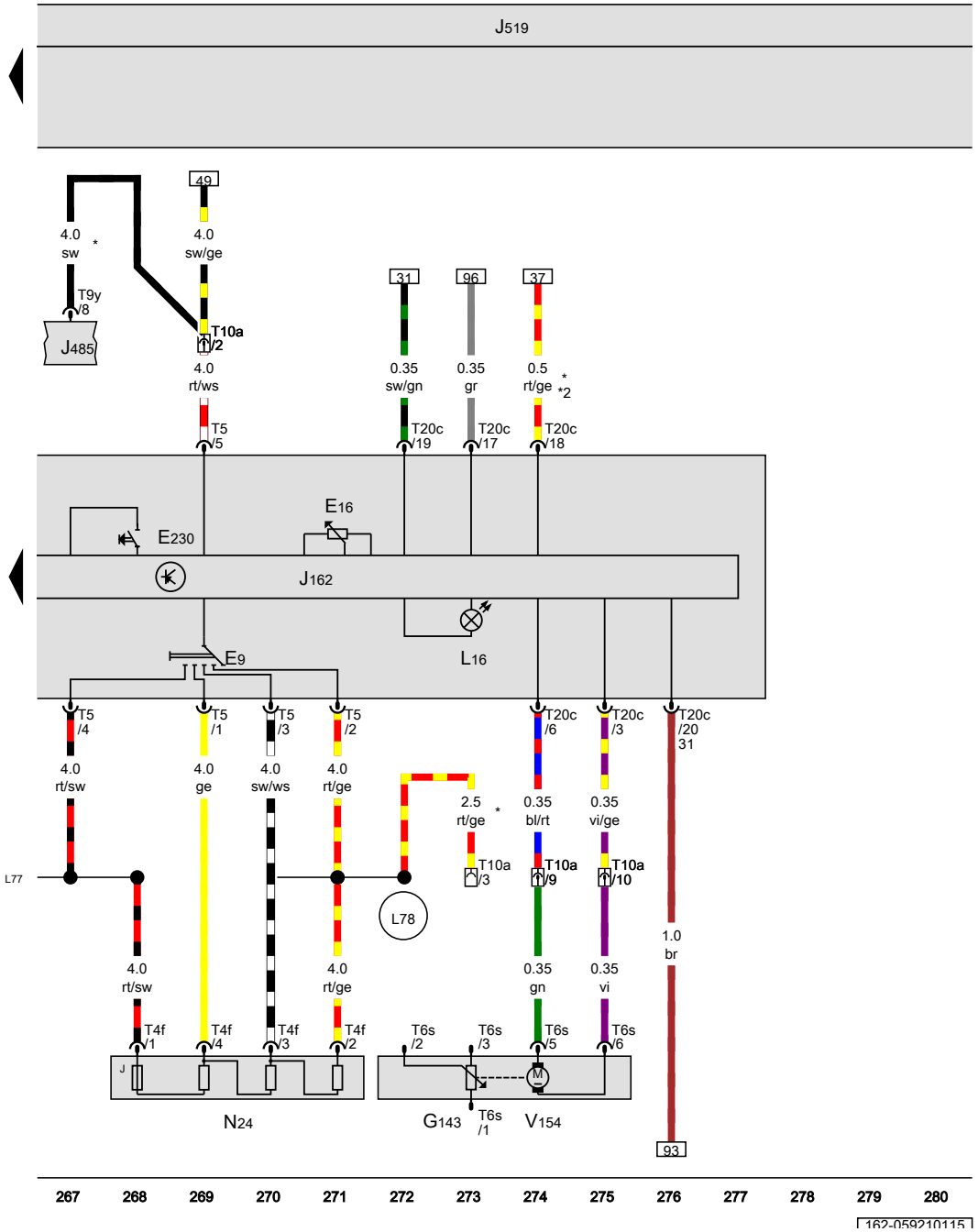

Fresh air blower switch, Heater control module, Vehicle electrical system control module, Fresh air blower series resistor with fuse, Fresh/recirculated air door motor

E9	Fresh air blower switch
E16	Heater/heat output switch
E230	Rear window defogger button
G143	Recirculation door motor position sensor
J162	Heater control module
J485	Parking heater operation relay
J519	Vehicle electrical system control module
L16	Fresh air control illumination bulb
N24	Fresh air blower series resistor with fuse
T4f	4-pin connector
T5	5-pin connector
T6s	6-pin connector
T9y	9-pin connector
T10a	10-pin connector, on the heating and A/C unit
T20c	20-pin connector
V154	Fresh/recirculated air door motor
L77	Connection (in fresh air blower wiring harness)
L78	Connection 1 (in fresh air blower wiring harness)
*	Only for vehicles with auxiliary coolant heater
*2	Diameter depends on equipment

ws	=	white
sw	=	black
ro	=	red
rt	=	red
br	=	brown
gn	=	green
bl	=	blue
gr	=	grey
li	=	lilac
vi	=	lilac
ge	=	yellow
or	=	orange
rs	=	pink

Protected by copyright. Copying for private or commercial purposes, in part or in whole, is not permitted unless authorised by Volkswagen AG. Volkswagen AG does not guarantee or accept any liability with respect to the correctness of information in this document. Copyright by Volkswagen AG.

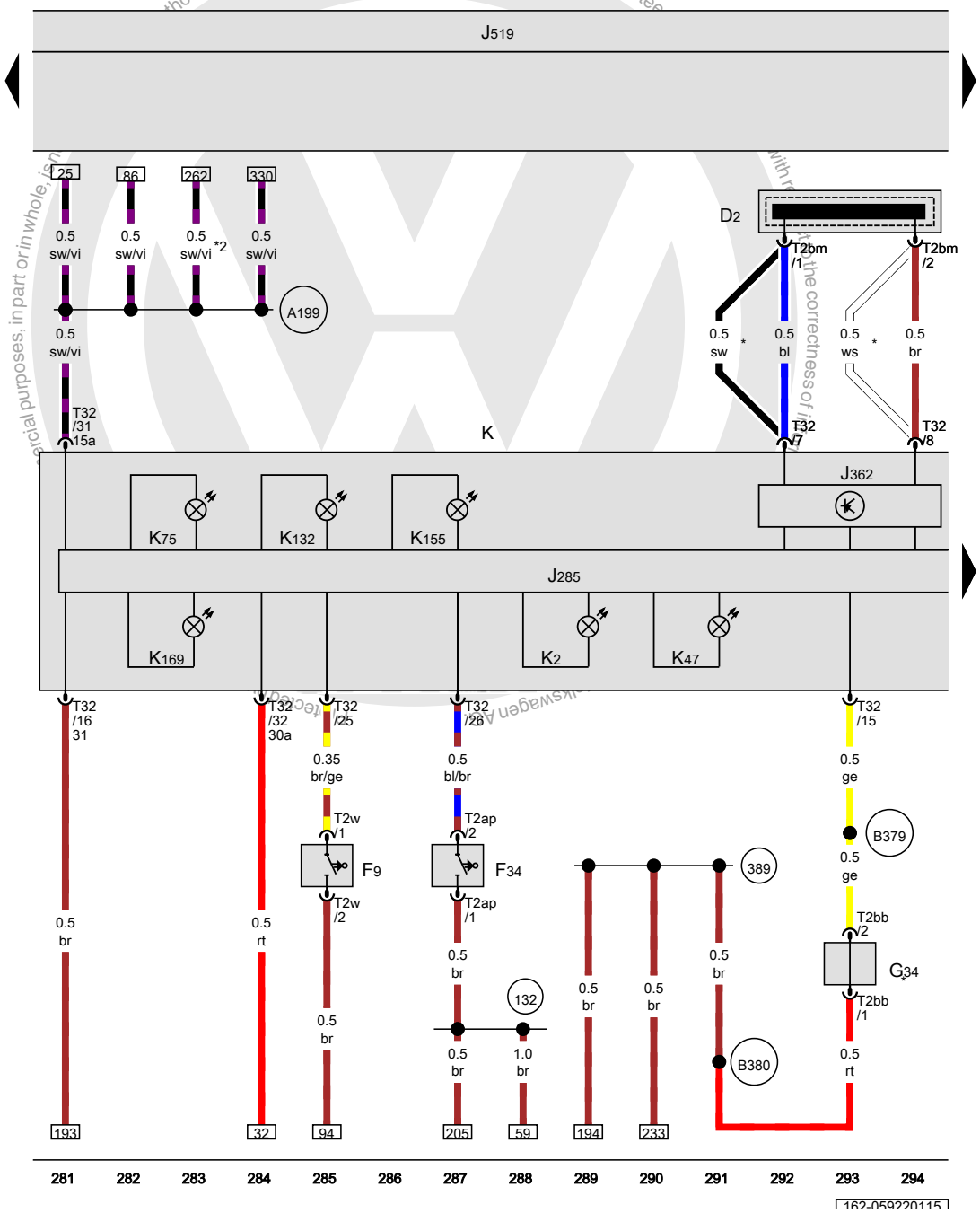

Anti-theft immobilizer reader coil, Parking brake indicator lamp switch, Brake fluid level warning switch, Left front brake pad wear sensor, Anti-theft immobilizer control module, Vehicle electrical system control module, Instrument cluster

D2	Anti-theft immobilizer reader coil
F9	Parking brake indicator lamp switch
F34	Brake fluid level warning switch
G34	Left front brake pad wear sensor
J285	Instrument cluster control module
J362	Anti-theft immobilizer control module
J519	Vehicle electrical system control module
K	Instrument cluster
K2	Generator indicator lamp
K47	ABS indicator lamp
K75	Airbag indicator lamp
K132	Electronic power control malfunction indicator lamp
K155	ASR/ESP indicator lamp
K169	Shift lock indicator lamp
T2ap	2-pin connector
T2bb	2-pin connector
T2bm	2-pin connector
T2w	2-pin connector
T32	32-pin connector
132	Ground connection 3 (in engine compartment wiring harness)
389	Ground connection 24 (in main wiring harness)
A199	Positive connection 4 (15a) (in instrument panel wiring harness)
B379	Brake wear indicator connection 1 (in main wiring harness)
B380	Brake wear indicator connection 2 (in main wiring harness)
*	Depending on equipment
*2	Only for vehicles with Start/Stop system

ws	=	white
sw	=	black
ro	=	red
rt	=	red
br	=	brown
gn	=	green
bl	=	blue
gr	=	grey
li	=	lilac
vi	=	lilac
ge	=	yellow
or	=	orange
rs	=	pink

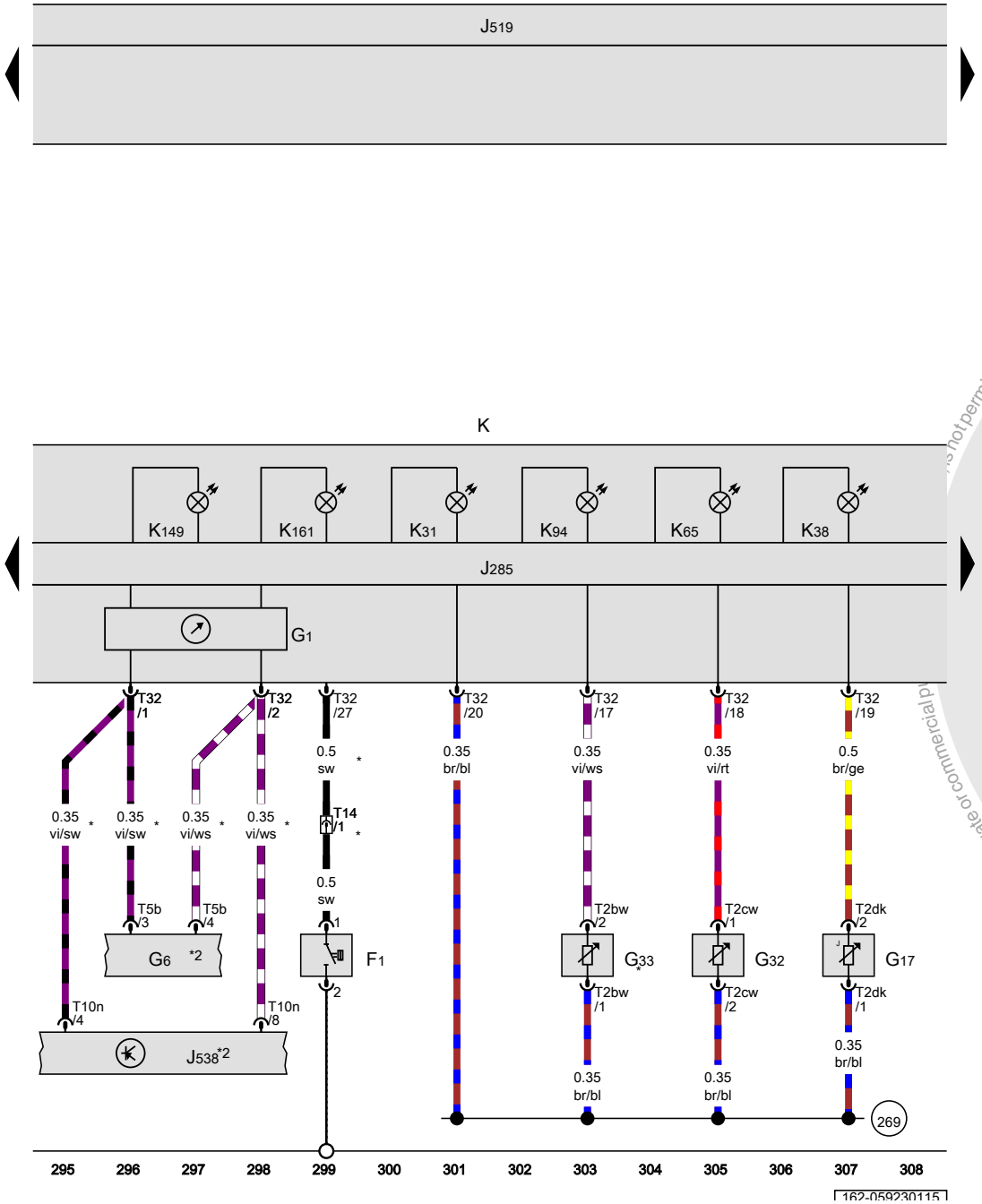

Oil pressure switch, Transfer fuel pump, Outside air temperature sensor, Engine coolant level sensor, Windshield washer fluid level sensor, Vehicle electrical system control module, Fuel pump control module, Instrument cluster

F1	Oil pressure switch
G1	Fuel gauge
G6	Transfer fuel pump
G17	Outside air temperature sensor
G32	Engine coolant level sensor
G33	Windshield washer fluid level sensor
J285	Instrument cluster control module
J519	Vehicle electrical system control module
J538	Fuel pump control module
K	Instrument cluster
K31	Cruise control indicator lamp
K38	Oil level indicator lamp
K65	Indicator lamp for left turn signal
K94	Right turn signal indicator lamp
K149	Engine electronics indicator lamp
K161	Electromechanical power steering indicator lamp
T2bw	2-pin connector
T2cw	2-pin connector
T2dk	2-pin connector
T5b	5-pin connector
T10n	10-pin connector
T14	14-pin connector
T32	32-pin connector
(269)	Sensor ground connection 1 (in instrument panel wiring harness)
*	Depending on equipment
*2	Refer to applicable engine wiring diagram

ws	=	white
sw	=	black
ro	=	red
rt	=	red
br	=	brown
gn	=	green
bl	=	blue
gr	=	grey
li	=	lilac
vi	=	lilac
ge	=	yellow
or	=	orange
rs	=	pink

Protected by copyright. Copying for private or commercial purposes is not permitted unless authorised by Volkswagen AG. Volkswagen AG does not guarantee or accept any liability with respect to the correctness of information in this document. Copyright by Volkswagen AG.

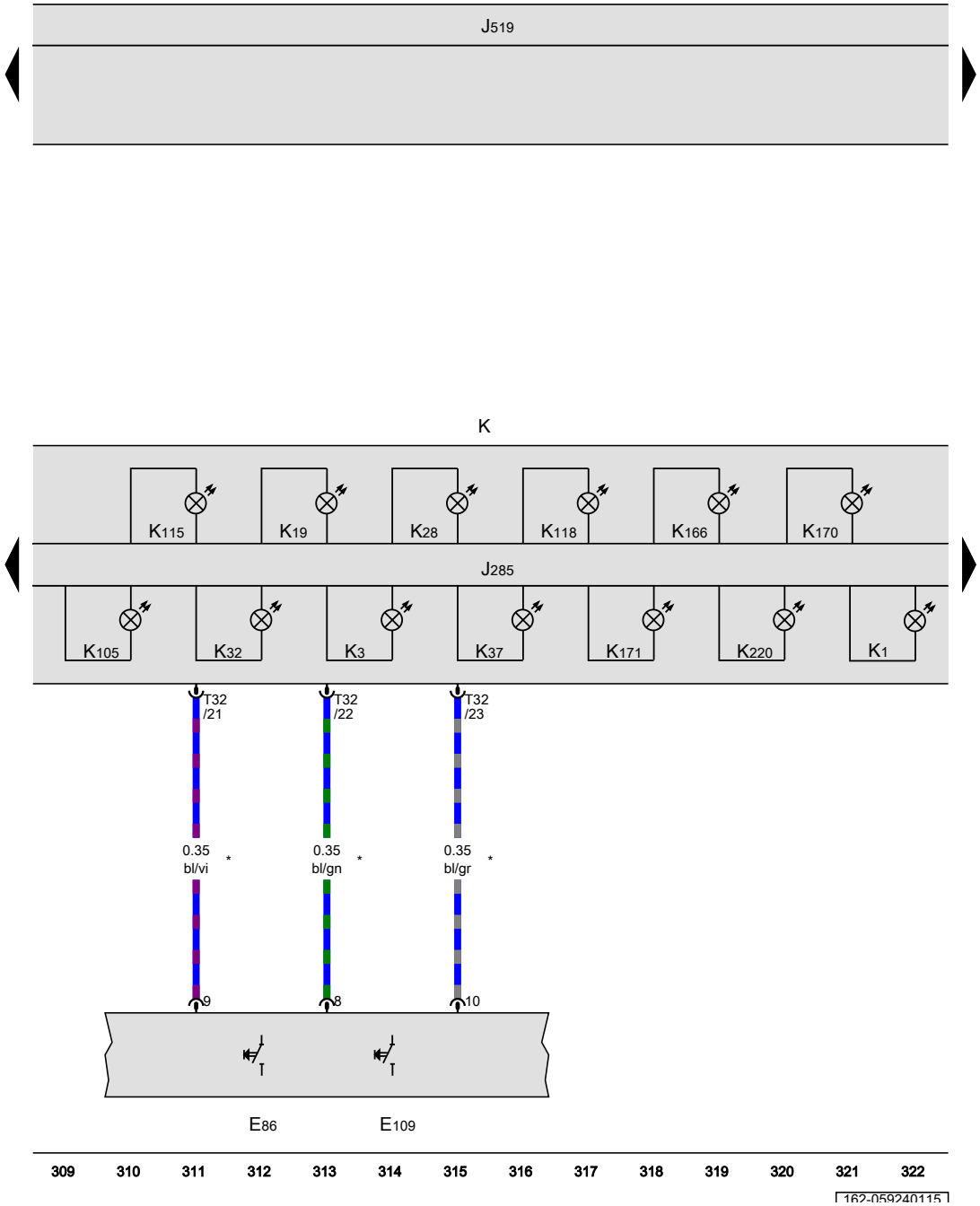

Multifunction indicator selection switch, Multifunction indicator memory switch, Vehicle electrical system control module, Instrument cluster

E86	Multifunction indicator selection switch
E109	Multifunction indicator memory switch
J285	Instrument cluster control module
J519	Vehicle electrical system control module
K	Instrument cluster
K1	High beam indicator lamp
K3	Oil pressure indicator lamp
K19	Seat belt indicator lamp
K28	Engine coolant level/temperature indicator lamp
K32	Brake pad wear indicator lamp
K37	Windshield washer fluid level indicator lamp
K105	Low fuel level indicator lamp
K115	Anti-theft immobilizer system indicator lamp
K118	Brake system indicator lamp
K166	Door ajar indicator lamp
K170	Lamp failure indicator lamp
K171	Hood -open- indicator lamp
K220	Tire pressure monitoring display indicator lamp
T32	32-pin connector
*	Only for vehicles with multifunction display

ws	=	white
sw	=	black
ro	=	red
rt	=	red
br	=	brown
gn	=	green
bl	=	blue
gr	=	grey
li	=	lilac
vi	=	lilac
ge	=	yellow
or	=	orange
rs	=	pink

Protected by copyright. Copyright by Volkswagen AG. Volkswagen AG does not guarantee or accept any liability with respect to the correctness of information in this document

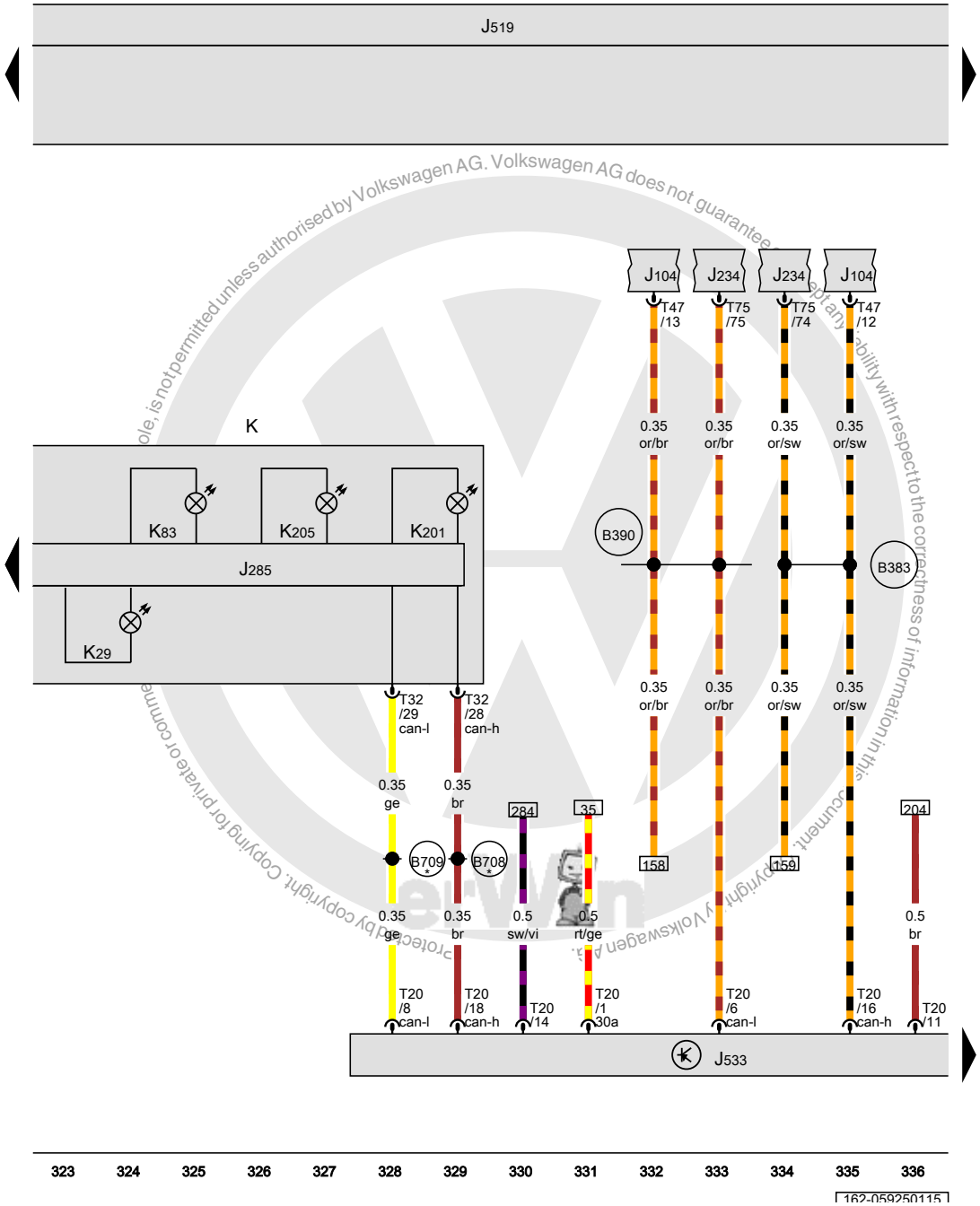

Vehicle electrical system control module, Data bus on board diagnostic interface, Instrument cluster

J104	ABS control module
J234	Airbag control module
J285	Instrument cluster control module
J519	Vehicle electrical system control module
J533	Data bus on board diagnostic interface
K	Instrument cluster
K29	Glow plug indicator lamp
K83	Malfunction indicator lamp
K201	Fuel filler door lock indicator lamp
K205	Daytime running lamp indicator lamp
T20	20-pin connector
T32	32-pin connector
T47	47-pin connector
T75	75-pin connector
B383	Powertrain CAN bus high connection 1 (in main wiring harness)
B390	Powertrain CAN bus low connection 1 (in main wiring harness)
B708	Instrument cluster CAN bus high connection 1 (in main wiring harness)
B709	Instrument cluster CAN bus low connection 1 (in main wiring harness)
*	From June 2013

ws	=	white
sw	=	black
ro	=	red
rt	=	red
br	=	brown
gn	=	green
bl	=	blue
gr	=	grey
li	=	lilac
vi	=	lilac
ge	=	yellow
or	=	orange
rs	=	pink

Protected by copyright. Copying for private or commercial purposes, in whole or in part, is not permitted unless authorised by Volkswagen AG. Volkswagen AG does not guarantee or accept any liability with respect to the correctness of information in this document.

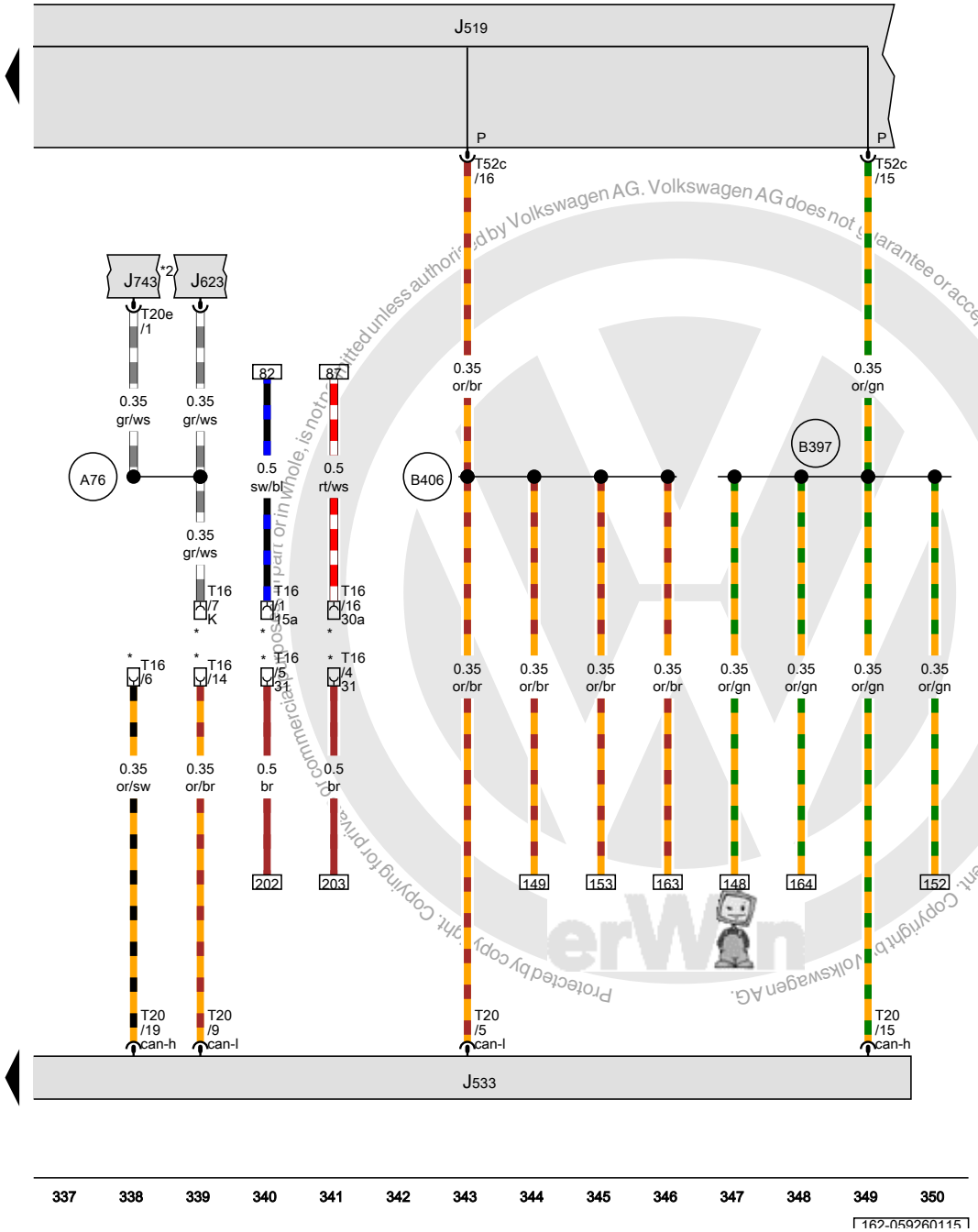

Vehicle electrical system control module, Data bus on board diagnostic interface

J519	Vehicle electrical system control module
J533	Data bus on board diagnostic interface
J623	Engine control module
J743	DSG transmission Mechatronic
T16	16-pin connector
T20	20-pin connector
T20e	20-pin connector
T52c	52-pin connector
A76	KS-diagnostic lead connection (in instrument panel wiring harness)
B397	Comfort system CAN bus high connection 1 (in main wiring harness)
B406	Comfort system CAN bus low connection 1 (in main wiring harness)
*	Diagnostic connector
*2	If available

ws	=	white
sw	=	black
ro	=	red
rt	=	red
br	=	brown
gn	=	green
bl	=	blue
gr	=	grey
li	=	lilac
vi	=	lilac
ge	=	yellow
or	=	orange
rs	=	pink

Protected by copyright. Copying for private or commercial purposes, in part or in whole, is not permitted unless authorized by Volkswagen AG. Volkswagen AG does not guarantee or accept any liability with respect to the correctness of information in this document. Copyright by Volkswagen AG.

Convenience system , (AW1)

from October 2010

Protected by copyright. Copying for private or commercial purposes, in part or in whole, is not permitted unless authorised by Volkswagen AG. Volkswagen AG does not guarantee or accept any liability with respect to the correctness of information in this document. Copyright by Volkswagen AG.

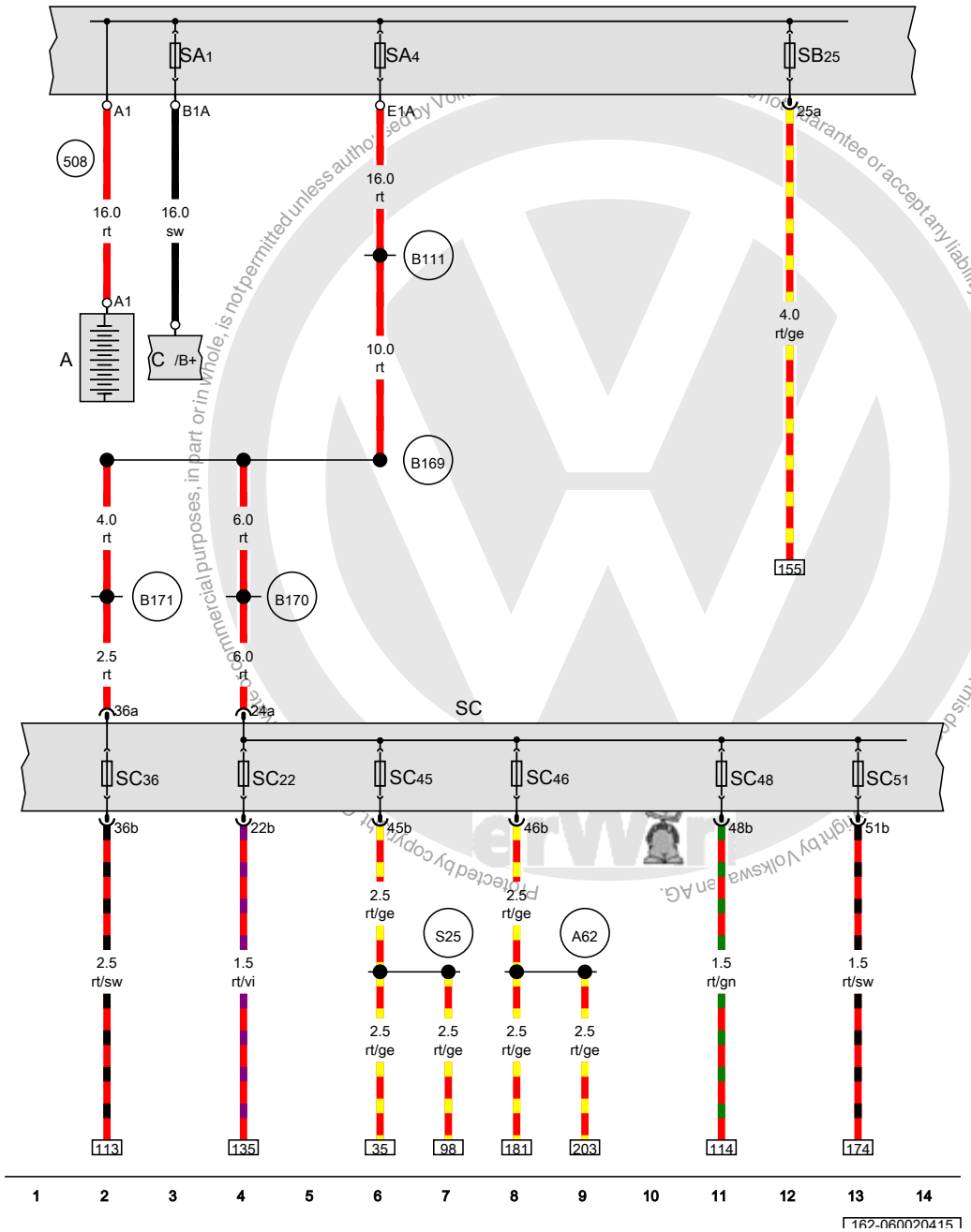

Battery, Fuse 1 (on fuse panel A), Fuse 4 (on fuse panel A), Fuse 25 (on fuse panel B), Fuse panel C

A	Battery
C	Generator
SA1	Fuse 1 (on fuse panel A)
SA4	Fuse 4 (on fuse panel A)
SB25	Fuse 25 (on fuse panel B)
SC	Fuse panel C
SC22	Fuse 22 (on fuse panel C)
SC36	Fuse 36 (on fuse panel C)
SC45	Fuse 45 (on fuse panel C)
SC46	Fuse 46 (on fuse panel C)
SC48	Fuse 48 (on fuse panel C)
SC51	Fuse 51 (on fuse panel C)
508	Terminal 30 threaded connection (on E-box)
A62	Power window connection (in instrument panel wiring harness)
B111	Positive connection 1 (30a) (in interior wiring harness)
B169	Positive connection 1 (30) (in interior wiring harness)
B170	Positive connection 2 (30) (in interior wiring harness)
B171	Positive connection 3 (30) (in interior wiring harness)
S25	Positive connection (30a) (in central locking system wiring harness)

ws	=	white
sw	=	black
ro	=	red
rt	=	red
br	=	brown
gn	=	green
bl	=	blue
gr	=	grey
li	=	lilac
vi	=	lilac
ge	=	yellow
or	=	orange
rs	=	pink

Protected by copyright by Volkswagen AG. Commercial purposes, in part or in whole, is not permitted unless authorized by Volkswagen AG. We do not guarantee or accept any liability with respect to the correctness of information in this document.

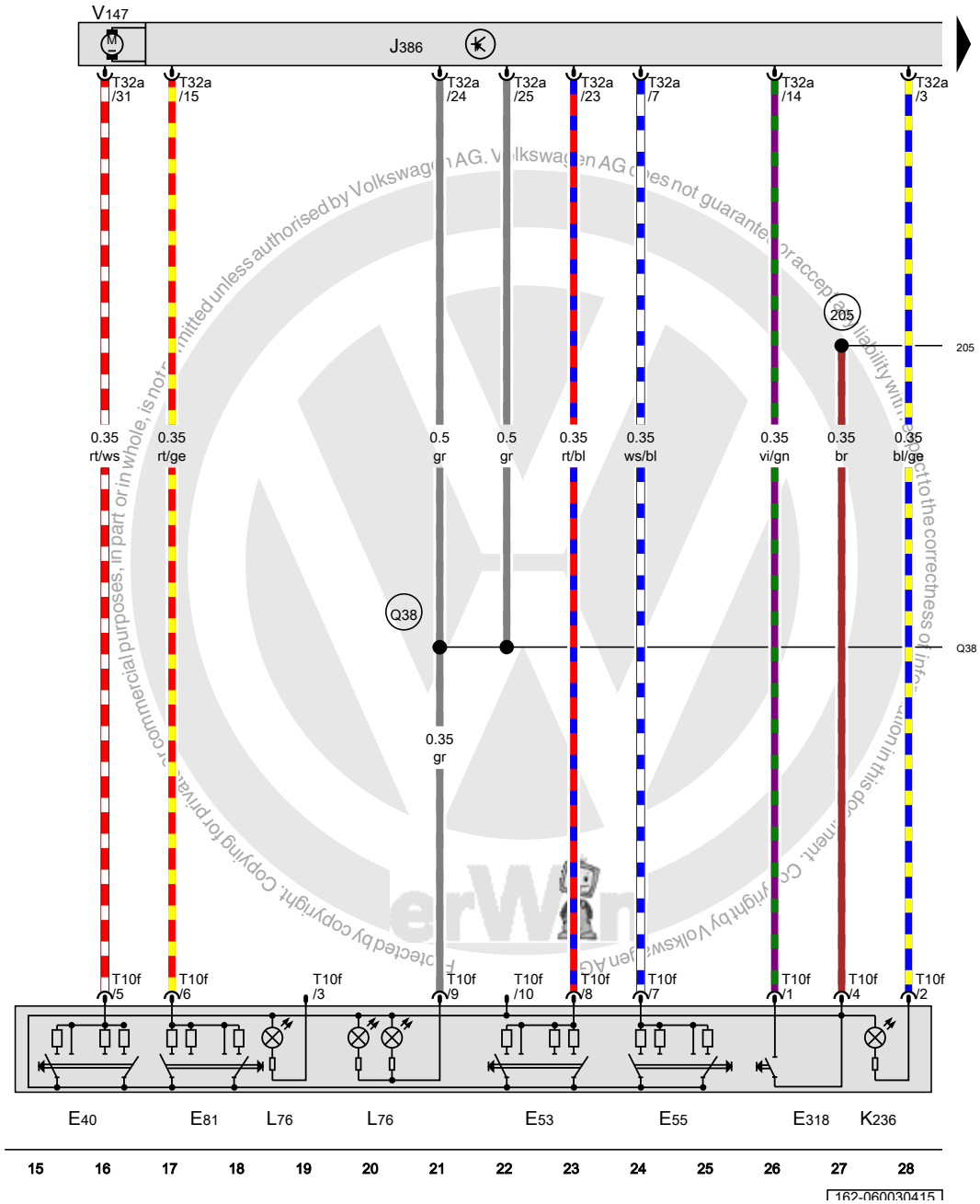

Left front window regulator switch, Left rear window regulator switch in driver door, Right rear window regulator switch in driver door, Right front power window switch in driver door, Child safety lock button, Driver door control module

E40	Left front window regulator switch
E53	Left rear window regulator switch in driver door
E55	Right rear window regulator switch in driver door
E81	Right front power window switch in driver door
E318	Child safety lock button
J386	Driver door control module
K236	Child safety lock -activated- indicator lamp
L76	Push button illumination bulb
T10f	10-pin connector
T32a	32-pin connector
V147	Driver window regulator motor
205	Ground connection (in driver door wiring harness)
Q38	Positive connection 1 (58b) (in power window wiring harness)

ws	=	white
sw	=	black
ro	=	red
rt	=	red
br	=	brown
gn	=	green
bl	=	blue
gr	=	grey
li	=	lilac
vi	=	lilac
ge	=	yellow
or	=	orange
rs	=	pink

Driver interior locking button, Driver door control module, Driver interior locking indicator lamp

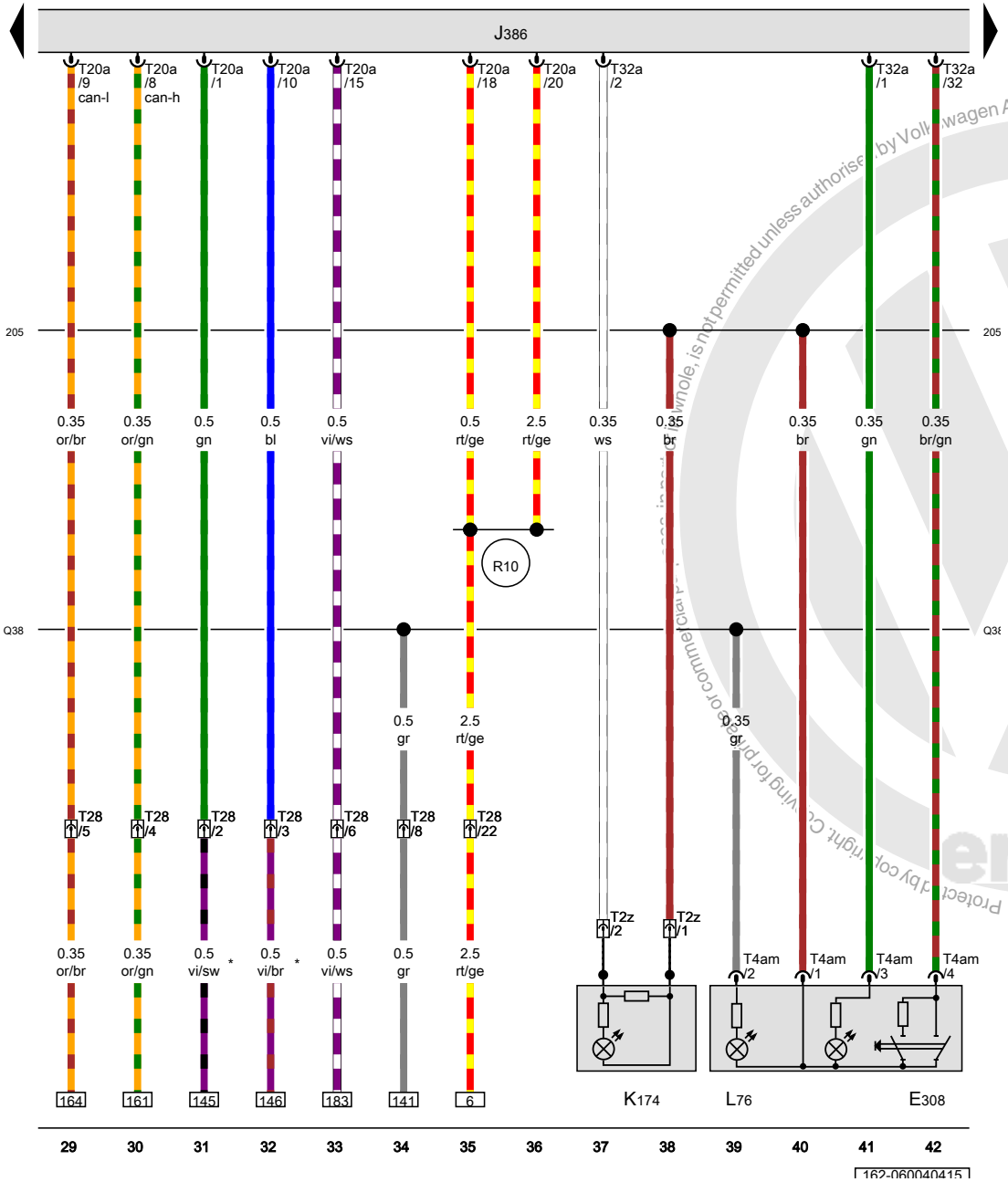

E308	Driver interior locking button
J386	Driver door control module
K174	Driver interior locking indicator lamp
L76	Push button illumination bulb
T2z	Double connector
T4am	4-pin connector
T20a	20-pin connector
T28	28-pin connector, Left A-pillar, bottom
T32a	32-pin connector
205	Ground connection (in driver door wiring harness)
Q38	Positive connection 1 (58b) (in power window wiring harness)
R10	Positive connection 1 (30) (in driver door wiring harness)
*	Omitted as a running change

ws	=	white
sw	=	black
ro	=	red
rt	=	red
br	=	brown
gn	=	green
bl	=	blue
gr	=	grey
li	=	lilac
vi	=	lilac
ge	=	yellow
or	=	orange
rs	=	pink

Protected by copyright. Copying for private or commercial purposes, in part or in whole, is not permitted unless authorised by Volkswagen AG. Volkswagen AG does not guarantee or accept any liability with respect to the correctness of information in this document. Copyright by Volkswagen AG.

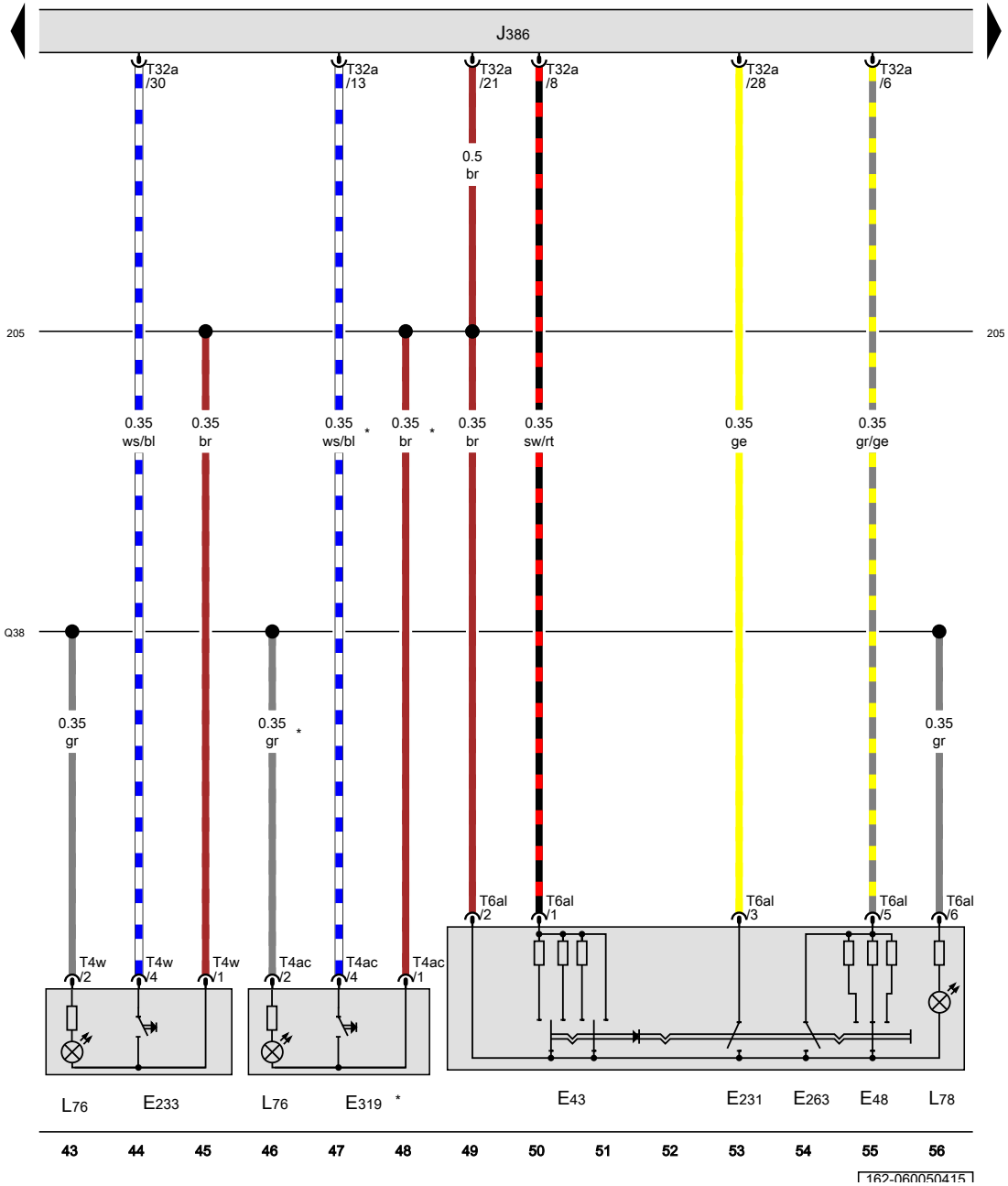

ws = white
sw = black
ro = red
rt = red
br = brown
gn = green
bl = blue
gr = grey
li = lilac
vi = lilac
ge = yellow
or = orange
rs = pink

Mirror adjusting switch, Mirror selector switch, Exterior rearview mirror heating switch, Rear lid remote release button, Mirror folding switch, Fuel filler door release button, Driver door control module, Mirror adjustment switch illumination bulb

E43	Mirror adjusting switch
E48	Mirror selector switch
E231	Exterior rearview mirror heating switch
E233	Rear lid remote release button
E263	Mirror folding switch
E319	Fuel filler door release button
J386	Driver door control module
L76	Push button illumination bulb
L78	Mirror adjustment switch illumination bulb
T4ac	4-pin connector
T4w	4-pin connector
T6al	6-pin connector
T32a	32-pin connector
(205)	Ground connection (in driver door wiring harness)
(Q38)	Positive connection 1 (58b) (in power window wiring harness)
*	USA only

Protected by copyright. Copying for private or commercial purposes, in part or in whole, is not permitted unless authorised by Volkswagen AG. Volkswagen AG does not guarantee or accept any liability with respect to the correctness of information in this document. Copyright by Volkswagen AG.

Driver door control module, Driver exterior rearview mirror, Driver mirror adjustment motor 2, Driver exterior rearview mirror folding motor, Driver mirror adjustment motor, Driver automatic dimming exterior rearview mirror

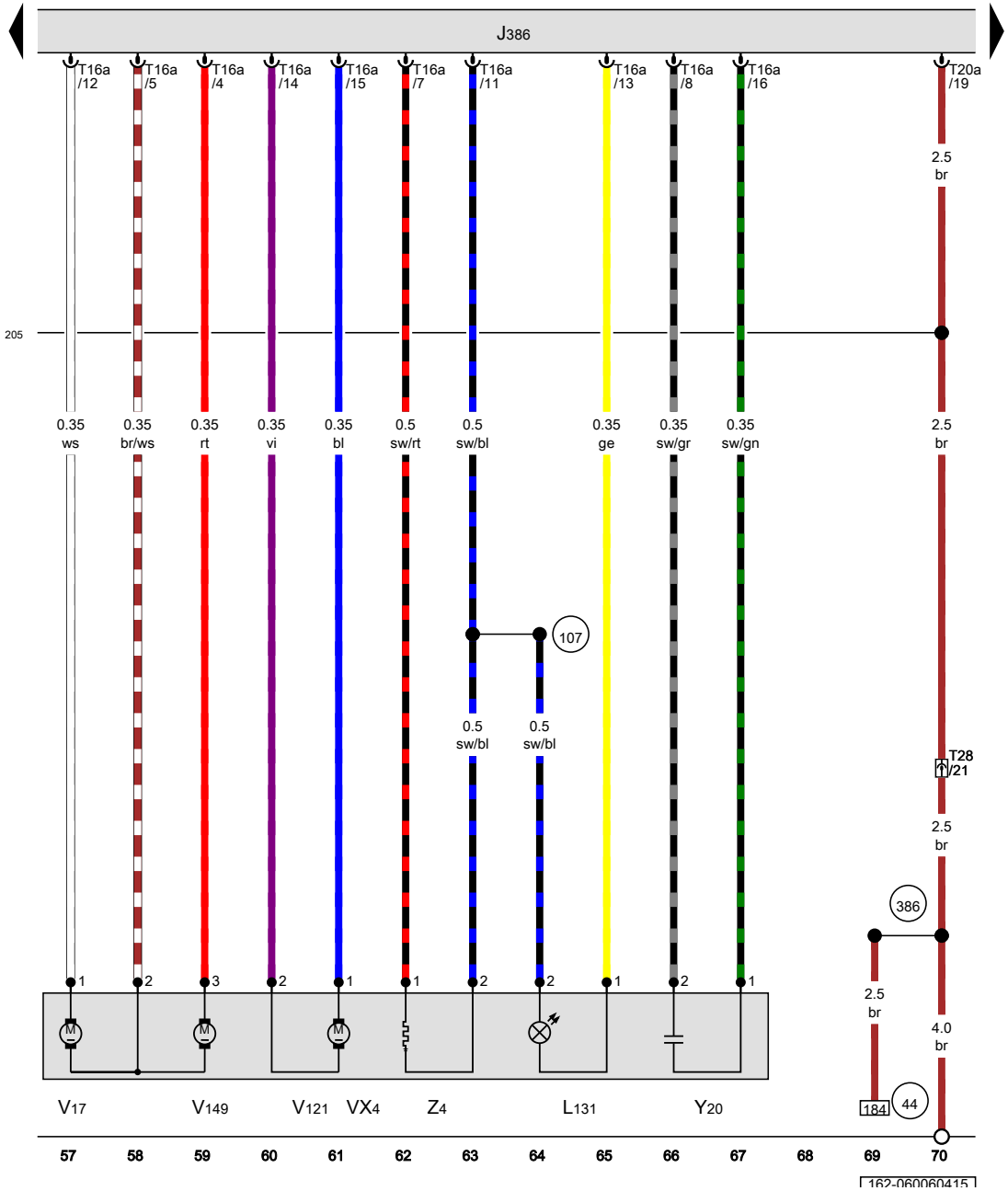

J386	Driver door control module
L131	Driver exterior rearview mirror turn signal bulb
T16a	16-pin connector
T20a	20-pin connector
T28	28-pin connector, Left A-pillar, bottom
VX4	Driver exterior rearview mirror
V17	Driver mirror adjustment motor 2
V121	Driver exterior rearview mirror folding motor
V149	Driver mirror adjustment motor
Y20	Driver automatic dimming exterior rearview mirror
Z4	Heated driver exterior rearview mirror
44	Ground connection on A-pillar, lower left
107	Ground connection (in exterior mirror wiring harness)
205	Ground connection (in driver door wiring harness)
386	Ground connection 21 (in main wiring harness)
*	pre-wired component

ws	=	white
sw	=	black
ro	=	red
rt	=	red
br	=	brown
gn	=	green
bl	=	blue
gr	=	grey
li	=	lilac
vi	=	lilac
ge	=	yellow
or	=	orange
rs	=	pink

Protected by copyright. Copying for private or commercial purposes, in part or in whole, is not permitted unless authorised by Volkswagen AG. Volkswagen AG does not guarantee or accept any liability with respect to the correctness of information in this document. Copyright by Volkswagen AG.

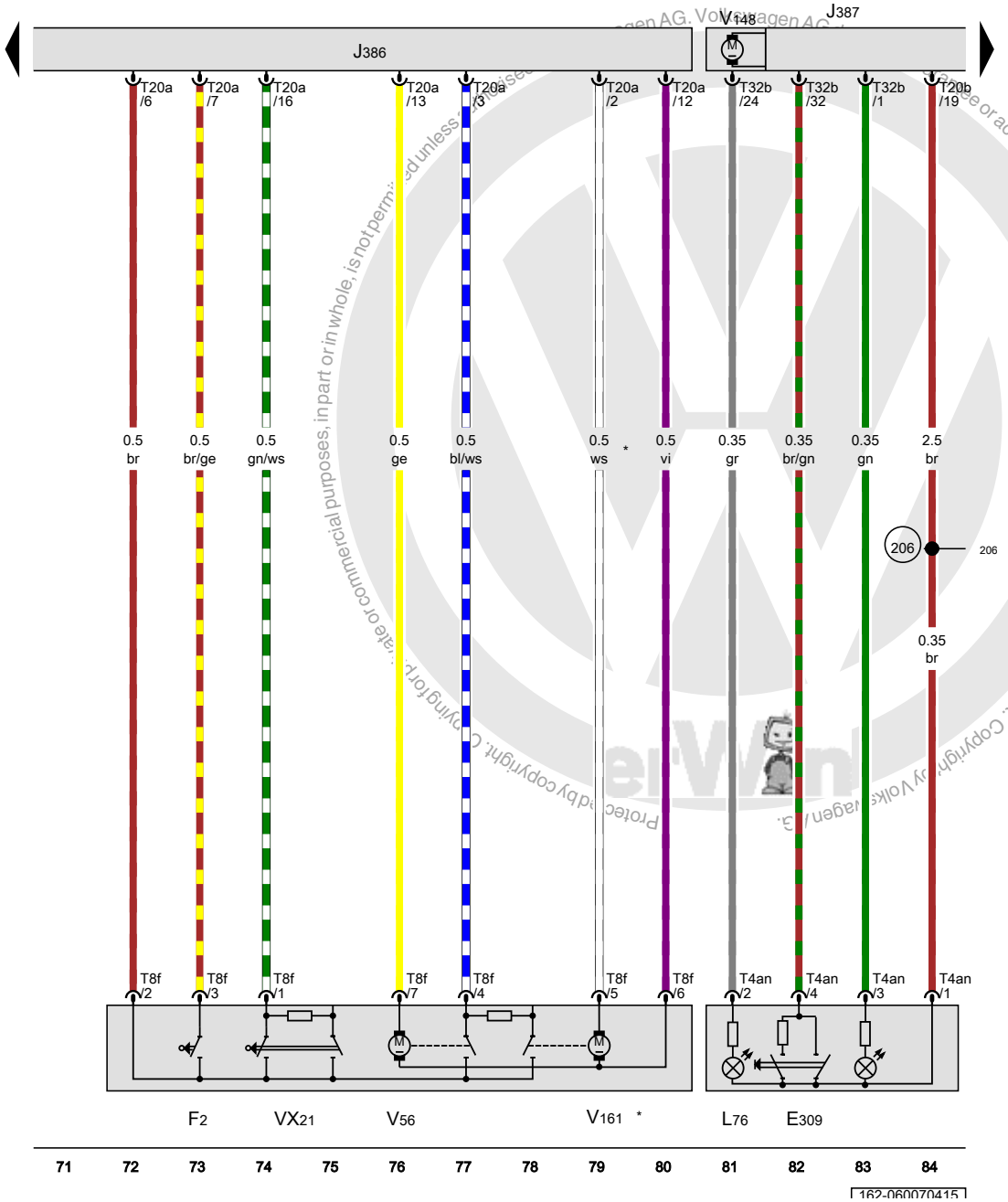

Front passenger interior locking button, Driver door contact switch, Driver door control module, Front passenger door control module, Driver door lock unit, Driver door central locking system motor, Front passenger window regulator motor

E309	Front passenger interior locking button
F2	Driver door contact switch
J386	Driver door control module
J387	Front passenger door control module
L76	Push button illumination bulb
T4an	4-pin connector
T8f	8-pin connector
T20a	20-pin connector
T20b	20-pin connector
T32b	32-pin connector
VX21	Driver door lock unit
V56	Driver door central locking system motor
V148	Front passenger window regulator motor
V161	Driver door central locking -SAFE- motor
206	Ground connection (in front passenger door wiring harness)
*	Not for USA

ws	=	white
sw	=	black
ro	=	red
rt	=	red
br	=	brown
gn	=	green
bl	=	blue
gr	=	grey
li	=	lilac
vi	=	lilac
ge	=	yellow
or	=	orange
rs	=	pink

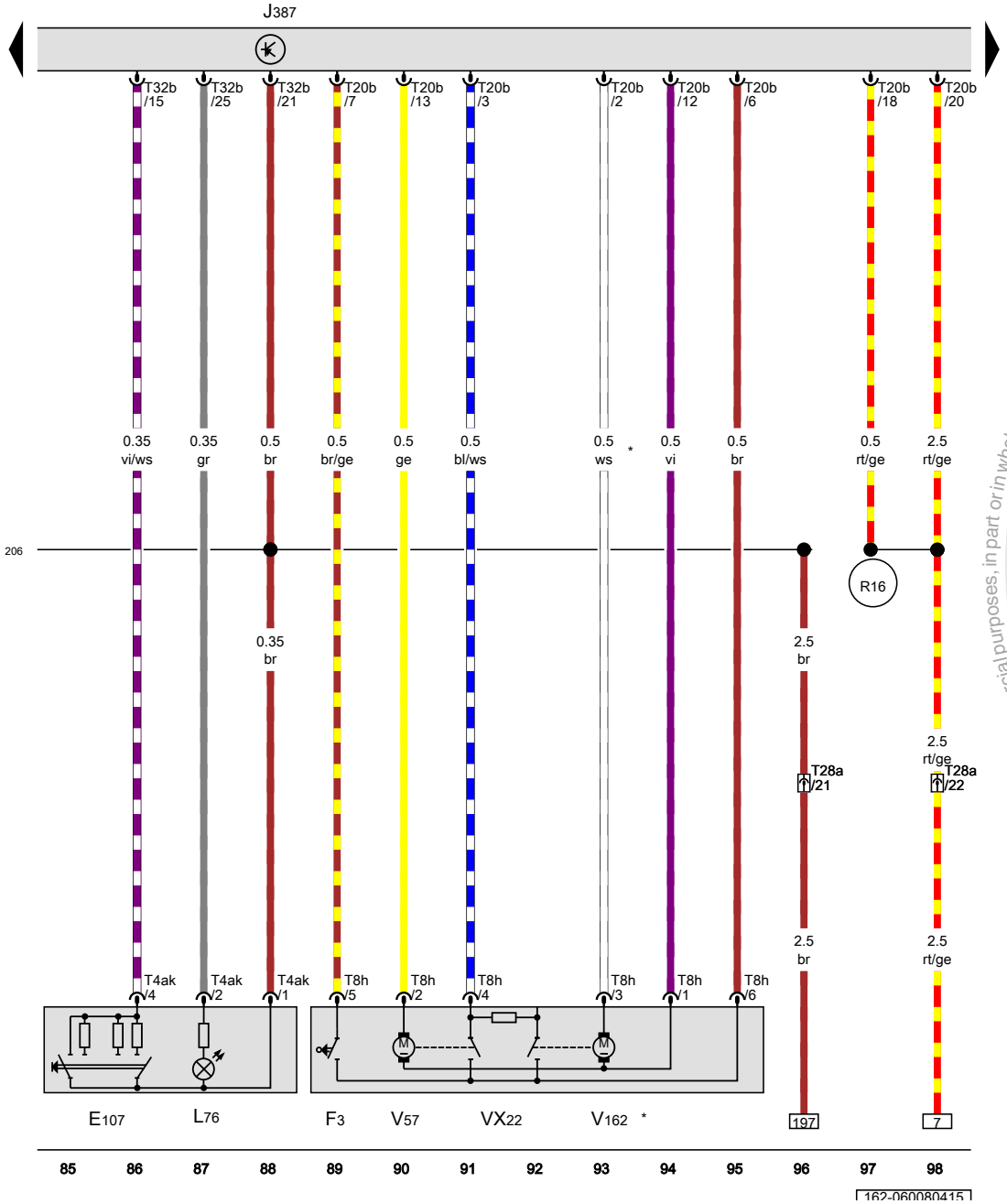

Front passenger door window regulator switch, Front passenger door contact switch, Front passenger door control module, Front passenger door lock unit, Front passenger door central locking system motor

E107	Front passenger door window regulator switch
F3	Front passenger door contact switch
J387	Front passenger door control module
L76	Push button illumination bulb
T4ak	4-pin connector
T8h	8-pin connector
T20b	20-pin connector
T28a	28-pin connector, Right A-pillar, bottom
T32b	32-pin connector
VX22	Front passenger door lock unit
V57	Front passenger door central locking system motor
V162	Front passenger central locking -SAFE- motor
206	Ground connection (in front passenger door wiring harness)
R16	Positive connection 1 (30) (in front passenger door wiring harness)
*	Not for USA

ws	=	white
sw	=	black
ro	=	red
rt	=	red
br	=	brown
gn	=	green
bl	=	blue
gr	=	grey
li = lilac
vi = lilac
ge = yellow
or = orange
rs = pink

Protected by copyright. Copying for private or commercial purposes, in part or in whole, is not permitted unless authorised by Volkswagen AG. Volkswagen AG does not guarantee or accept any liability with respect to the correctness of information in this document. Copyright by Volkswagen AG.

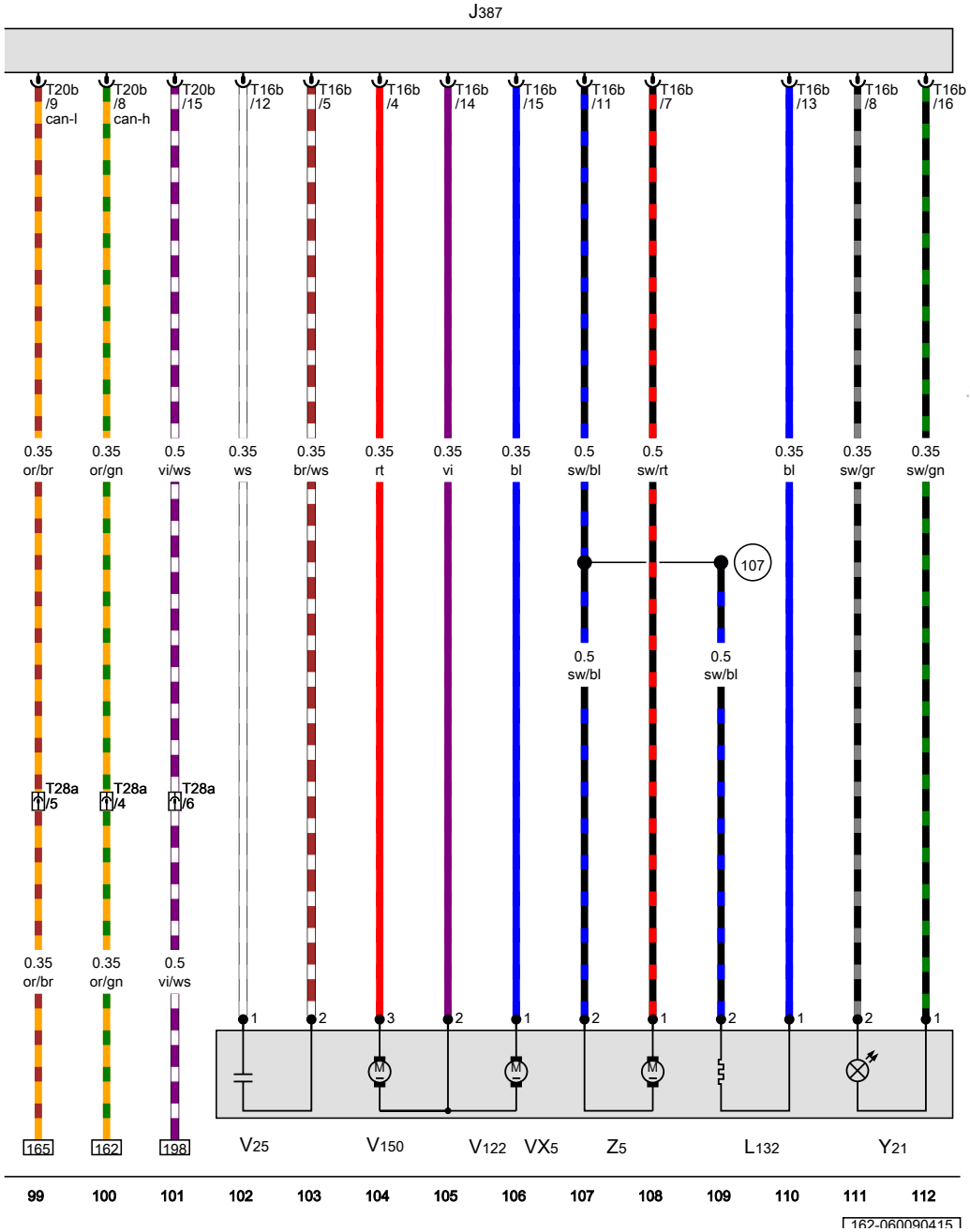

Front passenger door control module, Front passenger exterior rearview mirror, Front passenger side mirror adjustment motor 2, Front passenger exterior rearview mirror folding motor, Front passenger mirror adjustment motor, Front passenger automatic dimming exterior rearview mirror

J387	Front passenger door control module
L132	Front passenger exterior rearview mirror turn signal bulb
T16b	16-pin connector
T20b	20-pin connector
T28a	28-pin connector, Right A-pillar, bottom
VX5	Front passenger exterior rearview mirror
V25	Front passenger side mirror adjustment motor 2
V122	Front passenger exterior rearview mirror folding motor
V150	Front passenger mirror adjustment motor
Y21	Front passenger automatic dimming exterior rearview mirror
Z5	Heated front passenger exterior rearview mirror
(107)	Ground connection (in exterior mirror wiring harness)

ws	=	white
sw	=	black
ro	=	red
rt	=	red
br	=	brown
gn	=	green
bl	=	blue
gr	=	grey
li	=	lilac
vi	=	lilac
ge	=	yellow
or	=	orange
rs	=	pink

Protected by copyright. Copying for private or commercial purposes, in part or in whole, is not permitted unless authorised by Volkswagen AG. Volkswagen AG does not guarantee or accept any liability with respect to the correctness of information in this document. Copyright by Volkswagen AG.

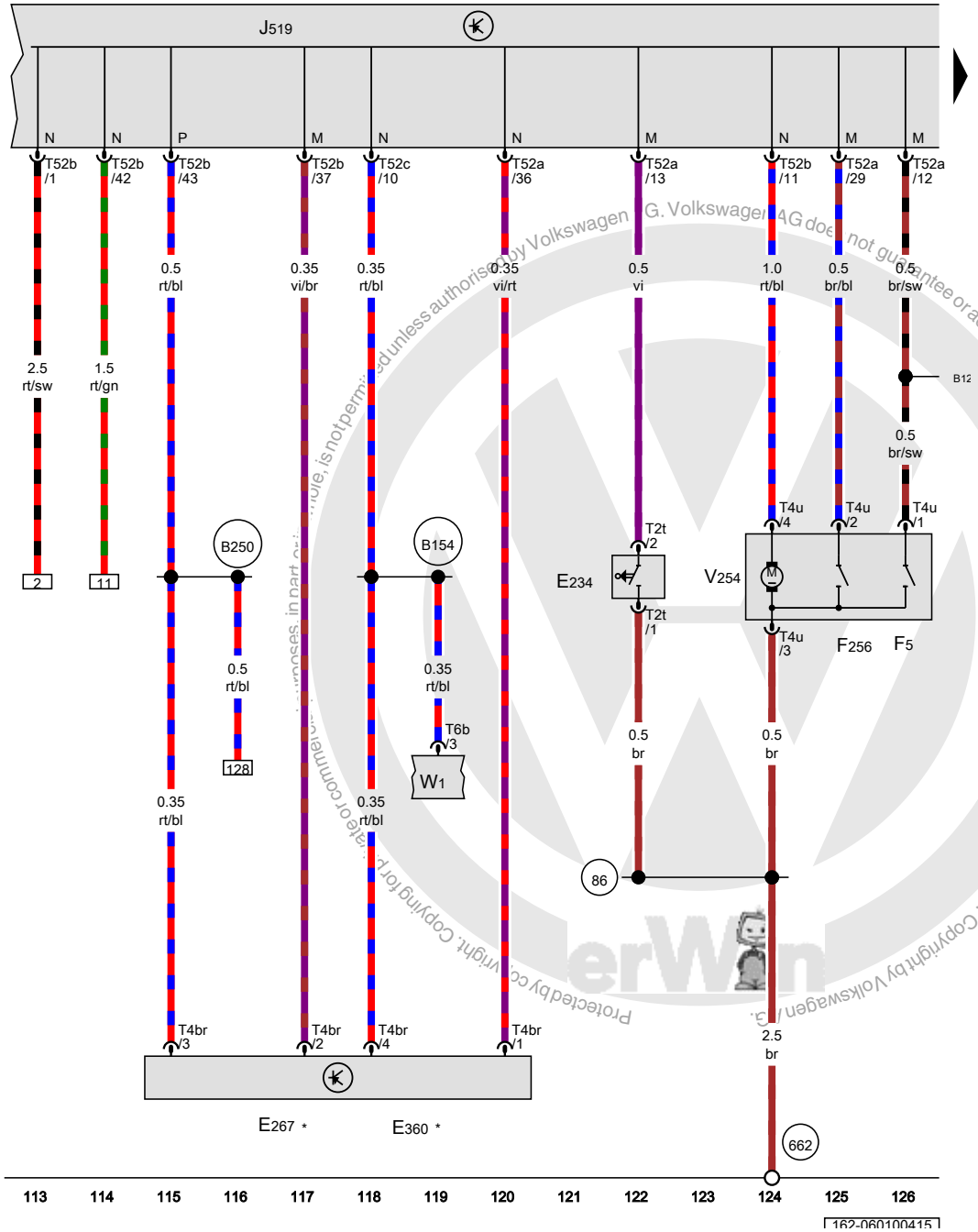

Release button in rear lid handle, Interior monitoring deactivation switch, Vehicle inclination sensor deactivation button, Luggage compartment lamp switch, Rear lid lock unit, Vehicle electrical control module system, Rear lid opening motor, Front interior lamp

E234	Release button in rear lid handle
E267	Interior monitoring deactivation switch
E360	Vehicle inclination sensor deactivation button
F5	Luggage compartment lamp switch
F256	Rear lid lock unit
J519	Vehicle electrical control module system
T2t	Double connector
T4br	4-pin connector
T4u	4-pin connector
T6b	6-pin connector
T52a	52-pin connector
T52b	52-pin connector
T52c	52-pin connector
V254	Rear lid opening motor
W1	Front interior lamp
86	Ground connection 1 (in rear wiring harness)
662	Ground connection in left rear side panel
B128	Luggage compartment lamp connection (in interior wiring harness)
B154	Connection TK (in interior wiring harness) 1
B250	Positive connection (in roof wiring harness)
*	Depending on equipment

ws	=	white
sw	=	black
ro	=	red
rt	=	red
br	=	brown
gn	=	green
bl	=	blue
gr	=	grey
li	=	lilac
vi	=	lilac
ge	=	yellow
or	=	orange
rs	=	pink

Protected by copyright. Copying for private or commercial purposes, in part or in whole, is not permitted unless authorised by Volkswagen AG. Volkswagen AG does not guarantee or accept any liability with respect to the correctness of information in this document. Copyright by Volkswagen AG.

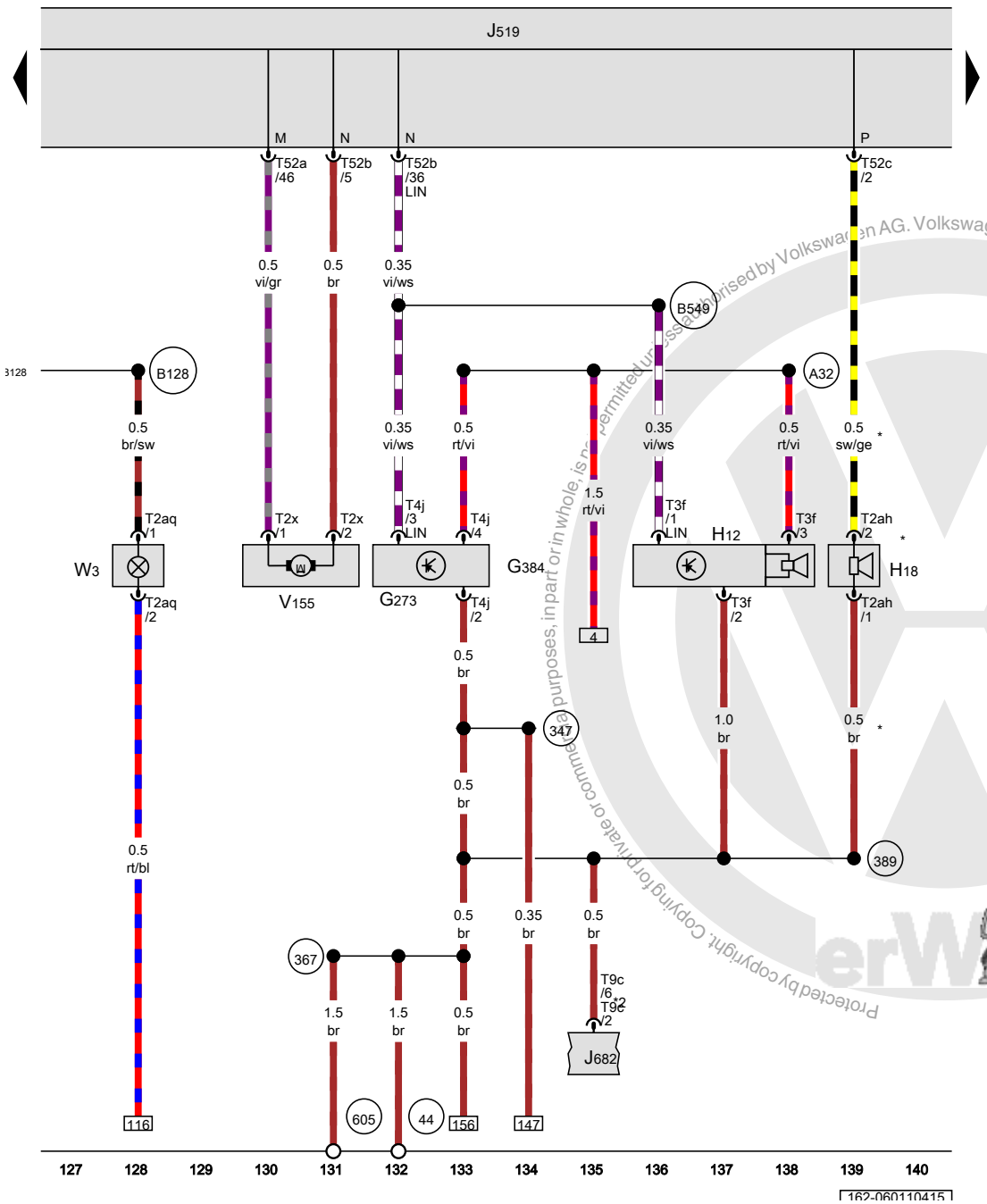

Interior monitoring sensor, Vehicle inclination sensor, Alarm horn, Vehicle electrical control module system, Fuel filler door unlock motor, Luggage compartment lamp

G273	Interior monitoring sensor
G384	Vehicle inclination sensor
H12	Alarm horn
H18	Alarm system horn
J519	Vehicle electrical control module system
J682	Terminal 50 power supply relay
T2ah	Double connector
T2aq	Double connector
T2x	Double connector
T3f	3-pin connector
T4j	4-pin connector
T9c	9-pin connector
T52a	52-pin connector
T52b	52-pin connector
T52c	52-pin connector
V155	Fuel filler door unlock motor
W3	Luggage compartment lamp
44	Ground connection on A-pillar, lower left
347	Ground connection (in roof wiring harness)
367	Ground connection 2 (in main wiring harness)
389	Ground connection 24 (in main wiring harness)
605	Ground connection on upper steering column
A32	Positive connection (30) (in instrument panel wiring harness)
B128	Luggage compartment lamp connection (in interior wiring harness)
B549	LIN bus connection 2 (in main wiring harness)
*	USA only
*2	Running change

ws	=	white
sw	=	black
ro	=	red
rt	=	red
br	=	brown
gn	=	green
bl	=	blue
gr	=	grey
li	=	lilac
vi	=	lilac
ge	=	yellow
or	=	orange
rs	=	pink

Protected by copyright. Copying for private or commercial purposes, in part or in whole, is not permitted unless authorised by Volkswagen AG. Volkswagen AG does not guarantee or accept any liability with respect to the correctness of information in this document. Copyright by Volkswagen AG.

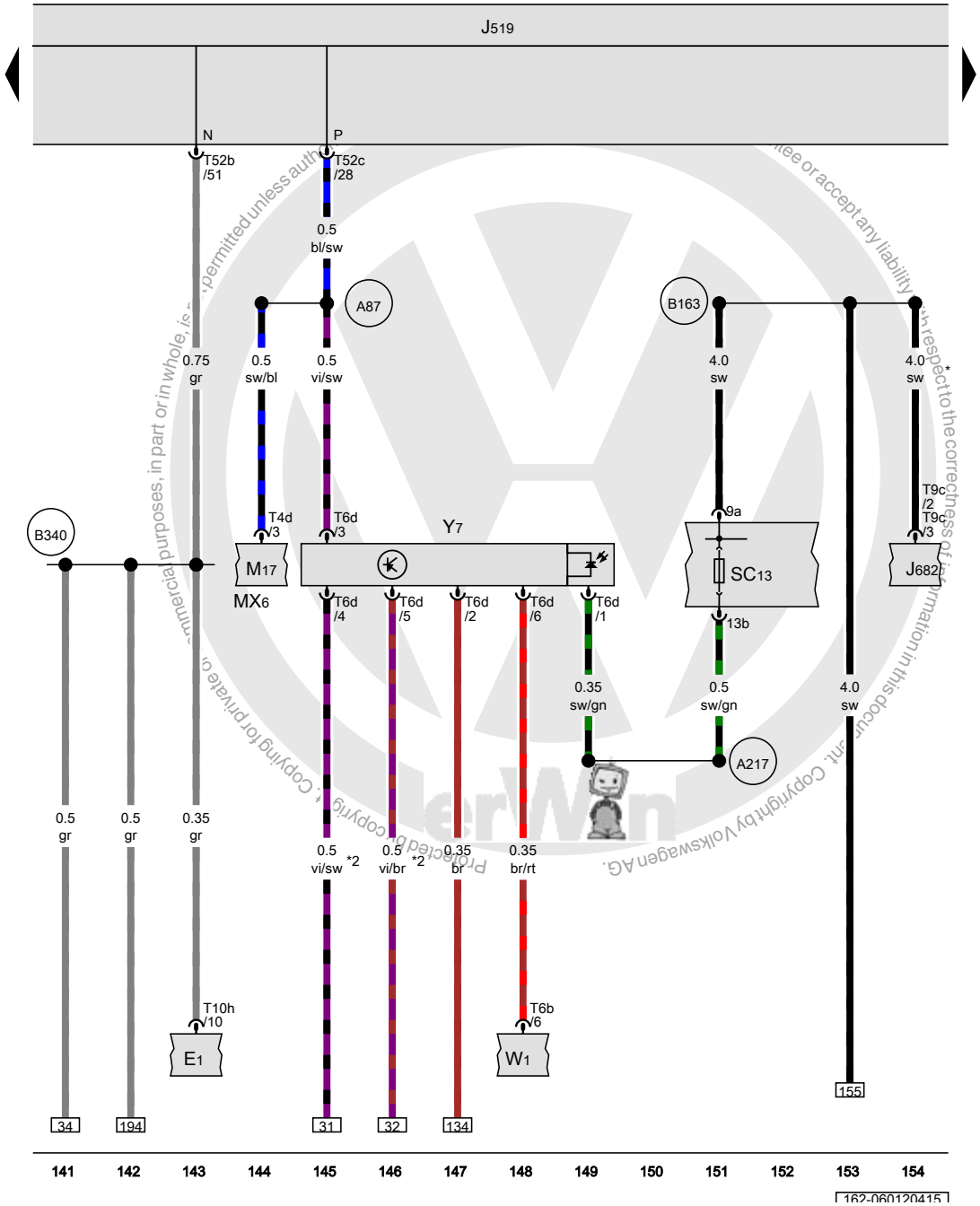

Vehicle electrical control module system, Automatic dimming interior rearview mirror

E1	Light switch
J519	Vehicle electrical control module system
J682	Terminal 50 power supply relay
MX6	Right tail lamp 2
M17	Right back-up lamp bulb
SC13	Fuse 13 (on fuse panel C)
T4d	4-pin connector
T6b	6-pin connector
T6d	6-pin connector
T9c	9-pin connector
T10h	10-pin connector
T52b	52-pin connector
T52c	52-pin connector
W1	Front interior lamp
Y7	Automatic dimming interior rearview mirror
A87	Back-up lamp connection (in instrument panel wiring harness)
A217	Positive connection 8 (15a) (in instrument panel wiring harness)
B163	Positive connection 1 (15) (in interior wiring harness)
B340	Connection 58d (in main wiring harness) 1
*	Running change
*2	Omitted as a running change

ws	=	white
sw	=	black
ro	=	red
rt	=	red
br	=	brown
gn	=	green
bl	=	blue
gr	=	grey
li	=	lilac
vi	=	lilac
ge	=	yellow
or	=	orange
rs	=	pink

Copyright by Volkswagen AG. Protected by copyright. Copying for private or commercial purposes, in part or in whole, is not permitted unless authorised. We do not guarantee or accept any liability with respect to the correctness of the information in this document.

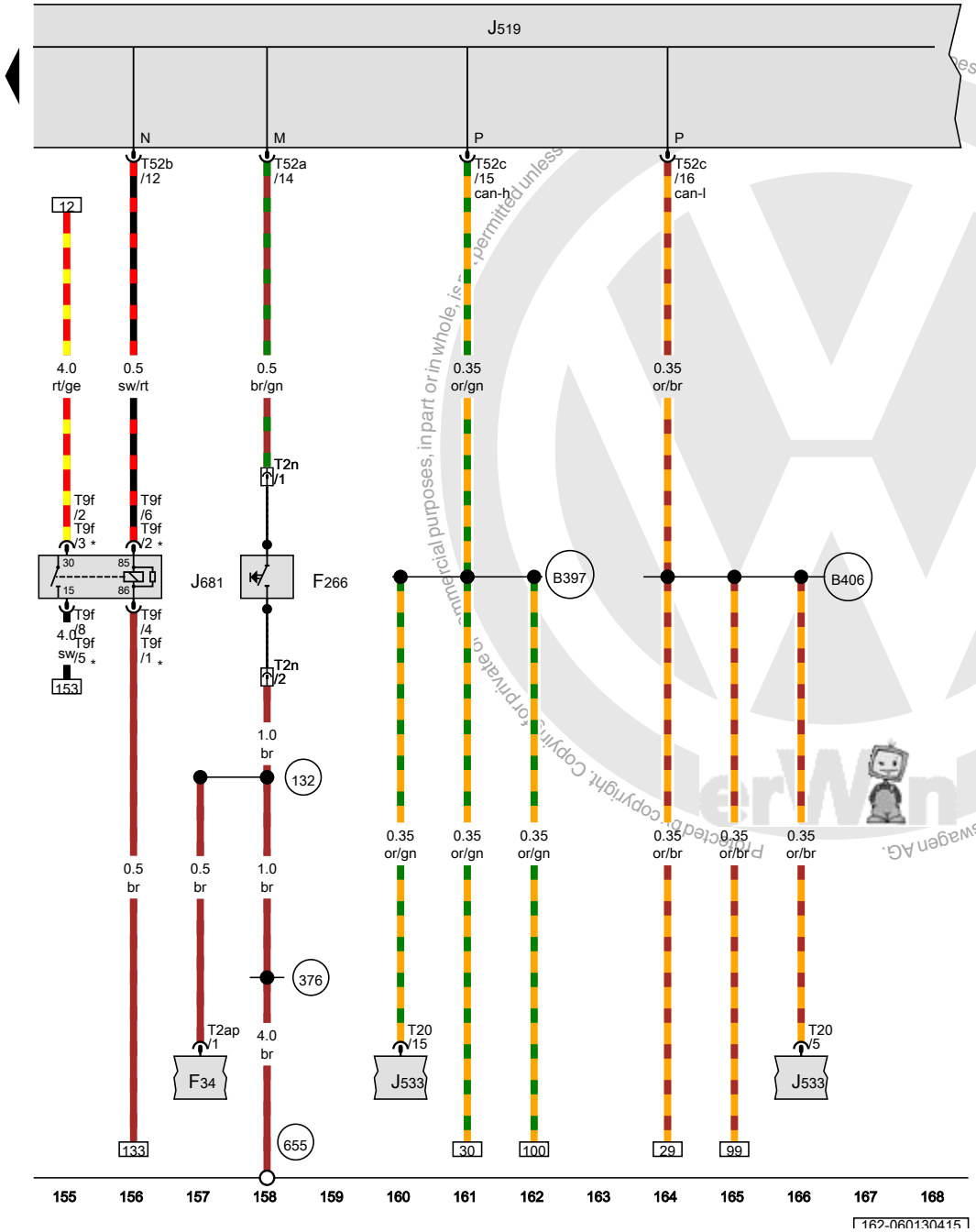

Engine hood contact switch, Vehicle electrical control module system, Terminal 15 power supply relay 2

F34	Brake fluid level warning switch
F266	Engine hood contact switch
J519	Vehicle electrical control module system
J533	Data bus on board diagnostic interface
J681	Terminal 15 power supply relay 2
T2ap	Double connector
T2n	Double connector
T9f	9-pin connector
T20	20-pin connector
T52a	52-pin connector
T52b	52-pin connector
T52c	52-pin connector
132	Ground connection 3 (in engine compartment wiring harness)
376	Ground connection 11 (in main wiring harness)
655	Ground connection on left headlamp
B397	Comfort system CAN bus high connection 1 (in main wiring harness)
B406	Comfort system CAN bus low connection 1 (in main wiring harness)
*	Running change

ws	=	white
sw	=	black
ro	=	red
rt	=	red
br	=	brown
gn	=	green
bl	=	blue
gr	=	grey
li	=	lilac
vi	=	lilac
ge	=	yellow
or	=	orange
rs	=	pink

Copyright by Volkswagen AG. Protected by copyright. Copying for private or commercial purposes, in part or in whole, is not permitted unless VW has granted its express consent. Volkswagen AG does not guarantee or accept any liability with respect to the correctness of information in this document.

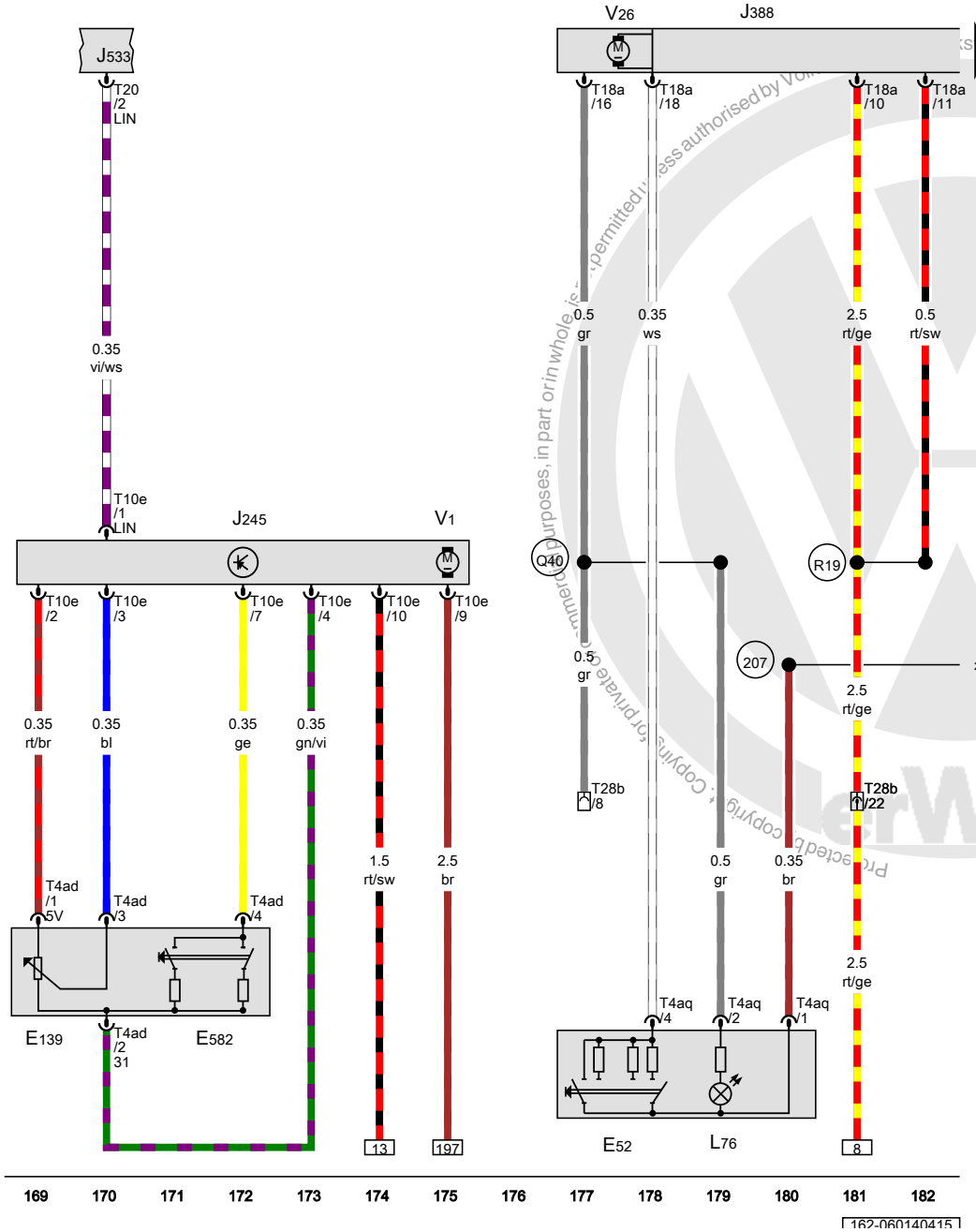

Left rear power window switch in left rear door, Sunroof adjustment regulator, Sunroof tilt button 1, Power sunroof control module, Left rear door control module, Sunroof motor, Left rear window regulator motor

E52	Left rear power window switch in left rear door
E139	Sunroof adjustment regulator
E582	Sunroof tilt button 1
J245	Power sunroof control module
J388	Left rear door control module
J533	Data bus on board diagnostic interface
L76	Push button illumination bulb
T4ad	4-pin connector
T4aq	4-pin connector
T10e	10-pin connector
T18a	18-pin connector
T20	20-pin connector
T28b	28-pin connector, on the left B-pillar
V1	Sunroof motor
V26	Left rear window regulator motor
207	Ground connection (in left rear door wiring harness)
Q40	Positive connection 3 (58b) (in power window wiring harness)
R19	Positive connection 1 (30) (in left rear door wiring harness)

ws	=	white
sw	=	black
ro	=	red
rt	=	red
br	=	brown
gn	=	green
bl	=	blue
gr	=	grey
li	=	lilac
vi	=	lilac
ge	=	yellow
or	=	orange
rs	=	pink

Volkswagen AG does not guarantee or accept any liability with respect to the correctness of information in this document. Copyright by Volkswagen AG. Protected by copyright. Copying, for private or commercial purposes, in part or in whole, is not permitted unless authorised by Volkswagen AG.

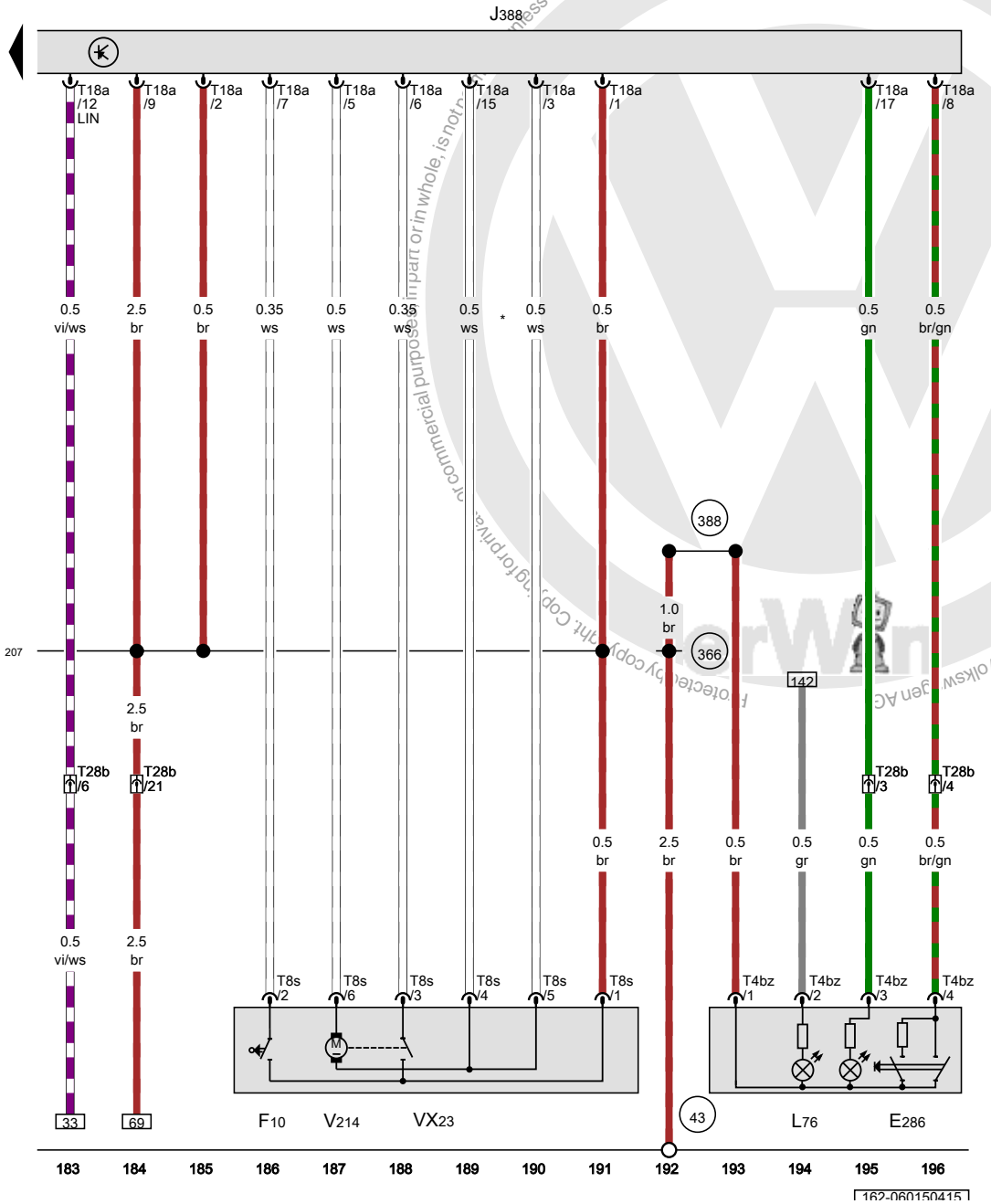

Rear center interior locking switch, Left rear door contact switch, Left rear door control module, Left rear door lock unit, Left rear central locking -lock- motor

E286	Rear center interior locking switch
F10	Left rear door contact switch
J388	Left rear door control module
L76	Push button illumination bulb
T4bz	4-pin connector
T8s	8-pin connector
T18a	18-pin connector
T28b	28-pin connector, on the left B-pillar
VX23	Left rear door lock unit
V214	Left rear central locking -lock- motor
43	Ground connection on A-pillar, lower right
207	Ground connection (in left rear door wiring harness)
366	Ground connection 1 (in main wiring harness)
388	Ground connection 23 (in main wiring harness)
*	Not for USA

ws	=	white
sw	=	black
ro	=	red
rt	=	red
br	=	brown
gn	=	green
bl	=	blue
gr	=	grey
li	=	lilac
vi	=	lilac
ge	=	yellow
or	=	orange
rs	=	pink

Copyright by Volkswagen AG. Volkswagen AG does not guarantee or accept any liability with respect to the correctness of information in this document. Copyright by Volkswagen AG. Protected by copyright. Copying for private or commercial purposes, in part or in whole, is not permitted unless authorised by Volkswagen AG.

Right rear window switch in right rear door, Right rear door contact switch, Right rear door control module, Right rear door lock unit, Right rear window regulator motor, Right rear central locking -lock- motor

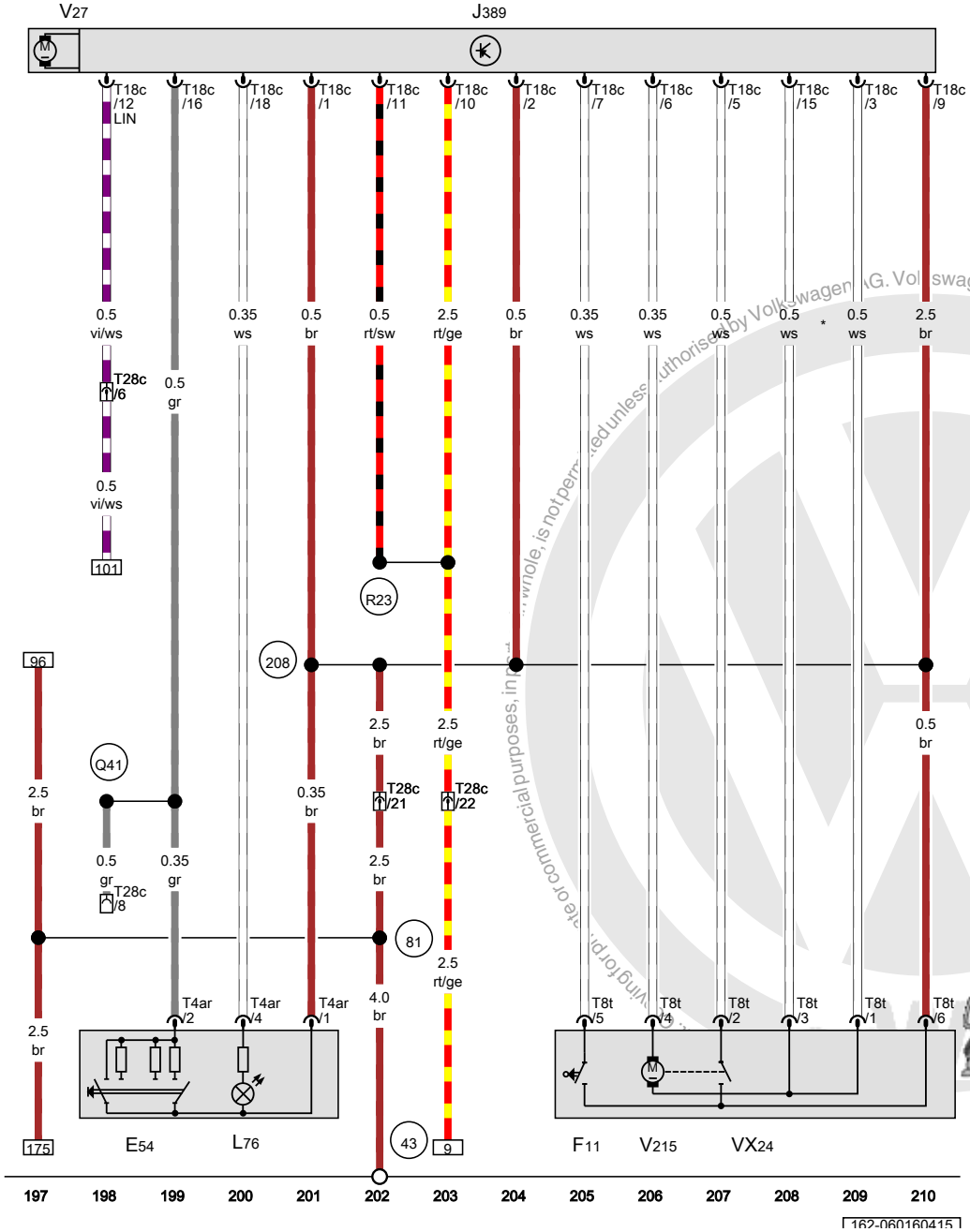

E54	Right rear window switch in right rear door
F11	Right rear door contact switch
J389	Right rear door control module
L76	Push button illumination bulb
T4ar	4-pin connector
T8t	8-pin connector
T18c	18-pin connector
T28c	28-pin connector, on the right B-pillar
VX24	Right rear door lock unit
V27	Right rear window regulator motor
V215	Right rear central locking -lock- motor
43	Ground connection on A-pillar, lower right
81	Ground connection 1 (in instrument panel wiring harness)
208	Ground connection (in right rear door wiring harness)
Q41	Positive connection 4 (58b) (in power window wiring harness)
R23	Positive connection 1 (30) (in right rear door wiring harness)
*	Not for USA

ws	=	white
sw	=	black
ro	=	red
rt	=	red
br	=	brown
gn	=	green
bl	=	blue
gr	=	grey
li	=	lilac
vi	=	lilac
ge	=	yellow
or	=	orange
rs	=	pink

Volkswagen AG. Volkswagen AG does not guarantee or accept any liability with respect to the correctness of information in this document. Copyright by Volkswagen AG.

Radio systems/navigation systems , (7T2),(7T6),(7T8),(7UB),(7UK),(7UL),(8AE),(8AX),(8DD)

from June 2011

Protected by copyright. Copying for private or commercial purposes, in part or in whole, is not permitted unless authorised by Volkswagen AG. Volkswagen AG does not guarantee or accept any liability with respect to the correctness of information in this document. Copyright by Volkswagen AG.

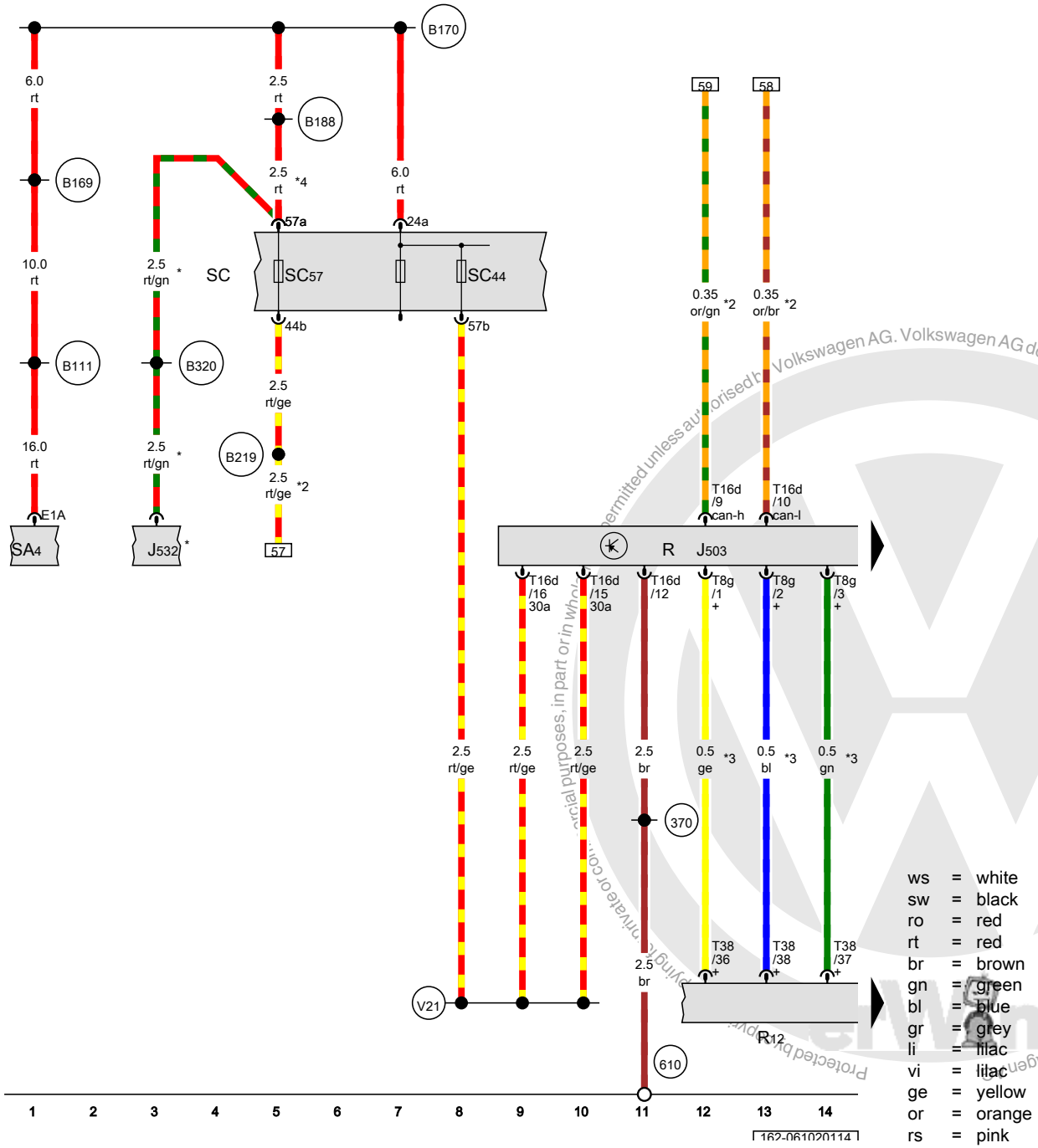

ws	=	white
sw	=	black
ro	=	red
rt	=	red
br	=	brown
gn	=	green
bl	=	blue
gr	=	grey
li	=	lilac
vi	=	lilac
ge	=	yellow
or	=	orange
rs	=	pink

Radio/navigation display unit control module, Radio, Fuse 4 (on fuse panel A), Fuse panel C

J503	Radio/navigation display unit control module
J532	Voltage stabilizer
R	Radio
R12	Amplifier
SA4	Fuse 4 (on fuse panel A)
SC	Fuse panel C
SC44	Fuse 44 (on fuse panel C)
SC57	Fuse 57 (on fuse panel C)
T8g	8-pin connector
T16d	16-pin connector
T38	38-pin connector
370	Ground connection 5 (in main wiring harness)
610	Audio ground connection under front center console
B111	Positive connection 1 (30a) (in interior wiring harness)
B169	Positive connection 1 (30) (in interior wiring harness)
B170	Positive connection 2 (30) (in interior wiring harness)
B188	Positive connection 5 (30) (in interior wiring harness)
B219	Positive connection 4 (30a) (in interior wiring harness)
B320	Positive connection 6 (30a) (in main wiring harness)
V21	Positive connection (30) (in wiring radio/amplifier wiring harness)
*	Only for vehicles with Stop/Start system
*2	only for vehicles with Low equipment (AW0)
*3	Only for vehicles with sound system
*4	Only for vehicles without Start/Stop system

Protected by copyright. Copying for private or commercial purposes, in part or in whole, is not permitted unless authorised by Volkswagen AG. Volkswagen AG does not guarantee or accept any liability with respect to the correctness of information in this document. Copyright by Volkswagen AG.

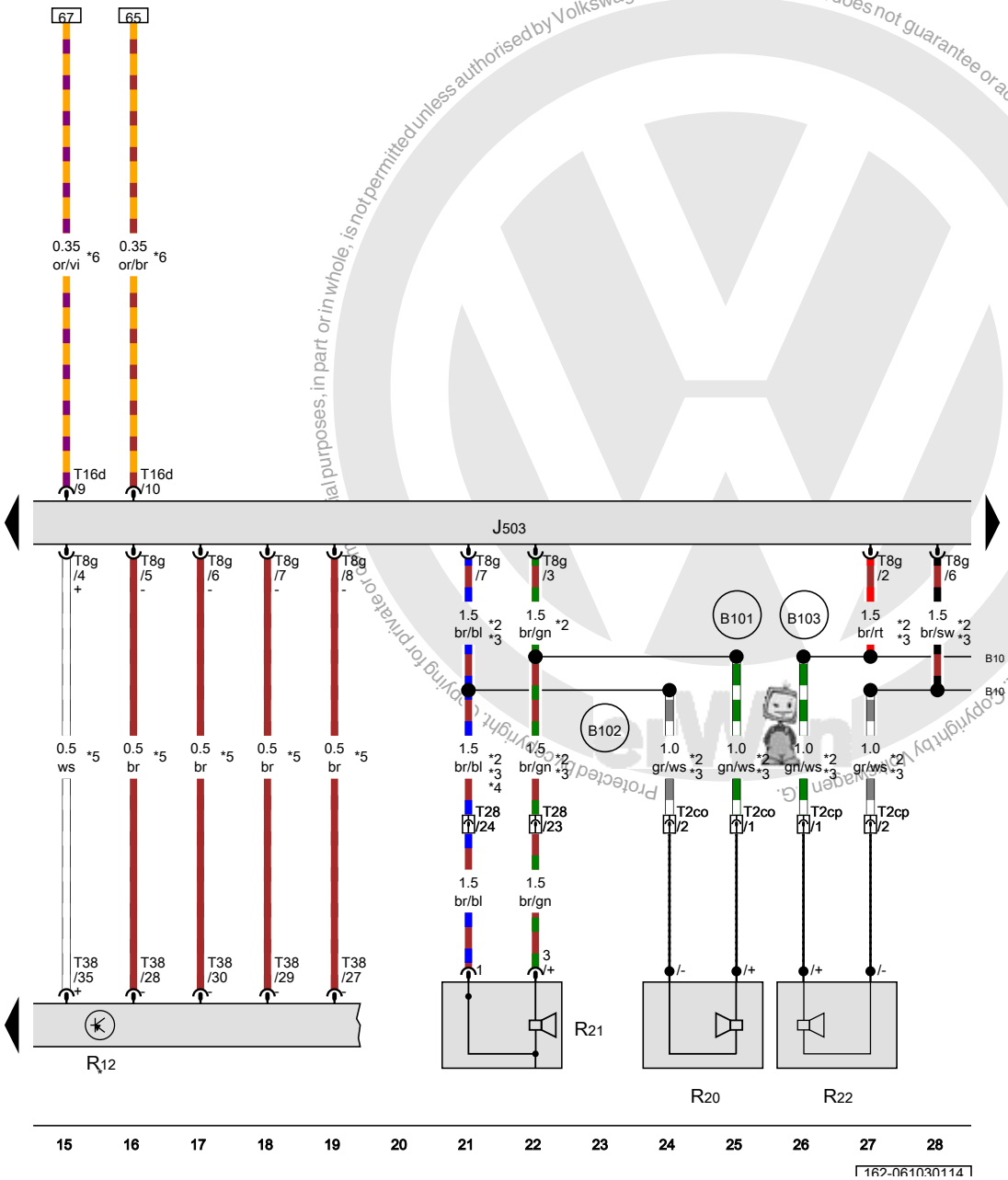

ws = white
sw = black
ro = red
rt = red
br = brown
gn = green
bl = blue
gr = grey
li = lilac
vi = lilac
ge = yellow
or = orange
rs = pink

Radio/navigation display unit control module, Left front treble speaker, Left front bass speaker, Right front treble speaker

J503	Radio/navigation display unit control module
R12	Amplifier
R20	Left front treble speaker
R21	Left front bass speaker
R22	Right front treble speaker
T2co	Double connector, Interface for front speaker, in the instrument panel, left
T2cp	Double connector, Interface for front speaker, in the instrument panel, right
T8g	8-pin connector
T16d	16-pin connector
T28	28-pin connector
T38	38-pin connector
B101	Left front speaker positive connection (in main wiring harness)
B102	Left front speaker negative connection (in main wiring harness)
B103	Right front speaker positive connection (in main wiring harness)
B104	Right front speaker negative connection (in main wiring harness)
*	Refer to applicable sound system wiring diagram
*2	Only for vehicles without sound system
*3	The color of the wires depends on vehicle equipment
*4	Diameter depends on equipment
*5	Only for vehicles with sound system
*6	only for vehicles with High equipment (AW1)

Protected by copyright. Copyright by Volkswagen AG. Volkswagen AG does not guarantee or accept any liability with respect to the correctness of information in this document. Copyright by Volkswagen AG. Protected by copyright. copying for private or commercial purposes, in part or in whole, is not permitted unless authorised by Volkswagen AG.

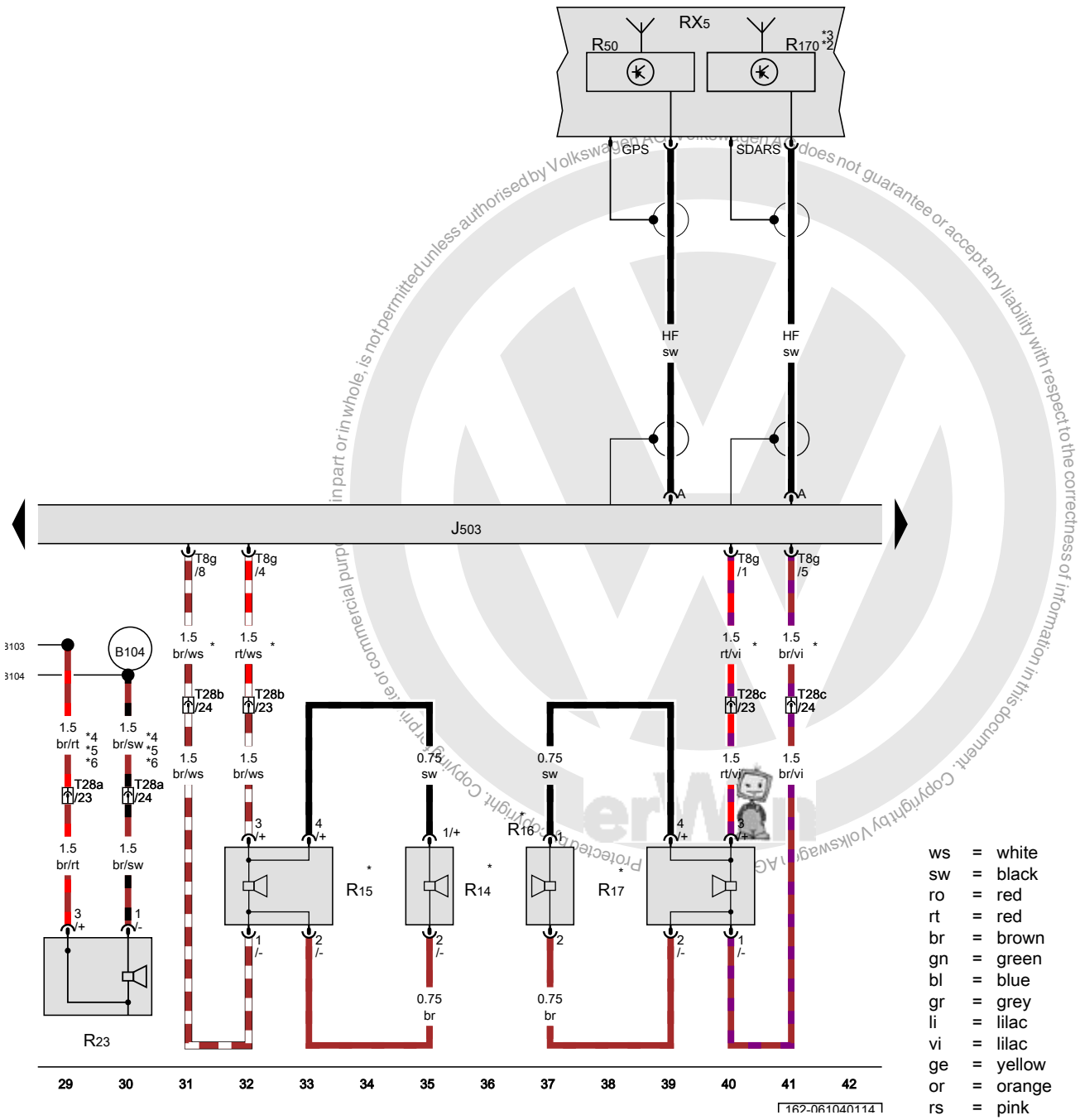

ws = white
sw = black
ro = red
rt = red
br = brown
gn = green
bl = blue
gr = grey
li = lilac
vi = lilac
ge = yellow
or = orange
rs = pink

Radio/navigation display unit control module, Roof antenna, Left rear treble speaker, Left rear bass speaker, Right rear treble speaker, Right rear bass speaker, Right front bass speaker, GPS antenna, Satellite antenna

J503	Radio/navigation display unit control module
RX5	Roof antenna
R14	Left rear treble speaker
R15	Left rear bass speaker
R16	Right rear treble speaker
R17	Right rear bass speaker
R23	Right front bass speaker
R50	GPS antenna
R170	Satellite antenna
T8g	8-pin connector
T28a	28-pin connector
T28b	28-pin connector
T28c	28-pin connector
B103	Right front speaker positive connection (in main wiring harness)
B104	Right front speaker negative connection (in main wiring harness)
*	Depending on equipment
*2	USA only
*3	Only for vehicles with satellite radio
*4	Only for vehicles without sound system
*5	The color of the wires depends on vehicle equipment
*6	Diameter depends on equipment

Protected by copyright. Copyright by Volkswagen AG. Copying in part or in whole, is not permitted unless authorised by Volkswagen AG. Volkswagen AG does not guarantee or accept any liability with respect to the correctness of information in this document.

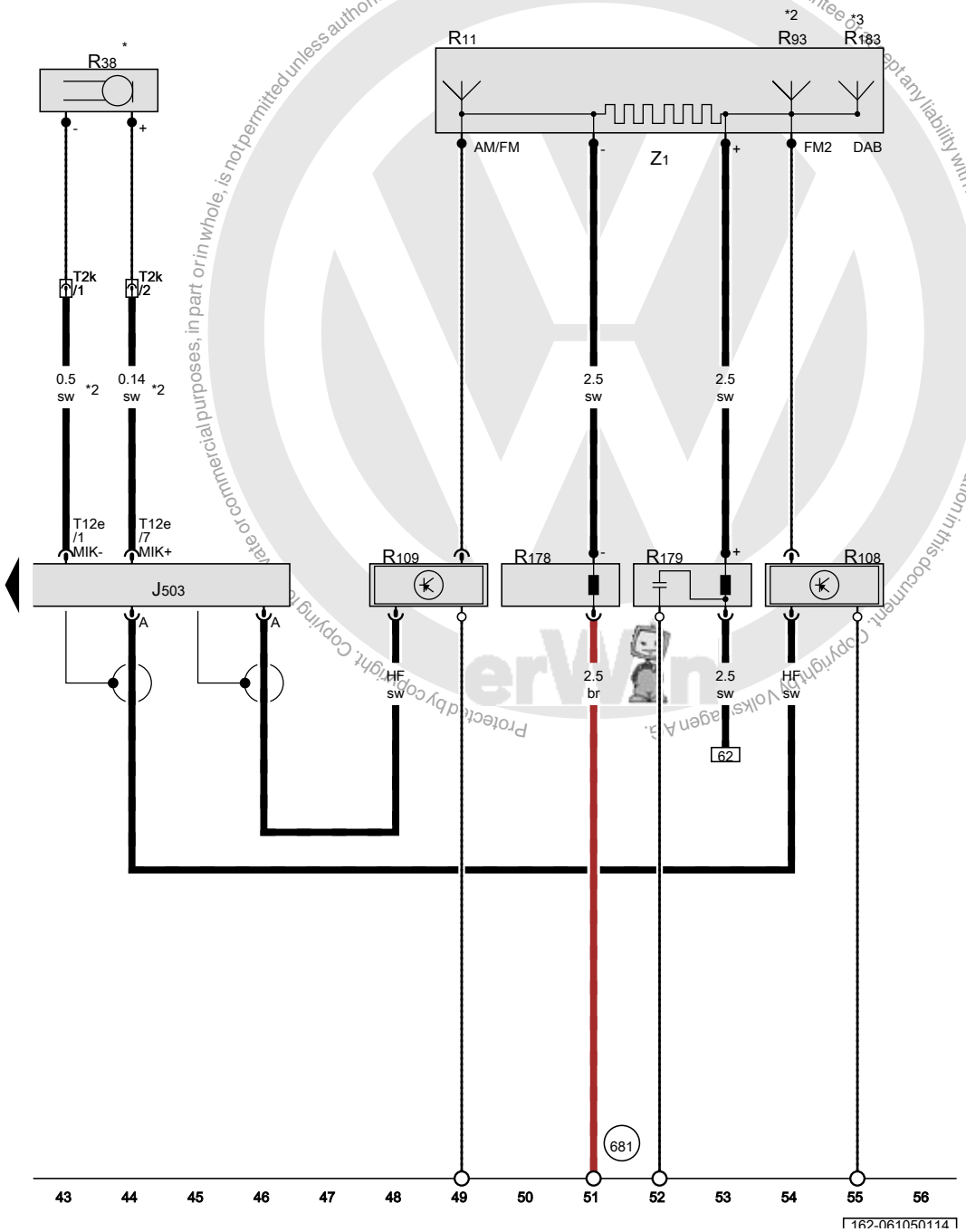

Radio/navigation display unit control module, Antenna, Radio antenna 2, Left antenna module, Right antenna module, Digital radio antenna, Rear window defogger

J503	Radio/navigation display unit control module
R11	Antenna
R38	Telephone microphone
R93	Radio antenna 2
R108	Left antenna module
R109	Right antenna module
R178	FM frequency filter in negative wire
R179	FM frequency filter in positive wire
R183	Digital radio antenna
T2k	Double connector
T12e	12-pin connector
Z1	Rear window defogger
681	Ground connection 1 in right rear side panel
*	Refer to applicable telephone systems wiring diagram
*2	Depending on equipment
*3	Only for vehicles with a digital radio

ws	=	white
sw	=	black
ro	=	red
rt	=	red
br	=	brown
gn	=	green
bl	=	blue
gr	=	grey
li	=	lilac
vi	=	lilac
ge	=	yellow
or	=	orange
rs	=	pink

Protected by copyright. Copying for private or commercial purposes, in part or in whole, is not permitted unless authorised by Volkswagen AG. Volkswagen AG does not guarantee or accept any liability with respect to the correctness of information in this document. Copyright by Volkswagen AG.

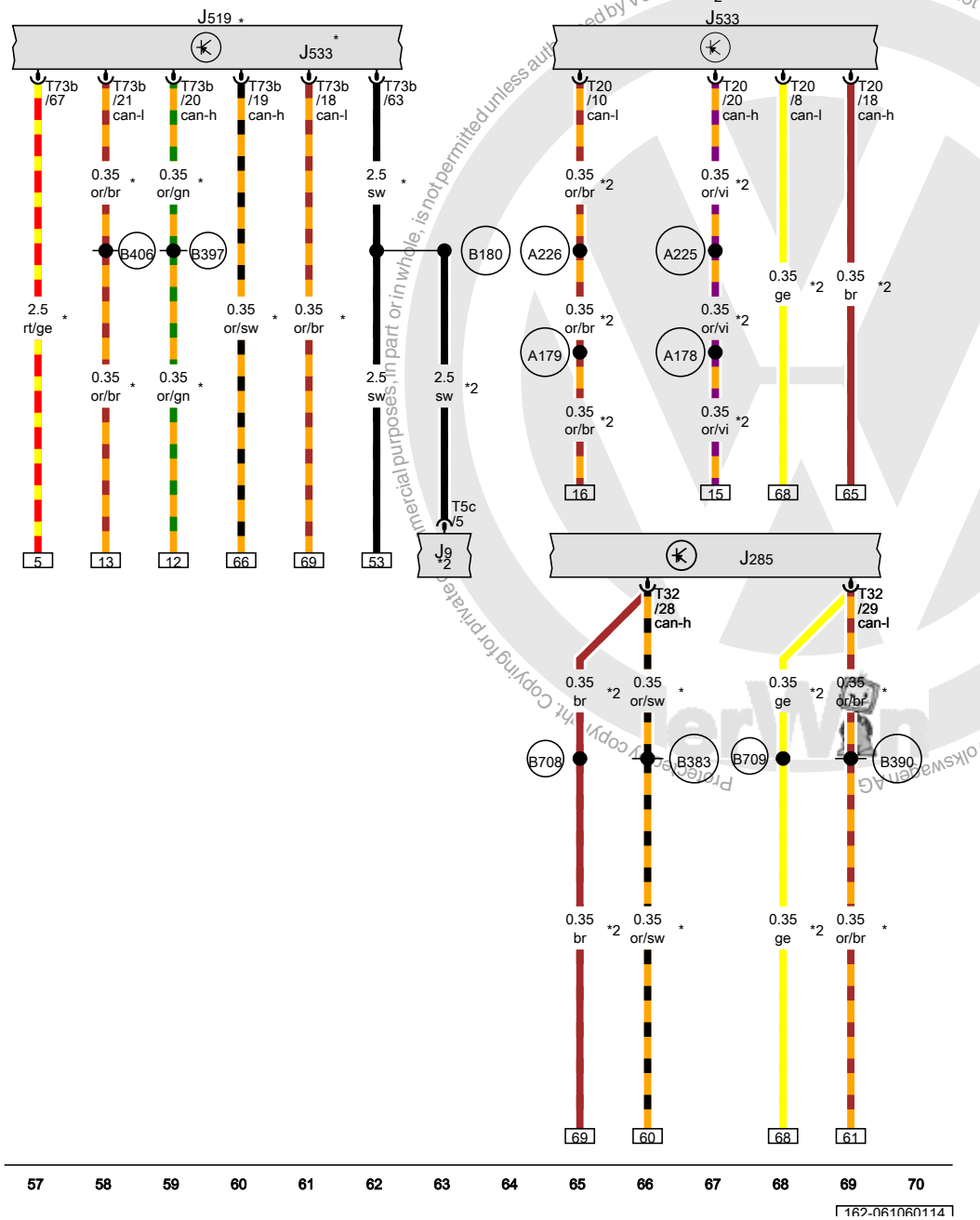

ws = white
sw = black
ro = red
rt = red
br = brown
gn = green
bl = blue
gr = grey
li = lilac
vi = lilac
ge = yellow
or = orange
rs = pink

Instrument cluster control module, Vehicle electrical system control module, Data bus on board diagnostic interface

J9	Rear window defogger relay
J285	Instrument cluster control module
J519	Vehicle electrical system control module
J533	Data bus on board diagnostic interface
T5c	5-pin connector
T20	20-pin connector
T32	32-pin connector
T73b	73-pin connector
A178	Infotainment CAN bus high connection (in instrument panel wiring harness)
A179	Infotainment CAN bus low connection (in instrument panel wiring harness)
A225	Infotainment CAN bus high connection 2 (in instrument panel wiring harness)
A226	Infotainment CAN bus low connection 2 (in instrument panel wiring harness)
B180	Rear window defogger connection (in interior wiring harness)
B383	Powertrain CAN bus high connection 1 (in main wiring harness)
B390	Powertrain CAN bus low connection 1 (in main wiring harness)
B397	Comfort system CAN bus high connection 1 (in main wiring harness)
B406	Comfort system CAN bus low connection 1 (in main wiring harness)
B708	Instrument cluster CAN bus high connection 1 (in main wiring harness)
B709	Instrument cluster CAN bus low connection 1 (in main wiring harness)
*	only for vehicles with Low equipment (AW0)
*2	only for vehicles with High equipment (AW1)

Protected by copyright. Copyright by Volkswagen AG. Volkswagen AG does not guarantee or accept any liability with respect to the correctness of information in this document. Copyright by Volkswagen AG. Protected by copyright. Copying for private or commercial purposes, in part or in whole, is not permitted unless authorised by Volkswagen AG.

Convenience system , (AW1)

from June 2011

Protected by copyright. Copying for private or commercial purposes, in part or in whole, is not permitted unless authorised by Volkswagen AG. Volkswagen AG does not guarantee or accept any liability with respect to the correctness of information in this document. Copyright by Volkswagen AG.

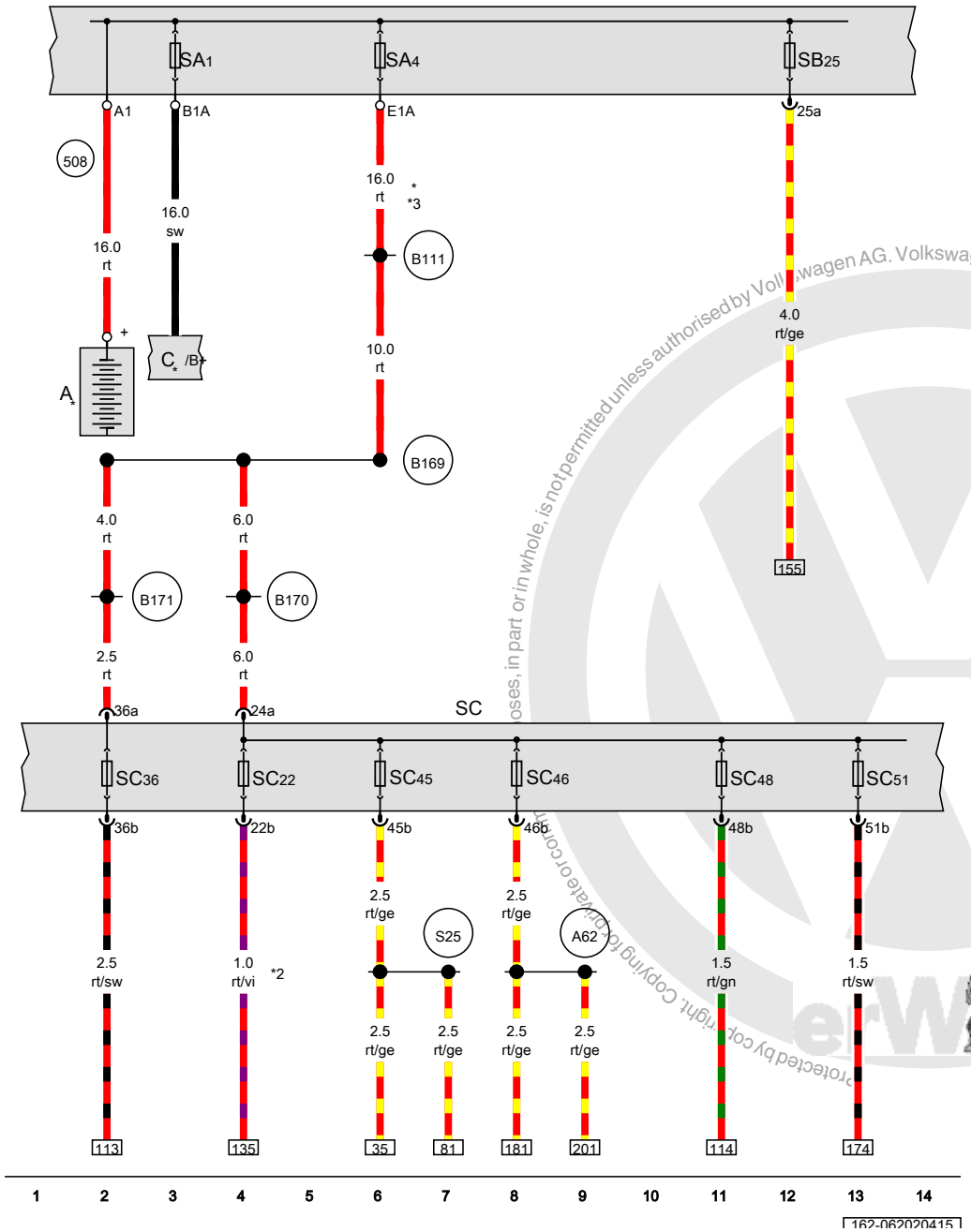

Battery, Fuse 1 (on fuse panel A), Fuse 4 (on fuse panel A), Fuse 25 (on fuse panel B), Fuse panel C

A	Battery
C	Generator
SA1	Fuse 1 (on fuse panel A)
SA4	Fuse 4 (on fuse panel A)
SB25	Fuse 25 (on fuse panel B)
SC	Fuse panel C
SC22	Fuse 22 (on fuse panel C)
SC36	Fuse 36 (on fuse panel C)
SC45	Fuse 45 (on fuse panel C)
SC46	Fuse 46 (on fuse panel C)
SC48	Fuse 48 (on fuse panel C)
SC51	Fuse 51 (on fuse panel C)
508	Terminal 30 threaded connection (on E-box)
A62	Power window connection (in instrument panel wiring harness)
B111	Positive connection 1 (30a) (in interior wiring harness)
B169	Positive connection 1 (30) (in interior wiring harness)
B170	Positive connection 2 (30) (in interior wiring harness)
B171	Positive connection 3 (30) (in interior wiring harness)
S25	Positive connection (30a) (in central locking system wiring harness)
*	Only for vehicles without hybrid drive
*2	Diameter depends on equipment
*3	Refer to applicable high-voltage system wiring diagram

ws	=	white
sw	=	black
ro	=	red
rt	=	red
br	=	brown
gn	=	green
bl	=	blue
gr	=	grey
li	=	lilac
vi	=	lilac
ge	=	yellow
or	=	orange
rs	=	pink

Protected by copyright. Copying for private or commercial purposes, in part or in whole, is not permitted unless authorised by Volkswagen AG. Volkswagen AG does not guarantee or accept any liability with respect to the correctness of information in this document. Copyright by Volkswagen AG.

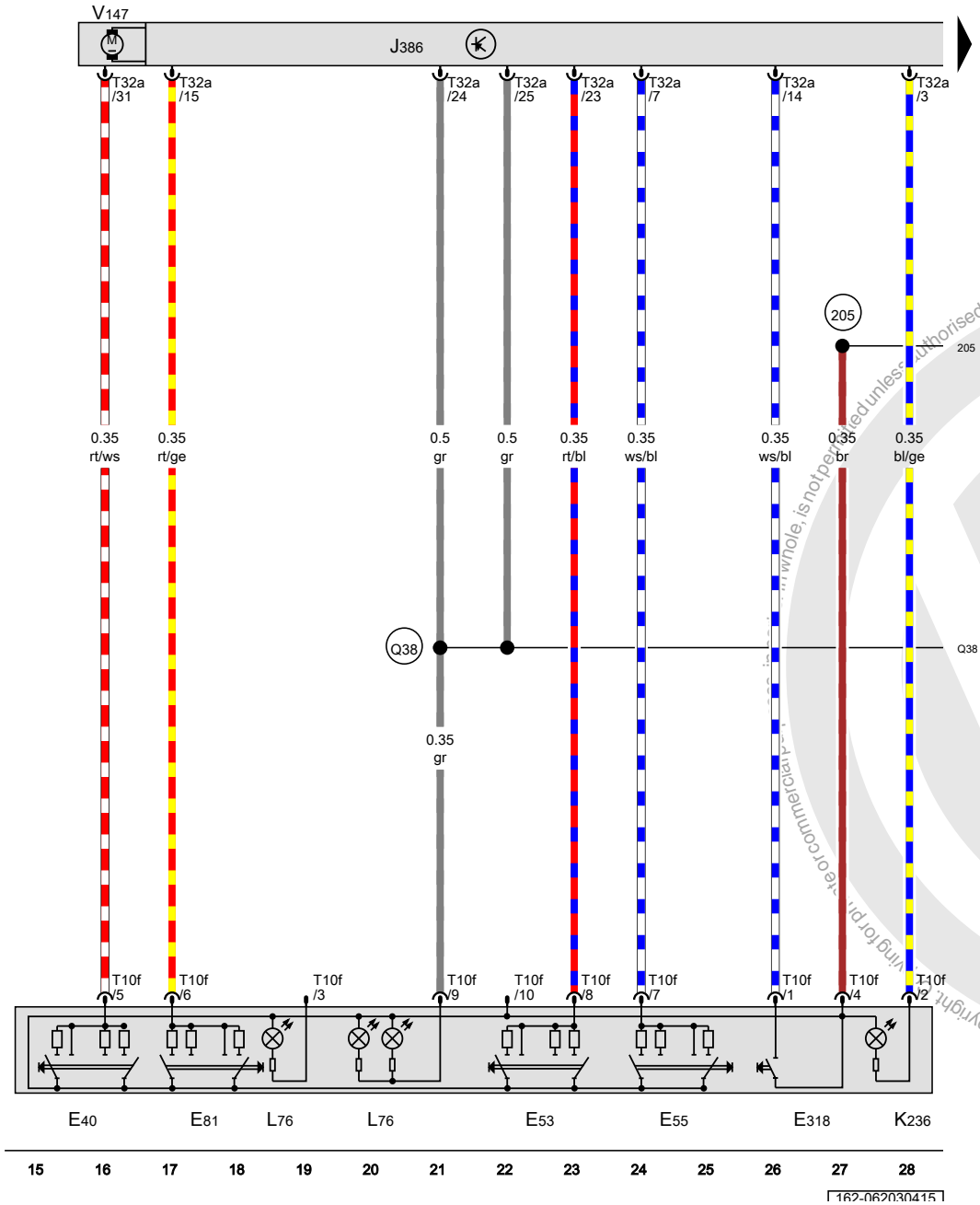

Left front window regulator switch, Left rear window regulator switch in driver door, Right rear window regulator switch in driver door, Right front power window switch in driver door, Child safety lock button, Driver door control module

E40	Left front window regulator switch
E53	Left rear window regulator switch in driver door
E55	Right rear window regulator switch in driver door
E81	Right front power window switch in driver door
E318	Child safety lock button
J386	Driver door control module
K236	Child safety lock -activated- indicator lamp
L76	Push button illumination bulb
T10f	10-pin connector
T32a	32-pin connector
V147	Driver window regulator motor
205	Ground connection (in driver door wiring harness)
Q38	Positive connection 1 (58b) (in power window wiring harness)

ws	=	white
sw	=	black
ro	=	red
rt	=	red
br	=	brown
gn	=	green
bl	=	blue
gr	=	grey
li	=	lilac
vi	=	lilac
ge	=	yellow
or	=	orange
rs	=	pink

Protected by copyright. Copying for private or commercial purposes, in whole or in part, is not permitted unless authorised by Volkswagen AG. Volkswagen AG does not guarantee or accept any liability with respect to the correctness of information in this document. Copyright by Volkswagen AG.

Driver interior locking button, Driver door control module, Central locking -SAFE- indicator lamp

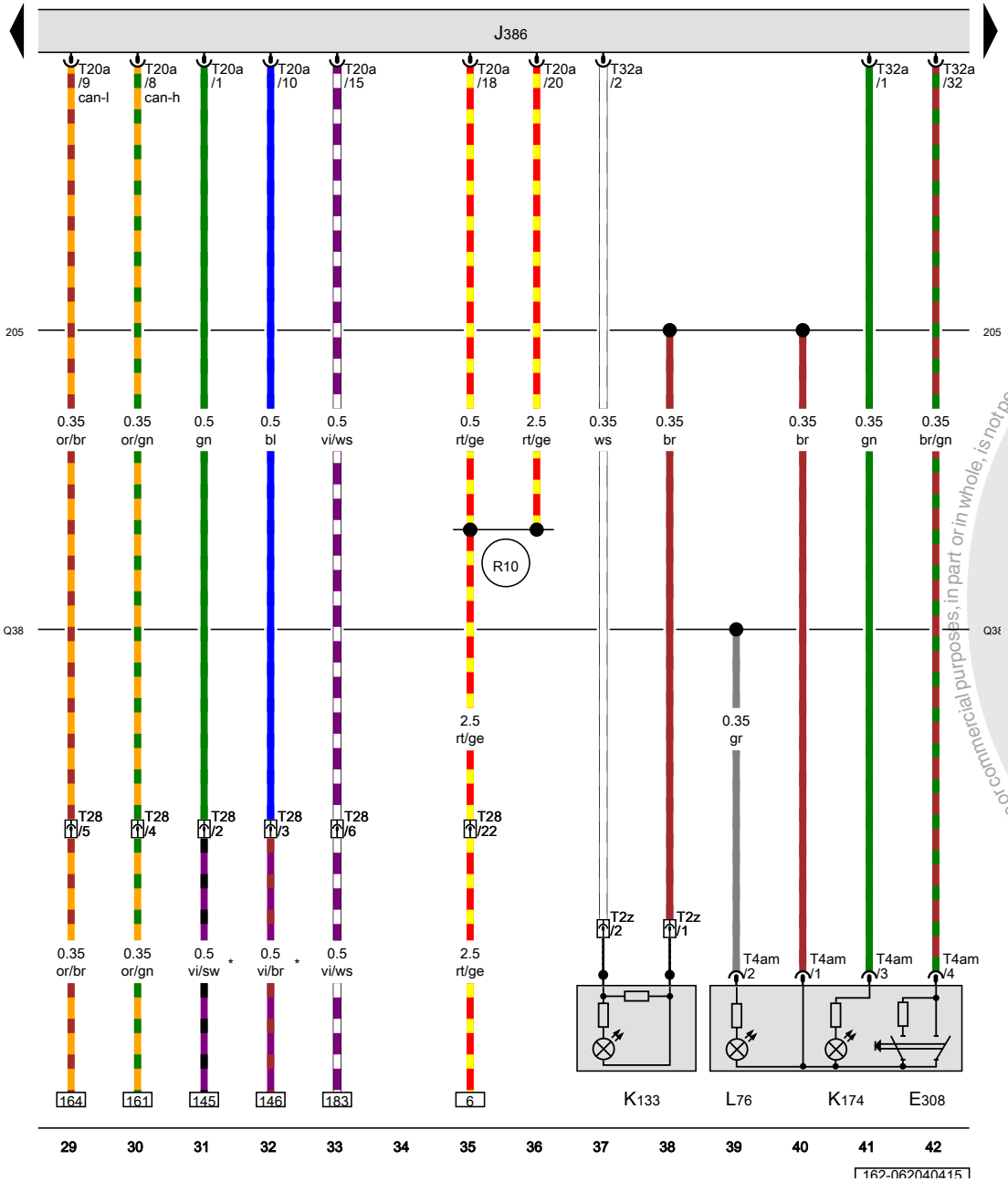

E308	Driver interior locking button
J386	Driver door control module
K133	Central locking -SAFE- indicator lamp
K174	Driver interior locking indicator lamp
L76	Push button illumination bulb
T2z	Double connector
T4am	4-pin connector
T20a	20-pin connector
T28	28-pin connector, Left A-pillar, bottom
T32a	32-pin connector
(205)	Ground connection (in driver door wiring harness)
(Q38)	Positive connection 1 (58b) (in power window wiring harness)
(R10)	Positive connection 1 (30) (in driver door wiring harness)
*	Omitted as a running change

ws	=	white
sw	=	black
ro	=	red
rt	=	red
br	=	brown
gn	=	green
bl	=	blue
gr	=	grey
li	=	lilac
vi	=	lilac
ge	=	yellow
or	=	orange
rs	=	pink

Protected by copyright. Copying for private or commercial purposes, in part or in whole, is not permitted unless authorised by Volkswagen AG. Volkswagen AG does not guarantee or accept any liability with respect to the correctness of information in this document. Copyright by Volkswagen AG.

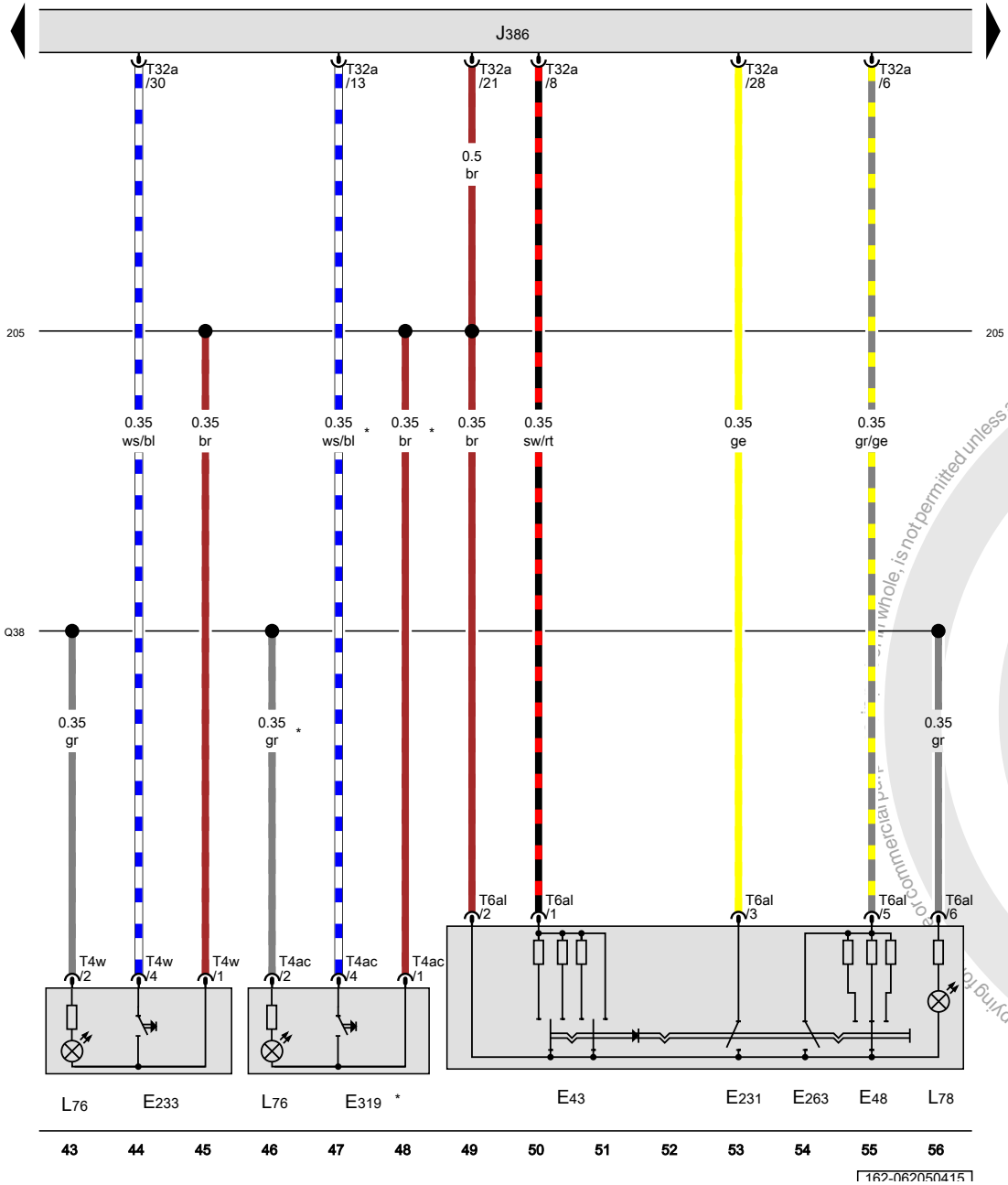

Mirror adjusting switch, Mirror selector switch, Exterior rearview mirror heating switch, Rear lid remote release button, Mirror folding switch, Fuel filler door release button, Driver door control module, Mirror adjustment switch illumination bulb

E43	Mirror adjusting switch
E48	Mirror selector switch
E231	Exterior rearview mirror heating switch
E233	Rear lid remote release button
E263	Mirror folding switch
E319	Fuel filler door release button
J386	Driver door control module
L76	Push button illumination bulb
L78	Mirror adjustment switch illumination bulb
T4ac	4-pin connector
T4w	4-pin connector
T6al	6-pin connector
T32a	32-pin connector
(205)	Ground connection (in driver door wiring harness)
(Q38)	Positive connection 1 (58b) (in power window wiring harness)
*	USA only

ws	=	white
sw	=	black
ro	=	red
rt	=	red
br	=	brown
gn	=	green
bl	=	blue
gr	=	grey
li	=	lilac
vi	=	lilac
ge	=	yellow
or	=	orange
rs	=	pink

Protected by copyright. Copying for commercial purposes, in whole, is not permitted unless authorised by Volkswagen AG. Volkswagen AG does not guarantee or accept any liability with respect to the correctness of information in this document. Copyright by Volkswagen AG.

Driver door control module, Driver exterior rearview mirror, Driver exterior rearview mirror folding motor, Driver mirror adjustment motor

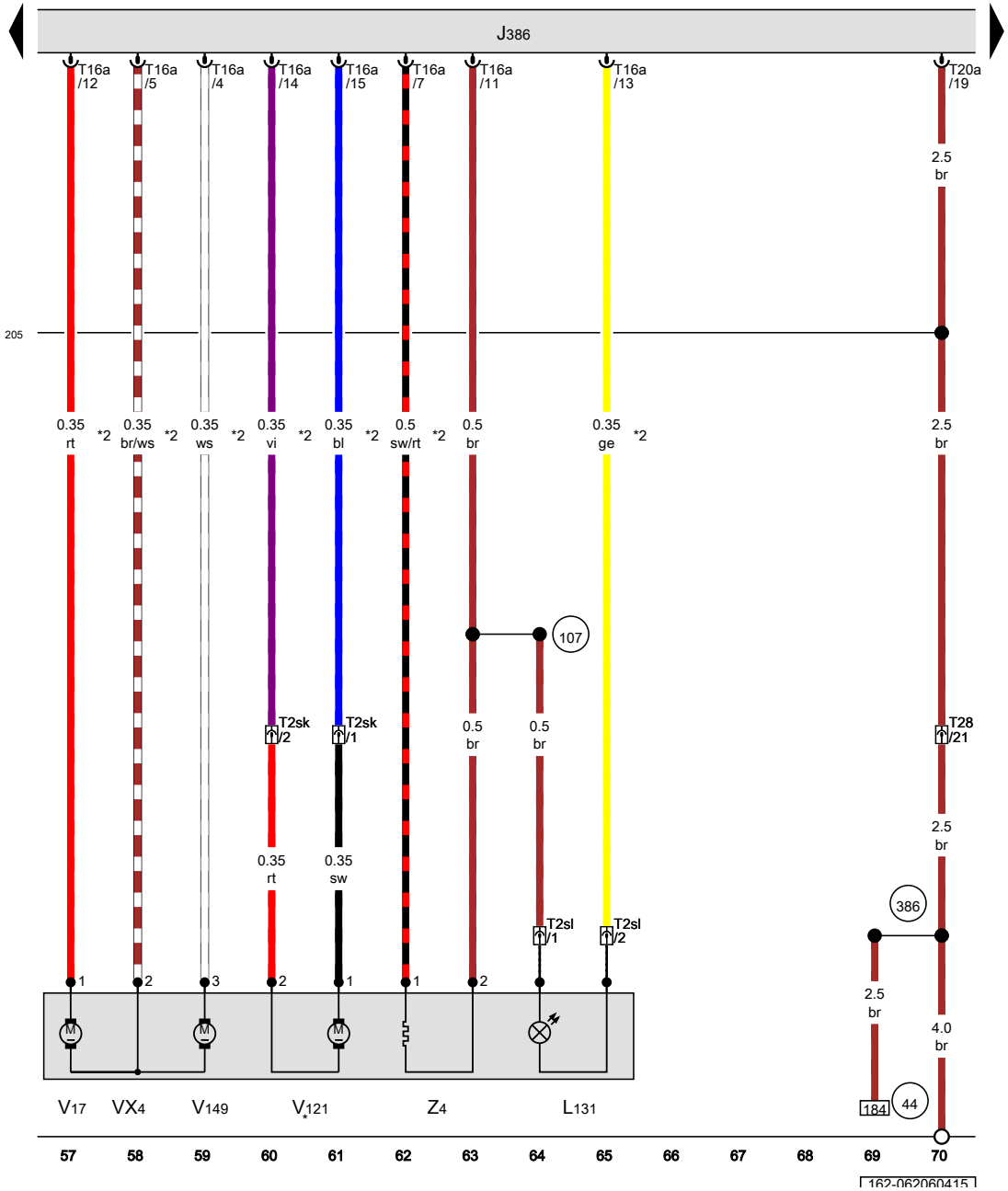

J386	Driver door control module
L131	Driver exterior rearview mirror turn signal bulb
T2sk	Double connector
T2sl	Double connector
T16a	16-pin connector
T20a	20-pin connector
T28	28-pin connector, Left A-pillar, bottom
VX4	Driver exterior rearview mirror
V17	Driver mirror adjustment motor 2
V121	Driver exterior rearview mirror folding motor
V149	Driver mirror adjustment motor
Z4	Heated driver exterior rearview mirror
44	Ground connection on A-pillar, lower left
107	Ground connection (in exterior mirror wiring harness)
205	Ground connection (in driver door wiring harness)
386	Ground connection 21 (in main wiring harness)
*	Depending on equipment
*2	The color of the wires depends on vehicle equipment

ws	=	white
sw	=	black
ro	=	red
rt	=	red
br	=	brown
gn	=	green
bl	=	blue
gr	=	grey
li	=	lilac
vi	=	lilac
ge	=	yellow
or	=	orange
rs	=	pink

Protected by copyright. Copying for private or commercial purposes, in part or in whole, is not permitted unless authorised by Volkswagen AG. Volkswagen AG does not guarantee or accept any liability with respect to the correctness of information in this document. Copyright by Volkswagen AG.

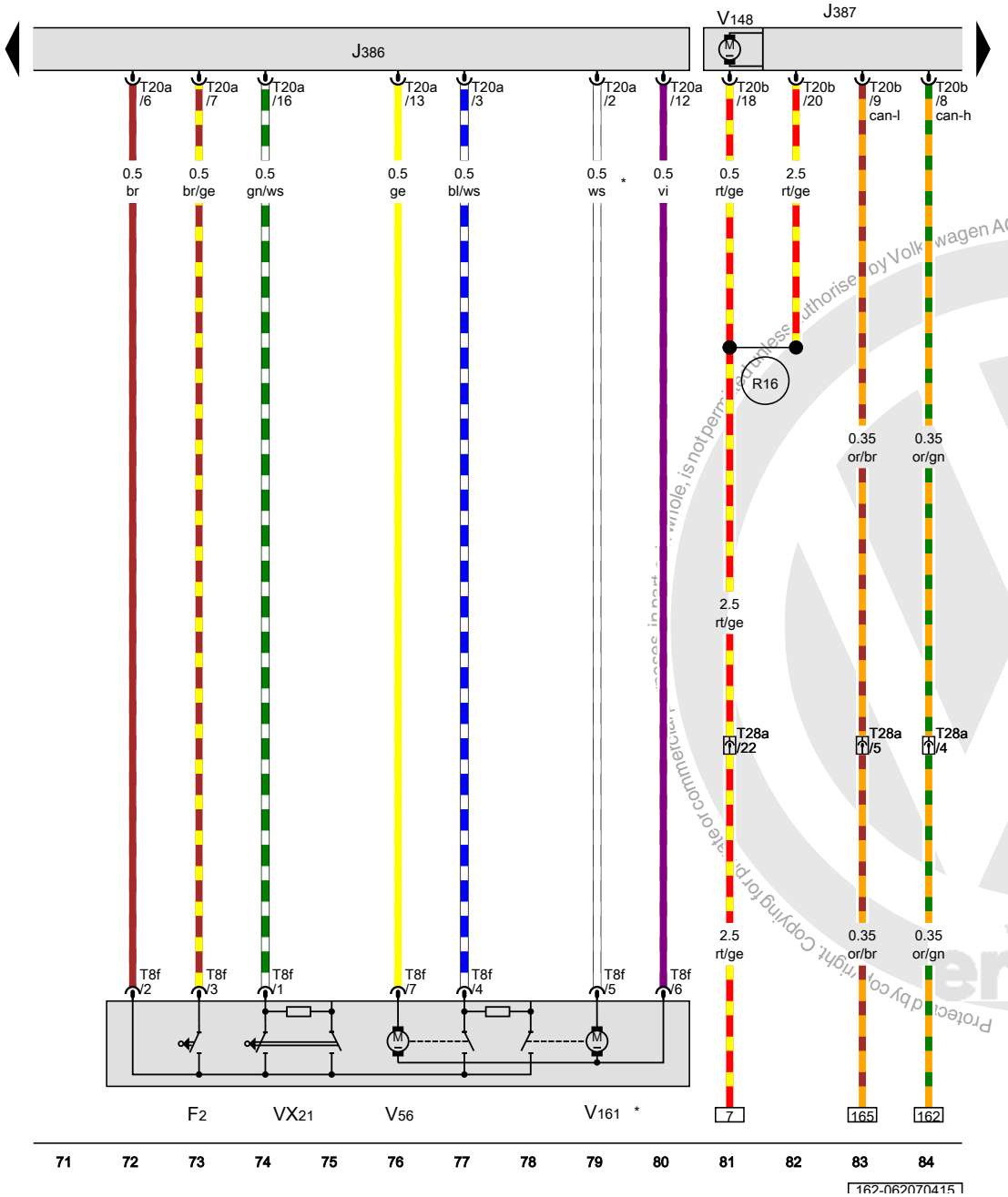

Driver door contact switch, Driver door control module, Front passenger door control module, Driver door lock unit, Driver door central locking system motor, Front passenger window regulator motor

F2	Driver door contact switch
J386	Driver door control module
J387	Front passenger door control module
T8f	8-pin connector
T20a	20-pin connector
T20b	20-pin connector
T28a	28-pin connector, Right A-pillar, bottom
VX21	Driver door lock unit
V56	Driver door central locking system motor
V148	Front passenger window regulator motor
V161	Driver door central locking -SAFE- motor
R16	Positive connection 1 (30) (in front passenger door wiring harness)
*	Not for USA

ws	=	white
sw	=	black
ro	=	red
rt	=	red
br	=	brown
gn	=	green
bl	=	blue
gr	=	grey
li	=	lilac
vi	=	lilac
ge	=	yellow
or	=	orange
rs	=	pink

Protected by copyright. Copying for private or commercial purposes, in part or whole, is not permitted unless authorised by Volkswagen AG. Volkswagen AG does not guarantee or accept any liability with respect to the correctness of information in this document. Copyright by Volkswagen AG.

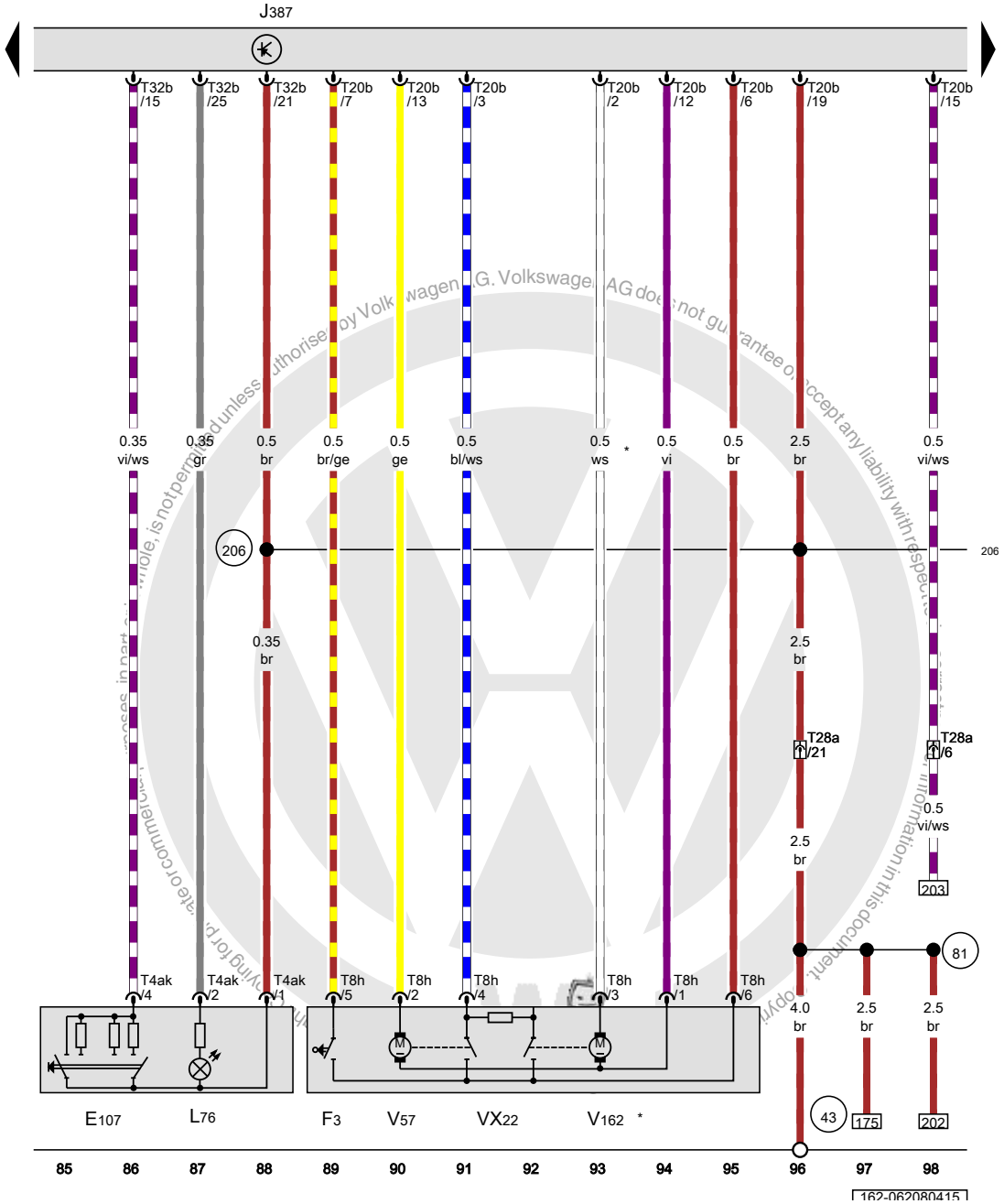

ws = white
sw = black
ro = red
rt = red
br = brown
gn = green
bl = blue
gr = grey
li = lilac
vi = lilac
ge = yellow
or = orange
rs = pink

Front passenger door window regulator switch, Front passenger door contact switch, Front passenger door control module, Front passenger door lock unit, Front passenger door central locking system motor

E107	Front passenger door window regulator switch
F3	Front passenger door contact switch
J387	Front passenger door control module
L76	Push button illumination bulb
T4ak	4-pin connector
T8h	8-pin connector
T20b	20-pin connector
T28a	28-pin connector, Right A-pillar, bottom
T32b	32-pin connector
VX22	Front passenger door lock unit
V57	Front passenger door central locking system motor
V162	Front passenger central locking -SAFE- motor
43	Ground connection on A-pillar, lower right
81	Ground connection 1 (in instrument panel wiring harness)
206	Ground connection (in front passenger door wiring harness)
*	Not for USA

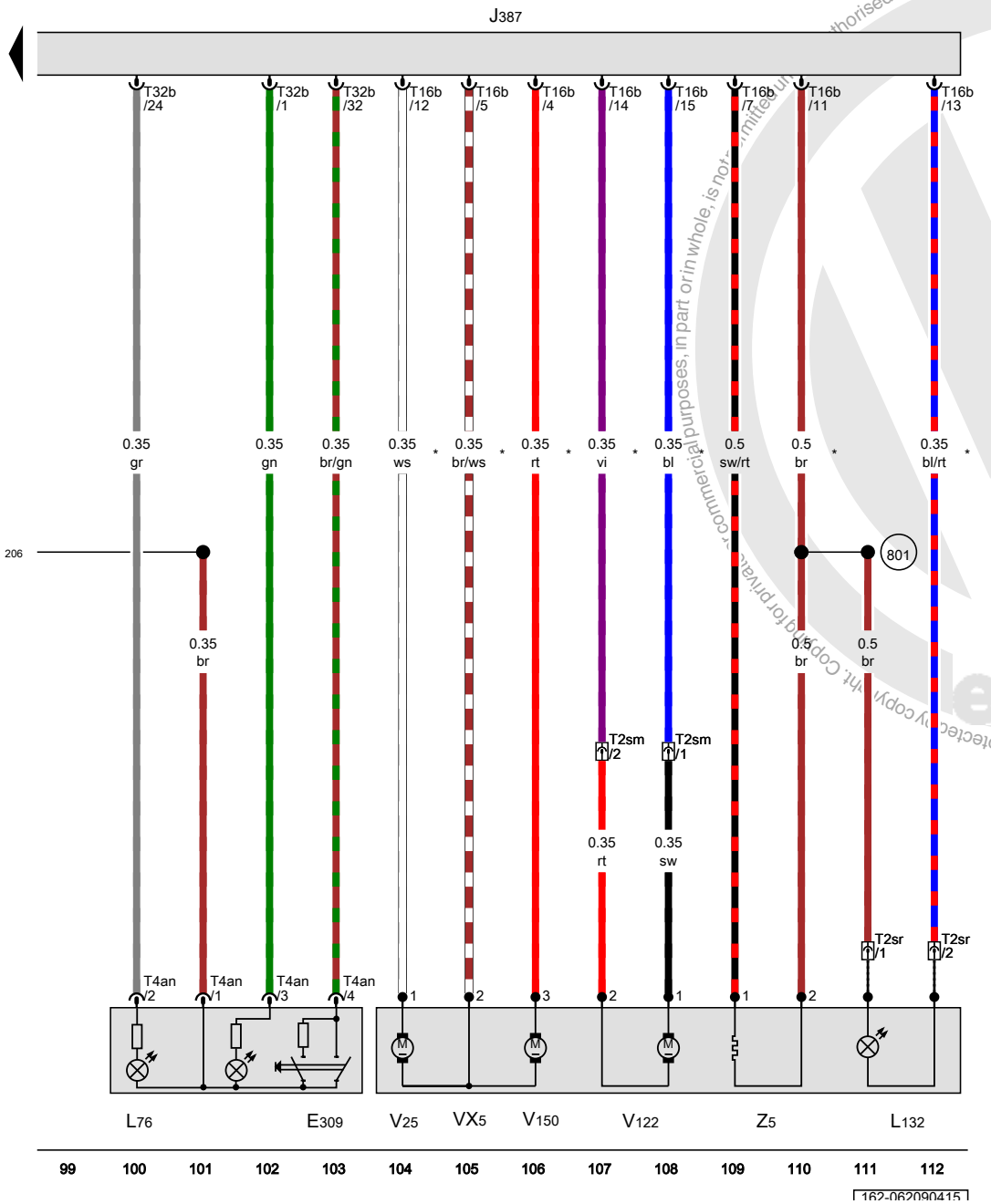

Front passenger interior locking button, Front passenger door control module, Front passenger exterior rearview mirror, Front passenger side mirror adjustment motor 2, Front passenger exterior rearview mirror folding motor, Front passenger mirror adjustment motor

E309	Front passenger interior locking button
J387	Front passenger door control module
L76	Push button illumination bulb
L132	Front passenger exterior rearview mirror turn signal bulb
T2sm	Double connector
T2sr	Double connector
T4an	4-pin connector
T16b	16-pin connector
T32b	32-pin connector
VX5	Front passenger exterior rearview mirror
V25	Front passenger side mirror adjustment motor 2
V122	Front passenger exterior rearview mirror folding motor
V150	Front passenger mirror adjustment motor
Z5	Heated front passenger exterior rearview mirror
206	Ground connection (in front passenger door wiring harness)
801	Ground connection 2 (in exterior rearview mirror wiring harness)
*	The color of the wires depends on vehicle equipment

ws	=	white
sw	=	black
ro	=	red
rt	=	red
br	=	brown
gn	=	green
bl	=	blue
gr	=	grey
li	=	lilac
vi	=	lilac
ge	=	yellow
or	=	orange
rs	=	pink

Protected by copyright. Copyright by Volkswagen AG. Volkswagen AG does not guarantee or assume any liability with respect to the correctness of information in this document. Copyright by Volkswagen AG. authorised by Volkswagen AG. Volkswagen AG does not guarantee or assume any liability with respect to the correctness of information in this document. Copyright by Volkswagen AG.

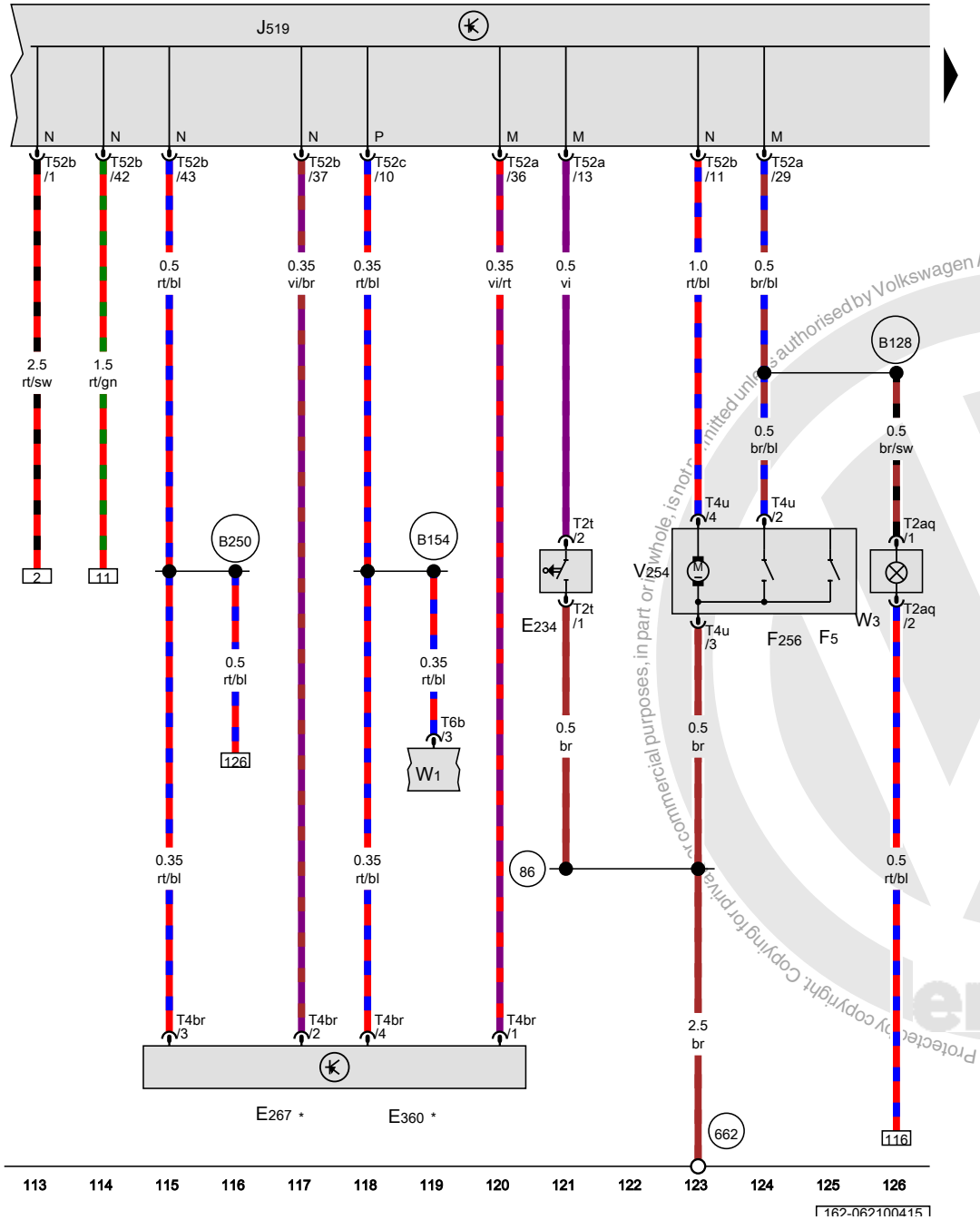

Release button in rear lid handle, Interior monitoring deactivation switch, Vehicle inclination sensor deactivation button, Luggage compartment lamp switch, Rear lid lock unit, Vehicle electrical control module system, Rear lid opening motor, Front interior lamp, Luggage compartment lamp

E234	Release button in rear lid handle
E267	Interior monitoring deactivation switch
E360	Vehicle inclination sensor deactivation button
F5	Luggage compartment lamp switch
F256	Rear lid lock unit
J519	Vehicle electrical control module system
T2aq	Double connector
T2t	Double connector
T4br	4-pin connector
T4u	4-pin connector
T6b	6-pin connector
T52a	52-pin connector
T52b	52-pin connector
T52c	52-pin connector
V254	Rear lid opening motor
W1	Front interior lamp
W3	Luggage compartment lamp
86	Ground connection 1 (in rear wiring harness)
662	Ground connection in left rear side panel
B128	Luggage compartment lamp connection (in interior wiring harness)
B154	Connection TK (in interior wiring harness) 1
B250	Positive connection (in roof wiring harness)
*	Depending on equipment

ws	=	white
sw	=	black
ro	=	red
rt	=	red
br	=	brown
gn	=	green
bl	=	blue
gr	=	grey
li	=	lilac
vi	=	lilac
ge	=	yellow
or	=	orange
rs	=	pink

Protected by copyright. Copying for private or commercial purposes, in part or in whole, is not permitted unless authorised by Volkswagen AG. Volkswagen AG does not guarantee the correctness of information in respect to the correctness of this document. Copyright by Volkswagen AG.

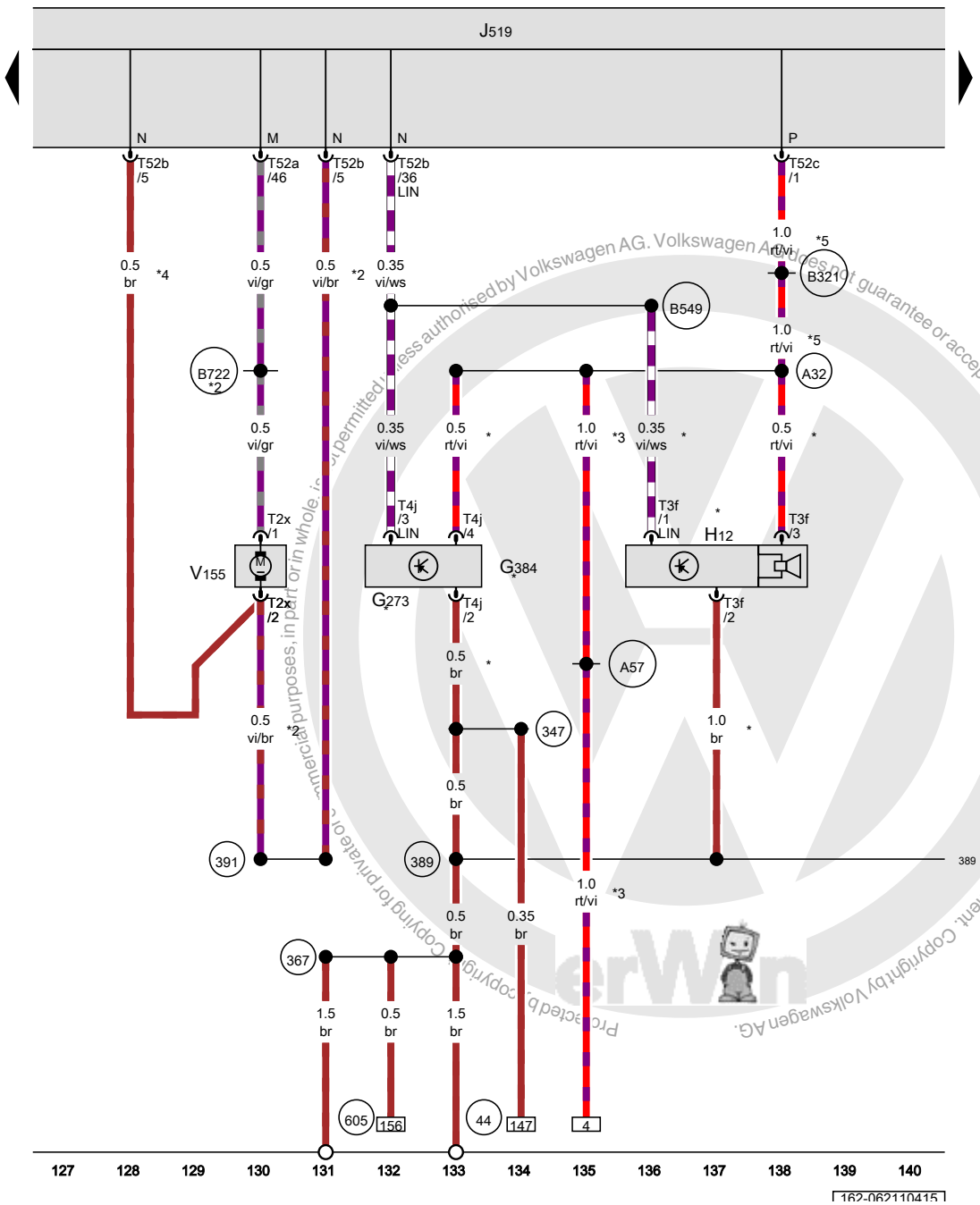

Interior monitoring sensor, Vehicle inclination sensor, Alarm horn, Vehicle electrical control module system, Fuel filler door unlock motor

G273	Interior monitoring sensor
G384	Vehicle inclination sensor
H12	Alarm horn
J519	Vehicle electrical control module system
T2x	Double connector
T3f	3-pin connector
T4j	4-pin connector
T52a	52-pin connector
T52b	52-pin connector
T52c	52-pin connector
V155	Fuel filler door unlock motor
44	Ground connection on A-pillar, lower left
347	Ground connection (in roof wiring harness)
367	Ground connection 2 (in main wiring harness)
389	Ground connection 24 (in main wiring harness)
391	Ground connection 26 (in main wiring harness)
605	Ground connection on upper steering column
A32	Positive connection (30) (in instrument panel wiring harness)
A57	Positive connection 3 (30) (in instrument panel wiring harness)
B321	Positive connection 7 (30a) (in main wiring harness)
B549	LIN bus connection 2 (in main wiring harness)
B722	Central locking connection 3 (in main wiring harness)
*	Not for USA
*2	Running change
*3	Diameter depends on equipment
*4	Omitted as a running change
*5	USA only

ws	=	white
sw	=	black
ro	=	red
rt	=	red
br	=	brown
gn	=	green
bl	=	blue
gr	=	grey
li	=	lilac
vi	=	lilac
ge	=	yellow
or	=	orange
rs	=	pink

Copyrighted by Volkswagen AG. Volkswagen AG does not guarantee or accept any liability with respect to the correctness of information in this document. Copyright by Volkswagen AG. Protected by copyright. Copying for private or commercial purposes, in part or in whole, is not permitted unless authorised by Volkswagen AG.

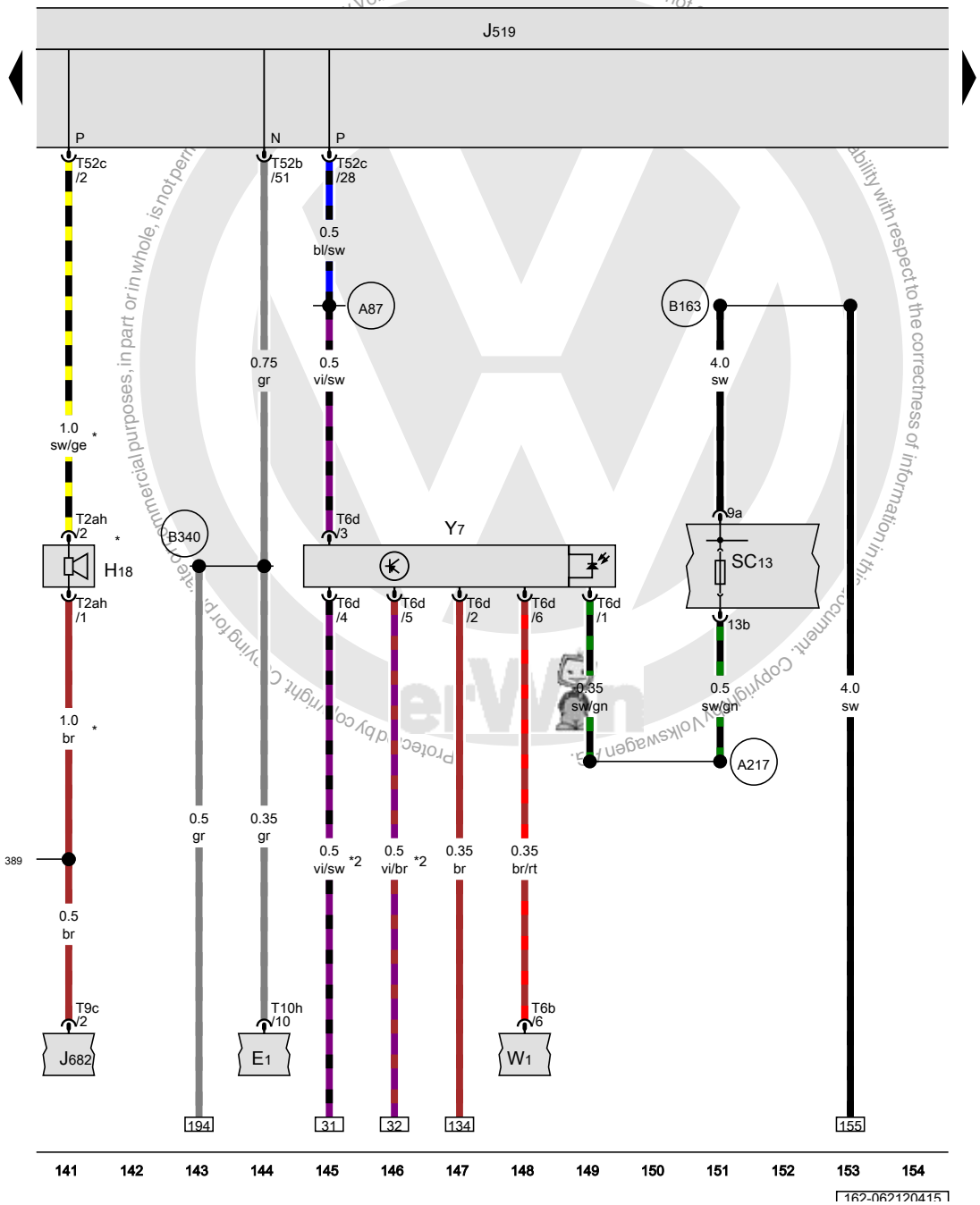

Vehicle electrical control module system, Automatic dimming interior rearview mirror

E1	Light switch
H18	Alarm system horn
J519	Vehicle electrical control module system
J682	Terminal 50 power supply relay
SC13	Fuse 13 (on fuse panel C)
T2ah	Double connector
T6b	6-pin connector
T6d	6-pin connector
T9c	9-pin connector
T10h	10-pin connector
T52b	52-pin connector
T52c	52-pin connector
W1	Front interior lamp
Y7	Automatic dimming interior rearview mirror
389	Ground connection 24 (in main wiring harness)
A87	Back-up lamp connection (in instrument panel wiring harness)
A217	Positive connection 8 (15a) (in instrument panel wiring harness)
B163	Positive connection 1 (15) (in interior wiring harness)
B340	Connection 58d (in main wiring harness) 1
*	USA only
*2	Omitted as a running change

ws	=	white
sw	=	black
ro	=	red
rt	=	red
br	=	brown
gn	=	green
bl	=	blue
gr	=	grey
li	=	lilac
vi	=	lilac
ge	=	yellow
or	=	orange
rs	=	pink

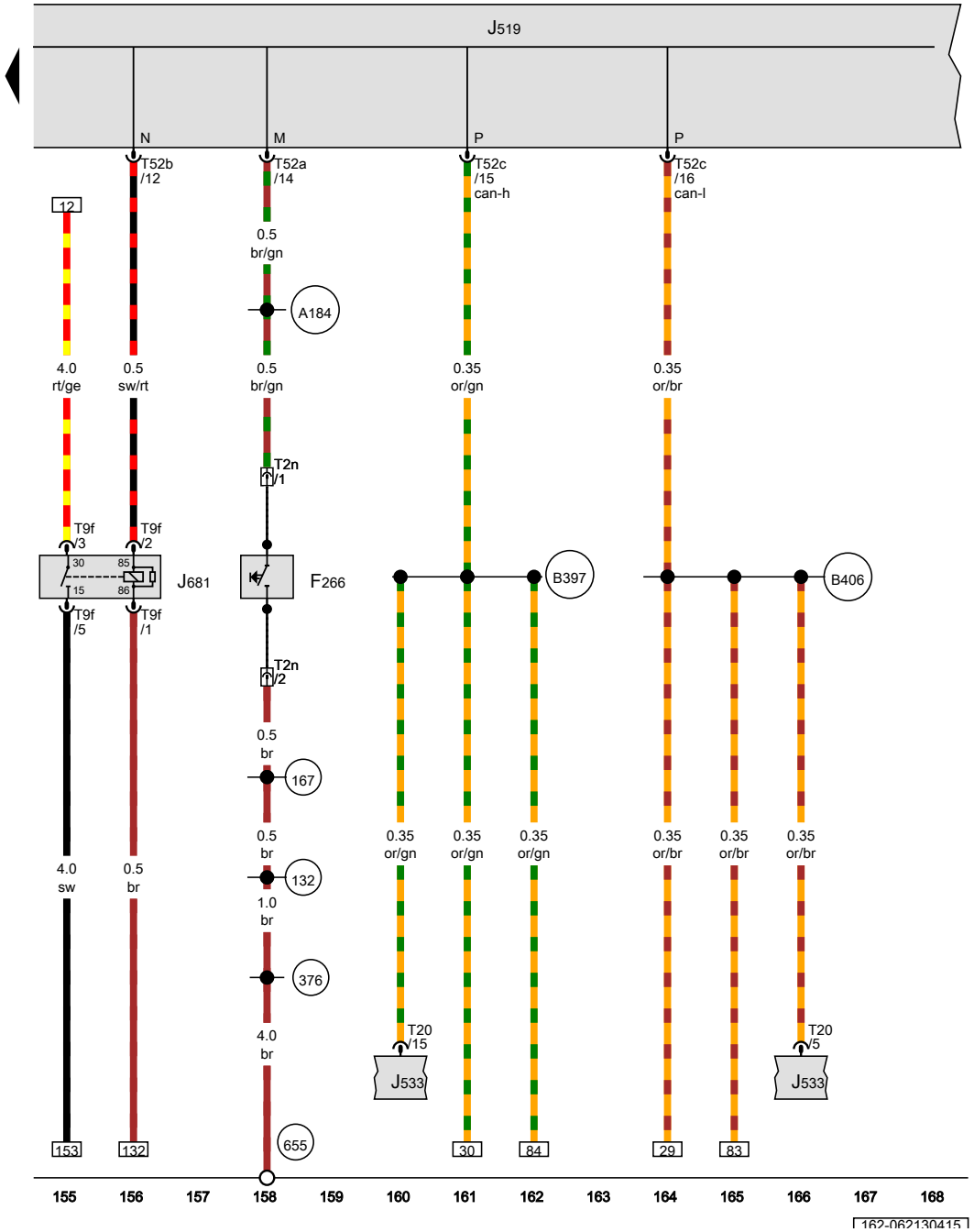

Engine hood contact switch, Vehicle electrical control module system, Terminal 15 power supply relay 2

F266	Engine hood contact switch
J519	Vehicle electrical control module system
J533	Data bus on board diagnostic interface
J681	Terminal 15 power supply relay 2
T2n	Double connector
T9f	9-pin connector
T20	20-pin connector
T52a	52-pin connector
T52b	52-pin connector
T52c	52-pin connector
132	Ground connection 3 (in engine compartment wiring harness)
167	Ground connection 4 (in engine compartment wiring harness)
376	Ground connection 11 (in main wiring harness)
655	Ground connection on left headlamp
A184	Hood contact switch connection (in instrument panel wiring harness)
B397	Comfort system CAN bus high connection 1 (in main wiring harness)
B406	Comfort system CAN bus low connection 1 (in main wiring harness)

ws	=	white
sw	=	black
ro	=	red
rt	=	red
br	=	brown
gn	=	green
bl	=	blue
gr	=	grey
li	=	lilac
vi	=	lilac
ge	=	yellow
or	=	orange
rs	=	pink

Protected by copyright. Copying for private or commercial purposes, in part or in whole, is not permitted unless authorised by Volkswagen AG. Volkswagen AG does not guarantee or accept any liability with respect to the correctness of information in this document. Copyright by Volkswagen AG.

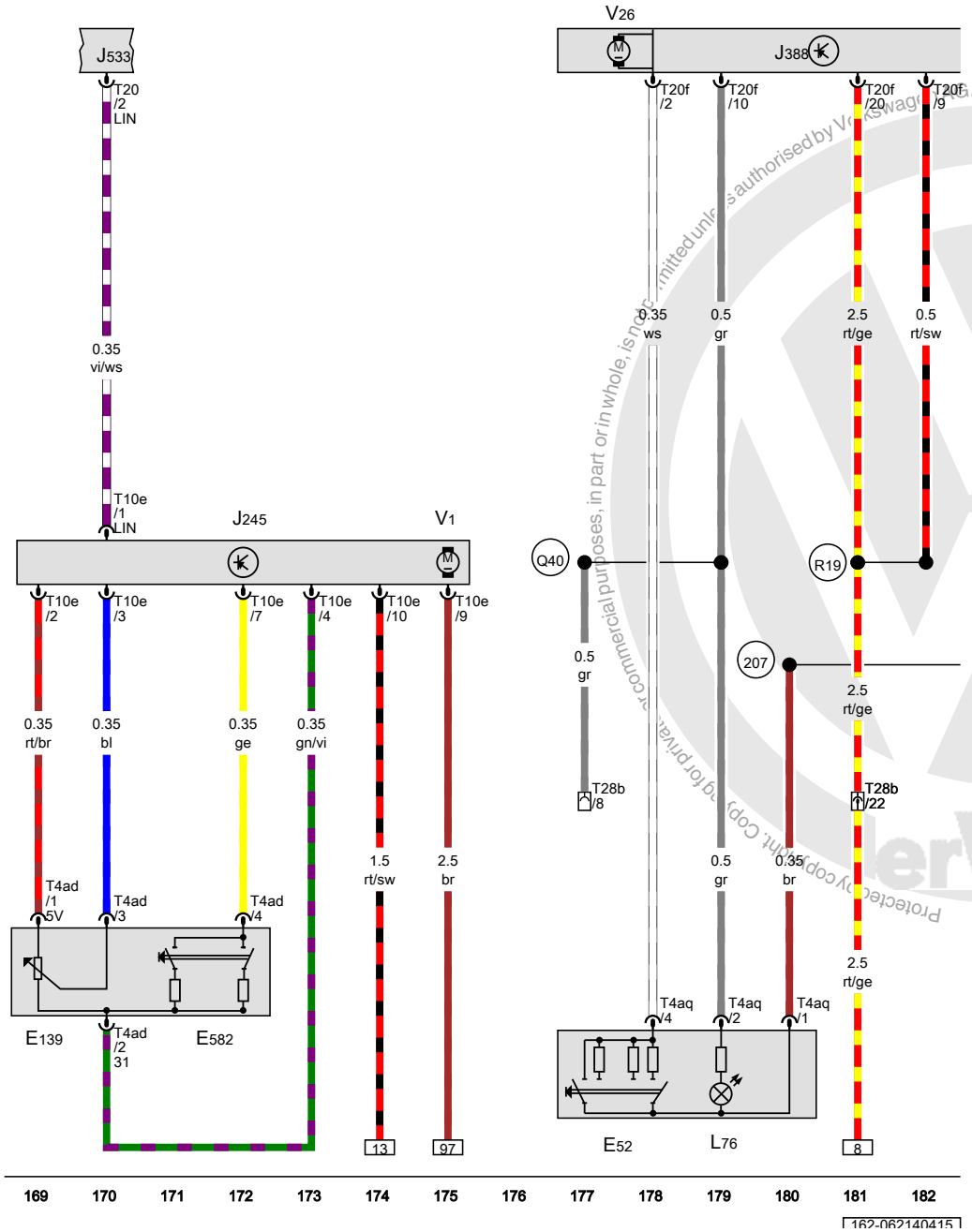

Left rear power window switch in left rear door, Sunroof adjustment regulator, Sunroof tilt button 1, Power sunroof control module, Left rear door control module, Sunroof motor, Left rear window regulator motor

E52	Left rear power window switch in left rear door
E139	Sunroof adjustment regulator
E582	Sunroof tilt button 1
J245	Power sunroof control module
J388	Left rear door control module
J533	Data bus on board diagnostic interface
L76	Push button illumination bulb
T4ad	4-pin connector
T4aq	4-pin connector
T10e	10-pin connector
T20	20-pin connector
T20f	20-pin connector
T28b	28-pin connector, on the left B-pillar
V1	Sunroof motor
V26	Left rear window regulator motor
207	Ground connection (in left rear door wiring harness)
Q40	Positive connection 3 (58b) (in power window wiring harness)
R19	Positive connection 1 (30) (in left rear door wiring harness)

ws	=	white
sw	=	black
ro	=	red
rt	=	red
br	=	brown
gn	=	green
bl	=	blue
gr	=	grey
li	=	lilac
vi	=	lilac
ge	=	yellow
or	=	orange
rs	=	pink

Protected by copyright. Copyright by Volkswagen AG.

Rear center interior locking switch, Left rear door contact switch, Left rear door control module, Left rear door lock unit, Left rear central locking -lock- motor

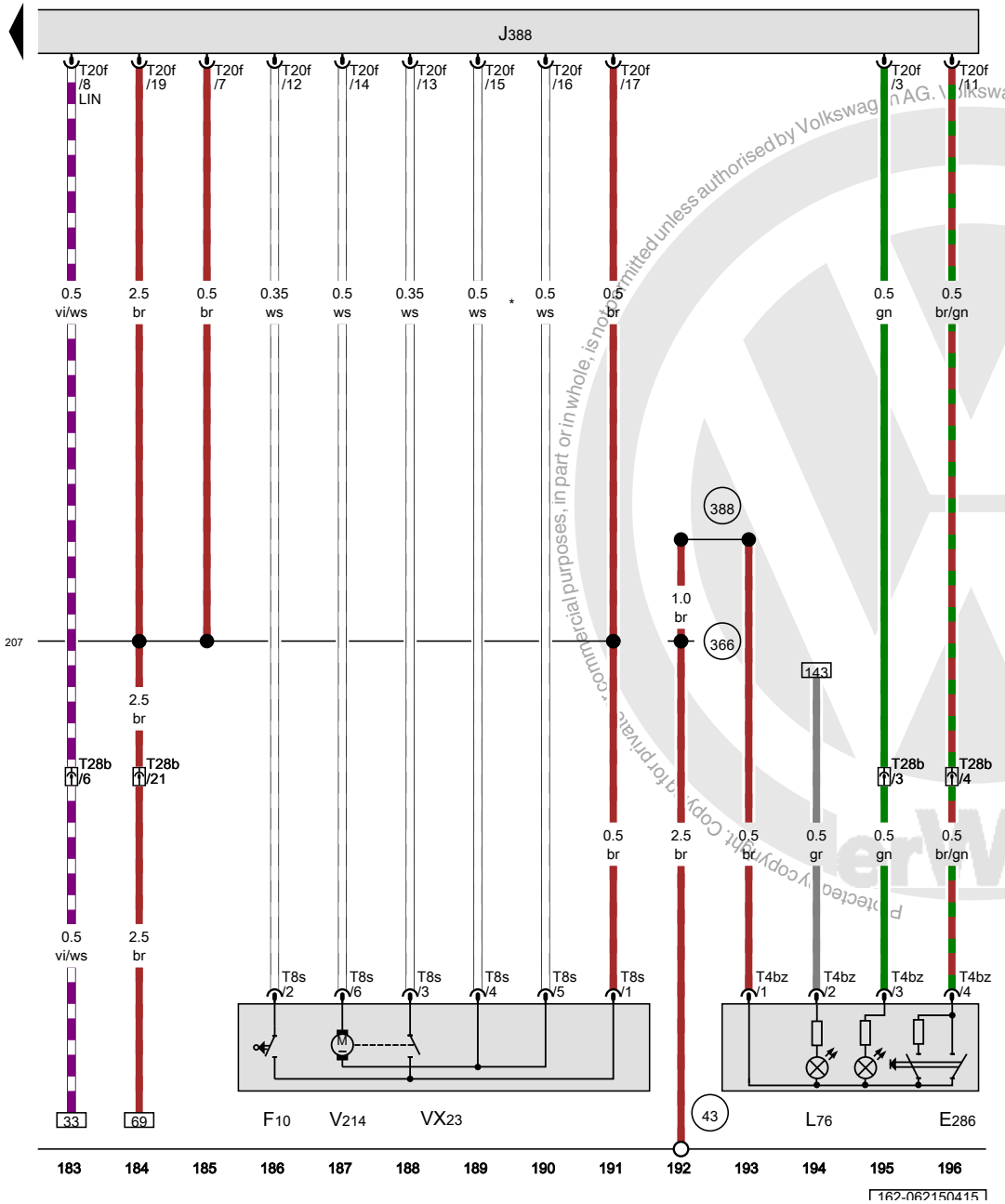

E286	Rear center interior locking switch
F10	Left rear door contact switch
J388	Left rear door control module
L76	Push button illumination bulb
T4bz	4-pin connector
T8s	8-pin connector
T20f	20-pin connector
T28b	28-pin connector, on the left B-pillar
VX23	Left rear door lock unit
V214	Left rear central locking -lock- motor
(43)	Ground connection on A-pillar, lower right
(207)	Ground connection (in left rear door wiring harness)
(366)	Ground connection 1 (in main wiring harness)
(388)	Ground connection 23 (in main wiring harness)
*	Not for USA

ws	=	white
sw	=	black
ro	=	red
rt	=	red
br	=	brown
gn	=	green
bl	=	blue
gr	=	grey
li	=	lilac
vi	=	lilac
ge	=	yellow
or	=	orange
rs	=	pink

Protected by copyright. Copying for private, commercial purposes, in part or in whole, is not permitted unless authorised by Volkswagen AG. Volkswagen AG does not guarantee or accept any liability with respect to the correctness of information in this document. Copyright by Volkswagen AG.

Right rear window switch in right rear door, Right rear door contact switch, Right rear door control module, Right rear door lock unit, Right rear window regulator motor, Right rear central locking -lock- motor

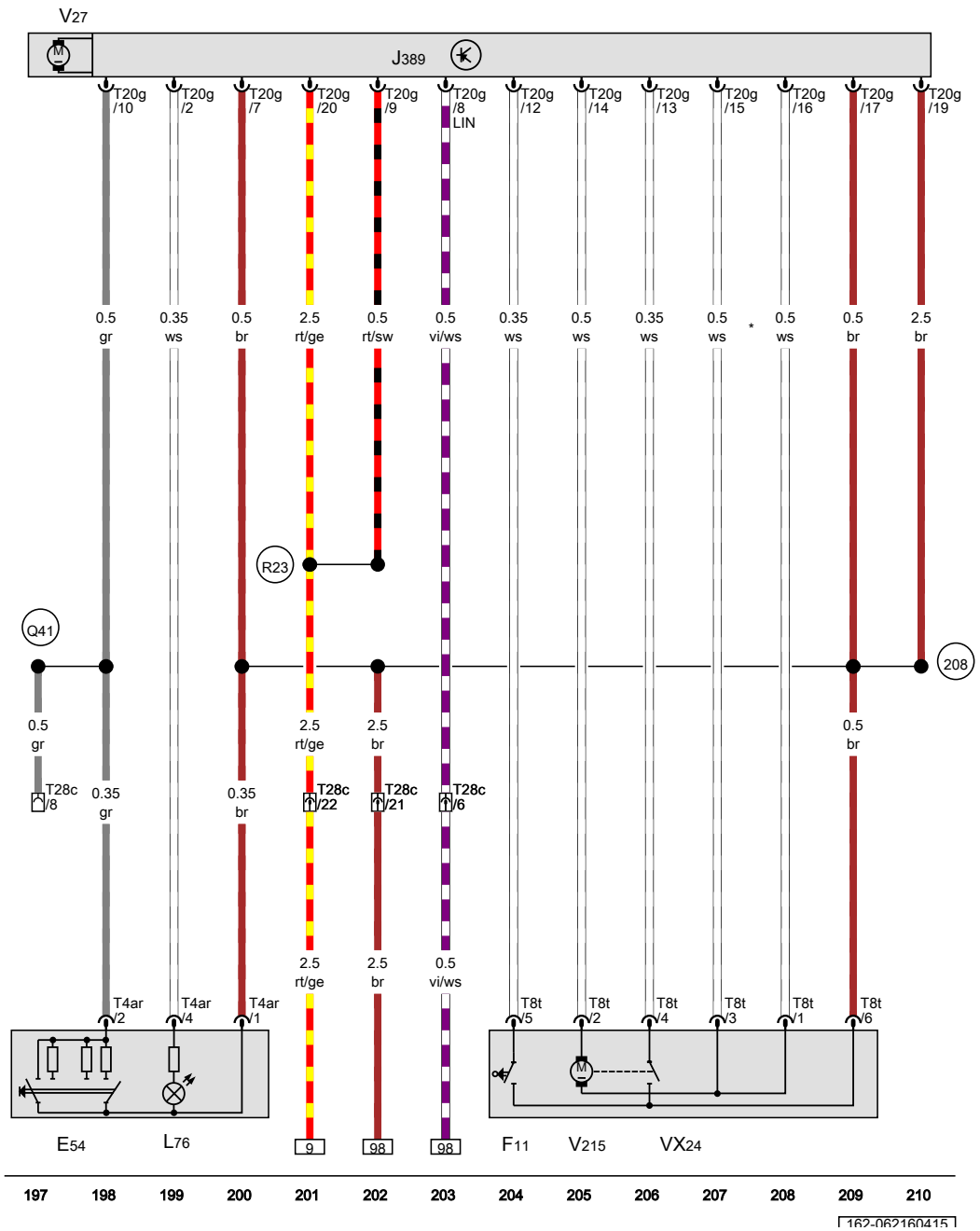

E54	Right rear window switch in right rear door
F11	Right rear door contact switch
J389	Right rear door control module
L76	Push button illumination bulb
T4ar	4-pin connector
T8t	8-pin connector
T20g	20-pin connector
T28c	28-pin connector, on the right B-pillar
VX24	Right rear door lock unit
V27	Right rear window regulator motor
V215	Right rear central locking -lock- motor
208	Ground connection (in right rear door wiring harness)
Q41	Positive connection 4 (58b) (in power window wiring harness)
R23	Positive connection 1 (30) (in right rear door wiring harness)
*	Not for USA

ws	=	white
sw	=	black
ro	=	red
rt	=	red
br	=	brown
gn	=	green
bl	=	blue
gr	=	grey
li	=	lilac
vi	=	lilac
ge	=	yellow
or	=	orange
rs	=	pink

Protected by copyright. Copying for private or commercial purposes, in part or in whole, is not permitted unless authorised by Volkswagen AG. Volkswagen AG does not guarantee or accept any liability with respect to the correctness of information in this document. Copyright by Volkswagen AG.

Airbag systems (USA) , (0K0)

from June 2010

Protected by copyright. Copying for private or commercial purposes, in part or in whole, is not permitted unless authorised by Volkswagen AG. Volkswagen AG does not guarantee or accept any liability with respect to the correctness of information in this document. Copyright by Volkswagen AG.

Airbag spiral spring/return spring with slip ring, Airbag control module, Steering column electronics control module, Front passenger airbag -disabled- indicator lamp, Driver airbag igniter

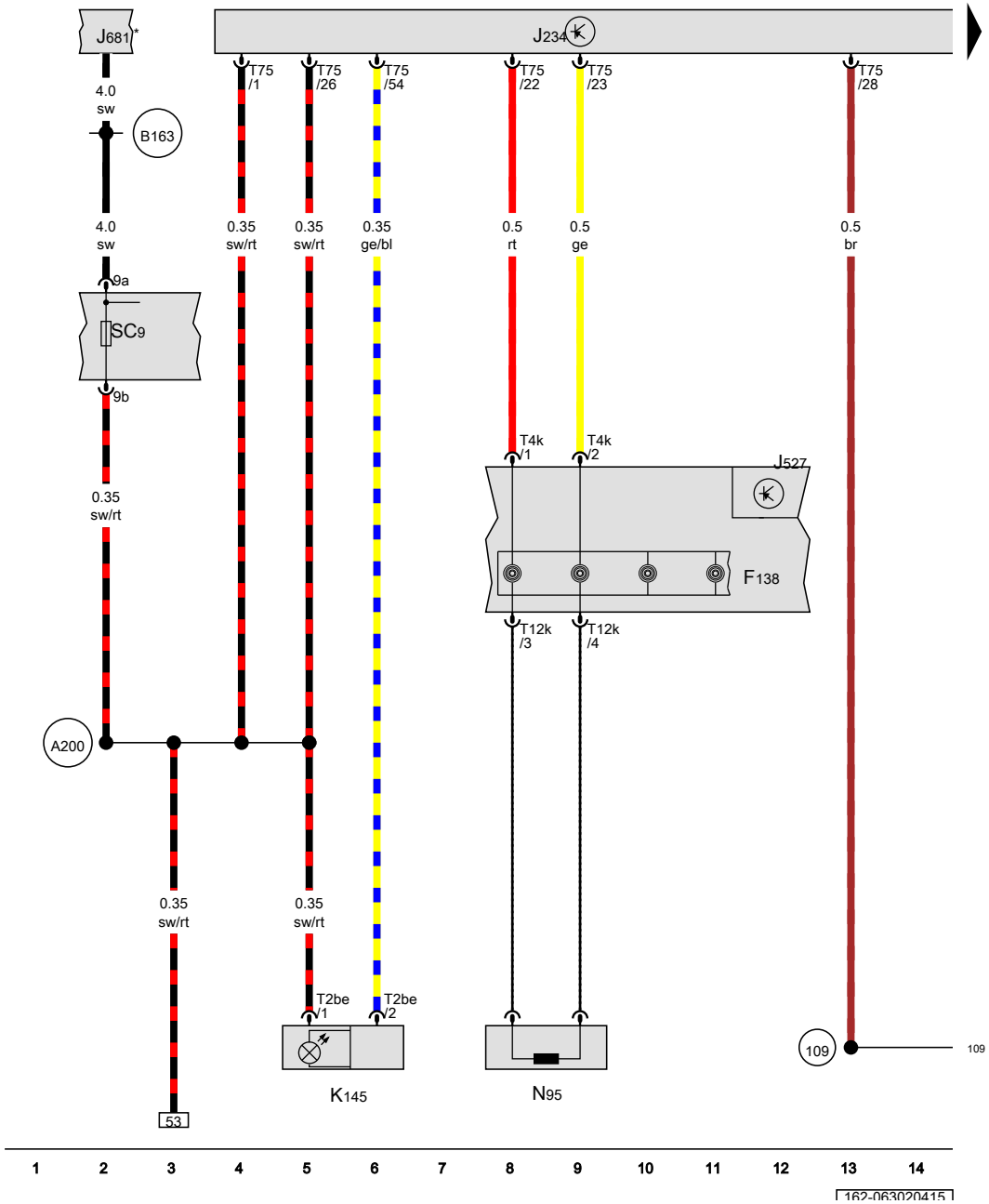

F138	Airbag spiral spring/return spring with slip ring
J234	Airbag control module
J527	Steering column electronics control module
J681	Terminal 15 power supply relay 2
K145	Front passenger airbag -disabled- indicator lamp
N95	Driver airbag igniter
SC9	Fuse 9 (on fuse panel C)
T2be	Double connector
T4k	4-pin connector
T9f	9-pin connector
T12k	12-pin connector
T75	75-pin connector
109	Ground connection (in airbag wiring harness)
A200	Positive connection 5 (15a) (in instrument panel wiring harness)
B163	Positive connection 1 (15) (in interior wiring harness)
*	Refer to applicable standard equipment wiring diagram

ws	=	white
sw	=	black
ro	=	red
rt	=	red
br	=	brown
gn	=	green
bl	=	blue
gr	=	grey
li	=	lilac
vi	=	lilac
ge	=	yellow
or	=	orange
rs	=	pink

Protected by copyright. Copying for private or commercial purposes, in part or in whole, is not permitted unless authorised by Volkswagen AG. Volkswagen AG does not guarantee or accept any liability with respect to the correctness of information in this document. Copyright by Volkswagen AG.

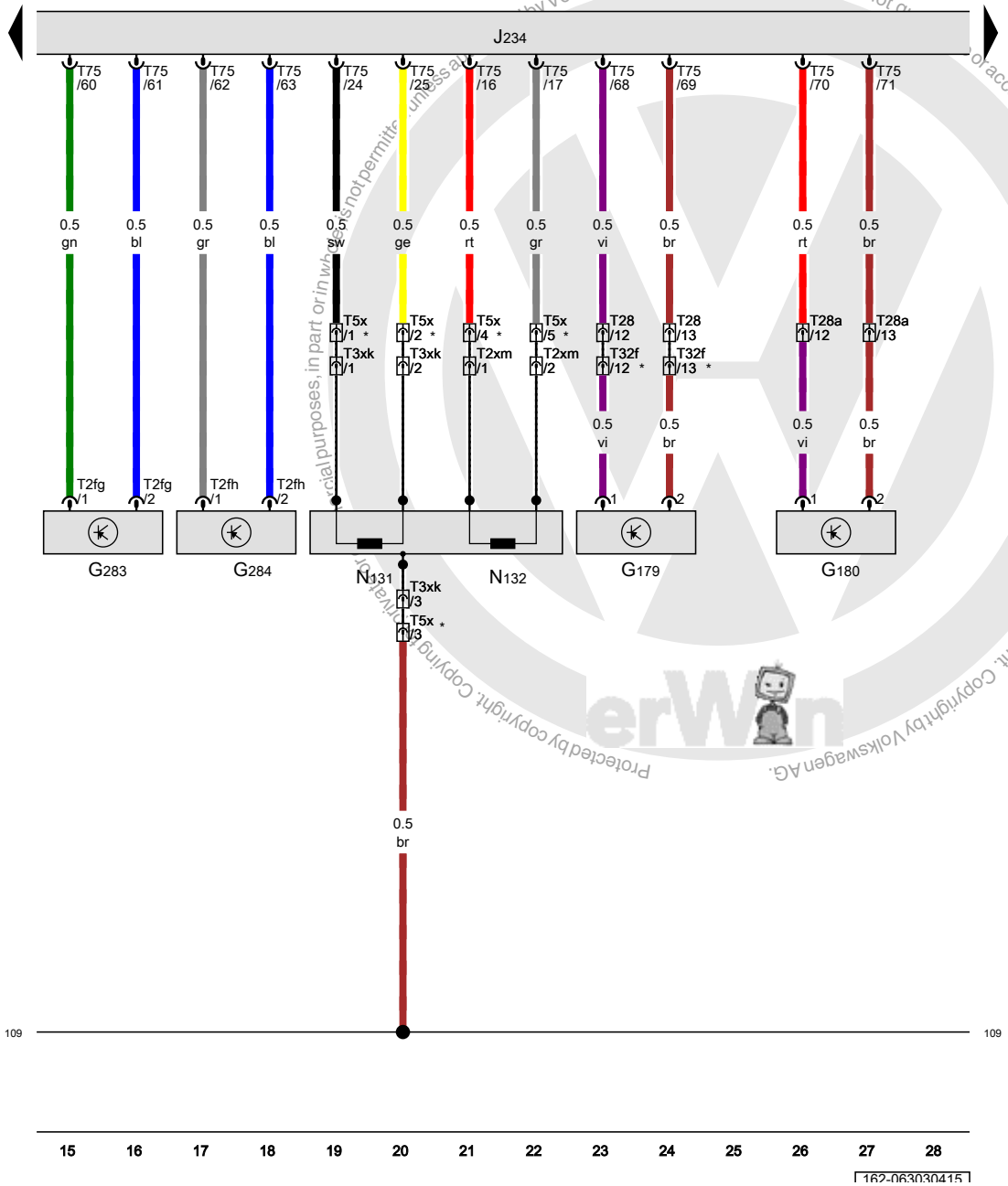

Driver side airbag crash sensor, Front passenger side airbag crash sensor, Driver front airbag crash sensor, Passenger side front airbag crash sensor, Airbag control module, Front passenger airbag igniter 1, Front passenger airbag igniter 2

G179	Driver side airbag crash sensor
G180	Front passenger side airbag crash sensor
G283	Driver front airbag crash sensor
G284	Passenger side front airbag crash sensor
J234	Airbag control module
N131	Front passenger airbag igniter 1
N132	Front passenger airbag igniter 2
T2fg	Double connector
T2fh	Double connector
T2xm	Double connector
T3xk	3-pin connector
T5x	5-pin connector
T28	28-pin connector
T28a	28-pin connector
T32f	32-pin connector
T75	75-pin connector
(109)	Ground connection (in airbag wiring harness)
*	Depending on equipment

ws	=	white
sw	=	black
ro	=	red
rt	=	red
br	=	brown
gn	=	green
bl	=	blue
gr	=	grey
li	=	lilac
vi	=	lilac
ge	=	yellow
or	=	orange
rs	=	pink

Protected by copyright. Copying for private or commercial purposes, in part or in whole, is not permitted unless authorised by Volkswagen AG. Volkswagen AG does not guarantee or accept any liability with respect to the correctness of information in this document. Copyright by Volkswagen AG.

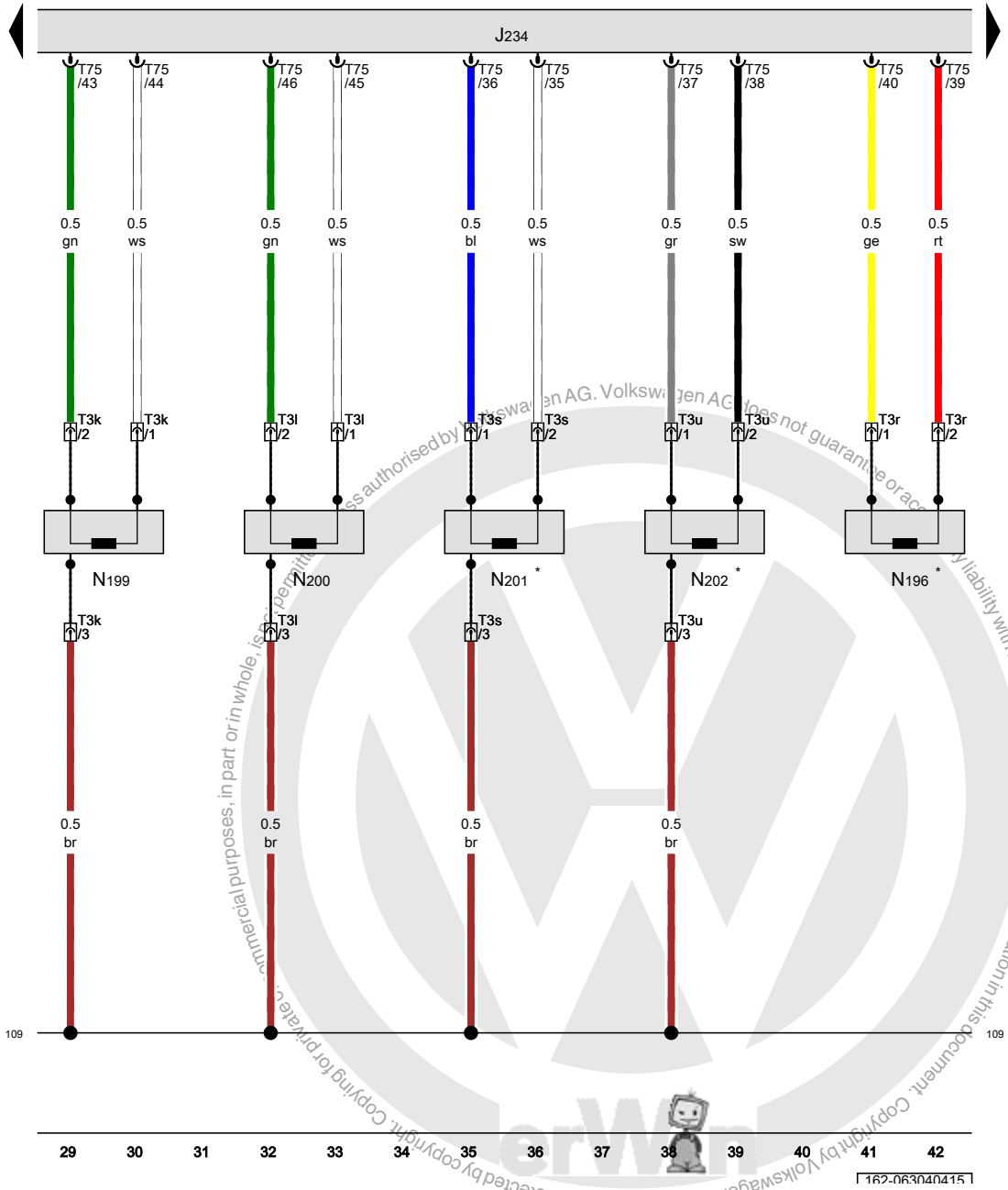

Airbag control module, Driver side rear seat belt tensioner igniter, Front passenger thorax airbag igniter, Passenger side rear thorax airbag igniter

J234	Airbag control module
N196	Driver side rear seat belt tensioner igniter
N199	Driver thorax airbag igniter
N200	Front passenger thorax airbag igniter
N201	Driver side rear thorax airbag igniter
N202	Passenger side rear thorax airbag igniter
T3k	3-pin connector, under the driver seat
T3l	3-pin connector, under the front passenger seat
T3r	3-pin connector
T3s	3-pin connector
T3u	3-pin connector
T75	75-pin connector
(109)	Ground connection (in airbag wiring harness)
*	Depending on equipment

ws	=	white
sw	=	black
ro	=	red
rt	=	red
br	=	brown
gn	=	green
bl	=	blue
gr	=	grey
li	=	lilac
vi	=	lilac
ge	=	yellow
or	=	orange
rs	=	pink

Protected by copyright. Copying for private or commercial purposes, in part or in whole, is not permitted unless authorised by Volkswagen AG. Volkswagen AG does not guarantee or accept any liability with respect to the correctness of information in this document. Copyright by Volkswagen AG.

Driver seat belt switch, Driver side rear side airbag crash sensor, Passenger side rear side airbag crash sensor, Passenger occupant detection system pressure sensor, Airbag control module, Passenger occupant detection system control module, Passenger side rear seat belt tensioner igniter

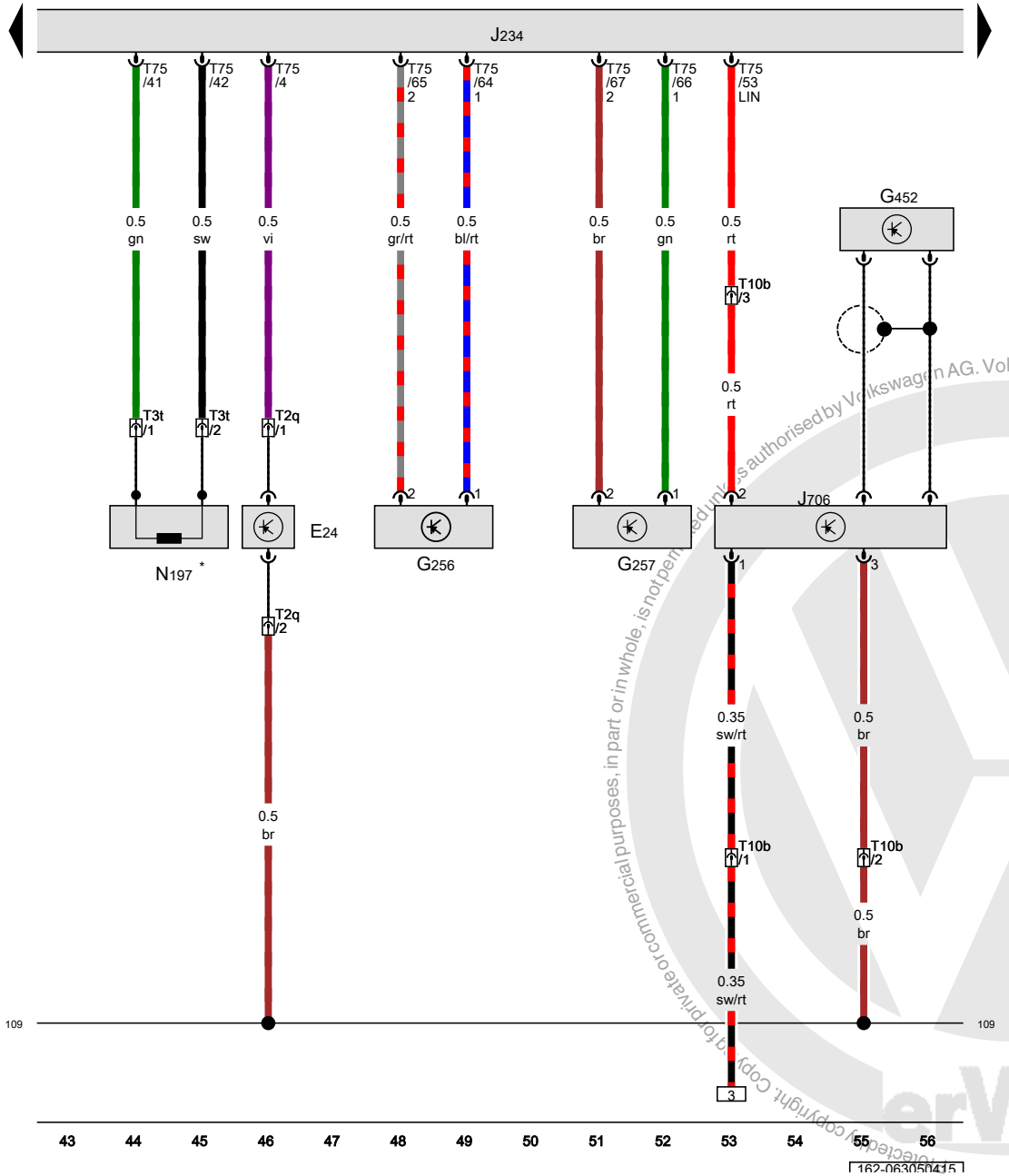

E24	Driver seat belt switch	
G256	Driver side rear side airbag crash sensor	
G257	Passenger side rear side airbag crash sensor	
G452	Passenger occupant detection system pressure sensor	
J234	Airbag control module	
J706	Passenger occupant detection system control module	
N197	Passenger side rear seat belt tensioner igniter	
T2q	Double connector, under the driver seat	
T3t	3-pin connector	
T10b	10-pin connector	
T75	75-pin connector	
109	Ground connection (in airbag wiring harness)	
*	Depending on equipment	

ws	=	white
sw	=	black
ro	=	red
rt	=	red
br	=	brown
gn	=	green
bl	=	blue
gr	=	grey
li	=	lilac
vi	=	lilac
ge	=	yellow
or	=	orange
rs	=	pink

Protected by copyright. Copyright by Volkswagen AG. Volkswagen AG does not guarantee or accept any liability with respect to the correctness of information in this document. Copying for private or commercial purposes, in part or in whole, is not permitted unless authorised by Volkswagen AG.

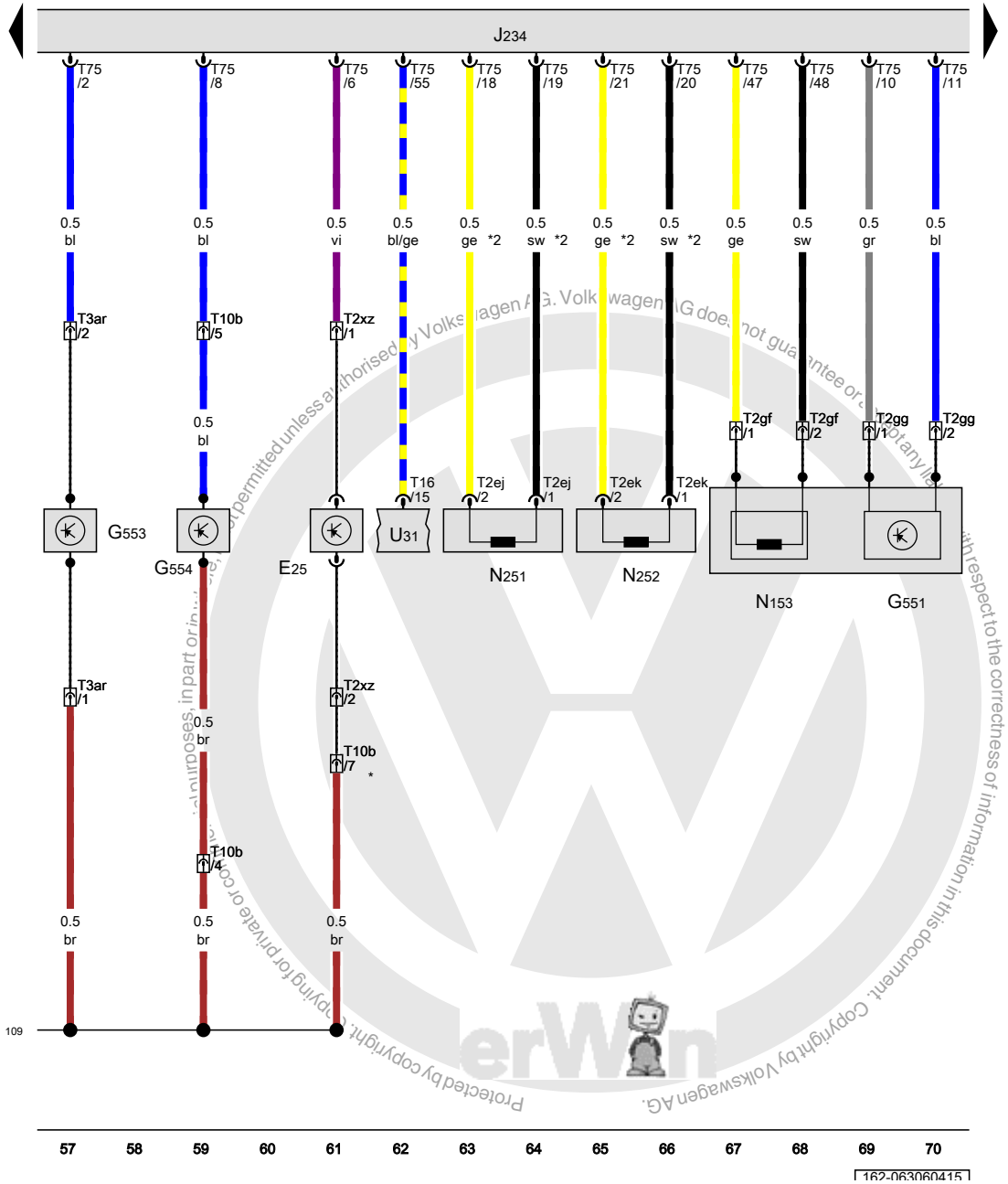

Front passenger seat belt switch, Driver belt force limiter, Driver seat position sensor, Front passenger seat position sensor, Airbag control module, Driver seat belt tensioner igniter 1, Driver head curtain airbag igniter, Front passenger head curtain airbag igniter

E25	Front passenger seat belt switch
G551	Driver belt force limiter
G553	Driver seat position sensor
G554	Front passenger seat position sensor
J234	Airbag control module
N153	Driver seat belt tensioner igniter 1
N251	Driver head curtain airbag igniter
N252	Front passenger head curtain airbag igniter
T2ej	Double connector
T2ek	Double connector
T2gf	Double connector
T2gg	Double connector
T2xz	Double connector, under the front passenger seat
T3ar	3-pin connector
T10b	10-pin connector
T16	16-pin connector
T75	75-pin connector
U31	Diagnostic connection
109	Ground connection (in airbag wiring harness)
*	Depending on equipment
*2	The color of the wires depends on vehicle equipment

ws	=	white
sw	=	black
ro	=	red
rt	=	red
br	=	brown
gn	=	green
bl	=	blue
gr	=	grey
li	=	lilac
vi	=	lilac
ge	=	yellow
or	=	orange
rs	=	pink

Protected by copyright. Copying for private or commercial purposes, in part or in whole, is not permitted unless authorised by Volkswagen AG. Volkswagen AG does not guarantee or assume any liability with respect to the correctness of information in this document. Copyright by Volkswagen AG.

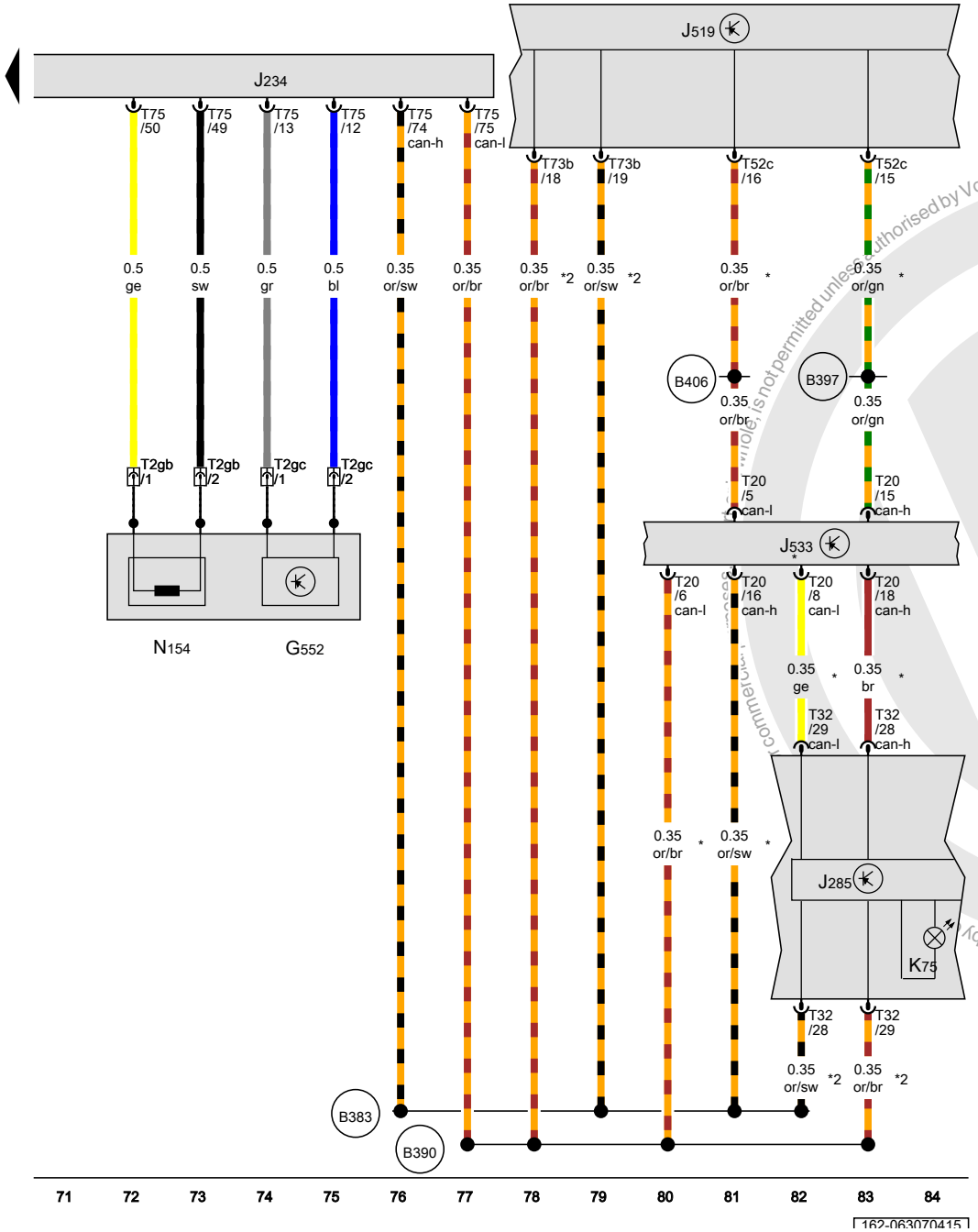

Front passenger belt force limiter, Airbag control module, Instrument cluster control module, Vehicle electrical control module system, Data bus on board diagnostic interface, Airbag indicator lamp

G552	Front passenger belt force limiter
J234	Airbag control module
J285	Instrument cluster control module
J519	Vehicle electrical control module system
J533	Data bus on board diagnostic interface
K75	Airbag indicator lamp
N154	Front passenger seat belt tensioner igniter 1
T2gb	Double connector
T2gc	Double connector
T20	20-pin connector
T32	32-pin connector
T52c	52-pin connector
T73b	73-pin connector
T75	75-pin connector
B383	Powertrain CAN bus high connection 1 (in main wiring harness)
B390	Powertrain CAN bus low connection 1 (in main wiring harness)
B397	Comfort system CAN bus high connection 1 (in main wiring harness)
B406	Comfort system CAN bus low connection 1 (in main wiring harness)
*	only for vehicles with High equipment (AW1)
*2	only for vehicles with Low equipment (AW0)

ws	=	white
sw	=	black
ro	=	red
rt	=	red
br	=	brown
gn	=	green
bl	=	blue
gr	=	grey
li	=	lilac
vi	=	lilac
ge	=	yellow
or	=	orange
rs	=	pink

Copyright by Volkswagen AG. Volkswagen AG does not guarantee the accuracy of this document, nor does it accept any liability with respect to the correctness of information in this document. Copyright by Volkswagen AG. Protected by copyright. Copying for private or commercial purposes, in part or in whole, is not permitted unless authorised by Volkswagen AG.

Ground concept

from October 2011

Protected by copyright. Copying for private or commercial purposes, in part or in whole, is not permitted unless authorised by Volkswagen AG. Volkswagen AG does not guarantee or accept any liability with respect to the correctness of information in this document. Copyright by Volkswagen AG.

Ground strap, battery to body, Ground connection in left front footwell

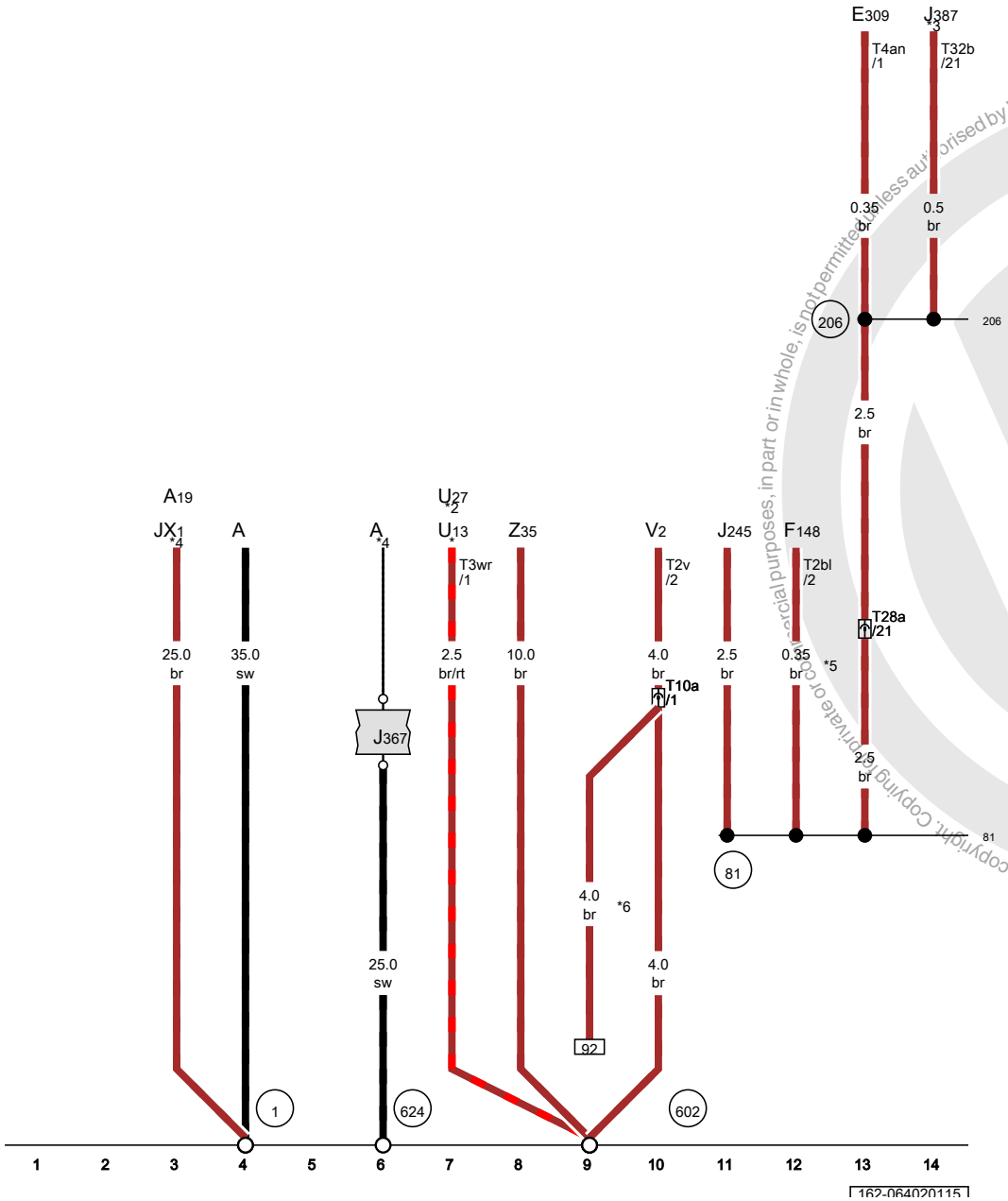

ws	=	white
sw	=	black
ro	=	red
rt	=	red
br	=	brown
gn	=	green
bl	=	blue
gr	=	grey
li	=	lilac
vi	=	lilac
ge	=	yellow
or	=	orange
rs	=	pink

A	Battery
A19	Voltage converter
E309	Front passenger interior locking button
F148	Front passenger vanity mirror lamp contact switch
JX1	Electric drive power and control electronics
J245	Power sunroof control module
J367	Battery monitoring control module
J387	Front passenger door control module
T2bl	2-pin connector
T2v	2-pin connector
T3wr	3-pin connector
T4an	4-pin connector
T10a	10-pin connector, behind the glove compartment
T28a	28-pin connector, Right A-pillar, bottom
T32b	32-pin connector
U13	Converter with socket, 12 V-230 V
U27	Converter with socket, 12 V-115 V
V2	Fresh air blower
Z35	Auxiliary heater heating element
1	Ground strap, battery to body
81	Ground connection 1 (in instrument panel wiring harness)
206	Ground connection (in front passenger door wiring harness)
602	Ground connection in left front footwell
624	Ground connection near starter battery
*	Not for USA
*2	USA only
*3	only for vehicles with High equipment (AW1)
*4	only for vehicles with hybrid drive
*5	Diameter depends on equipment
*6	Only for right-hand drive vehicles

Protected by copyright. Copying for private or commercial purposes, in part or in whole, is not permitted unless authorised by Volkswagen AG. Volkswagen AG does not guarantee or accept any liability with respect to the correctness of information in this document. Copyright by Volkswagen AG.

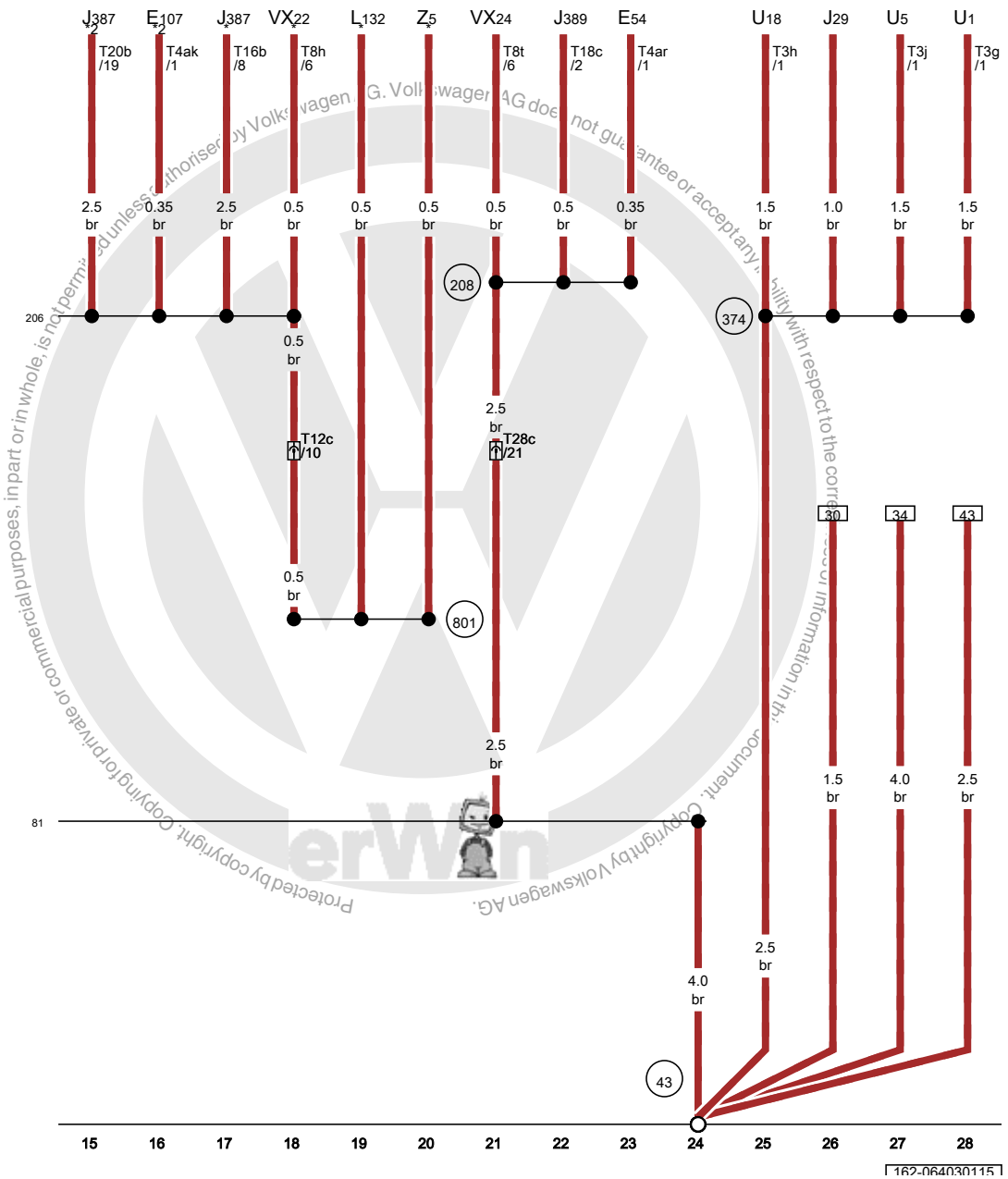

Ground connection on A-pillar, lower right, Ground connection (in right rear door wiring harness)

E54	Right rear window switch in right rear door
E107	Front passenger door window regulator switch
J29	Blocking diode, in the interior wiring harness
J387	Front passenger door control module
J389	Right rear door control module
L132	Front passenger exterior rearview mirror turn signal bulb
T3g	3-pin connector
T3h	3-pin connector
T3j	3-pin connector
T4ak	4-pin connector
T4ar	4-pin connector
T8h	8-pin connector
T8t	8-pin connector
T12c	12-pin connector, in the front passenger door
T16b	16-pin connector
T18c	18-pin connector
T20b	20-pin connector
T28c	28-pin connector, Right B-pillar, bottom
U1	Cigarette lighter
U5	12 V socket
U18	12 V socket 2
VX22	Front passenger door lock unit
VX24	Right rear door lock unit
Z5	Heated front passenger exterior rearview mirror
43	Ground connection on A-pillar, lower right
81	Ground connection 1 (in instrument panel wiring harness)
206	Ground connection (in front passenger door wiring harness)
208	Ground connection (in right rear door wiring harness)
374	Ground connection 9 (in main wiring harness)
801	Ground connection 2 (in exterior rearview mirror wiring harness), in the left door, near the exterior rearview mirror
*	only for vehicles with Low equipment (AW0)
*2	only for vehicles with High equipment (AW1)

ws	=	white
sw	=	black
ro	=	red
rt	=	red
br	=	brown
gn	=	green
bl	=	blue
gr	=	grey
li	=	lilac
vi	=	lilac
ge	=	yellow
or	=	orange
rs	=	pink

Protected by copyright. Copying for private or commercial purposes, in part or in whole, is not permitted unless authorised by Volkswagen AG. Volkswagen AG does not guarantee or accept any liability with respect to the correctness of information in this document. Copyright by Volkswagen AG.

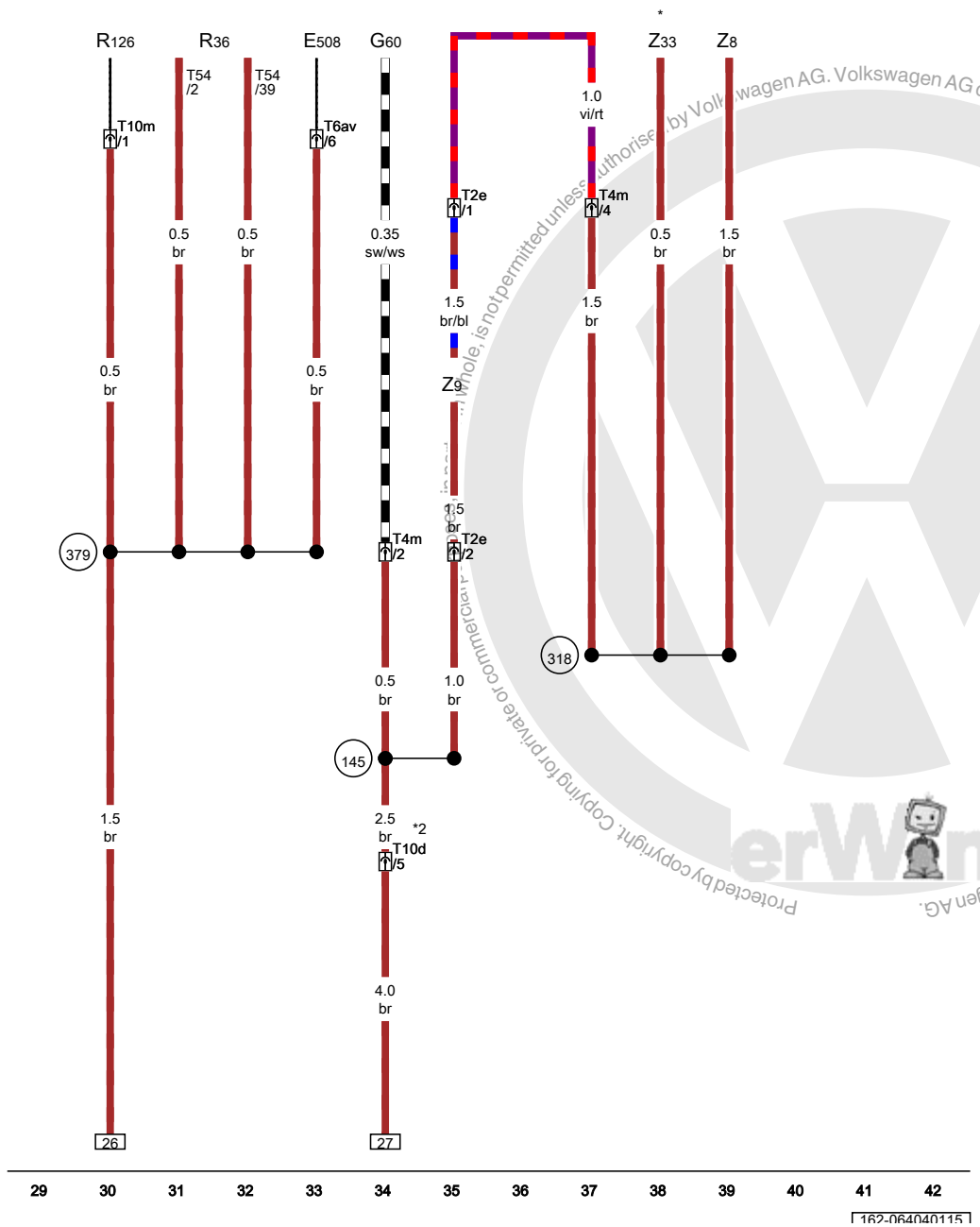

Ground connection 3 (in heated seats wiring harness), Ground connection 4 (in heated seats wiring harness), Ground connection 14 (in main wiring harness)

E508	Cellular telephone preparation control head
G60	Front passenger heated seat temperature sensor
R36	Telephone transceiver
R126	Telephone baseplate
T2e	2-pin connector, in the seat
T4m	4-pin connector, in the seat
T6av	6-pin connector
T10d	10-pin connector, under the front passenger seat
T10m	10-pin connector
T54	54-pin connector
Z8	Front passenger seat heating element
Z9	Front passenger backrest heating element
Z33	Front passenger seat bolster heater
145	Ground connection 3 (in heated seats wiring harness)
318	Ground connection 4 (in heated seats wiring harness)
379	Ground connection 14 (in main wiring harness)
*	Omitted as a running change
*2	Diameter depends on equipment

ws	=	white
sw	=	black
ro	=	red
rt	=	red
br	=	brown
gn	=	green
bl	=	blue
gr	=	grey
li	=	lilac
vi	=	lilac
ge	=	yellow
or	=	orange
rs	=	pink

Protected by copyright. Copying for private or commercial purposes, in part or in whole, is not permitted unless authorised by Volkswagen AG. Volkswagen AG does not guarantee or accept any liability with respect to the correctness of information in this document. Copyright by Volkswagen AG.

Diagnostic connection, Ground connection 1 (in main wiring harness)

E229	Emergency flasher button
J532	Voltage stabilizer
J745	Cornering lamp and headlamp range control module
MX1	Left front headlamp
T2br	2-pin connector
T2bt	2-pin connector
T2bu	2-pin connector
T6c	6-pin connector
T10l	10-pin connector
T10w	10-pin connector
T12d	12-pin connector
T14l	14-pin connector
T16	16-pin connector
T26b	26-pin connector
U31	Diagnostic connection, near the lower left A-pillar
V48	Left headlamp beam adjustment motor
W6	Glove compartment lamp
Z20	Left washer nozzle heater
Z21	Right washer nozzle heater
80	Ground connection 1 (in instrument cluster wiring harness)
366	Ground connection 1 (in main wiring harness)
*	Diagnostic connector
*2	Omitted as a running change
*3	Running change
*4	HID headlamps
*5	From June 2013

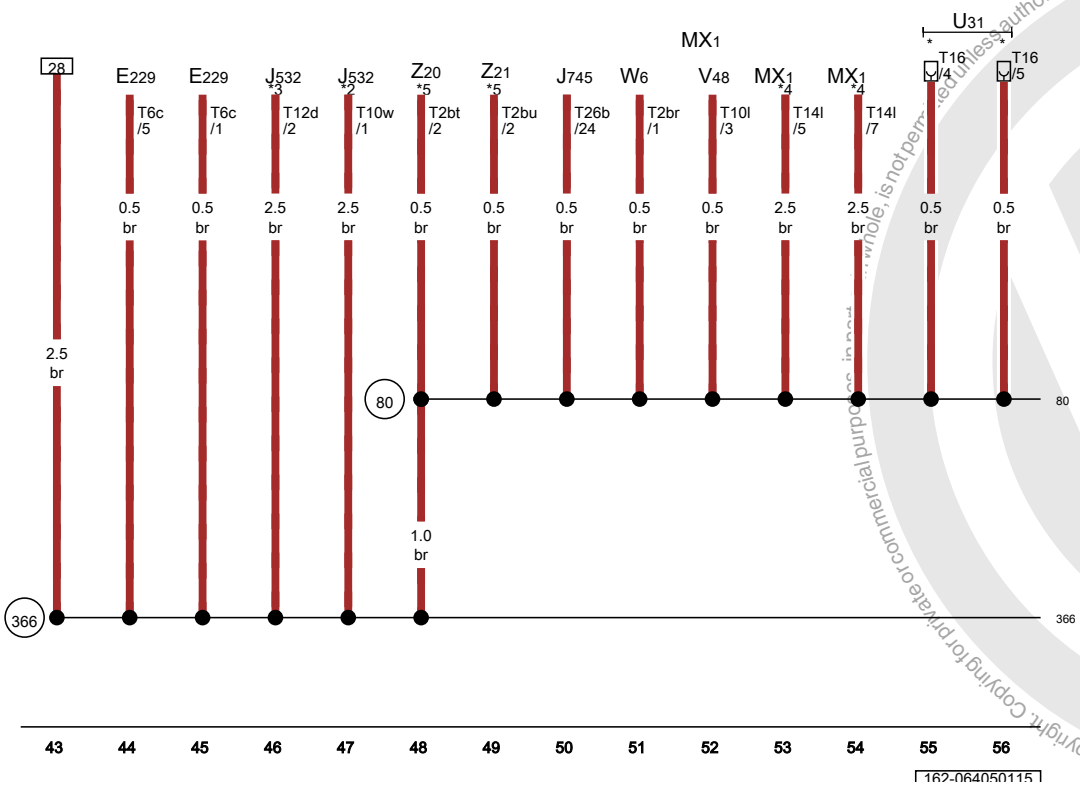

ws	=	white
sw	=	black
ro	=	red
rt	=	red
br	=	brown
gn	=	green
bl	=	blue
gr	=	grey
li	=	lilac
vi	=	lilac
ge	=	yellow
or	=	orange
rs	=	pink

Protected by copyright. Copying for private or commercial purposes, in part or in whole, is not permitted unless authorised by Volkswagen AG. Volkswagen AG does not guarantee or accept any liability with respect to the correctness of information in this document. Copyright by Volkswagen AG.

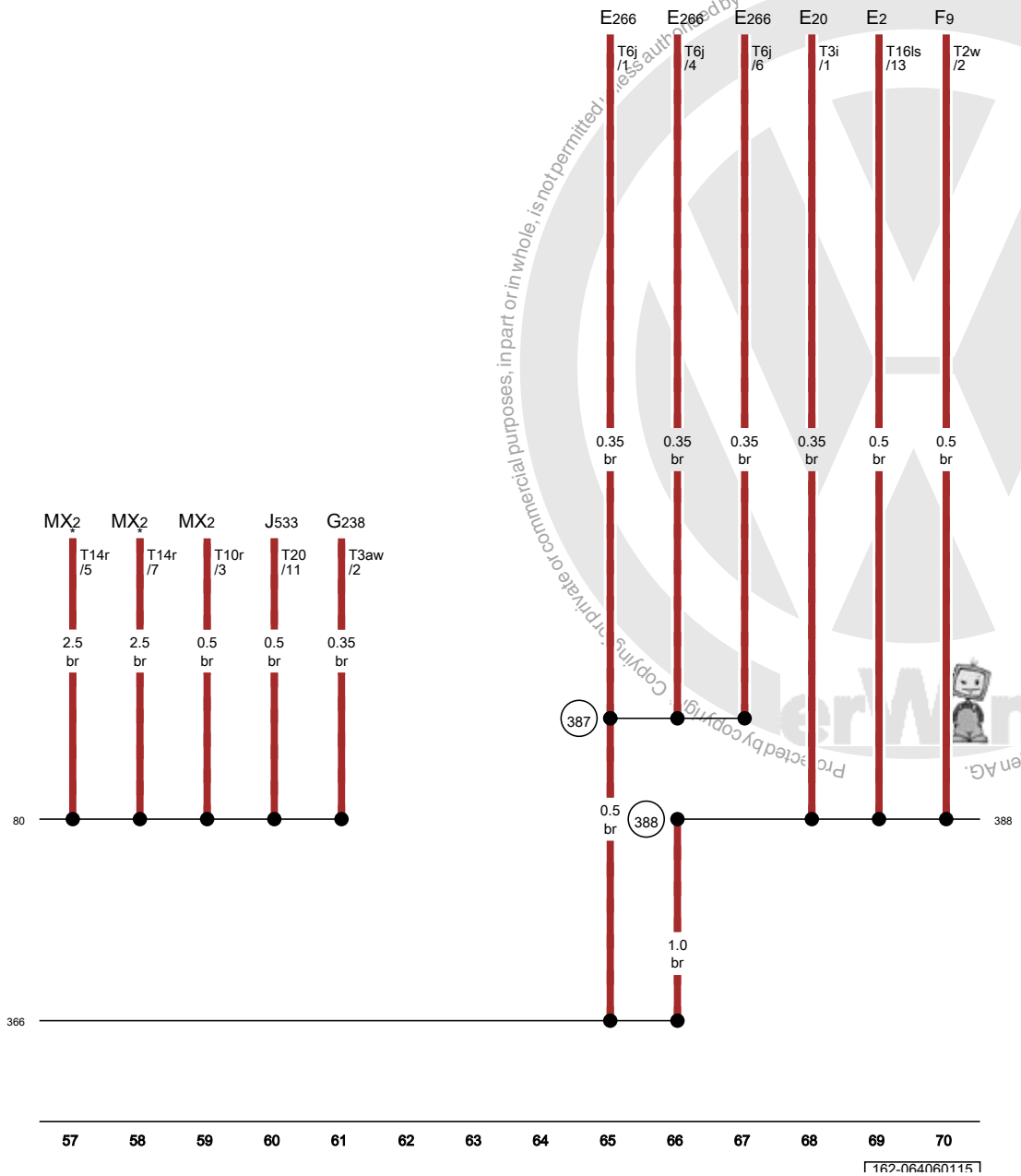

Ground connection 1 (in main wiring harness), Ground connection 23 (in main wiring harness)

E2	Turn signal switch
E20	Instrument panel and switch illumination dimmer switch
E266	Parking aid button
F9	Parking brake indicator lamp switch
G238	Air quality sensor
J533	Data bus on board diagnostic interface
MX2	Right front headlamp
T2w	2-pin connector
T3aw	3-pin connector
T3i	3-pin connector
T6j	6-pin connector
T10r	10-pin connector
T14r	14-pin connector
T16ls	16-pin connector
T20	20-pin connector
80	Ground connection 1 (in instrument cluster wiring harness)
366	Ground connection 1 (in main wiring harness)
387	Ground connection 22 (in main wiring harness)
388	Ground connection 23 (in main wiring harness)
*	HID headlamps

ws	=	white
sw	=	black
ro	=	red
rt	=	red
br	=	brown
gn	=	green
bl	=	blue
gr	=	grey
li	=	lilac
vi	=	lilac
ge	=	yellow
or	=	orange
rs	=	pink

Protected by copyright. Copying for private or commercial purposes, in part or in whole, is not permitted unless authorised by Volkswagen AG. Volkswagen AG does not guarantee or accept any liability with respect to the correctness of information in this document. Copyright by Volkswagen AG.

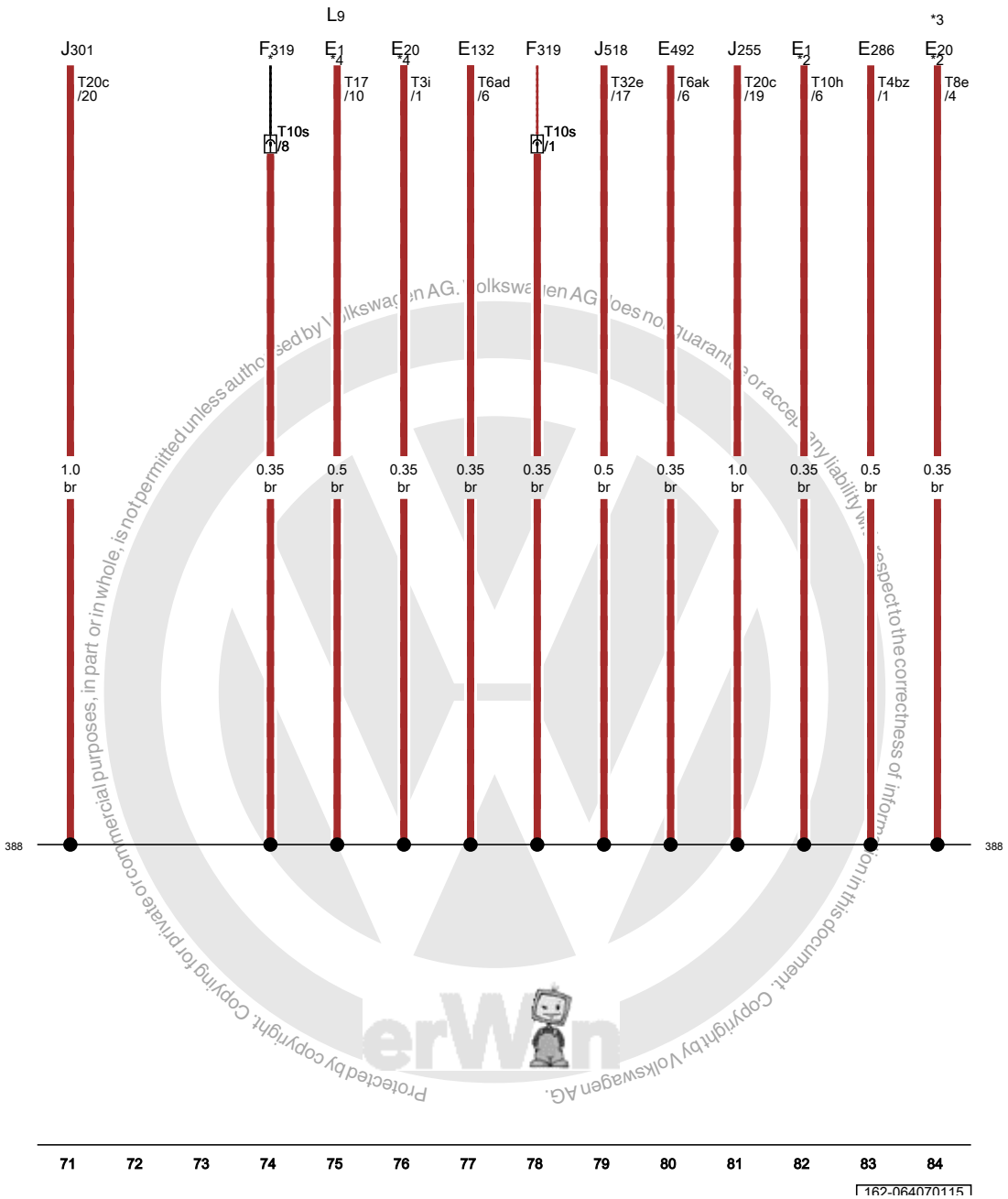

Protected by copyright. Copying for private or commercial purposes, in part or in whole, is not permitted unless authorised by Volkswagen AG. Volkswagen AG does not guarantee or accept any liability with respect to the correctness of information in this document. Copyright by Volkswagen AG.

Ground connection 23 (in main wiring harness)

E1	Light switch
E20	Instrument panel and switch illumination dimmer switch
E132	ASR switch
E286	Rear center interior locking switch
E492	Tire pressure monitoring display button
F319	Selector lever park position lock switch
J255	Climatronic control module
J301	A/C control module
J518	Access/start authorization control module
L9	Headlamp switch illumination bulb
T3i	3-pin connector
T4bz	4-pin connector
T6ad	6-pin connector
T6ak	6-pin connector
T8e	8-pin connector
T10h	10-pin connector
T10s	10-pin connector
T17	17-pin connector
T20c	20-pin connector
T32e	32-pin connector
388	Ground connection 23 (in main wiring harness)
*	not for vehicles with dual clutch transmission
*2	only for vehicles with High equipment (AW1)
*3	Depending on equipment
*4	only for vehicles with Low equipment (AW0)

ws	=	white
sw	=	black
ro	=	red
rt	=	red
br	=	brown
gn	=	green
bl	=	blue
gr	=	grey
li	=	lilac
vi	=	lilac
ge	=	yellow
or	=	orange
rs	=	pink

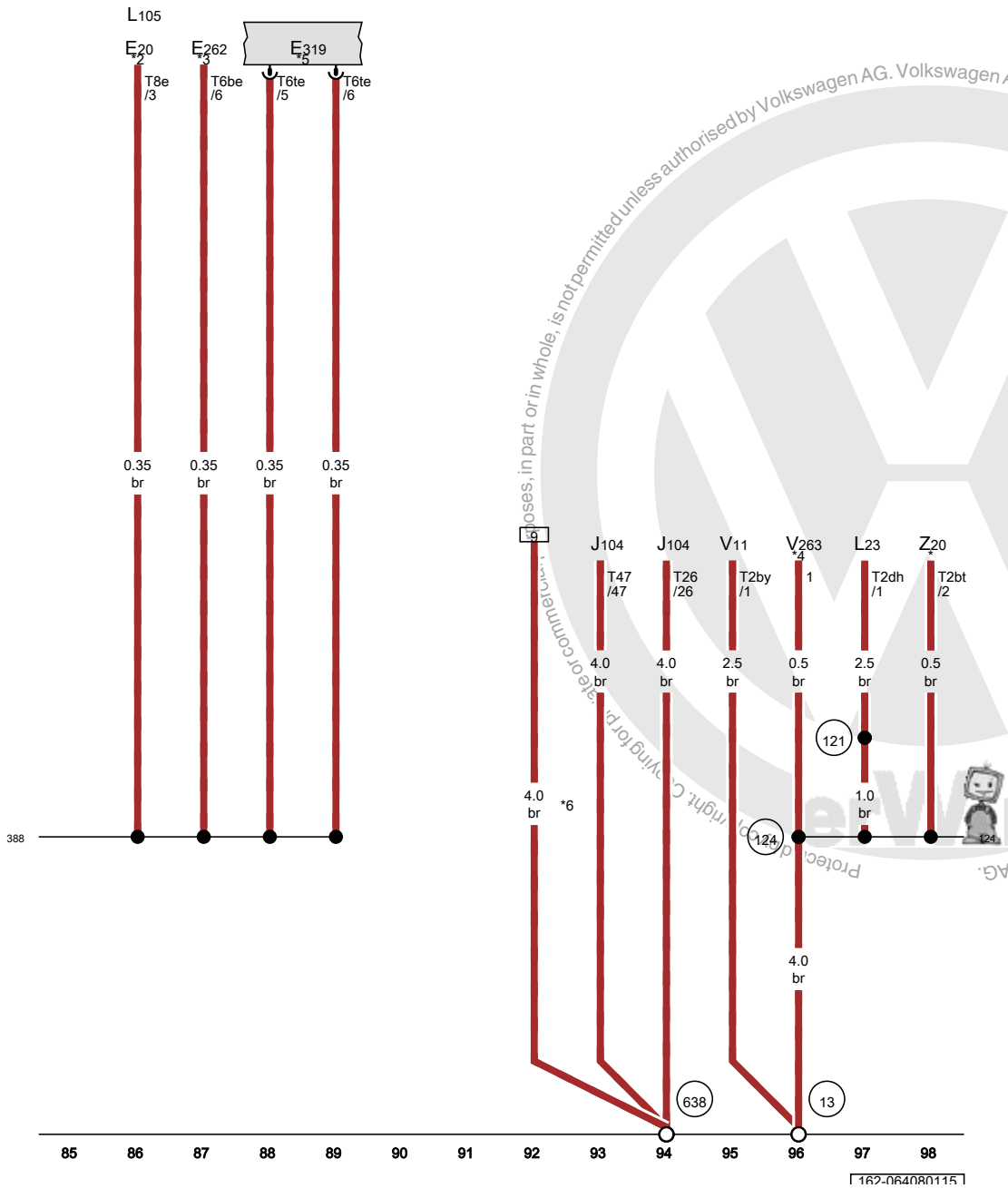

Ground connection in engine compartment, right, Ground connection 23 (in main wiring harness), Ground connection on right A-pillar

E20	Instrument panel and switch illumination dimmer switch
E262	Start/Stop mode switch
E319	Fuel filler door release button
J104	ABS control module
L23	Right front fog lamp bulb
L105	Lighting control illumination bulb
T2bt	2-pin connector
T2by	2-pin connector
T2dh	2-pin connector
T6be	6-pin connector
T6te	6-pin connector
T8e	8-pin connector
T26	26-pin connector
T47	47-pin connector
V11	Headlamp washer pump
V263	Cold start fuel pump
Z20	Left washer nozzle heater
13	Ground connection in engine compartment, right
121	Ground connection 2 (in right front wiring harness)
124	Ground connection (in right engine compartment wiring harness)
388	Ground connection 23 (in main wiring harness)
638	Ground connection on right A-pillar
*	Through May 2013
*2	only for vehicles with High equipment (AW1)
*3	Only for vehicles with Start/Stop system
*4	Refer to applicable engine wiring diagram
*5	only for vehicles with hybrid drive
*6	Only for right-hand drive vehicles

ws	=	white
sw	=	black
ro	=	red
rt	=	red
br	=	brown
gn	=	green
bl	=	blue
gr	=	grey
li	=	lilac
vi	=	lilac
ge	=	yellow
or	=	orange
rs	=	pink

Protected by copyright. Copying for private or commercial purposes, in part or in whole, is not permitted unless authorised by Volkswagen AG. Volkswagen AG does not guarantee or accept any liability with respect to the correctness of information in this document. Copyright by Volkswagen AG.

Audio ground connection under front center console, Ground connection on left headlamp

H1	Signal horn and dual tone horn
J503	Radio/navigation display unit control module
J650	Multimedia system control module
MX1	Left front headlamp
MX2	Right front headlamp
R	Radio
R12	Amplifier
R189	Rearview camera
T2bu	2-pin connector
T2dj	2-pin connector
T4cq	4-pin connector
T10l	10-pin connector
T10r	10-pin connector
T12h	12-pin connector
T16d	16-pin connector
T38	38-pin connector
Z21	Right washer nozzle heater
124	Ground connection (in right engine compartment wiring harness)
370	Ground connection 5 (in main wiring harness)
371	Ground connection 6 (in main wiring harness)
376	Ground connection 11 (in main wiring harness)
610	Audio ground connection under front center console
655	Ground connection on left headlamp
*	Only for vehicles with dual tone horn
*2	Through May 2013
*3	1.5 diameter possible

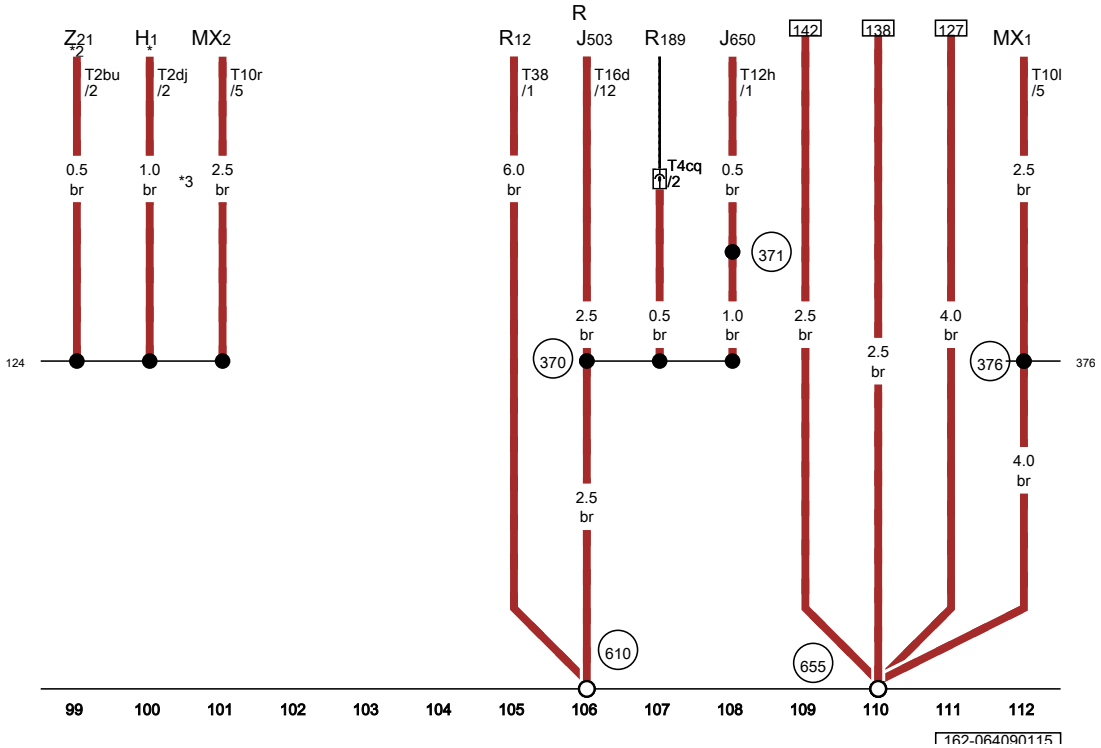

ws	=	white
sw	=	black
ro	=	red
rt	=	red
br	=	brown
gn	=	green
bl	=	blue
gr	=	grey
li	=	lilac
vi	=	lilac
ge	=	yellow
or	=	orange
rs	=	pink

Copyright by Volkswagen AG. Volkswagen AG does not guarantee or accept any liability with respect to the correctness of information in this document. Copying for private or commercial purposes, in part or in whole, is not permitted unless authorized by Volkswagen AG.

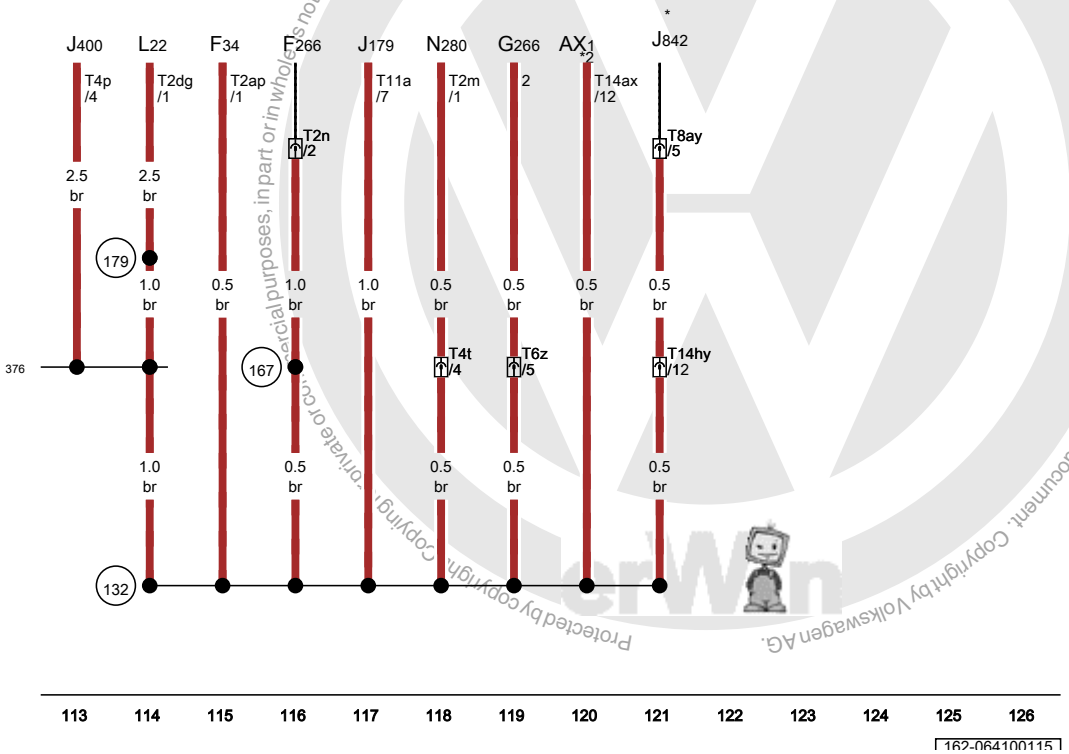

Protected by copyright. Copying for private or commercial purposes, in part or in whole, is not permitted unless authorised by Volkswagen AG. Volkswagen AG does not guarantee or accept any liability with respect to the correctness of information in this document. Copyright by Volkswagen AG.

ws	=	white
sw	=	black
ro	=	red
rt	=	red
br	=	brown
gn	=	green
bl	=	blue
gr	=	grey
li	=	lilac
vi	=	lilac
ge	=	yellow
or	=	orange
rs	=	pink

Ground connection 3 (in engine compartment wiring harness)

AX1	Hybrid battery unit
F34	Brake fluid level warning switch
F266	Engine hood contact switch
G266	Oil level thermal sensor
J179	Automatic glow time control module
J400	Wiper motor control module
J842	A/C compressor control module
L22	Left front fog lamp bulb
N280	A/C compressor regulator valve
T2ap	2-pin connector
T2dg	2-pin connector
T2m	2-pin connector
T2n	2-pin connector, in the engine compartment, left, near the headlamp
T4p	4-pin connector
T4t	4-pin connector, near the starter
T6z	6-pin connector, near the E-box
T8ay	8-pin connector
T11a	11-pin connector
T14ax	14-pin connector
T14hy	14-pin connector, black
132	Ground connection 3 (in engine compartment wiring harness)
167	Ground connection 4 (in engine compartment wiring harness)
179	Ground connection (in left headlamp wiring harness)
376	Ground connection 11 (in main wiring harness)
*	only for vehicles with hybrid drive
*2	Refer to applicable engine wiring diagram

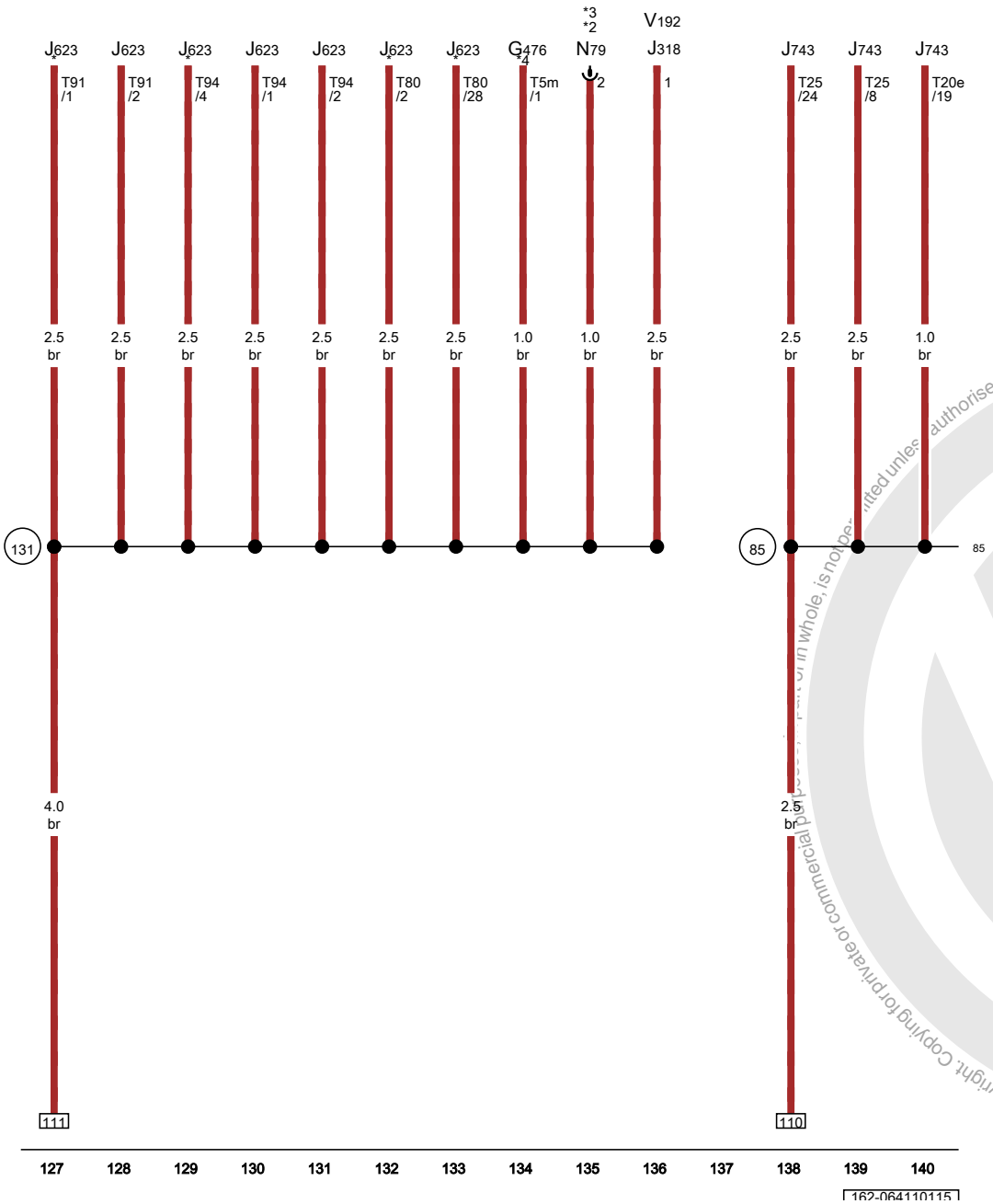

Ground connection 1 (in engine compartment wiring harness), Ground connection 2 (in engine compartment wiring harness)

G476	Clutch position sensor
J318	Vacuum pump relay
J623	Engine control module
J743	DSG transmission Mechatronic
N79	Positive crankcase ventilation heating element
T5m	5-pin connector
T20e	20-pin connector
T25	25-pin connector
T80	80-pin connector
T91	91-pin connector
T94	94-pin connector
V192	Brake system vacuum pump
85	Ground connection 1 (in engine compartment wiring harness)
131	Ground connection 2 (in engine compartment wiring harness)
*	Refer to applicable engine wiring diagram
*2	Only for vehicles with a 1.6L engine
*3	Only for vehicles with a diesel engine
*4	Only for vehicles with Start/Stop system

ws	=	white
sw	=	black
ro	=	red
rt	=	red
br	=	brown
gn	=	green
bl	=	blue
gr	=	grey
li	=	lilac
vi	=	lilac
ge	=	yellow
or	=	orange
rs	=	pink

Copyright by Volkswagen AG. Volkswagen AG does not guarantee or accept any liability with respect to the correctness of information in this document. Copyright by Volkswagen AG. Protected by copyright. Copying for private or commercial purposes, in whole or in part, is not permitted unless authorised by Volkswagen AG.

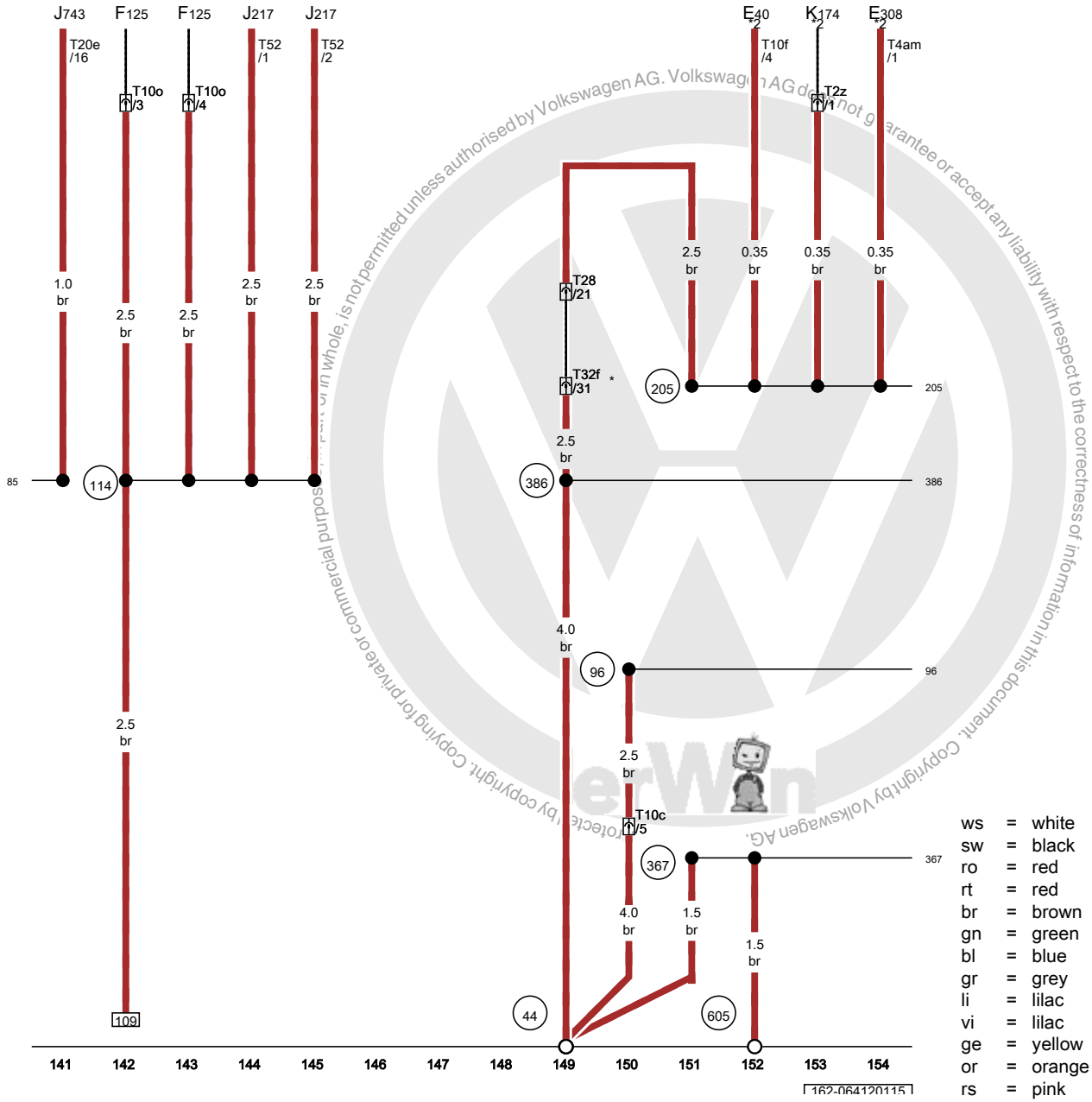

ws	=	white
sw	=	black
ro	=	red
rt	=	red
br	=	brown
gn	=	green
bl	=	blue
gr	=	grey
li	=	lilac
vi	=	lilac
ge	=	yellow
or	=	orange
rs	=	pink

Ground connection on A-pillar, lower left, Ground connection 1 (in engine compartment wiring harness), Ground connection 1 (in heated seats wiring harness), Ground connection (in driver door wiring harness), Ground connection 2 (in main wiring harness), Ground connection 21 (in main wiring harness), Ground connection on upper steering column

E40	Left front window regulator switch
E308	Driver interior locking button
F125	Multifunction transmission range switch
J217	Transmission control module
J743	DSG transmission Mechatronic
K174	Driver interior locking indicator lamp
T2z	2-pin connector
T4am	4-pin connector
T10c	10-pin connector, under the left front seat
T10f	10-pin connector
T10o	10-pin connector
T20e	20-pin connector
T28	28-pin connector, on the lower left A-pillar
T32f	32-pin connector, on the lower left A-pillar
T52	52-pin connector
44	Ground connection on A-pillar, lower left
85	Ground connection 1 (in engine compartment wiring harness)
96	Ground connection 1 (in heated seats wiring harness)
114	Ground connection (in automatic transmission wiring harness)
205	Ground connection (in driver door wiring harness)
367	Ground connection 2 (in main wiring harness)
386	Ground connection 21 (in main wiring harness)
605	Ground connection on upper steering column
*	only for vehicles with Low equipment (AW0)
*2	only for vehicles with High equipment (AW1)

Protected by copyright. Copying for private or commercial purposes, in whole or in part, is not permitted unless authorised by Volkswagen AG. Volkswagen AG does not guarantee or accept any liability with respect to the correctness of information in this document. Copyright by Volkswagen AG.

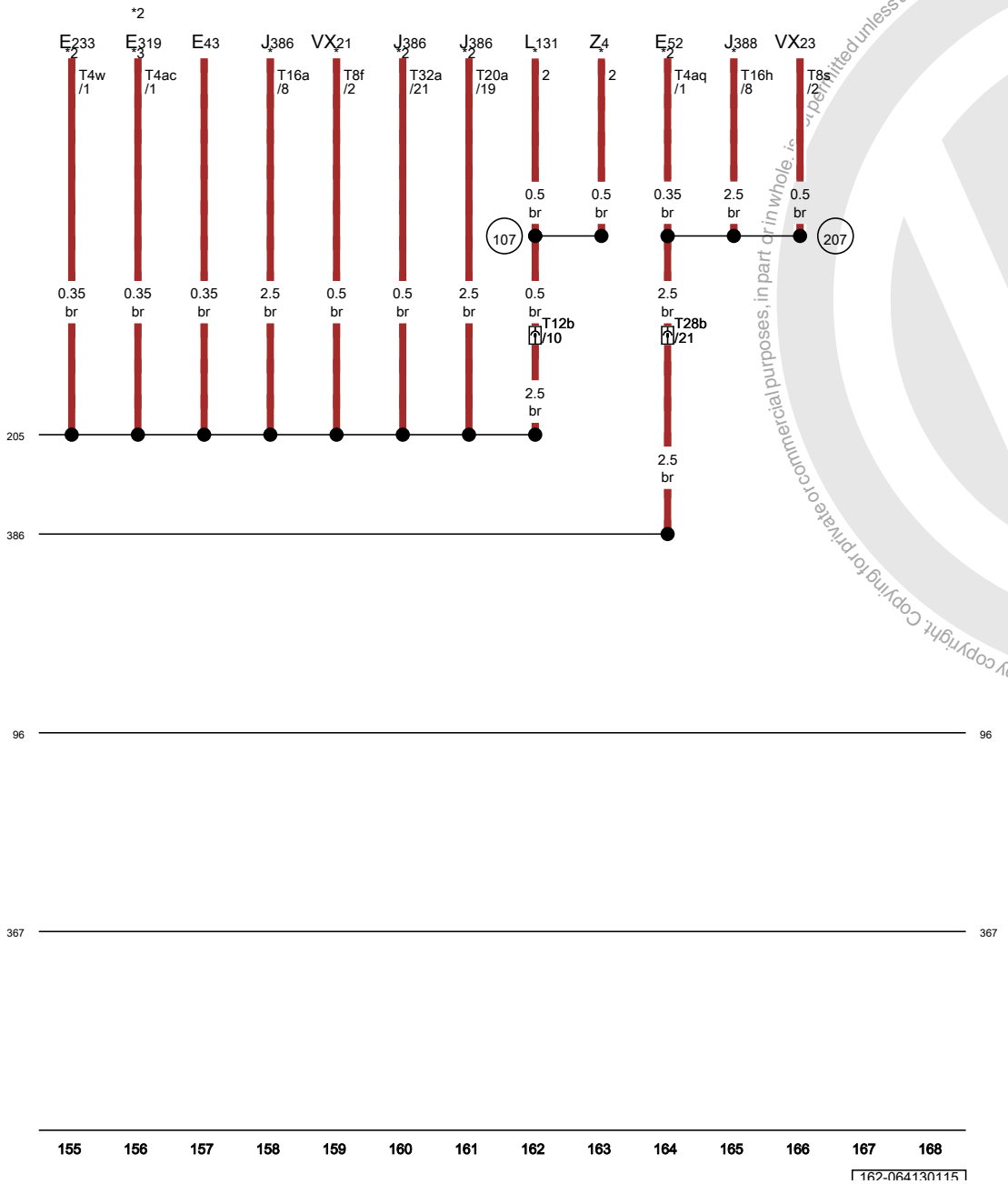

ws	=	white
sw	=	black
ro	=	red
rt	=	red
br	=	brown
gn	=	green
bl	=	blue
gr	=	grey
li	=	lilac
vi	=	lilac
ge	=	yellow
or	=	orange
rs	=	pink

Ground connection 1 (in heated seats wiring harness), Ground connection (in exterior mirror wiring harness), Ground connection (in driver door wiring harness), Ground connection 2 (in main wiring harness), Ground connection 21 (in main wiring harness)

E43	Mirror adjusting switch
E52	Left rear power window switch in left rear door
E233	Rear lid remote release button
E319	Fuel filler door release button
J386	Driver door control module
J388	Left rear door control module
L131	Driver exterior rearview mirror turn signal bulb
T4ac	4-pin connector
T4aq	4-pin connector
T4w	4-pin connector
T8f	8-pin connector
T8s	8-pin connector
T12b	12-pin connector, in the driver door
T16a	16-pin connector
T16h	16-pin connector
T20a	20-pin connector
T28b	28-pin connector, on the left B-pillar
T32a	32-pin connector
VX21	Driver door lock unit
VX23	Left rear door lock unit
Z4	Heated driver exterior rearview mirror
96	Ground connection 1 (in heated seats wiring harness)
107	Ground connection (in exterior mirror wiring harness), in the left door, near the exterior rearview mirror
205	Ground connection (in driver door wiring harness)
207	Ground connection (in left rear door wiring harness)
367	Ground connection 2 (in main wiring harness)
386	Ground connection 21 (in main wiring harness)
*	only for vehicles with Low equipment (AW0)
*2	only for vehicles with High equipment (AW1)
*3	USA only

Protected by copyright. Copying for private or commercial purposes, in part or in whole, is not permitted unless authorised by Volkswagen AG. Volkswagen AG does not guarantee or accept any liability with respect to the correctness of information in this document. Copyright by Volkswagen AG.

Ground connection 1 (in seat adjustment wiring harness), Ground connection 1 (in heated seats wiring harness), Ground connection 2 (in main wiring harness)

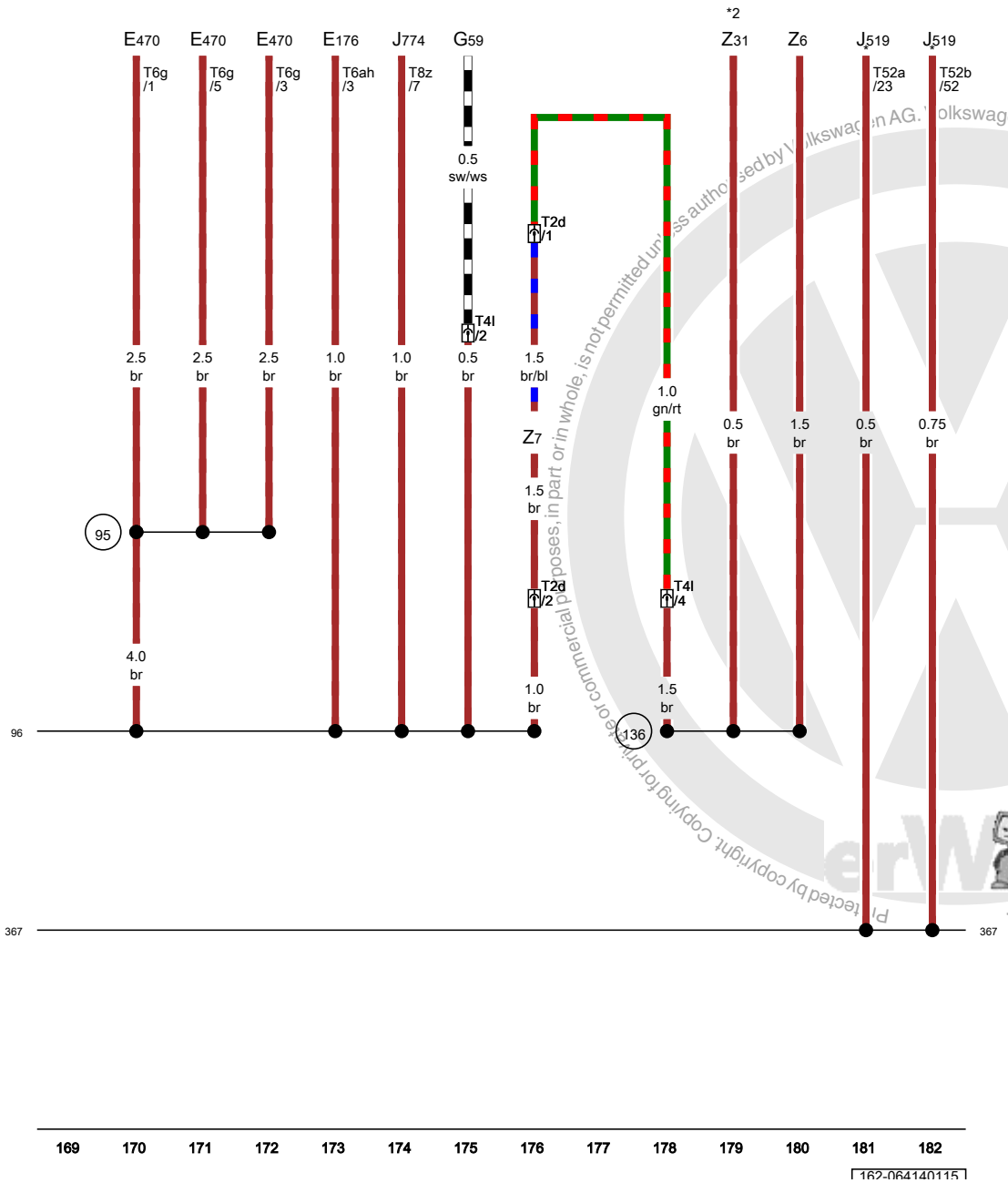

E176	Driver seat lumbar support adjustment switch
E470	Driver seat adjustment control head
G59	Heated driver seat temperature sensor
J519	Vehicle electrical system control module
J774	Front seat heating control module
T2d	2-pin connector, in the driver seat
T4l	4-pin connector, in the driver seat
T6ah	6-pin connector
T6g	6-pin connector
T8z	8-pin connector
T52a	52-pin connector
T52b	52-pin connector
Z6	Driver seat heating element
Z7	Driver backrest heating element
Z31	Driver seat bolster heater
95	Ground connection 1 (in seat adjustment wiring harness)
96	Ground connection 1 (in heated seats wiring harness)
136	Ground connection 2 (in heated seats wiring harness)
367	Ground connection 2 (in main wiring harness)
*	only for vehicles with High equipment (AW1)
*2	Omitted as a running change

ws	=	white
sw	=	black
ro	=	red
rt	=	red
br	=	brown
gn	=	green
bl	=	blue
gr	=	grey
li	=	lilac
vi	=	lilac
ge	=	yellow
or	=	orange
rs	=	pink

Protected by copyright. Copying for private or commercial purposes, in part or in whole, is not permitted unless authorised by Volkswagen AG. Volkswagen AG does not guarantee or accept any liability with respect to the correctness of information in this document. Copyright by Volkswagen AG.

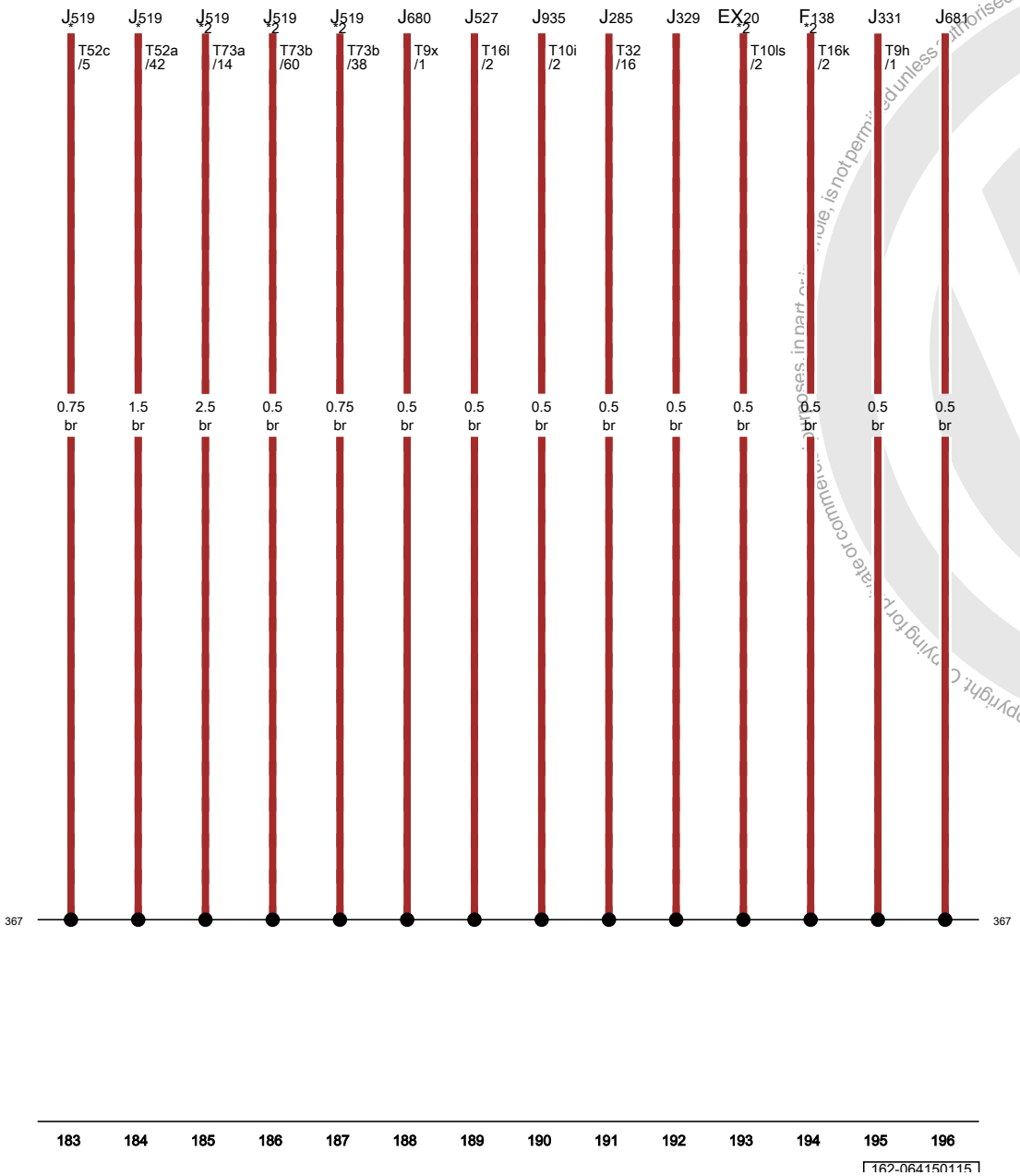

Ground connection 2 (in main wiring harness)

EX20	Right steering column switch
F138	Airbag spiral spring/return spring with slip ring
J285	Instrument cluster control module
J329	Terminal 15 power supply relay
J331	Low beam relay
J519	Vehicle electrical system control module
J527	Steering column electronics control module
J680	Terminal 75 power supply relay 1
J681	Terminal 15 power supply relay 2
J935	Converter box
T9h	9-pin connector
T9x	9-pin connector
T10i	10-pin connector
T10ls	10-pin connector
T16k	16-pin connector
T16l	16-pin connector
T32	32-pin connector
T52a	52-pin connector
T52c	52-pin connector
T73a	73-pin connector
T73b	73-pin connector
367	Ground connection 2 (in main wiring harness)
*	only for vehicles with High equipment (AW1)
*2	only for vehicles with Low equipment (AW0)

ws	=	white
sw	=	black
ro	=	red
rt	=	red
br	=	brown
gn	=	green
bl	=	blue
gr	=	grey
li	=	lilac
vi	=	lilac
ge	=	yellow
or	=	orange
rs	=	pink

Protected by copyright. Copying for private or commercial purposes, in part or in whole, is not permitted unless authorised by Volkswagen AG. Volkswagen AG does not guarantee or accept any liability with respect to the correctness of information in this document. Copyright by Volkswagen AG.

Ground connection 2 (in main wiring harness), Ground connection 3 (in main wiring harness), Ground connection 24 (in main wiring harness)

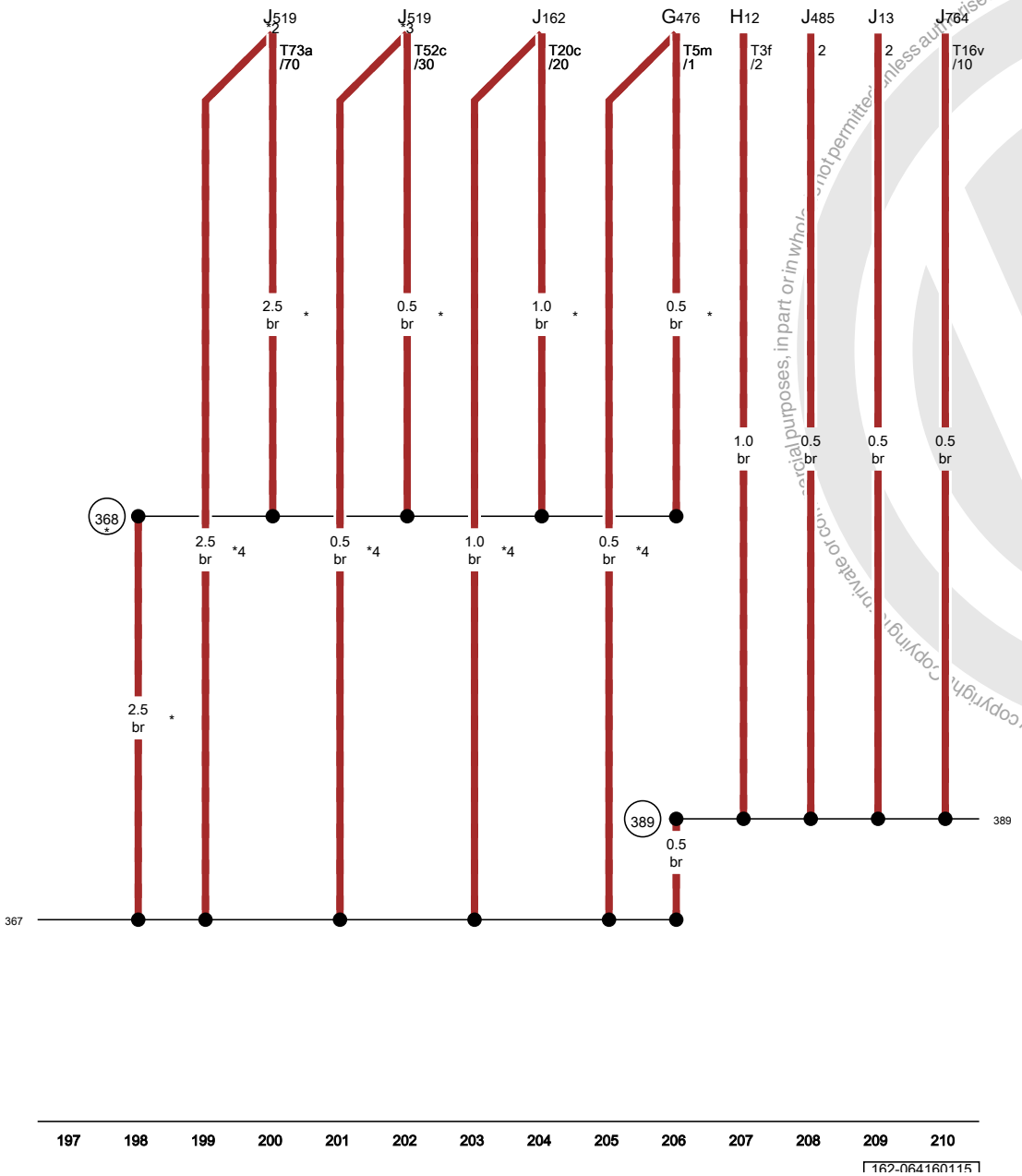

G476	Clutch position sensor
H12	Alarm horn
J13	Fresh air blower relay
J162	Heater control module
J485	Parking heater operation relay
J519	Vehicle electrical system control module
J764	Electronic steering column lock control module
T3f	3-pin connector
T5m	5-pin connector
T16v	16-pin connector
T20c	20-pin connector
T52c	52-pin connector
T73a	73-pin connector
367	Ground connection 2 (in main wiring harness)
368	Ground connection 3 (in main wiring harness)
389	Ground connection 24 (in main wiring harness)
*	Omitted as a running change
*2	only for vehicles with Low equipment (AW0)
*3	only for vehicles with High equipment (AW1)
*4	Running change

ws	=	white
sw	=	black
ro	=	red
rt	=	red
br	=	brown
gn	=	green
bl	=	blue
gr	=	grey
li	=	lilac
vi	=	lilac
ge	=	yellow
or	=	orange
rs	=	pink

Protected by copyright. Copying for private or commercial purposes, in part or in whole, is not permitted unless authorised by Volkswagen AG. Volkswagen AG does not guarantee or accept any liability with respect to the correctness of information in this document. Copyright by Volkswagen AG.

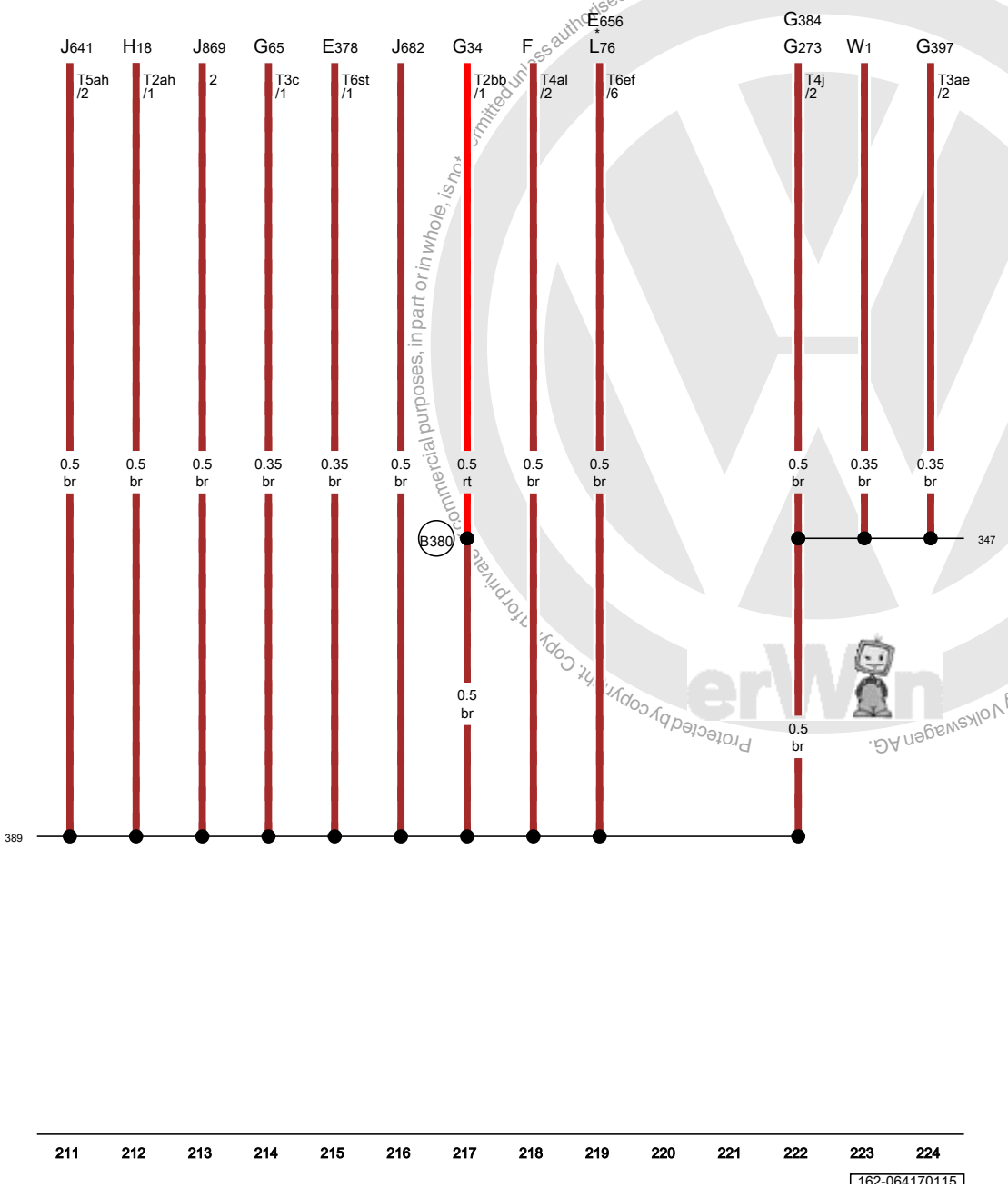

Protected by copyright. Copyright by Volkswagen AG. Volkswagen AG does not guarantee or accept any liability with respect to the correctness of information in this document. Copyright by Volkswagen AG.

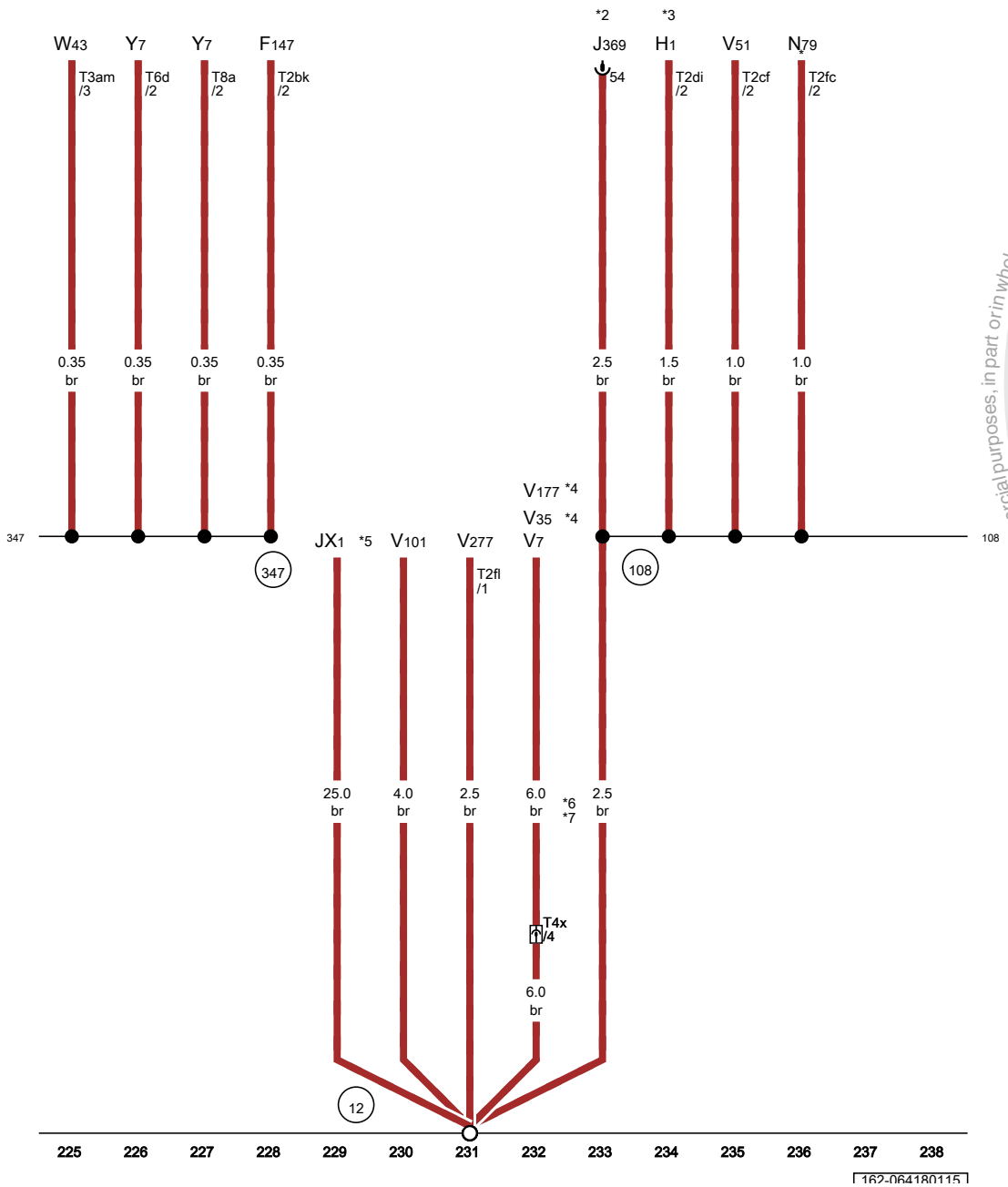

Ground connection in engine compartment, left, Ground connection (in roof wiring harness)

F147	Driver vanity mirror lamp contact switch
H1	Signal horn and dual tone horn
JX1	Electric drive power and control electronics
J369	Wiper motor relay 2, in the engine compartment E-box
N79	Positive crankcase ventilation heating element
T2bk	2-pin connector
T2cf	2-pin connector
T2di	2-pin connector
T2fc	2-pin connector
T2fl	2-pin connector
T3am	3-pin connector
T4x	4-pin connector, near the coolant fan
T6d	6-pin connector
T8a	8-pin connector
V7	Radiator fan
V35	Right radiator fan
V51	After-run coolant pump
V101	Secondary air injection pump motor
V177	Radiator fan 2
V277	Fuel pump 2
W43	Rear interior lamp
Y7	Automatic dimming interior rearview mirror
12	Ground connection in engine compartment, left
108	Ground connection 2 (in left front wiring harness)
347	Ground connection (in roof wiring harness)
*	Refer to applicable engine wiring diagram
*2	only for vehicles with High equipment (AW1)
*3	Only for vehicles with dual tone horn
*4	Only for vehicles with two radiator fans
*5	only for vehicles with hybrid drive
*6	Diameter depends on equipment
*7	4.0 diameter possible

ws	=	white
sw	=	black
ro	=	red
rt	=	red
br	=	brown
gn	=	green
bl	=	blue
gr	=	grey
li	=	lilac
vi	=	lilac
ge	=	yellow
or	=	orange
rs	=	pink

Copyright by Volkswagen AG. Not to be reproduced or made available to third parties without our express consent. Volkswagen AG does not guarantee or assume any liability with respect to the correctness of information in this document. Copyright by Volkswagen AG, Wolfsburg. All rights reserved. Copying for private or commercial purposes, in part or in whole, is not permitted unless authorised by Volkswagen AG.

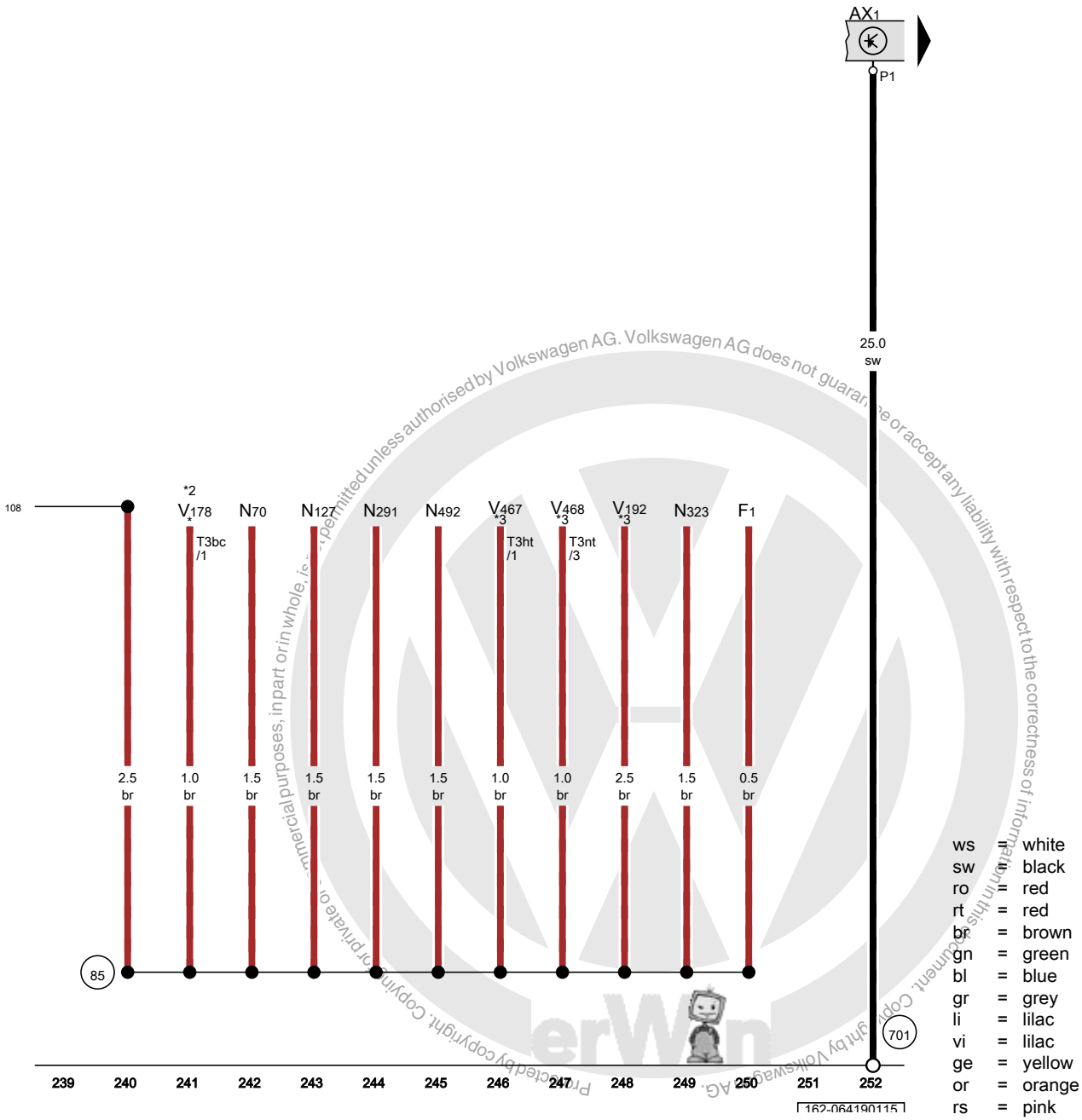

ws = white
sw = black
ro = red
rt = red
br = brown
gn = green
bl = blue
gr = grey
li = lilac
vi = lilac
ge = yellow
or = orange
rs = pink

Ground connection 1 (in engine compartment wiring harness)

AX1	Hybrid battery unit
F1	Oil pressure switch
N70	Ignition coil 1 with power output stage
N127	Ignition coil 2 with power output stage
N291	Ignition coil 3 with power output stage
N323	Ignition coil 5 with power output stage
N492	Cooling circuit solenoid valve
T3bc	3-pin connector
T3ht	3-pin connector
T3nt	3-pin connector
V178	Engine coolant circulation pump 2
V192	Brake system vacuum pump
V467	High temperature circuit coolant pump
V468	Low temperature circuit coolant pump
85	Ground connection 1 (in engine compartment wiring harness)
108	Ground connection 2 (in left front wiring harness)
701	Ground connection in luggage compartment
*	Only for vehicles with a 1.6L engine
*2	Only for vehicles with a diesel engine
*3	only for vehicles with hybrid drive

Protected by copyright. Copying for private or commercial purposes, in part or in whole, is not permitted unless authorised by Volkswagen AG. Volkswagen AG does not guarantee or accept any liability with respect to the correctness of information in this document. Copyright by Volkswagen AG.

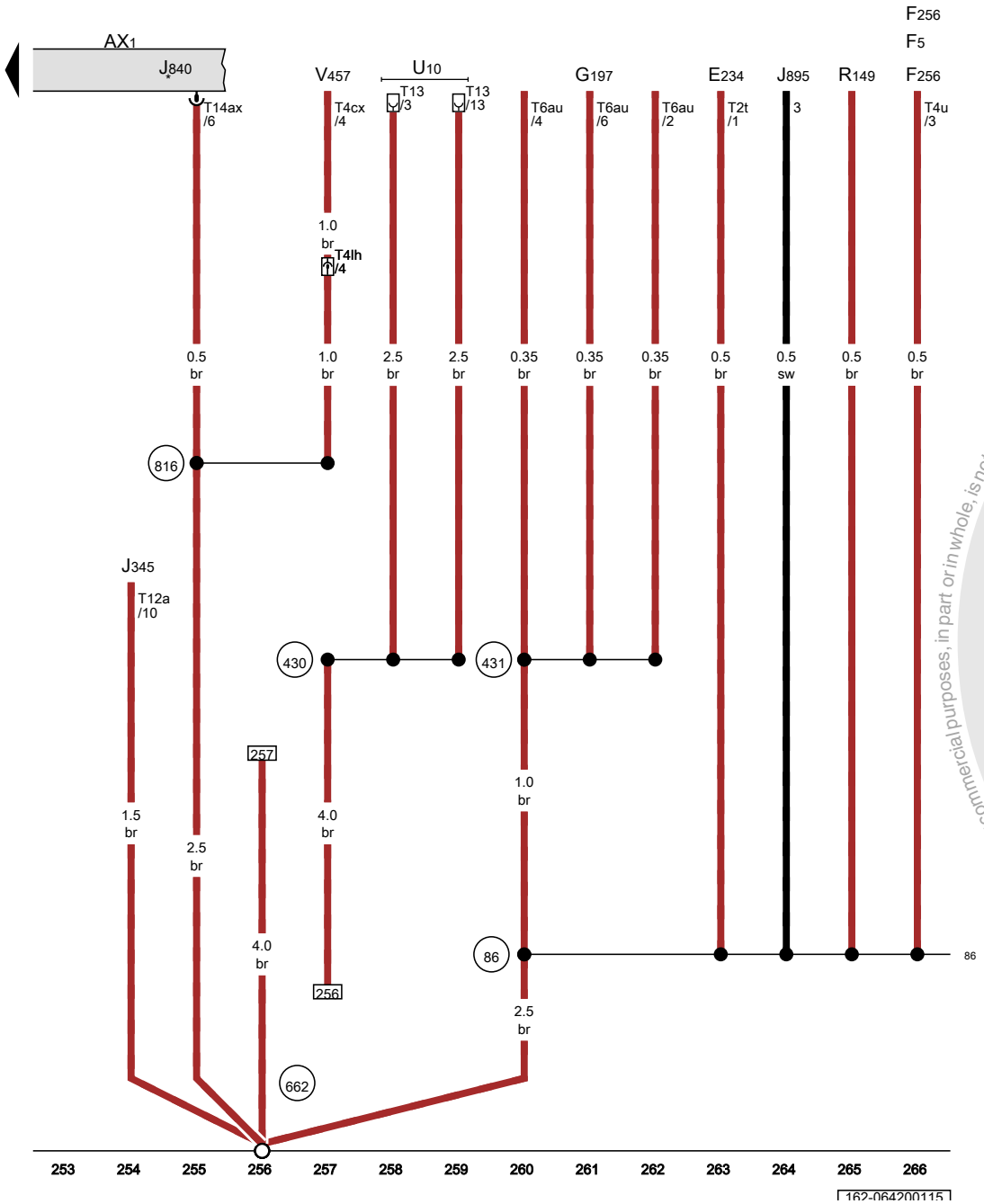

Ground connection 1 (in rear wiring harness), Ground connection in left rear side panel, Ground connection 1 in Hybrid System wiring harness

AX1	Hybrid battery unit
E234	Release button in rear lid handle
F5	Luggage compartment lamp switch
F256	Rear lid lock unit
G197	Compass magnetic field sensor
J345	Towing recognition control module
J840	Battery regulation control module
J895	Vehicle positioning system control module
R149	Auxiliary coolant heater radio frequency receiver
T2t	2-pin connector
T4cx	4-pin connector
T4lh	4-pin connector
T4u	4-pin connector
T6au	6-pin connector
T12a	12-pin connector
T13	122-pin connector
T14ax	14-pin connector
U10	Trailer socket
V457	Battery fan 1
86	Ground connection 1 (in rear wiring harness)
430	Ground connection in trailer hitch wiring harness
431	Ground connection 2 (in roof wiring harness)
662	Ground connection in left rear side panel
816	Ground connection 1 in Hybrid System wiring harness
*	only for vehicles with hybrid drive

ws	=	white
sw	=	black
ro	=	red
rt	=	red
br	=	brown
gn	=	green
bl	=	blue
gr	=	grey
li	=	lilac
vi	=	lilac
ge	=	yellow
or	=	orange
rs	=	pink

Protected by copyright. Copying for private or commercial purposes, in part or in whole, is not permitted unless authorised by Volkswagen AG. Volkswagen AG does not guarantee or accept any liability with respect to the correctness of information in this document. Copyright by Volkswagen AG.

Ground connection 1 (in rear wiring harness), Ground connection 2 (in rear wiring harness), Ground connection (in license plate lamp wiring harness), Ground connection 2 in engine compartment, left, Ground connection 1 in right rear side panel, Ground connection 2 in right rear side panel

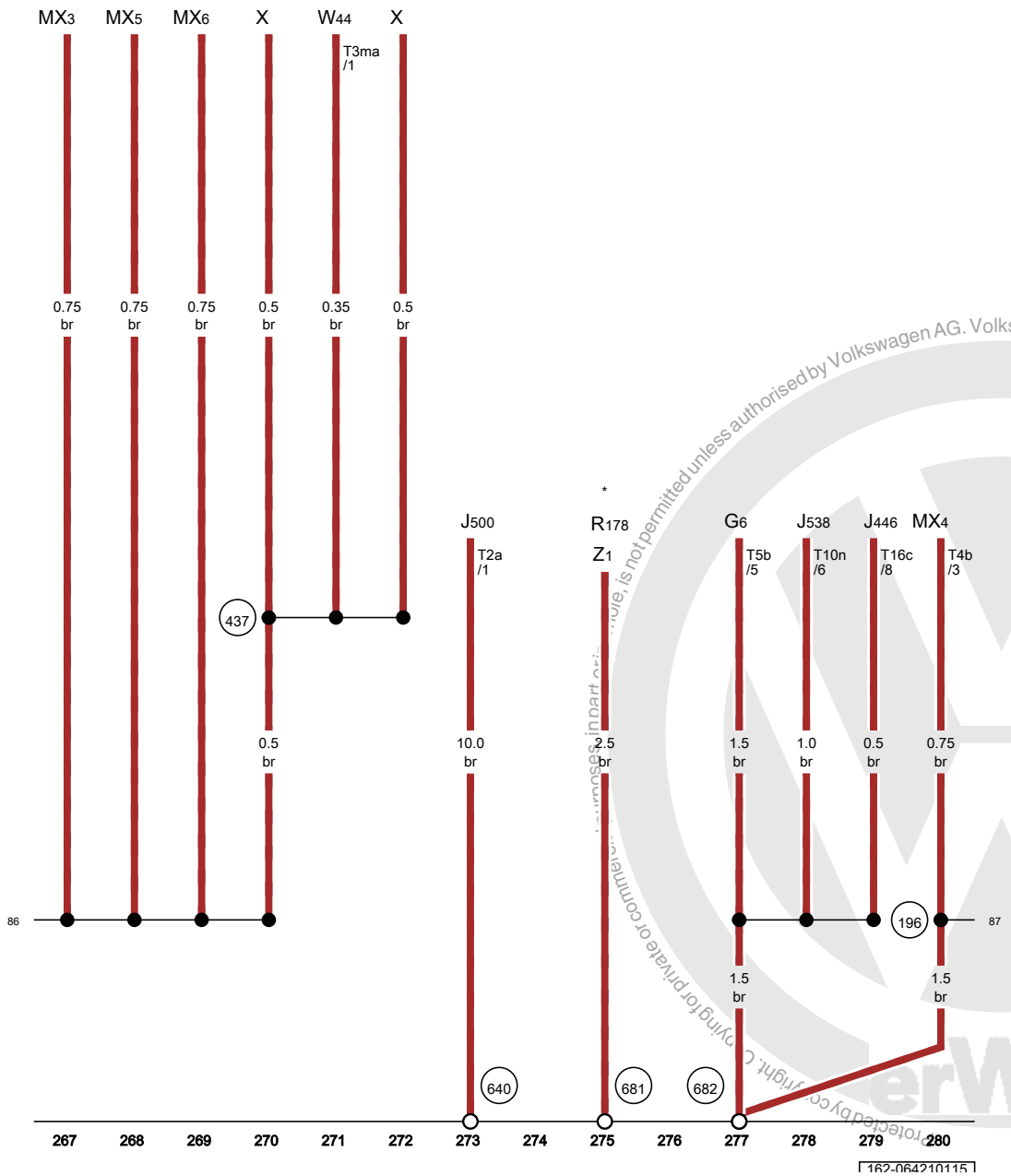

ws	=	white
sw	=	black
ro	=	red
rt	=	red
br	=	brown
gn	=	green
bl	=	blue
gr	=	grey
li	=	lilac
vi	=	lilac
ge	=	yellow
or	=	orange
rs	=	pink

G6	Transfer fuel pump
J446	Parking aid control module
J500	Power steering control module
J538	Fuel pump control module
MX3	Left tail lamp
MX4	Right tail lamp
MX5	Left tail lamp 2
MX6	Right tail lamp 2
R178	FM frequency filter in negative wire
T2a	2-pin connector
T3ma	3-pin connector
T4b	4-pin connector
T5b	5-pin connector
T10n	10-pin connector
T16c	16-pin connector
W44	Rear center reading lamp
X	License plate lamp
Z1	Rear window defogger
86	Ground connection 1 (in rear wiring harness)
87	Ground connection 2 (in rear wiring harness)
196	Ground connection 3 (in rear wiring harness)
437	Ground connection (in license plate lamp wiring harness)
640	Ground connection 2 in engine compartment, left
681	Ground connection 1 in right rear side panel
682	Ground connection 2 in right rear side panel
*	If available

Copyright by Volkswagen AG. Volkswagen AG does not guarantee or accept any liability with respect to the correctness of information in this document. Copyright by Volkswagen AG. Transmission to third parties, in part or in whole, is not permitted unless authorised by Volkswagen AG. Volkswagen AG does not guarantee or accept any liability with respect to the correctness of information in this document. Copyright by Volkswagen AG.

Ground connection 2 (in rear wiring harness)

F334	Fuel filler detection switch
M25	High-mounted brake lamp bulb
T2dn	2-pin connector
T4te	4-pin connector
V54	Metering pump
87	Ground connection 2 (in rear wiring harness)
*	Only for vehicles with auxiliary coolant heater
*2	only for vehicles with hybrid drive

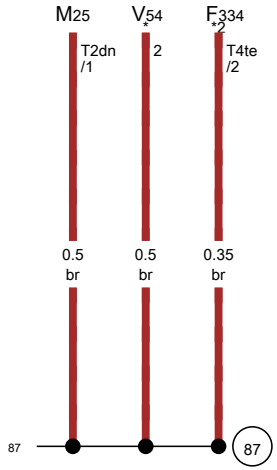

ws	=	white
sw	=	black
ro	=	red
rt	=	red
br	=	brown
gn	=	green
bl	=	blue
gr	=	grey
li	=	lilac
vi	=	lilac
ge	=	yellow
or	=	orange
rs	=	pink

281 282 283 284 285 286 287 288 289 290 291 292 293 294

162-064220115

Produced by CarWin. Copyright by Volkswagen AG. Copyright. Copying for private or commercial purposes, in part or in whole, is not permitted unless authorised by Volkswagen AG. Volkswagen AG does not guarantee or accept any liability with respect to the correctness of information in this document.

A/C system with manual control , (9AB)

from April 2010

Protected by copyright. Copying for private or commercial purposes, in part or in whole, is not permitted unless authorised by Volkswagen AG. Volkswagen AG does not guarantee or accept any liability with respect to the correctness of information in this document. Copyright by Volkswagen AG.

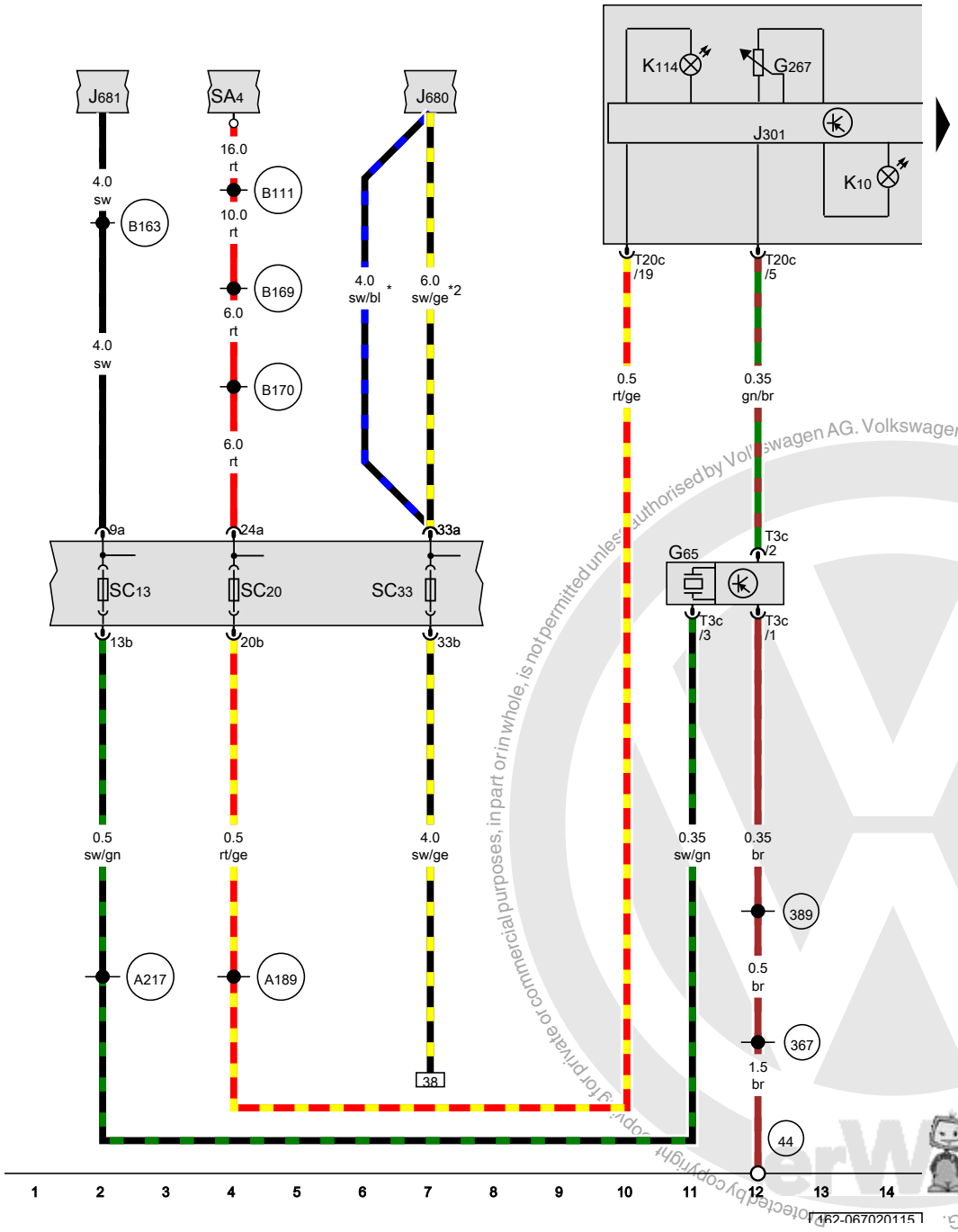

High pressure sensor, A/C control module

G65	High pressure sensor
G267	Temperature selector knob potentiometer
J301	A/C control module
J680	Terminal 75 power supply relay 1
J681	Terminal 15 power supply relay 2
K10	Rear window defogger indicator lamp
K114	Fresh air and recirculation mode indicator lamp
SA4	Fuse 4 (on fuse panel A)
SC13	Fuse 13 (on fuse panel C)
SC20	Fuse 20 (on fuse panel C)
SC33	Fuse 33 (on fuse panel C)
T3c	3-pin connector
T9f	9-pin connector
T9x	9-pin connector
T20c	20-pin connector
44	Ground connection on A-pillar, lower left
367	Ground connection 2 (in main wiring harness)
389	Ground connection 24 (in main wiring harness)
A189	Positive connection 5 (30a) (in instrument panel wiring harness)
A217	Positive connection 8 (15a) (in instrument panel wiring harness)
B111	Positive connection 1 (30a) (in interior wiring harness)
B163	Positive connection 1 (15) (in interior wiring harness)
B169	Positive connection 1 (30) (in interior wiring harness)
B170	Positive connection 2 (30) (in interior wiring harness)
*	Through June 2012
*2	from July 2012

ws	=	white
sw	=	black
ro	=	red
rt	=	red
br	=	brown
gn	=	green
bl	=	blue
gr	=	grey
li	=	lilac
vi	=	lilac
ge	=	yellow
or	=	orange
rs	=	pink

Copyright by Volkswagen AG. Volkswagen AG does not guarantee or accept any liability with respect to the correctness of information in this document. Copyright by Volkswagen AG. Protected by copyright. Copying for private or commercial purposes, in part or in whole, is not permitted unless authorised by Volkswagen AG.

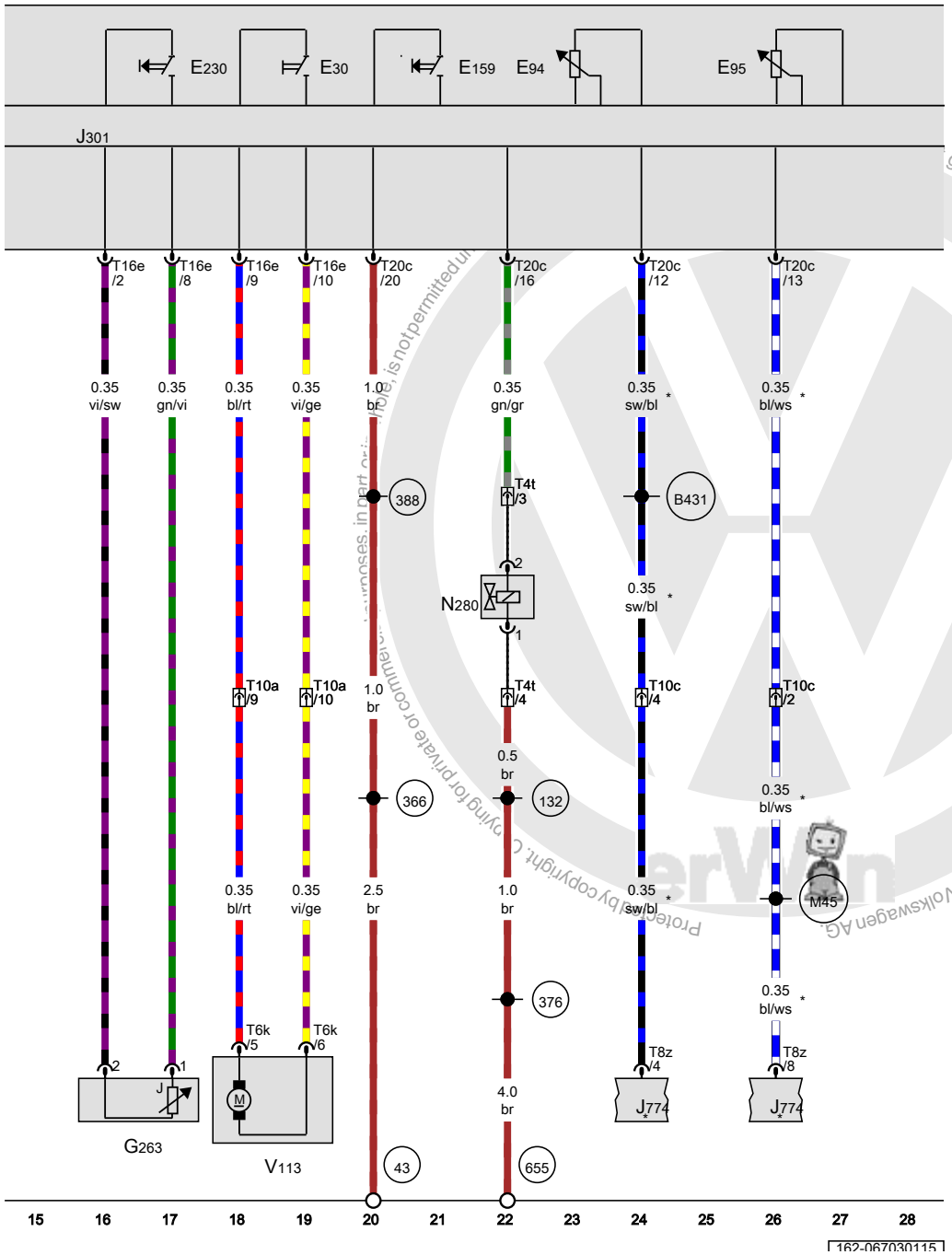

A/C control module, A/C compressor regulator valve

E30	A/C switch
E94	Heated driver seat adjuster
E95	Heated front passenger seat adjuster
E159	Fresh air/recirculation door switch
E230	Rear window defogger button
G263	Evaporator vent temperature sensor
J301	A/C control module
J774	Front seat heating control module
N280	A/C compressor regulator valve
T4t	4-pin connector
T6k	6-pin connector
T8z	8-pin connector
T10a	10-pin connector, on the heater
T10c	10-pin connector, under the driver seat
T16e	16-pin connector
T20c	20-pin connector
V113	Recirculation door motor
43	Ground connection on A-pillar, lower right
132	Ground connection 3 (in engine compartment wiring harness)
366	Ground connection 1 (in main wiring harness)
376	Ground connection 11 (in main wiring harness)
388	Ground connection 23 (in main wiring harness)
655	Ground connection on left headlamp
B431	Seat heating connection (in main wiring harness)
M45	Connection 5 (in driver seat wiring harness)
*	Only for vehicles with an auxiliary heater

ws	=	white
sw	=	black
ro	=	red
rt	=	red
br	=	brown
gn	=	green
bl	=	blue
gr	=	grey
li	=	lilac
vi	=	lilac
ge	=	yellow
or	=	orange
rs	=	pink

Protected by copyright. Copying for private or commercial purposes, in part or in whole, is not permitted unless authorized. Copyright by Volkswagen AG. We guarantee or accept any liability with respect to the correctness of information in this document.

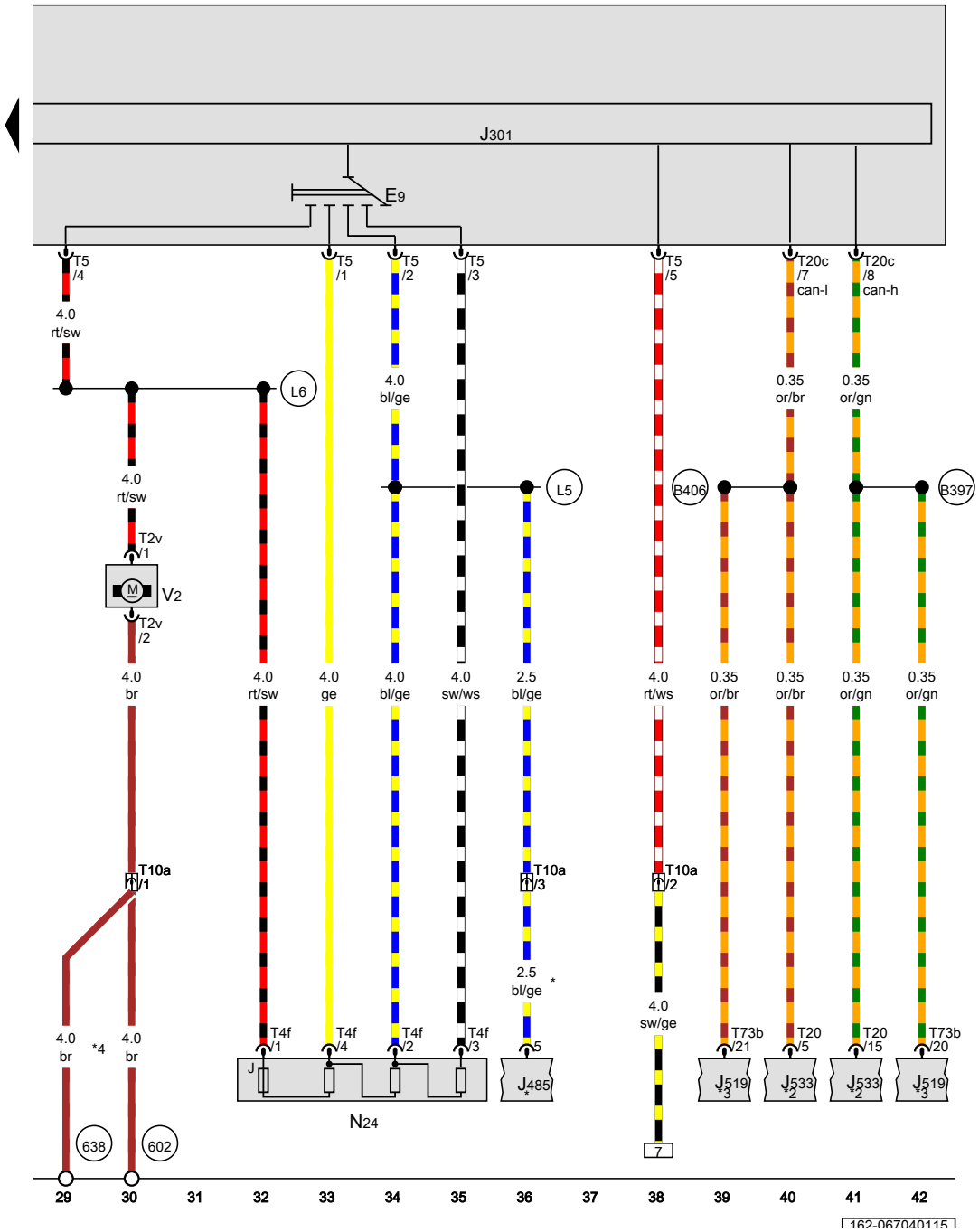

Fresh air blower switch, A/C control module, Fresh air blower series resistor with fuse, Fresh air blower

E9	Fresh air blower switch
J301	A/C control module
J485	Parking heater operation relay
J519	Vehicle electrical system control module
J533	Data bus on board diagnostic interface
N24	Fresh air blower series resistor with fuse
T2v	2-pin connector
T4f	4-pin connector
T5	5-pin connector
T10a	10-pin connector, on the heater
T20	20-pin connector
T20c	20-pin connector
T73b	73-pin connector
V2	Fresh air blower
602	Ground connection in left front footwell
638	Ground connection on right A-pillar
B397	Comfort system CAN bus high connection 1 (in main wiring harness)
B406	Comfort system CAN bus low connection 1 (in main wiring harness)
L5	Connection 1 (in A/C unit wiring harness)
L6	Connection 2 (in A/C unit wiring harness)
*	Only for vehicles with auxiliary coolant heater
*2	only for vehicles with High equipment (AW1)
*3	only for vehicles with Low equipment (AW0)
*4	Only for right-hand drive vehicles

ws	=	white
sw	=	black
ro	=	red
rt	=	red
br	=	brown
gn	=	green
bl	=	blue
gr	=	grey
li	=	lilac
vi	=	lilac
ge	=	yellow
or	=	orange
rs	=	pink

Protected by copyright. Copying for private or commercial purposes, in part or in whole, is not permitted unless authorised by Volkswagen AG. Volkswagen AG does not guarantee or accept any liability with respect to the correctness of information in this document. Copyright by Volkswagen AG.

Heating with manual control , (9AA)

From June 2010

Protected by copyright. Copying for private or commercial purposes, in part or in whole, is not permitted unless authorised by Volkswagen AG. Volkswagen AG does not guarantee or accept any liability with respect to the correctness of information in this document. Copyright by Volkswagen AG.

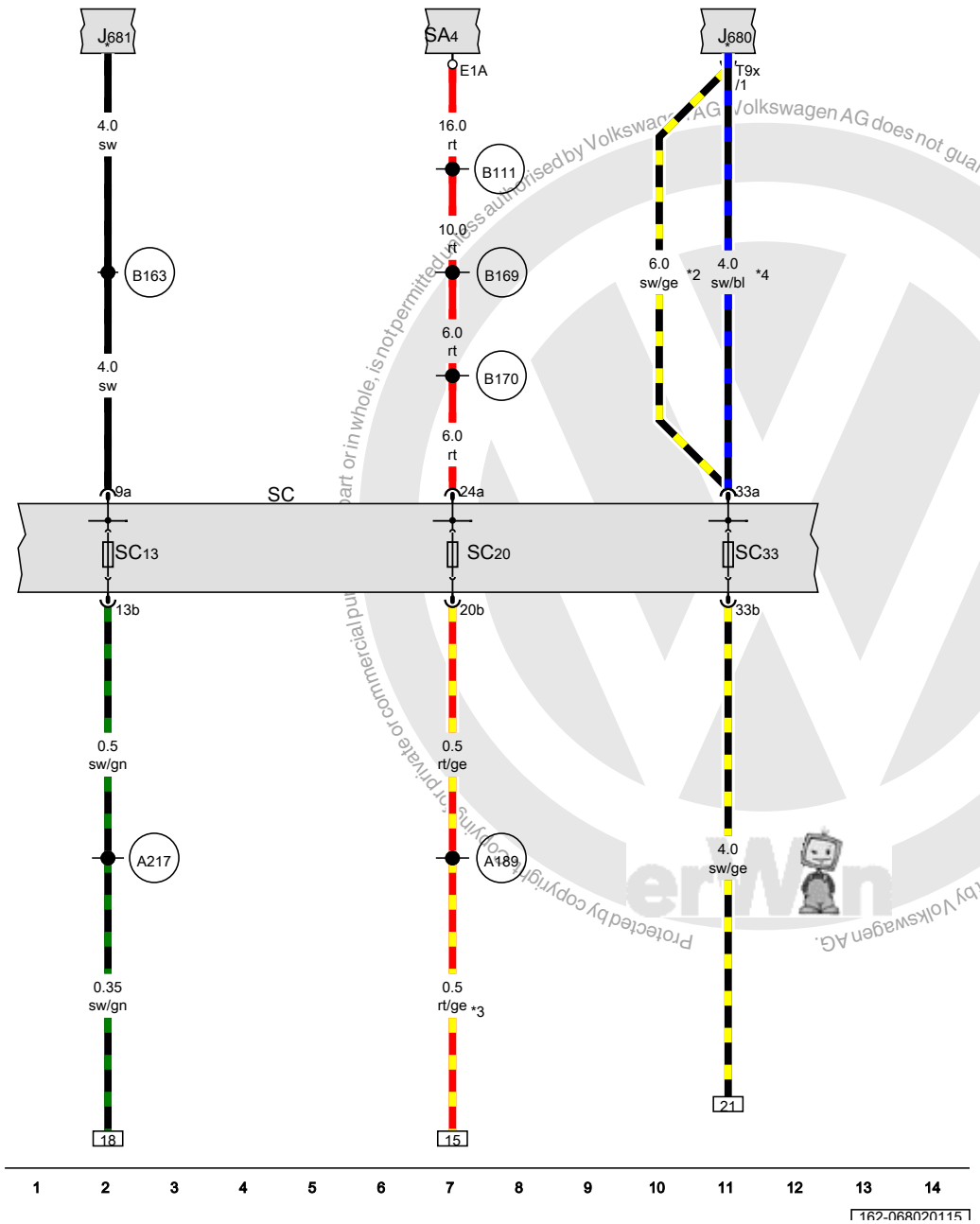

Fuse 4 (on fuse panel A), Fuse panel C

J680	Terminal 75 power supply relay 1
J681	Terminal 15 power supply relay 2
SA4	Fuse 4 (on fuse panel A)
SC	Fuse panel C
SC13	Fuse 13 (on fuse panel C)
SC20	Fuse 20 (on fuse panel C)
SC33	Fuse 33 (on fuse panel C)
T1	1-pin connector
T9x	9-pin connector
A189	Positive connection 5 (30a) (in instrument panel wiring harness)
A217	Positive connection 8 (15a) (in instrument panel wiring harness)
B111	Positive connection 1 (30a) (in interior wiring harness)
B163	Positive connection 1 (15) (in interior wiring harness)
B169	Positive connection 1 (30) (in interior wiring harness)
B170	Positive connection 2 (30) (in interior wiring harness)
*	Refer to applicable standard equipment wiring diagram
*2	from July 2012
*3	Only for vehicles with auxiliary coolant heater
*4	Through June 2012

ws	=	white
sw	=	black
ro	=	red
rt	=	red
br	=	brown
gn	=	green
bl	=	blue
gr	=	grey
li	=	lilac
vi	=	lilac
ge	=	yellow
or	=	orange
rs	=	pink

Protected by copyright. Copying, in part or in whole, is not permitted unless authorised by Volkswagen AG. Volkswagen AG does not guarantee or accept any liability with respect to the correctness of information in this document. Copyright by Volkswagen AG.

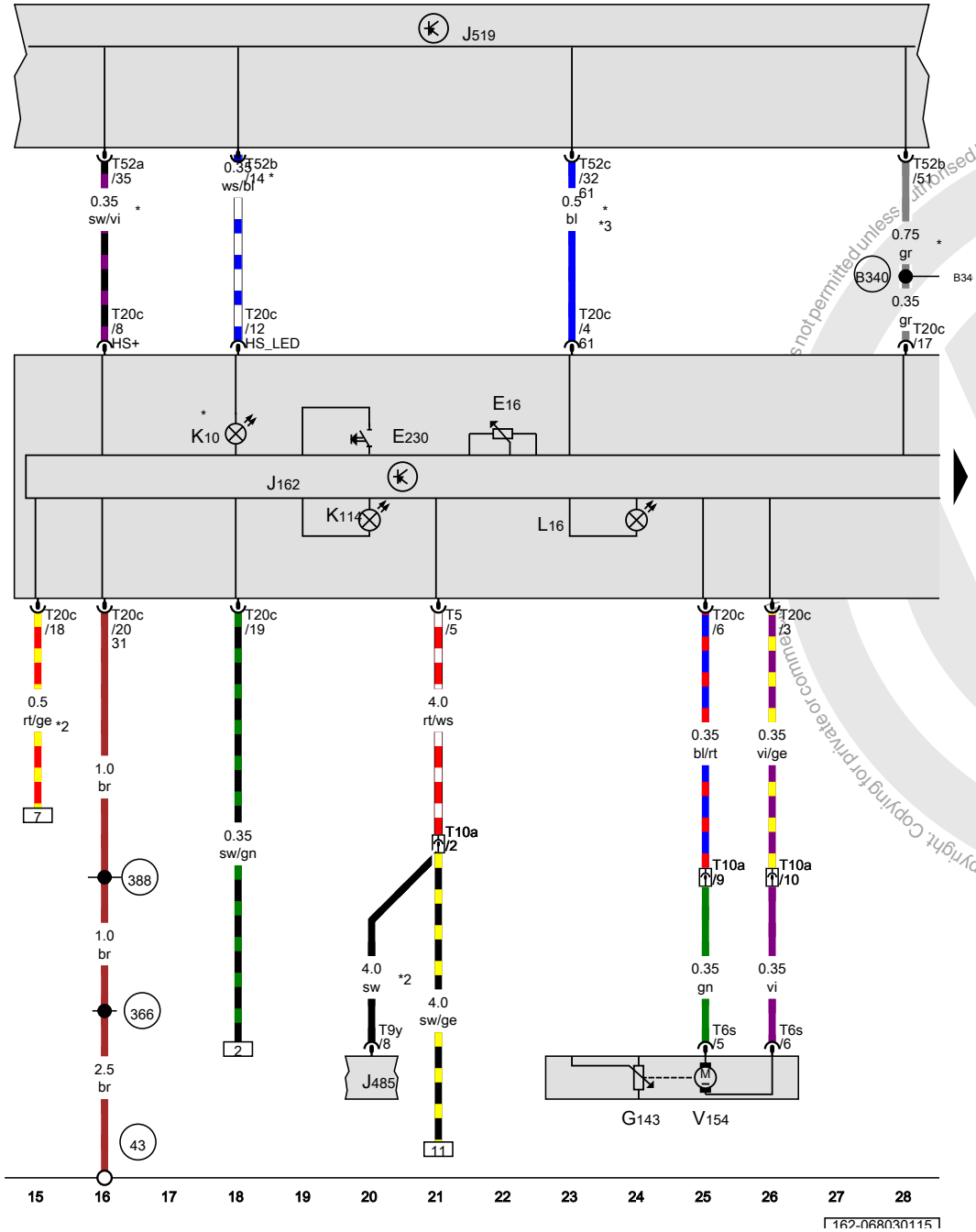

Heater control module, Vehicle electrical system control module, Fresh/recirculated air door motor

E16	Heater/heat output switch
E230	Rear window defogger button
G143	Recirculation door motor position sensor
J162	Heater control module
J485	Parking heater operation relay
J519	Vehicle electrical system control module
K10	Rear window defogger indicator lamp
K114	Fresh air and recirculation mode indicator lamp
L16	Fresh air control illumination bulb
T5	5-pin connector
T6s	6-pin connector
T9y	9-pin connector
T10a	10-pin connector
T20c	20-pin connector
T52a	52-pin connector
T52b	52-pin connector
T52c	52-pin connector
V154	Fresh/recirculated air door motor
43	Ground connection on A-pillar, lower right
366	Ground connection 1 (in main wiring harness)
388	Ground connection 23 (in main wiring harness)
B340	Connection 58d (in main wiring harness) 1
*	only for vehicles with High equipment (AW1)
*2	Only for vehicles with auxiliary coolant heater
*3	Only for vehicles with Start/Stop system

ws	=	white
sw	=	black
ro	=	red
rt	=	red
br	=	brown
gn	=	green
bl	=	blue
gr	=	grey
li	=	lilac
vi	=	lilac
ge	=	yellow
or	=	orange
rs	=	pink

Protected by copyright. Copying for private or commercial purposes, in any form or by any means, is not permitted unless authorised by Volkswagen AG. Volkswagen AG does not guarantee or accept any liability with respect to the correctness of information in this document. Copyright by Volkswagen AG.

Fresh air blower switch, Heater control module, Vehicle electrical system control module, Fresh air blower series resistor with fuse, Fresh air blower

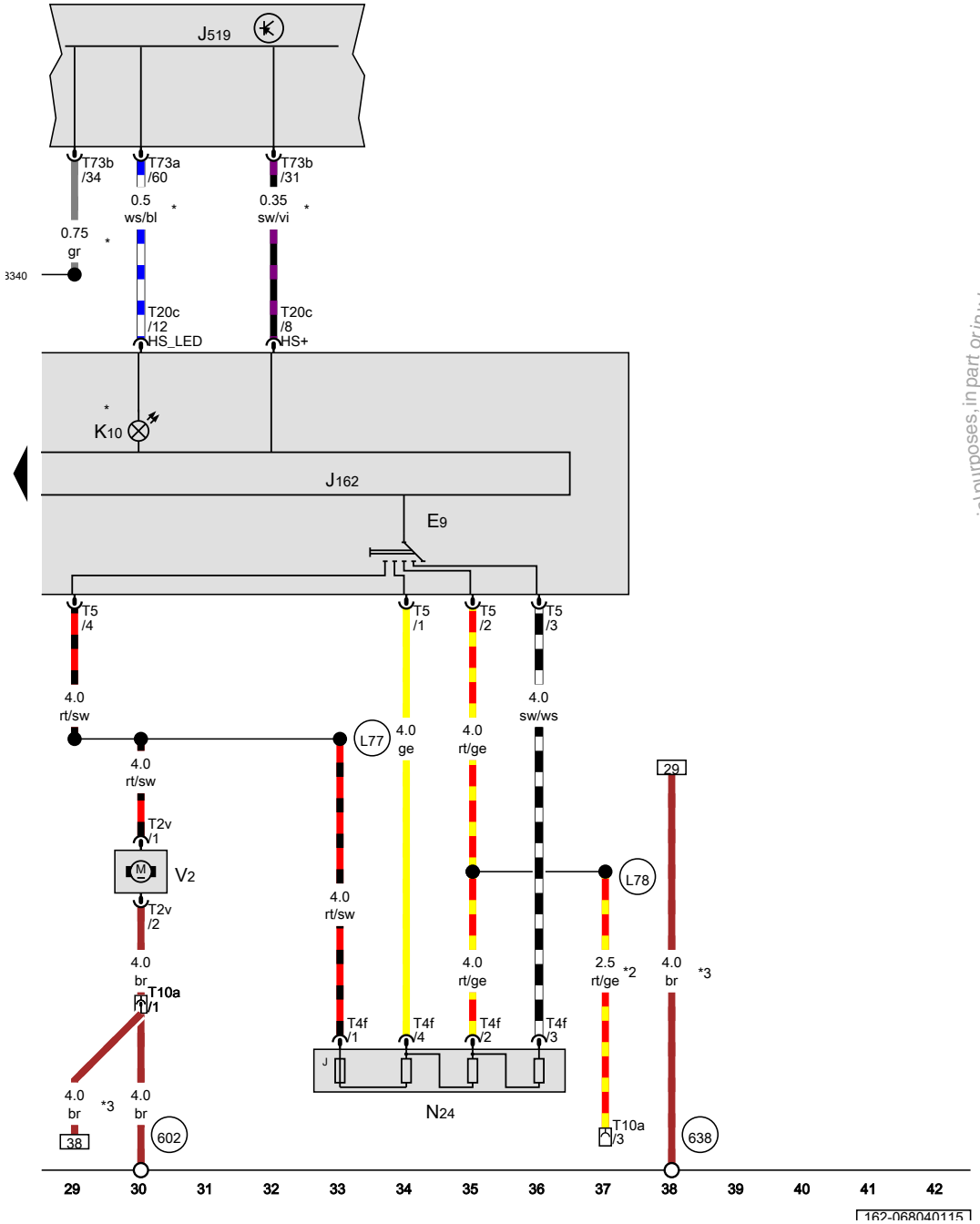

E9	Fresh air blower switch
J162	Heater control module
J519	Vehicle electrical system control module
K10	Rear window defogger indicator lamp
N24	Fresh air blower series resistor with fuse
T2v	2-pin connector
T4f	4-pin connector
T5	5-pin connector
T10a	10-pin connector, on the heating and A/C unit
T20c	20-pin connector
T73a	73-pin connector
T73b	73-pin connector
V2	Fresh air blower
602	Ground connection in left front footwell
638	Ground connection on right A-pillar
B340	Connection 58d (in main wiring harness) 1
L77	Connection (in fresh air blower wiring harness)
L78	Connection 1 (in fresh air blower wiring harness)
*	only for vehicles with Low equipment (AW0)
*2	Only for vehicles with auxiliary coolant heater
*3	Only for right-hand drive vehicles

ws	=	white
sw	=	black
ro	=	red
rt	=	red
br	=	brown
gn	=	green
bl	=	blue
gr	=	grey
li	=	lilac
vi	=	lilac
ge	=	yellow
or	=	orange
rs	=	pink

Protected by copyright. Copying for private or commercial purposes, in part or in whole, is not permitted unless authorised by Volkswagen AG. Volkswagen AG does not guarantee or accept any liability with respect to the correctness of information in this document. © Copyright by Volkswagen AG.

Sound system "Volkswagen Sound" , (8RB),(8RU)

from June 2011

Protected by copyright. Copying for private or commercial purposes, in part or in whole, is not permitted unless authorised by Volkswagen AG. Volkswagen AG does not guarantee or accept any liability with respect to the correctness of information in this document. Copyright by Volkswagen AG.

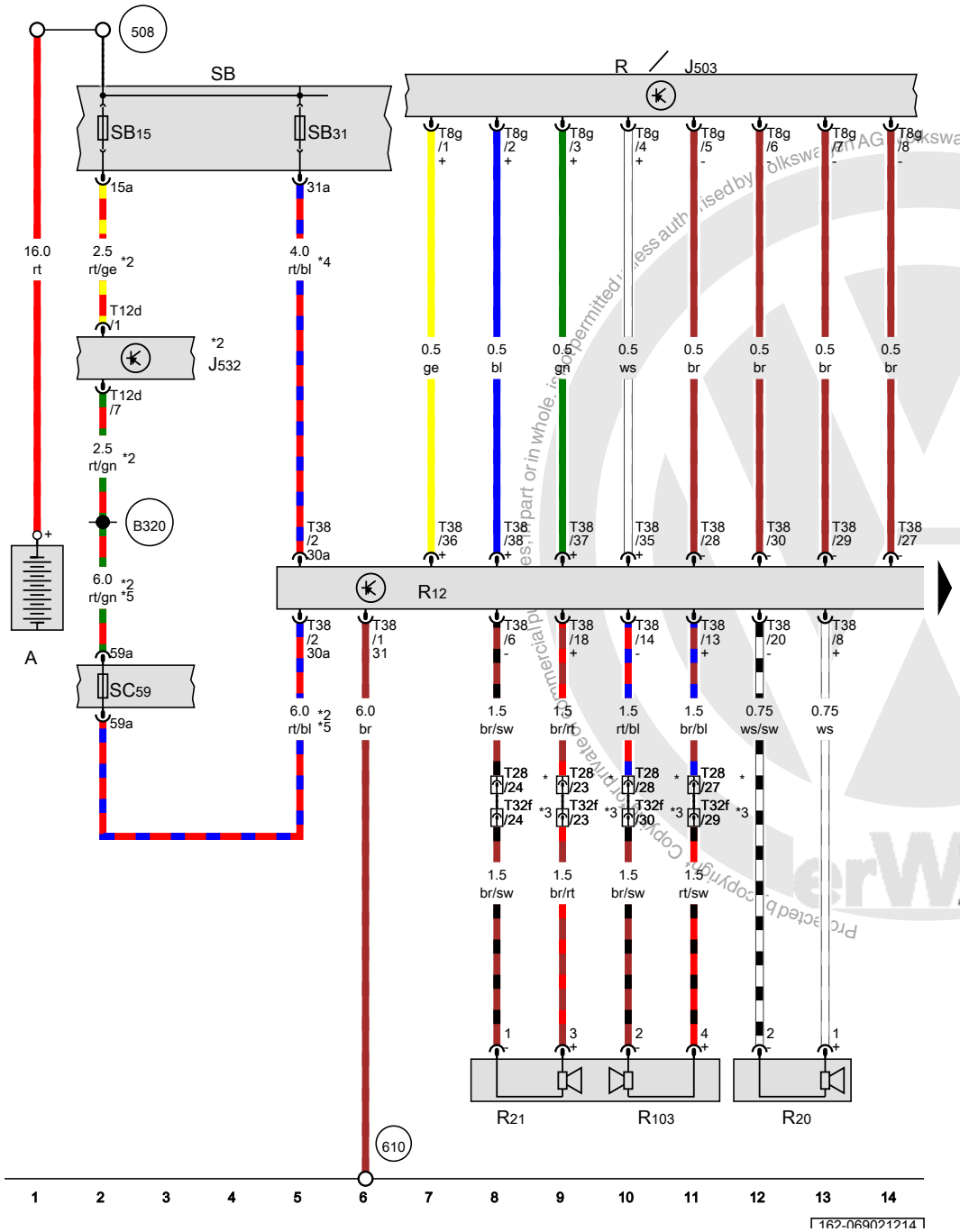

Radio/navigation display unit control module, Voltage stabilizer, Radio, Amplifier, Left front treble speaker, Left front bass speaker, Left front midrange speaker, Fuse panel B

A	Battery
J503	Radio/navigation display unit control module
J532	Voltage stabilizer
R	Radio
R12	Amplifier
R20	Left front treble speaker
R21	Left front bass speaker
R103	Left front midrange speaker
SB	Fuse panel B
SB15	Fuse 15 (on fuse panel B)
SB31	Fuse 31 (on fuse panel B)
SC59	Fuse 59 (on fuse panel C)
T8g	8-pin connector
T12d	12-pin connector
T28	28-pin connector, Left A-pillar, bottom
T32f	32-pin connector, Left A-pillar, bottom
T38	38-pin connector
508	Terminal 30 threaded connection (on E-box)
610	Audio ground connection under front center console
B320	Positive connection 6 (30a) (in main wiring harness)
*	only for vehicles with High equipment (AW1)
*2	Only for vehicles with Stop/Start system
*3	only for vehicles with Low equipment (AW0)
*4	Depending on equipment
*5	Through June 2012

ws	=	white
sw	=	black
ro	=	red
rt	=	red
br	=	brown
gn	=	green
bl	=	blue
gr	=	grey
li	=	lilac
vi	=	lilac
ge	=	yellow
or	=	orange
rs	=	pink

Volkswagen AG does not guarantee or assume any liability for the correctness of information in this document. Copyright by Volkswagen AG. Protected by copyright. Copying for private or commercial purposes, in part or in whole, is not permitted unless authorised by Volkswagen AG.

Vehicle electrical control module system, Data bus on board diagnostic interface, Amplifier, Left rear bass speaker, Right rear bass speaker, Right front treble speaker, Right front bass speaker, Right front midrange speaker, Subwoofer

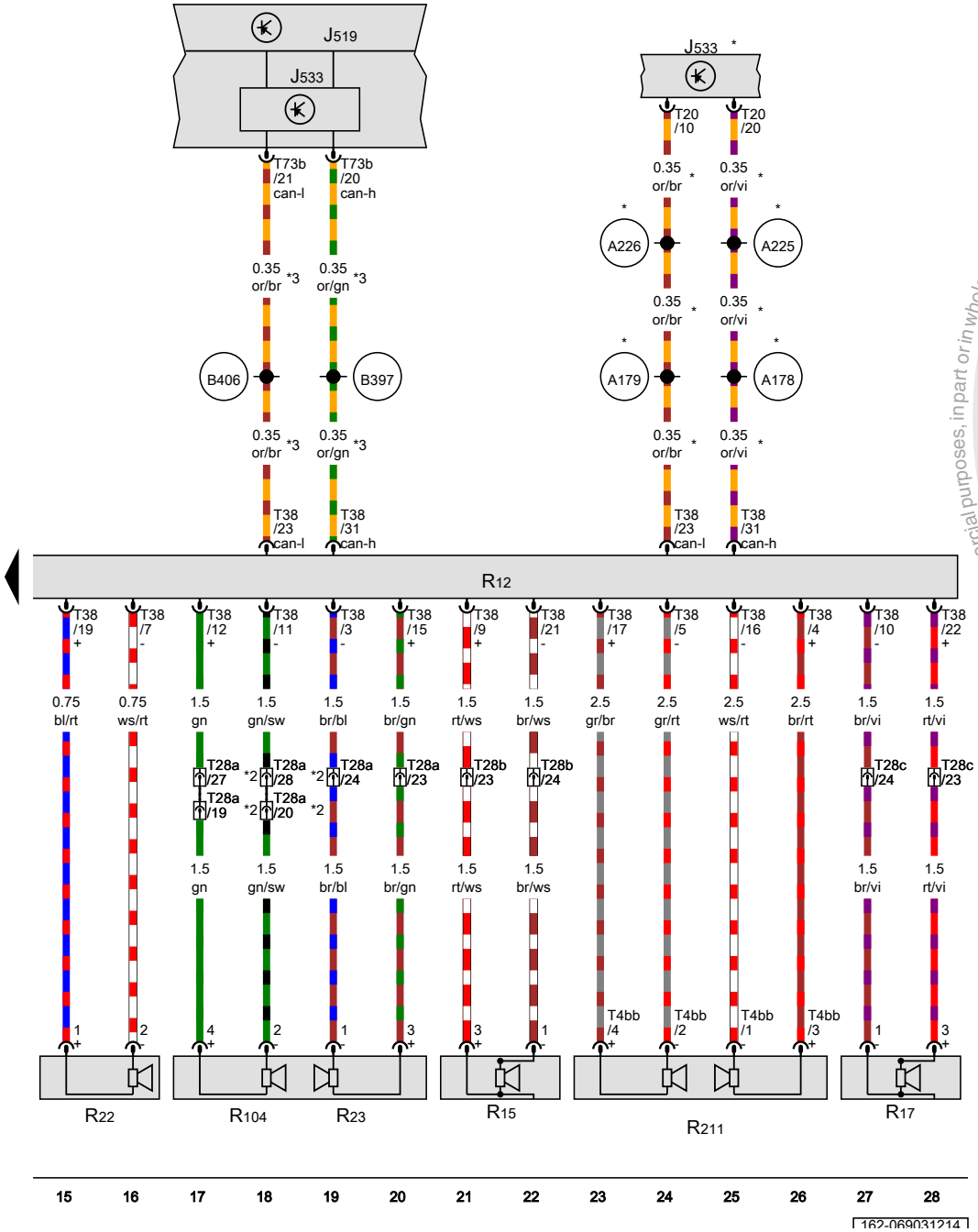

ws	=	white
sw	=	black
ro	=	red
rt	=	red
br	=	brown
gn	=	green
bl	=	blue
gr	=	grey
li	=	lilac
vi	=	lilac
ge	=	yellow
or	=	orange
rs	=	pink

J519	Vehicle electrical control module system
J533	Data bus on board diagnostic interface
R12	Amplifier
R15	Left rear bass speaker
R17	Right rear bass speaker
R22	Right front treble speaker
R23	Right front bass speaker
R104	Right front midrange speaker
R211	Subwoofer
T4bb	4-pin connector
T20	20-pin connector
T28a	28-pin connector, Right A-pillar, bottom
T28b	28-pin connector, on the left B-pillar
T28c	28-pin connector, on the right B-pillar
T38	38-pin connector
T73b	73-pin connector
A178	Infotainment CAN bus high connection (in instrument panel wiring harness)
A179	Infotainment CAN bus low connection (in instrument panel wiring harness)
A225	Infotainment CAN bus high connection 2 (in instrument panel wiring harness)
A226	Infotainment CAN bus low connection 2 (in instrument panel wiring harness)
B397	Comfort system CAN bus high connection 1 (in main wiring harness)
B406	Comfort system CAN bus low connection 1 (in main wiring harness)
*	only for vehicles with High equipment (AW1)
*2	Depending on equipment
*3	only for vehicles with Low equipment (AW0)

Protected by copyright. Copying for private or commercial purposes, in part or in whole, is not permitted unless authorised by Volkswagen AG. We do not guarantee or accept any liability with respect to the correctness of information in this document. Copyright by Volkswagen AG.

Keyless access/locking and starting system , (AW0)

from June 2011

Protected by copyright. Copying for private or commercial purposes, in part or in whole, is not permitted unless authorised by Volkswagen AG. Volkswagen AG does not guarantee or accept any liability with respect to the correctness of information in this document. Copyright by Volkswagen AG.

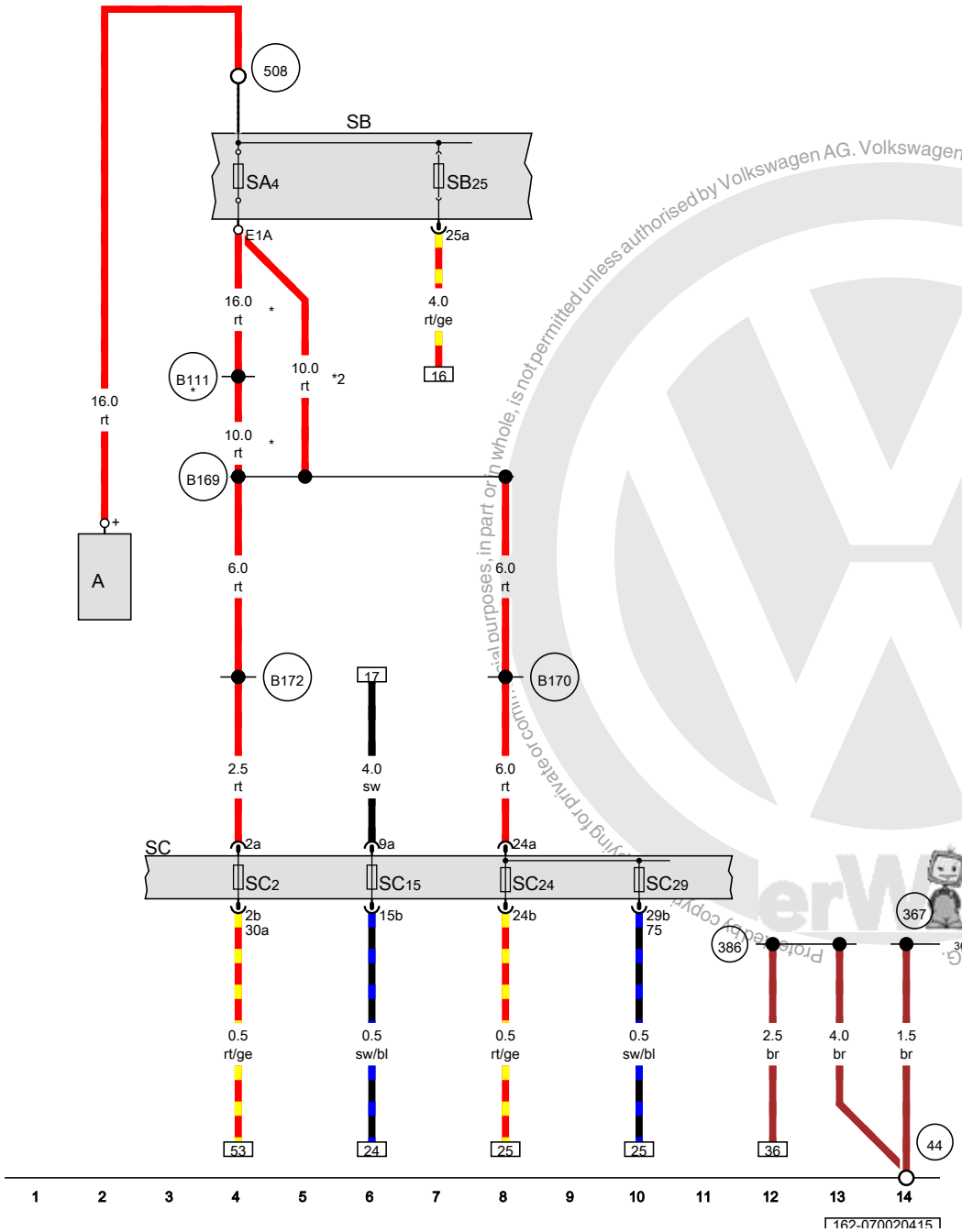

Fuse panel B, Fuse panel C

A	Battery
SA4	Fuse 4 (on fuse panel A)
SB	Fuse panel B
SC	Fuse panel C
SC2	Fuse 2 (on fuse panel C)
SC15	Fuse 15 (on fuse panel C)
SC24	Fuse 24 (on fuse panel C)
SB25	Fuse 25 (on fuse panel B)
SC29	Fuse 29 (on fuse panel C)
44	Ground connection on A-pillar, lower left
367	Ground connection 2 (in main wiring harness)
386	Ground connection 21 (in main wiring harness)
508	Terminal 30 threaded connection (on E-box)
B111	Positive connection 1 (30a) (in interior wiring harness)
B169	Positive connection 1 (30) (in interior wiring harness)
B170	Positive connection 2 (30) (in interior wiring harness)
B172	Positive connection 4 (30) (in interior wiring harness)
*	Omitted as a running change
*2	Running change

ws	=	white
sw	=	black
ro	=	red
rt	=	red
br	=	brown
gn	=	green
bl	=	blue
gr	=	grey
li	=	lilac
vi	=	lilac
ge	=	yellow
or	=	orange
rs	=	pink

Copyright by Volkswagen AG. Volkswagen AG does not guarantee or accept any liability with respect to the correctness of information in this document. Copying for private or commercial purposes, in part or in whole, is not permitted unless authorised by Volkswagen AG.

Access/start authorization control module, Vehicle electrical control module system, Terminal 15 power supply relay 2, Terminal 50 power supply relay, Access/start system antenna 1 in vehicle interior

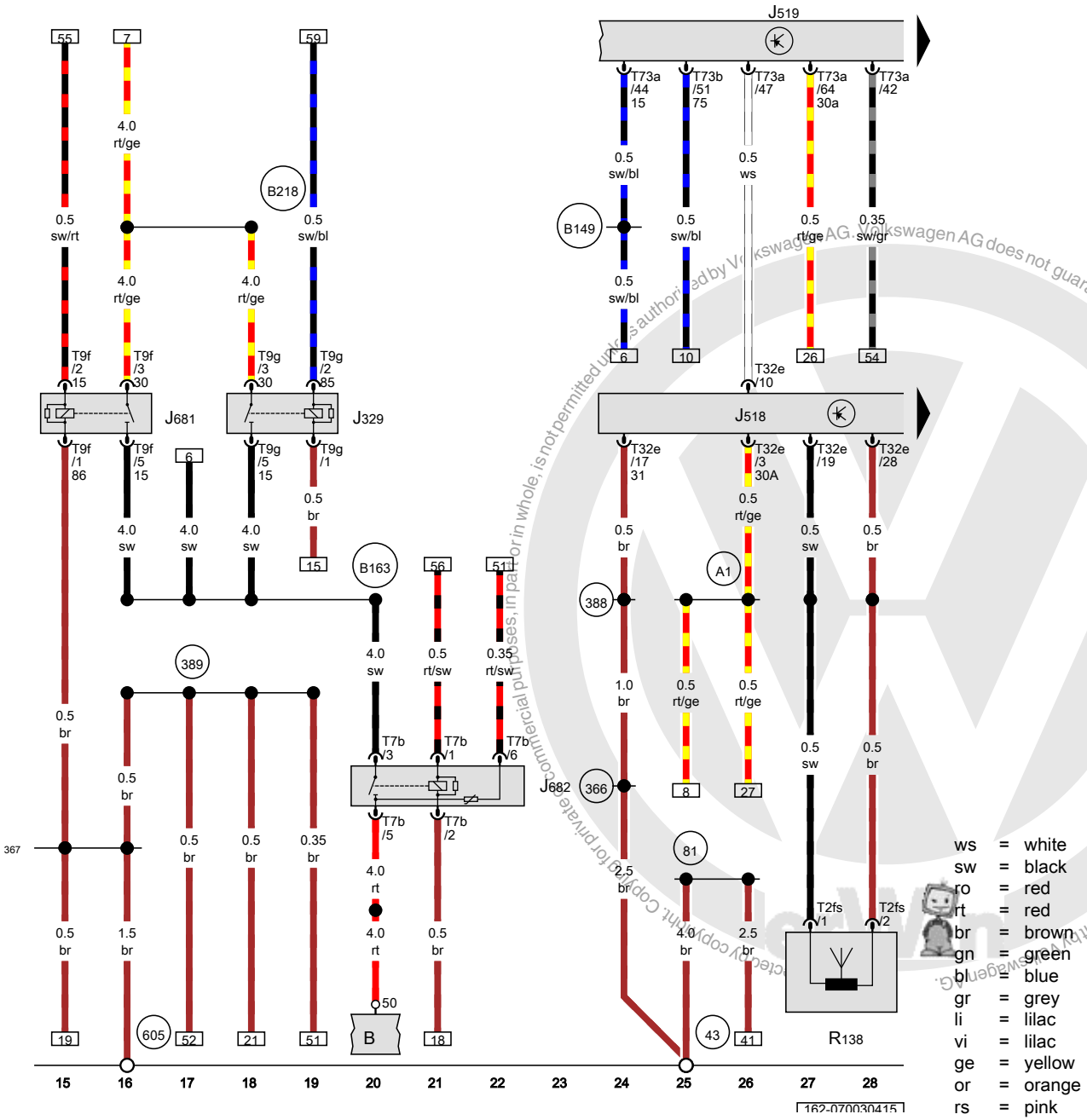

B	Starter
J329	Terminal 15 power supply relay
J518	Access/start authorization control module
J519	Vehicle electrical control module system
J681	Terminal 15 power supply relay 2
J682	Terminal 50 power supply relay
R138	Access/start system antenna 1 in vehicle interior, under the center console
T2fs	Double connector
T7b	7-pin connector
T9f	9-pin connector
T9g	9-pin connector
T32e	32-pin connector
T73a	73-pin connector
T73b	73-pin connector
43	Ground connection on A-pillar, lower right
81	Ground connection 1 (in instrument panel wiring harness)
366	Ground connection 1 (in main wiring harness)
367	Ground connection 2 (in main wiring harness)
388	Ground connection 23 (in main wiring harness)
389	Ground connection 24 (in main wiring harness)
605	Ground connection on upper steering column
A1	Positive connection (30a) (in instrument panel wiring harness)
B149	Positive connection 2 (15a) (in interior wiring harness)
B163	Positive connection 1 (15) (in interior wiring harness)
B218	Positive connection 6 (30) (in interior wiring harness)

ws	=	white
sw	=	black
ro	=	red
rt	=	red
br	=	brown
gn	=	green
bl	=	blue
gr	=	grey
li	=	lilac
vi	=	lilac
ge	=	yellow
or	=	orange
rs	=	pink

Volkswagen AG does not guarantee or accept any liability with respect to the correctness of information in this document. Copyright by Volkswagen AG.

Driver exterior door handle touch sensor, Front passenger exterior door handle touch sensor, Access/start authorization control module, Vehicle electrical control module system, Driver access/start system antenna, Front passenger access/start system antenna, Access/start system antenna in rear bumper, Access/start system antenna in luggage compartment, Access/start system antenna 2 in vehicle interior

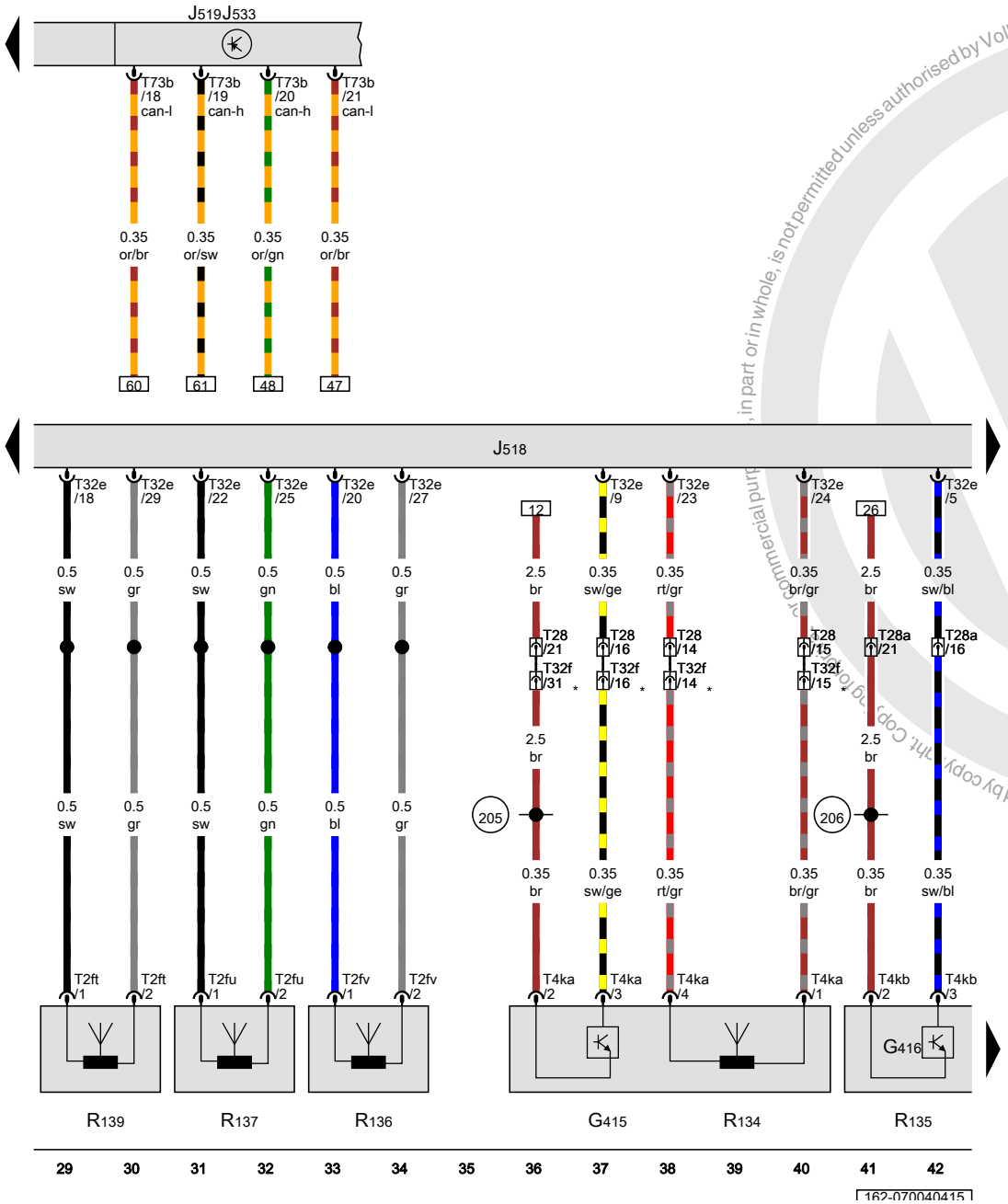

ws	=	white
sw	=	black
ro	=	red
rt	=	red
br	=	brown
gn	=	green
bl	=	blue
gr	=	grey
li	=	lilac
vi	=	lilac
ge	=	yellow
or	=	orange
rs	=	pink

G415	Driver exterior door handle touch sensor
G416	Front passenger exterior door handle touch sensor
J518	Access/start authorization control module
J519	Vehicle electrical control module system
J533	Data bus on board diagnostic interface
R134	Driver access/start system antenna
R135	Front passenger access/start system antenna
R136	Access/start system antenna in rear bumper
R137	Access/start system antenna in luggage compartment
R139	Access/start system antenna 2 in vehicle interior, in the interior
T2ft	Double connector
T2fu	Double connector
T2fv	Double connector
T4ka	4-pin connector
T4kb	4-pin connector
T28	28-pin connector, Left A-pillar, bottom
T28a	28-pin connector, Right A-pillar, bottom
T32e	32-pin connector
T32f	32-pin connector, Left A-pillar, bottom
T73b	73-pin connector
205	Ground connection (in driver door wiring harness)
206	Ground connection (in front passenger door wiring harness)
*	Only for vehicles with sound system

Protected by copyright. Copying for private or commercial purposes, in part or in whole, is not permitted unless authorised by Volkswagen AG. Volkswagen AG does not guarantee or accept any liability with respect to the correctness of information in this document. Copyright by Volkswagen AG.

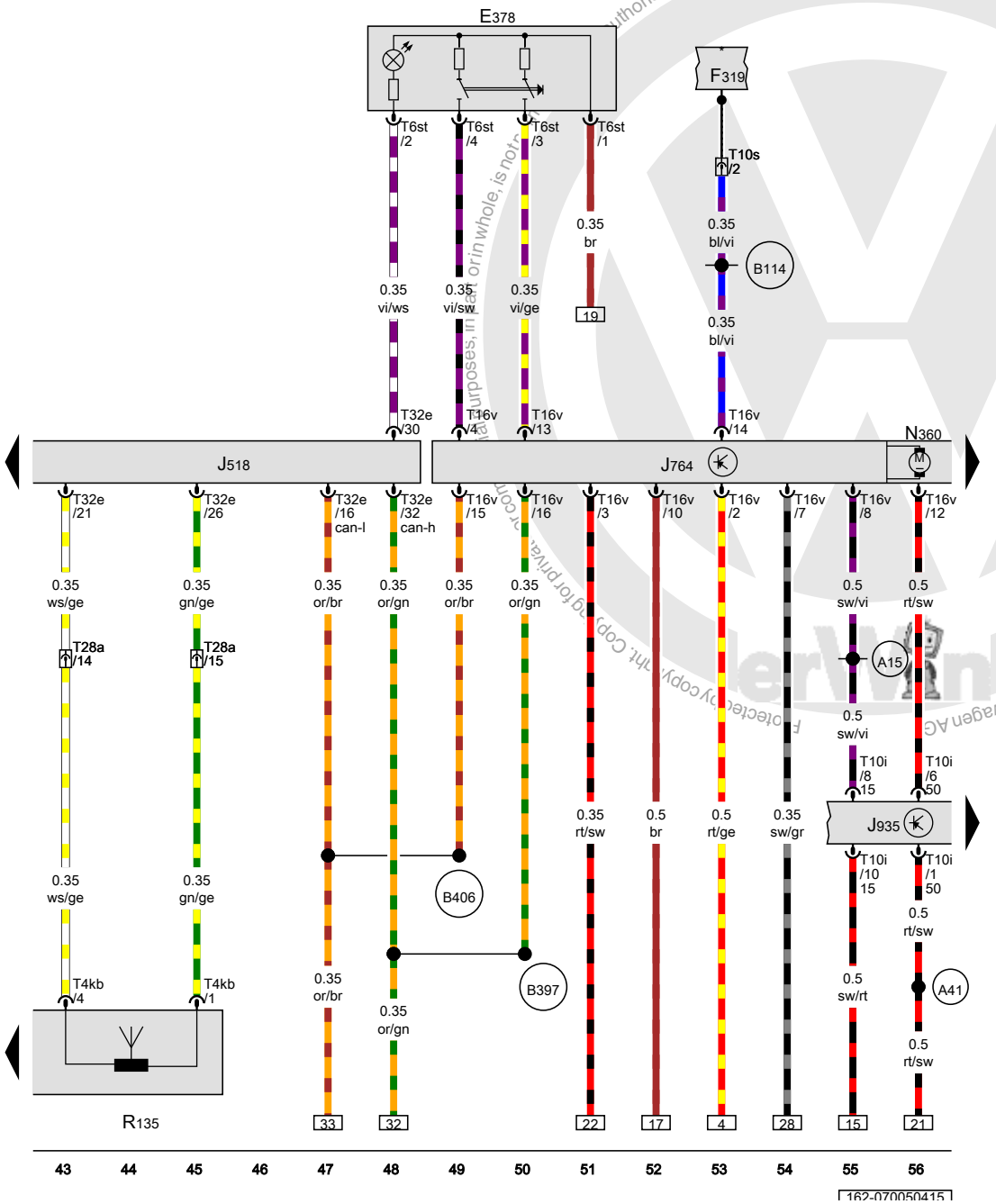

ws = white
sw = black
ro = red
rt = red
br = brown
gn = green
bl = blue
gr = grey
li = lilac
vi = lilac
ge = yellow
or = orange
rs = pink

Start system button, Access/start authorization control module, Electronic steering column lock control module, Converter box, Front passenger access/start system antenna

E378	Start system button
F319	Selector lever park position lock switch
J518	Access/start authorization control module
J764	Electronic steering column lock control module
J935	Converter box
N360	Steering column lock actuator
R135	Front passenger access/start system antenna
T4kb	4-pin connector
T6st	6-pin connector
T10i	10-pin connector
T10s	10-pin connector
T16v	16-pin connector
T28a	28-pin connector, Right A-pillar, bottom
T32e	32-pin connector
A15	Plus connection (15) (in instrument cluster wiring harness)
A41	Positive connection (50) (in instrument panel wiring harness)
B114	Lock switch connection (in interior wiring harness)
B397	Comfort system CAN bus high connection 1 (in main wiring harness)
B406	Comfort system CAN bus low connection 1 (in main wiring harness)
*	Only for vehicles with automatic transmission

Copyright by Volkswagen AG. Protected by copyright. Copying for private or commercial purposes, in part or in whole, is not permitted unless authorised by Volkswagen AG. Volkswagen AG does not guarantee or accept any liability with respect to the correctness of information in this document.

Anti-theft immobilizer reader coil, Multifunction indicator, Anti-theft immobilizer control module, Electronic steering column lock control module, Converter box, Instrument cluster

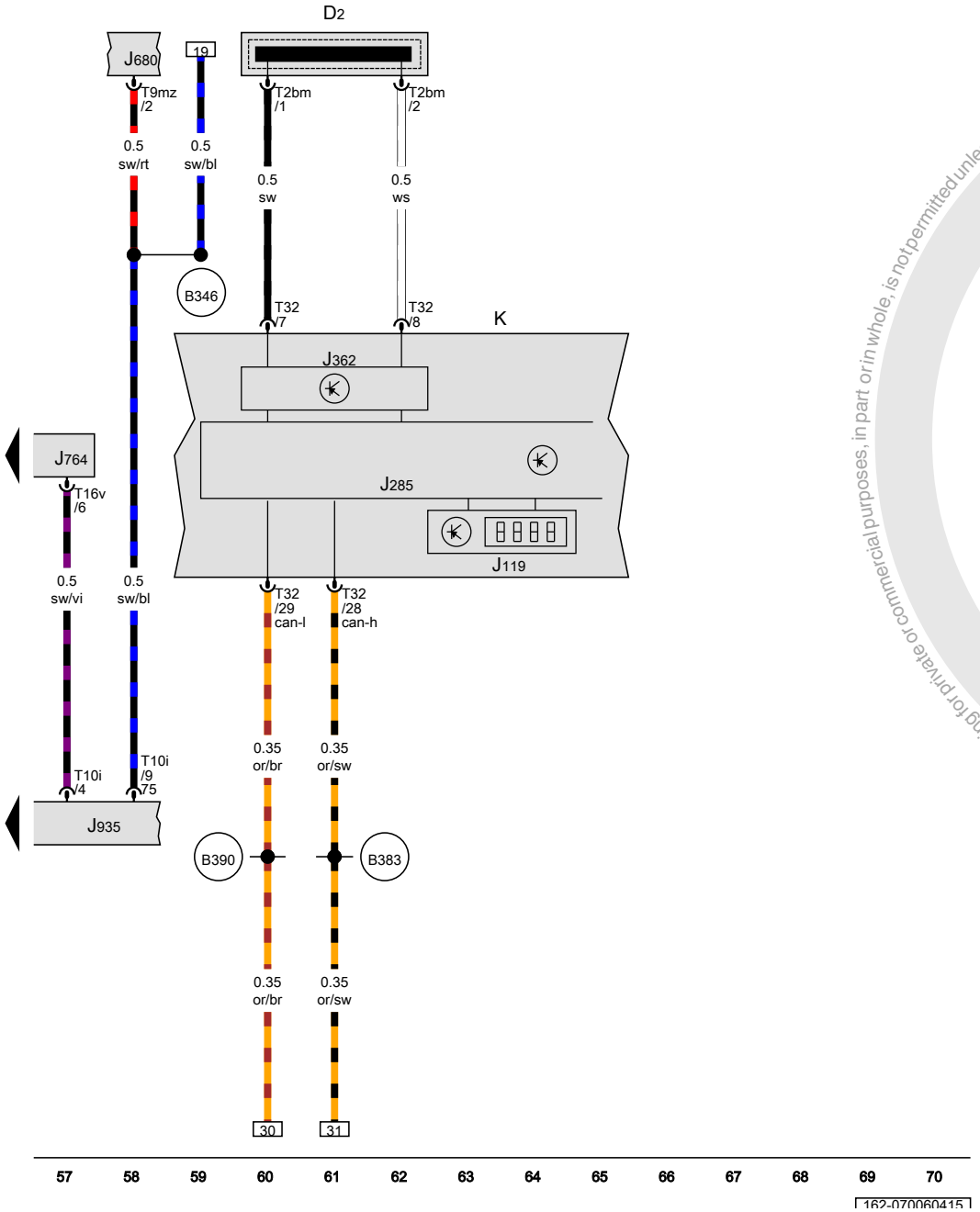

D2	Anti-theft immobilizer reader coil
J119	Multifunction indicator
J285	Instrument cluster control module
J362	Anti-theft immobilizer control module
J680	Terminal 75 power supply relay 1
J764	Electronic steering column lock control module
J935	Converter box
K	Instrument cluster
T2bm	Double connector
T9mz	9-pin connector
T10i	10-pin connector
T16v	16-pin connector
T32	32-pin connector
B346	Connection 75 (in main wiring harness) 1
B383	Powertrain CAN bus high connection 1 (in main wiring harness)
B390	Powertrain CAN bus low connection 1 (in main wiring harness)

ws	=	white
sw	=	black
ro	=	red
rt	=	red
br	=	brown
gn	=	green
bl	=	blue
gr	=	grey
li	=	lilac
vi	=	lilac
ge	=	yellow
or	=	orange
rs	=	pink

Protected by copyright. Copying for private or commercial purposes, in part or in whole, is not permitted unless authorised by Volkswagen AG. Volkswagen AG does not guarantee or assume any liability with respect to the correctness of information in this document. Copyright by Volkswagen AG.

Keyless access/locking and starting system , (AW1)

from April 2010

Protected by copyright. Copying for private or commercial purposes, in part or in whole, is not permitted unless authorised by Volkswagen AG. Volkswagen AG does not guarantee or accept any liability with respect to the correctness of information in this document. Copyright by Volkswagen AG.

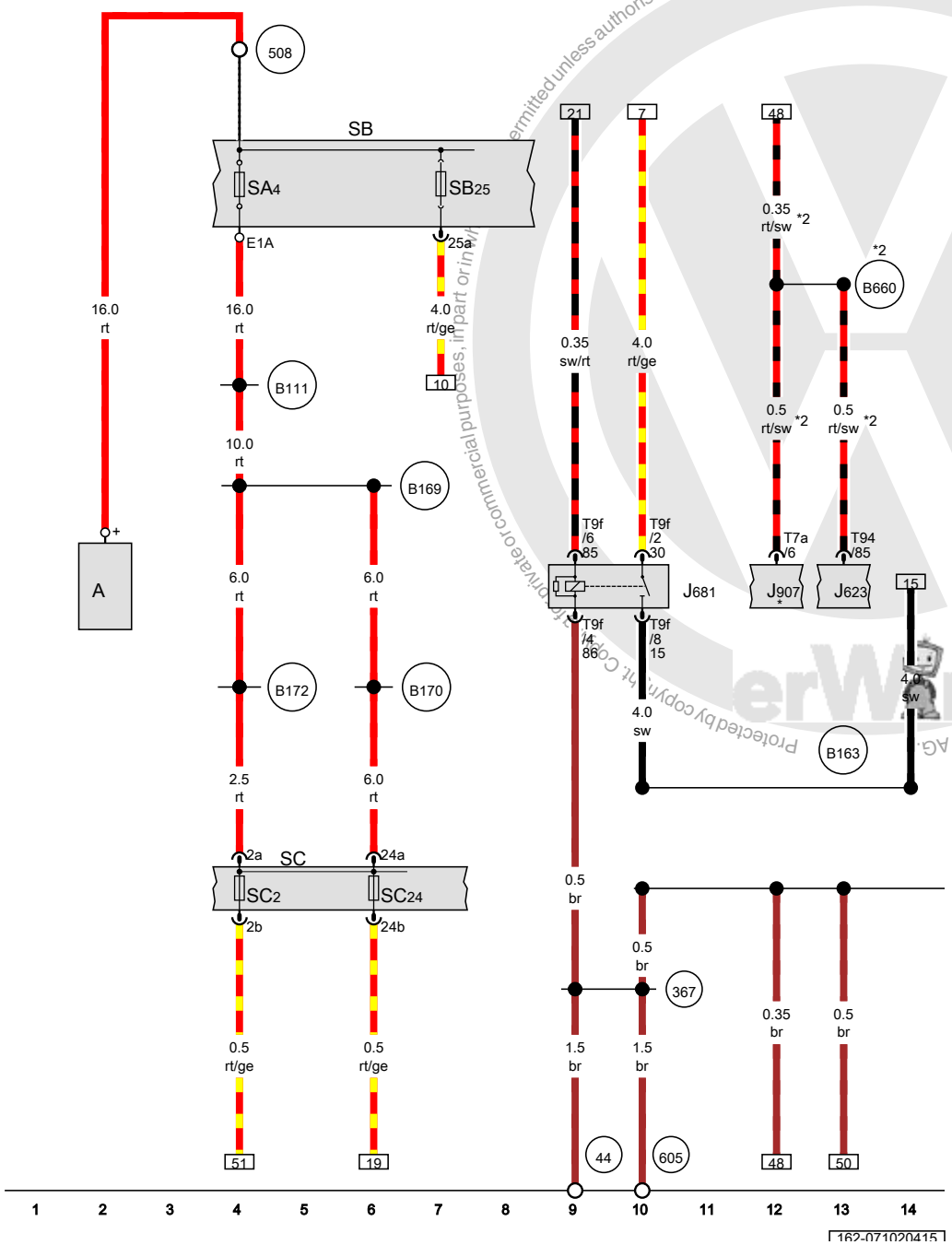

ws	=	white
sw	=	black
ro	=	red
rt	=	red
br	=	brown
gn	=	green
bl	=	blue
gr	=	grey
li	=	lilac
vi	=	lilac
ge	=	yellow
or	=	orange
rs	=	pink

Terminal 15 power supply relay 2, Fuse panel B, Fuse panel C

A	Battery
J623	Engine control module
J681	Terminal 15 power supply relay 2
J907	Starter relay 2
SA4	Fuse 4 (on fuse panel A)
SB	Fuse panel B
SC	Fuse panel C
SC2	Fuse 2 (on fuse panel C)
SC24	Fuse 24 (on fuse panel C)
SB25	Fuse 25 (on fuse panel B)
T7a	7-pin connector
T9f	9-pin connector
T94	94-pin connector
44	Ground connection on A-pillar, lower left
367	Ground connection 2 (in main wiring harness)
389	Ground connection 24 (in main wiring harness)
508	Terminal 30 threaded connection (on E-box)
605	Ground connection on upper steering column
B111	Positive connection 1 (30a) (in interior wiring harness)
B163	Positive connection 1 (15) (in interior wiring harness)
B169	Positive connection 1 (30) (in interior wiring harness)
B170	Positive connection 2 (30) (in interior wiring harness)
B172	Positive connection 4 (30) (in interior wiring harness)
B660	Diagnostic terminal 50 connection (in main wiring harness)
*	Refer to the applicable Start/Stop system wiring diagram
*2	Only for vehicles with Stop/Start system

Reproduction prohibited unless authorised by Volkswagen AG. Volkswagen AG does not guarantee or accept any liability with respect to the correctness of information in this document. Copyright by Volkswagen AG. Protected by copyright. Copying for private or commercial purposes, in part or in whole, is not permitted unless authorised by Volkswagen AG.

Access/start authorization control module, Vehicle electrical control module system, Terminal 50 power supply relay, Access/start system antenna in luggage compartment, Access/start system antenna 1 in vehicle interior, Access/start system antenna 2 in vehicle interior

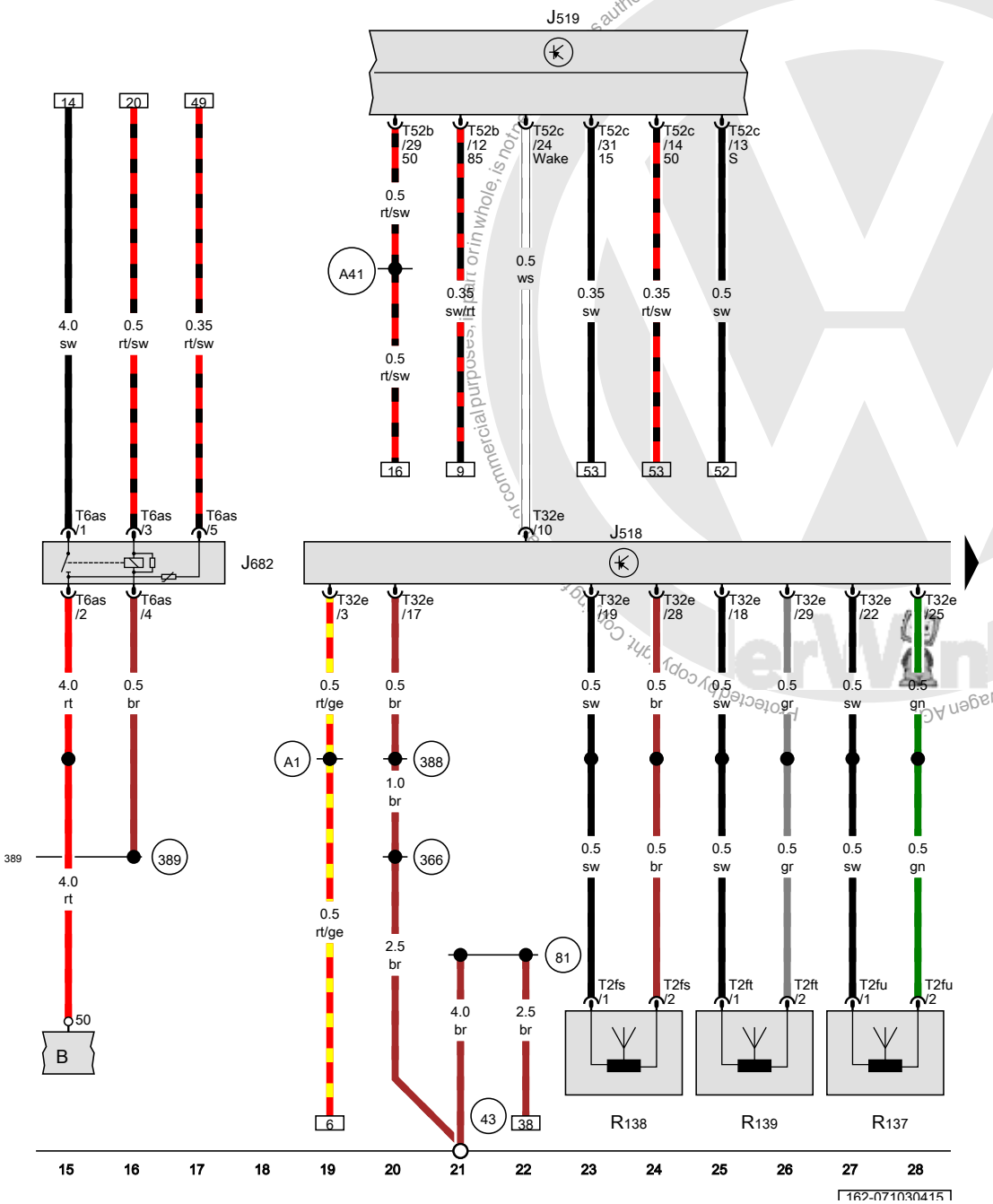

B	Starter
J518	Access/start authorization control module
J519	Vehicle electrical control module system
J682	Terminal 50 power supply relay
R137	Access/start system antenna in luggage compartment
R138	Access/start system antenna 1 in vehicle interior, under the center console
R139	Access/start system antenna 2 in vehicle interior, in the interior
T2fs	Double connector
T2ft	Double connector
T2fu	Double connector
T6as	6-pin connector, red
T32e	32-pin connector
T52b	52-pin connector
T52c	52-pin connector
43	Ground connection on A-pillar, lower right
81	Ground connection 1 (in instrument panel wiring harness)
366	Ground connection 1 (in main wiring harness)
388	Ground connection 23 (in main wiring harness)
389	Ground connection 24 (in main wiring harness)
A1	Positive connection (30a) (in instrument panel wiring harness)
A41	Positive connection (50) (in instrument panel wiring harness)

ws	=	white
sw	=	black
ro	=	red
rt	=	red
br	=	brown
gn	=	green
bl	=	blue
gr	=	grey
li	=	lilac
vi	=	lilac
ge	=	yellow
or	=	orange
rs	=	pink

authorised by Volkswagen AG. Volkswagen AG does not guarantee or accept any liability with respect to the correctness of information in this document. Copyright by Volkswagen AG. Protected by copyright. Copying for commercial purposes, in part or in whole, is not permitted.

Commercial purposes, in part or in whole, is not permitted unless authorised by Volkswagen AG. Volkswagen AG does not guarantee or accept any liability with respect to the correctness of information

Driver exterior door handle touch sensor, Front passenger exterior door handle touch sensor, Access/start authorization control module, Driver access/start system antenna, Front passenger access/start system antenna, Access/start system antenna in rear bumper

G415	Driver exterior door handle touch sensor
G416	Front passenger exterior door handle touch sensor
J518	Access/start authorization control module
R134	Driver access/start system antenna
R135	Front passenger access/start system antenna
R136	Access/start system antenna in rear bumper
T2fv	Double connector
T4ka	4-pin connector
T4kb	4-pin connector
T28	28-pin connector, Left A-pillar, bottom
T28a	28-pin connector, Right A-pillar, bottom
T32e	32-pin connector
44	Ground connection on A-pillar, lower left
205	Ground connection (in driver door wiring harness)
206	Ground connection (in front passenger door wiring harness)
386	Ground connection 21 (in main wiring harness)

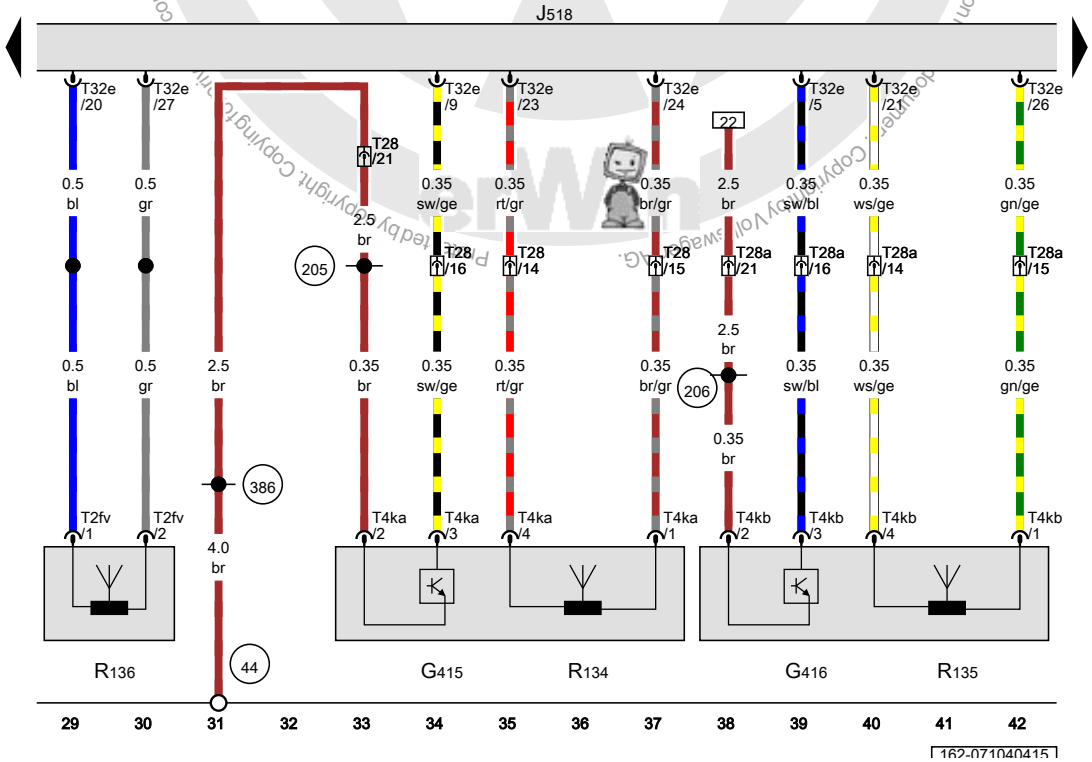

ws	=	white
sw	=	black
ro	=	red
rt	=	red
br	=	brown
gn	=	green
bl	=	blue
gr	=	grey
li	=	lilac
vi	=	lilac
ge	=	yellow
or	=	orange
rs	=	pink

Start system button, Access/start authorization control module, Electronic steering column lock control module

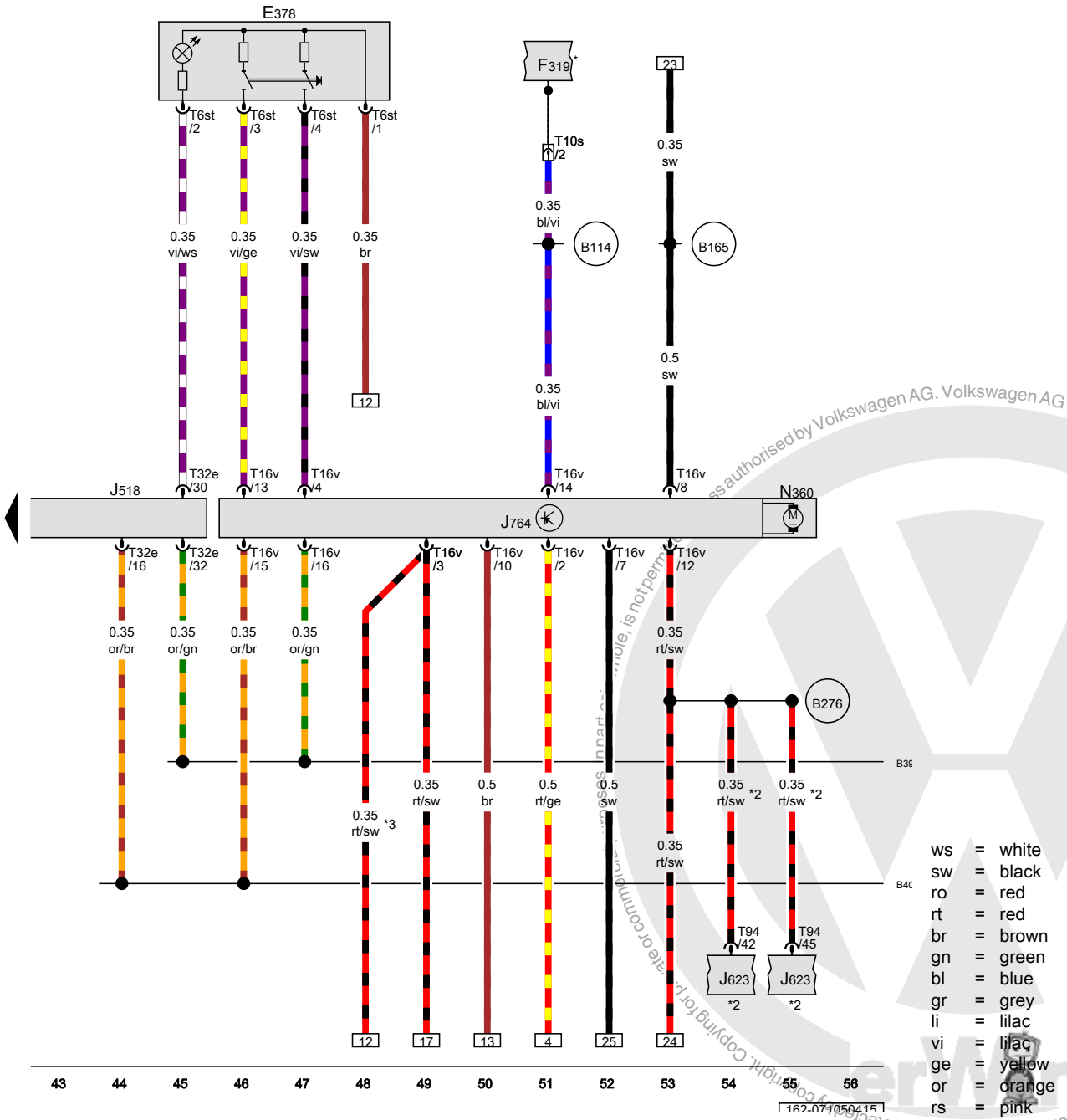

ws	=	white	
sw	=	black	
ro	=	red	
rt	=	red	
br	=	brown	
gn	=	green	
bl	=	blue	
gr	=	grey	
li	=	lilac	
vi	=	lilac	
ge	=	yellow	
or	=	orange	
rs	=	pink	

E378	Start system button
F319	Selector lever park position lock switch
J518	Access/start authorization control module
J623	Engine control module
J764	Electronic steering column lock control module
N360	Steering column lock actuator
T6st	6-pin connector
T10s	10-pin connector
T16v	16-pin connector
T32e	32-pin connector
T94	94-pin connector
B114	Lock switch connection (in interior wiring harness)
B165	Positive connection 2 (15) (in interior wiring harness)
B276	Positive connection (50) (in main wiring harness)
B397	Comfort system CAN bus high connection 1 (in main wiring harness)
B406	Comfort system CAN bus low connection 1 (in main wiring harness)
*	Only for vehicles with automatic transmission
*2	Refer to applicable engine wiring diagram
*3	Only for vehicles with Stop/Start system

Protected by copyright. Copying for private or commercial purposes, in part or in whole, is not permitted unless authorised by Volkswagen AG. Volkswagen AG does not guarantee or accept any liability with respect to the correctness of information in this document. Copyright by Volkswagen AG.

Anti-theft immobilizer reader coil, Multifunction indicator, Anti-theft immobilizer control module, Data bus on board diagnostic interface, Instrument cluster

D2	Anti-theft immobilizer reader coil
J119	Multifunction indicator
J285	Instrument cluster control module
J362	Anti-theft immobilizer control module
J533	Data bus on board diagnostic interface
K	Instrument cluster
T2bm	Double connector
T20	20-pin connector
T32	32-pin connector
B397	Comfort system CAN bus high connection 1 (in main wiring harness)
B406	Comfort system CAN bus low connection 1 (in main wiring harness)

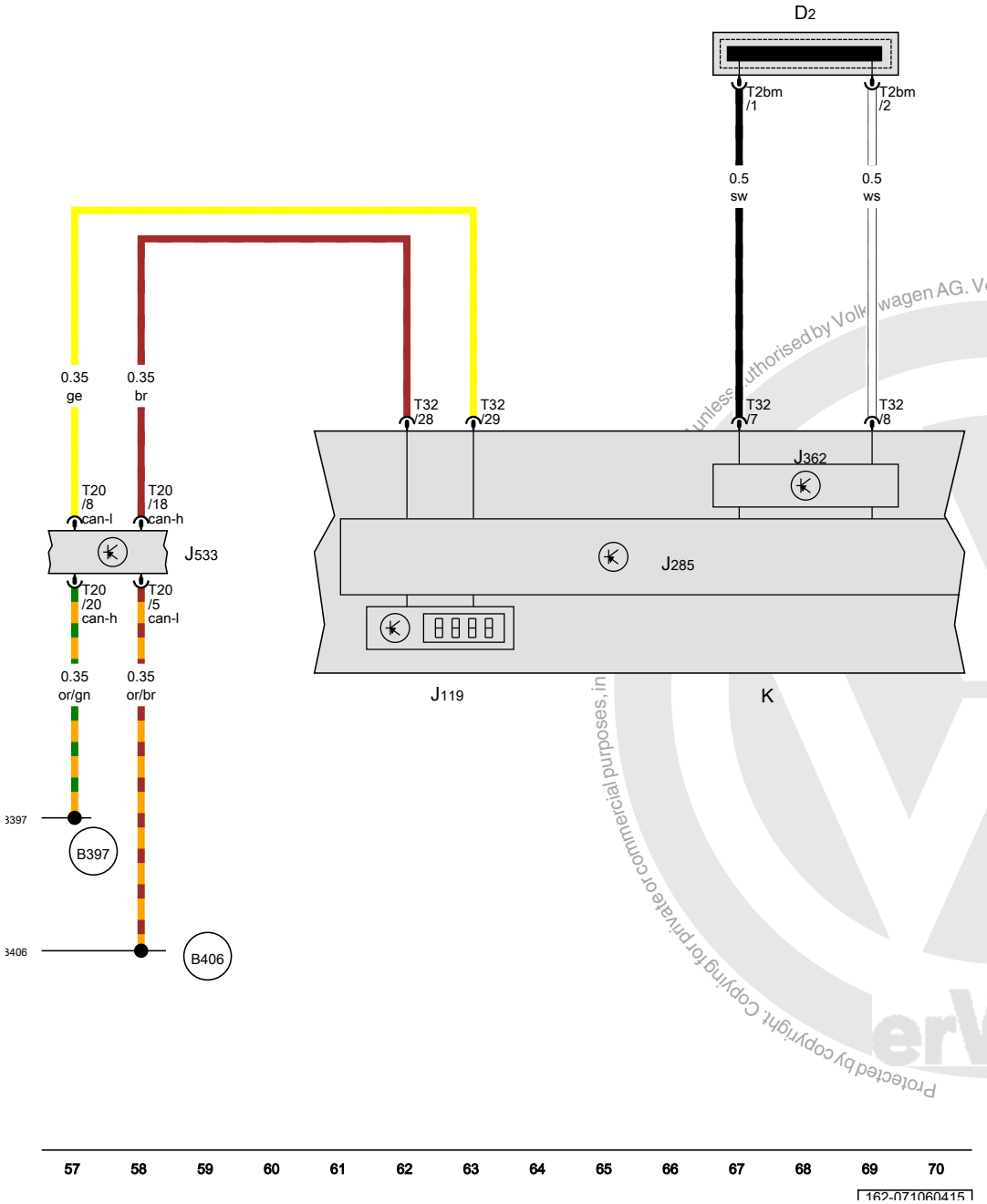

ws	=	white
sw	=	black
ro	=	red
rt	=	red
br	=	brown
gn	=	green
bl	=	blue
gr	=	grey
li	=	lilac
vi	=	lilac
ge	=	yellow
or	=	orange
rs	=	pink

Protected by copyright. Copying for private or commercial purposes, in unless authorised by Volkswagen AG. Volkswagen AG does not guarantee or accept any liability with respect to the correctness of information in this document. Copyright by Volkswagen AG.

Keyless access/locking and starting system , (AW1)

from June 2011

Protected by copyright. Copying for private or commercial purposes, in part or in whole, is not permitted unless authorised by Volkswagen AG. Volkswagen AG does not guarantee or accept any liability with respect to the correctness of information in this document. Copyright by Volkswagen AG.

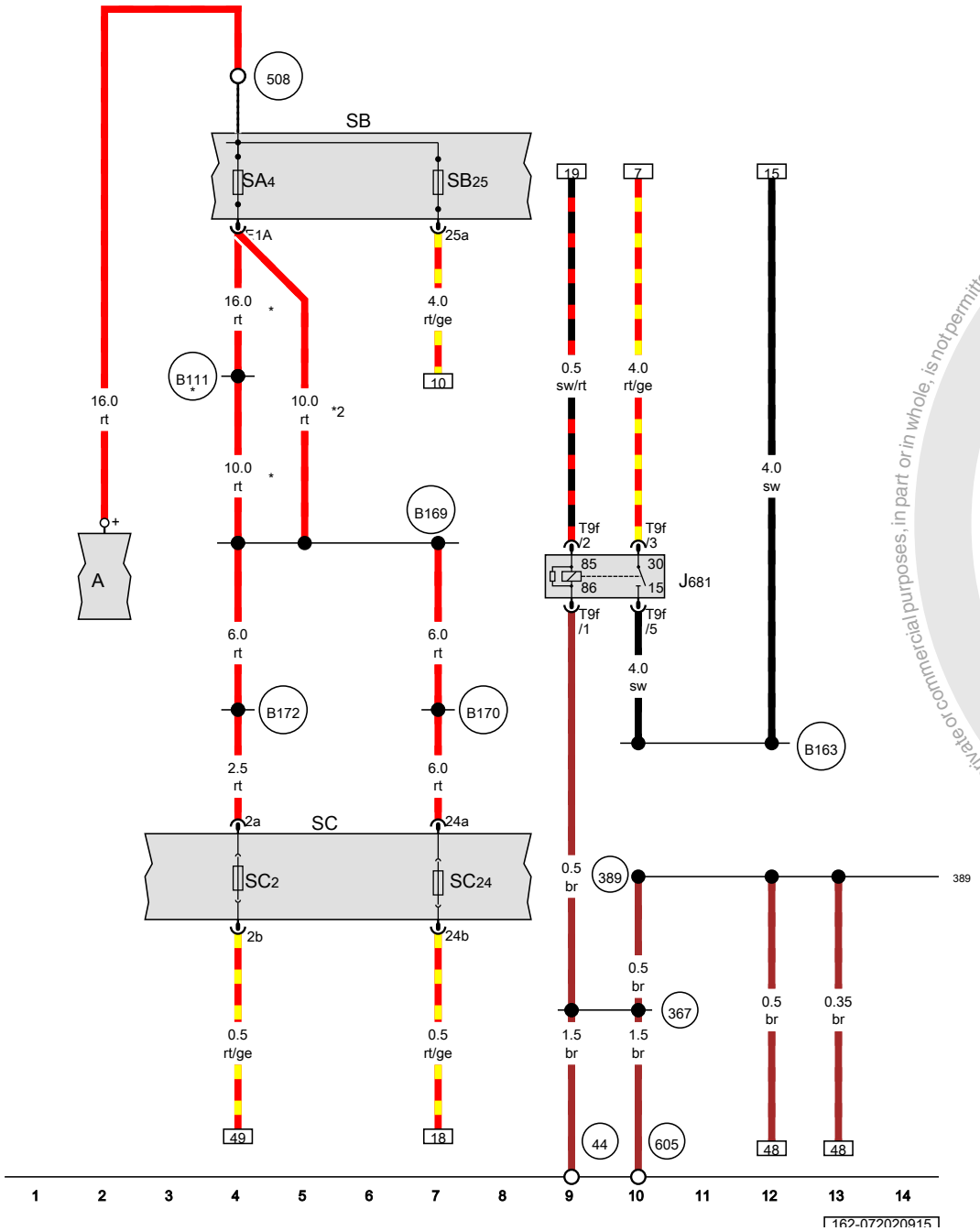

Terminal 15 power supply relay 2, Fuse panel B, Fuse panel C

A	Battery
J681	Terminal 15 power supply relay 2
SA4	Fuse 4 (on fuse panel A)
SB	Fuse panel B
SC	Fuse panel C
SC2	Fuse 2 (on fuse panel C)
SC24	Fuse 24 (on fuse panel C)
SB25	Fuse 25 (on fuse panel B)
T9f	9-pin connector
44	Ground connection on A-pillar, lower left
367	Ground connection 2 (in main wiring harness)
389	Ground connection 24 (in main wiring harness)
508	Terminal 30 threaded connection (on E-box)
605	Ground connection on upper steering column
B111	Positive connection 1 (30a) (in interior wiring harness)
B163	Positive connection 1 (15) (in interior wiring harness)
B169	Positive connection 1 (30) (in interior wiring harness)
B170	Positive connection 2 (30) (in interior wiring harness)
B172	Positive connection 4 (30) (in interior wiring harness)
*	Omitted as a running change
*2	Running change

ws	=	white
sw	=	black
ro	=	red
rt	=	red
br	=	brown
gn	=	green
bl	=	blue
gr	=	grey
li	=	lilac
vi	=	lilac
ge	=	yellow
or	=	orange
rs	=	pink

Protected by copyright. Copying for private or commercial purposes, in part or in whole, is not permitted unless authorised by Volkswagen AG. Volkswagen AG does not guarantee or accept any liability with respect to the correctness of information in this document. Copyright by Volkswagen AG.

Access/start authorization control module, Vehicle electrical control module system, Terminal 50 power supply relay, Access/start system antenna in luggage compartment, Access/start system antenna 1 in vehicle interior, Access/start system antenna 2 in vehicle interior

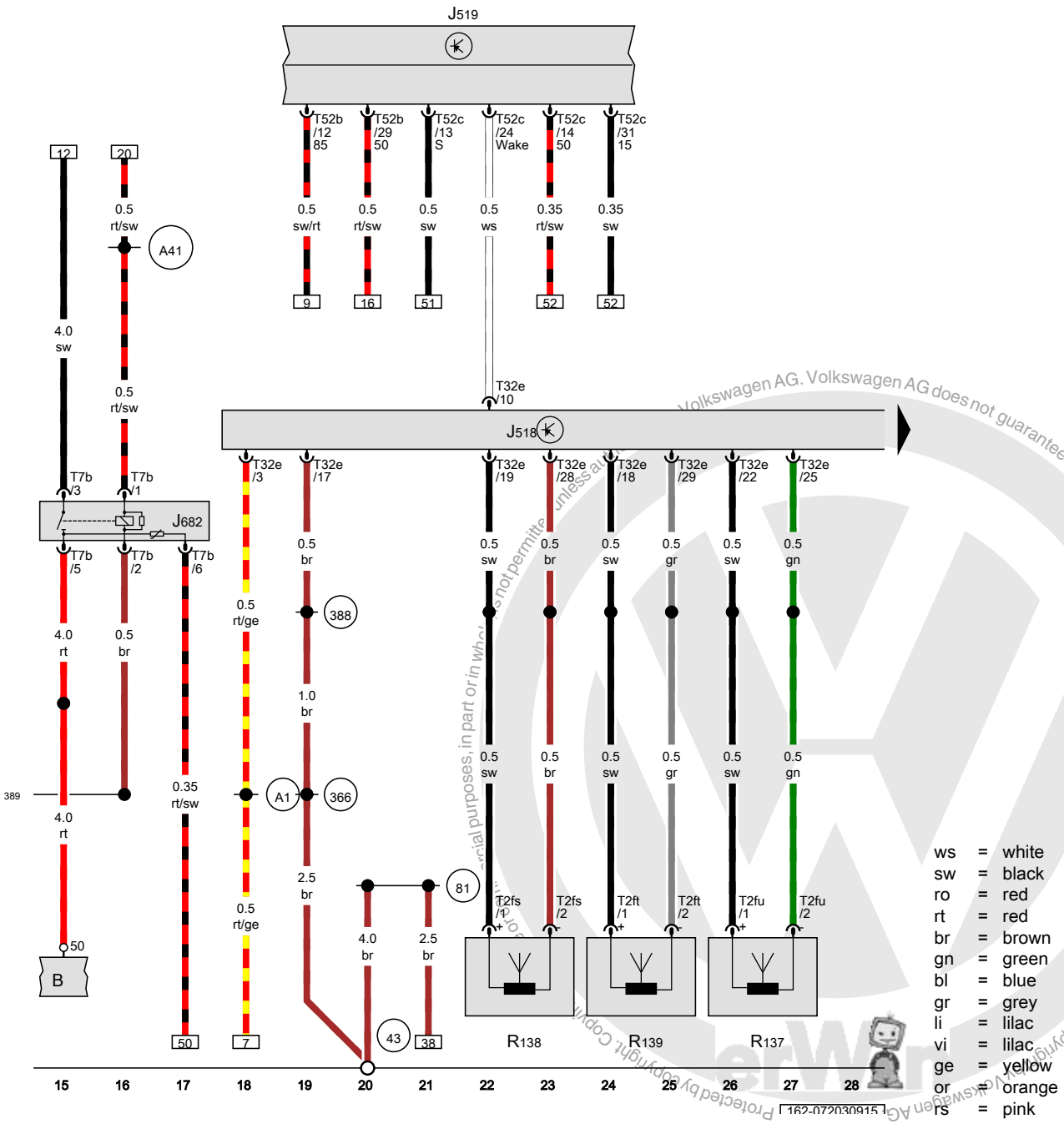

B	Starter
J518	Access/start authorization control module
J519	Vehicle electrical control module system
J682	Terminal 50 power supply relay
R137	Access/start system antenna in luggage compartment
R138	Access/start system antenna 1 in vehicle interior, under the center console
R139	Access/start system antenna 2 in vehicle interior, in the interior
T2fs	2-pin connector
T2ft	2-pin connector
T2fu	2-pin connector
T7b	7-pin connector
T32e	32-pin connector
T52b	52-pin connector
T52c	52-pin connector
43	Ground connection on A-pillar, lower right
81	Ground connection 1 (in instrument panel wiring harness)
366	Ground connection 1 (in main wiring harness)
388	Ground connection 23 (in main wiring harness)
389	Ground connection 24 (in main wiring harness)
A1	Positive connection (30a) (in instrument panel wiring harness)
A41	Positive connection (50) (in instrument panel wiring harness)

ws	=	white
sw	=	black
ro	=	red
rt	=	red
br	=	brown
gn	=	green
bl	=	blue
gr	=	grey
li	=	lilac
vi	=	lilac
ge	=	yellow
or	=	orange
rs	=	pink

Volkswagen AG. Volkswagen AG does not guarantee or accept any liability with respect to the correctness of information in this document. Copyright by Volkswagen AG. Protected by copyright. Copying not permitted unless authorized for educational purposes, in part or in whole.

Driver exterior door handle touch sensor, Front passenger exterior door handle touch sensor, Access/start authorization control module, Driver access/start system antenna, Front passenger access/start system antenna, Access/start system antenna in rear bumper

G415	Driver exterior door handle touch sensor
G416	Front passenger exterior door handle touch sensor
J518	Access/start authorization control module
R134	Driver access/start system antenna
R135	Front passenger access/start system antenna
R136	Access/start system antenna in rear bumper
T2fv	2-pin connector
T4ka	4-pin connector
T4kb	4-pin connector
T28	28-pin connector, Left A-pillar, bottom
T28a	28-pin connector, Right A-pillar, bottom
T32e	32-pin connector
44	Ground connection on A-pillar, lower left
205	Ground connection (in driver door wiring harness)
206	Ground connection (in front passenger door wiring harness)
386	Ground connection 21 (in main wiring harness)

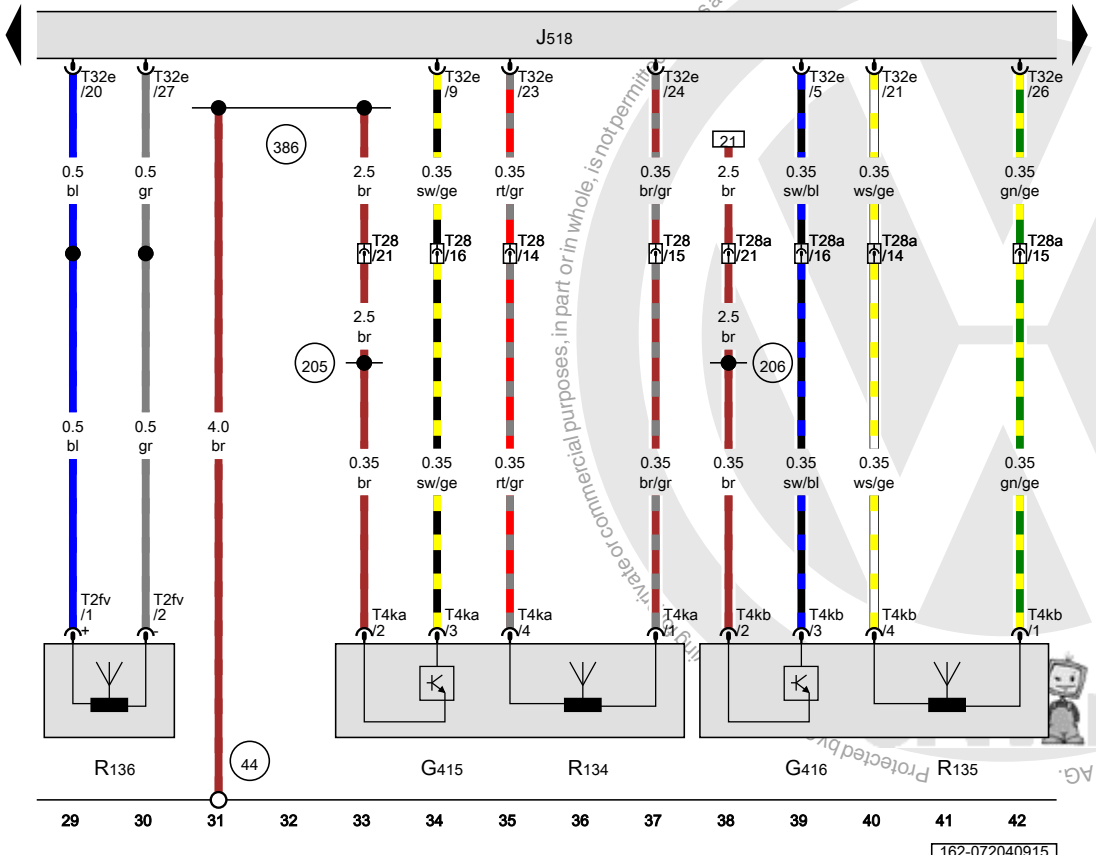

ws	=	white
sw	=	black
ro	=	red
rt	=	red
br	=	brown
gn	=	green
bl	=	blue
gr	=	grey
li	=	lilac
vi	=	lilac
ge	=	yellow
or	=	orange
rs	=	pink

authorised by Volkswagen AG. Volkswagen AG does not guarantee or accept any liability with respect to the correctness of information in this document. Copyright by Volkswagen AG. Protected by copyright. Use for private or commercial purposes, in part or in whole, is not permitted

Start system button, Access/start authorization control module, Electronic steering column lock control module

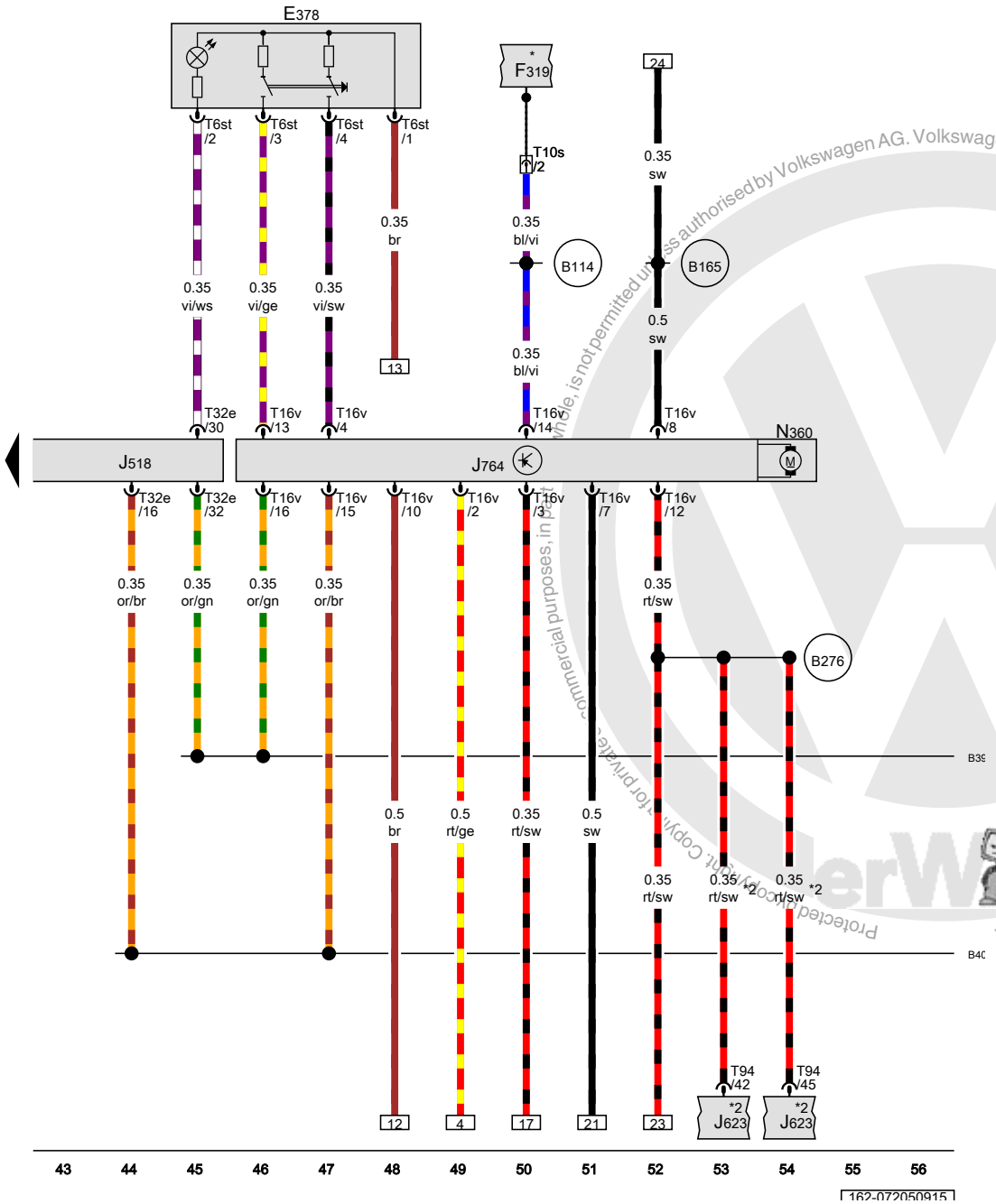

E378	Start system button
F319	Selector lever park position lock switch
J518	Access/start authorization control module
J623	Engine control module
J764	Electronic steering column lock control module
N360	Steering column lock actuator
T6st	6-pin connector
T10s	10-pin connector
T16v	16-pin connector
T32e	32-pin connector
T94	94-pin connector
B114	Lock switch connection (in interior wiring harness)
B165	Positive connection 2 (15) (in interior wiring harness)
B276	Positive connection (50) (in main wiring harness)
B397	Comfort system CAN bus high connection 1 (in main wiring harness)
B406	Comfort system CAN bus low connection 1 (in main wiring harness)
*	Only for vehicles with automatic transmission
*2	Refer to applicable engine wiring diagram

ws	=	white
sw	=	black
ro	=	red
rt	=	red
br	=	brown
gn	=	green
bl	=	blue
gr	=	grey
li	=	lilac
vi	=	lilac
ge	=	yellow
or	=	orange
rs	=	pink

Protected by copyright. Copyright by Volkswagen AG. Volkswagen AG does not guarantee or assume any liability with respect to the correctness of information in this document. Copying for private or commercial purposes, in part or in whole, is not permitted unless authorised by Volkswagen AG.

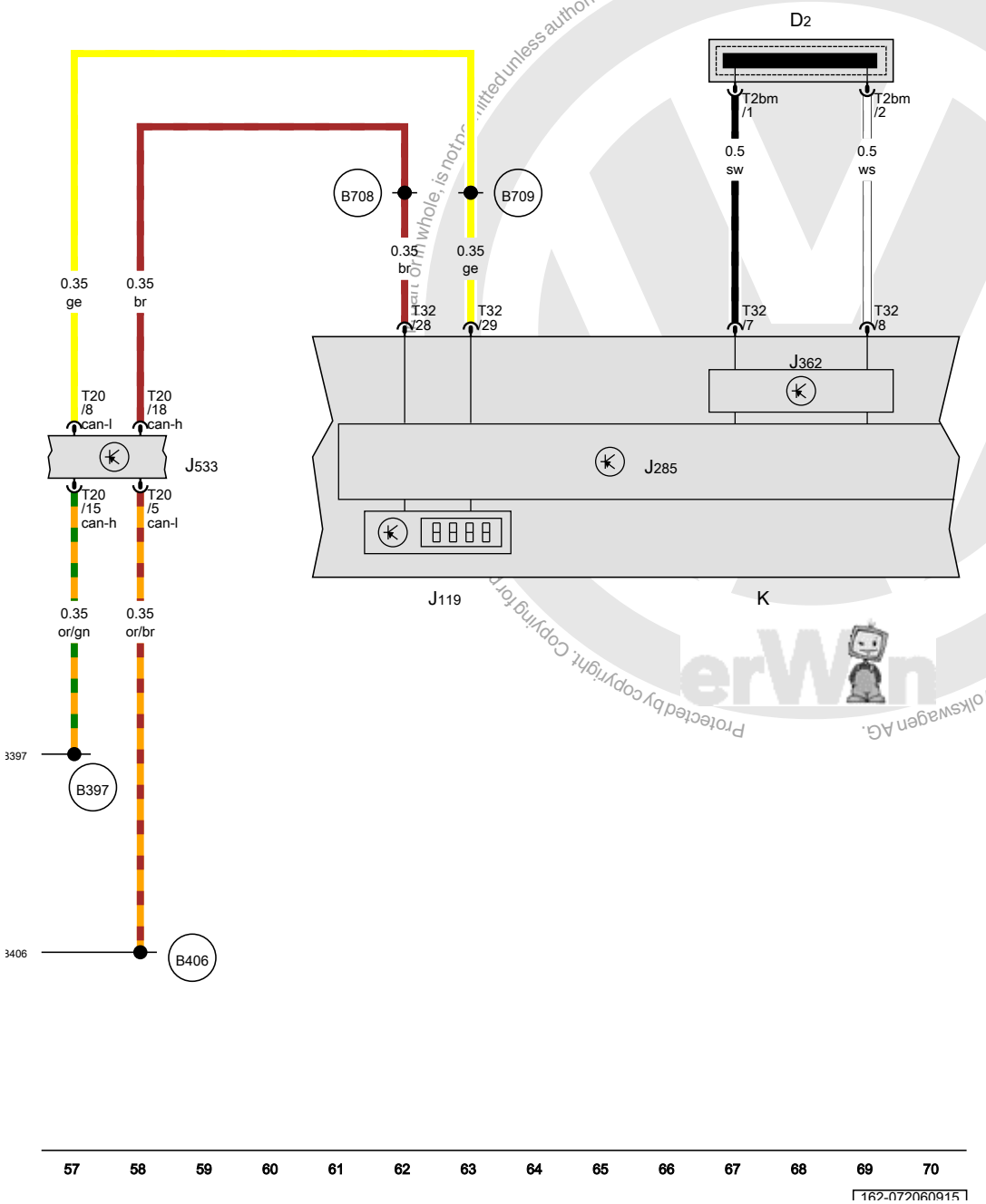

Anti-theft immobilizer reader coil, Multifunction indicator, Anti-theft immobilizer control module, Data bus on board diagnostic interface, Instrument cluster

D2	Anti-theft immobilizer reader coil
J119	Multifunction indicator
J285	Instrument cluster control module
J362	Anti-theft immobilizer control module
J533	Data bus on board diagnostic interface
K	Instrument cluster
T2bm	2-pin connector
T20	20-pin connector
T32	32-pin connector
B397	Comfort system CAN bus high connection 1 (in main wiring harness)
B406	Comfort system CAN bus low connection 1 (in main wiring harness)
B708	Instrument cluster CAN bus high connection 1 (in main wiring harness)
B709	Instrument cluster CAN bus low connection 1 (in main wiring harness)

ws	=	white
sw	=	black
ro	=	red
rt	=	red
br	=	brown
gn	=	green
bl	=	blue
gr	=	grey
li	=	lilac
vi	=	lilac
ge	=	yellow
or	=	orange
rs	=	pink

Protected by copyright. Copying for private or commercial purposes, in whole or in part, is not permitted unless authorised by Volkswagen AG. Volkswagen AG does not guarantee or accept any liability with respect to the correctness of information in this document. Copyright by Volkswagen AG.

Steering wheel, multifunction , (AW0)

from May 2010

Protected by copyright. Copying for private or commercial purposes, in part or in whole, is not permitted unless authorised by Volkswagen AG. Volkswagen AG does not guarantee or accept any liability with respect to the correctness of information in this document. Copyright by Volkswagen AG.

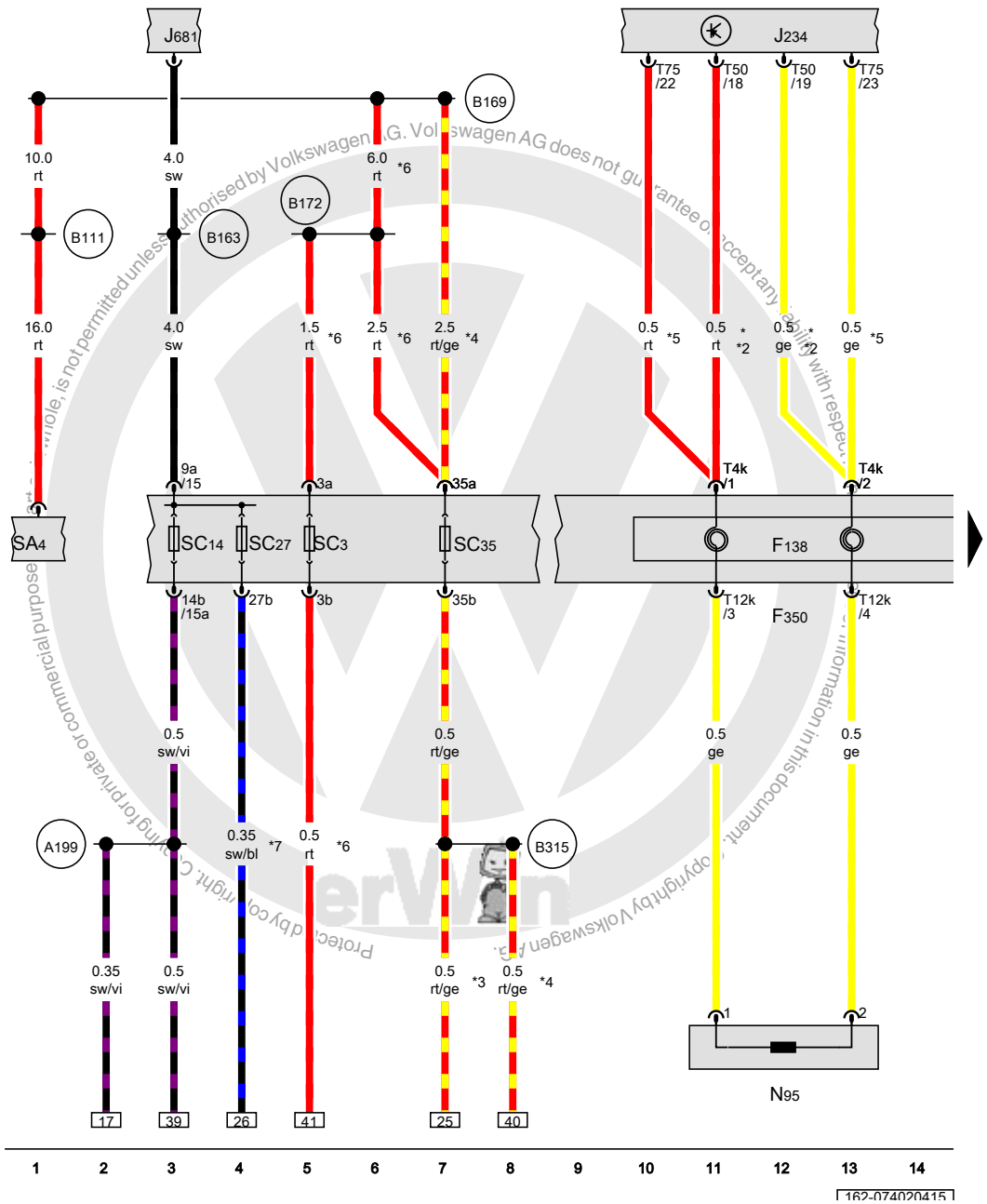

Airbag spiral spring/return spring with slip ring, Airbag control module, Driver airbag igniter, Fuse 35 (on fuse panel C)

F138	Airbag spiral spring/return spring with slip ring
F350	Spiral spring
J234	Airbag control module
J681	Terminal 15 power supply relay 2
N95	Driver airbag igniter
SC3	Fuse 3 (on fuse panel C)
SA4	Fuse 4 (on fuse panel A)
SC14	Fuse 14 (on fuse panel C)
SC27	Fuse 27 (on fuse panel C)
SC35	Fuse 35 (on fuse panel C)
T4k	4-pin connector
T12k	12-pin connector
T50	50-pin connector
T75	75-pin connector
A199	Positive connection 4 (15a) (in instrument panel wiring harness)
B111	Positive connection 1 (30a) (in interior wiring harness)
B163	Positive connection 1 (15) (in interior wiring harness)
B169	Positive connection 1 (30) (in interior wiring harness)
B172	Positive connection 4 (30) (in interior wiring harness)
B315	Positive connection 1 (30a) (in main wiring harness)
*	Only for vehicles with China equipment
*2	only for Mexico
*3	Through May 2011
*4	Omitted as a running change
*5	Depending on equipment
*6	Running change
*7	from June 2011

ws	=	white
sw	=	black
ro	=	red
rt	=	red
br	=	brown
gn	=	green
bl	=	blue
gr	=	grey
li	=	lilac
vi	=	lilac
ge	=	yellow
or	=	orange
rs	=	pink

Protected by copyright. Copying for private or commercial purposes, in whole or in part, is not permitted unless authorised by Volkswagen AG. Volkswagen AG does not guarantee or accept any liability with respect to the correctness of information in this document. Copyright by Volkswagen AG.

Airbag spiral spring/return spring with slip ring, Signal horn activation, Multifunction steering wheel control module, Vehicle electrical control module system

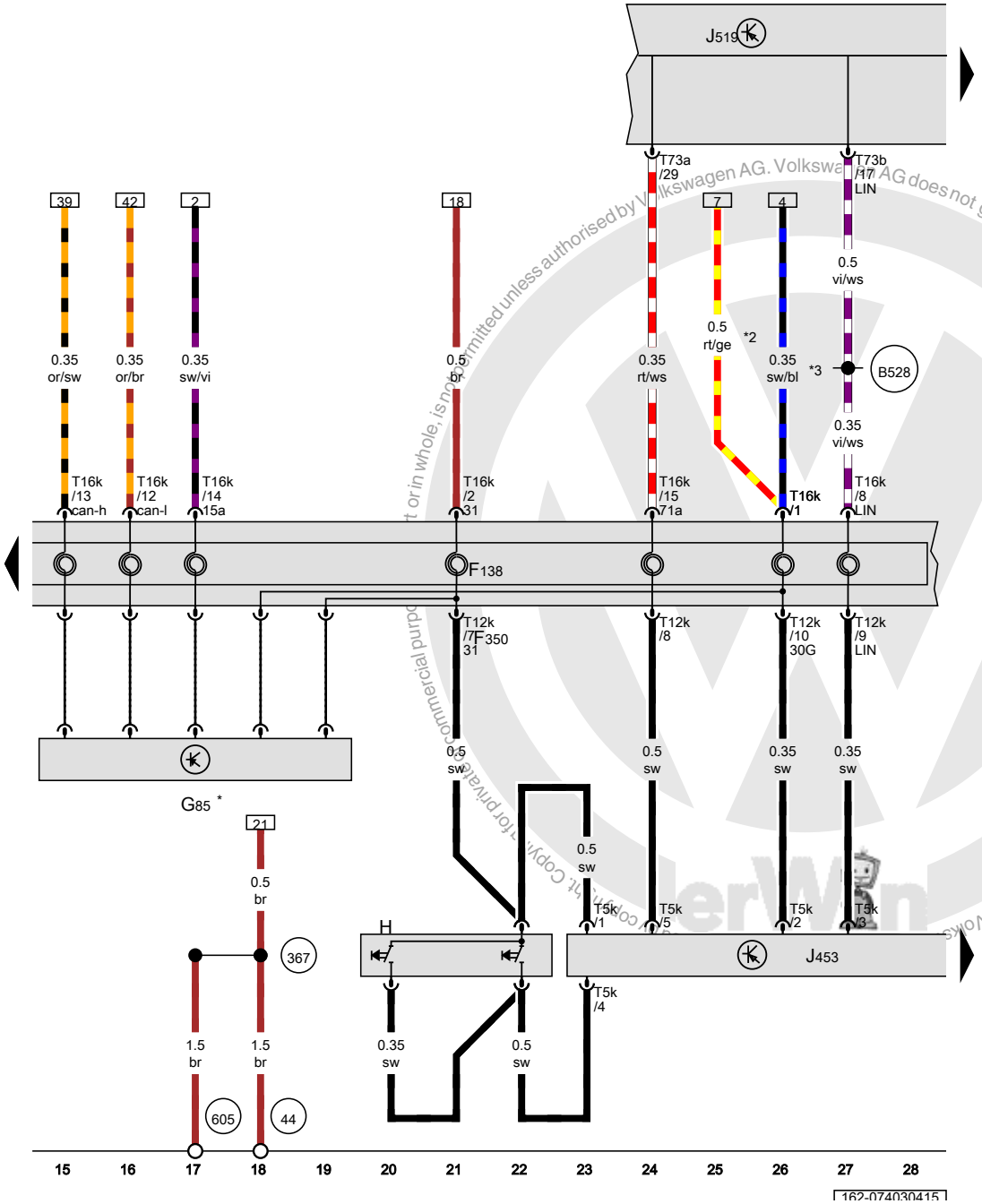

F138	Airbag spiral spring/return spring with slip ring
F350	Spiral spring
G85	Steering angle sensor
H	Signal horn activation
J453	Multifunction steering wheel control module
J519	Vehicle electrical control module system
T5k	5-pin connector
T12k	12-pin connector
T16k	16-pin connector
T73a	73-pin connector
T73b	73-pin connector
44	Ground connection on A-pillar, lower left
367	Ground connection 2 (in main wiring harness)
605	Ground connection on upper steering column
B528	LIN bus connection 1 (in main wiring harness)
*	Depending on equipment
*2	Through May 2011
*3	from June 2011

ws	=	white
sw	=	black
ro	=	red
rt	=	red
br	=	brown
gn	=	green
bl	=	blue
gr	=	grey
li	=	lilac
vi	=	lilac
ge	=	yellow
or	=	orange
rs	=	pink

Copyright by Volkswagen AG. Volkswagen AG does not guarantee or accept any liability with respect to the correctness of information in this document.

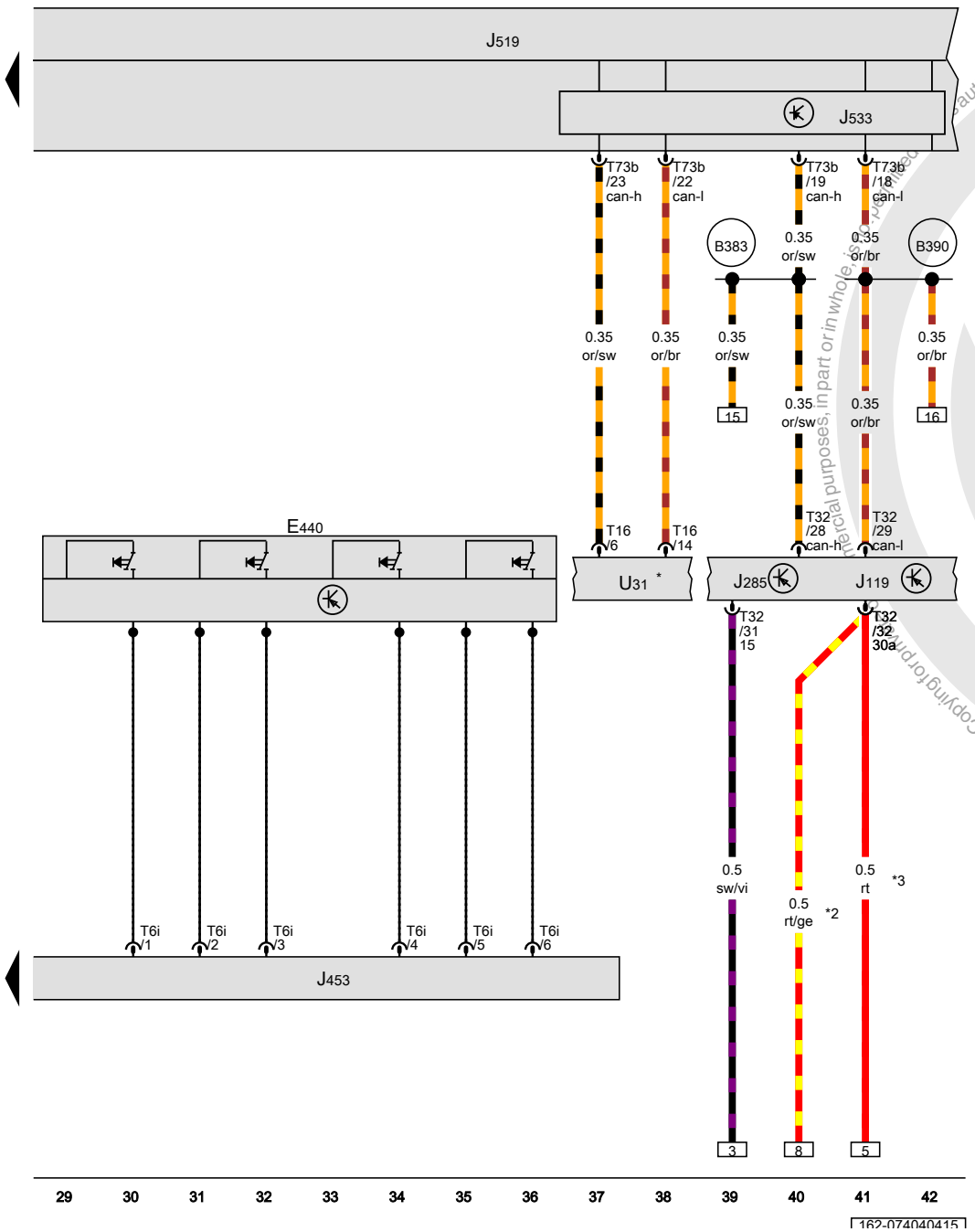

Left multifunction buttons on steering wheel, Multifunction indicator, Instrument cluster control module, Multifunction steering wheel control module, Vehicle electrical control module system, Data bus on board diagnostic interface, Diagnostic connection

E440	Left multifunction buttons on steering wheel
J119	Multifunction indicator
J285	Instrument cluster control module
J453	Multifunction steering wheel control module
J519	Vehicle electrical control module system
J533	Data bus on board diagnostic interface
T6i	6-pin connector
T16	16-pin connector
T32	32-pin connector
T73b	73-pin connector
U31	Diagnostic connection
B383	Powertrain CAN bus high connection 1 (in main wiring harness)
B390	Powertrain CAN bus low connection 1 (in main wiring harness)
*	Diagnostic connector
*2	Omitted as a running change
*3	Running change

ws	=	white
sw	=	black
ro	=	red
rt	=	red
br	=	brown
gn	=	green
bl	=	blue
gr	=	grey
li	=	lilac
vi	=	lilac
ge	=	yellow
or	=	orange
rs	=	pink

Protected by copyright. Copying for private or commercial purposes, in part or in whole, is not permitted unless authorised by Volkswagen AG. Volkswagen AG does not guarantee or accept any liability with respect to the correctness of information in this document. Copyright by Volkswagen AG.

Steering wheel, multifunction , (AW1)

from May 2010

Protected by copyright. Copying for private or commercial purposes, in part or in whole, is not permitted unless authorised by Volkswagen AG. Volkswagen AG does not guarantee or accept any liability with respect to the correctness of information in this document. Copyright by Volkswagen AG.

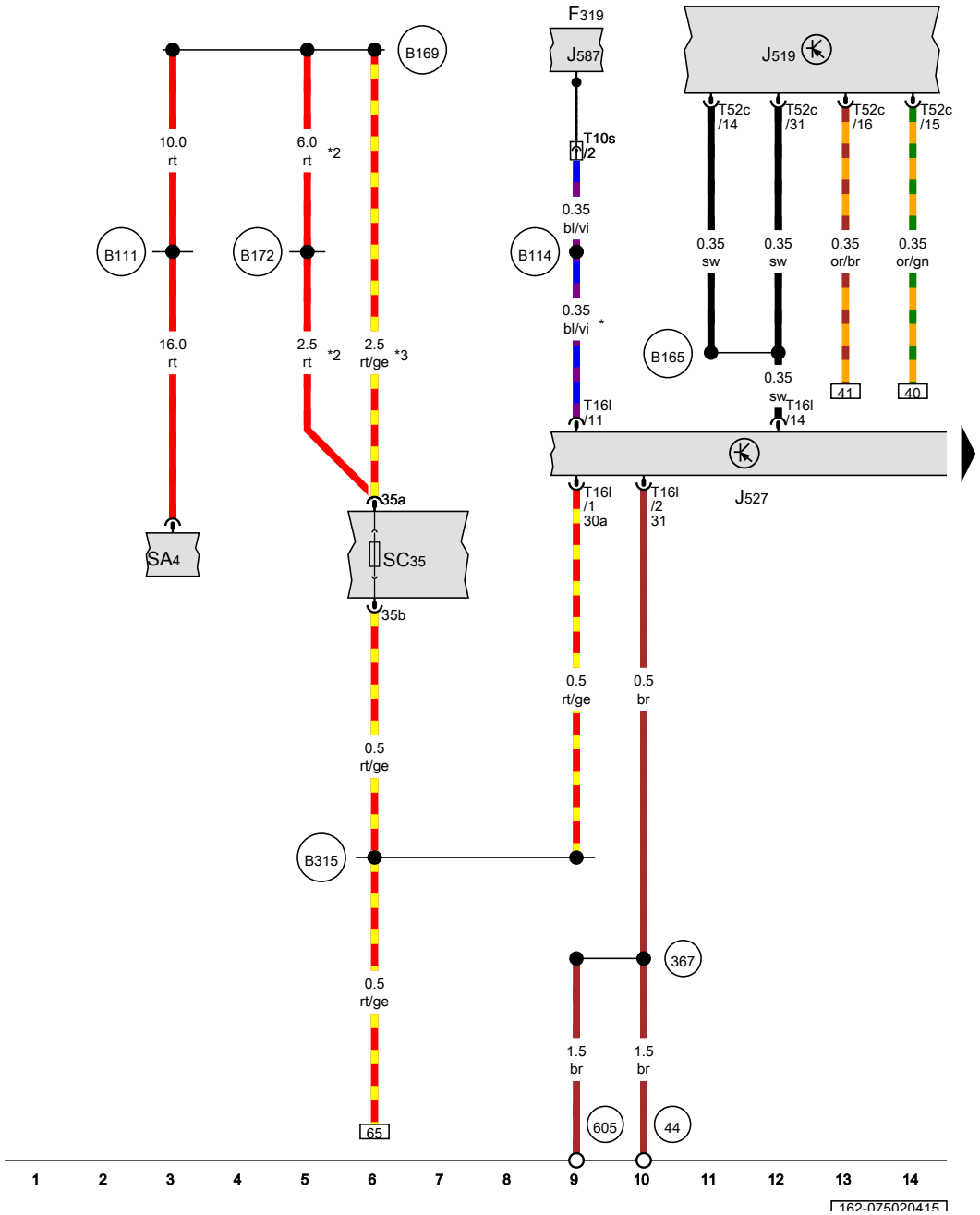

Steering column electronics control module

F319	Selector lever park position lock switch
J519	Vehicle electrical control module system
J527	Steering column electronics control module
J587	Selector lever sensor system control module
SA4	Fuse 4 (on fuse panel A)
SC35	Fuse 35 (on fuse panel C)
T10s	10-pin connector
T16l	16-pin connector
T52c	52-pin connector
44	Ground connection on A-pillar, lower left
367	Ground connection 2 (in main wiring harness)
605	Ground connection on upper steering column
B111	Positive connection 1 (30a) (in interior wiring harness)
B114	Lock switch connection (in interior wiring harness)
B165	Positive connection 2 (15) (in interior wiring harness)
B169	Positive connection 1 (30) (in interior wiring harness)
B172	Positive connection 4 (30) (in interior wiring harness)
B315	Positive connection 1 (30a) (in main wiring harness)
*	Only for vehicles with DSG transmission
*2	Running change
*3	Omitted as a running change

ws	=	white
sw	=	black
ro	=	red
rt	=	red
br	=	brown
gn	=	green
bl	=	blue
gr	=	grey
li	=	lilac
vi	=	lilac
ge	=	yellow
or	=	orange
rs	=	pink

Protected by copyright. Copying for private or commercial purposes, in part or in whole, is not permitted unless authorised by Volkswagen AG. Volkswagen AG does not guarantee or accept any liability with respect to the correctness of information in this document. Copyright by Volkswagen AG.

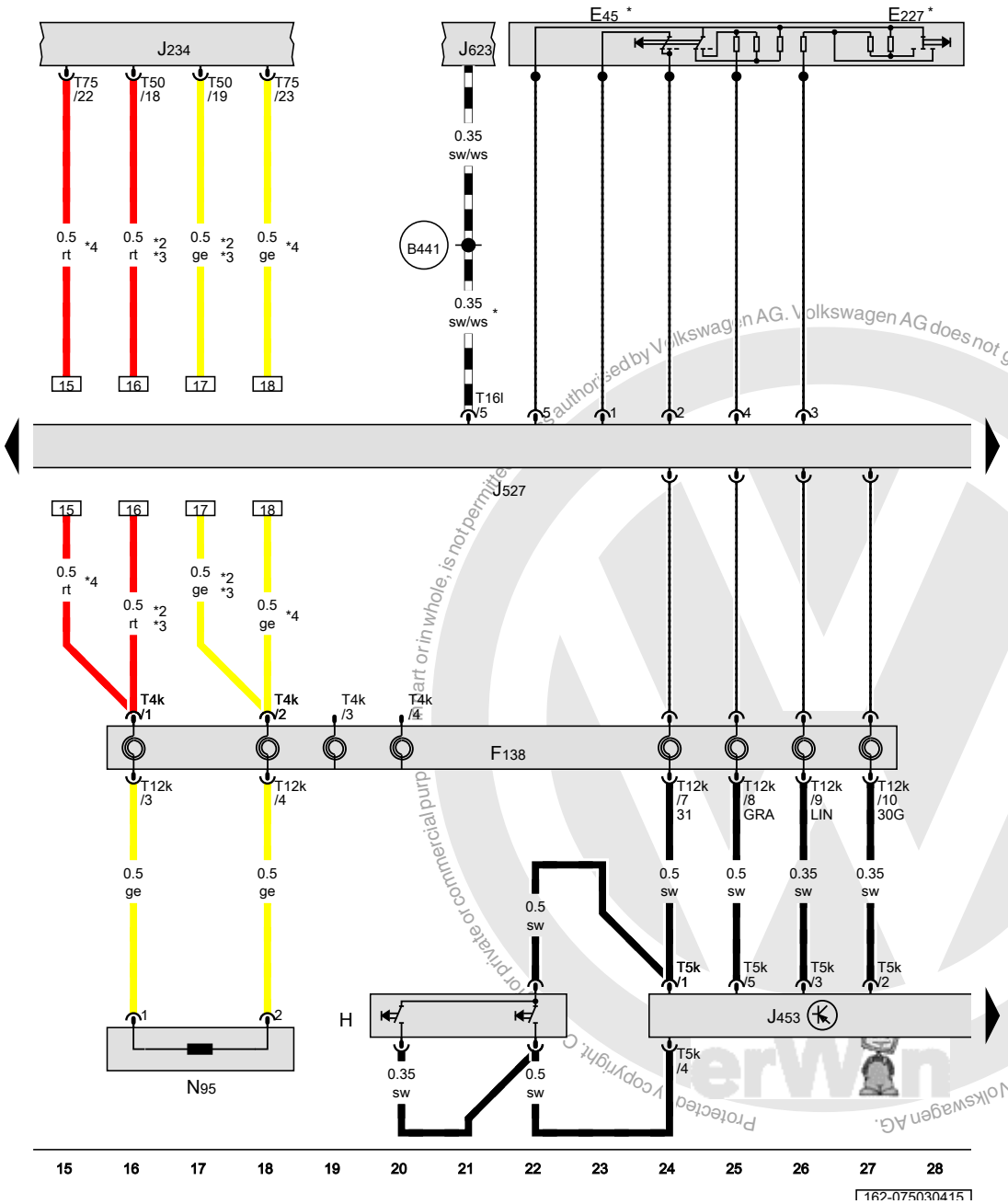

Cruise control switch, Airbag spiral spring/return spring with slip ring, Signal horn activation, Airbag control module, Multifunction steering wheel control module, Steering column electronics control module, Driver airbag igniter

E45	Cruise control switch
E227	Cruise control -SET- button
F138	Airbag spiral spring/return spring with slip ring
H	Signal horn activation
J234	Airbag control module
J453	Multifunction steering wheel control module
J527	Steering column electronics control module
J623	Engine control module
N95	Driver airbag igniter
T4k	4-pin connector
T5k	5-pin connector
T12k	12-pin connector
T16l	16-pin connector
T50	50-pin connector
T75	75-pin connector
T94a	94-pin connector
(B441)	Cruise control connection (in main wiring harness)
*	Only for vehicles with cruise control
*2	Only for vehicles with China equipment
*3	only for Mexico
*4	Depending on equipment

ws	=	white
sw	=	black
ro	=	red
rt	=	red
br	=	brown
gn	=	green
bl	=	blue
gr	=	grey
li	=	lilac
vi	=	lilac
ge	=	yellow
or	=	orange
rs	=	pink

Protected by copyright. Copyright by Volkswagen AG. Volkswagen AG does not guarantee or accept any liability with respect to the correctness of information in this document. Copyright by Volkswagen AG. Not authorised

Ignition/starter switch, Multifunction steering wheel control module, Steering column electronics control module, Ignition switch key lock solenoid

D	Ignition/starter switch
E440	Left multifunction buttons on steering wheel
J453	Multifunction steering wheel control module
J527	Steering column electronics control module
N376	Ignition switch key lock solenoid
T6i	6-pin connector
T12j	12-pin connector
T16l	16-pin connector
B397	Comfort system CAN bus high connection 1 (in main wiring harness)
B406	Comfort system CAN bus low connection 1 (in main wiring harness)

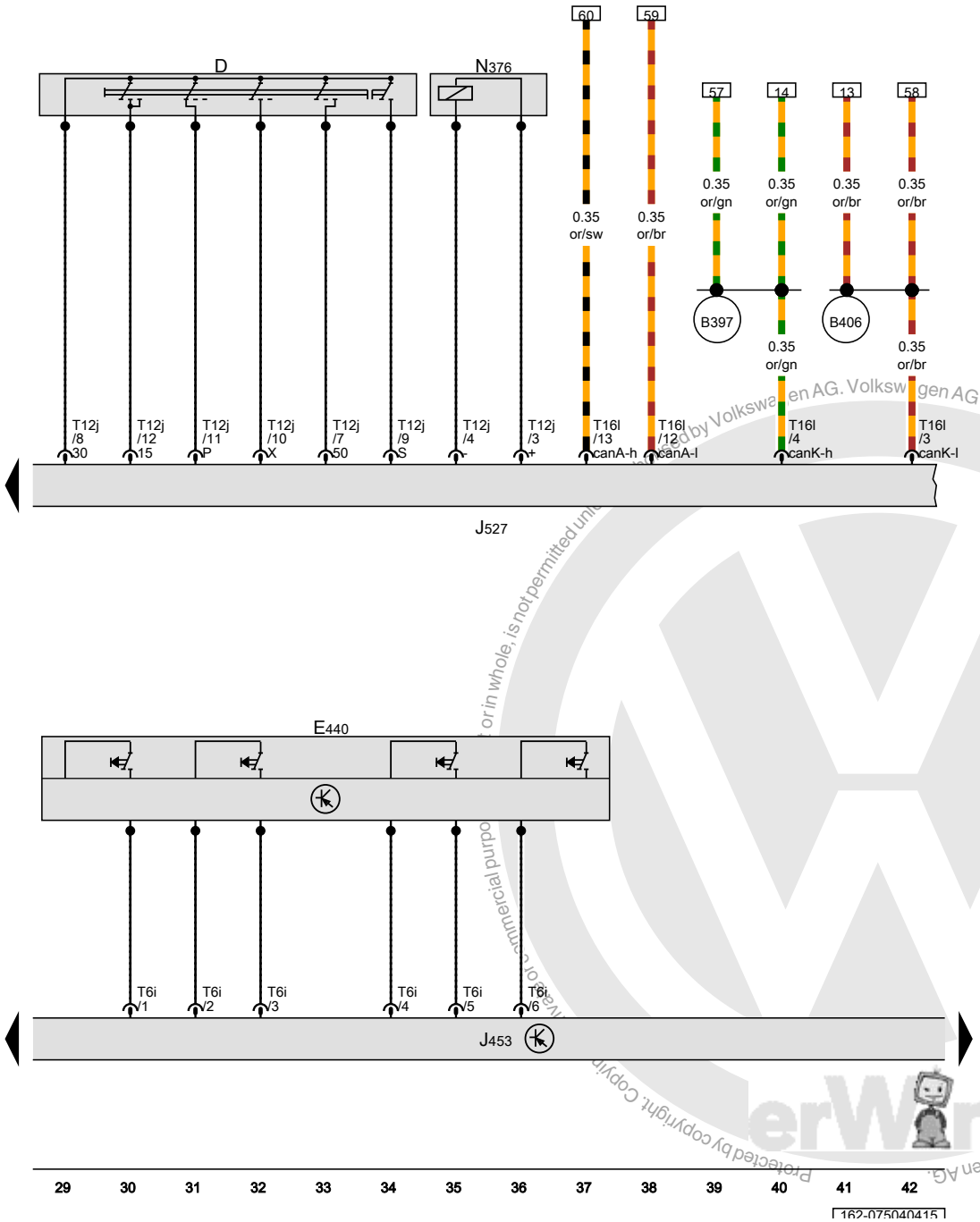

ws	=	white
sw	=	black
ro	=	red
rt	=	red
br	=	brown
gn	=	green
bl	=	blue
gr	=	grey
li	=	lilac
vi	=	lilac
ge	=	yellow
or	=	orange
rs	=	pink

Protected by copyright. Copyright by Volkswagen AG. Volkswagen AG does not guarantee or accept any liability with respect to the correctness of information in this document. Copyright by Volkswagen AG. Protected by copyright. Copyright by Volkswagen AG. Reproduction, in whole or in part, or any other use of contents for commercial purposes is not permitted unless authorized by Volkswagen AG.

Commercial purposes, in part or in whole, is not permitted unless authorised by Volkswagen AG. Volkswagen AG does not guarantee or accept any liability with respect to the correctness of information in this document. Copyright by Volkswagen AG. Protected by copyright. Copying for priv

Multifunction steering wheel control module

E438	tiptronic upshift button on steering wheel
E439	tiptronic downshift button on steering wheel
E441	Right multifunction buttons on steering wheel
J453	Multifunction steering wheel control module
T3ah	3-pin connector
T3mb	3-pin connector
T8p	8-pin connector
*	Only for vehicles with DSG transmission

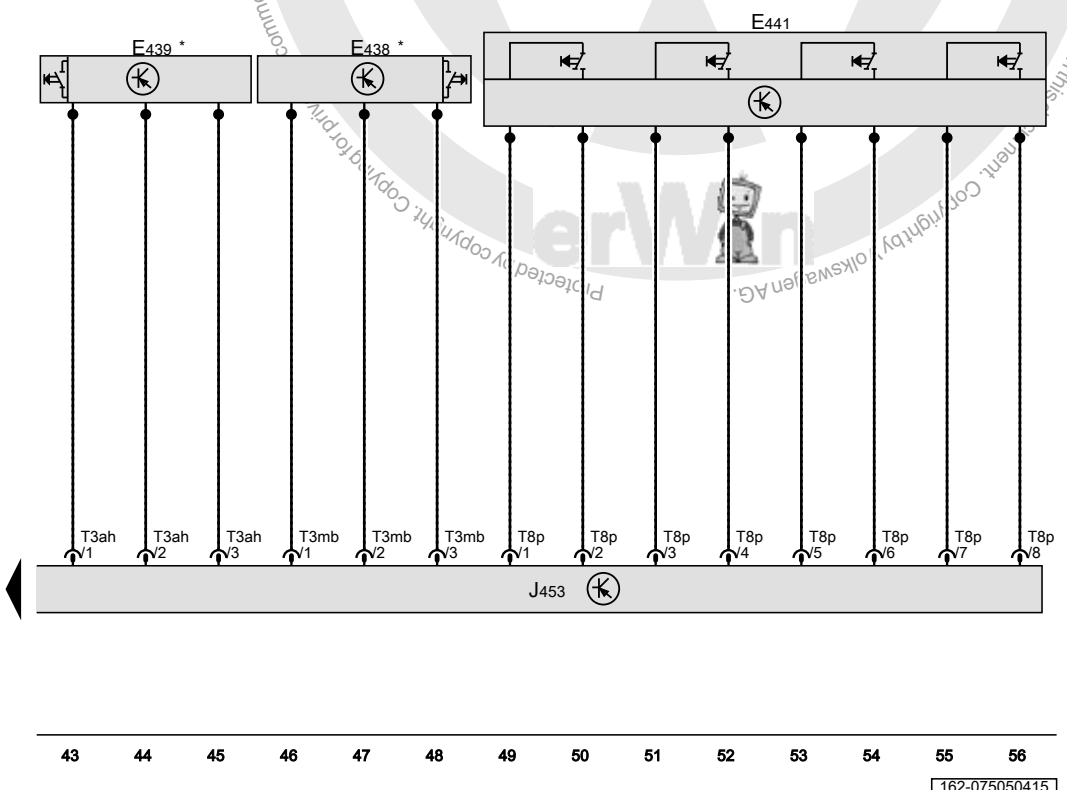

ws	=	white
sw	=	black
ro	=	red
rt	=	red
br	=	brown
gn	=	green
bl	=	blue
gr	=	grey
li	=	lilac
vi	=	lilac
ge	=	yellow
or	=	orange
rs	=	pink

Multifunction indicator, Instrument cluster control module, Data bus on board diagnostic interface

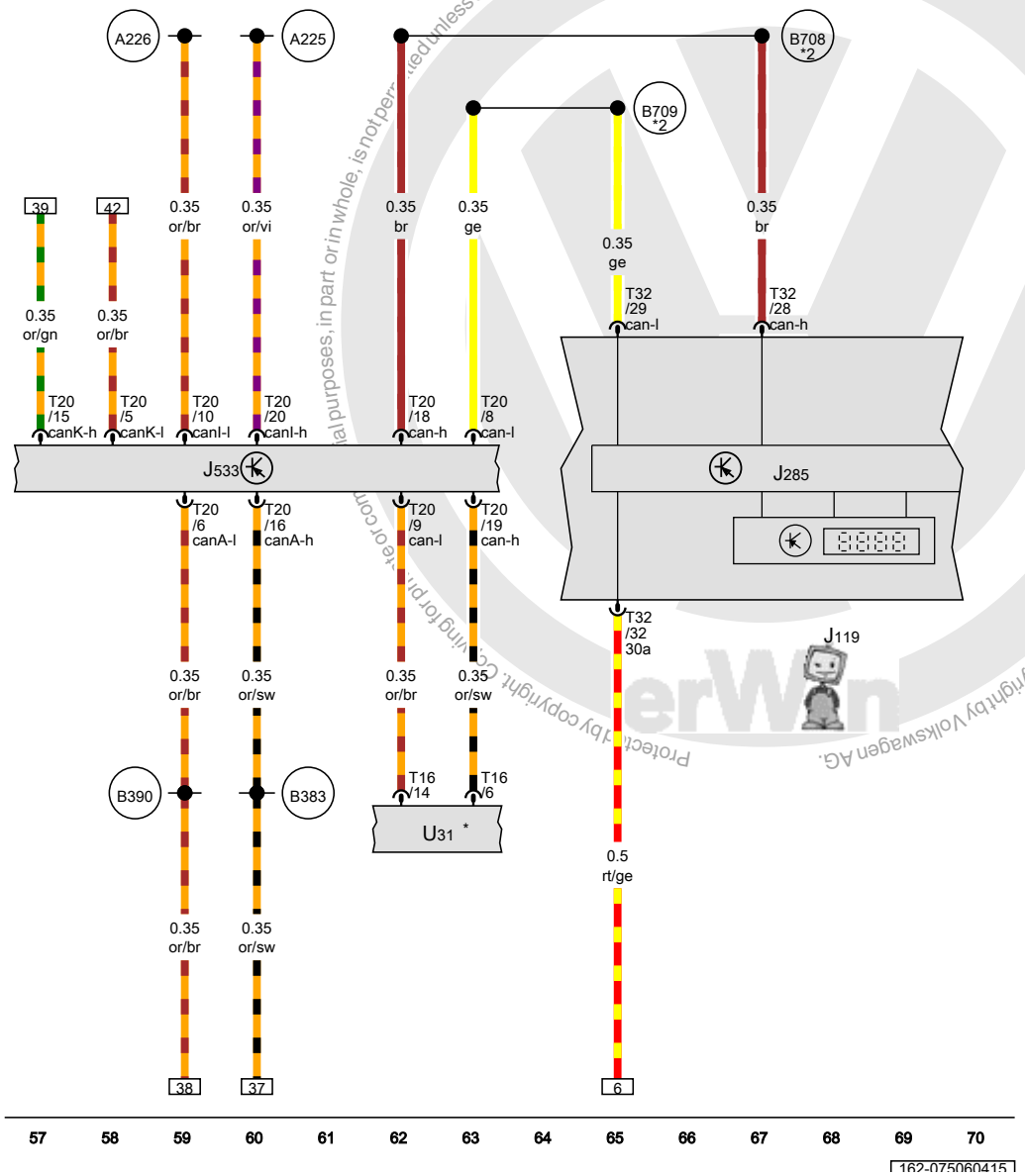

J119	Multifunction indicator
J285	Instrument cluster control module
J533	Data bus on board diagnostic interface
T16	16-pin connector
T20	20-pin connector
T32	32-pin connector
U31	Diagnostic connection
A225	Infotainment CAN bus high connection 2 (in instrument panel wiring harness)
A226	Infotainment CAN bus low connection 2 (in instrument panel wiring harness)
B383	Powertrain CAN bus high connection 1 (in main wiring harness)
B390	Powertrain CAN bus low connection 1 (in main wiring harness)
B708	Instrument cluster CAN bus high connection 1 (in main wiring harness)
B709	Instrument cluster CAN bus low connection 1 (in main wiring harness)
*	Diagnostic connector
*2	from June 2013

ws	=	white
sw	=	black
ro	=	red
rt	=	red
br	=	brown
gn	=	green
bl	=	blue
gr	=	grey
li	=	lilac
vi	=	lilac
ge	=	yellow
or	=	orange
rs	=	pink

Protected by copyright. Copying for private or commercial purposes, in part or in whole, is not permitted unless authorised by Volkswagen AG. Volkswagen AG does not guarantee or accept any liability with respect to the correctness of information in this document. Copyright by Volkswagen AG.

Radio navigation system RNS 510 , (7T6),(7UL)

from January 2011

Protected by copyright. Copying for private or commercial purposes, in part or in whole, is not permitted unless authorised by Volkswagen AG. Volkswagen AG does not guarantee or accept any liability with respect to the correctness of information in this document. Copyright by Volkswagen AG.

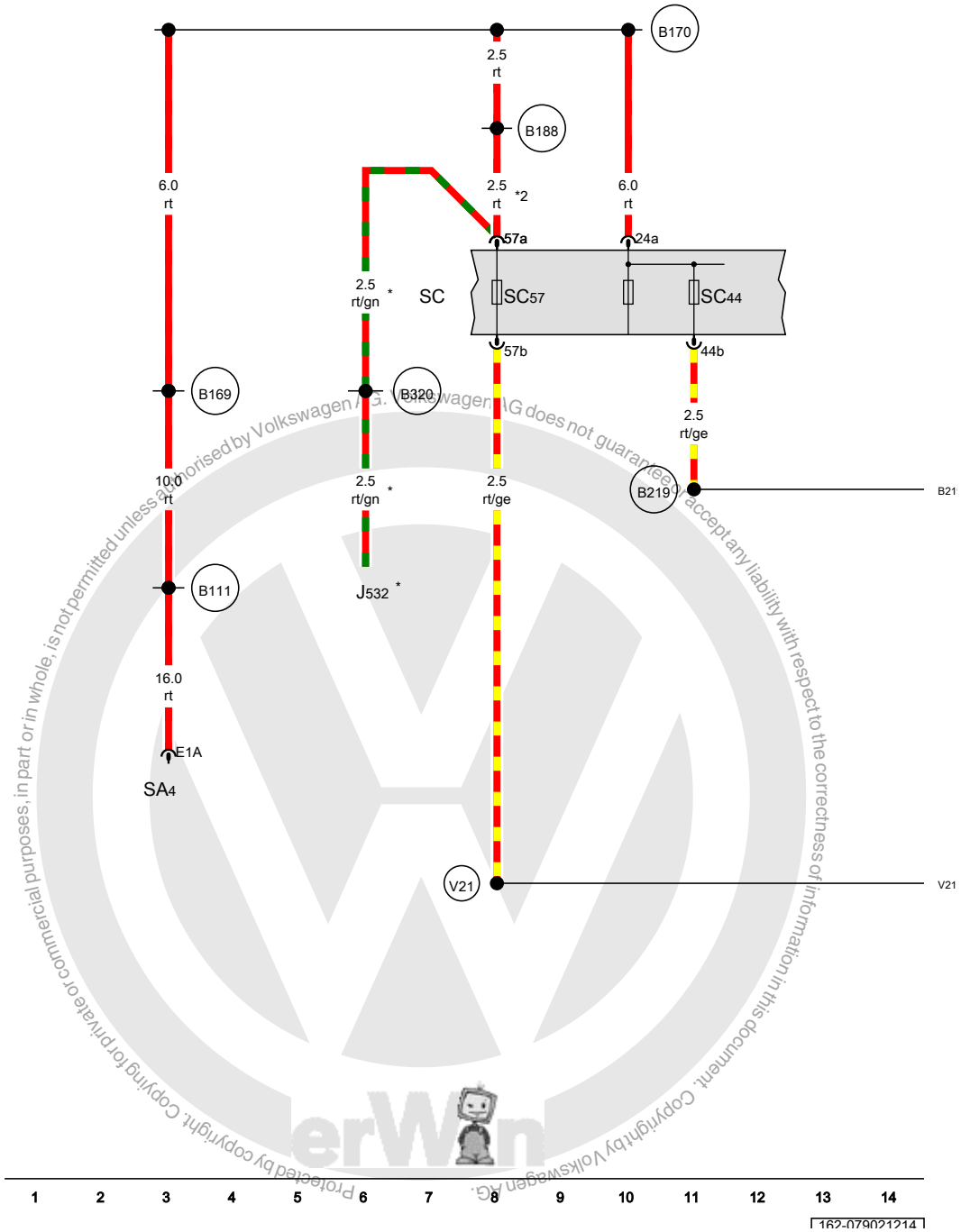

Protected by copyright. Copying for private or commercial purposes, in part or in whole, is not permitted unless authorised by Volkswagen AG. Volkswagen AG does not guarantee or accept any liability with respect to the correctness of information in this document. Copyright by Volkswagen AG.

Fuse 4 (on fuse panel A), Fuse panel C

J532	Voltage stabilizer
SA4	Fuse 4 (on fuse panel A)
SC	Fuse panel C
SC44	Fuse 44 (on fuse panel C)
SC57	Fuse 57 (on fuse panel C)
B111	Positive connection 1 (30a) (in interior wiring harness)
B169	Positive connection 1 (30) (in interior wiring harness)
B170	Positive connection 2 (30) (in interior wiring harness)
B188	Positive connection 5 (30) (in interior wiring harness)
B219	Positive connection 4 (30a) (in interior wiring harness)
B320	Positive connection 6 (30a) (in main wiring harness)
V21	Positive connection (30) (in wiring radio/amplifier wiring harness)
*	Only for vehicles with Stop/Start system
*2	Only for vehicles without Start/Stop system

ws	=	white
sw	=	black
ro	=	red
rt	=	red
br	=	brown
gn	=	green
bl	=	blue
gr	=	grey
li	=	lilac
vi	=	lilac
ge	=	yellow
or	=	orange
rs	=	pink

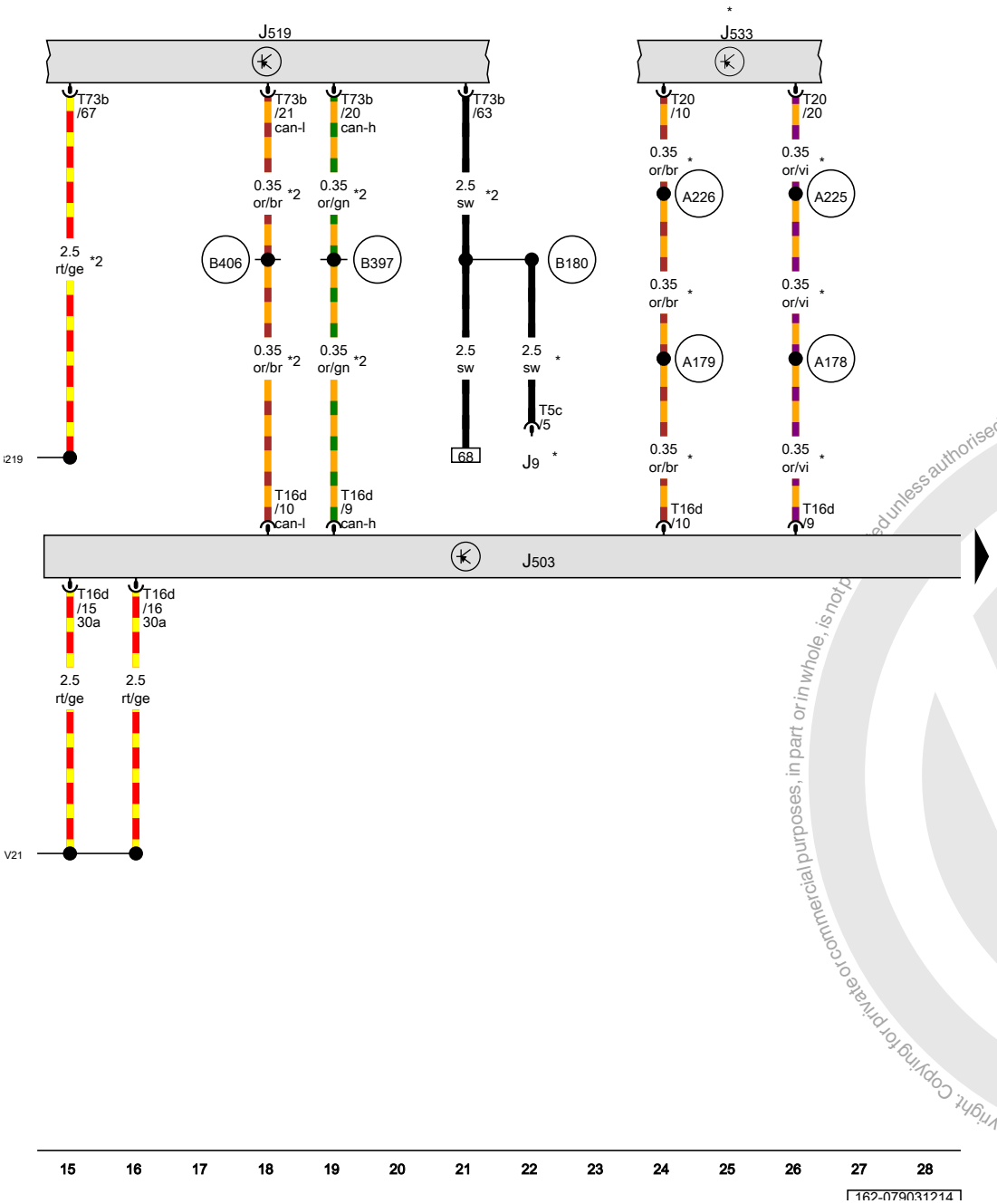

Radio/navigation display unit control module, Vehicle electrical control module system, Data bus on board diagnostic interface

J9	Rear window defogger relay
J503	Radio/navigation display unit control module
J519	Vehicle electrical control module system
J533	Data bus on board diagnostic interface
T5c	5-pin connector
T16d	16-pin connector
T20	20-pin connector
T73b	73-pin connector
A178	Infotainment CAN bus high connection (in instrument panel wiring harness)
A179	Infotainment CAN bus low connection (in instrument panel wiring harness)
A225	Infotainment CAN bus high connection 2 (in instrument panel wiring harness)
A226	Infotainment CAN bus low connection 2 (in instrument panel wiring harness)
B180	Rear window defogger connection (in interior wiring harness)
B219	Positive connection 4 (30a) (in interior wiring harness)
B397	Comfort system CAN bus high connection 1 (in main wiring harness)
B406	Comfort system CAN bus low connection 1 (in main wiring harness)
V21	Positive connection (30) (in wiring radio/amplifier wiring harness)
*	only for vehicles with High equipment (AW1)
*2	only for vehicles with Low equipment (AW0)

ws	=	white
sw	=	black
ro	=	red
rt	=	red
br	=	brown
gn	=	green
bl	=	blue
gr	=	grey
li	=	lilac
vi	=	lilac
ge	=	yellow
or	=	orange
rs	=	pink

Copyright by Volkswagen AG. Volkswagen AG does not guarantee or accept any liability with respect to the correctness of information in this document. Copyright by Volkswagen AG. Copying for private or commercial purposes, in part or in whole, is not permitted unless authorised by Volkswagen AG.

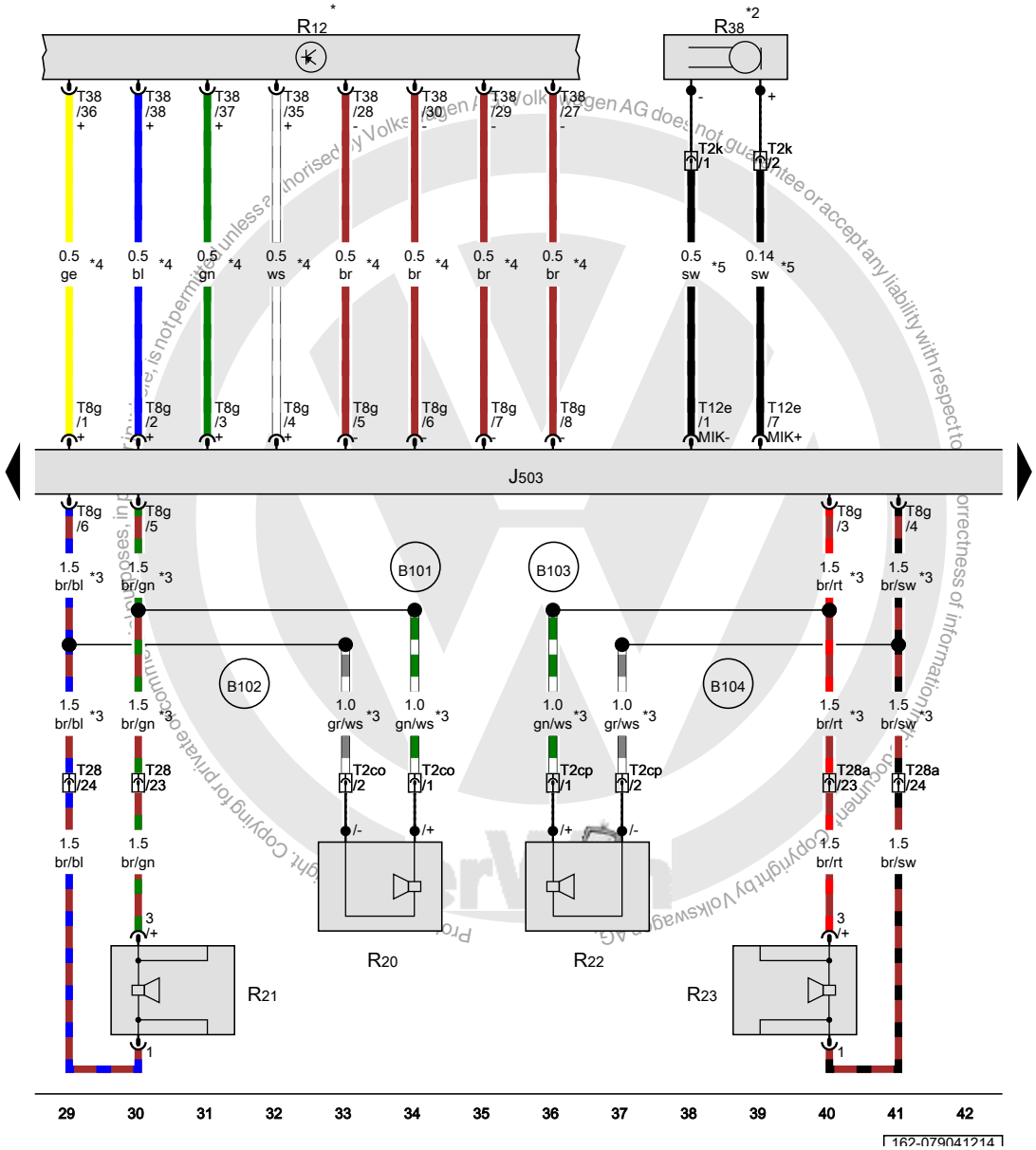

Radio/navigation display unit control module, Left front treble speaker, Left front bass speaker, Right front treble speaker, Right front bass speaker

J503	Radio/navigation display unit control module
R12	Amplifier
R20	Left front treble speaker
R21	Left front bass speaker
R22	Right front treble speaker
R23	Right front bass speaker
R38	Telephone microphone
T2co	Double connector, Interface for front speaker, in the instrument panel, left
T2cp	Double connector, Interface for front speaker, in the instrument panel, right
T2k	Double connector
T8g	8-pin connector
T12e	12-pin connector
T28	28-pin connector
T28a	28-pin connector
T38	38-pin connector
B101	Left front speaker positive connection (in main wiring harness)
B102	Left front speaker negative connection (in main wiring harness)
B103	Right front speaker positive connection (in main wiring harness)
B104	Right front speaker negative connection (in main wiring harness)
*	Refer to applicable sound system wiring diagram
*2	Refer to applicable telephone systems wiring diagram
*3	Only for vehicles without sound system
*4	Only for vehicles with sound system
*5	Depending on equipment

ws	=	white
sw	=	black
ro	=	red
rt	=	red
br	=	brown
gn	=	green
bl	=	blue
gr	=	grey
li	=	lilac
vi	=	lilac
ge	=	yellow
or	=	orange
rs	=	pink

Copyright by Volkswagen AG. Copying for private or commercial purposes, in part or in whole, is not permitted unless authorised by Volkswagen AG. Volkswagen AG does not guarantee or accept any liability with respect to the correctness of information in this document.

Radio/navigation display unit control module, Left rear treble speaker, Left rear bass speaker, Right rear treble speaker, Right rear bass speaker

J503	Radio/navigation display unit control module
R14	Left rear treble speaker
R15	Left rear bass speaker
R16	Right rear treble speaker
R17	Right rear bass speaker
T8g	8-pin connector
T28b	28-pin connector
T28c	28-pin connector
*	Depending on equipment

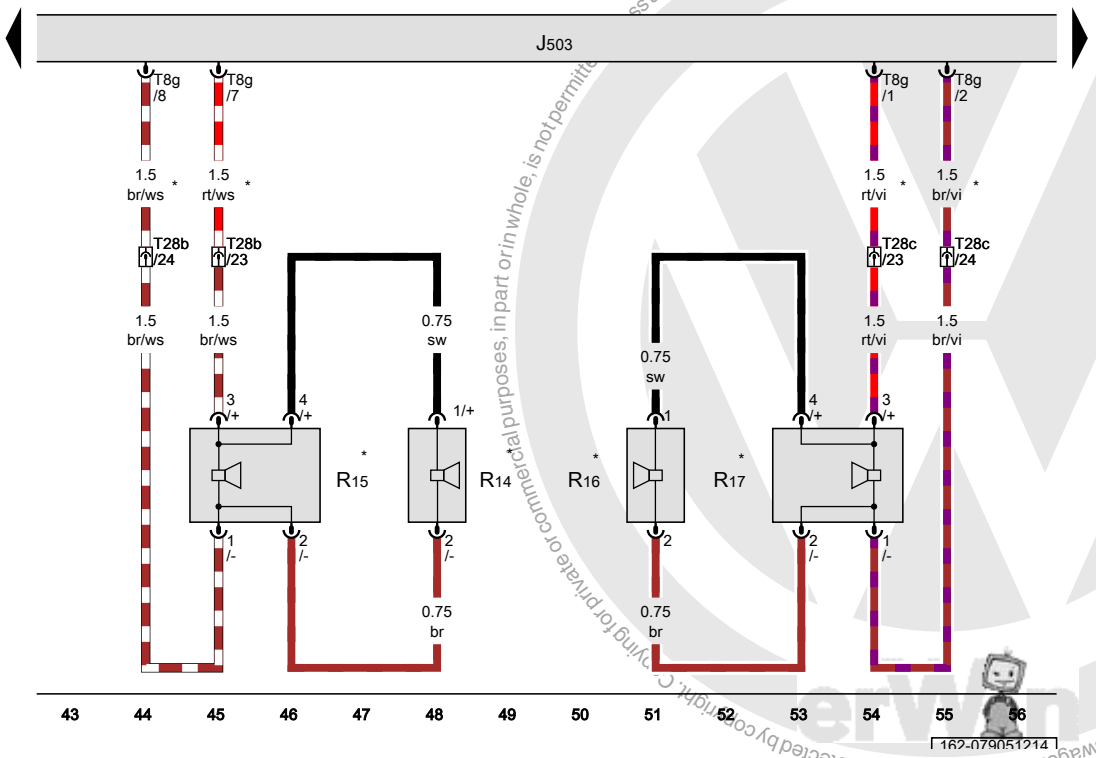

ws	=	white
sw	=	black
ro	=	red
rt	=	red
br	=	brown
gn	=	green
bl	=	blue
gr	=	grey
li	=	lilac
vi	=	lilac
ge	=	yellow
or	=	orange
rs	=	pink

Protected by copyright. Copying for private or commercial purposes, in part or in whole, is not permitted unless authorised by Volkswagen AG. Volkswagen AG does not guarantee or accept any liability with respect to the correctness of information in this document. Copyright by Volkswagen AG.

Radio/navigation display unit control module, Roof antenna, Antenna, GPS antenna, Radio antenna 2, Left antenna module, Right antenna module, Rear window defogger

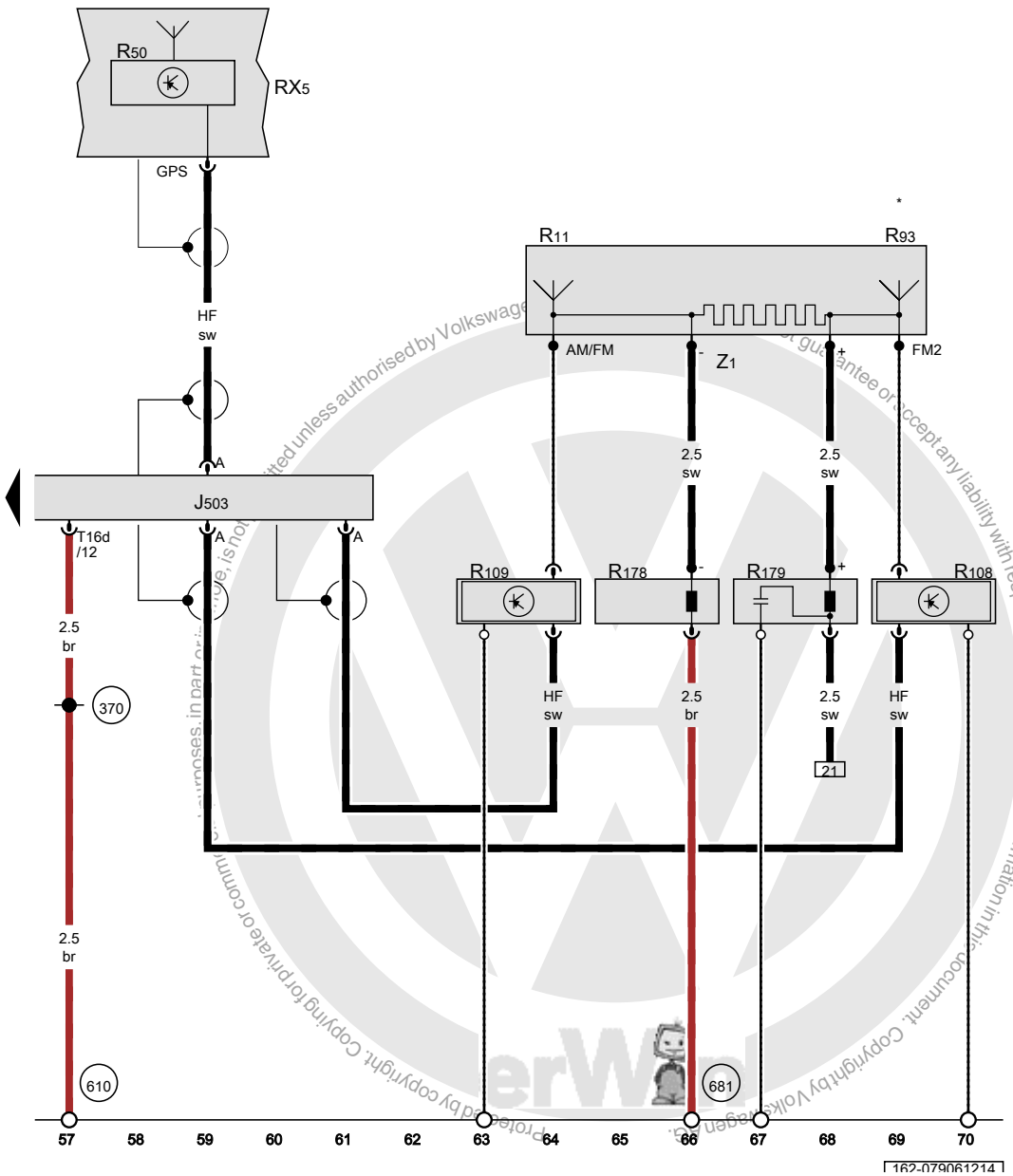

J503	Radio/navigation display unit control module	
RX5	Roof antenna	
R11	Antenna	
R50	GPS antenna	
R93	Radio antenna 2	
R108	Left antenna module	
R109	Right antenna module	
R178	FM frequency filter in negative wire	
R179	FM frequency filter in positive wire	
T16d	16-pin connector	
Z1	Rear window defogger	
370	Ground connection 5 (in main wiring harness)	
610	Audio ground connection under front center console	
681	Ground connection 1 in right rear side panel	
*	Depending on equipment	

ws	=	white
sw	=	black
ro	=	red
rt	=	red
br	=	brown
gn	=	green
bl	=	blue
gr	=	grey
li	=	lilac
vi	=	lilac
ge	=	yellow
or	=	orange
rs	=	pink

Copyright by Volkswagen AG. Protected by copyright. Copying for private or commercial purposes, in part or in whole, is not permitted unless authorised by Volkswagen AG. Volkswagen AG does not guarantee or accept any liability with respect to the correctness of information in this document.

Vehicle positioning system , (7I1)

from January 2011

Protected by copyright. Copying for private or commercial purposes, in part or in whole, is not permitted unless authorised by Volkswagen AG. Volkswagen AG does not guarantee or accept any liability with respect to the correctness of information in this document. Copyright by Volkswagen AG.

Instrument cluster control module, Vehicle positioning system control module, Fuse 14 (on fuse panel C), Fuse 20 (on fuse panel C)

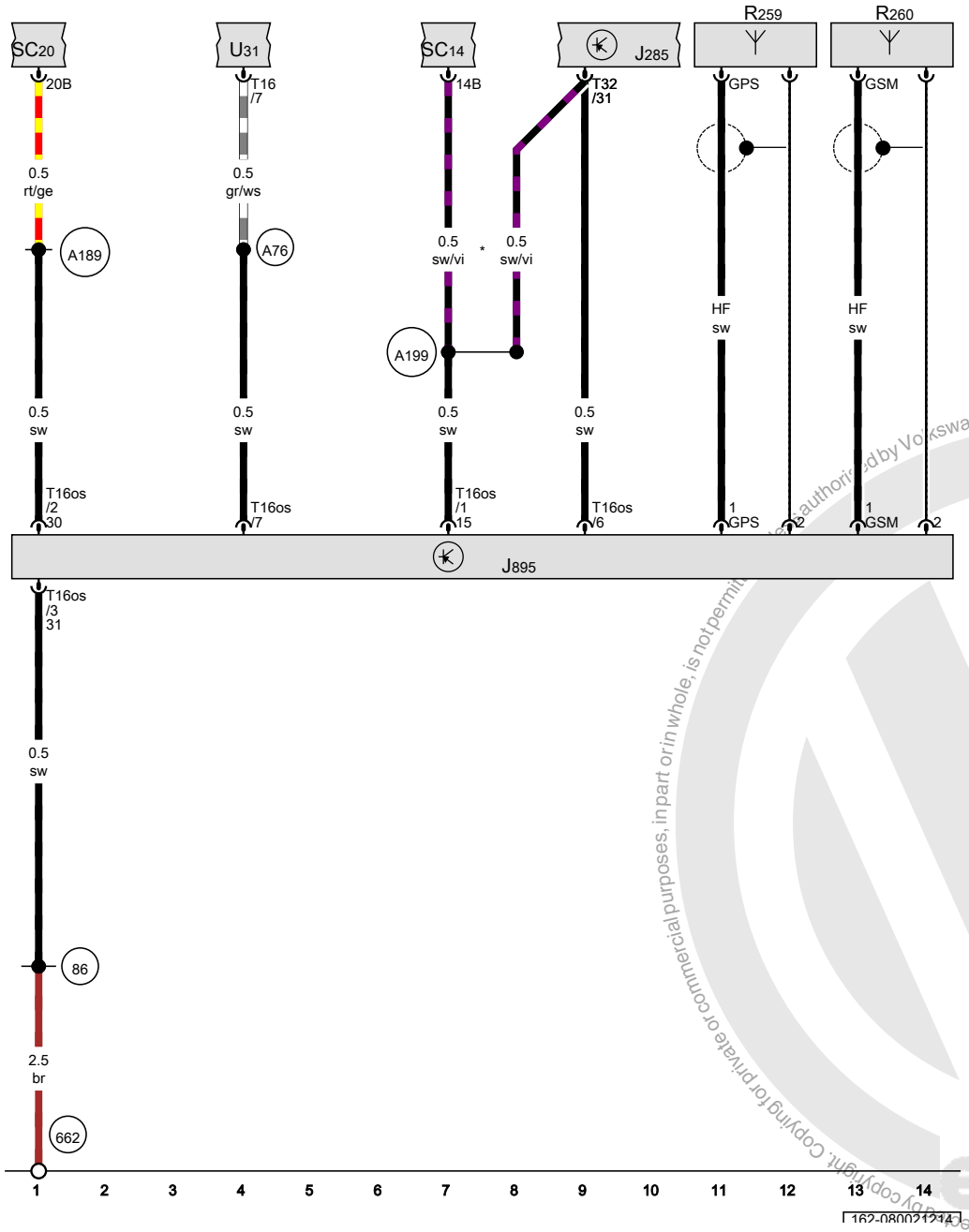

J285	Instrument cluster control module
J895	Vehicle positioning system control module
R259	Vehicle GPS antenna 1
R260	Vehicle GPS antenna 2
SC14	Fuse 14 (on fuse panel C)
SC20	Fuse 20 (on fuse panel C)
T16	16-pin connector
T16os	16-pin connector
T32	32-pin connector
U31	Diagnostic connection
86	Ground connection 1 (in rear wiring harness)
662	Ground connection in left rear side panel
A76	KS-diagnostic lead connection (in instrument panel wiring harness)
A189	Positive connection 5 (30a) (in instrument panel wiring harness)
A199	Positive connection 4 (15a) (in instrument panel wiring harness)
*	Depending on equipment

ws	=	white
sw	=	black
ro	=	red
rt	=	red
br	=	brown
gn	=	green
bl	=	blue
gr	=	grey
li	=	lilac
vi	=	lilac
ge	=	yellow
or	=	orange
rs	=	pink

Protected by copyright. Copying for private or commercial purposes, in part or in whole, is not permitted unless authorised by Volkswagen AG. Volkswagen AG does not guarantee or accept any liability with respect to the correctness of information in this document. Copyright by Volkswagen AG.

Coolant fan without A/C system , (9AA)

from April 2010

Protected by copyright. Copying for private or commercial purposes, in part or in whole, is not permitted unless authorised by Volkswagen AG. Volkswagen AG does not guarantee or accept any liability with respect to the correctness of information in this document. Copyright by Volkswagen AG.

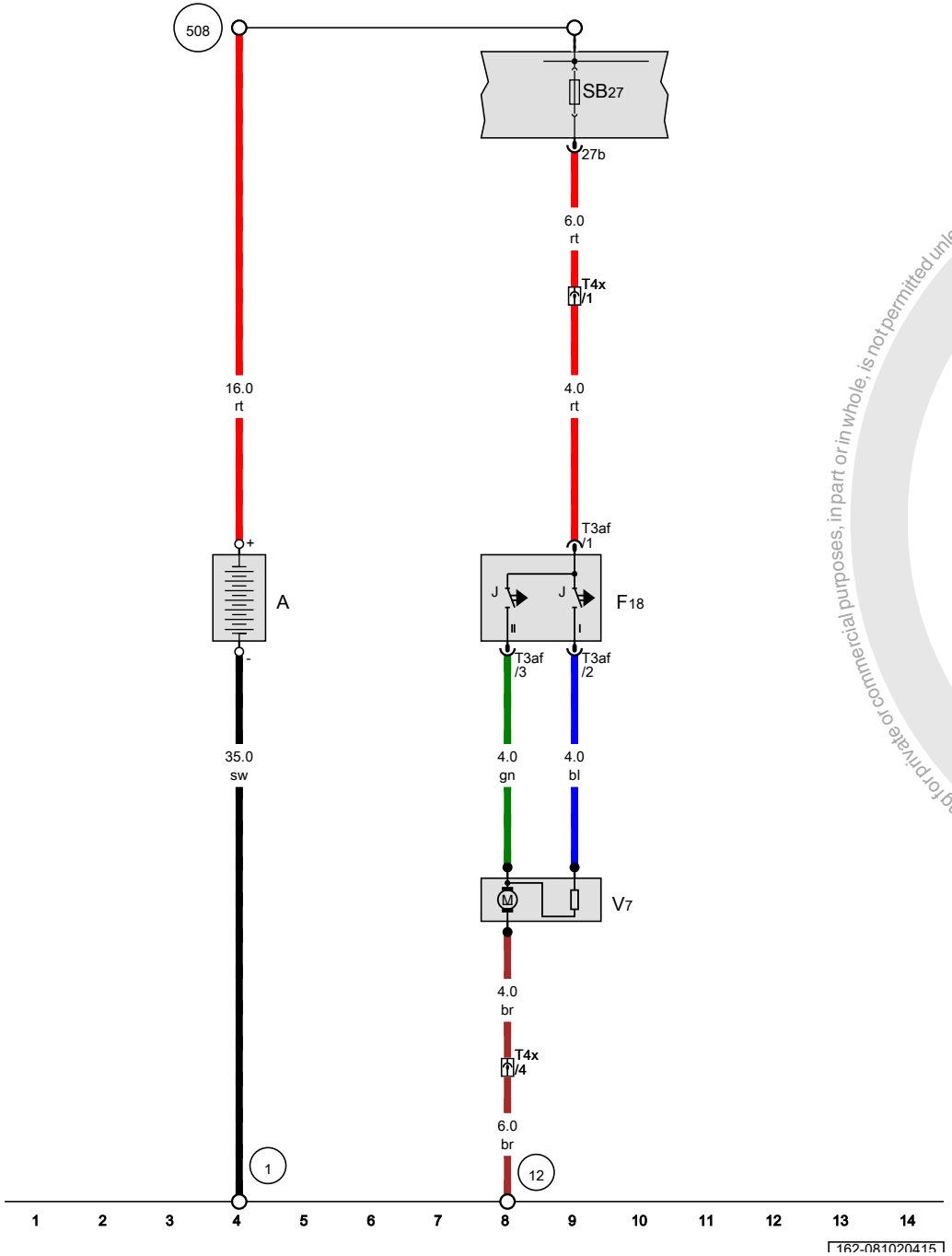

Radiator fan control thermal switch, Fuse 27 (on fuse panel B), Radiator fan

A	Battery
F18	Radiator fan control thermal switch
SB27	Fuse 27 (on fuse panel B)
T3af	3-pin connector
T4x	4-pin connector
V7	Radiator fan
1	Ground strap, battery to body
12	Ground connection in engine compartment, left
508	Terminal 30 threaded connection (on E-box)

Protected by copyright. Copying for private or commercial purposes, in part or in whole, is not permitted unless authorised by Volkswagen AG. Volkswagen AG does not guarantee or accept any liability with respect to the correctness of information in this document. Copyright by Volkswagen AG.

ws	=	white
sw	=	black
ro	=	red
rt	=	red
br	=	brown
gn	=	green
bl	=	blue
gr	=	grey
li	=	lilac
vi	=	lilac
ge	=	yellow
or	=	orange
rs	=	pink

2.5L gasoline engine , CBTA,CBUA,(AW0)

from December 2010

Protected by copyright. Copying for private or commercial purposes, in part or in whole, is not permitted unless authorised by Volkswagen AG. Volkswagen AG does not guarantee or accept any liability with respect to the correctness of information in this document. Copyright by Volkswagen AG.

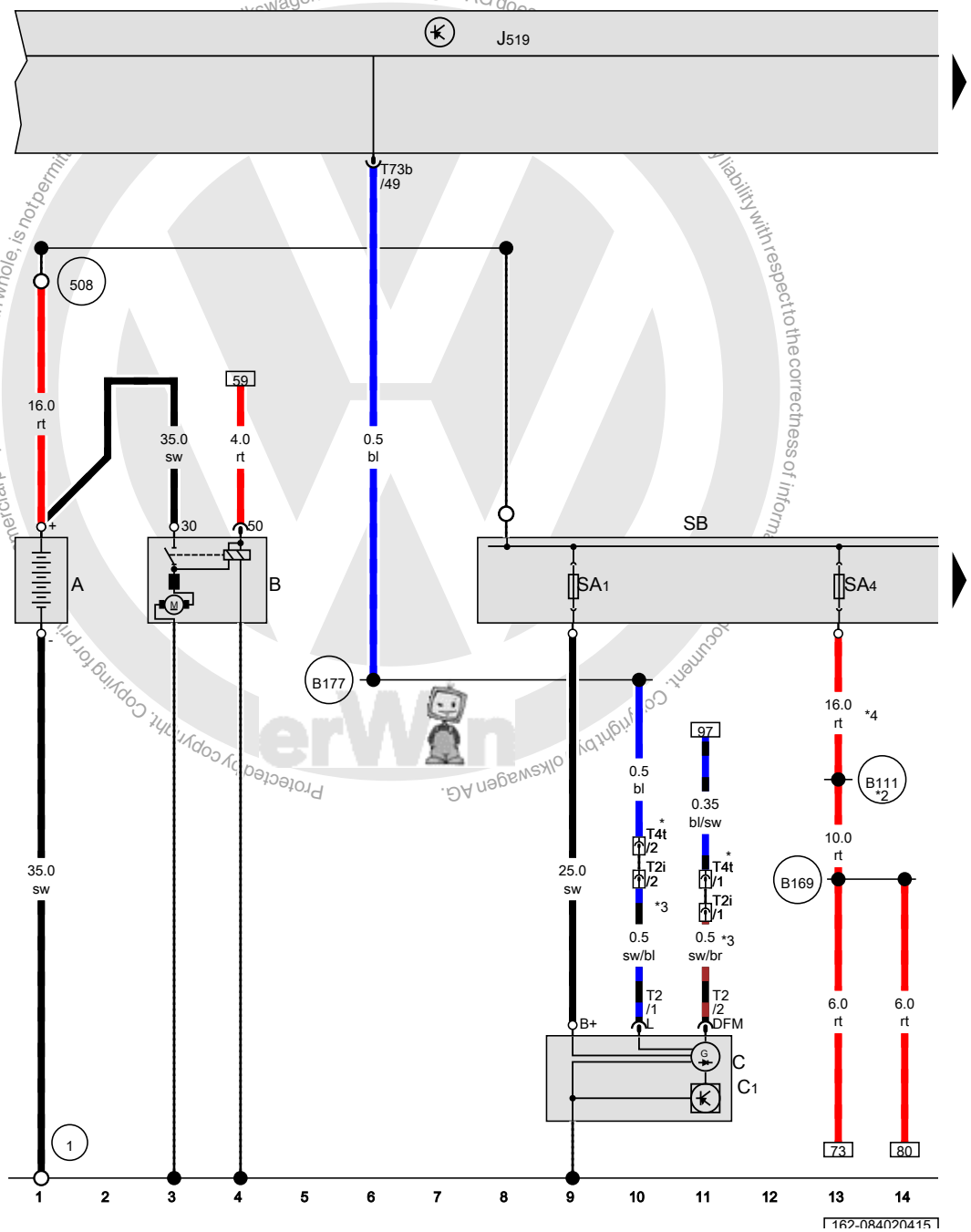

Battery, Starter, Generator, Vehicle electrical control module system, Fuse panel B

A	Battery
B	Starter
C	Generator
C1	Voltage regulator
J519	Vehicle electrical control module system
SA1	Fuse 1 (on fuse panel A)
SA4	Fuse 4 (on fuse panel A)
SB	Fuse panel B
T2	Double connector
T2i	Double connector, near the starter
T4t	4-pin connector, near the starter
T73b	73-pin connector
1	Ground strap, battery to body
508	Terminal 30 threaded connection (on E-box)
B111	Positive connection 1 (30a) (in interior wiring harness)
B169	Positive connection 1 (30) (in interior wiring harness)
B177	Connection 61 (in interior wiring harness)
*	Only for vehicles with A/C system
*2	Omitted as a running change
*3	Only for vehicles without an A/C system
*4	Diameter depends on equipment

ws	=	white
sw	=	black
ro	=	red
rt	=	red
br	=	brown
gn	=	green
bl	=	blue
gr	=	grey
li	=	lilac
vi	=	lilac
ge	=	yellow
or	=	orange
rs	=	pink

Motronic engine control module power supply relay, Vehicle electrical control module system, Fuse panel B, Fuse 14 (on fuse panel B)

J271	Motronic engine control module power supply relay
J519	Vehicle electrical control module system
SB	Fuse panel B
SB2	Fuse 2 (on fuse panel B)
SB3	Fuse 3 (on fuse panel B)
SB4	Fuse 4 (on fuse panel B)
SB5	Fuse 5 (on fuse panel B)
SB14	Fuse 14 (on fuse panel B)
T4x	4-pin connector
12	Ground connection in engine compartment, left
652	Transmission/engine ground connection
B350	Positive connection 1 (87a) (in main wiring harness)
D78	Positive connection 1 (30a) (in engine compartment wiring harness)
*	Coolant fan connection
*2	The color of the wires depends on vehicle equipment

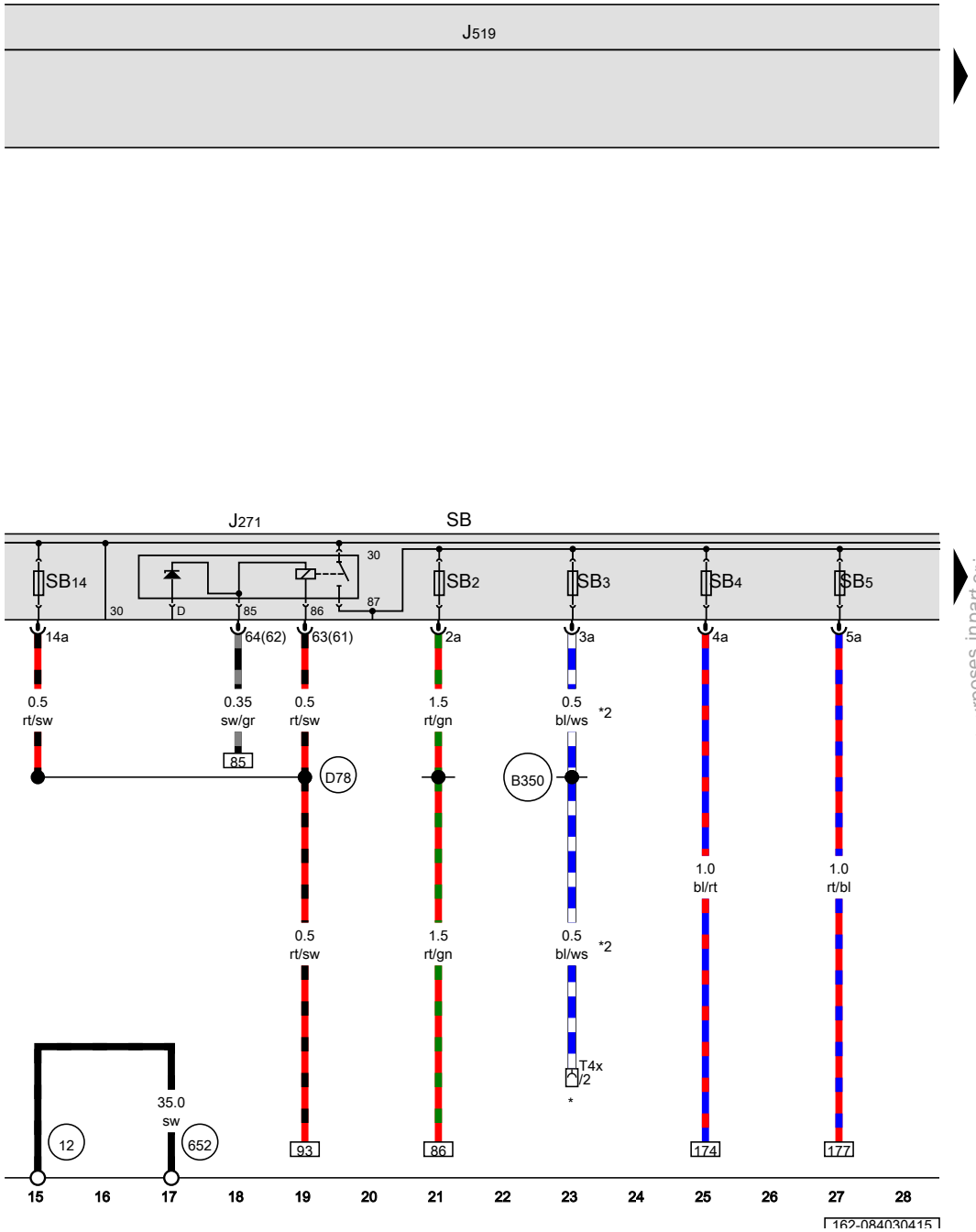

ws	=	white
sw	=	black
ro	=	red
rt	=	red
br	=	brown
gn	=	green
bl	=	blue
gr	=	grey
li	=	lilac
vi	=	lilac
ge	=	yellow
or	=	orange
rs	=	pink

Protected by copyright. Copying for private or commercial purposes, in part or in whole, is not permitted unless authorised by Volkswagen AG. Volkswagen AG does not guarantee or accept any liability with respect to the correctness of information in this document. Copyright by Volkswagen AG.

Secondary air injection pump relay, Vehicle electrical control module system, Fuse panel B, Secondary air injection pump motor

J299	Secondary air injection pump relay
J519	Vehicle electrical control module system
SB	Fuse panel B
SB6	Fuse 6 (on fuse panel B)
SB7	Fuse 7 (on fuse panel B)
SB8	Fuse 8 (on fuse panel B)
SB10	Fuse 10 (on fuse panel B)
SB21	Fuse 21 (on fuse panel B)
SB25	Fuse 25 (on fuse panel B)
T14	14-pin connector, near the battery
V101	Secondary air injection pump motor
(12)	Ground connection in engine compartment, left
*	Depending on equipment
*2	Running change
*3	Omitted as a running change

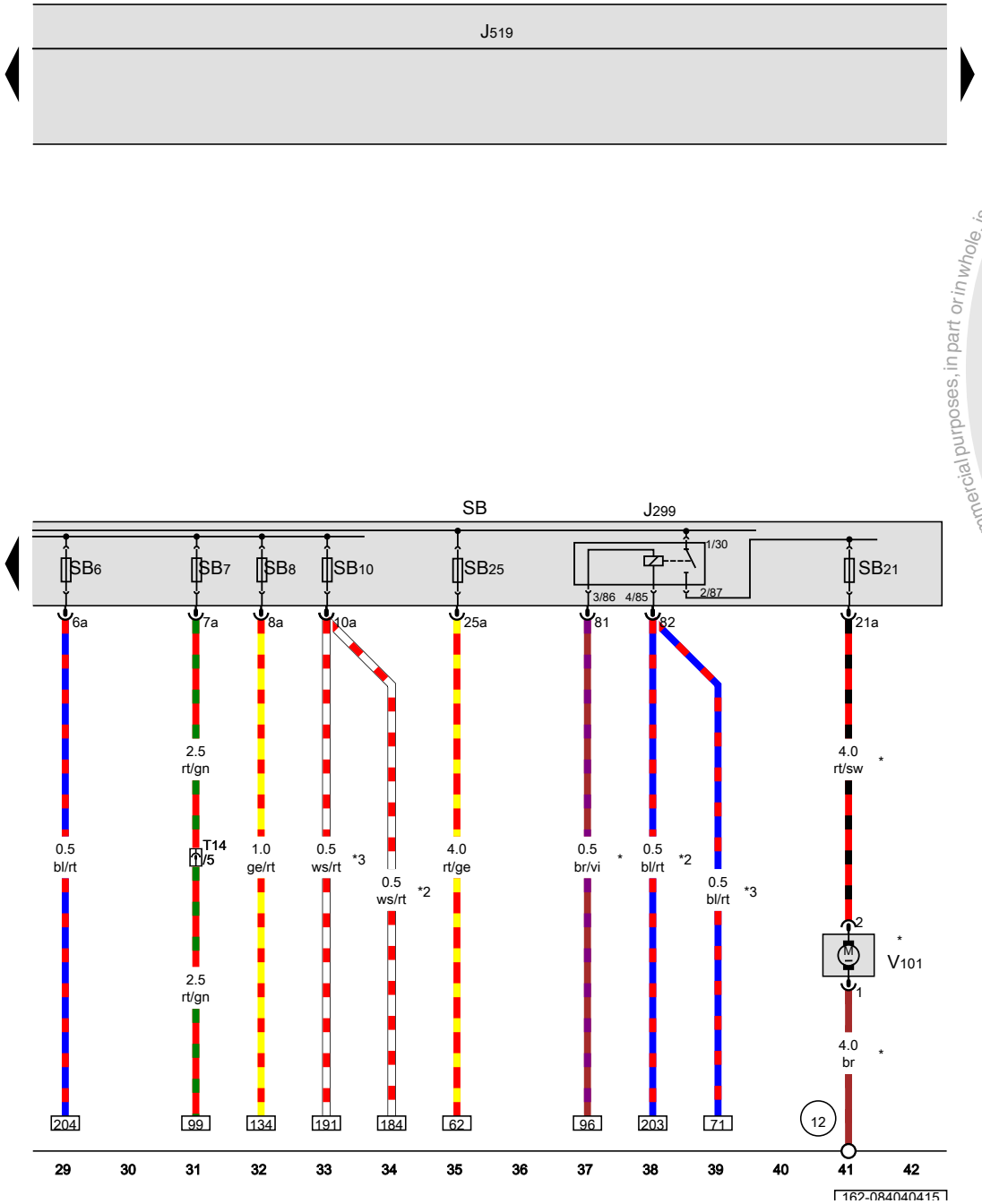

ws	=	white
sw	=	black
ro	=	red
rt	=	red
br	=	brown
gn	=	green
bl	=	blue
gr	=	grey
li	=	lilac
vi	=	lilac
ge	=	yellow
or	=	orange
rs	=	pink

Protected by copyright. Copying for private or commercial purposes, in part or in whole, is not permitted unless authorised by Volkswagen AG. Volkswagen AG does not make any representation or warranty or accept any liability with respect to the correctness of information in this document. Copyright by Volkswagen AG.

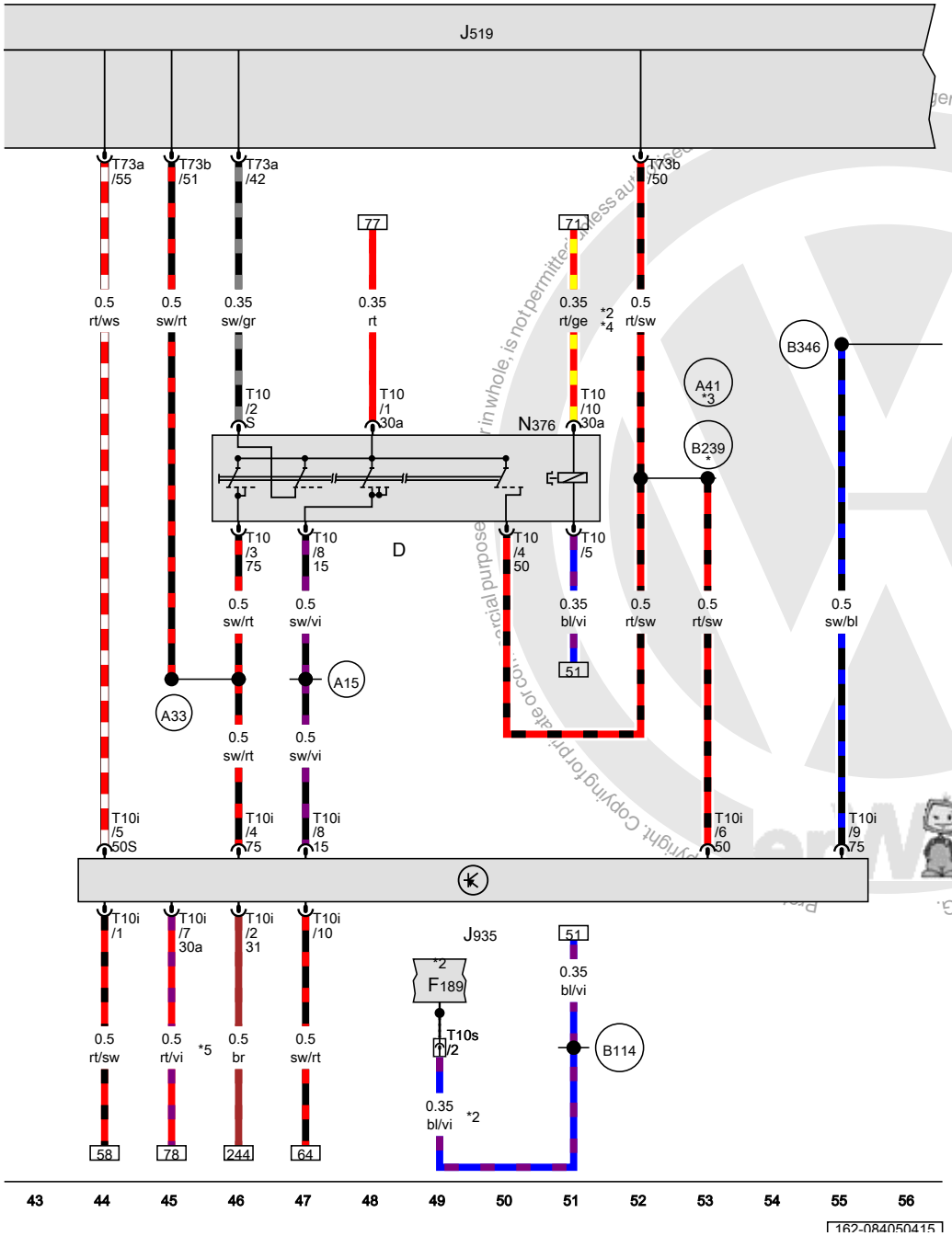

Ignition/starter switch, Vehicle electrical control module system, Converter box

D	Ignition/starter switch
F189	tiptronic switch
J519	Vehicle electrical control module system
J935	Converter box
N376	Ignition switch key lock solenoid
T10	10-pin connector
T10i	10-pin connector
T10s	10-pin connector
T73a	73-pin connector
T73b	73-pin connector
A15	Plus connection (15) (in instrument cluster wiring harness)
A33	Connection 75 (in instrument panel wiring harness)
A41	Positive connection (50) (in instrument panel wiring harness)
B114	Lock switch connection (in interior wiring harness)
B239	Positive connection 1 (50) (in interior wiring harness)
B346	Connection 75 (in main wiring harness) 1
*	Through May 2013
*2	Only for vehicles with automatic transmission
*3	from June 2013
*4	Diameter depends on equipment
*5	The color of the wires depends on vehicle equipment

ws	=	white
sw	=	black
ro	=	red
rt	=	red
br	=	brown
gn	=	green
bl	=	blue
gr	=	grey
li	=	lilac
vi	=	lilac
ge	=	yellow
or	=	orange
rs	=	pink

Copyright by Volkswagen AG. Copyright. Copying for private or commercial purposes, in whole or in part, is not permitted unless authorized by Volkswagen AG. Volkswagen AG does not guarantee or accept any liability with respect to the correctness of information in this document.

Terminal 15 power supply relay, Terminal 15 power supply relay 2, Terminal 50 power supply relay, Fuse panel C

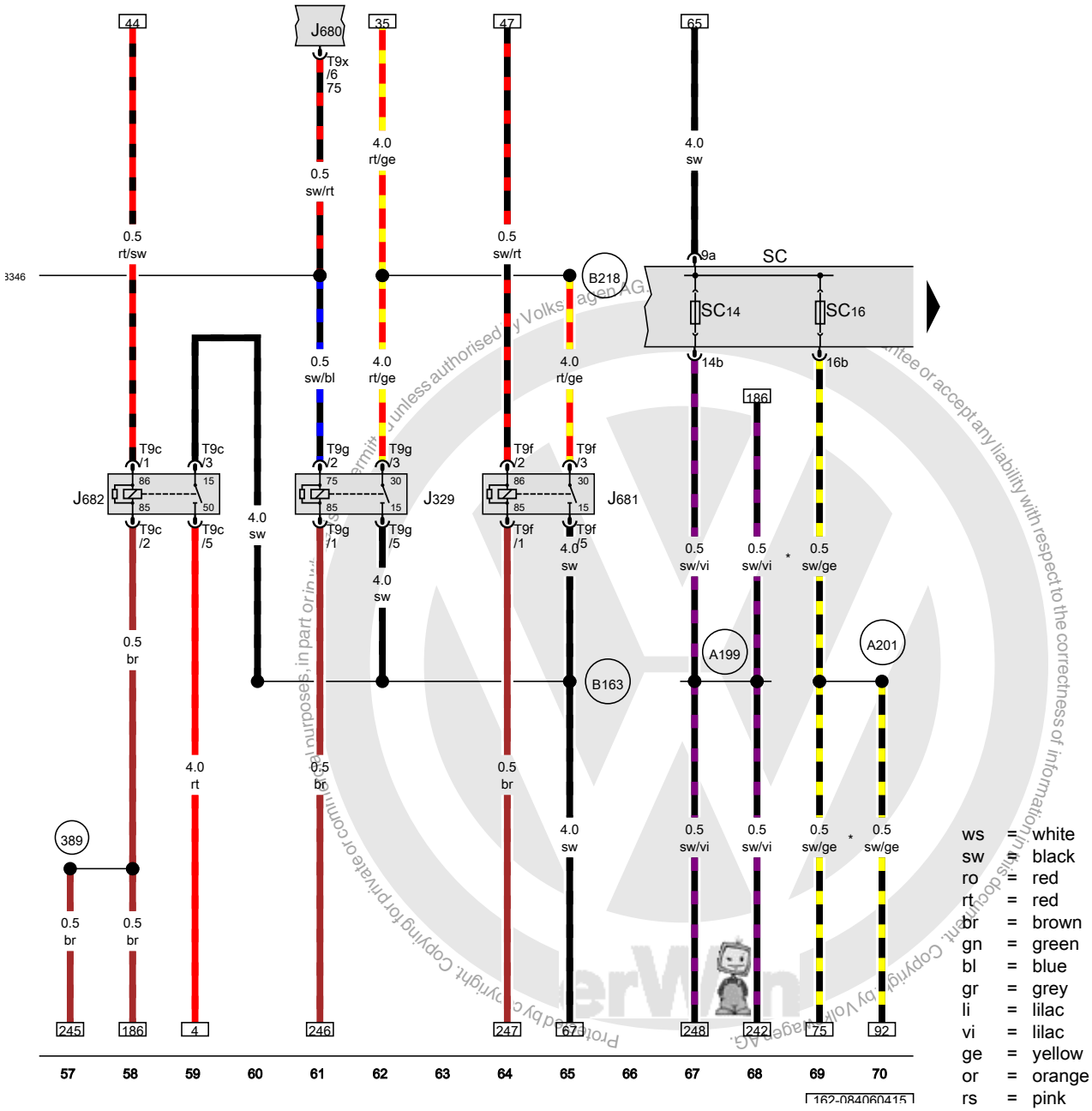

J329	Terminal 15 power supply relay	
J680	Terminal 75 power supply relay 1	
J681	Terminal 15 power supply relay 2	
J682	Terminal 50 power supply relay	
SC	Fuse panel C	
SC14	Fuse 14 (on fuse panel C)	
SC16	Fuse 16 (on fuse panel C)	
T9c	9-pin connector	
T9f	9-pin connector	
T9g	9-pin connector	
T9x	9-pin connector	
389	Ground connection 24 (in main wiring harness)	
A199	Positive connection 4 (15a) (in instrument panel wiring harness)	
A201	Positive connection 6 (15a) (in instrument panel wiring harness)	
B163	Positive connection 1 (15) (in interior wiring harness)	
B218	Positive connection 6 (30) (in interior wiring harness)	
B346	Connection 75 (in main wiring harness) 1	
*	Omitted as a running change	

ws	=	white
sw	=	black
ro	=	red
rt	=	red
br	=	brown
gn	=	green
bl	=	blue
gr	=	grey
li	=	lilac
vi	=	lilac
ge	=	yellow
or	=	orange
rs	=	pink

Protected by copyright. Copying for private or commercial purposes, in part or in whole, is not permitted unless authorised by Volkswagen AG. Volkswagen AG does not guarantee or accept any liability with respect to the correctness of information in this document. Copyright by Volkswagen AG.

Fuel level sensor, Transfer fuel pump, Fuel pump relay, Fuse panel C

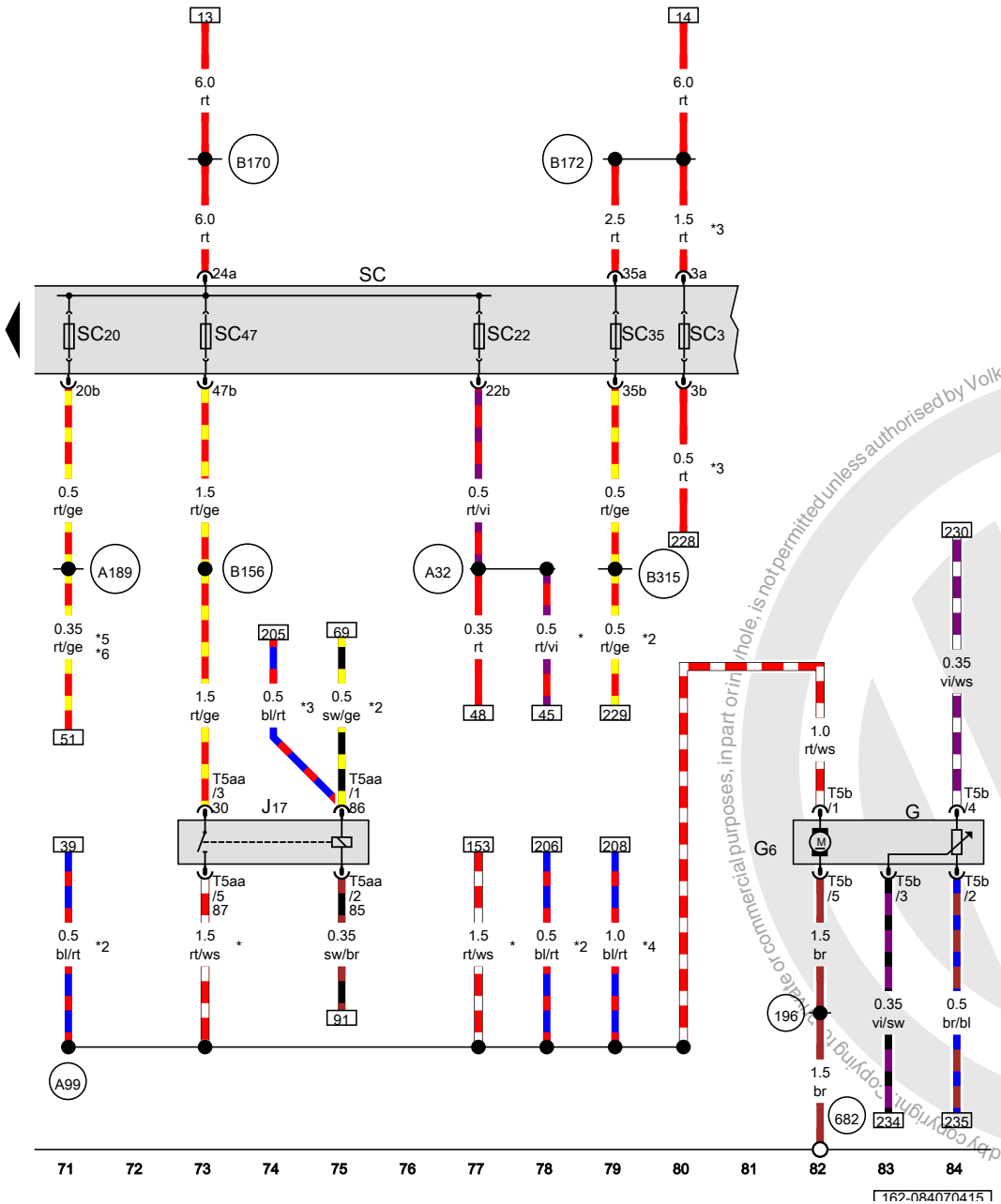

G	Fuel level sensor
G6	Transfer fuel pump
J17	Fuel pump relay
SC	Fuse panel C
SC3	Fuse 3 (on fuse panel C)
SC20	Fuse 20 (on fuse panel C)
SC22	Fuse 22 (on fuse panel C)
SC35	Fuse 35 (on fuse panel C)
SC47	Fuse 47 (on fuse panel C)
T5aa	5-pin connector
T5b	5-pin connector
196	Ground connection 3 (in rear wiring harness)
682	Ground connection 2 in right rear side panel
A32	Positive connection (30) (in instrument panel wiring harness)
A99	Connection 87 (in instrument panel wiring harness) 1
A189	Positive connection 5 (30a) (in instrument panel wiring harness)
B156	Positive connection (30a) (in interior wiring harness)
B170	Positive connection 2 (30) (in interior wiring harness)
B172	Positive connection 4 (30) (in interior wiring harness)
B315	Positive connection 1 (30a) (in main wiring harness)
*	The color of the wires depends on vehicle equipment
*2	Omitted as a running change
*3	Running change
*4	Depending on equipment
*5	Only for vehicles with automatic transmission
*6	Diameter depends on equipment

ws	=	white
sw	=	black
ro	=	red
rt	=	red
br	=	brown
gn	=	green
bl	=	blue
gr	=	grey
li	=	lilac
vi	=	lilac
ge	=	yellow
or	=	orange
rs	=	pink

Protected by copyright. Copying for private or commercial purposes, in part or in whole, is not permitted unless authorised by Volkswagen AG. Volkswagen AG does not guarantee or accept any liability with respect to the correctness of information in this document. Copyright by Volkswagen AG.

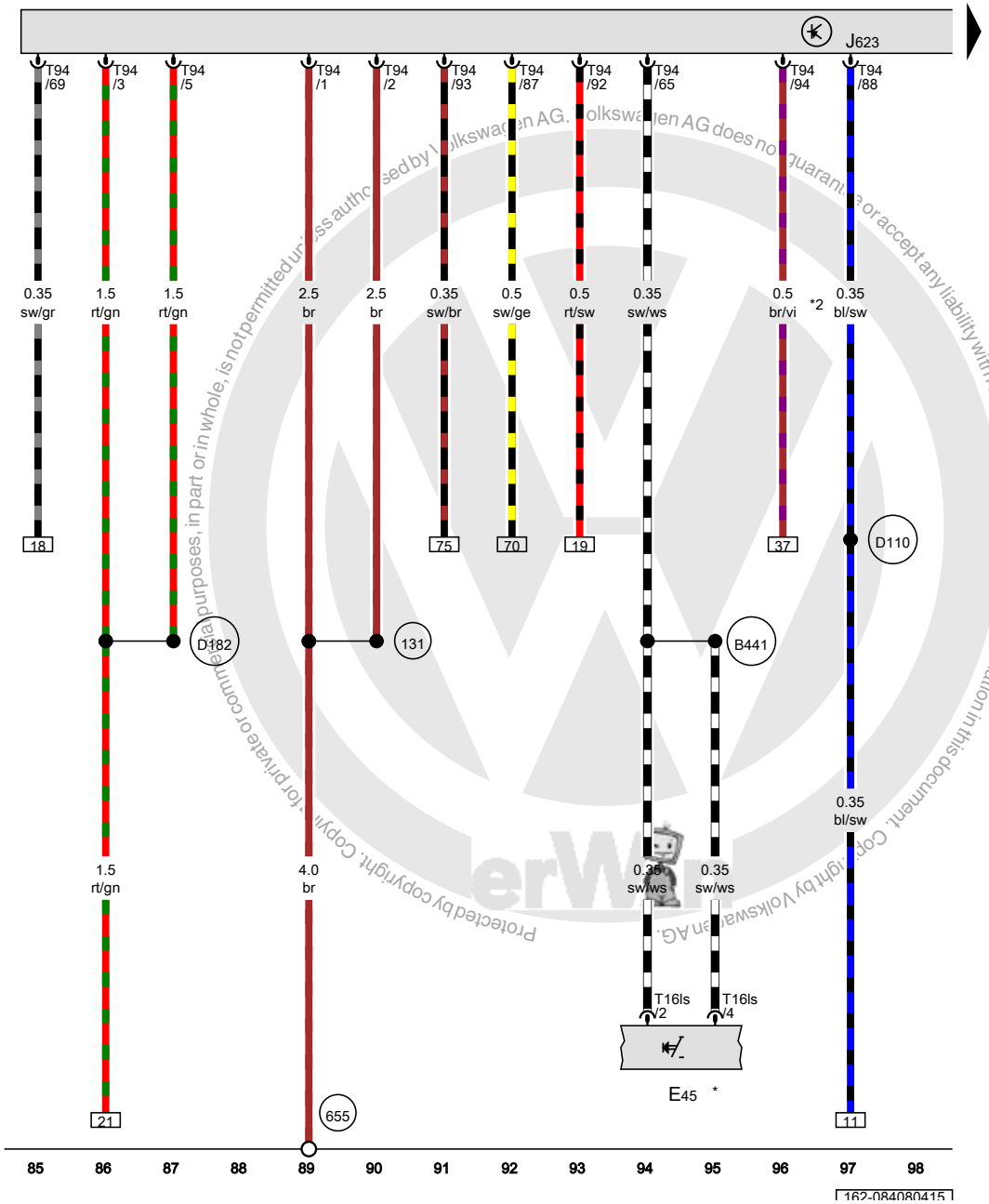

Engine control module

E45	Cruise control switch
J623	Engine control module
T16ls	16-pin connector
T94	94-pin connector
131	Ground connection 2 (in engine compartment wiring harness)
655	Ground connection on left headlamp
B441	Cruise control connection (in main wiring harness)
D110	Connection 8 (in engine compartment wiring harness)
D182	Connection 3 (87a) (in engine compartment wiring harness)
*	Only for vehicles with cruise control
*2	Depending on equipment

ws	=	white
sw	=	black
ro	=	red
rt	=	red
br	=	brown
gn	=	green
bl	=	blue
gr	=	grey
li	=	lilac
vi	=	lilac
ge	=	yellow
or	=	orange
rs	=	pink

Protected by copyright. Copyright by Volkswagen AG. Volkswagen AG does not guarantee or accept any liability with respect to the correctness of information in this document. Copyright by Volkswagen AG. Protected by copyright. Copying for private or commercial purposes, in part or in whole, is not permitted unless authorised by Volkswagen AG.

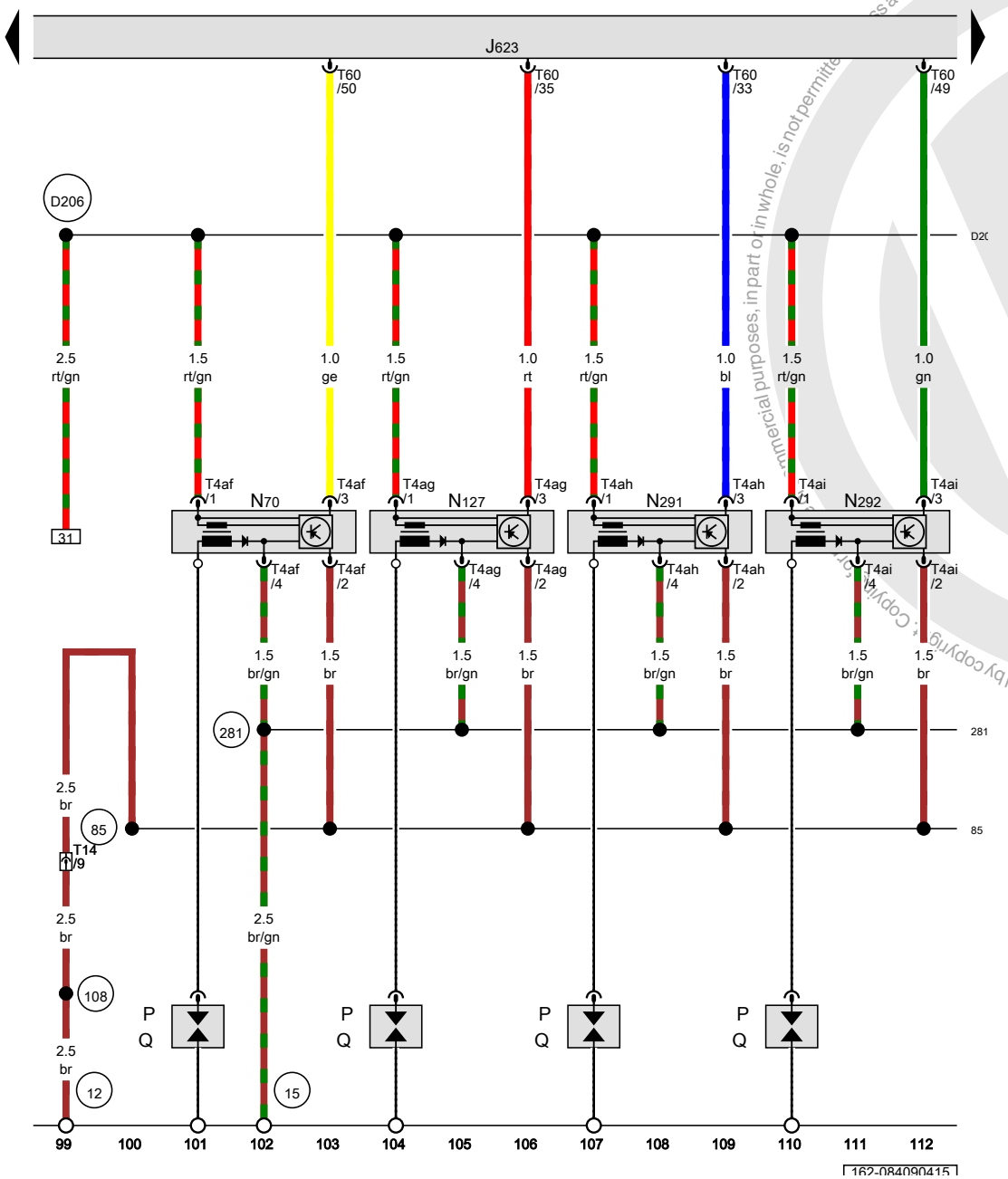

Engine control module, Ignition coil 1 with power output stage, Ignition coil 2 with power output stage, Ignition coil 3 with power output stage, Ignition coil 4 with power output stage, Spark plug connectors, Spark plugs

J623	Engine control module
N70	Ignition coil 1 with power output stage
N127	Ignition coil 2 with power output stage
N291	Ignition coil 3 with power output stage
N292	Ignition coil 4 with power output stage
P	Spark plug connectors
Q	Spark plugs
T4af	4-pin connector
T4ag	4-pin connector
T4ah	4-pin connector
T4ai	4-pin connector
T14	14-pin connector, near the battery
T60	60-pin connector
12	Ground connection in engine compartment, left
15	Ground connection on cylinder head
85	Ground connection 1 (in engine compartment wiring harness)
108	Ground connection 2 (in left front wiring harness)
281	Ground connection 1 (in engine pre-wiring harness)
D206	Connection 87a (in engine pre-wiring harness) 4

ws	=	white
sw	=	black
ro	=	red
rt	=	red
br	=	brown
gn	=	green
bl	=	blue
gr	=	grey
li	=	lilac
vi	=	lilac
ge	=	yellow
or	=	orange
rs	=	pink

Protected by copyright. Copying for private or commercial purposes, in part or in whole, is not permitted unless authorised by Volkswagen AG. Volkswagen AG does not guarantee or assume any liability with respect to the correctness of information in this document. Copyright by Volkswagen AG.

Throttle valve control module, Engine coolant temperature sensor, EPC throttle drive, Engine control module, Ignition coil 5 with power output stage, Spark plug connectors

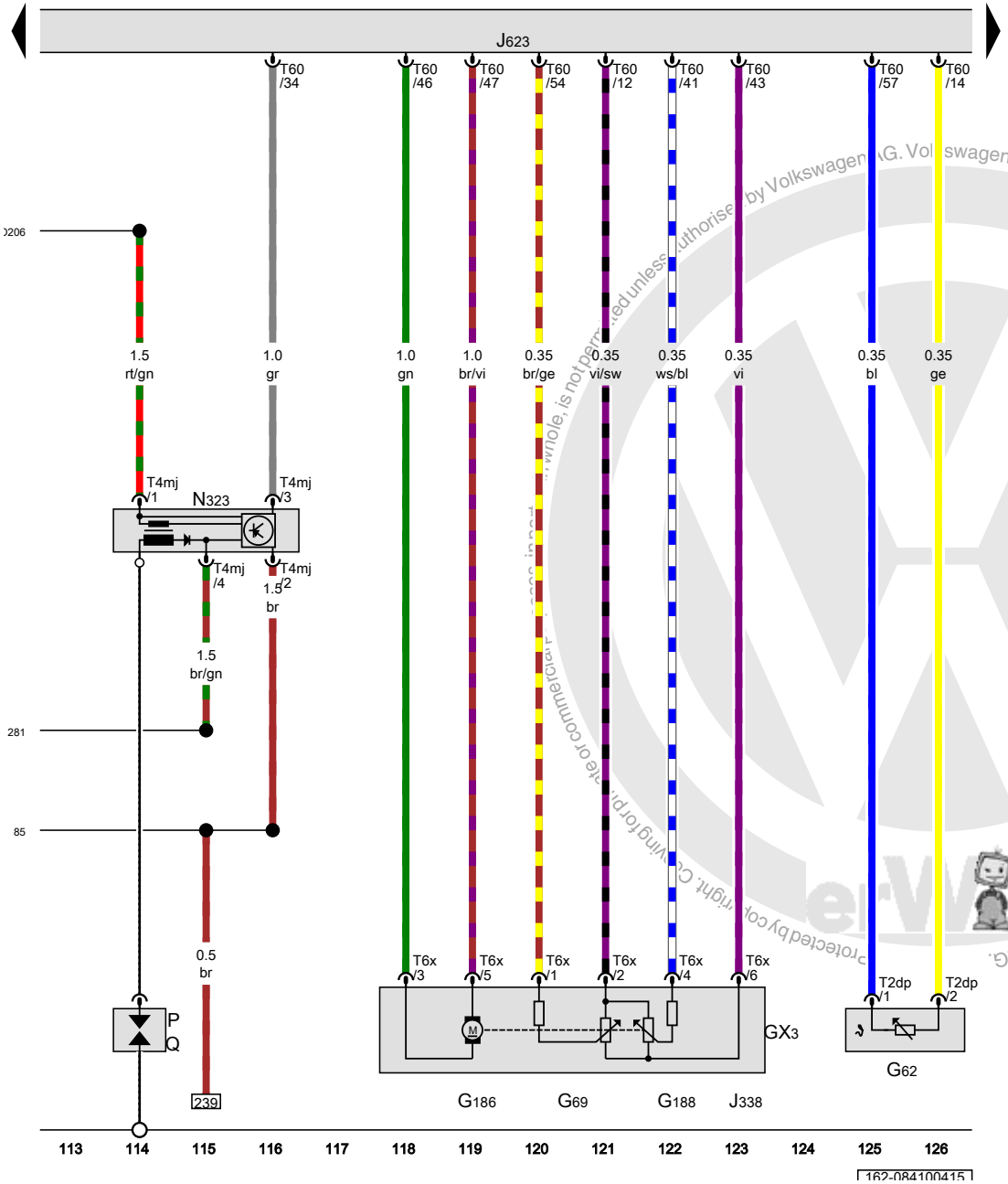

GX3	Throttle valve control module
G62	Engine coolant temperature sensor
G69	Throttle position sensor
G186	EPC throttle drive
G188	EPC throttle drive angle sensor 2
J338	Throttle valve control module
J623	Engine control module
N323	Ignition coil 5 with power output stage
P	Spark plug connectors
Q	Spark plugs
T2dp	Double connector
T4mj	4-pin connector
T6x	6-pin connector
T60	60-pin connector
85	Ground connection 1 (in engine compartment wiring harness)
281	Ground connection 1 (in engine pre-wiring harness)
D206	Connection 87a (in engine pre-wiring harness) 4

ws	=	white
sw	=	black
ro	=	red
rt	=	red
br	=	brown
gn	=	green
bl	=	blue
gr	=	grey
li	=	lilac
vi	=	lilac
ge	=	yellow
or	=	orange
rs	=	pink

Copyright by Volkswagen AG. Volkswagen AG does not guarantee or accept any liability with respect to the correctness of information in this document. Copyright by Volkswagen AG. This document, in whole, is not permitted unless authorised by Volkswagen AG. Copying for private or commercial purposes, in part or in whole, is not permitted unless authorised by Volkswagen AG.

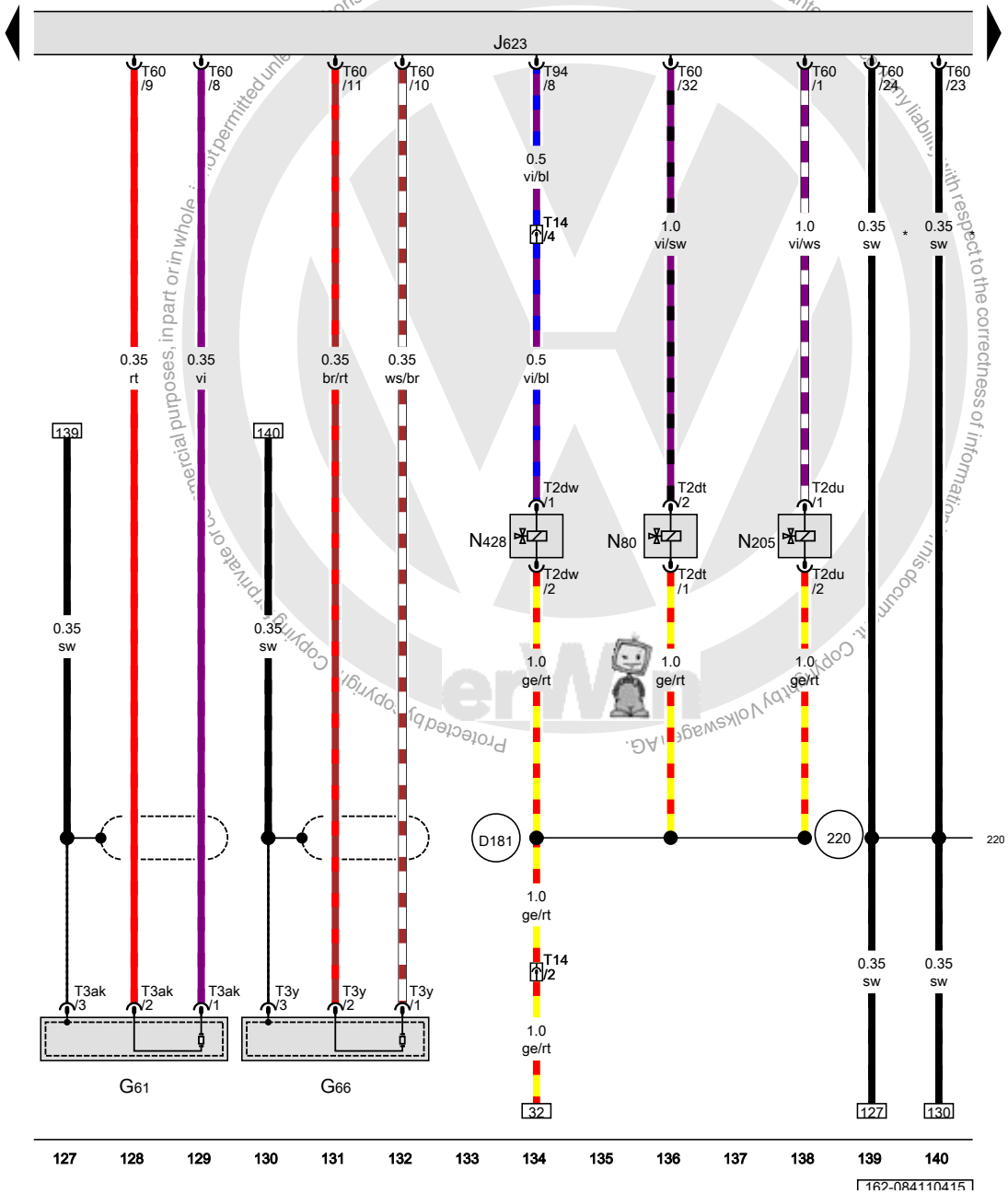

Knock sensor 1, Knock sensor 2, Engine control module, EVAP canister purge regulator valve 1, Camshaft adjustment valve 1

G61	Knock sensor 1
G66	Knock sensor 2
J623	Engine control module
N80	EVAP canister purge regulator valve 1
N205	Camshaft adjustment valve 1
N428	Oil pressure regulation valve
T2dt	Double connector
T2du	Double connector
T2dw	Double connector
T3ak	3-pin connector
T3y	3-pin connector
T14	14-pin connector, near the battery
T60	60-pin connector
T94	94-pin connector
(220)	Sensor ground connection (in engine wiring harness)
(D181)	Connection 2 (87a) (in engine compartment wiring harness)
*	Wagon

ws	=	white
sw	=	black
ro	=	red
rt	=	red
br	=	brown
gn	=	green
bl	=	blue
gr	=	grey
li	=	lilac
vi	=	lilac
ge	=	yellow
or	=	orange
rs	=	pink

Intake manifold sensor, Engine speed sensor, Camshaft position sensor, Intake air temperature sensor, Engine control module, Cylinder 1 fuel injector

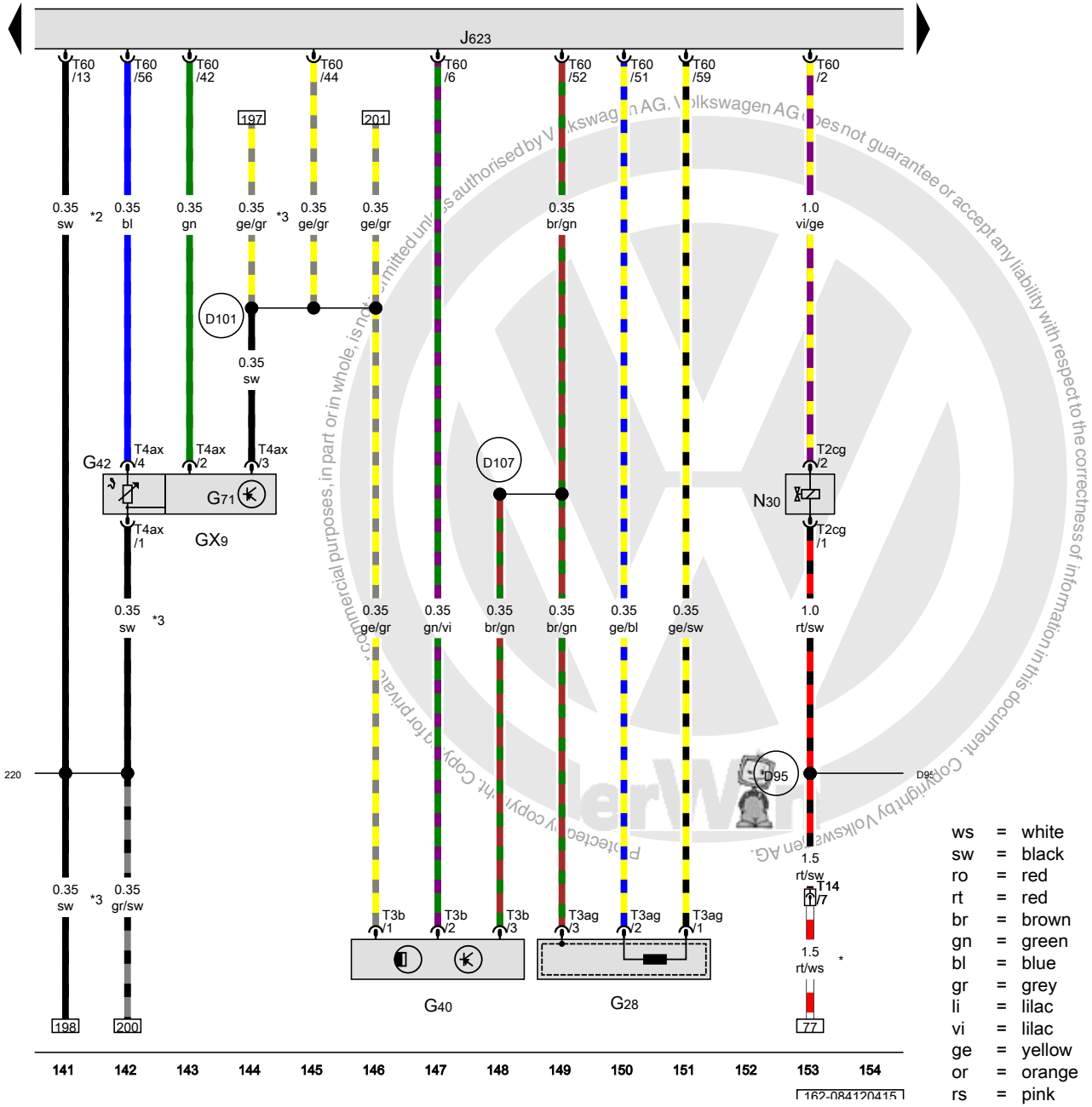

GX9	Intake manifold sensor	
G28	Engine speed sensor	
G40	Camshaft position sensor	
G42	Intake air temperature sensor	
G71	Manifold absolute pressure sensor	
J623	Engine control module	
N30	Cylinder 1 fuel injector	
T2cg	Double connector	
T3ag	3-pin connector	
T3b	3-pin connector	
T4ax	4-pin connector	
T14	14-pin connector	
T60	60-pin connector	
220	Sensor ground connection (in engine wiring harness)	
D95	Injector connection (in engine compartment wiring harness)	
D101	Connection 1 (in engine compartment wiring harness)	
D107	Connection 5 (in engine compartment wiring harness)	
*	The color of the wires depends on vehicle equipment	
*2	USA only	
*3	Depending on equipment	

ws	=	white
sw	=	black
ro	=	red
rt	=	red
br	=	brown
gn	=	green
bl	=	blue
gr	=	grey
li	=	lilac
vi	=	lilac
ge	=	yellow
or	=	orange
rs	=	pink

Protected by copyright. Copyright by Volkswagen AG. Volkswagen AG does not guarantee or accept any liability with respect to the correctness of information in this document. Copy for private, commercial purposes, in part or in whole, is not permitted unless authorised by Volkswagen AG.

Accelerator pedal module, Accelerator pedal position sensor 2, Engine control module, Cylinder 2 fuel injector, Cylinder 3 fuel injector, Cylinder 4 fuel injector, Cylinder 5 fuel injector

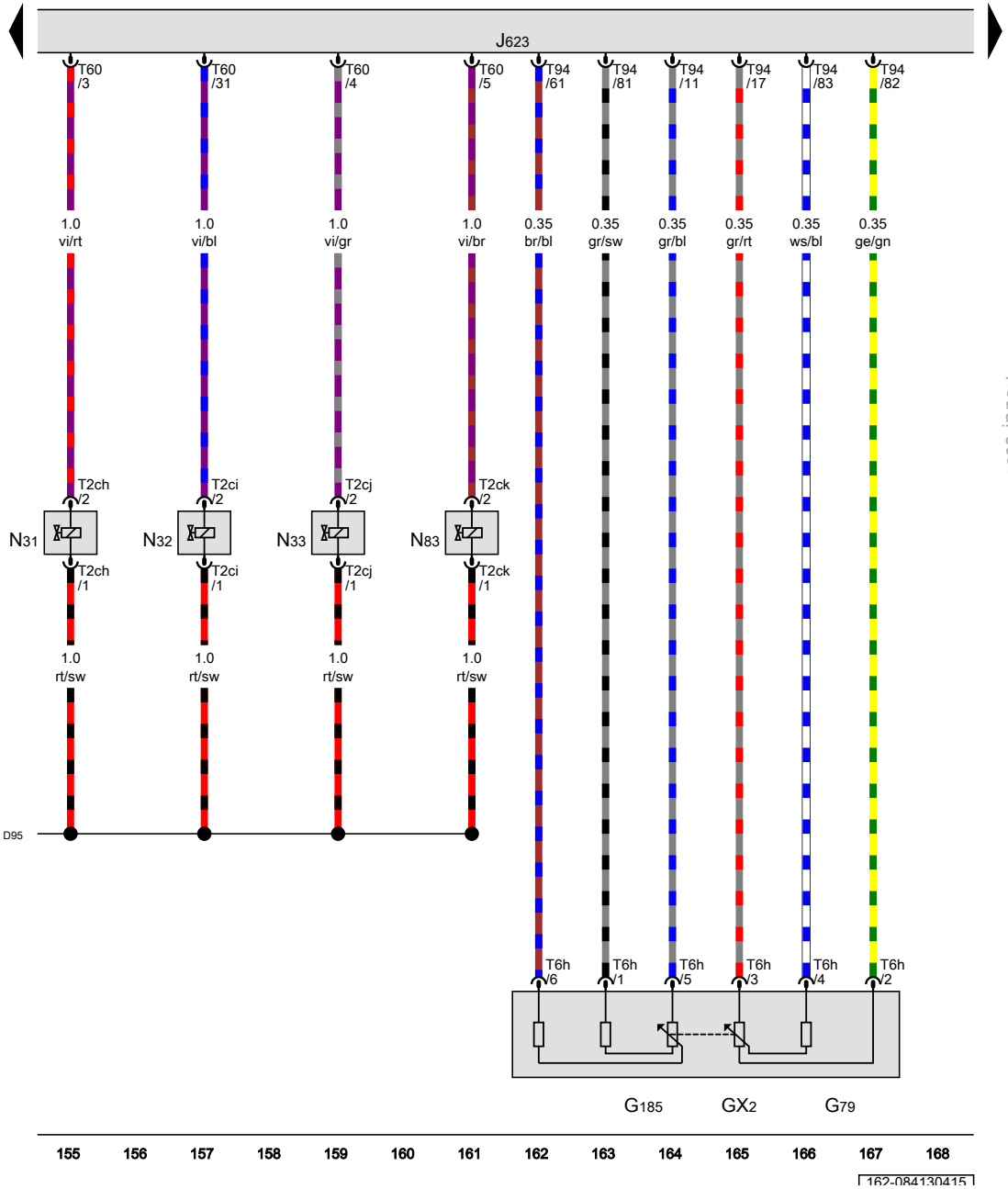

GX2	Accelerator pedal module
G79	Accelerator pedal position sensor
G185	Accelerator pedal position sensor 2
J623	Engine control module
N31	Cylinder 2 fuel injector
N32	Cylinder 3 fuel injector
N33	Cylinder 4 fuel injector
N83	Cylinder 5 fuel injector
T2ch	Double connector
T2ci	Double connector
T2cj	Double connector
T2ck	Double connector
T6h	6-pin connector
T60	60-pin connector
T94	94-pin connector
D95	Injector connection (in engine compartment wiring harness)

ws	=	white
sw	=	black
ro	=	red
rt	=	red
br	=	brown
gn	=	green
bl	=	blue
gr	=	grey
li	=	lilac
vi	=	lilac
ge	=	yellow
or	=	orange
rs	=	pink

Protected by copyright. Copying for private or commercial purposes, in part or in whole, is not permitted unless authorised by Volkswagen AG. Volkswagen AG does not guarantee or accept any liability with respect to the correctness of information in this document. Copyright by Volkswagen AG.

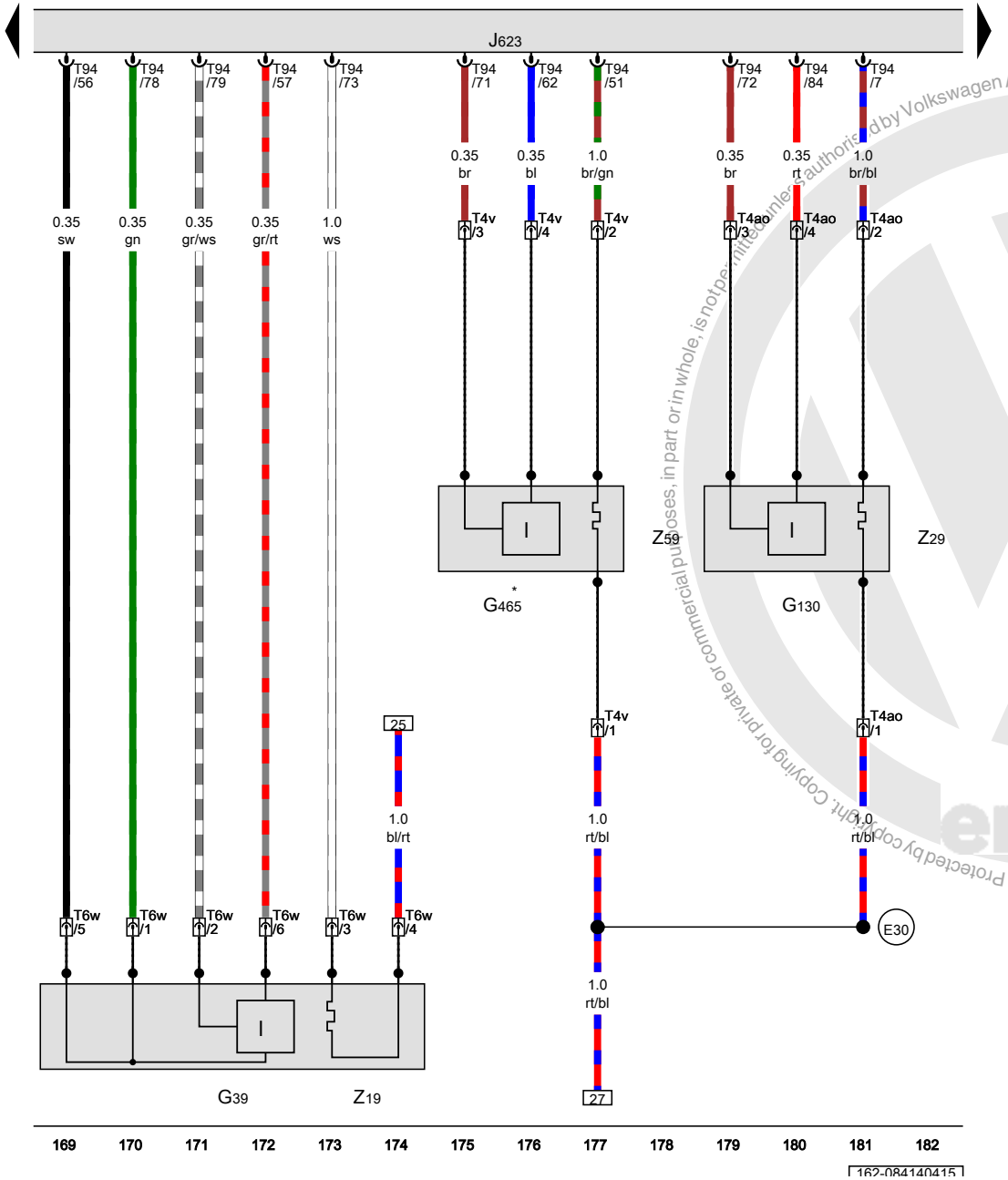

Heated oxygen sensor, Oxygen sensor after three way catalytic converter, Oxygen sensor in bank 1 center three way catalytic converter, Engine control module, Oxygen sensor heater, Heater for oxygen sensor 1 after catalytic converter, Heater for oxygen sensor center catalytic converter

G39	Heated oxygen sensor
G130	Oxygen sensor after three way catalytic converter
G465	Oxygen sensor in bank 1 center three way catalytic converter
J623	Engine control module
T4ao	4-pin connector
T4v	4-pin connector
T6w	6-pin connector
T94	94-pin connector
Z19	Oxygen sensor heater
Z29	Heater for oxygen sensor 1 after catalytic converter
Z59	Heater for oxygen sensor center catalytic converter
(E30)	Connection 87a (in engine wiring harness)
*	Depending on equipment

ws	=	white
sw	=	black
ro	=	red
rt	=	red
br	=	brown
gn	=	green
bl	=	blue
gr	=	grey
li	=	lilac
vi	=	lilac
ge	=	yellow
or	=	orange
rs	=	pink

Protected by copyright. Copying for private or commercial purposes, in part or in whole, is not permitted unless authorised by Volkswagen AG. Volkswagen AG does not guarantee or accept any liability with respect to the correctness of information in this document. Copyright by Volkswagen AG.

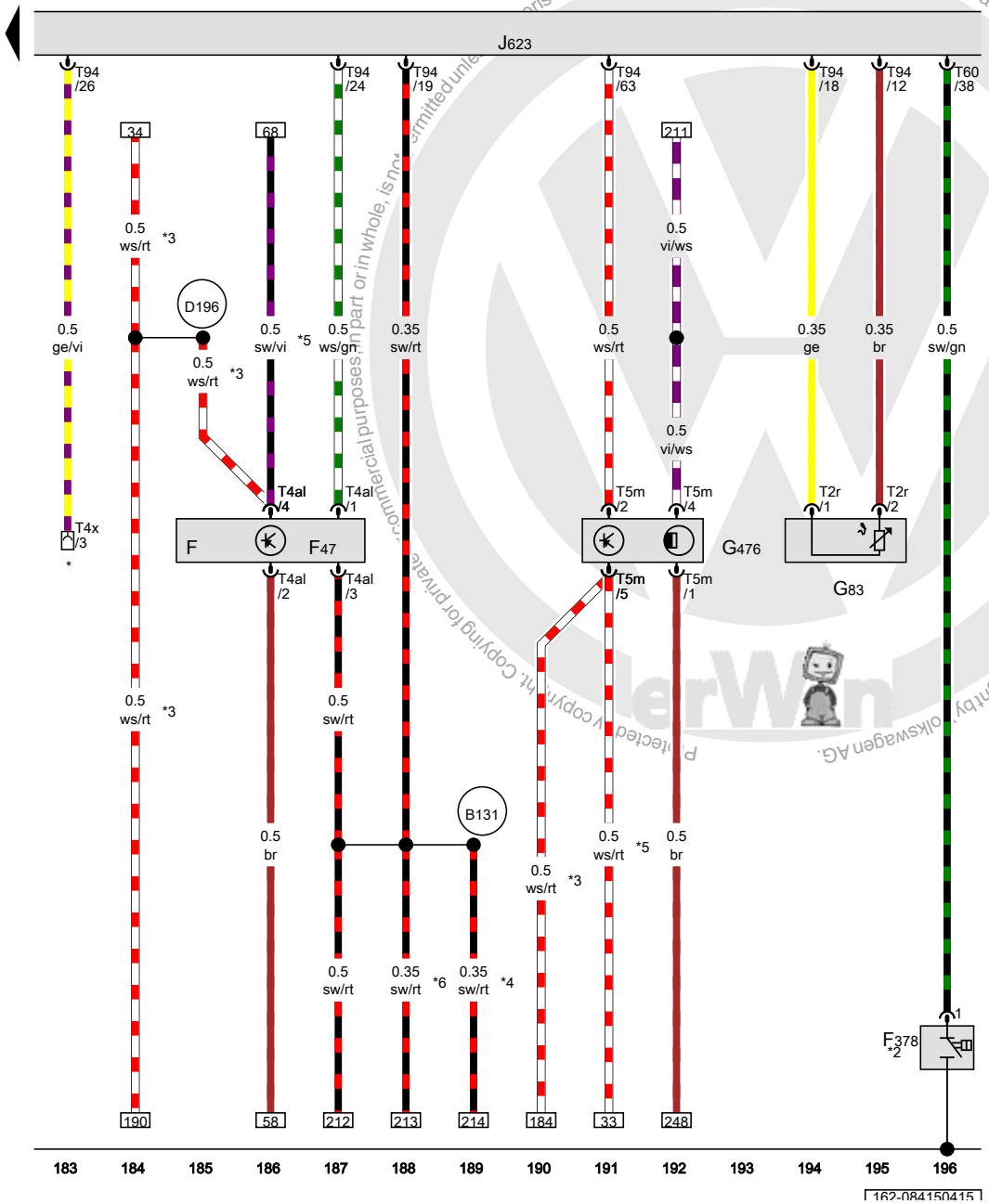

Brake lamp switch, Brake pedal switch, Reduced oil pressure switch, Engine coolant temperature sensor on radiator outlet, Clutch position sensor, Engine control module

F	Brake lamp switch
F47	Brake pedal switch
F378	Reduced oil pressure switch
G83	Engine coolant temperature sensor on radiator outlet
G476	Clutch position sensor
J623	Engine control module
T2r	Double connector
T4al	4-pin connector
T4x	4-pin connector
T5m	5-pin connector
T60	60-pin connector
T94	94-pin connector
B131	Connection 54 (in interior wiring harness)
D196	Connection 87a (in engine pre-wiring harness) 2
*	Coolant fan connection
*2	Depending on equipment
*3	Running change
*4	Only for vehicles with ABS and ESP
*5	Omitted as a running change
*6	Only for vehicles with ABS without ESP

ws	=	white
sw	=	black
ro	=	red
rt	=	red
br	=	brown
gn	=	green
bl	=	blue
gr	=	grey
li	=	lilac
vi	=	lilac
ge	=	yellow
or	=	orange
rs	=	pink

Protected by copyright. Copying for private or commercial purposes, in part or in whole, is not permitted unless authorised by Volkswagen AG. Volkswagen AG does not guarantee or accept any liability with respect to the correctness of information in this document. Copyright by Volkswagen AG.

Protected by copyright. Copyright by Volkswagen AG. Volkswagen AG does not guarantee or accept any liability with respect to the correctness of information in this document. Copyright by Volkswagen AG.

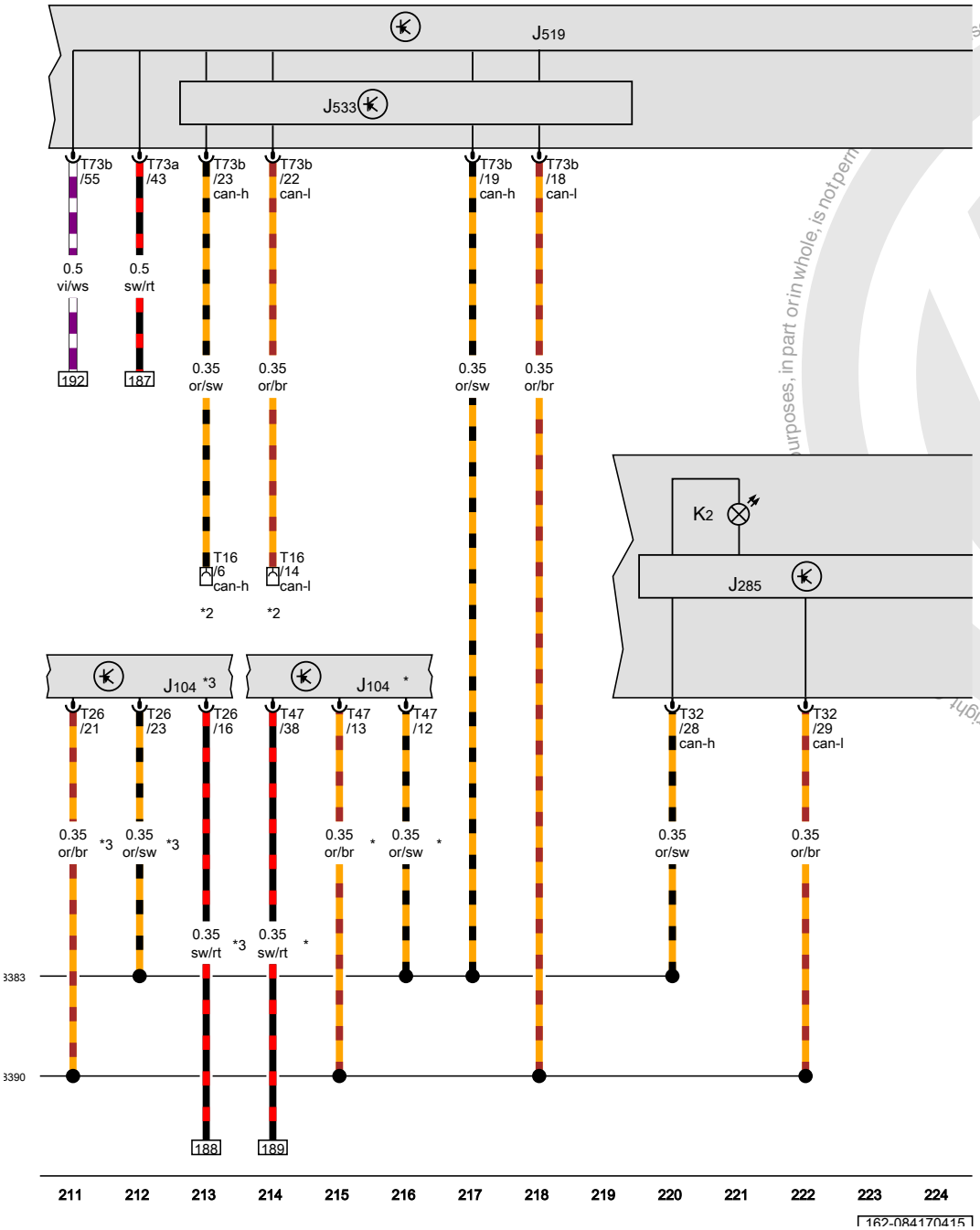

Instrument cluster control module, Vehicle electrical control module system, Data bus on board diagnostic interface, Generator indicator lamp

J104	ABS control module
J285	Instrument cluster control module
J519	Vehicle electrical control module system
J533	Data bus on board diagnostic interface
K2	Generator indicator lamp
T16	16-pin connector
T26	26-pin connector
T32	32-pin connector
T47	47-pin connector
T73a	73-pin connector
T73b	73-pin connector
B383	Powertrain CAN bus high connection 1 (in main wiring harness)
B390	Powertrain CAN bus low connection 1 (in main wiring harness)
*	Only for vehicles with ABS and ESP
*2	Diagnostic connector
*3	Only for vehicles with ABS without ESP

ws	=	white
sw	=	black
ro	=	red
rt	=	red
br	=	brown
gn	=	green
bl	=	blue
gr	=	grey
li	=	lilac
vi	=	lilac
ge	=	yellow
or	=	orange
rs	=	pink

Protected by copyright. Copyright by Volkswagen AG.

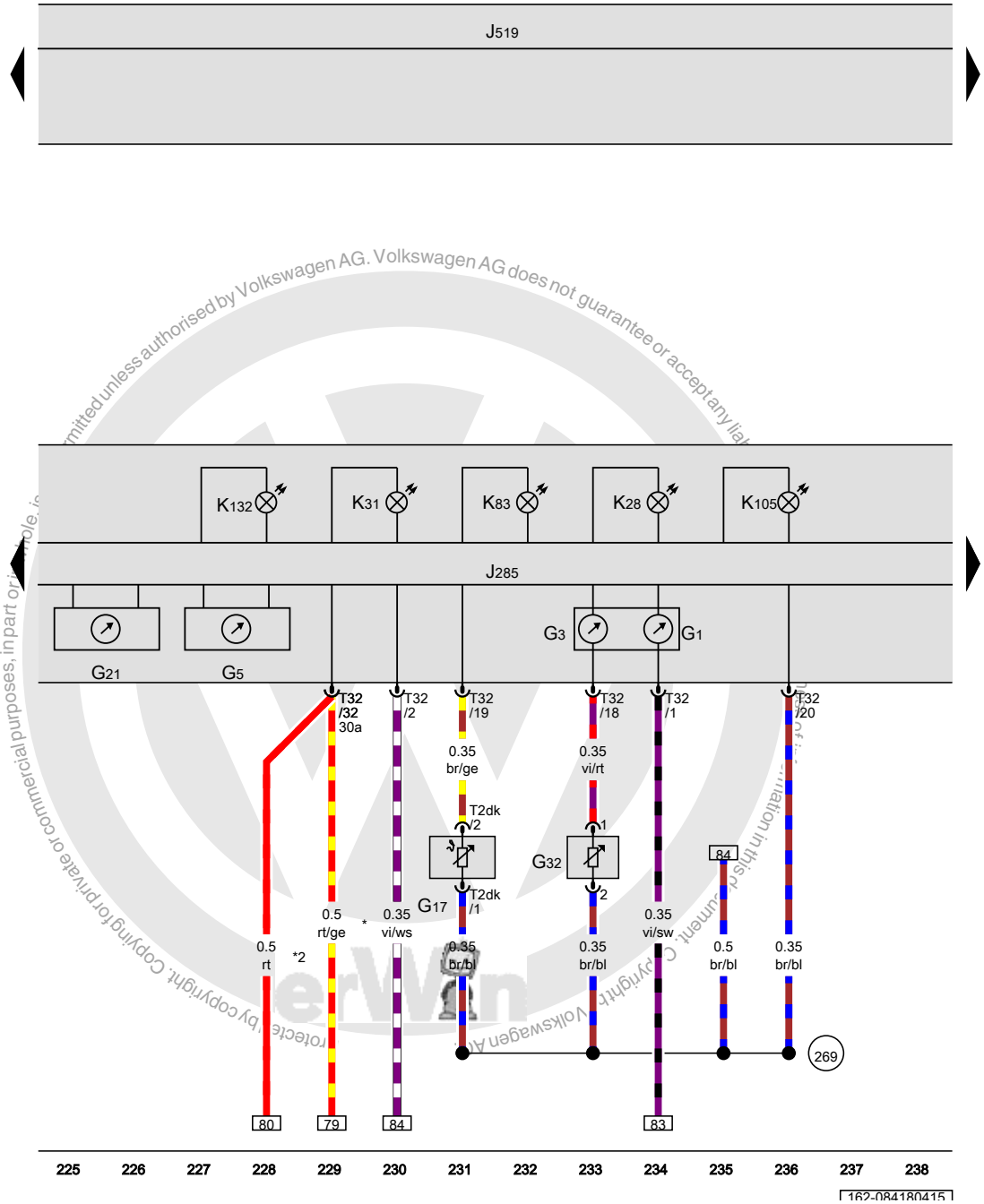

Fuel gauge, Engine coolant temperature gauge, Tachometer, Speedometer, Instrument cluster control module, Vehicle electrical control module system, Engine coolant level/temperature indicator lamp, Cruise control indicator lamp, Low fuel level indicator lamp, Electronic power control malfunction indicator lamp

G1	Fuel gauge
G3	Engine coolant temperature gauge
G5	Tachometer
G17	Outside air temperature sensor
G21	Speedometer
G32	Engine coolant level sensor
J285	Instrument cluster control module
J519	Vehicle electrical control module system
K28	Engine coolant level/temperature indicator lamp
K31	Cruise control indicator lamp
K83	Malfunction indicator lamp
K105	Low fuel level indicator lamp
K132	Electronic power control malfunction indicator lamp
T2dk	Double connector
T32	32-pin connector
269	Sensor ground connection 1 (in instrument panel wiring harness)
*	Omitted as a running change
*2	Running change

ws	=	white
sw	=	black
ro	=	red
rt	=	red
br	=	brown
gn	=	green
bl	=	blue
gr	=	grey
li	=	lilac
vi	=	lilac
ge	=	yellow
or	=	orange
rs	=	pink

Protected by copyright. Copying for private or commercial purposes, in part or in whole, is not permitted unless authorised by Volkswagen AG. Volkswagen AG does not guarantee or accept any liability with respect to the correctness of information in this document. Copyright by Volkswagen AG.

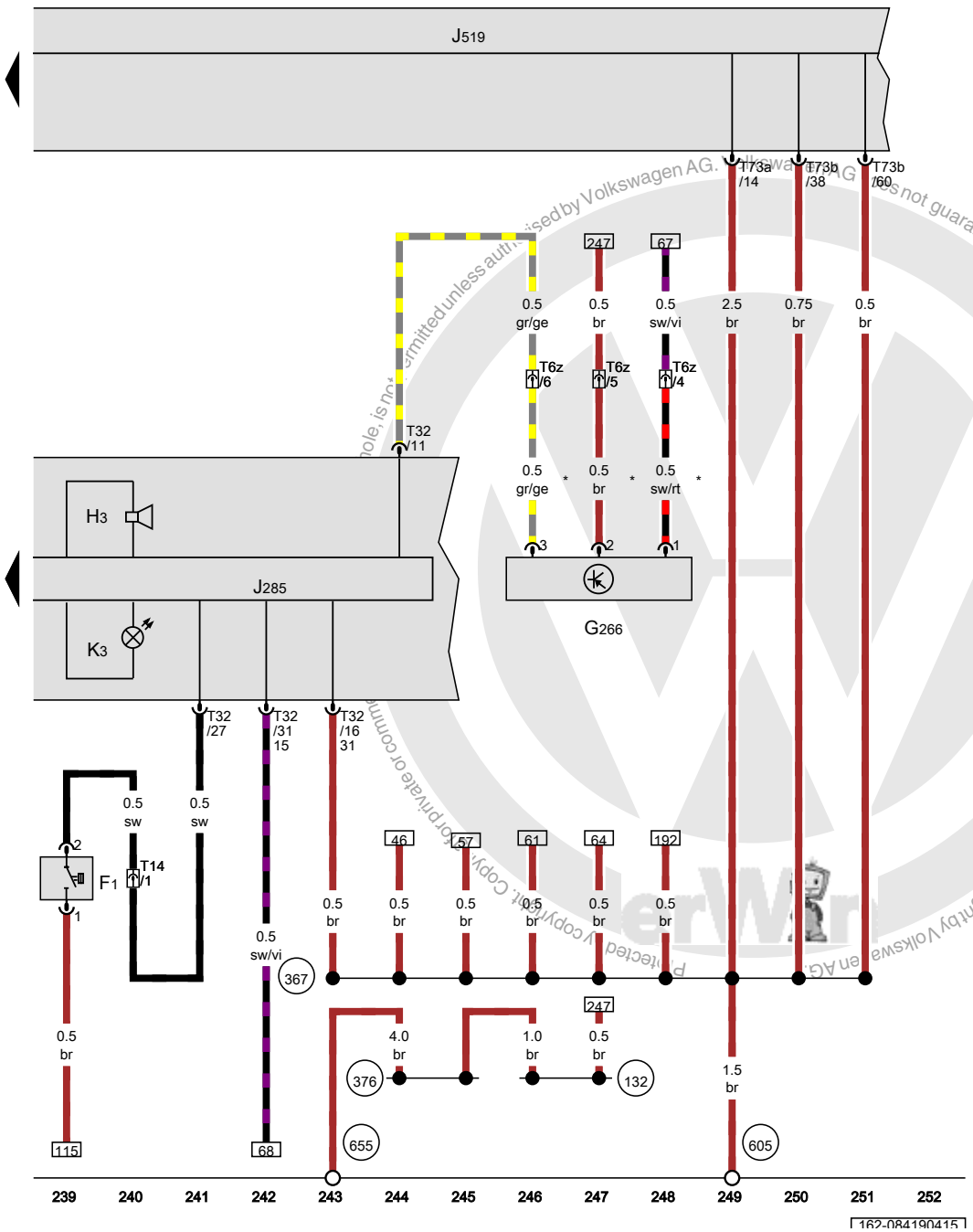

Oil pressure switch, Oil level thermal sensor, Instrument cluster control module, Vehicle electrical control module system

F1	Oil pressure switch
G266	Oil level thermal sensor
H3	Warning buzzer and tone
J285	Instrument cluster control module
J519	Vehicle electrical control module system
K3	Oil pressure indicator lamp
T6z	6-pin connector, near the left headlamp
T14	14-pin connector
T32	32-pin connector
T73a	73-pin connector
T73b	73-pin connector
132	Ground connection 3 (in engine compartment wiring harness)
367	Ground connection 2 (in main wiring harness)
376	Ground connection 11 (in main wiring harness)
605	Ground connection on upper steering column
655	Ground connection on left headlamp
*	Only for vehicles with flexible service interval reminder

ws	=	white
sw	=	black
ro	=	red
rt	=	red
br	=	brown
gn	=	green
bl	=	blue
gr	=	grey
li	=	lilac
vi	=	lilac
ge	=	yellow
or	=	orange
rs	=	pink

Protected by copyright. Copyright by Volkswagen AG. Volkswagen AG does not guarantee or accept any liability with respect to the correctness of information in this document. Copyright by Volkswagen AG. Protected by copyright. Copying for private or commercial purposes, in whole or in part, is not permitted unless authorised by Volkswagen AG.

Exterior mirrors, heated , (6XG),(6XN),(6XP)

from June 2010

Protected by copyright. Copying for private or commercial purposes, in part or in whole, is not permitted unless authorised by Volkswagen AG. Volkswagen AG does not guarantee or accept any liability with respect to the correctness of information in this document. Copyright by Volkswagen AG.

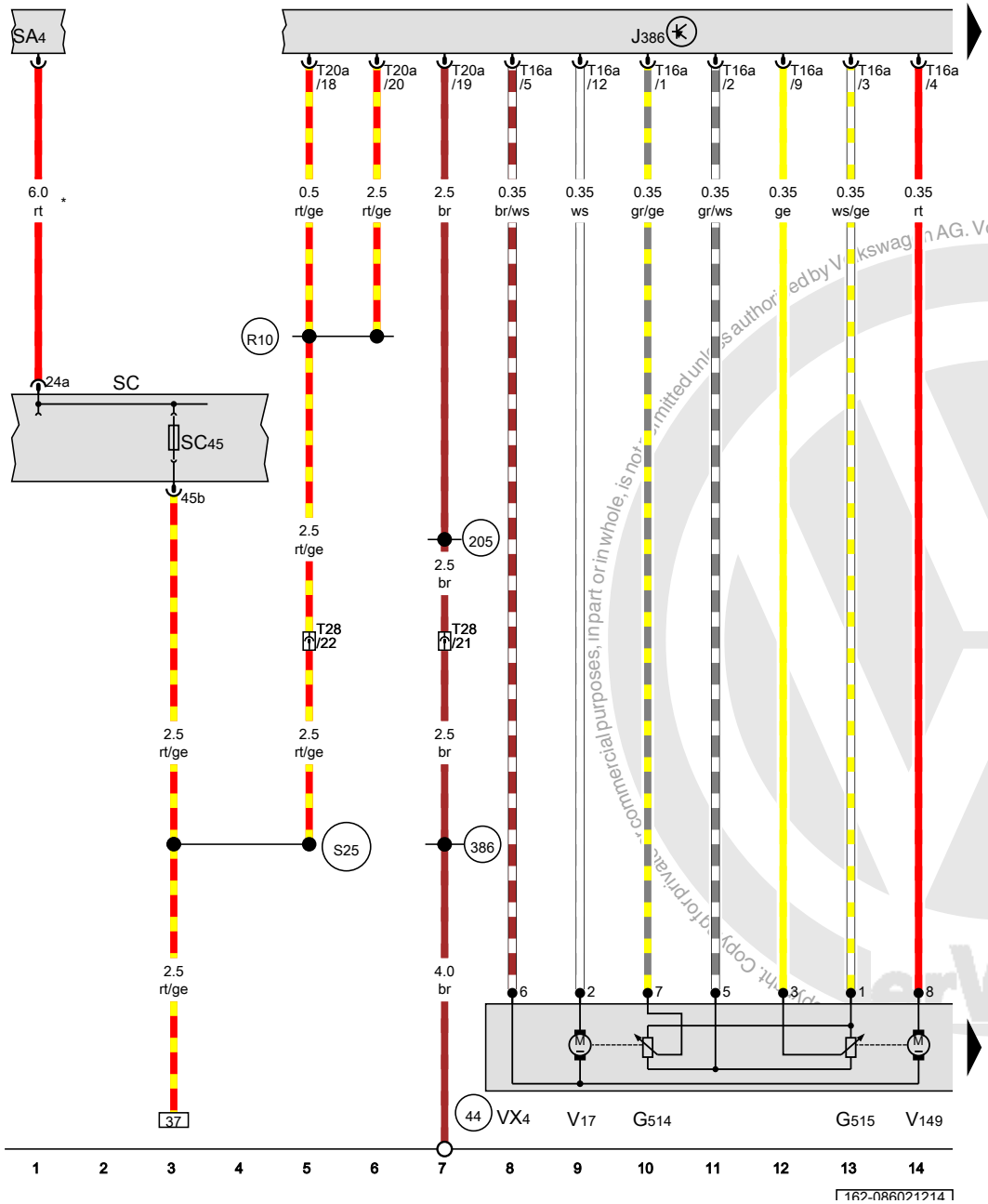

Driver door control module, Fuse panel C, Driver exterior rearview mirror

G514	Driver exterior rearview mirror horizontal position sensor
G515	Driver exterior rearview mirror vertical position sensor
J386	Driver door control module
SA4	Fuse 4 (on fuse panel A)
SC	Fuse panel C
SC45	Fuse 45 (on fuse panel C)
T16a	16-pin connector
T20a	20-pin connector
T28	28-pin connector, Left A-pillar, bottom
VX4	Driver exterior rearview mirror
V17	Driver mirror adjustment motor 2
V149	Driver mirror adjustment motor
44	Ground connection on A-pillar, lower left
205	Ground connection (in driver door wiring harness)
386	Ground connection 21 (in main wiring harness)
R10	Positive connection 1 (30) (in driver door wiring harness)
S25	Positive connection (30a) (in central locking system wiring harness)
*	Refer to applicable standard equipment wiring diagram

ws	=	white
sw	=	black
ro	=	red
rt	=	red
br	=	brown
gn	=	green
bl	=	blue
gr	=	grey
li	=	lilac
vi	=	lilac
ge	=	yellow
or	=	orange
rs	=	pink

Copyright. Copy for private, commercial purposes, in part or in whole, is not permitted unless authorised by Volkswagen AG. Volkswagen AG does not guarantee or accept any liability with respect to the correctness of information in this document. Copyright by Volkswagen AG.

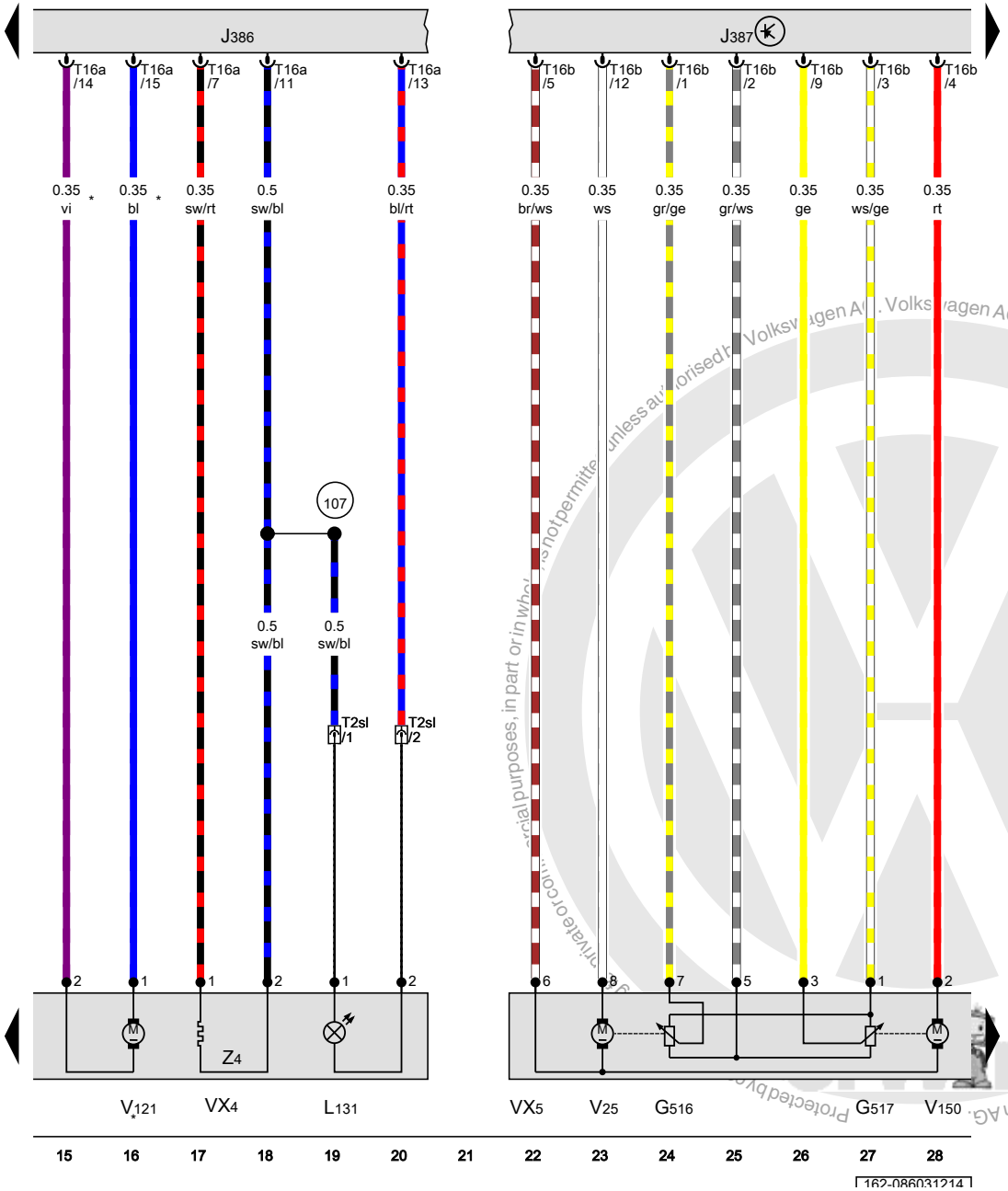

Driver door control module, Front passenger door control module, Driver exterior rearview mirror, Front passenger exterior rearview mirror

G516	Front passenger exterior rearview mirror horizontal position sensor
G517	Front passenger exterior rearview mirror vertical position sensor
J386	Driver door control module
J387	Front passenger door control module
L131	Driver exterior rearview mirror turn signal bulb
T2sl	Double connector, in the driver exterior rearview mirror housing
T16a	16-pin connector
T16b	16-pin connector
VX4	Driver exterior rearview mirror
VX5	Front passenger exterior rearview mirror
V25	Front passenger side mirror adjustment motor 2
V121	Driver exterior rearview mirror folding motor
V150	Front passenger mirror adjustment motor
Z4	Heated driver exterior rearview mirror
107	Ground connection (in exterior mirror wiring harness), in the left door, near the exterior rearview mirror
*	Depending on equipment

ws	=	white
sw	=	black
ro	=	red
rt	=	red
br	=	brown
gn	=	green
bl	=	blue
gr	=	grey
li	=	lilac
vi	=	lilac
ge	=	yellow
or	=	orange
rs	=	pink

Volkswagen AG does not guarantee or accept any liability with respect to the correctness of information in this document. Copyright by Volkswagen AG. Protected by copyright. Private or commercial purposes, in part or in whole, is not permitted unless authorised by Volkswagen AG.

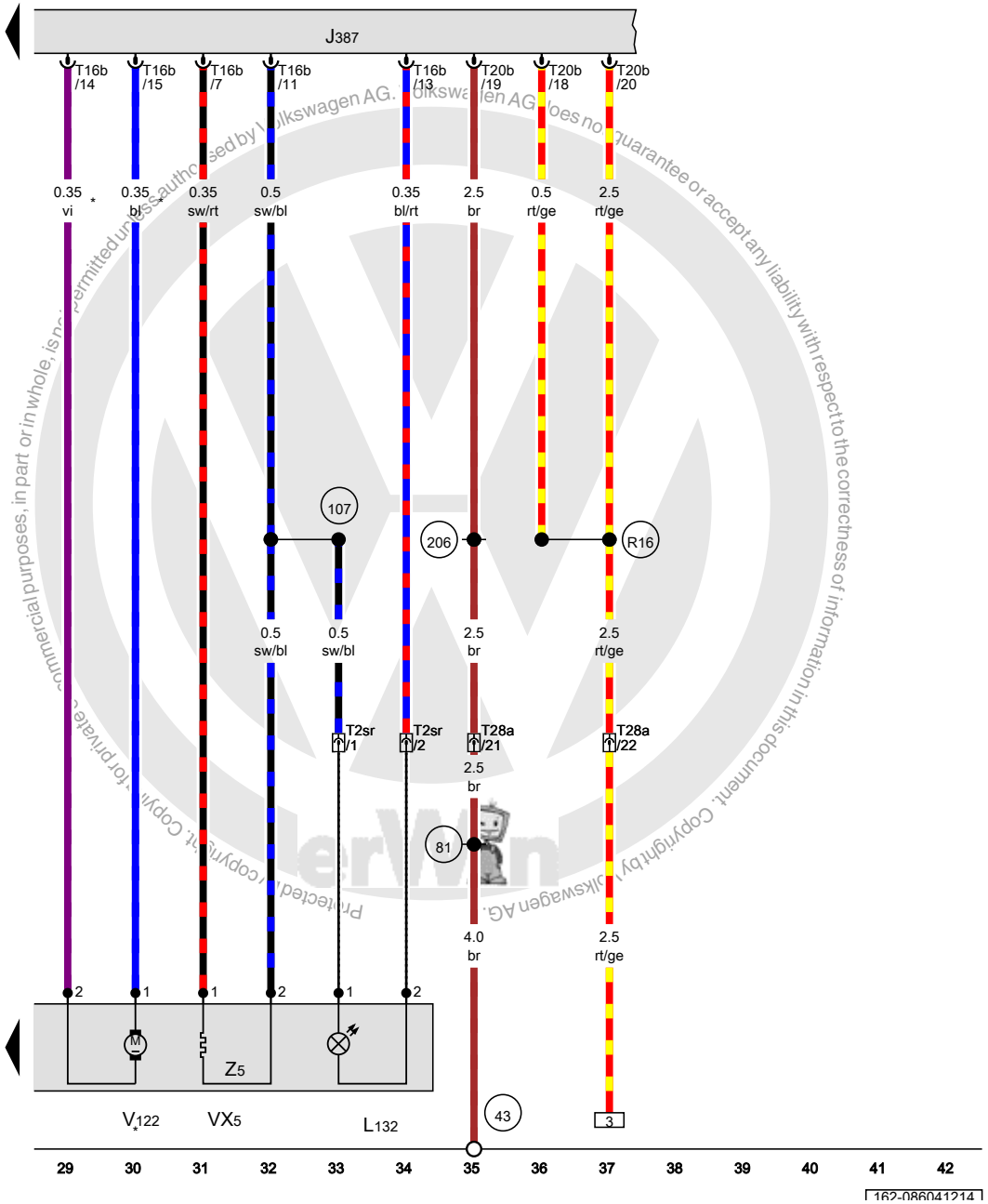

Front passenger door control module, Front passenger exterior rearview mirror

J387	Front passenger door control module
L132	Front passenger exterior rearview mirror turn signal bulb
T2sr	Double connector, in the front passenger exterior rearview mirror housing
T16b	16-pin connector
T20b	20-pin connector
T28a	28-pin connector, Right A-pillar, bottom
VX5	Front passenger exterior rearview mirror
V122	Front passenger exterior rearview mirror folding motor
Z5	Heated front passenger exterior rearview mirror
43	Ground connection on A-pillar, lower right
81	Ground connection 1 (in instrument panel wiring harness)
107	Ground connection (in exterior mirror wiring harness), in the right door, near the exterior rearview mirror
206	Ground connection (in front passenger door wiring harness)
R16	Positive connection 1 (30) (in front passenger door wiring harness)
*	Depending on equipment

ws	=	white
sw	=	black
ro	=	red
rt	=	red
br	=	brown
gn	=	green
bl	=	blue
gr	=	grey
li	=	lilac
vi	=	lilac
ge	=	yellow
or	=	orange
rs	=	pink

Protected by copyright. Copyright by Volkswagen AG. Volkswagen AG does not guarantee or accept any liability with respect to the correctness of information in this document. Copyright by Volkswagen AG.

Anti-theft alarm system , (7AG),(7AZ),(9V5)

from January 2011

Protected by copyright. Copying for private or commercial purposes, in part or in whole, is not permitted unless authorised by Volkswagen AG. Volkswagen AG does not guarantee or accept any liability with respect to the correctness of information in this document. Copyright by Volkswagen AG.

Vehicle electrical control module system, Fuse panel C

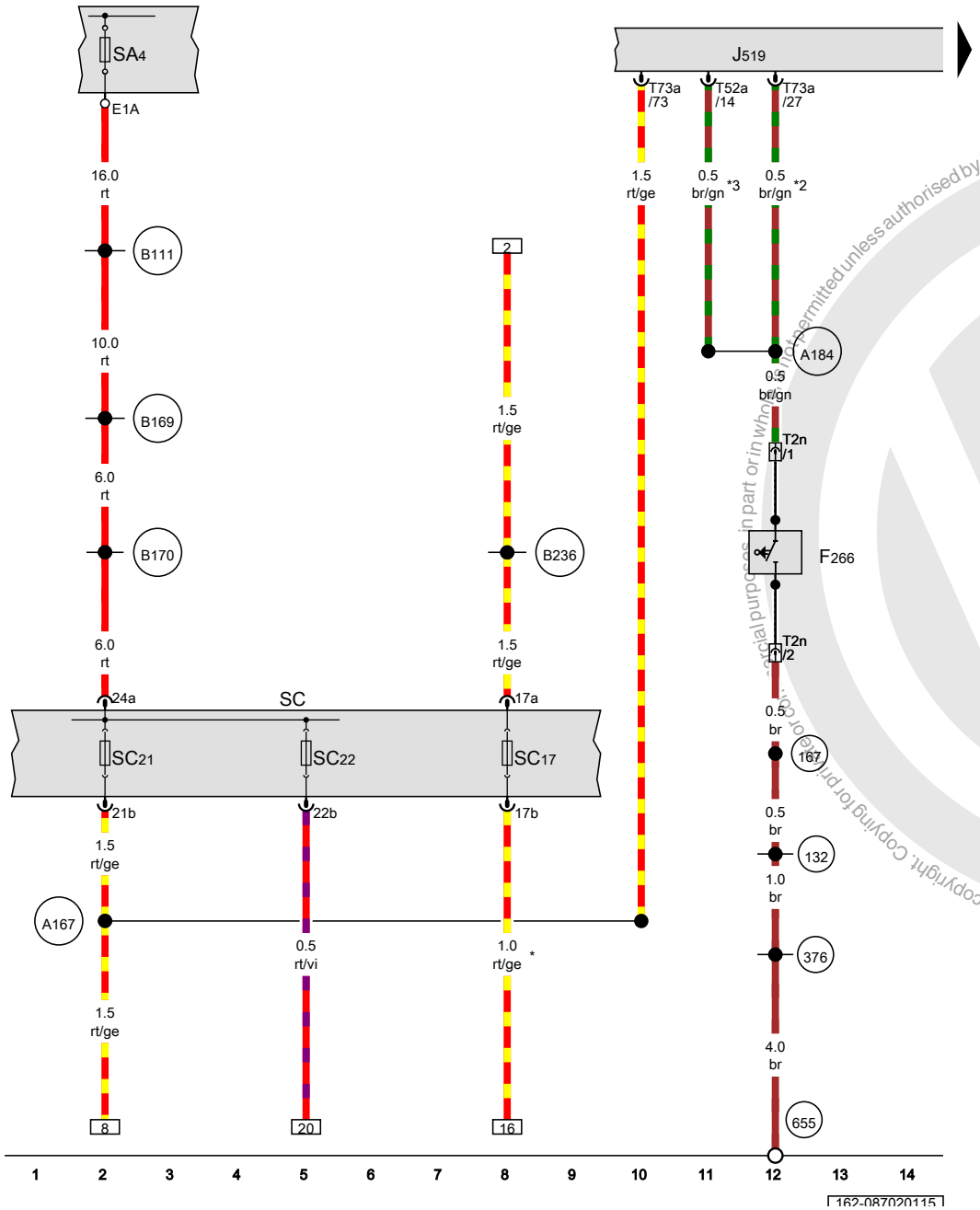

F266	Engine hood contact switch	
J519	Vehicle electrical control module system	
SA4	Fuse 4 (on fuse panel A)	
SC	Fuse panel C	
SC17	Fuse 17 (on fuse panel C)	
SC21	Fuse 21 (on fuse panel C)	
SC22	Fuse 22 (on fuse panel C)	
T2n	Double connector	
T52a	52-pin connector	
T73a	73-pin connector	
132	Ground connection 3 (in engine compartment wiring harness)	
167	Ground connection 4 (in engine compartment wiring harness)	
376	Ground connection 11 (in main wiring harness)	
655	Ground connection on left headlamp	
A167	Positive connection 3 (30a) (in instrument panel wiring harness)	
A184	Hood contact switch connection (in instrument panel wiring harness)	
B111	Positive connection 1 (30a) (in interior wiring harness)	
B169	Positive connection 1 (30) (in interior wiring harness)	
B170	Positive connection 2 (30) (in interior wiring harness)	
B236	Positive connection 6 (30a) (in interior wiring harness)	
*	Running change	
*2	only for vehicles with Low equipment (AW0)	
*3	only for vehicles with High equipment (AW1)	

ws	=	white
sw	=	black
ro	=	red
rt	=	red
br	=	brown
gn	=	green
bl	=	blue
gr	=	grey
li	=	lilac
vi	=	lilac
ge	=	yellow
or	=	orange
rs	=	pink

Copyright by Volkswagen AG. Volkswagen AG does not accept any liability with respect to the correctness of information in this document. Copyright by Volkswagen AG. Protected by copyright. Copying for private or commercial purposes, in part or in whole, is not permitted unless authorised by Volkswagen AG.

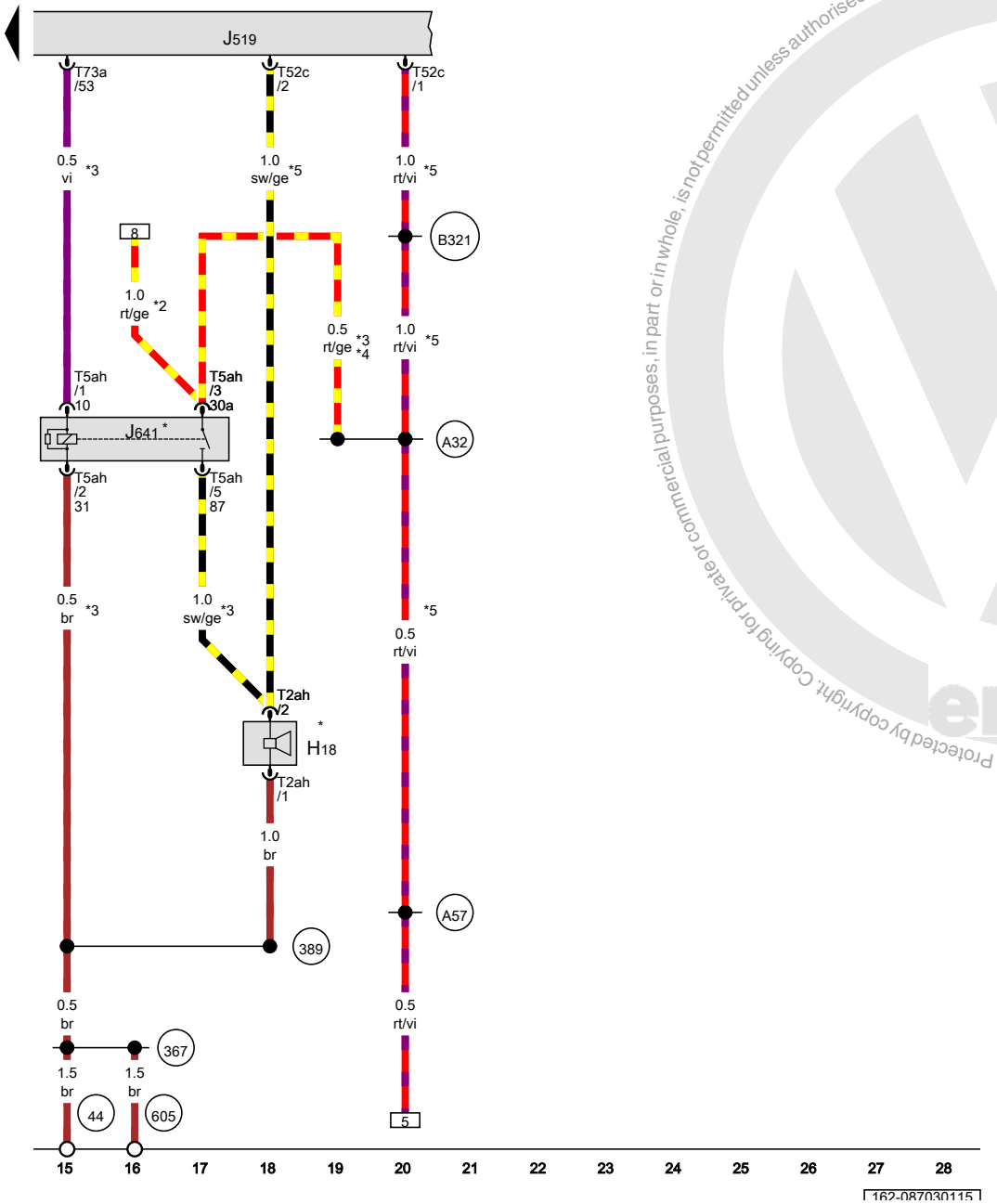

Vehicle electrical control module system

H18	Alarm system horn
J519	Vehicle electrical control module system
J641	Alarm horn relay
T2ah	Double connector
T5ah	5-pin connector
T52c	52-pin connector
T73a	73-pin connector
44	Ground connection on A-pillar, lower left
367	Ground connection 2 (in main wiring harness)
389	Ground connection 24 (in main wiring harness)
605	Ground connection on upper steering column
A32	Positive connection (30) (in instrument panel wiring harness)
A57	Positive connection 3 (30) (in instrument panel wiring harness)
B321	Positive connection 7 (30a) (in main wiring harness)
*	Not included in the preparation
*2	Running change
*3	only for vehicles with Low equipment (AW0)
*4	Omitted as a running change
*5	only for vehicles with High equipment (AW1)

ws	=	white
sw	=	black
ro	=	red
rt	=	red
br	=	brown
gn	=	green
bl	=	blue
gr	=	grey
li	=	lilac
vi	=	lilac
ge	=	yellow
or	=	orange
rs	=	pink

Protected by copyright. Copying for private or commercial purposes, in part or in whole, is not permitted unless authorised by Volkswagen AG. Volkswagen AG does not guarantee or assume any liability with respect to the correctness of information in this document. Copyright by Volkswagen AG.

Power socket 12V, cigarette lighter

from June 2011

Protected by copyright. Copying for private or commercial purposes, in part or in whole, is not permitted unless authorised by Volkswagen AG. Volkswagen AG does not guarantee or accept any liability with respect to the correctness of information in this document. Copyright by Volkswagen AG.

Terminal 75 power supply relay 1, Terminal 15 power supply relay 2, Fuse panel B

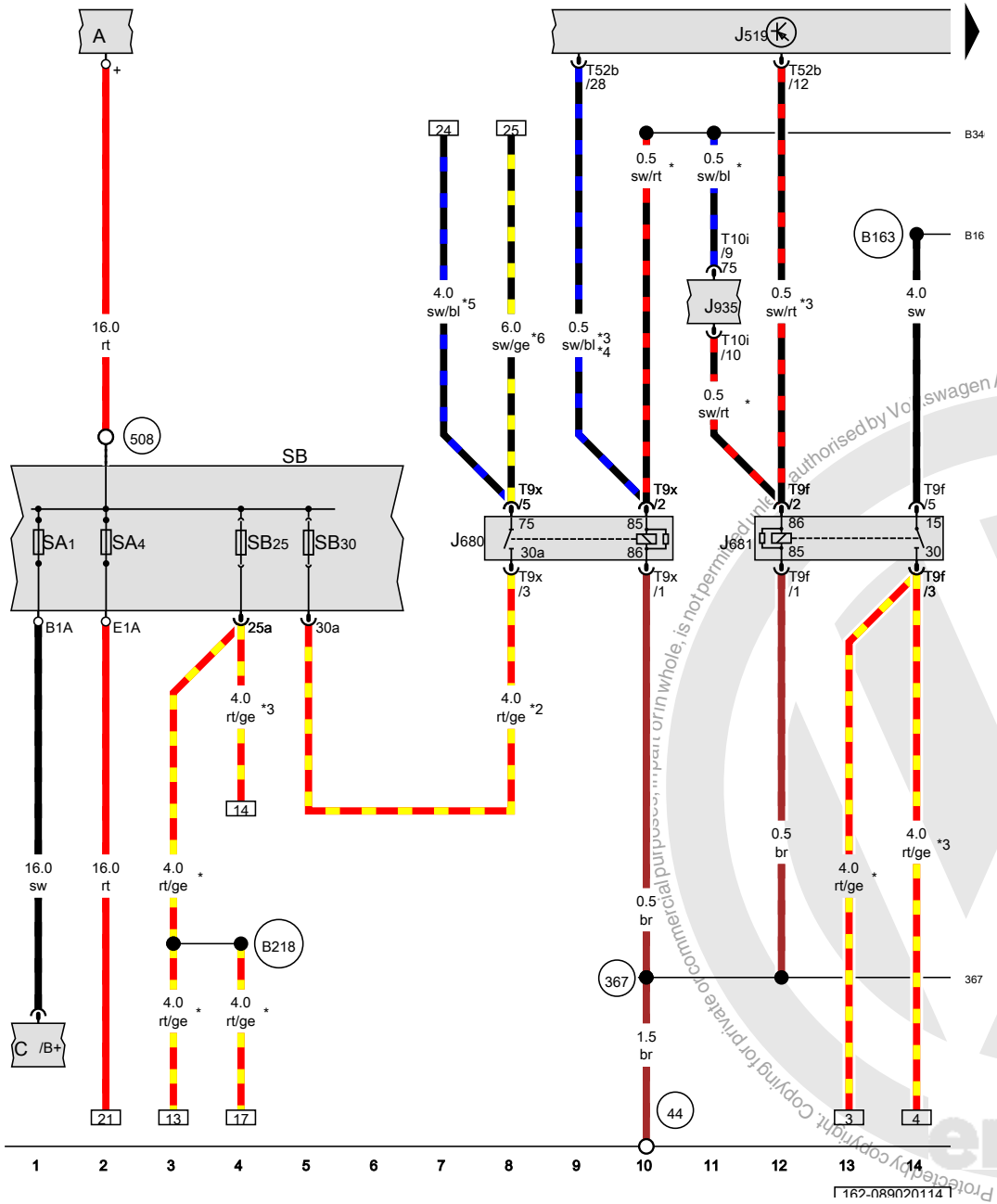

ws	=	white
sw	=	black
ro	=	red
rt	=	red
br	=	brown
gn	=	green
bl	=	blue
gr	=	grey
li	=	lilac
vi	=	lilac
ge	=	yellow
or	=	orange
rs	=	pink

A	Battery
C	Generator
J519	Vehicle electrical system control module
J680	Terminal 75 power supply relay 1
J681	Terminal 15 power supply relay 2
J935	Converter box
SA1	Fuse 1 (on fuse panel A)
SA4	Fuse 4 (on fuse panel A)
SB	Fuse panel B
SB25	Fuse 25 (on fuse panel B)
SB30	Fuse 30 (on fuse panel B)
T9f	9-pin connector
T9x	9-pin connector
T10i	10-pin connector
T52b	52-pin connector
44	Ground connection on A-pillar, lower left
367	Ground connection 2 (in main wiring harness)
508	Terminal 30 threaded connection (on E-box)
B163	Positive connection 1 (15) (in interior wiring harness)
B218	Positive connection 6 (30) (in interior wiring harness)
B346	Connection 75 (in main wiring harness) 1
*	only for vehicles with Low equipment (AW0)
*2	6,0 diameter possible
*3	only for vehicles with High equipment (AW1)
*4	Diameter depends on equipment
*5	Omitted as a running change
*6	Running change

Protected by copyright. Copying for private or commercial purposes, in part or in whole, is not permitted unless authorised by Volkswagen AG. Volkswagen AG does not guarantee or accept any liability with respect to the correctness of information in this document. Copyright by Volkswagen AG.

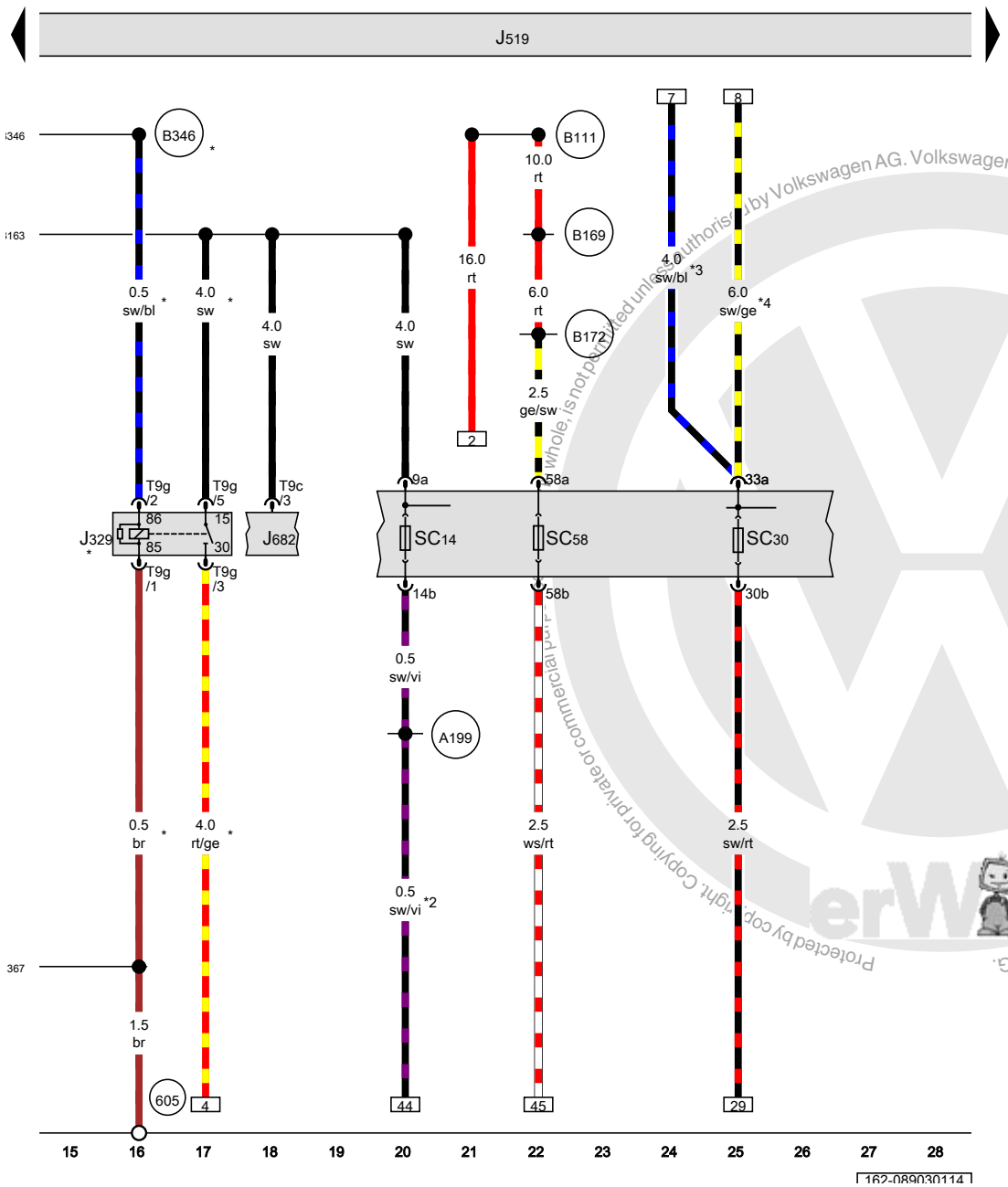

Terminal 15 power supply relay

J329	Terminal 15 power supply relay
J519	Vehicle electrical system control module
J682	Terminal 50 power supply relay
SC14	Fuse 14 (on fuse panel C)
SC30	Fuse 30 (on fuse panel C)
SC58	Fuse 58 (on fuse panel C)
T9c	9-pin connector
T9g	9-pin connector
367	Ground connection 2 (in main wiring harness)
605	Ground connection on upper steering column
A199	Positive connection 4 (15a) (in instrument panel wiring harness)
B111	Positive connection 1 (30a) (in interior wiring harness)
B163	Positive connection 1 (15) (in interior wiring harness)
B169	Positive connection 1 (30) (in interior wiring harness)
B172	Positive connection 4 (30) (in interior wiring harness)
B346	Connection 75 (in main wiring harness) 1
*	only for vehicles with Low equipment (AW0)
*2	Only for vehicles with Start/Stop system
*3	Omitted as a running change
*4	Running change

ws	=	white
sw	=	black
ro	=	red
rt	=	red
br	=	brown
gn	=	green
bl	=	blue
gr	=	grey
li	=	lilac
vi	=	lilac
ge	=	yellow
or	=	orange
rs	=	pink

Protected by copyright. Copying for private or commercial purposes, in whole, is not permitted unless authorised by Volkswagen AG. Volkswagen AG does not guarantee or accept any liability with respect to the correctness of information in this document. Copyright by Volkswagen AG.

Blocking diode, Cigarette lighter, Power socket 12 V, 12 V socket 2

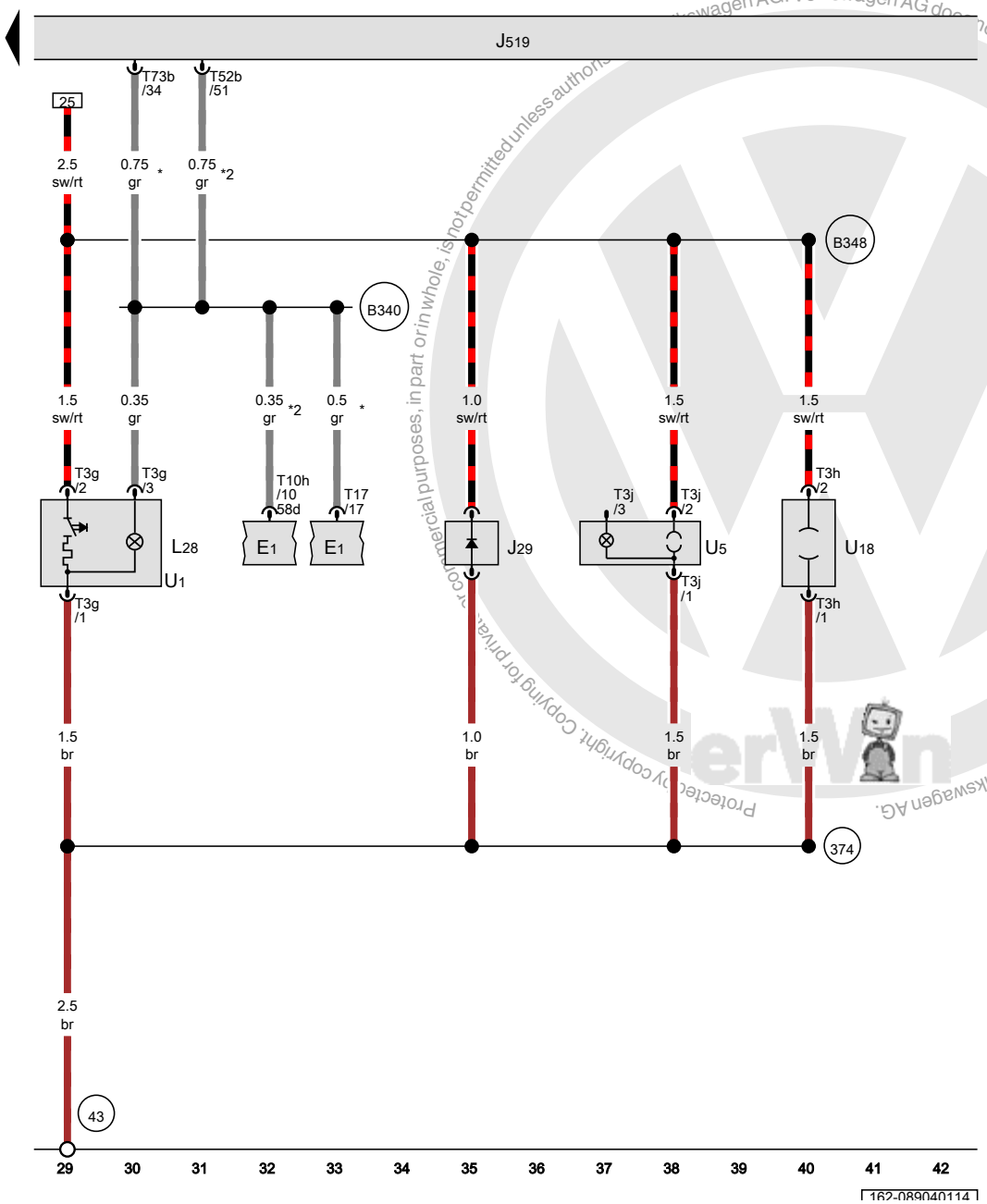

E1	Light switch
J29	Blocking diode, in the interior wiring harness
J519	Vehicle electrical system control module
L28	Cigarette lighter illumination bulb
T3g	3-pin connector
T3h	3-pin connector
T3j	3-pin connector
T10h	10-pin connector
T17	17-pin connector
T52b	52-pin connector
T73b	73-pin connector
U1	Cigarette lighter
U5	Power socket 12 V
U18	12 V socket 2
43	Ground connection on A-pillar, lower right
374	Ground connection 9 (in main wiring harness)
B340	Connection 58d (in main wiring harness) 1
B348	Connection 75a (in main wiring harness) 1
*	only for vehicles with Low equipment (AW0)
*2	only for vehicles with High equipment (AW1)

ws	=	white
sw	=	black
ro	=	red
rt	=	red
br	=	brown
gn	=	green
bl	=	blue
gr	=	grey
li	=	lilac
vi	=	lilac
ge	=	yellow
or	=	orange
rs	=	pink

Volkswagen AG. Volkswagen AG does not guarantee or accept any liability with respect to the correctness of information in this document. Copyright by Volkswagen AG. Protected by copyright. Copying for private or commercial purposes, in part or in whole, is not permitted unless authorised.

Socket indicator lamp, Converter with socket, 12 V-230 V, Converter with socket, 12 V-115 V

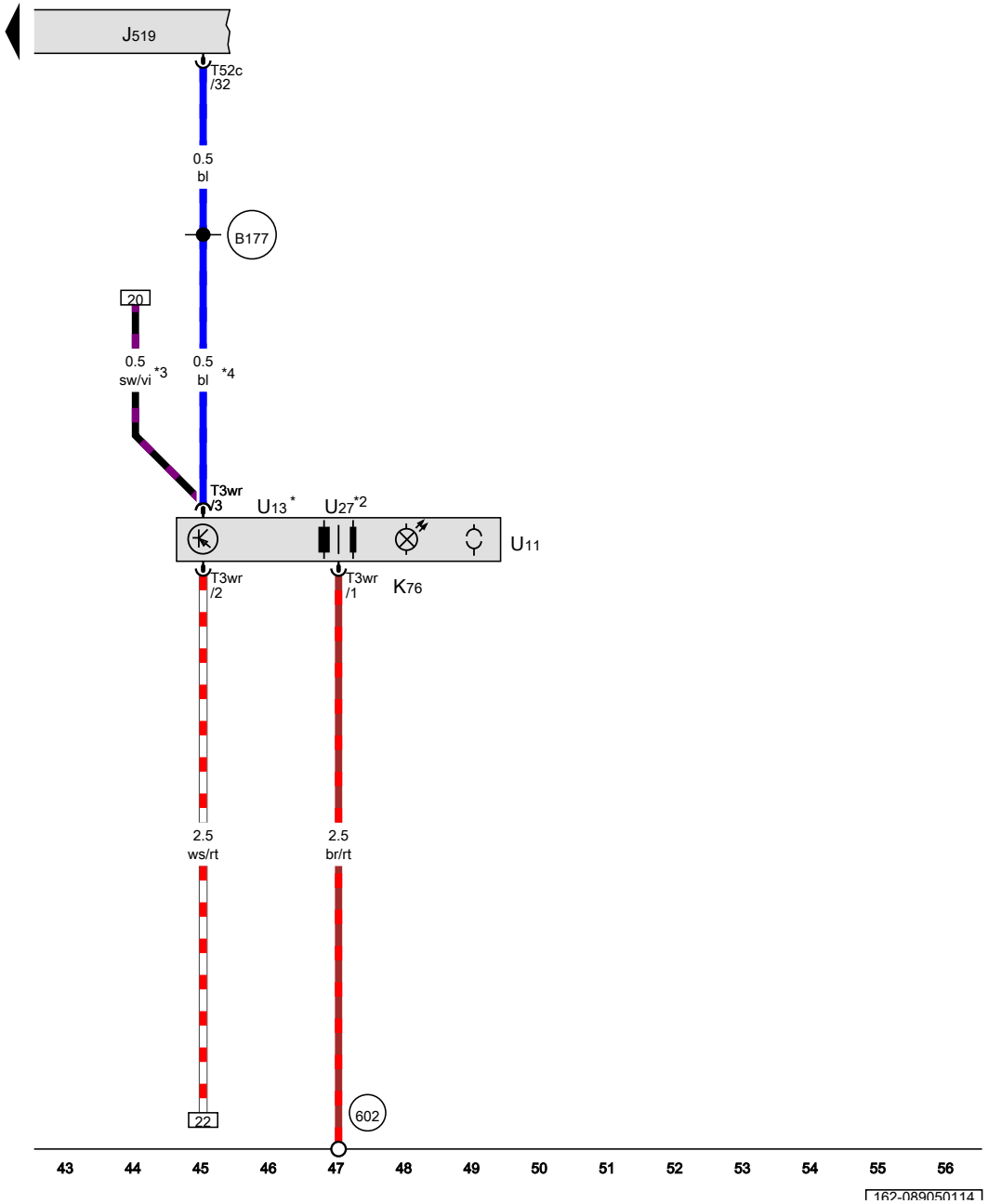

J519	Vehicle electrical system control module
K76	Socket indicator lamp
T3wr	3-pin connector
T52c	52-pin connector
U11	Interior socket, 230 V, 110 V
U13	Converter with socket, 12 V-230 V
U27	Converter with socket, 12 V-115 V
602	Ground connection in left front footwell
B177	Connection 61 (in interior wiring harness)
*	Not for USA
*2	USA only
*3	Only for vehicles with Start/Stop system
*4	Only for vehicles without Start/Stop system

ws	=	white
sw	=	black
ro	=	red
rt	=	red
br	=	brown
gn	=	green
bl	=	blue
gr	=	grey
li	=	lilac
vi	=	lilac
ge	=	yellow
or	=	orange
rs	=	pink

Protected by copyright. Copying for private or commercial purposes, in part or in whole, is not permitted unless authorised by Volkswagen AG. Volkswagen AG does not guarantee or accept any liability with respect to the correctness of information in this document. Copyright by Volkswagen AG.

Tail lamps with LEDs , (8SL)

from June 2012

Protected by copyright. Copying for private or commercial purposes, in part or in whole, is not permitted unless authorised by Volkswagen AG. Volkswagen AG does not guarantee or accept any liability with respect to the correctness of information in this document. Copyright by Volkswagen AG.

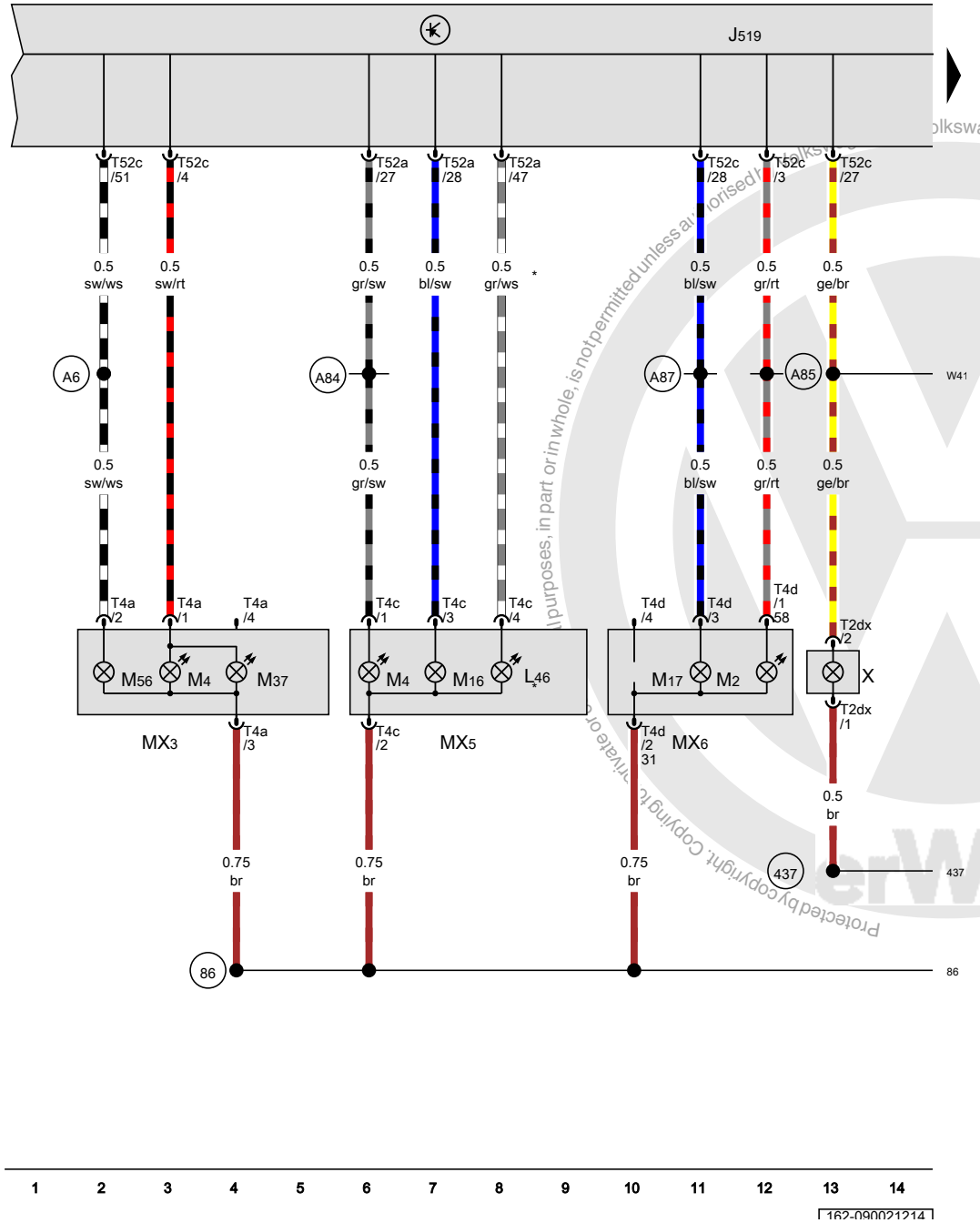

Vehicle electrical control module system, Left rear fog lamp bulb, Right tail lamp bulb, Left tail lamp, Left tail lamp bulb, Left tail lamp 2, Right tail lamp 2, Left back-up lamp bulb, Right back-up lamp bulb, Left rear side marker lamp bulb, Left brake lamp/turn signal bulb, License plate lamp

J519	Vehicle electrical control module system
L46	Left rear fog lamp bulb
M2	Right tail lamp bulb
MX3	Left tail lamp
M4	Left tail lamp bulb
MX5	Left tail lamp 2
MX6	Right tail lamp 2
M16	Left back-up lamp bulb
M17	Right back-up lamp bulb
M37	Left rear side marker lamp bulb
M56	Left brake lamp/turn signal bulb
T2dx	Double connector
T4a	4-pin connector
T4c	4-pin connector
T4d	4-pin connector
T52a	52-pin connector
T52c	52-pin connector
X	License plate lamp
86	Ground connection 1 (in rear wiring harness)
437	Ground connection (in license plate lamp wiring harness)
A6	Left turn signal positive connection (in instrument panel wiring harness)
A84	Connection 58L (in instrument panel wiring harness)
A85	Connection 58R (in instrument panel wiring harness)
A87	Back-up lamp connection (in instrument panel wiring harness)
W41	Positive connection (58) (in license plate lamp wiring harness)
*	Depending on equipment

ws	=	white
sw	=	black
ro	=	red
rt	=	red
br	=	brown
gn	=	green
bl	=	blue
gr	=	grey
li	=	lilac
vi	=	lilac
ge	=	yellow
or	=	orange
rs	=	pink

Protected by copyright. Copying for private or commercial purposes, in part or in whole, is not permitted unless authorised by Volkswagen AG. Volkswagen AG does not guarantee or accept any liability with respect to the correctness of information in this document. Copyright by Volkswagen AG.

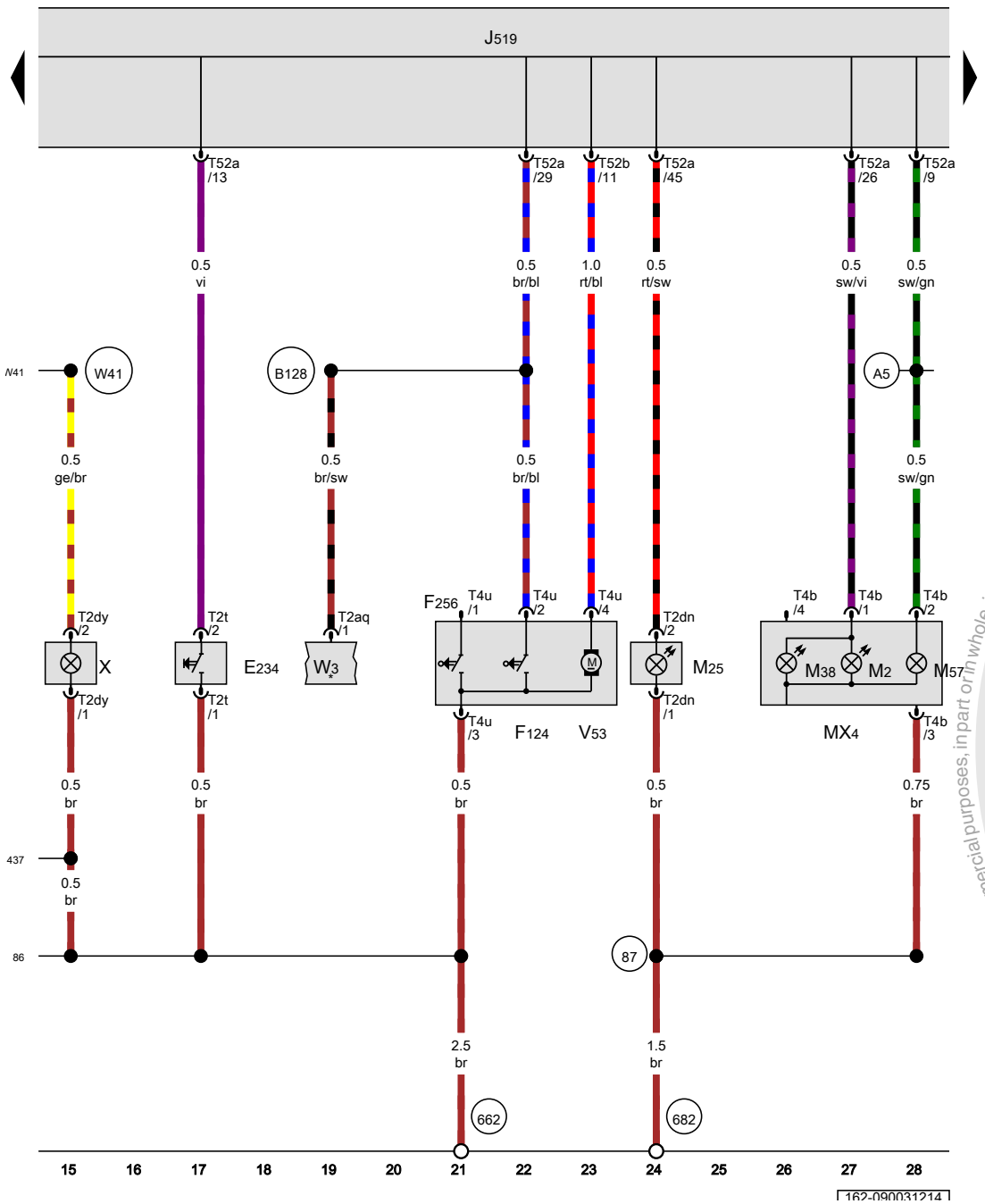

Release button in rear lid handle, Rear lid lock unit, Vehicle electrical control module system, Right tail lamp bulb, Right tail lamp, High-mounted brake lamp bulb, Right rear side marker lamp bulb, Right brake lamp/turn signal bulb, Rear lid central locking system motor, License plate lamp

E234	Release button in rear lid handle
F124	Rear lid lock/alarm/central locking switch
F256	Rear lid lock unit
J519	Vehicle electrical control module system
M2	Right tail lamp bulb
MX4	Right tail lamp
M25	High-mounted brake lamp bulb
M38	Right rear side marker lamp bulb
M57	Right brake lamp/turn signal bulb
T2aq	Double connector
T2dn	Double connector
T2dy	Double connector
T2t	Double connector
T4b	4-pin connector
T4u	4-pin connector
T52a	52-pin connector
T52b	52-pin connector
V53	Rear lid central locking system motor
W3	Luggage compartment lamp
X	License plate lamp
86	Ground connection 1 (in rear wiring harness)
87	Ground connection 2 (in rear wiring harness)
437	Ground connection (in license plate lamp wiring harness)
662	Ground connection in left rear side panel
682	Ground connection 2 in right rear side panel
A5	Right turn signal positive connection (in instrument panel wiring harness)
B128	Luggage compartment lamp connection (in interior wiring harness)
W41	Positive connection (58) (in license plate lamp wiring harness)
*	Refer to applicable standard equipment wiring diagram

ws	=	white
sw	=	black
ro	=	red
rt	=	red
br	=	brown
gn	=	green
bl	=	blue
gr	=	grey
li	=	lilac
vi	=	lilac
ge	=	yellow
or	=	orange
rs	=	pink

Protected by copyright. Copying for private or commercial purposes, in part or in whole, is not permitted unless authorised by Volkswagen AG. Volkswagen AG does not guarantee or accept any liability with respect to the correctness of information in this document. Copyright by Volkswagen AG.

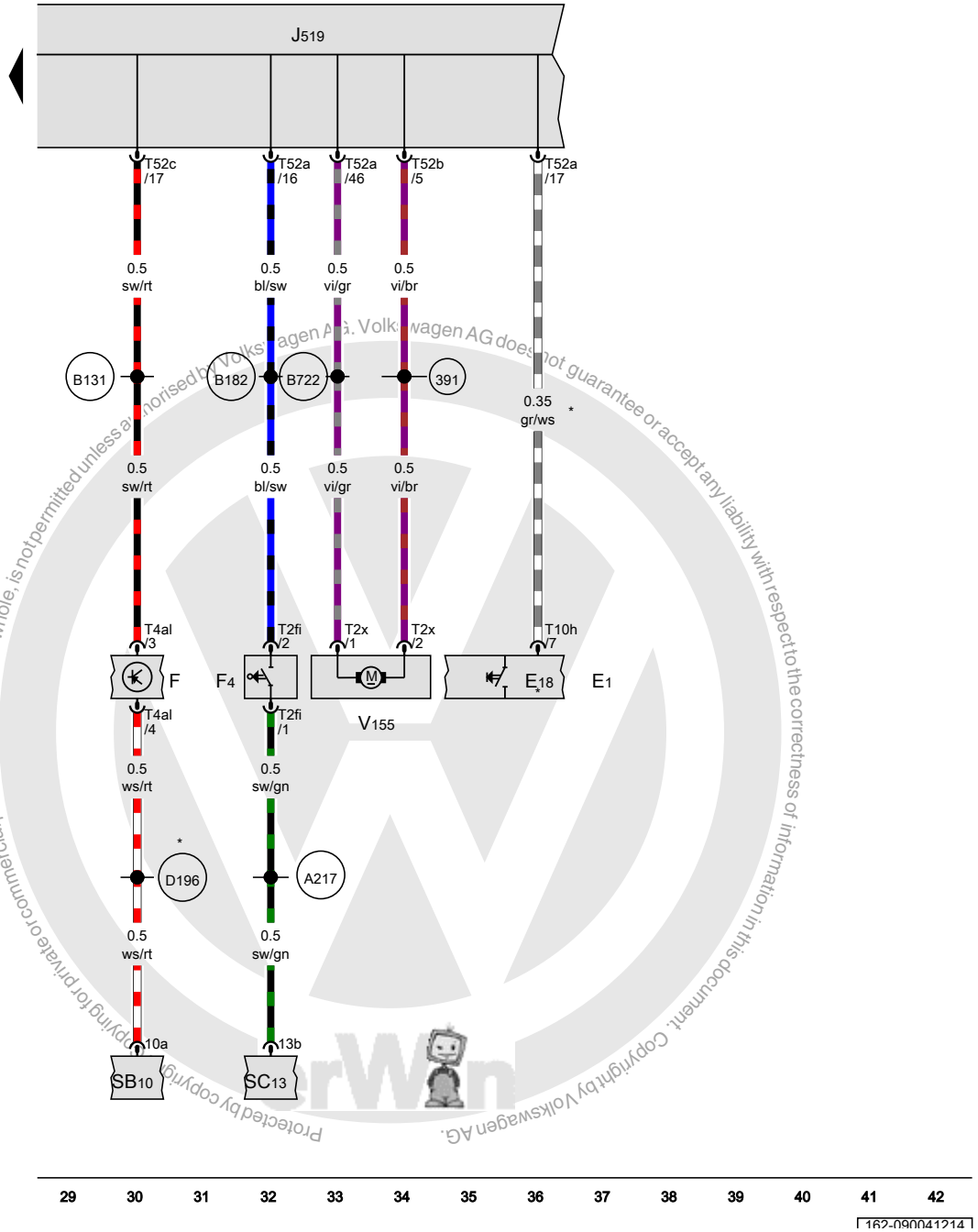

Light switch, Brake lamp switch, Vehicle electrical control module system

E1	Light switch
E18	Rear fog lamp switch
F	Brake lamp switch
F4	Back-up lamp switch
J519	Vehicle electrical control module system
SB10	Fuse 10 (on fuse panel B)
SC13	Fuse 13 (on fuse panel C)
T2fi	Double connector
T2x	Double connector
T4al	4-pin connector
T10h	10-pin connector
T52a	52-pin connector
T52b	52-pin connector
T52c	52-pin connector
V155	Fuel filler door unlock motor
391	Ground connection 26 (in main wiring harness)
A217	Positive connection 8 (15a) (in instrument panel wiring harness)
B131	Connection 54 (in interior wiring harness)
B182	Connection RF (in interior wiring harness)
B722	Central locking connection 3 (in main wiring harness)
D196	Connection 87a (in engine pre-wiring harness) 2
*	Depending on equipment

ws	=	white
sw	=	black
ro	=	red
rt	=	red
br	=	brown
gn	=	green
bl	=	blue
gr	=	grey
li	=	lilac
vi	=	lilac
ge	=	yellow
or	=	orange
rs	=	pink

Protected by copyright. Copying for private or commercial purposes, in part or in whole, is not permitted unless authorised by Volkswagen AG. Volkswagen AG does not guarantee or accept any liability with respect to the correctness of information in this document. Copyright by Volkswagen AG.

High voltage system , CNLA,CRJA,(0K1)

from June 2012

Protected by copyright. Copying for private or commercial purposes, in part or in whole, is not permitted unless authorised by Volkswagen AG. Volkswagen AG does not guarantee or accept any liability with respect to the correctness of information in this document. Copyright by Volkswagen AG.

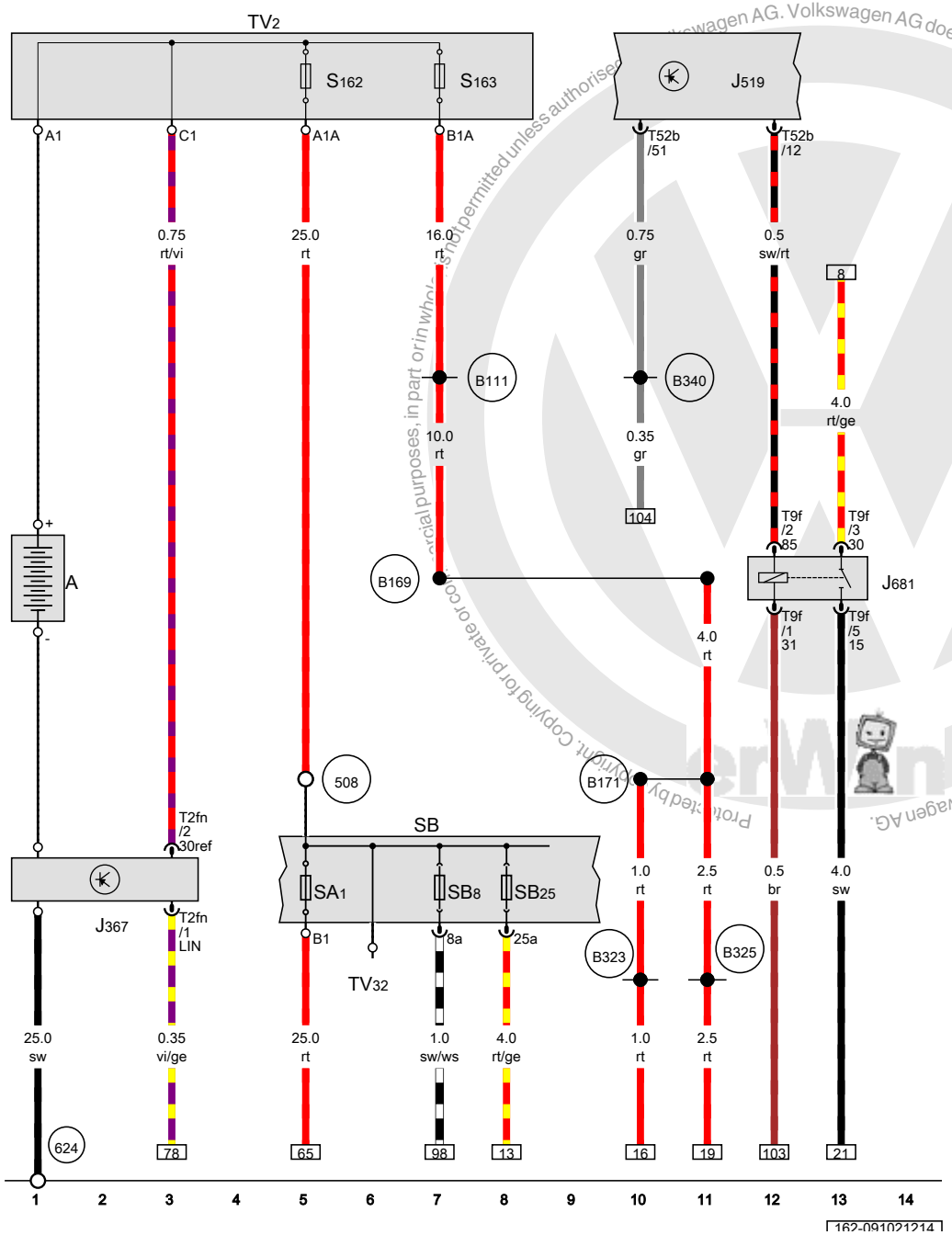

Battery, Battery monitoring control module, Vehicle electrical control module system, Fuse panel B, Remote start connection

A	Battery, in the luggage compartment, left
J367	Battery monitoring control module, on the battery ground cable terminal
J519	Vehicle electrical control module system
J681	Terminal 15 power supply relay 2
SA1	Fuse 1 (on fuse panel A), on the E-box in the engine compartment
SB	Fuse panel B, in the E-box
SB8	Fuse 8 (on fuse panel B)
SB25	Fuse 25 (on fuse panel B)
S162	Fuse 1 (terminal 30) on battery fuse panel
S163	Fuse 2 (terminal 30) on battery fuse panel
T2fn	Double connector
T9f	9-pin connector
T52b	52-pin connector
TV2	Terminal 30 wire junction, on the battery fuse panel
TV32	Remote start connection, on the E-box in the engine compartment
508	Terminal 30 threaded connection (on E-box)
624	Ground connection near starter battery
B111	Positive connection 1 (30a) (in interior wiring harness)
B169	Positive connection 1 (30) (in interior wiring harness)
B171	Positive connection 3 (30) (in interior wiring harness)
B323	Positive connection 9 (30a) (in main wiring harness)
B325	Positive connection 11 (30a) (in main wiring harness)
B340	Connection 58d (in main wiring harness) 1

ws	=	white
sw	=	black
ro	=	red
rt	=	red
br	=	brown
gn	=	green
bl	=	blue
gr	=	grey
li	=	lilac
vi	=	lilac
ge	=	yellow
or	=	orange
rs	=	pink

Protected by Copyright. Copying for private or commercial purposes, in part or in whole, is not permitted unless authorised by Volkswagen AG. Volkswagen AG does not guarantee or accept any liability with respect to the correctness of information in this document. Copyright by Volkswagen AG.

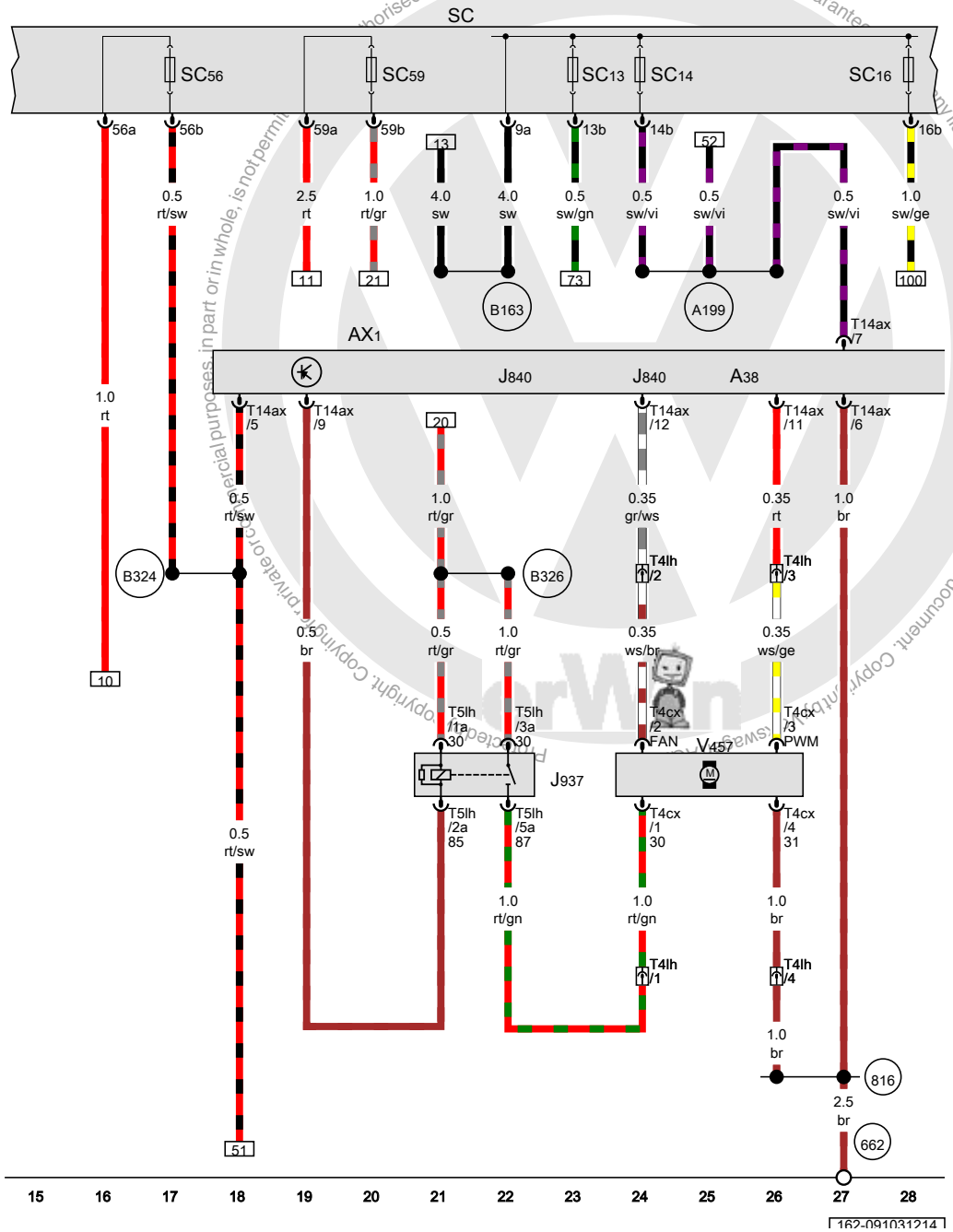

Hybrid battery unit, Hybrid battery, Battery regulation control module, Fan activation relay, Fuse panel C, Battery fan 1

AX1	Hybrid battery unit
A38	Hybrid battery
J840	Battery regulation control module
J937	Fan activation relay
SC	Fuse panel C
SC13	Fuse 13 (on fuse panel C)
SC14	Fuse 14 (on fuse panel C)
SC16	Fuse 16 (on fuse panel C)
SC56	Fuse 56 (on fuse panel C)
SC59	Fuse 59 (on fuse panel C)
T4cx	4-pin connector, brown
T4lh	4-pin connector, brown
T5lh	5-pin connector
T14ax	14-pin connector
V457	Battery fan 1
662	Ground connection in left rear side panel
816	Ground connection 1 in Hybrid System wiring harness
A199	Positive connection 4 (15a) (in instrument panel wiring harness)
B163	Positive connection 1 (15) (in interior wiring harness)
B324	Positive connection 10 (30a) (in main wiring harness)
B326	Positive connection 12 (30a) (in main wiring harness)

ws	=	white
sw	=	black
ro	=	red
rt	=	red
br	=	brown
gn	=	green
bl	=	blue
gr	=	grey
li	=	lilac
vi	=	lilac
ge	=	yellow
or	=	orange
rs	=	pink

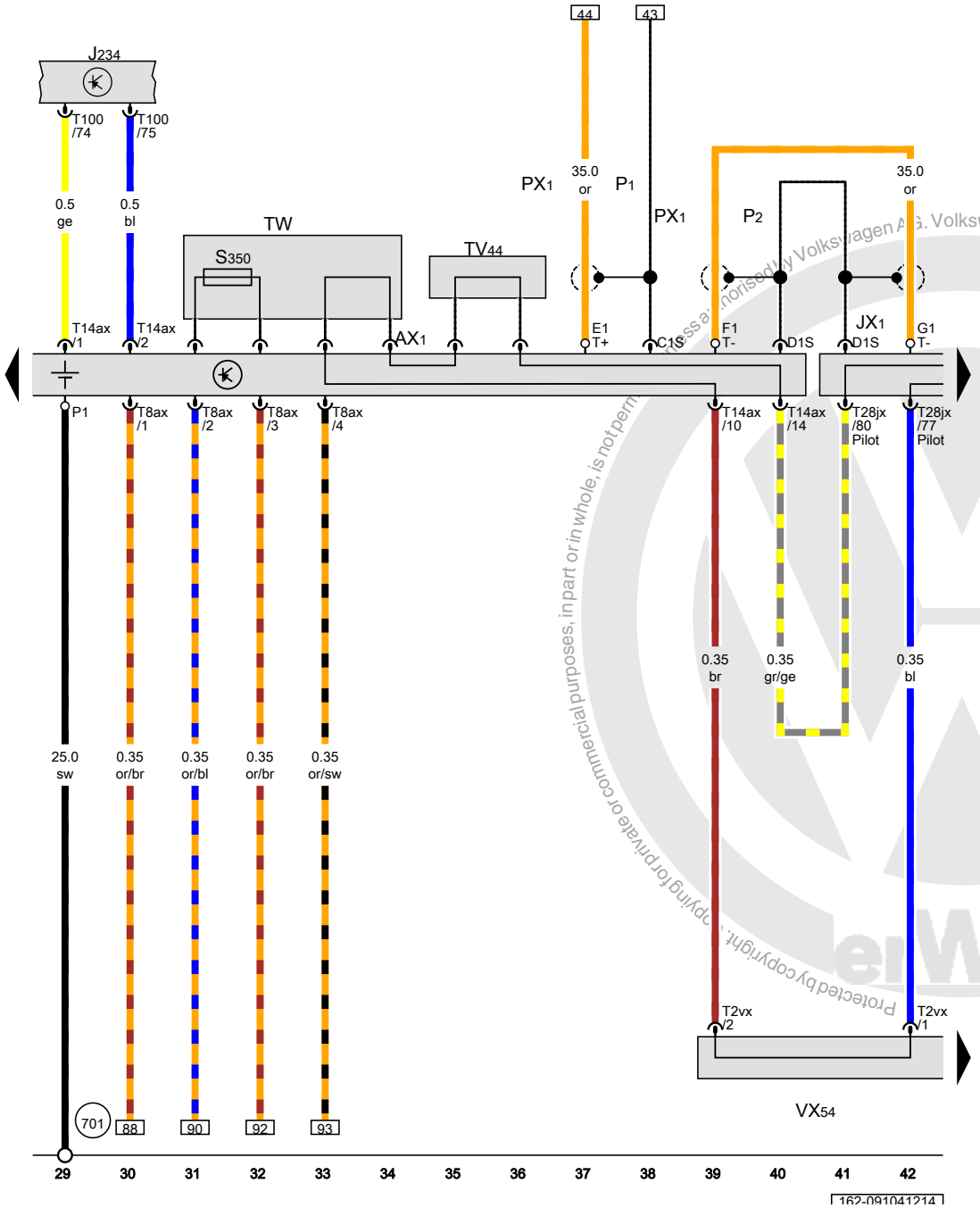

Hybrid battery unit, Electric drive power and control electronics, High voltage wiring harness for high voltage battery, Pilot line connector 1, High voltage system maintenance connector, Three-phrase current drive

AX1	Hybrid battery unit
JX1	Electric drive power and control electronics
J234	Airbag control module
PX1	High voltage wiring harness for high voltage battery
P1	Hybrid battery high voltage cable, positive terminal
P2	Hybrid battery high voltage cable, negative terminal
S350	High voltage system fuse 1
T2vx	Double connector
T8ax	8-pin connector
T14ax	14-pin connector
T28jx	28-pin connector
TV44	Pilot line connector 1
T100	100-pin connector
TW	High voltage system maintenance connector
VX54	Three-phrase current drive
701	Ground connection in luggage compartment

ws	=	white
sw	=	black
ro	=	red
rt	=	red
br	=	brown
gn	=	green
bl	=	blue
gr	=	grey
li	=	lilac
vi	=	lilac
ge	=	yellow
or	=	orange
rs	=	pink

Protected by copyright. Copying for private or commercial purposes, in part or in whole, is not permitted unless authorised by Volkswagen AG. Volkswagen AG does not guarantee or accept any liability with respect to the correctness of information in this document. Copyright by Volkswagen AG.

Drive motor temperature sensor, Electric drive power and control electronics, Three-phrase current drive

G712	Drive motor temperature sensor
G713	Drive motor rotor position sensor 1
JX1	Electric drive power and control electronics
T2va	Double connector
T4vx	4-pin connector
T14hy	14-pin connector, black
T28jx	28-pin connector
VX54	Three-phrase current drive
*	from December 2012

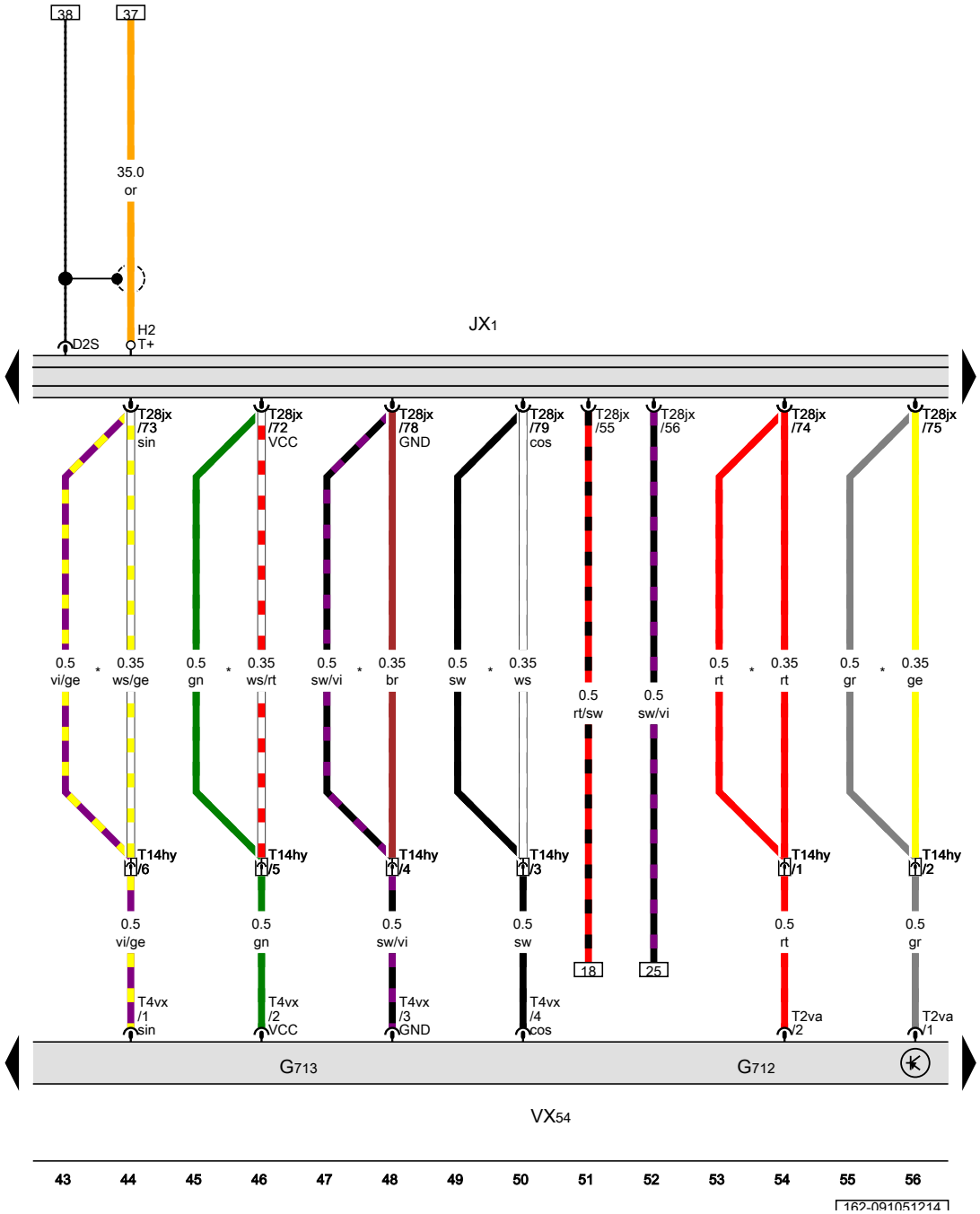

ws	=	white
sw	=	black
ro	=	red
rt	=	red
br	=	brown
gn	=	green
bl	=	blue
gr	=	grey
li	=	lilac
vi	=	lilac
ge	=	yellow
or	=	orange
rs	=	pink

Protected by copyright. Copying for private or commercial purposes, in part or in whole, is not permitted unless authorised by Volkswagen AG. Volkswagen AG does not guarantee or accept any liability with respect to the correctness of information in this document. Copyright by Volkswagen AG.

Electric drive power and control electronics, A/C compressor control module, Drive motor high voltage wiring harness, Electrical A/C compressor high voltage cable, Three-phrase current drive, Electro-drive drive motor, Electrical A/C compressor

JX1	Electric drive power and control electronics
J842	A/C compressor control module
PX2	Drive motor high voltage wiring harness
P3	Electrical A/C compressor high voltage cable
P4	Drive motor high voltage cable 1
P5	Drive motor high voltage cable 2
P6	Drive motor high voltage cable 3
T4bk	4-pin connector
T4jx	4-pin connector
VX54	Three-phrase current drive
V141	Electro-drive drive motor
V470	Electrical A/C compressor
1	Ground strap, battery to body, on the left bulkhead
12	Ground connection in engine compartment, left

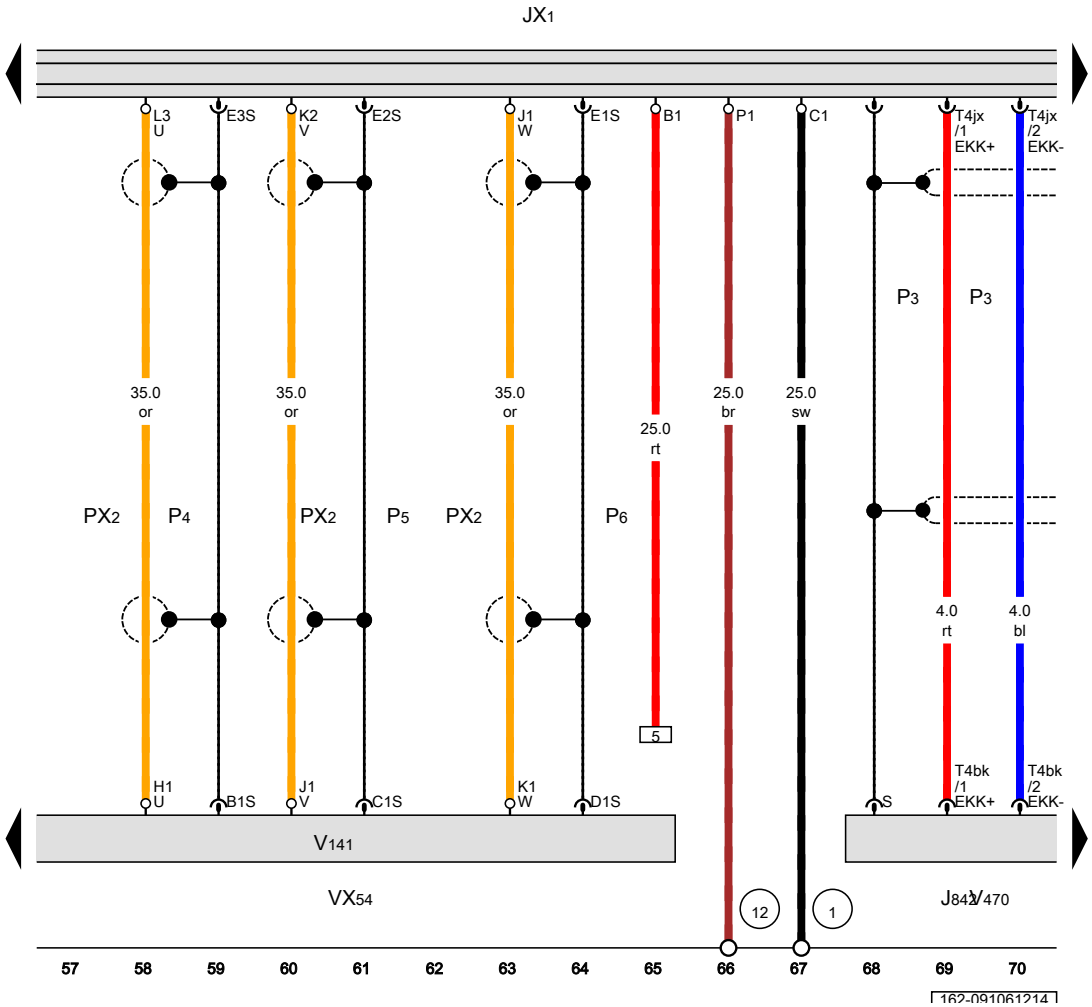

ws	=	white
sw	=	black
ro	=	red
rt	=	red
br	=	brown
gn	=	green
bl	=	blue
gr	=	grey
li	=	lilac
vi	=	lilac
ge	=	yellow
or	=	orange
rs	=	pink

Protected by copyright. Copying for private or commercial purposes, in part or in whole, is not permitted unless authorised by Volkswagen AG. Volkswagen AG does not guarantee or accept any liability with respect to the correctness of information in this document. Copyright by Volkswagen AG.

Voltage converter, Drive motor inverter, Electric drive power and control electronics, Instrument cluster control module, Data bus on board diagnostic interface, Electrical drive control module, A/C compressor control module, Electrical drive indicator lamp

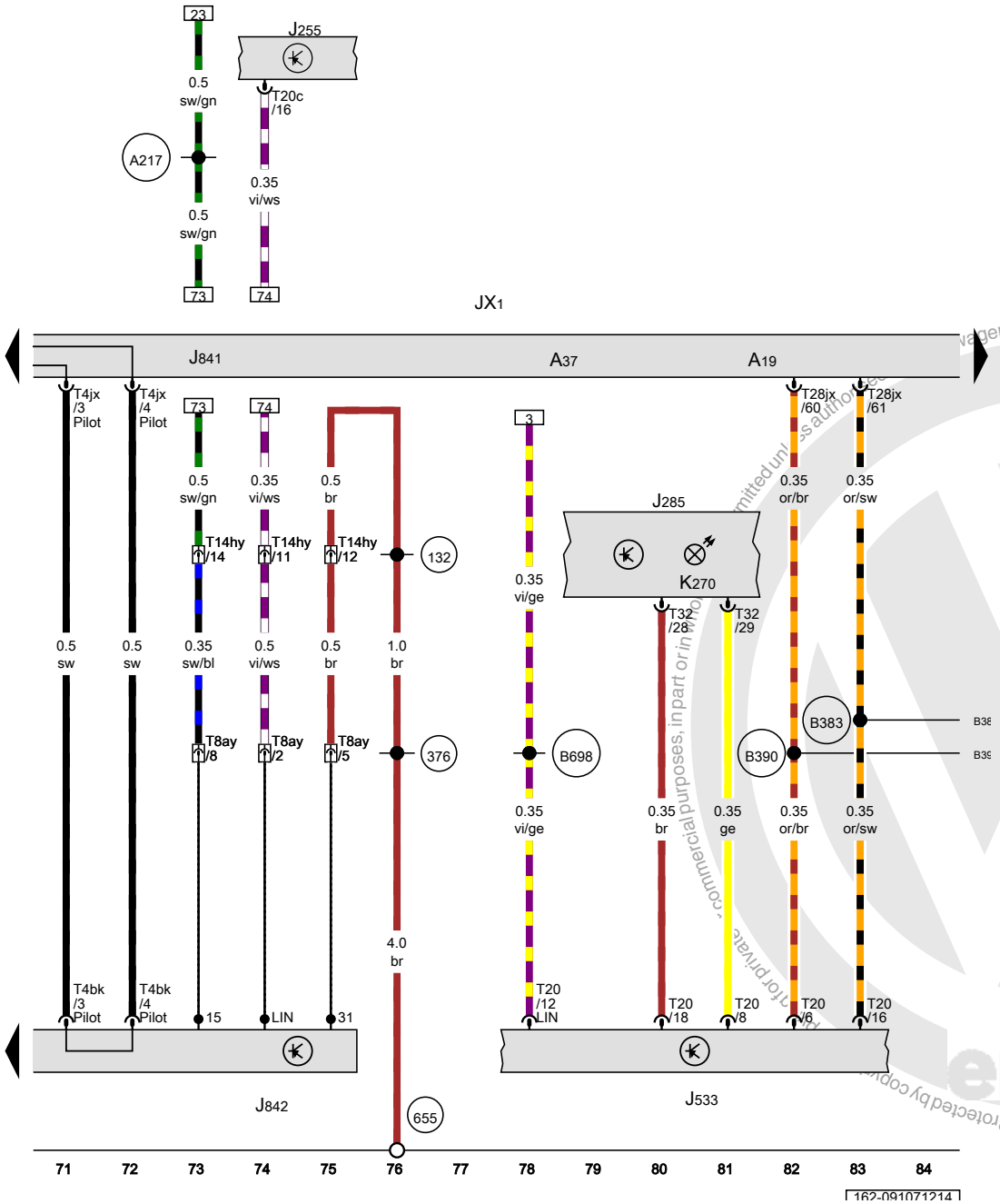

A19	Voltage converter	
A37	Drive motor inverter	
JX1	Electric drive power and control electronics	
J255	Climatronic control module	
J285	Instrument cluster control module	
J533	Data bus on board diagnostic interface	
J841	Electrical drive control module	
J842	A/C compressor control module	
K270	Electrical drive indicator lamp	
T4bk	4-pin connector	
T4jx	4-pin connector	
T8ay	8-pin connector	
T14hy	14-pin connector, black	
T20	20-pin connector	
T20c	20-pin connector	
T28jx	28-pin connector	
T32	32-pin connector	
132	Ground connection 3 (in engine compartment wiring harness)	
376	Ground connection 11 (in main wiring harness)	
655	Ground connection on left headlamp	
A217	Positive connection 8 (15a) (in instrument panel wiring harness)	
B383	Powertrain CAN bus high connection 1 (in main wiring harness)	
B390	Powertrain CAN bus low connection 1 (in main wiring harness)	
B698	LIN bus connection 3 (in main wiring harness)	

ws	=	white
sw	=	black
ro	=	red
rt	=	red
br	=	brown
gn	=	green
bl	=	blue
gr	=	grey
li	=	lilac
vi	=	lilac
ge	=	yellow
or	=	orange
rs	=	pink

Volkswagen AG. Volkswagen AG does not guarantee or accept any liability with respect to the correctness of information in this document. Copyright by Volkswagen AG. Protected by copyright. Transmitted or copied only for private, non-commercial purposes, in part or in whole, only with permission of Volkswagen AG.

Electric drive power and control electronics, Engine control module, Decoupler pressure actuator

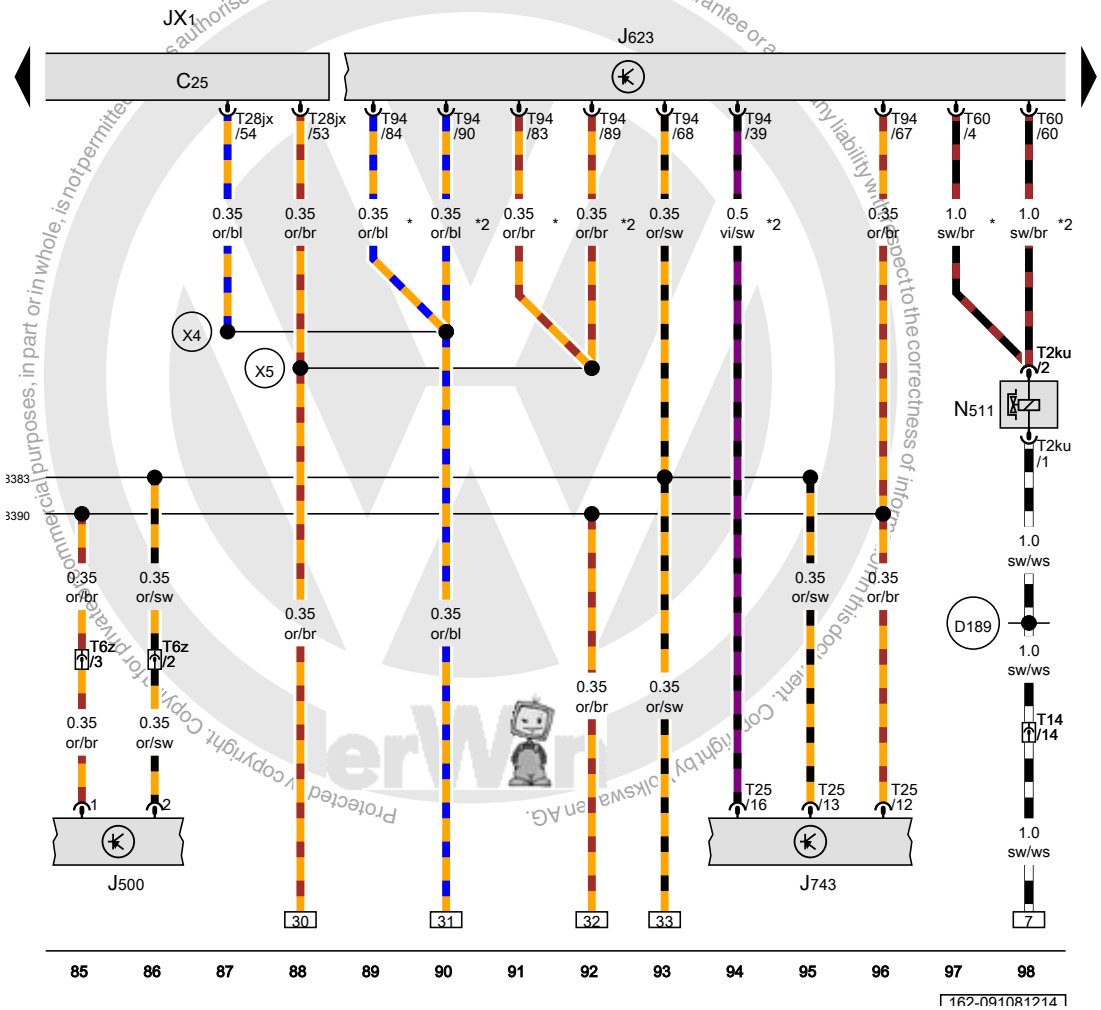

C25	Intermediate circuit capacitor 1
JX1	Electric drive power and control electronics
J500	Power steering control module
J623	Engine control module
J743	DSG transmission Mechatronic
N511	Decoupler pressure actuator
T2ku	Double connector
T6z	6-pin connector
T14	14-pin connector
T25	25-pin connector
T28jx	28-pin connector
T60	60-pin connector
T94	94-pin connector
B383	Powertrain CAN bus high connection 1 (in main wiring harness)
B390	Powertrain CAN bus low connection 1 (in main wiring harness)
D189	Connection 87a (in engine pre-wiring harness)
X4	CAN bus Hybrid high connection 1 (in engine compartment wiring harness)
X5	CAN bus Hybrid low connection 1 (in engine compartment wiring harness)
*	Not for USA
*2	USA only

ws	=	white
sw	=	black
ro	=	red
rt	=	red
br	=	brown
gn	=	green
bl	=	blue
gr	=	grey
li	=	lilac
vi	=	lilac
ge	=	yellow
or	=	orange
rs	=	pink

Protected by copyright. Copyright by Volkswagen AG. Volkswagen AG does not guarantee or assume any liability with respect to the correctness of information in this document. Copyright by Volkswagen AG. Protected by copyright. Copyright. Copyright.

Electrical drive button, Engine control module

E656	Electrical drive button
J623	Engine control module
L76	Push button illumination bulb
T6ef	6-pin connector
T94	94-pin connector
44	Ground connection on A-pillar, lower left
367	Ground connection 2 (in main wiring harness)
389	Ground connection 24 (in main wiring harness)
605	Ground connection on upper steering column
A201	Positive connection 6 (15a) (in instrument panel wiring harness)
*	Not for USA
*2	USA only

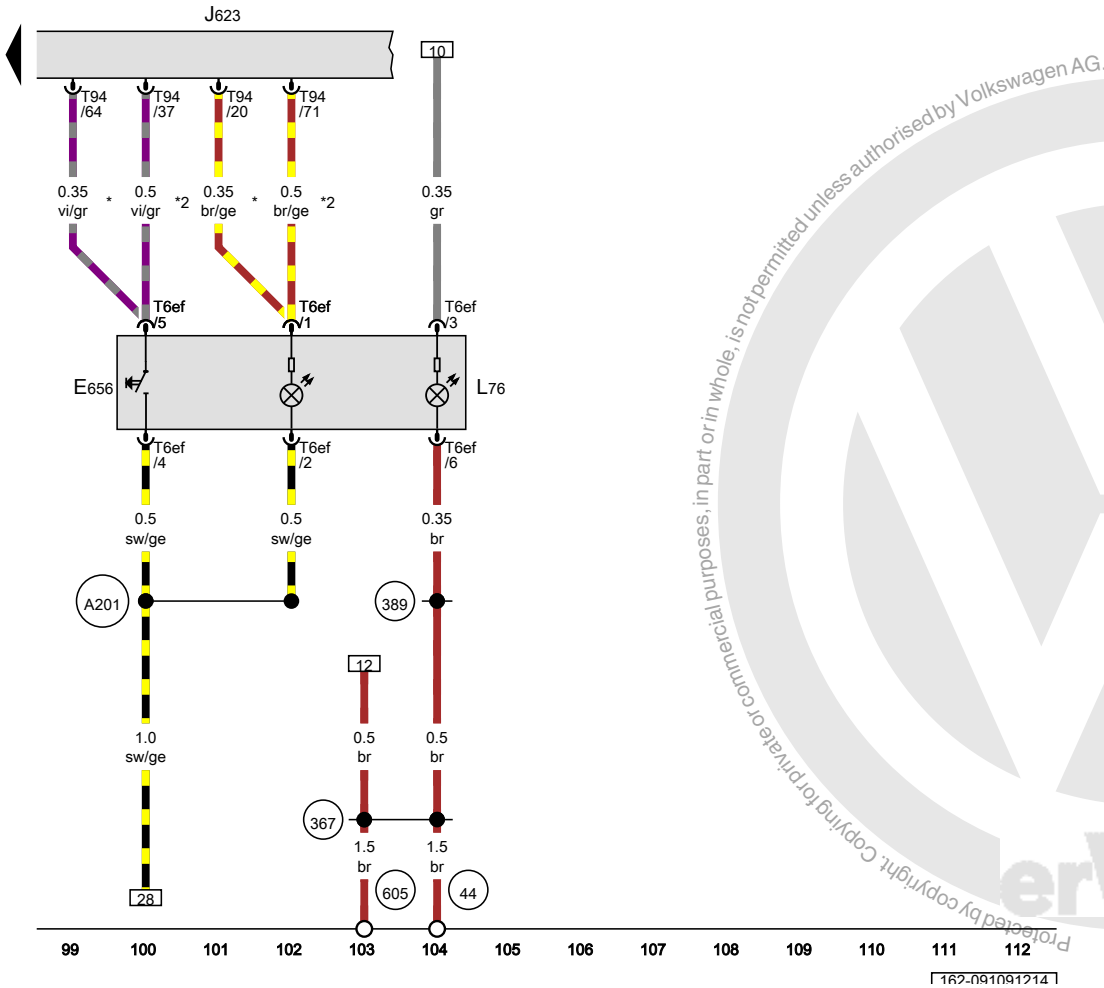

ws	=	white
sw	=	black
ro	=	red
rt	=	red
br	=	brown
gn	=	green
bl	=	blue
gr	=	grey
li	=	lilac
vi	=	lilac
ge	=	yellow
or	=	orange
rs	=	pink

Protected by copyright. Copying for private or commercial purposes, in part or in whole, is not permitted unless authorised by Volkswagen AG. Volkswagen AG does not guarantee or accept any liability with respect to the correctness of information in this document. Copyright by Volkswagen AG.

1.4L gasoline engine , CNLA

from June 2012

Protected by copyright. Copying for private or commercial purposes, in part or in whole, is not permitted unless authorised by Volkswagen AG. Volkswagen AG does not guarantee or accept any liability with respect to the correctness of information in this document. Copyright by Volkswagen AG.

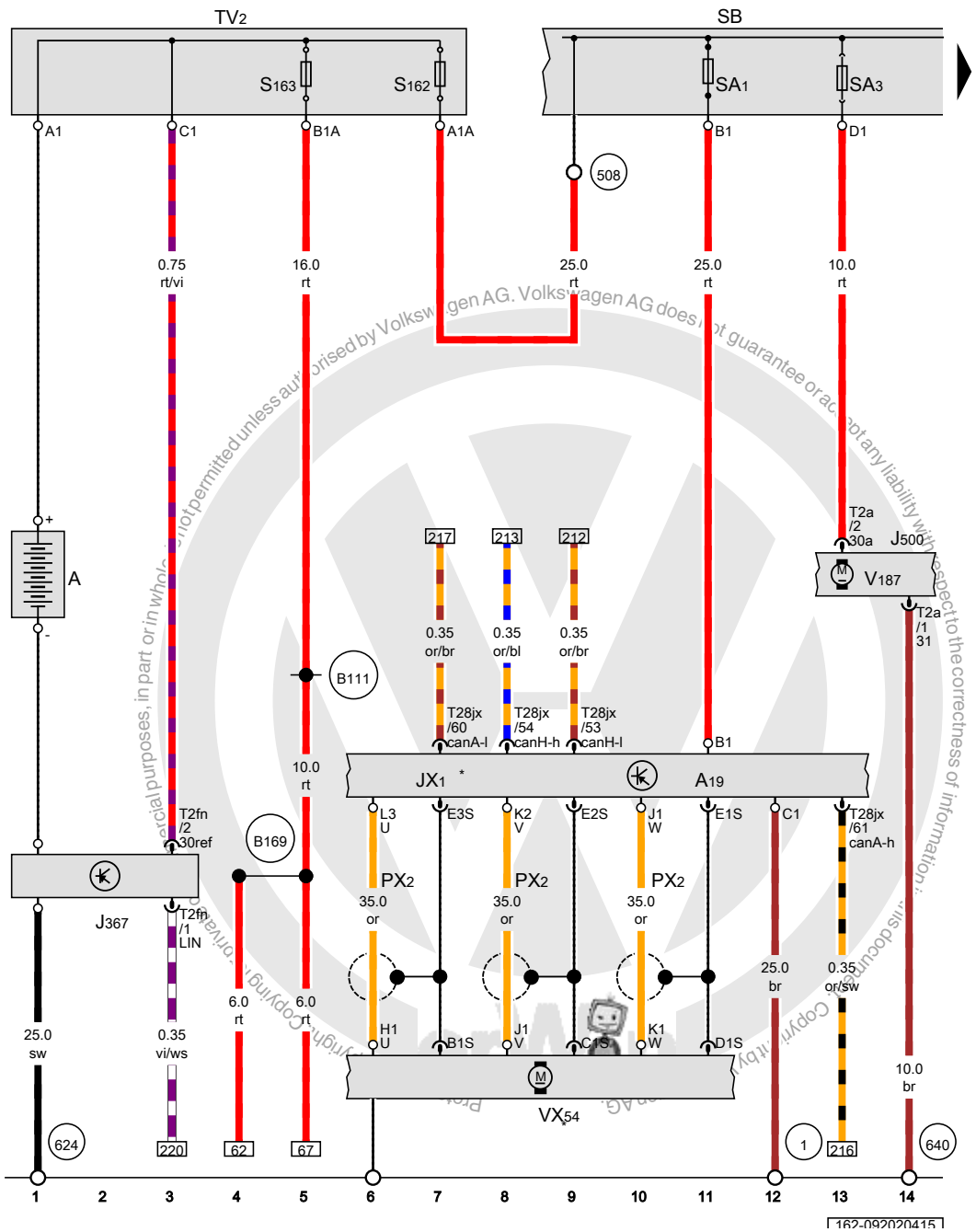

Battery, Voltage converter, Electric drive power and control electronics, Battery monitoring control module, Drive motor high-voltage wiring harness, Fuse 1 (on fuse panel A), Fuse 3 (on fuse panel A), Fuse panel B, Terminal 30 wire junction, Three-phase current drive

A	Battery, in the luggage compartment, left
A19	Voltage converter
JX1	Electric drive power and control electronics
J367	Battery monitoring control module, on the battery ground cable terminal
J500	Power steering control module
PX2	Drive motor high-voltage wiring harness
SA1	Fuse 1 (on fuse panel A)
SA3	Fuse 3 (on fuse panel A)
S162	Fuse 1 (terminal 30) on battery fuse panel
S163	Fuse 2 (terminal 30) on battery fuse panel
SB	Fuse panel B
T2a	Double connector
T2fn	Double connector
T28jx	28-pin connector
TV2	Terminal 30 wire junction, on the battery fuse panel
VX54	Three-phase current drive
V187	Electromechanical power steering motor
1	Ground strap, battery to body
508	Terminal 30 threaded connection (on E-box)
624	Ground connection near starter battery
640	Ground connection 2 in engine compartment, left
B111	Positive connection 1 (30a) (in interior wiring harness)
B169	Positive connection 1 (30) (in interior wiring harness)
*	Refer to applicable high-voltage system wiring diagram

ws	=	white
sw	=	black
ro	=	red
rt	=	red
br	=	brown
gn	=	green
bl	=	blue
gr	=	grey
li	=	lilac
vi	=	lilac
ge	=	yellow
or	=	orange
rs	=	pink

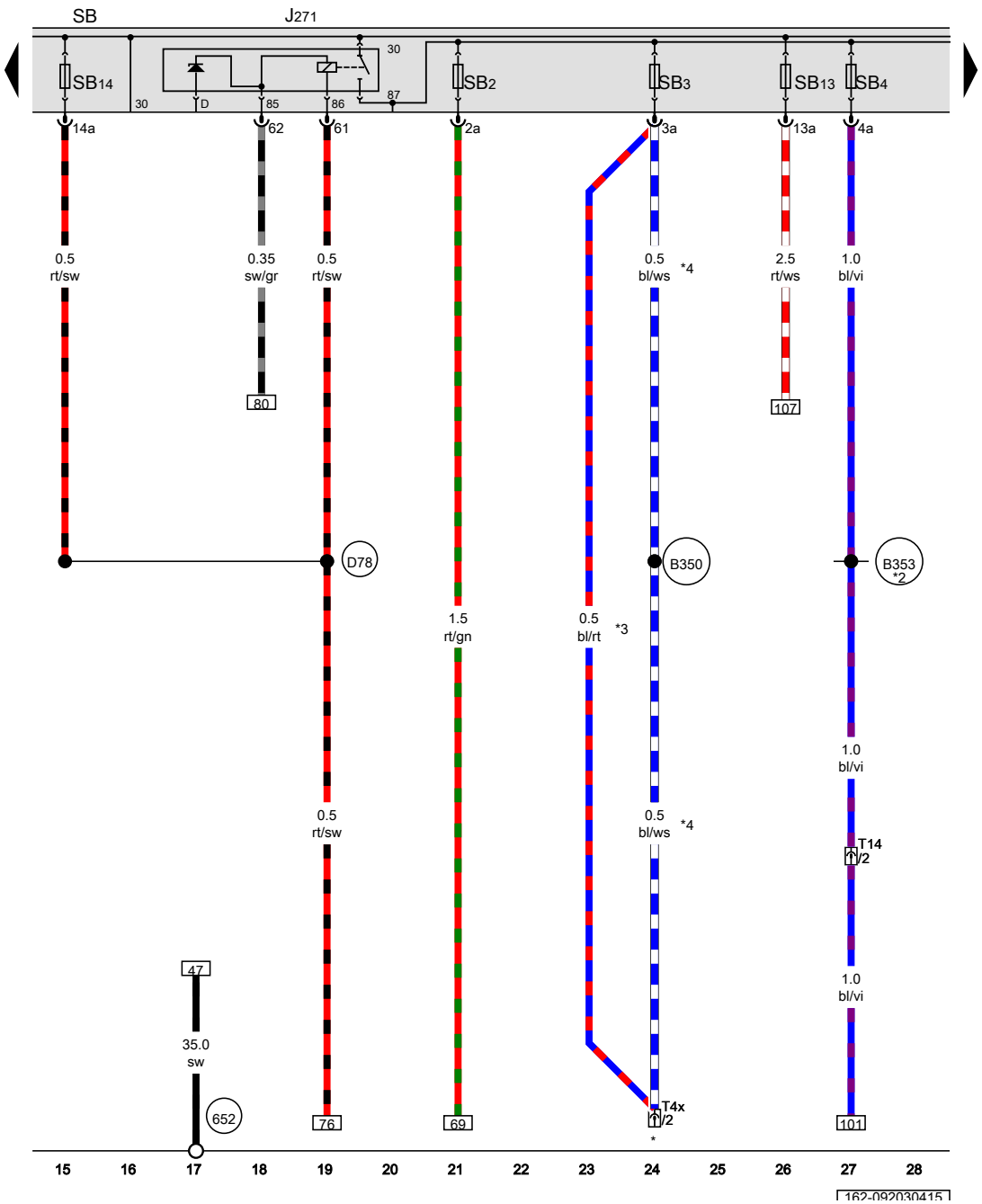

Motronic engine control module power supply relay, Fuse panel B

J271	Motronic engine control module power supply relay
SB	Fuse panel B
SB2	Fuse 2 (on fuse panel B)
SB3	Fuse 3 (on fuse panel B)
SB4	Fuse 4 (on fuse panel B)
SB13	Fuse 13 (on fuse panel B)
SB14	Fuse 14 (on fuse panel B)
T4x	4-pin connector
T14	14-pin connector
652	Transmission/engine ground connection
B350	Positive connection 1 (87a) (in main wiring harness)
B353	Positive connection 4 (87a) (in main wiring harness)
D78	Positive connection 1 (30a) (in engine compartment wiring harness)
*	Coolant fan connection
*2	Omitted as a running change
*3	Through May 2013
*4	from June 2013

ws	=	white
sw	=	black
ro	=	red
rt	=	red
br	=	brown
gn	=	green
bl	=	blue
gr	=	grey
li	=	lilac
vi	=	lilac
ge	=	yellow
or	=	orange
rs	=	pink

Protected by copyright. Copying for private or commercial purposes, in part or in whole, is not permitted unless authorised by Volkswagen AG. Volkswagen AG does not guarantee or accept any liability with respect to the correctness of information in this document. Copyright by Volkswagen AG.

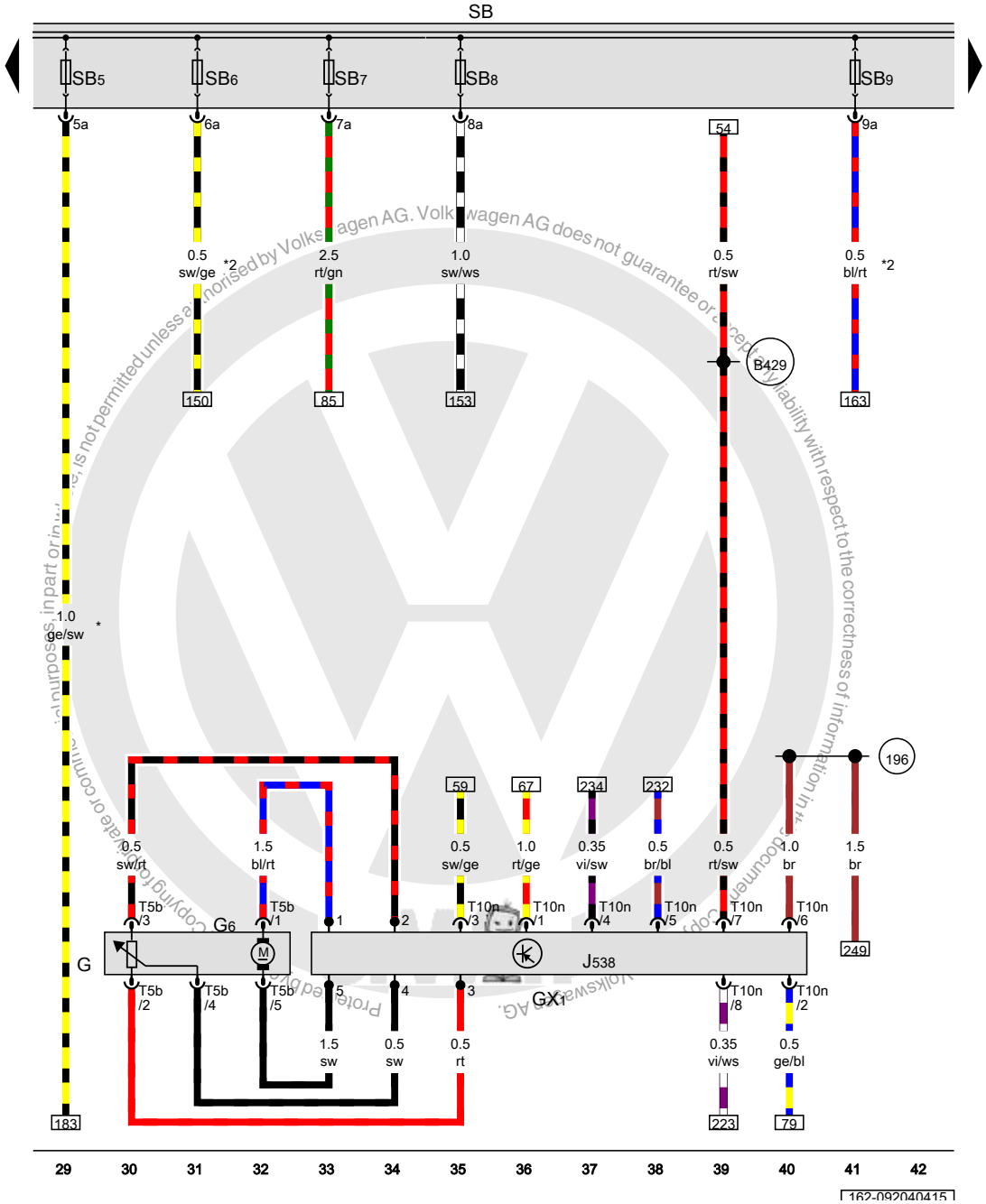

Fuel level sensor, Fuel delivery unit, Transfer fuel pump, Fuel pump control module, Fuse panel B

G	Fuel level sensor
GX1	Fuel delivery unit
G6	Transfer fuel pump
J538	Fuel pump control module
SB	Fuse panel B
SB5	Fuse 5 (on fuse panel B)
SB6	Fuse 6 (on fuse panel B)
SB7	Fuse 7 (on fuse panel B)
SB8	Fuse 8 (on fuse panel B)
SB9	Fuse 9 (on fuse panel B)
T5b	5-pin connector
T10n	10-pin connector
196	Ground connection 3 (in rear wiring harness)
B429	Fuel pump relay connection (in main wiring harness)
*	The color of the wires depends on vehicle equipment
*2	Diameter depends on equipment

ws	=	white
sw	=	black
ro	=	red
rt	=	red
br	=	brown
gn	=	green
bl	=	blue
gr	=	grey
li	=	lilac
vi	=	lilac
ge	=	yellow
or	=	orange
rs	=	pink

Protected by copyright. Copying for private or commercial purposes, in part or in whole, is not permitted unless authorised by Volkswagen AG. Volkswagen AG does not guarantee or accept any liability with respect to the correctness of information in this document. Copyright by Volkswagen AG.

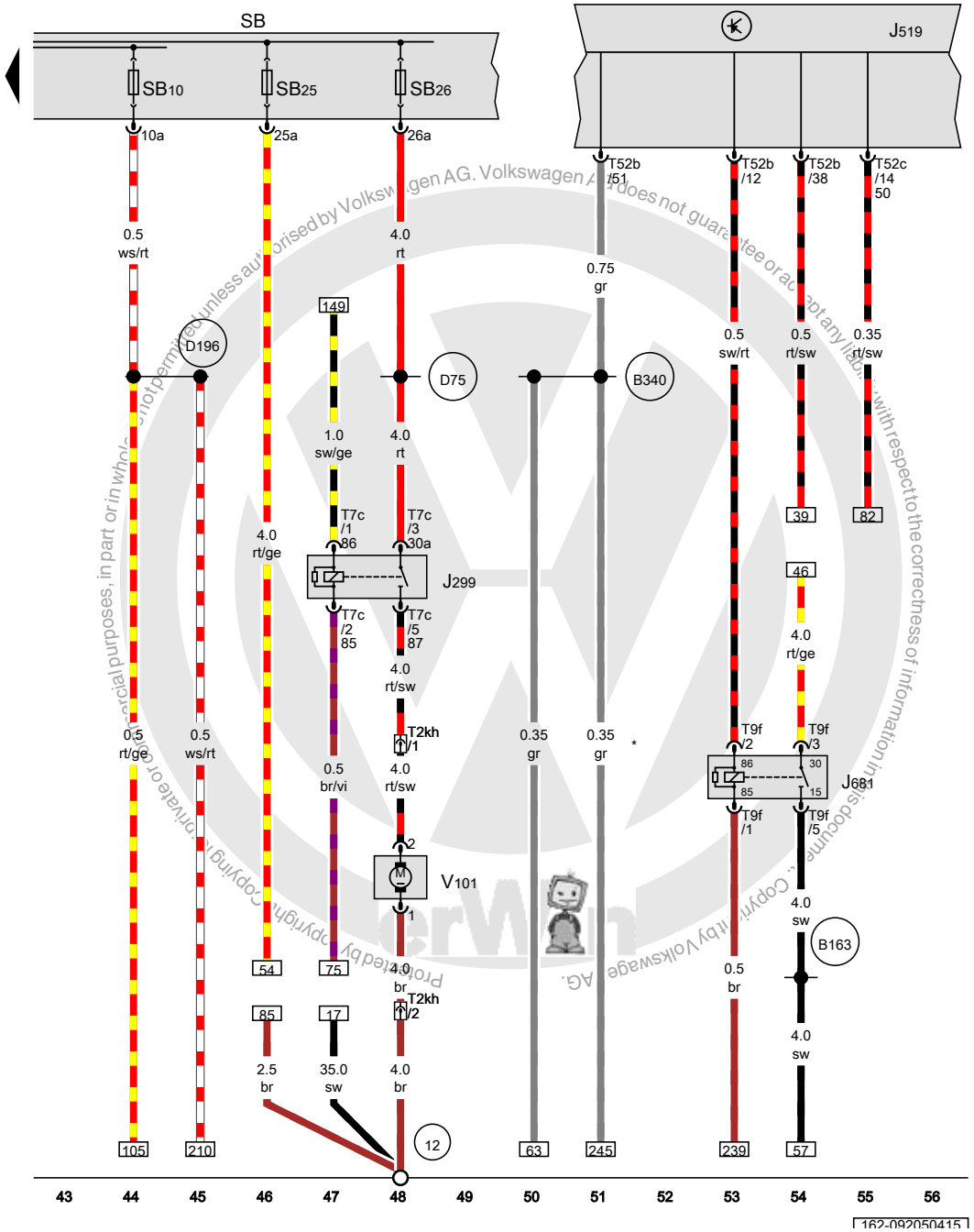

Secondary air injection pump relay, Vehicle electrical control module system, Terminal 15 power supply relay 2, Fuse panel B, Secondary air injection pump motor

J299	Secondary air injection pump relay
J519	Vehicle electrical control module system
J681	Terminal 15 power supply relay 2
SB	Fuse panel B
SB10	Fuse 10 (on fuse panel B)
SB25	Fuse 25 (on fuse panel B)
SB26	Fuse 26 (on fuse panel B)
T2kh	Double connector
T7c	7-pin connector
T9f	9-pin connector
T52b	52-pin connector
T52c	52-pin connector
V101	Secondary air injection pump motor
12	Ground connection in engine compartment, left
B163	Positive connection 1 (15) (in interior wiring harness)
B340	Connection 58d (in main wiring harness) 1
D75	Positive connection 2 (30) (in engine compartment wiring harness)
D196	Connection 87a (in engine pre-wiring harness) 2
*	Depending on equipment

ws	=	white
sw	=	black
ro	=	red
rt	=	red
br	=	brown
gn	=	green
bl	=	blue
gr	=	grey
li	=	lilac
vi	=	lilac
ge	=	yellow
or	=	orange
rs	=	pink

Copyright by Volkswagen AG. Volkswagen AG does not guarantee or accept any liability with respect to the correctness of information in this document. Copying for private or commercial purposes, in part or in whole, is not permitted unless authorised by Volkswagen AG. Protected by copyright.

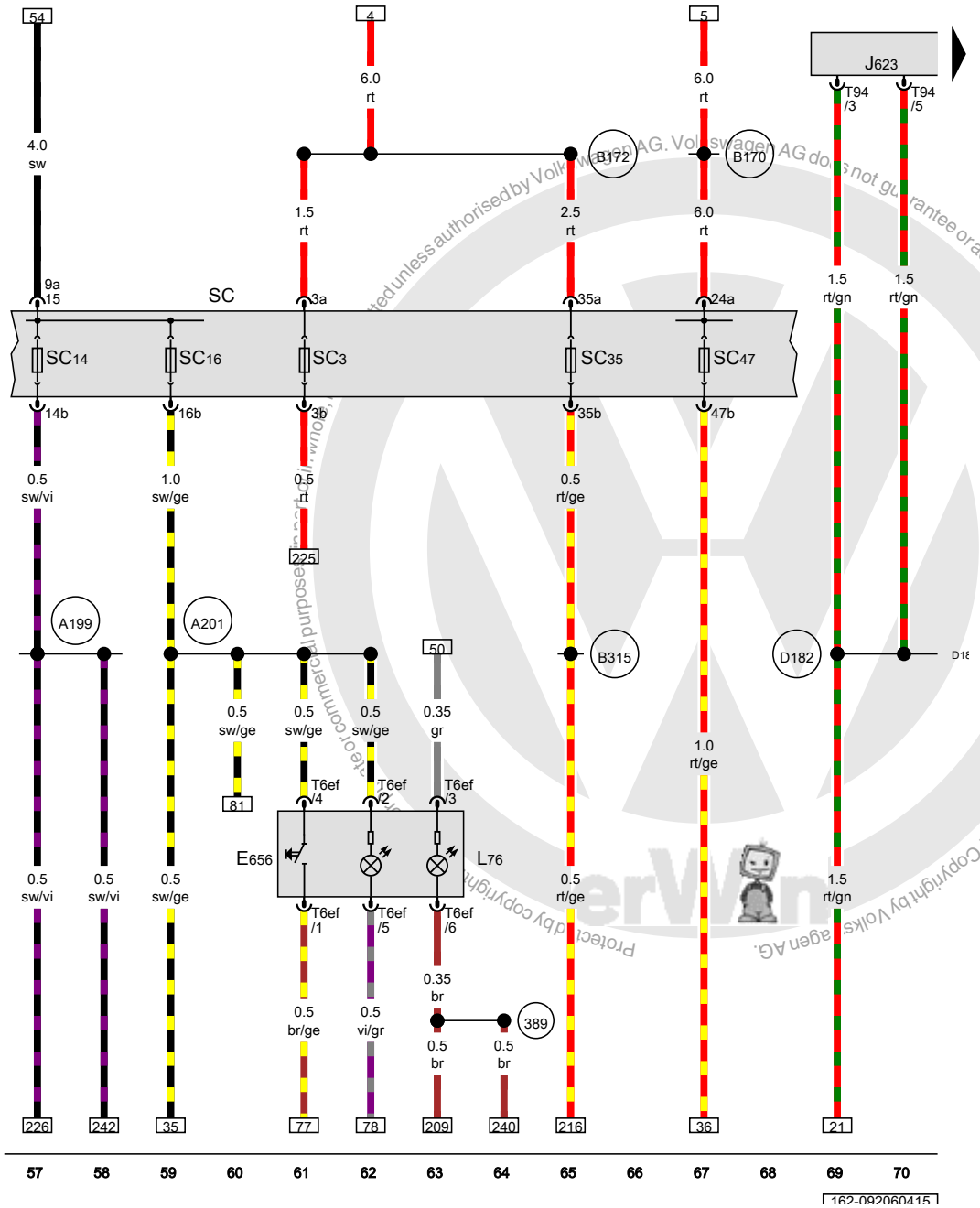

Electrical drive button, Engine control module, Push button illumination bulb, Fuse panel C

E656	Electrical drive button
J623	Engine control module
L76	Push button illumination bulb
SC	Fuse panel C
SC3	Fuse 3 (on fuse panel C)
SC14	Fuse 14 (on fuse panel C)
SC16	Fuse 16 (on fuse panel C)
SC35	Fuse 35 (on fuse panel C)
SC47	Fuse 47 (on fuse panel C)
T6ef	6-pin connector
T94	94-pin connector
389	Ground connection 24 (in main wiring harness)
A199	Positive connection 4 (15a) (in instrument panel wiring harness)
A201	Positive connection 6 (15a) (in instrument panel wiring harness)
B170	Positive connection 2 (30) (in interior wiring harness)
B172	Positive connection 4 (30) (in interior wiring harness)
B315	Positive connection 1 (30a) (in main wiring harness)
D182	Connection 3 (87a) (in engine compartment wiring harness)

ws	=	white
sw	=	black
ro	=	red
rt	=	red
br	=	brown
gn	=	green
bl	=	blue
gr	=	grey
li	=	lilac
vi	=	lilac
ge	=	yellow
or	=	orange
rs	=	pink

Protected by copyright. Copyright by Volkswagen AG.

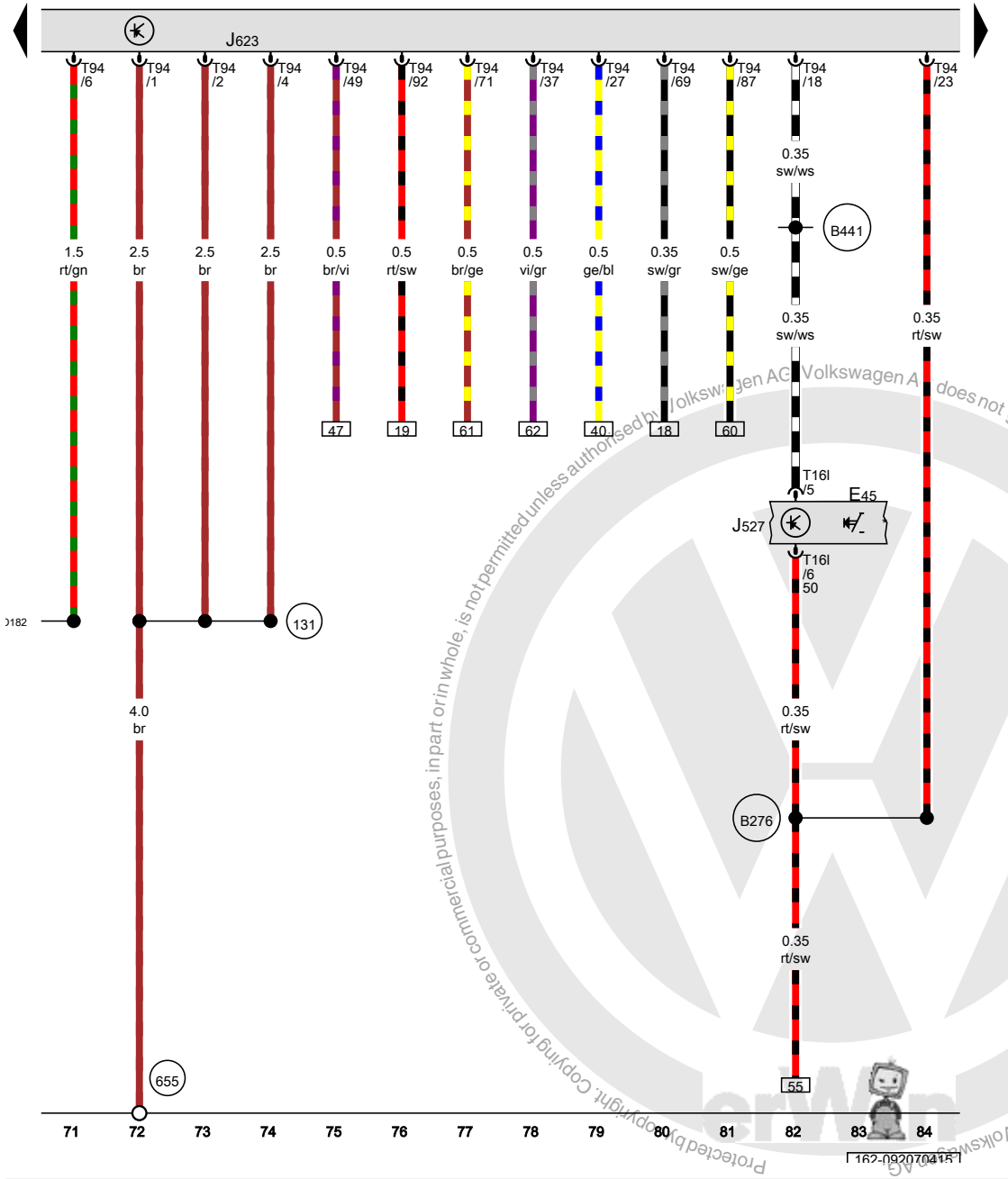

Engine control module

E45	Cruise control switch
J527	Steering column electronics control module
J623	Engine control module
T16l	16-pin connector
T94	94-pin connector
131	Ground connection 2 (in engine compartment wiring harness)
655	Ground connection on left headlamp
B276	Positive connection (50) (in main wiring harness)
B441	Cruise control connection (in main wiring harness)
D182	Connection 3 (87a) (in engine compartment wiring harness)
*	Only for vehicles with cruise control

ws	=	white
sw	=	black
ro	=	red
rt	=	red
br	=	brown
gn	=	green
bl	=	blue
gr	=	grey
li	=	lilac
vi	=	lilac
ge	=	yellow
or	=	orange
rs	=	pink

Protected by copyright. Copying for private or commercial purposes, in part or in whole, is not permitted unless authorised by Volkswagen AG. Volkswagen AG does not guarantee or accept any liability with respect to the correctness of information in this document. Copyright by Volkswagen AG.

Engine control module, Ignition coil 1 with power output stage, Ignition coil 2 with power output stage, Ignition coil 3 with power output stage, Ignition coil 4 with power output stage, Spark plug connectors, Spark plugs

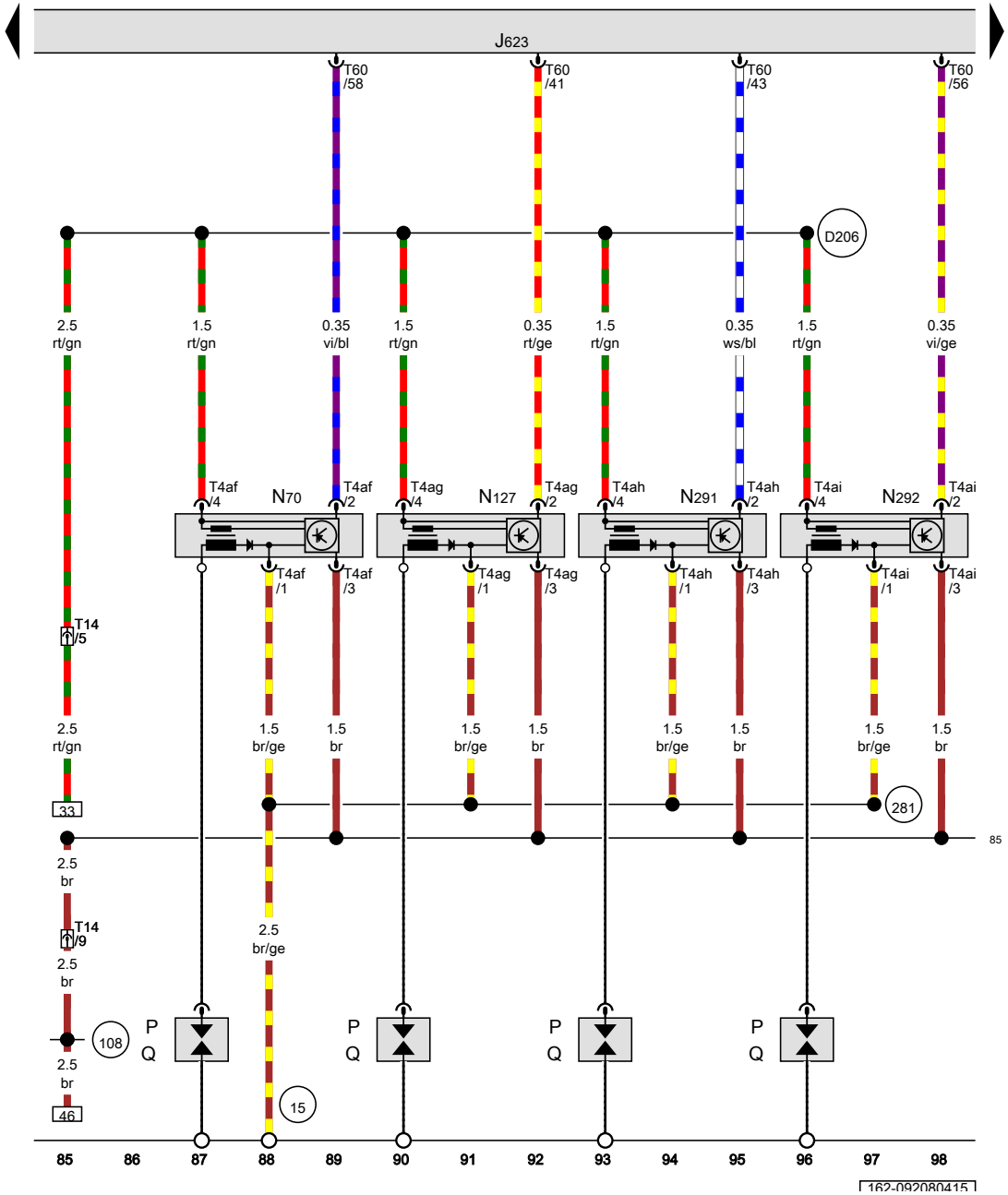

J623	Engine control module
N70	Ignition coil 1 with power output stage
N127	Ignition coil 2 with power output stage
N291	Ignition coil 3 with power output stage
N292	Ignition coil 4 with power output stage
P	Spark plug connectors
Q	Spark plugs
T4af	4-pin connector
T4ag	4-pin connector
T4ah	4-pin connector
T4ai	4-pin connector
T14	14-pin connector
T60	60-pin connector
15	Ground connection on cylinder head
85	Ground connection 1 (in engine compartment wiring harness)
108	Ground connection 2 (in left front wiring harness)
281	Ground connection 1 (in engine pre-wiring harness)
D206	Connection 87a (in engine pre-wiring harness) 4

ws	=	white
sw	=	black
ro	=	red
rt	=	red
br	=	brown
gn	=	green
bl	=	blue
gr	=	grey
li	=	lilac
vi	=	lilac
ge	=	yellow
or	=	orange
rs	=	pink

Protected by copyright. Copying for private or commercial purposes, in part or in whole, is not permitted unless authorised by Volkswagen AG. Volkswagen AG does not guarantee or accept any liability with respect to the correctness of information in this document. Copyright by Volkswagen AG.

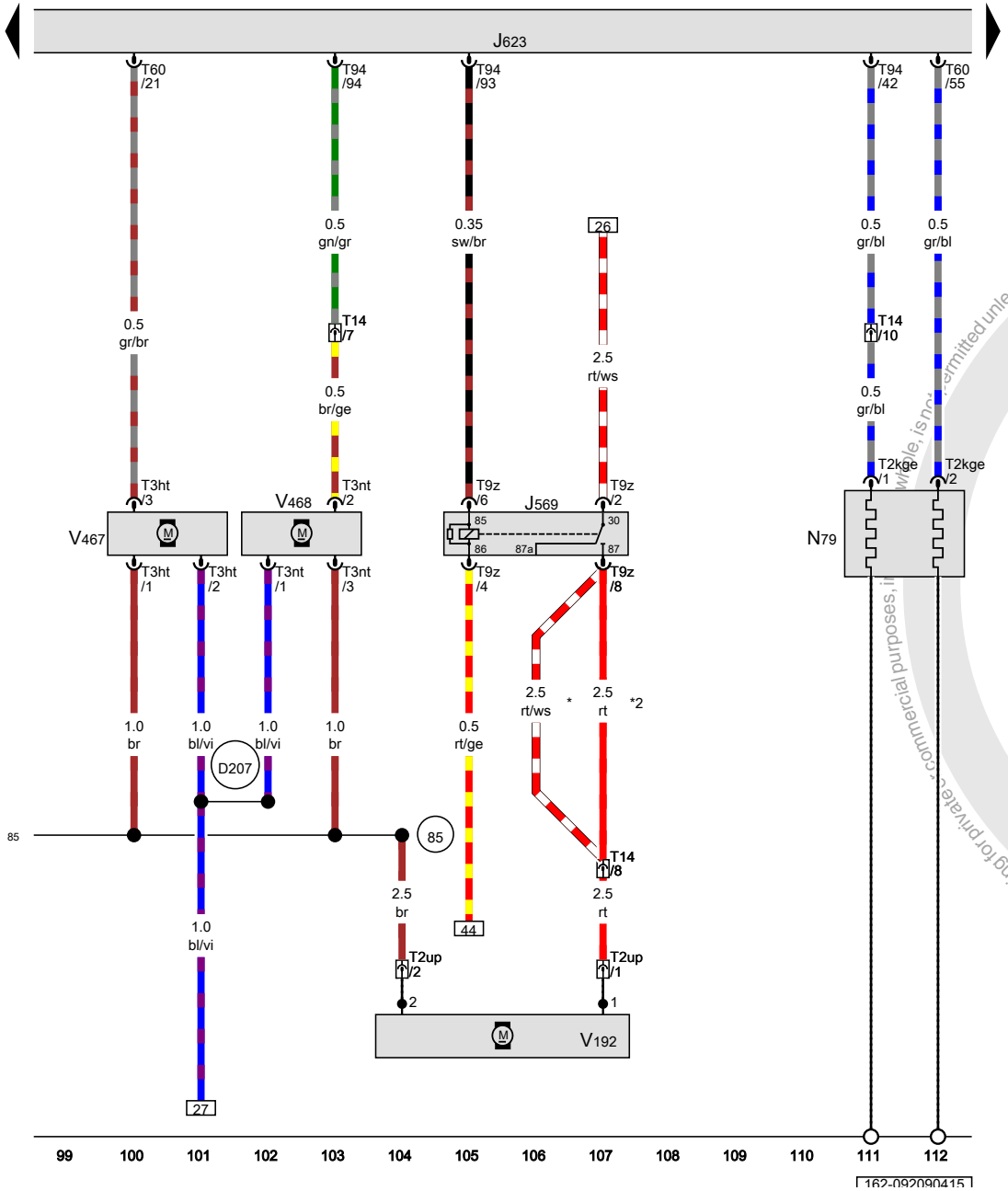

Brake booster relay, Engine control module, Brake system vacuum pump, High temperature circuit coolant pump, Low temperature circuit coolant pump

J569	Brake booster relay
J623	Engine control module
N79	Positive crankcase ventilation heating element
T2kge	Double connector
T2up	Double connector
T3ht	3-pin connector
T3nt	3-pin connector
T9z	9-pin connector
T14	14-pin connector
T60	60-pin connector
T94	94-pin connector
V192	Brake system vacuum pump
V467	High temperature circuit coolant pump
V468	Low temperature circuit coolant pump
85	Ground connection 1 (in engine compartment wiring harness)
D207	Connection 7 (87a) (in engine compartment wiring harness)
*	The color of the wires depends on vehicle equipment
*2	from July 2013

ws	=	white
sw	=	black
ro	=	red
rt	=	red
br	=	brown
gn	=	green
bl	=	blue
gr	=	grey
li	=	lilac
vi	=	lilac
ge	=	yellow
or	=	orange
rs	=	pink

Protected by copyright. Copying for private or commercial purposes, in whole, is not permitted unless authorised by Volkswagen AG. Volkswagen AG does not guarantee or accept any liability with respect to the correctness of information in this document. Copyright by Volkswagen AG.

Reduced oil pressure switch, Throttle valve control module, Charge air pressure actuator position sensor, Throttle valve control module, Engine control module, Charge air pressure actuator

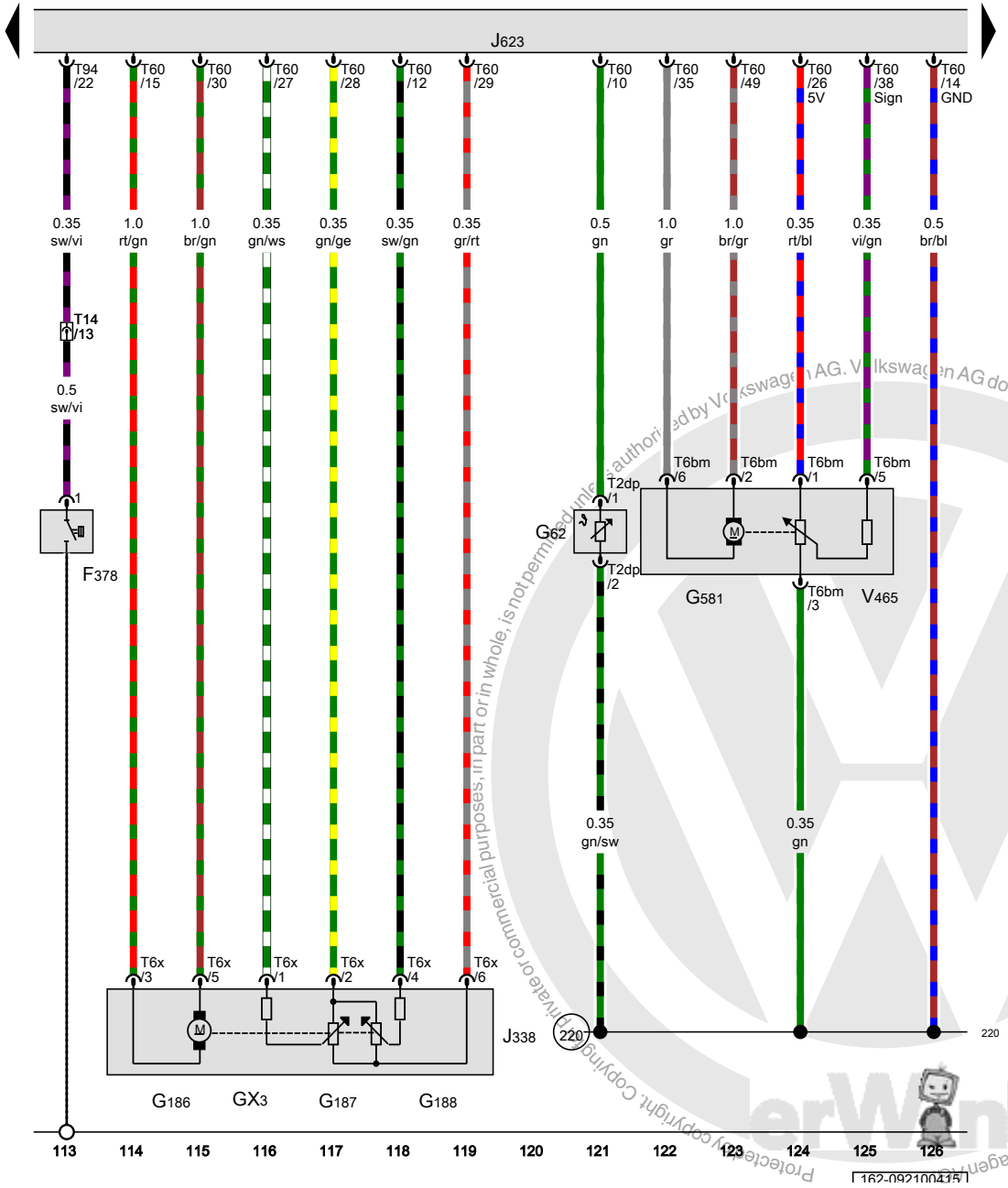

F378 Reduced oil pressure switch
GX3 Throttle valve control module
G62 Engine coolant temperature sensor
G186 EPC throttle drive
G187 EPC throttle drive angle sensor 1
G188 EPC throttle drive angle sensor 2
G581 Charge air pressure actuator position sensor
J338 Throttle valve control module
J623 Engine control module
T2dp Double connector
T6bm 6-pin connector
T6x 6-pin connector
T14 14-pin connector
T60 60-pin connector
T94 94-pin connector
V465 Charge air pressure actuator

220 Sensor ground connection (in engine wiring harness)

ws = white
sw = black
ro = red
rt = red
br = brown
gn = green
bl = blue
gr = grey
li = lilac
vi = lilac
ge = yellow
or = orange
rs = pink

Protected by copyright. Copying for private or commercial purposes, in part or in whole, is not permitted unless authorised by Volkswagen AG. Volkswagen AG does not guarantee or accept any liability with respect to the correctness of information in this document. Copyright by Volkswagen AG.

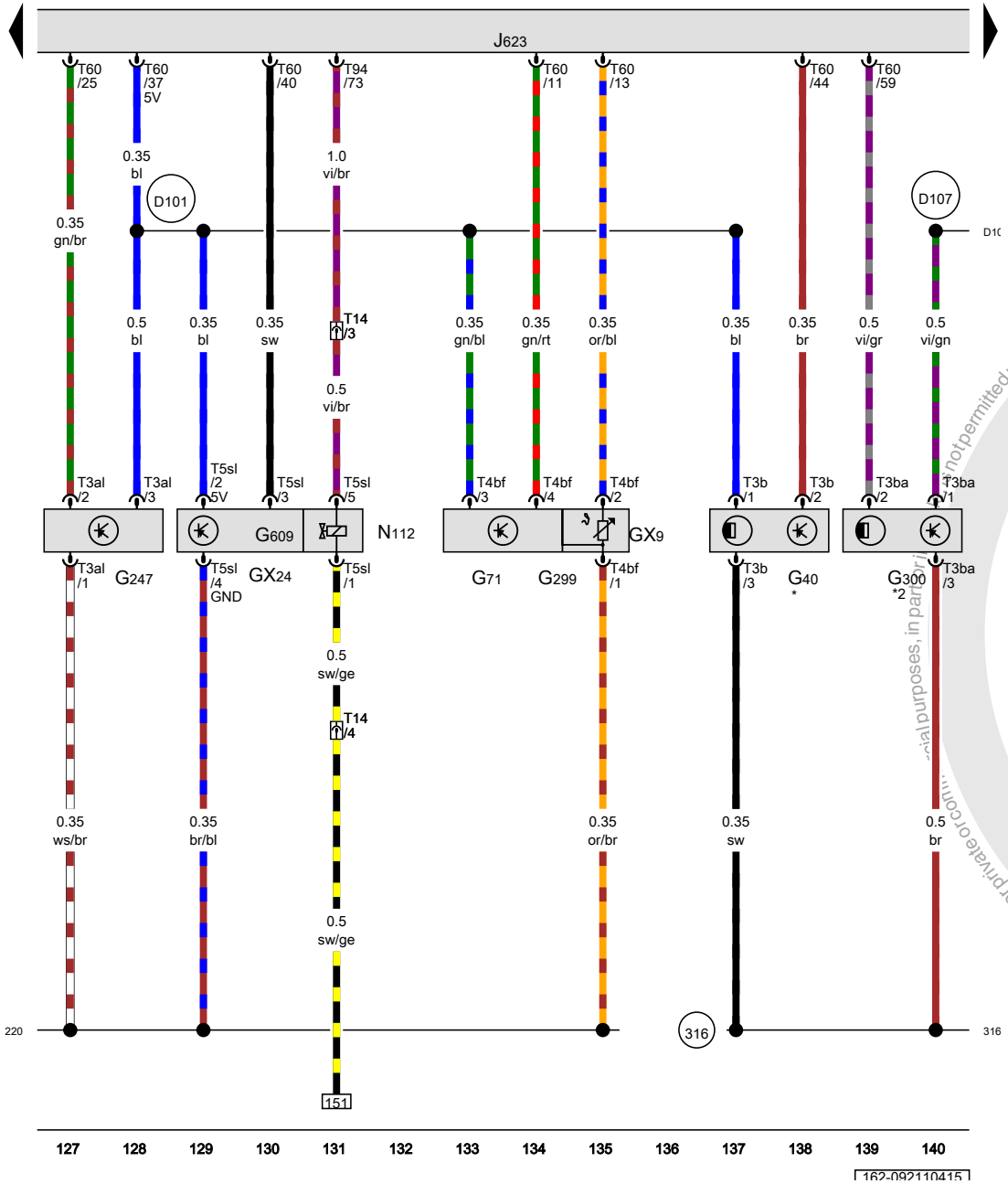

ws = white
sw = black
ro = red
rt = red
br = brown
gn = green
bl = blue
gr = grey
li = lilac
vi = lilac
ge = yellow
or = orange
rs = pink

Intake manifold sensor, Secondary air system, Camshaft position sensor, Manifold absolute pressure sensor, Fuel pressure sensor, Intake air temperature sensor 2, Camshaft position sensor 3, Secondary air injection sensor 1, Engine control module, Secondary air injection solenoid valve

GX9	Intake manifold sensor
GX24	Secondary air system
G40	Camshaft position sensor
G71	Manifold absolute pressure sensor
G247	Fuel pressure sensor
G299	Intake air temperature sensor 2
G300	Camshaft position sensor 3
G609	Secondary air injection sensor 1
J623	Engine control module
N112	Secondary air injection solenoid valve
T3al	3-pin connector
T3b	3-pin connector
T3ba	3-pin connector
T4bf	4-pin connector
T5sl	5-pin connector
T14	14-pin connector
T60	60-pin connector
T94	94-pin connector
220	Sensor ground connection (in engine wiring harness)
316	Sensor ground connection 2 (in engine wiring harness)
D101	Connection 1 (in engine compartment wiring harness)
D107	Connection 5 (in engine compartment wiring harness)
*	Camshaft sensor, intake valves
*2	Camshaft sensor, exhaust valves

Protected by copyright. Copying for private or commercial purposes, in part or in whole, is not permitted unless authorised by Volkswagen AG. Volkswagen AG does not guarantee or accept any liability with respect to the correctness of information in this document. Copyright by Volkswagen AG.

Engine speed sensor, Knock sensor 1, Engine control module, Oil pressure regulation valve

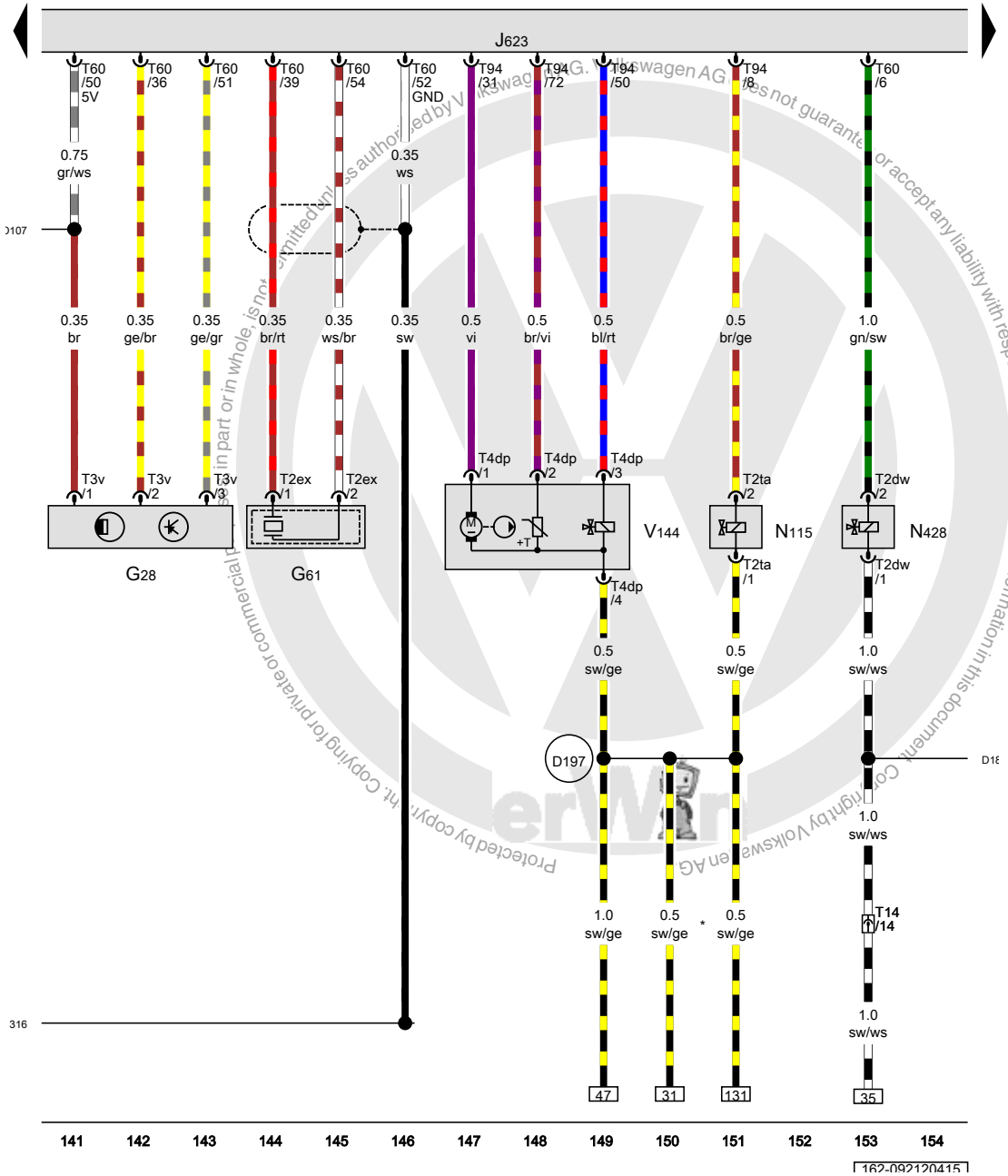

G28	Engine speed sensor
G61	Knock sensor 1
J623	Engine control module
N115	EVAP canister purge regulator valve 2
N428	Oil pressure regulation valve
T2dw	Double connector
T2ex	Double connector
T2ta	Double connector
T3v	3-pin connector
T4dp	4-pin connector
T14	14-pin connector
T60	60-pin connector
T94	94-pin connector
V144	Leak detection pump
316	Sensor ground connection 2 (in engine wiring harness)
D107	Connection 5 (in engine compartment wiring harness)
D189	Connection 87a (in engine pre-wiring harness)
D197	Connection 5 (87a) (in engine compartment wiring harness)
*	Diameter depends on equipment

ws	=	white
sw	=	black
ro	=	red
rt	=	red
br	=	brown
gn	=	green
bl	=	blue
gr	=	grey
li	=	lilac
vi	=	lilac
ge	=	yellow
or	=	orange
rs	=	pink

Protected by copyright. Copying for private or commercial purposes, in part or in whole, is not permitted unless authorised by Volkswagen AG. Volkswagen AG does not guarantee or accept any liability with respect to the correctness of information in this document. Copyright by Volkswagen AG.

Engine control module, Cylinder 1 fuel injector, Cylinder 2 fuel injector, EVAP canister purge regulator valve 1, Camshaft adjustment valve 1, Fuel pressure regulator valve, Exhaust camshaft adjustment valve 1, Decoupler pressure actuator

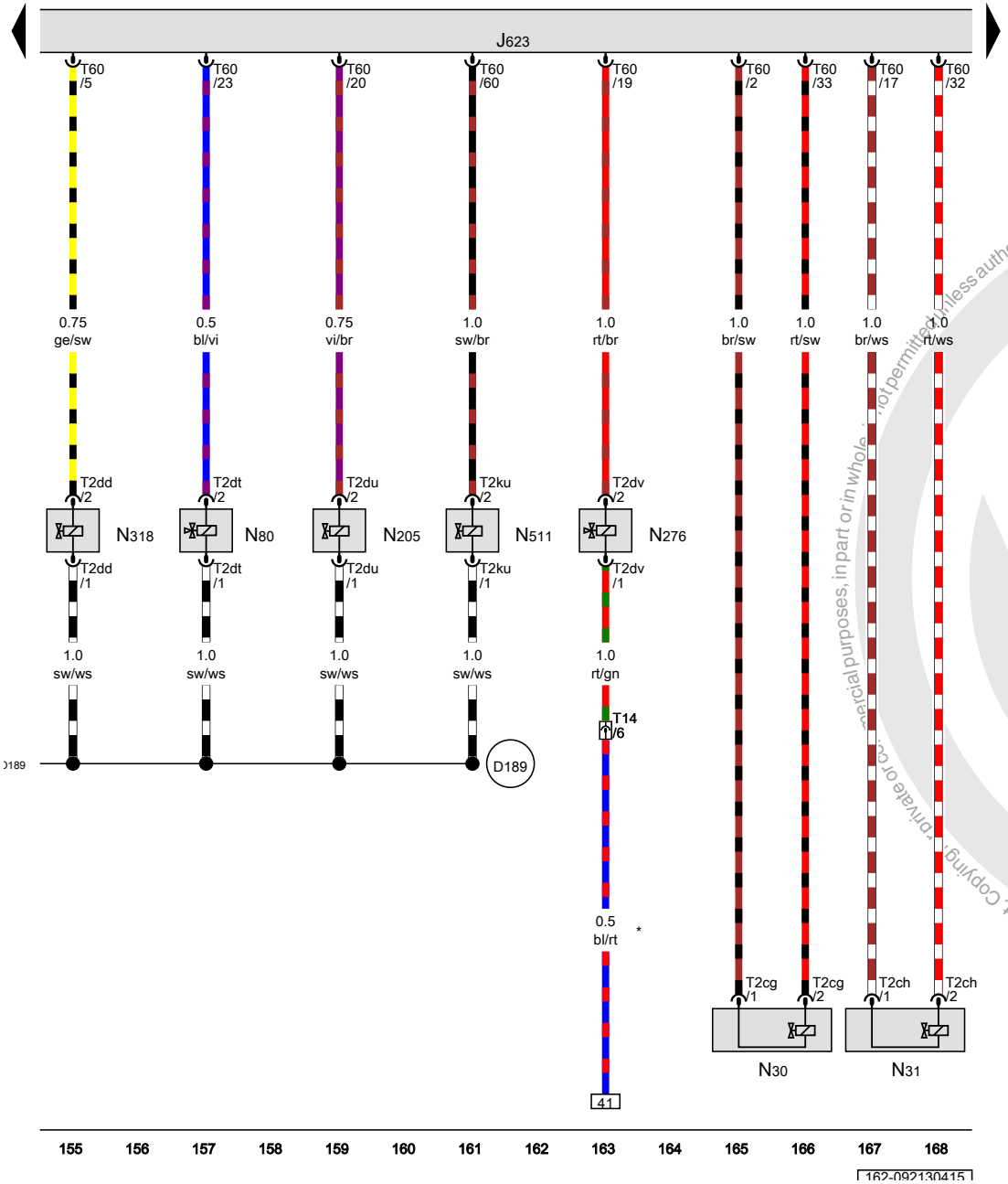

J623	Engine control module
N30	Cylinder 1 fuel injector
N31	Cylinder 2 fuel injector
N80	EVAP canister purge regulator valve 1
N205	Camshaft adjustment valve 1
N276	Fuel pressure regulator valve
N318	Exhaust camshaft adjustment valve 1
N511	Decoupler pressure actuator
T2cg	Double connector
T2ch	Double connector
T2dd	Double connector
T2dt	Double connector
T2du	Double connector
T2dv	Double connector
T2ku	Double connector
T14	14-pin connector
T60	60-pin connector
(D189)	Connection 87a (in engine pre-wiring harness)
*	Diameter depends on equipment

ws	=	white
sw	=	black
ro	=	red
rt	=	red
br	=	brown
gn	=	green
bl	=	blue
gr	=	grey
li	=	lilac
vi	=	lilac
ge	=	yellow
or	=	orange
rs	=	pink

Protected by copyright. Copying, private or commercial purposes, in part or in whole, not permitted unless authorised by Volkswagen AG. Volkswagen AG does not accept any liability with respect to the correctness of information in this document. Copyright by Volkswagen AG.

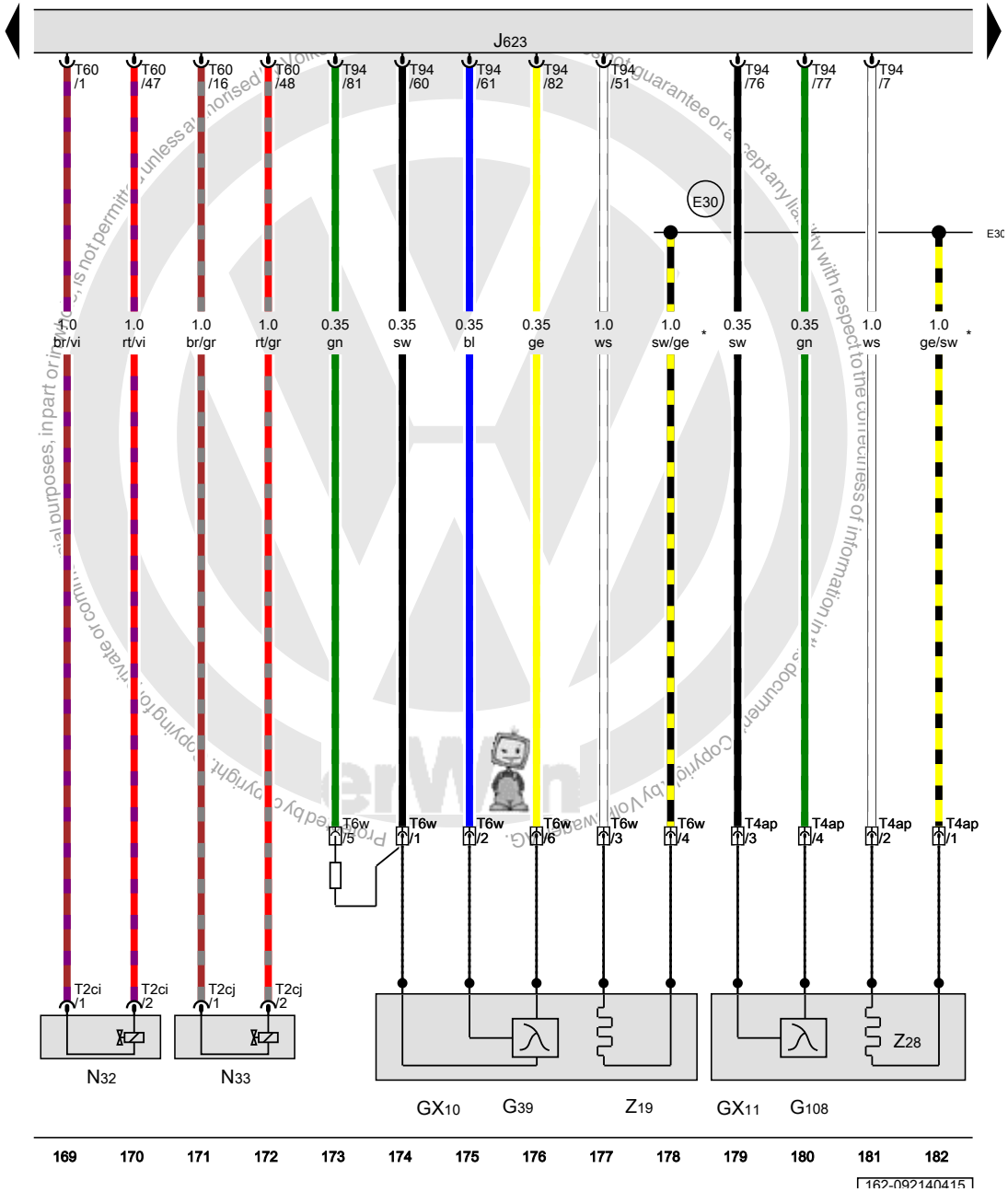

Oxygen sensor 1 before catalytic converter, Oxygen sensor 2 before catalytic converter, Heated oxygen sensor, Heated oxygen sensor 2, Engine control module, Cylinder 3 fuel injector, Cylinder 4 fuel injector

GX10	Oxygen sensor 1 before catalytic converter
GX11	Oxygen sensor 2 before catalytic converter
G39	Heated oxygen sensor
G108	Heated oxygen sensor 2
J623	Engine control module
N32	Cylinder 3 fuel injector
N33	Cylinder 4 fuel injector
T2ci	Double connector
T2cj	Double connector
T4ap	4-pin connector
T6w	6-pin connector, in the engine compartment, rear
T60	60-pin connector
T94	94-pin connector
Z19	Oxygen sensor heater
Z28	Oxygen sensor 2 heater
(E30)	Connection 87a (in engine wiring harness)
*	The color of the wires depends on vehicle equipment

ws	=	white
sw	=	black
ro	=	red
rt	=	red
br	=	brown
gn	=	green
bl	=	blue
gr	=	grey
li	=	lilac
vi	=	lilac
ge	=	yellow
or	=	orange
rs	=	pink

Accelerator pedal module, Oxygen sensor 1 after catalytic converter, Accelerator pedal position sensor, Oxygen sensor after three way catalytic converter, Accelerator pedal position sensor 2, Engine control module

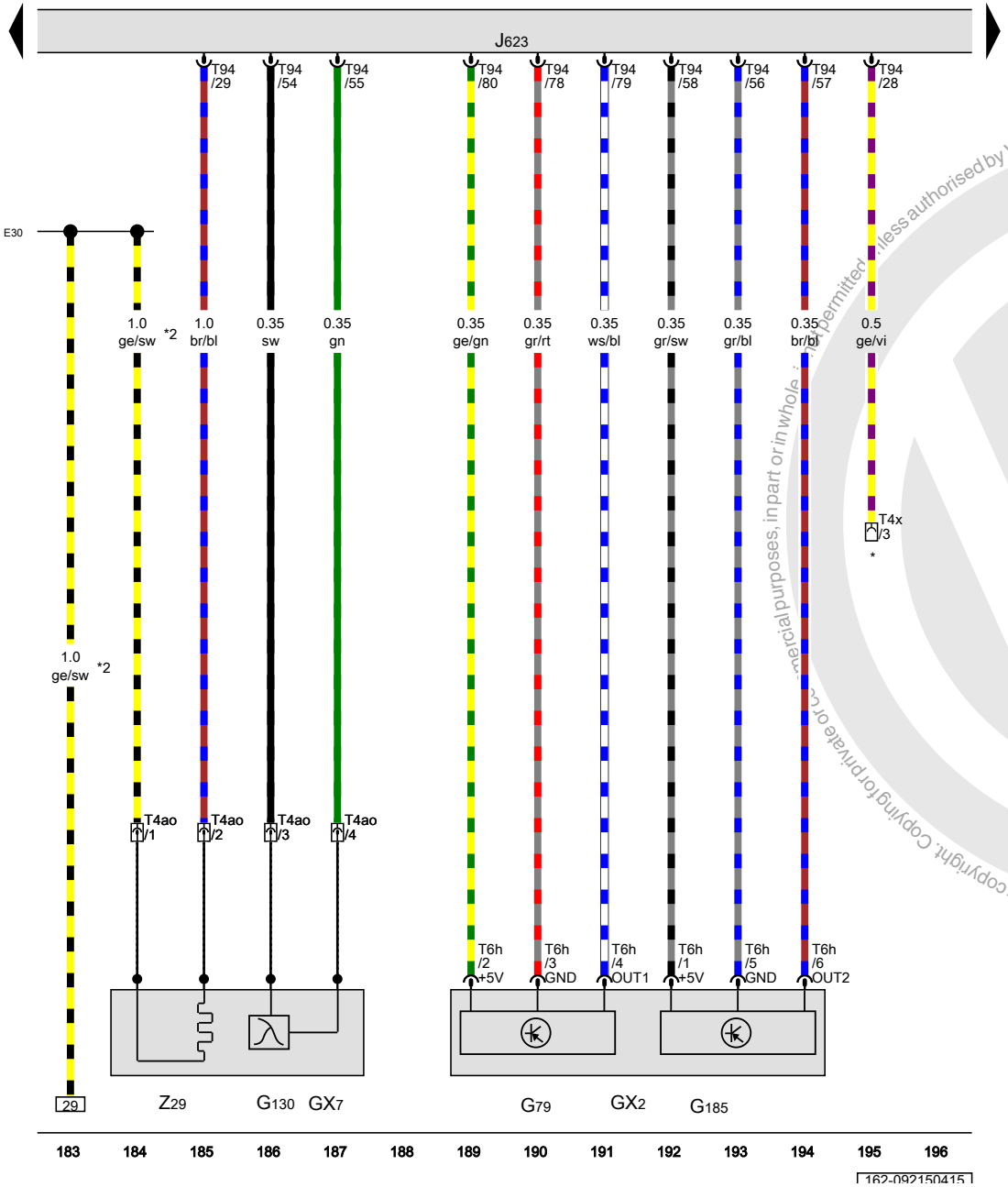

GX2	Accelerator pedal module
GX7	Oxygen sensor 1 after catalytic converter
G79	Accelerator pedal position sensor
G130	Oxygen sensor after three way catalytic converter
G185	Accelerator pedal position sensor 2
J623	Engine control module
T4ao	4-pin connector, near the oxygen sensor
T4x	4-pin connector
T6h	6-pin connector
T94	94-pin connector
Z29	Heater for oxygen sensor 1 after catalytic converter
(E30)	Connection 87a (in engine wiring harness)
*	Coolant fan connection
*2	The color of the wires depends on vehicle equipment

ws	=	white
sw	=	black
ro	=	red
rt	=	red
br	=	brown
gn	=	green
bl	=	blue
gr	=	grey
li	=	lilac
vi	=	lilac
ge	=	yellow
or	=	orange
rs	=	pink

Protected by copyright. Copying for private or commercial purposes, in part or in whole, is not permitted unless authorised by Volkswagen AG. Volkswagen AG does not guarantee or accept any liability with respect to the correctness of information in this document. Copyright by Volkswagen AG.

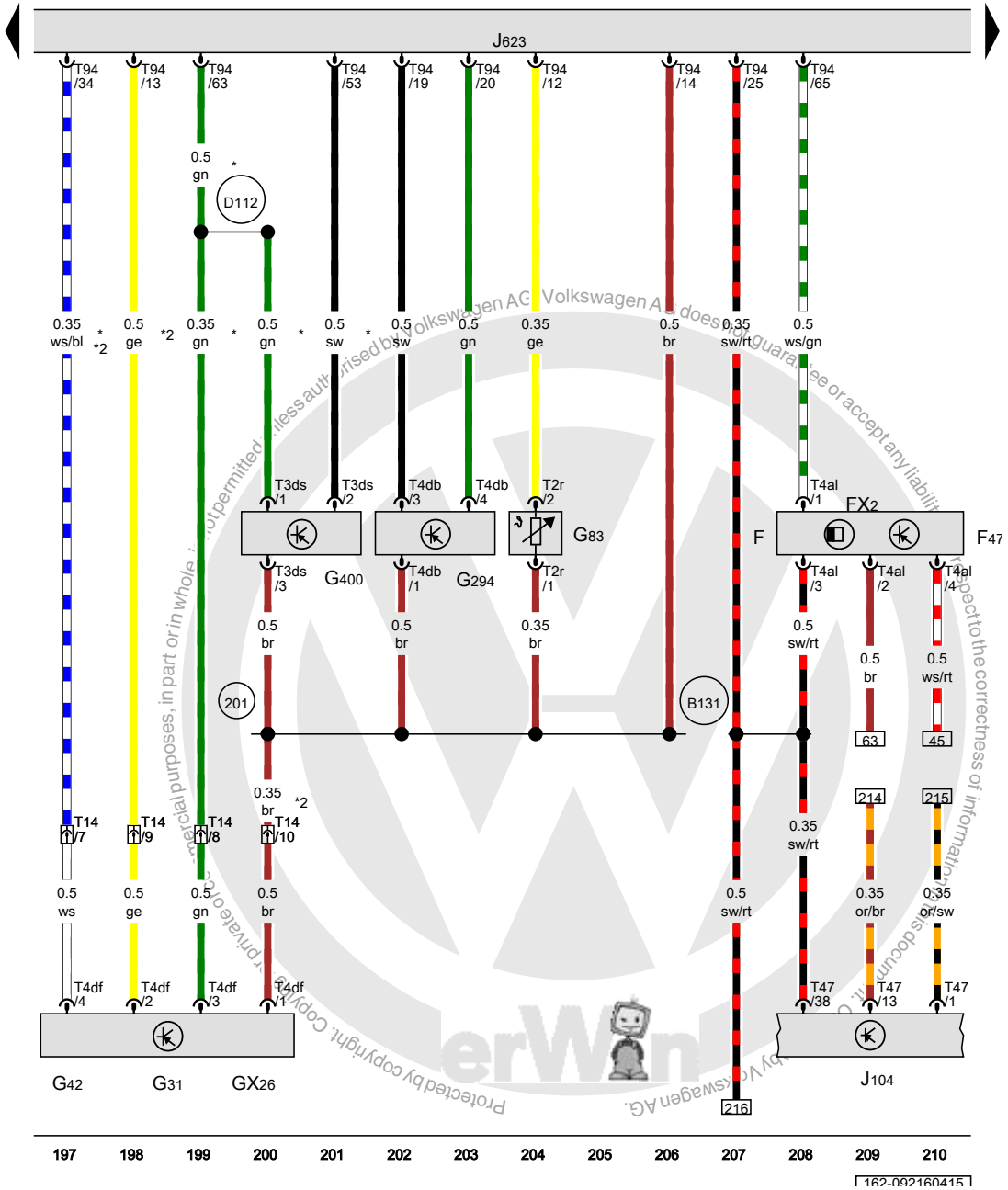

Brake lamp switch, Brake pedal switch, Charge air pressure sensor, Charge air pressure sensor, Intake air temperature sensor, Engine coolant temperature sensor on radiator outlet, Brake booster pressure sensor, Fuel tank pressure sensor, Engine control module

F	Brake lamp switch
FX2	Brake pedal switch
F47	Brake pedal switch
GX26	Charge air pressure sensor
G31	Charge air pressure sensor
G42	Intake air temperature sensor
G83	Engine coolant temperature sensor on radiator outlet
G294	Brake booster pressure sensor
G400	Fuel tank pressure sensor
J104	ABS control module
J623	Engine control module
T2r	Double connector
T3ds	3-pin connector
T4al	4-pin connector
T4db	4-pin connector
T4df	4-pin connector
T14	14-pin connector
T47	47-pin connector
T94	94-pin connector
201	Ground connection 5 (in engine compartment wiring harness)
B131	Connection 54 (in interior wiring harness)
D112	Connection 10 (in engine compartment wiring harness)
*	The color of the wires depends on vehicle equipment
*2	Diameter depends on equipment

ws	=	white
sw	=	black
ro	=	red
rt	=	red
br	=	brown
gn	=	green
bl	=	blue
gr	=	grey
li	=	lilac
vi	=	lilac
ge	=	yellow
or	=	orange
rs	=	pink

Protected by copyright. Copyright by Volkswagen AG.

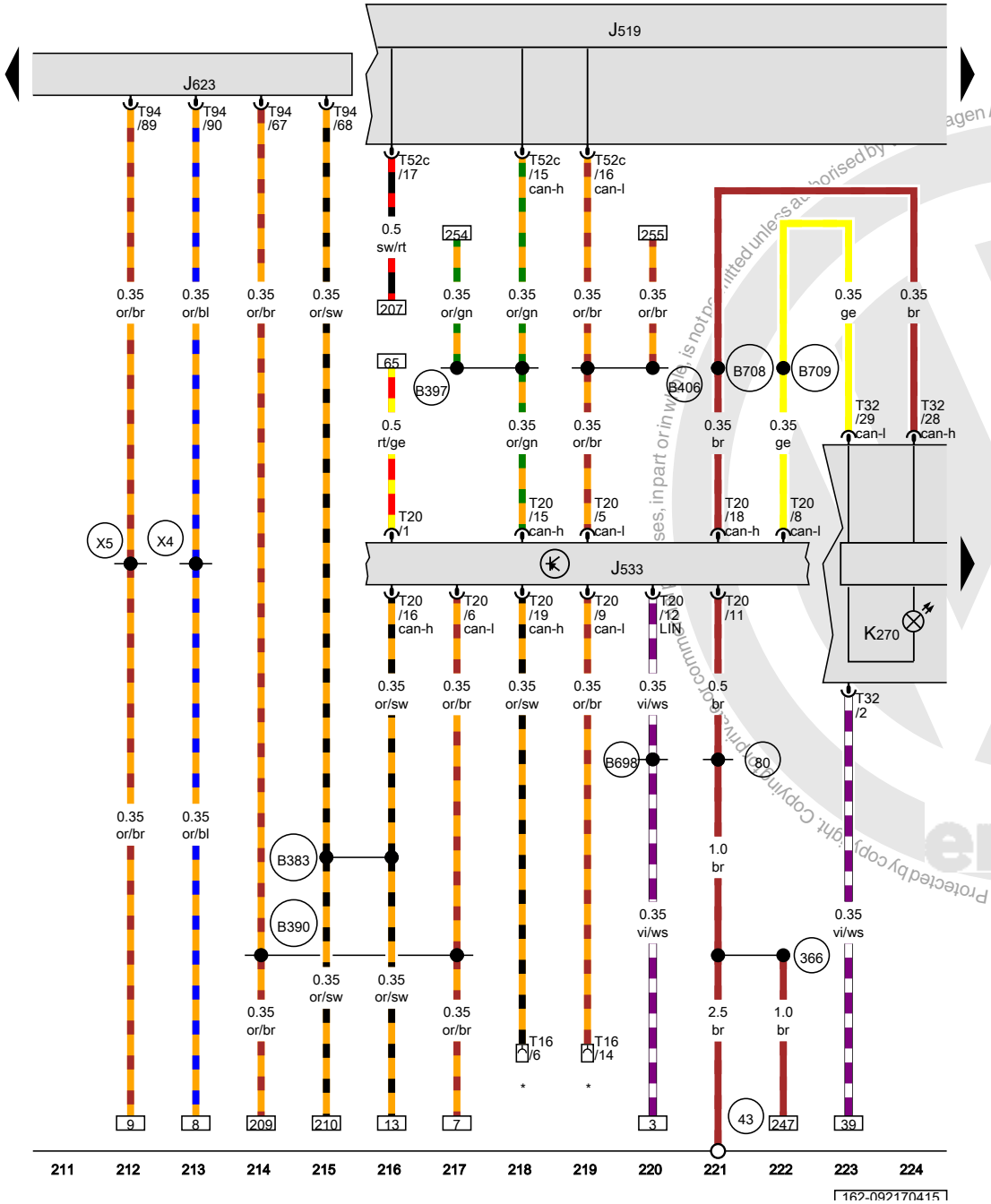

Vehicle electrical control module system, Data bus on board diagnostic interface, Engine control module, Electrical drive indicator lamp

J519	Vehicle electrical control module system
J533	Data bus on board diagnostic interface
J623	Engine control module
K270	Electrical drive indicator lamp
T16	16-pin connector
T20	20-pin connector
T32	32-pin connector
T52c	52-pin connector
T94	94-pin connector
43	Ground connection on A-pillar, lower right
80	Ground connection 1 (in instrument cluster wiring harness)
366	Ground connection 1 (in main wiring harness)
B383	Powertrain CAN bus high connection 1 (in main wiring harness)
B390	Powertrain CAN bus low connection 1 (in main wiring harness)
B397	Comfort system CAN bus high connection 1 (in main wiring harness)
B406	Comfort system CAN bus low connection 1 (in main wiring harness)
B698	LIN bus connection 3 (in main wiring harness)
B708	Instrument cluster CAN bus high connection 1 (in main wiring harness)
B709	Instrument cluster CAN bus low connection 1 (in main wiring harness)
X4	CAN bus Hybrid high connection 1 (in engine compartment wiring harness)
X5	CAN bus Hybrid low connection 1 (in engine compartment wiring harness)
*	Diagnostic connector

ws	=	white
sw	=	black
ro	=	red
rt	=	red
br	=	brown
gn	=	green
bl	=	blue
gr	=	grey
li = lilac
vi = lilac
ge = yellow
or = orange
rs = pink

Protected by copyright. Copying for private or commercial purposes, in part or in whole, is not permitted unless authorised by Volkswagen AG. Volkswagen AG does not guarantee or accept any liability with respect to the correctness of information in this document. Copyright by Volkswagen AG.

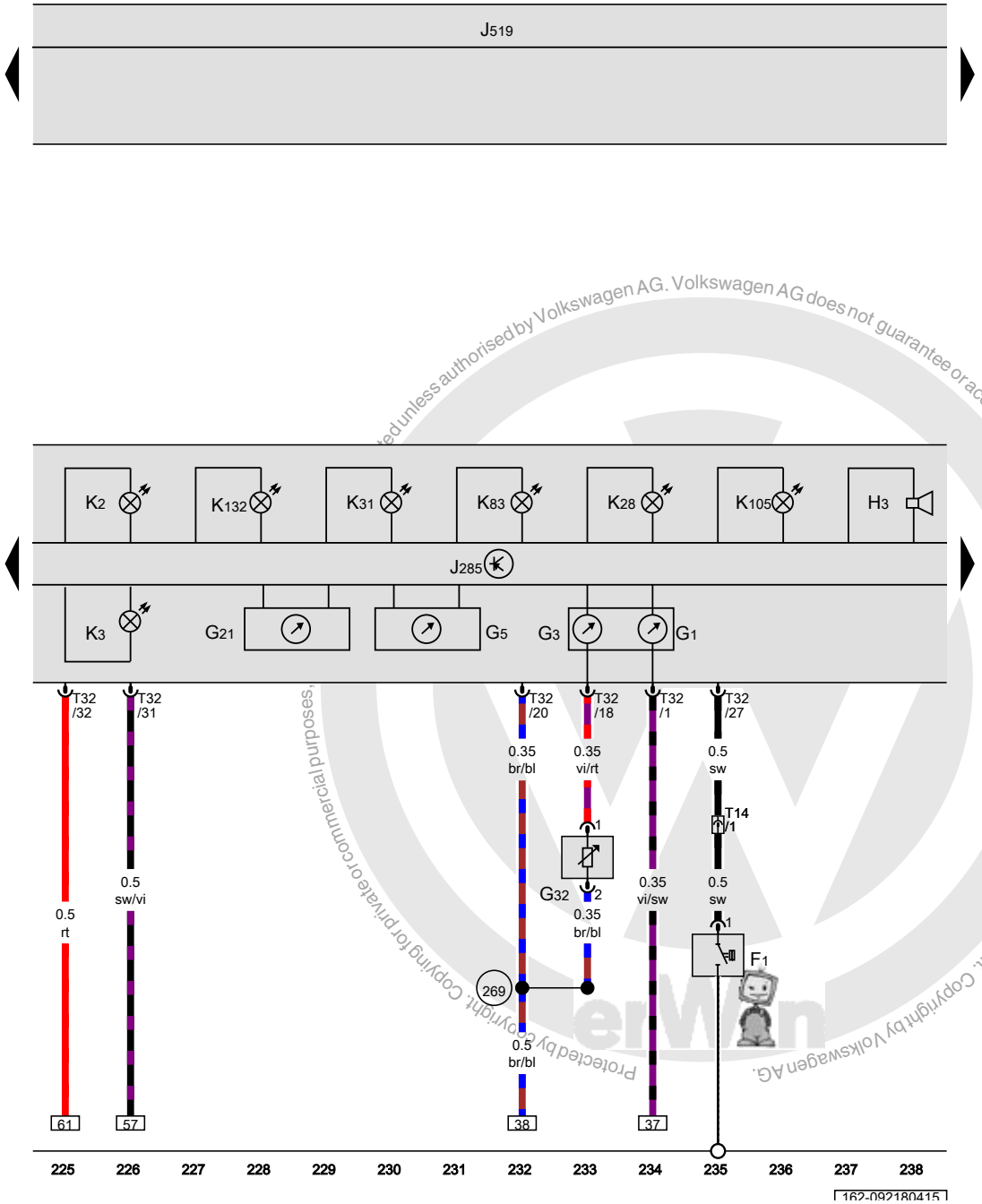

Oil pressure switch, Fuel gauge, Engine coolant temperature gauge, Tachometer, Speedometer, Instrument cluster control module, Vehicle electrical control module system, Generator indicator lamp, Engine coolant level/ temperature indicator lamp, Cruise control indicator lamp, Low fuel level indicator lamp, Electronic power control malfunction indicator lamp

F1	Oil pressure switch
G1	Fuel gauge
G3	Engine coolant temperature gauge
G5	Tachometer
G21	Speedometer
G32	Engine coolant level sensor
H3	Warning buzzer and tone
J285	Instrument cluster control module
J519	Vehicle electrical control module system
K2	Generator indicator lamp
K3	Oil pressure indicator lamp
K28	Engine coolant level/temperature indicator lamp
K31	Cruise control indicator lamp
K83	Malfunction indicator lamp
K105	Low fuel level indicator lamp
K132	Electronic power control malfunction indicator lamp
T14	14-pin connector
T32	32-pin connector
269	Sensor ground connection 1 (in instrument panel wiring harness)

ws	=	white
sw	=	black
ro	=	red
rt	=	red
br	=	brown
gn	=	green
bl	=	blue
gr	=	grey
li	=	lilac
vi	=	lilac
ge	=	yellow
or	=	orange
rs	=	pink

Protected by copyright. Copying for private or commercial purposes, unless authorised by Volkswagen AG. Volkswagen AG does not guarantee or accept any liability with respect to the correctness of information in this document. Copyright by Volkswagen AG.

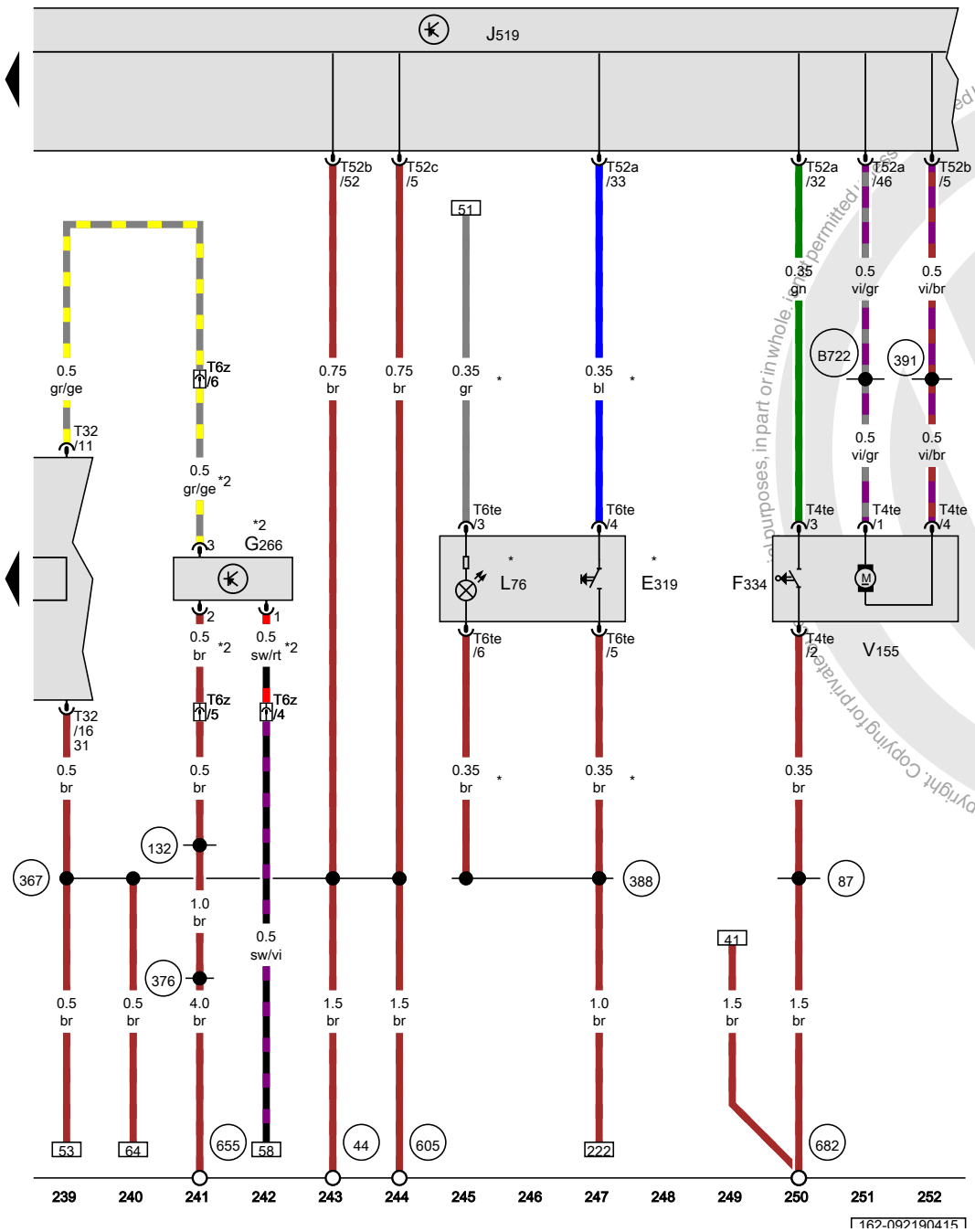

Fuel filler door release button, Fuel filler detection switch, Oil level thermal sensor, Vehicle electrical control module system, Push button illumination bulb, Fuel filler door unlock motor

E319	Fuel filler door release button
F334	Fuel filler detection switch
G266	Oil level thermal sensor
J519	Vehicle electrical control module system
L76	Push button illumination bulb
T4te	4-pin connector
T6te	6-pin connector
T6z	6-pin connector, near the left headlamp
T32	32-pin connector
T52a	52-pin connector
T52b	52-pin connector
T52c	52-pin connector
V155	Fuel filler door unlock motor
44	Ground connection on A-pillar, lower left
87	Ground connection 2 (in rear wiring harness)
132	Ground connection 3 (in engine compartment wiring harness)
367	Ground connection 2 (in main wiring harness)
376	Ground connection 11 (in main wiring harness)
388	Ground connection 23 (in main wiring harness)
391	Ground connection 26 (in main wiring harness)
605	Ground connection on upper steering column
655	Ground connection on left headlamp
682	Ground connection 2 in right rear side panel
B722	Central locking connection 3 (in main wiring harness)
*	Depending on equipment
*2	Only for vehicles with flexible service interval reminder

ws	=	white
sw	=	black
ro	=	red
rt	=	red
br	=	brown
gn	=	green
bl	=	blue
gr	=	grey
li	=	lilac
vi	=	lilac
ge	=	yellow
or	=	orange
rs	=	pink

Protected by copyright. Copying for private or commercial purposes, in part or in whole, is not permitted unless authorised by Volkswagen AG. Volkswagen AG does not guarantee or accept any liability with respect to the correctness of information in this document. Copyright by Volkswagen AG.

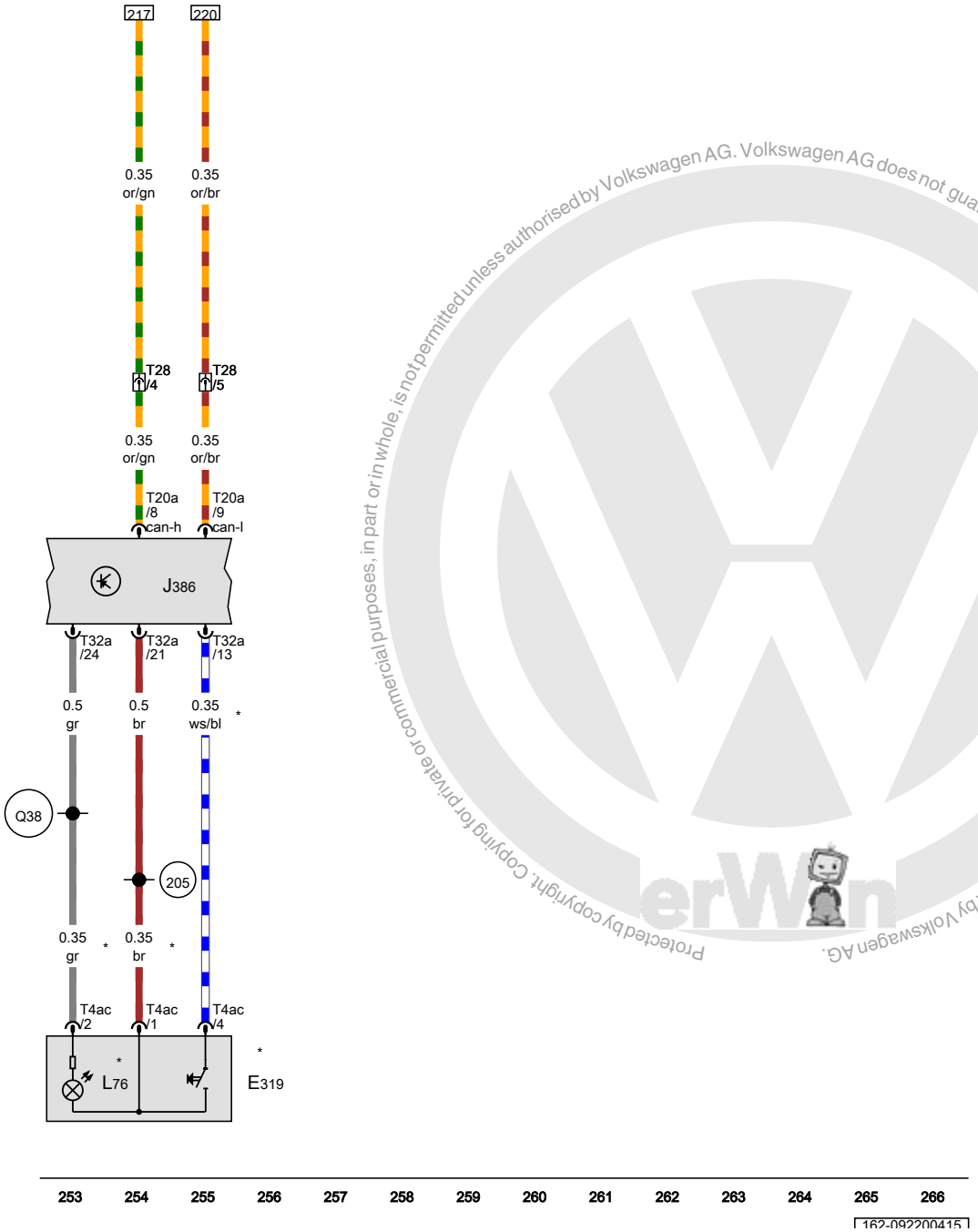

Protected by copyright. Copying for private or commercial purposes, in part or in whole, is not permitted unless authorised by Volkswagen AG. Volkswagen AG does not guarantee or accept any liability with respect to the correctness of information in this document. Copyright by Volkswagen AG.

Fuel filler door release button

E319	Fuel filler door release button, in the driver door
J386	Driver door control module
L76	Push button illumination bulb
T4ac	4-pin connector
T20a	20-pin connector
T28	28-pin connector, Left A-pillar, bottom
T32a	32-pin connector
205	Ground connection (in driver door wiring harness)
Q38	Positive connection 1 (58b) (in power window wiring harness)
*	Depending on equipment

ws	=	white
sw	=	black
ro	=	red
rt	=	red
br	=	brown
gn	=	green
bl	=	blue
gr	=	grey
li	=	lilac
vi	=	lilac
ge	=	yellow
or	=	orange
rs	=	pink

Tail lamps with LEDs , (8SK)

from June 2012

Protected by copyright. Copying for private or commercial purposes, in part or in whole, is not permitted unless authorised by Volkswagen AG. Volkswagen AG does not guarantee or accept any liability with respect to the correctness of information in this document. Copyright by Volkswagen AG.

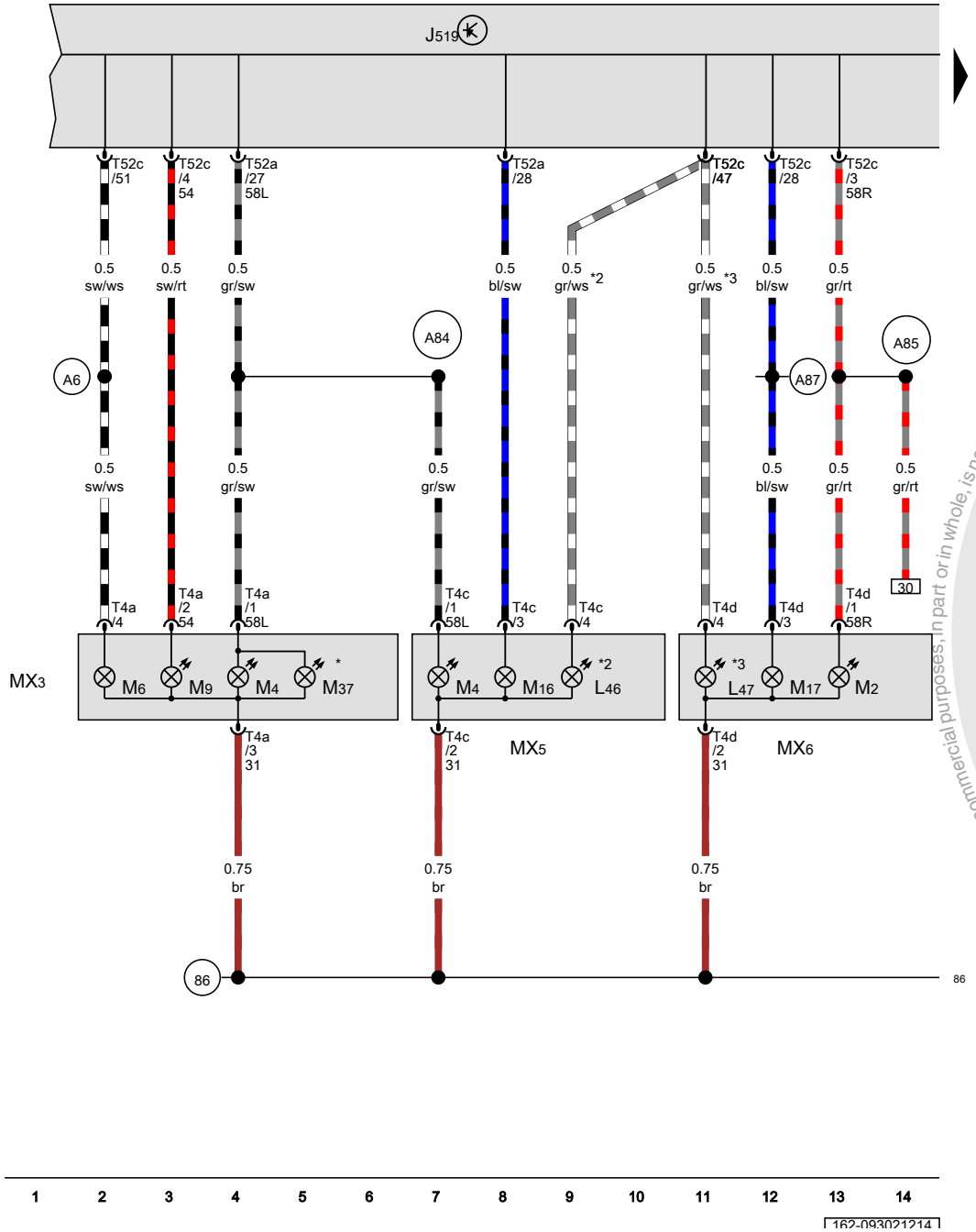

Vehicle electrical control module system, Right tail lamp bulb, Left tail lamp, Left tail lamp bulb, Left tail lamp 2, Left rear turn signal bulb, Right tail lamp 2, Left brake lamp bulb, Left back-up lamp bulb, Right back-up lamp bulb

J519	Vehicle electrical control module system
L46	Left rear fog lamp bulb
L47	Right rear fog lamp bulb
M2	Right tail lamp bulb
MX3	Left tail lamp
M4	Left tail lamp bulb
MX5	Left tail lamp 2
M6	Left rear turn signal bulb
MX6	Right tail lamp 2
M9	Left brake lamp bulb
M16	Left back-up lamp bulb
M17	Right back-up lamp bulb
M37	Left rear side marker lamp bulb
T4a	4-pin connector
T4c	4-pin connector
T4d	4-pin connector
T52a	52-pin connector
T52c	52-pin connector
86	Ground connection 1 (in rear wiring harness)
A6	Left turn signal positive connection (in instrument panel wiring harness)
A84	Connection 58L (in instrument panel wiring harness)
A85	Connection 58R (in instrument panel wiring harness)
A87	Back-up lamp connection (in instrument panel wiring harness)
*	USA only
*2	Not for USA
*3	Only for right-hand drive vehicles

ws	=	white
sw	=	black
ro	=	red
rt	=	red
br	=	brown
gn	=	green
bl	=	blue
gr	=	grey
li	=	lilac
vi	=	lilac
ge	=	yellow
or	=	orange
rs	=	pink

Protected by copyright. Copying for private or commercial purposes, in part or in whole, is not permitted unless authorised by Volkswagen AG. Volkswagen AG does not guarantee or accept any liability with respect to the correctness of information in this document. Copyright by Volkswagen AG.

Authorised by Volkswagen AG. Volkswagen AG does not guarantee or accept any liability with respect to the correctness of information in this document. Copyright by Volkswagen AG. Protected by copyright. Copying for private or commercial purposes, in part or in whole, is not permitted unless authorised by Volkswagen AG.

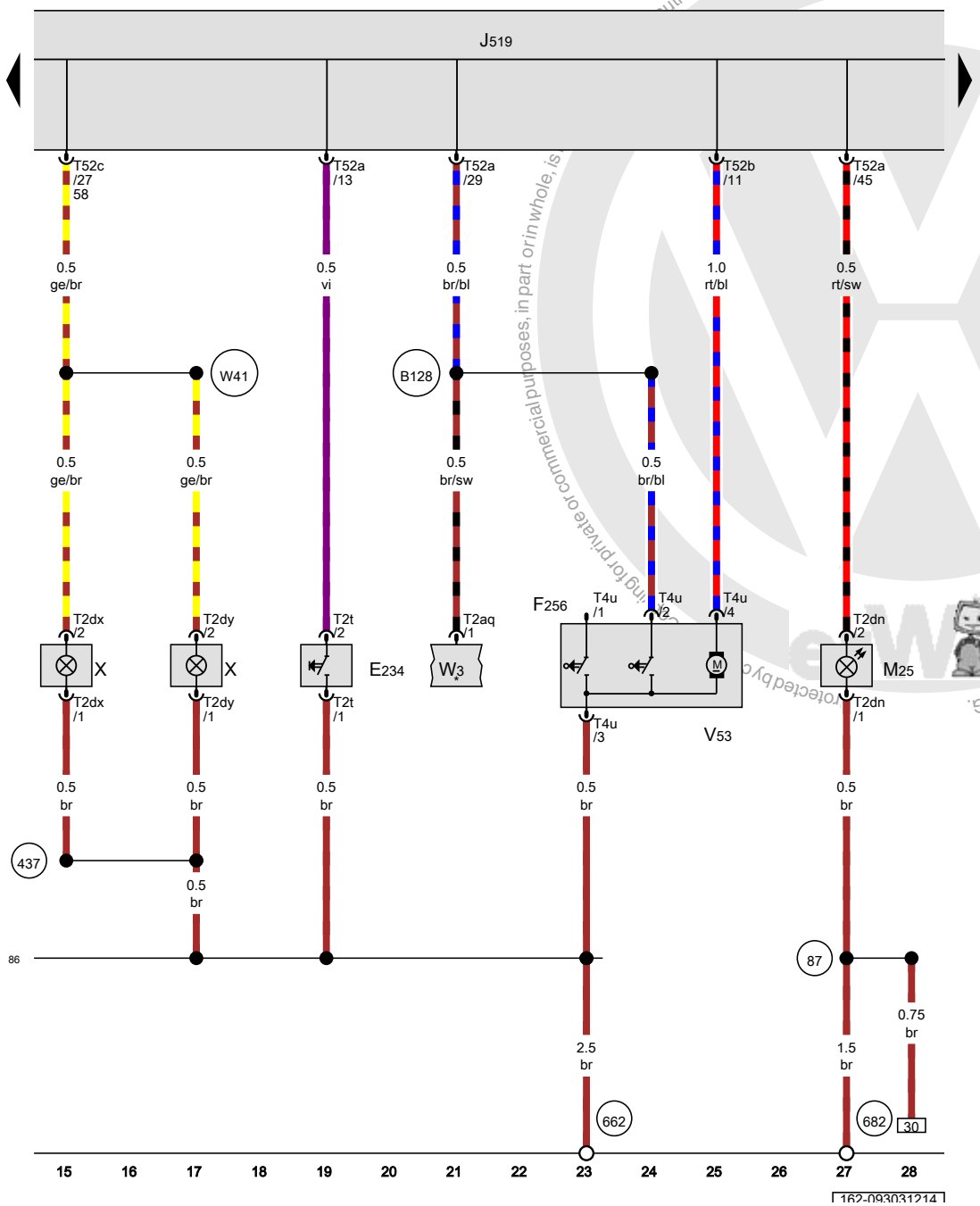

ws = white
sw = black
ro = red
rt = red
br = brown
gn = green
bl = blue
gr = grey
li = lilac
vi = lilac
ge = yellow
or = orange
rs = pink

Release button in rear lid handle, Rear lid lock unit, Vehicle electrical control module system, High-mounted brake lamp bulb, Rear lid central locking system motor, License plate lamp

E234	Release button in rear lid handle
F256	Rear lid lock unit
J519	Vehicle electrical control module system
M25	High-mounted brake lamp bulb
T2aq	Double connector
T2dn	Double connector
T2dx	Double connector
T2dy	Double connector
T2t	Double connector
T4u	4-pin connector
T52a	52-pin connector
T52b	52-pin connector
T52c	52-pin connector
V53	Rear lid central locking system motor
W3	Luggage compartment lamp
X	License plate lamp
86	Ground connection 1 (in rear wiring harness)
87	Ground connection 2 (in rear wiring harness)
437	Ground connection (in license plate lamp wiring harness)
662	Ground connection in left rear side panel
682	Ground connection 2 in right rear side panel
B128	Luggage compartment lamp connection (in interior wiring harness)
W41	Positive connection (58) (in license plate lamp wiring harness)
*	Refer to applicable standard equipment wiring diagram

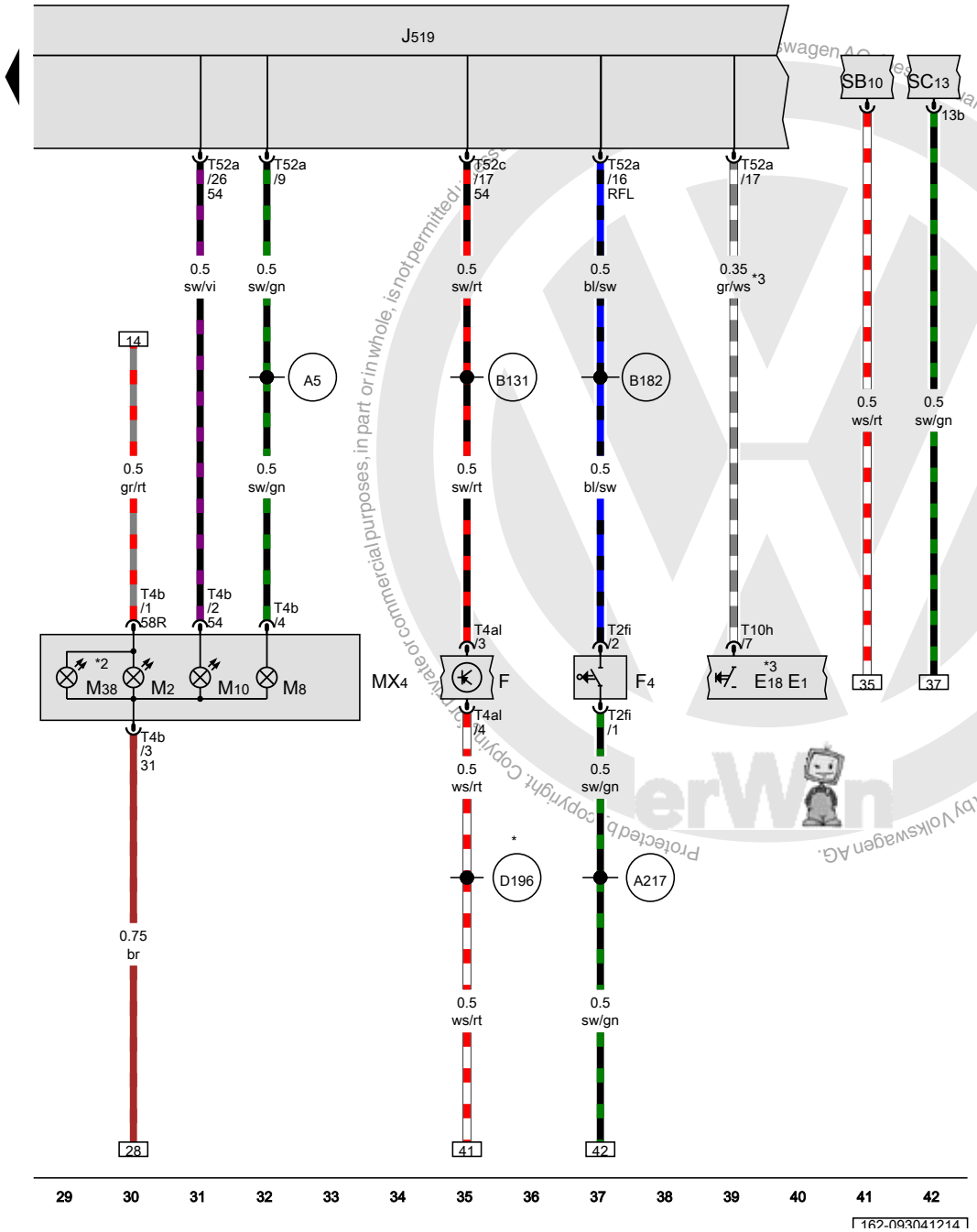

Brake lamp switch, Vehicle electrical control module system, Right tail lamp bulb, Right tail lamp, Right rear turn signal bulb, Right rear side marker lamp bulb

E1	Light switch
E18	Rear fog lamp switch
F	Brake lamp switch
F4	Back-up lamp switch
J519	Vehicle electrical control module system
M2	Right tail lamp bulb
MX4	Right tail lamp
M8	Right rear turn signal bulb
M10	Right brake lamp bulb
M38	Right rear side marker lamp bulb
SB10	Fuse 10 (on fuse panel B)
SC13	Fuse 13 (on fuse panel C)
T2fi	Double connector
T4al	4-pin connector
T4b	4-pin connector
T10h	10-pin connector
T52a	52-pin connector
T52c	52-pin connector
A5	Right turn signal positive connection (in instrument panel wiring harness)
A217	Positive connection 8 (15a) (in instrument panel wiring harness)
B131	Connection 54 (in interior wiring harness)
B182	Connection RF (in interior wiring harness)
D196	Connection 87a (in engine pre-wiring harness) 2
*	Depending on equipment
*2	USA only
*3	Not for USA

ws	=	white
sw	=	black
ro	=	red
rt	=	red
br	=	brown
gn	=	green
bl	=	blue
gr	=	grey
li	=	lilac
vi	=	lilac
ge	=	yellow
or	=	orange
rs	=	pink

Protected by copyright. Copyright by Volkswagen AG. Copyright by Volkswagen AG. Reproduce or commercial purposes, in part or in whole, is not permitted. Guarantee or accept any liability with respect to the correctness of information in this document.

Auxiliary air heater (PTC) , CNLA,CRJA

from June 2012

Protected by copyright. Copying for private or commercial purposes, in part or in whole, is not permitted unless authorised by Volkswagen AG. Volkswagen AG does not guarantee or accept any liability with respect to the correctness of information in this document. Copyright by Volkswagen AG.

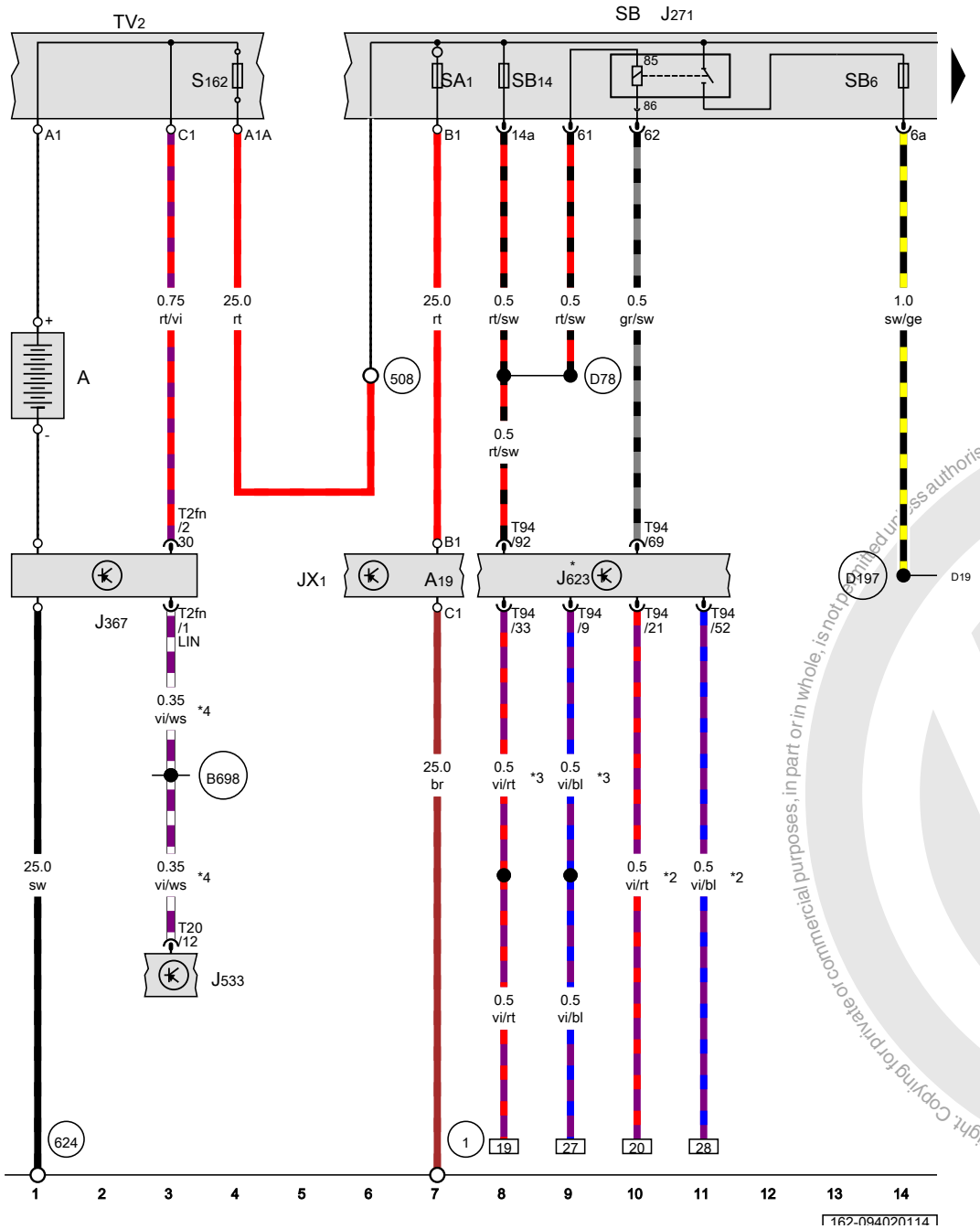

Motronic engine control module power supply relay

A	Battery
A19	Voltage converter
JX1	Electric drive power and control electronics
J271	Motronic engine control module power supply relay
J367	Battery monitoring control module
J533	Data bus on board diagnostic interface
J623	Engine control module
SA1	Fuse 1 (on fuse panel A)
S162	Fuse 1 (terminal 30) on battery fuse panel
SB	Fuse panel B
SB6	Fuse 6 (on fuse panel B)
SB14	Fuse 14 (on fuse panel B)
T2fn	Double connector
TV2	Terminal 30 wire junction
T20	20-pin connector
T94	94-pin connector
1	Ground strap, battery to body
508	Terminal 30 threaded connection (on E-box)
624	Ground connection near starter battery
B698	LIN bus connection 3 (in main wiring harness)
D78	Positive connection 1 (30a) (in engine compartment wiring harness)
D197	Connection 5 (87a) (in engine compartment wiring harness)
*	Refer to applicable engine wiring diagram
*2	Not for USA
*3	USA only
*4	The color of the wires depends on vehicle equipment

ws	=	white
sw	=	black
ro	=	red
rt	=	red
br	=	brown
gn	=	green
bl	=	blue
gr	=	grey
li	=	lilac
vi	=	lilac
ge	=	yellow
or	=	orange
rs	=	pink

Protected by copyright. Copying for private or commercial purposes, in part or in whole, is not permitted unless authorised by Volkswagen AG. Volkswagen AG does not guarantee or accept any liability with respect to the correctness of information in this document. Copyright by Volkswagen AG.

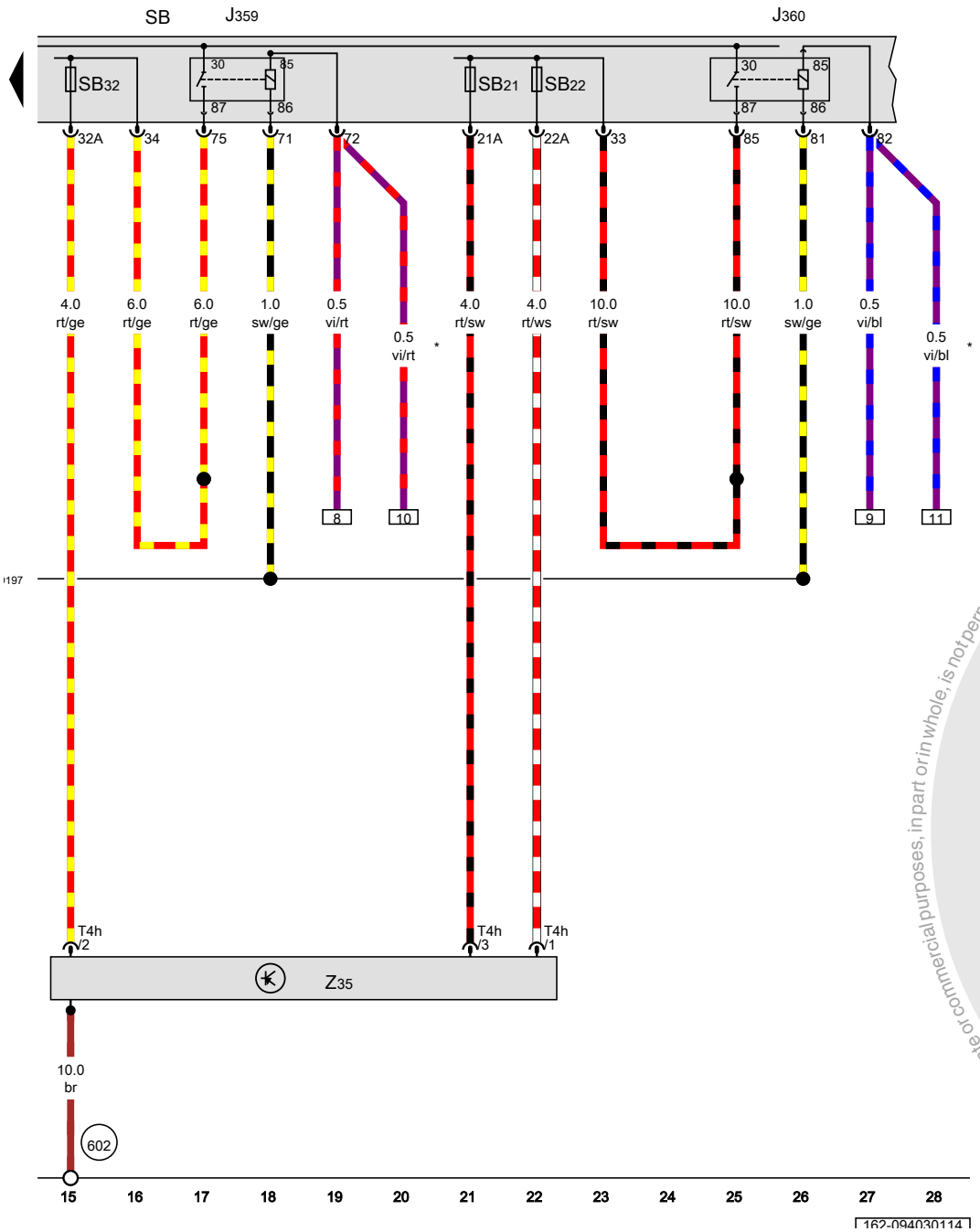

Low heat output relay, High heat output relay, Auxiliary heater heating element

J359	Low heat output relay
J360	High heat output relay
SB	Fuse panel B
SB21	Fuse 21 (on fuse panel B)
SB22	Fuse 22 (on fuse panel B)
SB32	Fuse 32 (on fuse panel B)
T4h	4-pin connector
Z35	Auxiliary heater heating element
602	Ground connection in left front footwell
D197	Connection 5 (87a) (in engine compartment wiring harness)
*	Not for USA

ws	=	white
sw	=	black
ro	=	red
rt	=	red
br	=	brown
gn	=	green
bl	=	blue
gr	=	grey
li	=	lilac
vi	=	lilac
ge	=	yellow
or	=	orange
rs	=	pink

Protected by copyright. Copyright by Volkswagen AG. Volkswagen AG does not guarantee or accept any liability with respect to the correctness of information in this document. Copyright by Volkswagen AG. Volkswagen AG, is not permitted unless authorised by Volkswagen AG. Volkswagen AG does not guarantee or accept any liability with respect to the correctness of information in this document. Copyright by Volkswagen AG.

2.0L diesel engine , CJAA,(AW0)

from November 2012

Protected by copyright. Copying for private or commercial purposes, in part or in whole, is not permitted unless authorised by Volkswagen AG. Volkswagen AG does not guarantee or accept any liability with respect to the correctness of information in this document. Copyright by Volkswagen AG.

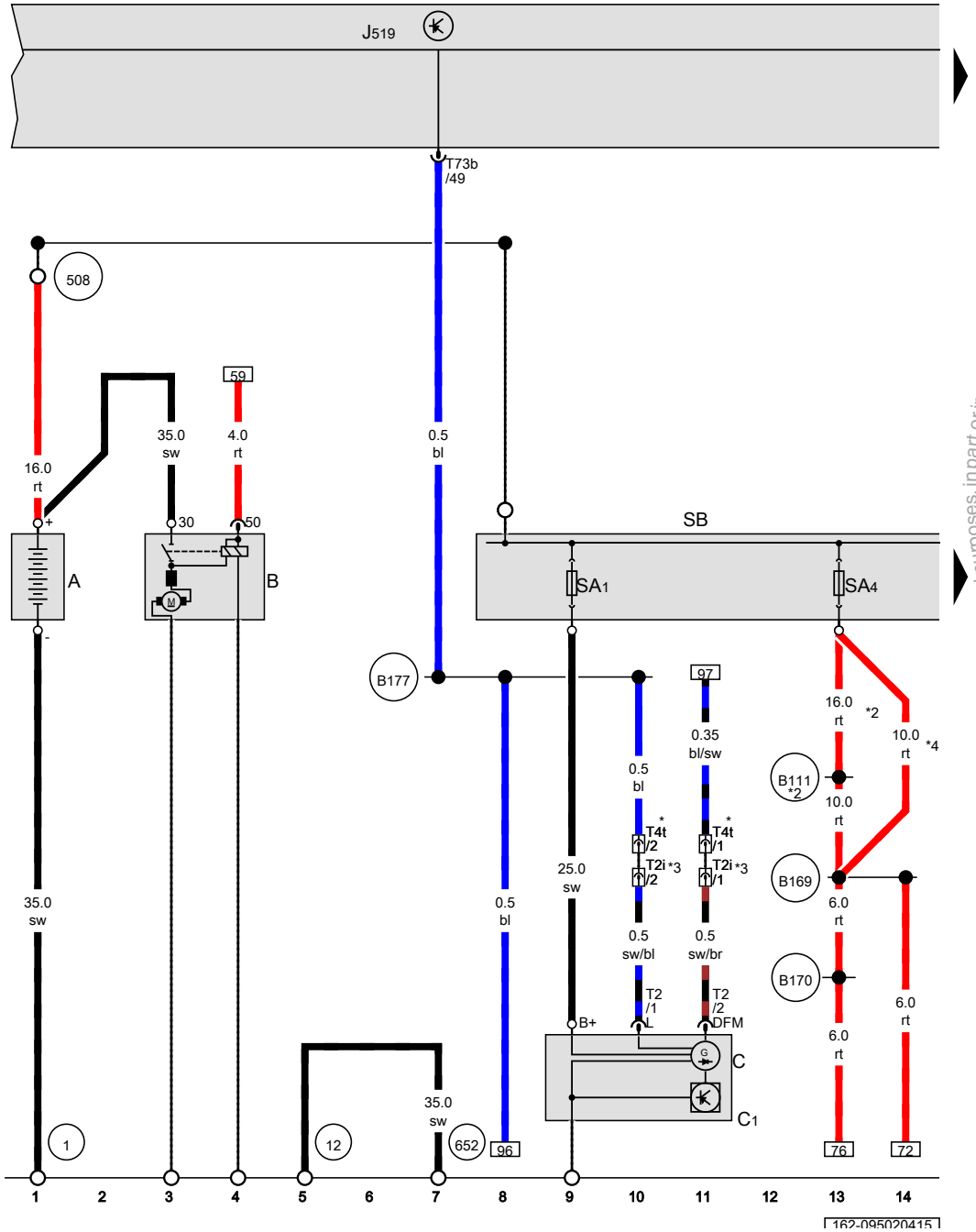

Battery, Starter, Generator, Vehicle electrical control module system, Fuse panel B

A	Battery
B	Starter
C	Generator
C1	Voltage regulator
J519	Vehicle electrical control module system
SA1	Fuse 1 (on fuse panel A)
SA4	Fuse 4 (on fuse panel A)
SB	Fuse panel B
T2	Double connector
T2i	Double connector, near the starter
T4t	4-pin connector, near the starter
T73b	73-pin connector
1	Ground strap, battery to body
12	Ground connection in engine compartment, left
508	Terminal 30 threaded connection (on E-box)
652	Transmission/engine ground connection
B111	Positive connection 1 (30a) (in interior wiring harness)
B169	Positive connection 1 (30) (in interior wiring harness)
B170	Positive connection 2 (30) (in interior wiring harness)
B177	Connection 61 (in interior wiring harness)
*	Only for vehicles with A/C system
*2	Omitted as a running change
*3	Only for vehicles without an A/C system
*4	Running change

ws	=	white
sw	=	black
ro	=	red
rt	=	red
br	=	brown
gn	=	green
bl	=	blue
gr	=	grey
li	=	lilac
vi	=	lilac
ge	=	yellow
or	=	orange
rs	=	pink

Protected by copyright. Copying for private or commercial purposes, in part or in whole, is not permitted unless authorised by Volkswagen AG. Volkswagen AG does not guarantee or accept any liability with respect to the correctness of information in this document. Copyright by Volkswagen AG.

Terminal 30 power supply relay, Vehicle electrical control module system, Fuse panel B, Fuse 14 (on fuse panel B)

J317	Terminal 30 power supply relay
J519	Vehicle electrical control module system
SB	Fuse panel B
SB2	Fuse 2 (on fuse panel B)
SB3	Fuse 3 (on fuse panel B)
SB4	Fuse 4 (on fuse panel B)
SB5	Fuse 5 (on fuse panel B)
SB7	Fuse 7 (on fuse panel B)
SB14	Fuse 14 (on fuse panel B)
T4x	4-pin connector
T14	14-pin connector
B350	Positive connection 1 (87a) (in main wiring harness)
D78	Positive connection 1 (30a) (in engine compartment wiring harness)
*	Coolant fan connection
*2	Running change
*3	The color of the wires depends on vehicle equipment

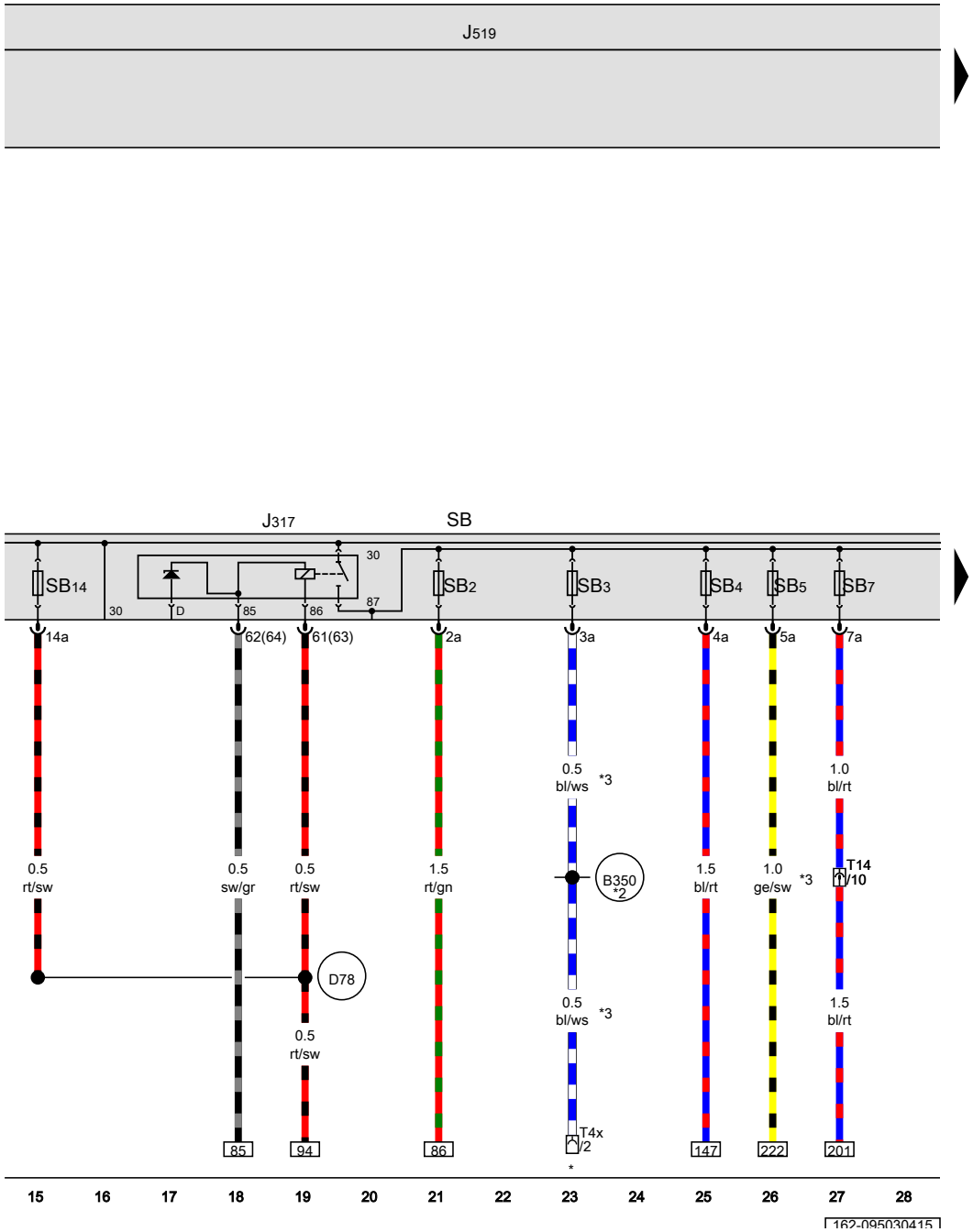

ws	=	white
sw	=	black
ro	=	red
rt	=	red
br	=	brown
gn	=	green
bl	=	blue
gr	=	grey
li	=	lilac
vi	=	lilac
ge	=	yellow
or	=	orange
rs	=	pink

Protected by copyright. Copying for private or commercial purposes, in part or in whole, is not permitted unless authorised by Volkswagen AG. Volkswagen AG does not guarantee or accept any liability with respect to the correctness of information in this document. Copyright by Volkswagen AG.

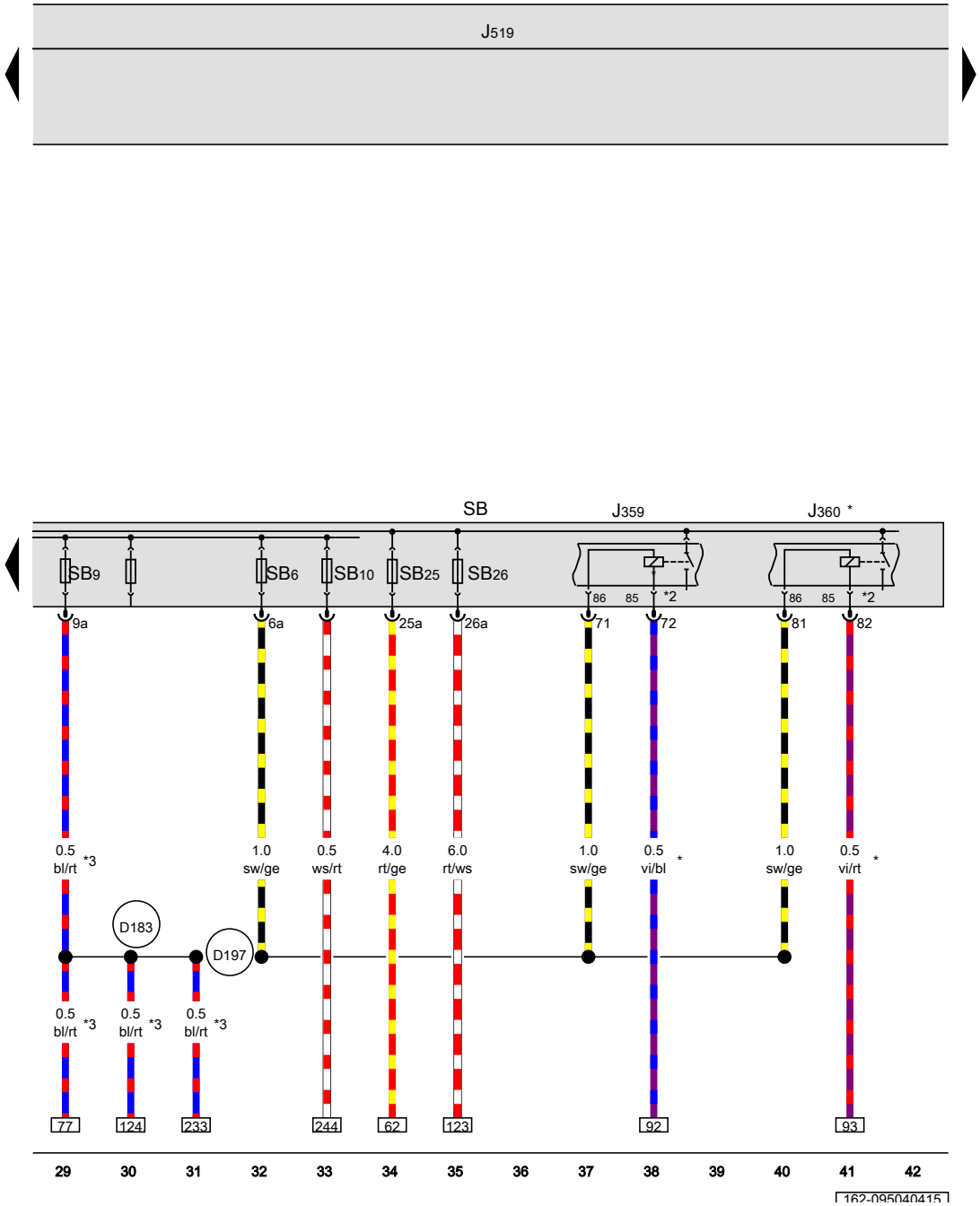

Low heat output relay, High heat output relay, Vehicle electrical control module system, Fuse panel B

J359	Low heat output relay
J360	High heat output relay
J519	Vehicle electrical control module system
SB	Fuse panel B
SB6	Fuse 6 (on fuse panel B)
SB9	Fuse 9 (on fuse panel B)
SB10	Fuse 10 (on fuse panel B)
SB25	Fuse 25 (on fuse panel B)
SB26	Fuse 26 (on fuse panel B)
D183	Connection 4 (87a) (in engine compartment wiring harness)
D197	Connection 5 (87a) (in engine compartment wiring harness)
*	only for vehicles with auxiliary heater
*2	Refer to applicable wiring diagram
*3	The color of the wires depends on vehicle equipment

ws	=	white
sw	=	black
ro	=	red
rt	=	red
br	=	brown
gn	=	green
bl	=	blue
gr	=	grey
li	=	lilac
vi	=	lilac
ge	=	yellow
or	=	orange
rs	=	pink

Protected by copyright. Copying for private or commercial purposes, in part or in whole, is not permitted unless authorised by Volkswagen AG. Volkswagen AG does not guarantee or accept any liability with respect to the correctness of information in this document. Copyright by Volkswagen AG.

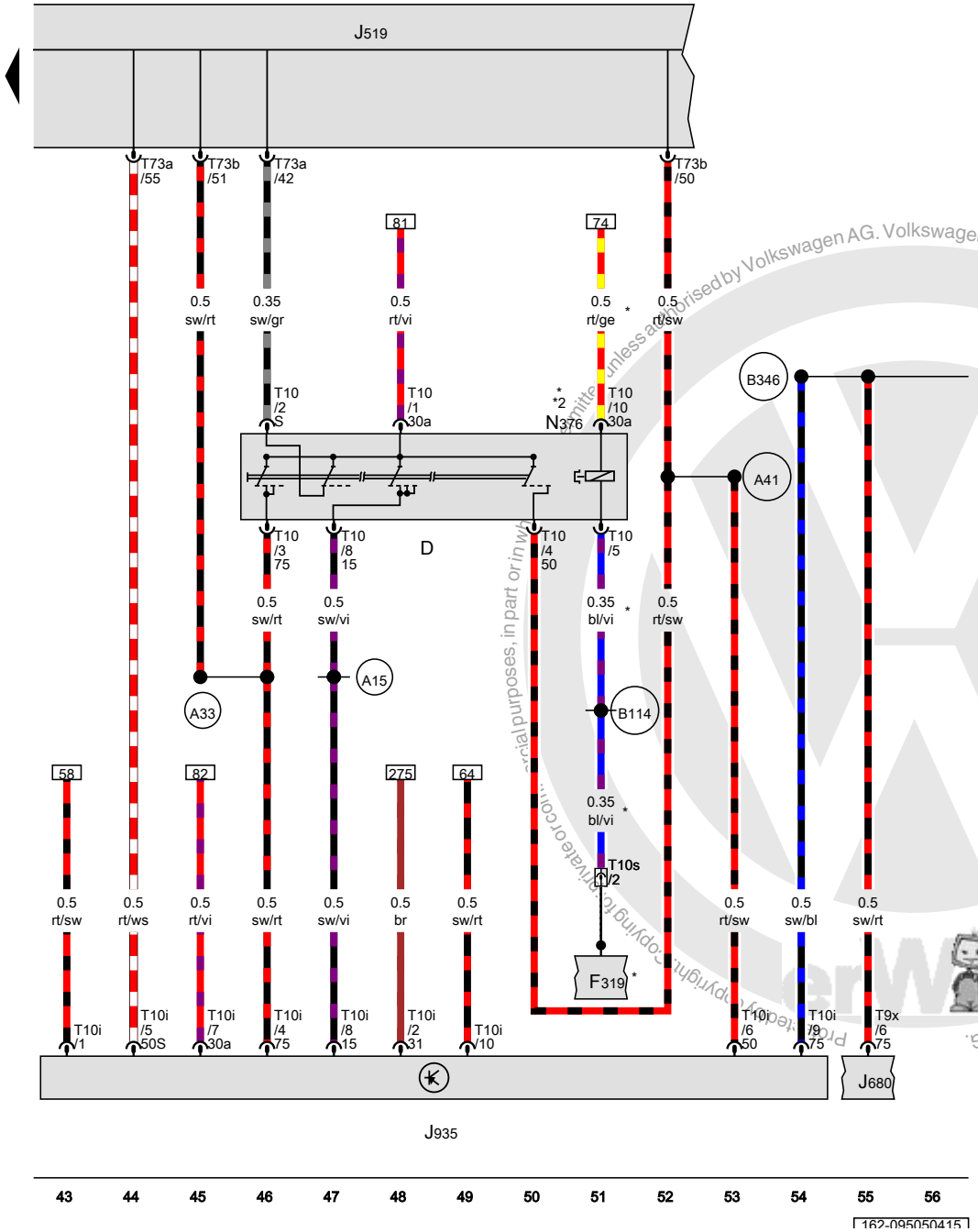

Ignition/starter switch, Vehicle electrical control module system, Converter box

D	Ignition/starter switch
F319	Selector lever park position lock switch
J519	Vehicle electrical control module system
J680	Terminal 75 power supply relay 1
J935	Converter box
N376	Ignition switch key lock solenoid
T9x	9-pin connector
T10	10-pin connector
T10i	10-pin connector
T10s	10-pin connector
T73a	73-pin connector
T73b	73-pin connector
A15	Plus connection (15) (in instrument cluster wiring harness)
A33	Connection 75 (in instrument panel wiring harness)
A41	Positive connection (50) (in instrument panel wiring harness)
B114	Lock switch connection (in interior wiring harness)
B346	Connection 75 (in main wiring harness) 1
*	Only for vehicles with automatic transmission
*2	Only for vehicles with DSG transmission

ws	=	white
sw	=	black
ro	=	red
rt	=	red
br	=	brown
gn	=	green
bl	=	blue
gr	=	grey
li	=	lilac
vi	=	lilac
ge	=	yellow
or	=	orange
rs	=	pink

Copyright by Volkswagen AG. Volkswagen AG does not guarantee or accept any liability with respect to the correctness of information in this document. Copyright by Volkswagen AG. Protected by copyright. Copying for private or commercial purposes, in part or in whole, is not permitted unless authorised by Volkswagen AG.

Terminal 15 power supply relay, Terminal 15 power supply relay 2, Terminal 50 power supply relay, Fuse panel C

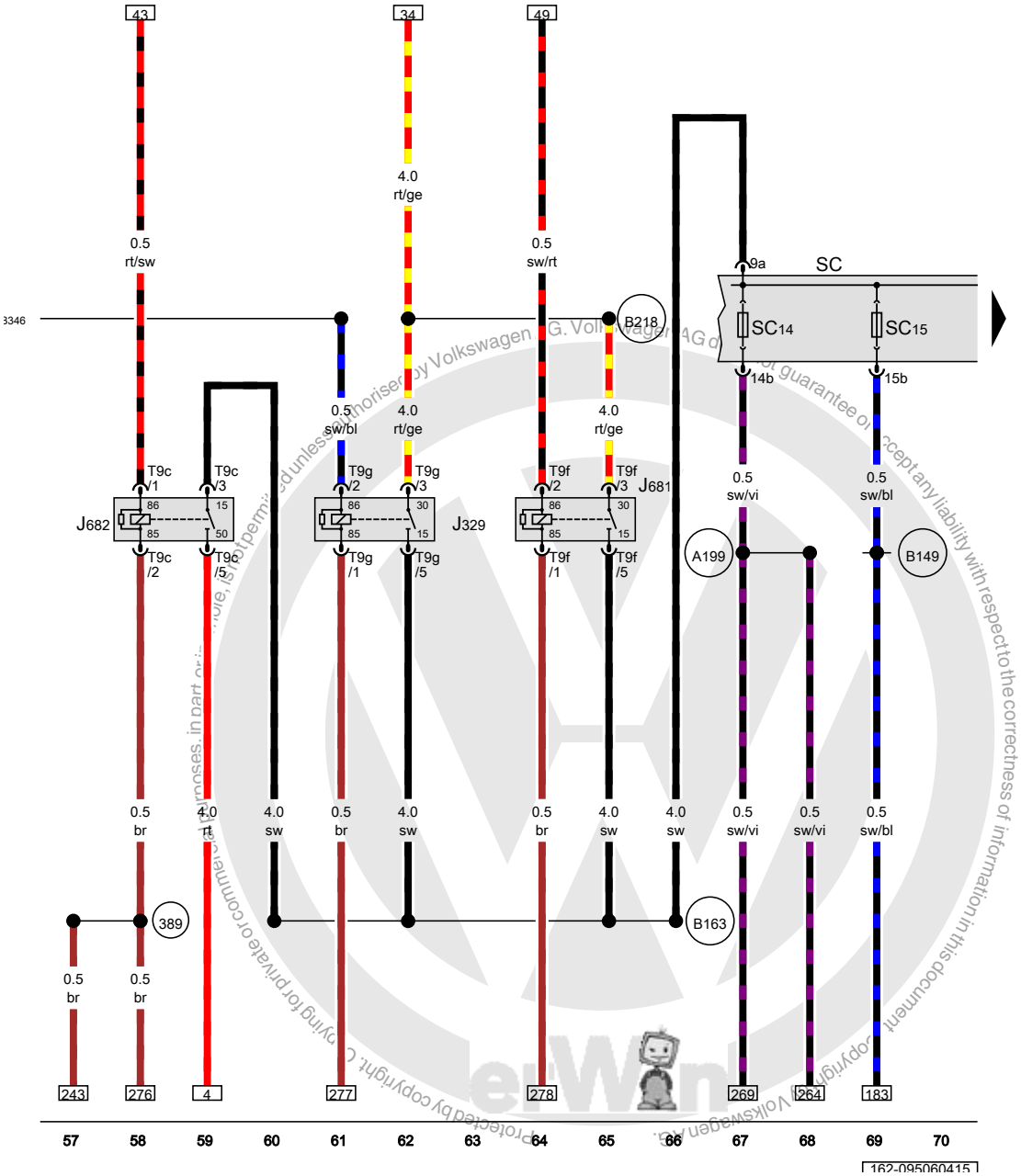

J329	Terminal 15 power supply relay
J681	Terminal 15 power supply relay 2
J682	Terminal 50 power supply relay
SC	Fuse panel C
SC14	Fuse 14 (on fuse panel C)
SC15	Fuse 15 (on fuse panel C)
T9c	9-pin connector
T9f	9-pin connector
T9g	9-pin connector
389	Ground connection 24 (in main wiring harness)
A199	Positive connection 4 (15a) (in instrument panel wiring harness)
B149	Positive connection 2 (15a) (in interior wiring harness)
B163	Positive connection 1 (15) (in interior wiring harness)
B218	Positive connection 6 (30) (in interior wiring harness)
B346	Connection 75 (in main wiring harness) 1

ws	=	white
sw	=	black
ro	=	red
rt	=	red
br	=	brown
gn	=	green
bl	=	blue
gr	=	grey
li	=	lilac
vi	=	lilac
ge	=	yellow
or	=	orange
rs	=	pink

Fuel level sensor, Transfer fuel pump, Fuel pump relay, Fuse panel C

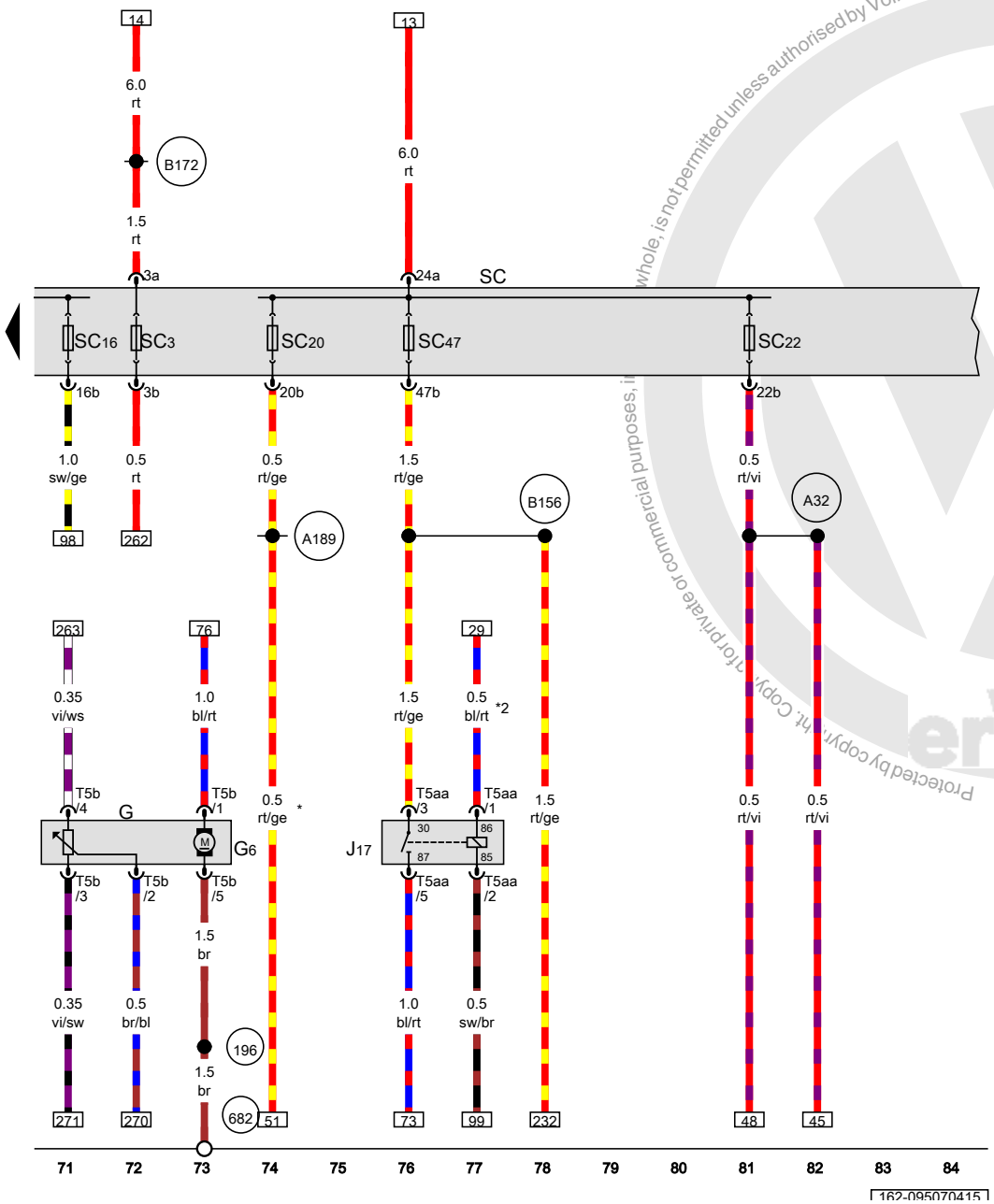

G	Fuel level sensor
G6	Transfer fuel pump
J17	Fuel pump relay
SC	Fuse panel C
SC3	Fuse 3 (on fuse panel C)
SC16	Fuse 16 (on fuse panel C)
SC20	Fuse 20 (on fuse panel C)
SC22	Fuse 22 (on fuse panel C)
SC47	Fuse 47 (on fuse panel C)
T5aa	5-pin connector
T5b	5-pin connector
196	Ground connection 3 (in rear wiring harness)
682	Ground connection 2 in right rear side panel
A32	Positive connection (30) (in instrument panel wiring harness)
A189	Positive connection 5 (30a) (in instrument panel wiring harness)
B156	Positive connection (30a) (in interior wiring harness)
B172	Positive connection 4 (30) (in interior wiring harness)
*	Only for vehicles with automatic transmission
*2	The color of the wires depends on vehicle equipment

ws	=	white
sw	=	black
ro	=	red
rt	=	red
br	=	brown
gn	=	green
bl	=	blue
gr	=	grey
li	=	lilac
vi	=	lilac
ge	=	yellow
or	=	orange
rs	=	pink

Protected by copyright. Copying for private or commercial purposes, in whole, is not permitted unless authorised by Volkswagen AG. Volkswagen AG does not guarantee or assume any liability with respect to the correctness of information in this document. Copyright by Volkswagen AG.

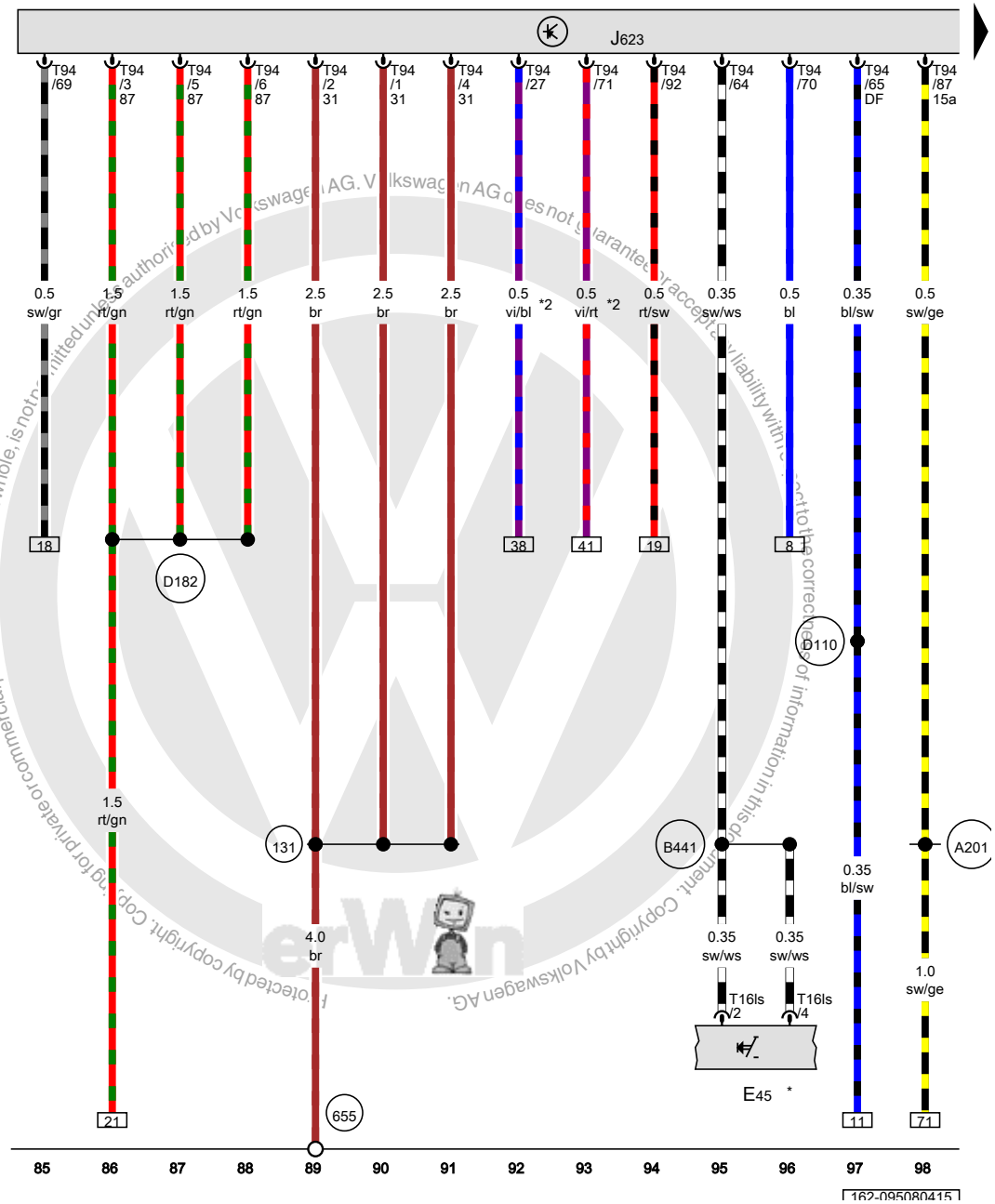

Engine control module

E45	Cruise control switch
J623	Engine control module
T16ls	16-pin connector
T94	94-pin connector
131	Ground connection 2 (in engine compartment wiring harness)
655	Ground connection on left headlamp
A201	Positive connection 6 (15a) (in instrument panel wiring harness)
B441	Cruise control connection (in main wiring harness)
D110	Connection 8 (in engine compartment wiring harness)
D182	Connection 3 (87a) (in engine compartment wiring harness)
*	Only for vehicles with cruise control
*2	only for vehicles with auxiliary heater

ws	=	white
sw	=	black
ro	=	red
rt	=	red
br	=	brown
gn	=	green
bl	=	blue
gr	=	grey
li	=	lilac
vi	=	lilac
ge	=	yellow
or	=	orange
rs	=	pink

Protected by copyright. Copyright for private or commercial purposes, in part or in whole, is not permitted unless authorised by Volkswagen AG. Volkswagen AG does not guarantee or accept any liability with respect to the correctness of information in this document. Copyright by Volkswagen AG.

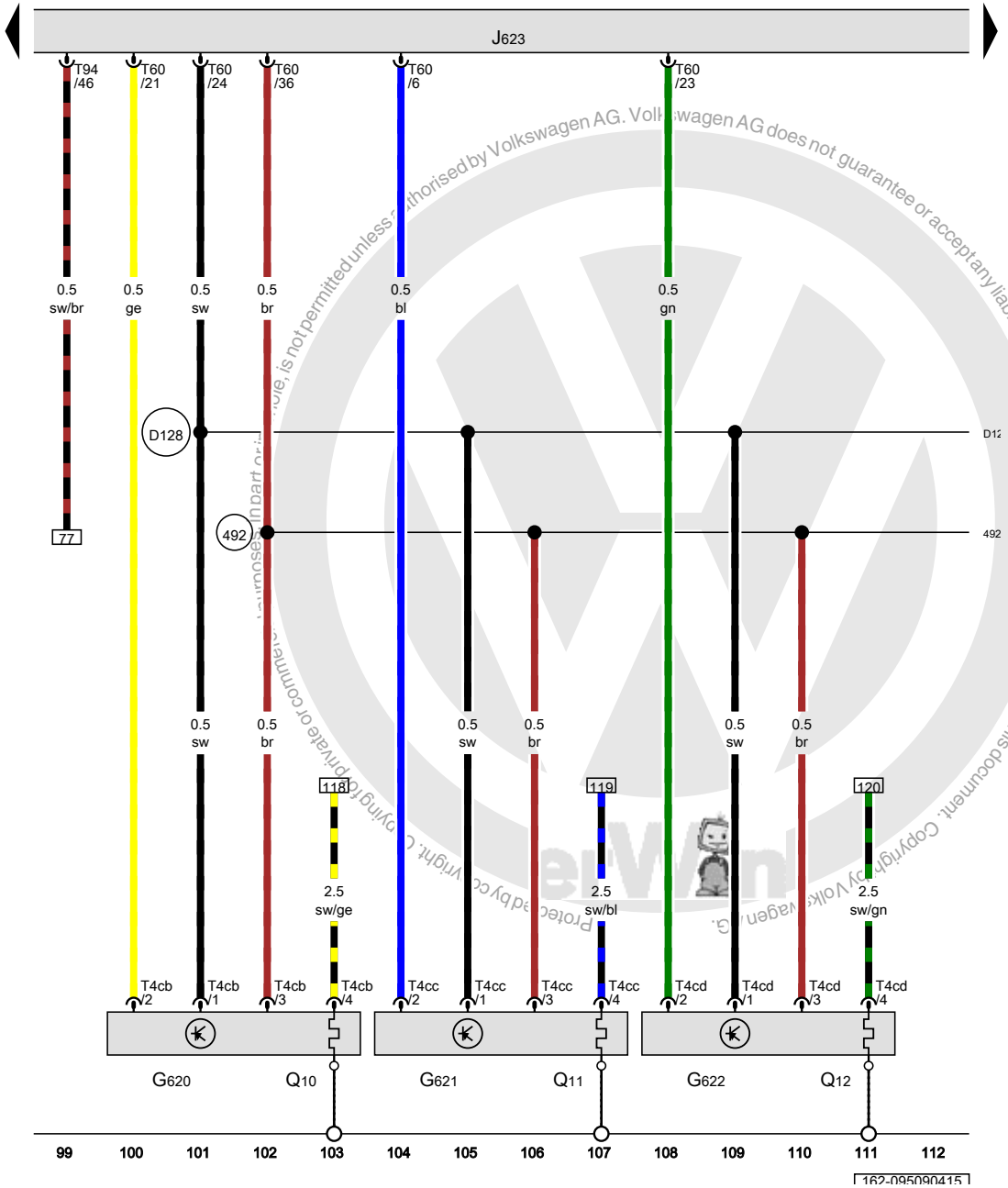

Cylinder 1 internal pressure sensor, Cylinder 2 internal pressure sensor, Cylinder 3 internal pressure sensor, Engine control module, Glow plug 1, Glow plug 2, Glow plug 3

G620	Cylinder 1 internal pressure sensor
G621	Cylinder 2 internal pressure sensor
G622	Cylinder 3 internal pressure sensor
J623	Engine control module
Q10	Glow plug 1
Q11	Glow plug 2
Q12	Glow plug 3
T4cb	4-pin connector
T4cc	4-pin connector
T4cd	4-pin connector
T60	60-pin connector
T94	94-pin connector
492	Sensor ground connection 2 (in fuel injection system wiring harness)
D128	Connection 26 (in engine compartment wiring harness)

ws	=	white
sw	=	black
ro	=	red
rt	=	red
br	=	brown
gn	=	green
bl	=	blue
gr	=	grey
li	=	lilac
vi	=	lilac
ge	=	yellow
or	=	orange
rs	=	pink

Protected by copyright. Copying for private or commercial purposes, in part or in whole, is not permitted unless authorised by Volkswagen AG. Volkswagen AG does not guarantee or accept any liability with respect to the correctness of information in this document. Copyright by Volkswagen AG.

Cylinder 4 internal pressure sensor, Automatic glow time control module, Engine control module, Glow plug 4

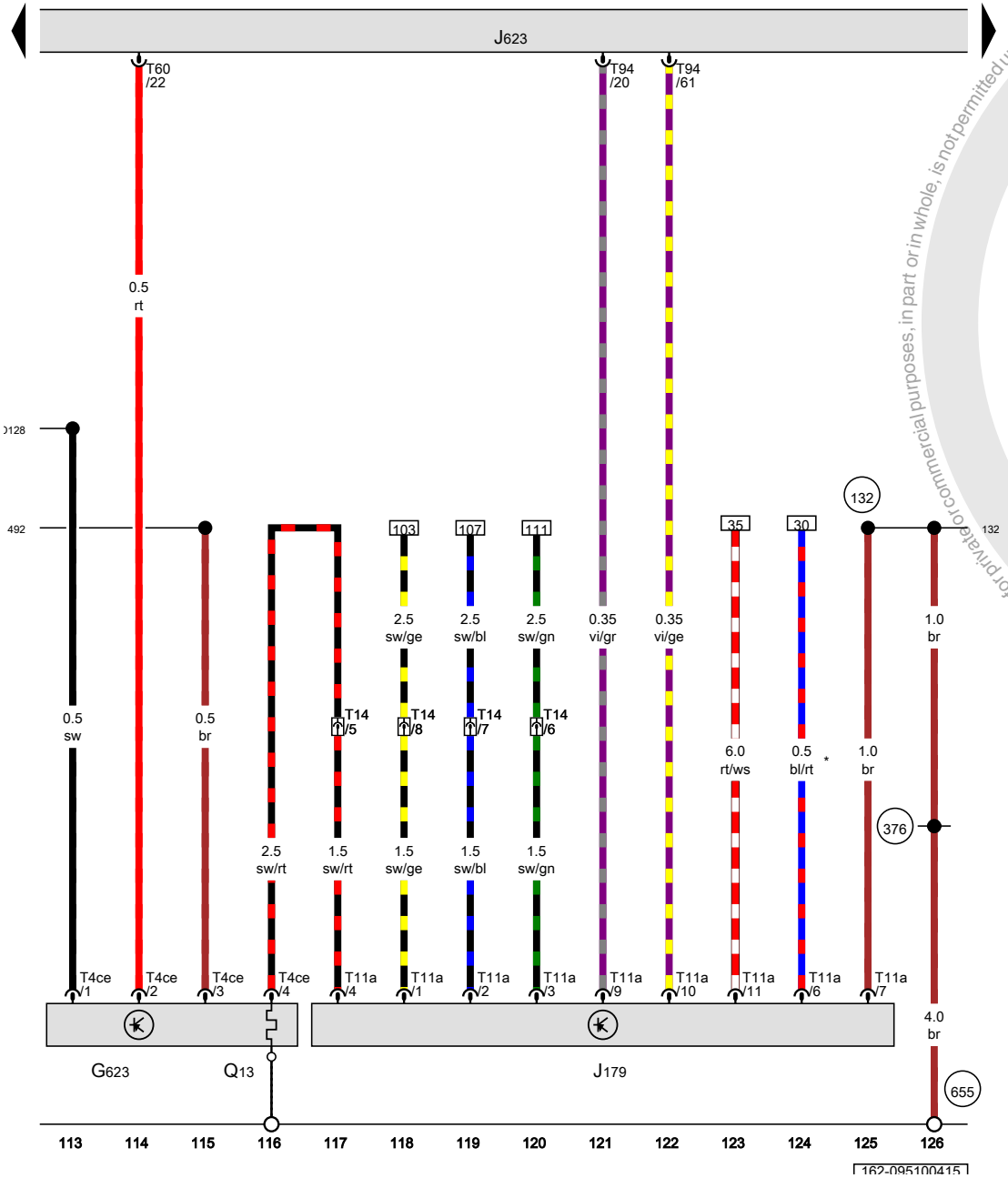

G623	Cylinder 4 internal pressure sensor
J179	Automatic glow time control module
J623	Engine control module
Q13	Glow plug 4
T4ce	4-pin connector
T11a	11-pin connector
T14	14-pin connector
T60	60-pin connector
T94	94-pin connector
132	Ground connection 3 (in engine compartment wiring harness)
376	Ground connection 11 (in main wiring harness)
492	Sensor ground connection 2 (in fuel injection system wiring harness)
655	Ground connection on left headlamp
D128	Connection 26 (in engine compartment wiring harness)
*	The color of the wires depends on vehicle equipment

ws	=	white
sw	=	black
ro	=	red
rt	=	red
br	=	brown
gn	=	green
bl	=	blue
gr	=	grey
li	=	lilac
vi	=	lilac
ge	=	yellow
or	=	orange
rs	=	pink

Protected by copyright. Copying for private or commercial purposes, in part or in whole, is not permitted unless authorised by Volkswagen AG. Volkswagen AG does not guarantee or accept any liability with respect to the correctness of information in this document. Copyright by Volkswagen AG.

Accelerator pedal module, Intake manifold sensor, Charge air pressure sensor, Intake air temperature sensor, Accelerator pedal position sensor, Accelerator pedal position sensor 2, Engine control module

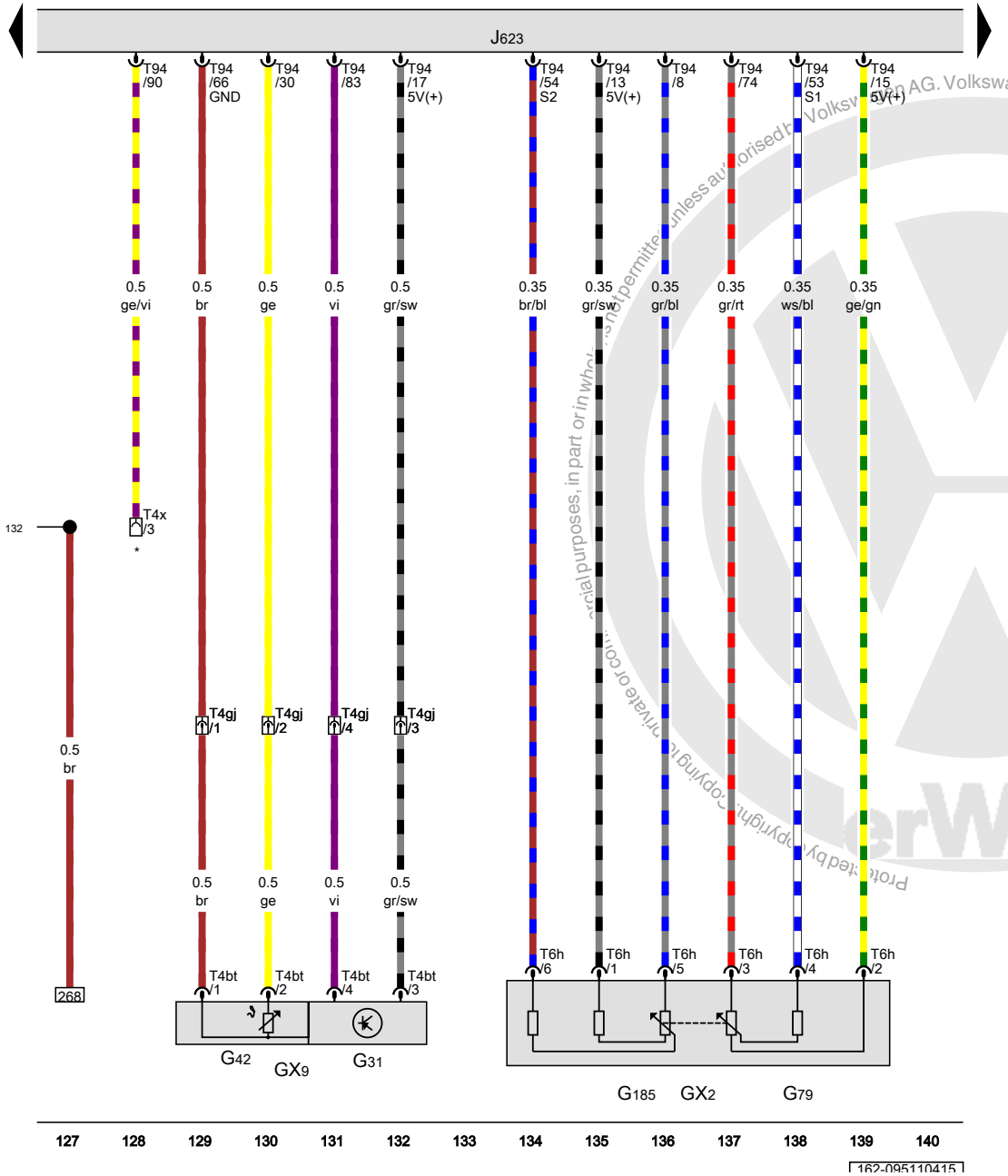

GX2	Accelerator pedal module
GX9	Intake manifold sensor
G31	Charge air pressure sensor
G42	Intake air temperature sensor
G79	Accelerator pedal position sensor
G185	Accelerator pedal position sensor 2
J623	Engine control module
T4bt	4-pin connector
T4gj	4-pin connector
T4x	4-pin connector
T6h	6-pin connector
T94	94-pin connector
(132)	Ground connection 3 (in engine compartment wiring harness)
*	Coolant fan connection

ws	=	white
sw	=	black
ro	=	red
rt	=	red
br	=	brown
gn	=	green
bl	=	blue
gr	=	grey
li	=	lilac
vi	=	lilac
ge	=	yellow
or	=	orange
rs	=	pink

Protected by copyright. Copying for private or commercial purposes, in part or in whole, is not permitted unless authorised by Volkswagen AG. Volkswagen AG does not guarantee or assume any liability with respect to the correctness of information in this document. Copyright by Volkswagen AG.

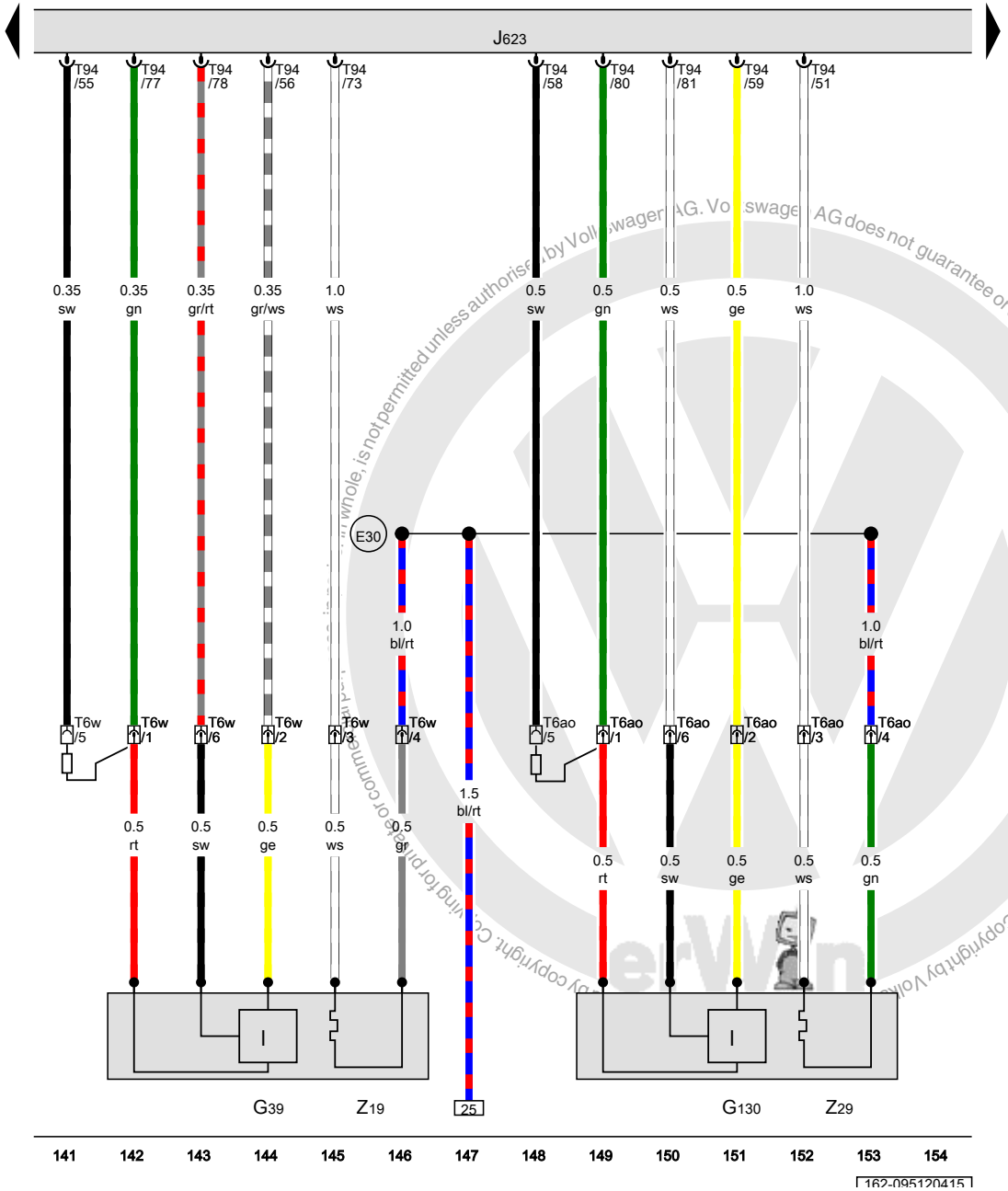

Heated oxygen sensor, Engine control module, Oxygen sensor heater, Heater for oxygen sensor 1 after catalytic converter

G39	Heated oxygen sensor
G130	Oxygen sensor after three way catalytic converter
J623	Engine control module
T6ao	6-pin connector
T6w	6-pin connector
T94	94-pin connector
Z19	Oxygen sensor heater
Z29	Heater for oxygen sensor 1 after catalytic converter
E30	Connection 87a (in engine wiring harness)

ws	=	white
sw	=	black
ro	=	red
rt	=	red
br	=	brown
gn	=	green
bl	=	blue
gr	=	grey
li	=	lilac
vi	=	lilac
ge	=	yellow
or	=	orange
rs	=	pink

Copyright by Volkswagen AG. Volkswagen AG does not guarantee or accept any liability with respect to the correctness of information in this document. Copying for private or commercial purposes, in whole, is not permitted unless authorised by Volkswagen AG.

Engine coolant temperature sensor on radiator outlet, Exhaust gas temperature sensor 1, Exhaust gas temperature sensor 2, Exhaust gas temperature sensor 3, Exhaust gas temperature sensor 4, Engine control module

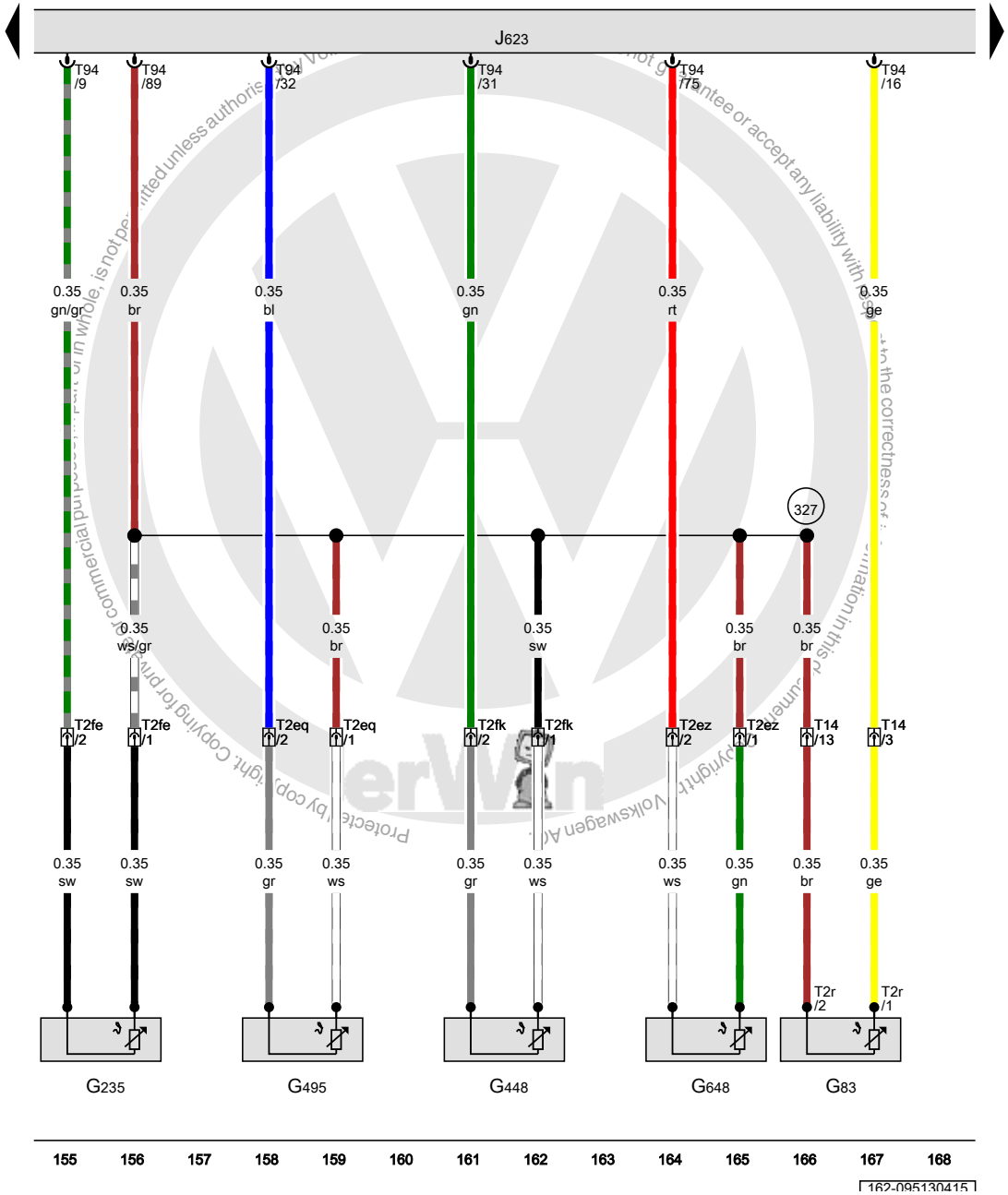

G83	Engine coolant temperature sensor on radiator outlet
G235	Exhaust gas temperature sensor 1
G448	Exhaust gas temperature sensor 2
G495	Exhaust gas temperature sensor 3
G648	Exhaust gas temperature sensor 4
J623	Engine control module
T2eq	Double connector
T2ez	Double connector
T2fe	Double connector
T2fk	Double connector
T2r	Double connector
T14	14-pin connector
T94	94-pin connector
327	Sensor ground connection (in engine compartment wiring harness)

ws	=	white
sw	=	black
ro	=	red
rt	=	red
br	=	brown
gn	=	green
bl	=	blue
gr	=	grey
li	=	lilac
vi	=	lilac
ge	=	yellow
or	=	orange
rs	=	pink

Mass airflow sensor, Exhaust pressure sensor 1, Differential pressure sensor, Engine control module, Exhaust door control unit

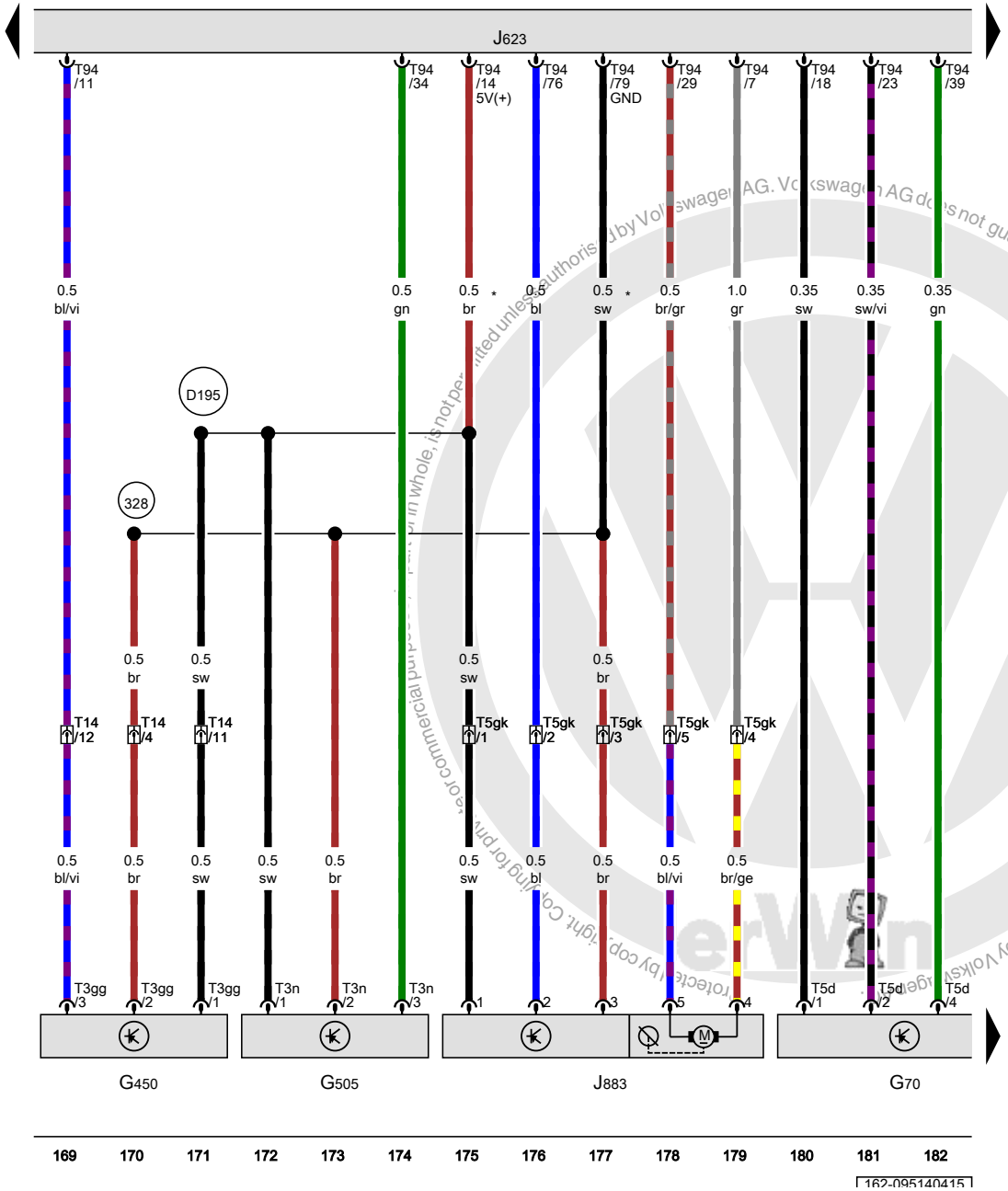

G70	Mass airflow sensor
G450	Exhaust pressure sensor 1
G505	Differential pressure sensor
J623	Engine control module
J883	Exhaust door control unit
T3gg	3-pin connector
T3n	3-pin connector
T5d	5-pin connector
T5gk	5-pin connector
T14	14-pin connector
T94	94-pin connector
328	Sensor ground connection 2 (in engine compartment wiring harness)
D195	Connection 5V (in engine compartment wiring harness) 1
*	The color of the wires depends on vehicle equipment

ws	=	white
sw	=	black
ro	=	red
rt	=	red
br	=	brown
gn	=	green
bl	=	blue
gr	=	grey
li	=	lilac
vi	=	lilac
ge	=	yellow
or	=	orange
rs	=	pink

Protected by copyright. Copying for private or commercial purposes, in whole, is not permitted unless authorised by Volkswagen AG. Volkswagen AG does not guarantee or accept any liability with respect to the correctness of information in this document. Copyright by Volkswagen AG.

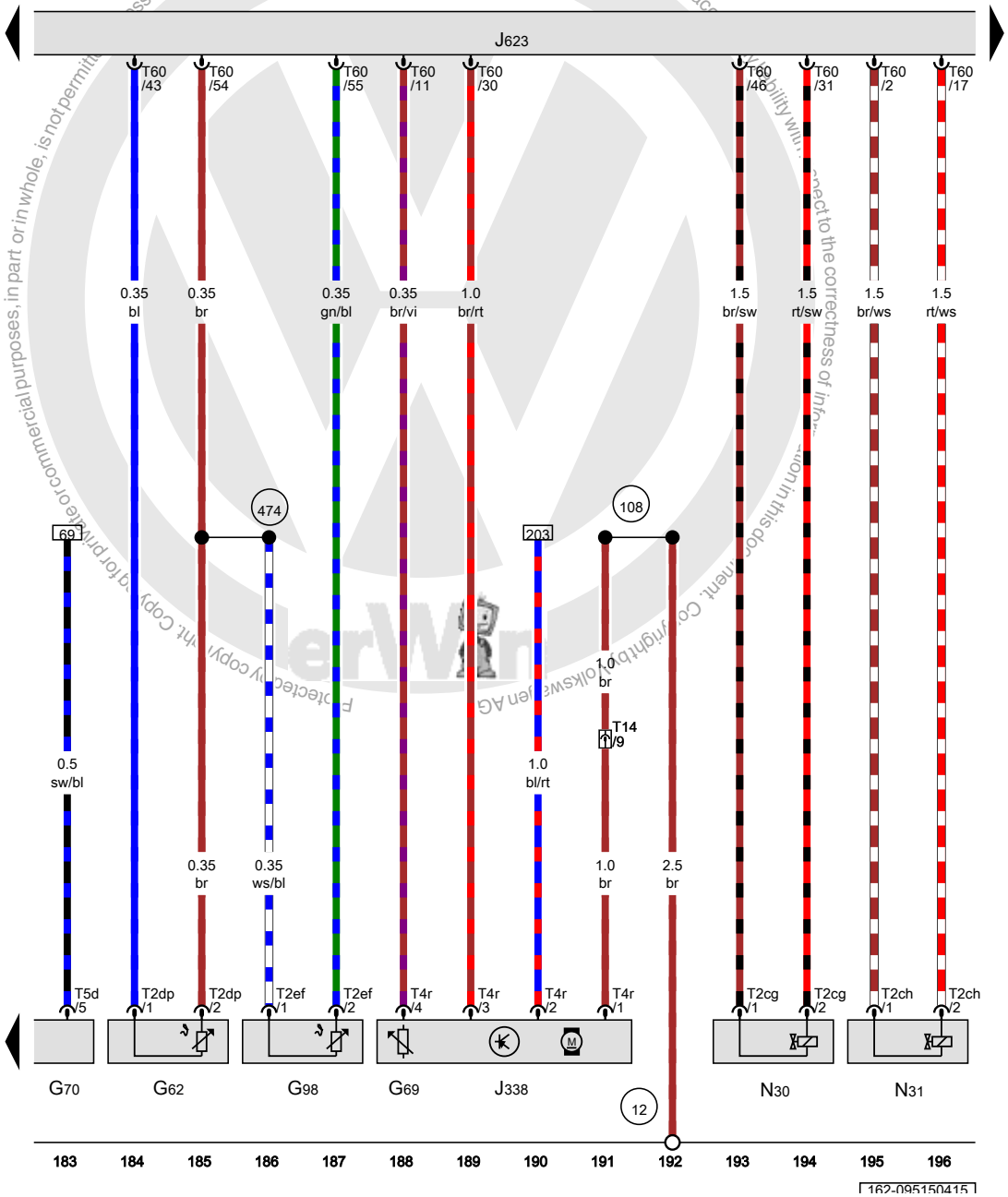

Engine coolant temperature sensor, Throttle position sensor, Mass airflow sensor, EGR temperature sensor, Throttle valve control module, Engine control module, Cylinder 1 fuel injector, Cylinder 2 fuel injector

G62	Engine coolant temperature sensor
G69	Throttle position sensor
G70	Mass airflow sensor
G98	EGR temperature sensor
J338	Throttle valve control module
J623	Engine control module
N30	Cylinder 1 fuel injector
N31	Cylinder 2 fuel injector
T2cg	Double connector
T2ch	Double connector
T2dp	Double connector
T2ef	Double connector
T4r	4-pin connector
T5d	5-pin connector
T14	14-pin connector
T60	60-pin connector
12	Ground connection in engine compartment, left
108	Ground connection 2 (in left front wiring harness)
474	Sensor ground connection (in engine pre-wiring harness)

ws	=	white
sw	=	black
ro	=	red
rt	=	red
br	=	brown
gn	=	green
bl	=	blue
gr	=	grey
li	=	lilac
vi	=	lilac
ge	=	yellow
or	=	orange
rs	=	pink

Engine speed sensor, Fuel temperature sensor, Charge air pressure actuator position sensor, Engine control module, Cylinder 3 fuel injector, Cylinder 4 fuel injector, Fuel pressure regulator valve, Fuel metering valve

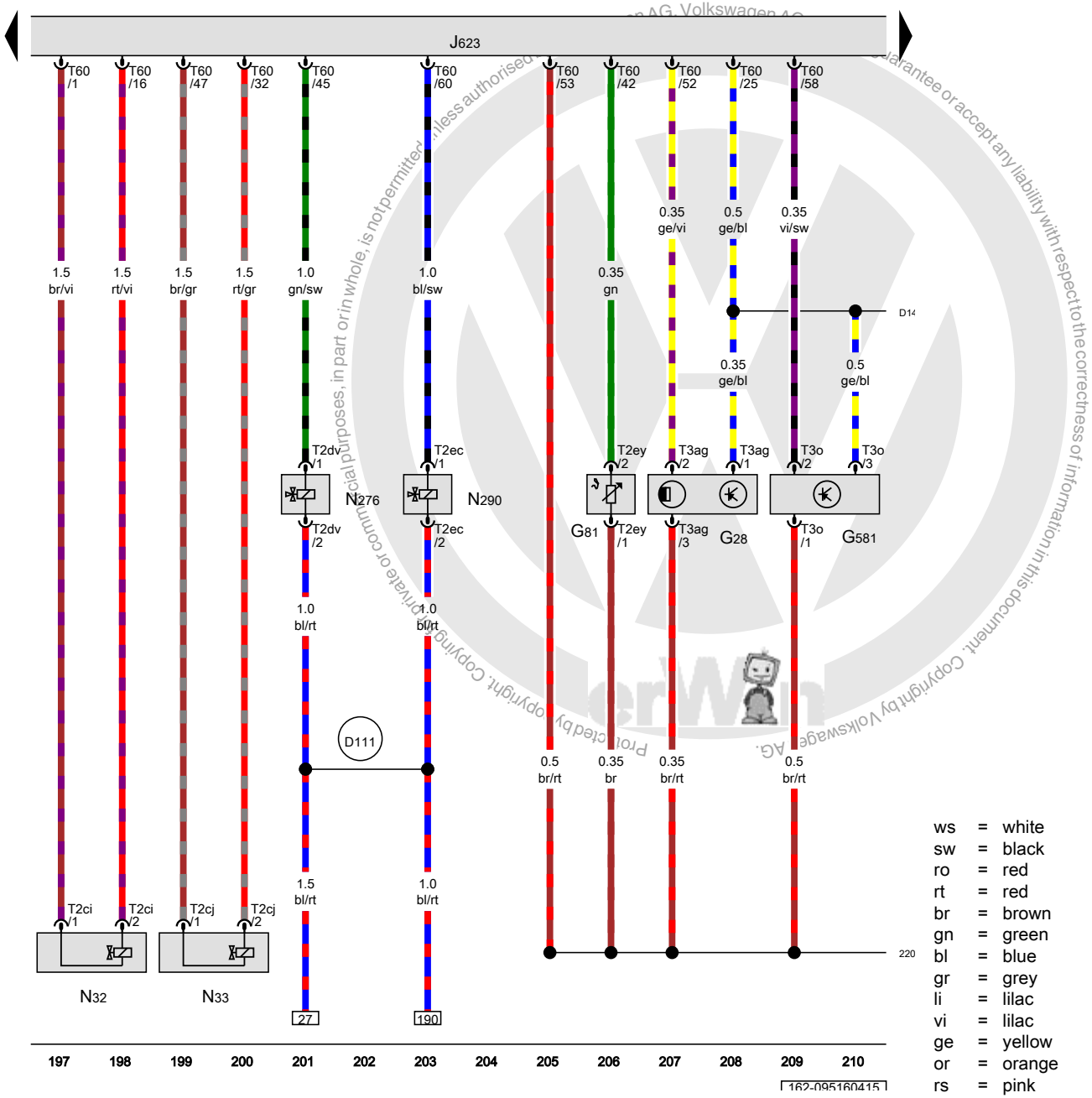

ws	=	white
sw	=	black
ro	=	red
rt	=	red
br	=	brown
gn	=	green
bl	=	blue
gr	=	grey
li	=	lilac
vi	=	lilac
ge	=	yellow
or	=	orange
rs	=	pink

G28	Engine speed sensor
G81	Fuel temperature sensor
G581	Charge air pressure actuator position sensor
J623	Engine control module
N32	Cylinder 3 fuel injector
N33	Cylinder 4 fuel injector
N276	Fuel pressure regulator valve
N290	Fuel metering valve
T2ci	Double connector
T2cj	Double connector
T2dv	Double connector
T2ec	Double connector
T2ey	Double connector
T3ag	3-pin connector
T3o	3-pin connector
T60	60-pin connector
220	Sensor ground connection (in engine wiring harness)
D111	Connection 9 (in engine compartment wiring harness)
D141	Connection 5V (in engine pre-wiring harness)

Protected by copyright. Copying for private or commercial purposes, in part or in whole, is not permitted unless authorised by Volkswagen AG. Volkswagen AG does not guarantee or accept any liability with respect to the correctness of information in this document. Copyright by Volkswagen AG.

EGR valve 1, EGR potentiometer, Fuel pressure sensor, Exhaust gas recirculation position sensor 2, Engine control module, Wastegate bypass regulator valve, Positive crankcase ventilation heating element, Valve 2 for EGR

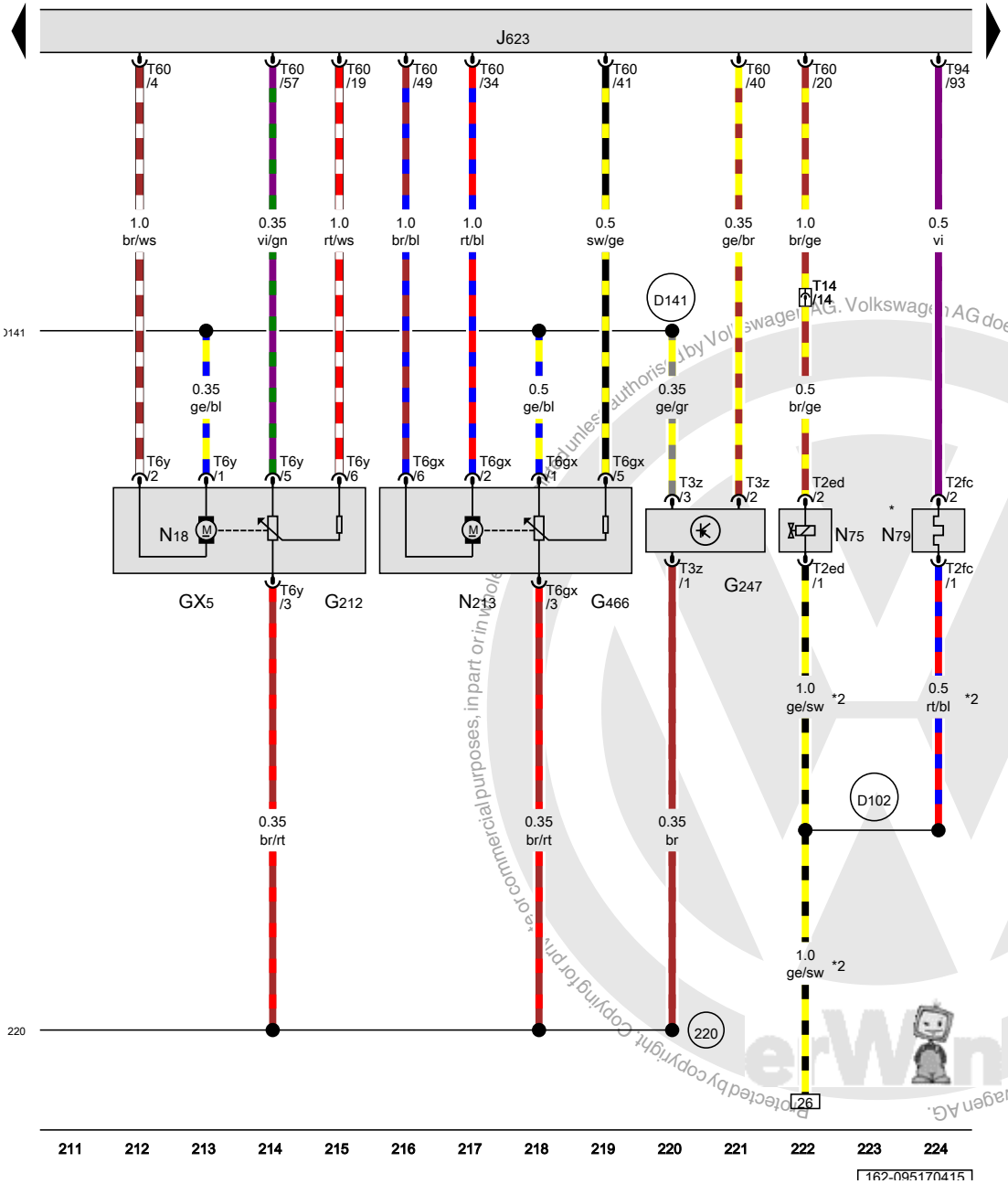

GX5	EGR valve 1
G212	EGR potentiometer
G247	Fuel pressure sensor
G466	Exhaust gas recirculation position sensor 2
J623	Engine control module
N18	EGR vacuum regulator solenoid valve
N75	Wastegate bypass regulator valve
N79	Positive crankcase ventilation heating element
N213	Valve 2 for EGR
T2ed	Double connector
T2fc	Double connector
T3z	3-pin connector
T6gx	6-pin connector
T6y	6-pin connector
T14	14-pin connector
T60	60-pin connector
T94	94-pin connector
220	Sensor ground connection (in engine wiring harness)
D102	Connection 2 (in engine compartment wiring harness)
D141	Connection 5V (in engine pre-wiring harness)
*	Only for vehicles with crankcase ventilation heater
*2	The color of the wires depends on vehicle equipment

ws	=	white
sw	=	black
ro	=	red
rt	=	red
br	=	brown
gn	=	green
bl	=	blue
gr	=	grey
li	=	lilac
vi	=	lilac
ge	=	yellow
or	=	orange
rs	=	pink

Protected by copyright. Copyright for printed or commercial purposes, in part or in whole, is reserved by Volkswagen AG. Volkswagen AG does not guarantee or accept any liability with respect to the correctness of information in this document. Copyright by Volkswagen AG.

Intake flap control unit, Camshaft position sensor, Intake manifold runner position sensor, Fuel pump relay 2, ABS control module, Engine control module, Fuel pump 2

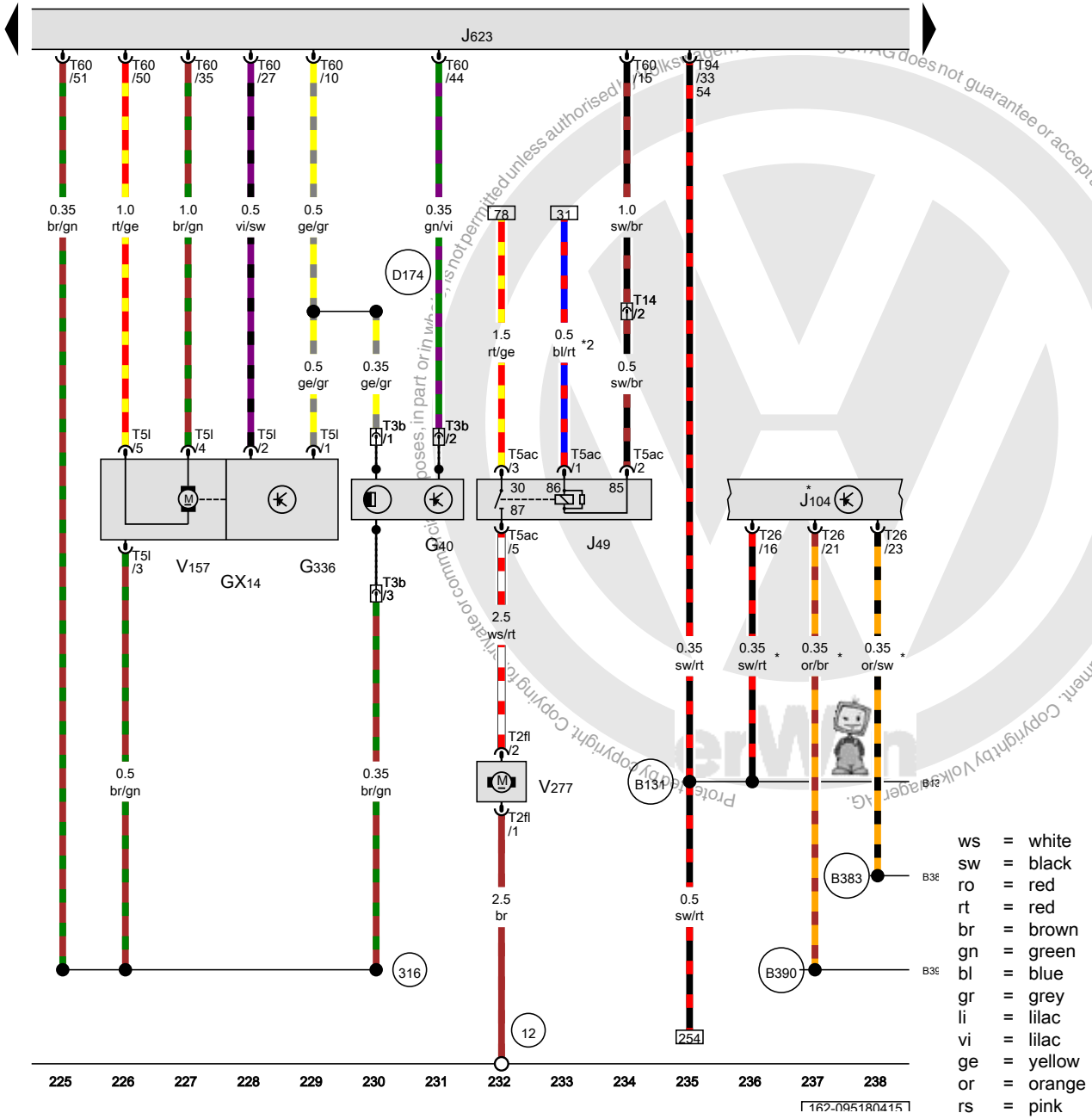

GX14	Intake flap control unit
G40	Camshaft position sensor
G336	Intake manifold runner position sensor
J49	Fuel pump relay 2
J104	ABS control module
J623	Engine control module
T2fl	Double connector
T3b	3-pin connector
T5ac	5-pin connector
T5l	5-pin connector
T14	14-pin connector
T26	26-pin connector
T60	60-pin connector
T94	94-pin connector
V157	Intake flap motor
V277	Fuel pump 2
12	Ground connection in engine compartment, left
316	Sensor ground connection 2 (in engine wiring harness)
B131	Connection 54 (in interior wiring harness)
B383	Powertrain CAN bus high connection 1 (in main wiring harness)
B390	Powertrain CAN bus low connection 1 (in main wiring harness)
D174	Connection 2 (5V) (in engine pre-wiring harness)
*	Only for vehicles with ABS without ESP
*2	The color of the wires depends on vehicle equipment

ws	=	white
sw	=	black
ro	=	red
rt	=	red
br	=	brown
gn	=	green
bl	=	blue
gr	=	grey
li	=	lilac
vi	=	lilac
ge	=	yellow
or	=	orange
rs	=	pink

Protected by copyright. Copying for private or commercial purposes, in part or in whole, is not permitted unless authorised by Volkswagen AG. Volkswagen AG does not guarantee or accept any liability with respect to the correctness of information in this document. Copyright by Volkswagen AG.

Brake lamp switch, Brake pedal switch, Clutch position sensor, ABS control module, Engine control module

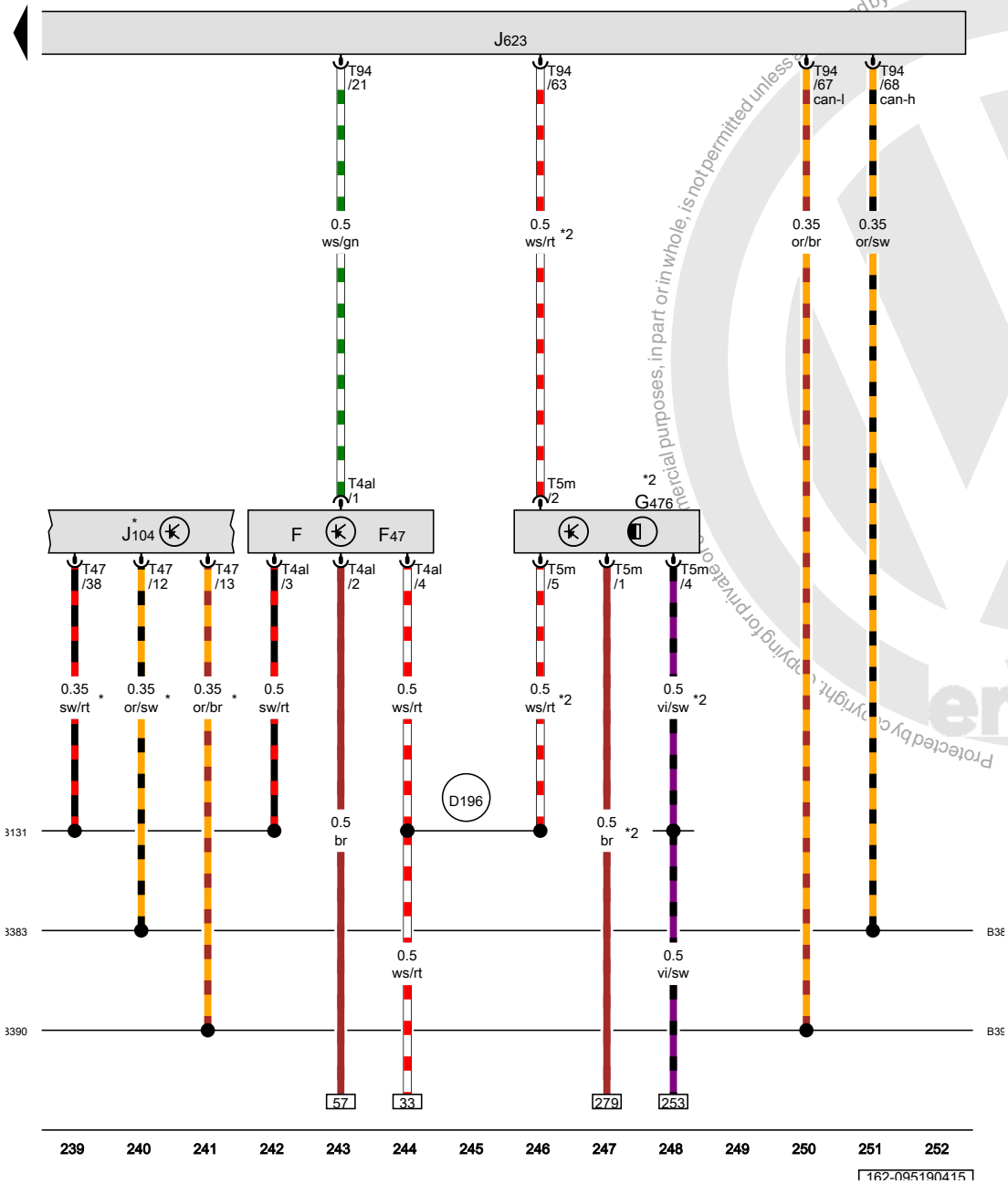

F	Brake lamp switch
F47	Brake pedal switch
G476	Clutch position sensor
J104	ABS control module
J623	Engine control module
T4al	4-pin connector
T5m	5-pin connector
T47	47-pin connector
T94	94-pin connector
B131	Connection 54 (in interior wiring harness)
B383	Powertrain CAN bus high connection 1 (in main wiring harness)
B390	Powertrain CAN bus low connection 1 (in main wiring harness)
D196	Connection 87a (in engine pre-wiring harness) 2
*	Only for vehicles with ABS and ESP
*2	Only for vehicles with a manual transmission

ws	=	white
sw	=	black
ro	=	red
rt	=	red
br	=	brown
gn	=	green
bl	=	blue
gr	=	grey
li	=	lilac
vi	=	lilac
ge	=	yellow
or	=	orange
rs	=	pink

Protected by copyright. Copying for private or commercial purposes, in part or in whole, is not permitted unless authorised by Volkswagen AG. Volkswagen AG does not guarantee or accept any liability with respect to the correctness of information in this document. Copyright by Volkswagen AG.

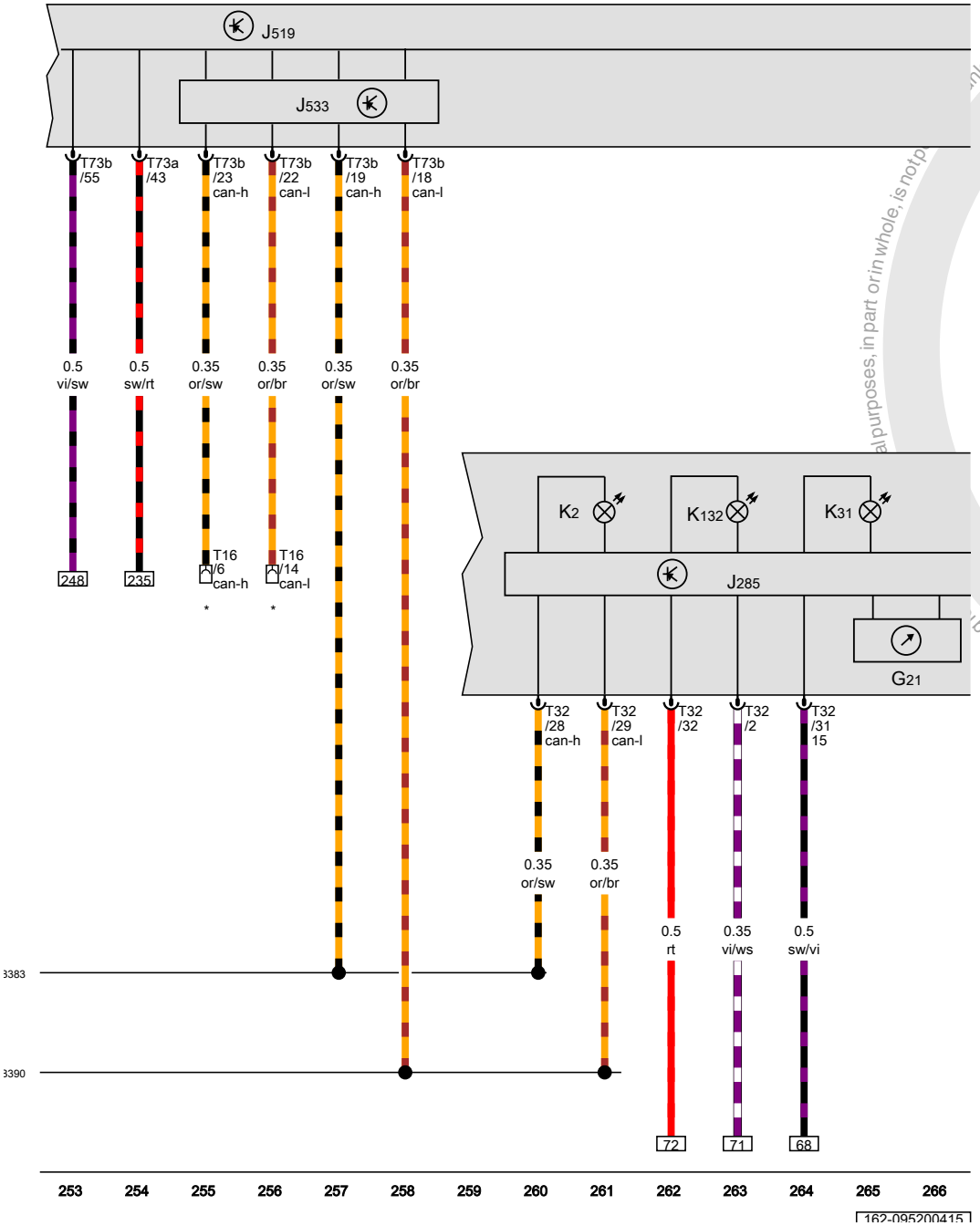

Speedometer, Instrument cluster control module, Vehicle electrical control module system, Data bus on board diagnostic interface, Generator indicator lamp, Cruise control indicator lamp, Electronic power control malfunction indicator lamp

G21	Speedometer
J285	Instrument cluster control module
J519	Vehicle electrical control module system
J533	Data bus on board diagnostic interface
K2	Generator indicator lamp
K31	Cruise control indicator lamp
K132	Electronic power control malfunction indicator lamp
T16	16-pin connector
T32	32-pin connector
T73a	73-pin connector
T73b	73-pin connector
B383	Powertrain CAN bus high connection 1 (in main wiring harness)
B390	Powertrain CAN bus low connection 1 (in main wiring harness)
*	Diagnostic connector

ws	=	white
sw	=	black
ro	=	red
rt	=	red
br	=	brown
gn	=	green
bl	=	blue
gr	=	grey
li	=	lilac
vi	=	lilac
ge	=	yellow
or	=	orange
rs	=	pink

Protected by copyright. Copying for private or commercial purposes, in part or in whole, is not permitted unless authorised by Volkswagen AG. Volkswagen AG does not give any guarantee or any liability with respect to the correctness of information in this document. Copyright by Volkswagen AG.

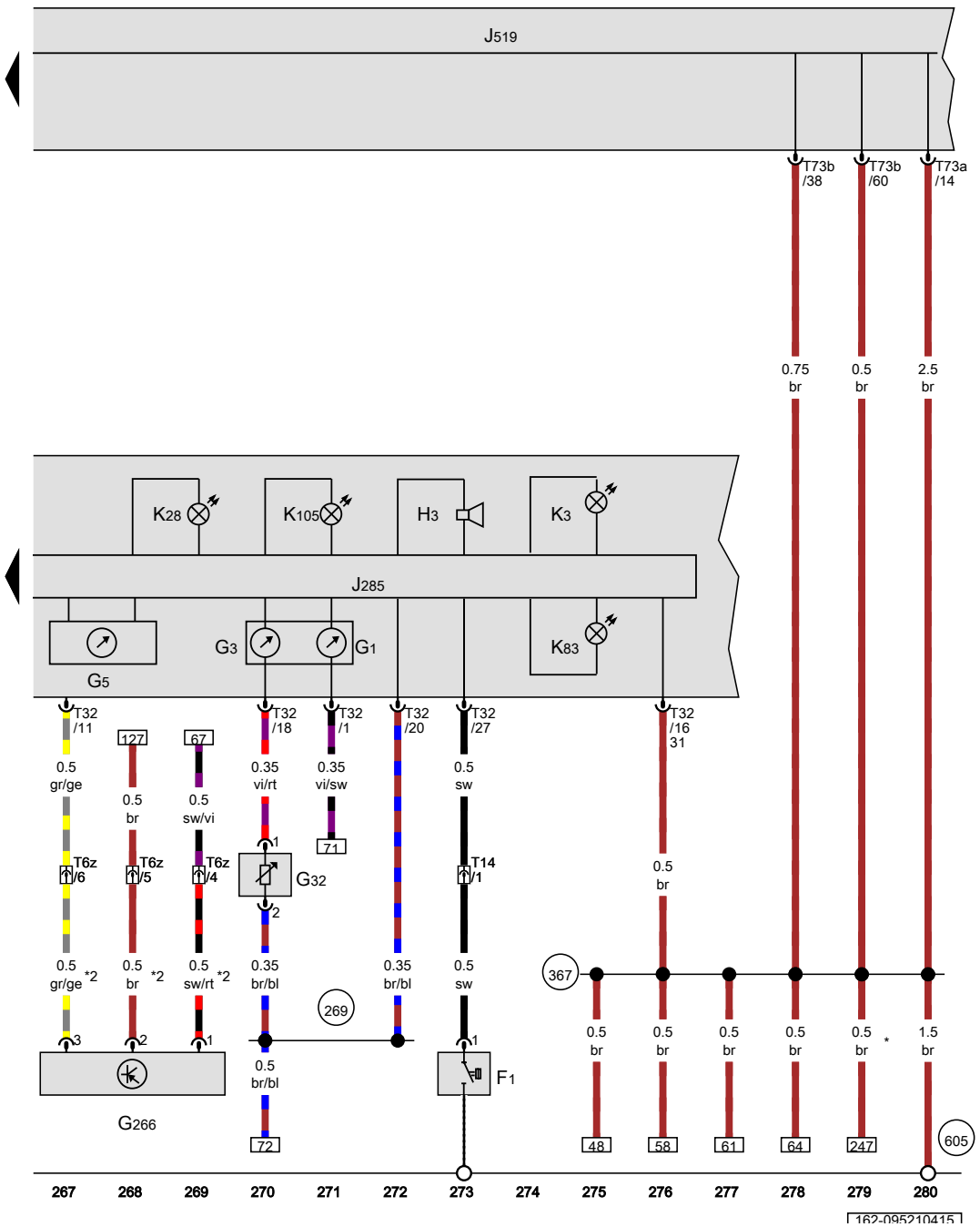

ws	=	white
sw	=	black
ro	=	red
rt	=	red
br	=	brown
gn	=	green
bl	=	blue
gr	=	grey
li	=	lilac
vi	=	lilac
ge	=	yellow
or	=	orange
rs	=	pink

Oil pressure switch, Fuel gauge, Engine coolant temperature gauge, Tachometer, Oil level thermal sensor, Instrument cluster control module, Vehicle electrical control module system, Engine coolant level/temperature indicator lamp, Low fuel level indicator lamp

F1	Oil pressure switch
G1	Fuel gauge
G3	Engine coolant temperature gauge
G5	Tachometer
G32	Engine coolant level sensor
G266	Oil level thermal sensor
H3	Warning buzzer and tone
J285	Instrument cluster control module
J519	Vehicle electrical control module system
K3	Oil pressure indicator lamp
K28	Engine coolant level/temperature indicator lamp
K83	Malfunction indicator lamp
K105	Low fuel level indicator lamp
T6z	6-pin connector, near the left headlamp
T14	14-pin connector
T32	32-pin connector
T73a	73-pin connector
T73b	73-pin connector
269	Sensor ground connection 1 (in instrument panel wiring harness)
367	Ground connection 2 (in main wiring harness)
605	Ground connection on upper steering column
*	Only for vehicles with a manual transmission
*2	Only for vehicles with flexible service interval reminder

Protected by copyright. Copying for private or commercial purposes, in part or in whole, is not permitted unless authorised by Volkswagen AG. Volkswagen AG does not guarantee or accept any liability with respect to the correctness of information in this document. Copyright by Volkswagen AG.

Airbag systems (USA) , CNLA,(4UM)

from June 2012

Protected by copyright. Copying for private or commercial purposes, in part or in whole, is not permitted unless authorised by Volkswagen AG. Volkswagen AG does not guarantee or accept any liability with respect to the correctness of information in this document. Copyright by Volkswagen AG.

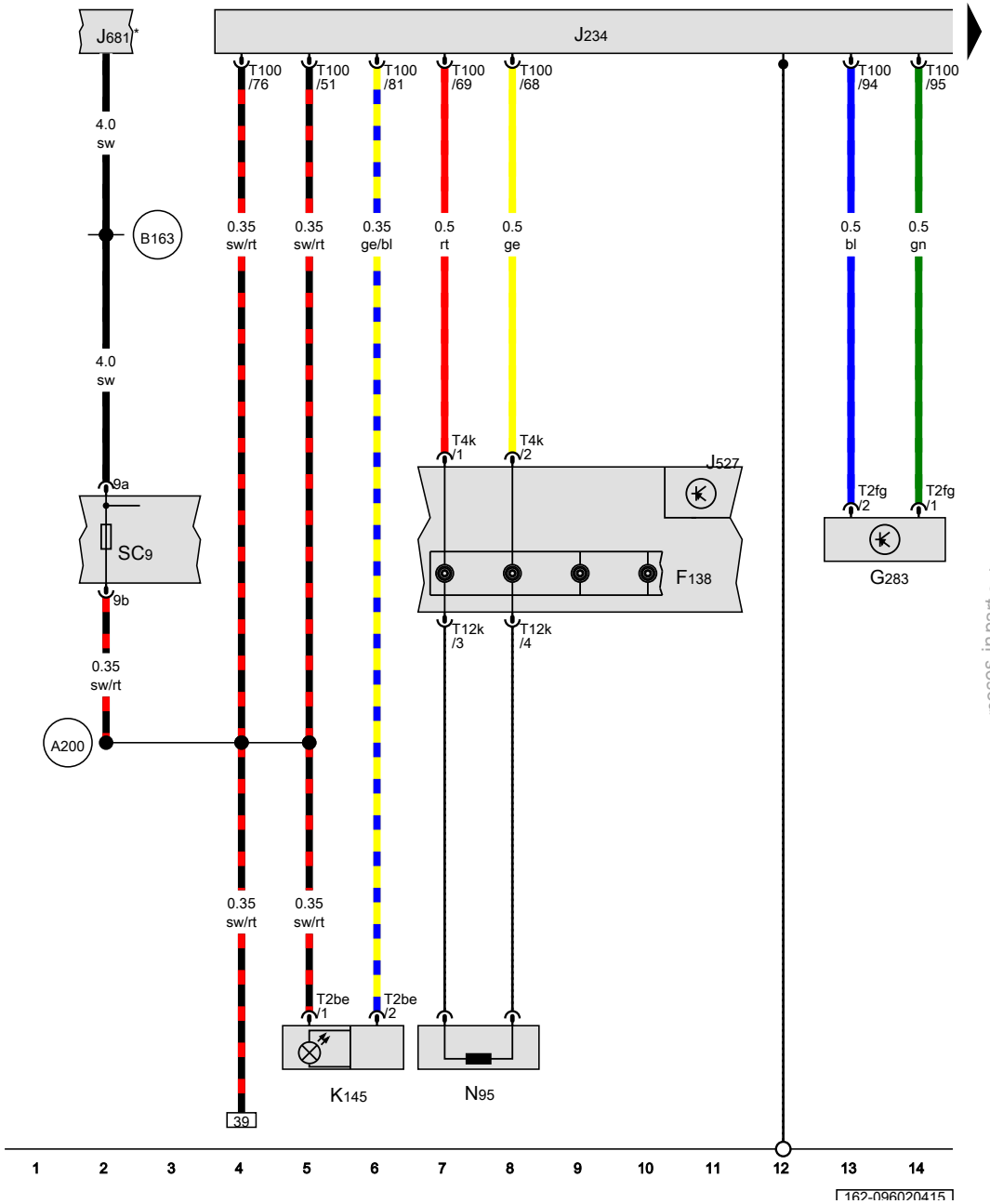

Airbag spiral spring/return spring with slip ring, Driver front airbag crash sensor, Airbag control module, Steering column electronics control module, Front passenger airbag -disabled- indicator lamp, Driver airbag igniter

F138	Airbag spiral spring/return spring with slip ring
G283	Driver front airbag crash sensor
J234	Airbag control module
J527	Steering column electronics control module
J681	Terminal 15 power supply relay 2
K145	Front passenger airbag -disabled- indicator lamp
N95	Driver airbag igniter
SC9	Fuse 9 (on fuse panel C)
T2be	Double connector
T2fg	Double connector
T4k	4-pin connector
T9f	9-pin connector
T12k	12-pin connector
T100	100-pin connector
A200	Positive connection 5 (15a) (in instrument panel wiring harness)
B163	Positive connection 1 (15) (in interior wiring harness)
*	Refer to applicable standard equipment wiring diagram

ws	=	white
sw	=	black
ro	=	red
rt	=	red
br	=	brown
gn	=	green
bl	=	blue
gr	=	grey
li	=	lilac
vi	=	lilac
ge	=	yellow
or	=	orange
rs	=	pink

Protected by copyright. Copying for private or commercial purposes, in part or in whole, is not permitted unless authorised by Volkswagen AG. Volkswagen AG does not guarantee or accept any liability with respect to the correctness of information in this document. Copyright by Volkswagen AG.

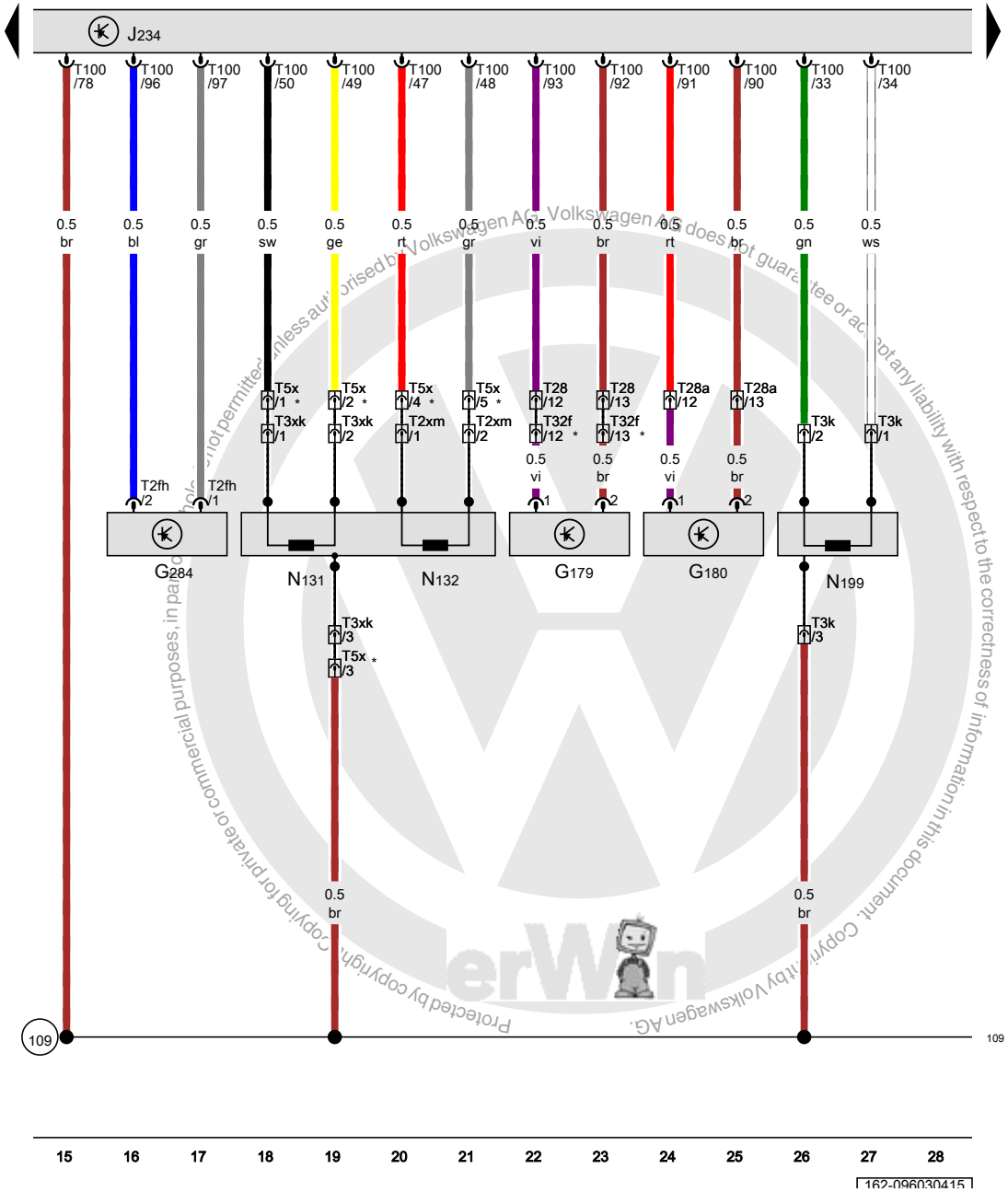

Driver side airbag crash sensor, Front passenger side airbag crash sensor, Passenger side front airbag crash sensor, Airbag control module, Front passenger airbag igniter 1, Front passenger airbag igniter 2

G179	Driver side airbag crash sensor
G180	Front passenger side airbag crash sensor
G284	Passenger side front airbag crash sensor
J234	Airbag control module
N131	Front passenger airbag igniter 1
N132	Front passenger airbag igniter 2
N199	Driver thorax airbag igniter
T2fh	Double connector
T2xm	Double connector
T3k	3-pin connector, under the driver seat
T3xk	3-pin connector
T5x	5-pin connector
T28	28-pin connector
T28a	28-pin connector
T32f	32-pin connector
T100	100-pin connector
109	Ground connection (in airbag wiring harness)
*	Depending on equipment

ws	=	white
sw	=	black
ro	=	red
rt	=	red
br	=	brown
gn	=	green
bl	=	blue
gr	=	grey
li	=	lilac
vi	=	lilac
ge	=	yellow
or	=	orange
rs	=	pink

Protected by copyright. Copying for private or commercial purposes, in part or in whole, is not permitted unless authorised by Volkswagen AG. Volkswagen AG does not guarantee or accept any liability with respect to the correctness of information in this document. Copyright by Volkswagen AG.

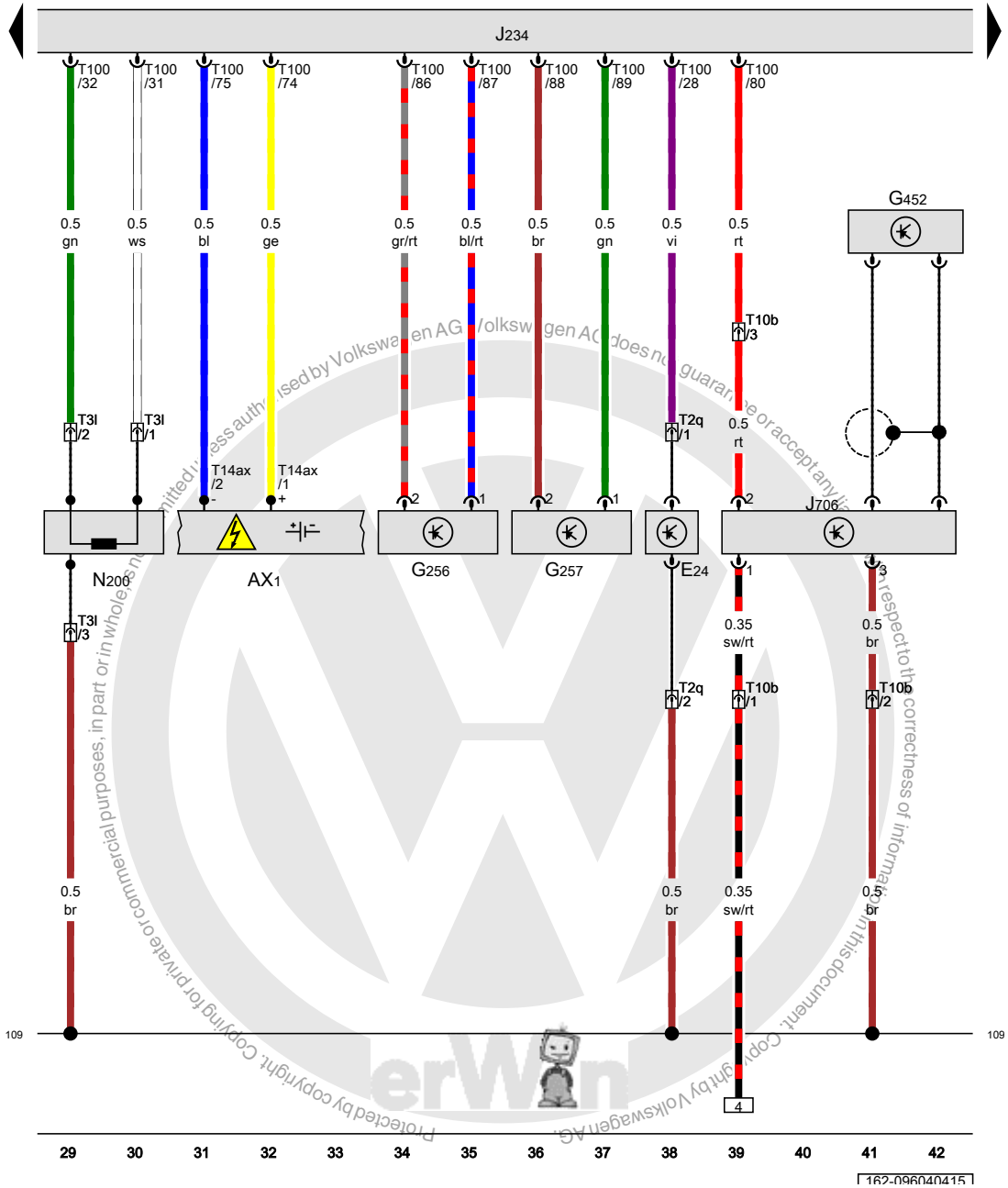

Hybrid battery unit, Driver seat belt switch, Driver side rear side airbag crash sensor, Passenger side rear side airbag crash sensor, Passenger occupant detection system pressure sensor, Airbag control module, Passenger occupant detection system control module, Front passenger thorax airbag igniter

AX1	Hybrid battery unit
E24	Driver seat belt switch
G256	Driver side rear side airbag crash sensor
G257	Passenger side rear side airbag crash sensor
G452	Passenger occupant detection system pressure sensor
J234	Airbag control module
J706	Passenger occupant detection system control module
N200	Front passenger thorax airbag igniter
T2q	Double connector, under the driver seat
T3l	3-pin connector, under the front passenger seat
T10b	10-pin connector
T14ax	14-pin connector
T100	100-pin connector
109	Ground connection (in airbag wiring harness)

ws	=	white
sw	=	black
ro	=	red
rt	=	red
br	=	brown
gn	=	green
bl	=	blue
gr	=	grey
li	=	lilac
vi	=	lilac
ge	=	yellow
or	=	orange
rs	=	pink

Protected by copyright. Copying for private or commercial purposes, in part or in whole, is not permitted unless authorised by Volkswagen AG. Volkswagen AG does not guarantee or accept any liability with respect to the correctness of information in this document. Copyright by Volkswagen AG.

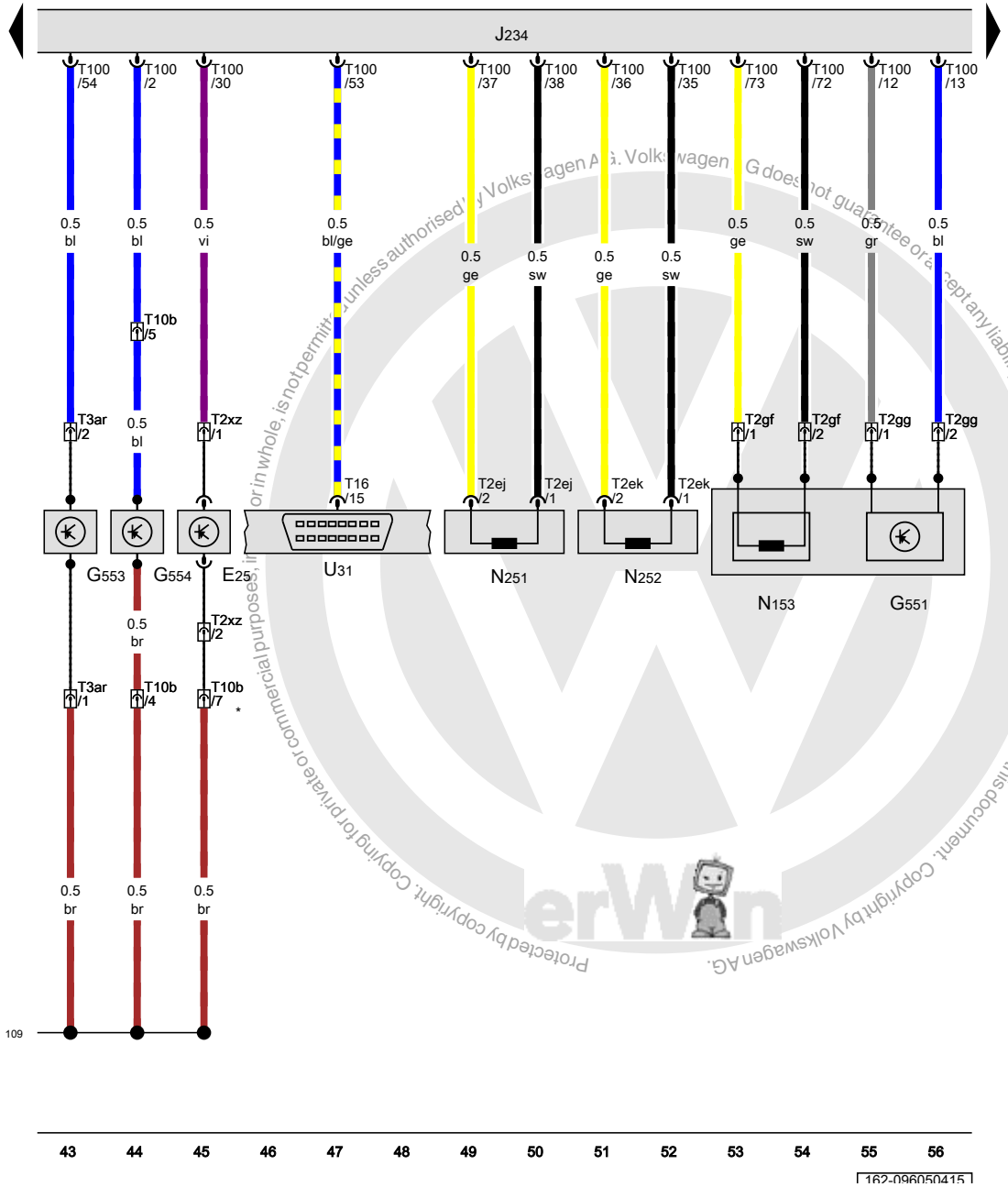

Front passenger seat belt switch, Driver belt force limiter, Driver seat position sensor, Front passenger seat position sensor, Airbag control module, Driver seat belt tensioner igniter 1, Driver head curtain airbag igniter, Front passenger head curtain airbag igniter

E25	Front passenger seat belt switch
G551	Driver belt force limiter
G553	Driver seat position sensor
G554	Front passenger seat position sensor
J234	Airbag control module
N153	Driver seat belt tensioner igniter 1
N251	Driver head curtain airbag igniter
N252	Front passenger head curtain airbag igniter
T2ej	Double connector
T2ek	Double connector
T2gf	Double connector
T2gg	Double connector
T2xz	Double connector, under the front passenger seat
T3ar	3-pin connector
T10b	10-pin connector
T16	16-pin connector
T100	100-pin connector
U31	Diagnostic connection
(109)	Ground connection (in airbag wiring harness)
*	Depending on equipment

ws	=	white
sw	=	black
ro	=	red
rt	=	red
br	=	brown
gn	=	green
bl	=	blue
gr	=	grey
li	=	lilac
vi	=	lilac
ge	=	yellow
or	=	orange
rs	=	pink

Protected by copyright. Copying for private or commercial purposes, in whole or in part, is not permitted unless authorised by Volkswagen AG. Volkswagen AG does not guarantee or accept any liability with respect to the correctness of information in this document. Copyright by Volkswagen AG.

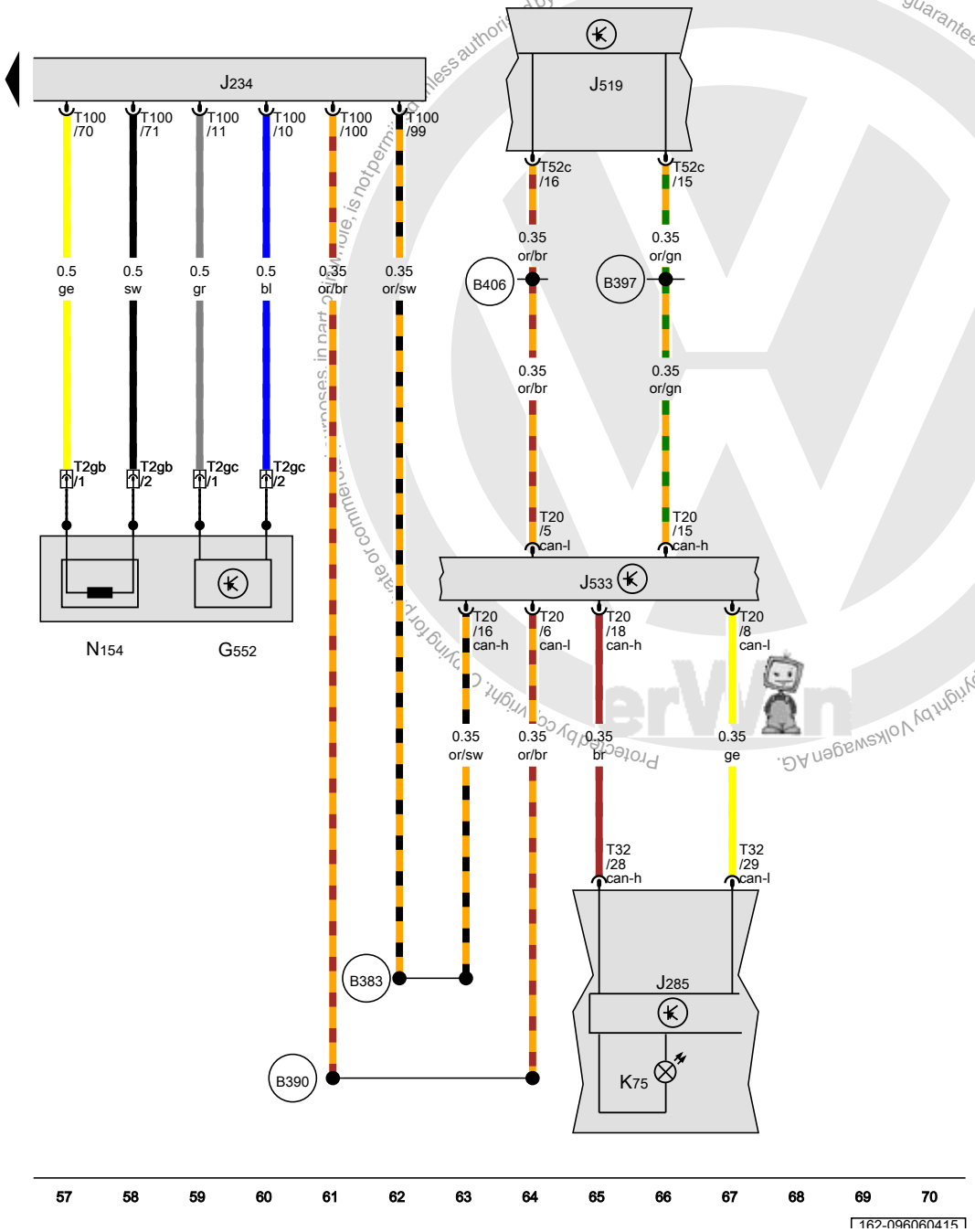

Front passenger belt force limiter, Airbag control module, Instrument cluster control module, Vehicle electrical control module system, Data bus on board diagnostic interface, Airbag indicator lamp

G552	Front passenger belt force limiter
J234	Airbag control module
J285	Instrument cluster control module
J519	Vehicle electrical control module system
J533	Data bus on board diagnostic interface
K75	Airbag indicator lamp
N154	Front passenger seat belt tensioner igniter 1
T2gb	Double connector
T2gc	Double connector
T20	20-pin connector
T32	32-pin connector
T52c	52-pin connector
T100	100-pin connector
B383	Powertrain CAN bus high connection 1 (in main wiring harness)
B390	Powertrain CAN bus low connection 1 (in main wiring harness)
B397	Comfort system CAN bus high connection 1 (in main wiring harness)
B406	Comfort system CAN bus low connection 1 (in main wiring harness)

ws	=	white
sw	=	black
ro	=	red
rt	=	red
br	=	brown
gn	=	green
bl	=	blue
gr	=	grey
li	=	lilac
vi	=	lilac
ge	=	yellow
or	=	orange
rs	=	pink

Copyright by Volkswagen AG. Volkswagen AG does not guarantee or accept any liability with respect to the correctness of information in this document. Copyright by Volkswagen AG. Protected by copyright. Copying for private or commercial purposes, in part or whole, is not permitted unless authorised by Volkswagen AG.

Headlamps Bixenon HID with range control, cornering lamp, LED daytime running lamps , (8IM)

from June 2012

Protected by copyright. Copying for private or commercial purposes, in part or in whole, is not permitted unless authorised by Volkswagen AG. Volkswagen AG does not guarantee or accept any liability with respect to the correctness of information in this document. Copyright by Volkswagen AG.

Vehicle electrical control module system, Terminal 15 power supply relay 2, Left front fog lamp bulb, Left stationary cornering lamp, Fuse panel B, Fuse panel C

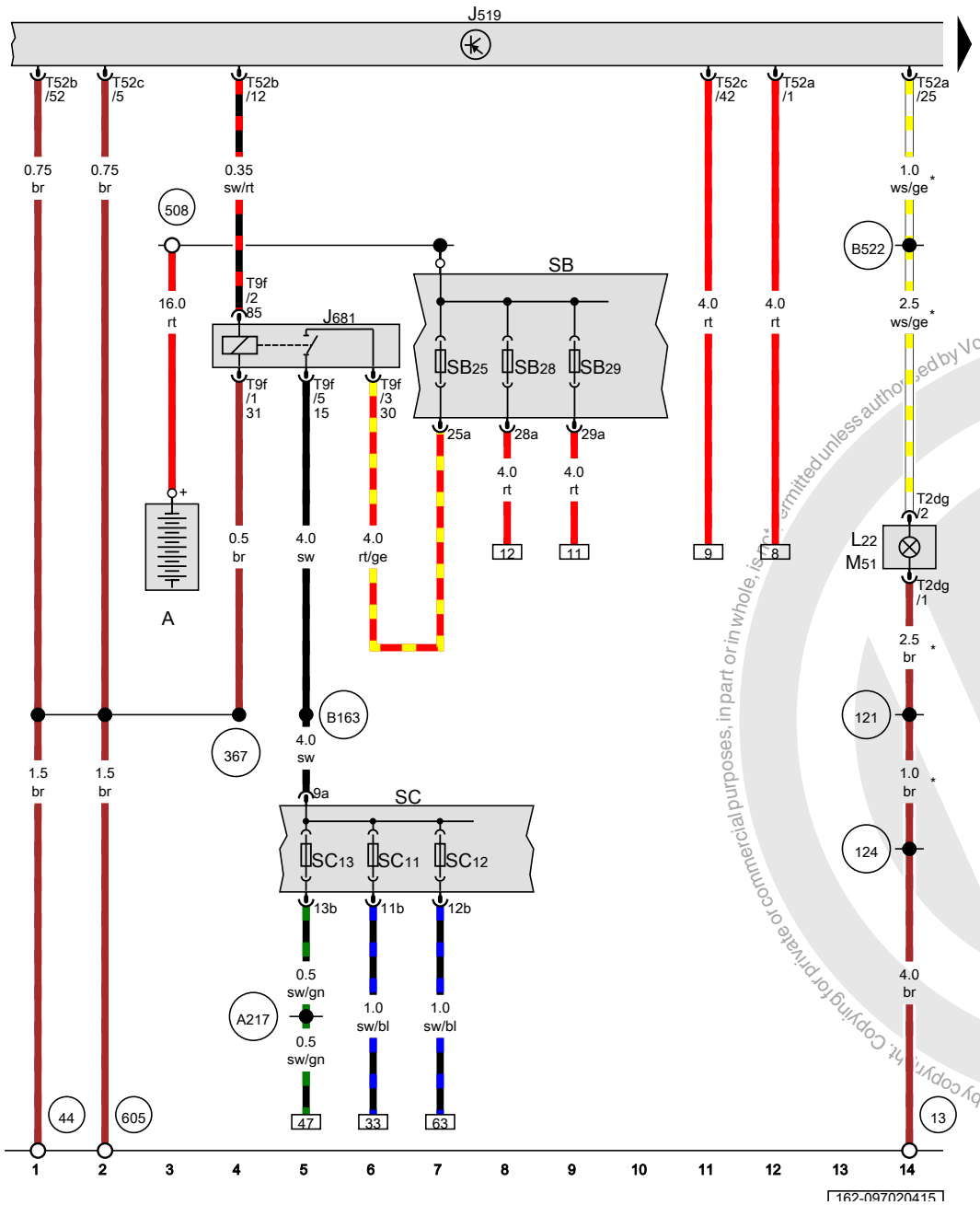

ws	=	white
sw	=	black
ro	=	red
rt	=	red
br	=	brown
gn	=	green
bl	=	blue
gr	=	grey
li	=	lilac
vi	=	lilac
ge	=	yellow
or	=	orange
rs	=	pink

A	Battery
J519	Vehicle electrical control module system
J681	Terminal 15 power supply relay 2
L22	Left front fog lamp bulb
M51	Left stationary cornering lamp
SB	Fuse panel B
SC11	Fuse 11 (on fuse panel C)
SC12	Fuse 12 (on fuse panel C)
SC13	Fuse 13 (on fuse panel C)
SB25	Fuse 25 (on fuse panel B)
SB28	Fuse 28 (on fuse panel B)
SB29	Fuse 29 (on fuse panel B)
SC	Fuse panel C
T2dg	Double connector
T9f	9-pin connector
T52a	52-pin connector
T52b	52-pin connector
T52c	52-pin connector
13	Ground connection in engine compartment, right
44	Ground connection on A-pillar, lower left
121	Ground connection 2 (in right front wiring harness)
124	Ground connection (in right engine compartment wiring harness)
367	Ground connection 2 (in main wiring harness)
508	Terminal 30 threaded connection (on E-box)
605	Ground connection on upper steering column
A217	Positive connection 8 (15a) (in instrument panel wiring harness)
B163	Positive connection 1 (15) (in interior wiring harness)
B522	Fog lamp connection (in main wiring harness)
*	Only for vehicles with fog lamps

Protected by copyright. Copying for private or commercial purposes, in part or in whole, is not permitted unless authorised by Volkswagen AG. Volkswagen AG does not guarantee or accept any liability with respect to the correctness of information in this document. Copyright by Volkswagen AG.

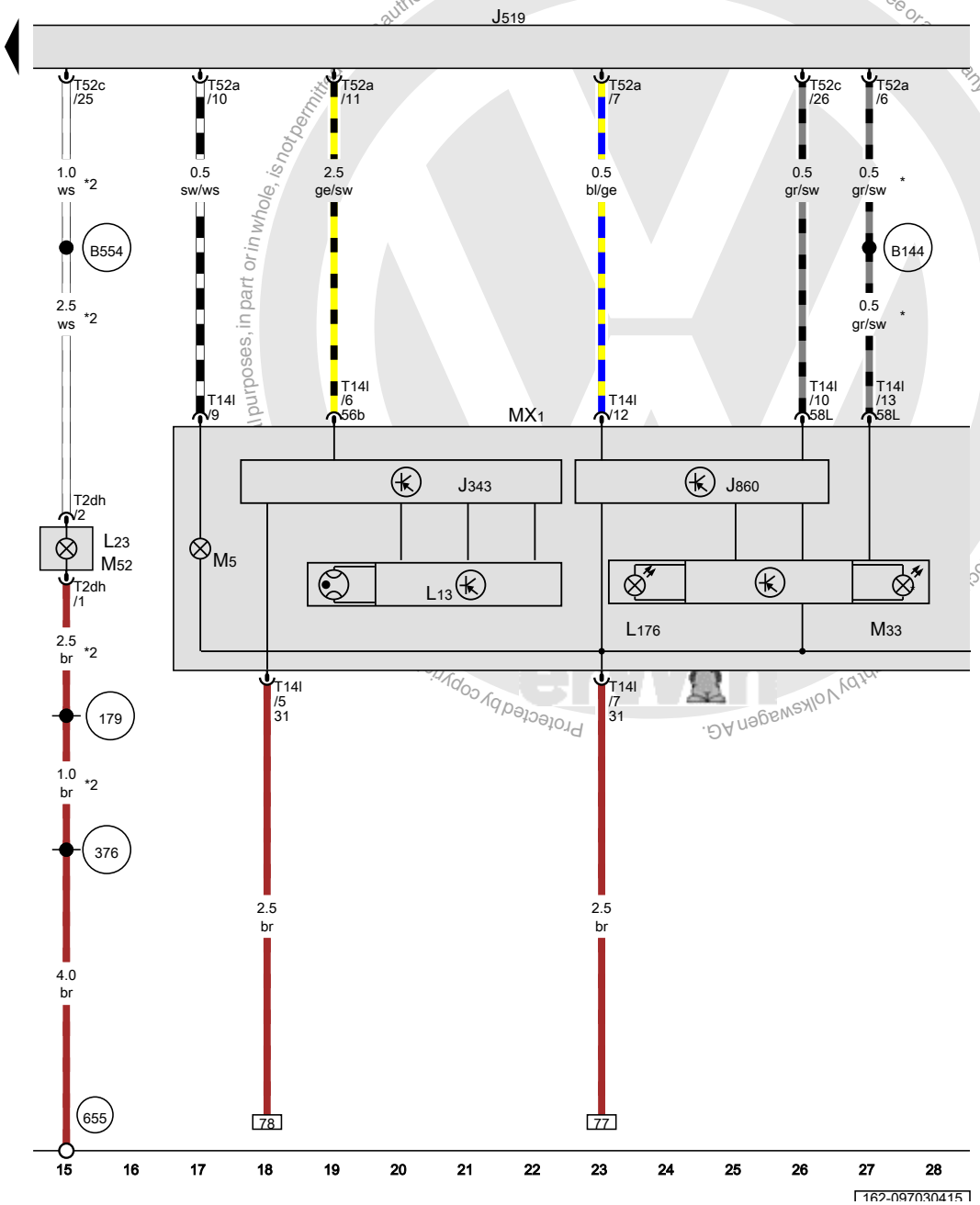

Left HID headlamp control module, Vehicle electrical control module system, Left HID headlamp bulb, Right front fog lamp bulb, Left daytime running lamp and position lamp LED module, Left front turn signal bulb, Right stationary cornering lamp

J343	Left HID headlamp control module, on the left headlamp
J519	Vehicle electrical control module system
J860	Left daytime running lamp and position lamp control module, on the left headlamp, in the left headlamp, in the left headlamp
L13	Left HID headlamp bulb
L23	Right front fog lamp bulb
L176	Left daytime running lamp and position lamp LED module
MX1	Left front headlamp
M5	Left front turn signal bulb
M33	Left front side marker lamp bulb
M52	Right stationary cornering lamp
T2dh	Double connector
T14l	14-pin connector
T52a	52-pin connector
T52c	52-pin connector
179	Ground connection (in left headlamp wiring harness)
376	Ground connection 11 (in main wiring harness)
655	Ground connection on left headlamp
B144	Positive connection (58L) (in interior wiring harness)
B554	Fog lamp connection (in main wiring harness)
*	USA only
*2	Only for vehicles with fog lamps

ws	=	white
sw	=	black
ro	=	red
rt	=	red
br	=	brown
gn	=	green
bl	=	blue
gr	=	grey
li	=	lilac
vi	=	lilac
ge	=	yellow
or	=	orange
rs	=	pink

authorised by Volkswagen AG. Volkswagen AG does not guarantee or ... any liability with respect to the correctness of information in this ... purposes, in part or in whole, is not permitted ... Protected by copyright by Volkswagen AG.

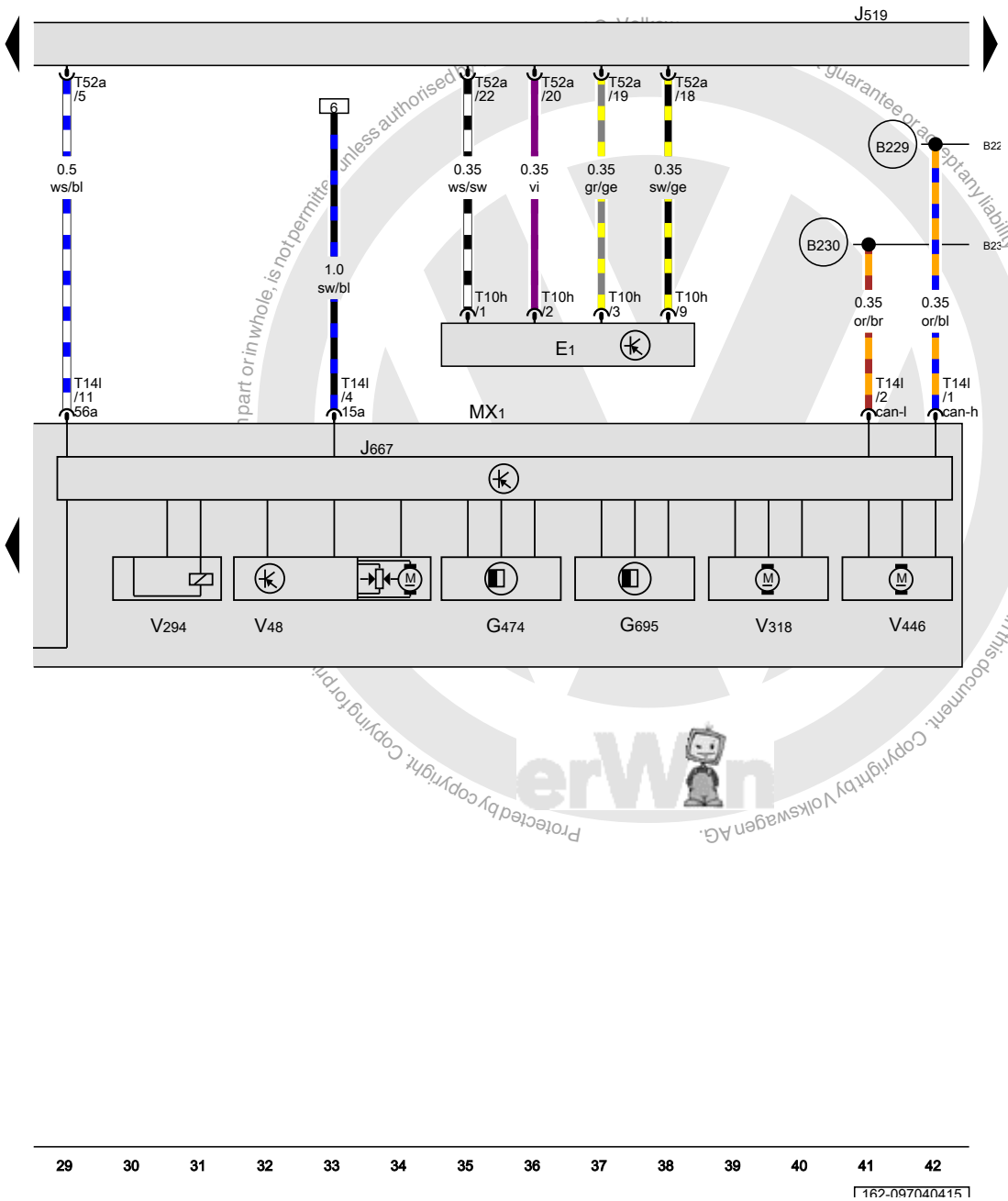

Vehicle electrical control module system, Left headlamp power output module, Left headlamp beam adjustment motor, Left low beam headlamp reflector motor, Left adaptive cornering lamp motor

E1	Light switch
G474	Left swivel module position sensor
G695	Sensor for left variable headlamp positioning motor
J519	Vehicle electrical control module system
J667	Left headlamp power output module, on the left headlamp
MX1	Left front headlamp
T10h	10-pin connector
T14l	14-pin connector
T52a	52-pin connector
V48	Left headlamp beam adjustment motor
V294	Left low beam headlamp reflector motor
V318	Left adaptive cornering lamp motor
V446	Left variable headlamp positioning motor
B229	High bus connection (in interior wiring harness)
B230	Low bus connection (in interior wiring harness)

ws	=	white
sw	=	black
ro	=	red
rt	=	red
br	=	brown
gn	=	green
bl	=	blue
gr	=	grey
li	=	lilac
vi	=	lilac
ge	=	yellow
or	=	orange
rs	=	pink

Protected by copyright. Copying for private or commercial purposes, in part or in whole, is not permitted unless authorised by Volkswagen AG. Volkswagen AG does not guarantee or accept any liability with respect to the correctness of information in this document. Copyright by Volkswagen AG.

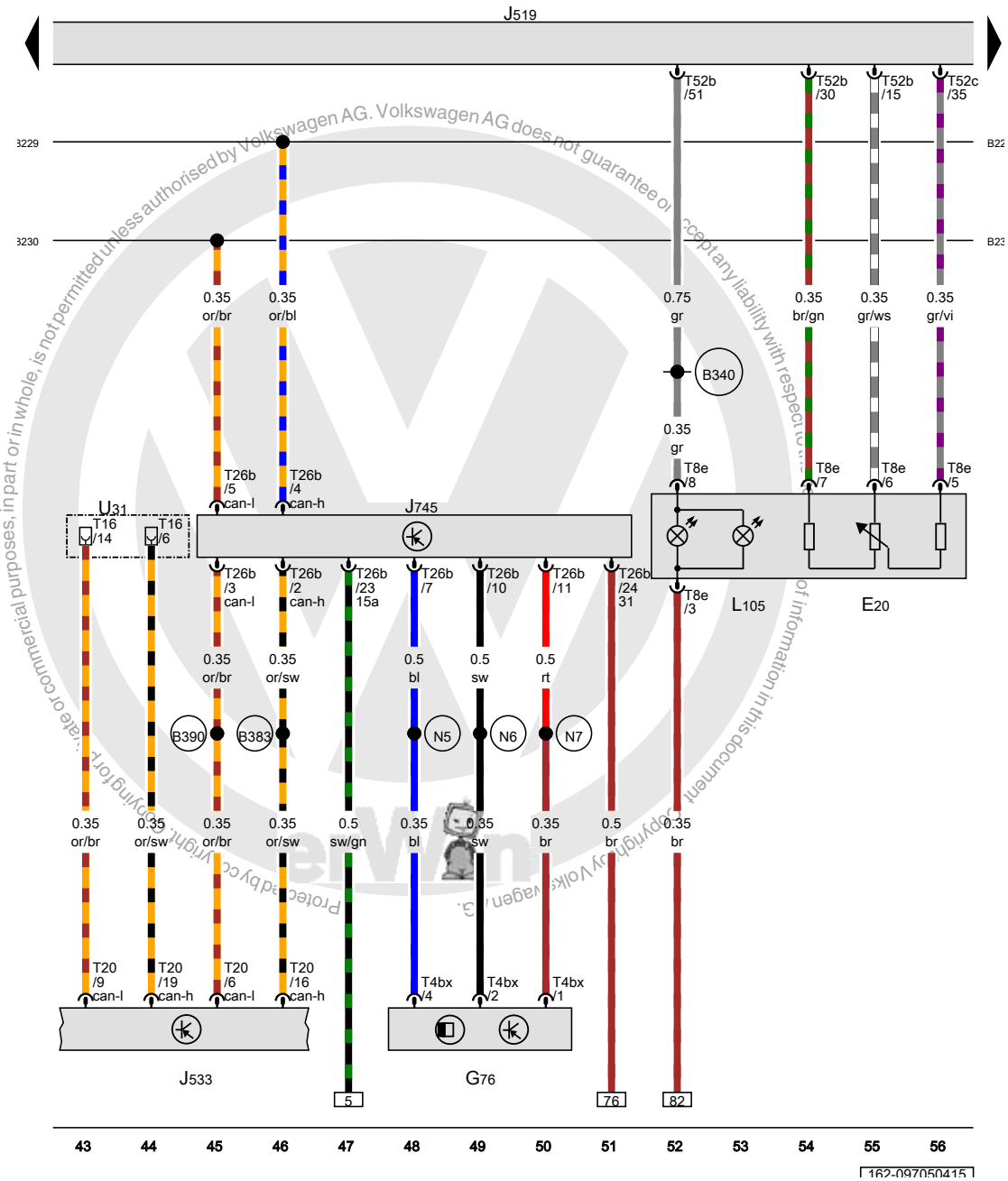

Protected by copyright. Copying for private or commercial purposes, in part or in whole, is not permitted unless authorised by Volkswagen AG. Volkswagen AG does not guarantee or accept any liability with respect to the correctness of information in this document. Copyright by Volkswagen AG.

Left rear level control system sensor, Vehicle electrical control module system, Data bus on board diagnostic interface, Cornering lamp and headlamp range control module, Lighting control illumination bulb

E20	Instrument panel and switch illumination dimmer switch
G76	Left rear level control system sensor
J519	Vehicle electrical control module system
J533	Data bus on board diagnostic interface, in the left footwell, near the center console
J745	Cornering lamp and headlamp range control module, on the right glove compartment
L105	Lighting control illumination bulb
T4bx	4-pin connector
T8e	8-pin connector
T16	16-pin connector
T20	20-pin connector
T26b	26-pin connector
T52b	52-pin connector
T52c	52-pin connector
U31	Diagnostic connection
B229	High bus connection (in interior wiring harness)
B230	Low bus connection (in interior wiring harness)
B340	Connection 58d (in main wiring harness) 1
B383	Powertrain CAN bus high connection 1 (in main wiring harness)
B390	Powertrain CAN bus low connection 1 (in main wiring harness)
N5	Connection 4 (in headlamp range control wiring harness)
N6	Connection 5 (in headlamp range control wiring harness)
N7	Connection 6 (in headlamp range control wiring harness)

ws	=	white
sw	=	black
ro	=	red
rt	=	red
br	=	brown
gn	=	green
bl	=	blue
gr	=	grey
li	=	lilac
vi	=	lilac
ge	=	yellow
or	=	orange
rs	=	pink

Vehicle electrical control module system, Right headlamp power output module, Right headlamp beam adjustment motor, Right low beam headlamp reflector motor, Right adaptive cornering lamp motor

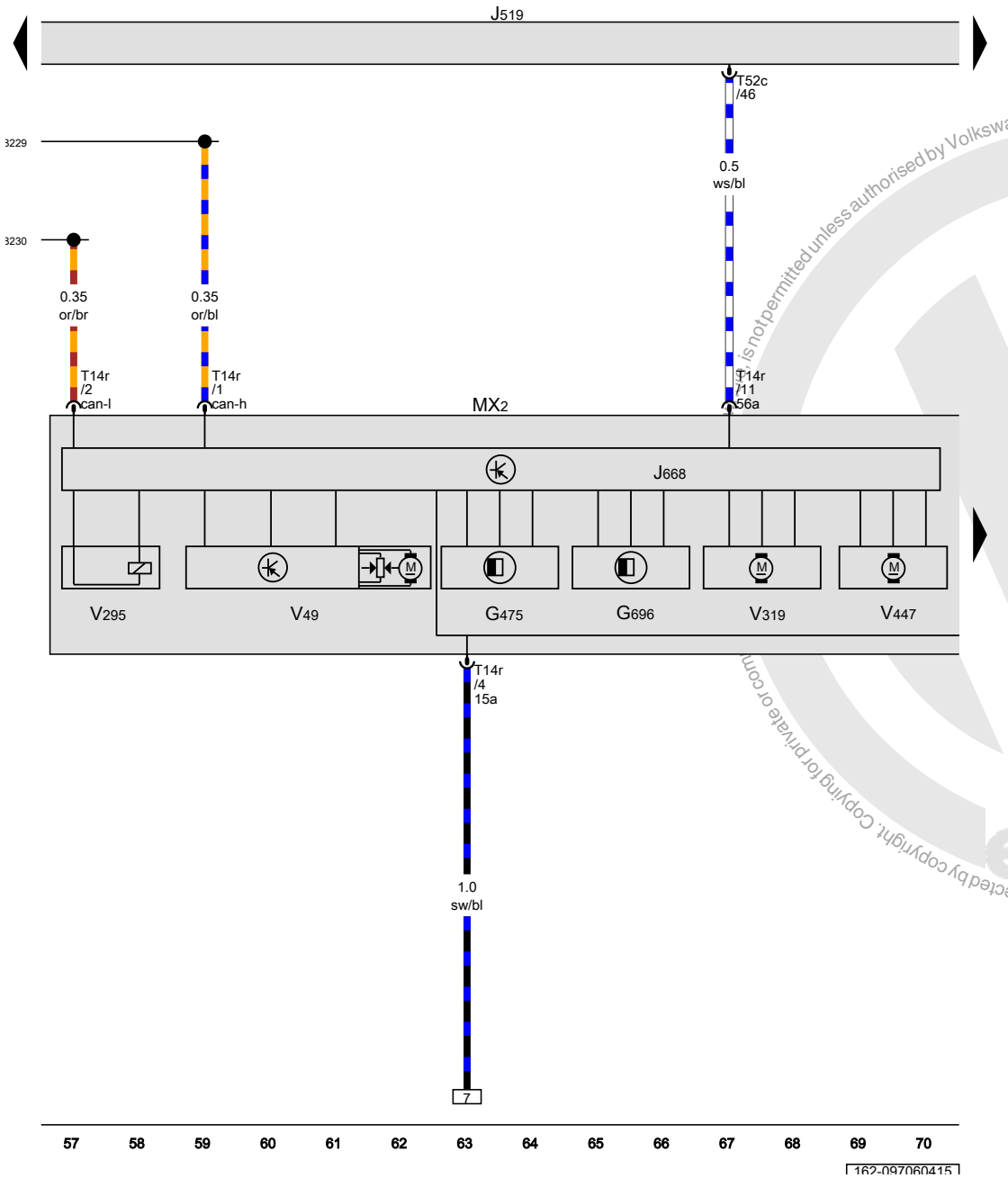

G475	Right swivel module position sensor
G696	Sensor for right variable headlamp positioning motor
J519	Vehicle electrical control module system
J668	Right headlamp power output module, on the left headlamp, on the right headlamp
MX2	Right front headlamp
T14r	14-pin connector
T52c	52-pin connector
V49	Right headlamp beam adjustment motor
V295	Right low beam headlamp reflector motor
V319	Right adaptive cornering lamp motor
V447	Right variable headlamp positioning motor
B229	High bus connection (in interior wiring harness)
B230	Low bus connection (in interior wiring harness)

ws	=	white
sw	=	black
ro	=	red
rt	=	red
br	=	brown
gn	=	green
bl	=	blue
gr	=	grey
li	=	lilac
vi	=	lilac
ge	=	yellow
or	=	orange
rs	=	pink

Protected by copyright. Copying for private or commercial purposes, in part or in whole, is not permitted unless authorised by Volkswagen AG. Volkswagen AG does not make any representation or warranty with respect to the correctness of information in this document. Copyright by Volkswagen AG.

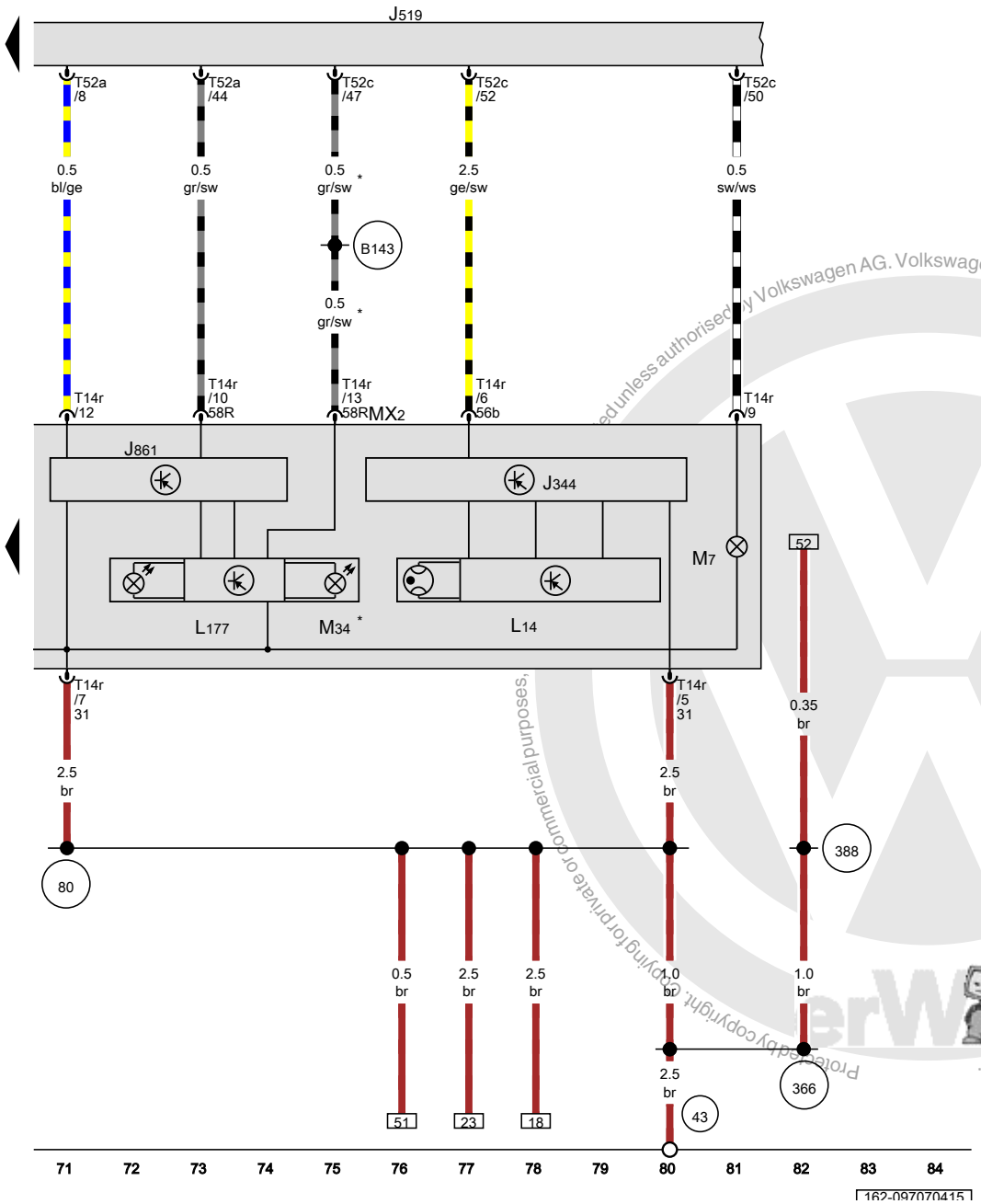

Right HID headlamp control module, Vehicle electrical control module system, Right HID headlamp bulb, Right daytime running lamp and position lamp LED module, Right front turn signal bulb

J344	Right HID headlamp control module, on the left headlamp, on the right headlamp
J519	Vehicle electrical control module system
J861	Right daytime running lamp and position lamp control module, on the left headlamp, in the left headlamp, in the left headlamp, in the right headlamp
L14	Right HID headlamp bulb
L177	Right daytime running lamp and position lamp LED module
MX2	Right front headlamp
M7	Right front turn signal bulb
M34	Right front side marker lamp bulb
T14r	14-pin connector
T52a	52-pin connector
T52c	52-pin connector
43	Ground connection on A-pillar, lower right
80	Ground connection 1 (in instrument cluster wiring harness)
366	Ground connection 1 (in main wiring harness)
388	Ground connection 23 (in main wiring harness)
B143	Positive connection (58R) (in interior wiring harness)
*	USA only

ws	=	white
sw	=	black
ro	=	red
rt	=	red
br	=	brown
gn	=	green
bl	=	blue
gr	=	grey
li	=	lilac
vi	=	lilac
ge	=	yellow
or	=	orange
rs	=	pink

Protected by copyright. Copying for private or commercial purposes, unless authorised by Volkswagen AG. Volkswagen AG does not guarantee or accept any liability with respect to the correctness of information in this document. Copyright by Volkswagen AG.

Rearview camera (Rear Assist) , (KA1)

from June 2012

Protected by copyright. Copying for private or commercial purposes, in part or in whole, is not permitted unless authorised by Volkswagen AG. Volkswagen AG does not guarantee or accept any liability with respect to the correctness of information in this document. Copyright by Volkswagen AG.

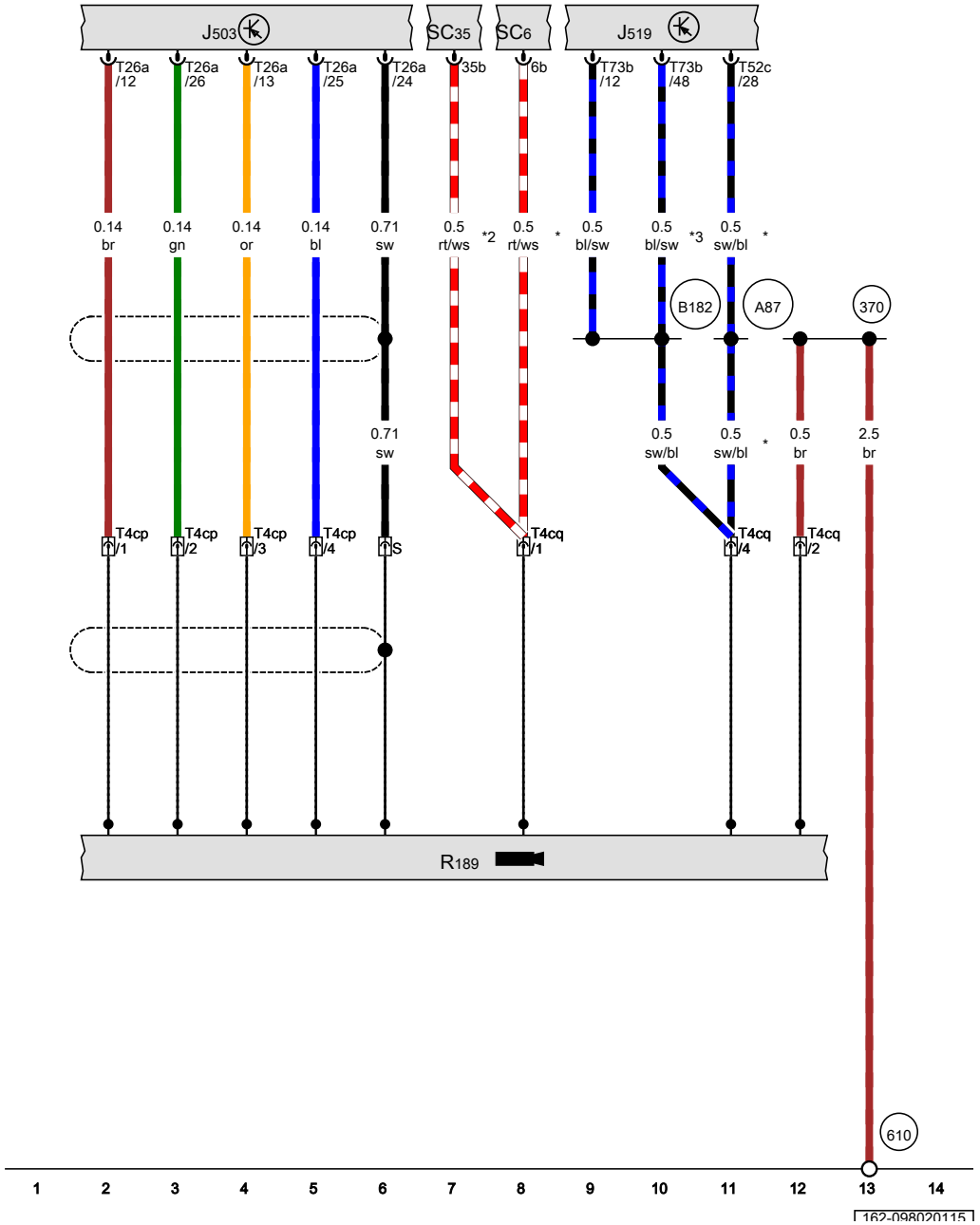

Radio/navigation display unit control module, Rearview camera

J503	Radio/navigation display unit control module
J519	Vehicle electrical control module system
R189	Rearview camera
SC6	Fuse 6 (on fuse panel C)
SC35	Fuse 35 (on fuse panel C)
T4	4-pin connector
T4cp	4-pin connector
T4cq	4-pin connector
T26a	26-pin connector
T52c	52-pin connector
T73b	73-pin connector
370	Ground connection 5 (in main wiring harness)
610	Audio ground connection under front center console
A87	Back-up lamp connection (in instrument panel wiring harness)
B182	Connection RF (in interior wiring harness)
*	only for vehicles with High equipment (AW1)
*2	only for vehicles with Low equipment (AW0)
*3	Only for vehicles with a manual transmission

ws	=	white
sw	=	black
ro	=	red
rt	=	red
br	=	brown
gn	=	green
bl	=	blue
gr	=	grey
li	=	lilac
vi	=	lilac
ge	=	yellow
or	=	orange
rs	=	pink

Protected by copyright. Copying for private or commercial purposes, in part or in whole, is not permitted unless authorised by Volkswagen AG. Volkswagen AG does not guarantee or accept any liability with respect to the correctness of information in this document. Copyright by Volkswagen AG.

Automatic transmission - DSG 0AM , (0K1)

from June 2012

Protected by copyright. Copying for private or commercial purposes, in part or in whole, is not permitted unless authorised by Volkswagen AG. Volkswagen AG does not guarantee or accept any liability with respect to the correctness of information in this document. Copyright by Volkswagen AG.

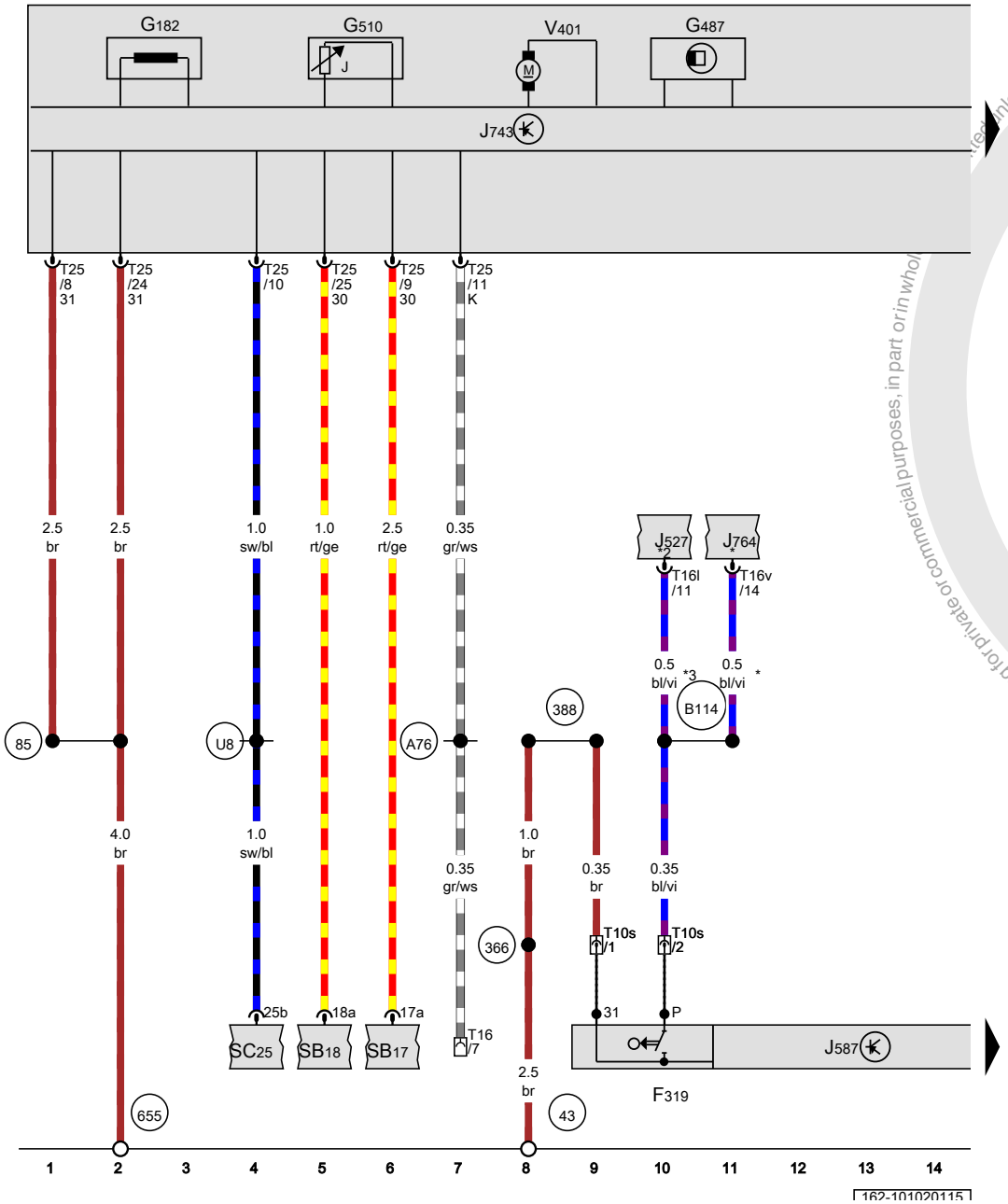

Selector lever sensor system control module, DSG transmission Mechatronic

F319	Selector lever park position lock switch
G182	Transmission input speed sensor
G487	Gear position distance sensor 1
G510	Temperature sensor in control module
J527	Steering column electronics control module
J587	Selector lever sensor system control module
J743	DSG transmission Mechatronic
J764	Electronic steering column lock control module
SB17	Fuse 17 (on fuse panel B)
SB18	Fuse 18 (on fuse panel B)
SC25	Fuse 25 (on fuse panel C)
T10s	10-pin connector, under the selector lever
T16	16-pin connector, on the diagnostic connector
T16l	16-pin connector
T16v	16-pin connector
T25	25-pin connector
V401	Hydraulic pump motor
43	Ground connection on A-pillar, lower right
85	Ground connection 1 (in engine compartment wiring harness)
366	Ground connection 1 (in main wiring harness)
388	Ground connection 23 (in main wiring harness)
655	Ground connection on left headlamp
A76	KS-diagnostic lead connection (in instrument panel wiring harness)
B114	Lock switch connection (in interior wiring harness)
U8	Positive connection (15a) (in automatic transmission wiring harness)
*	only for vehicles with access/start authorization system
*2	Depending on equipment
*3	Only for vehicles without access/start authorization system

ws	=	white
sw	=	black
ro	=	red
rt	=	red
br	=	brown
gn	=	green
bl	=	blue
gr	=	grey
li	=	lilac
vi	=	lilac
ge	=	yellow
or	=	orange
rs	=	pink

Protected by copyright. Copying for private or commercial purposes, in part or in whole, is not permitted unless authorised by Volkswagen AG. Volkswagen AG does not guarantee the correctness of information in this document, nor any liability with respect to the consequences of its use.

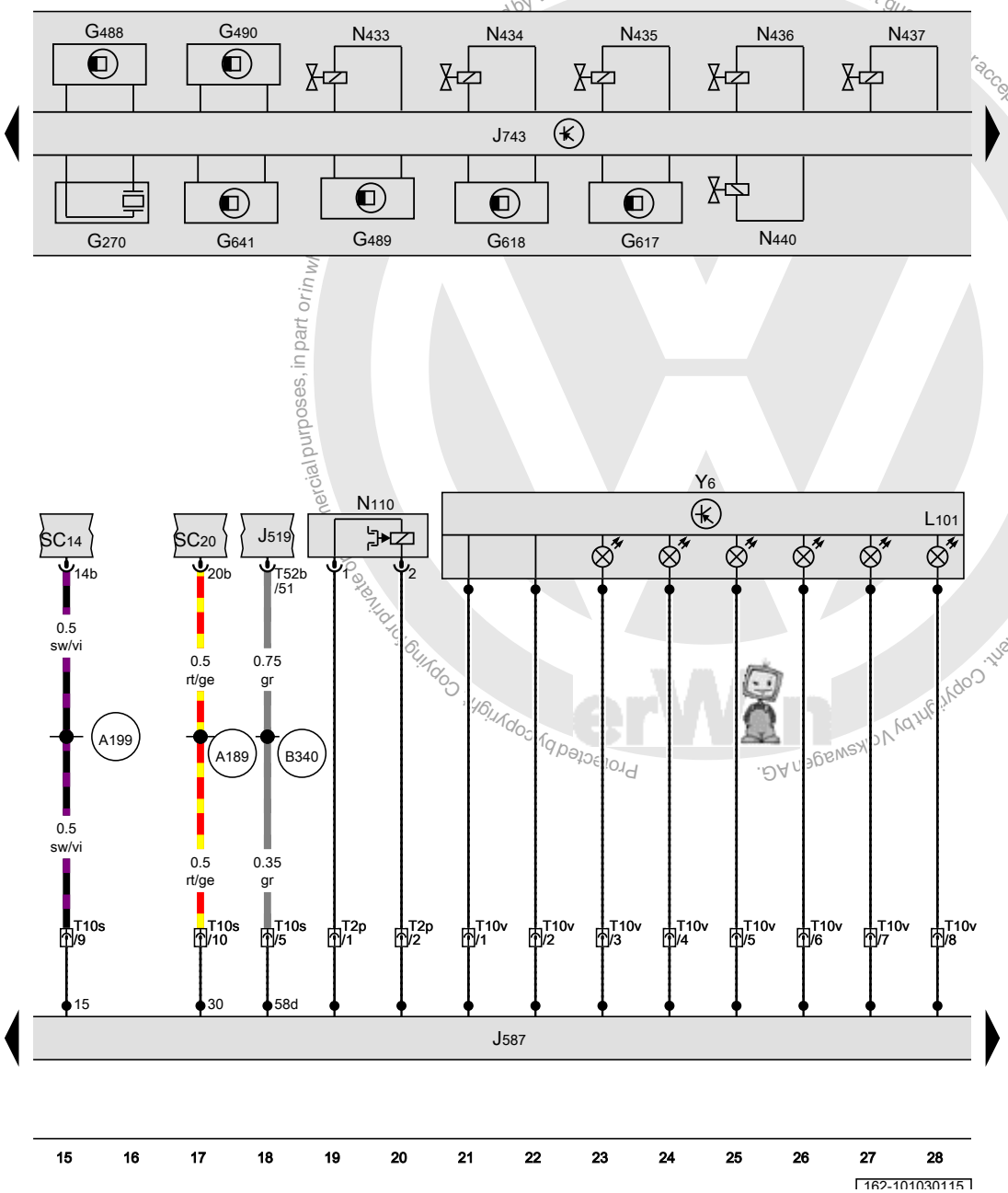

ws = white
sw = black
ro = red
rt = red
br = brown
gn = green
bl = blue
gr = grey
li = lilac
vi = lilac
ge = yellow
or = orange
rs = pink

Selector lever sensor system control module, DSG transmission Mechatronic, Selector lever scale illumination bulb, Transmission range display

G270	Hydraulic pressure sensor
G488	Gear position distance sensor 2
G489	Gear position distance sensor 3
G490	Gear position distance sensor 4
G617	Clutch pedal position sensor 1
G618	Clutch pedal position sensor 2
G641	Transmission input speed sensor 3
J519	Vehicle electrical control module system
J587	Selector lever sensor system control module
J743	DSG transmission Mechatronic
L101	Selector lever scale illumination bulb
N110	Shift lock solenoid
N433	Sub-transmission 1 valve 1
N434	Sub-transmission 1 valve 2
N435	Sub-transmission 1 valve 3
N436	Sub-transmission 1 valve 4
N437	Sub-transmission 2 valve 1
N440	Sub-transmission 2 valve 4
SC14	Fuse 14 (on fuse panel C)
SC20	Fuse 20 (on fuse panel C)
T2p	Double connector
T10s	10-pin connector, under the selector lever
T10v	10-pin connector
T52b	52-pin connector
Y6	Transmission range display
A189	Positive connection 5 (30a) (in instrument panel wiring harness)
A199	Positive connection 4 (15a) (in instrument panel wiring harness)
B340	Connection 58d (in main wiring harness) 1

Copyright by Volkswagen AG. Volkswagen AG does not guarantee or accept any liability with respect to the correctness of information in this document. Copyright by Volkswagen AG. Protected by copyright. Copying for private or commercial purposes, in part or in whole, is not permitted.

Electric drive power and control electronics, Instrument cluster control module, Data bus on board diagnostic interface, Selector lever sensor system control module, Engine control module, DSG transmission Mechatronic

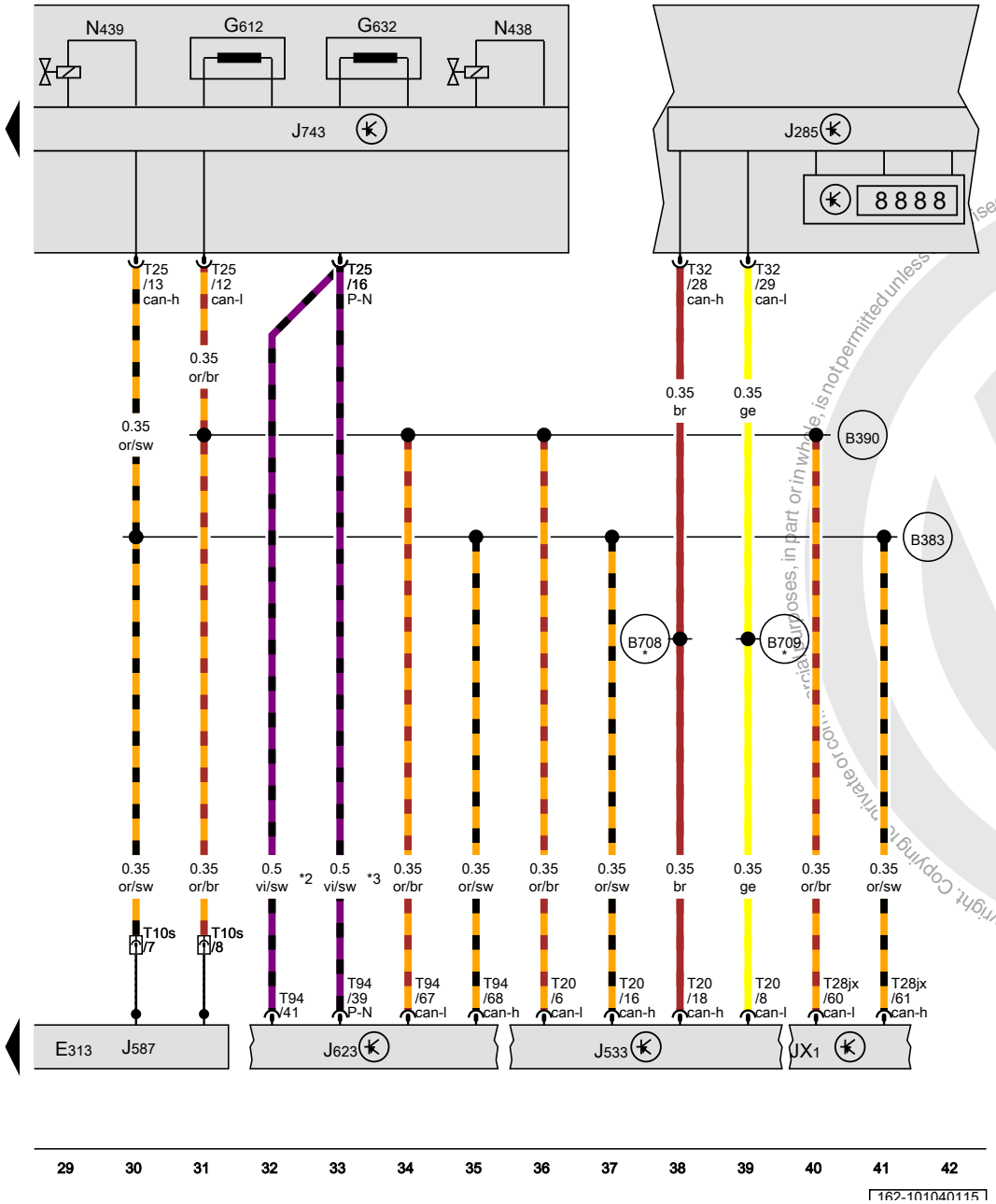

E313	Selector lever
G612	Transmission input speed sensor 2
G632	Transmission input speed sensor 1
JX1	Electric drive power and control electronics
J285	Instrument cluster control module
J533	Data bus on board diagnostic interface
J587	Selector lever sensor system control module
J623	Engine control module
J743	DSG transmission Mechatronic
N438	Sub-transmission 2 valve 2
N439	Sub-transmission 2 valve 3
T10s	10-pin connector, under the selector lever
T20	20-pin connector
T25	25-pin connector
T28jx	28-pin connector
T32	32-pin connector
T94	94-pin connector
B383	Powertrain CAN bus high connection 1 (in main wiring harness)
B390	Powertrain CAN bus low connection 1 (in main wiring harness)
B708	Instrument cluster CAN bus high connection 1 (in main wiring harness)
B709	Instrument cluster CAN bus low connection 1 (in main wiring harness)
*	from June 2013
*2	Only with emissions standard Euro 6
*3	USA only

ws	=	white
sw	=	black
ro	=	red
rt	=	red
br	=	brown
gn	=	green
bl	=	blue
gr	=	grey
li	=	lilac
vi	=	lilac
ge	=	yellow
or	=	orange
rs	=	pink

Protected by copyright. Copyright by Volkswagen AG. Copying for private or commercial purposes, in part or in whole, is not permitted unless authorised by Volkswagen AG. Volkswagen AG does not guarantee or assume any liability with respect to the correctness of information in this document.

Convenience system with manual rear windows , (4R8)

from June 2012

Protected by copyright. Copying for private or commercial purposes, in part or in whole, is not permitted unless authorised by Volkswagen AG. Volkswagen AG does not guarantee or accept any liability with respect to the correctness of information in this document. Copyright by Volkswagen AG.

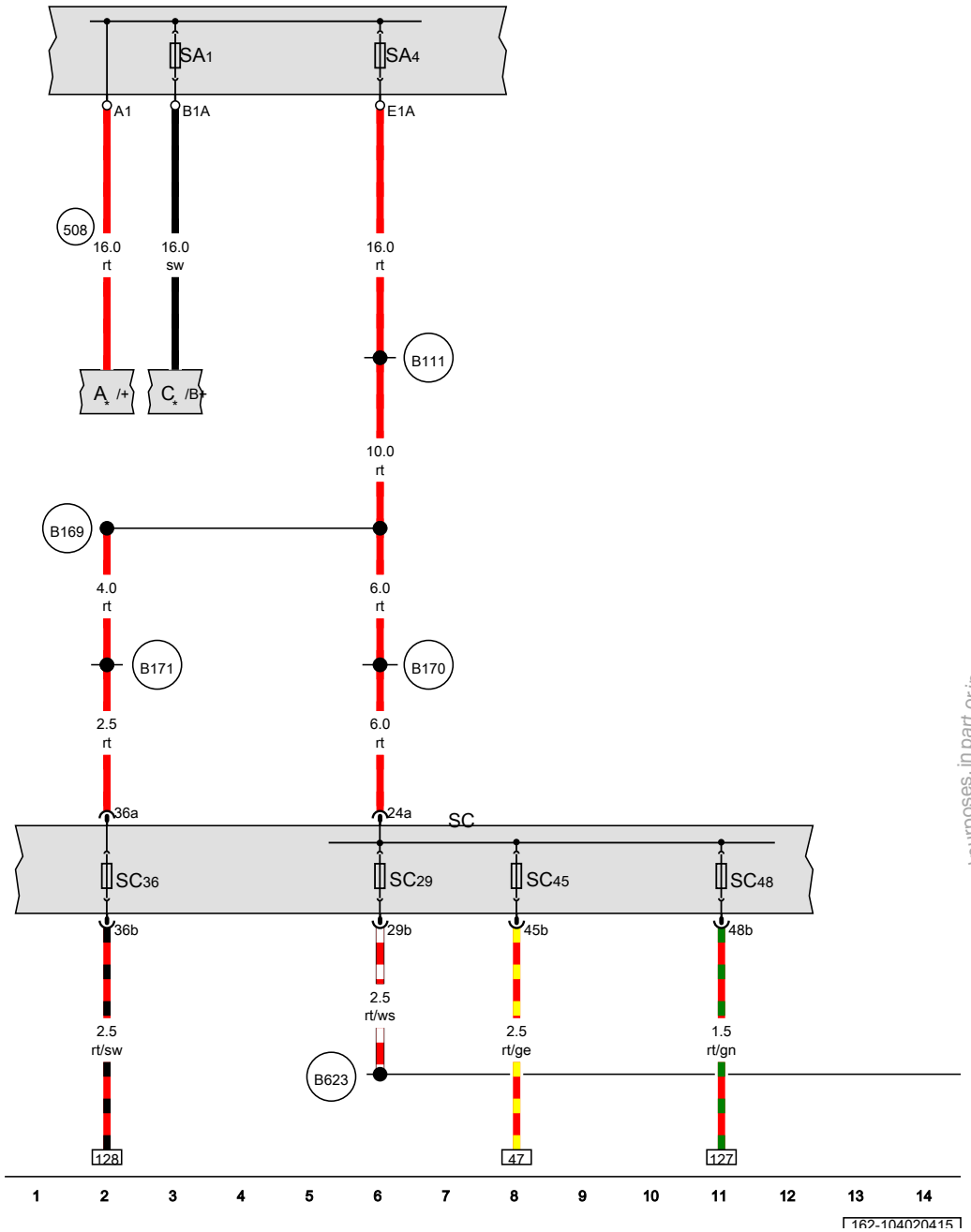

Battery, Fuse 1 (on fuse panel A), Fuse 4 (on fuse panel A), Fuse panel C

A	Battery
C	Generator
SA1	Fuse 1 (on fuse panel A)
SA4	Fuse 4 (on fuse panel A)
SC	Fuse panel C
SC29	Fuse 29 (on fuse panel C)
SC36	Fuse 36 (on fuse panel C)
SC45	Fuse 45 (on fuse panel C)
SC48	Fuse 48 (on fuse panel C)
508	Terminal 30 threaded connection (on E-box)
B111	Positive connection 1 (30a) (in interior wiring harness)
B169	Positive connection 1 (30) (in interior wiring harness)
B170	Positive connection 2 (30) (in interior wiring harness)
B171	Positive connection 3 (30) (in interior wiring harness)
B623	Connection 75x (in main wiring harness) 1
*	Only for vehicles without hybrid drive

ws	=	white
sw	=	black
ro	=	red
rt	=	red
br	=	brown
gn	=	green
bl	=	blue
gr	=	grey
li	=	lilac
vi	=	lilac
ge	=	yellow
or	=	orange
rs	=	pink

Protected by copyright. Copying for private or commercial purposes, in part or in whole, is not permitted unless authorised by Volkswagen AG. Volkswagen AG does not guarantee or accept any liability with respect to the correctness of information in this document. Copyright by Volkswagen AG.

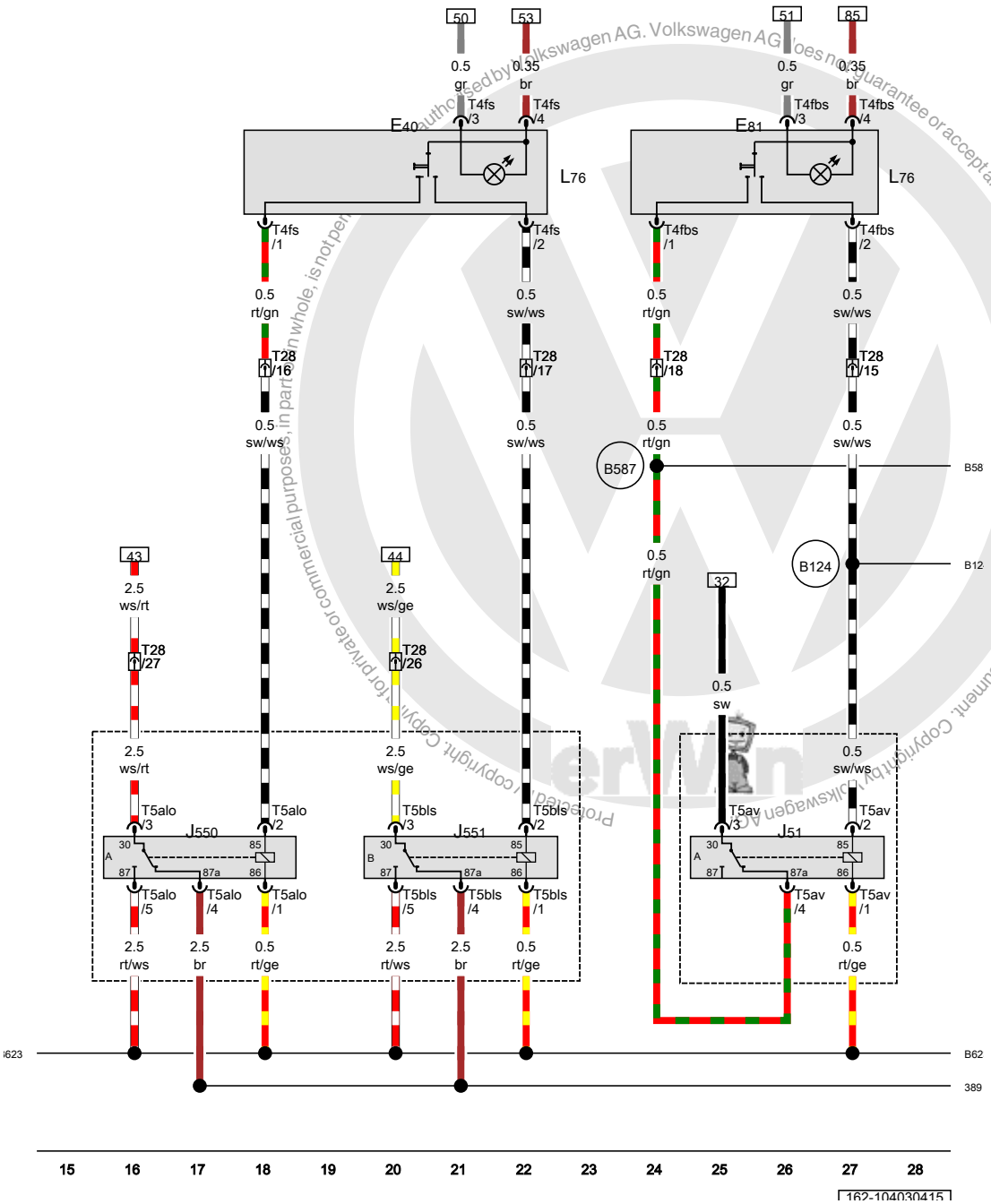

Left front window regulator switch, Right front power window switch in driver door, Power window relay, Driver power window opening relay, Driver power window closing relay

E40	Left front window regulator switch
E81	Right front power window switch in driver door
J51	Power window relay, on the relay panel under the instrument panel, driver side
J550	Driver power window opening relay, on the relay panel under the instrument panel, driver side
J551	Driver power window closing relay, on the relay panel under the instrument panel, driver side
L76	Push button illumination bulb
T4fbs	4-pin connector
T4fs	4-pin connector
T5alo	5-pin connector
T5av	5-pin connector
T5bls	5-pin connector
T28	28-pin connector
389	Ground connection 24 (in main wiring harness)
B124	Power window connection (85) (in interior wiring harness)
B587	Positive connection 7 (87) (in interior wiring harness)
B623	Connection 75x (in main wiring harness) 1

ws	=	white
sw	=	black
ro	=	red
rt	=	red
br	=	brown
gn	=	green
bl	=	blue
gr	=	grey
li	=	lilac
vi	=	lilac
ge	=	yellow
or	=	orange
rs	=	pink

authorised by Volkswagen AG. Volkswagen AG does not guarantee or accept any liability with respect to the correctness of information in this document. Copyright by Volkswagen AG. Protected by copyright. Copying for private or commercial purposes, in part or in whole, is not permitted.

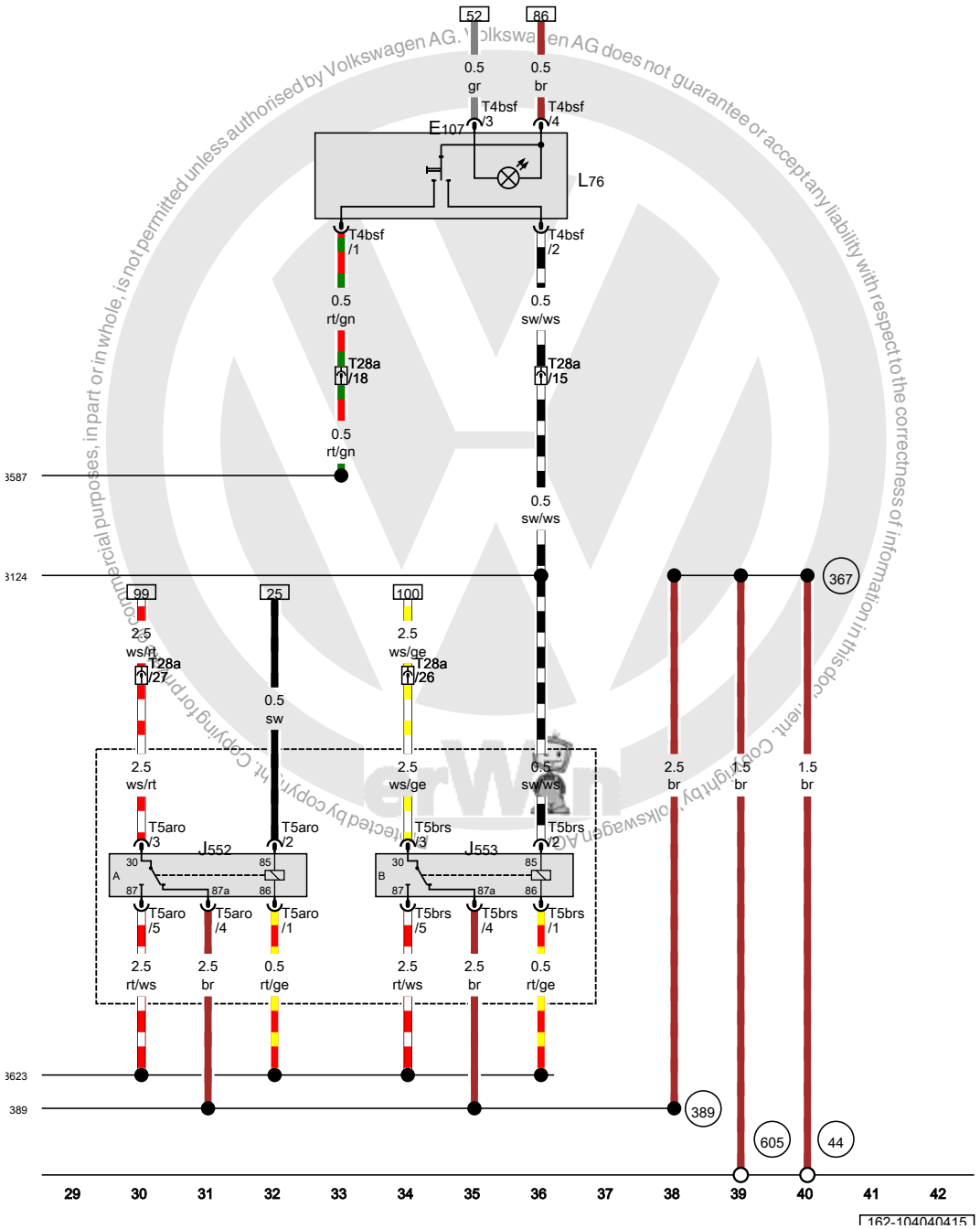

Front passenger door window regulator switch, Front passenger power window opening relay, Front passenger power window closing relay

E107	Front passenger door window regulator switch
J552	Front passenger power window opening relay, on the relay panel under the instrument panel, driver side
J553	Front passenger power window closing relay, on the relay panel under the instrument panel, driver side
L76	Push button illumination bulb
T4bsf	4-pin connector
T5aro	5-pin connector
T5brs	5-pin connector
T28a	28-pin connector
44	Ground connection on A-pillar, lower left
367	Ground connection 2 (in main wiring harness)
389	Ground connection 24 (in main wiring harness)
605	Ground connection on upper steering column
B124	Power window connection (85) (in interior wiring harness)
B587	Positive connection 7 (87) (in interior wiring harness)
B623	Connection 75x (in main wiring harness) 1

ws	=	white
sw	=	black
ro	=	red
rt	=	red
br	=	brown
gn	=	green
bl	=	blue
gr	=	grey
li	=	lilac
vi	=	lilac
ge	=	yellow
or	=	orange
rs	=	pink

Volkswagen AG does not guarantee or accept any liability with respect to the correctness of information in this document. Copyright by Volkswagen AG. Protected by copyright. Copying for private and commercial purposes, in part or in whole, is not permitted unless authorised by Volkswagen AG.

Driver door control module, Central locking -SAFE- indicator lamp, Driver window regulator motor

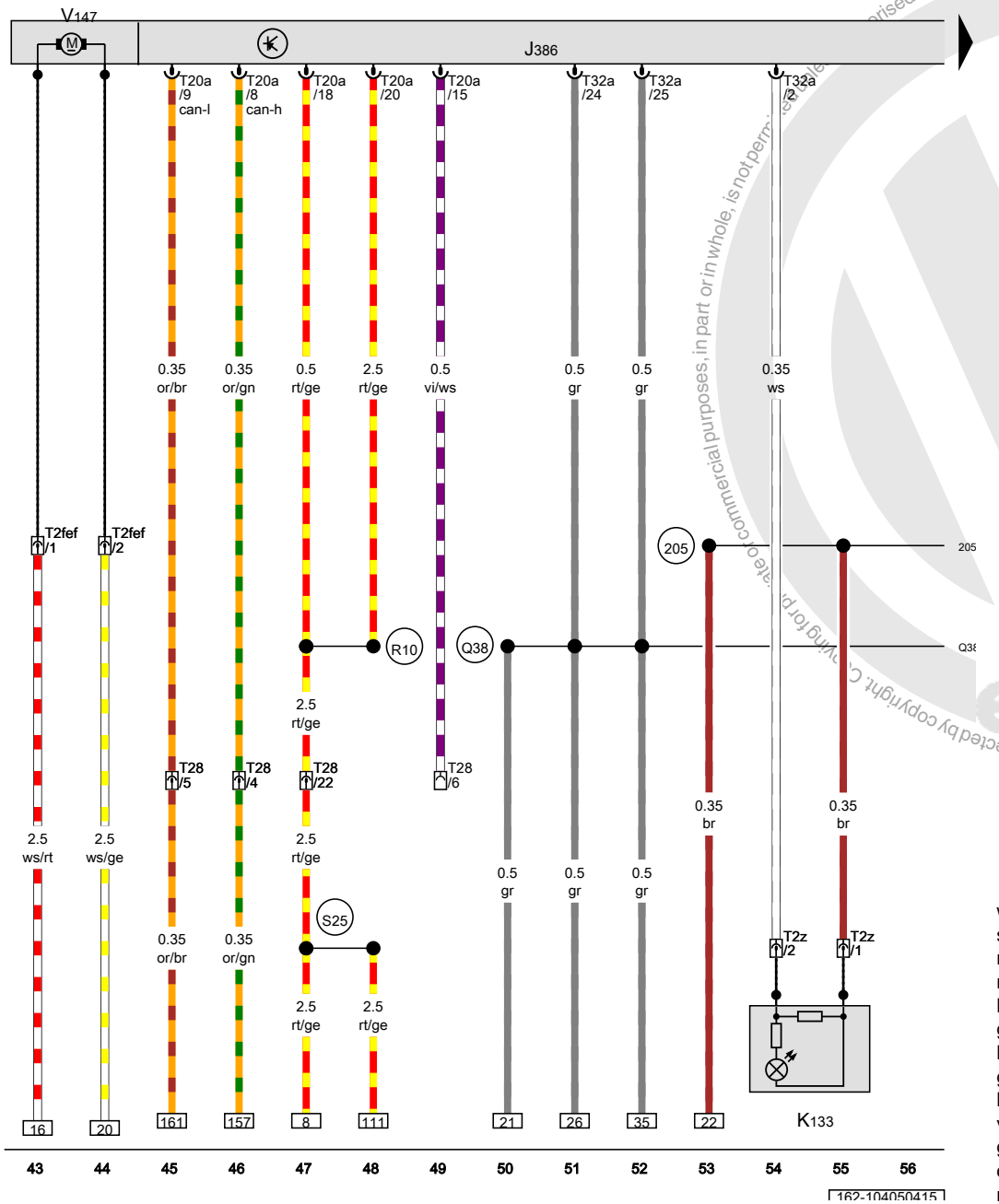

J386	Driver door control module
K133	Central locking -SAFE- indicator lamp
T2fef	Double connector
T2z	Double connector
T20a	20-pin connector
T28	28-pin connector
T32a	32-pin connector
V147	Driver window regulator motor
205	Ground connection (in driver door wiring harness)
Q38	Positive connection 1 (58b) (in power window wiring harness)
R10	Positive connection 1 (30) (in driver door wiring harness)
S25	Positive connection (30a) (in central locking system wiring harness)

ws	=	white
sw	=	black
ro	=	red
rt	=	red
br	=	brown
gn	=	green
bl	=	blue
gr	=	grey
li	=	lilac
vi	=	lilac
ge	=	yellow
or	=	orange
rs	=	pink

Protected by copyright. Copying for private or commercial purposes, in part or in whole, is not permitted unless authorised by Volkswagen AG. Volkswagen AG does not guarantee or accept any liability with respect to the correctness of information in this document. Copyright by Volkswagen AG.

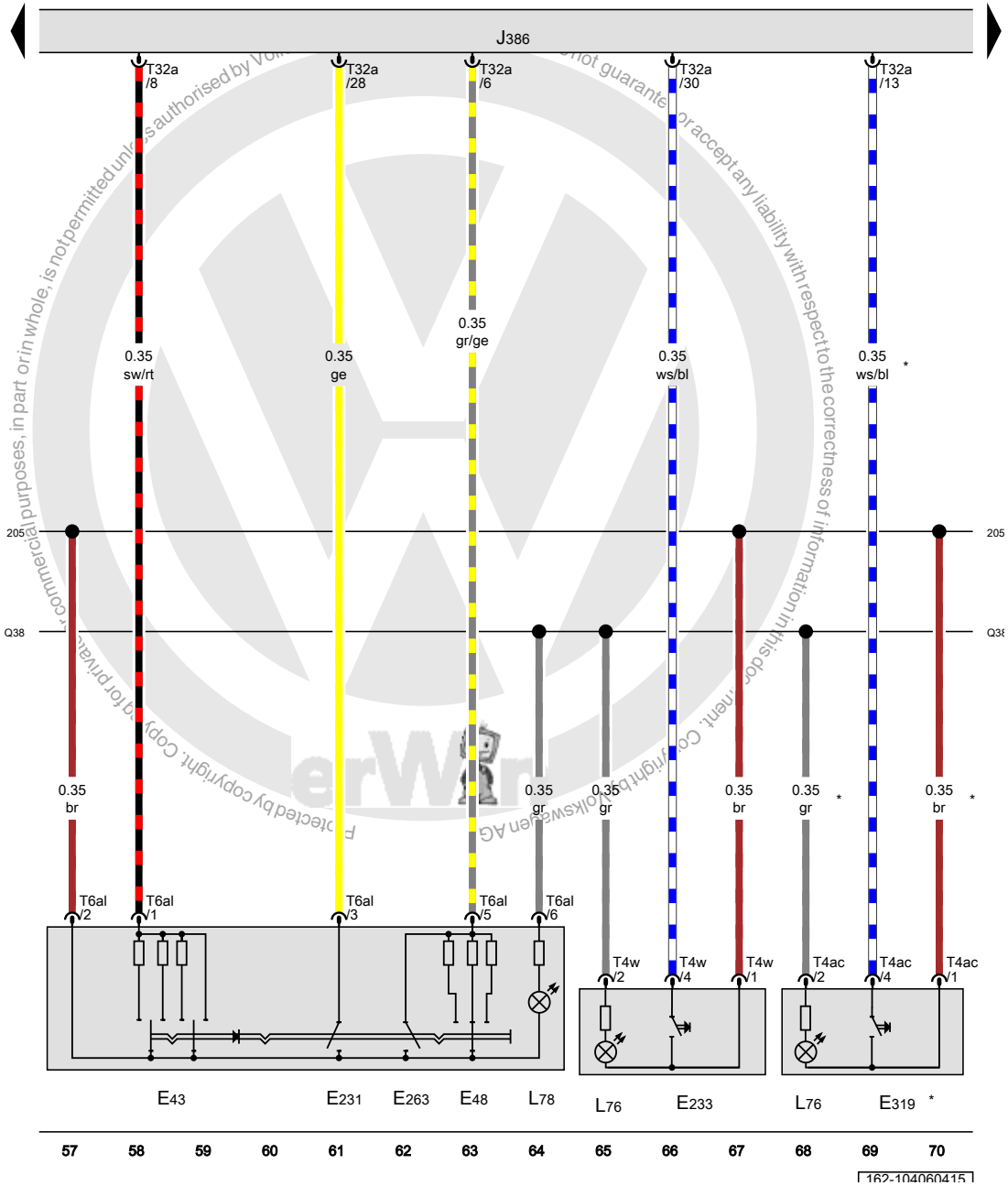

ws = white
sw = black
ro = red
rt = red
br = brown
gn = green
bl = blue
gr = grey
li = lilac
vi = lilac
ge = yellow
or = orange
rs = pink

Mirror adjusting switch, Mirror selector switch, Exterior rearview mirror heating switch, Rear lid remote release button, Mirror folding switch, Fuel filler door release button, Driver door control module, Mirror adjustment switch illumination bulb

E43	Mirror adjusting switch
E48	Mirror selector switch
E231	Exterior rearview mirror heating switch
E233	Rear lid remote release button
E263	Mirror folding switch
E319	Fuel filler door release button
J386	Driver door control module
L76	Push button illumination bulb
L78	Mirror adjustment switch illumination bulb
T4ac	4-pin connector
T4w	4-pin connector
T6al	6-pin connector
T32a	32-pin connector
205	Ground connection (in driver door wiring harness)
Q38	Positive connection 1 (58b) (in power window wiring harness)
*	USA only

Protected by copyright. Copyright for private, commercial purposes, in part or in whole, is not permitted unless authorised by Volkswagen AG. Volkswagen AG does not guarantee or accept any liability with respect to the correctness of information in this document.

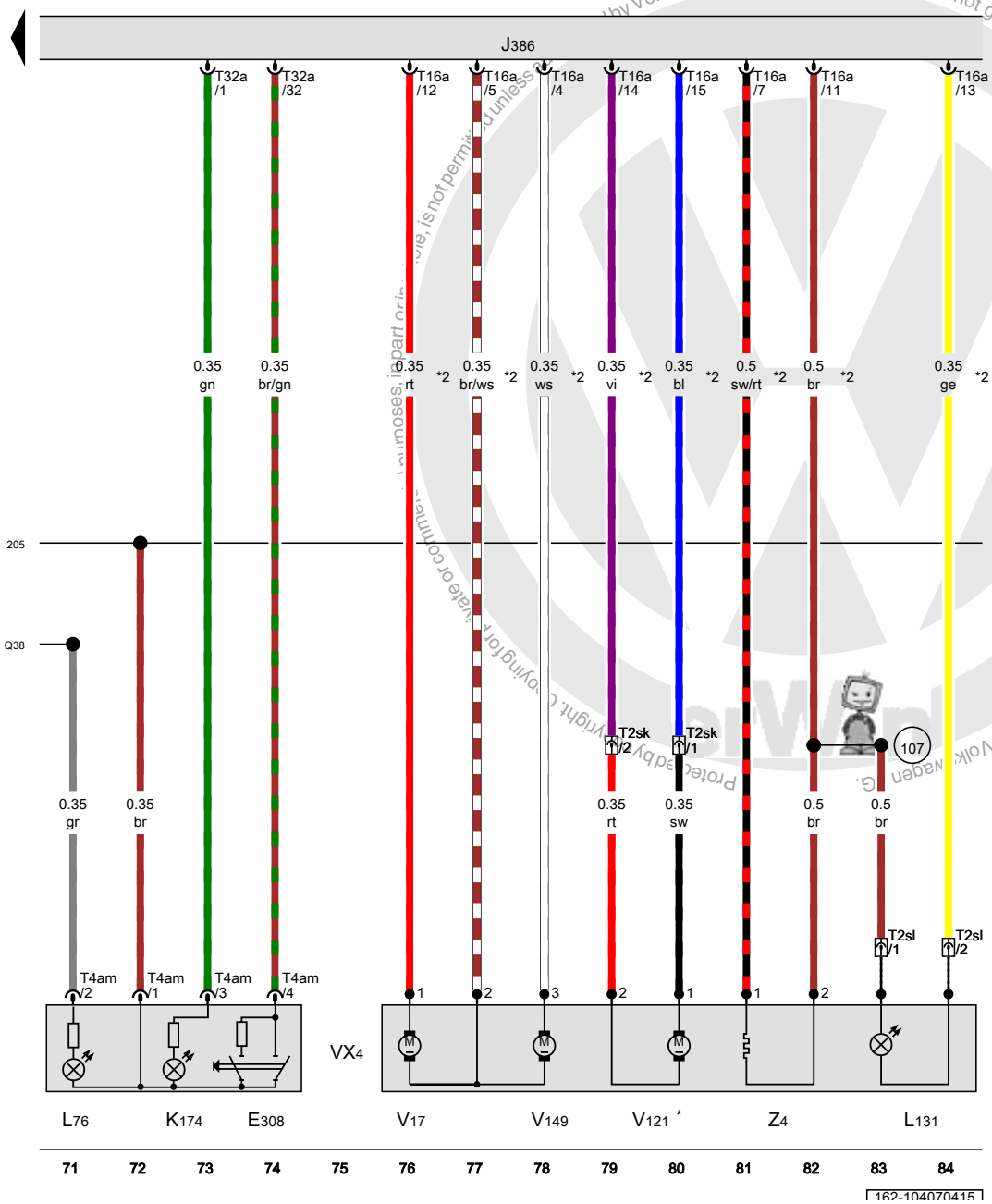

Driver interior locking button, Driver door control module, Driver exterior rearview mirror, Driver exterior rearview mirror folding motor, Driver mirror adjustment motor

E308	Driver interior locking button
J386	Driver door control module
K174	Driver interior locking indicator lamp
L76	Push button illumination bulb
L131	Driver exterior rearview mirror turn signal bulb
T2sk	Double connector, in the driver exterior rearview mirror housing
T2sl	Double connector, in the driver exterior rearview mirror housing
T4am	4-pin connector
T16a	16-pin connector
T32a	32-pin connector
VX4	Driver exterior rearview mirror
V17	Driver mirror adjustment motor 2
V121	Driver exterior rearview mirror folding motor
V149	Driver mirror adjustment motor
Z4	Heated driver exterior rearview mirror
107	Ground connection (in exterior mirror wiring harness)
205	Ground connection (in driver door wiring harness)
Q38	Positive connection 1 (58b) (in power window wiring harness)
*	Depending on equipment
*2	The color of the wires depends on vehicle equipment

ws	=	white
sw	=	black
ro	=	red
rt	=	red
br	=	brown
gn	=	green
bl	=	blue
gr	=	grey
li	=	lilac
vi	=	lilac
ge	=	yellow
or	=	orange
rs	=	pink

Protected by copyright. Copyright by Volkswagen AG. Volkswagen AG does not guarantee or accept any liability with respect to the correctness of information in this document.

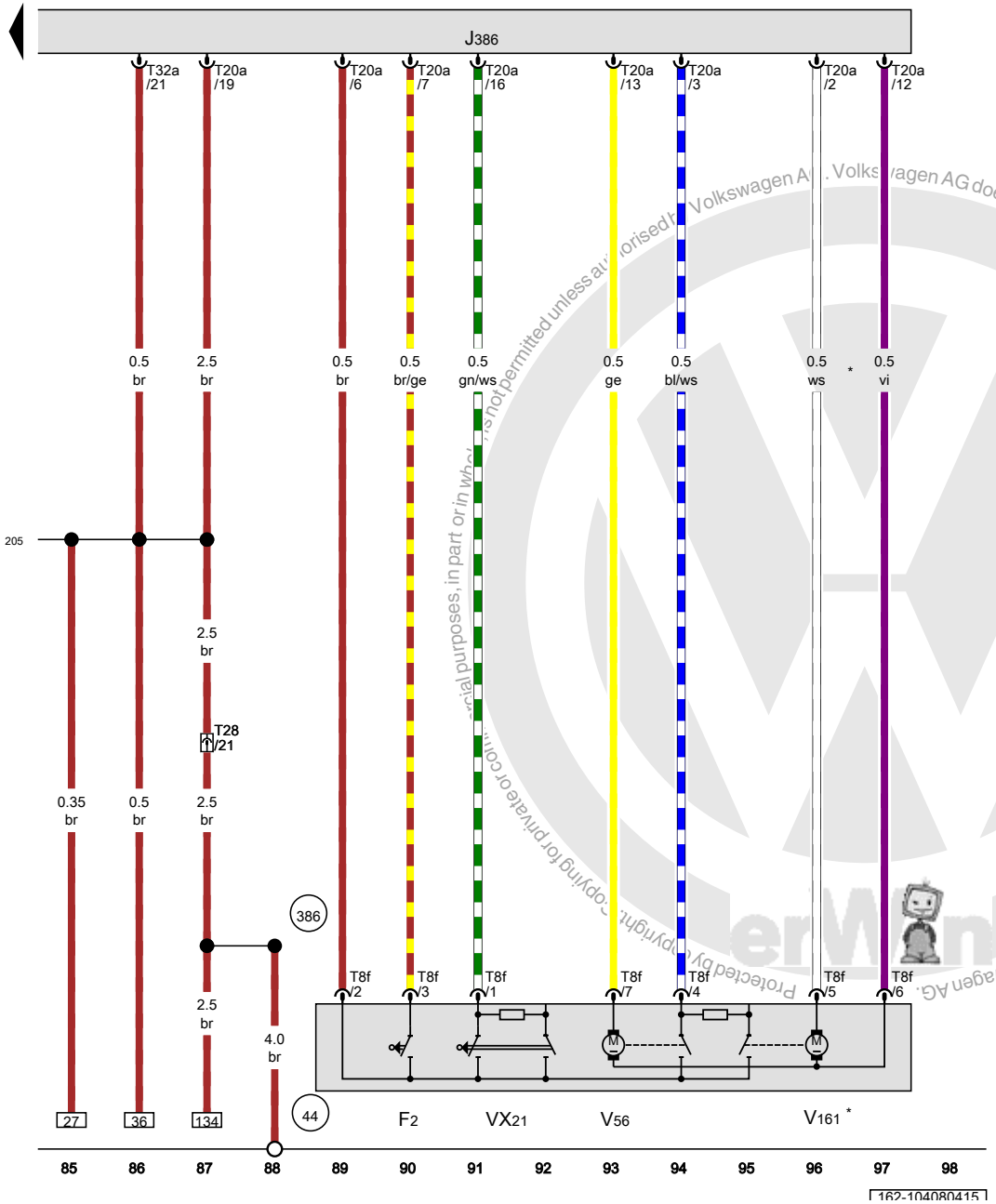

Driver door contact switch, Driver door control module, Driver door lock unit, Driver door central locking system motor

F2	Driver door contact switch
J386	Driver door control module
T8f	8-pin connector
T20a	20-pin connector
T28	28-pin connector
T32a	32-pin connector
VX21	Driver door lock unit
V56	Driver door central locking system motor
V161	Driver door central locking -SAFE- motor
44	Ground connection on A-pillar, lower left
205	Ground connection (in driver door wiring harness)
386	Ground connection 21 (in main wiring harness)
*	Not for USA

ws	=	white
sw	=	black
ro	=	red
rt	=	red
br	=	brown
gn	=	green
bl	=	blue
gr	=	grey
li	=	lilac
vi	=	lilac
ge	=	yellow
or	=	orange
rs	=	pink

Volkswagen AG does not guarantee or accept any liability with respect to the correctness of information in this document. Copyright by Volkswagen AG. Protected by copyright. Copying for private or commercial purposes, in part or in whole, is not permitted unless authorised by Volkswagen AG.

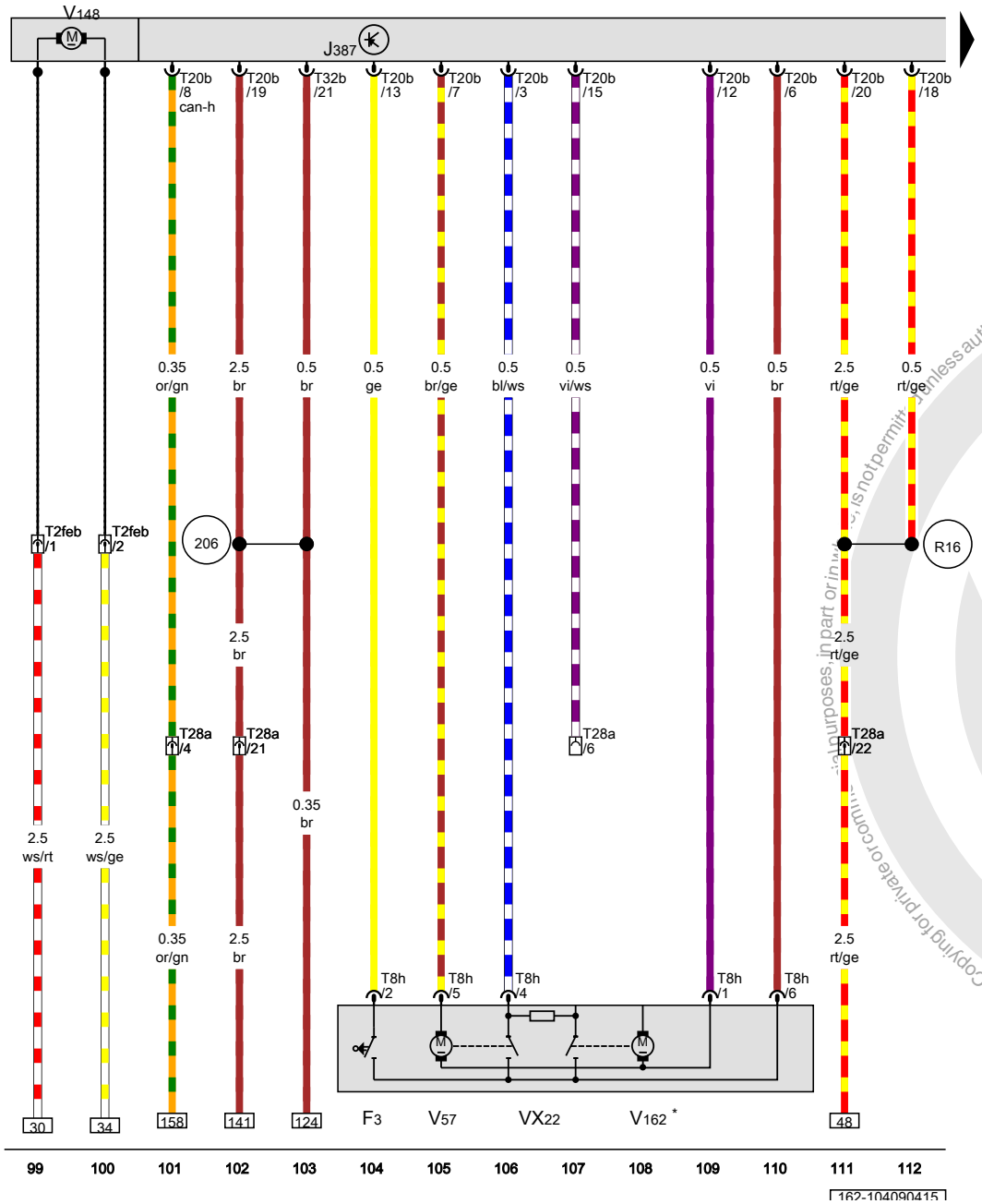

Front passenger door contact switch, Front passenger door control module, Front passenger door lock unit, Front passenger door central locking system motor, Front passenger window regulator motor

F3	Front passenger door contact switch
J387	Front passenger door control module
T2feb	Double connector
T8h	8-pin connector
T20b	20-pin connector
T28a	28-pin connector
T32b	32-pin connector
VX22	Front passenger door lock unit
V57	Front passenger door central locking system motor
V148	Front passenger window regulator motor
V162	Front passenger central locking -SAFE- motor
206	Ground connection (in front passenger door wiring harness)
R16	Positive connection 1 (30) (in front passenger door wiring harness)
*	Not for USA

ws	=	white
sw	=	black
ro	=	red
rt	=	red
br	=	brown
gn	=	green
bl	=	blue
gr	=	grey
li	=	lilac
vi	=	lilac
ge	=	yellow
or	=	orange
rs	=	pink

Protected by copyright. Copying for private or commercial purposes, in part or in whole, is not permitted unless authorised by Volkswagen AG. Volkswagen AG does not guarantee or accept any liability with respect to the correctness of information in this document. Copyright by Volkswagen AG.

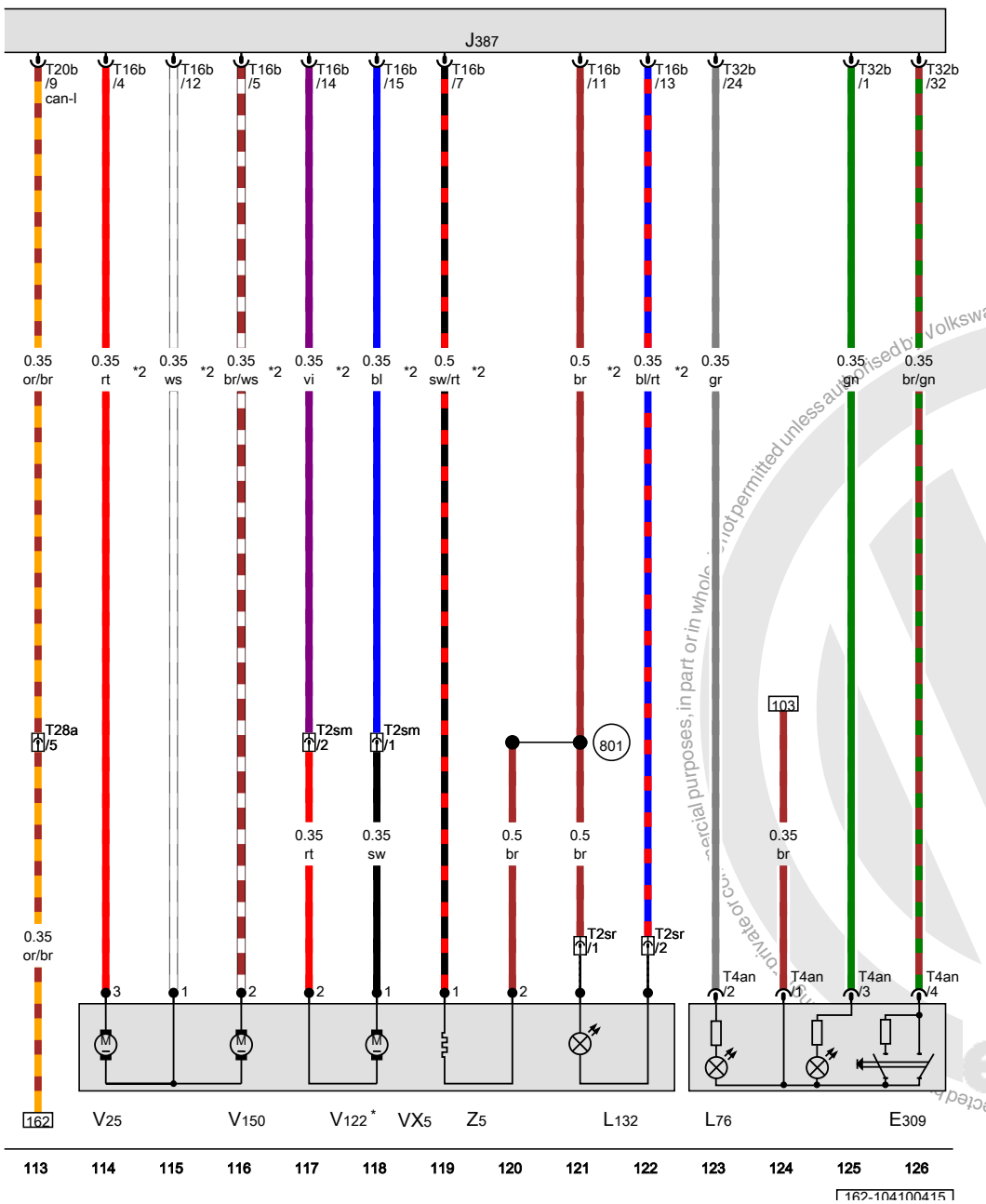

Front passenger interior locking button, Front passenger door control module, Front passenger exterior rearview mirror, Front passenger exterior rearview mirror folding motor, Front passenger mirror adjustment motor

E309	Front passenger interior locking button
J387	Front passenger door control module
L76	Push button illumination bulb
L132	Front passenger exterior rearview mirror turn signal bulb
T2sm	Double connector, in the front passenger exterior rearview mirror housing
T2sr	Double connector, in the front passenger exterior rearview mirror housing
T4an	4-pin connector
T16b	16-pin connector
T20b	20-pin connector
T28a	28-pin connector
T32b	32-pin connector
VX5	Front passenger exterior rearview mirror
V25	Front passenger side mirror adjustment motor 2
V122	Front passenger exterior rearview mirror folding motor
V150	Front passenger mirror adjustment motor
Z5	Heated front passenger exterior rearview mirror
801	Ground connection 2 (in exterior rearview mirror wiring harness), in the right door, near the exterior rearview mirror
*	Depending on equipment
*2	The color of the wires depends on vehicle equipment

ws	=	white
sw	=	black
ro	=	red
rt	=	red
br	=	brown
gn	=	green
bl	=	blue
gr	=	grey
li	=	lilac
vi	=	lilac
ge	=	yellow
or	=	orange
rs	=	pink

Protected by copyright. Copying for private or commercial purposes, in part or in whole, is not permitted unless authorised by Volkswagen AG. Volkswagen AG does not guarantee or assume any liability with respect to the correctness of information in this document. Copyright by Volkswagen AG.

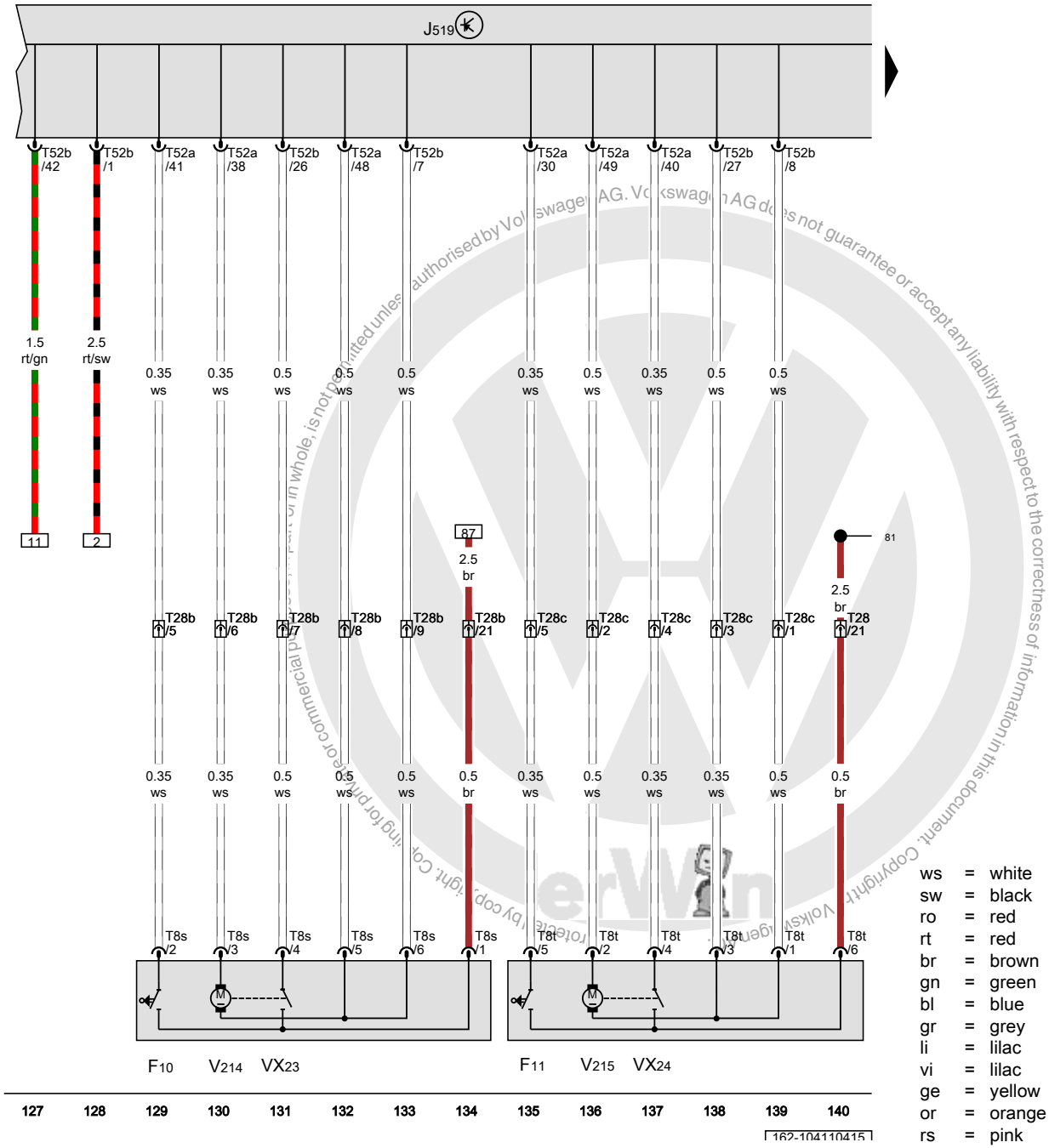

Left rear door contact switch, Right rear door contact switch, Vehicle electrical control module system, Left rear door lock unit, Right rear door lock unit, Left rear central locking -lock- motor, Right rear central locking -lock- motor

F10	Left rear door contact switch
F11	Right rear door contact switch
J519	Vehicle electrical control module system
T8s	8-pin connector
T8t	8-pin connector
T28	28-pin connector
T28b	28-pin connector
T28c	28-pin connector
T52a	52-pin connector
T52b	52-pin connector
VX23	Left rear door lock unit
VX24	Right rear door lock unit
V214	Left rear central locking -lock- motor
V215	Right rear central locking -lock- motor
81	Ground connection 1 (in instrument panel wiring harness)

ws	=	white
sw	=	black
ro	=	red
rt	=	red
br	=	brown
gn	=	green
bl	=	blue
gr	=	grey
li	=	lilac
vi	=	lilac
ge	=	yellow
or	=	orange
rs	=	pink

Volkswagen AG does not guarantee or accept any liability with respect to the correctness of information in this document. Copyright by Volkswagen AG. Volkswagen AG does not guarantee or accept any liability with respect to the correctness of information in this document. Copyright by Volkswagen AG. Volkswagen AG does not guarantee or accept any liability with respect to the correctness of information in this document. Copyright by Volkswagen AG. Volkswagen AG does not guarantee or accept any liability with respect to the correctness of information in this document. Copyright by Volkswagen AG. Volkswagen AG does not guarantee or accept any liability with respect to the correctness of information in this document. Copyright by Volkswagen AG. Volkswagen AG does not guarantee or accept any liability with respect to the correctness of information in this document. Copyright by Volkswagen AG. Volkswagen AG does not guarantee or accept any liability with respect to the correctness of information in this document. Copyright by Volkswagen AG. Volkswagen AG does not guarantee or accept any liability with respect to the correctness of information in this document. Copyright by Volkswagen AG. Volkswagen AG does not guarantee or accept any liability with respect to the correctness of information in this document. Copyright by Volkswagen AG. Volkswagen AG does not guarantee or accept any liability with respect to the correctness of information in this document. Copyright by Volkswagen AG.

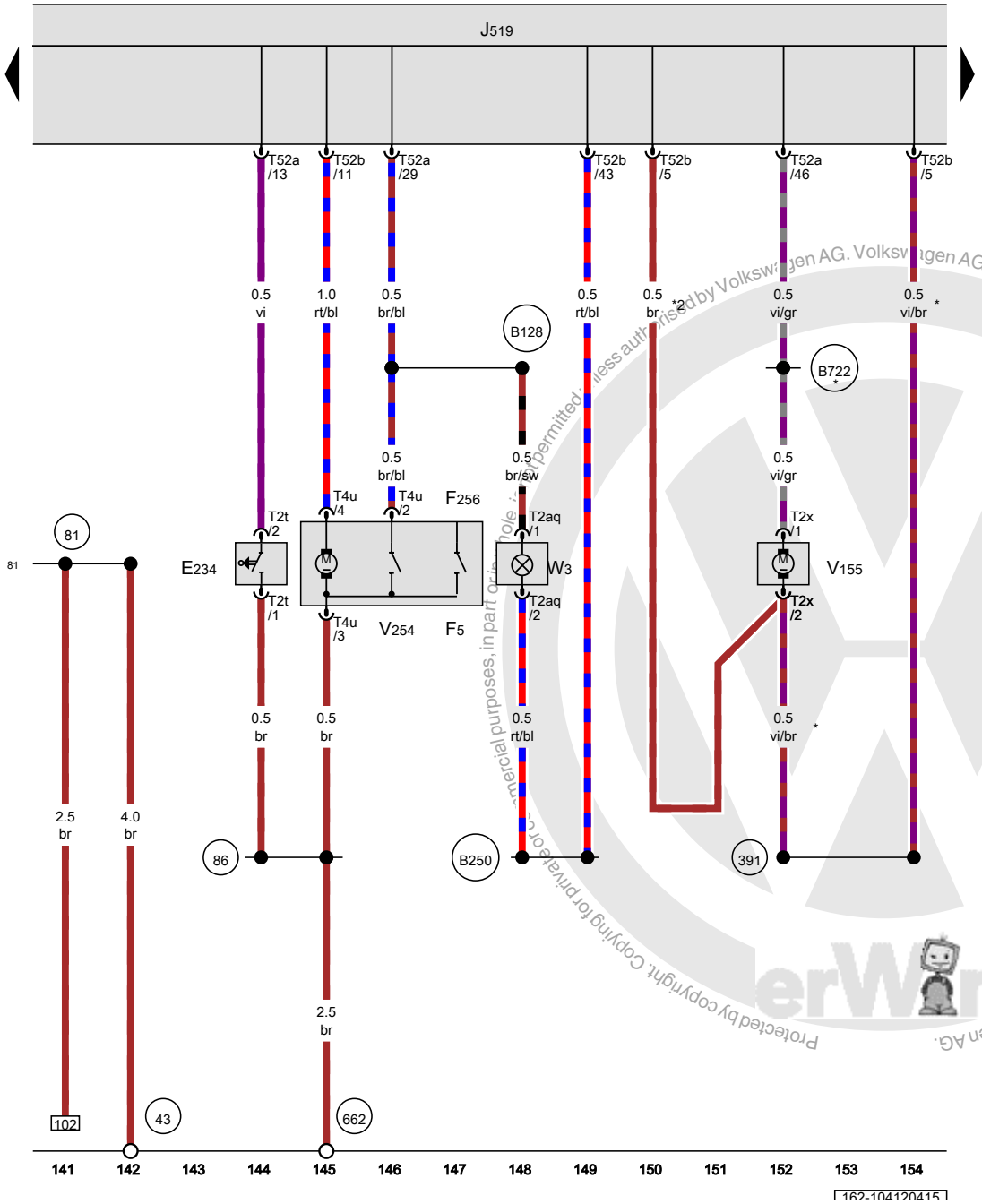

Release button in rear lid handle, Luggage compartment lamp switch, Rear lid lock unit, Vehicle electrical control module system, Fuel filler door unlock motor, Rear lid opening motor, Luggage compartment lamp

E234	Release button in rear lid handle
F5	Luggage compartment lamp switch
F256	Rear lid lock unit
J519	Vehicle electrical control module system
T2aq	Double connector
T2t	Double connector
T2x	Double connector
T4u	4-pin connector
T52a	52-pin connector
T52b	52-pin connector
V155	Fuel filler door unlock motor
V254	Rear lid opening motor
W3	Luggage compartment lamp
43	Ground connection on A-pillar, lower right
81	Ground connection 1 (in instrument panel wiring harness)
86	Ground connection 1 (in rear wiring harness)
391	Ground connection 26 (in main wiring harness)
662	Ground connection in left rear side panel
B128	Luggage compartment lamp connection (in interior wiring harness)
B250	Positive connection (in roof wiring harness)
B722	Central locking connection 3 (in main wiring harness)
*	Running change
*2	Omitted as a running change

ws	=	white
sw	=	black
ro	=	red
rt	=	red
br	=	brown
gn	=	green
bl	=	blue
gr	=	grey
li	=	lilac
vi	=	lilac
ge	=	yellow
or	=	orange
rs	=	pink

Protected by copyright. Copying for private or commercial purposes, in part or in whole, is not permitted unless authorised by Volkswagen AG. Volkswagen AG does not guarantee or accept any liability with respect to the correctness of information in this document. Copyright by Volkswagen AG.

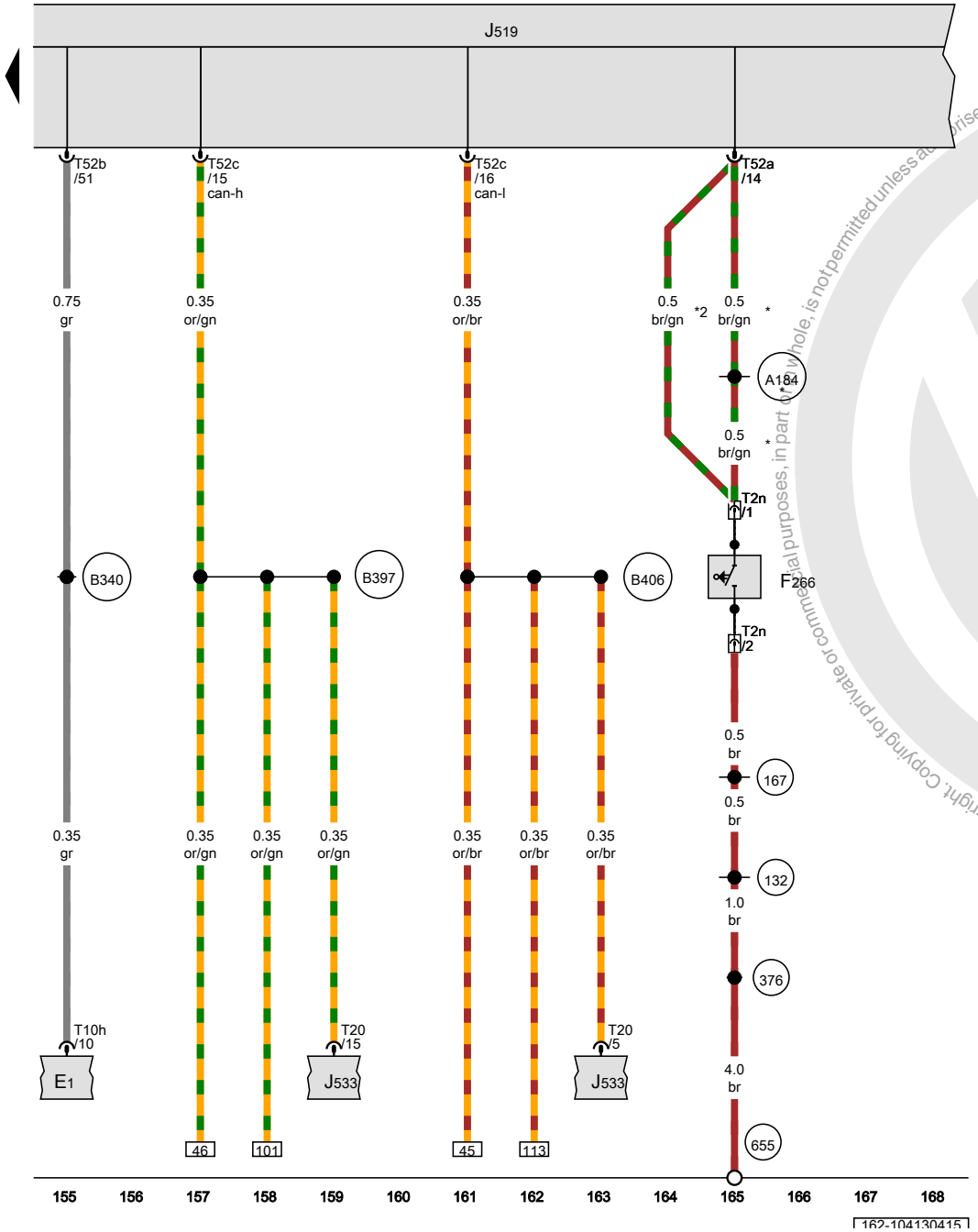

Engine hood contact switch, Vehicle electrical control module system

E1	Light switch
F266	Engine hood contact switch
J519	Vehicle electrical control module system
J533	Data bus on board diagnostic interface
T2n	Double connector
T10h	10-pin connector
T20	20-pin connector
T52a	52-pin connector
T52b	52-pin connector
T52c	52-pin connector
132	Ground connection 3 (in engine compartment wiring harness)
167	Ground connection 4 (in engine compartment wiring harness)
376	Ground connection 11 (in main wiring harness)
655	Ground connection on left headlamp
A184	Hood contact switch connection (in instrument panel wiring harness)
B340	Connection 58d (in main wiring harness) 1
B397	Comfort system CAN bus high connection 1 (in main wiring harness)
B406	Comfort system CAN bus low connection 1 (in main wiring harness)
*	Omitted as a running change
*2	Running change

ws	=	white
sw	=	black
ro	=	red
rt	=	red
br	=	brown
gn	=	green
bl	=	blue
gr	=	grey
li	=	lilac
vi	=	lilac
ge	=	yellow
or	=	orange
rs	=	pink

Protected by copyright. Copying for private or commercial purposes, in part or in whole, is not permitted unless authorised by Volkswagen AG. Volkswagen AG does not give any guarantee or accept any liability with respect to the correctness of information in this document. Copyright by Volkswagen AG.

1.8L gasoline engine , CPKA,(7GJ)

from June 2013

Protected by copyright. Copying for private or commercial purposes, in part or in whole, is not permitted unless authorised by Volkswagen AG. Volkswagen AG does not guarantee or accept any liability with respect to the correctness of information in this document. Copyright by Volkswagen AG.

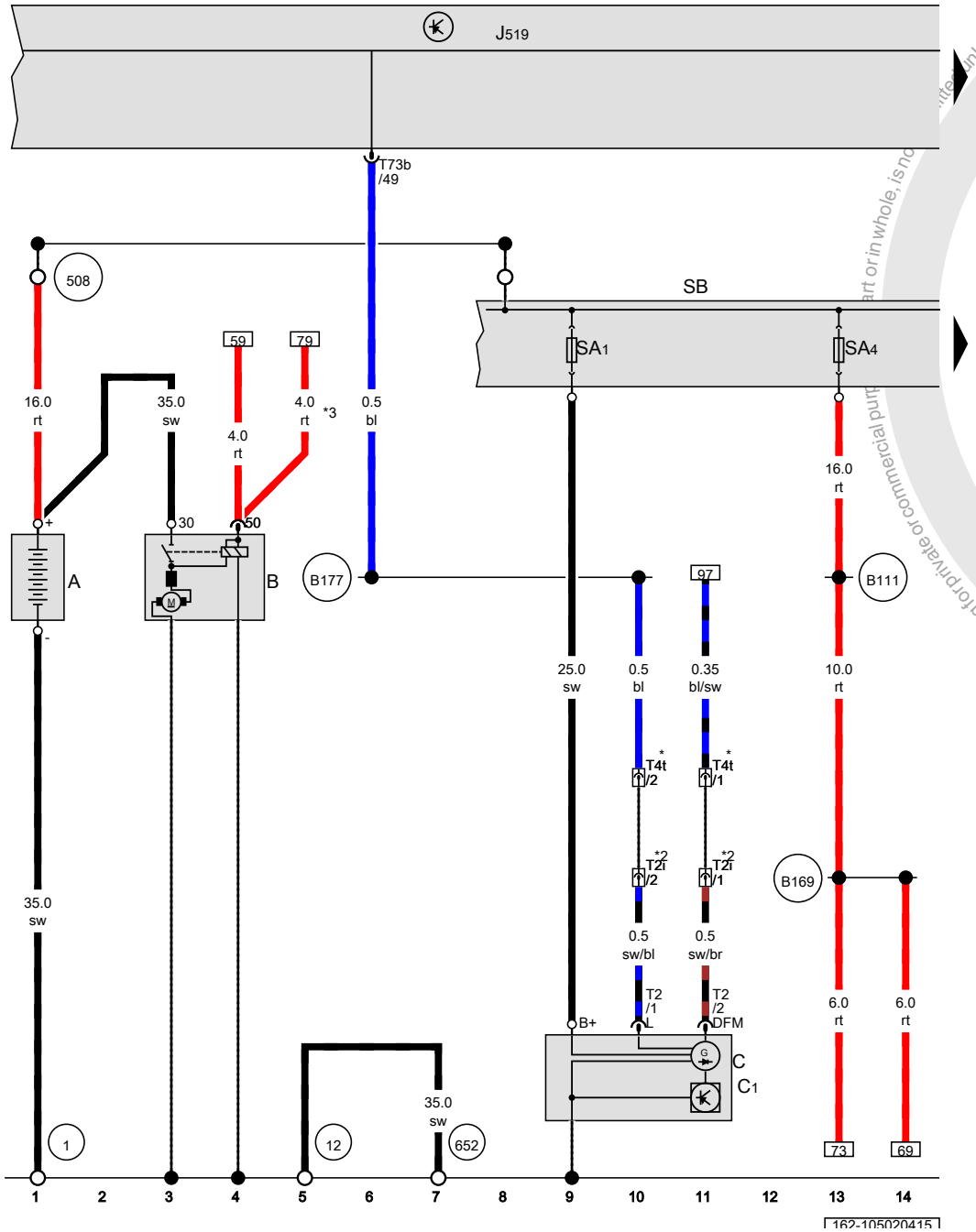

Battery, Starter, Generator, Vehicle electrical control module system, Fuse panel B

A	Battery
B	Starter
C	Generator
C1	Voltage regulator
J519	Vehicle electrical control module system
SA1	Fuse 1 (on fuse panel A)
SA4	Fuse 4 (on fuse panel A)
SB	Fuse panel B
T2	Double connector
T2i	Double connector, near the starter
T4t	4-pin connector, near the starter
T73b	73-pin connector
1	Ground strap, battery to body
12	Ground connection in engine compartment, left
508	Terminal 30 threaded connection (on E-box)
652	Transmission/engine ground connection
B111	Positive connection 1 (30a) (in interior wiring harness)
B169	Positive connection 1 (30) (in interior wiring harness)
B177	Connection 61 (in interior wiring harness)
*	Only for vehicles with A/C system
*2	Only for vehicles without an A/C system
*3	Depending on equipment

ws	=	white
sw	=	black
ro	=	red
rt	=	red
br	=	brown
gn	=	green
bl	=	blue
gr	=	grey
li	=	lilac
vi	=	lilac
ge	=	yellow
or	=	orange
rs	=	pink

Protected by copyright. Copying for private or commercial purposes, in part or in whole, is not permitted unless authorised by Volkswagen AG. Volkswagen AG does not guarantee or accept any liability with respect to the correctness of information in this document. Copyright by Volkswagen AG.

Motronic engine control module power supply relay, Vehicle electrical control module system, Fuse panel B, Fuse 14 (on fuse panel B)

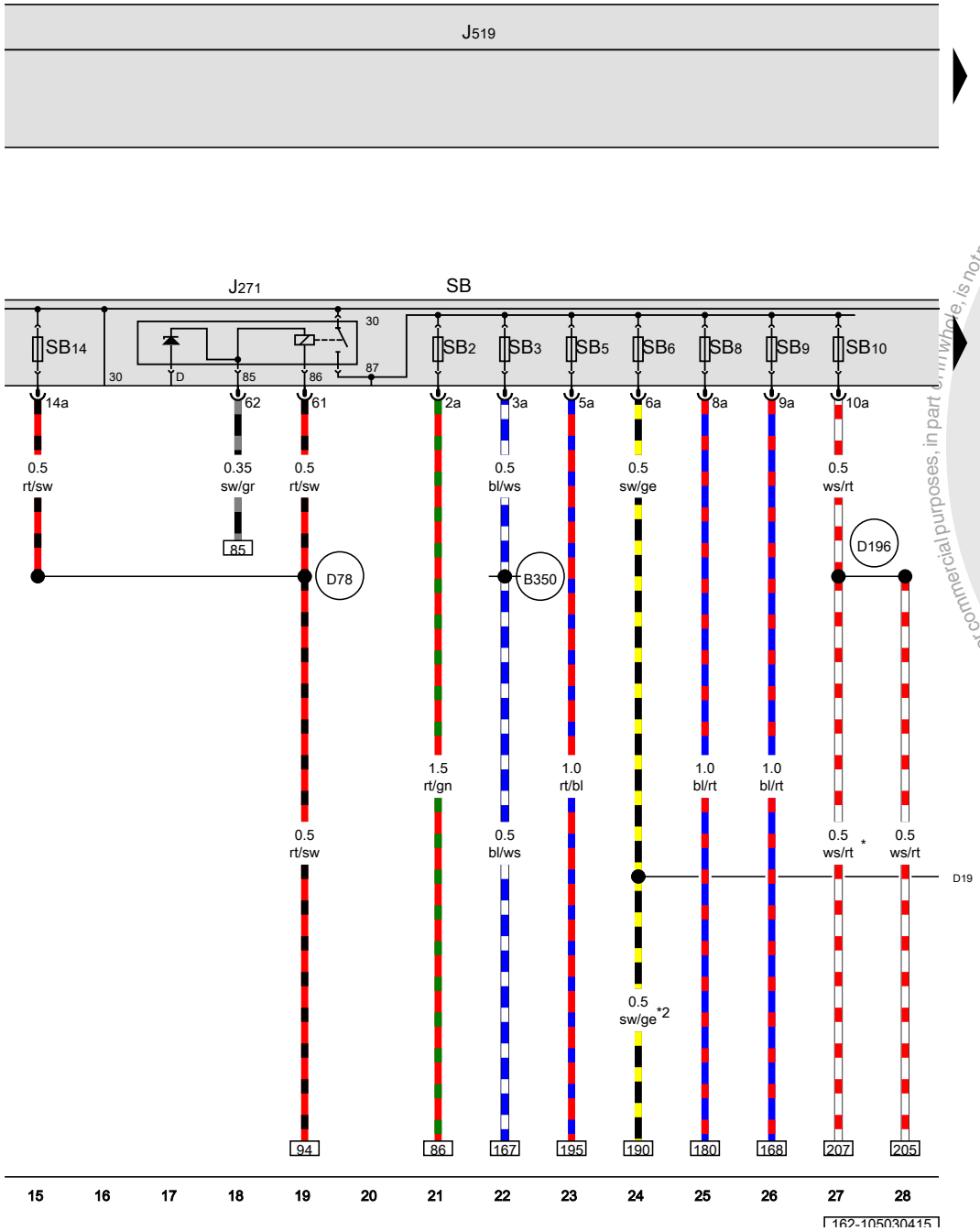

J271	Motronic engine control module power supply relay
J519	Vehicle electrical control module system
SB	Fuse panel B
SB2	Fuse 2 (on fuse panel B)
SB3	Fuse 3 (on fuse panel B)
SB5	Fuse 5 (on fuse panel B)
SB6	Fuse 6 (on fuse panel B)
SB8	Fuse 8 (on fuse panel B)
SB9	Fuse 9 (on fuse panel B)
SB10	Fuse 10 (on fuse panel B)
SB14	Fuse 14 (on fuse panel B)
B350	Positive connection 1 (87a) (in main wiring harness)
D78	Positive connection 1 (30a) (in engine compartment wiring harness)
D196	Connection 87a (in engine pre-wiring harness) 2
D197	Connection 5 (87a) (in engine compartment wiring harness)
*	Only for vehicles with a manual transmission
*2	Depending on equipment

ws	=	white
sw	=	black
ro	=	red
rt	=	red
br	=	brown
gn	=	green
bl	=	blue
gr	=	grey
li	=	lilac
vi	=	lilac
ge	=	yellow
or	=	orange
rs	=	pink

Protected by copyright. Copying for private or commercial purposes, in part or in whole, is not permitted unless authorised by Volkswagen AG. Volkswagen AG does not guarantee or accept any liability with respect to the correctness of information in this document. Copyright by Volkswagen AG.

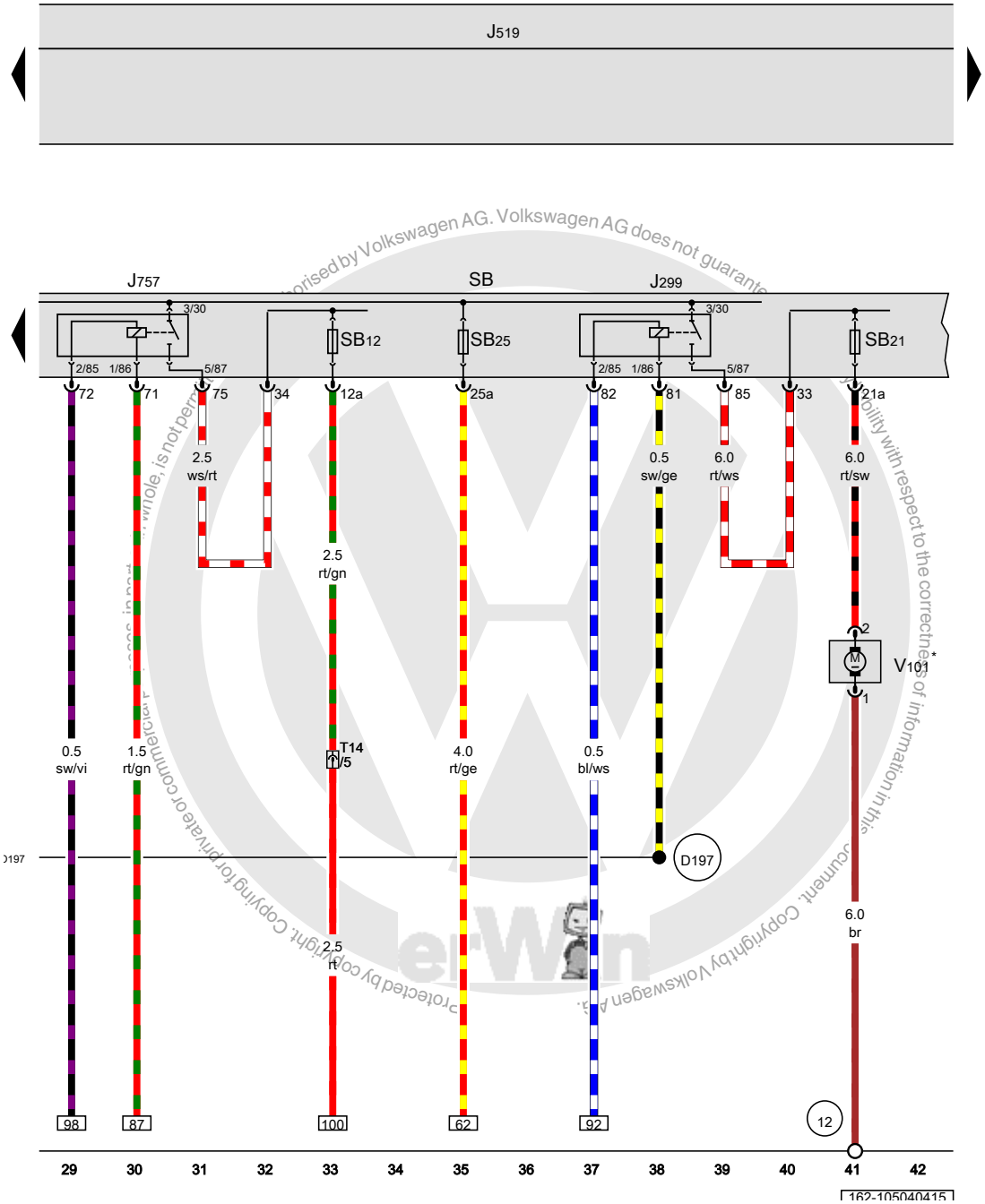

Secondary air injection pump relay, Vehicle electrical control module system, Engine component power supply relay, Fuse panel B, Secondary air injection pump motor

J299	Secondary air injection pump relay
J519	Vehicle electrical control module system
J757	Engine component power supply relay
SB	Fuse panel B
SB12	Fuse 12 (on fuse panel B)
SB21	Fuse 21 (on fuse panel B)
SB25	Fuse 25 (on fuse panel B)
T14	14-pin connector
V101	Secondary air injection pump motor
12	Ground connection in engine compartment, left
D197	Connection 5 (87a) (in engine compartment wiring harness)
*	USA only

ws	=	white
sw	=	black
ro	=	red
rt	=	red
br	=	brown
gn	=	green
bl	=	blue
gr	=	grey
li	=	lilac
vi	=	lilac
ge	=	yellow
or	=	orange
rs	=	pink

Protected by copyright. Copying for private or commercial purposes, in part or in whole, is not permitted unless authorised by Volkswagen AG. Volkswagen AG does not guarantee or accept any liability with respect to the correctness of information in this document. Copyright by Volkswagen AG.

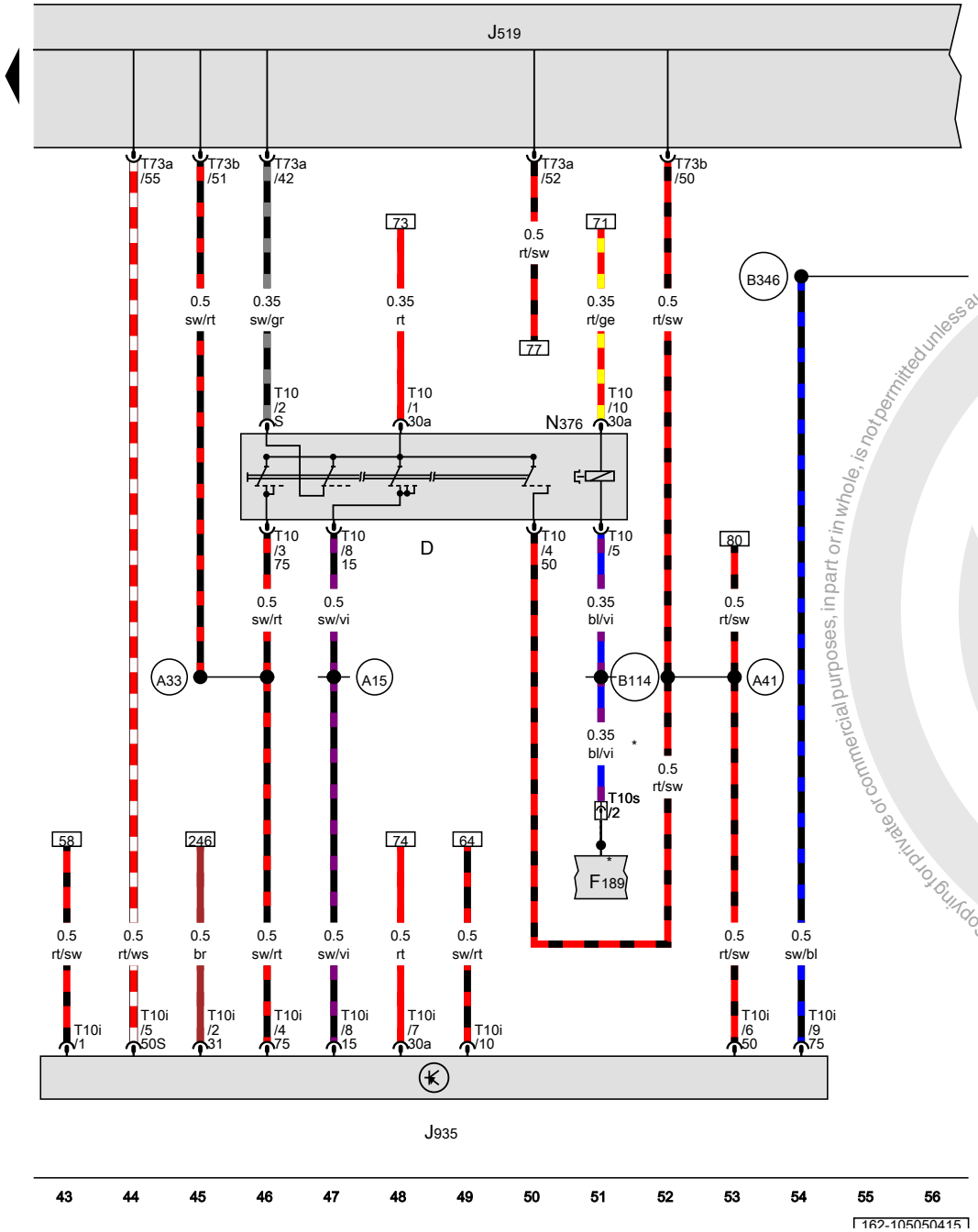

Ignition/starter switch, Vehicle electrical control module system, Converter box

D	Ignition/starter switch
F189	tiptronic switch
J519	Vehicle electrical control module system
J935	Converter box
N376	Ignition switch key lock solenoid
T10	10-pin connector
T10i	10-pin connector
T10s	10-pin connector
T73a	73-pin connector
T73b	73-pin connector
A15	Plus connection (15) (in instrument cluster wiring harness)
A33	Connection 75 (in instrument panel wiring harness)
A41	Positive connection (50) (in instrument panel wiring harness)
B114	Lock switch connection (in interior wiring harness)
B346	Connection 75 (in main wiring harness) 1
*	Only for vehicles with automatic transmission

ws	=	white
sw	=	black
ro	=	red
rt	=	red
br	=	brown
gn	=	green
bl	=	blue
gr	=	grey
li	=	lilac
vi	=	lilac
ge	=	yellow
or	=	orange
rs	=	pink

Protected by copyright. Copying for private or commercial purposes, in part or in whole, is not permitted unless authorised by Volkswagen AG. Volkswagen AG does not guarantee or accept any liability with respect to the correctness of information in this document. Copyright by Volkswagen AG.

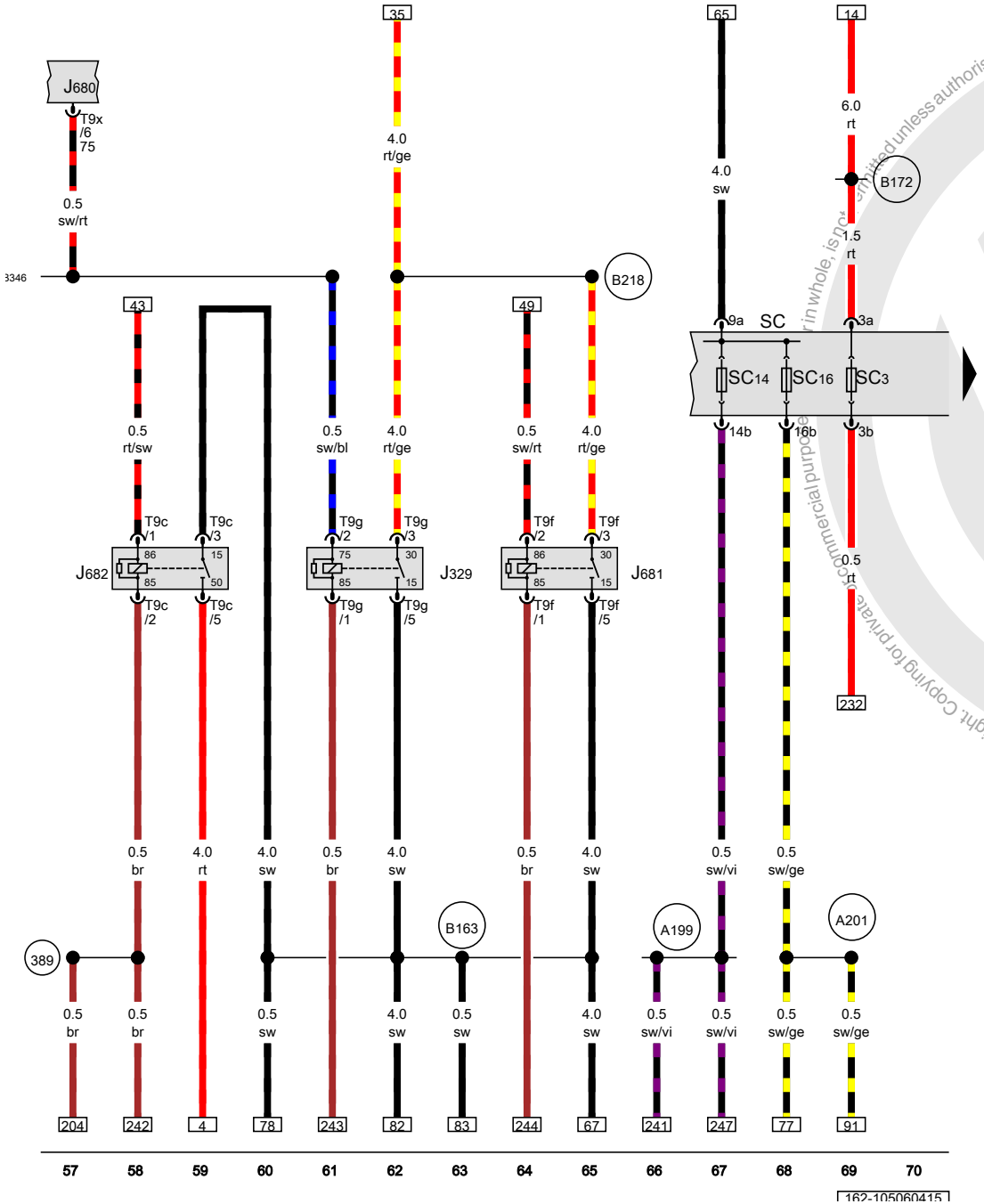

Terminal 15 power supply relay, Terminal 15 power supply relay 2, Terminal 50 power supply relay, Fuse panel C

J329	Terminal 15 power supply relay
J680	Terminal 75 power supply relay 1
J681	Terminal 15 power supply relay 2
J682	Terminal 50 power supply relay
SC	Fuse panel C
SC3	Fuse 3 (on fuse panel C)
SC14	Fuse 14 (on fuse panel C)
SC16	Fuse 16 (on fuse panel C)
T9c	9-pin connector
T9f	9-pin connector
T9g	9-pin connector
T9x	9-pin connector
389	Ground connection 24 (in main wiring harness)
A199	Positive connection 4 (15a) (in instrument panel wiring harness)
A201	Positive connection 6 (15a) (in instrument panel wiring harness)
B163	Positive connection 1 (15) (in interior wiring harness)
B172	Positive connection 4 (30) (in interior wiring harness)
B218	Positive connection 6 (30) (in interior wiring harness)
B346	Connection 75 (in main wiring harness) 1

ws	=	white
sw	=	black
ro	=	red
rt	=	red
br	=	brown
gn	=	green
bl	=	blue
gr	=	grey
li	=	lilac
vi	=	lilac
ge	=	yellow
or	=	orange
rs	=	pink

Protected by copyright. Copying for private or commercial purposes, in whole, is not permitted unless authorised by Volkswagen AG. Volkswagen AG does not guarantee or assume any liability with respect to the correctness of information in this document. Copyright by Volkswagen AG.

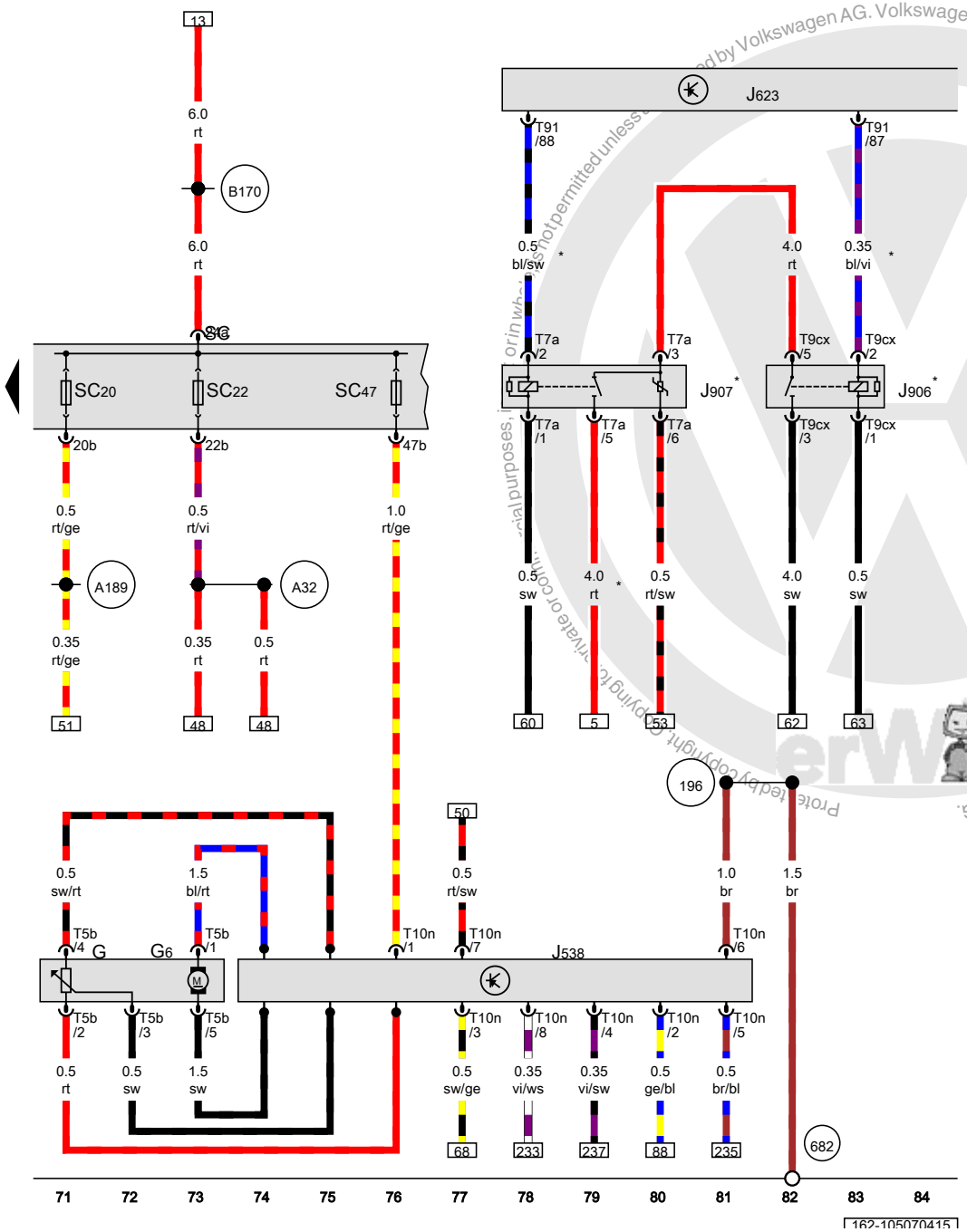

Fuel level sensor, Transfer fuel pump, Engine control module, Fuse panel C

G	Fuel level sensor
G6	Transfer fuel pump
J538	Fuel pump control module
J623	Engine control module
J906	Starter relay 1
J907	Starter relay 2
SC	Fuse panel C
SC20	Fuse 20 (on fuse panel C)
SC22	Fuse 22 (on fuse panel C)
SC47	Fuse 47 (on fuse panel C)
T5b	5-pin connector
T7a	7-pin connector
T9cx	9-pin connector
T10n	10-pin connector
T91	91-pin connector
196	Ground connection 3 (in rear wiring harness)
682	Ground connection 2 in right rear side panel
A32	Positive connection (30) (in instrument panel wiring harness)
A189	Positive connection 5 (30a) (in instrument panel wiring harness)
B170	Positive connection 2 (30) (in interior wiring harness)
*	Depending on equipment

ws	=	white
sw	=	black
ro	=	red
rt	=	red
br	=	brown
gn	=	green
bl	=	blue
gr	=	grey
li	=	lilac
vi	=	lilac
ge	=	yellow
or	=	orange
rs	=	pink

Protected by copyright. Copyright by Volkswagen AG. Volkswagen AG does not guarantee or accept any liability with respect to the correctness of information in this document. Copyright by Volkswagen AG.

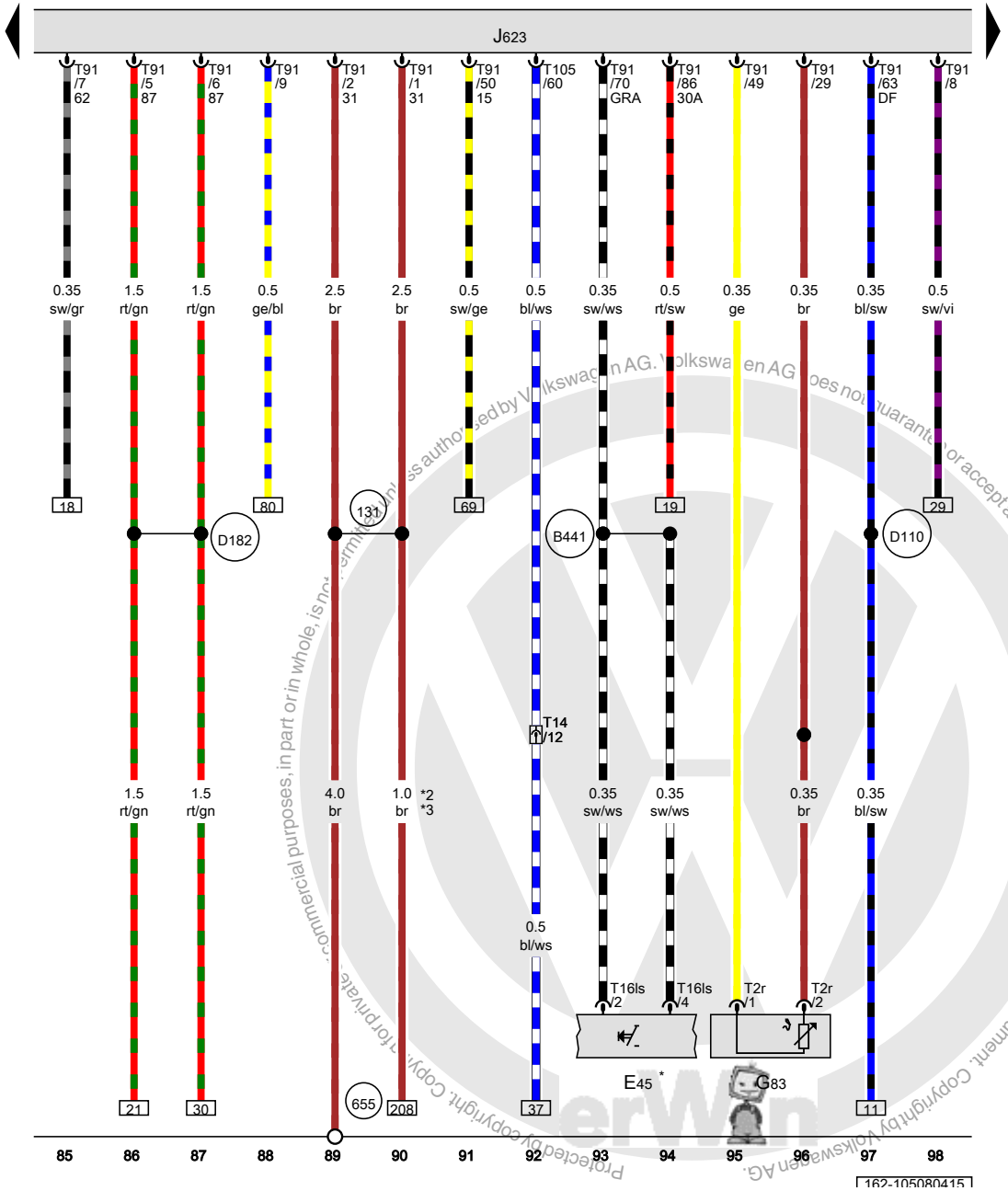

ws = white
sw = black
ro = red
rt = red
br = brown
gn = green
bl = blue
gr = grey
li = lilac
vi = lilac
ge = yellow
or = orange
rs = pink

Engine coolant temperature sensor on radiator outlet, Engine control module

E45	Cruise control switch
G83	Engine coolant temperature sensor on radiator outlet
J623	Engine control module
T2r	Double connector
T14	14-pin connector
T16ls	16-pin connector
T91	91-pin connector
T105	105-pin connector
131	Ground connection 2 (in engine compartment wiring harness)
655	Ground connection on left headlamp
B441	Cruise control connection (in main wiring harness)
D110	Connection 8 (in engine compartment wiring harness)
D182	Connection 3 (87a) (in engine compartment wiring harness)
*	Only for vehicles with cruise control
*2	Only for vehicles with a manual transmission
*3	USA only

Copyright by Volkswagen AG. Volkswagen AG does not guarantee or accept any liability with respect to the correctness of information in this document. Copyright by Volkswagen AG. Protected by copyright. Copying for private, commercial purposes, in part or in whole, is not permitted unless authorised by Volkswagen AG.

Engine control module, Ignition coil 1 with power output stage, Ignition coil 2 with power output stage, Ignition coil 3 with power output stage, Ignition coil 4 with power output stage, Spark plug connectors, Spark plugs

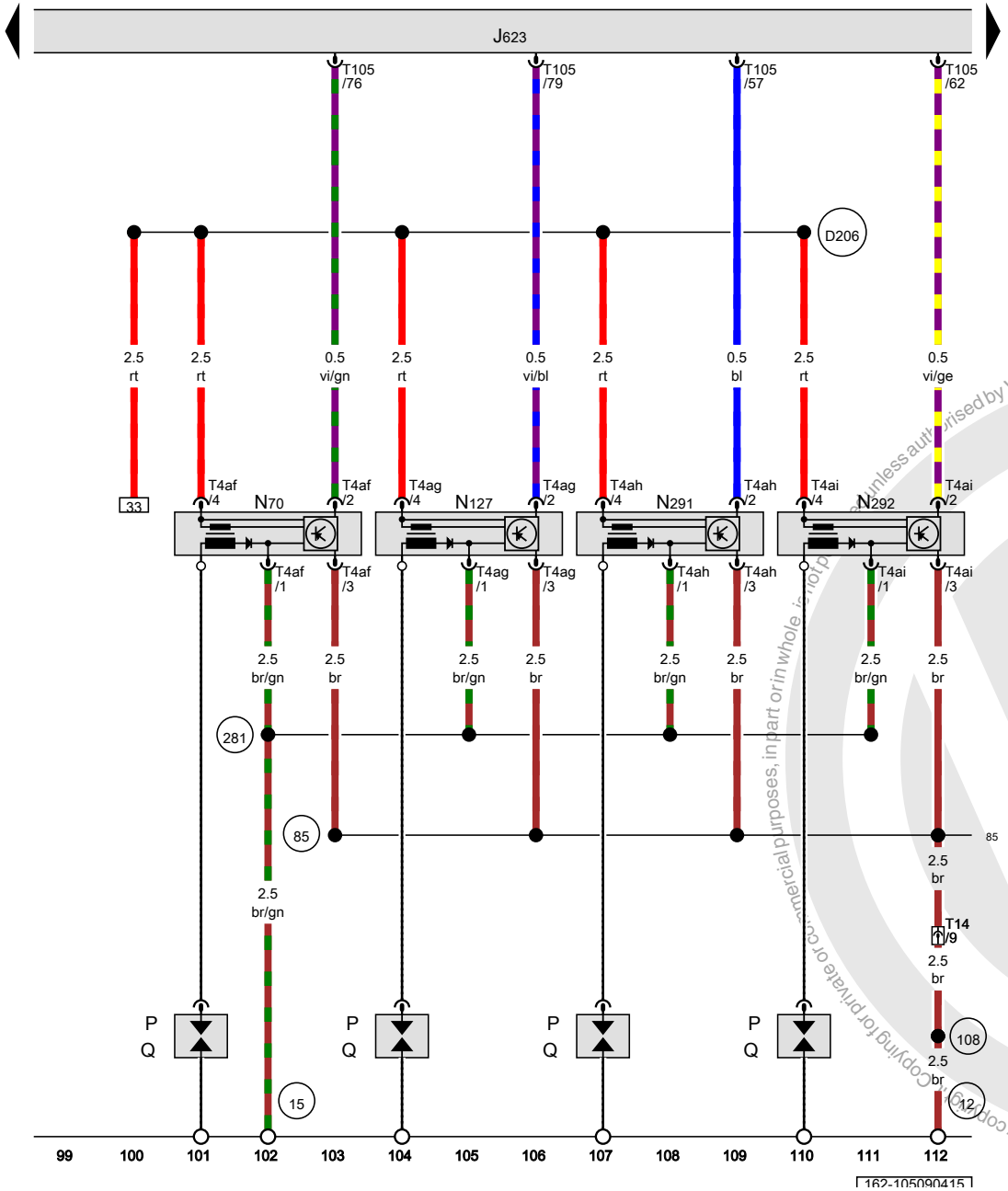

J623	Engine control module
N70	Ignition coil 1 with power output stage
N127	Ignition coil 2 with power output stage
N291	Ignition coil 3 with power output stage
N292	Ignition coil 4 with power output stage
P	Spark plug connectors
Q	Spark plugs
T4af	4-pin connector
T4ag	4-pin connector
T4ah	4-pin connector
T4ai	4-pin connector
T14	14-pin connector
T105	105-pin connector
12	Ground connection in engine compartment, left
15	Ground connection on cylinder head
85	Ground connection 1 (in engine compartment wiring harness)
108	Ground connection 2 (in left front wiring harness)
281	Ground connection 1 (in engine pre-wiring harness)
D206	Connection 87a (in engine pre-wiring harness) 4

ws	=	white
sw	=	black
ro	=	red
rt	=	red
br	=	brown
gn	=	green
bl	=	blue
gr	=	grey
li	=	lilac
vi	=	lilac
ge	=	yellow
or	=	orange
rs	=	pink

Protected by copyright. Copying for private or commercial purposes, in part or in whole, is not permitted unless authorised by Volkswagen AG. Volkswagen AG does not guarantee or accept any liability with respect to the correctness of information in this document. Copyright by Volkswagen AG.

Throttle valve control module, EPC throttle drive, Charge air pressure actuator position sensor, Engine control module, After-run coolant pump

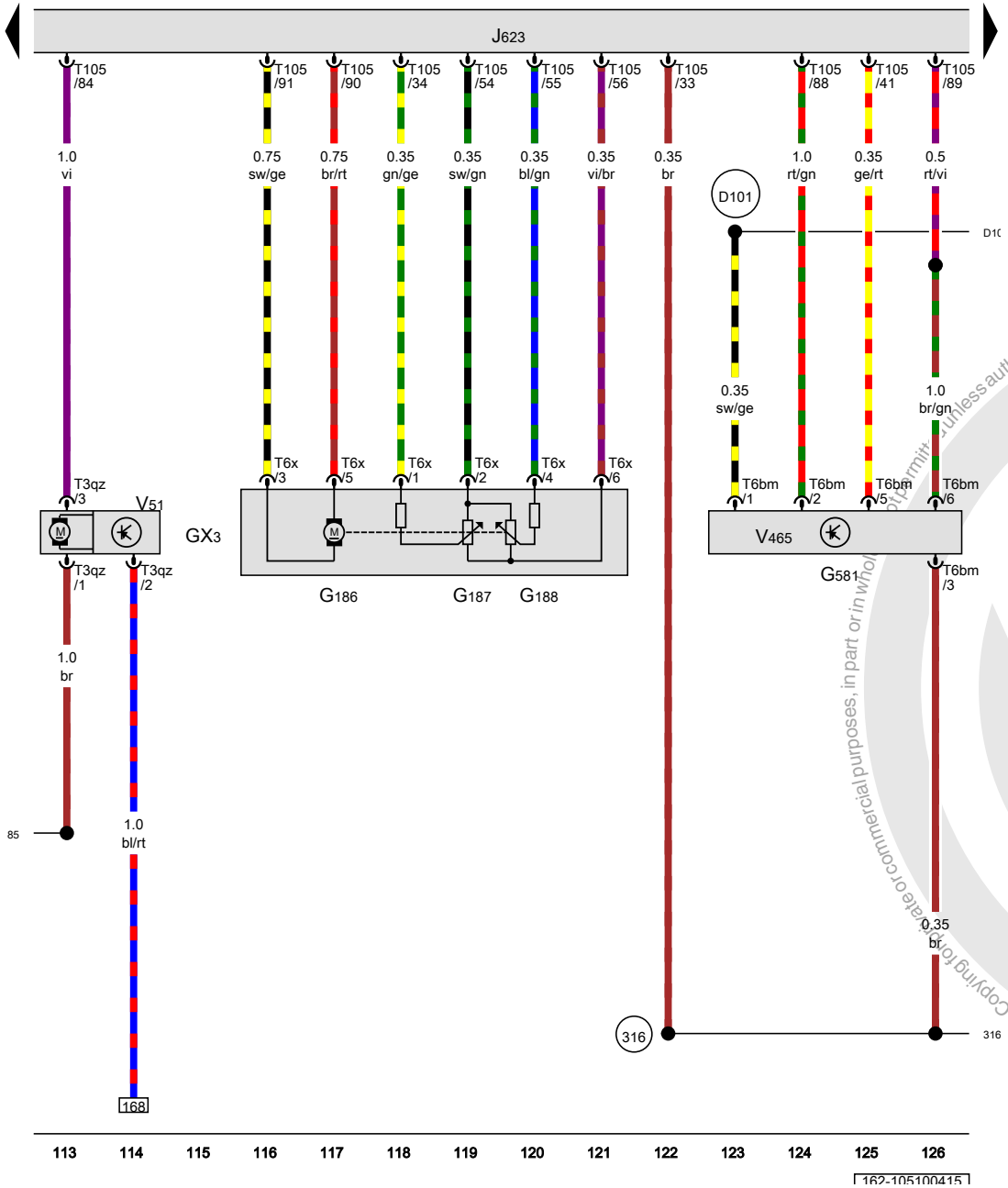

GX3	Throttle valve control module
G186	EPC throttle drive
G187	EPC throttle drive angle sensor 1
G188	EPC throttle drive angle sensor 2
G581	Charge air pressure actuator position sensor
J623	Engine control module
T3qz	3-pin connector
T6bm	6-pin connector
T6x	6-pin connector
T105	105-pin connector
V51	After-run coolant pump
V465	Charge air pressure actuator
85	Ground connection 1 (in engine compartment wiring harness)
316	Sensor ground connection 2 (in engine wiring harness)
D101	Connection 1 (in engine compartment wiring harness)

ws	=	white
sw	=	black
ro	=	red
rt	=	red
br	=	brown
gn	=	green
bl	=	blue
gr	=	grey
li	=	lilac
vi	=	lilac
ge	=	yellow
or	=	orange
rs	=	pink

Protected by copyright. Copying for private or commercial purposes, in part or in whole, is not permitted unless authorised by Volkswagen AG. Volkswagen AG does not guarantee or accept any liability with respect to the correctness of information in this document. Copyright by Volkswagen AG.

Intake manifold sensor, Secondary air system, Engine speed sensor, Fuel pressure sensor, Engine control module, Secondary air injection solenoid valve

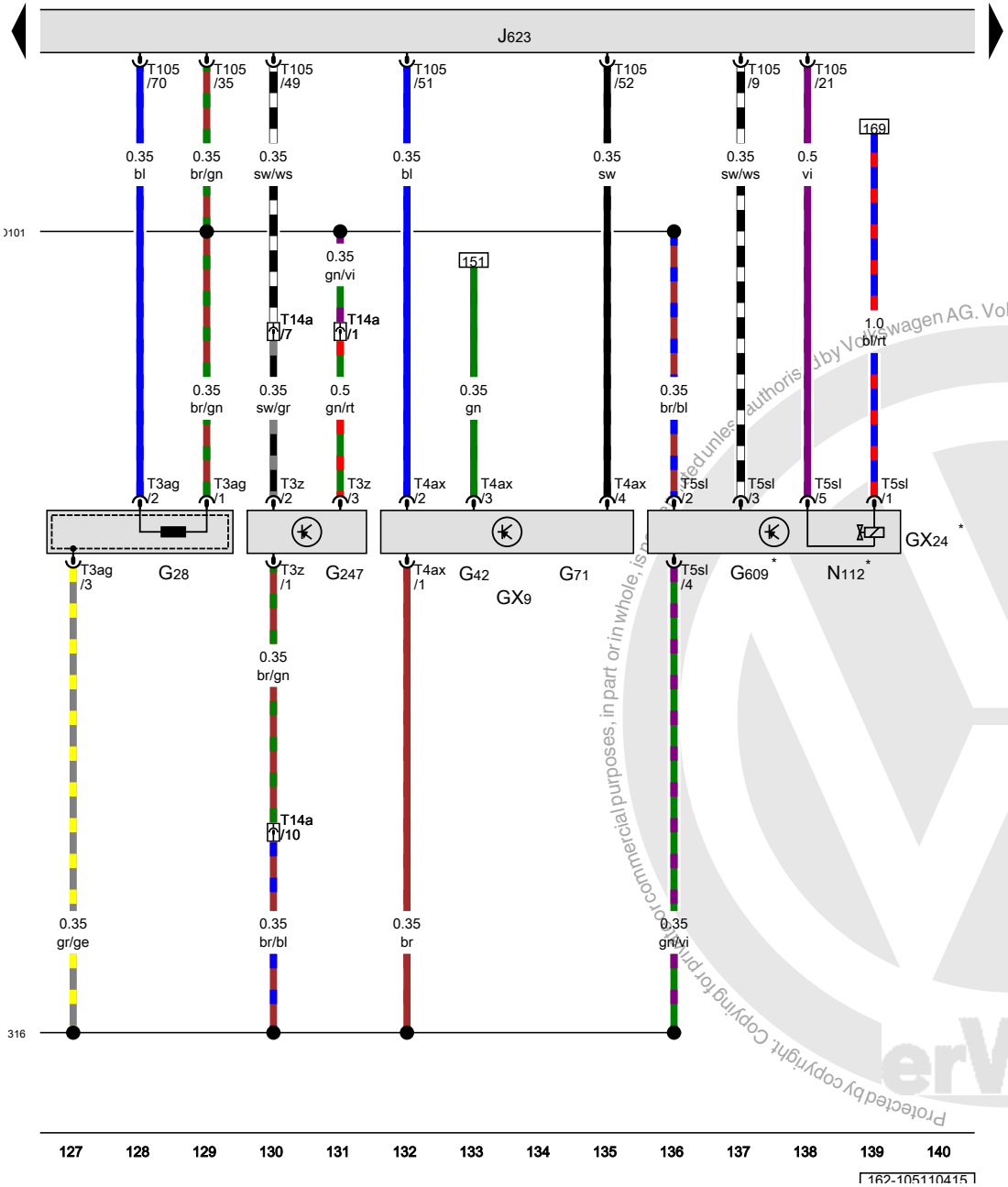

GX9	Intake manifold sensor
GX24	Secondary air system
G28	Engine speed sensor
G42	Intake air temperature sensor
G71	Manifold absolute pressure sensor
G247	Fuel pressure sensor
G609	Secondary air injection sensor 1
J623	Engine control module
N112	Secondary air injection solenoid valve
T3ag	3-pin connector
T3z	3-pin connector
T4ax	4-pin connector
T5sl	5-pin connector
T14a	14-pin connector
T105	105-pin connector
316	Sensor ground connection 2 (in engine wiring harness)
D101	Connection 1 (in engine compartment wiring harness)
*	Depending on equipment

ws	=	white
sw	=	black
ro	=	red
rt	=	red
br	=	brown
gn	=	green
bl	=	blue
gr	=	grey
li	=	lilac
vi	=	lilac
ge	=	yellow
or	=	orange
rs	=	pink

Protected by copyright. Copying for private or commercial purposes, in part or in whole, is not permitted unless authorised by Volkswagen AG. Volkswagen AG does not guarantee or accept any liability with respect to the correctness of information in this document. Copyright by Volkswagen AG.

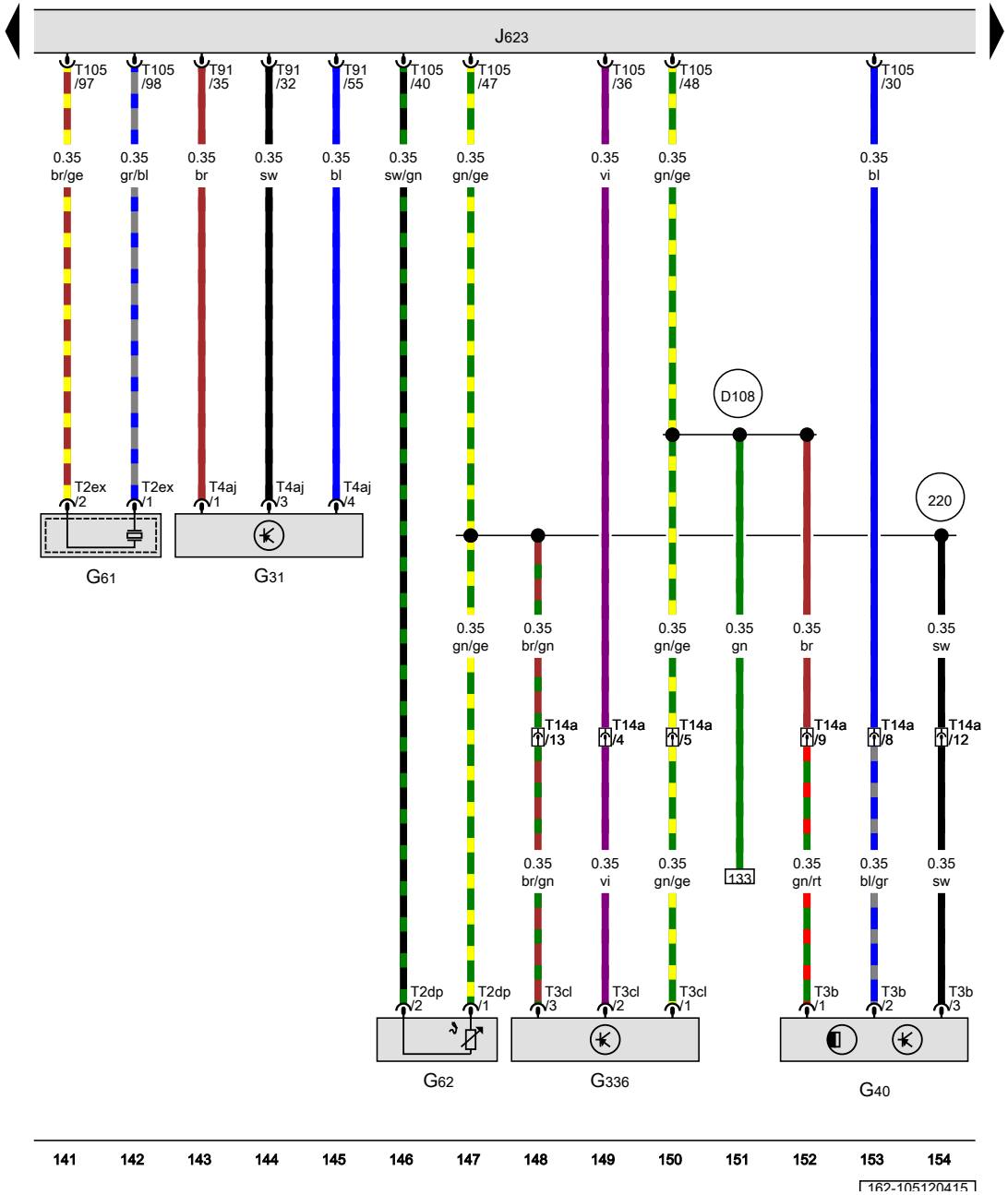

Charge air pressure sensor, Camshaft position sensor, Knock sensor 1, Engine coolant temperature sensor, Engine control module

G31	Charge air pressure sensor
G40	Camshaft position sensor
G61	Knock sensor 1
G62	Engine coolant temperature sensor
G336	Intake manifold runner position sensor
J623	Engine control module
T2dp	Double connector
T2ex	Double connector
T3b	3-pin connector
T3cl	3-pin connector
T4aj	4-pin connector
T14a	14-pin connector
T91	91-pin connector
T105	105-pin connector
220	Sensor ground connection (in engine wiring harness)
D108	Connection 6 (in engine compartment wiring harness)

ws	=	white
sw	=	black
ro	=	red
rt	=	red
br	=	brown
gn	=	green
bl	=	blue
gr	=	grey
li	=	lilac
vi	=	lilac
ge	=	yellow
or	=	orange
rs	=	pink

Protected by copyright. Copying for private or commercial purposes, in part or in whole, is not permitted unless authorised by Volkswagen AG. Volkswagen AG does not guarantee or accept any liability with respect to the correctness of information in this document. Copyright by Volkswagen AG.

Engine control module, Cylinder 1 fuel injector, Cylinder 2 fuel injector, Cylinder 3 fuel injector, Cylinder 4 fuel injector, Fuel pressure regulator valve

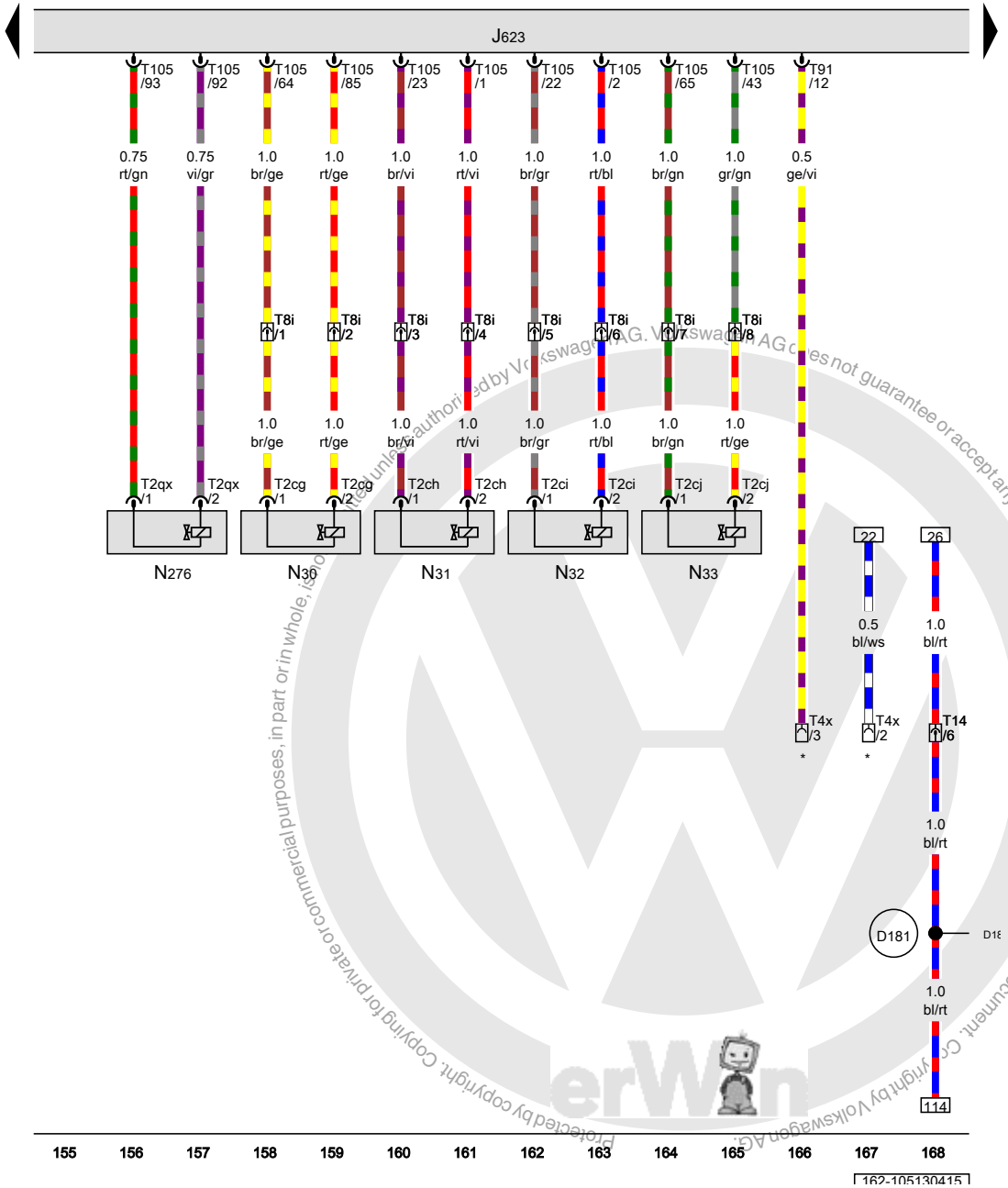

ws	=	white
sw	=	black
ro	=	red
rt	=	red
br	=	brown
gn	=	green
bl	=	blue
gr	=	grey
li	=	lilac
vi	=	lilac
ge	=	yellow
or	=	orange
rs	=	pink

J623	Engine control module
N30	Cylinder 1 fuel injector
N31	Cylinder 2 fuel injector
N32	Cylinder 3 fuel injector
N33	Cylinder 4 fuel injector
N276	Fuel pressure regulator valve
T2cg	Double connector
T2ch	Double connector
T2ci	Double connector
T2cj	Double connector
T2qx	Double connector
T4x	4-pin connector
T8i	8-pin connector
T14	14-pin connector
T91	91-pin connector
T105	105-pin connector
D181	Connection 2 (87a) (in engine compartment wiring harness)
*	Coolant fan connection

Protected by copyright. Copying for private or commercial purposes, in part or in whole, is not permitted unless authorised by Volkswagen AG. Volkswagen AG does not guarantee or accept any liability with respect to the correctness of information in this document. Copyright by Volkswagen AG.

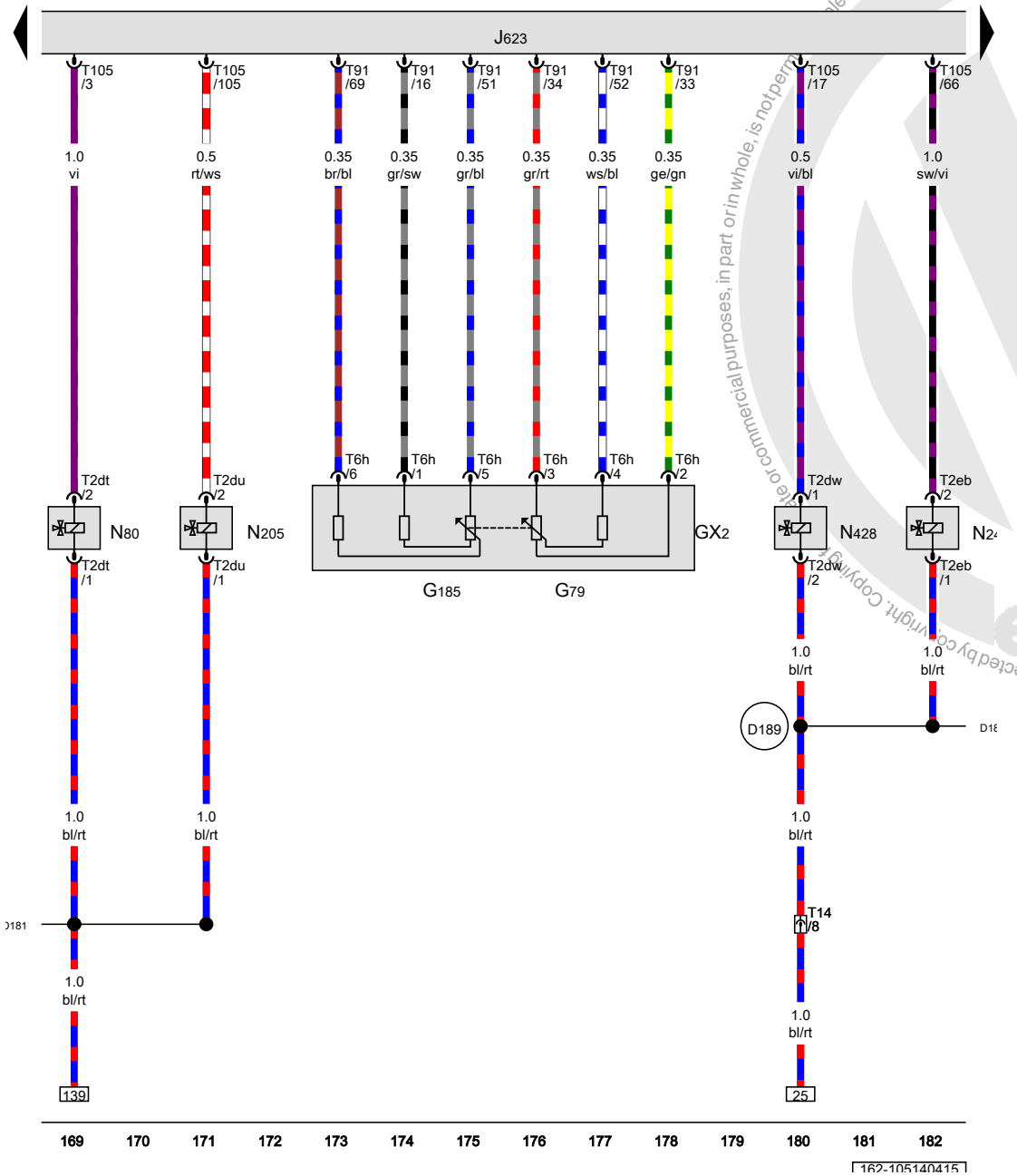

Accelerator pedal module, Accelerator pedal position sensor 2, Engine control module, EVAP canister purge regulator valve 1, Camshaft adjustment valve 1, Turbocharger recirculation valve, Oil pressure regulation valve

GX2	Accelerator pedal module
G79	Accelerator pedal position sensor
G185	Accelerator pedal position sensor 2
J623	Engine control module
N80	EVAP canister purge regulator valve 1
N205	Camshaft adjustment valve 1
N249	Turbocharger recirculation valve
N428	Oil pressure regulation valve
T2dt	Double connector
T2du	Double connector
T2dw	Double connector
T2eb	Double connector
T6h	6-pin connector
T14	14-pin connector
T91	91-pin connector
T105	105-pin connector
D181	Connection 2 (87a) (in engine compartment wiring harness)
D189	Connection 87a (in engine pre-wiring harness)

ws	=	white
sw	=	black
ro	=	red
rt	=	red
br	=	brown
gn	=	green
bl	=	blue
gr	=	grey
li = lilac
vi = lilac
ge = yellow
or = orange
rs = pink

Protected by copyright. Copying for private or commercial purposes, in part or in whole, is not permitted unless authorised by Volkswagen AG. Volkswagen AG does not guarantee or accept any liability with respect to the correctness of information in this document. Copyright by Volkswagen AG.

Oxygen sensor 1 before catalytic converter, Engine control module, Intake manifold runner control valve, Leak detection pump, Oxygen sensor heater

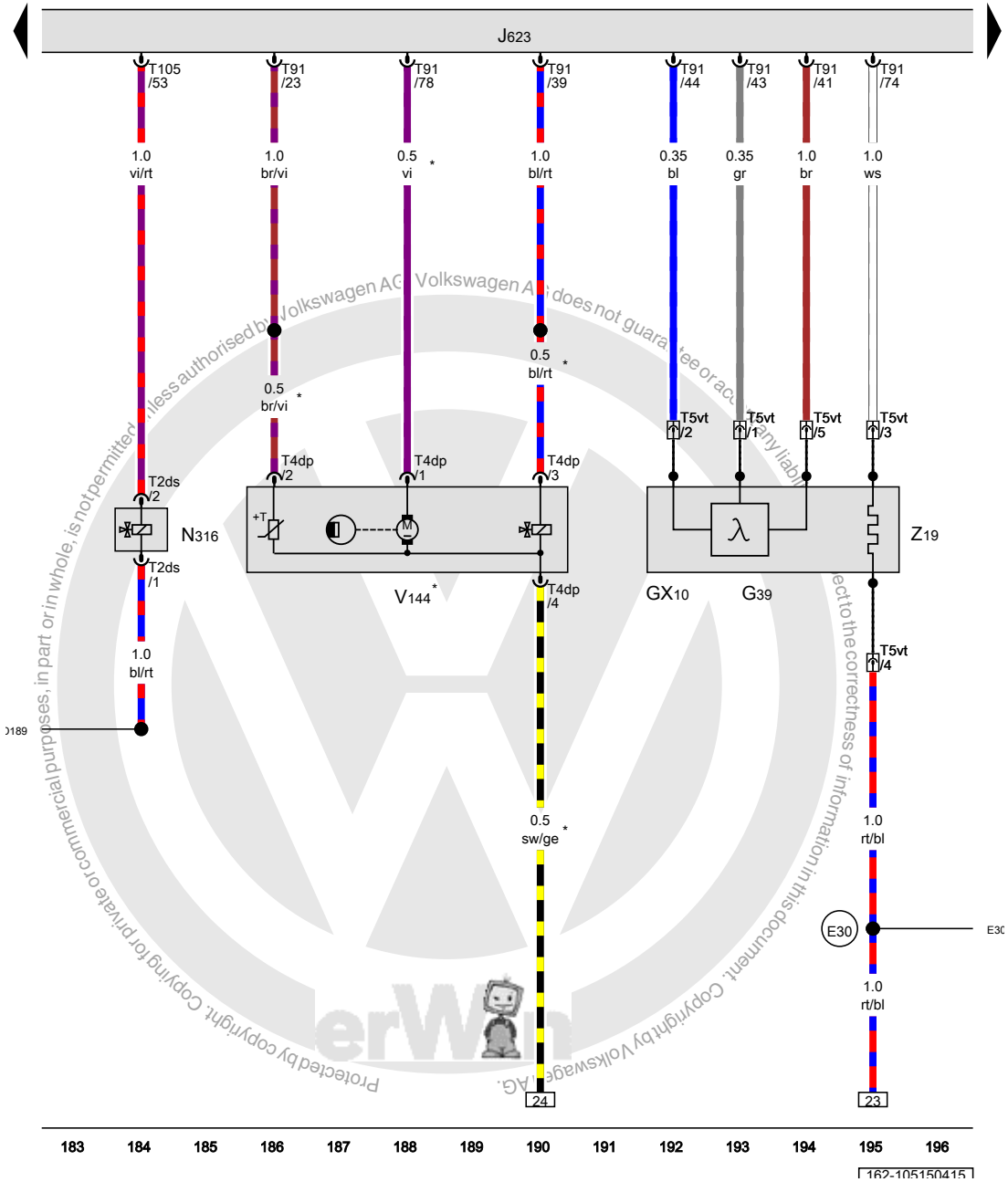

GX10	Oxygen sensor 1 before catalytic converter
G39	Heated oxygen sensor
J623	Engine control module
N316	Intake manifold runner control valve
T2ds	Double connector
T4dp	4-pin connector
T5vt	5-pin connector
T91	91-pin connector
T105	105-pin connector
V144	Leak detection pump
Z19	Oxygen sensor heater
D189	Connection 87a (in engine pre-wiring harness)
E30	Connection 87a (in engine wiring harness)
*	Depending on equipment

ws	=	white
sw	=	black
ro	=	red
rt	=	red
br	=	brown
gn	=	green
bl	=	blue
gr	=	grey
li	=	lilac
vi	=	lilac
ge	=	yellow
or	=	orange
rs	=	pink

Protected by copyright. Copying for private or commercial purposes, in part or in whole, is not permitted unless authorised by Volkswagen AG. Volkswagen AG does not guarantee or accept any liability with respect to the correctness of information in this document. Copyright by Volkswagen AG.

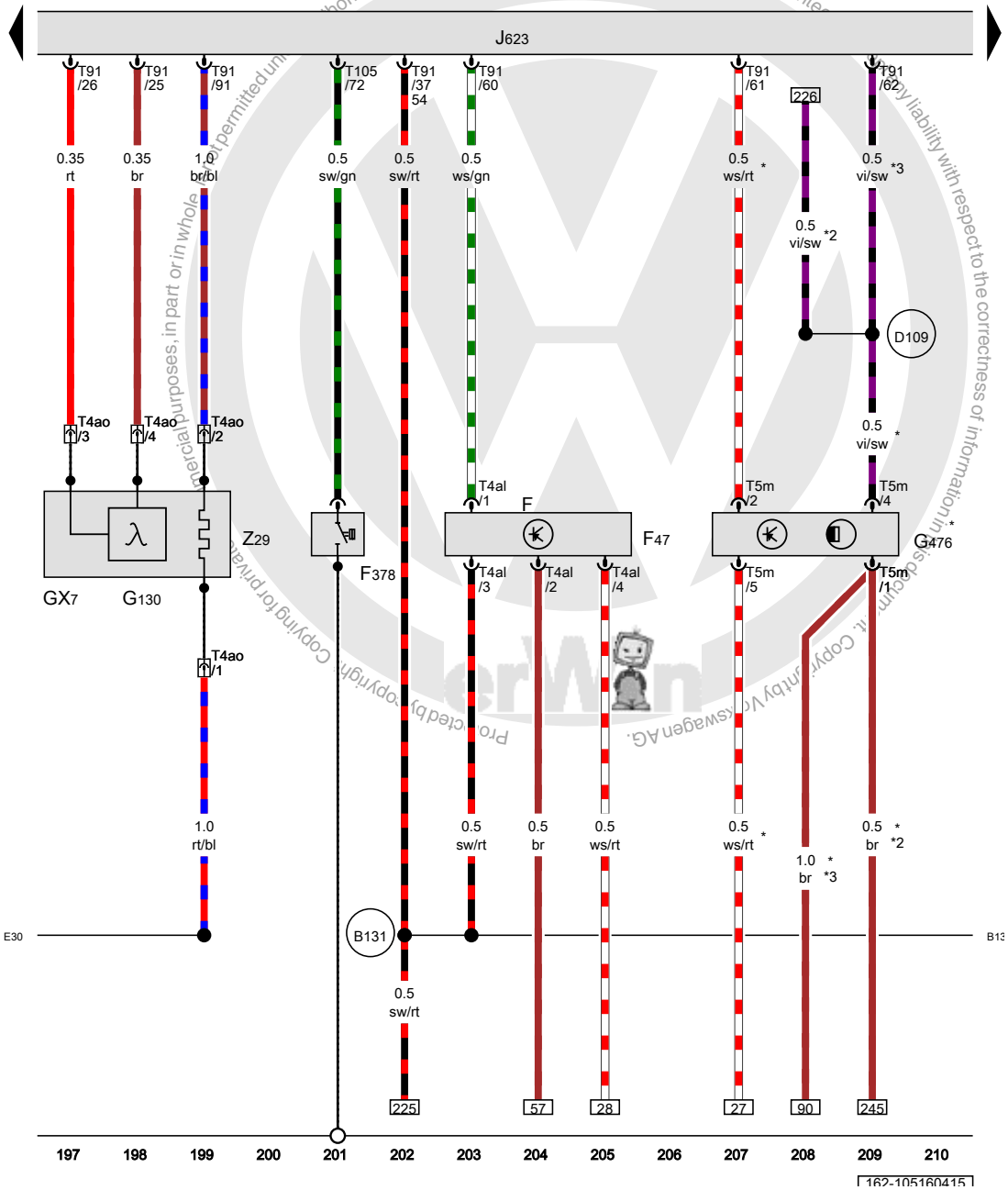

Brake lamp switch, Brake pedal switch, Reduced oil pressure switch, Oxygen sensor 1 after catalytic converter, Clutch position sensor, Engine control module, Heater for oxygen sensor 1 after catalytic converter

F	Brake lamp switch
F47	Brake pedal switch
F378	Reduced oil pressure switch
GX7	Oxygen sensor 1 after catalytic converter
G130	Oxygen sensor after three way catalytic converter
G476	Clutch position sensor
J623	Engine control module
T4al	4-pin connector
T4ao	4-pin connector
T5m	5-pin connector
T91	91-pin connector
T105	105-pin connector
Z29	Heater for oxygen sensor 1 after catalytic converter
(B131)	Connection 54 (in interior wiring harness)
(D109)	Connection 7 (in engine compartment wiring harness)
(E30)	Connection 87a (in engine wiring harness)
*	Only for vehicles with a manual transmission
*2	Not for USA
*3	USA only

ws	=	white
sw	=	black
ro	=	red
rt	=	red
br	=	brown
gn	=	green
bl	=	blue
gr	=	grey
li	=	lilac
vi	=	lilac
ge	=	yellow
or	=	orange
rs	=	pink

Vehicle electrical control module system, Data bus on board diagnostic interface, Engine control module

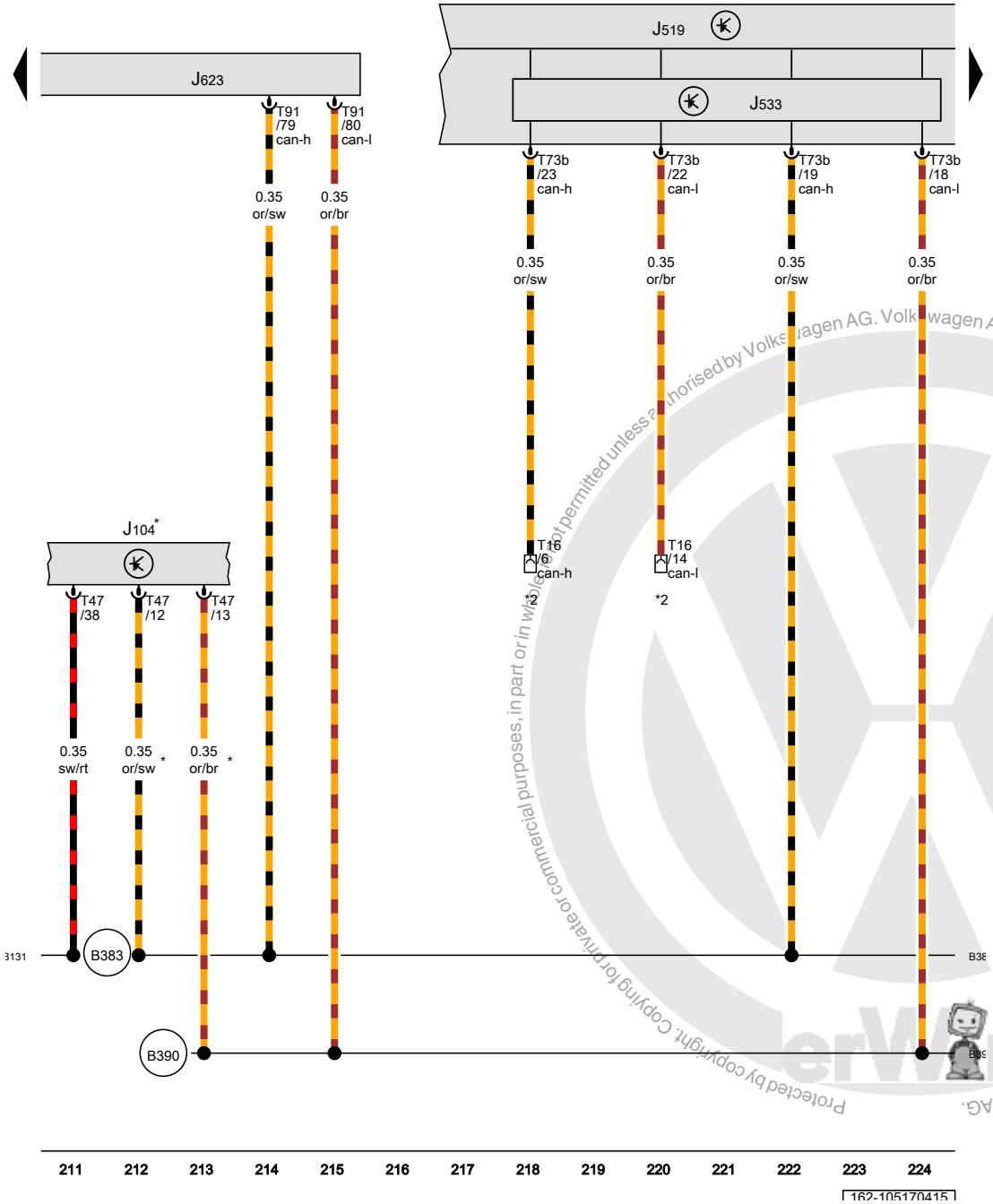

J104	ABS control module
J519	Vehicle electrical control module system
J533	Data bus on board diagnostic interface
J623	Engine control module
T16	16-pin connector
T47	47-pin connector
T73b	73-pin connector
T91	91-pin connector
B131	Connection 54 (in interior wiring harness)
B383	Powertrain CAN bus high connection 1 (in main wiring harness)
B390	Powertrain CAN bus low connection 1 (in main wiring harness)
*	Only for vehicles with ABS and ESP
*2	Diagnostic connector

ws	=	white
sw	=	black
ro	=	red
rt	=	red
br	=	brown
gn	=	green
bl	=	blue
gr	=	grey
li	=	lilac
vi	=	lilac
ge	=	yellow
or	=	orange
rs	=	pink

Protected by copyright. Copying for private or commercial purposes, in part or in whole, is not permitted unless authorised by Volkswagen AG. Volkswagen AG does not guarantee or accept any liability with respect to the correctness of information in this document. Copyright by Volkswagen AG.

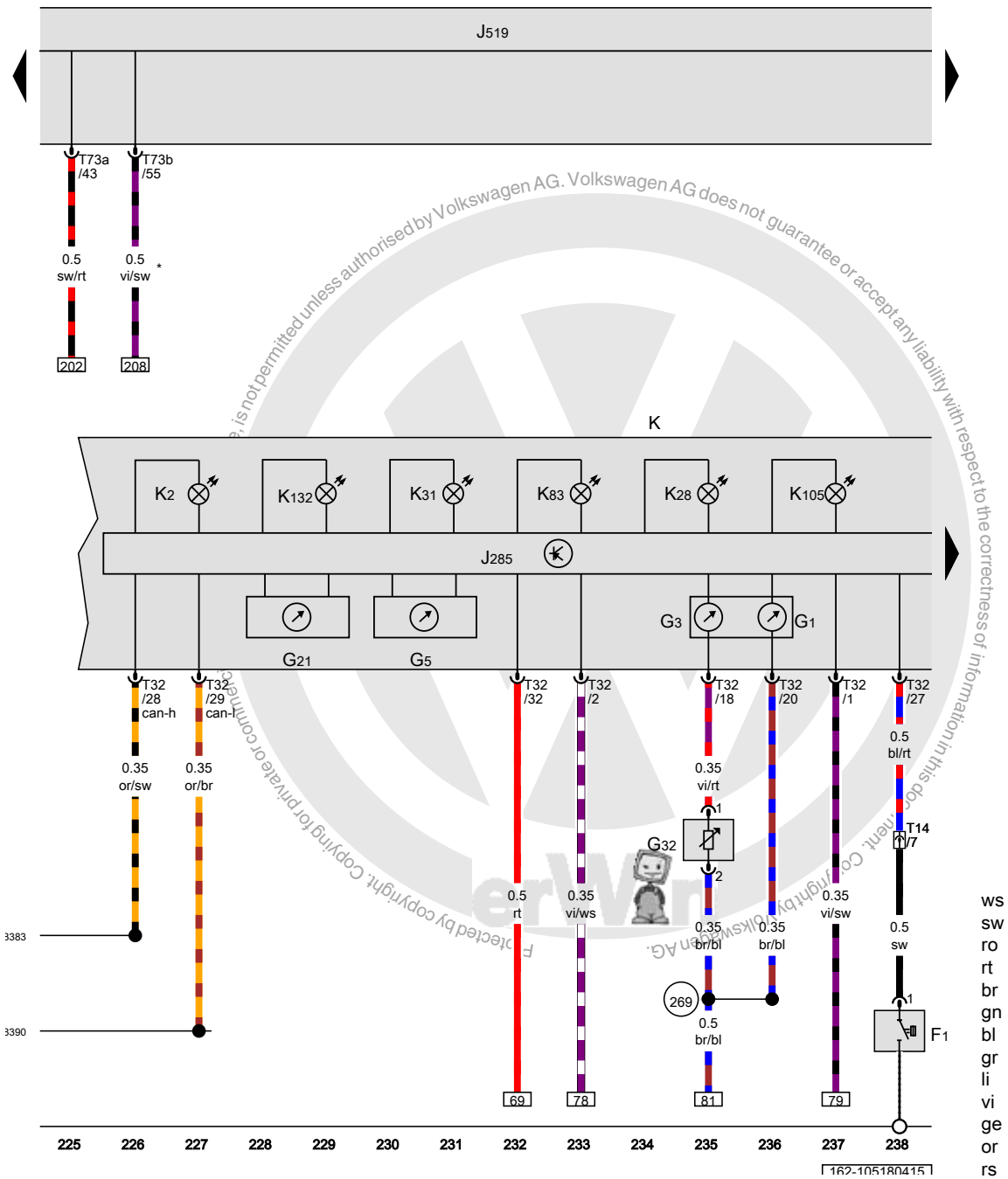

Oil pressure switch, Fuel gauge, Engine coolant temperature gauge, Tachometer, Speedometer, Instrument cluster control module, Vehicle electrical control module system, Generator indicator lamp, Engine coolant level/ temperature indicator lamp, Cruise control indicator lamp, Low fuel level indicator lamp, Electronic power control malfunction indicator lamp

F1	Oil pressure switch
G1	Fuel gauge
G3	Engine coolant temperature gauge
G5	Tachometer
G21	Speedometer
G32	Engine coolant level sensor
J285	Instrument cluster control module
J519	Vehicle electrical control module system
K	Instrument cluster
K2	Generator indicator lamp
K28	Engine coolant level/temperature indicator lamp
K31	Cruise control indicator lamp
K83	Malfunction indicator lamp
K105	Low fuel level indicator lamp
K132	Electronic power control malfunction indicator lamp
T14	14-pin connector
T32	32-pin connector
T73a	73-pin connector
T73b	73-pin connector
269	Sensor ground connection 1 (in instrument panel wiring harness)
B383	Powertrain CAN bus high connection 1 (in main wiring harness)
B390	Powertrain CAN bus low connection 1 (in main wiring harness)
*	Not for USA

ws	=	white
sw	=	black
ro	=	red
rt	=	red
br	=	brown
gn	=	green
bl	=	blue
gr	=	grey
li	=	lilac
vi	=	lilac
ge	=	yellow
or	=	orange
rs	=	pink

Protected by copyright. Copying for private or commercial purposes, is not permitted unless authorised by Volkswagen AG. Volkswagen AG does not guarantee or accept any liability with respect to the correctness of information in this document. Copyright by Volkswagen AG.

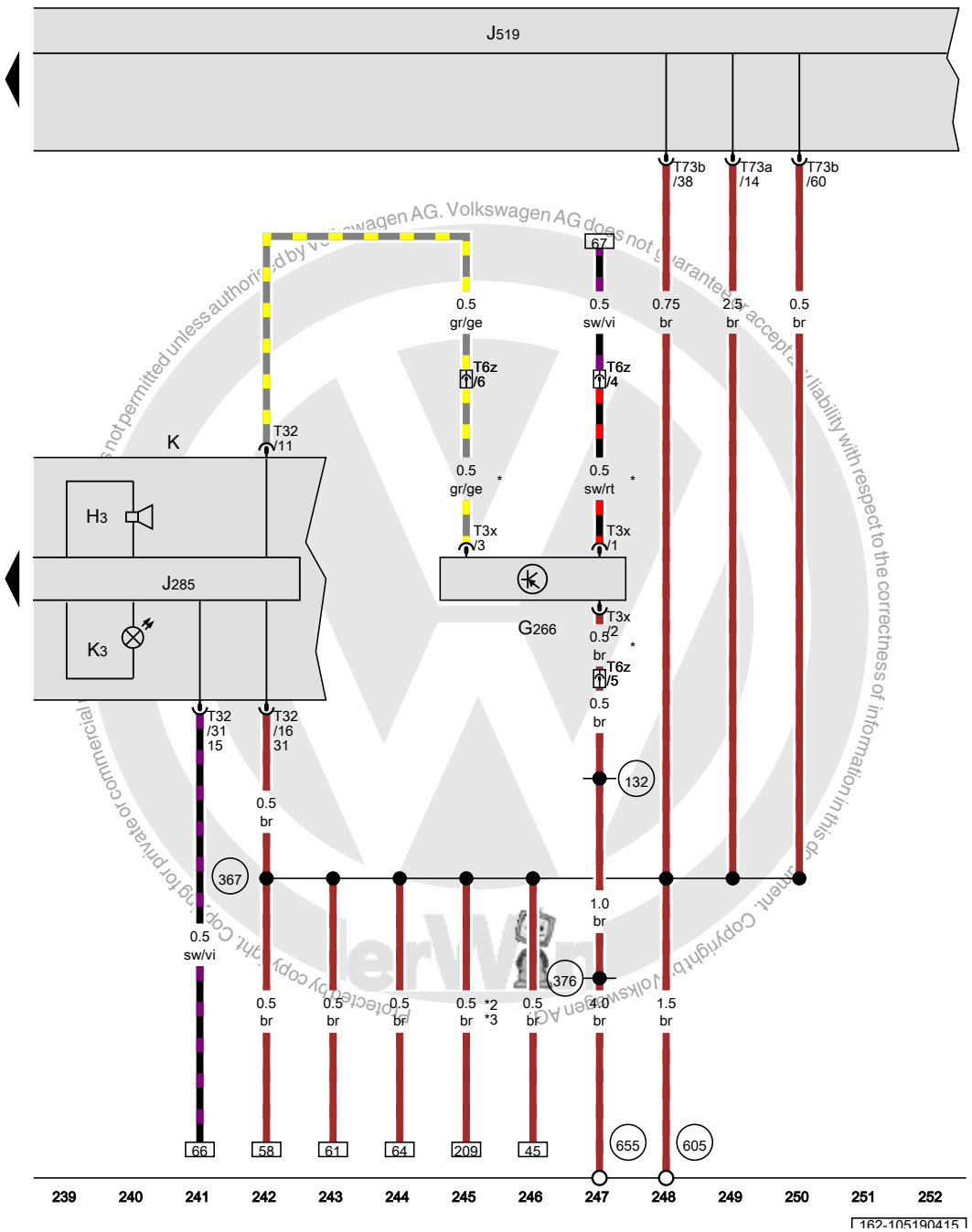

Oil level thermal sensor, Instrument cluster control module, Vehicle electrical control module system

G266	Oil level thermal sensor
H3	Warning buzzer and tone
J285	Instrument cluster control module
J519	Vehicle electrical control module system
K	Instrument cluster
K3	Oil pressure indicator lamp
T3x	3-pin connector
T6z	6-pin connector, near the left headlamp
T32	32-pin connector
T73a	73-pin connector
T73b	73-pin connector
132	Ground connection 3 (in engine compartment wiring harness)
367	Ground connection 2 (in main wiring harness)
376	Ground connection 11 (in main wiring harness)
605	Ground connection on upper steering column
655	Ground connection on left headlamp
*	Only for vehicles with flexible service interval reminder
*2	Only for vehicles with a manual transmission
*3	Not for USA

ws	=	white
sw	=	black
ro	=	red
rt	=	red
br	=	brown
gn	=	green
bl	=	blue
gr	=	grey
li	=	lilac
vi	=	lilac
ge	=	yellow
or	=	orange
rs	=	pink

Volkswagen AG. Volkswagen AG does not guarantee or accept any liability with respect to the correctness of information in this document. Copyright by Volkswagen AG. Protected by copyright. Copying for private or commercial purposes is not permitted unless authorised by Volkswagen AG.

2.0L gasoline engine , CPLA

from December 2012

Protected by copyright. Copying for private or commercial purposes, in part or in whole, is not permitted unless authorised by Volkswagen AG. Volkswagen AG does not guarantee or accept any liability with respect to the correctness of information in this document. Copyright by Volkswagen AG.

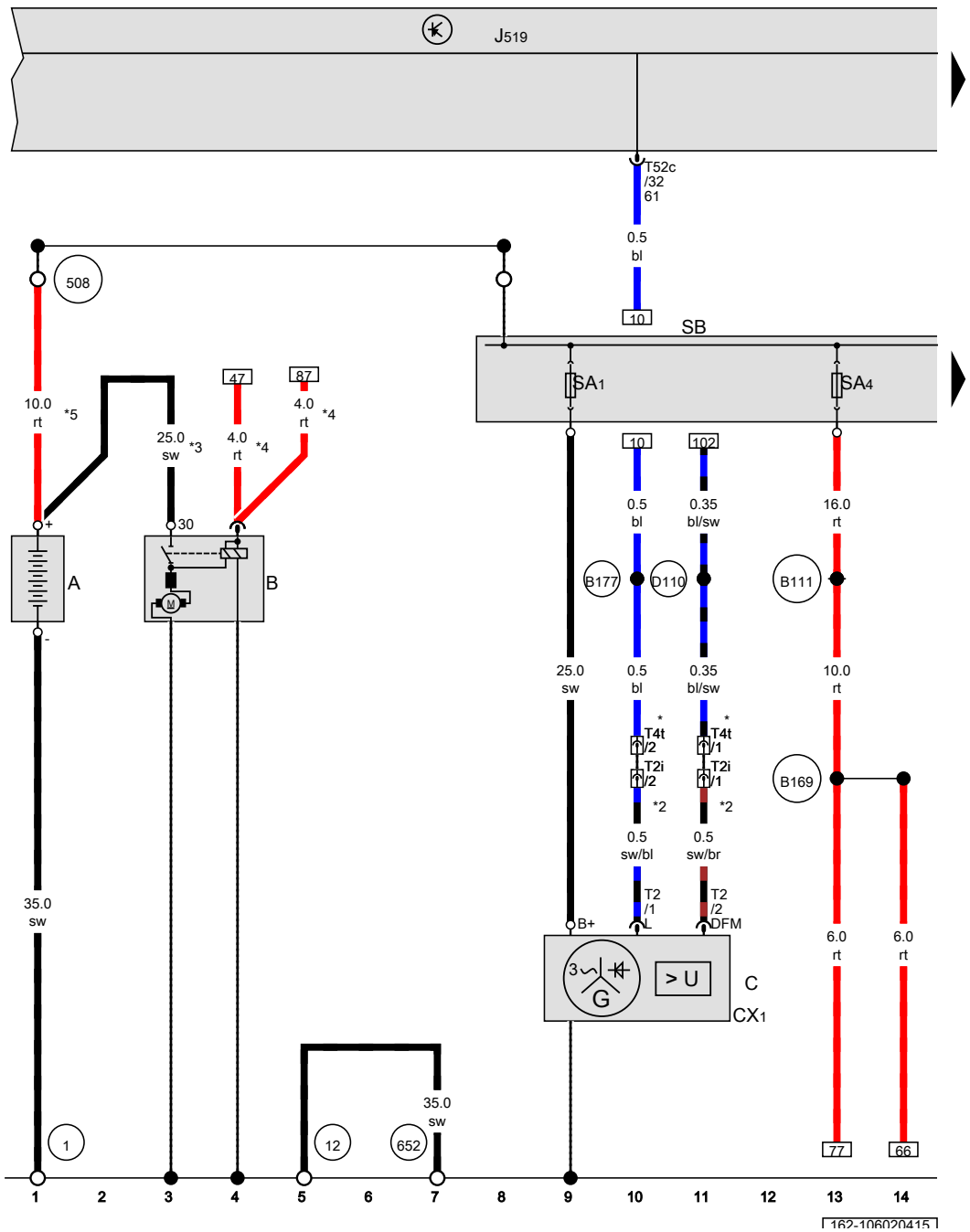

Battery, Starter, Generator, Vehicle electrical control module system, Fuse panel B

A	Battery
B	Starter
C	Generator
CX1	Generator with voltage regulator
J519	Vehicle electrical control module system
SA1	Fuse 1 (on fuse panel A)
SA4	Fuse 4 (on fuse panel A)
SB	Fuse panel B
T2	Double connector
T2i	Double connector, near the starter
T4t	4-pin connector, near the starter
T52c	52-pin connector
1	Ground strap, battery to body
12	Ground connection in engine compartment, left
508	Terminal 30 threaded connection (on E-box)
652	Transmission/engine ground connection
B111	Positive connection 1 (30a) (in interior wiring harness)
B169	Positive connection 1 (30) (in interior wiring harness)
B177	Connection 61 (in interior wiring harness)
D110	Connection 8 (in engine compartment wiring harness)
*	Only for vehicles with A/C system
*2	Only for vehicles without an A/C system
*3	35.0 diameter possible
*4	Depending on equipment
*5	16.0 diameter possible

ws	=	white
sw	=	black
ro	=	red
rt	=	red
br	=	brown
gn	=	green
bl	=	blue
gr	=	grey
li	=	lilac
vi	=	lilac
ge	=	yellow
or	=	orange
rs	=	pink

Protected by copyright. Copying for private or commercial purposes, in part or in whole, is not permitted unless authorised. Volkswagen AG does not guarantee or accept any liability with respect to the correctness of information in this document. Copyright by Volkswagen AG.

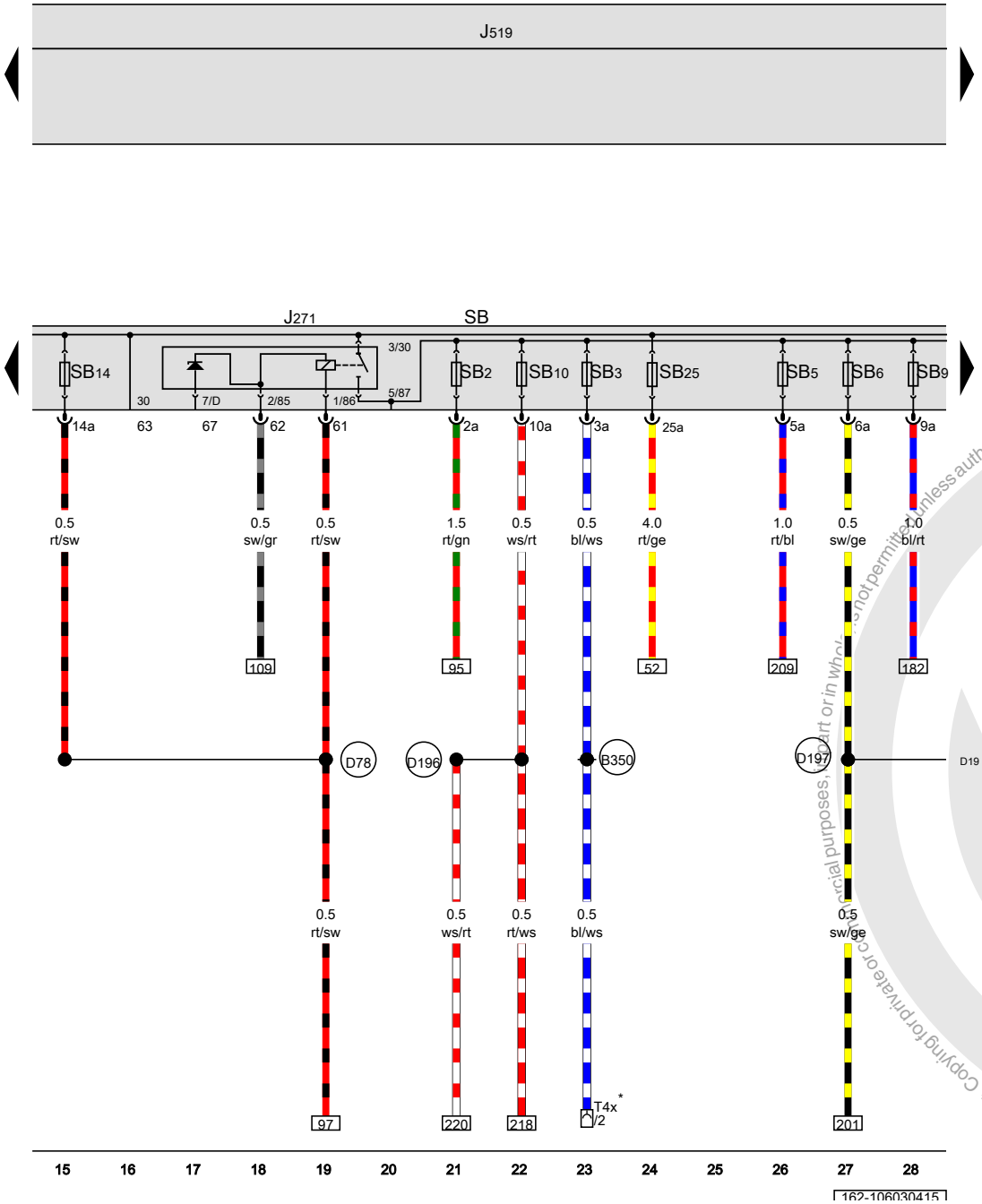

Motronic engine control module power supply relay, Vehicle electrical control module system, Fuse panel B, Fuse 14 (on fuse panel B)

J271	Motronic engine control module power supply relay
J519	Vehicle electrical control module system
SB	Fuse panel B
SB2	Fuse 2 (on fuse panel B)
SB3	Fuse 3 (on fuse panel B)
SB5	Fuse 5 (on fuse panel B)
SB6	Fuse 6 (on fuse panel B)
SB9	Fuse 9 (on fuse panel B)
SB10	Fuse 10 (on fuse panel B)
SB14	Fuse 14 (on fuse panel B)
SB25	Fuse 25 (on fuse panel B)
T4x	4-pin connector
B350	Positive connection 1 (87a) (in main wiring harness)
D78	Positive connection 1 (30a) (in engine compartment wiring harness)
D196	Connection 87a (in engine pre-wiring harness) 2
D197	Connection 5 (87a) (in engine compartment wiring harness)
*	Coolant fan connection

ws	=	white
sw	=	black
ro	=	red
rt	=	red
br	=	brown
gn	=	green
bl	=	blue
gr	=	grey
li	=	lilac
vi	=	lilac
ge	=	yellow
or	=	orange
rs	=	pink

Protected by copyright. Copying for private or commercial purposes, in part or in whole, is not permitted unless authorised by Volkswagen AG. Volkswagen AG does not guarantee or accept any liability with respect to the correctness of information in this document. Copyright by Volkswagen AG.

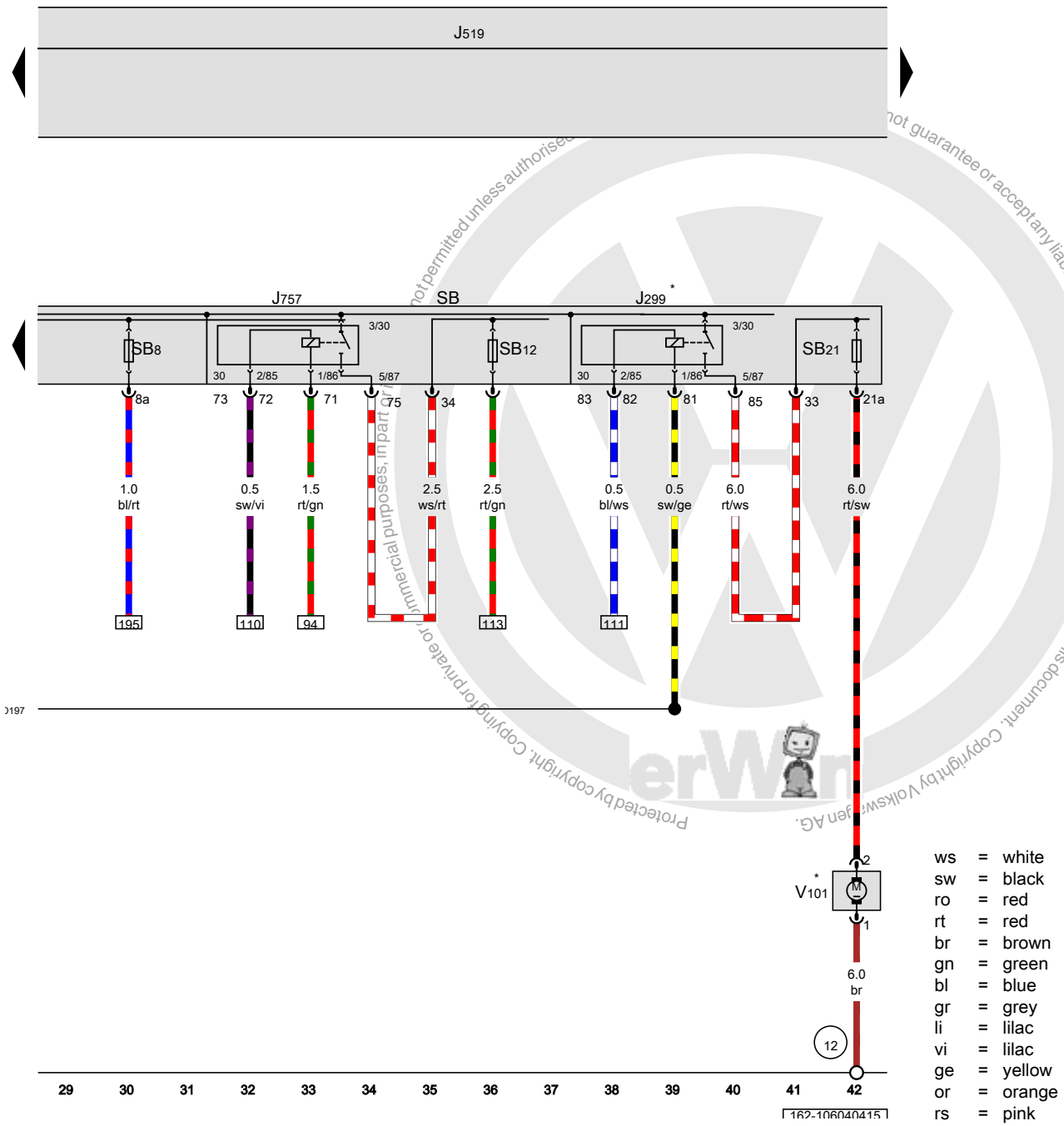

Secondary air injection pump relay, Vehicle electrical control module system, Engine component power supply relay, Fuse panel B, Secondary air injection pump motor

J299	Secondary air injection pump relay
J519	Vehicle electrical control module system
J757	Engine component power supply relay
SB	Fuse panel B
SB8	Fuse 8 (on fuse panel B)
SB12	Fuse 12 (on fuse panel B)
SB21	Fuse 21 (on fuse panel B)
V101	Secondary air injection pump motor
12	Ground connection in engine compartment, left
D197	Connection 5 (87a) (in engine compartment wiring harness)
*	USA only

ws	=	white
sw	=	black
ro	=	red
rt	=	red
br	=	brown
gn	=	green
bl	=	blue
gr	=	grey
li	=	lilac
vi	=	lilac
ge	=	yellow
or	=	orange
rs	=	pink

Protected by copyright. Copying for private or commercial purposes, in part or in whole, is not permitted unless authorised. Copyright by Volkswagen AG. We do not guarantee or accept any liability with respect to the correctness of information in this document.

Vehicle electrical control module system, Terminal 15 power supply relay 2, Terminal 50 power supply relay

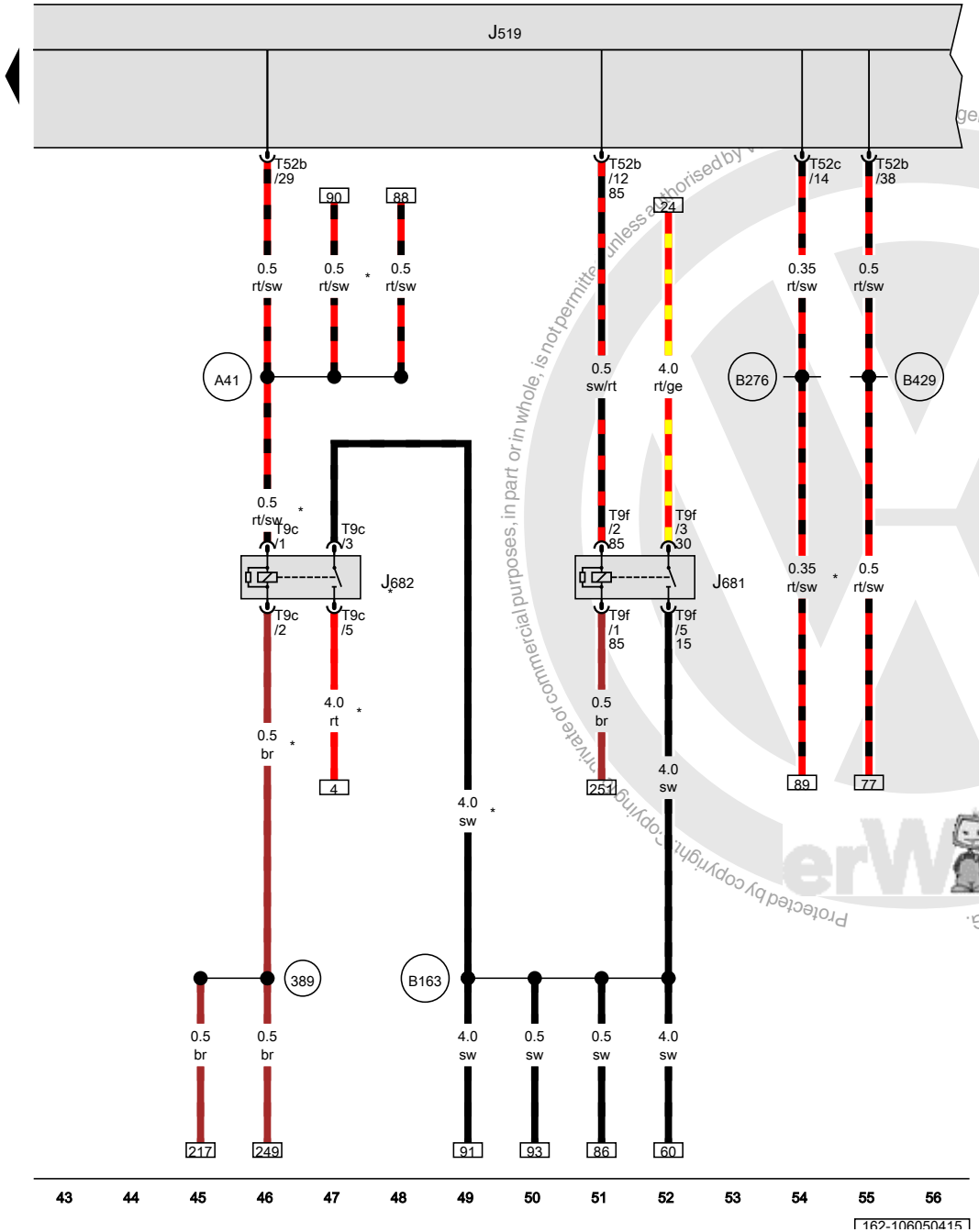

J519	Vehicle electrical control module system
J681	Terminal 15 power supply relay 2
J682	Terminal 50 power supply relay
T9c	9-pin connector
T9f	9-pin connector
T52b	52-pin connector
T52c	52-pin connector
389	Ground connection 24 (in main wiring harness)
A41	Positive connection (50) (in instrument panel wiring harness)
B163	Positive connection 1 (15) (in interior wiring harness)
B276	Positive connection (50) (in main wiring harness)
B429	Fuel pump relay connection (in main wiring harness)
*	Depending on equipment

ws	=	white
sw	=	black
ro	=	red
rt	=	red
br	=	brown
gn	=	green
bl	=	blue
gr	=	grey
li	=	lilac
vi	=	lilac
ge	=	yellow
or	=	orange
rs	=	pink

Protected by copyright. Copying for private or commercial purposes, in part or in whole, is not permitted unless authorised by Volkswagen AG. Volkswagen AG does not guarantee or accept any liability with respect to the correctness of information in this document. Copyright by Volkswagen AG.

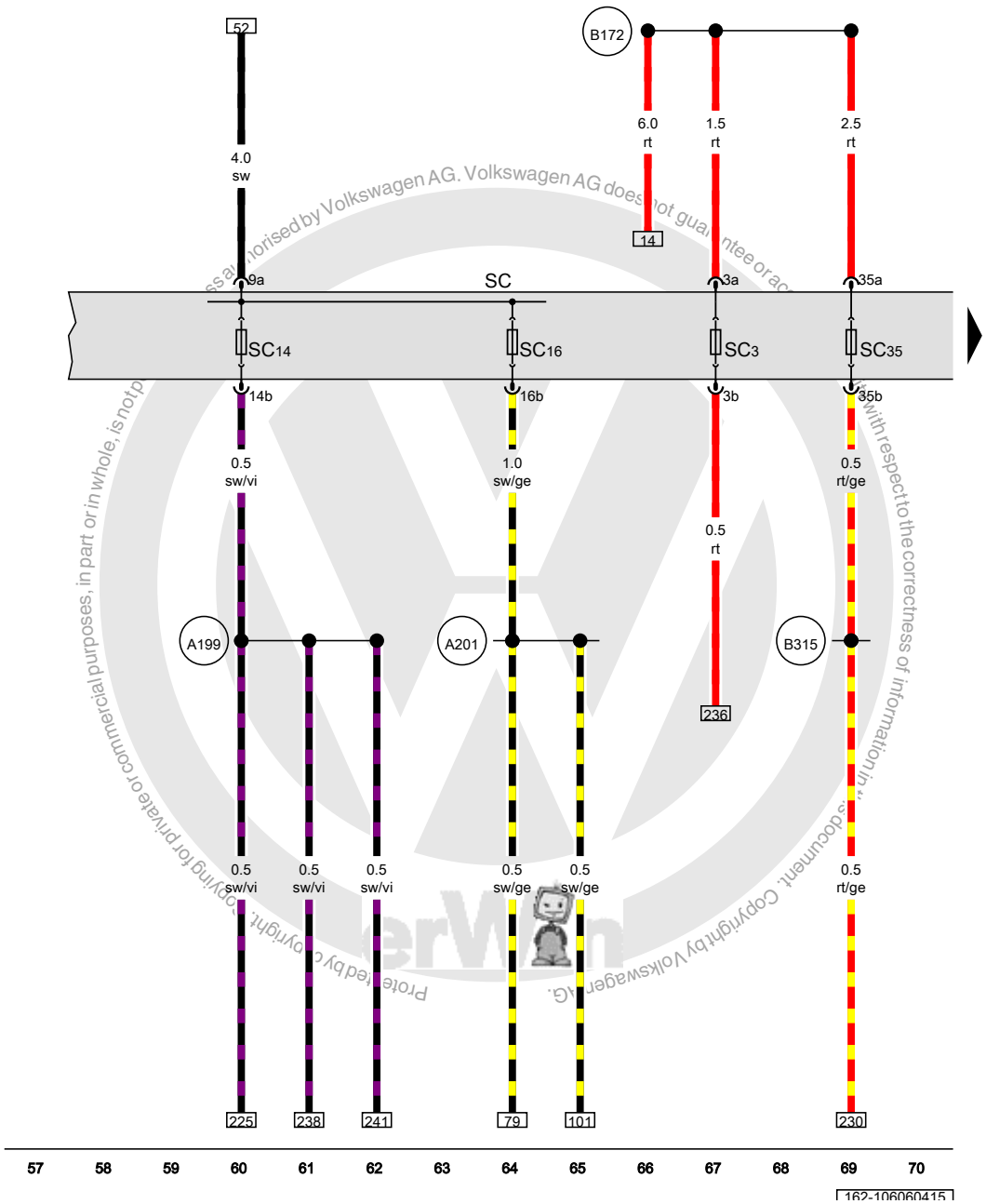

Fuse panel C

SC	Fuse panel C
SC3	Fuse 3 (on fuse panel C)
SC14	Fuse 14 (on fuse panel C)
SC16	Fuse 16 (on fuse panel C)
SC35	Fuse 35 (on fuse panel C)
A199	Positive connection 4 (15a) (in instrument panel wiring harness)
A201	Positive connection 6 (15a) (in instrument panel wiring harness)
B172	Positive connection 4 (30) (in interior wiring harness)
B315	Positive connection 1 (30a) (in main wiring harness)

ws	=	white
sw	=	black
ro	=	red
rt	=	red
br	=	brown
gn	=	green
bl	=	blue
gr	=	grey
li	=	lilac
vi	=	lilac
ge	=	yellow
or	=	orange
rs	=	pink

Protected by copyright. Copyright by Volkswagen AG. Volkswagen AG does not guarantee or accept any liability with respect to the correctness of information in this document. Copyright by Volkswagen AG. Reproduction, in part or in whole, is not permitted for private or commercial purposes, in part or in whole, is not permitted unless authorised by Volkswagen AG. Volkswagen AG does not guarantee or accept any liability with respect to the correctness of information in this document. Copyright by Volkswagen AG.

Fuel level sensor, Transfer fuel pump, Fuel pump control module, Fuse panel C

G	Fuel level sensor
G6	Transfer fuel pump
J538	Fuel pump control module
SC	Fuse panel C
SC47	Fuse 47 (on fuse panel C)
T5b	5-pin connector
T10n	10-pin connector
196	Ground connection 3 (in rear wiring harness)
682	Ground connection 2 in right rear side panel
B170	Positive connection 2 (30) (in interior wiring harness)

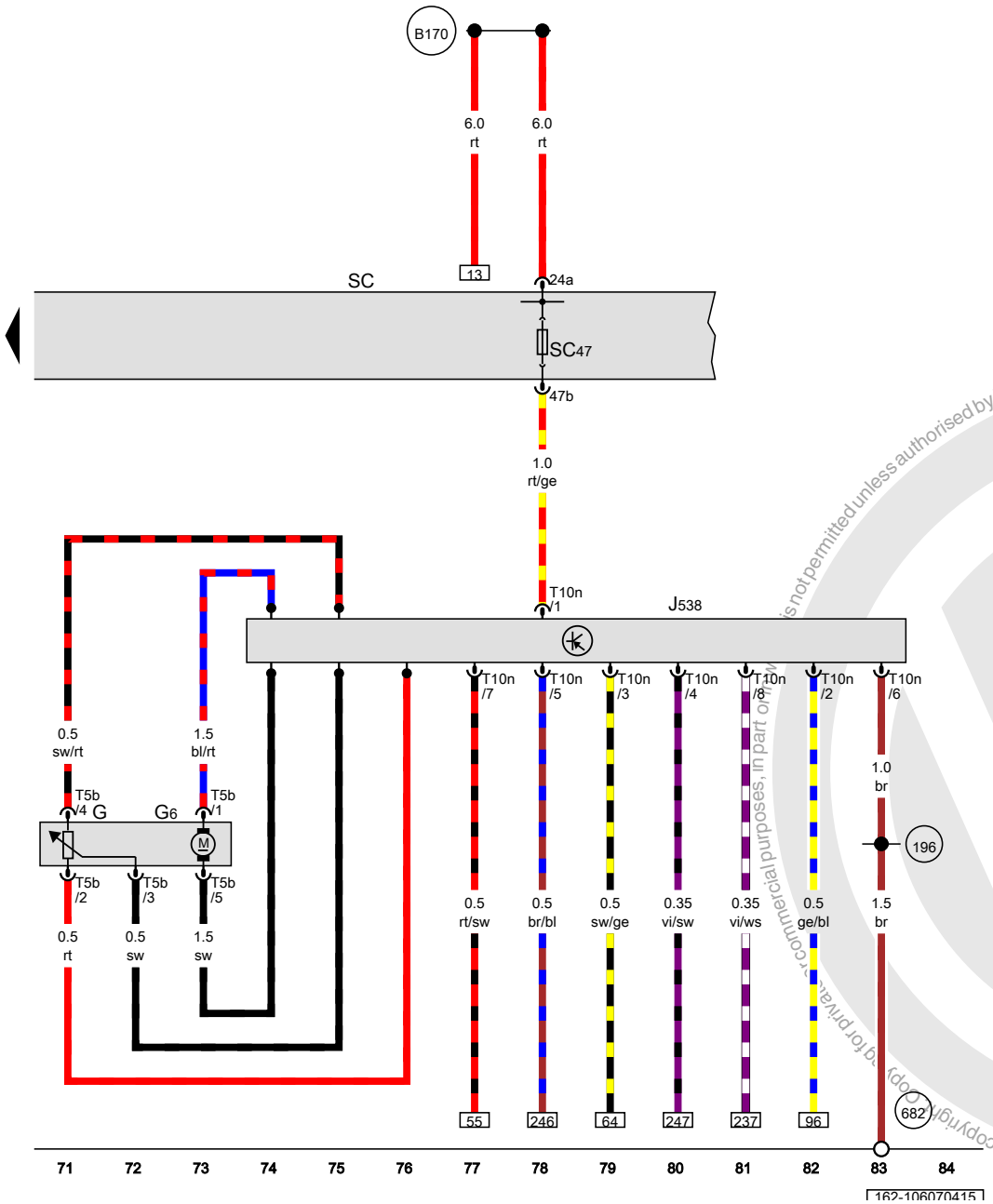

ws	=	white
sw	=	black
ro	=	red
rt	=	red
br	=	brown
gn	=	green
bl	=	blue
gr	=	grey
li	=	lilac
vi	=	lilac
ge	=	yellow
or	=	orange
rs	=	pink

Protected by copyright. Copying for private, commercial purposes, in part or in whole, is not permitted unless authorised by Volkswagen AG. Volkswagen AG does not guarantee or accept any liability with respect to the correctness of information in this document. Copyright by Volkswagen AG.

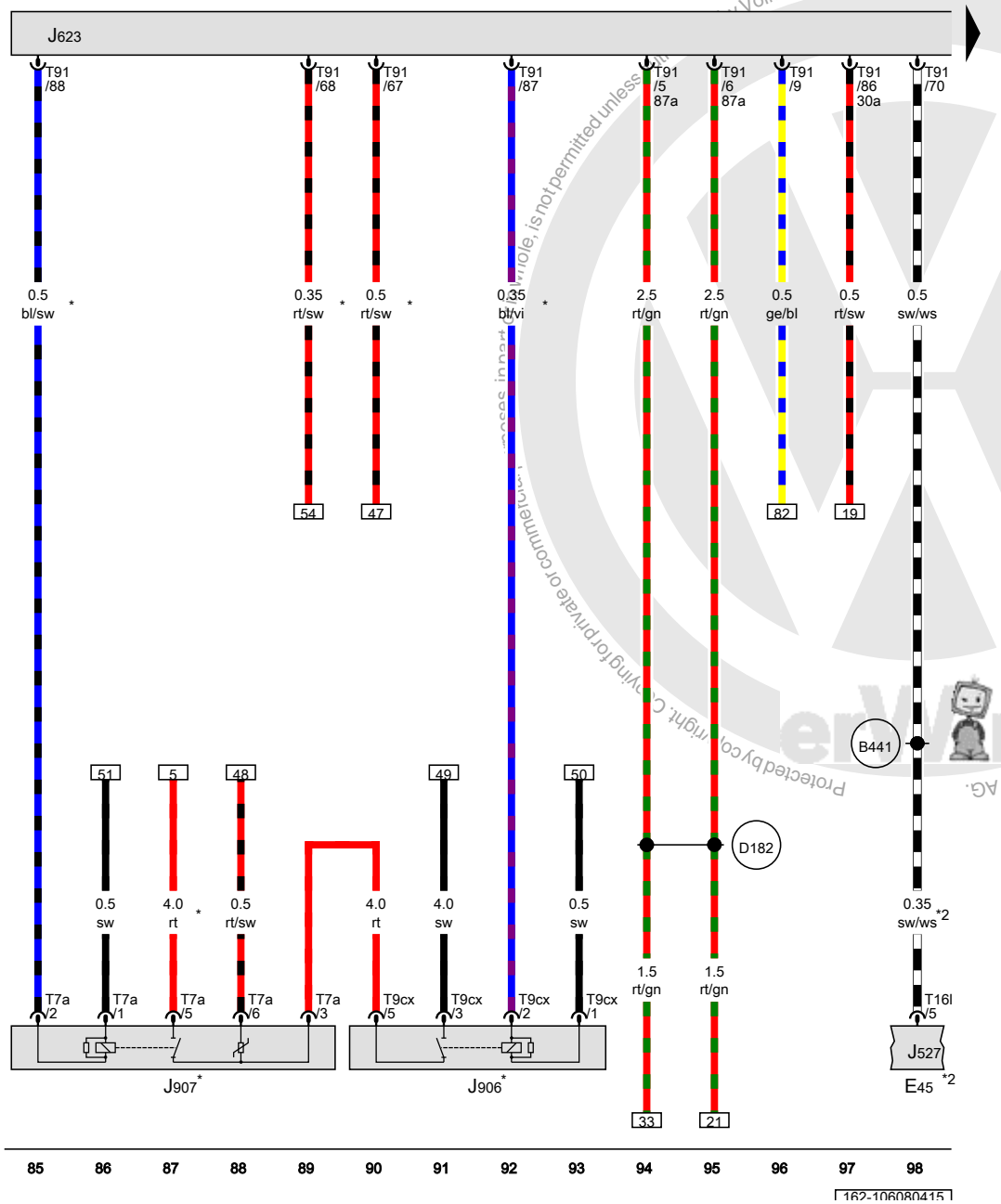

Engine control module

E45	Cruise control switch
J527	Steering column electronics control module
J623	Engine control module
J906	Starter relay 1
J907	Starter relay 2
T7a	7-pin connector
T9cx	9-pin connector
T16l	16-pin connector
T91	91-pin connector
B441	Cruise control connection (in main wiring harness)
D182	Connection 3 (87a) (in engine compartment wiring harness)
*	Depending on equipment
*2	Only for vehicles with cruise control

ws	=	white
sw	=	black
ro	=	red
rt	=	red
br	=	brown
gn	=	green
bl	=	blue
gr	=	grey
li	=	lilac
vi	=	lilac
ge	=	yellow
or	=	orange
rs	=	pink

Volkswagen AG. Volkswagen AG does not guarantee or accept any liability with respect to the correctness of information in this document. Copyright by Volkswagen AG. Protected by copyright. Copying for private or commercial purposes, in part or in whole, is not permitted unless authorised by Volkswagen AG.

Charge air pressure sensor, Engine coolant temperature sensor on radiator outlet, Engine control module

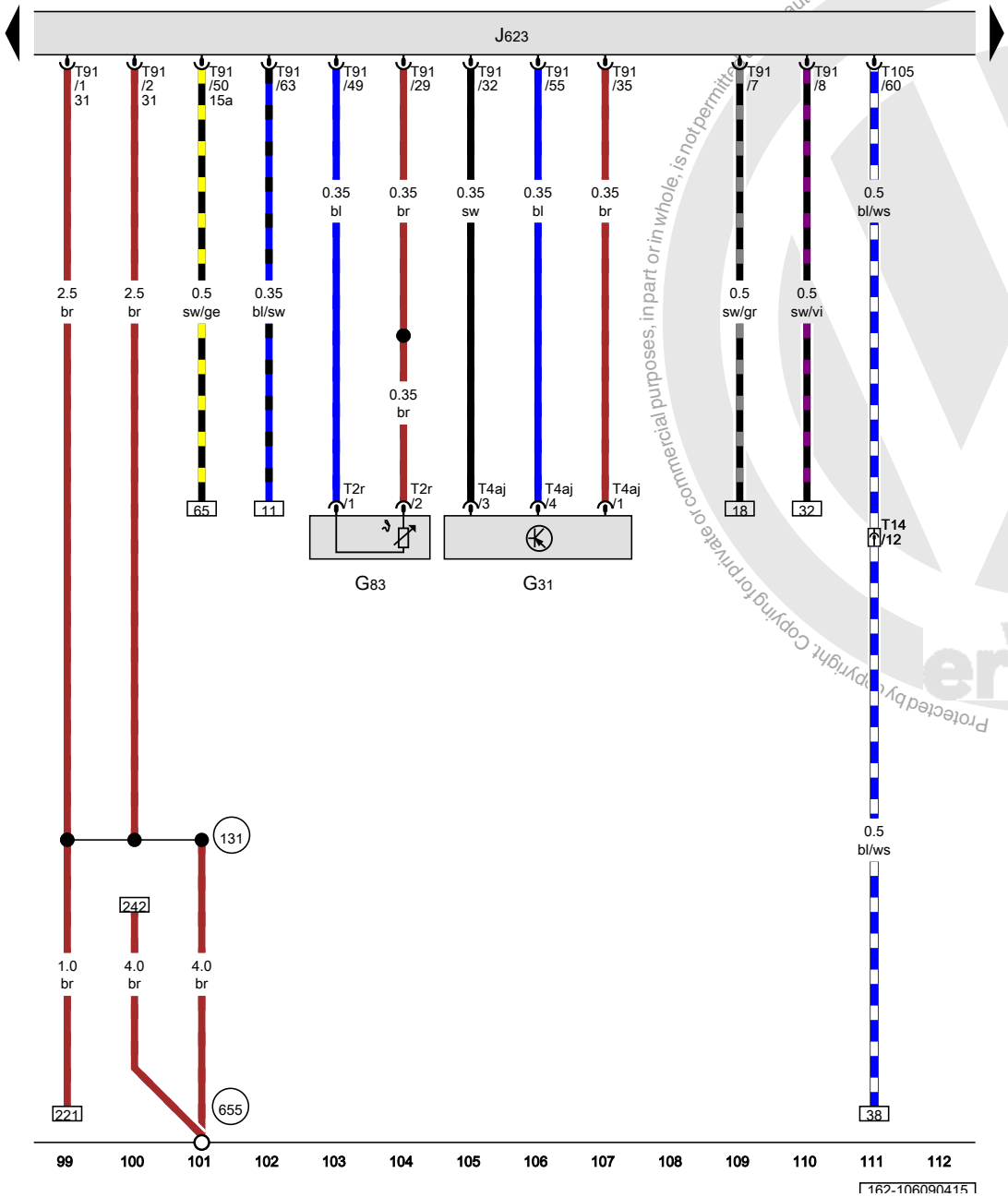

G31	Charge air pressure sensor
G83	Engine coolant temperature sensor on radiator outlet
J623	Engine control module
Q	Spark plugs
T2r	Double connector
T4aj	4-pin connector
T14	14-pin connector
T91	91-pin connector
T105	105-pin connector
131	Ground connection 2 (in engine compartment wiring harness)
655	Ground connection on left headlamp

ws	=	white
sw	=	black
ro	=	red
rt	=	red
br	=	brown
gn	=	green
bl	=	blue
gr	=	grey
li	=	lilac
vi	=	lilac
ge	=	yellow
or	=	orange
rs	=	pink

Protected by copyright. Copying for private or commercial purposes, in part or in whole, is not permitted unless authorised by Volkswagen AG. Volkswagen AG does not guarantee or accept any liability with respect to the correctness of information in this document. Copyright by Volkswagen AG.

Engine control module, Ignition coil 1 with power output stage, Ignition coil 2 with power output stage, Ignition coil 3 with power output stage, Ignition coil 4 with power output stage

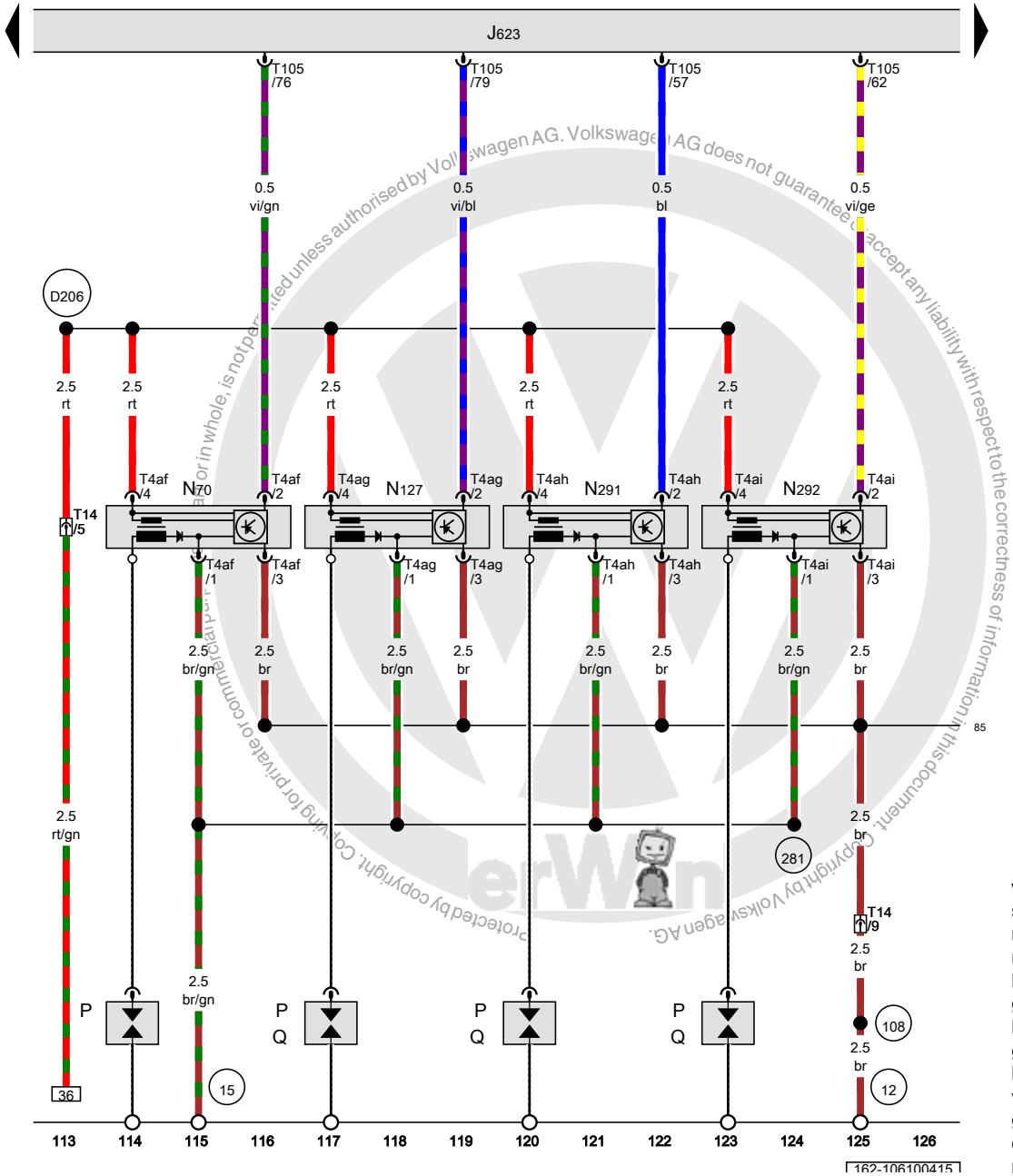

J623	Engine control module
N70	Ignition coil 1 with power output stage
N127	Ignition coil 2 with power output stage
N291	Ignition coil 3 with power output stage
N292	Ignition coil 4 with power output stage
P	Spark plug connectors
Q	Spark plugs
T4af	4-pin connector
T4ag	4-pin connector
T4ah	4-pin connector
T4ai	4-pin connector
T14	14-pin connector
T105	105-pin connector
12	Ground connection in engine compartment, left
15	Ground connection on cylinder head
85	Ground connection 1 (in engine compartment wiring harness)
108	Ground connection 2 (in left front wiring harness)
281	Ground connection 1 (in engine pre-wiring harness)
D206	Connection 87a (in engine pre-wiring harness) 4

ws	=	white
sw	=	black
ro	=	red
rt	=	red
br	=	brown
gn	=	green
bl	=	blue
gr	=	grey
li	=	lilac
vi	=	lilac
ge	=	yellow
or	=	orange
rs	=	pink

Protected by copyright. Copying for private or commercial purposes, in part or in whole, is not permitted unless authorised by Volkswagen AG. Volkswagen AG does not guarantee or accept any liability with respect to the correctness of information in this document. Copyright by Volkswagen AG.

Reduced oil pressure switch, EPC throttle drive, Charge air pressure actuator position sensor, Engine control module, After-run coolant pump

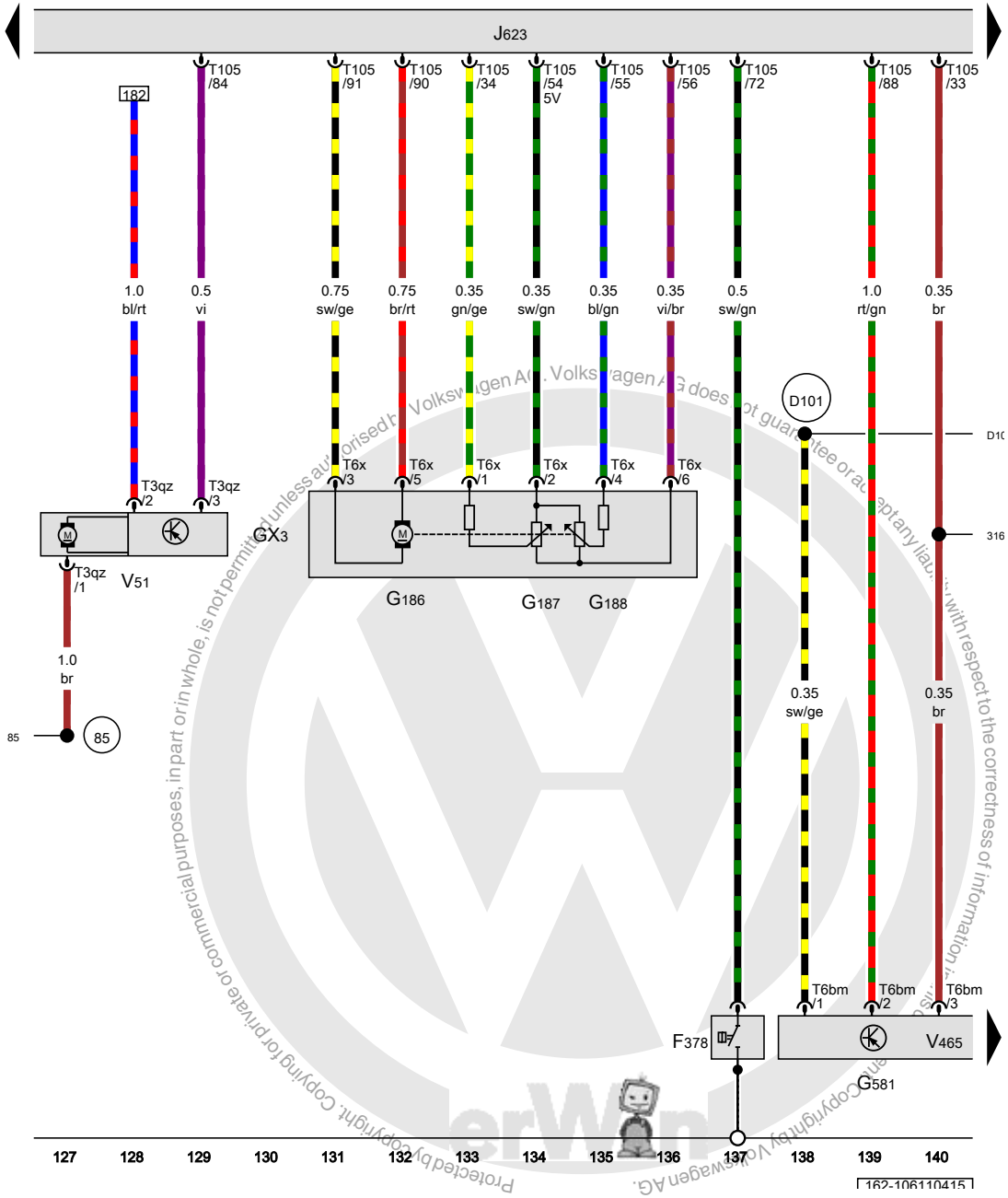

F378	Reduced oil pressure switch
GX3	Throttle valve control module
G186	EPC throttle drive
G187	EPC throttle drive angle sensor 1
G188	EPC throttle drive angle sensor 2
G581	Charge air pressure actuator position sensor
J623	Engine control module
T3qz	3-pin connector
T6bm	6-pin connector
T6x	6-pin connector
T105	105-pin connector
V51	After-run coolant pump
V465	Charge air pressure actuator
85	Ground connection 1 (in engine compartment wiring harness)
316	Sensor ground connection 2 (in engine wiring harness)
D101	Connection 1 (in engine compartment wiring harness)

ws	=	white
sw	=	black
ro	=	red
rt	=	red
br	=	brown
gn	=	green
bl	=	blue
gr	=	grey
li	=	lilac
vi	=	lilac
ge	=	yellow
or	=	orange
rs	=	pink

Protected by copyright. Copying for private or commercial purposes, in part or in whole, is not permitted unless authorised by Volkswagen AG. Volkswagen AG does not guarantee or accept any liability with respect to the correctness of information in this copy.

Intake manifold sensor, Secondary air system, Engine speed sensor, Fuel pressure sensor, Charge air pressure actuator position sensor, Engine control module

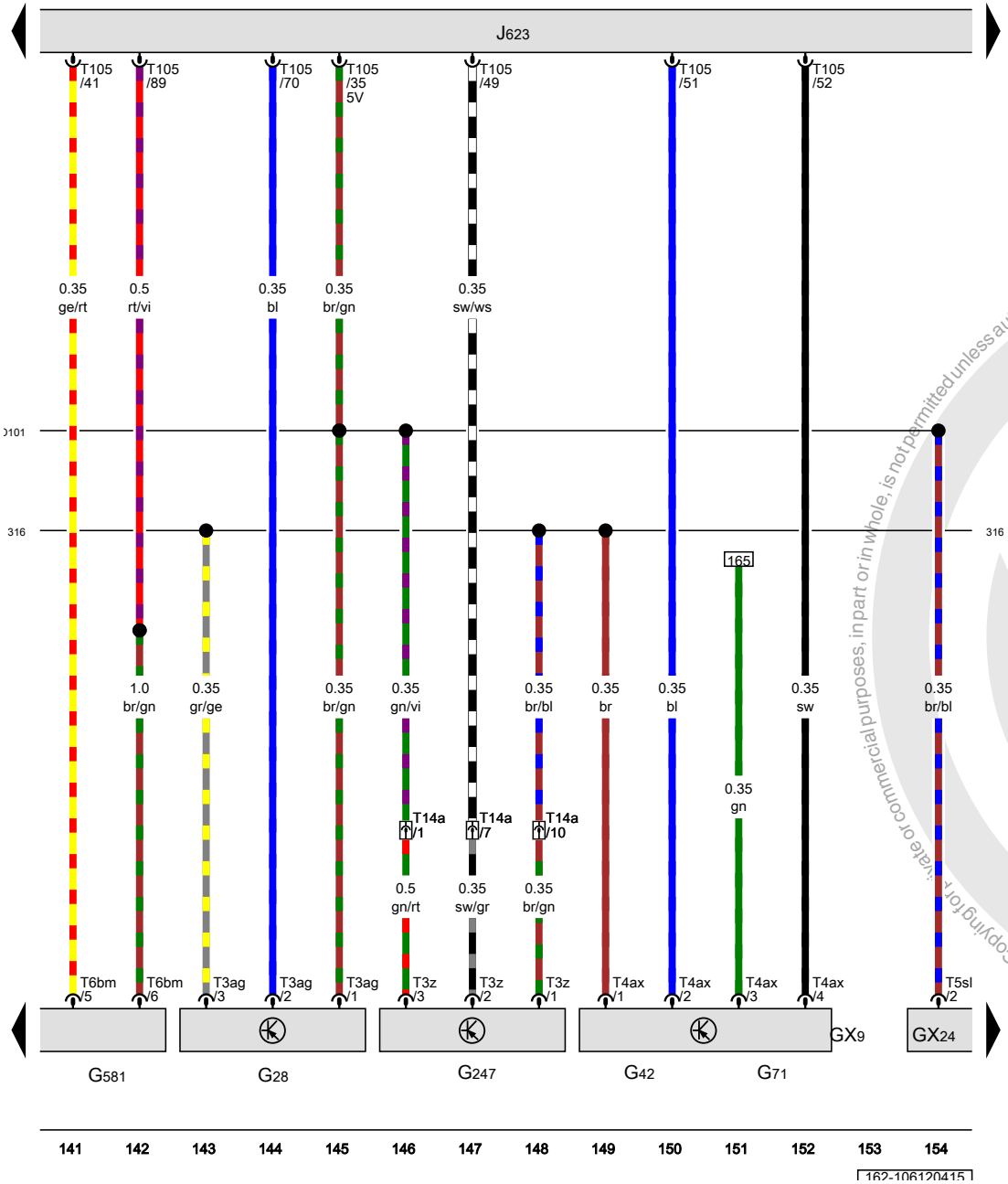

GX9	Intake manifold sensor
GX24	Secondary air system
G28	Engine speed sensor
G42	Intake air temperature sensor
G71	Manifold absolute pressure sensor
G247	Fuel pressure sensor
G581	Charge air pressure actuator position sensor
J623	Engine control module
T3ag	3-pin connector
T3z	3-pin connector
T4ax	4-pin connector
T5sl	5-pin connector
T6bm	6-pin connector
T14a	14-pin connector
T105	105-pin connector
316	Sensor ground connection 2 (in engine wiring harness)
D101	Connection 1 (in engine compartment wiring harness)

ws	=	white
sw	=	black
ro	=	red
rt	=	red
br	=	brown
gn	=	green
bl	=	blue
gr	=	grey
li	=	lilac
vi	=	lilac
ge	=	yellow
or	=	orange
rs	=	pink

Protected by copyright. Copying for private or commercial purposes, in part or in whole, is not permitted unless authorised by Volkswagen AG. Volkswagen AG does not guarantee or accept any liability with respect to the correctness of information in this document. Copyright by Volkswagen AG.

Secondary air system, Camshaft position sensor, Engine coolant temperature sensor, Intake manifold runner position sensor, Secondary air injection sensor 1, Engine control module

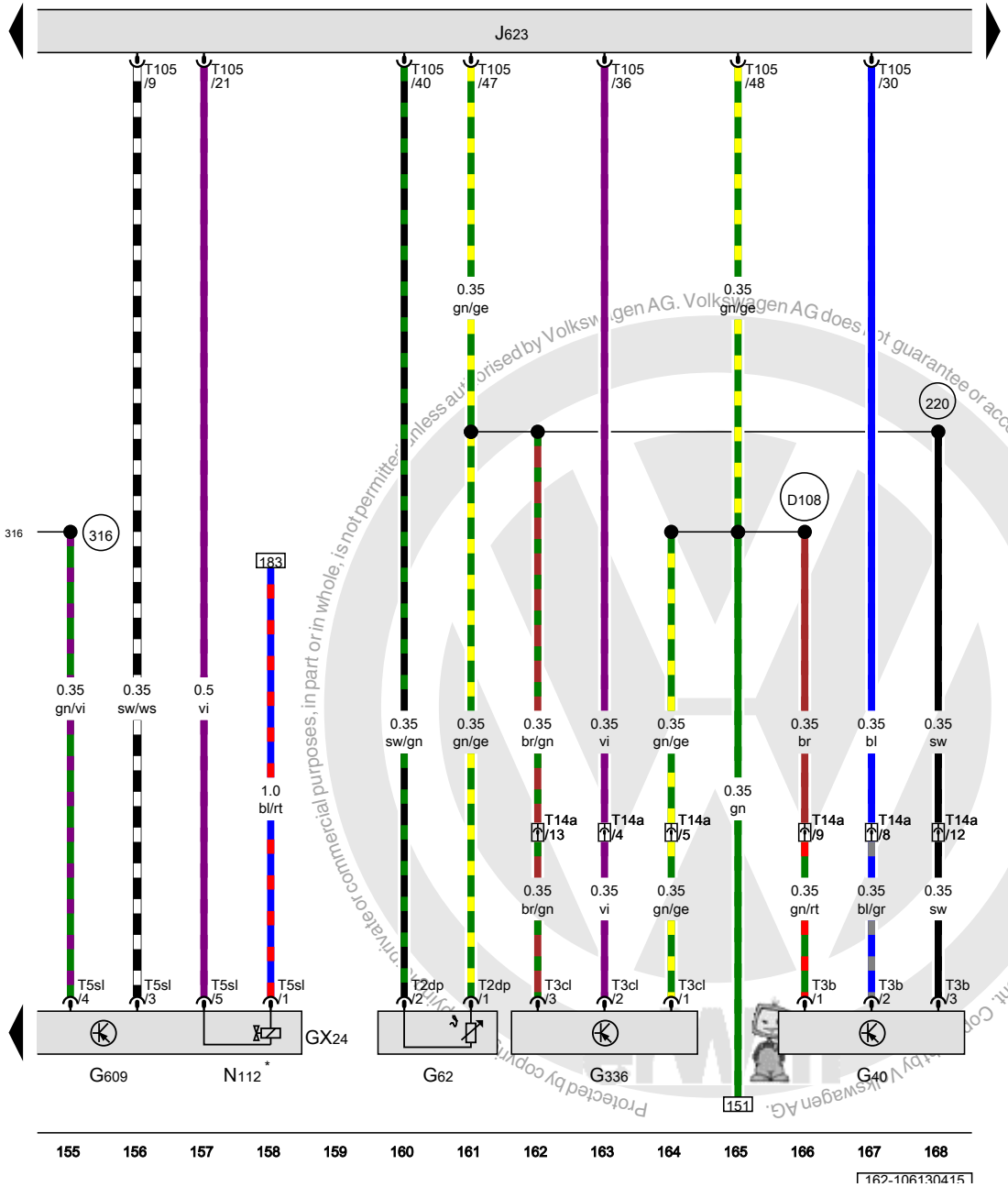

GX24	Secondary air system	
G40	Camshaft position sensor	
G62	Engine coolant temperature sensor	
G336	Intake manifold runner position sensor	
G609	Secondary air injection sensor 1	
J623	Engine control module	
N112	Secondary air injection solenoid valve	
T2dp	Double connector	
T3b	3-pin connector	
T3cl	3-pin connector	
T5sl	5-pin connector	
T14a	14-pin connector	
T105	105-pin connector	
220	Sensor ground connection (in engine wiring harness)	
316	Sensor ground connection 2 (in engine wiring harness)	
D108	Connection 6 (in engine compartment wiring harness)	
*	Depending on equipment	

ws	=	white
sw	=	black
ro	=	red
rt	=	red
br	=	brown
gn	=	green
bl	=	blue
gr	=	grey
li	=	lilac
vi	=	lilac
ge	=	yellow
or	=	orange
rs	=	pink

Protected by copyright. Copying for private or commercial purposes, in part or in whole, is not permitted unless authorised by Volkswagen AG. Volkswagen AG does not guarantee or accept any liability with respect to the correctness of information in this document. Copyright by Volkswagen AG.

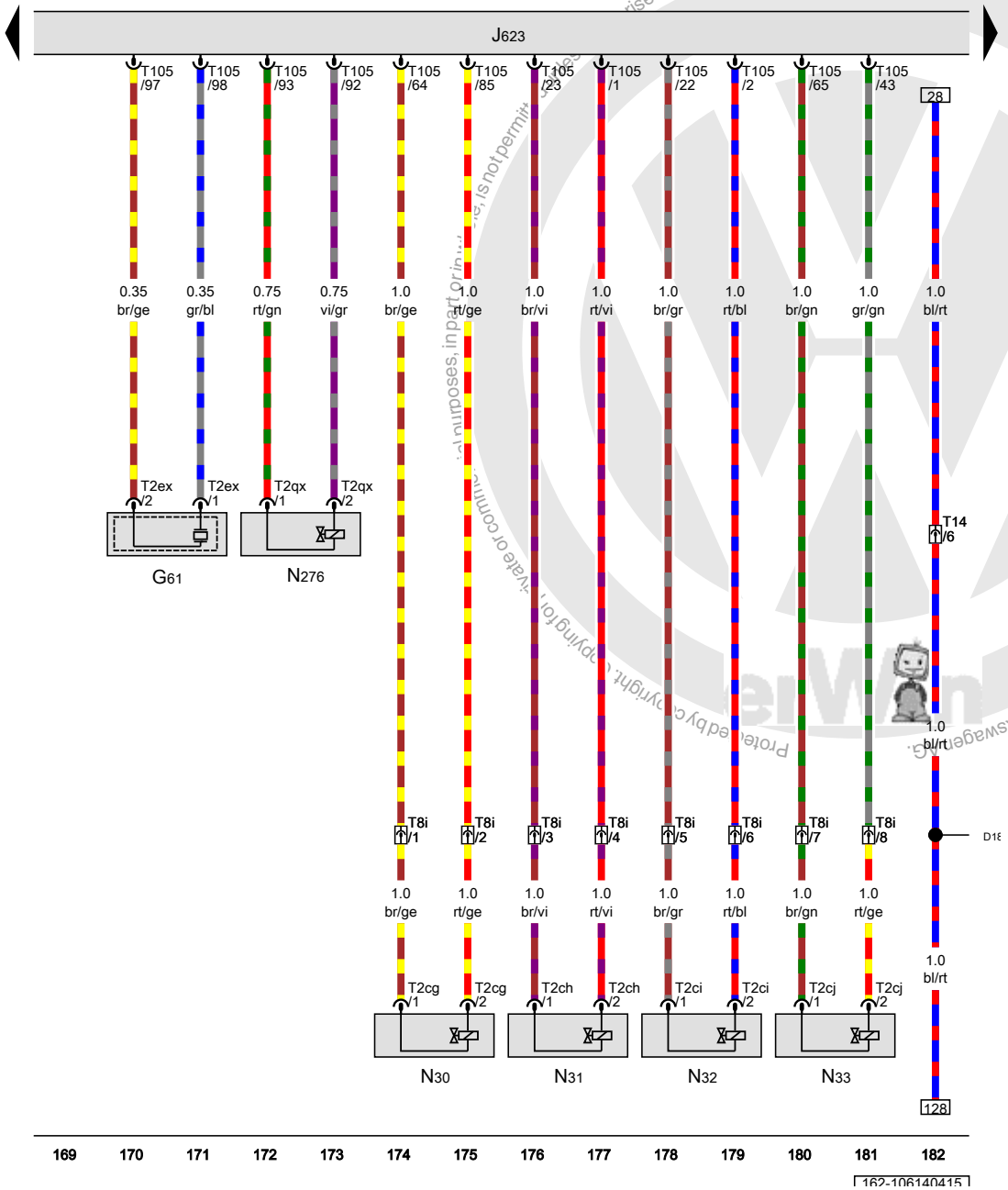

Knock sensor 1, Engine control module, Cylinder 1 fuel injector, Cylinder 2 fuel injector, Cylinder 3 fuel injector, Cylinder 4 fuel injector, Fuel pressure regulator valve

G61	Knock sensor 1
J623	Engine control module
N30	Cylinder 1 fuel injector
N31	Cylinder 2 fuel injector
N32	Cylinder 3 fuel injector
N33	Cylinder 4 fuel injector
N276	Fuel pressure regulator valve
T2cg	Double connector
T2ch	Double connector
T2ci	Double connector
T2cj	Double connector
T2ex	Double connector
T2qx	Double connector
T8i	8-pin connector
T14	14-pin connector
T105	105-pin connector
D181	Connection 2 (87a) (in engine compartment wiring harness)

ws	=	white
sw	=	black
ro	=	red
rt	=	red
br	=	brown
gn	=	green
bl	=	blue
gr	=	grey
li	=	lilac
vi	=	lilac
ge	=	yellow
or	=	orange
rs	=	pink

Protected by copyright. Copying for private or commercial purposes, in part or in whole, is not permitted unless authorised by Volkswagen AG. Volkswagen AG does not guarantee or accept any liability with respect to the correctness of information in this document. Copyright by Volkswagen AG.

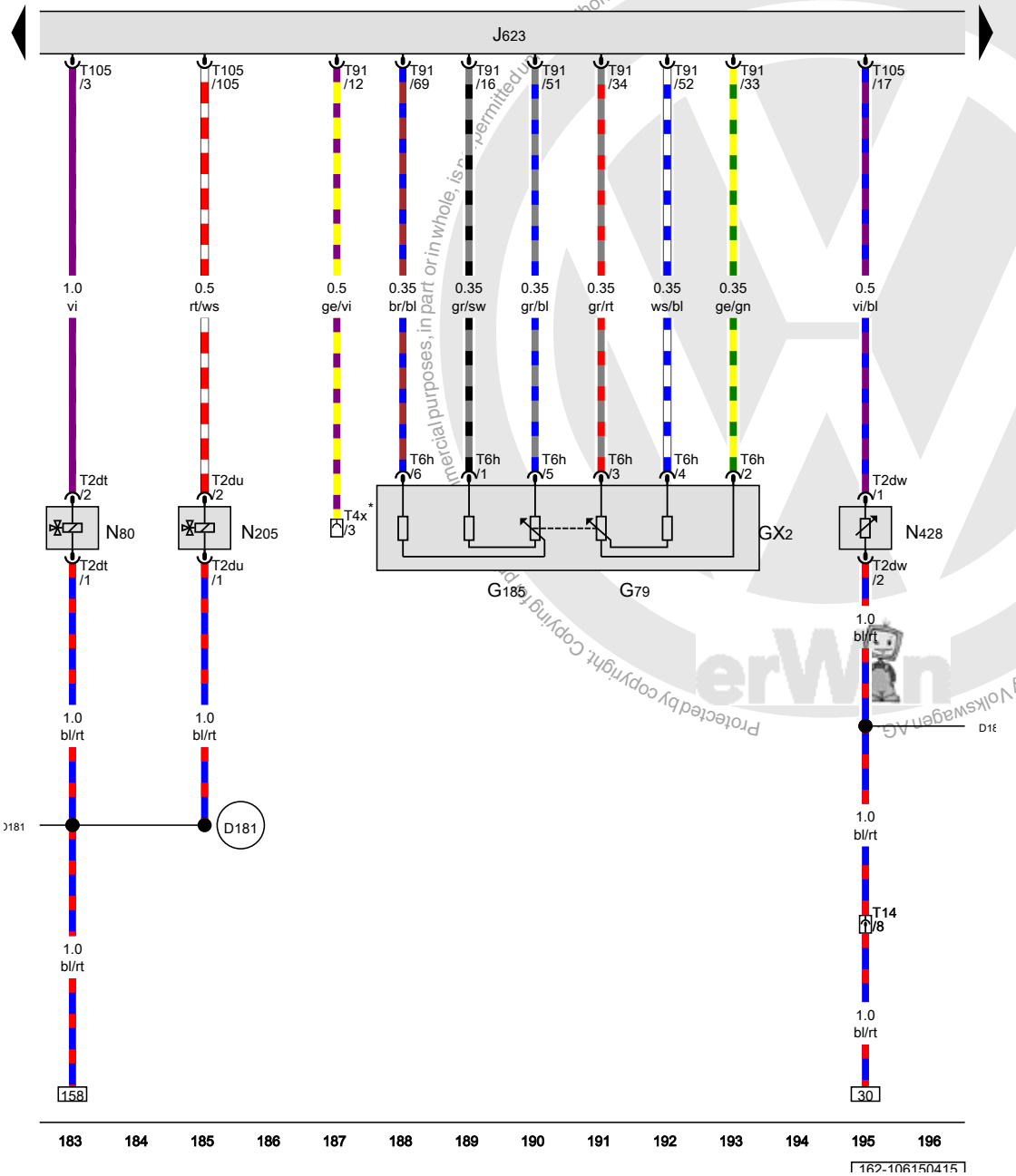

ws	=	white
sw	=	black
ro	=	red
rt	=	red
br	=	brown
gn	=	green
bl	=	blue
gr	=	grey
li	=	lilac
vi	=	lilac
ge	=	yellow
or	=	orange
rs	=	pink

Accelerator pedal module, Accelerator pedal position sensor, Engine control module, EVAP canister purge regulator valve 1, Camshaft adjustment valve 1, Oil pressure regulation valve

GX2	Accelerator pedal module
G79	Accelerator pedal position sensor
G185	Accelerator pedal position sensor 2
J623	Engine control module
N80	EVAP canister purge regulator valve 1
N205	Camshaft adjustment valve 1
N428	Oil pressure regulation valve
T2dt	Double connector
T2du	Double connector
T2dw	Double connector
T4x	4-pin connector
T6h	6-pin connector
T14	14-pin connector
T91	91-pin connector
T105	105-pin connector
D181	Connection 2 (87a) (in engine compartment wiring harness)
D189	Connection 87a (in engine pre-wiring harness)
*	Coolant fan connection

Protected by copyright. Copying for private or commercial purposes, in part or in whole, is not permitted unless authorised by Volkswagen AG. Volkswagen AG does not guarantee or accept any liability with respect to the correctness of information in this document. Copyright by Volkswagen AG.

Oxygen sensor 1 before catalytic converter, Engine control module, Turbocharger recirculation valve, Intake manifold runner control valve, Leak detection pump, Oxygen sensor heater

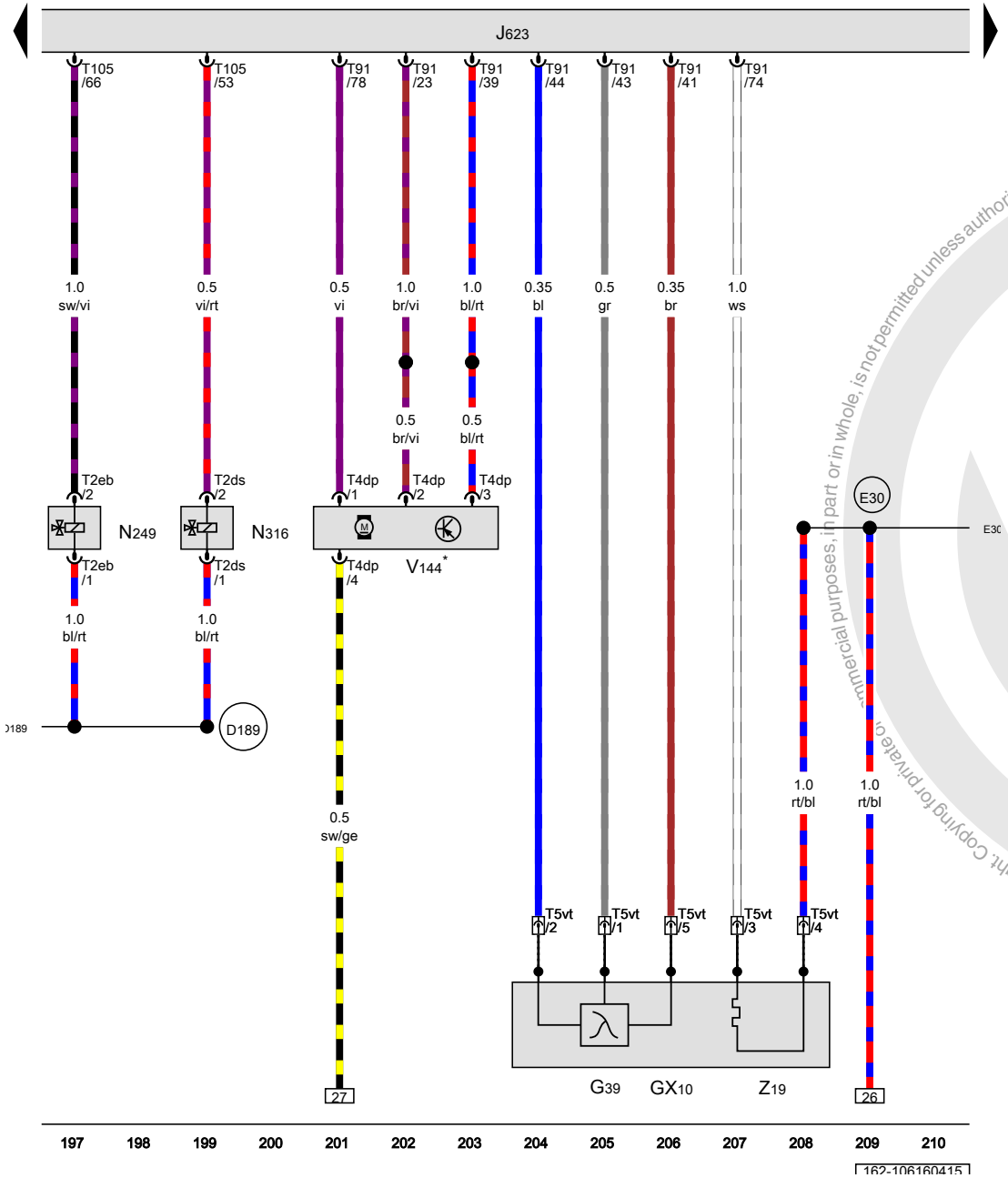

GX10	Oxygen sensor 1 before catalytic converter
G39	Heated oxygen sensor
J623	Engine control module
N249	Turbocharger recirculation valve
N316	Intake manifold runner control valve
T2ds	Double connector
T2eb	Double connector
T4dp	4-pin connector
T5vt	5-pin connector
T91	91-pin connector
T105	105-pin connector
V144	Leak detection pump
Z19	Oxygen sensor heater
D189	Connection 87a (in engine pre-wiring harness)
E30	Connection 87a (in engine wiring harness)
*	Depending on equipment

ws	=	white
sw	=	black
ro	=	red
rt	=	red
br	=	brown
gn	=	green
bl	=	blue
gr	=	grey
li	=	lilac
vi	=	lilac
ge	=	yellow
or	=	orange
rs	=	pink

Protected by copyright. Copying for private or commercial purposes, in part or in whole, is not permitted unless authorised by Volkswagen AG. Volkswagen AG does not guarantee or accept any liability with respect to the correctness of information in this document. Copyright by Volkswagen AG.

Brake lamp switch, Brake pedal switch, Oxygen sensor 1 after catalytic converter, Oxygen sensor after three way catalytic converter, Clutch position sensor, Engine control module

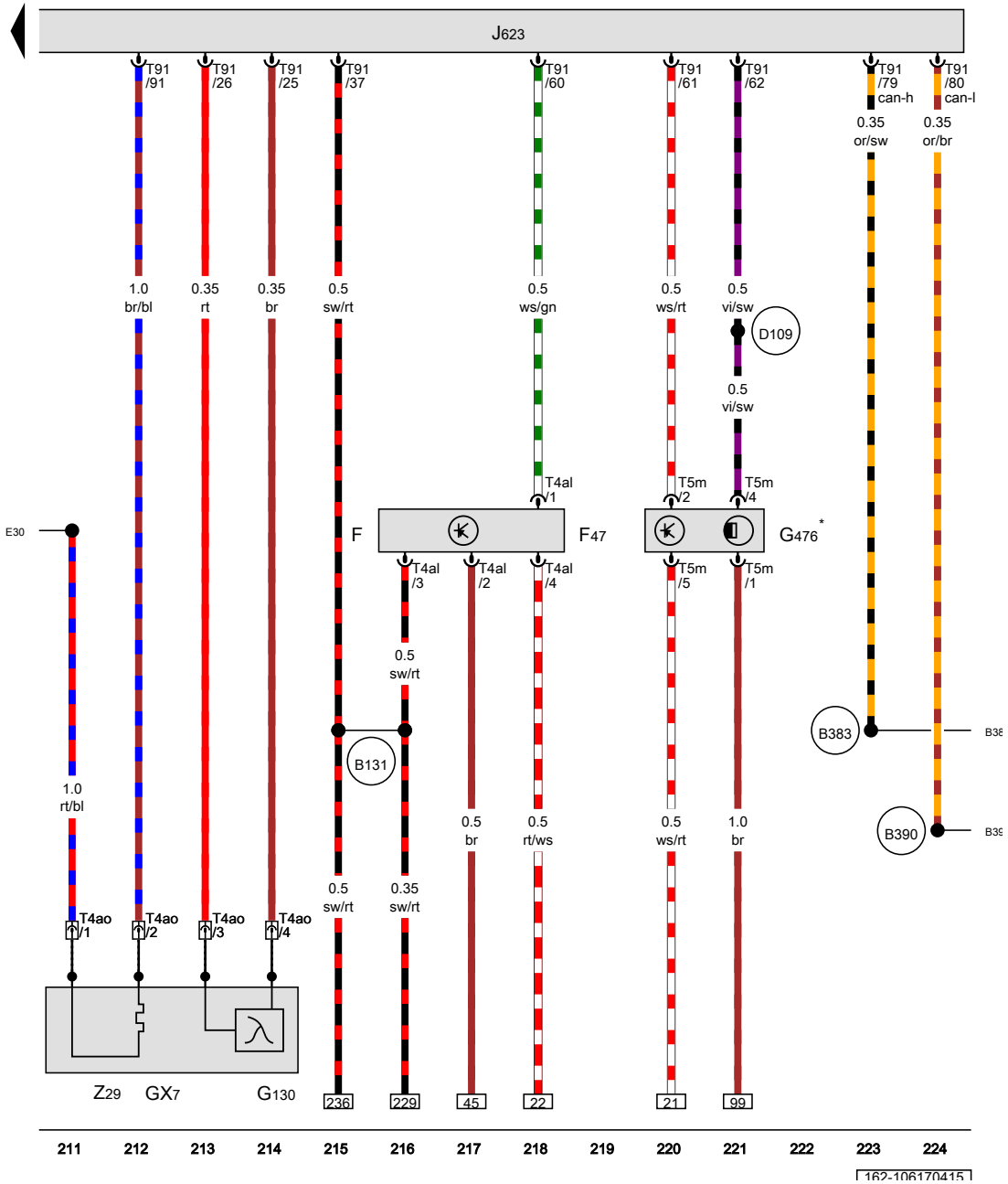

F	Brake lamp switch
F47	Brake pedal switch
GX7	Oxygen sensor 1 after catalytic converter
G130	Oxygen sensor after three way catalytic converter
G476	Clutch position sensor
J623	Engine control module
T4al	4-pin connector
T4ao	4-pin connector
T5m	5-pin connector
T91	91-pin connector
Z29	Heater for oxygen sensor 1 after catalytic converter
B131	Connection 54 (in interior wiring harness)
B383	Powertrain CAN bus high connection 1 (in main wiring harness)
B390	Powertrain CAN bus low connection 1 (in main wiring harness)
D109	Connection 7 (in engine compartment wiring harness)
E30	Connection 87a (in engine wiring harness)
*	Only for vehicles with a manual transmission

ws	=	white
sw	=	black
ro	=	red
rt	=	red
br	=	brown
gn	=	green
bl	=	blue
gr	=	grey
li = lilac
vi = lilac
ge = yellow
or = orange
rs = pink

Protected by copyright. Copying for private or commercial purposes, in part or in whole, is not permitted unless authorised by Volkswagen AG. Volkswagen AG does not guarantee or accept any liability with respect to the correctness of information in this document. Copyright by Volkswagen AG.

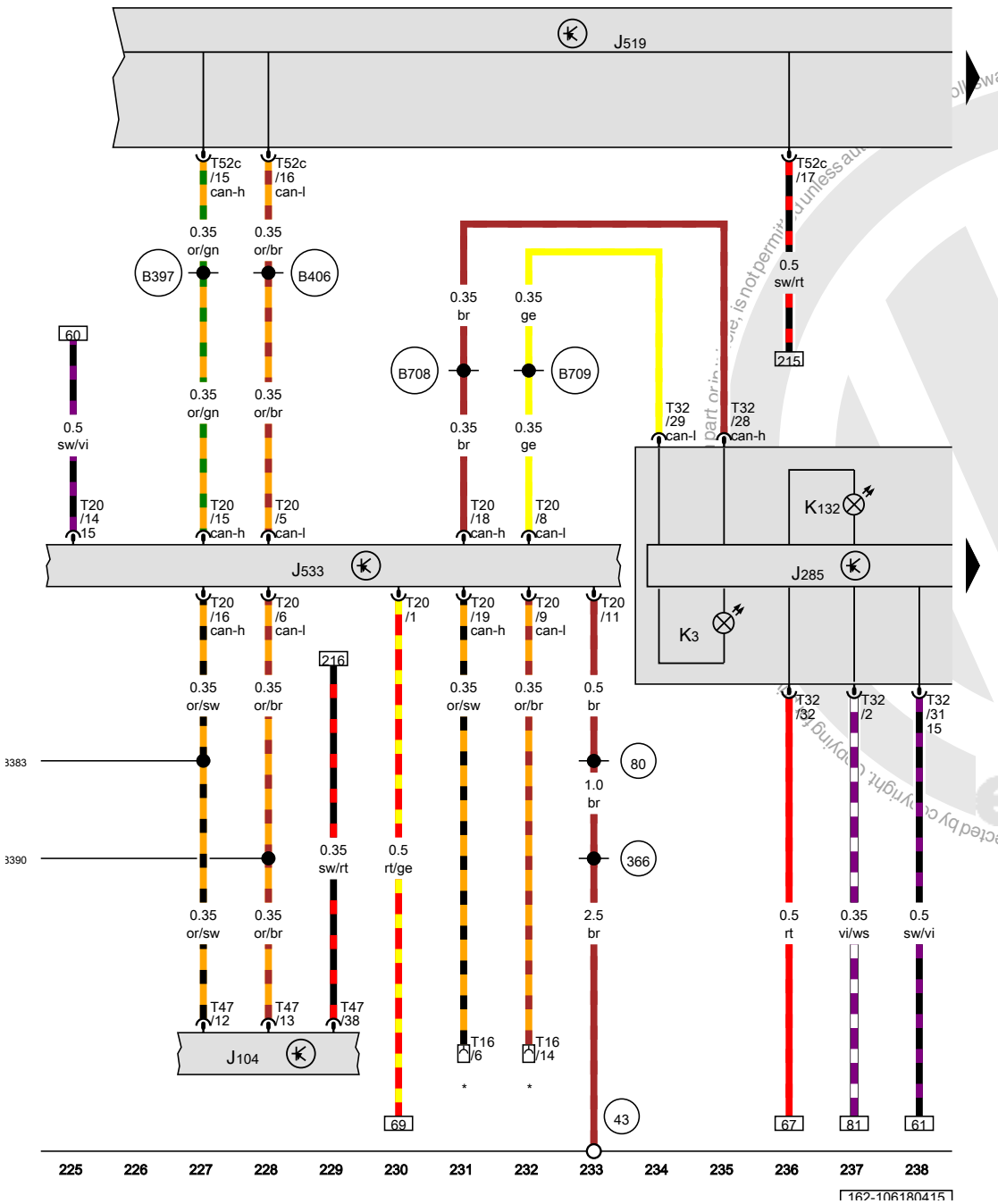

Instrument cluster control module, Vehicle electrical control module system, Data bus on board diagnostic interface, Electronic power control malfunction indicator lamp

J104	ABS control module
J285	Instrument cluster control module
J519	Vehicle electrical control module system
J533	Data bus on board diagnostic interface
K3	Oil pressure indicator lamp
K132	Electronic power control malfunction indicator lamp
T16	16-pin connector, near the lower left A-pillar
T20	20-pin connector
T32	32-pin connector
T47	47-pin connector
T52c	52-pin connector
43	Ground connection on A-pillar, lower right
80	Ground connection 1 (in instrument cluster wiring harness)
366	Ground connection 1 (in main wiring harness)
B383	Powertrain CAN bus high connection 1 (in main wiring harness)
B390	Powertrain CAN bus low connection 1 (in main wiring harness)
B397	Comfort system CAN bus high connection 1 (in main wiring harness)
B406	Comfort system CAN bus low connection 1 (in main wiring harness)
B708	Instrument cluster CAN bus high connection 1 (in main wiring harness)
B709	Instrument cluster CAN bus low connection 1 (in main wiring harness)
*	Diagnostic connector

ws	=	white
sw	=	black
ro	=	red
rt	=	red
br	=	brown
gn	=	green
bl	=	blue
gr	=	grey
li	=	lilac
vi	=	lilac
ge	=	yellow
or	=	orange
rs	=	pink

Volkswagen AG. Volkswagen AG does not guarantee the correctness of information in this document. Copyright by Volkswagen AG. Protected by copyright. Copying for private or commercial purposes, in part or in whole, is not permitted unless authorised by Volkswagen AG.

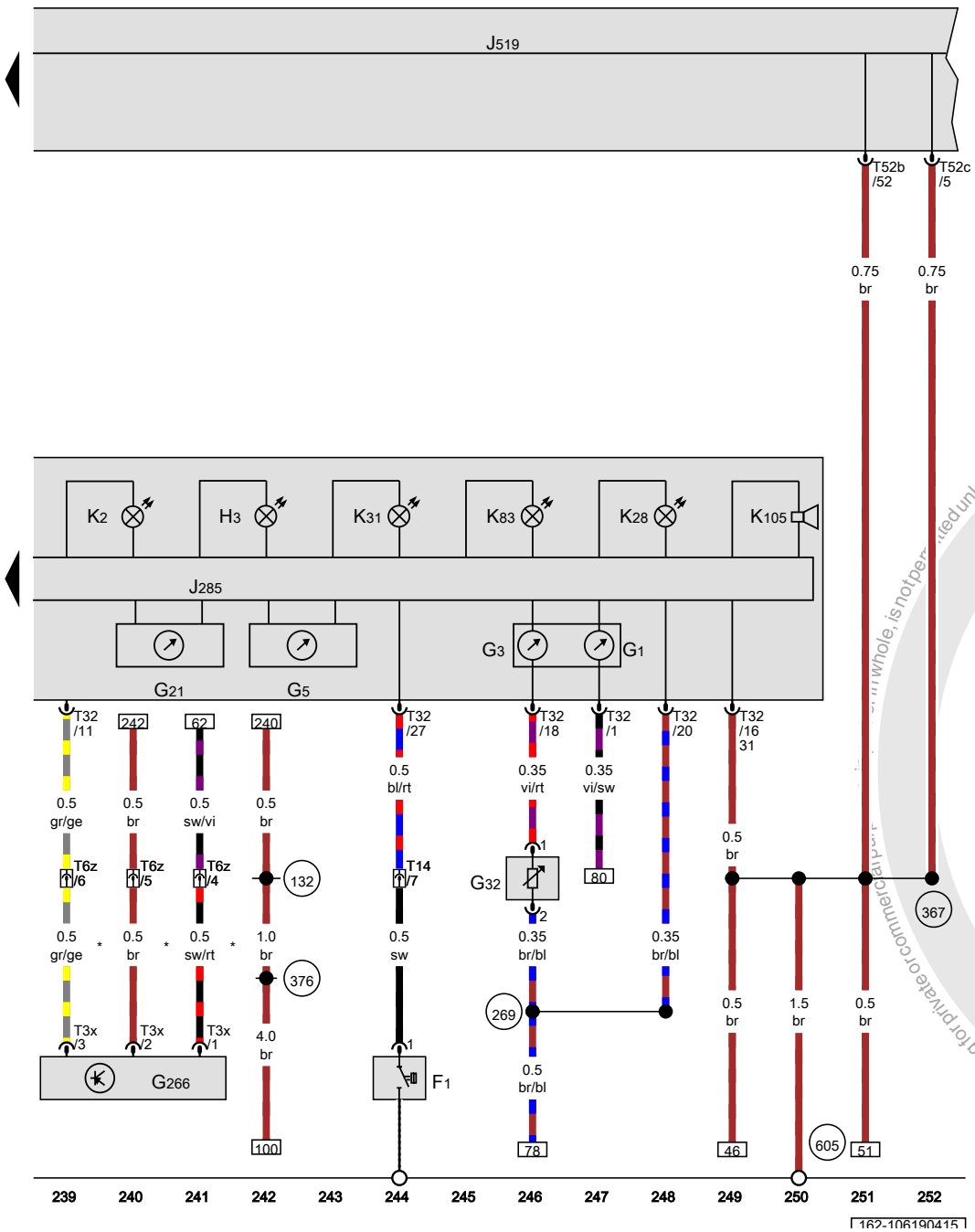

Oil pressure switch, Fuel gauge, Engine coolant temperature gauge, Tachometer, Speedometer, Instrument cluster control module, Vehicle electrical control module system, Generator indicator lamp, Engine coolant level/ temperature indicator lamp, Cruise control indicator lamp, Low fuel level indicator lamp

F1	Oil pressure switch
G1	Fuel gauge
G3	Engine coolant temperature gauge
G5	Tachometer
G21	Speedometer
G32	Engine coolant level sensor
G266	Oil level thermal sensor
H3	Warning buzzer and tone
J285	Instrument cluster control module
J519	Vehicle electrical control module system
K2	Generator indicator lamp
K28	Engine coolant level/temperature indicator lamp
K31	Cruise control indicator lamp
K83	Malfunction indicator lamp
K105	Low fuel level indicator lamp
T3x	3-pin connector
T6z	6-pin connector, near the left headlamp
T14	14-pin connector
T32	32-pin connector
T52b	52-pin connector
T52c	52-pin connector
132	Ground connection 3 (in engine compartment wiring harness)
269	Sensor ground connection 1 (in instrument panel wiring harness)
367	Ground connection 2 (in main wiring harness)
376	Ground connection 11 (in main wiring harness)
605	Ground connection on upper steering column
*	Only for vehicles without flexible service interval reminder

ws	=	white
sw	=	black
ro	=	red
rt	=	red
br	=	brown
gn	=	green
bl	=	blue
gr	=	grey
li	=	lilac
vi	=	lilac
ge	=	yellow
or	=	orange
rs	=	pink

Protected copyright. Copying for private or commercial purposes, in whole, is not permitted unless authorised by Volkswagen AG. Volkswagen AG does not accept any liability with respect to the correctness of information in this document. Copyright by Volkswagen AG.

Seat adjustment , (3PB),(3PS),(3PZ)

from December 2012

Protected by copyright. Copying for private or commercial purposes, in part or in whole, is not permitted unless authorised by Volkswagen AG. Volkswagen AG does not guarantee or accept any liability with respect to the correctness of information in this document. Copyright by Volkswagen AG.

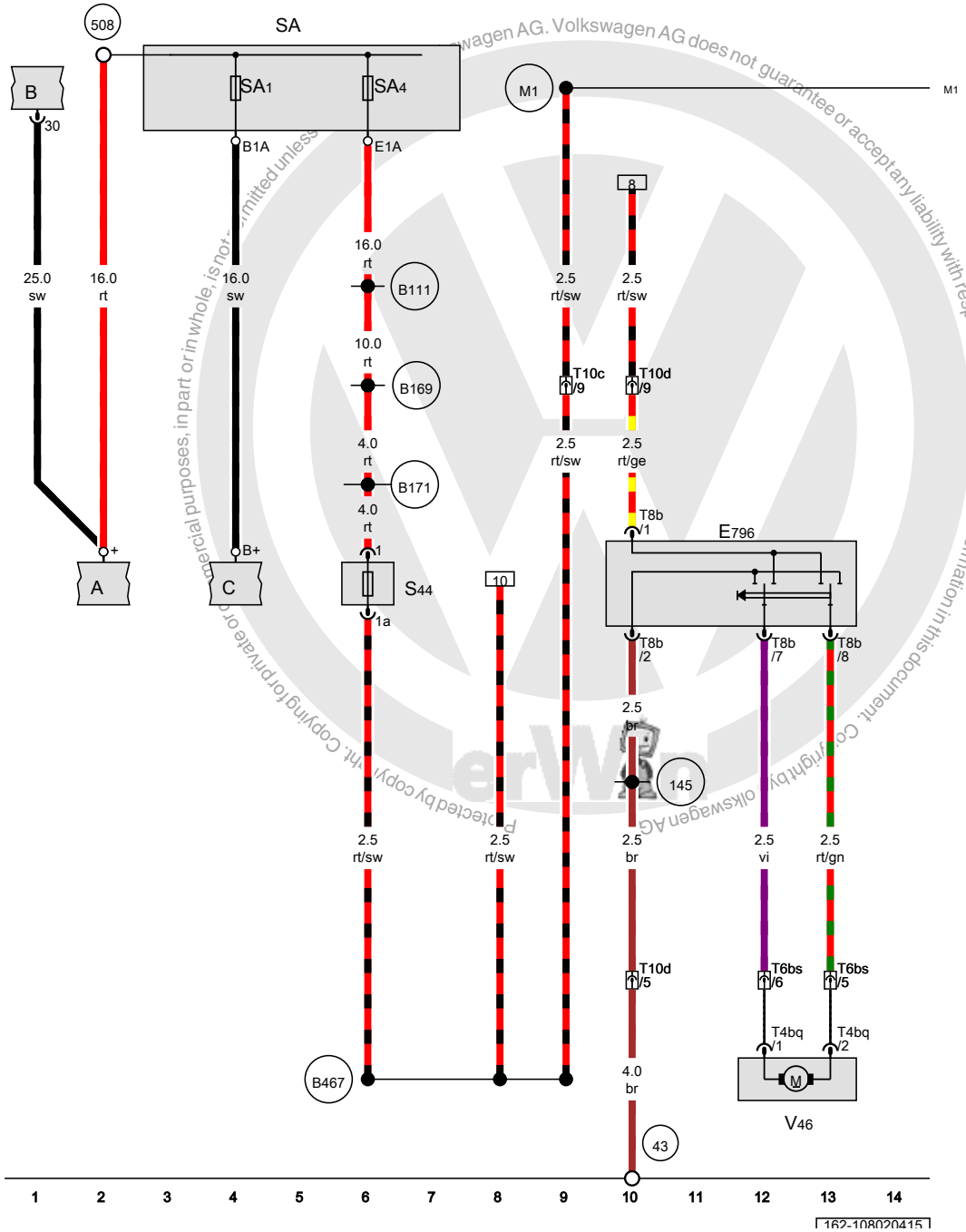

Battery, Starter, Generator, Backrest adjustment button 2, Fuse panel A, Front passenger backrest adjustment motor

A	Battery
B	Starter
C	Generator
E796	Backrest adjustment button 2
S44	Driver power seat adjustment circuit breaker 1
SA	Fuse panel A
SA1	Fuse 1 (on fuse panel A)
SA4	Fuse 4 (on fuse panel A)
T4bq	4-pin connector
T6bs	6-pin connector
T8b	8-pin connector
T10c	10-pin connector, under the driver seat
T10d	10-pin connector, under the front passenger seat
V46	Front passenger backrest adjustment motor
43	Ground connection on A-pillar, lower right
145	Ground connection 3 (in heated seats wiring harness)
508	Terminal 30 threaded connection (on E-box)
B111	Positive connection 1 (30a) (in interior wiring harness)
B169	Positive connection 1 (30) (in interior wiring harness)
B171	Positive connection 3 (30) (in interior wiring harness)
B467	Connection 3 (in main wiring harness)
M1	Positive connection 1 (30) (in seat adjustment wiring harness)

ws	=	white
sw	=	black
ro	=	red
rt	=	red
br	=	brown
gn	=	green
bl	=	blue
gr	=	grey
li	=	lilac
vi	=	lilac
ge	=	yellow
or	=	orange
rs	=	pink

Volkswagen AG. Volkswagen AG does not guarantee or accept any liability with respect to the correctness of information in this document. Copyright by Volkswagen AG. Protected by copyright. Copying for private or commercial purposes, in part or in whole, is not permitted unless

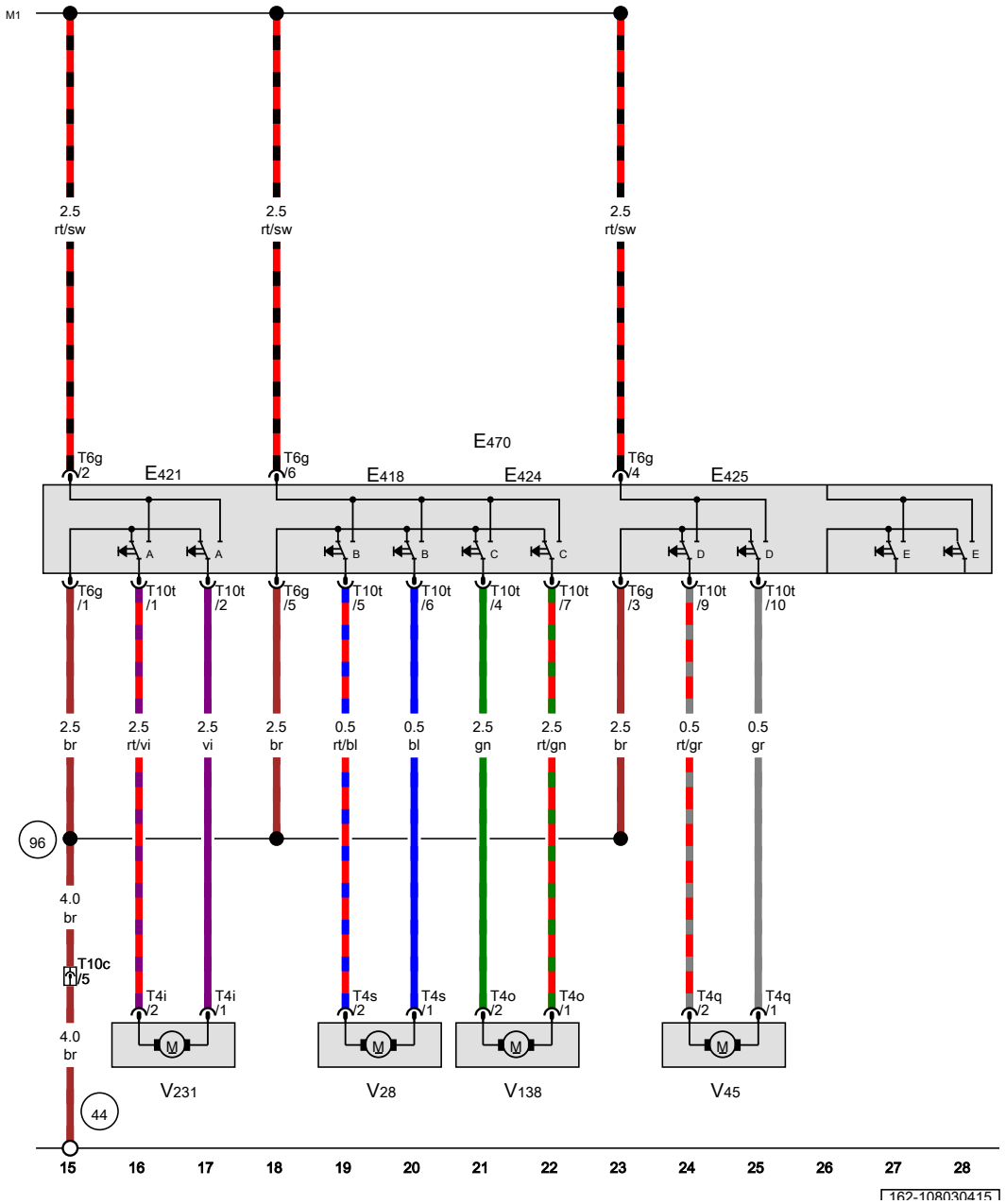

Seat forward/back adjustment button, Seat height adjustment button, Backrest adjustment button, Driver seat adjustment control head, Driver seat forward/back adjustment motor, Driver backrest adjustment motor, Driver seat height adjustment motor, Seat angle adjustment motor

E418	Seat forward/back adjustment button
E421	Angle adjustment button
E424	Seat height adjustment button
E425	Backrest adjustment button
E470	Driver seat adjustment control head
T4i	4-pin connector
T4o	4-pin connector
T4q	4-pin connector
T4s	4-pin connector
T6g	6-pin connector
T10c	10-pin connector, under the driver seat
T10t	10-pin connector
V28	Driver seat forward/back adjustment motor
V45	Driver backrest adjustment motor
V138	Driver seat height adjustment motor
V231	Seat angle adjustment motor
44	Ground connection on A-pillar, lower left
96	Ground connection 1 (in heated seats wiring harness)
M1	Positive connection 1 (30) (in seat adjustment wiring harness)

ws	=	white
sw	=	black
ro	=	red
rt	=	red
br	=	brown
gn	=	green
bl	=	blue
gr	=	grey
li	=	lilac
vi	=	lilac
ge	=	yellow
or	=	orange
rs	=	pink

Protected by copyright. Copying for private or commercial purposes, in part or in whole, is not permitted unless authorised by Volkswagen AG. Volkswagen AG does not guarantee or accept any liability with respect to the correctness of information in this document. Copyright by Volkswagen AG.

Emergency call module , (EL2)

from June 2013

Protected by copyright. Copying for private or commercial purposes, in part or in whole, is not permitted unless authorised by Volkswagen AG. Volkswagen AG does not guarantee or accept any liability with respect to the correctness of information in this document. Copyright by Volkswagen AG.

Emergency call button, Vehicle electrical system control module, Control module for emergency call module and communication unit, Telephone microphone

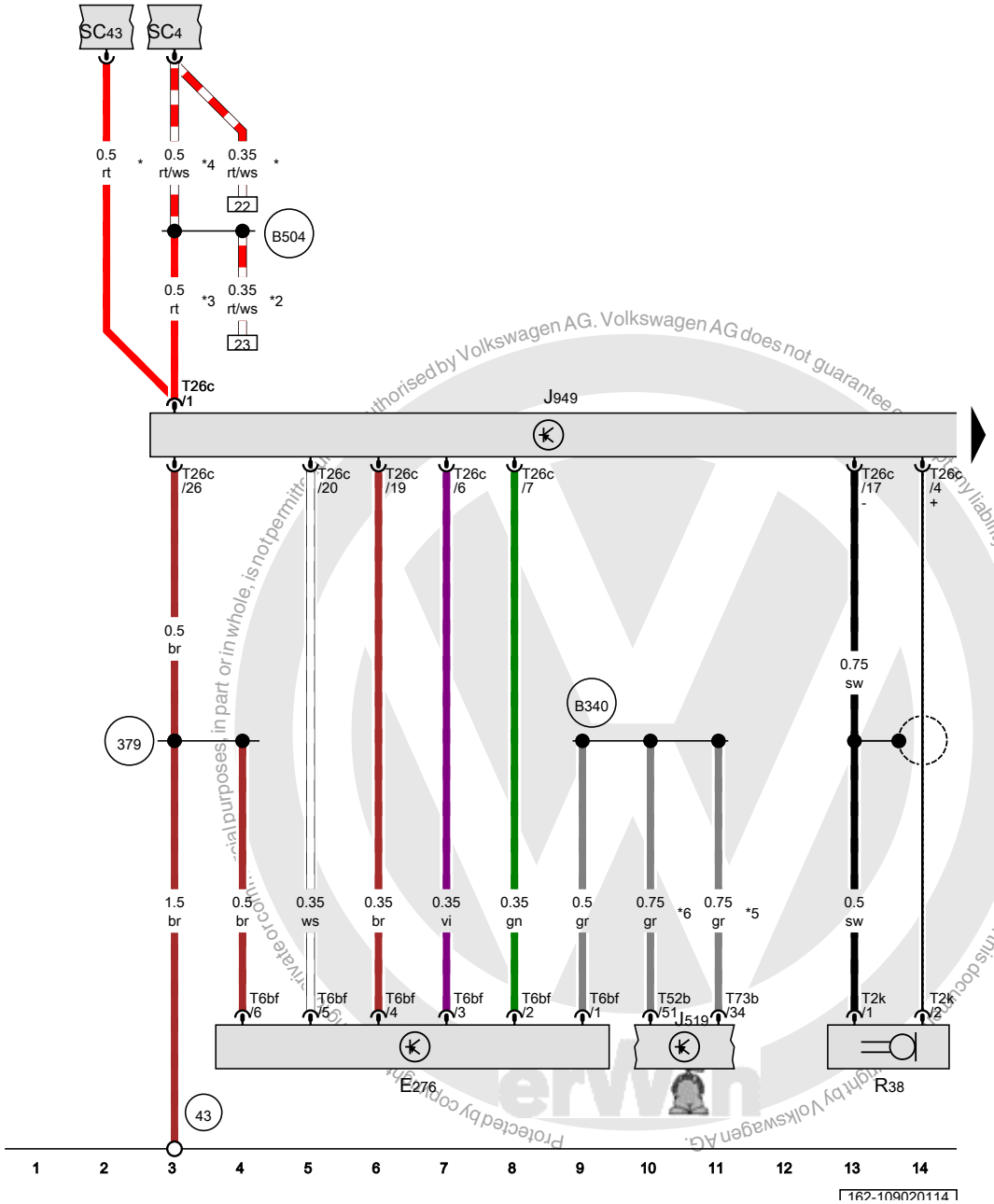

E276	Emergency call button
J519	Vehicle electrical system control module
J949	Control module for emergency call module and communication unit, under the right front seat
R38	Telephone microphone
SC4	Fuse 4 (on fuse panel C)
SC43	Fuse 43 (on fuse panel C)
T2k	Double connector
T6bf	6-pin connector
T26c	26-pin connector
T52b	52-pin connector
T73b	73-pin connector
43	Ground connection on A-pillar, lower right
379	Ground connection 14 (in main wiring harness)
B340	Connection 58d (in main wiring harness) 1
B504	Positive connection 8 (30a) (in interior wiring harness)
*	Only for vehicles without Start/Stop system
*2	Only for vehicles with Start/Stop system
*3	Only for vehicles with Stop/Start system
*4	Diameter depends on equipment
*5	only for vehicles with Low equipment (AW0)
*6	only for vehicles with High equipment (AW1)

ws	=	white
sw	=	black
ro	=	red
rt	=	red
br	=	brown
gn	=	green
bl	=	blue
gr	=	grey
li	=	lilac
vi	=	lilac
ge	=	yellow
or	=	orange
rs	=	pink

Protected by copyright. Copy or distribution is not permitted without authorisation by Volkswagen AG. Volkswagen AG does not guarantee or accept any liability with respect to the correctness of information in this document. This document is for private or in part or in whole, is not permitted without authorisation by Volkswagen AG. Volkswagen AG does not guarantee or accept any liability with respect to the correctness of information in this document.

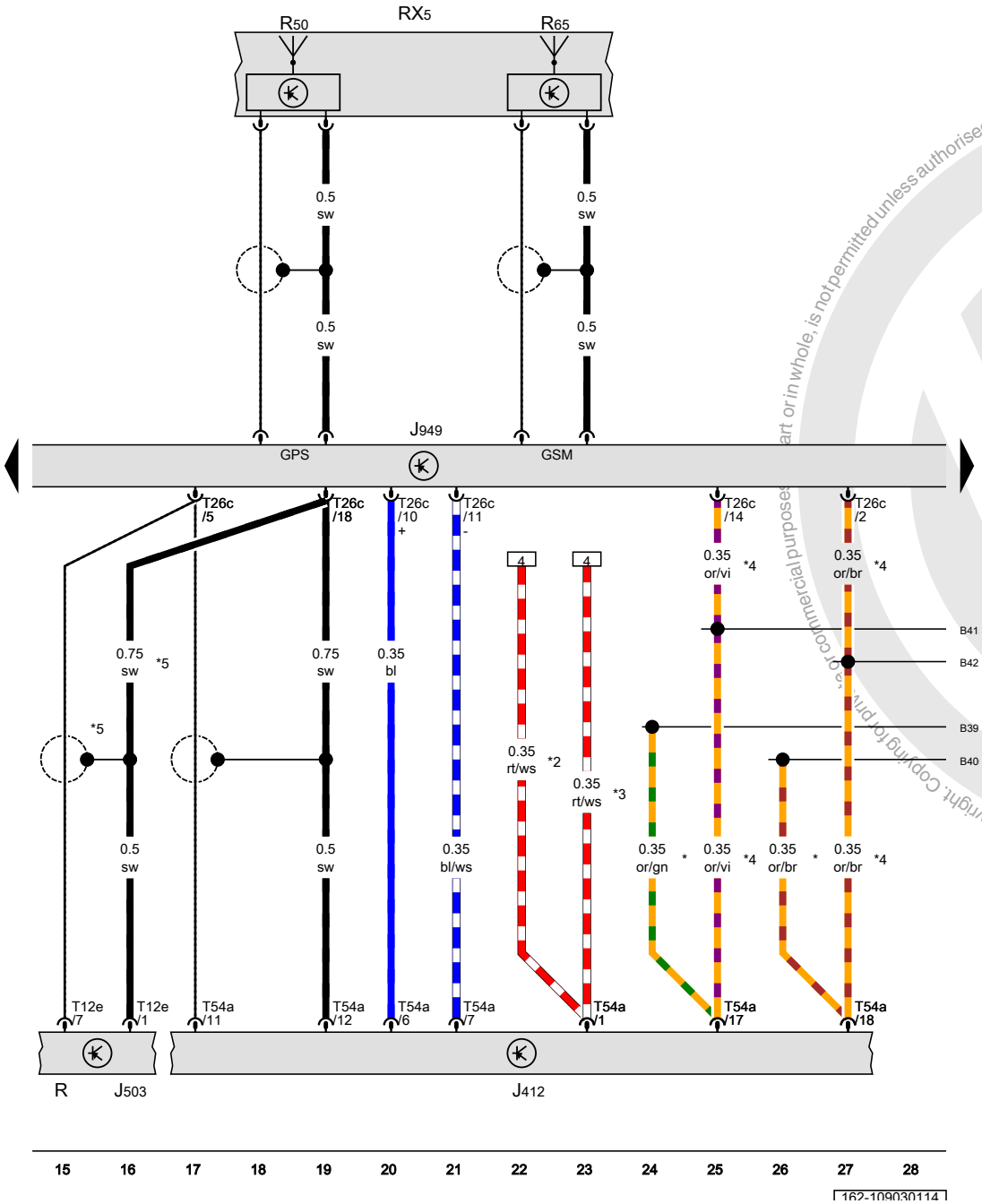

ws	=	white
sw	=	black
ro	=	red
rt	=	red
br	=	brown
gn	=	green
bl	=	blue
gr	=	grey
li	=	lilac
vi	=	lilac
ge	=	yellow
or	=	orange
rs	=	pink

Cell phone operating electronics control module, Radio/ navigation display unit control module, Control module for emergency call module and communication unit, Roof antenna, GPS antenna, Telephone antenna

J412	Cell phone operating electronics control module, under the front passenger seat
J503	Radio/navigation display unit control module
J949	Control module for emergency call module and communication unit, under the right front seat
R	Radio
RX5	Roof antenna
R50	GPS antenna
R65	Telephone antenna
T12e	12-pin connector
T26c	26-pin connector
T54a	54-pin connector
B397	Comfort system CAN bus high connection 1 (in main wiring harness)
B406	Comfort system CAN bus low connection 1 (in main wiring harness)
B415	Infotainment CAN Bus high connection 1 (in main wiring harness)
B421	Infotainment CAN bus low connection 1 (in main wiring harness)
*	only for vehicles with Low equipment (AW0)
*2	Only for vehicles without Start/Stop system
*3	Only for vehicles with Start/Stop system
*4	only for vehicles with High equipment (AW1)
*5	Depending on equipment

Protected by copyright. Copying for private or commercial purposes, in part or in whole, is not permitted unless authorised by Volkswagen AG. Volkswagen AG does not guarantee or assume any liability with respect to the correctness of information. Copyright by Volkswagen AG.

Vehicle electrical system control module, Data bus on board diagnostic interface, Control module for emergency call module and communication unit

J519	Vehicle electrical system control module
J533	Data bus on board diagnostic interface
J949	Control module for emergency call module and communication unit, under the right front seat
T20	20-pin connector
T26c	26-pin connector
T73b	73-pin connector
B397	Comfort system CAN bus high connection 1 (in main wiring harness)
B406	Comfort system CAN bus low connection 1 (in main wiring harness)
B415	Infotainment CAN Bus high connection 1 (in main wiring harness)
B421	Infotainment CAN bus low connection 1 (in main wiring harness)
*	only for vehicles with High equipment (AW1)
*2	only for vehicles with Low equipment (AW0)

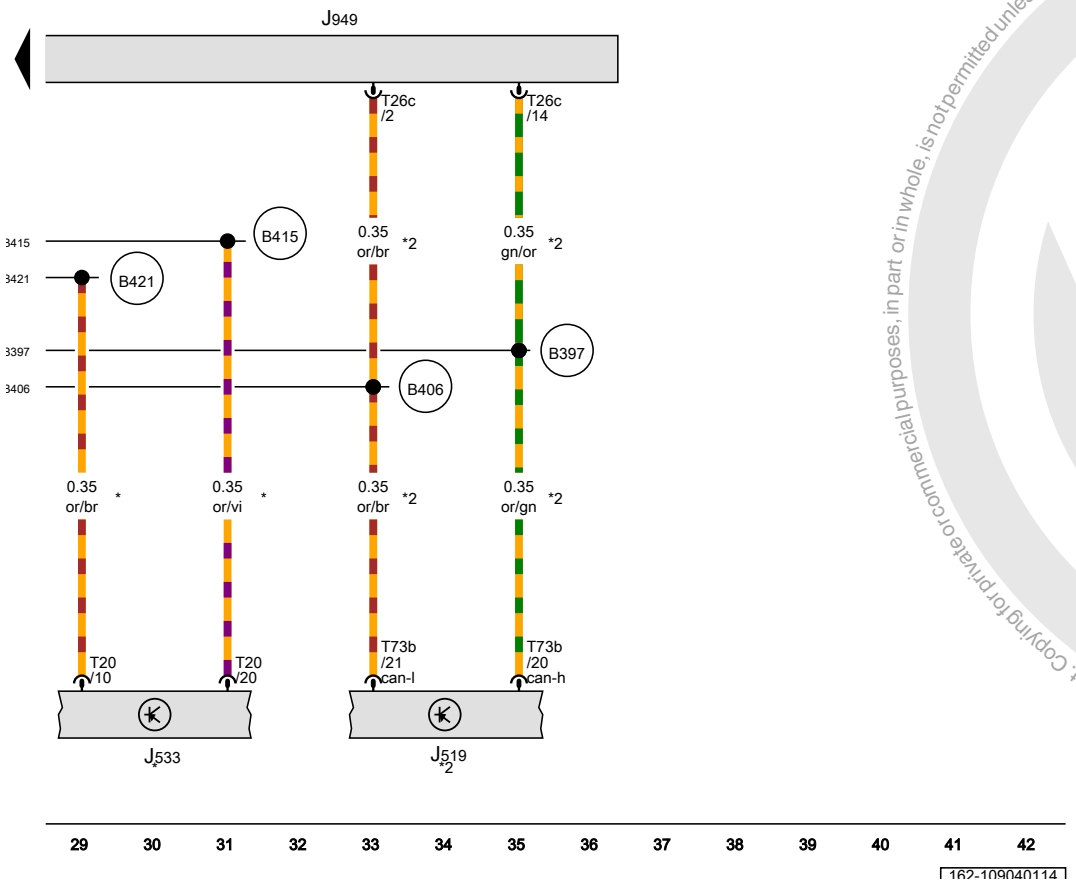

ws	=	white
sw	=	black
ro	=	red
rt	=	red
br	=	brown
gn	=	green
bl	=	blue
gr	=	grey
li	=	lilac
vi	=	lilac
ge	=	yellow
or	=	orange
rs	=	pink

Protected by copyright. Copying for private or commercial purposes, in part or in whole, is not permitted unless authorised by Volkswagen AG. Volkswagen AG does not guarantee or accept any liability with respect to the correctness of information in this document. Copyright by Volkswagen AG.

Radio systems/navigation systems

from June 2012

Protected by copyright. Copying for private or commercial purposes, in part or in whole, is not permitted unless authorised by Volkswagen AG. Volkswagen AG does not guarantee or accept any liability with respect to the correctness of information in this document. Copyright by Volkswagen AG.

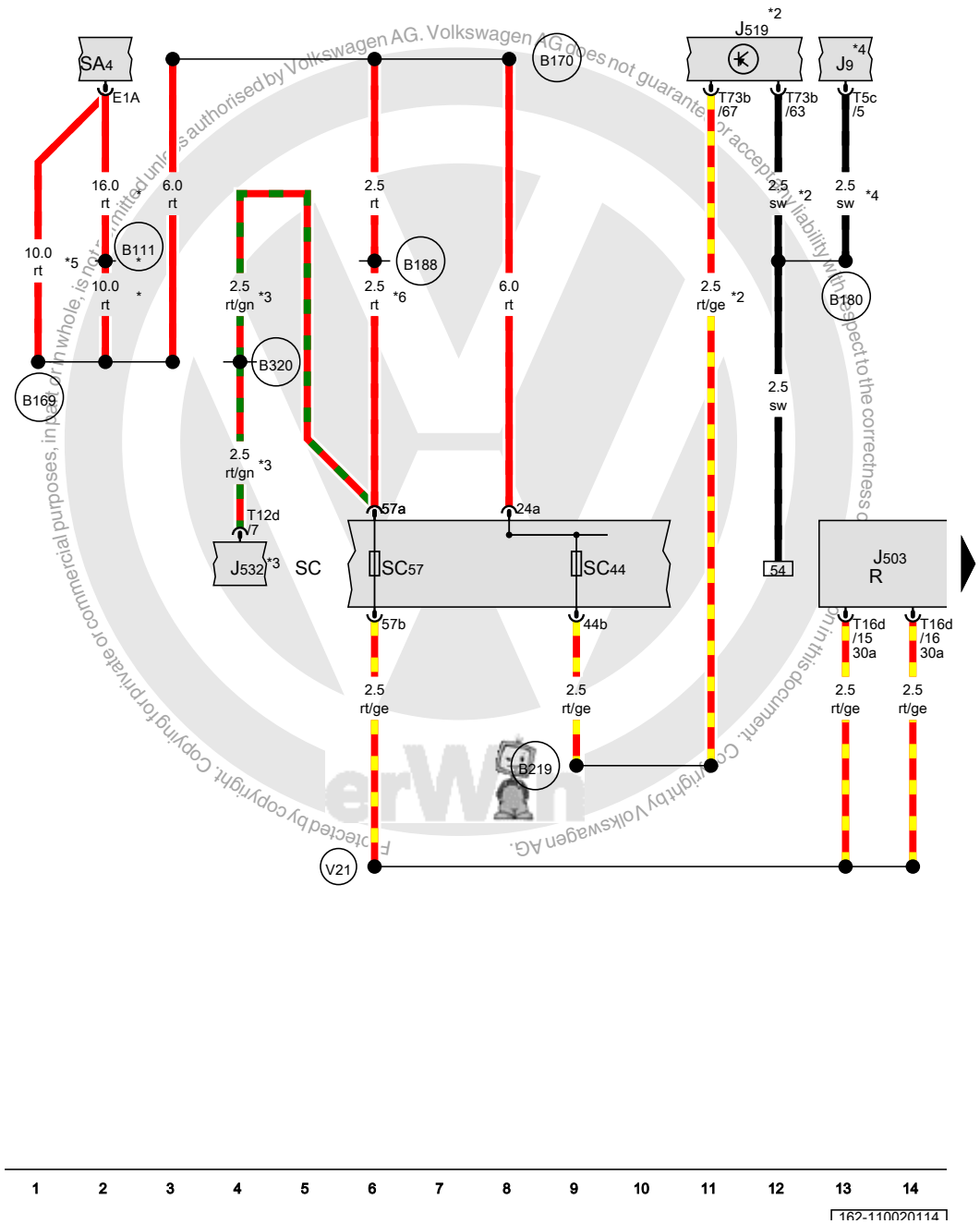

Radio/navigation display unit control module, Vehicle electrical system control module, Radio, Fuse 4 (on fuse panel A), Fuse panel C

J9	Rear window defogger relay
J503	Radio/navigation display unit control module
J519	Vehicle electrical system control module
J532	Voltage stabilizer
R	Radio
SA4	Fuse 4 (on fuse panel A)
SC	Fuse panel C
SC44	Fuse 44 (on fuse panel C)
SC57	Fuse 57 (on fuse panel C)
T5c	5-pin connector
T12d	12-pin connector
T16d	16-pin connector
T73b	73-pin connector
B111	Positive connection 1 (30a) (in interior wiring harness)
B169	Positive connection 1 (30) (in interior wiring harness)
B170	Positive connection 2 (30) (in interior wiring harness)
B180	Rear window defogger connection (in interior wiring harness)
B188	Positive connection 5 (30) (in interior wiring harness)
B219	Positive connection 4 (30a) (in interior wiring harness)
B320	Positive connection 6 (30a) (in main wiring harness)
V21	Positive connection (30) (in wiring radio/amplifier wiring harness)
*	Omitted as a running change
*2	only for vehicles with Low equipment (AW0)
*3	Only for vehicles with Stop/Start system
*4	only for vehicles with High equipment (AW1)
*5	Running change
*6	Only for vehicles without Start/Stop system

ws	=	white
sw	=	black
ro	=	red
rt	=	red
br	=	brown
gn	=	green
bl	=	blue
gr	=	grey
li	=	lilac
vi	=	lilac
ge	=	yellow
or	=	orange
rs	=	pink

Protected by copyright. Copying for private or commercial purposes, in part or in whole, is not permitted unless authorised by Volkswagen AG. Volkswagen AG does not guarantee or accept any liability with respect to the correctness of information in this document. Copyright by Volkswagen AG.

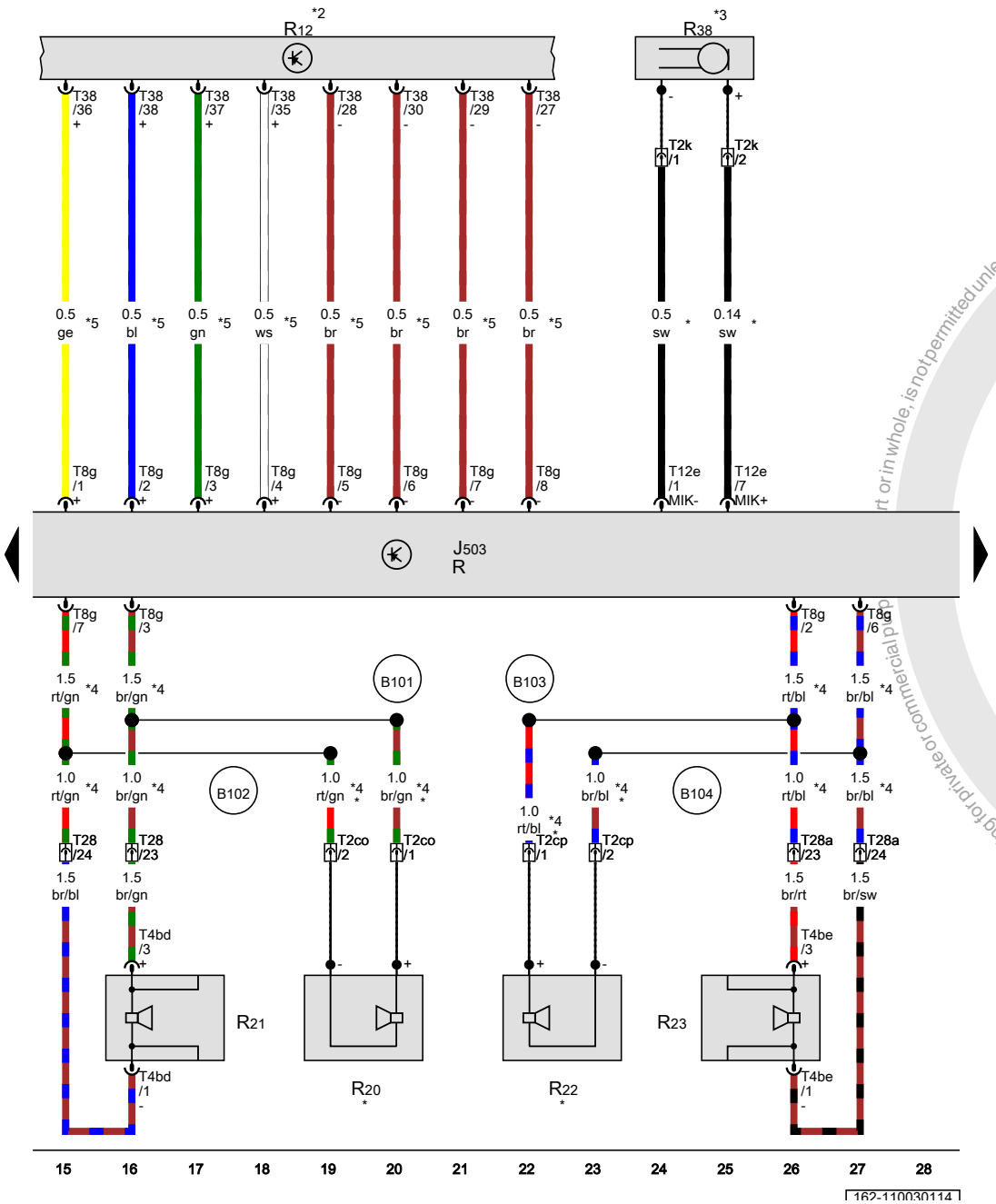

Radio/navigation display unit control module, Radio, Left front treble speaker, Left front bass speaker, Right front treble speaker, Right front bass speaker

J503	Radio/navigation display unit control module
R	Radio
R12	Amplifier
R20	Left front treble speaker
R21	Left front bass speaker
R22	Right front treble speaker
R23	Right front bass speaker
R38	Telephone microphone
T2co	Double connector, Interface for front speaker, in the instrument panel, left
T2cp	Double connector, Interface for front speaker, in the instrument panel, right
T2k	Double connector
T4bd	4-pin connector
T4be	4-pin connector
T8g	8-pin connector
T12e	12-pin connector
T28	28-pin connector
T28a	28-pin connector
T38	38-pin connector
B101	Left front speaker positive connection (in main wiring harness)
B102	Left front speaker negative connection (in main wiring harness)
B103	Right front speaker positive connection (in main wiring harness)
B104	Right front speaker negative connection (in main wiring harness)
*	Depending on equipment
*2	Refer to applicable sound system wiring diagram
*3	Refer to applicable telephone systems wiring diagram
*4	Only for vehicles without sound system
*5	Only for vehicles with sound system

ws	=	white
sw	=	black
ro	=	red
rt	=	red
br	=	brown
gn	=	green
bl	=	blue
gr	=	grey
li	=	lilac
vi	=	lilac
ge	=	yellow
or	=	orange
rs	=	pink

Protected by copyright. Copying for private or commercial purposes, in part or in whole, is not permitted unless authorised by Volkswagen AG. Volkswagen AG does not guarantee or accept any liability with respect to the correctness of information in this document.

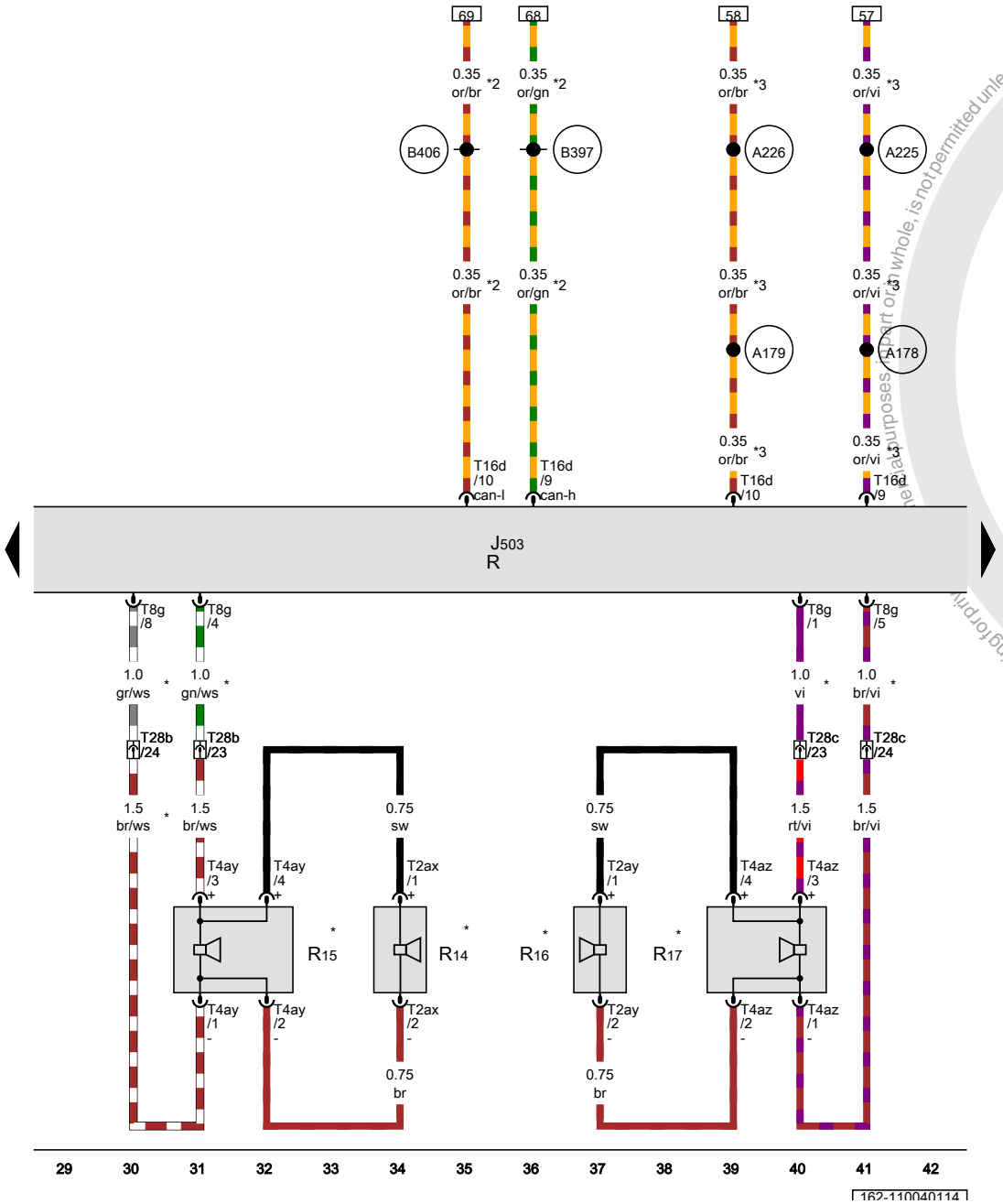

Radio/navigation display unit control module, Radio, Left rear treble speaker, Left rear bass speaker, Right rear treble speaker, Right rear bass speaker

J503	Radio/navigation display unit control module
R	Radio
R14	Left rear treble speaker
R15	Left rear bass speaker
R16	Right rear treble speaker
R17	Right rear bass speaker
T2ax	Double connector
T2ay	Double connector
T4ay	4-pin connector
T4az	4-pin connector
T8g	8-pin connector
T16d	16-pin connector
T28b	28-pin connector
T28c	28-pin connector
A178	Infotainment CAN bus high connection (in instrument panel wiring harness)
A179	Infotainment CAN bus low connection (in instrument panel wiring harness)
A225	Infotainment CAN bus high connection 2 (in instrument panel wiring harness)
A226	Infotainment CAN bus low connection 2 (in instrument panel wiring harness)
B397	Comfort system CAN bus high connection 1 (in main wiring harness)
B406	Comfort system CAN bus low connection 1 (in main wiring harness)
*	Depending on equipment
*2	only for vehicles with Low equipment (AW0)
*3	only for vehicles with High equipment (AW1)

ws	=	white
sw	=	black
ro	=	red
rt	=	red
br	=	brown
gn	=	green
bl	=	blue
gr	=	grey
li	=	lilac
vi	=	lilac
ge	=	yellow
or	=	orange
rs	=	pink

Protected by copyright. Copying for private or commercial purposes, in part or in whole, is not permitted unless authorised by Volkswagen AG. Volkswagen AG does not guarantee or accept any liability with respect to the correctness of information in this document. Copyright by Volkswagen AG.

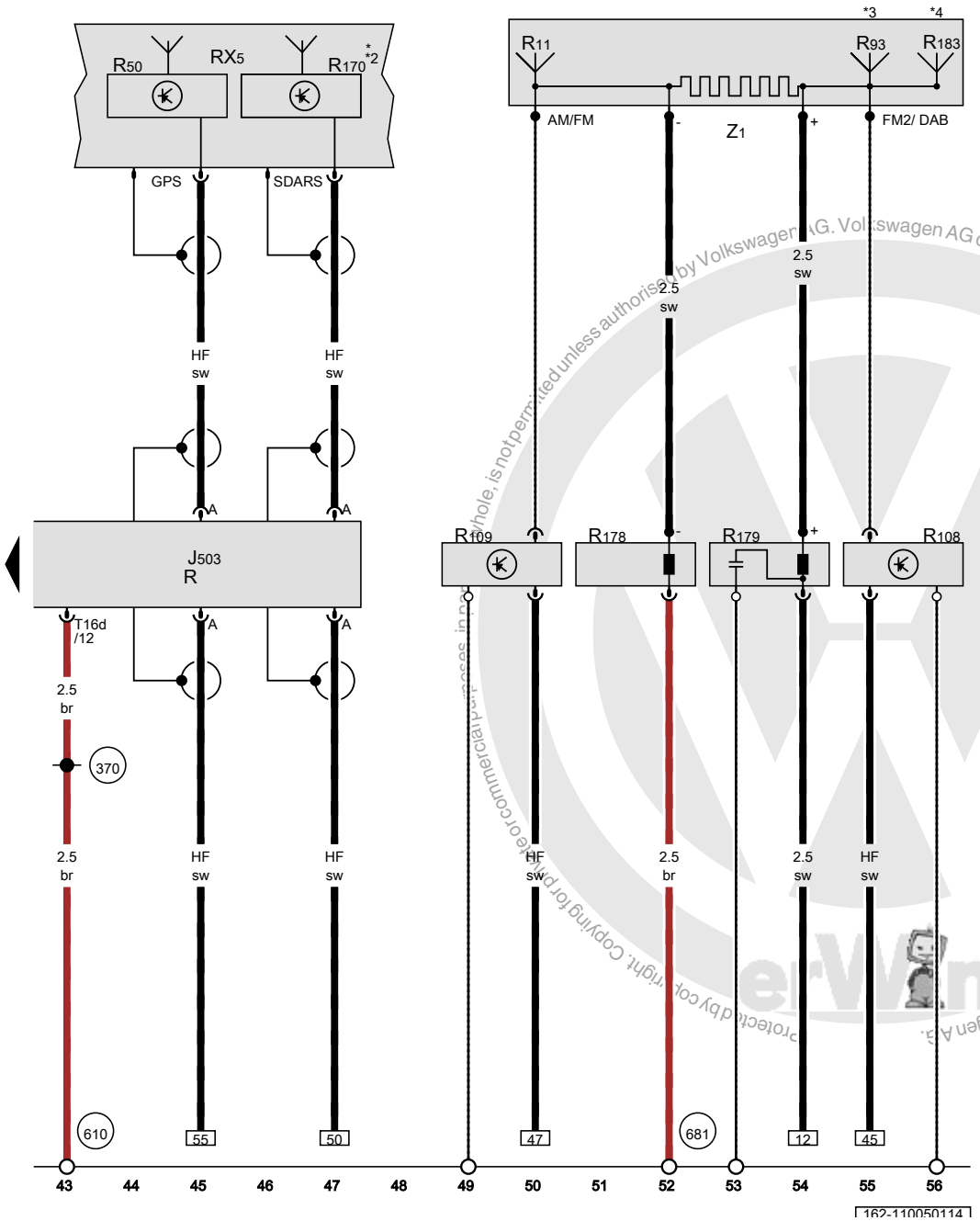

Radio/navigation display unit control module, Radio, Roof antenna, Antenna, GPS antenna, Radio antenna 2, Left antenna module, Right antenna module, Satellite antenna, Digital radio antenna, Rear window defogger

J503	Radio/navigation display unit control module
R	Radio
RX5	Roof antenna
R11	Antenna
R50	GPS antenna
R93	Radio antenna 2
R108	Left antenna module
R109	Right antenna module
R170	Satellite antenna
R178	FM frequency filter in negative wire
R179	FM frequency filter in positive wire
R183	Digital radio antenna
T16d	16-pin connector
Z1	Rear window defogger
370	Ground connection 5 (in main wiring harness)
610	Audio ground connection under front center console
681	Ground connection 1 in right rear side panel
*	USA only
*2	Only for vehicles with satellite radio
*3	Depending on equipment
*4	Only for vehicles with a digital radio

ws	=	white
sw	=	black
ro	=	red
rt	=	red
br	=	brown
gn	=	green
bl	=	blue
gr	=	grey
li	=	lilac
vi	=	lilac
ge	=	yellow
or	=	orange
rs	=	pink

The whole, is not permitted unless authorised by Volkswagen AG. Volkswagen AG does not guarantee or accept any liability with respect to the correctness of information in this document. Copyright by Volkswagen AG. Protected by copyright. Copying for private or commercial purposes, in part

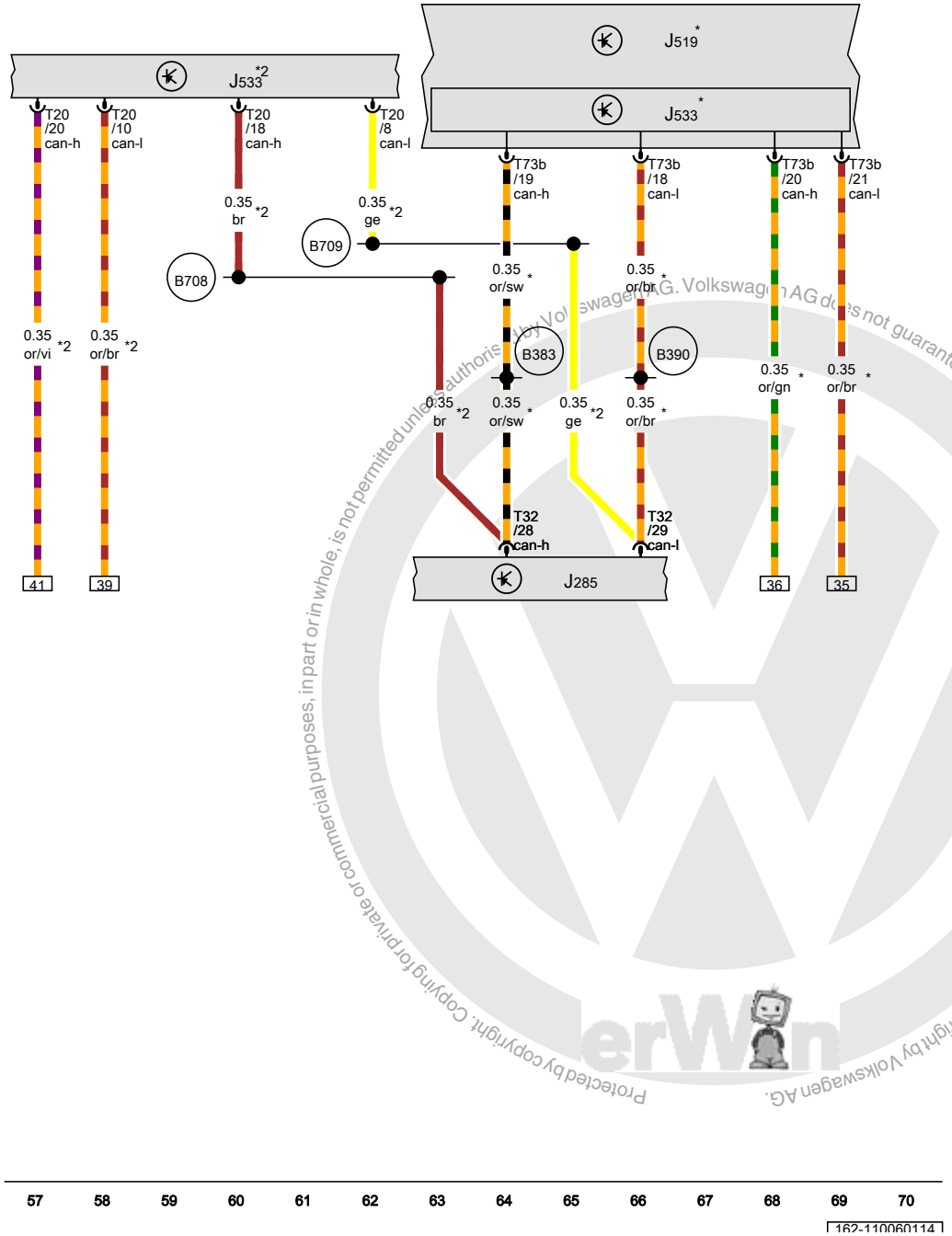

Instrument cluster control module, Vehicle electrical system control module

J285	Instrument cluster control module
J519	Vehicle electrical system control module
J533	Data bus on board diagnostic interface
T20	20-pin connector
T32	32-pin connector
T73b	73-pin connector
B383	Powertrain CAN bus high connection 1 (in main wiring harness)
B390	Powertrain CAN bus low connection 1 (in main wiring harness)
B708	Instrument cluster CAN bus high connection 1 (in main wiring harness)
B709	Instrument cluster CAN bus low connection 1 (in main wiring harness)
*	only for vehicles with Low equipment (AW0)
*2	only for vehicles with High equipment (AW1)

ws	=	white
sw	=	black
ro	=	red
rt	=	red
br	=	brown
gn	=	green
bl	=	blue
gr	=	grey
li	=	lilac
vi	=	lilac
ge	=	yellow
or	=	orange
rs	=	pink

Protected by copyright. Copying for private or commercial purposes, in part or in whole, is not permitted unless authorised by Volkswagen AG. Volkswagen AG does not guarantee or accept any liability with respect to the correctness of information in this document. Copyright by Volkswagen AG.

Fuse assignment, passenger compartment , (AW0)

from May 2013

Protected by copyright. Copying for private or commercial purposes, in part or in whole, is not permitted unless authorised by Volkswagen AG. Volkswagen AG does not guarantee or accept any liability with respect to the correctness of information in this document. Copyright by Volkswagen AG.

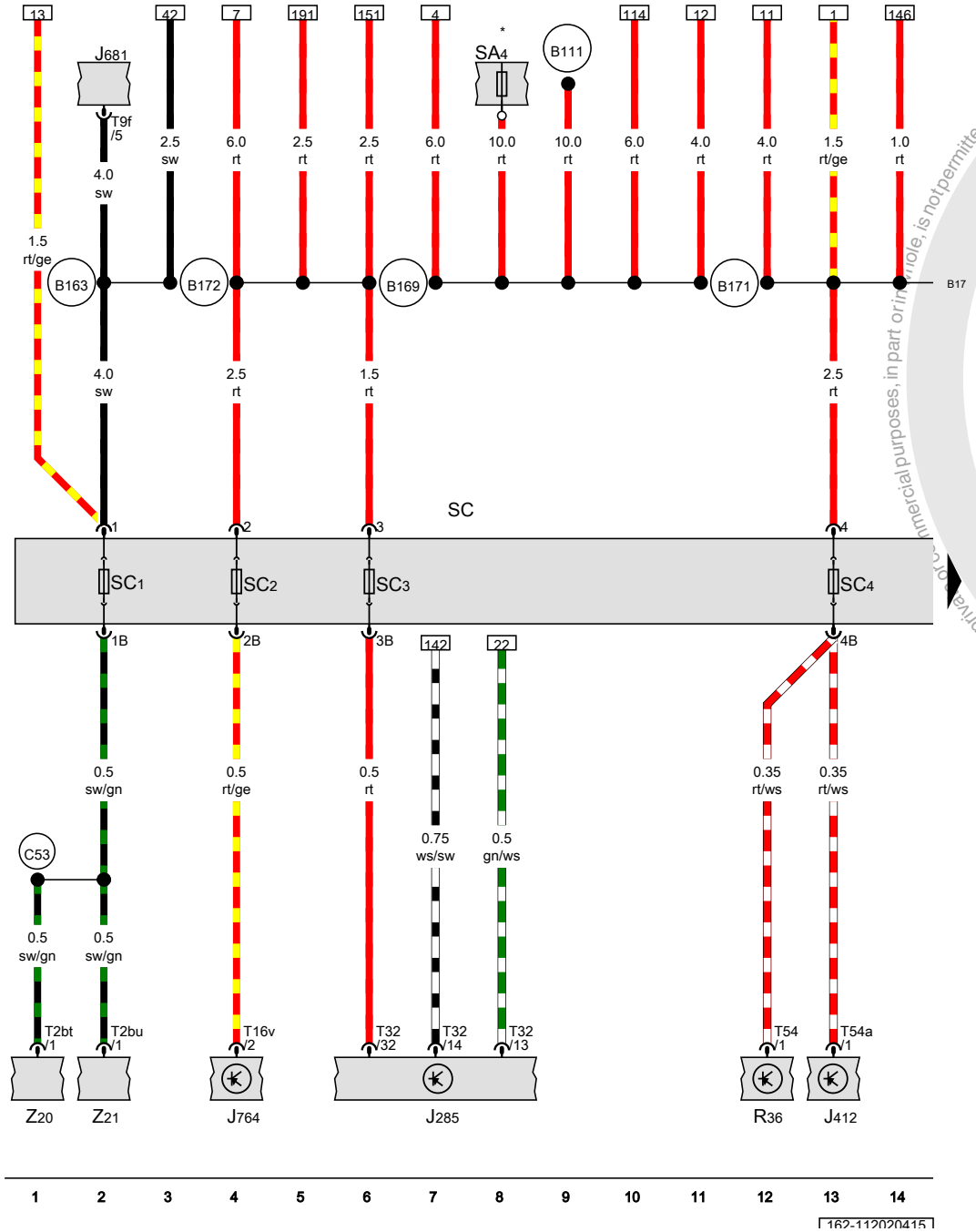

Fuse panel C

J285	Instrument cluster control module
J412	Cell phone operating electronics control module
J681	Terminal 15 power supply relay 2
J764	Electronic steering column lock control module
R36	Telephone transceiver
SC1	Fuse 1 (on fuse panel C)
SC2	Fuse 2 (on fuse panel C)
SC3	Fuse 3 (on fuse panel C)
SA4	Fuse 4 (on fuse panel A)
SC	Fuse panel C
SC4	Fuse 4 (on fuse panel C)
T2bt	Double connector
T2bu	Double connector
T9f	9-pin connector
T16v	16-pin connector
T32	32-pin connector
T54	54-pin connector
T54a	54-pin connector
Z20	Left washer nozzle heater
Z21	Right washer nozzle heater
B111	Positive connection 1 (30a) (in interior wiring harness)
B163	Positive connection 1 (15) (in interior wiring harness)
B169	Positive connection 1 (30) (in interior wiring harness)
B171	Positive connection 3 (30) (in interior wiring harness)
B172	Positive connection 4 (30) (in interior wiring harness)
C53	Positive connection (x) (in heated spray nozzle wiring harness)
*	Only for vehicles without hybrid drive

ws	=	white
sw	=	black
ro	=	red
rt	=	red
br	=	brown
gn	=	green
bl	=	blue
gr	=	grey
li	=	lilac
vi	=	lilac
ge	=	yellow
or	=	orange
rs	=	pink

Protected by copyright. Copying for private or commercial purposes, in part or in whole, is not permitted unless authorised by Volkswagen AG. Volkswagen AG does not guarantee or accept any liability with respect to the correctness of information in this document. Copyright by Volkswagen AG.

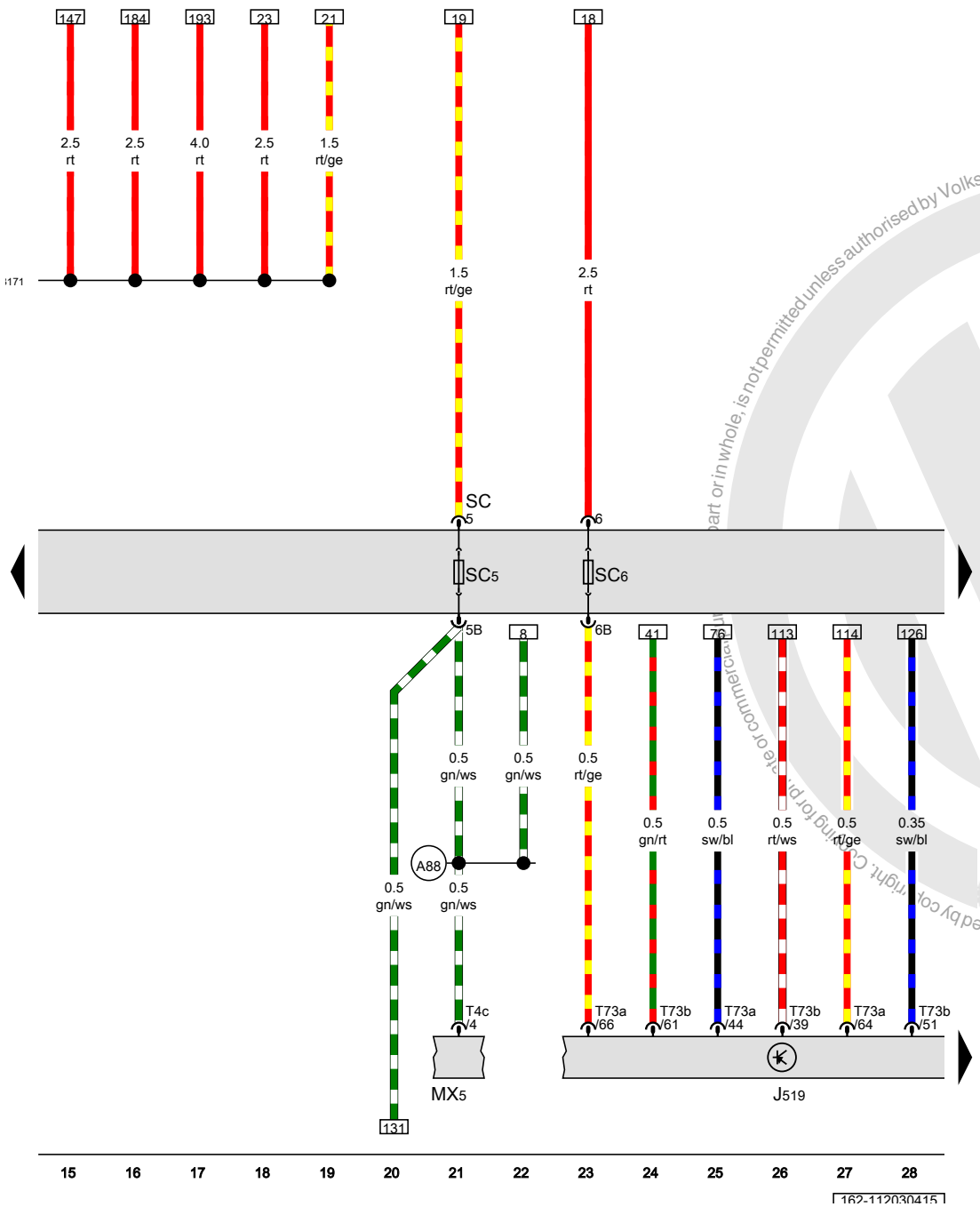

Fuse panel C

J519	Vehicle electrical control module system
MX5	Left tail lamp 2
SC	Fuse panel C
SC5	Fuse 5 (on fuse panel C)
SC6	Fuse 6 (on fuse panel C)
T4c	4-pin connector
T73a	73-pin connector
T73b	73-pin connector
A88	Fog lamp connection (in instrument panel wiring harness)
B171	Positive connection 3 (30) (in interior wiring harness)

ws	=	white
sw	=	black
ro	=	red
rt	=	red
br	=	brown
gn	=	green
bl	=	blue
gr	=	grey
li	=	lilac
vi	=	lilac
ge	=	yellow
or	=	orange
rs	=	pink

Copyright by Volkswagen AG. Volkswagen AG does not guarantee or accept any liability with respect to the correctness of information in this document. Copyright by Volkswagen AG. Protected by copyright. Copying for private or commercial purposes, in part or in whole, is not permitted unless authorised by Volkswagen AG.

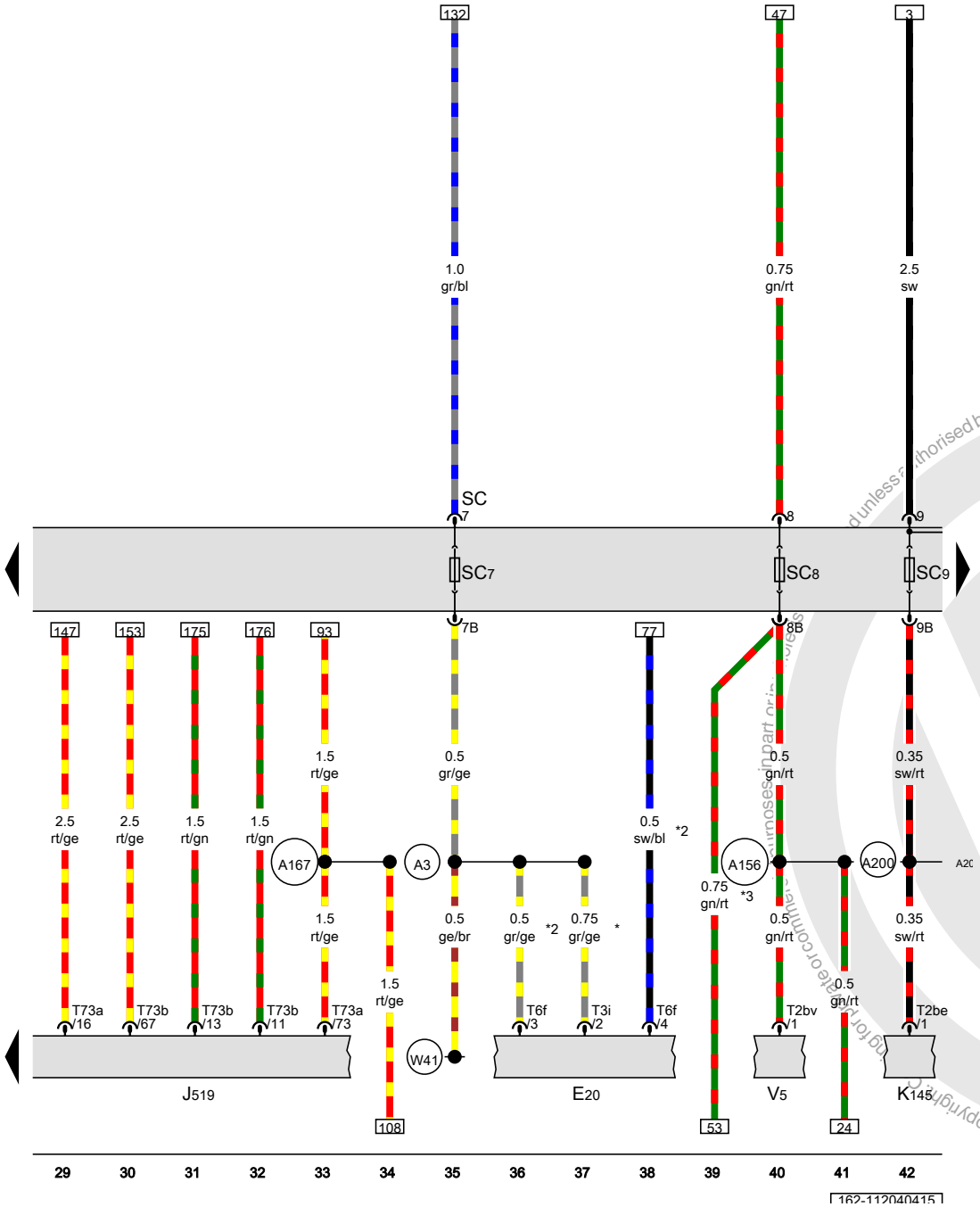

Fuse panel C

E20	Instrument panel and switch illumination dimmer switch
J519	Vehicle electrical control module system
K145	Front passenger airbag -disabled- indicator lamp
SC	Fuse panel C
SC7	Fuse 7 (on fuse panel C)
SC8	Fuse 8 (on fuse panel C)
SC9	Fuse 9 (on fuse panel C)
T2be	Double connector
T2bv	Double connector
T3i	3-pin connector
T6f	6-pin connector
T73a	73-pin connector
T73b	73-pin connector
V5	Windshield washer pump
A3	Positive connection (58) (in instrument panel wiring harness)
A156	Connection (53c) inside instrument panel wiring harness
A167	Positive connection 3 (30a) (in instrument panel wiring harness)
A200	Positive connection 5 (15a) (in instrument panel wiring harness)
W41	Positive connection (58) (in license plate lamp wiring harness)
*	Only for vehicles without headlamp range control
*2	Only for vehicles with headlamp range control
*3	Only for vehicles with China equipment

ws	=	white
sw	=	black
ro	=	red
rt	=	red
br	=	brown
gn	=	green
bl	=	blue
gr	=	grey
li	=	lilac
vi	=	lilac
ge	=	yellow
or	=	orange
rs	=	pink

Protected by copyright. Copyright by Volkswagen AG.

Fuse panel C

EX19	Left steering column switch
EX20	Right steering column switch
E256	ASR/ESP button
J234	Airbag control module
SC	Fuse panel C
SC10	Fuse 10 (on fuse panel C)
SC13	Fuse 13 (on fuse panel C)
T6ad	6-pin connector
T10ls	10-pin connector
T16ls	16-pin connector
T50	50-pin connector
T100	100-pin connector
(A200)	Positive connection 5 (15a) (in instrument panel wiring harness)
(A217)	Positive connection 8 (15a) (in instrument panel wiring harness)
*	Refer to applicable airbag wiring diagram
*2	Only for vehicles with China equipment

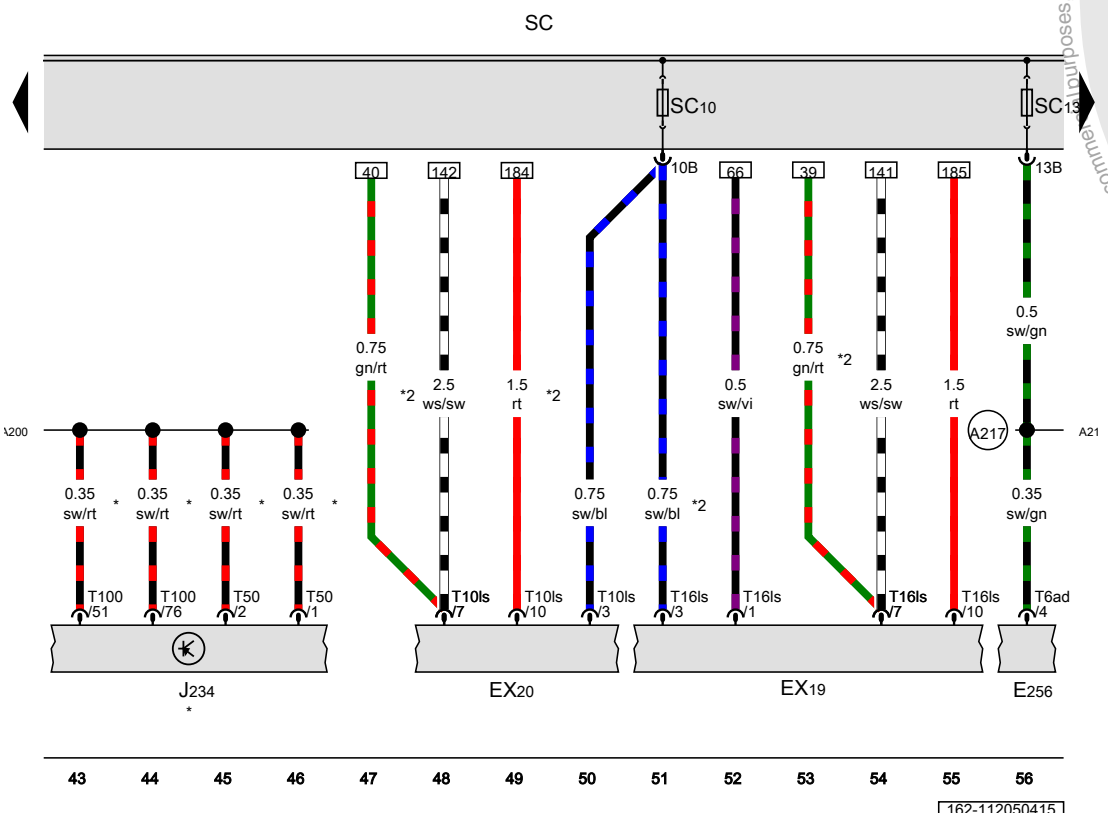

ws	=	white
sw	=	black
ro	=	red
rt	=	red
br	=	brown
gn	=	green
bl	=	blue
gr	=	grey
li	=	lilac
vi	=	lilac
ge	=	yellow
or	=	orange
rs	=	pink

Protected by copyright. Copying for private or commercial purposes, in part or in whole, is not permitted unless authorised by Volkswagen AG. Volkswagen AG does not guarantee or accept any liability with respect to the correctness of information in this document. Copyright by Volkswagen AG.

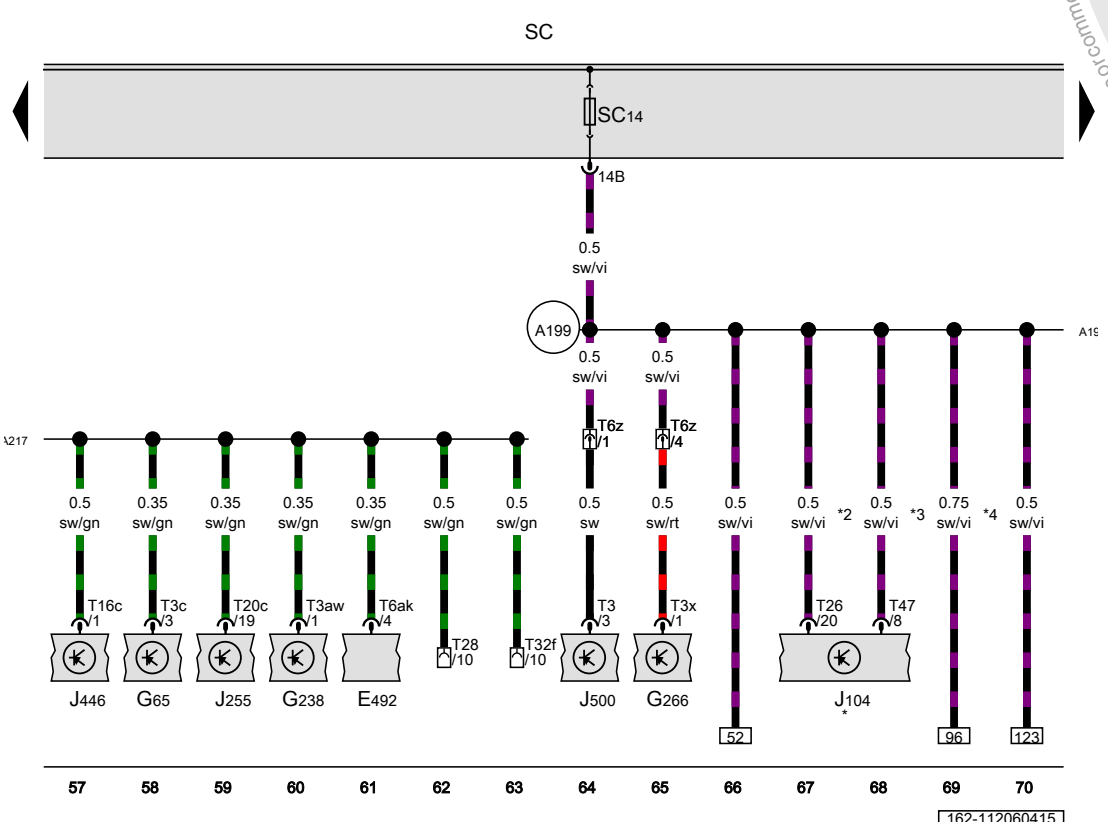

Fuse panel C

E492	Tire pressure monitoring display button
G65	High pressure sensor
G238	Air quality sensor
G266	Oil level thermal sensor
J104	ABS control module
J255	Climatronic control module
J446	Parking aid control module
J500	Power steering control module
SC	Fuse panel C
SC14	Fuse 14 (on fuse panel C)
T3	3-pin connector
T3aw	3-pin connector
T3c	3-pin connector
T3x	3-pin connector
T6ak	6-pin connector
T6z	6-pin connector
T16c	16-pin connector
T20c	20-pin connector
T26	26-pin connector
T28	28-pin connector
T32f	32-pin connector
T47	47-pin connector
A199	Positive connection 4 (15a) (in instrument panel wiring harness)
A217	Positive connection 8 (15a) (in instrument panel wiring harness)
*	Refer to applicable ABS wiring diagram
*2	Only for vehicles with ABS and without ESP
*3	Only for vehicles with ABS and ESP
*4	Refer to applicable transmission wiring diagram

ws	=	white
sw	=	black
ro	=	red
rt	=	red
br	=	brown
gn	=	green
bl	=	blue
gr	=	grey
li	=	lilac
vi	=	lilac
ge	=	yellow
or	=	orange
rs	=	pink

Protected by copyright. Copying for private or commercial purposes, in part or in whole, is not permitted unless authorised by Volkswagen AG. Volkswagen AG does not guarantee or accept any liability with respect to the correctness of information in this document. Copyright by Volkswagen AG.

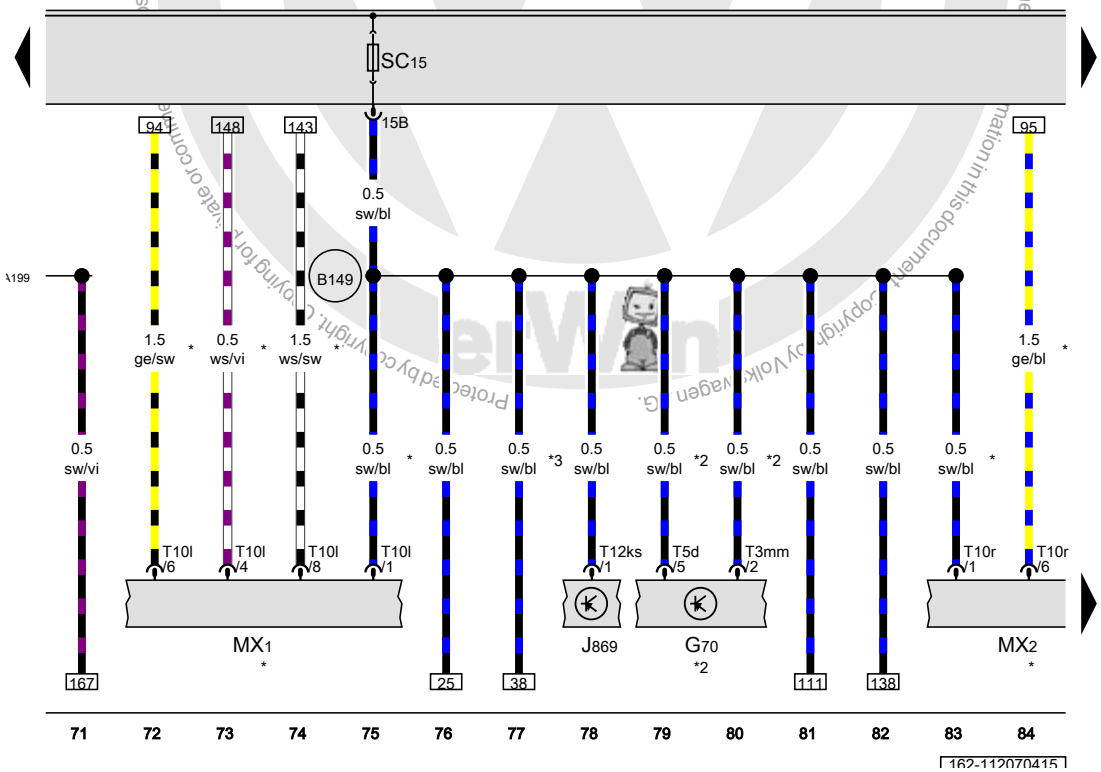

Fuse panel C

G70	Mass airflow sensor
J869	Structure borne sound control module
MX1	Left front headlamp
MX2	Right front headlamp
SC	Fuse panel C
SC15	Fuse 15 (on fuse panel C)
T3mm	3-pin connector
T5d	5-pin connector
T10l	10-pin connector
T10r	10-pin connector
T12ks	12-pin connector
A199	Positive connection 4 (15a) (in instrument panel wiring harness)
B149	Positive connection 2 (15a) (in interior wiring harness)
*	Depending on equipment
*2	Refer to applicable engine wiring diagram
*3	Only for vehicles with headlamp range control

ws	=	white
sw	=	black
ro	=	red
rt	=	red
br	=	brown
gn	=	green
bl	=	blue
gr	=	grey
li	=	lilac
vi	=	lilac
ge	=	yellow
or	=	orange
rs	=	pink

Protected by copyright. Copying for private or commercial purposes, in part or in whole, is not permitted unless authorised by Volkswagen AG. Volkswagen AG does not guarantee or accept any liability with respect to the correctness of information in this document.

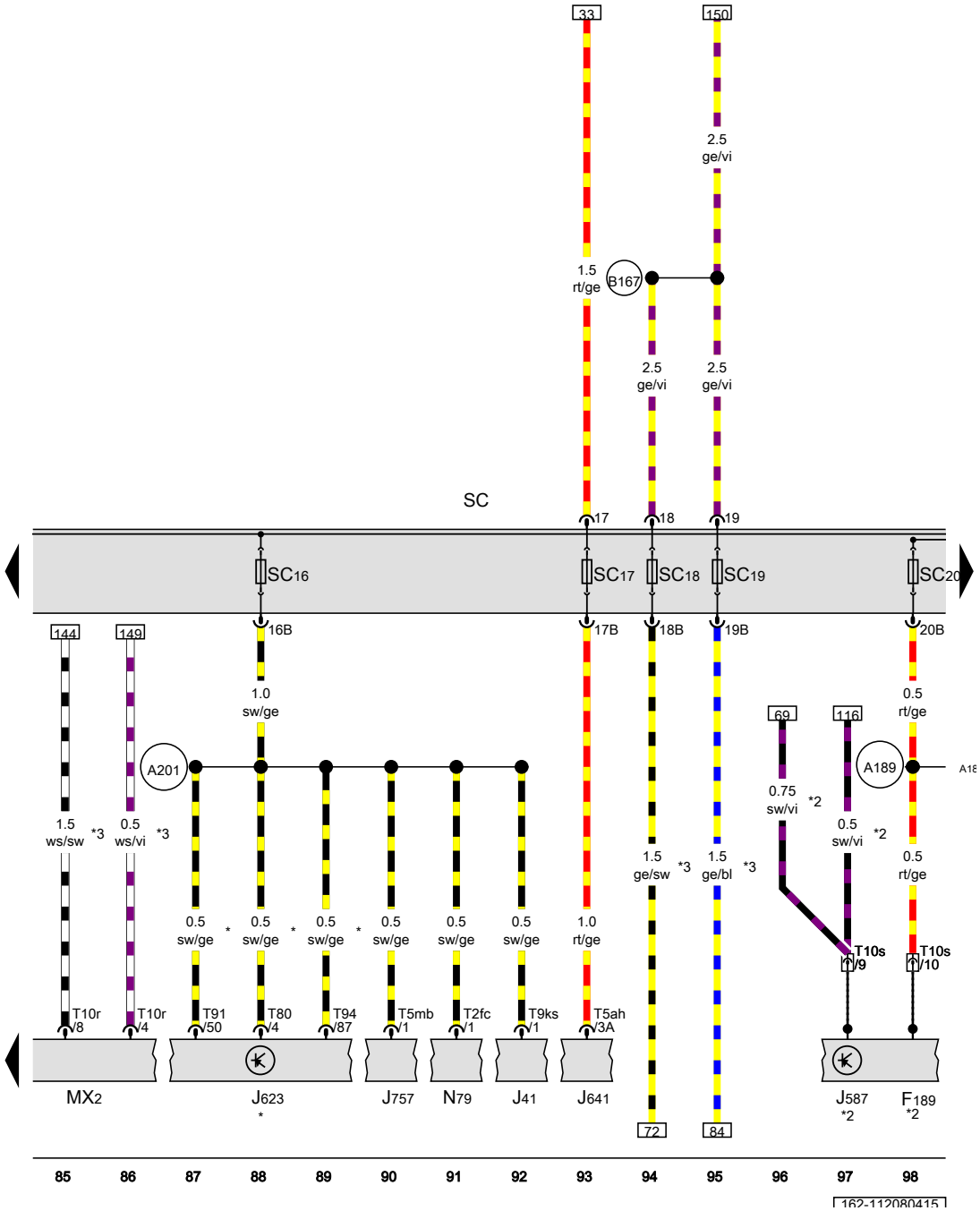

Fuse panel C

F189	tiptronic switch
J41	Cold start injector relay
J587	Selector lever sensor system control module
J623	Engine control module
J641	Alarm horn relay
J757	Engine component power supply relay
MX2	Right front headlamp
N79	Positive crankcase ventilation heating element
SC	Fuse panel C
SC16	Fuse 16 (on fuse panel C)
SC17	Fuse 17 (on fuse panel C)
SC18	Fuse 18 (on fuse panel C)
SC19	Fuse 19 (on fuse panel C)
SC20	Fuse 20 (on fuse panel C)
T2fc	Double connector
T5ah	5-pin connector
T5mb	5-pin connector
T9ks	9-pin connector
T10r	10-pin connector
T10s	10-pin connector
T80	80-pin connector
T91	91-pin connector
T94	94-pin connector
A189	Positive connection 5 (30a) (in instrument panel wiring harness)
A201	Positive connection 6 (15a) (in instrument panel wiring harness)
B167	Connection 56b (in interior wiring harness)
*	Refer to applicable engine wiring diagram
*2	Refer to applicable transmission wiring diagram
*3	Depending on equipment

ws	=	white
sw	=	black
ro	=	red
rt	=	red
br	=	brown
gn	=	green
bl	=	blue
gr	=	grey
li	=	lilac
vi	=	lilac
ge	=	yellow
or	=	orange
rs	=	pink

Protected by copyright. Copying for private or commercial purposes, in part or in whole, is not permitted unless authorised by Volkswagen AG. Volkswagen AG does not guarantee or accept any liability with respect to the correctness of information in this document. Copyright by Volkswagen AG.

Fuse panel C

D	Ignition/starter switch
J217	Transmission control module
J301	A/C control module
J935	Converter box
R149	Auxiliary engine coolant heater radio frequency receiver
SC	Fuse panel C
SC21	Fuse 21 (on fuse panel C)
SC22	Fuse 22 (on fuse panel C)
SC23	Fuse 23 (on fuse panel C)
T6j	6-pin connector
T10	10-pin connector
T10i	10-pin connector
T16	16-pin connector
T20c	20-pin connector
T52	52-pin connector
U31	Diagnostic connection
A32	Positive connection (30) (in instrument panel wiring harness)
A189	Positive connection 5 (30a) (in instrument panel wiring harness)
B150	Positive connection 2 (30a) (in interior wiring harness)
*	Depending on equipment

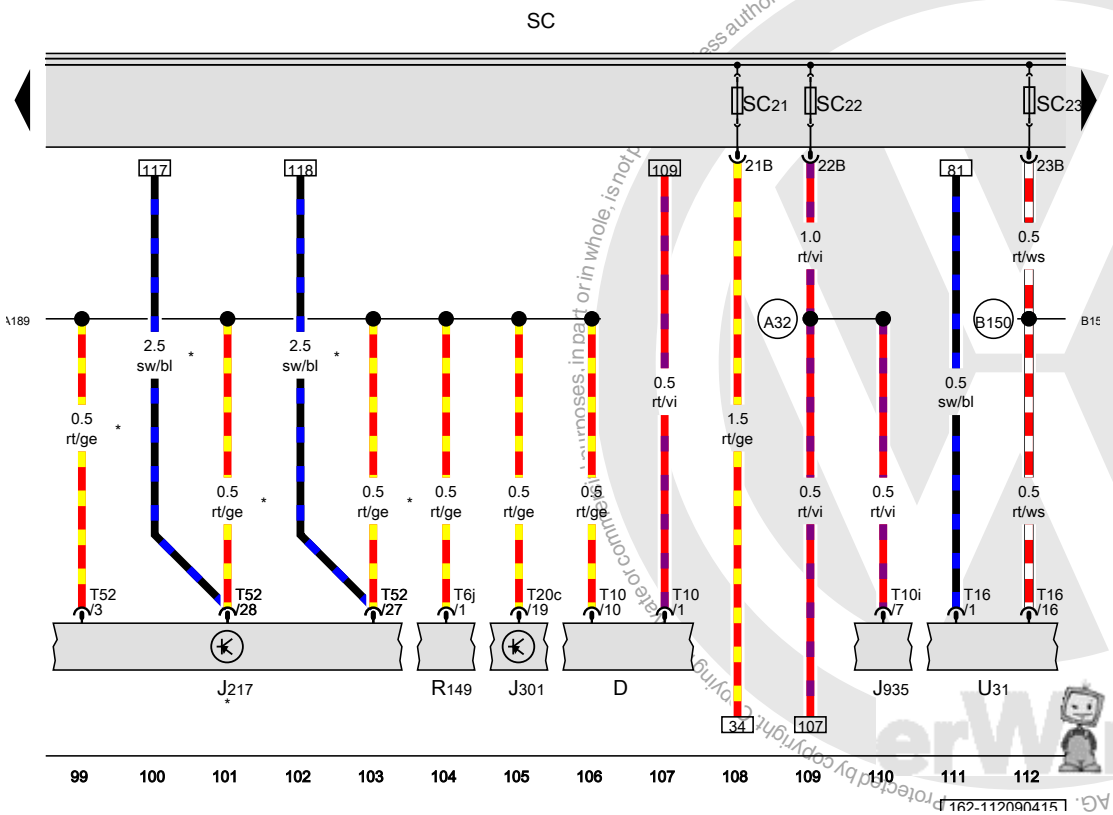

ws	=	white
sw	=	black
ro	=	red
rt	=	red
br	=	brown
gn	=	green
bl	=	blue
gr	=	grey
li	=	lilac
vi	=	lilac
ge	=	yellow
or	=	orange
rs	=	pink

Reproduction authorised by Volkswagen AG. Volkswagen AG does not guarantee or accept any liability with respect to the correctness of information in this document. Copyright by Volkswagen AG. Protected by copyright. Copying for private or commercial purposes, in part or in whole, is not permitted.

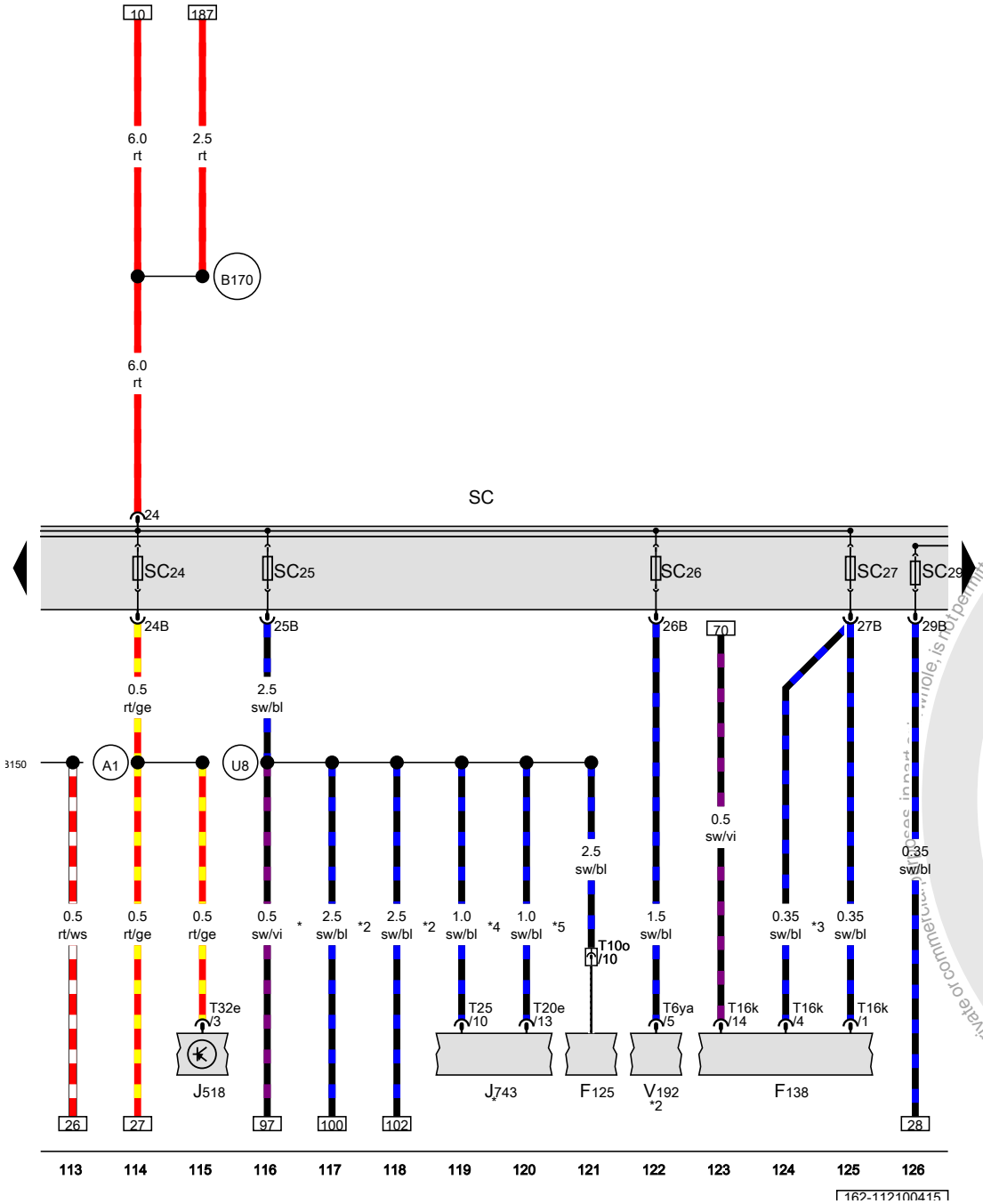

Fuse panel C

F125	Multifunction transmission range switch
F138	Airbag spiral spring/return spring with slip ring
J518	Access/start authorization control module
J743	DSG transmission Mechatronic
SC	Fuse panel C
SC24	Fuse 24 (on fuse panel C)
SC25	Fuse 25 (on fuse panel C)
SC26	Fuse 26 (on fuse panel C)
SC27	Fuse 27 (on fuse panel C)
SC29	Fuse 29 (on fuse panel C)
T6ya	6-pin connector
T10o	10-pin connector
T16k	16-pin connector
T20e	20-pin connector
T25	25-pin connector
T32e	32-pin connector
V192	Brake system vacuum pump
A1	Positive connection (30a) (in instrument panel wiring harness)
B150	Positive connection 2 (30a) (in interior wiring harness)
B170	Positive connection 2 (30) (in interior wiring harness)
U8	Positive connection (15a) (in automatic transmission wiring harness)
*	Refer to applicable transmission wiring diagram
*2	Depending on equipment
*3	Only for vehicles with China equipment
*4	Only for vehicles with DSG transmission 0AM
*5	Only for vehicles with DSG transmission 02E

ws	=	white
sw	=	black
ro	=	red
rt	=	red
br	=	brown
gn	=	green
bl	=	blue
gr	=	grey
li	=	lilac
vi	=	lilac
ge	=	yellow
or	=	orange
rs	=	pink

Protected by copyright. Copying for private or commercial purposes, in part or in whole, is not permitted unless authorised by Volkswagen AG. Volkswagen AG does not guarantee or accept any liability with respect to the correctness of information in this document. Copyright by Volkswagen AG.

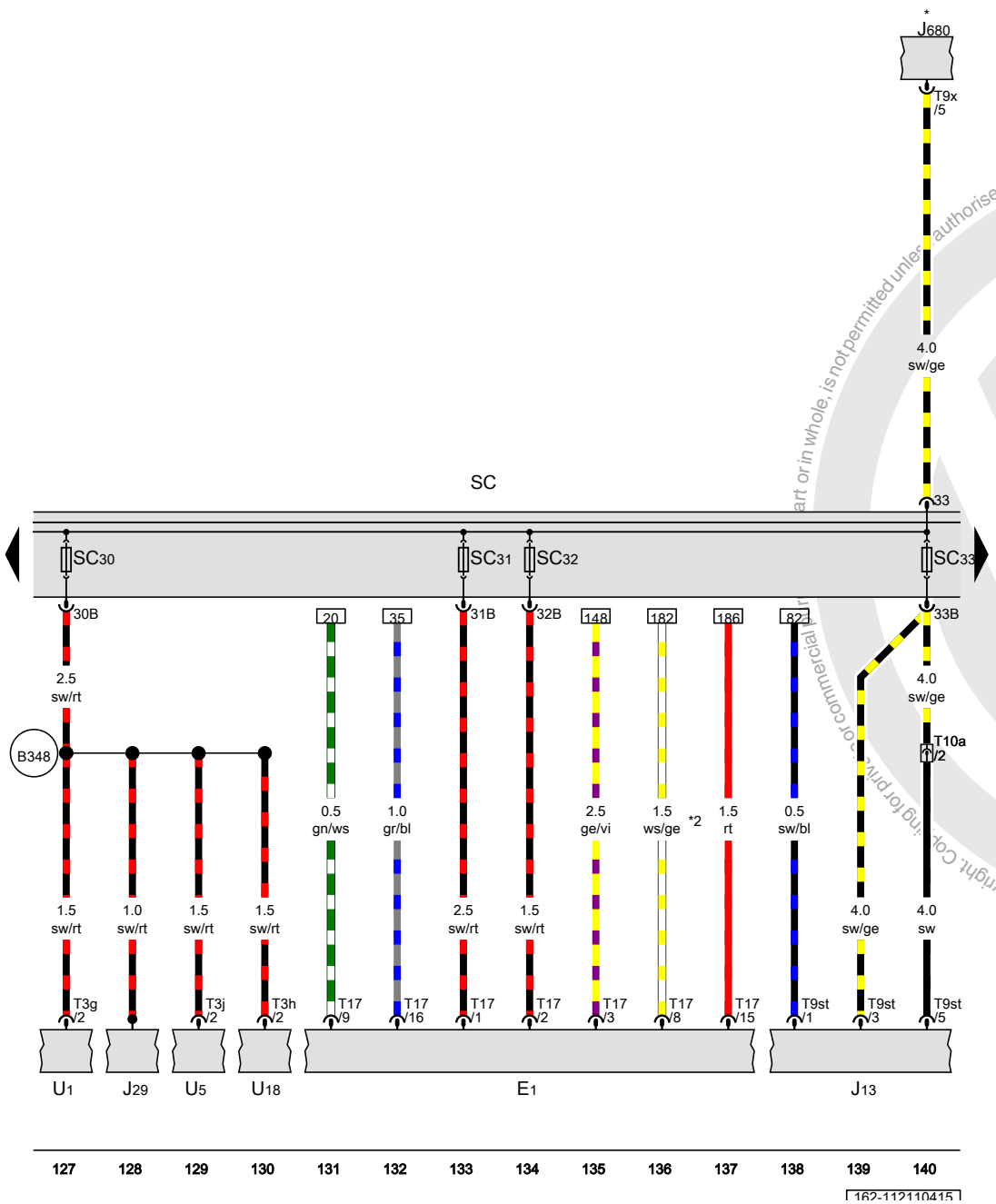

Fuse panel C

E1	Light switch
J13	Fresh air blower relay
J29	Blocking diode
J680	Terminal 75 power supply relay 1
SC	Fuse panel C
SC30	Fuse 30 (on fuse panel C)
SC31	Fuse 31 (on fuse panel C)
SC32	Fuse 32 (on fuse panel C)
SC33	Fuse 33 (on fuse panel C)
T3g	3-pin connector
T3h	3-pin connector
T3j	3-pin connector
T9st	9-pin connector
T9x	9-pin connector
T10a	10-pin connector
T17	17-pin connector
U1	Cigarette lighter
U5	12 V socket
U18	12 V socket 2
B348	Connection 75a (in main wiring harness) 1
*	Refer to applicable standard equipment wiring diagram
*2	Depending on equipment

ws	=	white
sw	=	black
ro	=	red
rt	=	red
br	=	brown
gn	=	green
bl	=	blue
gr	=	grey
li	=	lilac
vi	=	lilac
ge	=	yellow
or	=	orange
rs	=	pink

Protected by copyright. Copying for private or commercial purposes, in part or in whole, is not permitted unless authorised by Volkswagen AG. Volkswagen AG does not guarantee or accept any liability with respect to the correctness of information in this document. Copyright by Volkswagen AG.

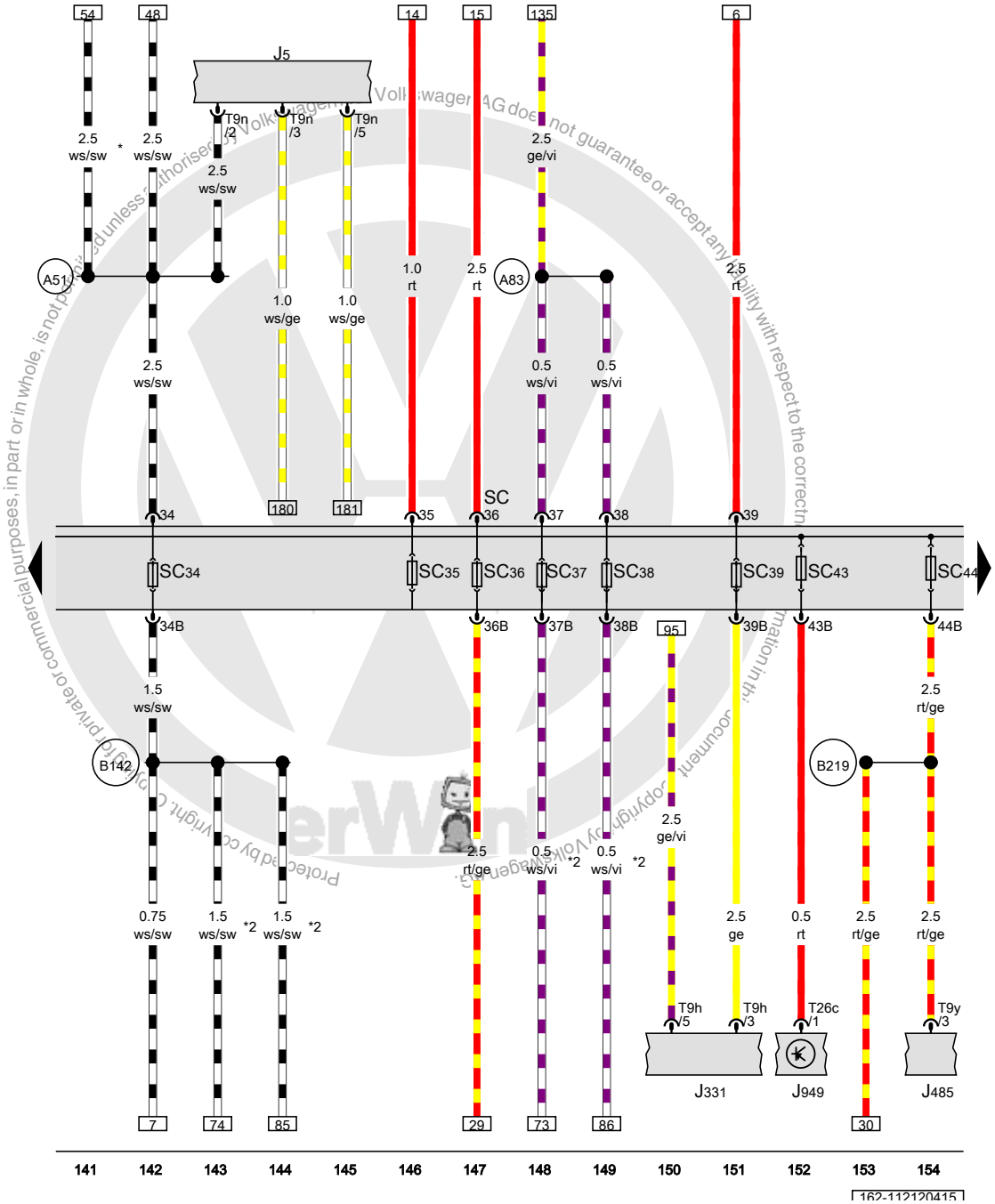

Fuse panel C

J5	Fog lamp relay
J331	Low beam relay
J485	Auxiliary heater operation relay
J949	Control module for emergency call module and communication unit
SC	Fuse panel C
SC34	Fuse 34 (on fuse panel C)
SC35	Fuse 35 (on fuse panel C)
SC36	Fuse 36 (on fuse panel C)
SC37	Fuse 37 (on fuse panel C)
SC38	Fuse 38 (on fuse panel C)
SC39	Fuse 39 (on fuse panel C)
SC43	Fuse 43 (on fuse panel C)
SC44	Fuse 44 (on fuse panel C)
T9h	9-pin connector
T9n	9-pin connector
T9y	9-pin connector
T26c	26-pin connector
A51	Connection 56 (in instrument panel wiring harness)
A83	Daytime running lamps connection (in instrument panel wiring harness)
B142	Positive connection 2 (56a) (in interior wiring harness)
B219	Positive connection 4 (30a) (in interior wiring harness)
*	Only for vehicles with China equipment
*2	Depending on equipment

ws	=	white
sw	=	black
ro	=	red
rt	=	red
br	=	brown
gn	=	green
bl	=	blue
gr	=	grey
li	=	lilac
vi	=	lilac
ge	=	yellow
or	=	orange
rs	=	pink

Volkswagen AG does not guarantee or accept any liability with respect to the correctness of information in this document. Copyright by Volkswagen AG. Protected by copyright. Copying for private or commercial purposes, in part or in whole, is not permitted unless authorised by Volkswagen AG.

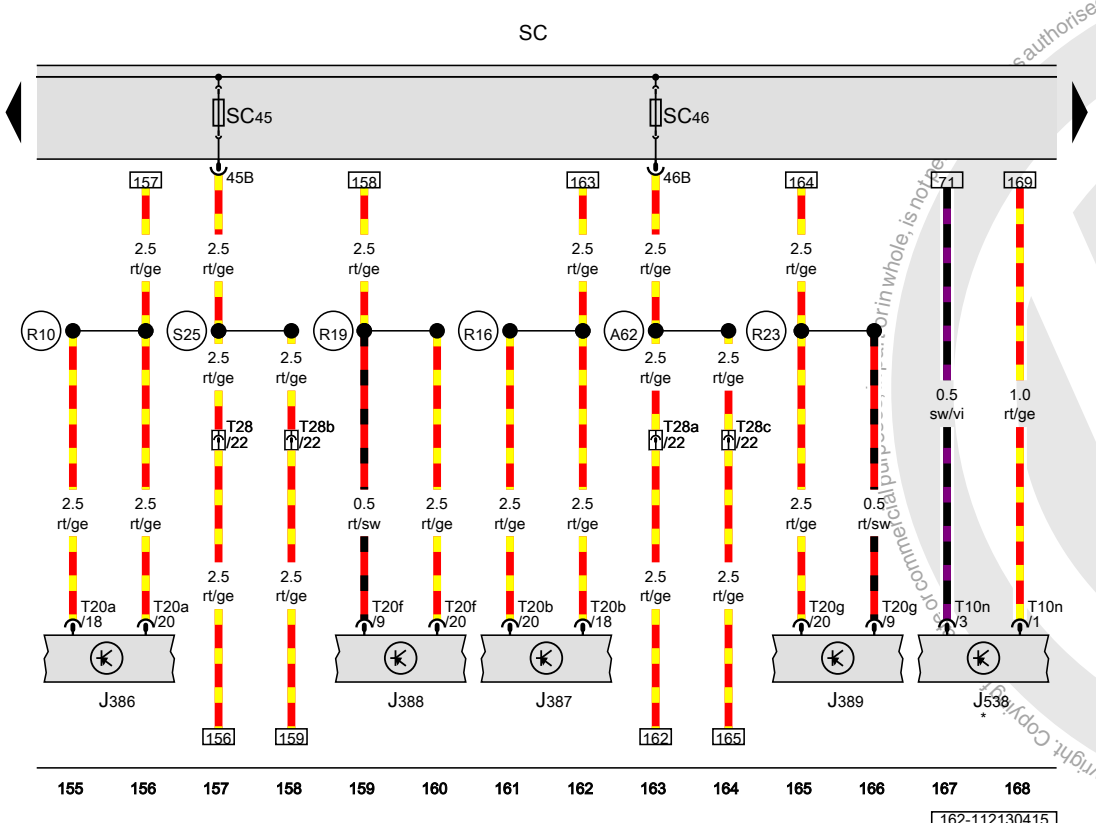

Fuse panel C

J386	Driver door control module
J387	Front passenger door control module
J388	Left rear door control module
J389	Right rear door control module
J538	Fuel pump control module
SC	Fuse panel C
SC45	Fuse 45 (on fuse panel C)
SC46	Fuse 46 (on fuse panel C)
T10n	10-pin connector
T20a	20-pin connector
T20b	20-pin connector
T20f	20-pin connector
T20g	20-pin connector
T28	28-pin connector
T28a	28-pin connector
T28b	28-pin connector
T28c	28-pin connector
A62	Power window connection (in instrument panel wiring harness)
R10	Positive connection 1 (30) (in driver door wiring harness)
R16	Positive connection 1 (30) (in front passenger door wiring harness)
R19	Positive connection 1 (30) (in left rear door wiring harness)
R23	Positive connection 1 (30) (in right rear door wiring harness)
S25	Positive connection (30a) (in central locking system wiring harness)
*	Refer to applicable engine wiring diagram

ws	=	white
sw	=	black
ro	=	red
rt	=	red
br	=	brown
gn	=	green
bl	=	blue
gr	=	grey
li	=	lilac
vi	=	lilac
ge	=	yellow
or	=	orange
rs	=	pink

Protected by copyright. Copyright by Volkswagen AG.
Reproduction or commercial use is not authorised by Volkswagen AG. Volkswagen AG does not guarantee or accept any liability with respect to the correctness of information in this document. Copyright by Volkswagen AG.

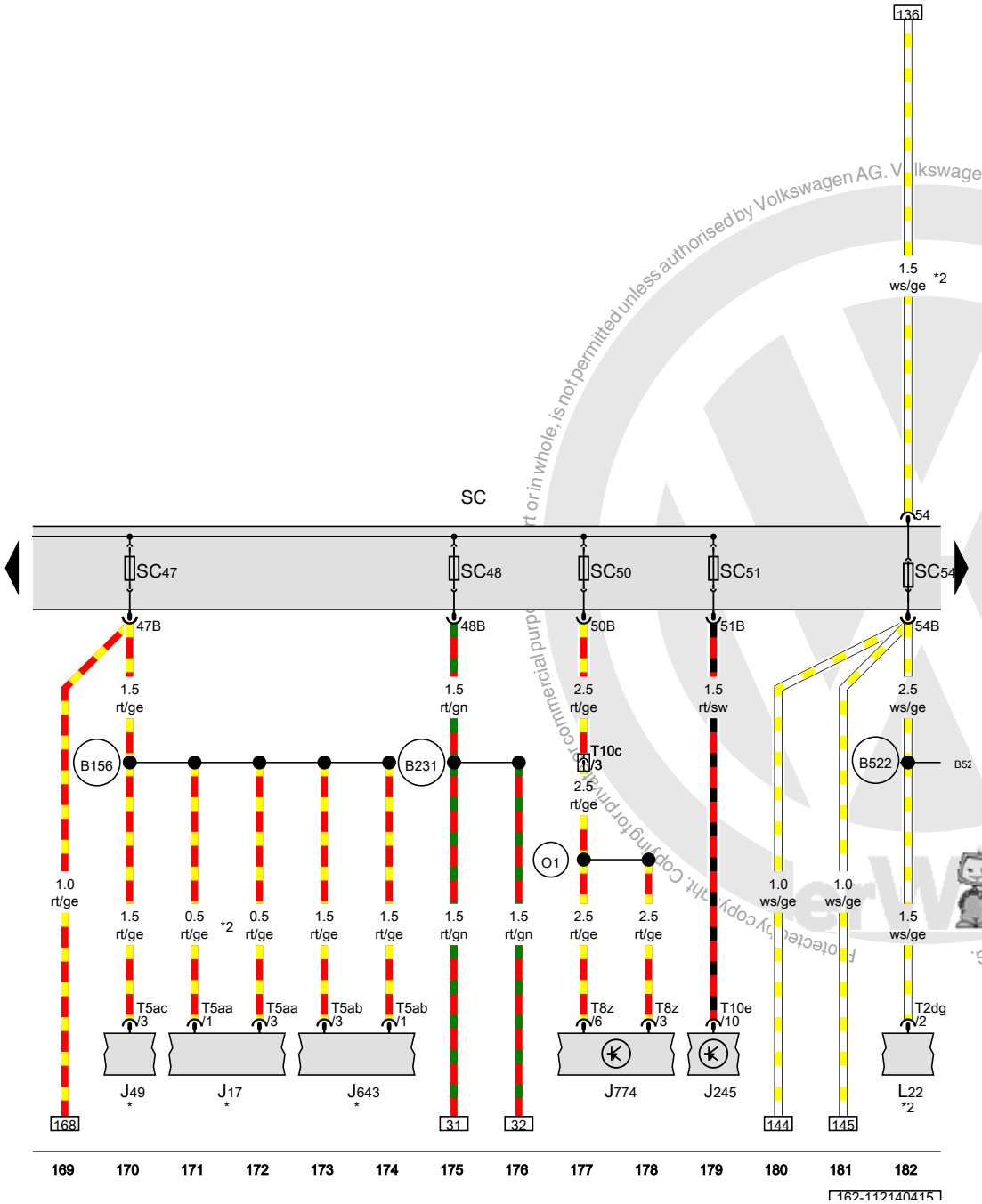

Fuse panel C

J17	Fuel pump relay
J49	Fuel pump relay 2
J245	Power sunroof control module
J643	Fuel primer relay
J774	Front seat heating control module
L22	Left front fog lamp bulb
SC	Fuse panel C
SC47	Fuse 47 (on fuse panel C)
SC48	Fuse 48 (on fuse panel C)
SC50	Fuse 50 (on fuse panel C)
SC51	Fuse 51 (on fuse panel C)
SC54	Fuse 54 (on fuse panel C)
T2dg	Double connector
T5aa	5-pin connector
T5ab	5-pin connector
T5ac	5-pin connector
T8z	8-pin connector
T10c	10-pin connector
T10e	10-pin connector
B156	Positive connection (30a) (in interior wiring harness)
B231	Positive connection 5 (30a) (in interior wiring harness)
B522	Fog lamp connection (in main wiring harness)
O1	Positive connection (30) (in heated seats wiring harness)
*	Refer to applicable engine wiring diagram
*2	Depending on equipment

ws	=	white
sw	=	black
ro	=	red
rt	=	red
br	=	brown
gn	=	green
bl	=	blue
gr	=	grey
li	=	lilac
vi	=	lilac
ge	=	yellow
or	=	orange
rs	=	pink

Protected by copyright. Copying for private or commercial purposes, in part or in whole, is not permitted unless authorised by Volkswagen AG. Volkswagen AG does not guarantee or accept any liability with respect to the correctness of information in this document. Copyright by Volkswagen AG.

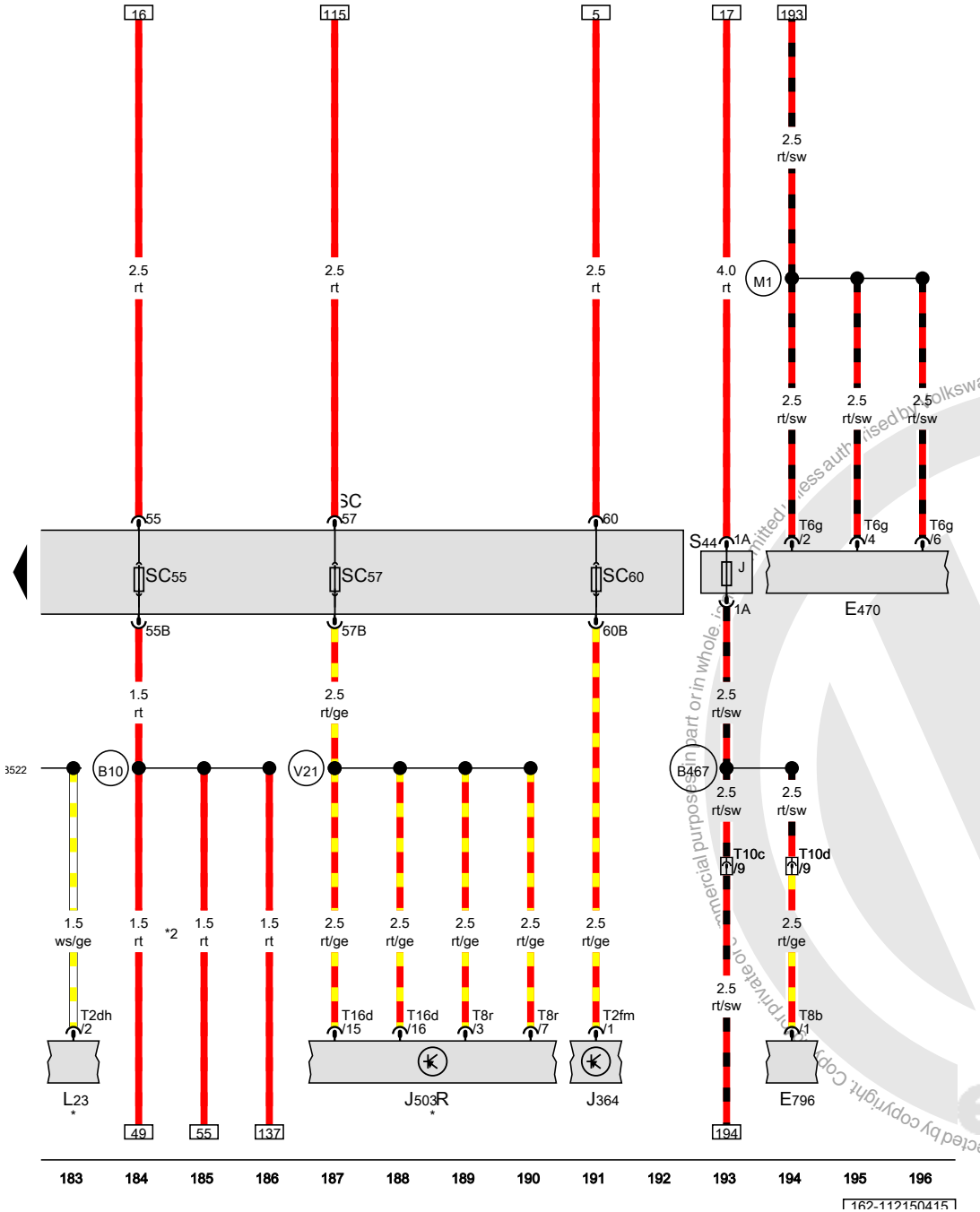

Fuse panel C

E470	Driver seat adjustment control head
E796	Backrest adjustment button 2
J364	Auxiliary heater control module
J503	Radio/navigation display unit control module
L23	Right front fog lamp bulb
R	Radio
S44	Driver power seat adjustment circuit breaker 1
SC	Fuse panel C
SC55	Fuse 55 (on fuse panel C)
SC57	Fuse 57 (on fuse panel C)
SC60	Fuse 60 (on fuse panel C)
T2dh	Double connector
T2fm	Double connector
T6g	6-pin connector
T8b	8-pin connector
T8r	8-pin connector
T10c	10-pin connector
T10d	10-pin connector
T16d	16-pin connector
B10	Positive connection (30) (in light switch wiring harness)
B467	Connection 3 (in main wiring harness)
B522	Fog lamp connection (in main wiring harness)
M1	Positive connection 1 (30) (in seat adjustment wiring harness)
V21	Positive connection (30) (in wiring radio/amplifier wiring harness)
*	Depending on equipment
*2	Only for vehicles with China equipment

ws	=	white
sw	=	black
ro	=	red
rt	=	red
br	=	brown
gn	=	green
bl	=	blue
gr	=	grey
li	=	lilac
vi	=	lilac
ge	=	yellow
or	=	orange
rs	=	pink

Protected by copyright. Copyright by Volkswagen AG. Volkswagen AG does not guarantee or accept any liability with respect to the correctness of information in this document. Copyright by Volkswagen AG. Volkswagen AG. Volkswagen AG.

Fuse assignment, passenger compartment , (AW1)

from May 2013

Protected by copyright. Copying for private or commercial purposes, in part or in whole, is not permitted unless authorised by Volkswagen AG. Volkswagen AG does not guarantee or accept any liability with respect to the correctness of information in this document. Copyright by Volkswagen AG.

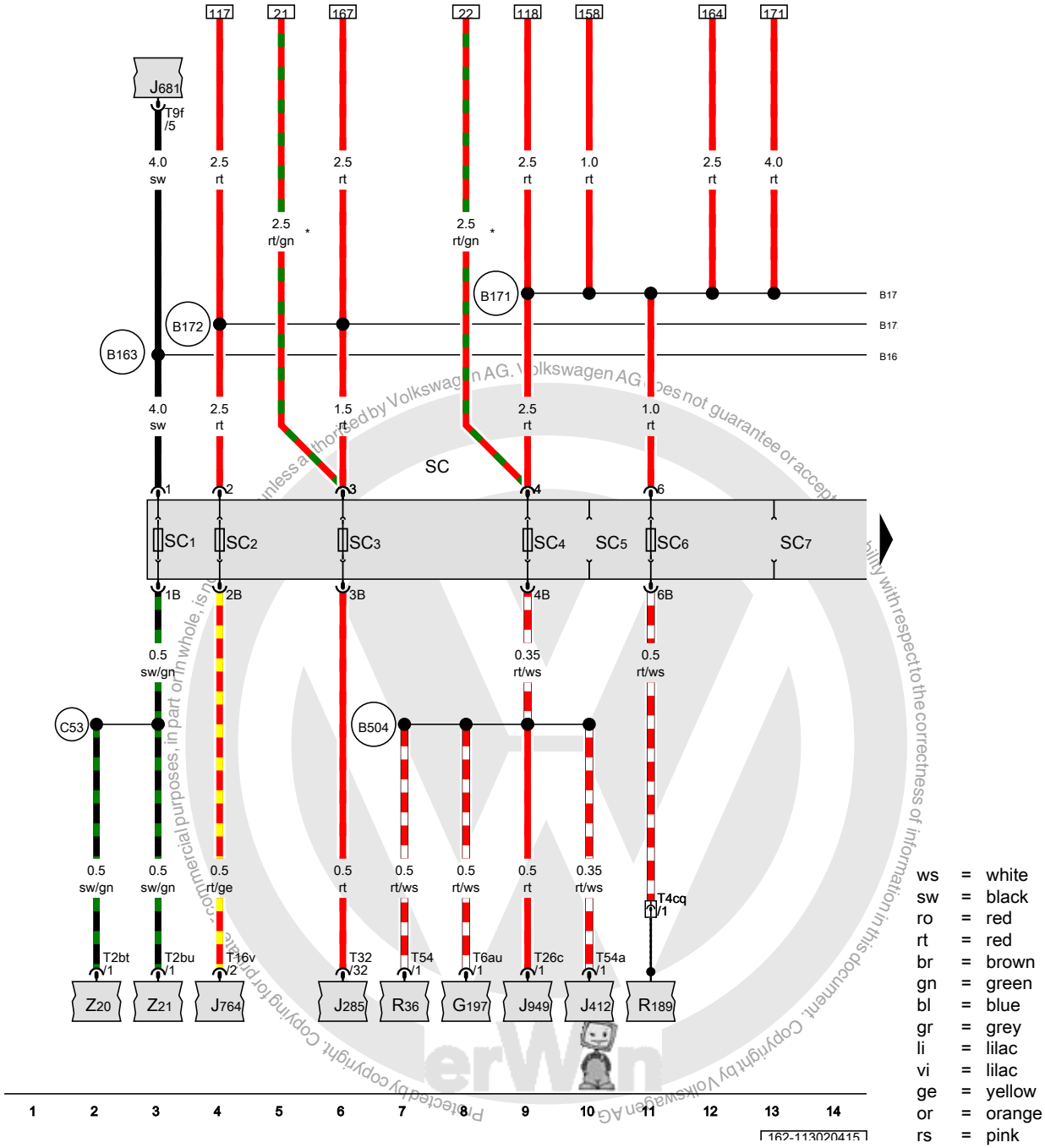

ws	=	white
sw	=	black
ro	=	red
rt	=	red
br	=	brown
gn	=	green
bl	=	blue
gr	=	grey
li	=	lilac
vi	=	lilac
ge	=	yellow
or	=	orange
rs	=	pink

Fuse panel C

G197	Compass magnetic field sensor
J285	Instrument cluster control module
J412	Cell phone operating electronics control module
J681	Terminal 15 power supply relay 2
J764	Electronic steering column lock control module
J949	Control module for emergency call module and communication unit
R36	Telephone transceiver
R189	Rearview camera
SC	Fuse panel C
SC1	Fuse 1 (on fuse panel C)
SC2	Fuse 2 (on fuse panel C)
SC3	Fuse 3 (on fuse panel C)
SC4	Fuse 4 (on fuse panel C)
SC5	Fuse 5 (on fuse panel C)
SC6	Fuse 6 (on fuse panel C)
SC7	Fuse 7 (on fuse panel C)
T2bt	Double connector
T2bu	Double connector
T4cq	4-pin connector
T6au	6-pin connector
T9f	9-pin connector
T16v	16-pin connector
T26c	26-pin connector
T32	32-pin connector
T54	54-pin connector
T54a	54-pin connector
Z20	Left washer nozzle heater
Z21	Right washer nozzle heater
B163	Positive connection 1 (15) (in interior wiring harness)
B171	Positive connection 3 (30) (in interior wiring harness)
B172	Positive connection 4 (30) (in interior wiring harness)
B504	Positive connection 8 (30a) (in interior wiring harness)
C53	Positive connection (x) (in heated spray nozzle wiring harness)
*	Only for vehicles with Start/Stop system

Protected by copyright. Copying for private or commercial purposes, in part or in whole, is not permitted unless authorised by Volkswagen AG. Volkswagen AG does not guarantee or accept any liability with respect to the correctness of information in this document. Copyright by Volkswagen AG.

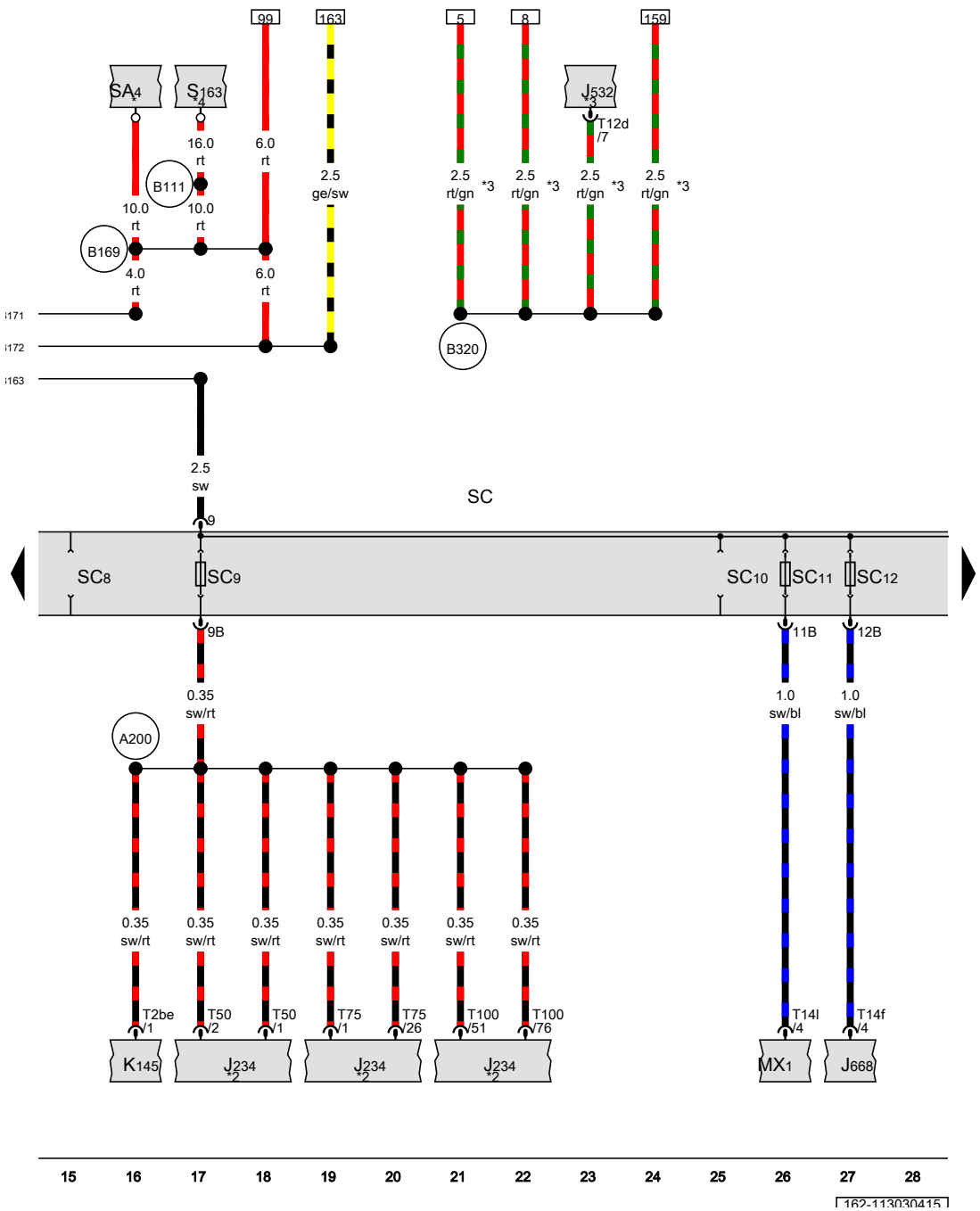

Fuse panel C

J234	Airbag control module
J532	Voltage stabilizer
J668	Right headlamp power output module
K145	Front passenger airbag -disabled- indicator lamp
MX1	Left front headlamp
SA4	Fuse 4 (on fuse panel A)
SC	Fuse panel C
SC8	Fuse 8 (on fuse panel C)
SC9	Fuse 9 (on fuse panel C)
SC10	Fuse 10 (on fuse panel C)
SC11	Fuse 11 (on fuse panel C)
SC12	Fuse 12 (on fuse panel C)
S163	Fuse 2 (terminal 30) on battery fuse panel
T2be	Double connector
T12d	12-pin connector
T14f	14-pin connector
T14l	14-pin connector
T50	50-pin connector
T75	75-pin connector
T100	100-pin connector
A200	Positive connection 5 (15a) (in instrument panel wiring harness)
B111	Positive connection 1 (30a) (in interior wiring harness)
B163	Positive connection 1 (15) (in interior wiring harness)
B169	Positive connection 1 (30) (in interior wiring harness)
B171	Positive connection 3 (30) (in interior wiring harness)
B172	Positive connection 4 (30) (in interior wiring harness)
B320	Positive connection 6 (30a) (in main wiring harness)
*	Only for vehicles without hybrid drive
*2	Refer to applicable airbag wiring diagram
*3	Only for vehicles with Start/Stop system
*4	only for vehicles with hybrid drive

ws	=	white
sw	=	black
ro	=	red
rt	=	red
br	=	brown
gn	=	green
bl	=	blue
gr	=	grey
li	=	lilac
vi	=	lilac
ge	=	yellow
or	=	orange
rs	=	pink

Protected by copyright. Copying for private or commercial purposes, in part or in whole, is not permitted unless authorised by Volkswagen AG. Volkswagen AG does not guarantee or accept any liability with respect to the correctness of information in this document. Copyright by Volkswagen AG.

Fuse panel C

E256	ASR/ESP button
E262	Start/Stop mode switch
E492	Tire pressure monitoring display button
F4	Back-up lamp switch
G65	High pressure sensor
G238	Air quality sensor
J162	Heater control module
J255	Climatronic control module
J446	Parking aid control module
J745	Cornering lamp and headlamp range control module
K259	Start/Stop mode indicator lamp
SC	Fuse panel C
SC13	Fuse 13 (on fuse panel C)
T2fi	Double connector
T3aw	3-pin connector
T3c	3-pin connector
T6ad	6-pin connector
T6ak	6-pin connector
T6be	6-pin connector
T6d	6-pin connector
T8a	8-pin connector
T16c	16-pin connector
T20c	20-pin connector
T26b	26-pin connector
Y7	Automatic dimming interior rearview mirror
A217	Positive connection 8 (15a) (in instrument panel wiring harness)
*	Depending on equipment

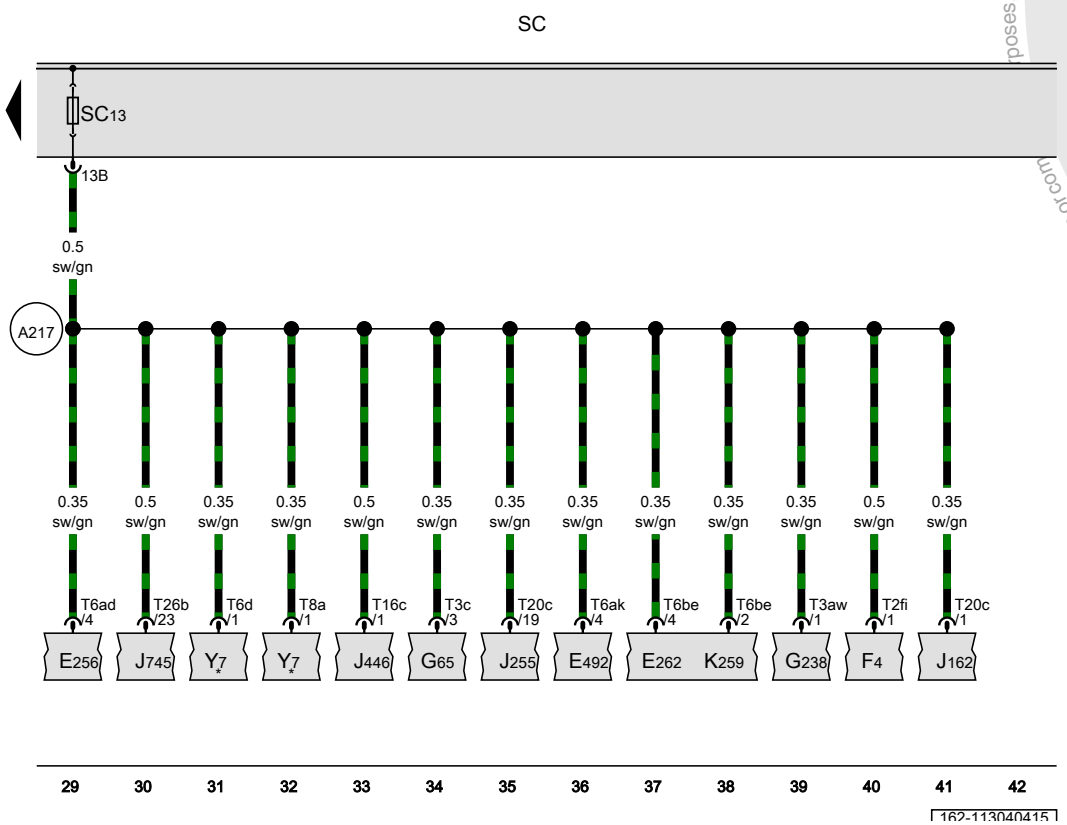

ws	=	white
sw	=	black
ro	=	red
rt	=	red
br	=	brown
gn	=	green
bl	=	blue
gr	=	grey
li	=	lilac
vi	=	lilac
ge	=	yellow
or	=	orange
rs	=	pink

Protected by copyright. Copying for private or commercial purposes, in part or in whole, is not permitted unless authorised by Volkswagen AG. Volkswagen AG does not guarantee or accept any liability with respect to the correctness of information in this document. Copyright by Volkswagen AG.

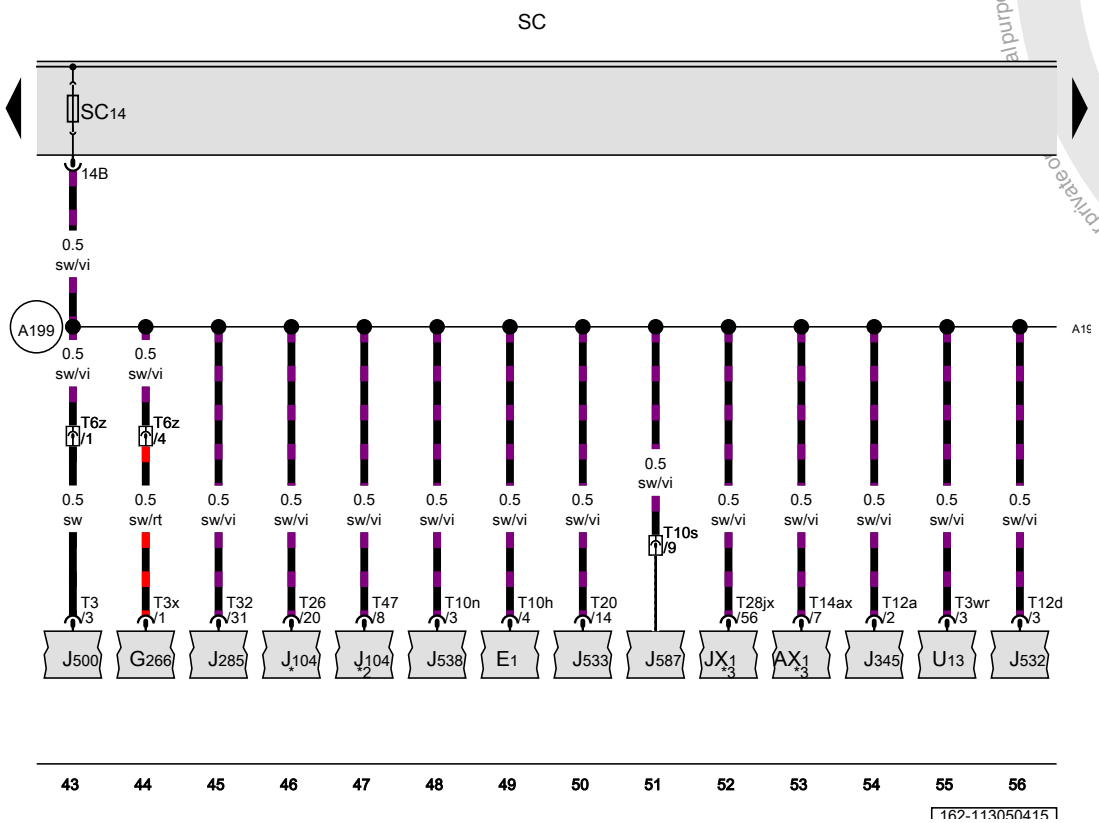

Fuse panel C

AX1	Hybrid battery unit
E1	Light switch
G266	Oil level thermal sensor
JX1	Electric drive power and control electronics
J104	ABS control module
J285	Instrument cluster control module
J345	Towing recognition control module
J500	Power steering control module
J532	Voltage stabilizer
J533	Data bus on board diagnostic interface
J538	Fuel pump control module
J587	Selector lever sensor system control module
SC	Fuse panel C
SC14	Fuse 14 (on fuse panel C)
T3	3-pin connector
T3wr	3-pin connector
T3x	3-pin connector
T6z	6-pin connector
T10h	10-pin connector
T10n	10-pin connector
T10s	10-pin connector
T12a	12-pin connector
T12d	12-pin connector
T14ax	14-pin connector
T20	20-pin connector
T26	26-pin connector
T28jx	28-pin connector
T32	32-pin connector
T47	47-pin connector
U13	Converter with socket, 12 V-230 V
A199	Positive connection 4 (15a) (in instrument panel wiring harness)
*	Only for vehicles with ABS and without ESP
*2	Only for vehicles with ABS and ESP
*3	only for vehicles with hybrid drive

ws	=	white
sw	=	black
ro	=	red
rt	=	red
br	=	brown
gn	=	green
bl	=	blue
gr	=	grey
li	=	lilac
vi	=	lilac
ge	=	yellow
or	=	orange
rs	=	pink

Protected by copyright. Copying for private or commercial purposes, in part or in whole, is not permitted unless authorised by Volkswagen AG. Volkswagen AG does not guarantee or accept any liability with respect to the correctness of information in this document.

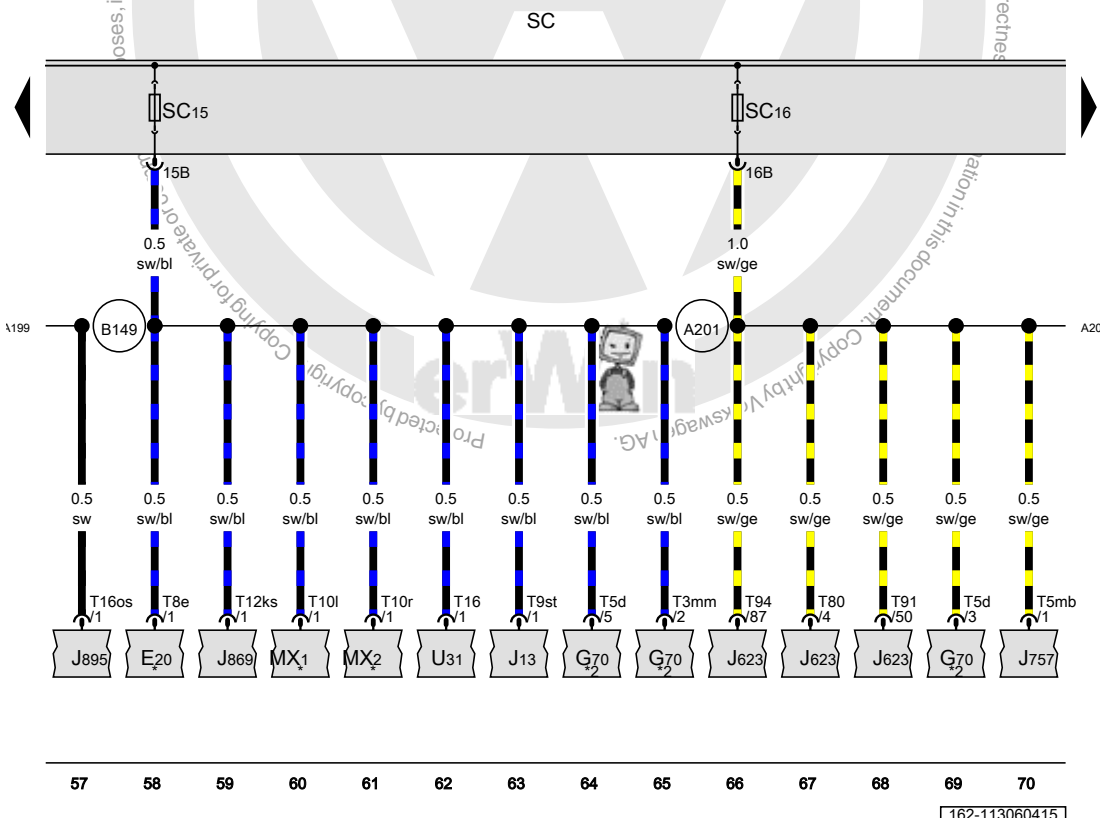

ws	=	white
sw	=	black
ro	=	red
rt	=	red
br	=	brown
gn	=	green
bl	=	blue
gr	=	grey
li	=	lilac
vi	=	lilac
ge	=	yellow
or	=	orange
rs	=	pink

Fuse panel C

E20	Instrument panel and switch illumination dimmer switch
G70	Mass airflow sensor
J13	Fresh air blower relay
J623	Engine control module
J757	Engine component power supply relay
J869	Structure borne sound control module
J895	Vehicle positioning system control module
MX1	Left front headlamp
MX2	Right front headlamp
SC	Fuse panel C
SC15	Fuse 15 (on fuse panel C)
SC16	Fuse 16 (on fuse panel C)
T3mm	3-pin connector
T5d	5-pin connector
T5mb	5-pin connector
T8e	8-pin connector
T9st	9-pin connector
T10l	10-pin connector
T10r	10-pin connector
T12ks	12-pin connector
T16	16-pin connector
T16os	16-pin connector
T80	80-pin connector
T91	91-pin connector
T94	94-pin connector
U31	Diagnostic connection
A199	Positive connection 4 (15a) (in instrument panel wiring harness)
A201	Positive connection 6 (15a) (in instrument panel wiring harness)
B149	Positive connection 2 (15a) (in interior wiring harness)
*	Depending on equipment
*2	Refer to applicable engine wiring diagram

Protected by copyright. Copying for private or commercial purposes, in part or in whole, is not permitted unless authorised by Volkswagen AG. Volkswagen AG does not guarantee or accept any liability with respect to the correctness of information in this document. Copyright by Volkswagen AG.

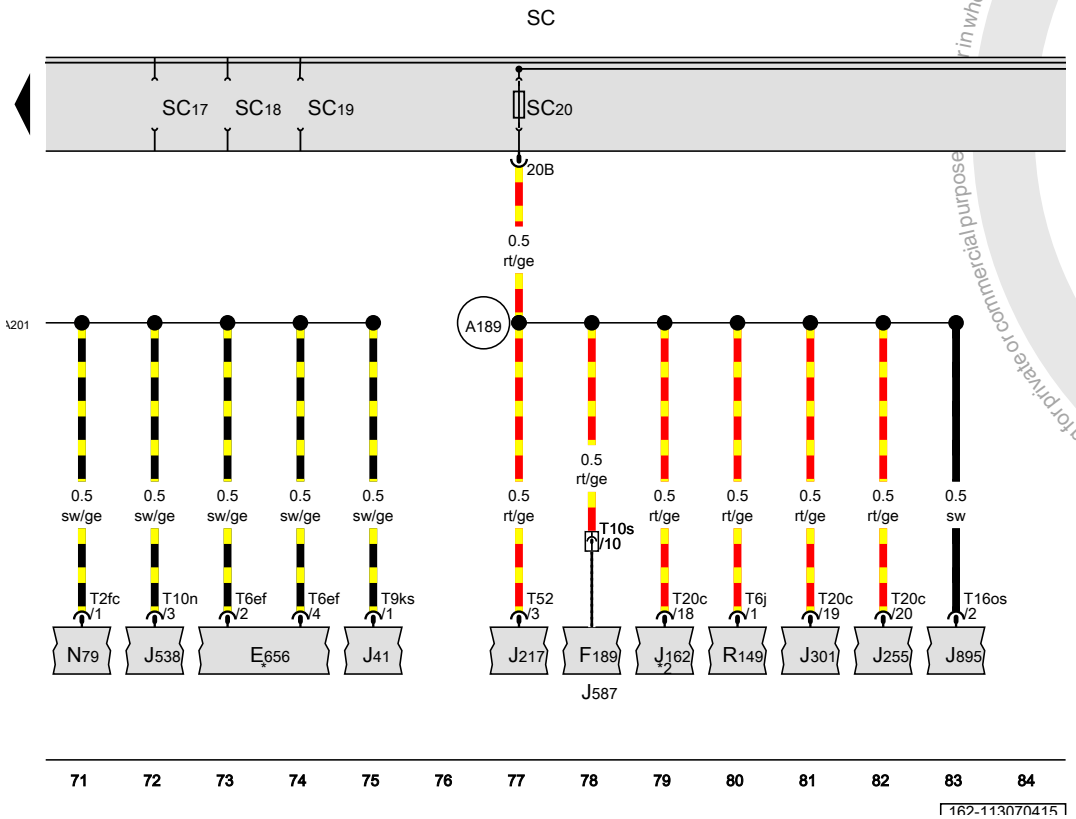

Fuse panel C

E656	Electrical drive button
F189	tiptronic switch
J41	Cold start injector relay
J162	Heater control module
J217	Transmission control module
J255	Climatronic control module
J301	A/C control module
J538	Fuel pump control module
J587	Selector lever sensor system control module
J895	Vehicle positioning system control module
N79	Positive crankcase ventilation heating element
R149	Auxiliary engine coolant heater radio frequency receiver
SC	Fuse panel C
SC17	Fuse 17 (on fuse panel C)
SC18	Fuse 18 (on fuse panel C)
SC19	Fuse 19 (on fuse panel C)
SC20	Fuse 20 (on fuse panel C)
T2fc	Double connector
T6ef	6-pin connector
T6j	6-pin connector
T9ks	9-pin connector
T10n	10-pin connector
T10s	10-pin connector
T16os	16-pin connector
T20c	20-pin connector
T52	52-pin connector
A189	Positive connection 5 (30a) (in instrument panel wiring harness)
A201	Positive connection 6 (15a) (in instrument panel wiring harness)
*	only for vehicles with hybrid drive
*2	Only for vehicles with auxiliary coolant heater

ws	=	white
sw	=	black
ro	=	red
rt	=	red
br	=	brown
gn	=	green
bl	=	blue
gr	=	grey
li	=	lilac
vi	=	lilac
ge	=	yellow
or	=	orange
rs	=	pink

Protected by copyright. Copying for private or commercial purpose in whole, is not permitted unless authorised by Volkswagen AG. Volkswagen AG does not guarantee or accept any liability with respect to the correctness of information in this document. Copyright by Volkswagen AG.

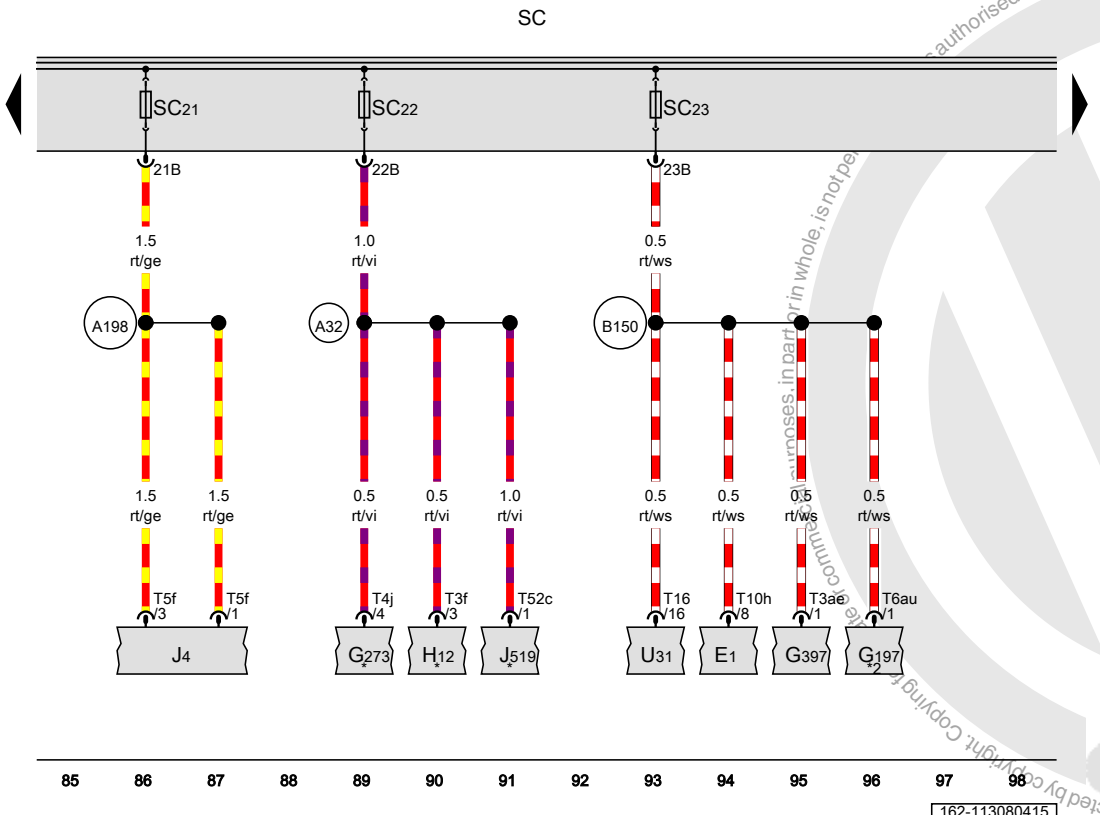

Fuse panel C

E1	Light switch
G197	Compass magnetic field sensor
G273	Interior monitoring sensor
G397	Rain/light recognition sensor
H12	Alarm horn
J4	Dual tone horn relay
J519	Vehicle electrical control module system
SC	Fuse panel C
SC21	Fuse 21 (on fuse panel C)
SC22	Fuse 22 (on fuse panel C)
SC23	Fuse 23 (on fuse panel C)
T3ae	3-pin connector
T3f	3-pin connector
T4j	4-pin connector
T5f	5-pin connector
T6au	6-pin connector
T10h	10-pin connector
T16	16-pin connector
T52c	52-pin connector
U31	Diagnostic connection
A32	Positive connection (30) (in instrument panel wiring harness)
A198	Positive connection 6 (30a) (in instrument panel wiring harness)
B150	Positive connection 2 (30a) (in interior wiring harness)
*	Not for USA
*2	Only for vehicles without Start/Stop system

ws	=	white
sw	=	black
ro	=	red
rt	=	red
br	=	brown
gn	=	green
bl	=	blue
gr	=	grey
li	=	lilac
vi	=	lilac
ge	=	yellow
or	=	orange
rs	=	pink

authorised by Volkswagen AG. Volkswagen AG does not guarantee or accept any liability with respect to the correctness of information in this document. Copyright by Volkswagen AG. Protected by copyright. Copying for private or commercial purposes, in part or in whole, is not permitted.

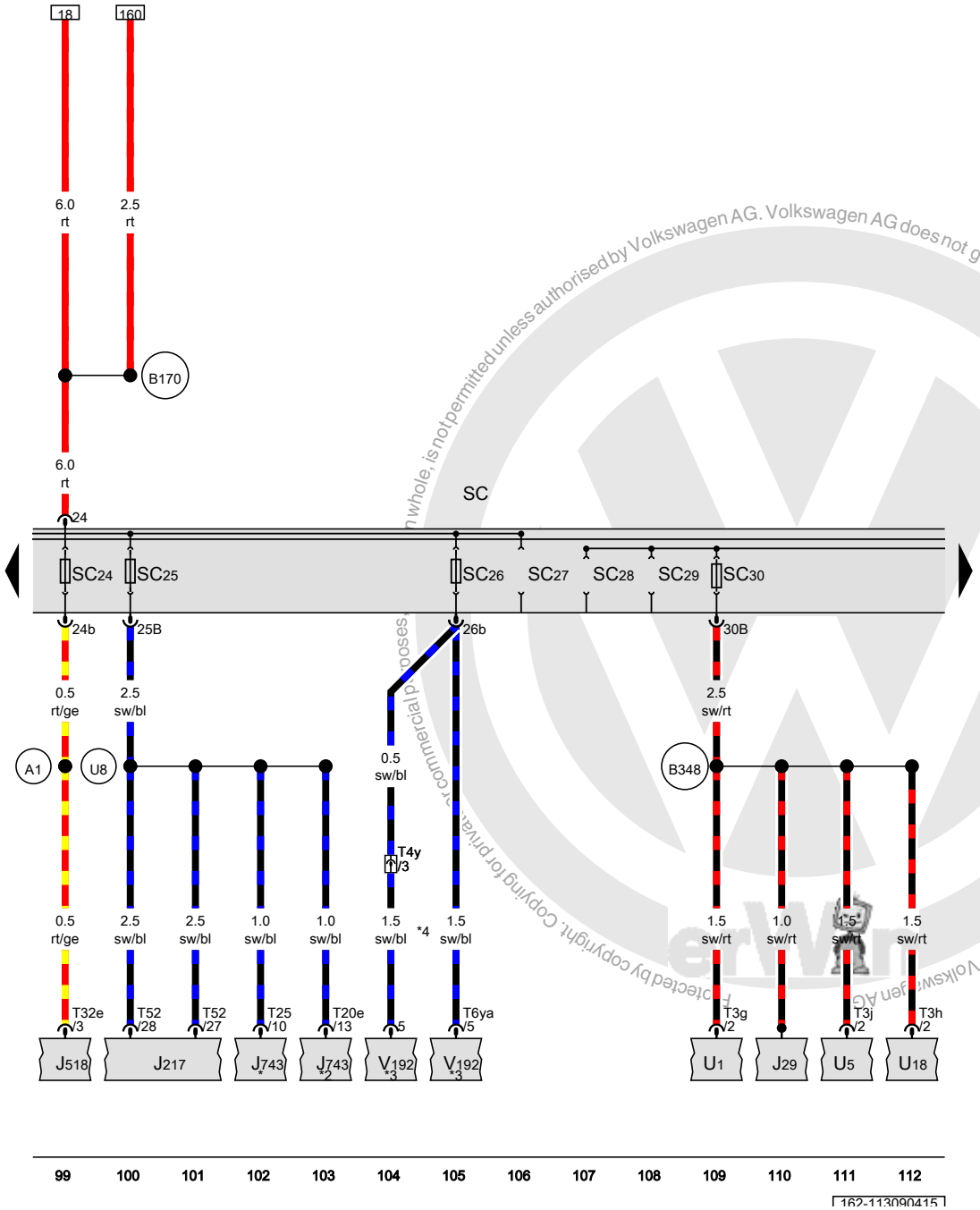

ws	=	white
sw	=	black
ro	=	red
rt	=	red
br	=	brown
gn	=	green
bl	=	blue
gr	=	grey
li	=	lilac
vi	=	lilac
ge	=	yellow
or	=	orange
rs	=	pink

Fuse panel C

J29	Blocking diode
J217	Transmission control module
J518	Access/start authorization control module
J743	DSG transmission Mechatronic
SC	Fuse panel C
SC24	Fuse 24 (on fuse panel C)
SC25	Fuse 25 (on fuse panel C)
SC26	Fuse 26 (on fuse panel C)
SC27	Fuse 27 (on fuse panel C)
SC28	Fuse 28 (on fuse panel C)
SC29	Fuse 29 (on fuse panel C)
SC30	Fuse 30 (on fuse panel C)
T3g	3-pin connector
T3h	3-pin connector
T3j	3-pin connector
T4y	4-pin connector
T6ya	6-pin connector
T20e	20-pin connector
T25	25-pin connector
T32e	32-pin connector
T52	52-pin connector
U1	Cigarette lighter
U5	12 V socket
U18	12 V socket 2
V192	Brake system vacuum pump
A1	Positive connection (30a) (in instrument panel wiring harness)
B170	Positive connection 2 (30) (in interior wiring harness)
B348	Connection 75a (in main wiring harness) 1
U8	Positive connection (15a) (in automatic transmission wiring harness)
*	Only for vehicles with DSG transmission 0AM
*2	Only for vehicles with DSG transmission 02E
*3	Depending on equipment
*4	Only for vehicles with automatic transmission

Protected by copyright. Copying for private or commercial purposes, in whole, is not permitted unless authorised by Volkswagen AG. Volkswagen AG does not guarantee or accept any liability with respect to the correctness of information in this document. Copyright by Volkswagen AG

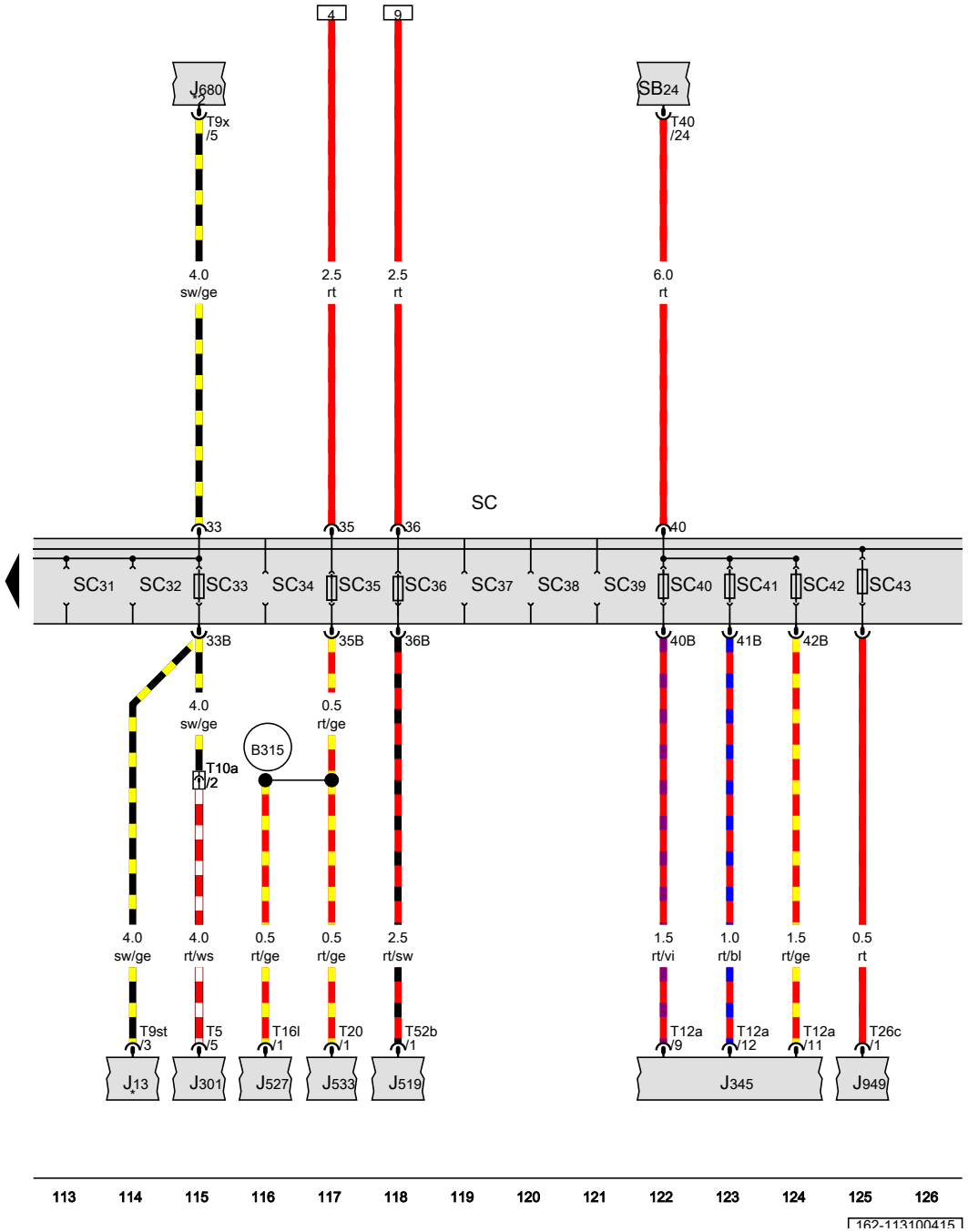

Fuse panel C

J13	Fresh air blower relay
J301	A/C control module
J345	Towing recognition control module
J519	Vehicle electrical control module system
J527	Steering column electronics control module
J533	Data bus on board diagnostic interface
J680	Terminal 75 power supply relay 1
J949	Control module for emergency call module and communication unit
SB24	Fuse 24 (on fuse panel B)
SC	Fuse panel C
SC31	Fuse 31 (on fuse panel C)
SC32	Fuse 32 (on fuse panel C)
SC33	Fuse 33 (on fuse panel C)
SC34	Fuse 34 (on fuse panel C)
SC35	Fuse 35 (on fuse panel C)
SC36	Fuse 36 (on fuse panel C)
SC37	Fuse 37 (on fuse panel C)
SC38	Fuse 38 (on fuse panel C)
SC39	Fuse 39 (on fuse panel C)
SC40	Fuse 40 (on fuse panel C)
SC41	Fuse 41 (on fuse panel C)
SC42	Fuse 42 (on fuse panel C)
SC43	Fuse 43 (on fuse panel C)
T5	5-pin connector
T9st	9-pin connector
T9x	9-pin connector
T10a	10-pin connector
T12a	12-pin connector
T16l	16-pin connector
T20	20-pin connector
T26c	26-pin connector
T40	40-pin connector
T52b	52-pin connector
(B315)	Positive connection 1 (30a) (in main wiring harness)
*	Only for vehicles with an auxiliary heater
*2	Refer to applicable standard equipment wiring diagram

ws	=	white
sw	=	black
ro	=	red
rt	=	red
br	=	brown
gn	=	green
bl	=	blue
gr	=	grey
li	=	lilac
vi	=	lilac
ge	=	yellow
or	=	orange
rs	=	pink

Protected by copyright. Copying for private or commercial purposes, in part or in whole, is not permitted unless authorised by Volkswagen AG. Volkswagen AG does not guarantee or accept any liability with respect to the correctness of information in this document. Copyright by Volkswagen AG.

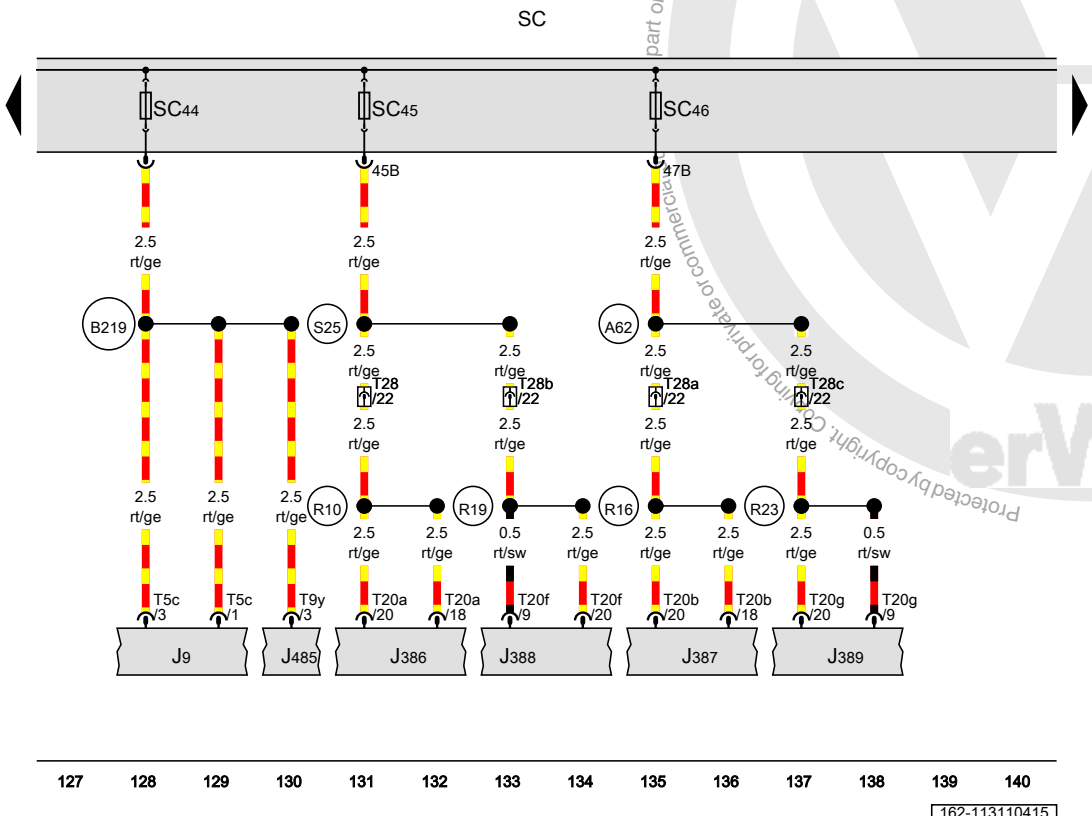

ws	=	white
sw	=	black
ro	=	red
rt	=	red
br	=	brown
gn	=	green
bl	=	blue
gr	=	grey
li	=	lilac
vi	=	lilac
ge	=	yellow
or	=	orange
rs	=	pink

Fuse panel C

J9	Rear window defogger relay
J386	Driver door control module
J387	Front passenger door control module
J388	Left rear door control module
J389	Right rear door control module
J485	Auxiliary heater operation relay
SC	Fuse panel C
SC44	Fuse 44 (on fuse panel C)
SC45	Fuse 45 (on fuse panel C)
SC46	Fuse 46 (on fuse panel C)
T5c	5-pin connector
T9y	9-pin connector
T20a	20-pin connector
T20b	20-pin connector
T20f	20-pin connector
T20g	20-pin connector
T28	28-pin connector
T28a	28-pin connector
T28b	28-pin connector
T28c	28-pin connector
A62	Power window connection (in instrument panel wiring harness)
B219	Positive connection 4 (30a) (in interior wiring harness)
R10	Positive connection 1 (30) (in driver door wiring harness)
R16	Positive connection 1 (30) (in front passenger door wiring harness)
R19	Positive connection 1 (30) (in left rear door wiring harness)
R23	Positive connection 1 (30) (in right rear door wiring harness)
S25	Positive connection (30a) (in central locking system wiring harness)

Protected by copyright. Copying for private or commercial purposes, in part or in whole, is not permitted unless authorised by Volkswagen AG. Volkswagen AG does not guarantee or accept any liability with respect to the correctness of information in this document. Copyright by Volkswagen AG.

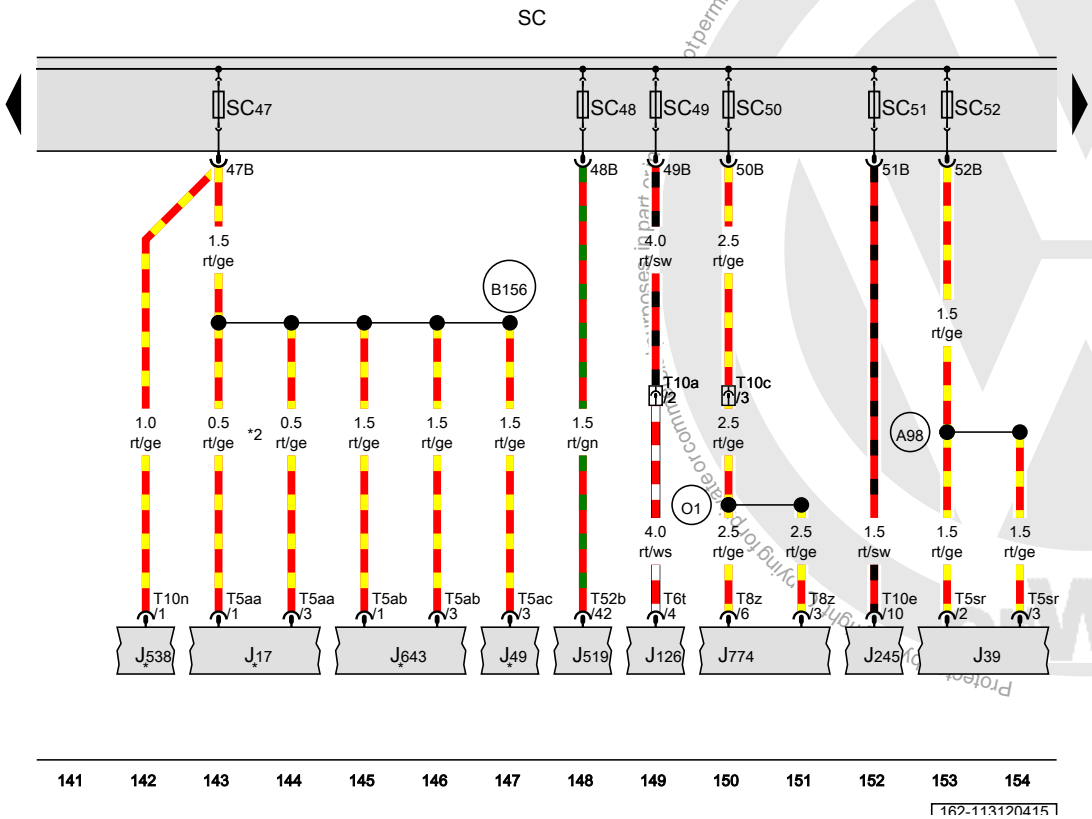

ws = white
sw = black
ro = red
rt = red
br = brown
gn = green
bl = blue
gr = grey
li = lilac
vi = lilac
ge = yellow
or = orange
rs = pink

Fuse panel C

J17	Fuel pump relay
J39	Headlamp washer relay
J49	Fuel pump relay 2
J126	Fresh air blower control module
J245	Power sunroof control module
J519	Vehicle electrical control module system
J538	Fuel pump control module
J643	Fuel primer relay
J774	Front seat heating control module
SC	Fuse panel C
SC47	Fuse 47 (on fuse panel C)
SC48	Fuse 48 (on fuse panel C)
SC49	Fuse 49 (on fuse panel C)
SC50	Fuse 50 (on fuse panel C)
SC51	Fuse 51 (on fuse panel C)
SC52	Fuse 52 (on fuse panel C)
T5aa	5-pin connector
T5ab	5-pin connector
T5ac	5-pin connector
T5sr	5-pin connector
T6t	6-pin connector
T8z	8-pin connector
T10a	10-pin connector
T10c	10-pin connector
T10e	10-pin connector
T10n	10-pin connector
T52b	52-pin connector
A98	Positive connection 4 (30) (in instrument panel wiring harness)
B156	Positive connection (30a) (in interior wiring harness)
O1	Positive connection (30) (in heated seats wiring harness)
*	Refer to applicable engine wiring diagram
*2	Depending on equipment

Protected by copyright. Copying for private or commercial purposes, in part or in whole, is not permitted unless authorised by Volkswagen AG. Volkswagen AG does not guarantee or accept any liability with respect to the correctness of information in this document. Copyright by Volkswagen AG.

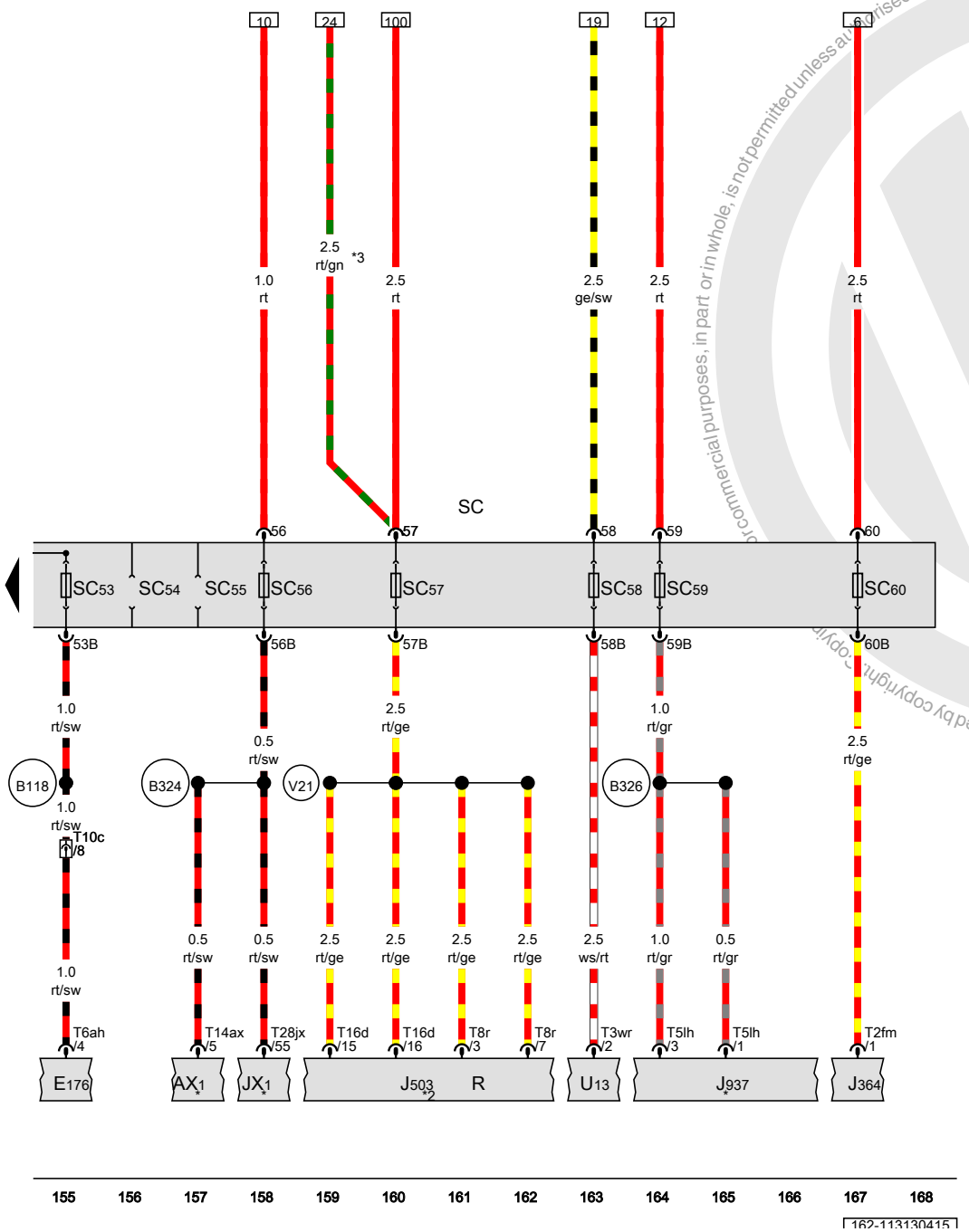

ws	=	white
sw	=	black
ro	=	red
rt	=	red
br	=	brown
gn	=	green
bl	=	blue
gr	=	grey
li	=	lilac
vi	=	lilac
ge	=	yellow
or	=	orange
rs	=	pink

Fuse panel C

AX1	Hybrid battery unit
E176	Driver seat lumbar support adjustment switch
JX1	Electric drive power and control electronics
J364	Auxiliary heater control module
J503	Radio/navigation display unit control module
J937	Fan activation relay
R	Radio
SC	Fuse panel C
SC53	Fuse 53 (on fuse panel C)
SC54	Fuse 54 (on fuse panel C)
SC55	Fuse 55 (on fuse panel C)
SC56	Fuse 56 (on fuse panel C)
SC57	Fuse 57 (on fuse panel C)
SC58	Fuse 58 (on fuse panel C)
SC59	Fuse 59 (on fuse panel C)
SC60	Fuse 60 (on fuse panel C)
T2fm	Double connector
T3wr	3-pin connector
T5lh	5-pin connector
T6ah	6-pin connector
T8r	8-pin connector
T10c	10-pin connector
T14ax	14-pin connector
T16d	16-pin connector
T28jx	28-pin connector
U13	Converter with socket, 12 V-230 V
B118	Driver seat adjustment connection (in interior wiring harness)
B324	Positive connection 10 (30a) (in main wiring harness)
B326	Positive connection 12 (30a) (in main wiring harness)
V21	Positive connection (30) (in wiring radio/amplifier wiring harness)
*	only for vehicles with hybrid drive
*2	Depending on equipment
*3	Only for vehicles with Start/Stop system

Protected by copyright. Copyright by Volkswagen AG. Volkswagen AG does not guarantee or accept any liability with respect to the correctness of information in this document. Copyright by Volkswagen AG.

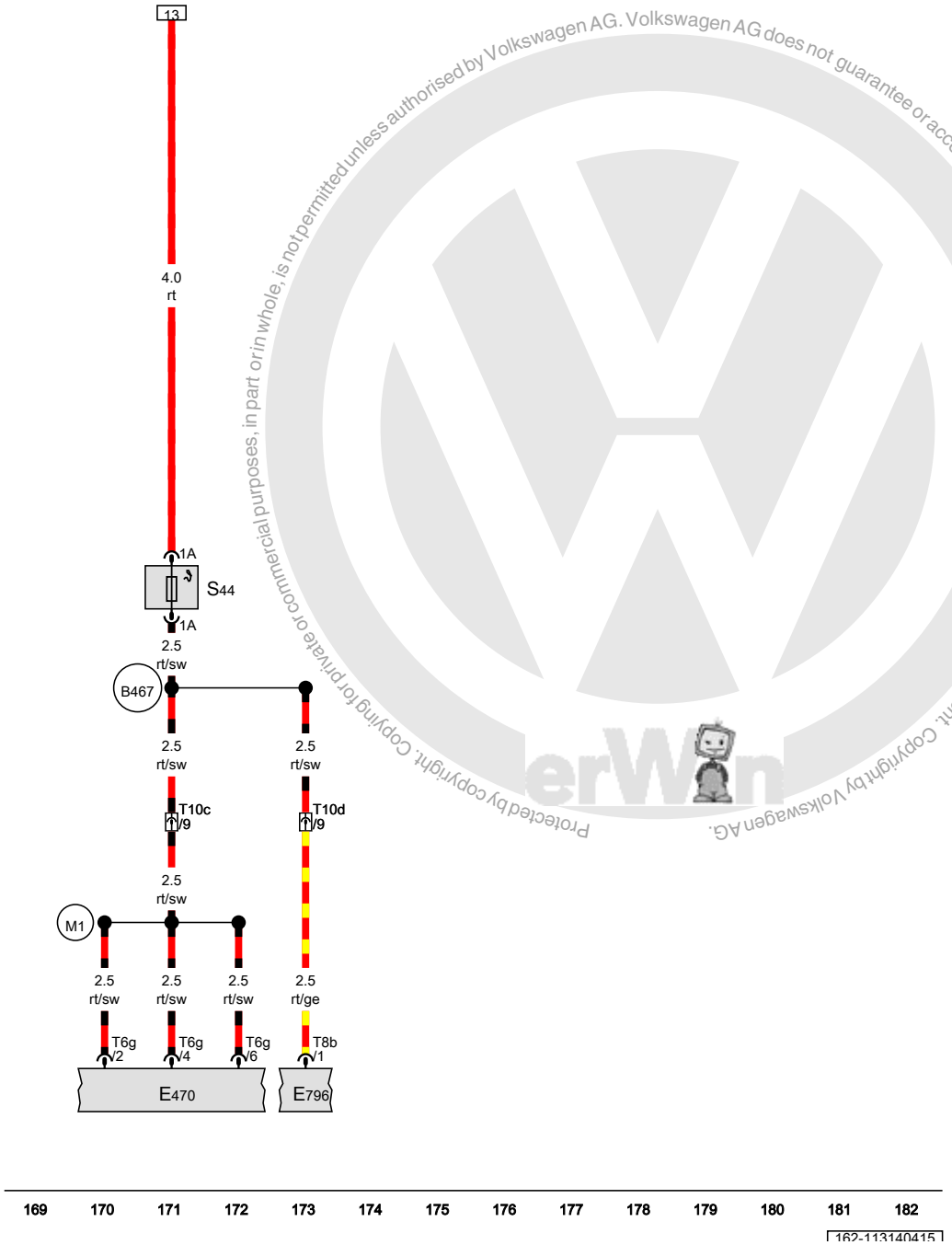

Driver power seat adjustment circuit breaker 1

E470	Driver seat adjustment control head
E796	Backrest adjustment button 2
S44	Driver power seat adjustment circuit breaker 1
T6g	6-pin connector
T8b	8-pin connector
T10c	10-pin connector
T10d	10-pin connector
B467	Connection 3 (in main wiring harness)
M1	Positive connection 1 (30) (in seat adjustment wiring harness)

ws	=	white
sw	=	black
ro	=	red
rt	=	red
br	=	brown
gn	=	green
bl	=	blue
gr	=	grey
li	=	lilac
vi	=	lilac
ge	=	yellow
or	=	orange
rs	=	pink

Protected by copyright. Copying for private or commercial purposes, in part or in whole, is not permitted unless authorised by Volkswagen AG. Volkswagen AG does not guarantee or accept any liability with respect to the correctness of information in this document. Copyright by Volkswagen AG.

Network data bus , (AW0)

from May 2013

Protected by copyright. Copying for private or commercial purposes, in part or in whole, is not permitted unless authorised by Volkswagen AG. Volkswagen AG does not guarantee or accept any liability with respect to the correctness of information in this document. Copyright by Volkswagen AG.

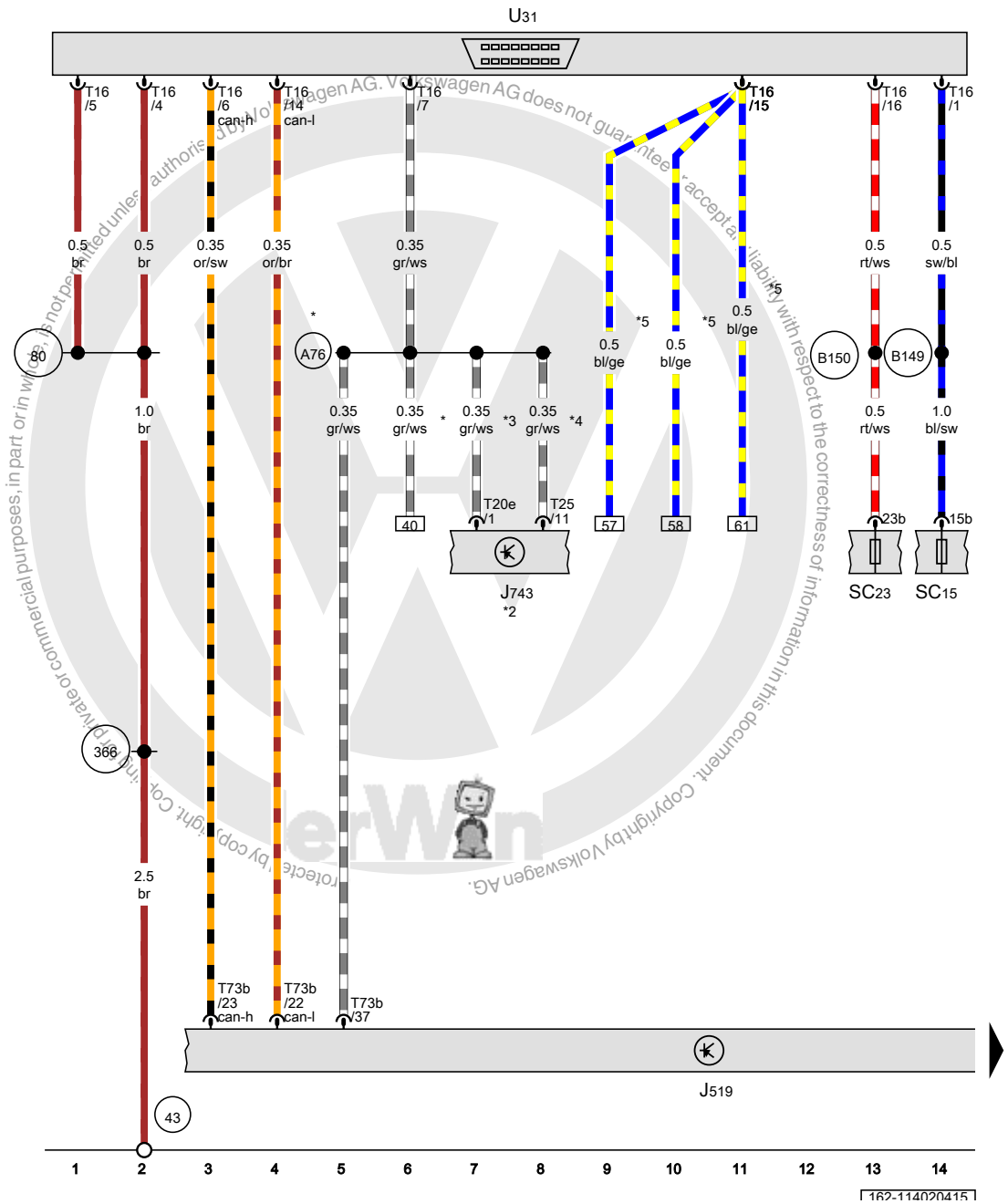

Diagnostic connection

J519	Vehicle electrical control module system
J743	DSG transmission Mechatronic
SC15	Fuse 15 (on fuse panel C)
SC23	Fuse 23 (on fuse panel C)
T16	16-pin connector
T20e	20-pin connector
T25	25-pin connector
T73b	73-pin connector
U31	Diagnostic connection
43	Ground connection on A-pillar, lower right
80	Ground connection 1 (in instrument cluster wiring harness)
366	Ground connection 1 (in main wiring harness)
A76	KS-diagnostic lead connection (in instrument panel wiring harness)
B149	Positive connection 2 (15a) (in interior wiring harness)
B150	Positive connection 2 (30a) (in interior wiring harness)
*	Refer to applicable wiring diagram for automatic transmission
*2	Refer to applicable wiring diagram for DSG transmission
*3	Only for vehicles with DSG transmission 02E
*4	Only for vehicles with DSG transmission 0AM
*5	Refer to applicable airbag wiring diagram

ws	=	white
sw	=	black
ro	=	red
rt	=	red
br	=	brown
gn	=	green
bl	=	blue
gr	=	grey
li	=	lilac
vi	=	lilac
ge	=	yellow
or	=	orange
rs	=	pink

Volkswagen AG. Volkswagen AG does not guarantee or accept any liability with respect to the correctness of information in this document. Copyright by Volkswagen AG. Protected by copyright. Copying for private or commercial purposes, in part or in whole, is not permitted unless authorised by Volkswagen AG.

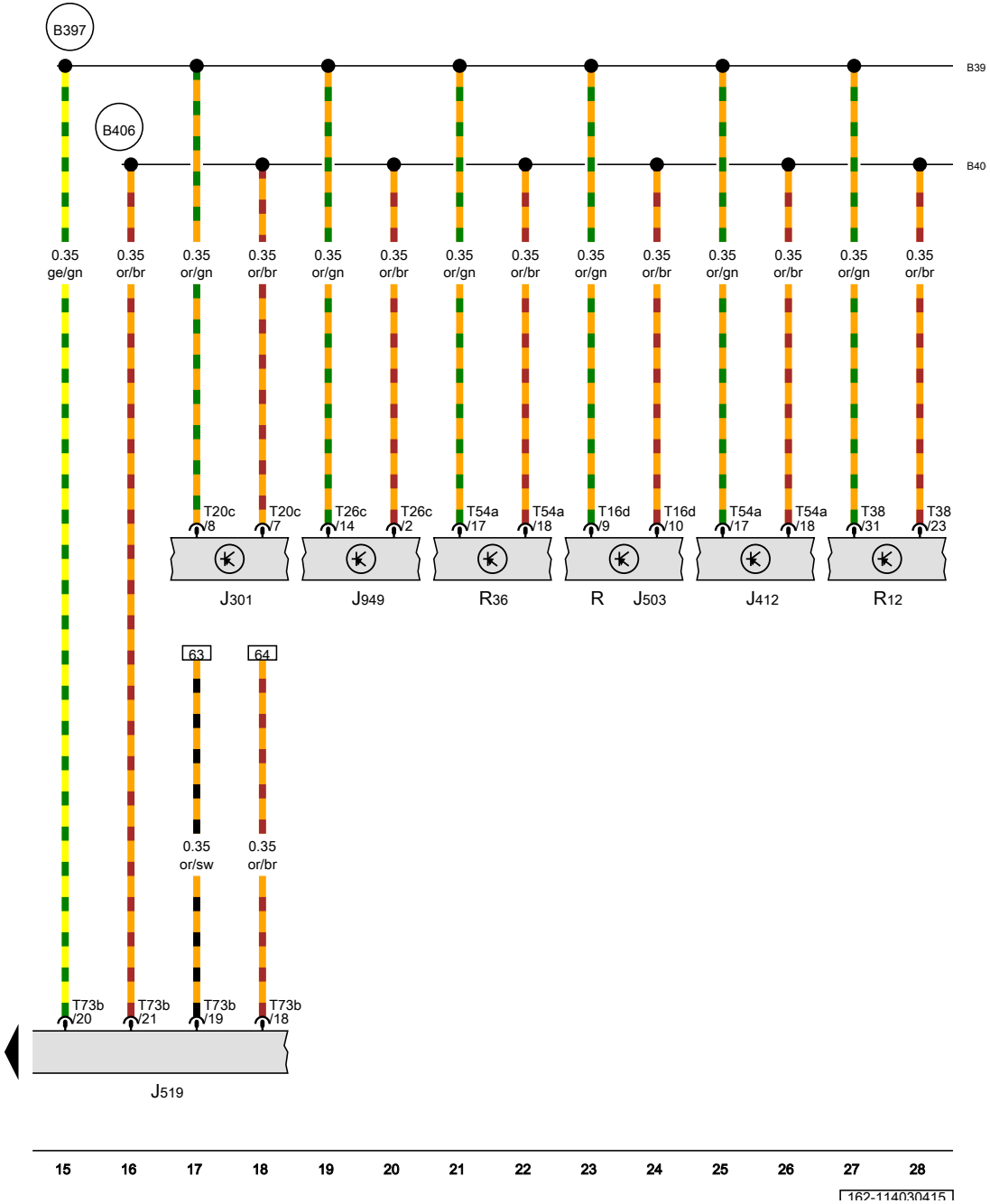

Comfort system CAN bus high connection 1 (in main wiring harness), Comfort system CAN bus low connection 1 (in main wiring harness)

J301	A/C control module
J412	Cell phone operating electronics control module
J503	Radio/navigation display unit control module
J519	Vehicle electrical control module system
J949	Control module for emergency call module and communication unit
R	Radio
R12	Amplifier
R36	Telephone transceiver
T16d	16-pin connector
T20c	20-pin connector
T26c	26-pin connector
T38	38-pin connector
T54a	54-pin connector
T73b	73-pin connector
B397	Comfort system CAN bus high connection 1 (in main wiring harness)
B406	Comfort system CAN bus low connection 1 (in main wiring harness)

ws	=	white
sw	=	black
ro	=	red
rt	=	red
br	=	brown
gn	=	green
bl	=	blue
gr	=	grey
li	=	lilac
vi	=	lilac
ge	=	yellow
or	=	orange
rs	=	pink

Protected by copyright. Copying for private or commercial purposes, in part or in whole, is not permitted unless authorised by Volkswagen AG. Volkswagen AG does not guarantee or accept any liability with respect to the correctness of information in this document. Copyright by Volkswagen AG.

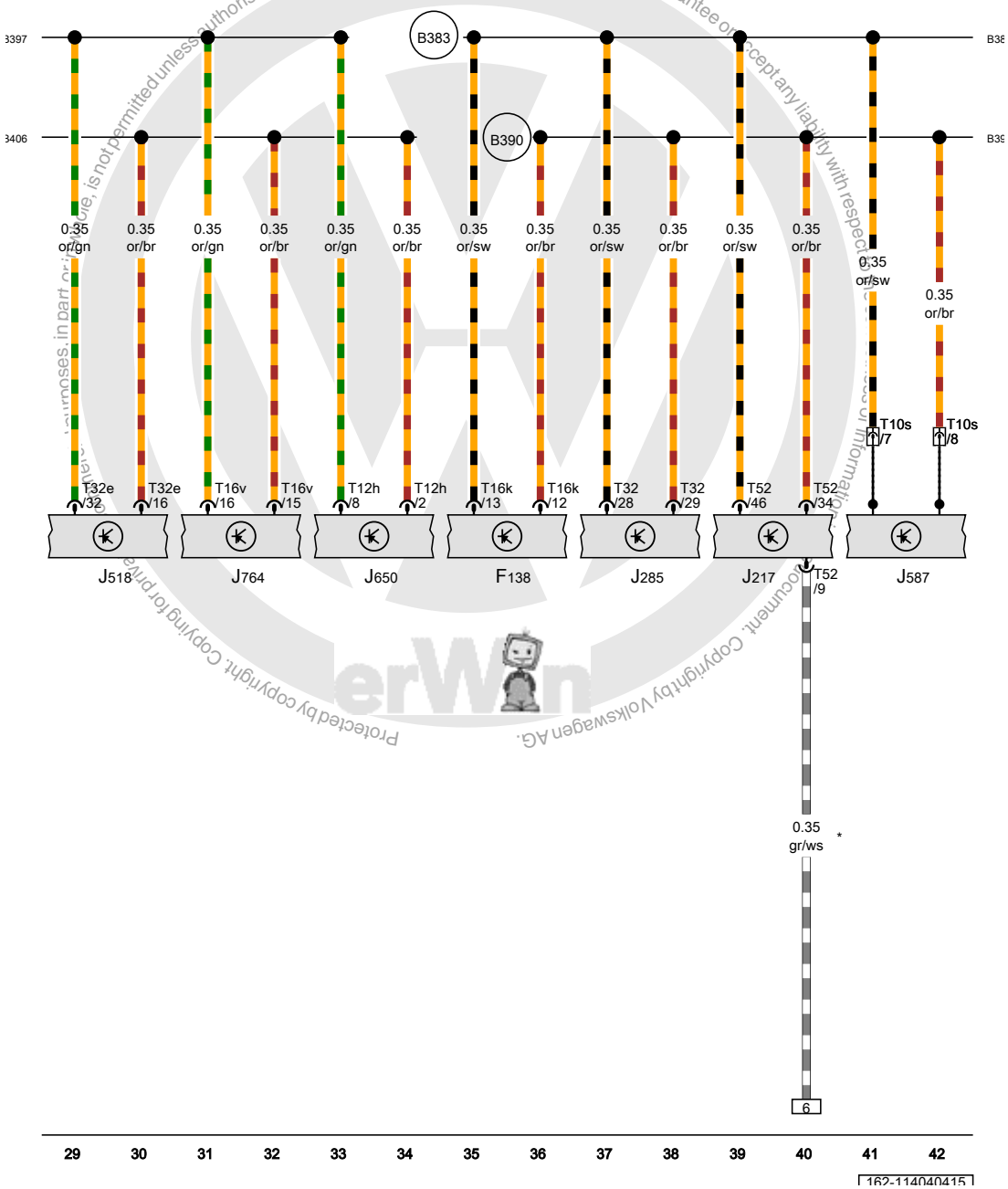

Protected by copyright. Copying for private and commercial purposes, in part or in whole, is not permitted unless authorised by Volkswagen AG. Volkswagen AG does not guarantee or accept any liability with respect to the correctness of information in this document. Copyright by Volkswagen AG.

Powertrain CAN bus high connection 1 (in main wiring harness), Powertrain CAN bus low connection 1 (in main wiring harness), Comfort system CAN bus high connection 1 (in main wiring harness), Comfort system CAN bus low connection 1 (in main wiring harness)

F138	Airbag spiral spring/return spring with slip ring
J217	Transmission control module
J285	Instrument cluster control module
J518	Access/start authorization control module
J587	Selector lever sensor system control module
J650	Multimedia system control module
J764	Electronic steering column lock control module
T10s	10-pin connector
T12h	12-pin connector
T16k	16-pin connector
T16v	16-pin connector
T32	32-pin connector
T32e	32-pin connector
T52	52-pin connector
B383	Powertrain CAN bus high connection 1 (in main wiring harness)
B390	Powertrain CAN bus low connection 1 (in main wiring harness)
B397	Comfort system CAN bus high connection 1 (in main wiring harness)
B406	Comfort system CAN bus low connection 1 (in main wiring harness)
*	Refer to applicable wiring diagram for automatic transmission

ws	=	white
sw	=	black
ro	=	red
rt	=	red
br	=	brown
gn	=	green
bl	=	blue
gr	=	grey
li	=	lilac
vi	=	lilac
ge	=	yellow
or	=	orange
rs	=	pink

Powertrain CAN bus high connection 1 (in main wiring harness), Powertrain CAN bus low connection 1 (in main wiring harness)

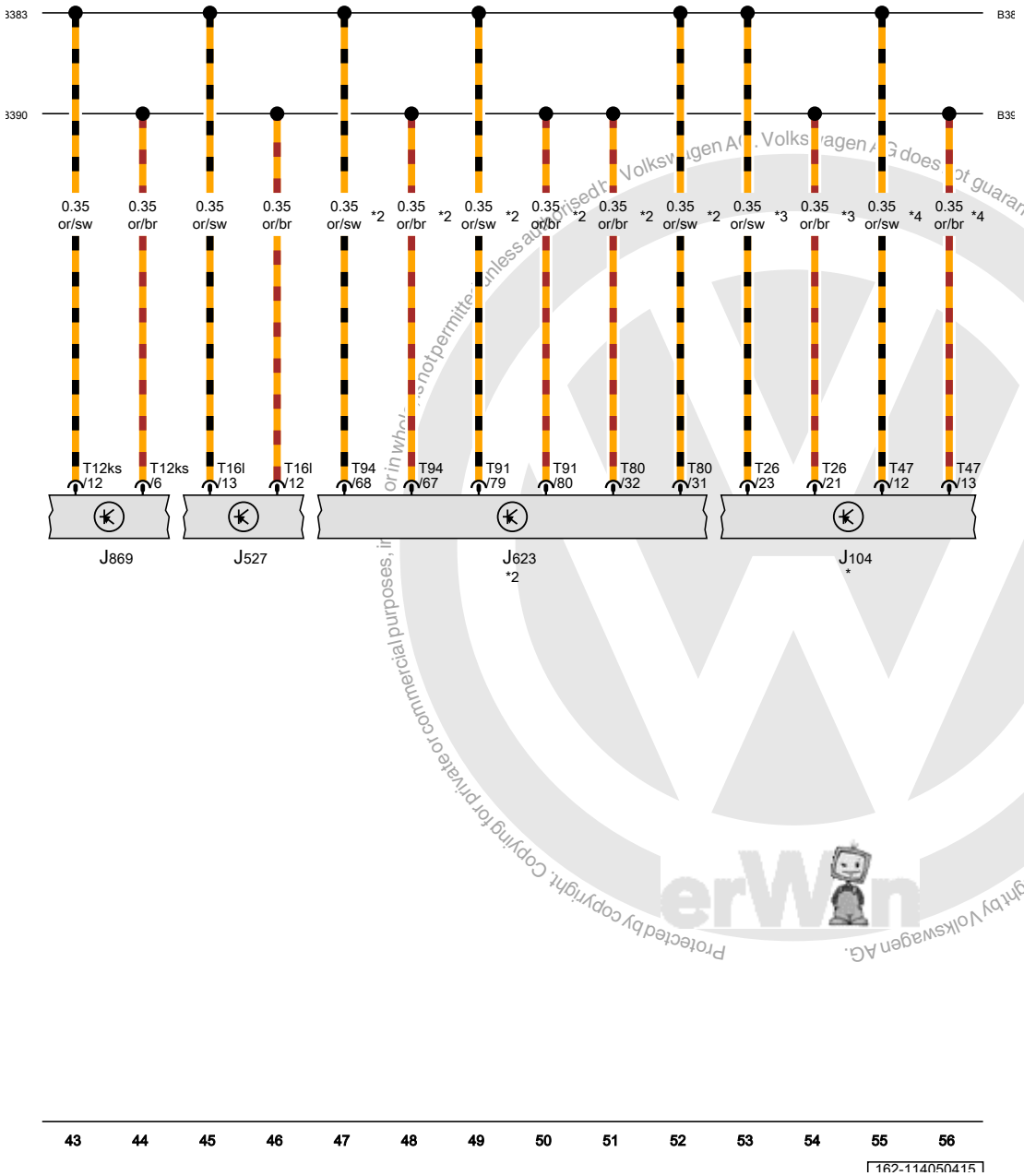

J104	ABS control module
J527	Steering column electronics control module
J623	Engine control module
J869	Structure borne sound control module
T12ks	12-pin connector
T16l	16-pin connector
T26	26-pin connector
T47	47-pin connector
T80	80-pin connector
T91	91-pin connector
T94	94-pin connector
B383	Powertrain CAN bus high connection 1 (in main wiring harness)
B390	Powertrain CAN bus low connection 1 (in main wiring harness)
*	Refer to applicable wiring diagram for ABS
*2	Refer to applicable engine wiring diagram
*3	Only for vehicles with ABS without ESP
*4	Only for vehicles with ABS and ESP

ws	=	white
sw	=	black
ro	=	red
rt	=	red
br	=	brown
gn	=	green
bl	=	blue
gr	=	grey
li	=	lilac
vi	=	lilac
ge	=	yellow
or	=	orange
rs	=	pink

Protected by copyright. Copying for private or commercial purposes, in whole or in part, is not permitted unless authorised by Volkswagen AG. Volkswagen AG does not guarantee or accept any liability with respect to the correctness of information in this document. Copyright by Volkswagen AG.

Powertrain CAN bus high connection 1 (in main wiring harness), Powertrain CAN bus low connection 1 (in main wiring harness)

J234	Airbag control module
T50	50-pin connector
T75	75-pin connector
T100	100-pin connector
B383	Powertrain CAN bus high connection 1 (in main wiring harness)
B390	Powertrain CAN bus low connection 1 (in main wiring harness)
*	Refer to applicable airbag wiring diagram

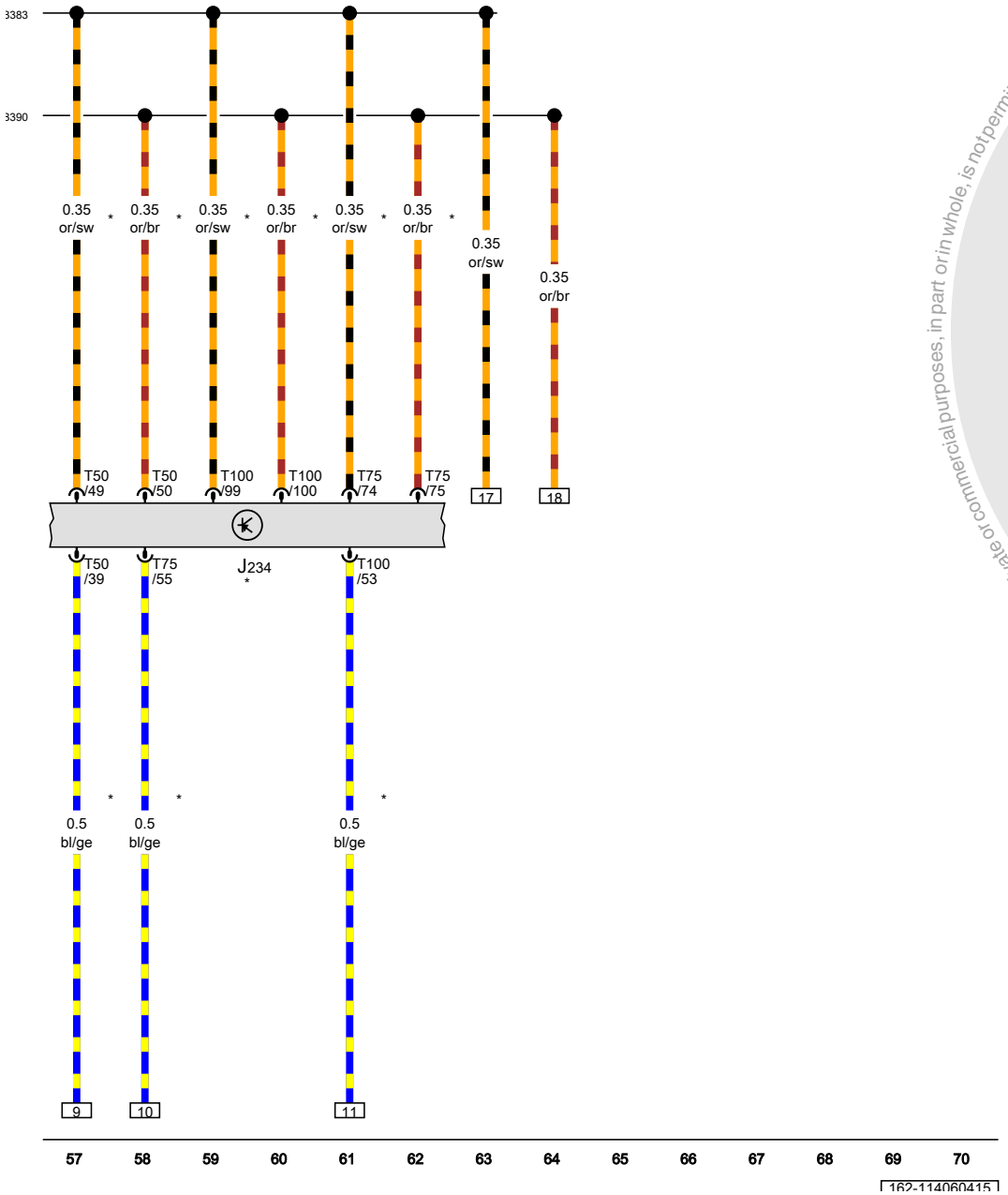

ws	=	white
sw	=	black
ro	=	red
rt	=	red
br	=	brown
gn	=	green
bl	=	blue
gr	=	grey
li	=	lilac
vi	=	lilac
ge	=	yellow
or	=	orange
rs	=	pink

Protected by copyright. Copying for private or commercial purposes, in part or in whole, is not permitted unless authorised by Volkswagen AG. Copyright by Volkswagen AG. No liability or guarantee or accept any liability with respect to the correctness of information in this document.

Network data bus , (AW1)

from May 2013

Protected by copyright. Copying for private or commercial purposes, in part or in whole, is not permitted unless authorised by Volkswagen AG. Volkswagen AG does not guarantee or accept any liability with respect to the correctness of information in this document. Copyright by Volkswagen AG.

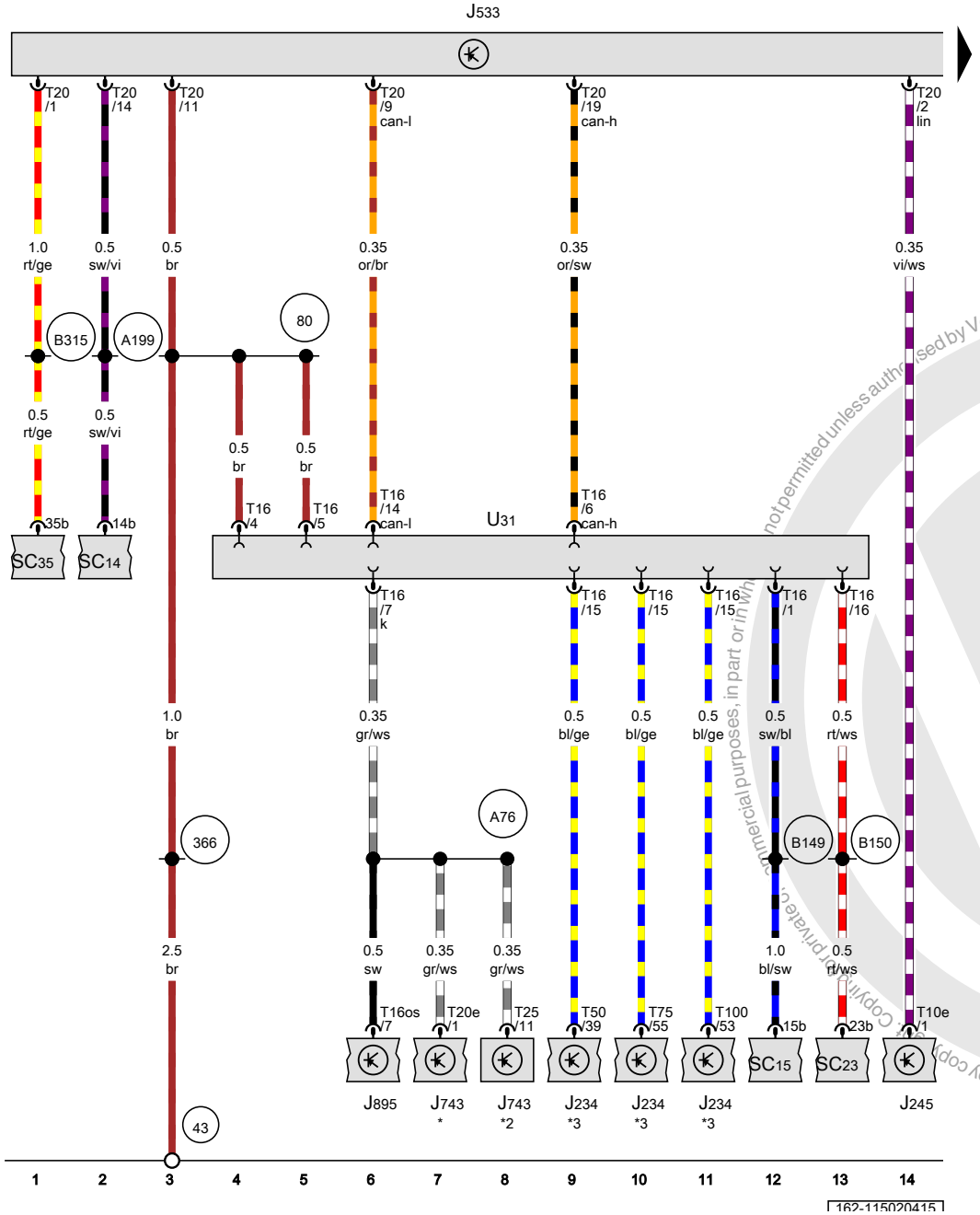

Data bus on board diagnostic interface, Diagnostic connection

J234	Airbag control module
J245	Power sunroof control module
J533	Data bus on board diagnostic interface
J743	DSG transmission Mechatronic
J895	Vehicle positioning system control module
SC14	Fuse 14 (on fuse panel C)
SC15	Fuse 15 (on fuse panel C)
SC23	Fuse 23 (on fuse panel C)
SC35	Fuse 35 (on fuse panel C)
T10e	10-pin connector
T16	16-pin connector
T16os	16-pin connector
T20	20-pin connector
T20e	20-pin connector
T25	25-pin connector
T50	50-pin connector
T75	75-pin connector
T100	100-pin connector
U31	Diagnostic connection
43	Ground connection on A-pillar, lower right
80	Ground connection 1 (in instrument cluster wiring harness)
366	Ground connection 1 (in main wiring harness)
A76	KS-diagnostic lead connection (in instrument panel wiring harness)
A199	Positive connection 4 (15a) (in instrument panel wiring harness)
B149	Positive connection 2 (15a) (in interior wiring harness)
B150	Positive connection 2 (30a) (in interior wiring harness)
B315	Positive connection 1 (30a) (in main wiring harness)
*	Only for vehicles with DSG transmission 02E
*2	Only for vehicles with DSG transmission 0AM
*3	Refer to applicable airbag wiring diagram

ws	=	white
sw	=	black
ro	=	red
rt	=	red
br	=	brown
gn	=	green
bl	=	blue
gr	=	grey
li	=	lilac
vi	=	lilac
ge	=	yellow
or	=	orange
rs	=	pink

Copyright by Volkswagen AG. Protected by copyright. Commercial purposes, in part or in whole, is not permitted unless authorised by Volkswagen AG. Volkswagen does not accept any liability with respect to the correctness of information in this document. Copyright by Volkswagen AG.

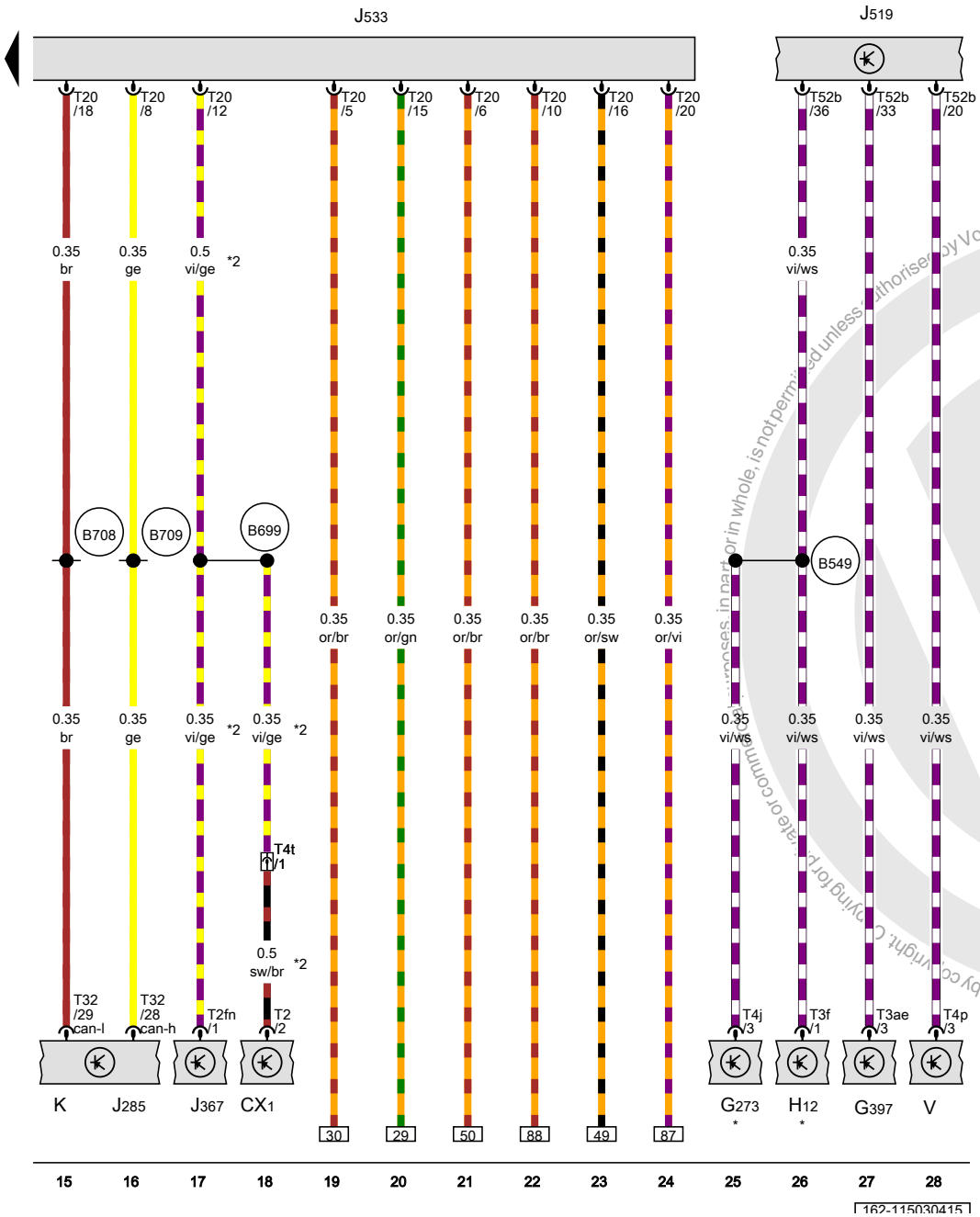

Data bus on board diagnostic interface, LIN bus connection 4 (in main wiring harness)

CX1	Generator with voltage regulator
G273	Interior monitoring sensor
G397	Rain/light recognition sensor
H12	Alarm horn
J285	Instrument cluster control module
J367	Battery monitoring control module
J519	Vehicle electrical control module system
J533	Data bus on board diagnostic interface
K	Instrument cluster
T2	Double connector
T2fn	Double connector
T3ae	3-pin connector
T3f	3-pin connector
T4j	4-pin connector
T4p	4-pin connector
T4t	4-pin connector
T20	20-pin connector
T32	32-pin connector
T52b	52-pin connector
V	Windshield wiper motor
B549	LIN bus connection 2 (in main wiring harness)
B699	LIN bus connection 4 (in main wiring harness)
B708	Instrument cluster CAN bus high connection 1 (in main wiring harness)
B709	Instrument cluster CAN bus low connection 1 (in main wiring harness)
*	Not for USA
*2	Only for vehicles with Start/Stop system

ws	=	white
sw	=	black
ro	=	red
rt	=	red
br	=	brown
gn	=	green
bl	=	blue
gr	=	grey
li	=	lilac
vi	=	lilac
ge	=	yellow
or	=	orange
rs	=	pink

Protected by copyright. Copying for private or commercial purposes, in part or in whole, is not permitted unless authorised by Volkswagen AG. Volkswagen AG does not give any warranty or accept any liability with respect to the correctness of information in this document. Copyright by Volkswagen AG.

Comfort system CAN bus high connection 1 (in main wiring harness), Comfort system CAN bus low connection 1 (in main wiring harness)

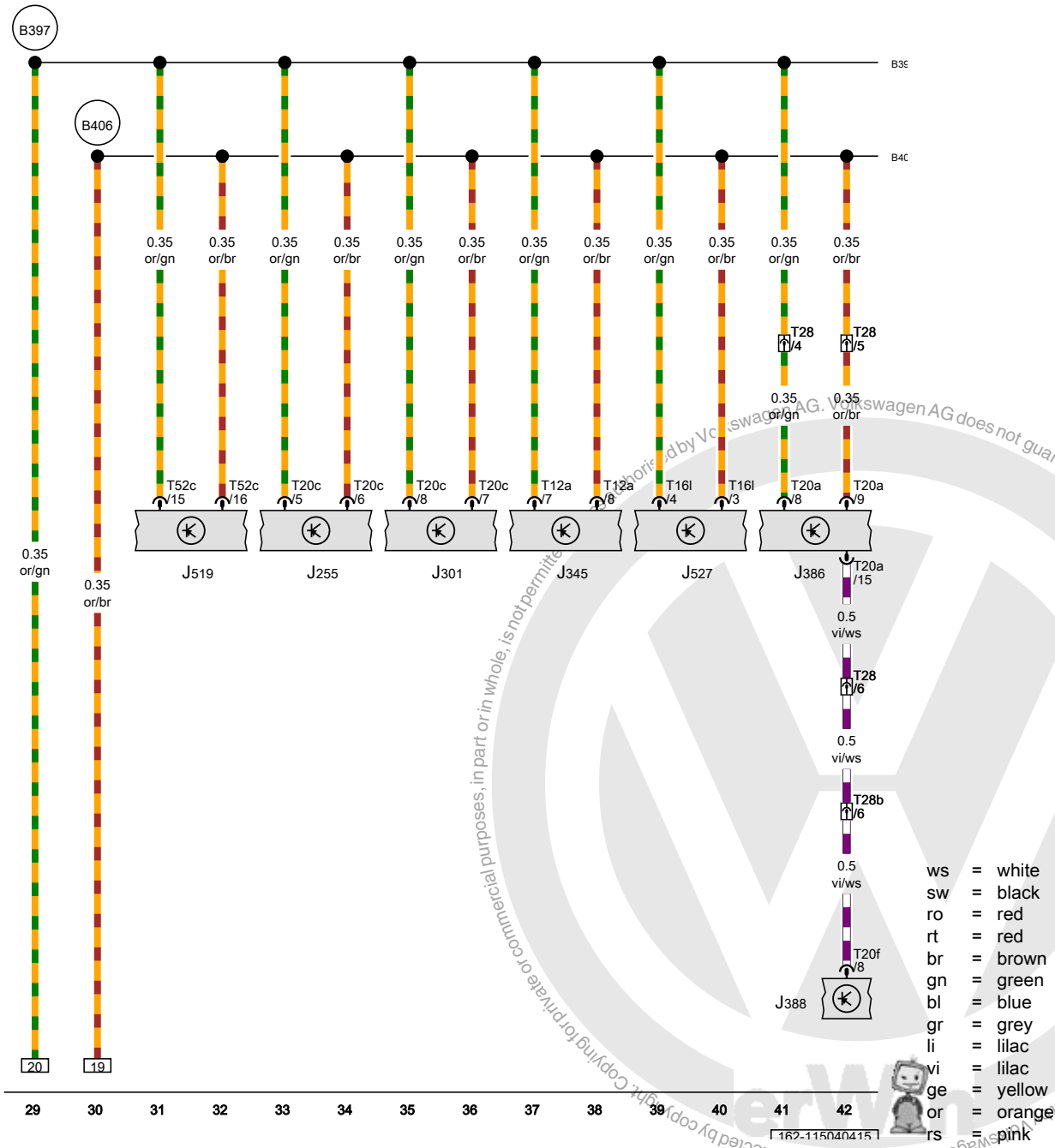

J255	Climatronic control module
J301	A/C control module
J345	Towing recognition control module
J386	Driver door control module
J388	Left rear door control module
J519	Vehicle electrical control module system
J527	Steering column electronics control module
T12a	12-pin connector
T16l	16-pin connector
T20a	20-pin connector
T20c	20-pin connector
T20f	20-pin connector
T28	28-pin connector
T28b	28-pin connector
T52c	52-pin connector
B397	Comfort system CAN bus high connection 1 (in main wiring harness)
B406	Comfort system CAN bus low connection 1 (in main wiring harness)

ws	=	white
sw	=	black
ro	=	red
rt	=	red
br	=	brown
gn	=	green
bl	=	blue
gr	=	grey
li	=	lilac
vi	=	lilac
ge	=	yellow
or	=	orange
rs	=	pink

Protected by copyright. Copying for private or commercial purposes, in part or in whole, is not permitted unless authorised by Volkswagen AG. Volkswagen AG does not guarantee or accept any liability with respect to the correctness of information in this document. Copyright by Volkswagen AG.

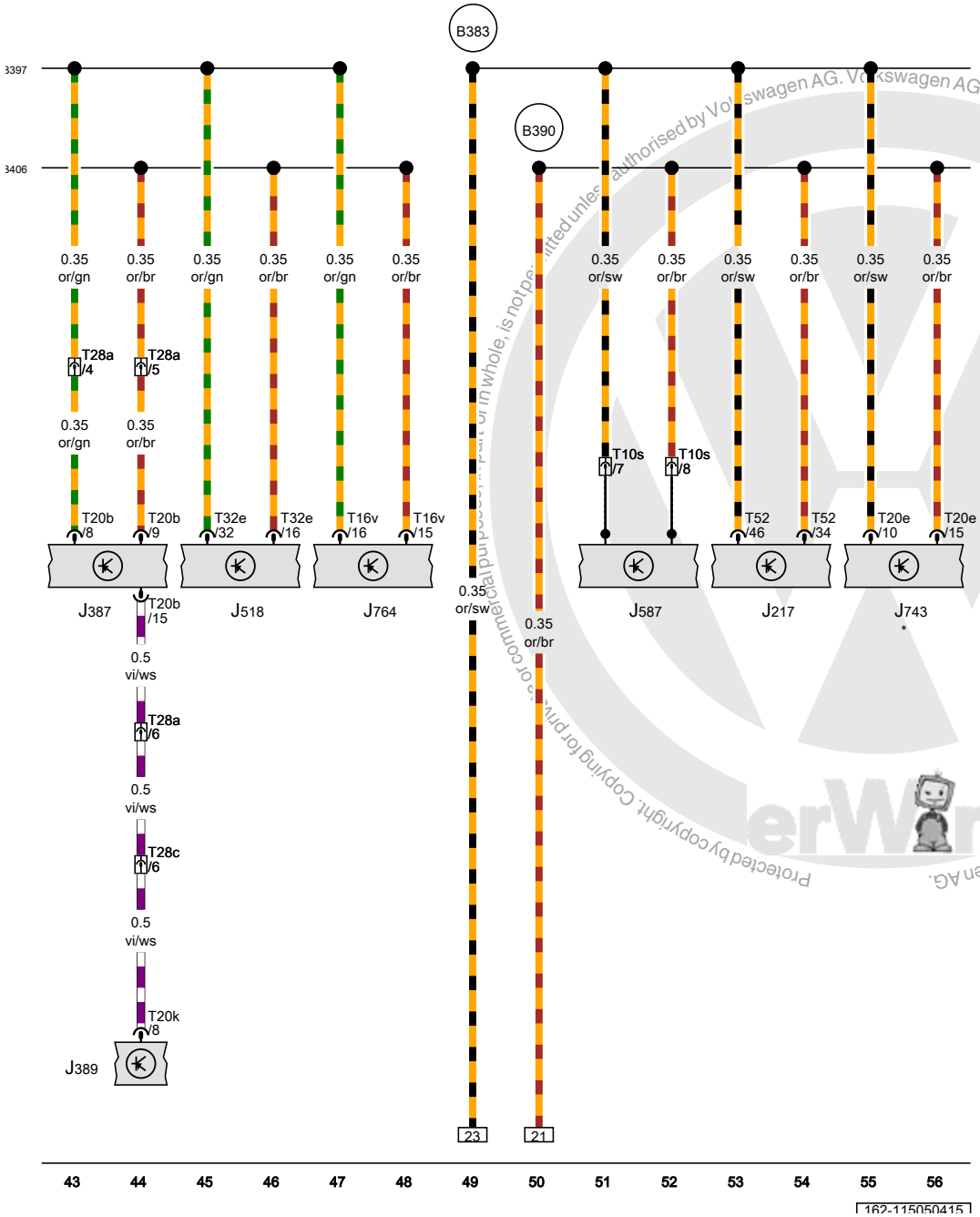

Powertrain CAN bus high connection 1 (in main wiring harness), Powertrain CAN bus low connection 1 (in main wiring harness), Comfort system CAN bus high connection 1 (in main wiring harness), Comfort system CAN bus low connection 1 (in main wiring harness)

J217	Transmission control module
J387	Front passenger door control module
J389	Right rear door control module
J518	Access/start authorization control module
J587	Selector lever sensor system control module
J743	DSG transmission Mechatronic
J764	Electronic steering column lock control module
T10s	10-pin connector
T16v	16-pin connector
T20b	20-pin connector
T20e	20-pin connector
T20k	20-pin connector
T28a	28-pin connector
T28c	28-pin connector
T32e	32-pin connector
T52	52-pin connector
B383	Powertrain CAN bus high connection 1 (in main wiring harness)
B390	Powertrain CAN bus low connection 1 (in main wiring harness)
B397	Comfort system CAN bus high connection 1 (in main wiring harness)
B406	Comfort system CAN bus low connection 1 (in main wiring harness)
*	Only for vehicles with DSG transmission 02E

ws	=	white
sw	=	black
ro	=	red
rt	=	red
br	=	brown
gn	=	green
bl	=	blue
gr	=	grey
li	=	lilac
vi	=	lilac
ge	=	yellow
or	=	orange
rs	=	pink

Protected by copyright. Copying for private or commercial purposes, in part or in whole, is not permitted unless authorised by Volkswagen AG. Volkswagen AG does not guarantee or accept any liability with respect to the correctness of information in this document. Copyright by Volkswagen AG.

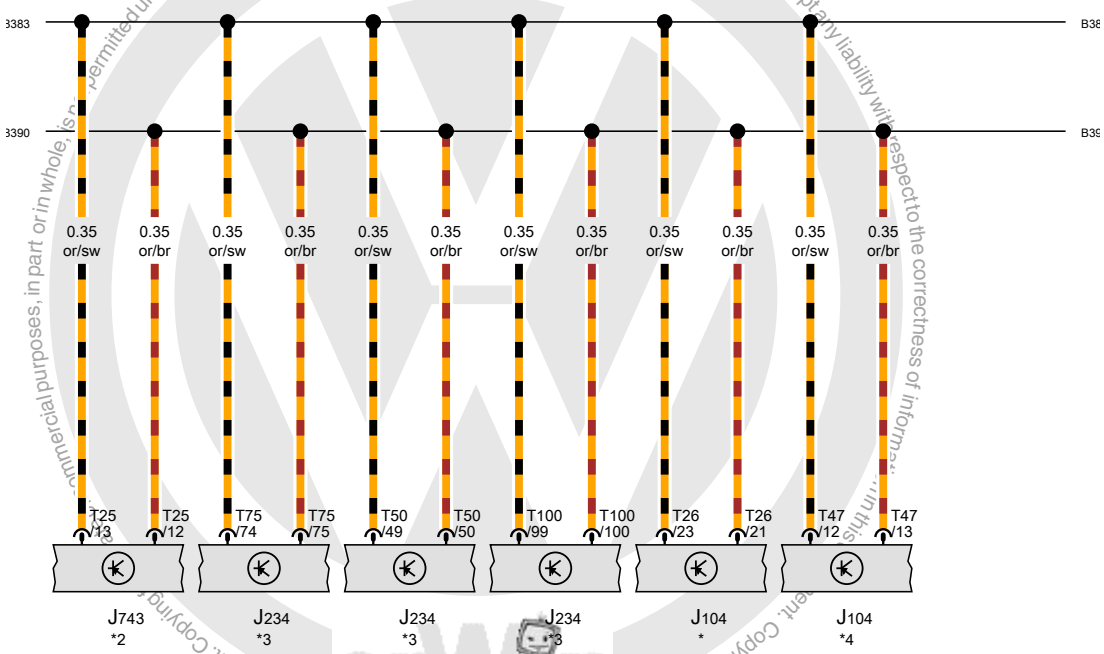

Powertrain CAN bus high connection 1 (in main wiring harness), Powertrain CAN bus low connection 1 (in main wiring harness)

J104	ABS control module
J234	Airbag control module
J743	DSG transmission Mechatronic
T25	25-pin connector
T26	26-pin connector
T47	47-pin connector
T50	50-pin connector
T75	75-pin connector
T100	100-pin connector
B383	Powertrain CAN bus high connection 1 (in main wiring harness)
B390	Powertrain CAN bus low connection 1 (in main wiring harness)
*	Only for vehicles with ABS without ESP
*2	Only for vehicles with DSG transmission 0AM
*3	Refer to applicable airbag wiring diagram
*4	Only for vehicles with ABS and ESP

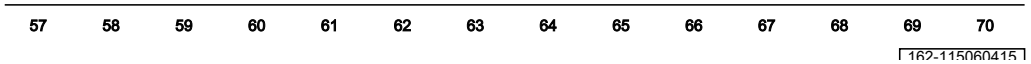

ws	=	white
sw	=	black
ro	=	red
rt	=	red
br	=	brown
gn	=	green
bl	=	blue
gr	=	grey
li	=	lilac
vi	=	lilac
ge	=	yellow
or	=	orange
rs	=	pink

Protected by copyright. Copyright by Volkswagen AG. Volkswagen AG does not guarantee or accept any liability with respect to the correctness of information in this document. Copyright by Volkswagen AG. Commercial purposes, in part or in whole, is not permitted unless authorised by Volkswagen AG.

Powertrain CAN bus high connection 1 (in main wiring harness), Powertrain CAN bus low connection 1 (in main wiring harness)

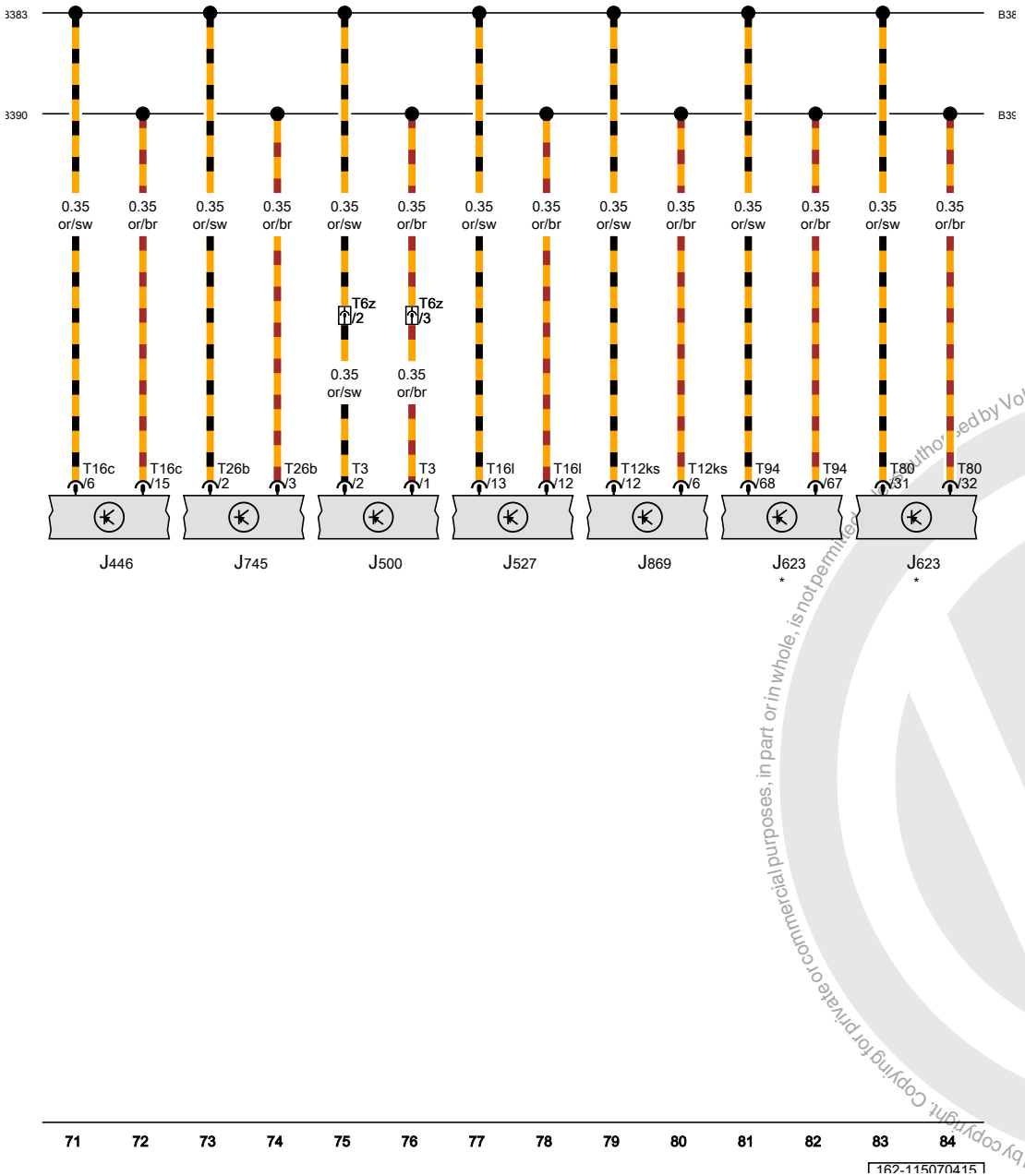

J446	Parking aid control module
J500	Power steering control module
J527	Steering column electronics control module
J623	Engine control module
J745	Cornering lamp and headlamp range control module
J869	Structure borne sound control module
T3	3-pin connector
T6z	6-pin connector
T12ks	12-pin connector
T16c	16-pin connector
T16l	16-pin connector
T26b	26-pin connector
T80	80-pin connector
T94	94-pin connector
B383	Powertrain CAN bus high connection 1 (in main wiring harness)
B390	Powertrain CAN bus low connection 1 (in main wiring harness)
*	Refer to applicable engine wiring diagram

ws	=	white
sw	=	black
ro	=	red
rt	=	red
br	=	brown
gn	=	green
bl	=	blue
gr	=	grey
li	=	lilac
vi	=	lilac
ge	=	yellow
or	=	orange
rs	=	pink

Protected by copyright. Copying for private or commercial purposes, in part or in whole, is not permitted unless authorised by Volkswagen AG. Volkswagen AG does not guarantee or accept any liability with respect to the correctness of information in this document. Copyright by Volkswagen AG.

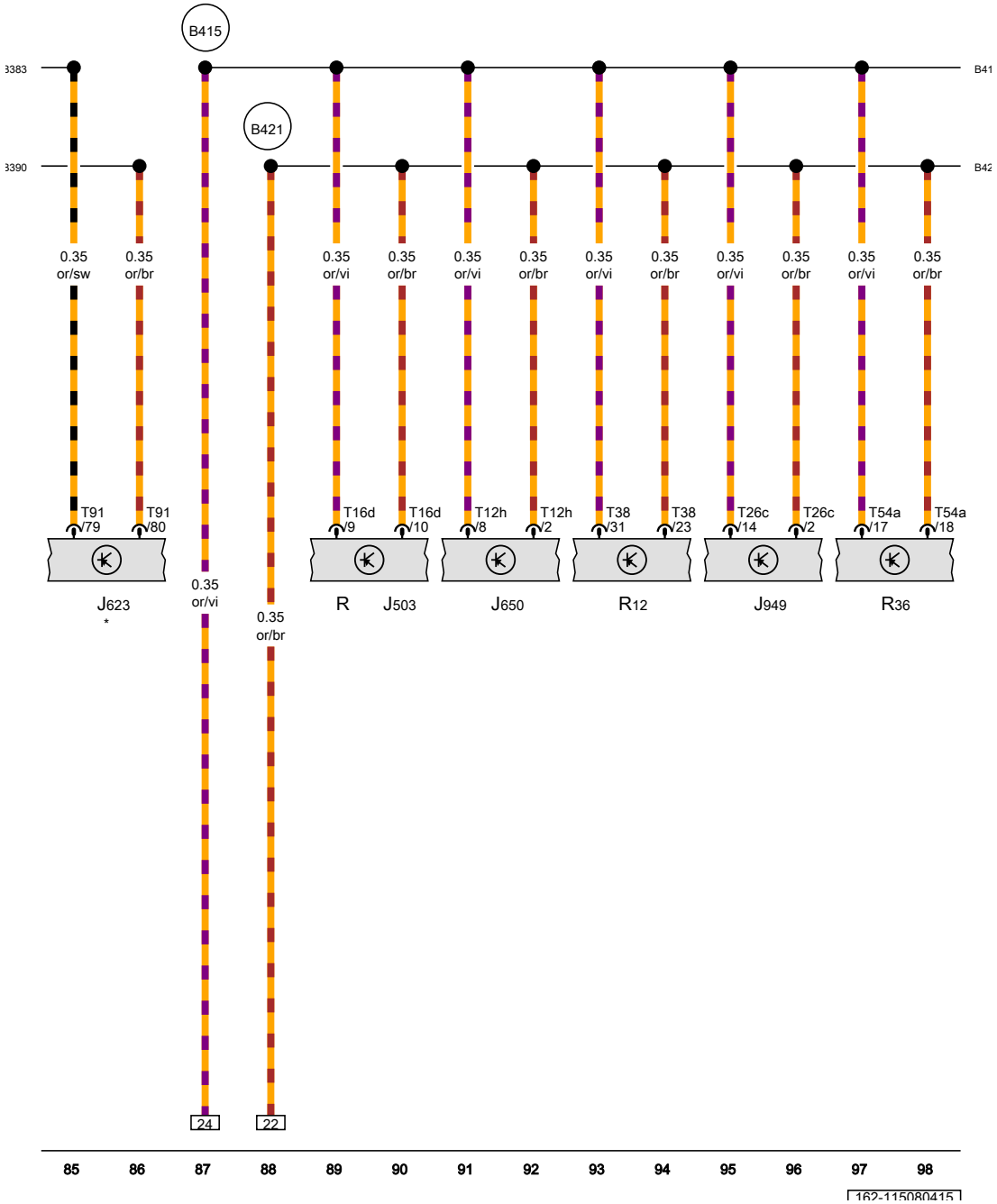

Powertrain CAN bus high connection 1 (in main wiring harness), Powertrain CAN bus low connection 1 (in main wiring harness), Infotainment CAN Bus high connection 1 (in main wiring harness), Infotainment CAN bus low connection 1 (in main wiring harness)

J503	Radio/navigation display unit control module
J623	Engine control module
J650	Multimedia system control module
J949	Control module for emergency call module and communication unit
R	Radio
R12	Amplifier
R36	Telephone transceiver
T12h	12-pin connector
T16d	16-pin connector
T26c	26-pin connector
T38	38-pin connector
T54a	54-pin connector
T91	91-pin connector
B383	Powertrain CAN bus high connection 1 (in main wiring harness)
B390	Powertrain CAN bus low connection 1 (in main wiring harness)
B415	Infotainment CAN Bus high connection 1 (in main wiring harness)
B421	Infotainment CAN bus low connection 1 (in main wiring harness)
*	Refer to applicable engine wiring diagram

ws	=	white
sw	=	black
ro	=	red
rt	=	red
br	=	brown
gn	=	green
bl	=	blue
gr	=	grey
li	=	lilac
vi	=	lilac
ge	=	yellow
or	=	orange
rs	=	pink

Protected by copyright. Copying for private or commercial purposes, in part or in whole, is not permitted unless authorised by Volkswagen AG. Volkswagen AG does not guarantee or accept any liability with respect to the correctness of information in this document. Copyright by Volkswagen AG.

Infotainment CAN Bus high connection 1 (in main wiring harness), Infotainment CAN bus low connection 1 (in main wiring harness)

G197	Compass magnetic field sensor
J364	Auxiliary heater control module
J412	Cell phone operating electronics control module
T6au	6-pin connector
T8c	8-pin connector
T54a	54-pin connector
B415	Infotainment CAN Bus high connection 1 (in main wiring harness)
B421	Infotainment CAN bus low connection 1 (in main wiring harness)

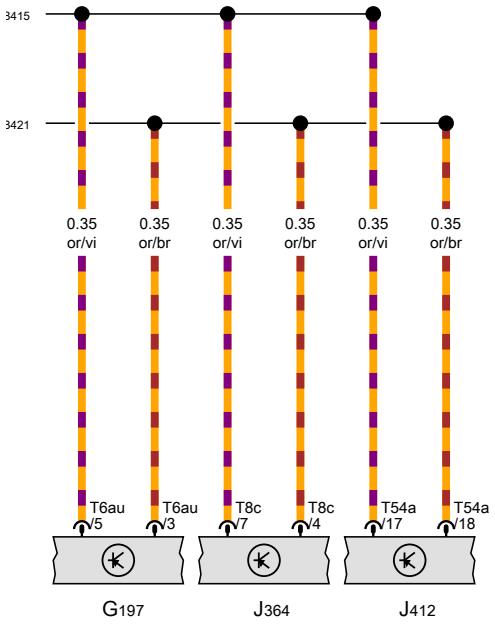

ws	=	white
sw	=	black
ro	=	red
rt	=	red
br	=	brown
gn	=	green
bl	=	blue
gr	=	grey
li	=	lilac
vi	=	lilac
ge	=	yellow
or	=	orange
rs	=	pink

99 100 101 102 103 104 105 106 107 108 109 110 111 112

162-115090415

Protected by copyright. Copyright by Volkswagen AG. Copying for commercial purposes, in part or in whole, is not permitted unless authorised by Volkswagen AG. Volkswagen AG does not guarantee or accept any liability with respect to the correctness of information in this document.

1.8L gasoline engine , CPRA,(0GT)

from June 2013

Protected by copyright. Copying for private or commercial purposes, in part or in whole, is not permitted unless authorised by Volkswagen AG. Volkswagen AG does not guarantee or accept any liability with respect to the correctness of information in this document. Copyright by Volkswagen AG.

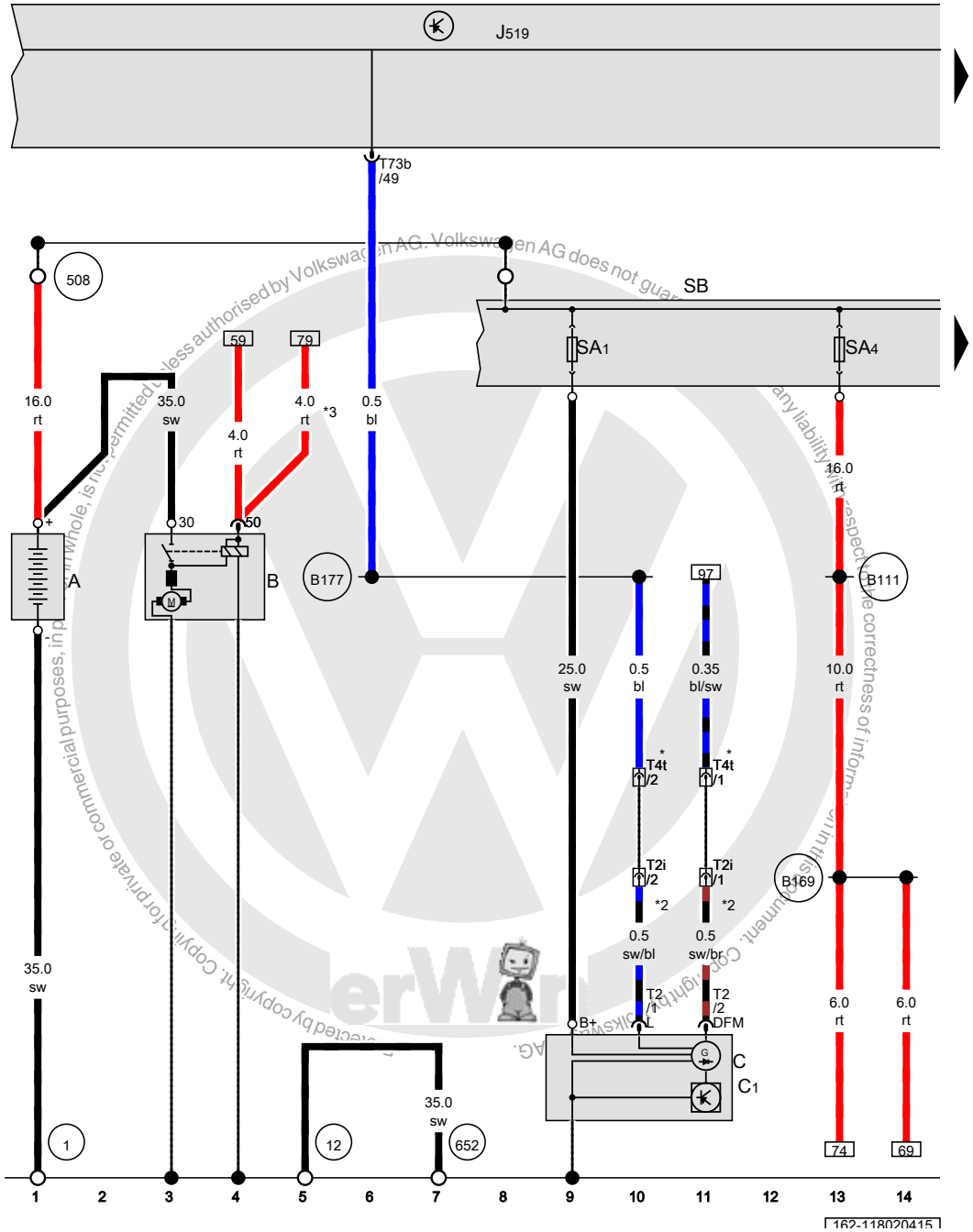

Battery, Starter, Generator, Vehicle electrical control module system, Fuse panel B

A	Battery
B	Starter
C	Generator
C1	Voltage regulator
J519	Vehicle electrical control module system
SA1	Fuse 1 (on fuse panel A)
SA4	Fuse 4 (on fuse panel A)
SB	Fuse panel B
T2	Double connector
T2i	Double connector, near the starter
T4t	4-pin connector, near the starter
T73b	73-pin connector
1	Ground strap, battery to body
12	Ground connection in engine compartment, left
508	Terminal 30 threaded connection (on E-box)
652	Transmission/engine ground connection
B111	Positive connection 1 (30a) (in interior wiring harness)
B169	Positive connection 1 (30) (in interior wiring harness)
B177	Connection 61 (in interior wiring harness)
*	Only for vehicles with A/C system
*2	Only for vehicles without an A/C system
*3	Depending on equipment

ws	=	white
sw	=	black
ro	=	red
rt	=	red
br	=	brown
gn	=	green
bl	=	blue
gr	=	grey
li	=	lilac
vi	=	lilac
ge	=	yellow
or	=	orange
rs	=	pink

Protected by copyright. Copying for private or commercial purposes, in part or in whole, is not permitted unless authorised by Volkswagen AG. Volkswagen AG does not guarantee the correctness of information in this document. Copyright by Volkswagen AG. Any liability for the correctness of information in this document.

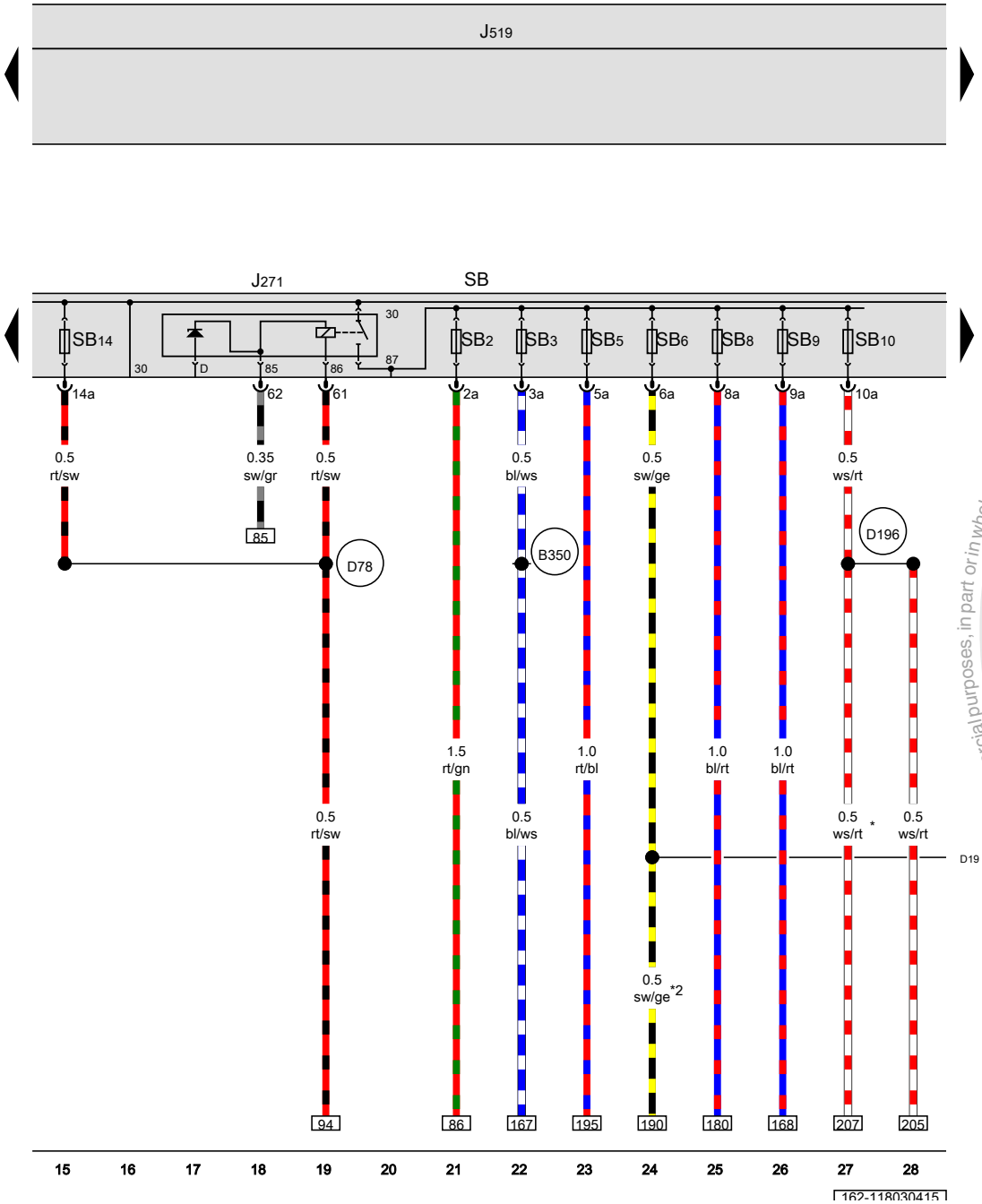

Motronic engine control module power supply relay, Vehicle electrical control module system, Fuse panel B, Fuse 14 (on fuse panel B)

J271	Motronic engine control module power supply relay
J519	Vehicle electrical control module system
SB	Fuse panel B
SB2	Fuse 2 (on fuse panel B)
SB3	Fuse 3 (on fuse panel B)
SB5	Fuse 5 (on fuse panel B)
SB6	Fuse 6 (on fuse panel B)
SB8	Fuse 8 (on fuse panel B)
SB9	Fuse 9 (on fuse panel B)
SB10	Fuse 10 (on fuse panel B)
SB14	Fuse 14 (on fuse panel B)
B350	Positive connection 1 (87a) (in main wiring harness)
D78	Positive connection 1 (30a) (in engine compartment wiring harness)
D196	Connection 87a (in engine pre-wiring harness) 2
D197	Connection 5 (87a) (in engine compartment wiring harness)
*	Only for vehicles with a manual transmission
*2	Depending on equipment

ws	=	white
sw	=	black
ro	=	red
rt	=	red
br	=	brown
gn	=	green
bl	=	blue
gr	=	grey
li	=	lilac
vi	=	lilac
ge	=	yellow
or	=	orange
rs	=	pink

Protected by copyright. Copying for private or commercial purposes, in part or in whole, is not permitted unless authorised by Volkswagen AG. Volkswagen AG does not guarantee or accept any liability with respect to the correctness of information in this document. Copyright by Volkswagen AG.

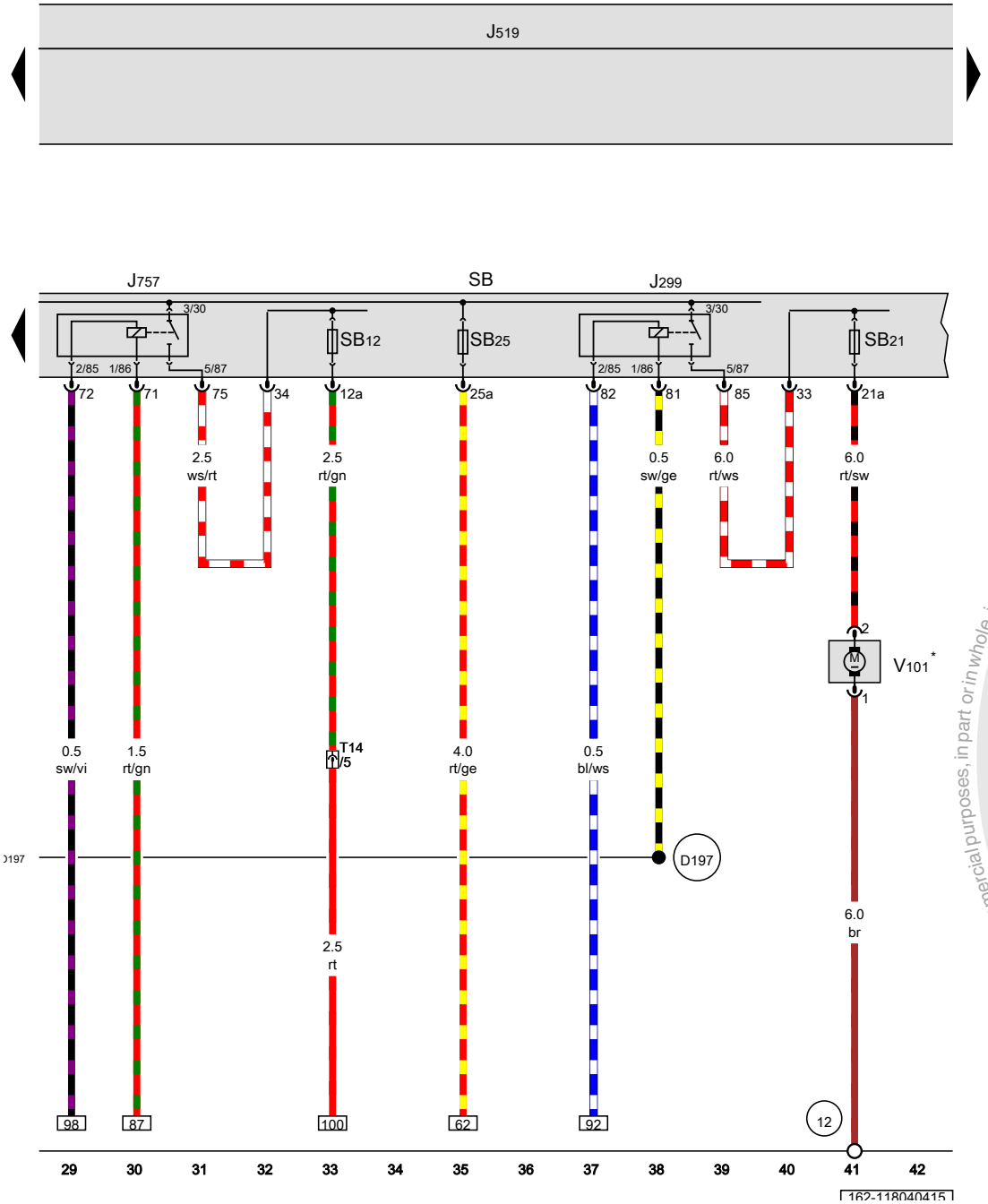

Secondary air injection pump relay, Vehicle electrical control module system, Engine component power supply relay, Fuse panel B, Secondary air injection pump motor

J299	Secondary air injection pump relay
J519	Vehicle electrical control module system
J757	Engine component power supply relay
SB	Fuse panel B
SB12	Fuse 12 (on fuse panel B)
SB21	Fuse 21 (on fuse panel B)
SB25	Fuse 25 (on fuse panel B)
T14	14-pin connector
V101	Secondary air injection pump motor
12	Ground connection in engine compartment, left
D197	Connection 5 (87a) (in engine compartment wiring harness)
*	USA only

ws	=	white
sw	=	black
ro	=	red
rt	=	red
br	=	brown
gn	=	green
bl	=	blue
gr	=	grey
li	=	lilac
vi	=	lilac
ge	=	yellow
or	=	orange
rs	=	pink

Protected by copyright. Copyright by Volkswagen AG. Volkswagen AG does not guarantee or accept any liability with respect to the correctness of information in this document. Copyright by Volkswagen AG. Protected by copyright. Copying for private or commercial purposes, in part or in whole, is not permitted unless authorised by Volkswagen AG.

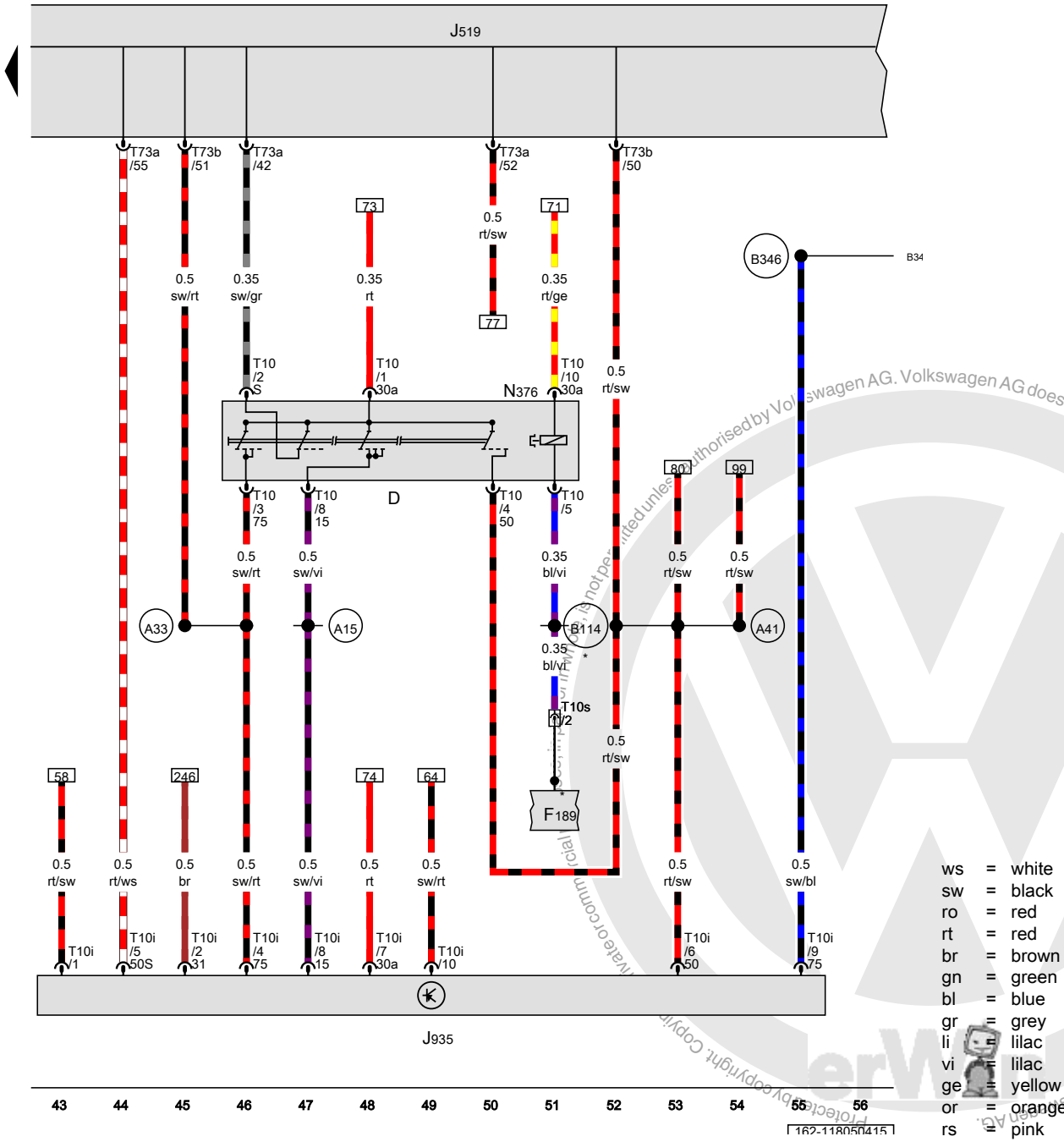

Ignition/starter switch, Vehicle electrical control module system, Converter box

D	Ignition/starter switch
F189	tiptronic switch
J519	Vehicle electrical control module system
J935	Converter box
N376	Ignition switch key lock solenoid
T10	10-pin connector
T10i	10-pin connector
T10s	10-pin connector
T73a	73-pin connector
T73b	73-pin connector
A15	Plus connection (15) (in instrument cluster wiring harness)
A33	Connection 75 (in instrument panel wiring harness)
A41	Positive connection (50) (in instrument panel wiring harness)
B114	Lock switch connection (in interior wiring harness)
B346	Connection 75 (in main wiring harness) 1
*	Only for vehicles with automatic transmission

ws	=	white
sw	=	black
ro	=	red
rt	=	red
br	=	brown
gn	=	green
bl	=	blue
gr	=	grey
li	=	lilac
vi	=	lilac
ge	=	yellow
or	=	orange
rs	=	pink

Copyright by Volkswagen AG. Volkswagen AG does not guarantee or accept any liability with respect to the correctness of information in this document. Copyright by Volkswagen AG. Protected by copyright. Copying for private or commercial purposes, in part or in whole, is not permitted unless authorised by Volkswagen AG.

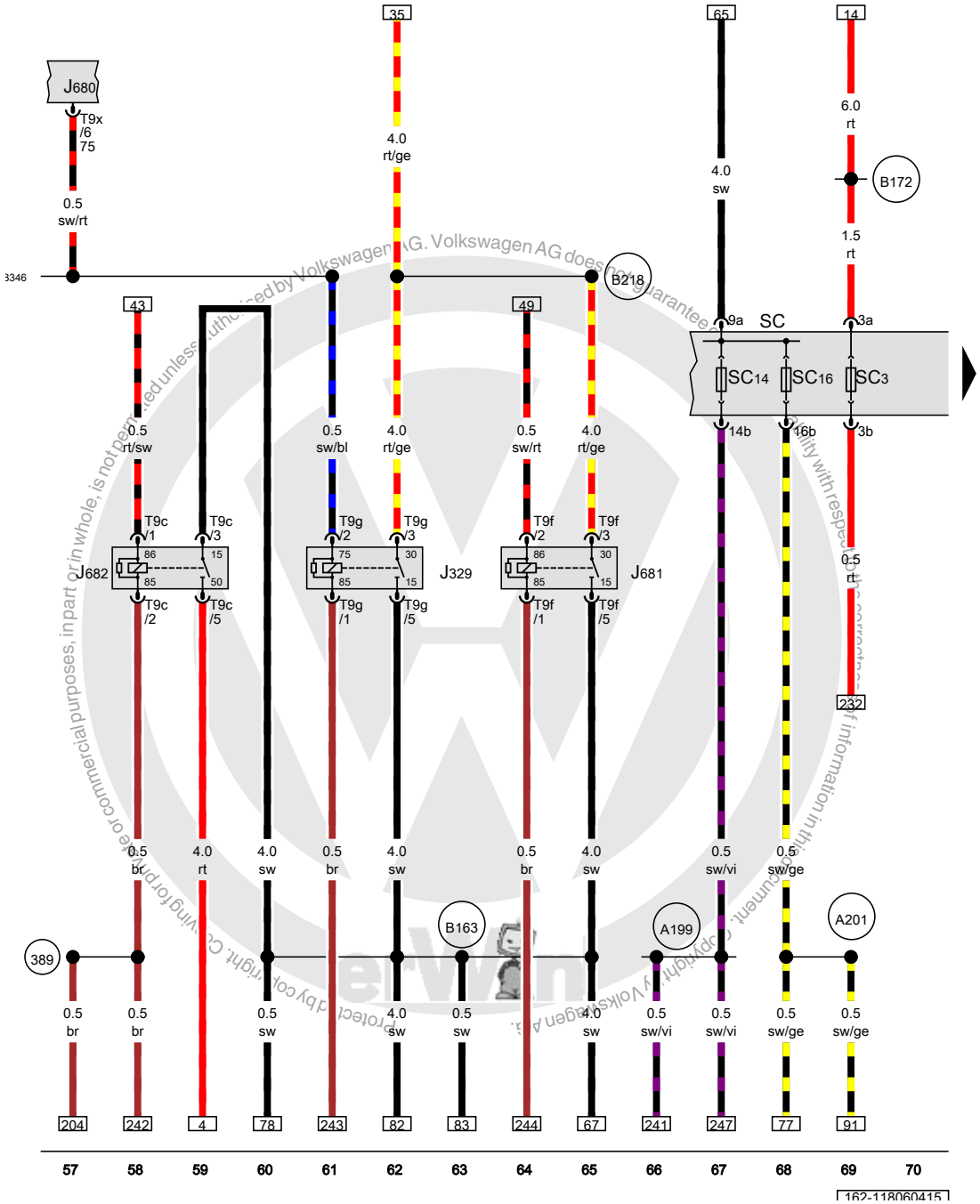

Terminal 15 power supply relay, Terminal 15 power supply relay 2, Terminal 50 power supply relay, Fuse panel C

J329	Terminal 15 power supply relay
J680	Terminal 75 power supply relay 1
J681	Terminal 15 power supply relay 2
J682	Terminal 50 power supply relay
SC	Fuse panel C
SC3	Fuse 3 (on fuse panel C)
SC14	Fuse 14 (on fuse panel C)
SC16	Fuse 16 (on fuse panel C)
T9c	9-pin connector
T9f	9-pin connector
T9g	9-pin connector
T9x	9-pin connector
389	Ground connection 24 (in main wiring harness)
A199	Positive connection 4 (15a) (in instrument panel wiring harness)
A201	Positive connection 6 (15a) (in instrument panel wiring harness)
B163	Positive connection 1 (15) (in interior wiring harness)
B172	Positive connection 4 (30) (in interior wiring harness)
B218	Positive connection 6 (30) (in interior wiring harness)
B346	Connection 75 (in main wiring harness) 1

ws	=	white
sw	=	black
ro	=	red
rt	=	red
br	=	brown
gn	=	green
bl	=	blue
gr	=	grey
li	=	lilac
vi	=	lilac
ge	=	yellow
or	=	orange
rs	=	pink

Protected by copyright. Copying for private or commercial purposes, in part or in whole, is not permitted unless authorised by Volkswagen AG. Volkswagen AG does not guarantee the accuracy of information in this document. Copyright by Volkswagen AG.

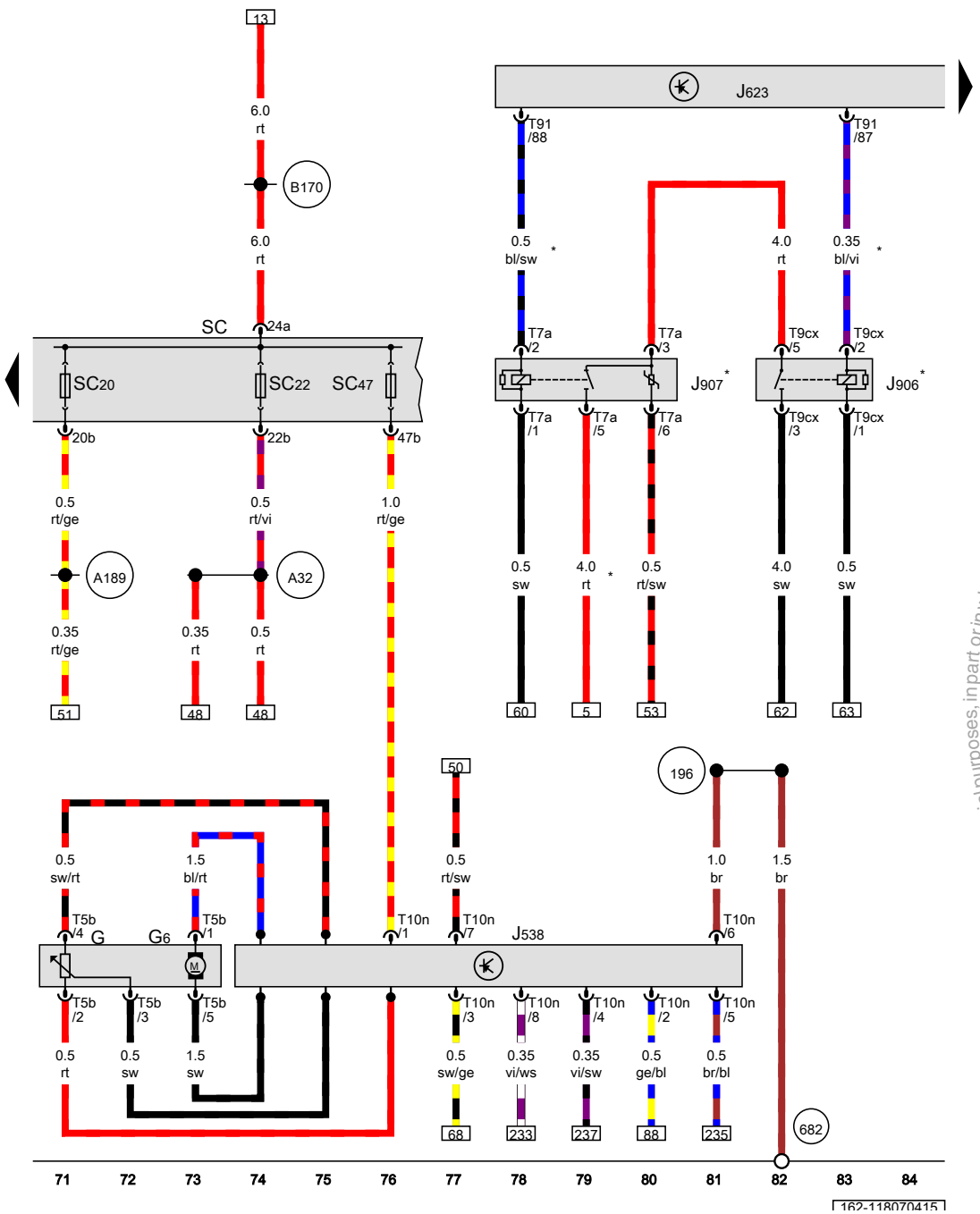

Fuel level sensor, Transfer fuel pump, Engine control module, Fuse panel C

G	Fuel level sensor
G6	Transfer fuel pump
J538	Fuel pump control module
J623	Engine control module
J906	Starter relay 1
J907	Starter relay 2
SC	Fuse panel C
SC20	Fuse 20 (on fuse panel C)
SC22	Fuse 22 (on fuse panel C)
SC47	Fuse 47 (on fuse panel C)
T5b	5-pin connector
T7a	7-pin connector
T9cx	9-pin connector
T10n	10-pin connector
T91	91-pin connector
196	Ground connection 3 (in rear wiring harness)
682	Ground connection 2 in right rear side panel
A32	Positive connection (30) (in instrument panel wiring harness)
A189	Positive connection 5 (30a) (in instrument panel wiring harness)
B170	Positive connection 2 (30) (in interior wiring harness)
*	Depending on equipment

ws	=	white
sw	=	black
ro	=	red
rt	=	red
br	=	brown
gn	=	green
bl	=	blue
gr	=	grey
li	=	lilac
vi	=	lilac
ge	=	yellow
or	=	orange
rs	=	pink

Protected by copyright. Copyright by Volkswagen AG. Volkswagen AG does not guarantee or accept any liability with respect to the correctness of information in this document. Copyright by Volkswagen AG. Copying for private or commercial purposes, in part or in whole, is not permitted unless authorised by Volkswagen AG.

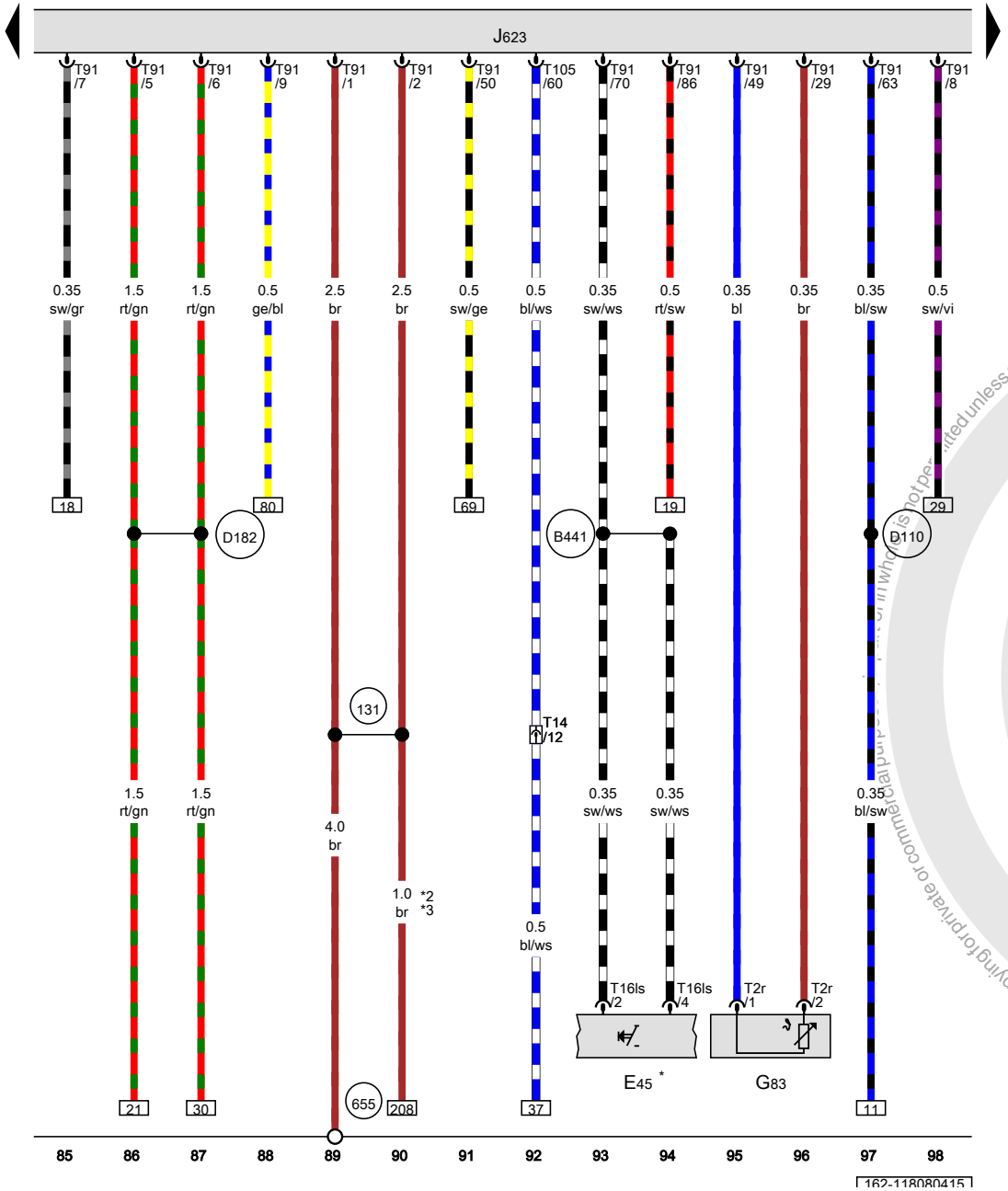

Engine coolant temperature sensor on radiator outlet, Engine control module

E45	Cruise control switch
G83	Engine coolant temperature sensor on radiator outlet
J623	Engine control module
T2r	Double connector
T14	14-pin connector
T16ls	16-pin connector
T91	91-pin connector
T105	105-pin connector
131	Ground connection 2 (in engine compartment wiring harness)
655	Ground connection on left headlamp
B441	Cruise control connection (in main wiring harness)
D110	Connection 8 (in engine compartment wiring harness)
D182	Connection 3 (87a) (in engine compartment wiring harness)
*	Only for vehicles with cruise control
*2	Only for vehicles with a manual transmission
*3	USA only

ws	=	white
sw	=	black
ro	=	red
rt	=	red
br	=	brown
gn	=	green
bl	=	blue
gr	=	grey
li	=	lilac
vi	=	lilac
ge	=	yellow
or	=	orange
rs	=	pink

Protected by copyright. Copying for private or commercial purposes, in whole or in part, is not permitted unless authorised by Volkswagen AG. Volkswagen AG does not guarantee or accept any liability with respect to the correctness of information in this document. Copyright by Volkswagen AG.

Engine control module, Ignition coil 1 with power output stage, Ignition coil 2 with power output stage, Ignition coil 3 with power output stage, Ignition coil 4 with power output stage, Spark plug connectors, Spark plugs

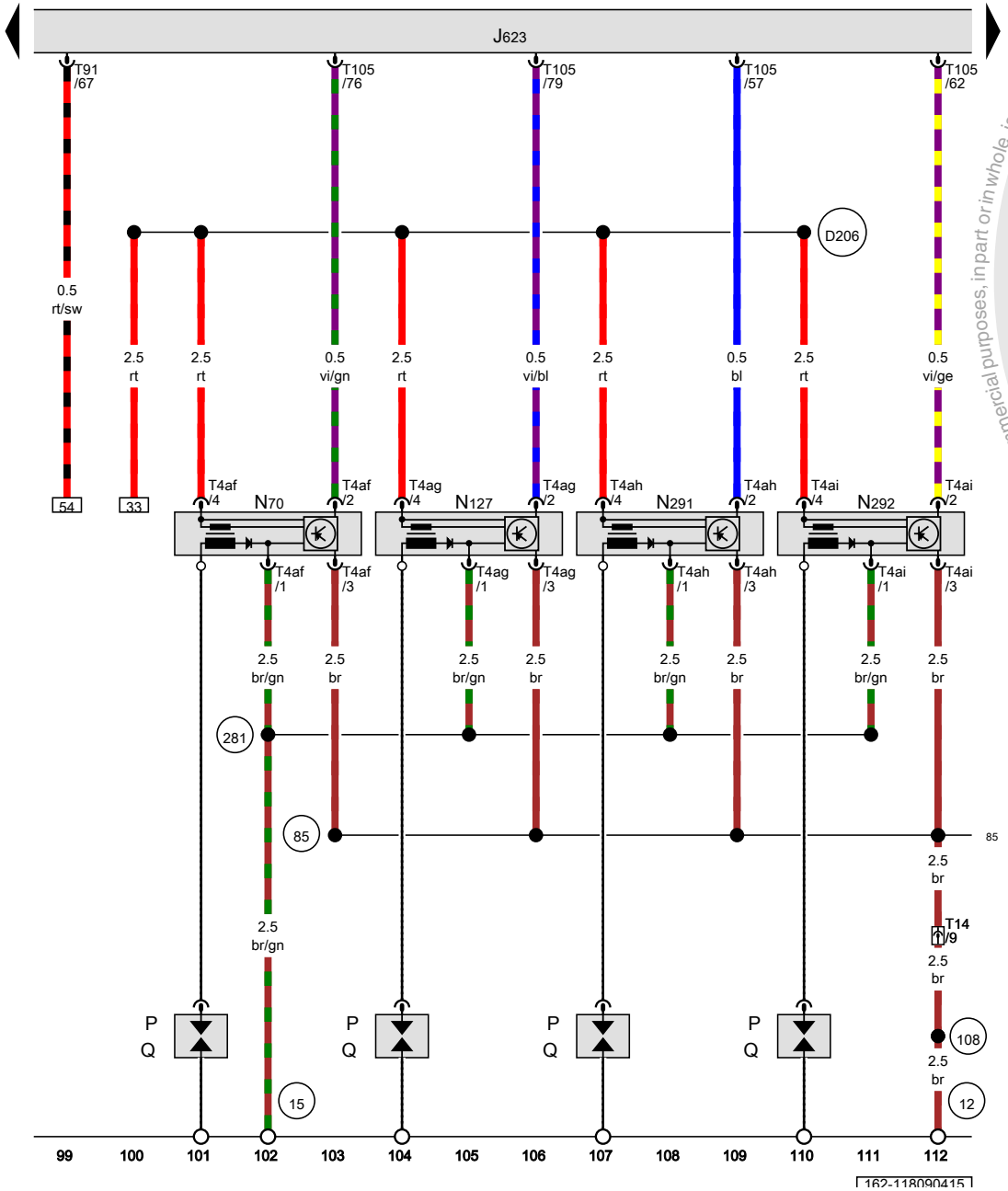

J623	Engine control module
N70	Ignition coil 1 with power output stage
N127	Ignition coil 2 with power output stage
N291	Ignition coil 3 with power output stage
N292	Ignition coil 4 with power output stage
P	Spark plug connectors
Q	Spark plugs
T4af	4-pin connector
T4ag	4-pin connector
T4ah	4-pin connector
T4ai	4-pin connector
T14	14-pin connector
T91	91-pin connector
T105	105-pin connector
12	Ground connection in engine compartment, left
15	Ground connection on cylinder head
85	Ground connection 1 (in engine compartment wiring harness)
108	Ground connection 2 (in left front wiring harness)
281	Ground connection 1 (in engine pre-wiring harness)
D206	Connection 87a (in engine pre-wiring harness) 4

ws	=	white
sw	=	black
ro	=	red
rt	=	red
br	=	brown
gn	=	green
bl	=	blue
gr	=	grey
li	=	lilac
vi	=	lilac
ge	=	yellow
or	=	orange
rs	=	pink

Volkswagen AG. Volkswagen AG does not guarantee or assume any liability with respect to the correctness of information in this document. Copying by Volkswagen AG protected by copyright. Copying for private or commercial purposes, in part or in whole, is not permitted unless authorised by

Throttle valve control module, EPC throttle drive, Charge air pressure actuator position sensor, Engine control module, After-run coolant pump

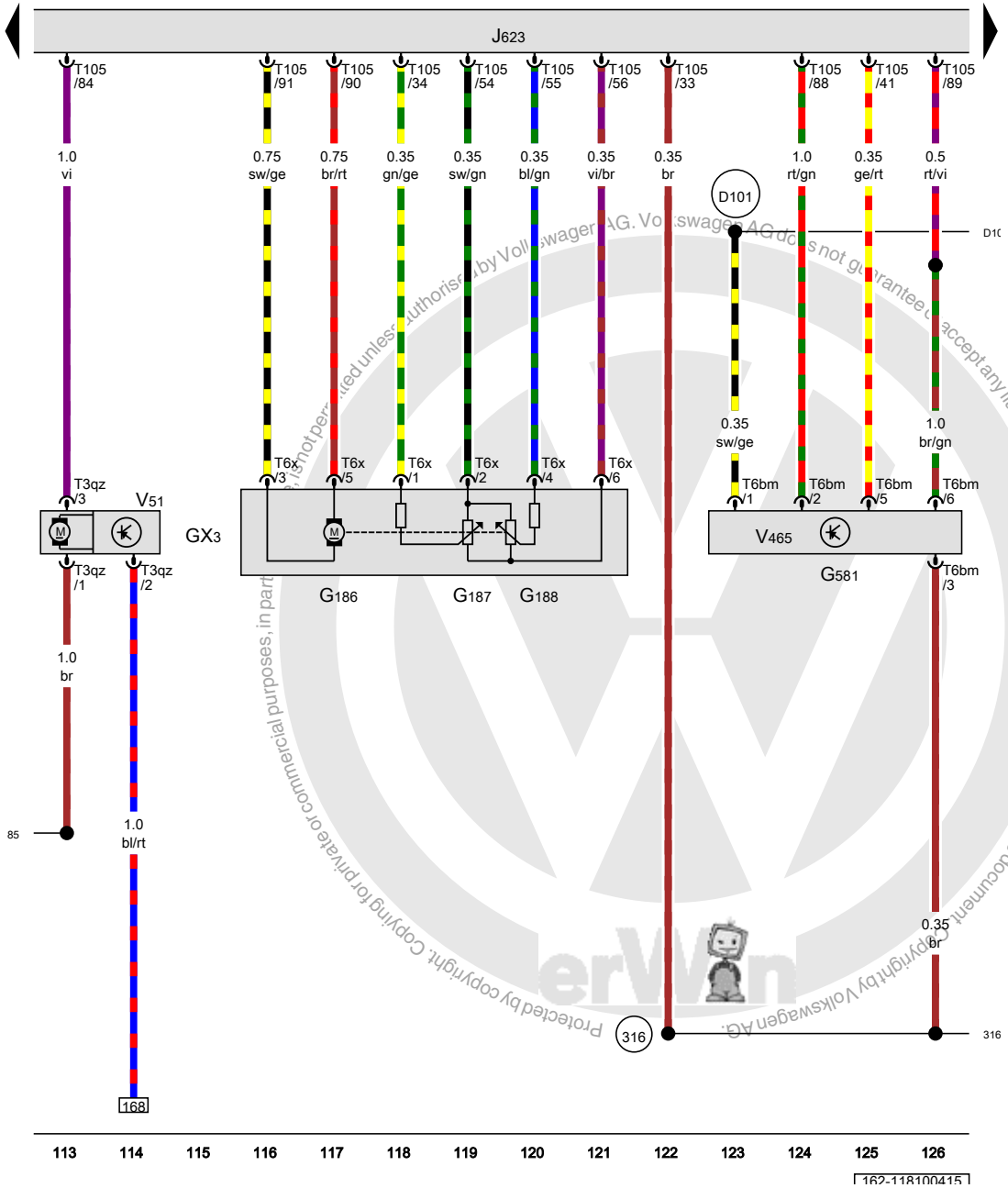

GX3	Throttle valve control module	
G186	EPC throttle drive	
G187	EPC throttle drive angle sensor 1	
G188	EPC throttle drive angle sensor 2	
G581	Charge air pressure actuator position sensor	
J623	Engine control module	
T3qz	3-pin connector	
T6bm	6-pin connector	
T6x	6-pin connector	
T105	105-pin connector	
V51	After-run coolant pump	
V465	Charge air pressure actuator	
85	Ground connection 1 (in engine compartment wiring harness)	
316	Sensor ground connection 2 (in engine wiring harness)	
D101	Connection 1 (in engine compartment wiring harness)	

ws	=	white
sw	=	black
ro	=	red
rt	=	red
br	=	brown
gn	=	green
bl	=	blue
gr	=	grey
li	=	lilac
vi	=	lilac
ge	=	yellow
or	=	orange
rs	=	pink

Protected by copyright. Copying for private or commercial purposes, in part, is not permitted unless authorised by Volkswagen AG. Volkswagen AG does not guarantee or accept any liability with respect to the correctness of information in this document. Copyright by Volkswagen AG.

Intake manifold sensor, Secondary air system, Engine speed sensor, Fuel pressure sensor, Engine control module, Secondary air injection solenoid valve

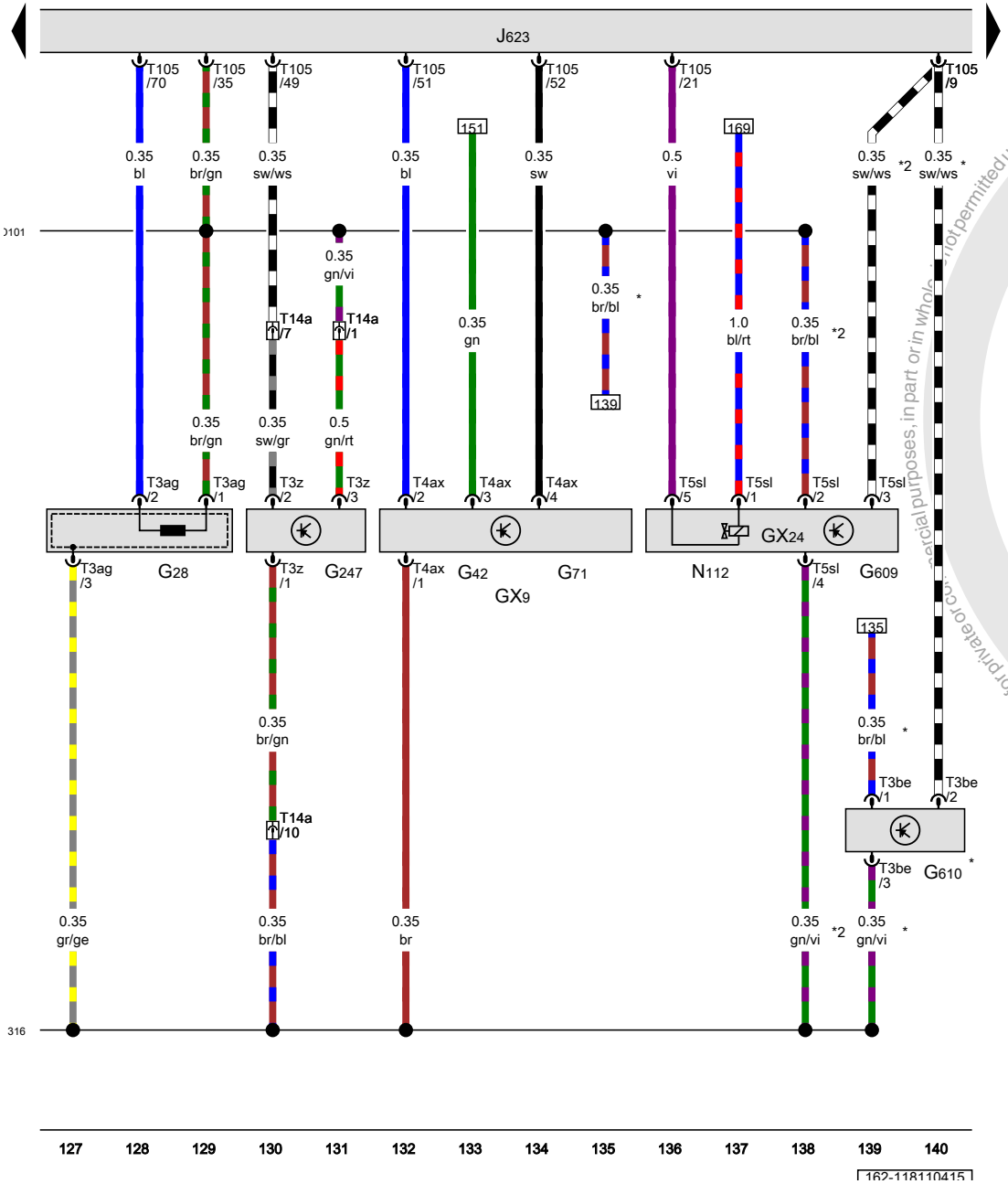

GX9	Intake manifold sensor
GX24	Secondary air system
G28	Engine speed sensor
G42	Intake air temperature sensor
G71	Manifold absolute pressure sensor
G247	Fuel pressure sensor
G609	Secondary air injection sensor 1
G610	Secondary air injection sensor 2
J623	Engine control module
N112	Secondary air injection solenoid valve
T3ag	3-pin connector
T3be	3-pin connector
T3z	3-pin connector
T4ax	4-pin connector
T5sl	5-pin connector
T14a	14-pin connector
T105	105-pin connector
316	Sensor ground connection 2 (in engine wiring harness)
D101	Connection 1 (in engine compartment wiring harness)
*	from September 2013
*2	Through September 2013

ws	=	white
sw	=	black
ro	=	red
rt	=	red
br	=	brown
gn	=	green
bl	=	blue
gr	=	grey
li	=	lilac
vi	=	lilac
ge	=	yellow
or	=	orange
rs	=	pink

Protected by copyright. Copying for private or commercial purposes, in part or in whole, is not permitted unless authorised by Volkswagen AG. Volkswagen AG does not guarantee or accept any liability with respect to the correctness of information in this document. Copyright by Volkswagen AG.

Charge air pressure sensor, Camshaft position sensor, Knock sensor 1, Engine coolant temperature sensor, Engine control module

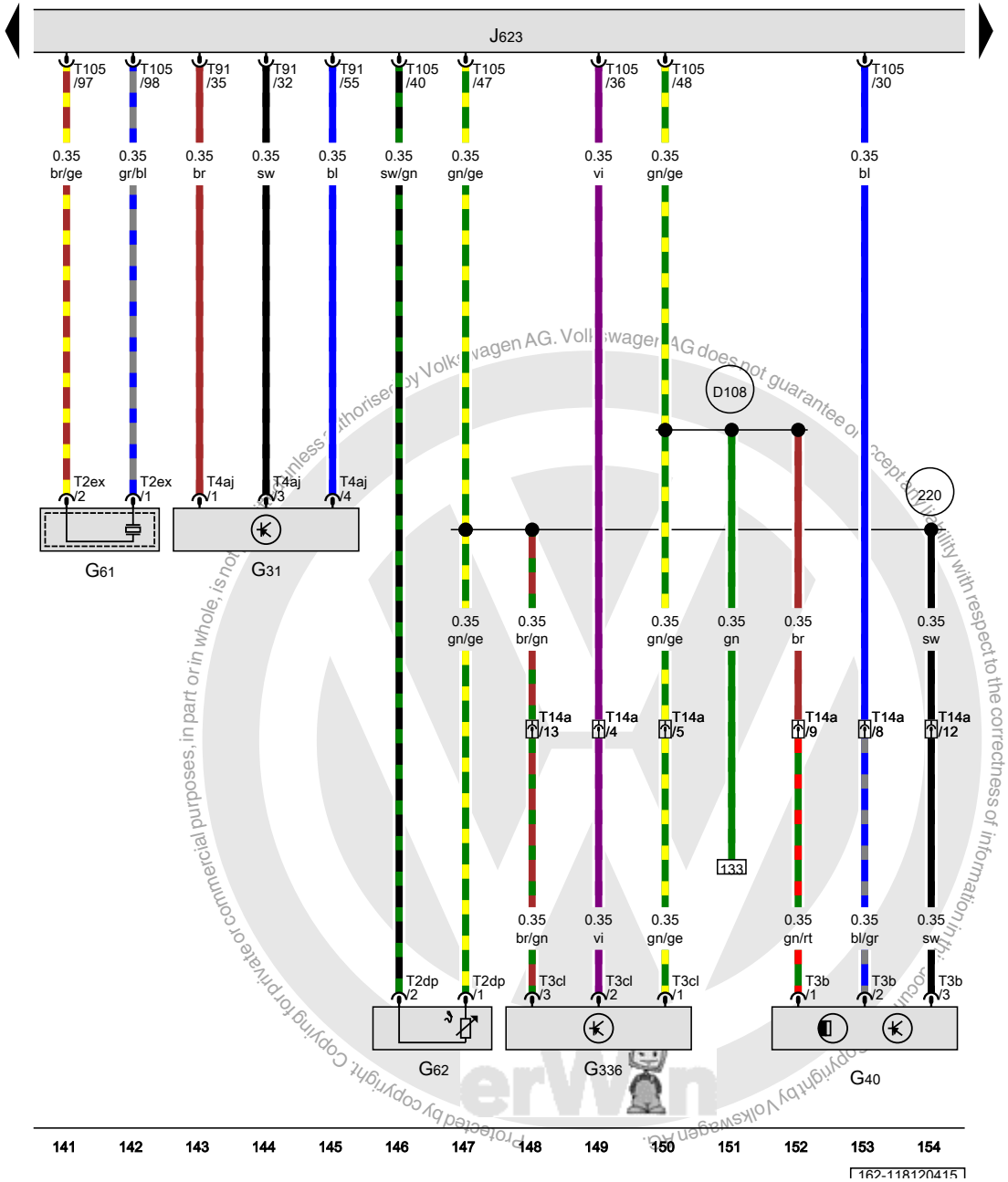

G31	Charge air pressure sensor
G40	Camshaft position sensor
G61	Knock sensor 1
G62	Engine coolant temperature sensor
G336	Intake manifold runner position sensor
J623	Engine control module
T2dp	Double connector
T2ex	Double connector
T3b	3-pin connector
T3cl	3-pin connector
T4aj	4-pin connector
T14a	14-pin connector
T91	91-pin connector
T105	105-pin connector
220	Sensor ground connection (in engine wiring harness)
D108	Connection 6 (in engine compartment wiring harness)

ws	=	white
sw	=	black
ro	=	red
rt	=	red
br	=	brown
gn	=	green
bl	=	blue
gr	=	grey
li	=	lilac
vi	=	lilac
ge	=	yellow
or	=	orange
rs	=	pink

Protected by copyright. Copying for private or commercial purposes, in part or in whole, is not permitted unless authorised by Volkswagen AG. Volkswagen AG does not guarantee or accept any liability with respect to the correctness of information in this document. Copyright by Volkswagen AG.

Engine control module, Cylinder 1 fuel injector, Cylinder 2 fuel injector, Cylinder 3 fuel injector, Cylinder 4 fuel injector, Fuel pressure regulator valve

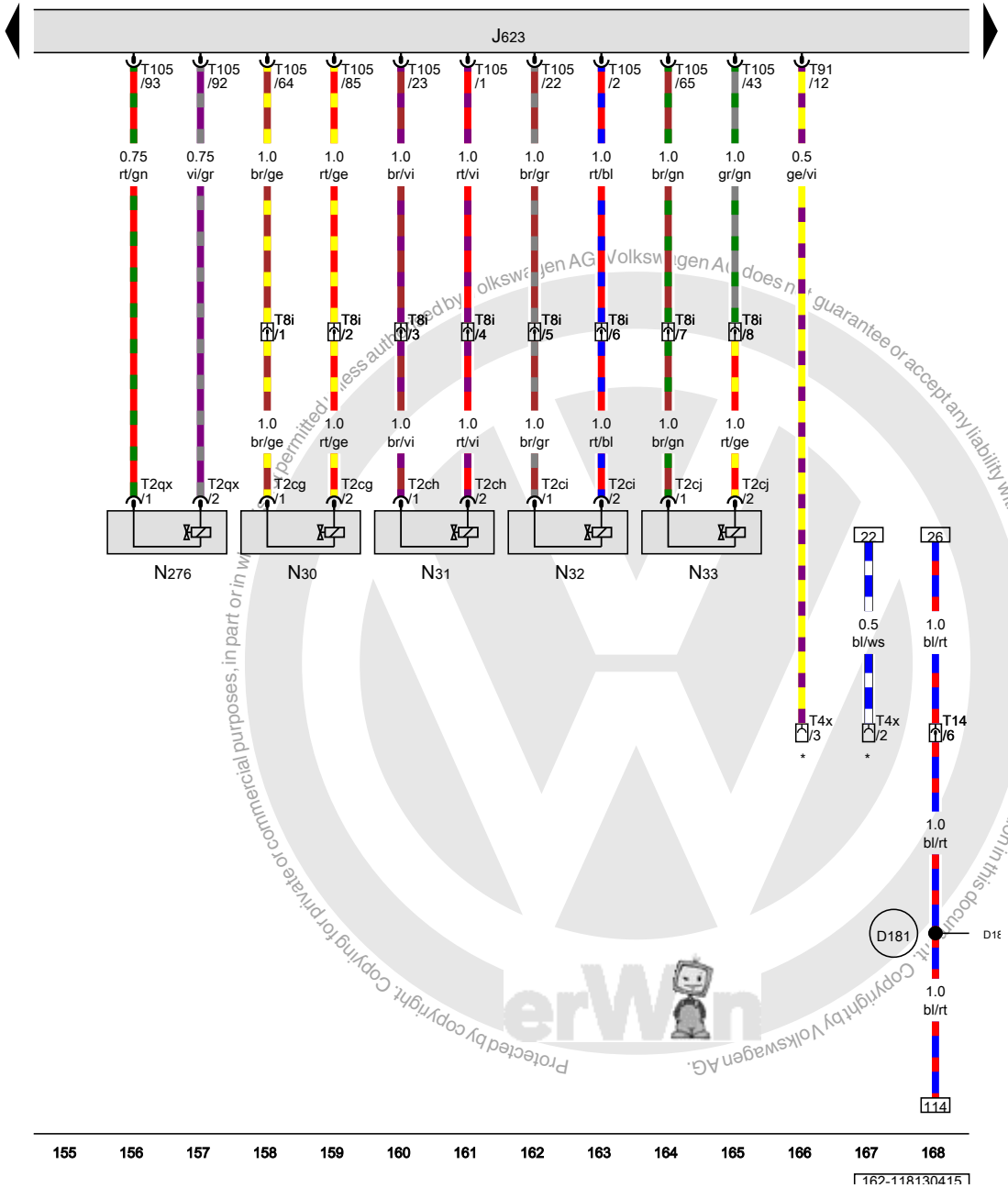

J623	Engine control module	
N30	Cylinder 1 fuel injector	
N31	Cylinder 2 fuel injector	
N32	Cylinder 3 fuel injector	
N33	Cylinder 4 fuel injector	
N276	Fuel pressure regulator valve	
T2cg	Double connector	
T2ch	Double connector	
T2ci	Double connector	
T2cj	Double connector	
T2qx	Double connector	
T4x	4-pin connector	
T8i	8-pin connector	
T14	14-pin connector	
T91	91-pin connector	
T105	105-pin connector	
D181	Connection 2 (87a) (in engine compartment wiring harness)	
*	Coolant fan connection	

ws	=	white
sw	=	black
ro	=	red
rt	=	red
br	=	brown
gn	=	green
bl	=	blue
gr	=	grey
li	=	lilac
vi	=	lilac
ge	=	yellow
or	=	orange
rs	=	pink

Protected by copyright. Copyright by Volkswagen AG. Volkswagen AG does not guarantee or accept any liability with respect to the correctness of information in this document. Copyright by Volkswagen AG. Protected by copyright. Copying for private or commercial purposes, in part or in whole, is not permitted unless authorised by Volkswagen AG.

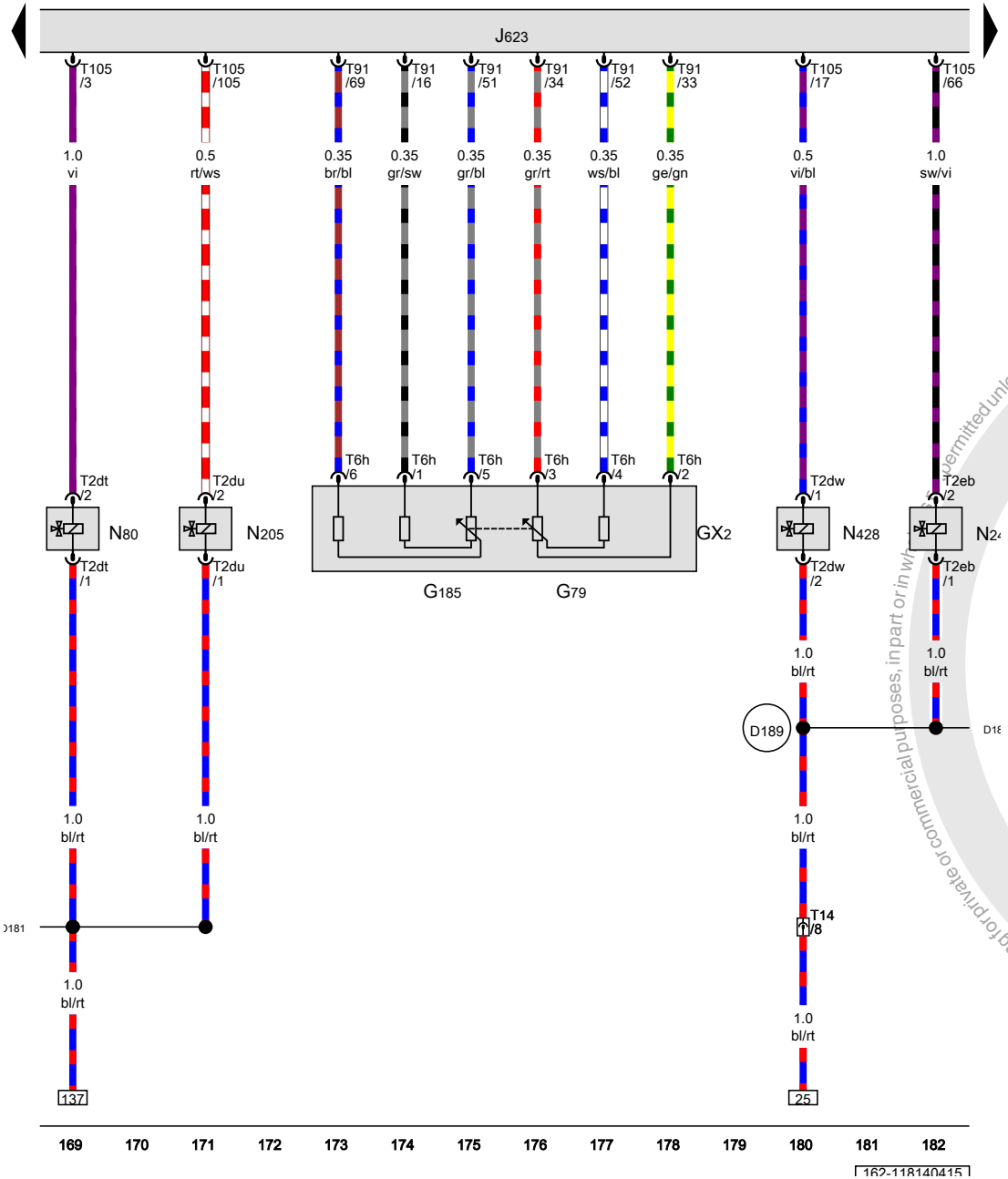

Accelerator pedal module, Accelerator pedal position sensor 2, Engine control module, EVAP canister purge regulator valve 1, Camshaft adjustment valve 1, Turbocharger recirculation valve, Oil pressure regulation valve

GX2	Accelerator pedal module
G79	Accelerator pedal position sensor
G185	Accelerator pedal position sensor 2
J623	Engine control module
N80	EVAP canister purge regulator valve 1
N205	Camshaft adjustment valve 1
N249	Turbocharger recirculation valve
N428	Oil pressure regulation valve
T2dt	Double connector
T2du	Double connector
T2dw	Double connector
T2eb	Double connector
T6h	6-pin connector
T14	14-pin connector
T91	91-pin connector
T105	105-pin connector
D181	Connection 2 (87a) (in engine compartment wiring harness)
D189	Connection 87a (in engine pre-wiring harness)

ws	=	white
sw	=	black
ro	=	red
rt	=	red
br	=	brown
gn	=	green
bl	=	blue
gr	=	grey
li	=	lilac
vi	=	lilac
ge	=	yellow
or	=	orange
rs	=	pink

Protected by copyright. Copying for private or commercial purposes, in part or in whole, is not permitted unless authorised by Volkswagen AG. Volkswagen AG does not guarantee or accept any liability with respect to the correctness of information in this document. Copyright by Volkswagen AG.

Oxygen sensor 1 before catalytic converter, Engine control module, Intake manifold runner control valve, Leak detection pump, Oxygen sensor heater

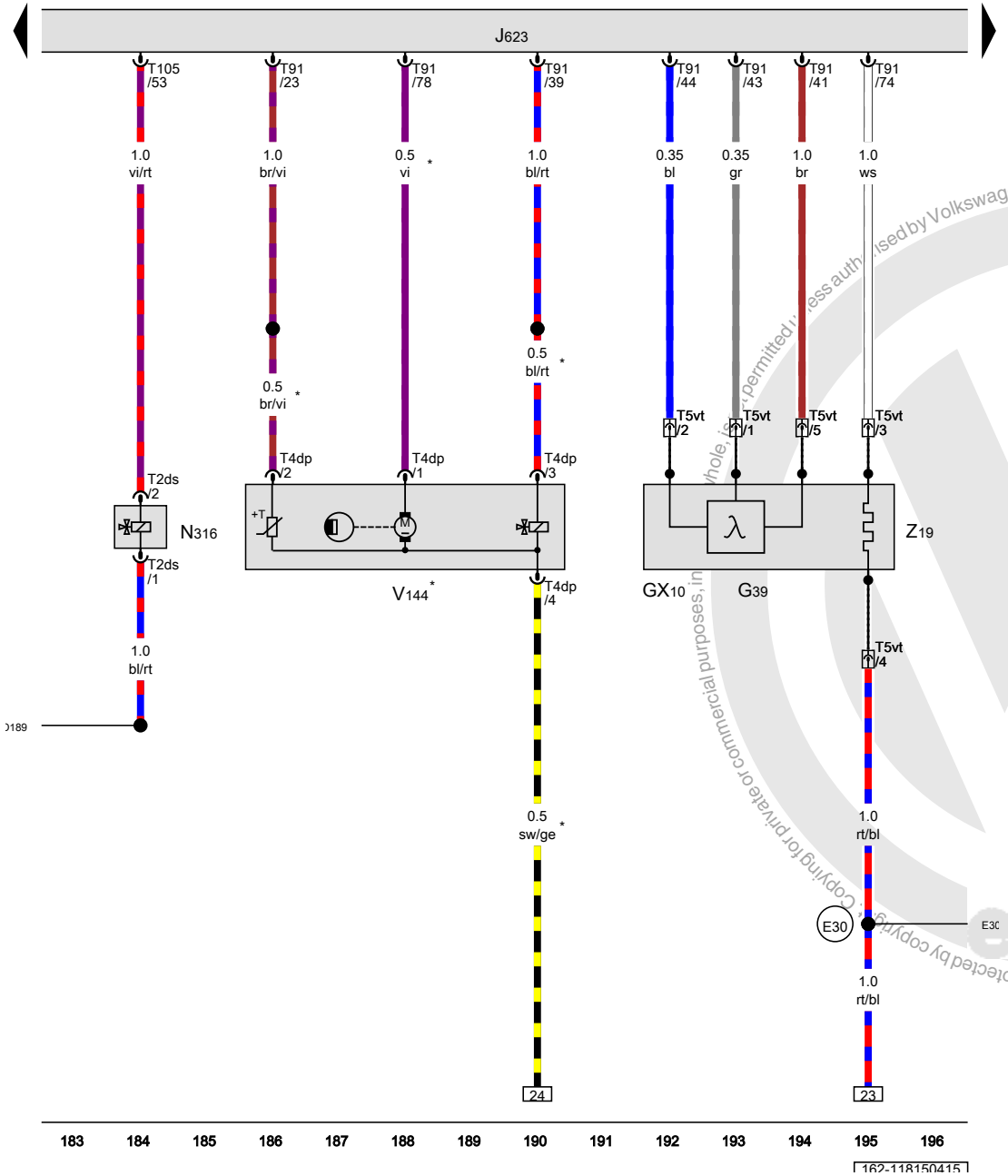

GX10	Oxygen sensor 1 before catalytic converter
G39	Heated oxygen sensor
J623	Engine control module
N316	Intake manifold runner control valve
T2ds	Double connector
T4dp	4-pin connector
T5vt	5-pin connector
T91	91-pin connector
T105	105-pin connector
V144	Leak detection pump
Z19	Oxygen sensor heater
(D189)	Connection 87a (in engine pre-wiring harness)
(E30)	Connection 87a (in engine wiring harness)
*	Depending on equipment

ws	=	white
sw	=	black
ro	=	red
rt	=	red
br	=	brown
gn	=	green
bl	=	blue
gr	=	grey
li	=	lilac
vi	=	lilac
ge	=	yellow
or	=	orange
rs	=	pink

Copyright by Volkswagen AG. Volkswagen AG does not guarantee or accept any liability with respect to the correctness of information in this document. Copying for private or commercial purposes, in whole, is not permitted unless authorised by Volkswagen AG.

Brake lamp switch, Brake pedal switch, Reduced oil pressure switch, Oxygen sensor 1 after catalytic converter, Clutch position sensor, Engine control module, Heater for oxygen sensor 1 after catalytic converter

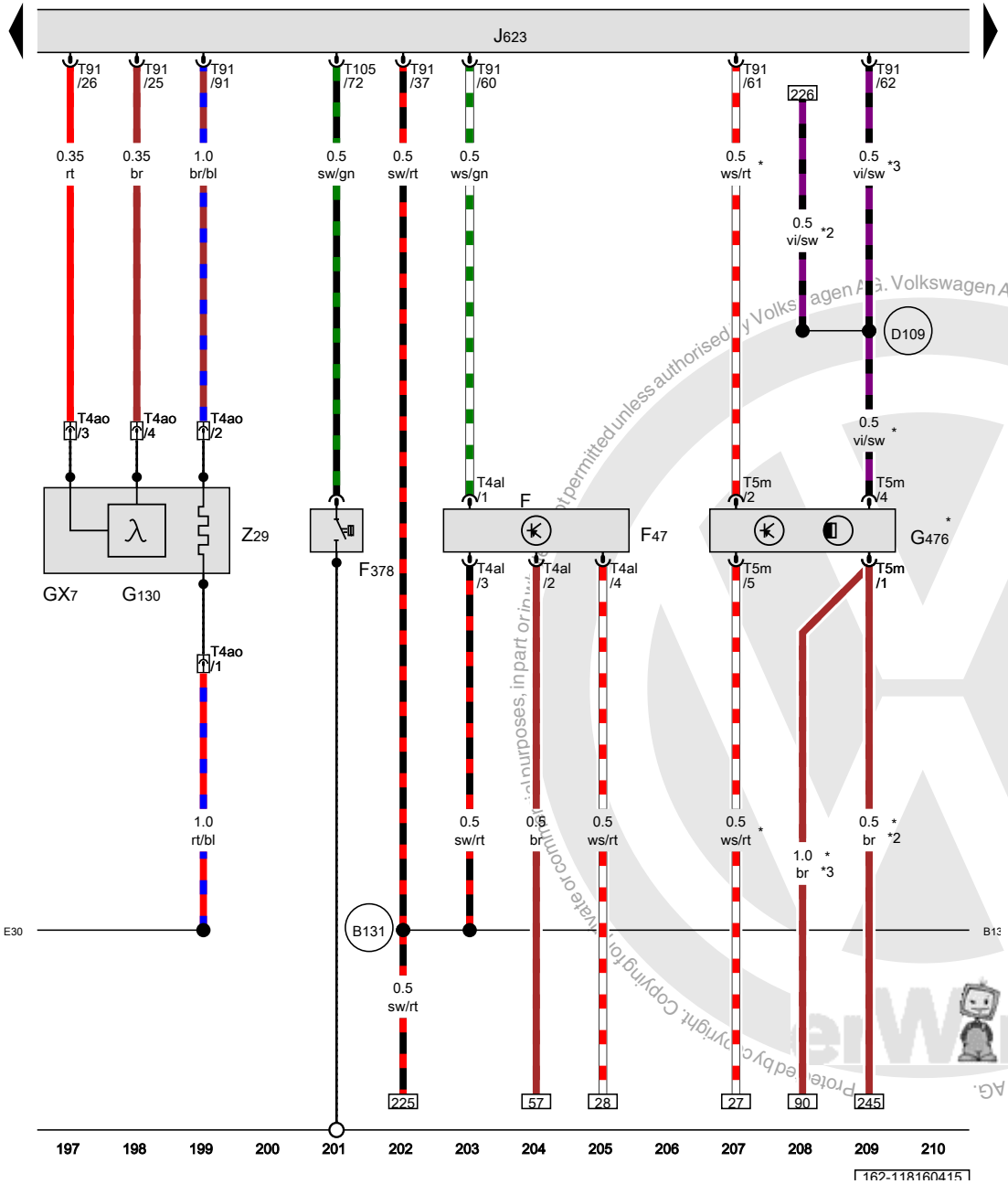

F	Brake lamp switch
F47	Brake pedal switch
F378	Reduced oil pressure switch
GX7	Oxygen sensor 1 after catalytic converter
G130	Oxygen sensor after three way catalytic converter
G476	Clutch position sensor
J623	Engine control module
T4al	4-pin connector
T4ao	4-pin connector
T5m	5-pin connector
T91	91-pin connector
T105	105-pin connector
Z29	Heater for oxygen sensor 1 after catalytic converter
B131	Connection 54 (in interior wiring harness)
D109	Connection 7 (in engine compartment wiring harness)
E30	Connection 87a (in engine wiring harness)
*	Only for vehicles with a manual transmission
*2	Not for USA
*3	USA only

ws	=	white
sw	=	black
ro	=	red
rt	=	red
br	=	brown
gn	=	green
bl	=	blue
gr	=	grey
li	=	lilac
vi	=	lilac
ge	=	yellow
or	=	orange
rs	=	pink

Protected by copyright. Copying for private or commercial purposes, in part or in whole, is not permitted unless authorised by Volkswagen AG. Volkswagen AG does not guarantee or accept any liability with respect to the correctness of information in this document. Copyright by Volkswagen AG.

Vehicle electrical control module system, Data bus on board diagnostic interface, Engine control module

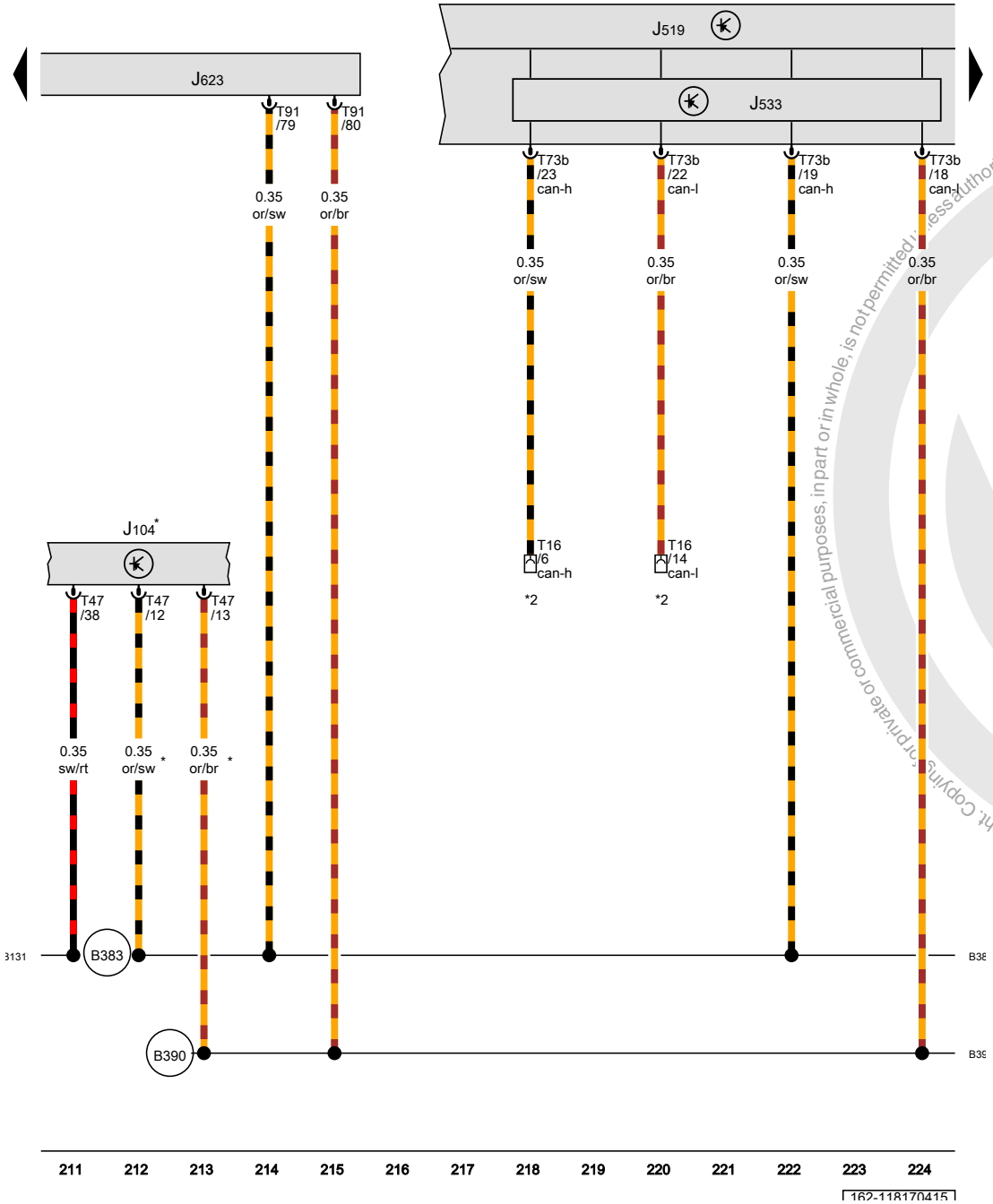

J104	ABS control module
J519	Vehicle electrical control module system
J533	Data bus on board diagnostic interface
J623	Engine control module
T16	16-pin connector
T47	47-pin connector
T73b	73-pin connector
T91	91-pin connector
B131	Connection 54 (in interior wiring harness)
B383	Powertrain CAN bus high connection 1 (in main wiring harness)
B390	Powertrain CAN bus low connection 1 (in main wiring harness)
*	Only for vehicles with ABS and ESP
*2	Diagnostic connector

ws	=	white
sw	=	black
ro	=	red
rt	=	red
br	=	brown
gn	=	green
bl	=	blue
gr	=	grey
li	=	lilac
vi	=	lilac
ge	=	yellow
or	=	orange
rs	=	pink

Protected by copyright. Copying for private or commercial purposes, in part or in whole, is not permitted unless authorised by Volkswagen AG. Volkswagen AG does not guarantee or accept any liability with respect to the correctness of information in this document. Copyright by Volkswagen AG.

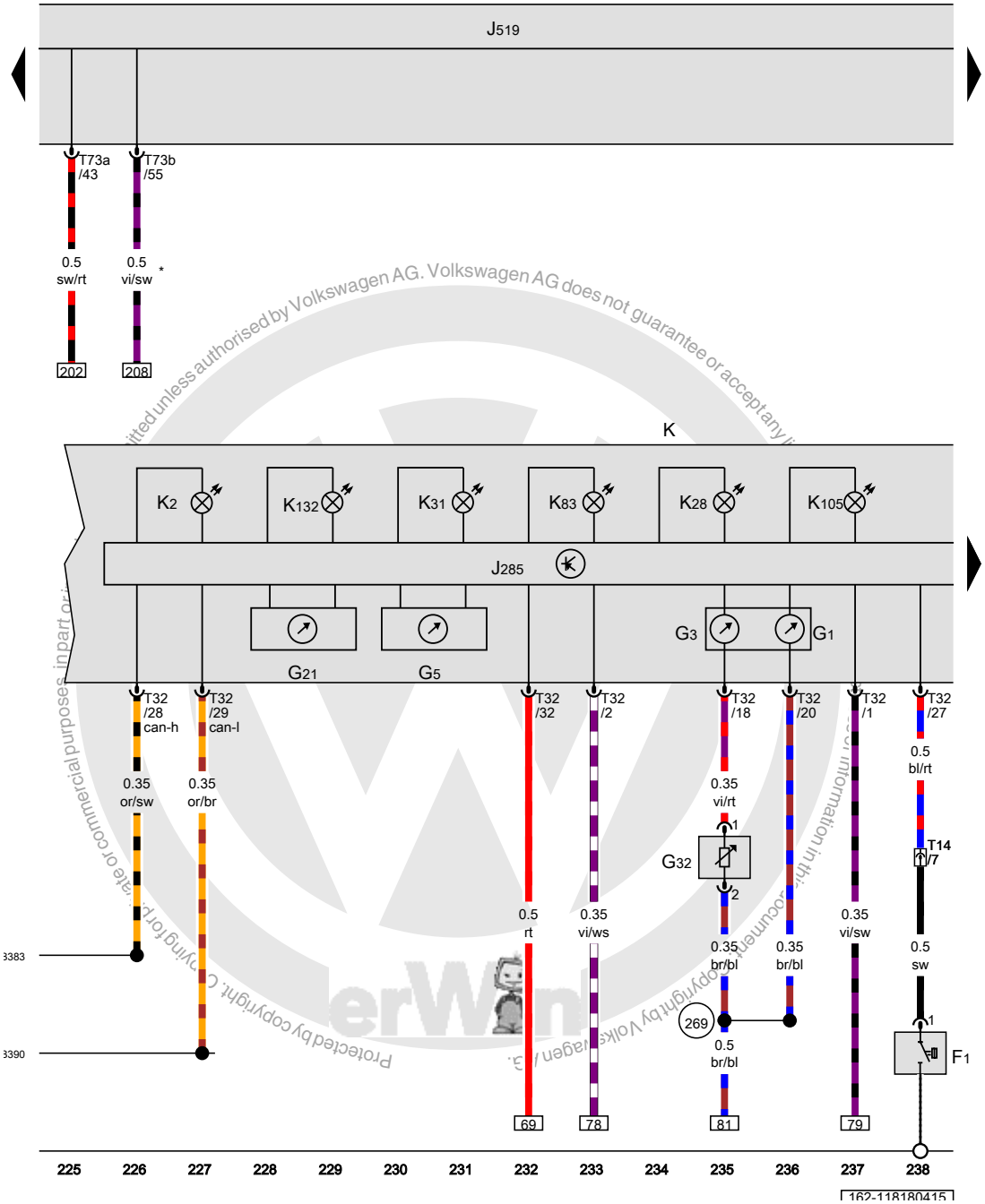

Oil pressure switch, Fuel gauge, Engine coolant temperature gauge, Tachometer, Speedometer, Instrument cluster control module, Vehicle electrical control module system, Generator indicator lamp, Engine coolant level/ temperature indicator lamp, Cruise control indicator lamp, Low fuel level indicator lamp, Electronic power control malfunction indicator lamp

F1	Oil pressure switch
G1	Fuel gauge
G3	Engine coolant temperature gauge
G5	Tachometer
G21	Speedometer
G32	Engine coolant level sensor
J285	Instrument cluster control module
J519	Vehicle electrical control module system
K	Instrument cluster
K2	Generator indicator lamp
K28	Engine coolant level/temperature indicator lamp
K31	Cruise control indicator lamp
K83	Malfunction indicator lamp
K105	Low fuel level indicator lamp
K132	Electronic power control malfunction indicator lamp
T14	14-pin connector
T32	32-pin connector
T73a	73-pin connector
T73b	73-pin connector
269	Sensor ground connection 1 (in instrument panel wiring harness)
B383	Powertrain CAN bus high connection 1 (in main wiring harness)
B390	Powertrain CAN bus low connection 1 (in main wiring harness)
*	Not for USA

ws	=	white
sw	=	black
ro	=	red
rt	=	red
br	=	brown
gn	=	green
bl	=	blue
gr	=	grey
li	=	lilac
vi	=	lilac
ge	=	yellow
or	=	orange
rs	=	pink

Protected by copyright. Copying for private or commercial purposes, in part or in whole, is not permitted unless authorised by Volkswagen AG. Volkswagen AG does not guarantee or accept any liability with respect to the correctness of information in this document. Copyright by Volkswagen AG.

Oil level thermal sensor, Instrument cluster control module, Vehicle electrical control module system

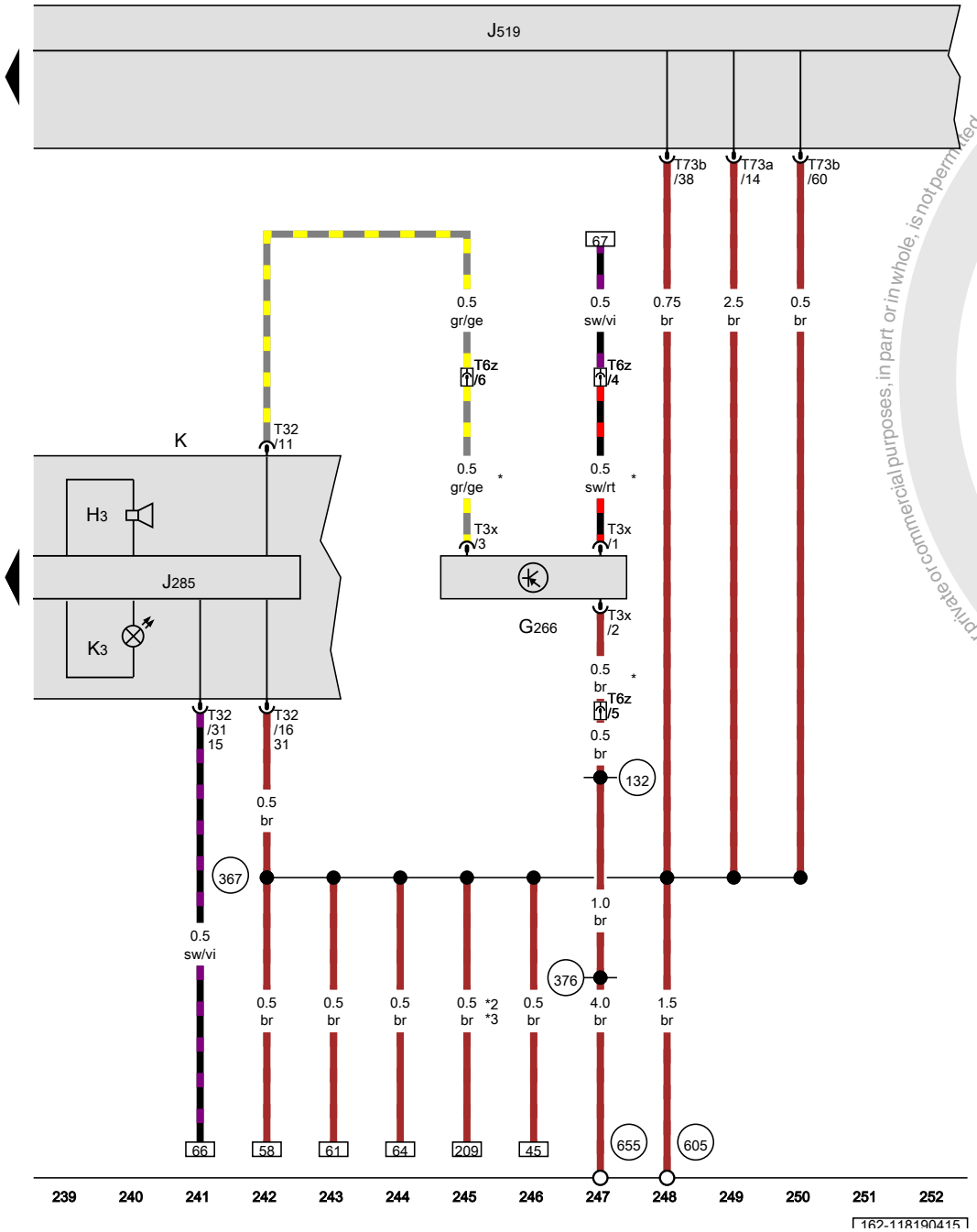

G266	Oil level thermal sensor
H3	Warning buzzer and tone
J285	Instrument cluster control module
J519	Vehicle electrical control module system
K	Instrument cluster
K3	Oil pressure indicator lamp
T3x	3-pin connector
T6z	6-pin connector, near the left headlamp
T32	32-pin connector
T73a	73-pin connector
T73b	73-pin connector
132	Ground connection 3 (in engine compartment wiring harness)
367	Ground connection 2 (in main wiring harness)
376	Ground connection 11 (in main wiring harness)
605	Ground connection on upper steering column
655	Ground connection on left headlamp
*	Only for vehicles with flexible service interval reminder
*2	Only for vehicles with a manual transmission
*3	Not for USA

ws	=	white
sw	=	black
ro	=	red
rt	=	red
br	=	brown
gn	=	green
bl	=	blue
gr	=	grey
li	=	lilac
vi	=	lilac
ge	=	yellow
or	=	orange
rs	=	pink

Protected by copyright. Copying for private or commercial purposes, in part or in whole, is not permitted unless authorised by Volkswagen AG. Volkswagen AG does not guarantee or accept any liability with respect to the correctness of information in this document. Copyright by Volkswagen AG.

2.0L gasoline engine , CPPA,(0GT)

from December 2012

Protected by copyright. Copying for private or commercial purposes, in part or in whole, is not permitted unless authorised by Volkswagen AG. Volkswagen AG does not guarantee or accept any liability with respect to the correctness of information in this document. Copyright by Volkswagen AG.

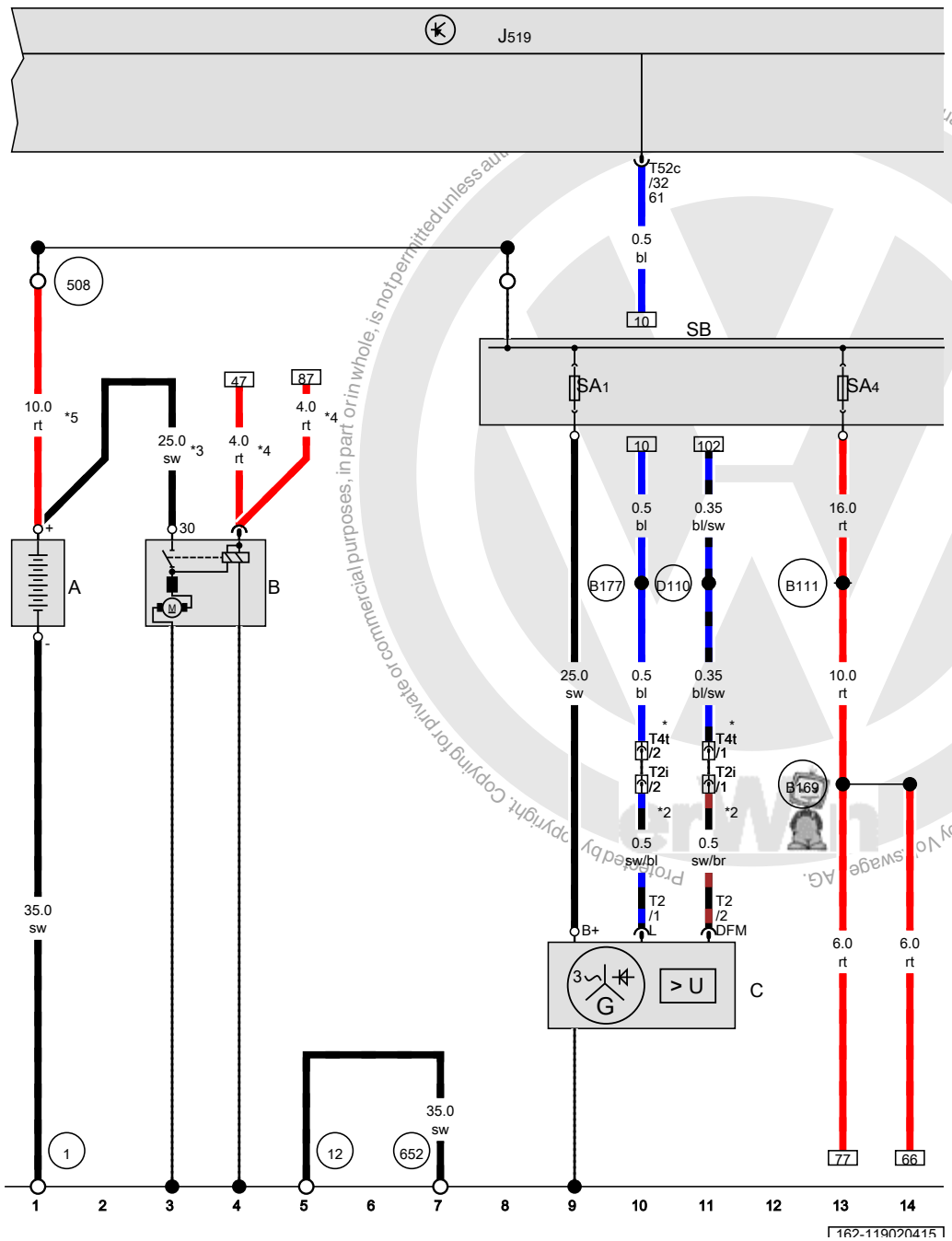

Battery, Starter, Generator, Vehicle electrical control module system, Fuse panel B

A	Battery
B	Starter
C	Generator
J519	Vehicle electrical control module system
SA1	Fuse 1 (on fuse panel A)
SA4	Fuse 4 (on fuse panel A)
SB	Fuse panel B
T2	Double connector
T2i	Double connector, near the starter
T4t	4-pin connector, near the starter
T52c	52-pin connector
1	Ground strap, battery to body
12	Ground connection in engine compartment, left
508	Terminal 30 threaded connection (on E-box)
652	Transmission/engine ground connection
B111	Positive connection 1 (30a) (in interior wiring harness)
B169	Positive connection 1 (30) (in interior wiring harness)
B177	Connection 61 (in interior wiring harness)
D110	Connection 8 (in engine compartment wiring harness)
*	Only for vehicles with A/C system
*2	Only for vehicles without an A/C system
*3	35.0 diameter possible
*4	Depending on equipment
*5	16.0 diameter possible

ws	=	white
sw	=	black
ro	=	red
rt	=	red
br	=	brown
gn	=	green
bl	=	blue
gr	=	grey
li	=	lilac
vi	=	lilac
ge	=	yellow
or	=	orange
rs	=	pink

Copyright. Copying for private or commercial purposes, in part or in whole, is not permitted unless authorised. Protected by Copyright. Volkswagen AG. We guarantee or accept any liability with respect to the correctness of information in this document.

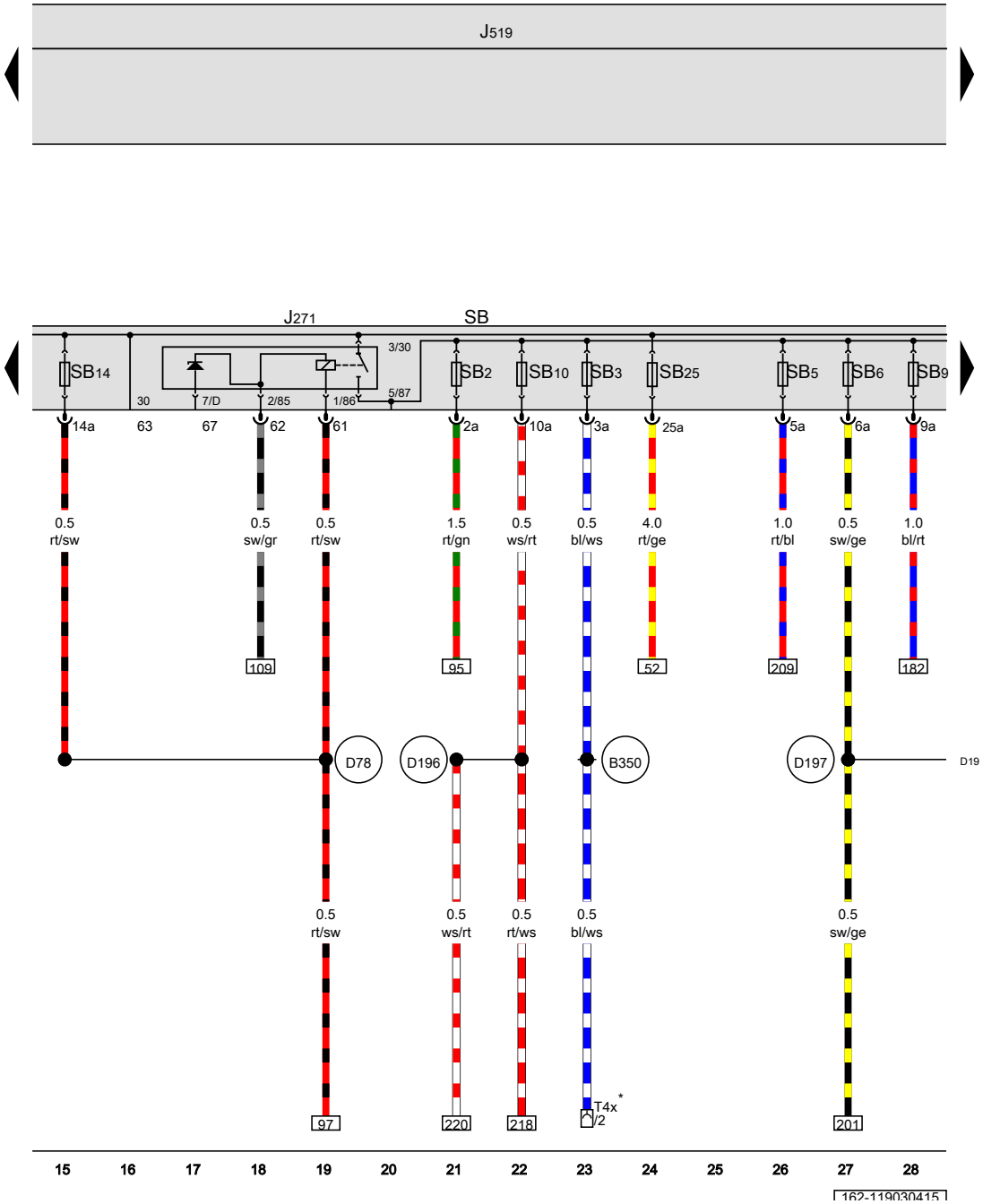

Motronic engine control module power supply relay, Vehicle electrical control module system, Fuse panel B, Fuse 14 (on fuse panel B)

J271	Motronic engine control module power supply relay
J519	Vehicle electrical control module system
SB	Fuse panel B
SB2	Fuse 2 (on fuse panel B)
SB3	Fuse 3 (on fuse panel B)
SB5	Fuse 5 (on fuse panel B)
SB6	Fuse 6 (on fuse panel B)
SB9	Fuse 9 (on fuse panel B)
SB10	Fuse 10 (on fuse panel B)
SB14	Fuse 14 (on fuse panel B)
SB25	Fuse 25 (on fuse panel B)
T4x	4-pin connector
B350	Positive connection 1 (87a) (in main wiring harness)
D78	Positive connection 1 (30a) (in engine compartment wiring harness)
D196	Connection 87a (in engine pre-wiring harness) 2
D197	Connection 5 (87a) (in engine compartment wiring harness)
*	Coolant fan connection

ws	=	white
sw	=	black
ro	=	red
rt	=	red
br	=	brown
gn	=	green
bl	=	blue
gr	=	grey
li	=	lilac
vi	=	lilac
ge	=	yellow
or	=	orange
rs	=	pink

Protected by copyright. Copying for private or commercial purposes, in part or in whole, is not permitted unless authorised by Volkswagen AG. Volkswagen AG does not guarantee or accept any liability with respect to the correctness of information in this document. Copyright by Volkswagen AG.

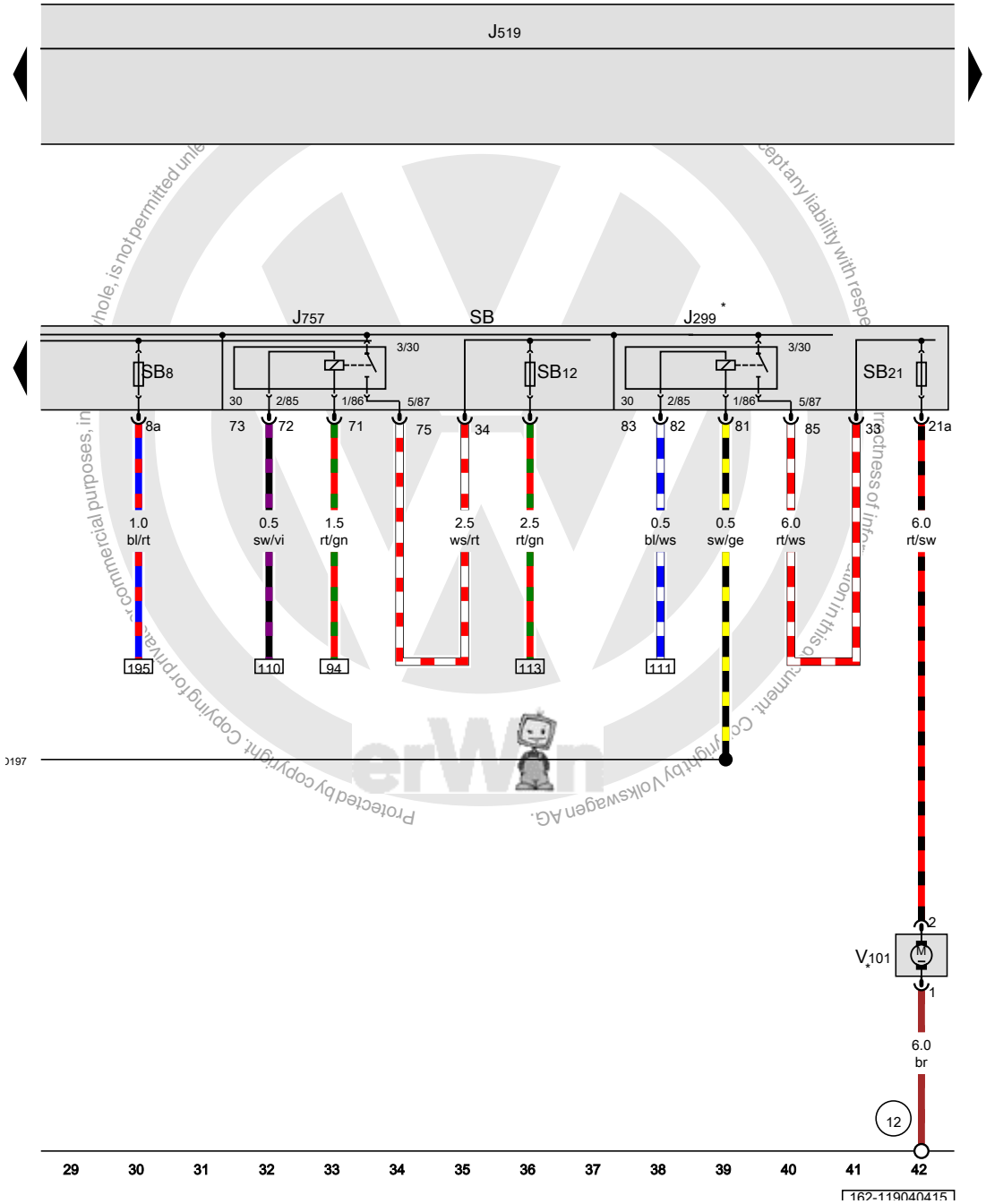

Secondary air injection pump relay, Vehicle electrical control module system, Engine component power supply relay, Fuse panel B, Secondary air injection pump motor

J299	Secondary air injection pump relay
J519	Vehicle electrical control module system
J757	Engine component power supply relay
SB	Fuse panel B
SB8	Fuse 8 (on fuse panel B)
SB12	Fuse 12 (on fuse panel B)
SB21	Fuse 21 (on fuse panel B)
V101	Secondary air injection pump motor
12	Ground connection in engine compartment, left
D197	Connection 5 (87a) (in engine compartment wiring harness)
*	USA only

ws	=	white
sw	=	black
ro	=	red
rt	=	red
br	=	brown
gn	=	green
bl	=	blue
gr	=	grey
li	=	lilac
vi	=	lilac
ge	=	yellow
or	=	orange
rs	=	pink

Vehicle electrical control module system, Terminal 15 power supply relay 2, Terminal 50 power supply relay

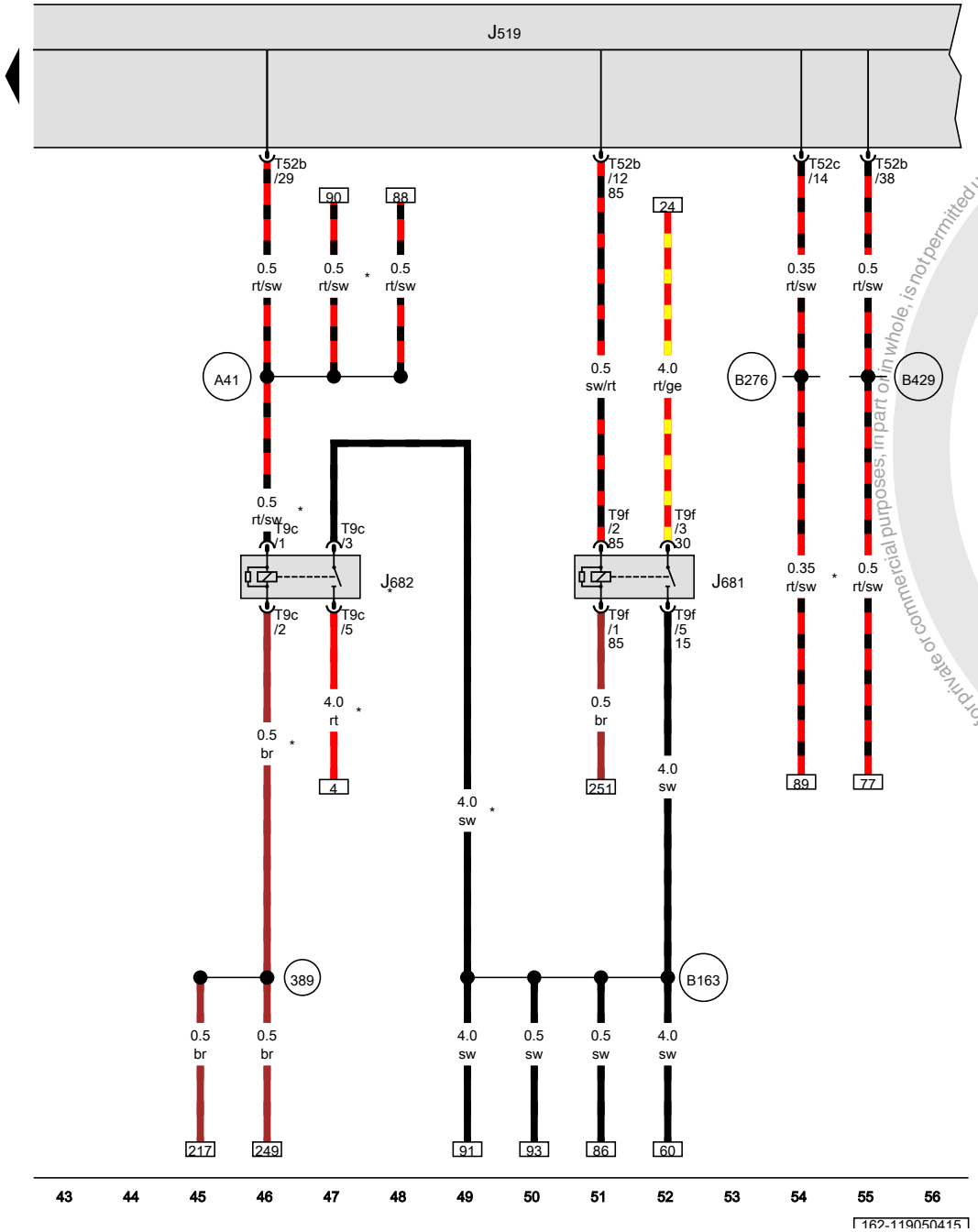

J519	Vehicle electrical control module system
J681	Terminal 15 power supply relay 2
J682	Terminal 50 power supply relay
T9c	9-pin connector
T9f	9-pin connector
T52b	52-pin connector
T52c	52-pin connector
389	Ground connection 24 (in main wiring harness)
A41	Positive connection (50) (in instrument panel wiring harness)
B163	Positive connection 1 (15) (in interior wiring harness)
B276	Positive connection (50) (in main wiring harness)
B429	Fuel pump relay connection (in main wiring harness)
*	Depending on equipment

ws	=	white
sw	=	black
ro	=	red
rt	=	red
br	=	brown
gn	=	green
bl	=	blue
gr	=	grey
li	=	lilac
vi	=	lilac
ge	=	yellow
or	=	orange
rs	=	pink

Protected by copyright. Copying for private or commercial purposes, in part or in whole, is not permitted unless authorised by Volkswagen AG. Volkswagen AG does not guarantee or accept any liability with respect to the correctness of information in this document. Copyright by Volkswagen AG.

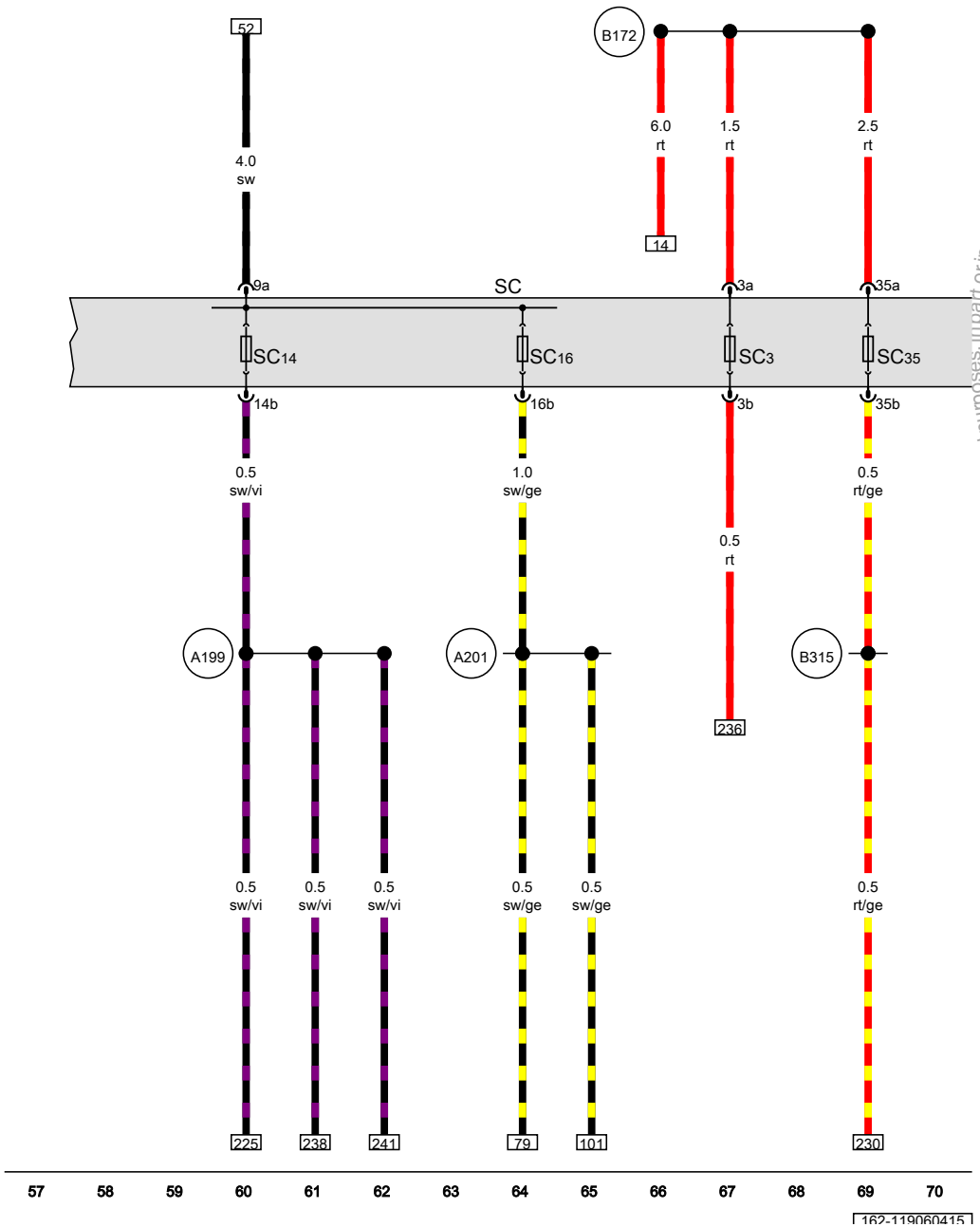

Fuse panel C

SC	Fuse panel C
SC3	Fuse 3 (on fuse panel C)
SC14	Fuse 14 (on fuse panel C)
SC16	Fuse 16 (on fuse panel C)
SC35	Fuse 35 (on fuse panel C)
A199	Positive connection 4 (15a) (in instrument panel wiring harness)
A201	Positive connection 6 (15a) (in instrument panel wiring harness)
B172	Positive connection 4 (30) (in interior wiring harness)
B315	Positive connection 1 (30a) (in main wiring harness)

ws	=	white
sw	=	black
ro	=	red
rt	=	red
br	=	brown
gn	=	green
bl	=	blue
gr	=	grey
li	=	lilac
vi	=	lilac
ge	=	yellow
or	=	orange
rs	=	pink

Protected by copyright. Copying for private or commercial purposes, in part or in whole, is not permitted unless authorised by Volkswagen AG. Volkswagen AG does not guarantee or accept any liability with respect to the correctness of information in this document. Copyright by Volkswagen AG.

Fuel level sensor, Transfer fuel pump, Fuel pump control module, Fuse panel C

G	Fuel level sensor
G6	Transfer fuel pump
J538	Fuel pump control module
SC	Fuse panel C
SC47	Fuse 47 (on fuse panel C)
T5b	5-pin connector
T10n	10-pin connector
196	Ground connection 3 (in rear wiring harness)
682	Ground connection 2 in right rear side panel
B170	Positive connection 2 (30) (in interior wiring harness)

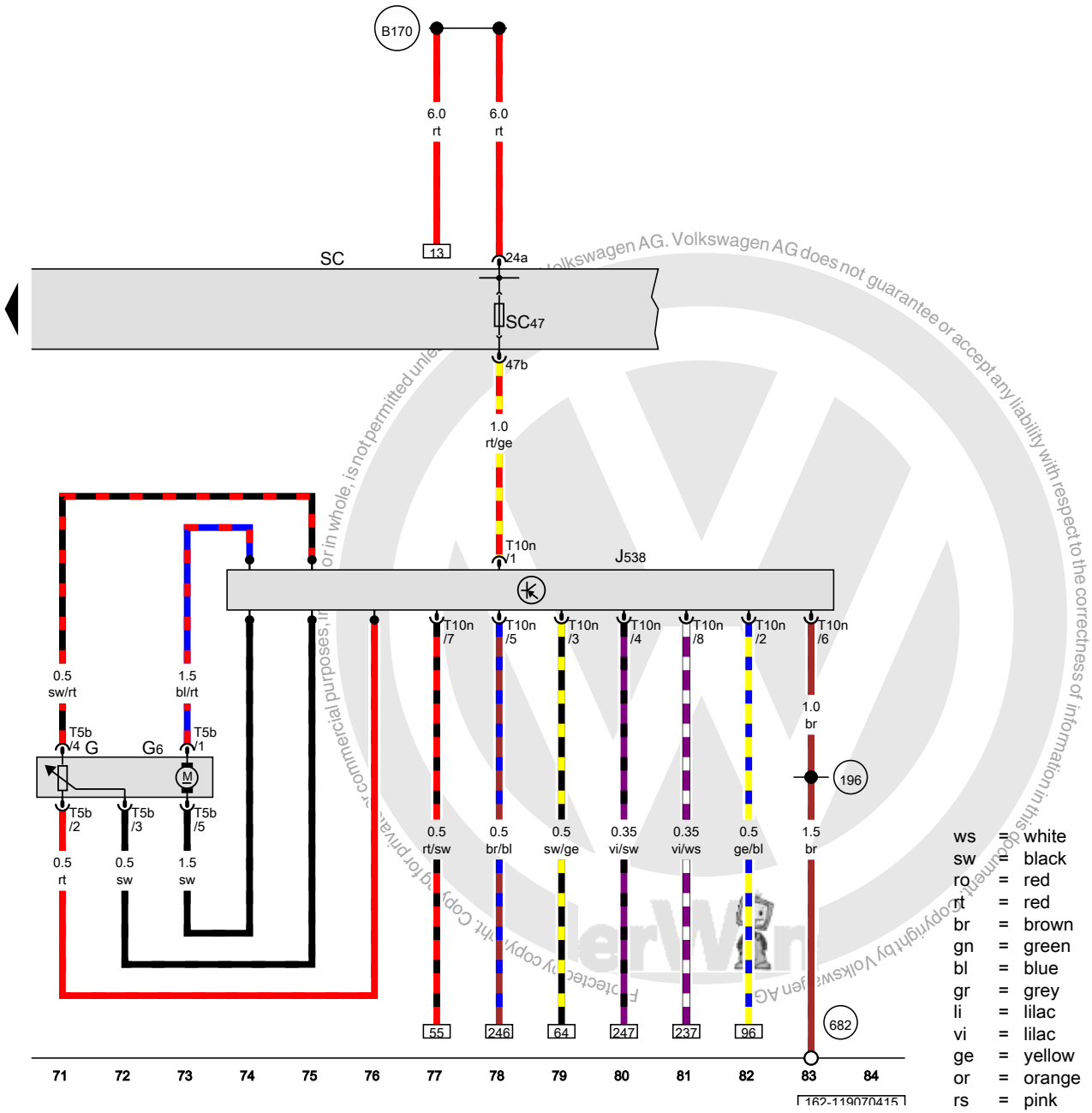

ws	=	white
sw	=	black
ro	=	red
rt	=	red
br	=	brown
gn	=	green
bl	=	blue
gr	=	grey
li	=	lilac
vi	=	lilac
ge	=	yellow
or	=	orange
rs	=	pink

Volkswagen AG. Volkswagen AG does not guarantee or accept any liability with respect to the correctness of information in this document. Copyright by Volkswagen AG. Protected by copyright. Copy for private or commercial purposes, in whole or in part, is not permitted unless

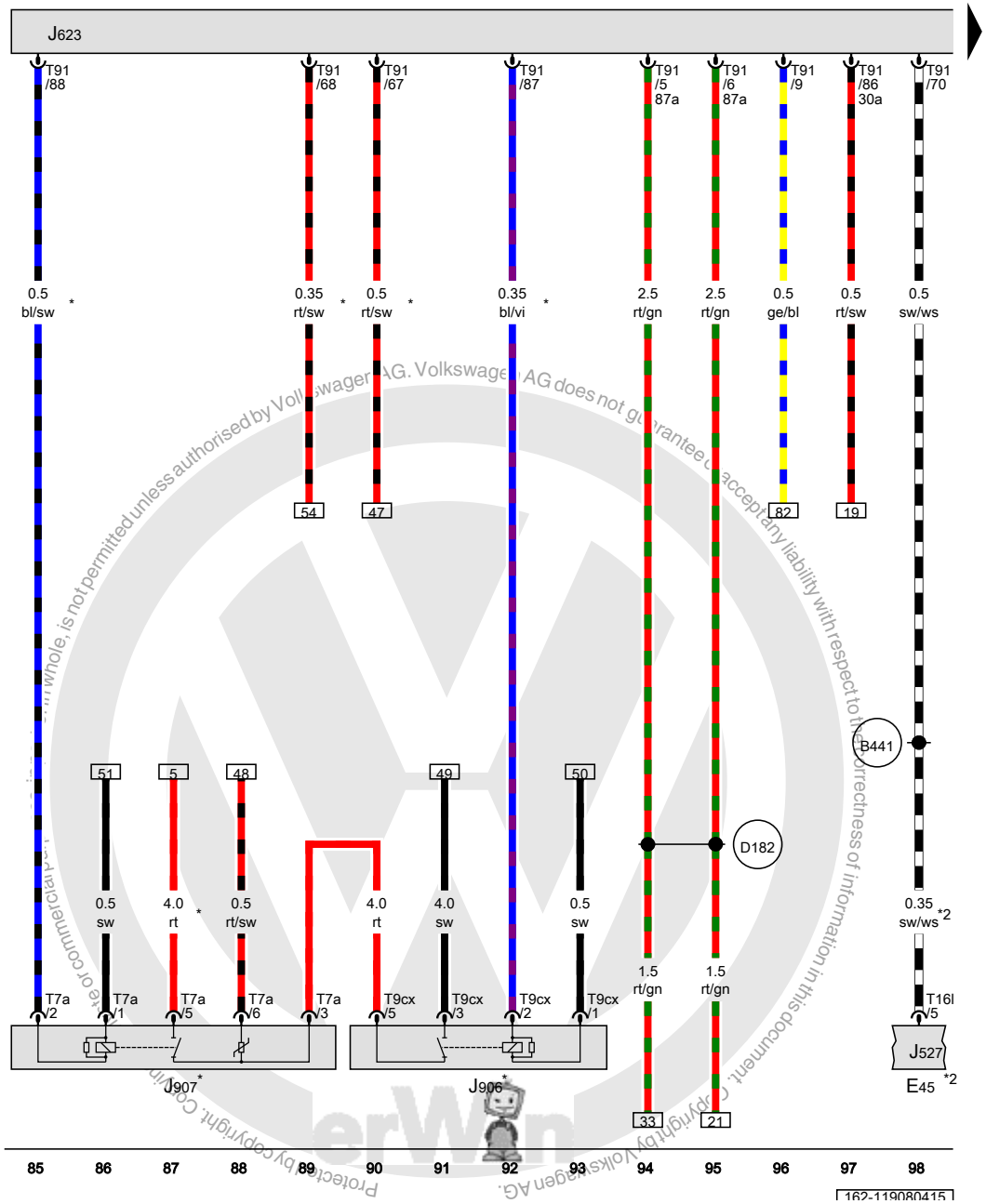

Engine control module

E45	Cruise control switch
J527	Steering column electronics control module
J623	Engine control module
J906	Starter relay 1
J907	Starter relay 2
T7a	7-pin connector
T9cx	9-pin connector
T16l	16-pin connector
T91	91-pin connector
B441	Cruise control connection (in main wiring harness)
D182	Connection 3 (87a) (in engine compartment wiring harness)
*	Depending on equipment
*2	Only for vehicles with cruise control

ws	=	white
sw	=	black
ro	=	red
rt	=	red
br	=	brown
gn	=	green
bl	=	blue
gr	=	grey
li	=	lilac
vi	=	lilac
ge	=	yellow
or	=	orange
rs	=	pink

Protected by copyright. Copyright by Volkswagen AG.

Protected by copyright. Copying for private or commercial purposes, in part or in whole, is not permitted unless authorised by Volkswagen AG. Volkswagen AG does not guarantee or accept any liability with respect to the correctness of information in this document. Copyright by Volkswagen AG.

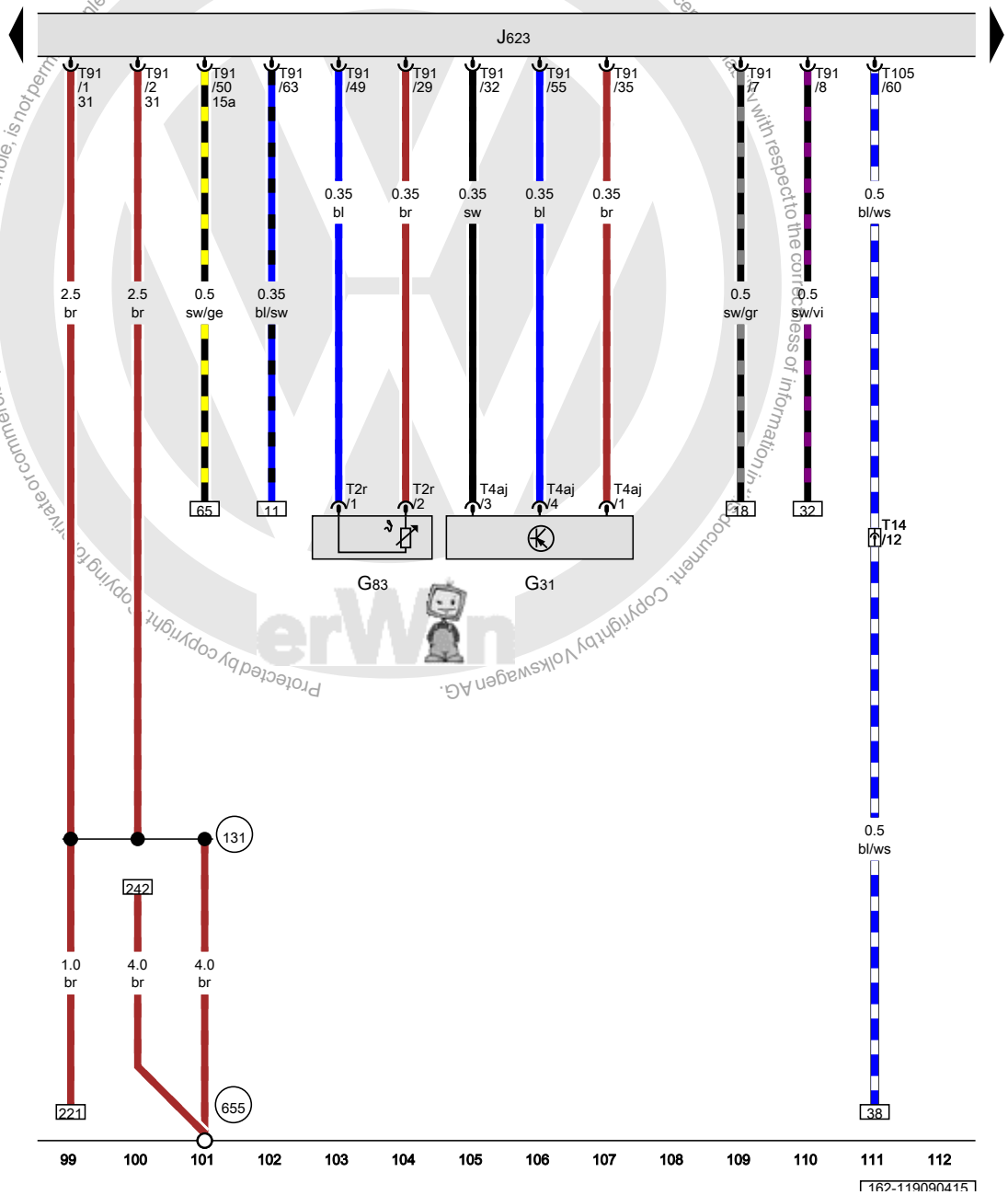

Charge air pressure sensor, Engine coolant temperature sensor on radiator outlet, Engine control module

G31	Charge air pressure sensor
G83	Engine coolant temperature sensor on radiator outlet
J623	Engine control module
Q	Spark plugs
T2r	Double connector
T4aj	4-pin connector
T14	14-pin connector
T91	91-pin connector
T105	105-pin connector
131	Ground connection 2 (in engine compartment wiring harness)
655	Ground connection on left headlamp

ws	=	white
sw	=	black
ro	=	red
rt	=	red
br	=	brown
gn	=	green
bl	=	blue
gr	=	grey
li	=	lilac
vi	=	lilac
ge	=	yellow
or	=	orange
rs	=	pink

Engine control module, Ignition coil 1 with power output stage, Ignition coil 2 with power output stage, Ignition coil 3 with power output stage, Ignition coil 4 with power output stage

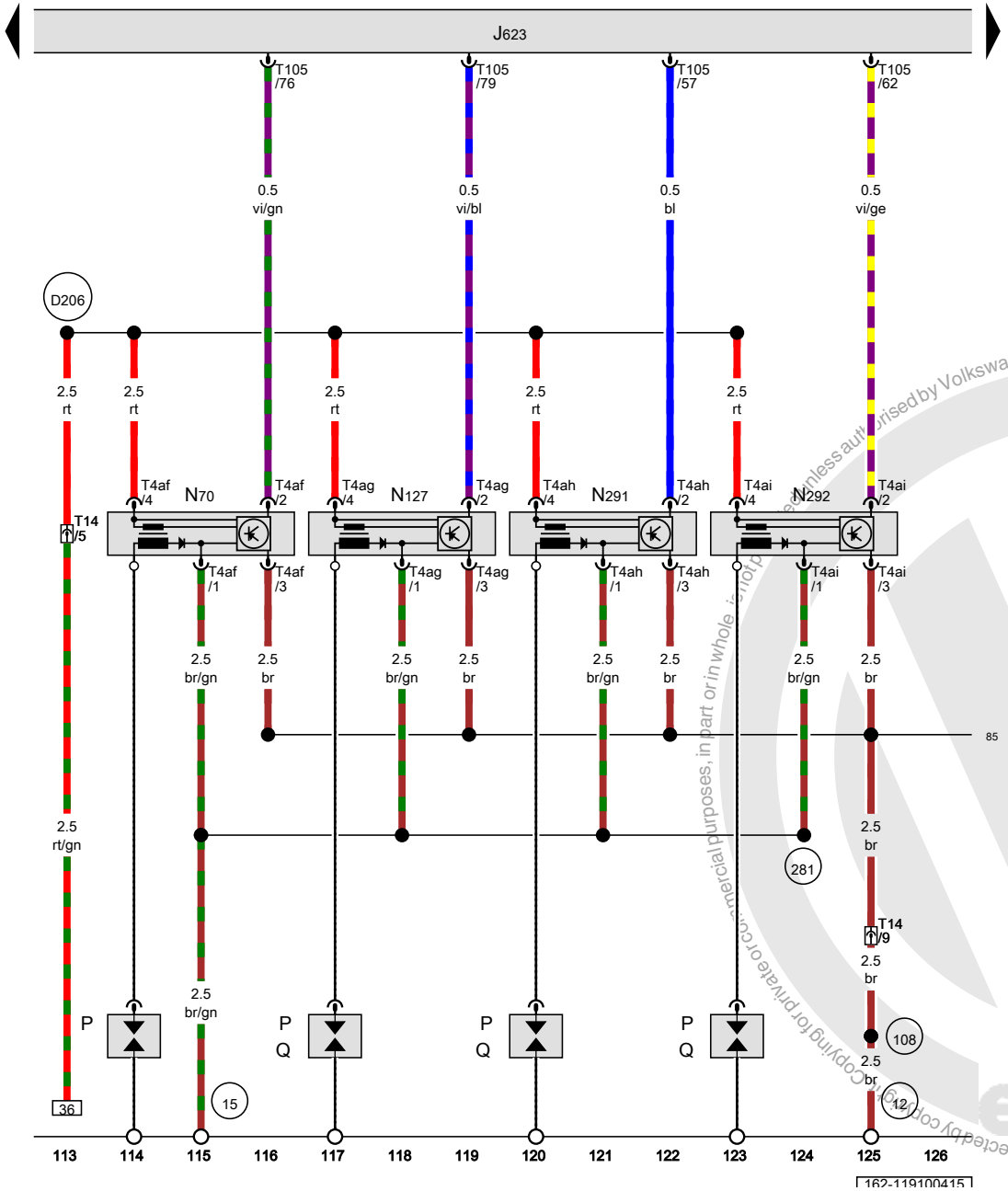

J623	Engine control module
N70	Ignition coil 1 with power output stage
N127	Ignition coil 2 with power output stage
N291	Ignition coil 3 with power output stage
N292	Ignition coil 4 with power output stage
P	Spark plug connectors
Q	Spark plugs
T4af	4-pin connector
T4ag	4-pin connector
T4ah	4-pin connector
T4ai	4-pin connector
T14	14-pin connector
T105	105-pin connector
12	Ground connection in engine compartment, left
15	Ground connection on cylinder head
85	Ground connection 1 (in engine compartment wiring harness)
108	Ground connection 2 (in left front wiring harness)
281	Ground connection 1 (in engine pre-wiring harness)
D206	Connection 87a (in engine pre-wiring harness) 4

ws	=	white
sw	=	black
ro	=	red
rt	=	red
br	=	brown
gn	=	green
bl	=	blue
gr	=	grey
li	=	lilac
vi	=	lilac
ge	=	yellow
or	=	orange
rs	=	pink

Protected by copyright. Copying for private or commercial purposes, in part or in whole, is not permitted unless authorised by Volkswagen AG. Volkswagen AG does not guarantee or accept any liability with respect to the correctness of information in this document. Copyright by Volkswagen AG.

EPC throttle drive, Charge air pressure actuator position sensor, Engine control module, After-run coolant pump

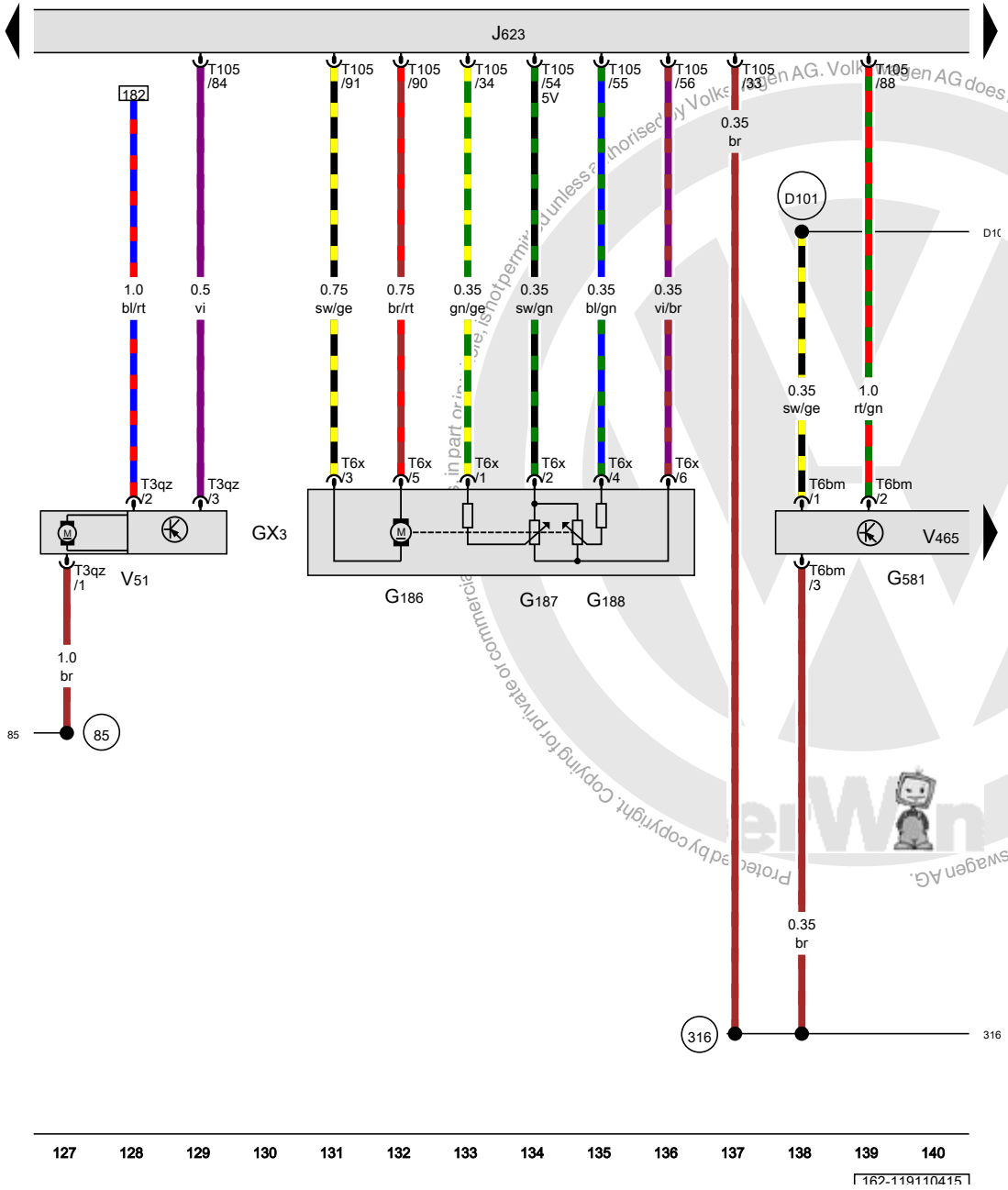

GX3	Throttle valve control module
G186	EPC throttle drive
G187	EPC throttle drive angle sensor 1
G188	EPC throttle drive angle sensor 2
G581	Charge air pressure actuator position sensor
J623	Engine control module
T3qz	3-pin connector
T6bm	6-pin connector
T6x	6-pin connector
T105	105-pin connector
V51	After-run coolant pump
V465	Charge air pressure actuator
85	Ground connection 1 (in engine compartment wiring harness)
316	Sensor ground connection 2 (in engine wiring harness)
D101	Connection 1 (in engine compartment wiring harness)

ws	=	white
sw	=	black
ro	=	red
rt	=	red
br	=	brown
gn	=	green
bl	=	blue
gr	=	grey
li	=	lilac
vi	=	lilac
ge	=	yellow
or	=	orange
rs	=	pink

Protected by copyright. Copying for private or commercial purposes, in part or in whole, is not permitted unless authorised by Volkswagen AG. Volkswagen AG does not guarantee or accept any liability with respect to the correctness of information in this document. Copyright by Volkswagen AG.

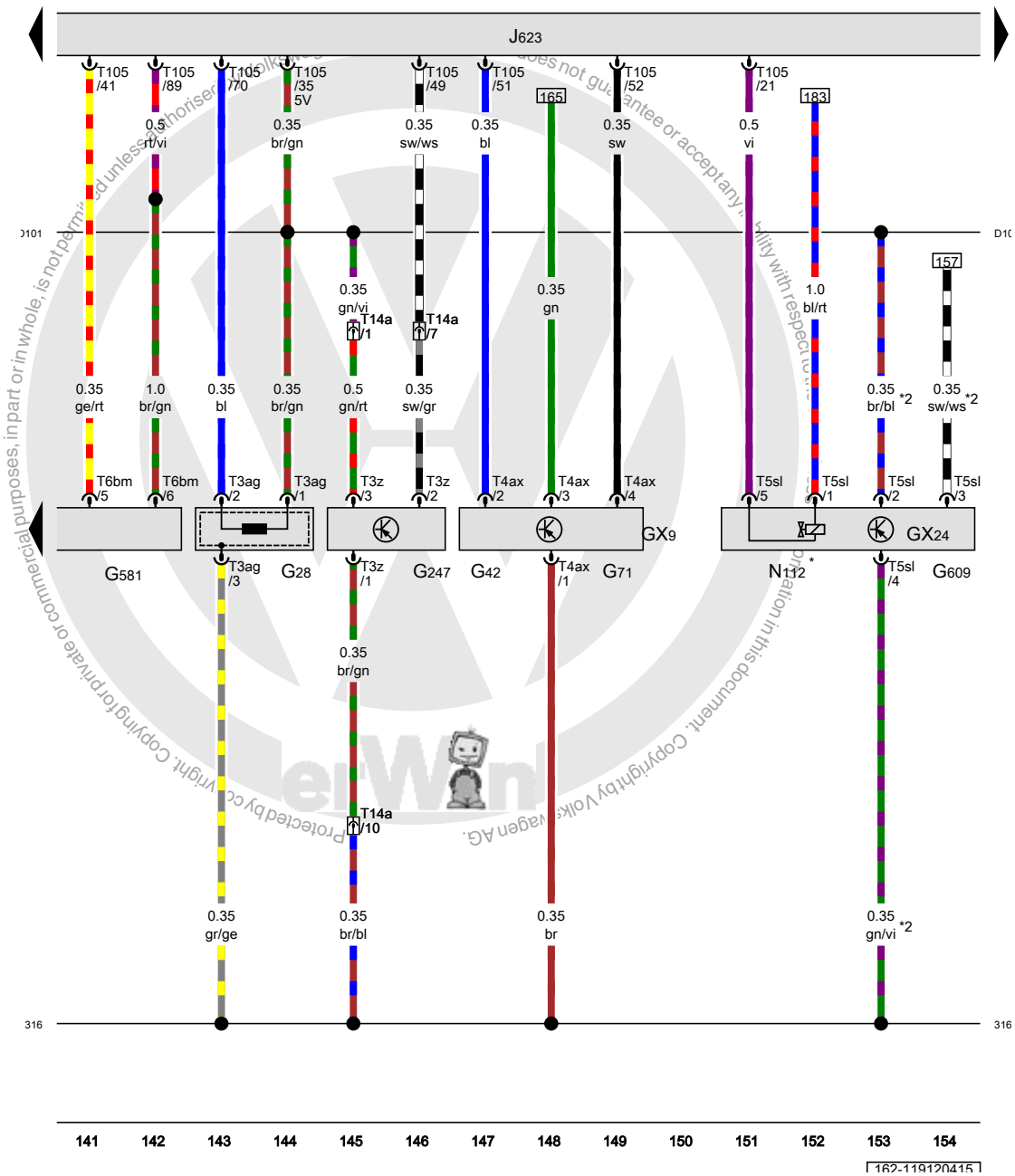

Intake manifold sensor, Secondary air system, Engine speed sensor, Fuel pressure sensor, Charge air pressure actuator position sensor, Secondary air injection sensor 1, Engine control module

GX9	Intake manifold sensor
GX24	Secondary air system
G28	Engine speed sensor
G42	Intake air temperature sensor
G71	Manifold absolute pressure sensor
G247	Fuel pressure sensor
G581	Charge air pressure actuator position sensor
G609	Secondary air injection sensor 1
J623	Engine control module
N112	Secondary air injection solenoid valve
T3ag	3-pin connector
T3z	3-pin connector
T4ax	4-pin connector
T5sl	5-pin connector
T6bm	6-pin connector
T14a	14-pin connector
T105	105-pin connector
316	Sensor ground connection 2 (in engine wiring harness)
D101	Connection 1 (in engine compartment wiring harness)
*	Depending on equipment
*2	Through September 2013

ws	=	white
sw	=	black
ro	=	red
rt	=	red
br	=	brown
gn	=	green
bl	=	blue
gr	=	grey
li	=	lilac
vi	=	lilac
ge	=	yellow
or	=	orange
rs	=	pink

Protected by copyright. Copying for private or commercial purposes, in part or in whole, is not permitted unless authorised. Volkswagen AG does not guarantee or accept any liability with respect to the correctness of information in this document. Copyright by Volkswagen AG.

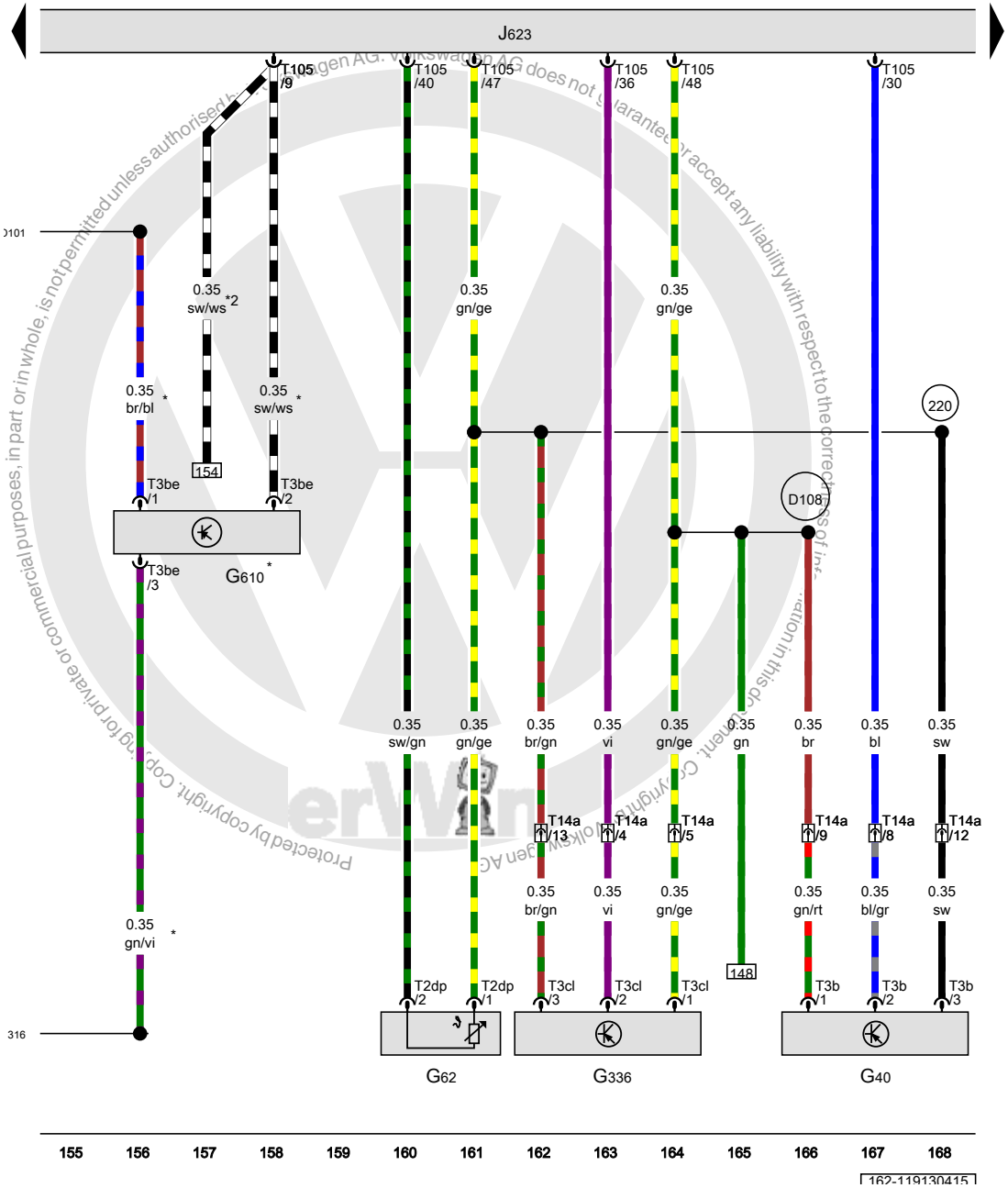

Camshaft position sensor, Engine coolant temperature sensor, Intake manifold runner position sensor, Engine control module

G40	Camshaft position sensor
G62	Engine coolant temperature sensor
G336	Intake manifold runner position sensor
G610	Secondary air injection sensor 2
J623	Engine control module
T2dp	Double connector
T3b	3-pin connector
T3be	3-pin connector
T3cl	3-pin connector
T14a	14-pin connector
T105	105-pin connector
220	Sensor ground connection (in engine wiring harness)
316	Sensor ground connection 2 (in engine wiring harness)
D101	Connection 1 (in engine compartment wiring harness)
D108	Connection 6 (in engine compartment wiring harness)
*	from September 2013
*2	Through September 2013

ws	=	white
sw	=	black
ro	=	red
rt	=	red
br	=	brown
gn	=	green
bl	=	blue
gr	=	grey
li	=	lilac
vi	=	lilac
ge	=	yellow
or	=	orange
rs	=	pink

Protected by copyright. Copying for private or commercial purposes, in part or in whole, is not permitted unless authorised by Volkswagen AG. Volkswagen AG does not guarantee or accept any liability with respect to the correctness of information in this document.

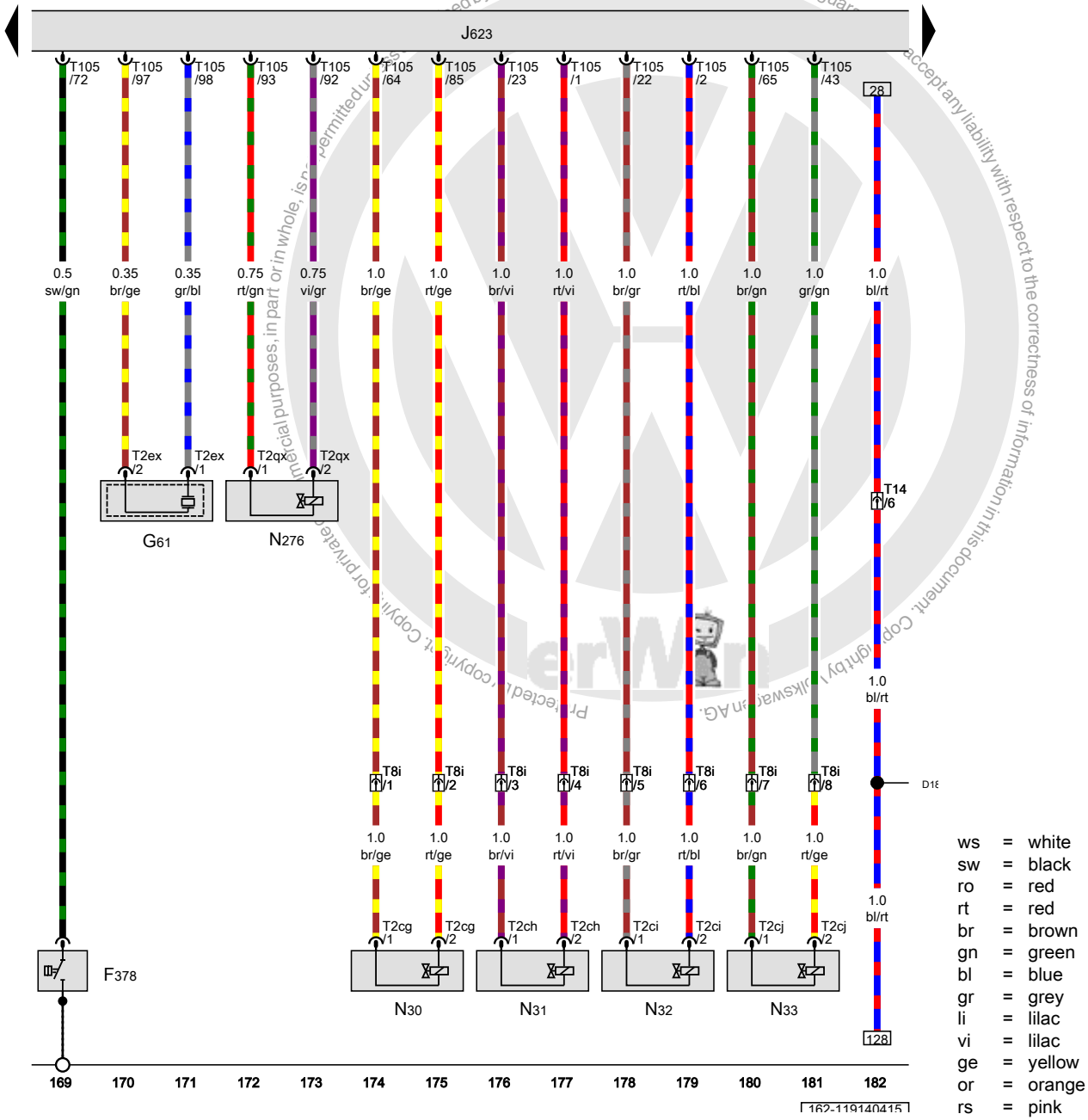

ws	=	white
sw	=	black
ro	=	red
rt	=	red
br	=	brown
gn	=	green
bl	=	blue
gr	=	grey
li	=	lilac
vi	=	lilac
ge	=	yellow
or	=	orange
rs	=	pink

Reduced oil pressure switch, Knock sensor 1, Engine control module, Cylinder 1 fuel injector, Cylinder 2 fuel injector, Cylinder 3 fuel injector, Cylinder 4 fuel injector, Fuel pressure regulator valve

F378	Reduced oil pressure switch
G61	Knock sensor 1
J623	Engine control module
N30	Cylinder 1 fuel injector
N31	Cylinder 2 fuel injector
N32	Cylinder 3 fuel injector
N33	Cylinder 4 fuel injector
N276	Fuel pressure regulator valve
T2cg	Double connector
T2ch	Double connector
T2ci	Double connector
T2cj	Double connector
T2ex	Double connector
T2qx	Double connector
T8i	8-pin connector
T14	14-pin connector
T105	105-pin connector
D181	Connection 2 (87a) (in engine compartment wiring harness)

Accelerator pedal module, Accelerator pedal position sensor, Engine control module, EVAP canister purge regulator valve 1, Camshaft adjustment valve 1, Oil pressure regulation valve

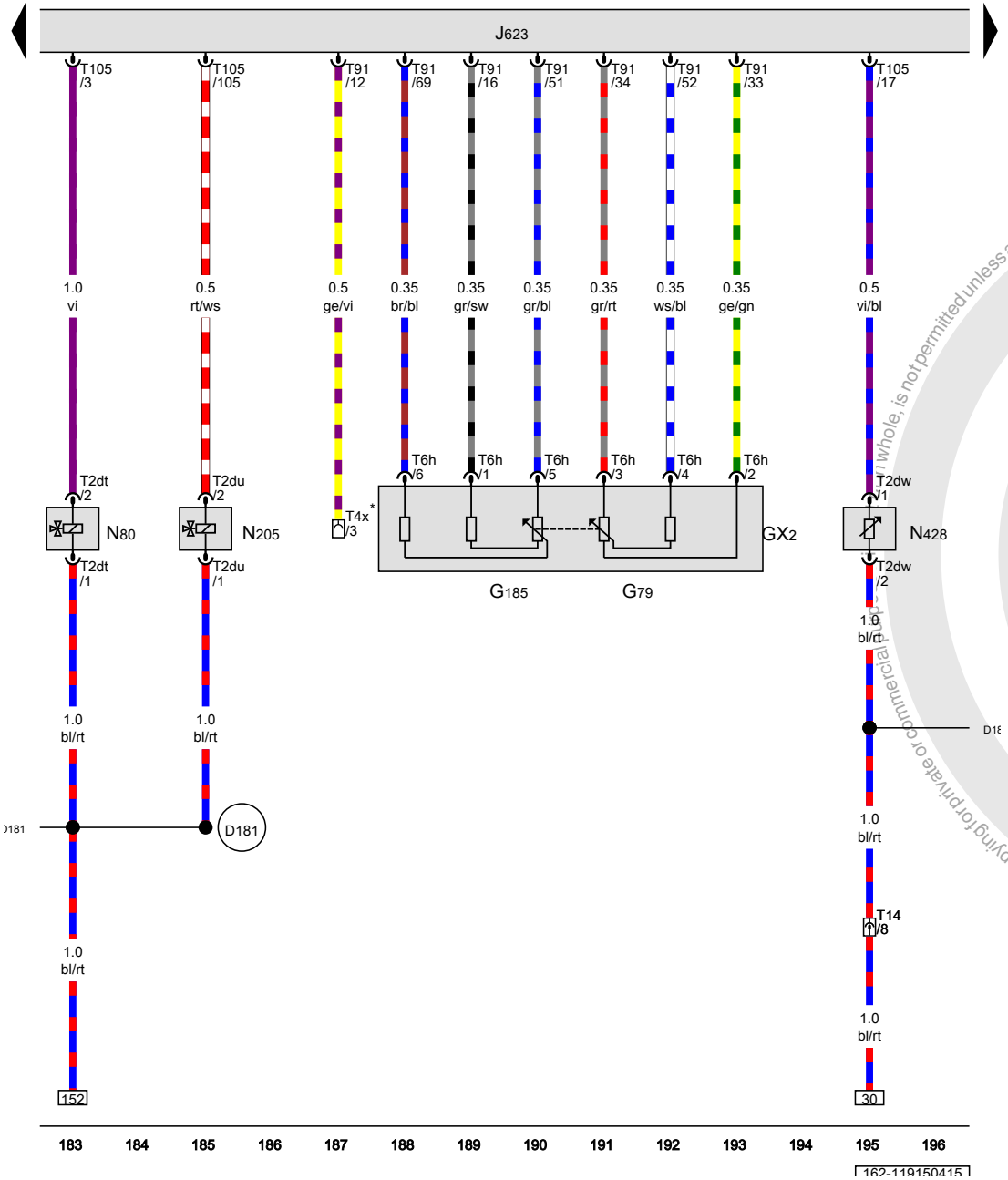

GX2	Accelerator pedal module
G79	Accelerator pedal position sensor
G185	Accelerator pedal position sensor 2
J623	Engine control module
N80	EVAP canister purge regulator valve 1
N205	Camshaft adjustment valve 1
N428	Oil pressure regulation valve
T2dt	Double connector
T2du	Double connector
T2dw	Double connector
T4x	4-pin connector
T6h	6-pin connector
T14	14-pin connector
T91	91-pin connector
T105	105-pin connector
D181	Connection 2 (87a) (in engine compartment wiring harness)
D189	Connection 87a (in engine pre-wiring harness)
*	Coolant fan connection

ws	=	white
sw	=	black
ro	=	red
rt	=	red
br	=	brown
gn	=	green
bl	=	blue
gr	=	grey
li	=	lilac
vi	=	lilac
ge	=	yellow
or	=	orange
rs	=	pink

Protected by copyright. Copying for private or commercial purposes, in part or in whole, is not permitted unless authorised by Volkswagen AG. Volkswagen AG does not guarantee or accept any liability with respect to the correctness of information in this document. Copyright by Volkswagen AG.

Oxygen sensor 1 before catalytic converter, Engine control module, Turbocharger recirculation valve, Intake manifold runner control valve, Leak detection pump, Oxygen sensor heater

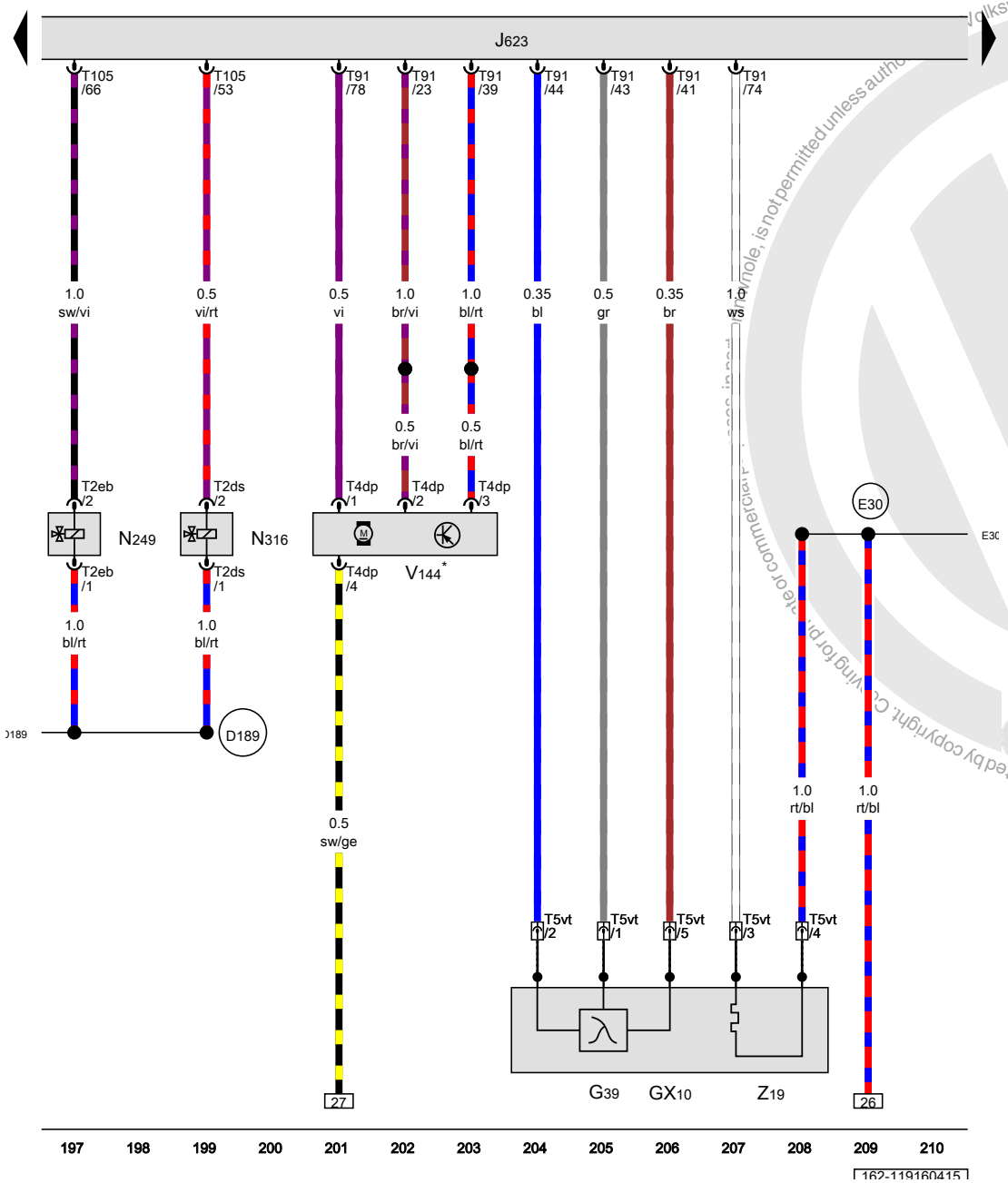

GX10	Oxygen sensor 1 before catalytic converter
G39	Heated oxygen sensor
J623	Engine control module
N249	Turbocharger recirculation valve
N316	Intake manifold runner control valve
T2ds	Double connector
T2eb	Double connector
T4dp	4-pin connector
T5vt	5-pin connector
T91	91-pin connector
T105	105-pin connector
V144	Leak detection pump
Z19	Oxygen sensor heater
D189	Connection 87a (in engine pre-wiring harness)
E30	Connection 87a (in engine wiring harness)
*	Depending on equipment

ws	=	white
sw	=	black
ro	=	red
rt	=	red
br	=	brown
gn	=	green
bl	=	blue
gr	=	grey
li	=	lilac
vi	=	lilac
ge	=	yellow
or	=	orange
rs	=	pink

Volkswagen AG. Volkswagen AG does not guarantee or assume any liability with respect to the correctness of information in this document. Copyright by Volkswagen AG. Protected by copyright. Copying for private or commercial purposes, in part or in whole, is not permitted unless authorized by Volkswagen AG.

Brake lamp switch, Brake pedal switch, Oxygen sensor 1 after catalytic converter, Oxygen sensor after three way catalytic converter, Clutch position sensor, Engine control module

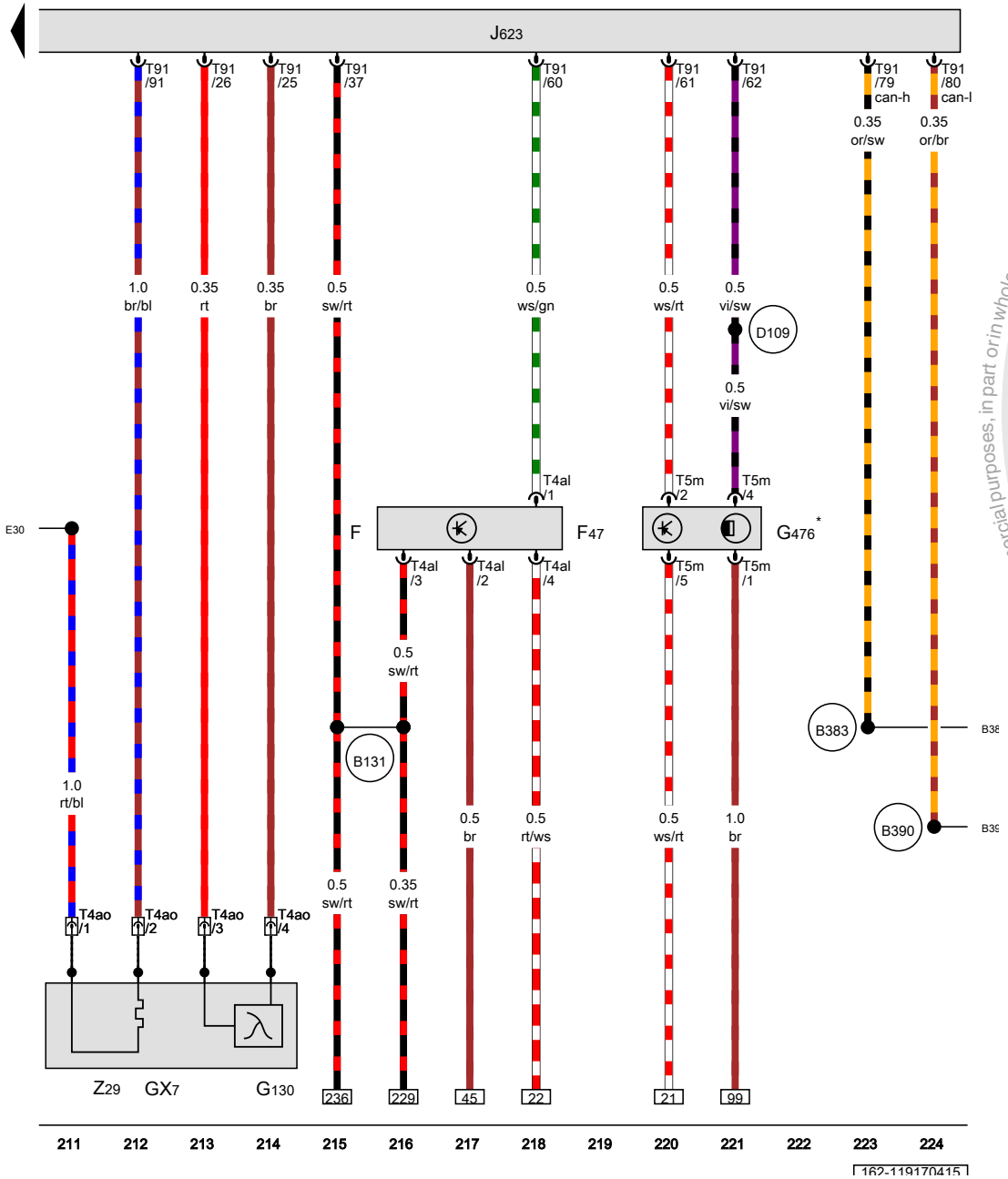

F	Brake lamp switch
F47	Brake pedal switch
GX7	Oxygen sensor 1 after catalytic converter
G130	Oxygen sensor after three way catalytic converter
G476	Clutch position sensor
J623	Engine control module
T4al	4-pin connector
T4ao	4-pin connector
T5m	5-pin connector
T91	91-pin connector
Z29	Heater for oxygen sensor 1 after catalytic converter
B131	Connection 54 (in interior wiring harness)
B383	Powertrain CAN bus high connection 1 (in main wiring harness)
B390	Powertrain CAN bus low connection 1 (in main wiring harness)
D109	Connection 7 (in engine compartment wiring harness)
E30	Connection 87a (in engine wiring harness)
*	Only for vehicles with a manual transmission

ws	=	white
sw	=	black
ro	=	red
rt	=	red
br	=	brown
gn	=	green
bl	=	blue
gr	=	grey
li	=	lilac
vi	=	lilac
ge	=	yellow
or	=	orange
rs	=	pink

Protected by copyright. Copying for private or commercial purposes, in part or in whole, is not permitted unless authorised by Volkswagen AG. Volkswagen AG does not guarantee or accept any liability with respect to the correctness of information in this document. Copyright by Volkswagen AG.

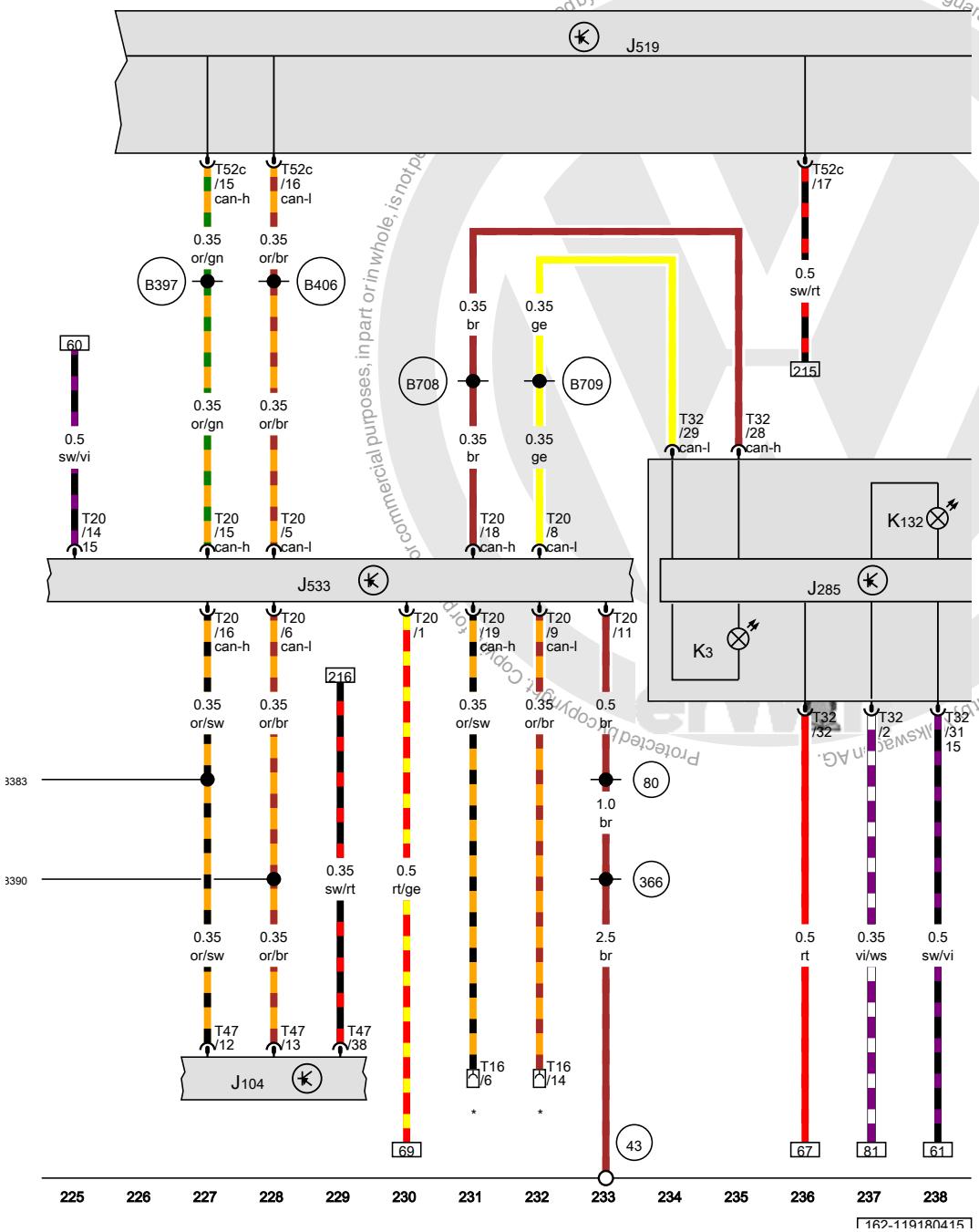

Instrument cluster control module, Vehicle electrical control module system, Data bus on board diagnostic interface, Electronic power control malfunction indicator lamp

J104	ABS control module
J285	Instrument cluster control module
J519	Vehicle electrical control module system
J533	Data bus on board diagnostic interface
K3	Oil pressure indicator lamp
K132	Electronic power control malfunction indicator lamp
T16	16-pin connector, near the lower left A-pillar
T20	20-pin connector
T32	32-pin connector
T47	47-pin connector
T52c	52-pin connector
43	Ground connection on A-pillar, lower right
80	Ground connection 1 (in instrument cluster wiring harness)
366	Ground connection 1 (in main wiring harness)
B383	Powertrain CAN bus high connection 1 (in main wiring harness)
B390	Powertrain CAN bus low connection 1 (in main wiring harness)
B397	Comfort system CAN bus high connection 1 (in main wiring harness)
B406	Comfort system CAN bus low connection 1 (in main wiring harness)
B708	Instrument cluster CAN bus high connection 1 (in main wiring harness)
B709	Instrument cluster CAN bus low connection 1 (in main wiring harness)
*	Diagnostic connector

ws	=	white
sw	=	black
ro	=	red
rt	=	red
br	=	brown
gn	=	green
bl	=	blue
gr	=	grey
li	=	lilac
vi	=	lilac
ge	=	yellow
or	=	orange
rs	=	pink

Protected by Volkswagen AG. Volkswagen AG does not guarantee or accept any liability with respect to the correctness of information in this document. Copyright by Volkswagen AG. Protected by copyright. Copyright for commercial purposes, in part or in whole, is not permitted.

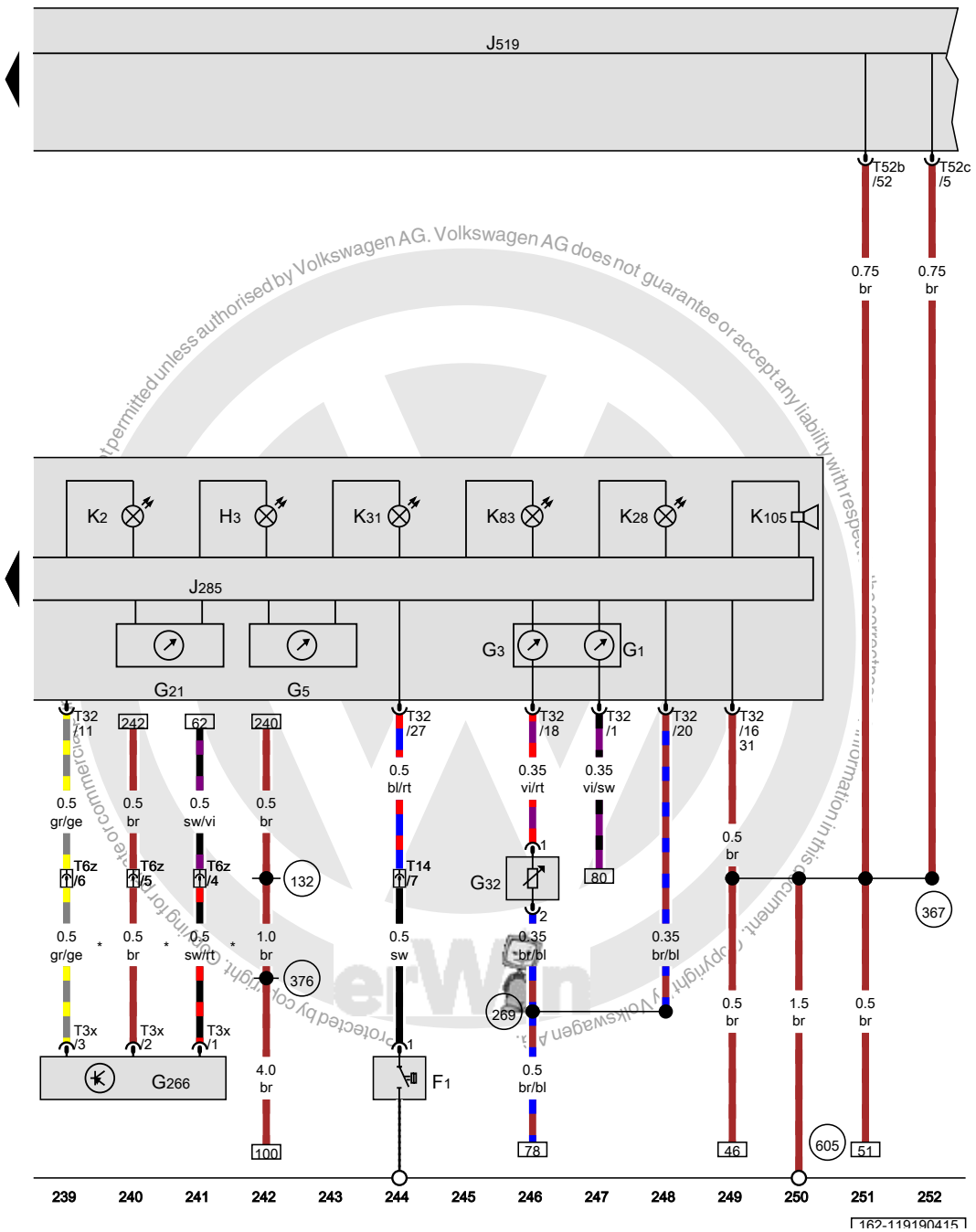

Oil pressure switch, Fuel gauge, Engine coolant temperature gauge, Tachometer, Speedometer, Instrument cluster control module, Vehicle electrical control module system, Generator indicator lamp, Engine coolant level/ temperature indicator lamp, Cruise control indicator lamp, Low fuel level indicator lamp

F1	Oil pressure switch
G1	Fuel gauge
G3	Engine coolant temperature gauge
G5	Tachometer
G21	Speedometer
G32	Engine coolant level sensor
G266	Oil level thermal sensor
H3	Warning buzzer and tone
J285	Instrument cluster control module
J519	Vehicle electrical control module system
K2	Generator indicator lamp
K28	Engine coolant level/temperature indicator lamp
K31	Cruise control indicator lamp
K83	Malfunction indicator lamp
K105	Low fuel level indicator lamp
T3x	3-pin connector
T6z	6-pin connector, near the left headlamp
T14	14-pin connector
T32	32-pin connector
T52b	52-pin connector
T52c	52-pin connector
132	Ground connection 3 (in engine compartment wiring harness)
269	Sensor ground connection 1 (in instrument panel wiring harness)
367	Ground connection 2 (in main wiring harness)
376	Ground connection 11 (in main wiring harness)
605	Ground connection on upper steering column
*	Only for vehicles without flexible service interval reminder

ws	=	white
sw	=	black
ro	=	red
rt	=	red
br	=	brown
gn	=	green
bl	=	blue
gr	=	grey
li	=	lilac
vi	=	lilac
ge	=	yellow
or	=	orange
rs	=	pink

Protected by copyright. Copying for private or commercial purposes, in part or in whole, is not permitted unless authorised by Volkswagen AG. Volkswagen AG does not guarantee or accept any liability with respect to the correctness of information in this document. Copyright by Volkswagen AG.

Airbag systems (USA) , (0K0)

from July 2013

Protected by copyright. Copying for private or commercial purposes, in part or in whole, is not permitted unless authorised by Volkswagen AG. Volkswagen AG does not guarantee or accept any liability with respect to the correctness of information in this document. Copyright by Volkswagen AG.

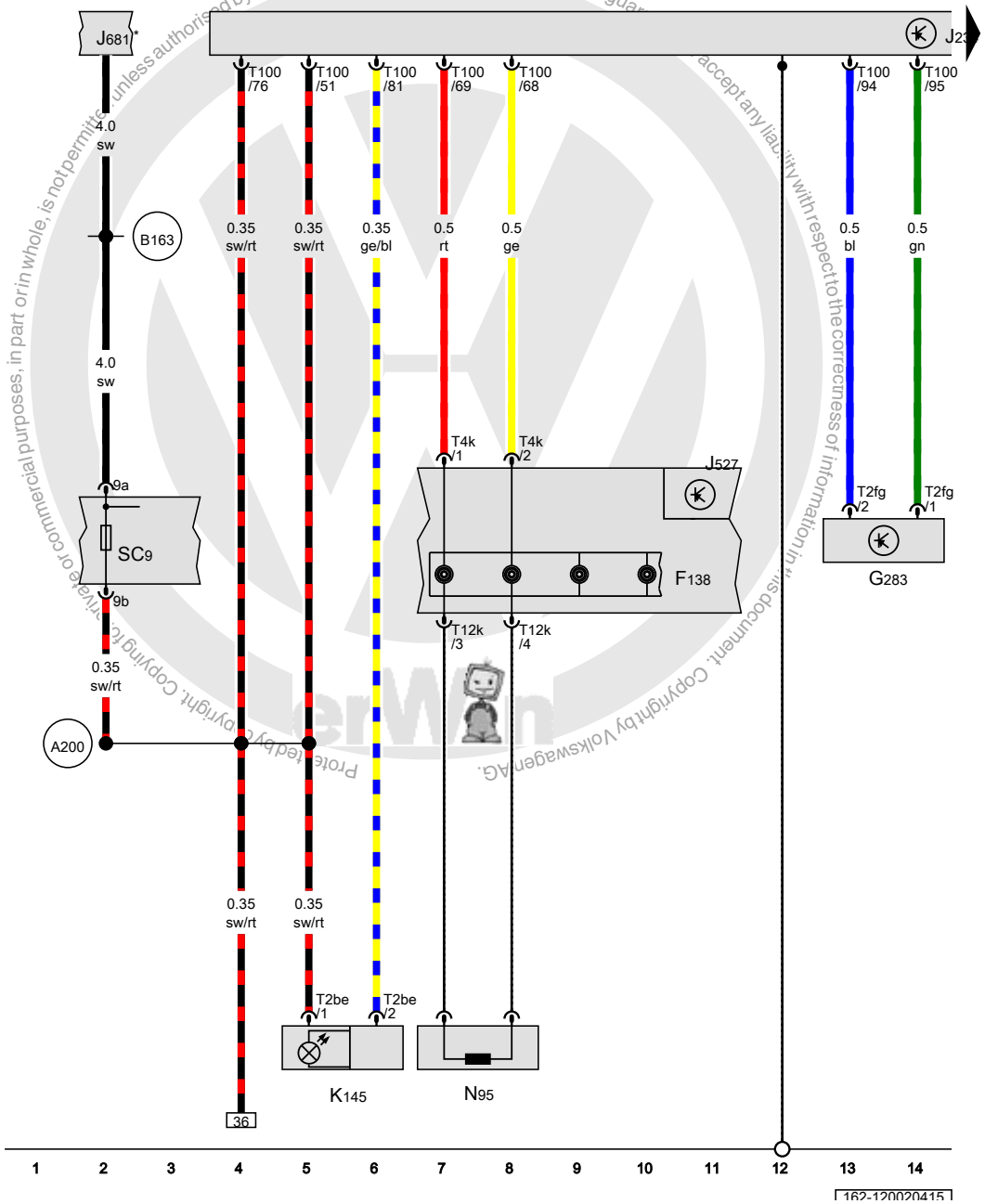

Protected by copyright. Copying for private or commercial purposes, in part or in whole, is not permitted unless authorised by Volkswagen AG. Volkswagen AG does not guarantee or accept any liability with respect to the correctness of information in this document. Copyright by Volkswagen AG.

Airbag spiral spring/return spring with slip ring, Driver front airbag crash sensor, Airbag control module, Steering column electronics control module, Front passenger airbag -disabled- indicator lamp, Driver airbag igniter

F138	Airbag spiral spring/return spring with slip ring
G283	Driver front airbag crash sensor
J234	Airbag control module
J527	Steering column electronics control module
J681	Terminal 15 power supply relay 2
K145	Front passenger airbag -disabled- indicator lamp
N95	Driver airbag igniter
SC9	Fuse 9 (on fuse panel C)
T2be	Double connector
T2fg	Double connector
T4k	4-pin connector
T9f	9-pin connector
T12k	12-pin connector
T100	100-pin connector
A200	Positive connection 5 (15a) (in instrument panel wiring harness)
B163	Positive connection 1 (15) (in interior wiring harness)
*	Refer to applicable standard equipment wiring diagram

ws	=	white
sw	=	black
ro	=	red
rt	=	red
br	=	brown
gn	=	green
bl	=	blue
gr	=	grey
li	=	lilac
vi	=	lilac
ge	=	yellow
or	=	orange
rs	=	pink

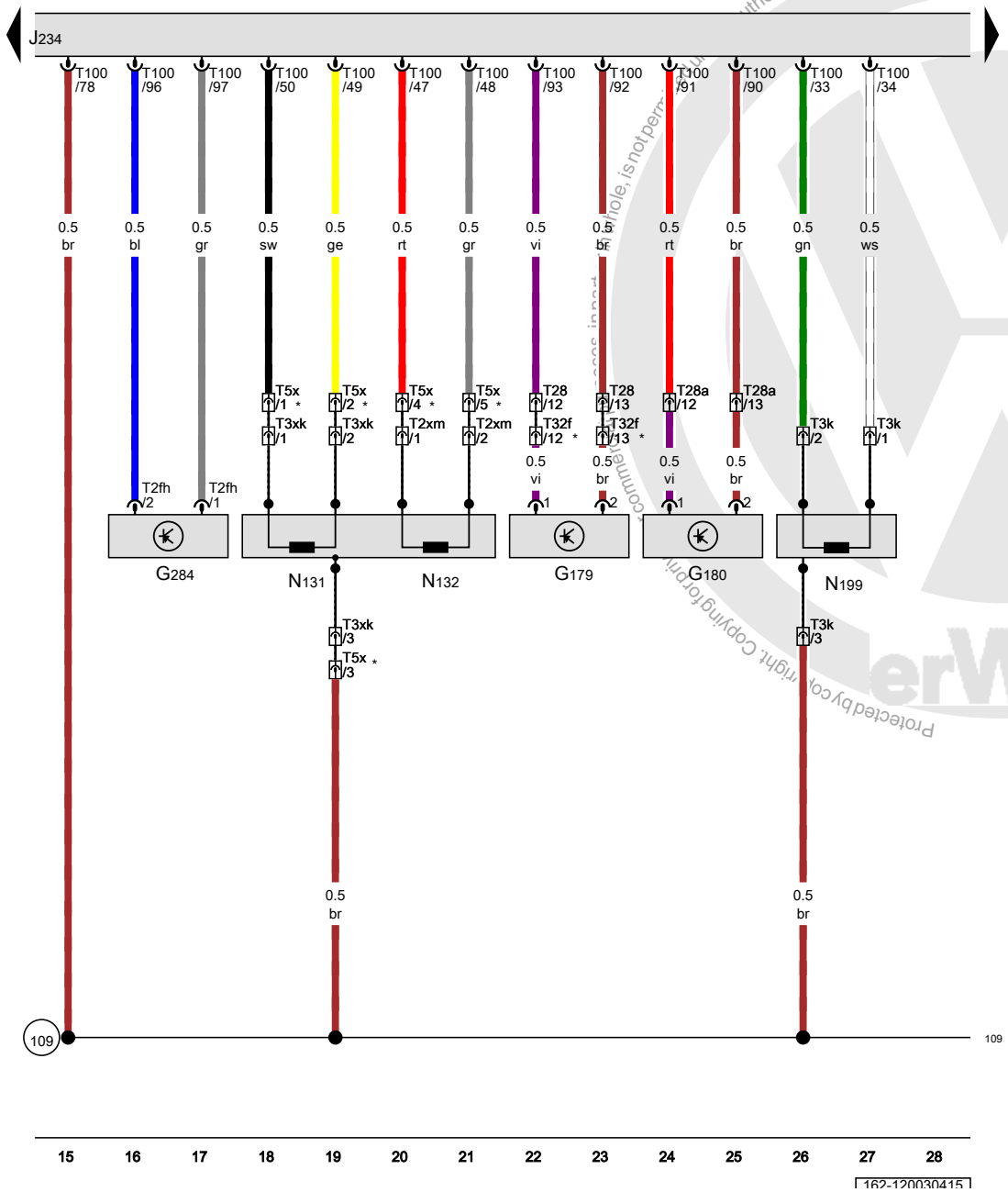

Driver side airbag crash sensor, Front passenger side airbag crash sensor, Passenger side front airbag crash sensor, Airbag control module, Front passenger airbag igniter 1, Front passenger airbag igniter 2

G179	Driver side airbag crash sensor
G180	Front passenger side airbag crash sensor
G284	Passenger side front airbag crash sensor
J234	Airbag control module
N131	Front passenger airbag igniter 1
N132	Front passenger airbag igniter 2
N199	Driver thorax airbag igniter
T2fh	Double connector
T2xm	Double connector
T3k	3-pin connector, under the driver seat
T3xk	3-pin connector
T5x	5-pin connector
T28	28-pin connector
T28a	28-pin connector
T32f	32-pin connector
T100	100-pin connector
109	Ground connection (in airbag wiring harness)
*	Depending on equipment

ws	=	white
sw	=	black
ro	=	red
rt	=	red
br	=	brown
gn	=	green
bl	=	blue
gr	=	grey
li	=	lilac
vi	=	lilac
ge	=	yellow
or	=	orange
rs	=	pink

Protected by copyright. Copying for private or commercial purposes, in part or in whole, is not permitted unless authorised by Volkswagen AG. Volkswagen AG does not guarantee or accept any liability with respect to the correctness and completeness of this information. Copyright by Volkswagen AG.

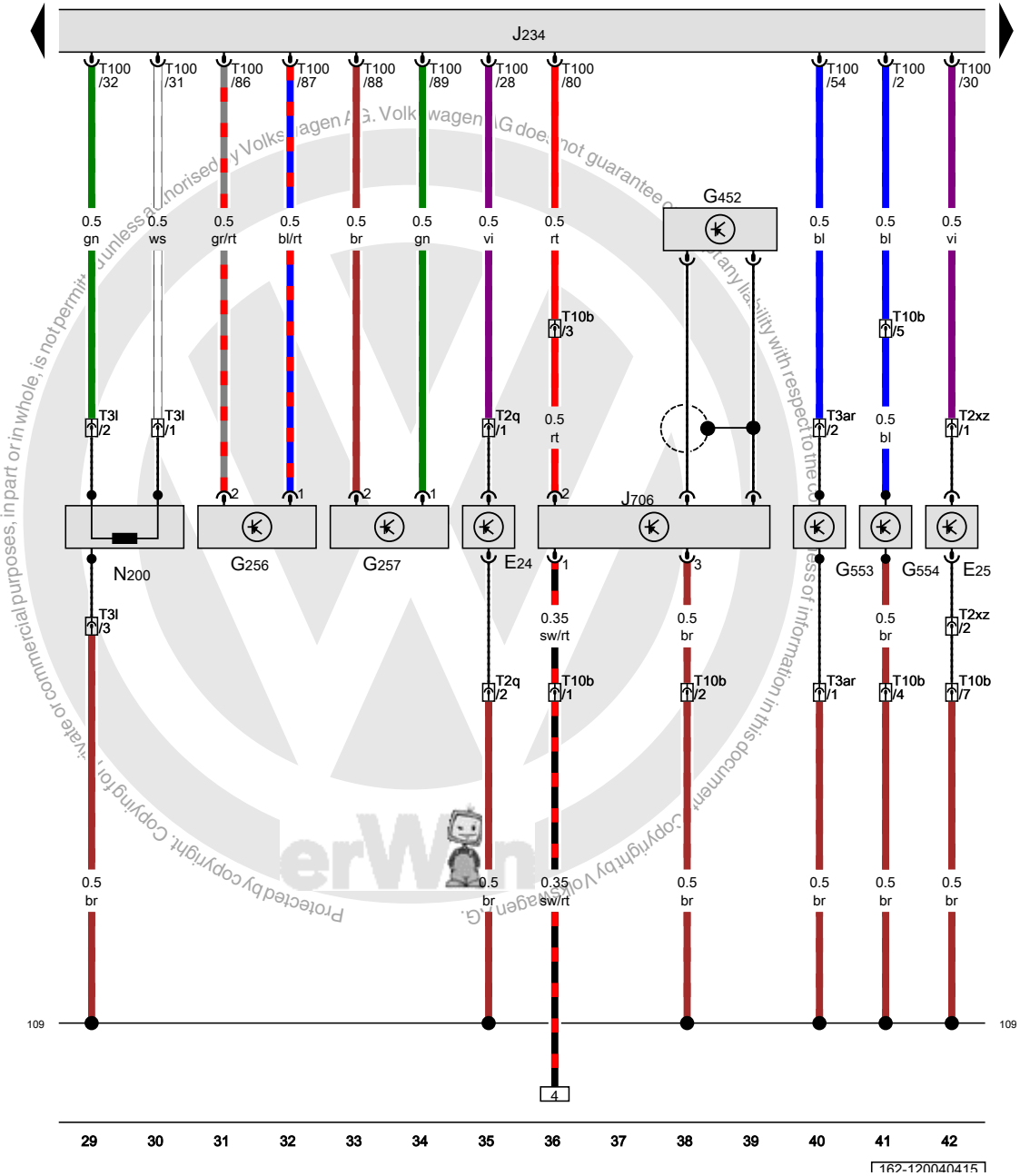

Driver seat belt switch, Front passenger seat belt switch, Driver side rear side airbag crash sensor, Passenger side rear side airbag crash sensor, Passenger occupant detection system pressure sensor, Driver seat position sensor, Front passenger seat position sensor, Airbag control module, Passenger occupant detection system control module, Front passenger thorax airbag igniter

E24	Driver seat belt switch
E25	Front passenger seat belt switch
G256	Driver side rear side airbag crash sensor
G257	Passenger side rear side airbag crash sensor
G452	Passenger occupant detection system pressure sensor
G553	Driver seat position sensor
G554	Front passenger seat position sensor
J234	Airbag control module
J706	Passenger occupant detection system control module
N200	Front passenger thorax airbag igniter
T2q	Double connector, under the driver seat
T2xz	Double connector, under the front passenger seat
T3ar	3-pin connector
T3l	3-pin connector, under the front passenger seat
T10b	10-pin connector
T100	100-pin connector
(109)	Ground connection (in airbag wiring harness)

ws	=	white
sw	=	black
ro	=	red
rt	=	red
br	=	brown
gn	=	green
bl	=	blue
gr	=	grey
li	=	lilac
vi	=	lilac
ge	=	yellow
or	=	orange
rs	=	pink

Protected by copyright. Copying for private or commercial purposes, in part or in whole, is not permitted unless authorised by Volkswagen AG. Volkswagen AG does not guarantee or assume any liability with respect to the correctness of information in this document. Copyright by Volkswagen AG.

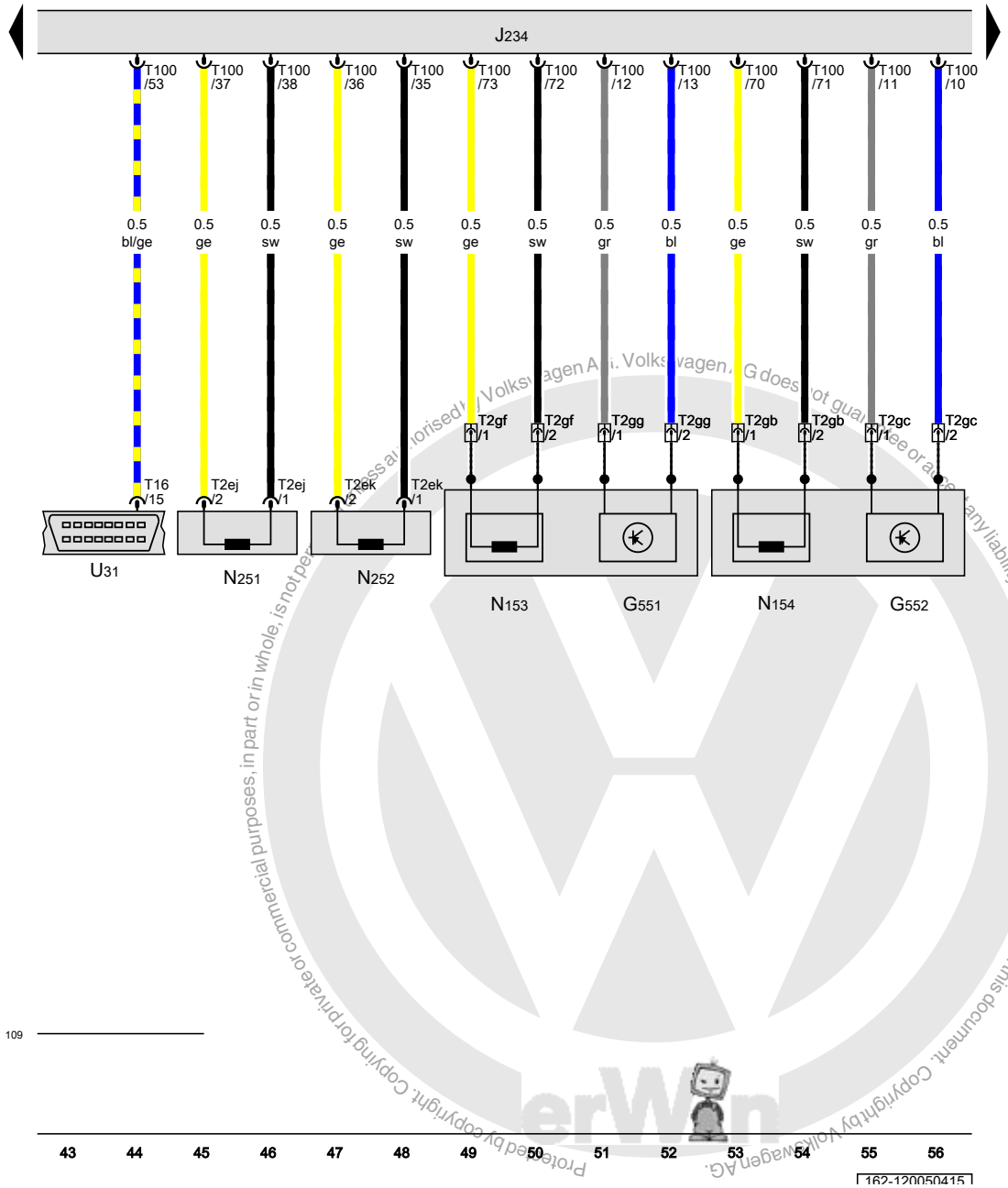

Driver belt force limiter, Front passenger belt force limiter, Airbag control module, Driver seat belt tensioner igniter 1, Driver head curtain airbag igniter, Front passenger head curtain airbag igniter

G551	Driver belt force limiter
G552	Front passenger belt force limiter
J234	Airbag control module
N153	Driver seat belt tensioner igniter 1
N154	Front passenger seat belt tensioner igniter 1
N251	Driver head curtain airbag igniter
N252	Front passenger head curtain airbag igniter
T2ej	Double connector
T2ek	Double connector
T2gb	Double connector
T2gc	Double connector
T2gf	Double connector
T2gg	Double connector
T16	16-pin connector
T100	100-pin connector
U31	Diagnostic connection
(109)	Ground connection (in airbag wiring harness)
*	Depending on equipment

ws	=	white
sw	=	black
ro	=	red
rt	=	red
br	=	brown
gn	=	green
bl	=	blue
gr	=	grey
li	=	lilac
vi	=	lilac
ge	=	yellow
or	=	orange
rs	=	pink

Protected by copyright. Copying for private or commercial purposes, in part or in whole, is not permitted unless authorised by Volkswagen AG. Volkswagen AG does not guarantee or assume any liability with respect to the correctness of information in this document. Copyright by Volkswagen AG.

Airbag control module, Instrument cluster control module, Vehicle electrical control module system, Data bus on board diagnostic interface, Airbag indicator lamp

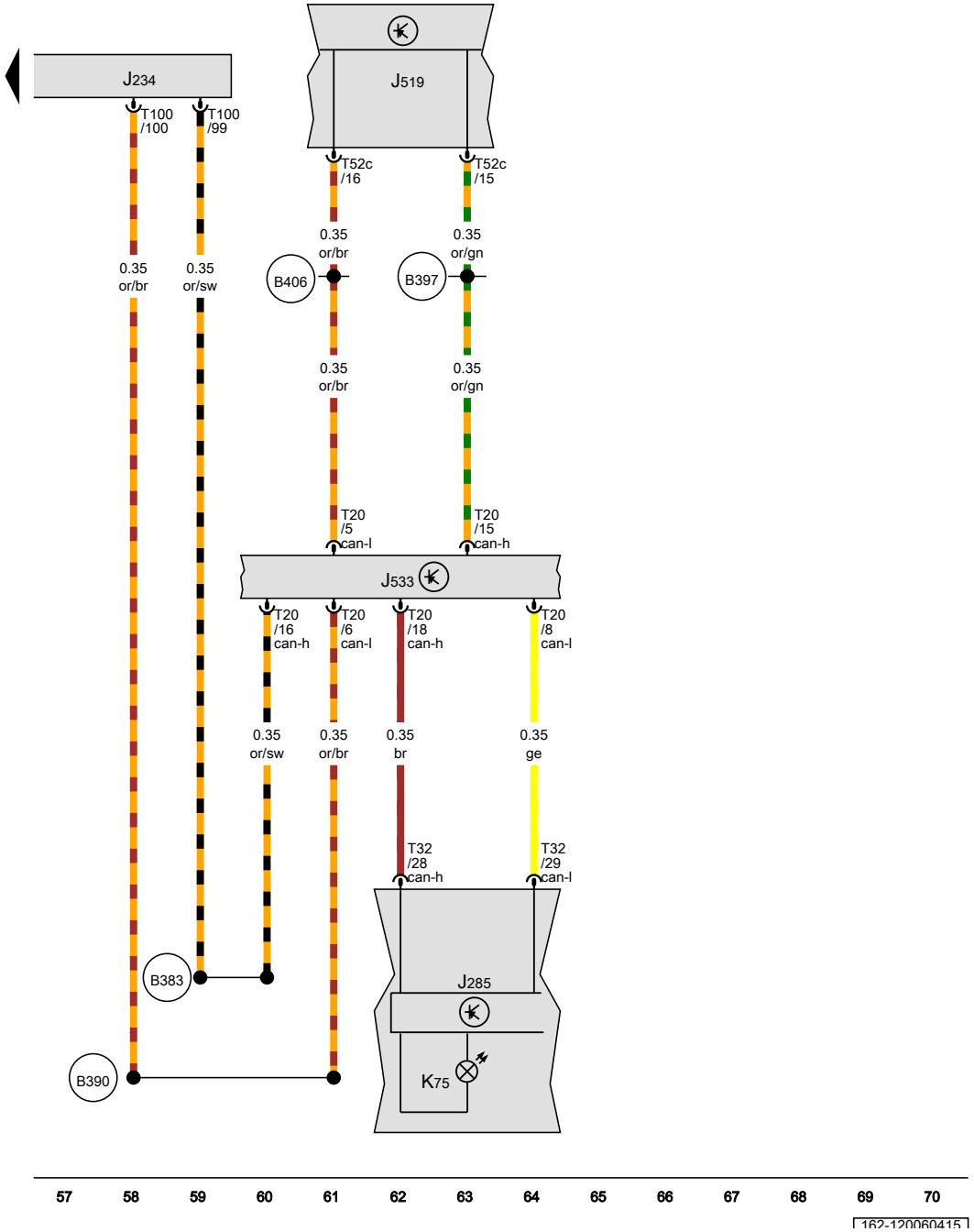

J234	Airbag control module
J285	Instrument cluster control module
J519	Vehicle electrical control module system
J533	Data bus on board diagnostic interface
K75	Airbag indicator lamp
T20	20-pin connector
T32	32-pin connector
T52c	52-pin connector
T100	100-pin connector
B383	Powertrain CAN bus high connection 1 (in main wiring harness)
B390	Powertrain CAN bus low connection 1 (in main wiring harness)
B397	Comfort system CAN bus high connection 1 (in main wiring harness)
B406	Comfort system CAN bus low connection 1 (in main wiring harness)

ws	=	white
sw	=	black
ro	=	red
rt	=	red
br	=	brown
gn	=	green
bl	=	blue
gr	=	grey
li	=	lilac
vi	=	lilac
ge	=	yellow
or	=	orange
rs	=	pink

Protected by copyright. Copying for private or commercial purposes, in part or in whole, is not permitted unless authorised by Volkswagen AG. Volkswagen AG does not guarantee or accept any liability with respect to the correctness of information in this document. Copyright by Volkswagen AG.

2.5L gasoline engine, Low (AW0) , CBTA,CCCA,(7GC),(AW0)

from April 2010

Protected by copyright. Copying for private or commercial purposes, in part or in whole, is not permitted unless authorised by Volkswagen AG. Volkswagen AG does not guarantee or accept any liability with respect to the correctness of information in this document. Copyright by Volkswagen AG.

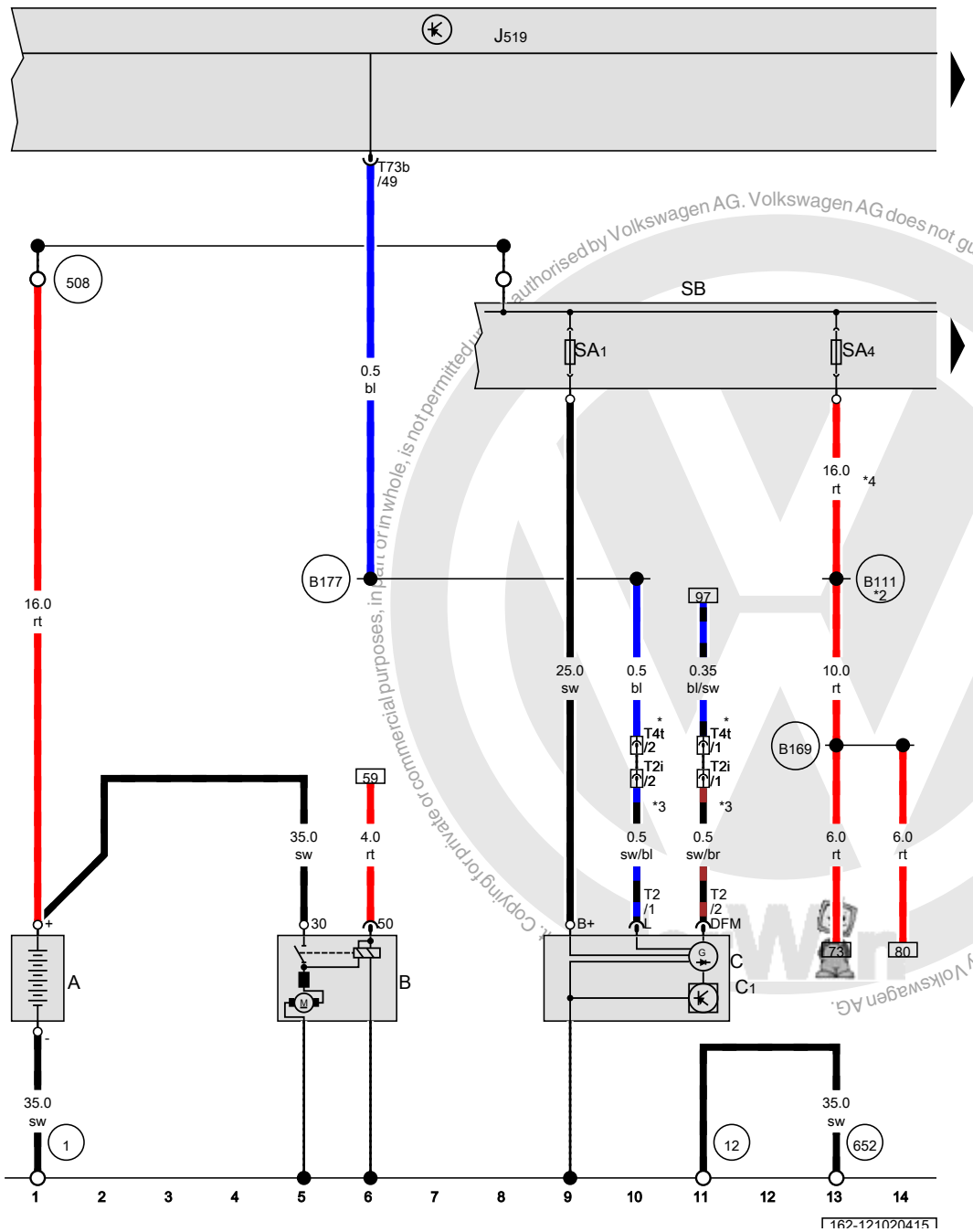

Battery, Starter, Generator, Vehicle electrical control module system, Fuse panel B

A	Battery
B	Starter
C	Generator
C1	Voltage regulator
J519	Vehicle electrical control module system
SA1	Fuse 1 (on fuse panel A)
SA4	Fuse 4 (on fuse panel A)
SB	Fuse panel B
T2	Double connector
T2i	Double connector, near the starter
T4t	4-pin connector, near the starter
T73b	73-pin connector
1	Ground strap, battery to body
12	Ground connection in engine compartment, left
508	Terminal 30 threaded connection (on E-box)
652	Transmission/engine ground connection
B111	Positive connection 1 (30a) (in interior wiring harness)
B169	Positive connection 1 (30) (in interior wiring harness)
B177	Connection 61 (in interior wiring harness)
*	Only for vehicles with A/C system
*2	Omitted as a running change
*3	Only for vehicles without an A/C system
*4	Diameter depends on equipment
*5	Only for vehicles with automatic transmission

ws	=	white
sw	=	black
ro	=	red
rt	=	red
br	=	brown
gn	=	green
bl	=	blue
gr	=	grey
li	=	lilac
vi	=	lilac
ge	=	yellow
or	=	orange
rs	=	pink

authorised by Volkswagen AG. Volkswagen AG does not guarantee or accept any liability with respect to the correctness of information in this document. Copyright by Volkswagen AG. Copying for private or commercial purposes, in part or in whole, is not permitted

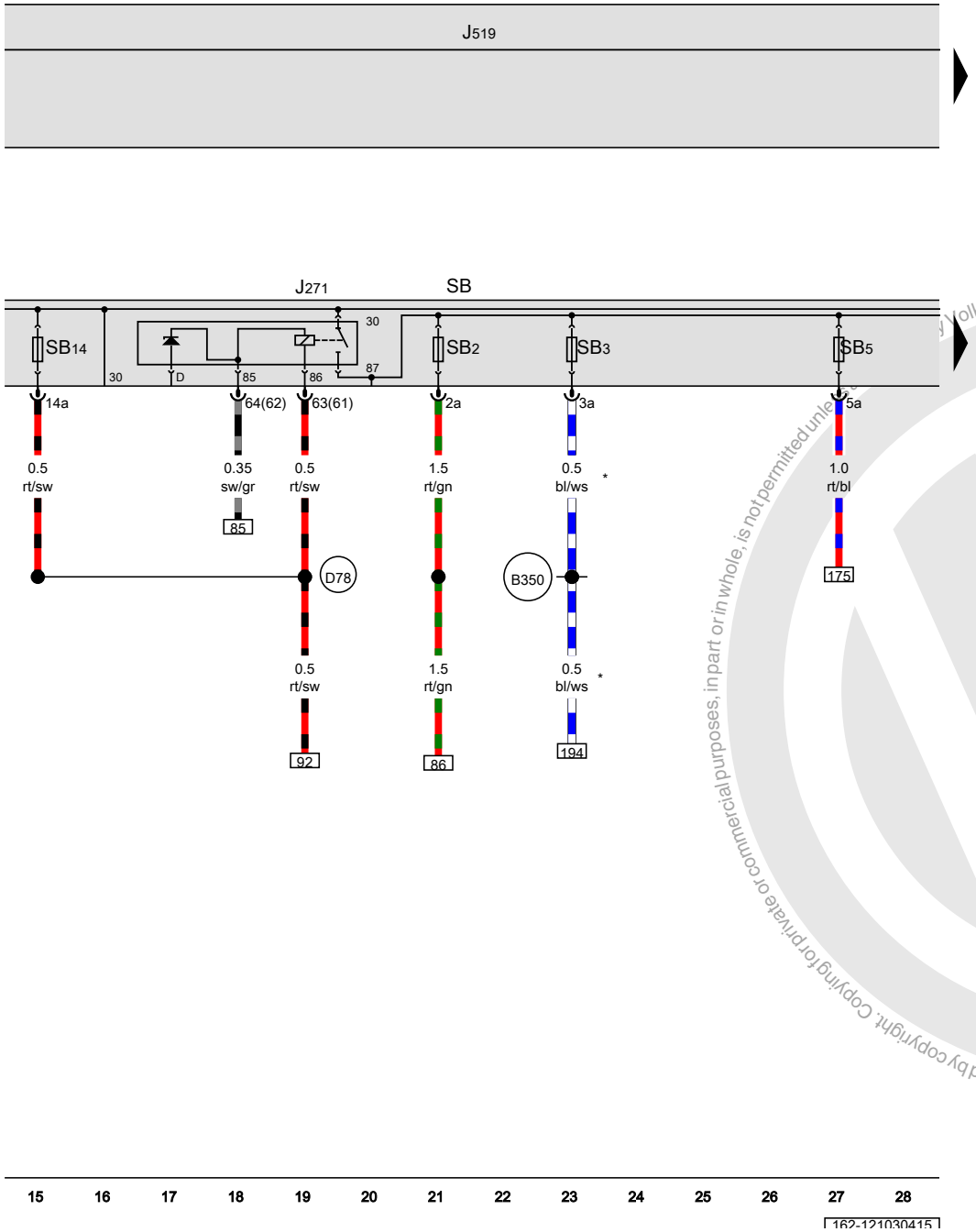

Motronic engine control module power supply relay, Vehicle electrical control module system, Fuse panel B, Fuse 14 (on fuse panel B)

J271	Motronic engine control module power supply relay
J519	Vehicle electrical control module system
SB	Fuse panel B
SB2	Fuse 2 (on fuse panel B)
SB3	Fuse 3 (on fuse panel B)
SB5	Fuse 5 (on fuse panel B)
SB14	Fuse 14 (on fuse panel B)
B350	Positive connection 1 (87a) (in main wiring harness)
D78	Positive connection 1 (30a) (in engine compartment wiring harness)
*	The color of the wires depends on vehicle equipment

ws	=	white
sw	=	black
ro	=	red
rt	=	red
br	=	brown
gn	=	green
bl	=	blue
gr	=	grey
li	=	lilac
vi	=	lilac
ge	=	yellow
or	=	orange
rs	=	pink

Protected by copyright. Copying for private or commercial purposes, in part or in whole, is not permitted unless authorised by Volkswagen AG. Volkswagen AG does not guarantee or accept any liability with respect to the correctness of information in this document. Copyright by Volkswagen AG.

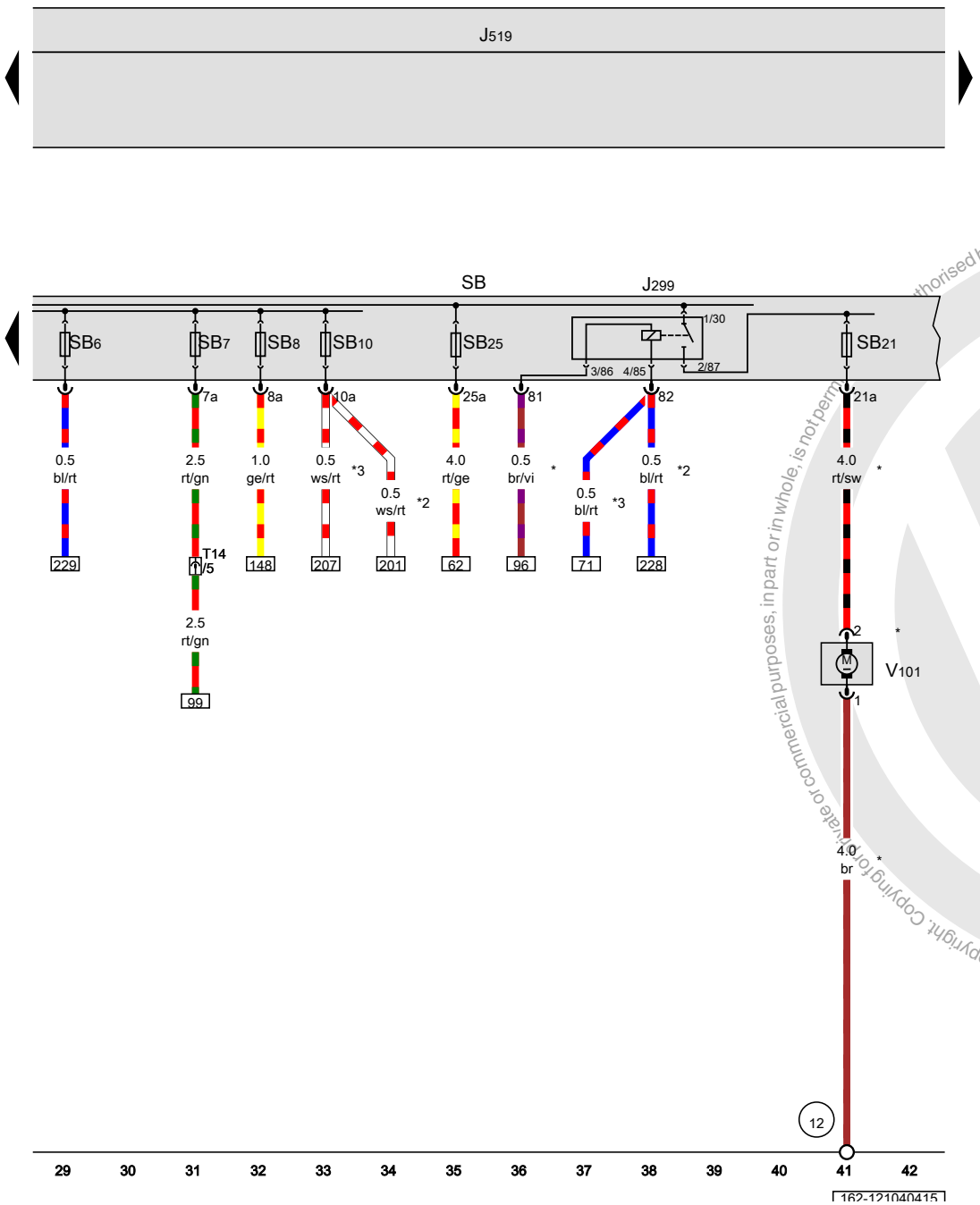

Secondary air injection pump relay, Vehicle electrical control module system, Fuse panel B, Secondary air injection pump motor

J299	Secondary air injection pump relay
J519	Vehicle electrical control module system
SB	Fuse panel B
SB6	Fuse 6 (on fuse panel B)
SB7	Fuse 7 (on fuse panel B)
SB8	Fuse 8 (on fuse panel B)
SB10	Fuse 10 (on fuse panel B)
SB21	Fuse 21 (on fuse panel B)
SB25	Fuse 25 (on fuse panel B)
T14	14-pin connector, near the battery
V101	Secondary air injection pump motor
12	Ground connection in engine compartment, left
*	Depending on equipment
*2	Running change
*3	Omitted as a running change

ws	=	white
sw	=	black
ro	=	red
rt	=	red
br	=	brown
gn	=	green
bl	=	blue
gr	=	grey
li	=	lilac
vi	=	lilac
ge	=	yellow
or	=	orange
rs	=	pink

authorised by Volkswagen AG. Volkswagen AG does not guarantee or accept any liability with respect to the correctness of information in this document. Copyright by Volkswagen AG. Permitted for private, non-commercial purposes, in part or in whole, is not permitted to reproduce or distribute or commercial purposes, in part or in whole, is not permitted. Copyright by Volkswagen AG.

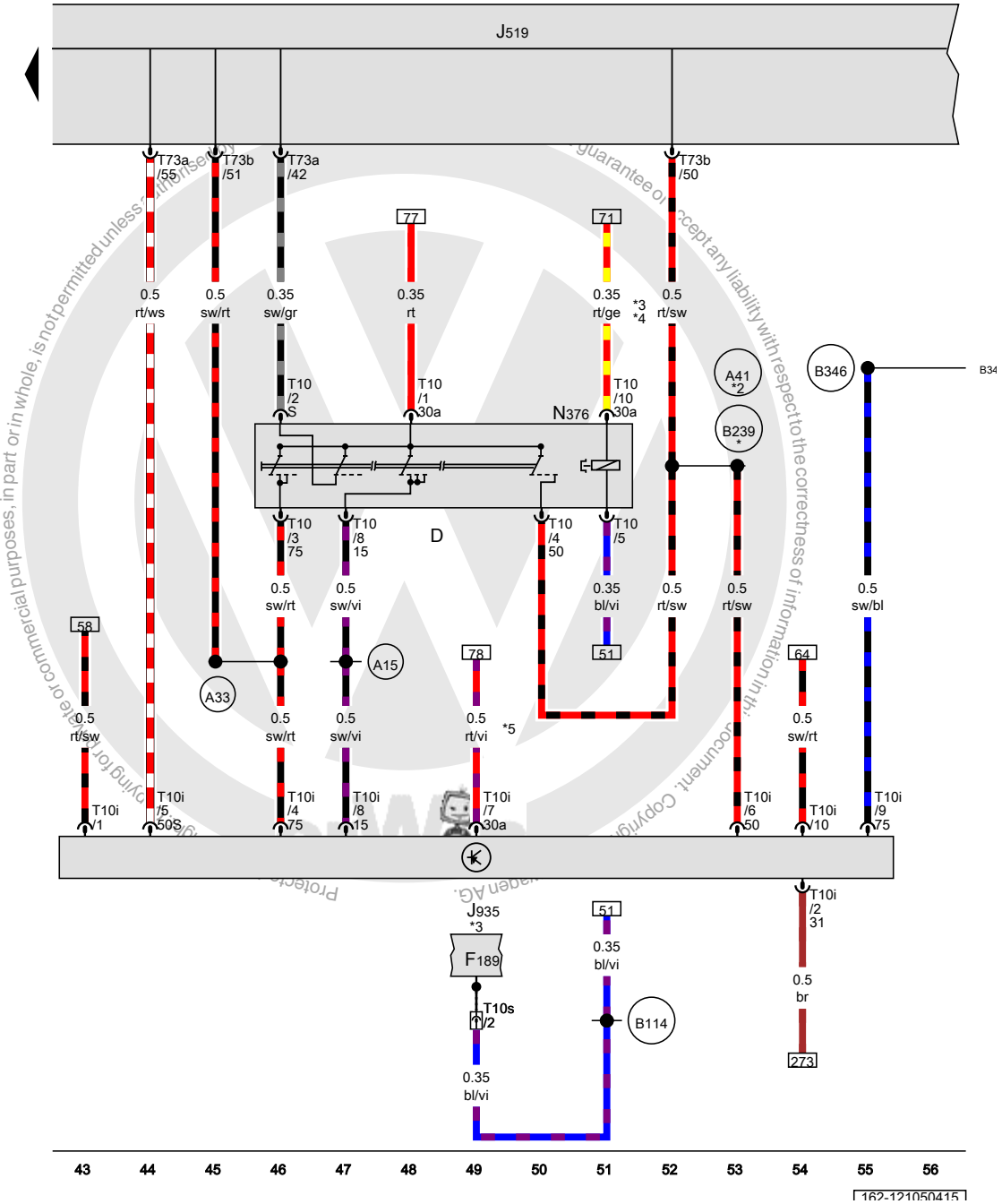

Ignition/starter switch, Vehicle electrical control module system, Converter box

D	Ignition/starter switch
F189	tiptronic switch
J519	Vehicle electrical control module system
J935	Converter box
N376	Ignition switch key lock solenoid
T10	10-pin connector
T10i	10-pin connector
T10s	10-pin connector
T73a	73-pin connector
T73b	73-pin connector
A15	Plus connection (15) (in instrument cluster wiring harness)
A33	Connection 75 (in instrument panel wiring harness)
A41	Positive connection (50) (in instrument panel wiring harness)
B114	Lock switch connection (in interior wiring harness)
B239	Positive connection 1 (50) (in interior wiring harness)
B346	Connection 75 (in main wiring harness) 1
*	Through May 2013
*2	from June 2013
*3	Only for vehicles with automatic transmission
*4	Diameter depends on equipment
*5	The color of the wires depends on vehicle equipment

ws	=	white
sw	=	black
ro	=	red
rt	=	red
br	=	brown
gn	=	green
bl	=	blue
gr	=	grey
li	=	lilac
vi	=	lilac
ge	=	yellow
or	=	orange
rs	=	pink

Terminal 15 power supply relay, Terminal 15 power supply relay 2, Terminal 50 power supply relay, Fuse panel C

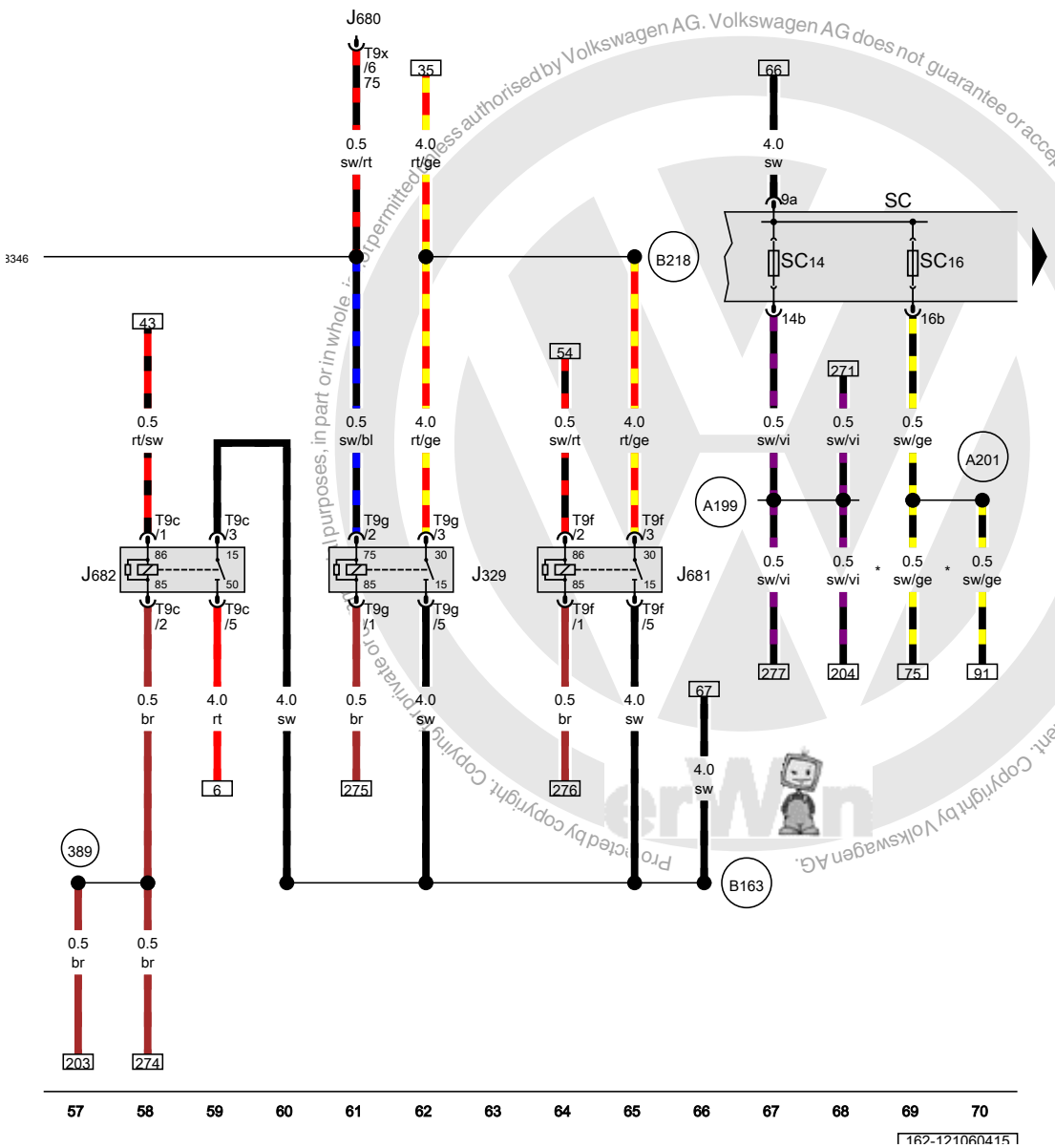

J329	Terminal 15 power supply relay
J680	Terminal 75 power supply relay 1
J681	Terminal 15 power supply relay 2
J682	Terminal 50 power supply relay
SC	Fuse panel C
SC14	Fuse 14 (on fuse panel C)
SC16	Fuse 16 (on fuse panel C)
T9c	9-pin connector
T9f	9-pin connector
T9g	9-pin connector
T9x	9-pin connector
389	Ground connection 24 (in main wiring harness)
A199	Positive connection 4 (15a) (in instrument panel wiring harness)
A201	Positive connection 6 (15a) (in instrument panel wiring harness)
B163	Positive connection 1 (15) (in interior wiring harness)
B218	Positive connection 6 (30) (in interior wiring harness)
B346	Connection 75 (in main wiring harness) 1
*	Omitted as a running change

ws	=	white
sw	=	black
ro	=	red
rt	=	red
br	=	brown
gn	=	green
bl	=	blue
gr	=	grey
li	=	lilac
vi	=	lilac
ge	=	yellow
or	=	orange
rs	=	pink

Protected by copyright. Copying for private or commercial purposes, in part or in whole, is not permitted unless authorised by Volkswagen AG. Volkswagen AG does not guarantee or accept any liability with respect to the correctness of information in this document. Copyright by Volkswagen AG.

Fuel level sensor, Transfer fuel pump, Fuel pump relay, Fuse panel C

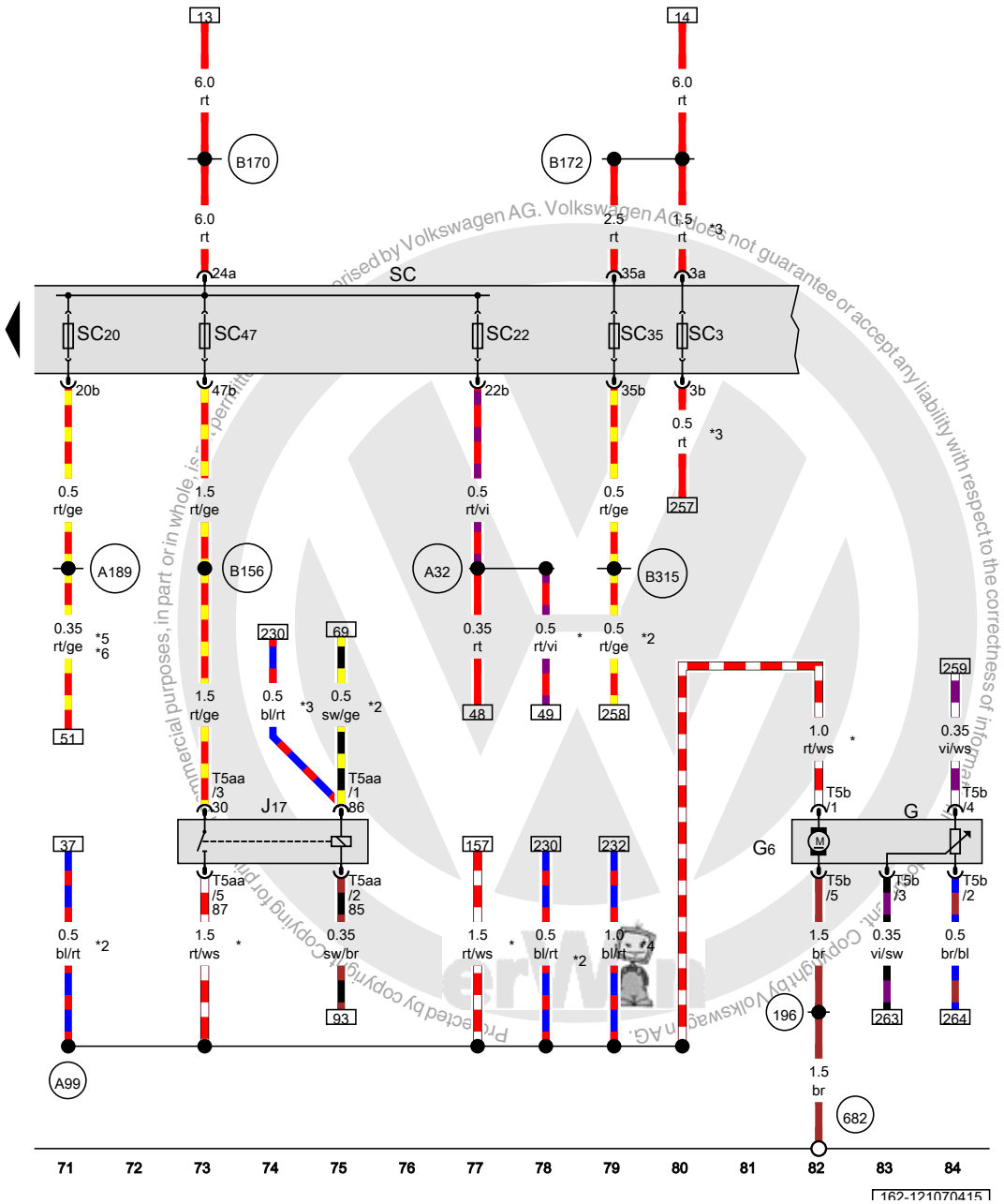

G	Fuel level sensor
G6	Transfer fuel pump
J17	Fuel pump relay
SC	Fuse panel C
SC3	Fuse 3 (on fuse panel C)
SC20	Fuse 20 (on fuse panel C)
SC22	Fuse 22 (on fuse panel C)
SC35	Fuse 35 (on fuse panel C)
SC47	Fuse 47 (on fuse panel C)
T5aa	5-pin connector
T5b	5-pin connector
196	Ground connection 3 (in rear wiring harness)
682	Ground connection 2 in right rear side panel
A32	Positive connection (30) (in instrument panel wiring harness)
A99	Connection 87 (in instrument panel wiring harness) 1
A189	Positive connection 5 (30a) (in instrument panel wiring harness)
B156	Positive connection (30a) (in interior wiring harness)
B170	Positive connection 2 (30) (in interior wiring harness)
B172	Positive connection 4 (30) (in interior wiring harness)
B315	Positive connection 1 (30a) (in main wiring harness)
*	The color of the wires depends on vehicle equipment
*2	Omitted as a running change
*3	Running change
*4	Depending on equipment
*5	Only for vehicles with automatic transmission
*6	Diameter depends on equipment

ws	=	white
sw	=	black
ro	=	red
rt	=	red
br	=	brown
gn	=	green
bl	=	blue
gr	=	grey
li	=	lilac
vi	=	lilac
ge	=	yellow
or	=	orange
rs	=	pink

Protected by copyright. Copyright by Volkswagen AG. Volkswagen AG does not guarantee or accept any liability with respect to the correctness of information. Copying for private or commercial purposes, in part or in whole, is not permitted unless authorised by Volkswagen AG.

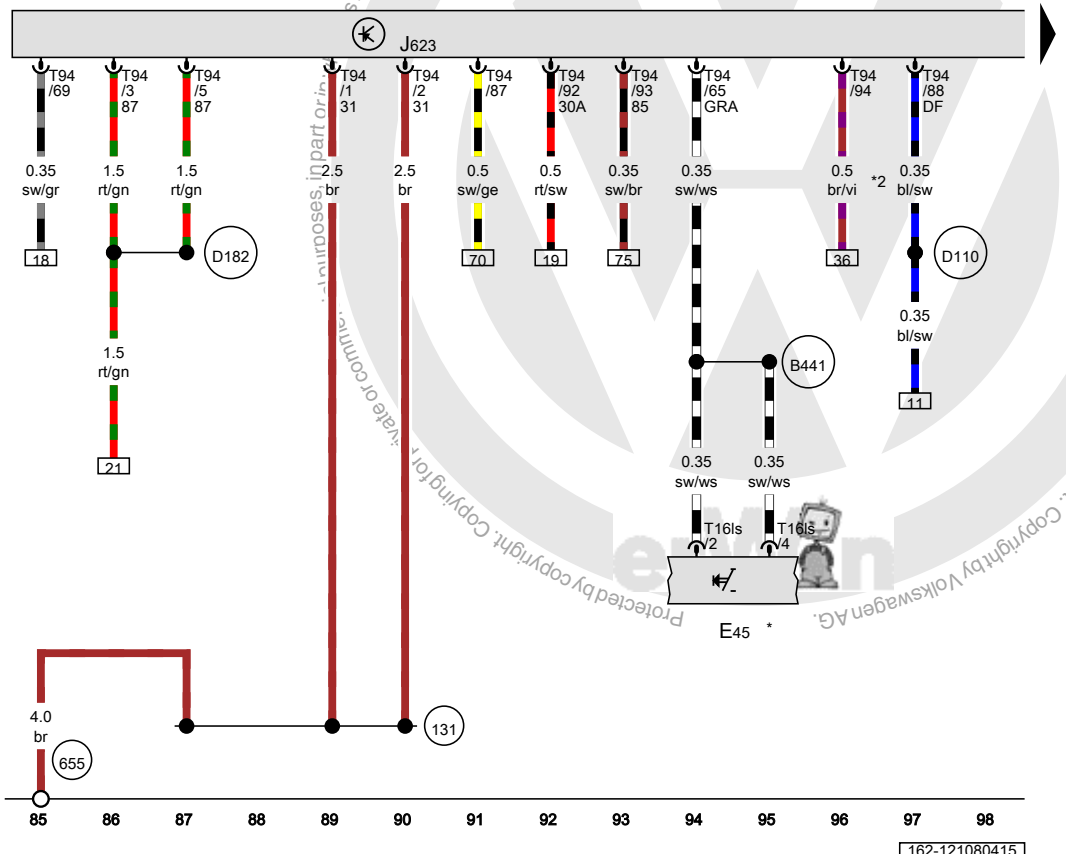

ws = white
sw = black
ro = red
rt = red
br = brown
gn = green
bl = blue
gr = grey
li = lilac
vi = lilac
ge = yellow
or = orange
rs = pink

Engine control module

E45	Cruise control switch
J623	Engine control module
T16ls	16-pin connector
T94	94-pin connector
131	Ground connection 2 (in engine compartment wiring harness)
655	Ground connection on left headlamp
B441	Cruise control connection (in main wiring harness)
D110	Connection 8 (in engine compartment wiring harness)
D182	Connection 3 (87a) (in engine compartment wiring harness)
*	Only for vehicles with cruise control
*2	Depending on equipment

Protected by copyright. Copying for private or commercial purposes, in part or in whole is not permitted unless authorised by Volkswagen AG. Volkswagen AG does not guarantee or accept any liability with respect to the correctness of information in this document. Copyright by Volkswagen AG.

Engine control module, Ignition coil 1 with power output stage, Ignition coil 2 with power output stage, Ignition coil 3 with power output stage, Ignition coil 4 with power output stage, Spark plug connectors, Spark plugs

J623	Engine control module
N70	Ignition coil 1 with power output stage
N127	Ignition coil 2 with power output stage
N291	Ignition coil 3 with power output stage
N292	Ignition coil 4 with power output stage
P	Spark plug connectors
Q	Spark plugs
T4af	4-pin connector
T4ag	4-pin connector
T4ah	4-pin connector
T4ai	4-pin connector
T14	14-pin connector, near the battery
T60	60-pin connector
12	Ground connection in engine compartment, left
15	Ground connection on cylinder head
85	Ground connection 1 (in engine compartment wiring harness)
108	Ground connection 2 (in left front wiring harness)
281	Ground connection 1 (in engine pre-wiring harness)
D206	Connection 87a (in engine pre-wiring harness) 4
*	USA only

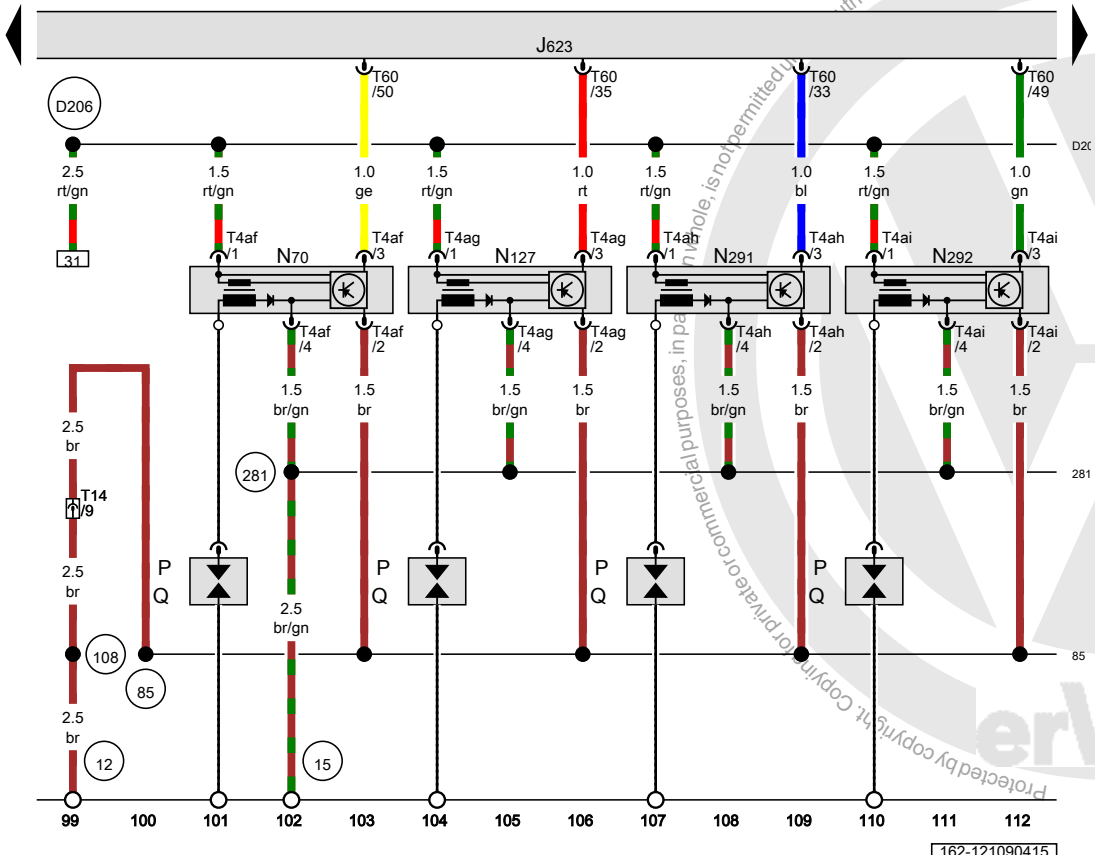

ws	=	white
sw	=	black
ro	=	red
rt	=	red
br	=	brown
gn	=	green
bl	=	blue
gr	=	grey
li	=	lilac
vi	=	lilac
ge	=	yellow
or	=	orange
rs	=	pink

Protected by copyright. Copyright by Volkswagen AG. Copyright for private or commercial purposes, in part or in whole, is not permitted unless authorised by Volkswagen AG. Volkswagen AG does not guarantee or accept any liability with respect to the correctness of information in this document.

Volkswagen AG. Volkswagen AG does not guarantee or accept any liability with respect to the correctness of information in this document. Copyright by Volkswagen AG. Protected by copyright. Reproducing for private or commercial purposes, in part or in whole, is not permitted unless authorised by Volkswagen AG.

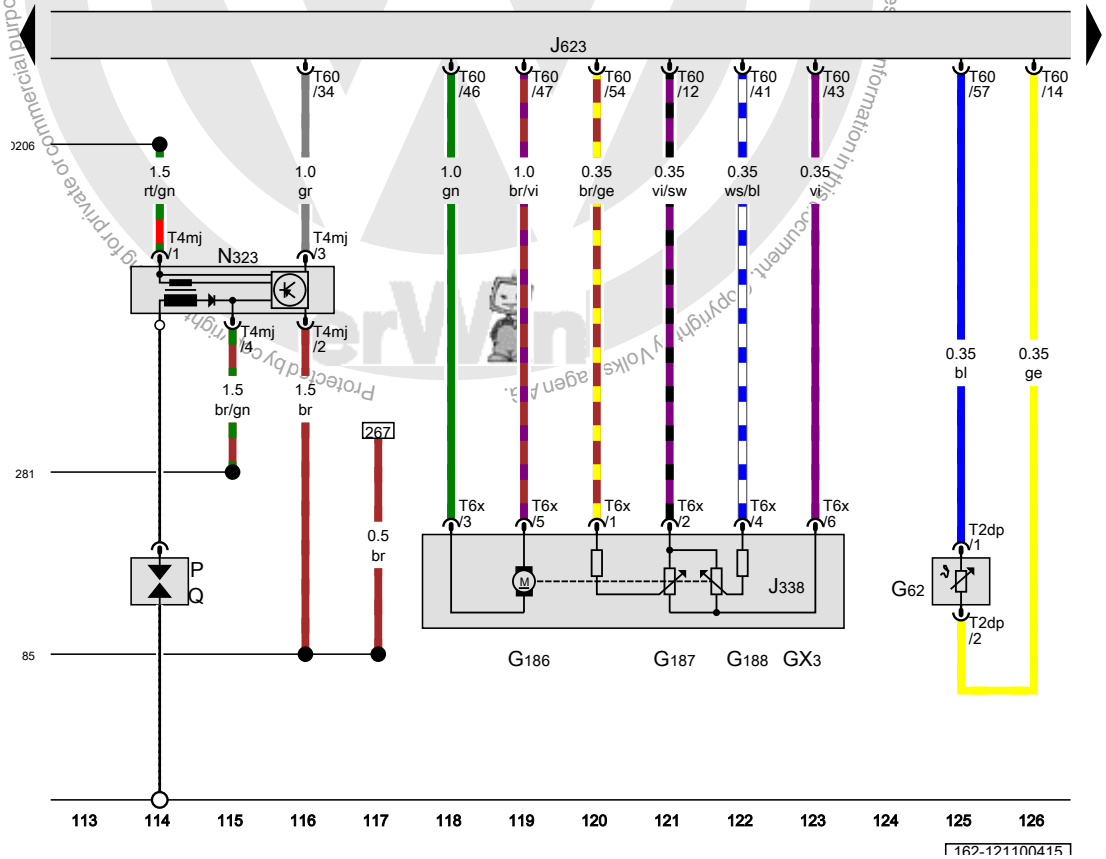

Throttle valve control module, Engine coolant temperature sensor, EPC throttle drive, Engine control module, Ignition coil 5 with power output stage, Spark plug connectors

GX3	Throttle valve control module
G62	Engine coolant temperature sensor
G186	EPC throttle drive
G187	EPC throttle drive angle sensor 1
G188	EPC throttle drive angle sensor 2
J338	Throttle valve control module
J623	Engine control module
N323	Ignition coil 5 with power output stage
P	Spark plug connectors
Q	Spark plugs
T2dp	Double connector
T4mj	4-pin connector
T6x	6-pin connector
T60	60-pin connector
85	Ground connection 1 (in engine compartment wiring harness)
281	Ground connection 1 (in engine pre-wiring harness)
D206	Connection 87a (in engine pre-wiring harness) 4

ws	=	white
sw	=	black
ro	=	red
rt	=	red
br	=	brown
gn	=	green
bl	=	blue
gr	=	grey
li	=	lilac
vi	=	lilac
ge	=	yellow
or	=	orange
rs	=	pink

Volkswagen AG. Volkswagen AG does not guarantee or accept any liability with respect to the correctness of info
cial purposes, in part or in whole, is not permitted unless authorised by
Copyright by Volkswagen AG.
Protected by Copyright. Copying for private

Intake manifold sensor, Intake air temperature sensor, Knock sensor 1, Knock sensor 2, Engine control module

GX9	Intake manifold sensor
G42	Intake air temperature sensor
G61	Knock sensor 1
G66	Knock sensor 2
G71	Manifold absolute pressure sensor
J623	Engine control module
T3ak	3-pin connector
T3y	3-pin connector
T4ax	4-pin connector
T60	60-pin connector
(220)	Sensor ground connection (in engine wiring harness)
(D101)	Connection 1 (in engine compartment wiring harness)
*	Depending on equipment
*2	Wagon

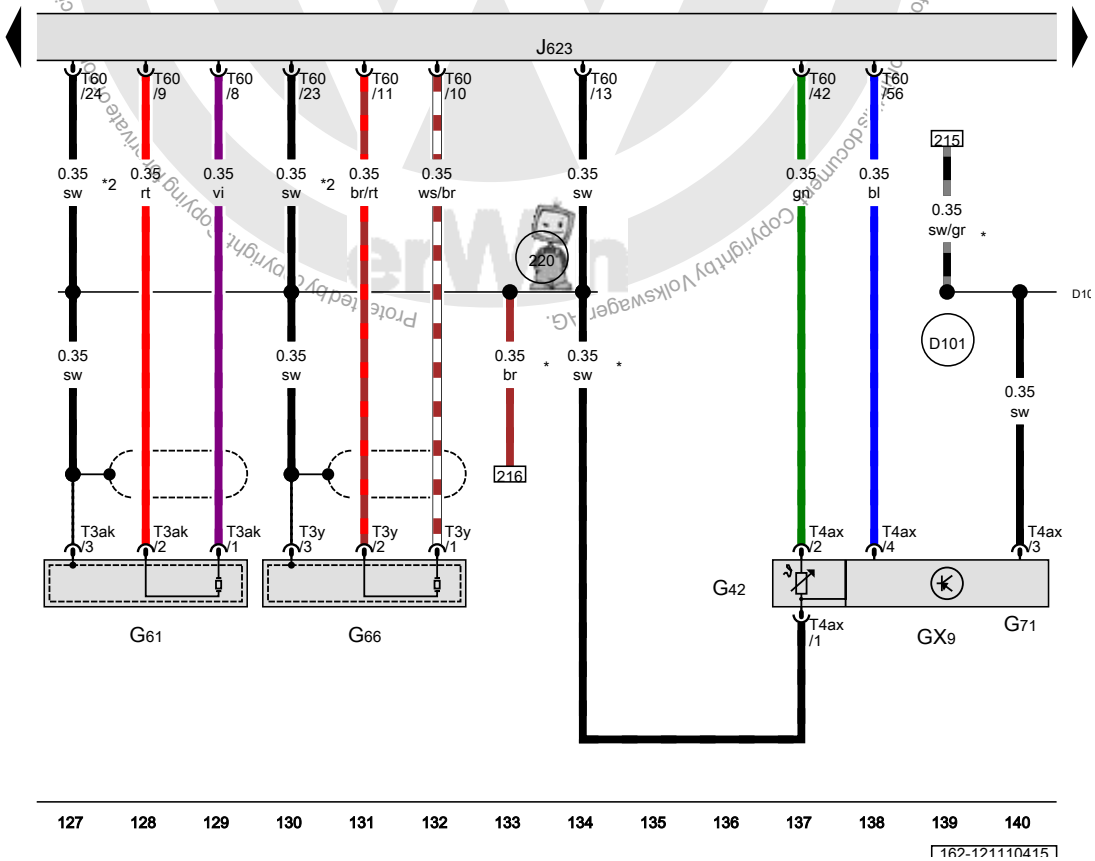

ws	=	white
sw	=	black
ro	=	red
rt	=	red
br	=	brown
gn	=	green
bl	=	blue
gr	=	grey
li	=	lilac
vi	=	lilac
ge	=	yellow
or	=	orange
rs	=	pink

Engine speed sensor, Camshaft position sensor, Engine control module, EVAP canister purge regulator valve 1, Camshaft adjustment valve 1

G28	Engine speed sensor
G40	Camshaft position sensor
J623	Engine control module
N80	EVAP canister purge regulator valve 1
N205	Camshaft adjustment valve 1
N428	Oil pressure regulation valve
T2dt	Double connector
T2du	Double connector
T2dw	Double connector
T3ag	3-pin connector
T3b	3-pin connector
T14	14-pin connector, near the battery
T60	60-pin connector
T94	94-pin connector
D101	Connection 1 (in engine compartment wiring harness)
D107	Connection 5 (in engine compartment wiring harness)
D181	Connection 2 (87a) (in engine compartment wiring harness)

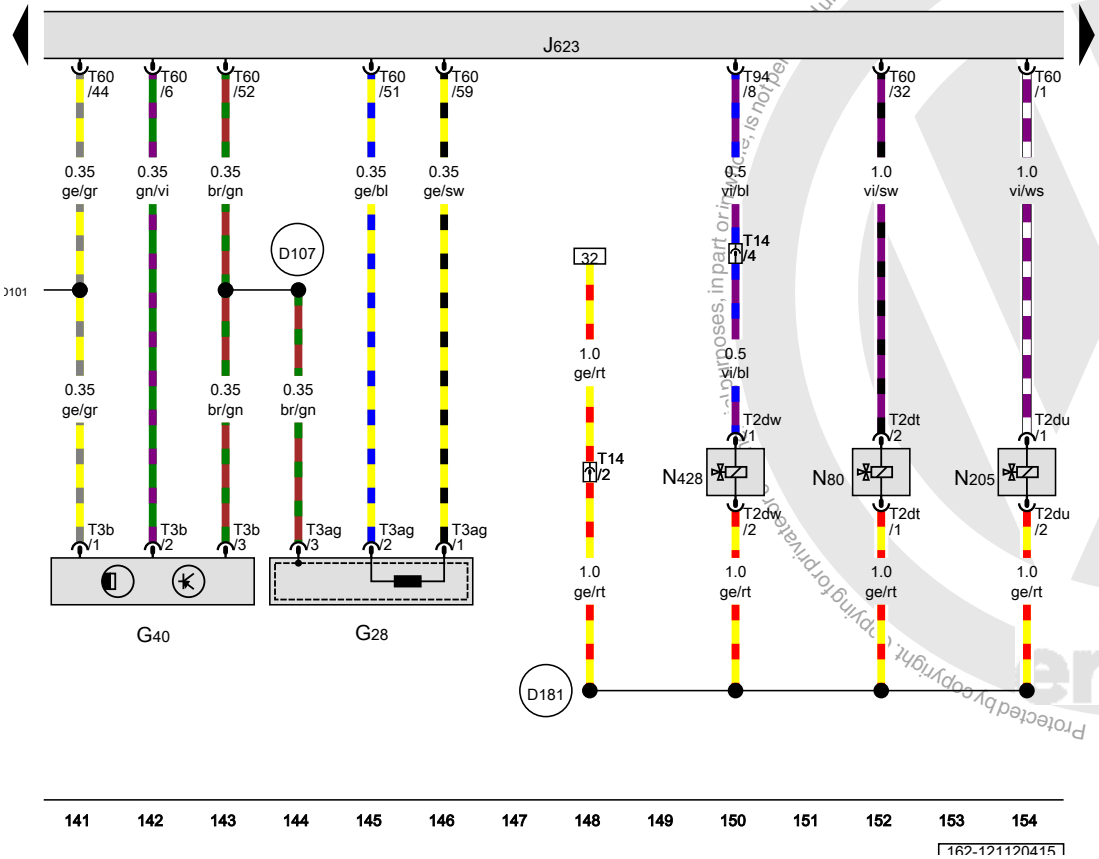

ws	=	white
sw	=	black
ro	=	red
rt	=	red
br	=	brown
gn	=	green
bl	=	blue
gr	=	grey
li	=	lilac
vi	=	lilac
ge	=	yellow
or	=	orange
rs	=	pink

Protected by copyright. Copying for private or commercial purposes, in part or in whole, is not permitted unless authorised by Volkswagen AG. Volkswagen AG does not guarantee or accept any liability with respect to the correctness of information in this document. Copyright by Volkswagen AG.

Engine control module, Cylinder 1 fuel injector, Cylinder 2 fuel injector, Cylinder 3 fuel injector, Cylinder 4 fuel injector, Cylinder 5 fuel injector

J623	Engine control module
N30	Cylinder 1 fuel injector
N31	Cylinder 2 fuel injector
N32	Cylinder 3 fuel injector
N33	Cylinder 4 fuel injector
N83	Cylinder 5 fuel injector
T2cg	Double connector
T2ch	Double connector
T2ci	Double connector
T2cj	Double connector
T2ck	Double connector
T14	14-pin connector
T60	60-pin connector
D95	Injector connection (in engine compartment wiring harness)
*	The color of the wires depends on vehicle equipment

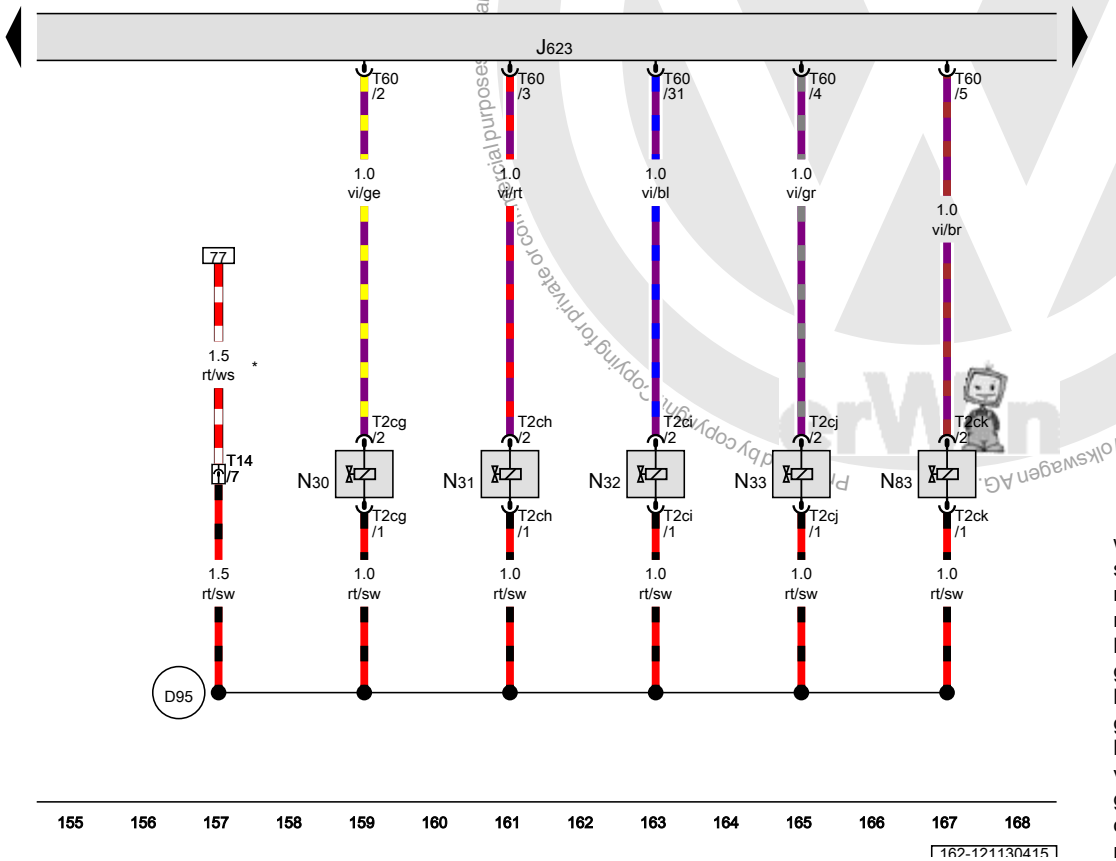

ws	=	white
sw	=	black
ro	=	red
rt	=	red
br	=	brown
gn	=	green
bl	=	blue
gr	=	grey
li	=	lilac
vi	=	lilac
ge	=	yellow
or	=	orange
rs	=	pink

Copyright by Volkswagen AG. Volkswagen AG does not guarantee or accept any liability with respect to the correctness of information in this document. Copyright by Volkswagen AG. Reproduction in part or in whole, is not permitted unless authorised

Accelerator pedal module, Heated oxygen sensor, Accelerator pedal position sensor 2, Engine control module, Oxygen sensor heater

GX2	Accelerator pedal module
G39	Heated oxygen sensor
G79	Accelerator pedal position sensor
G185	Accelerator pedal position sensor 2
J623	Engine control module
T6h	6-pin connector
T6w	6-pin connector
T94	94-pin connector
Z19	Oxygen sensor heater
E30	Connection 87a (in engine wiring harness)

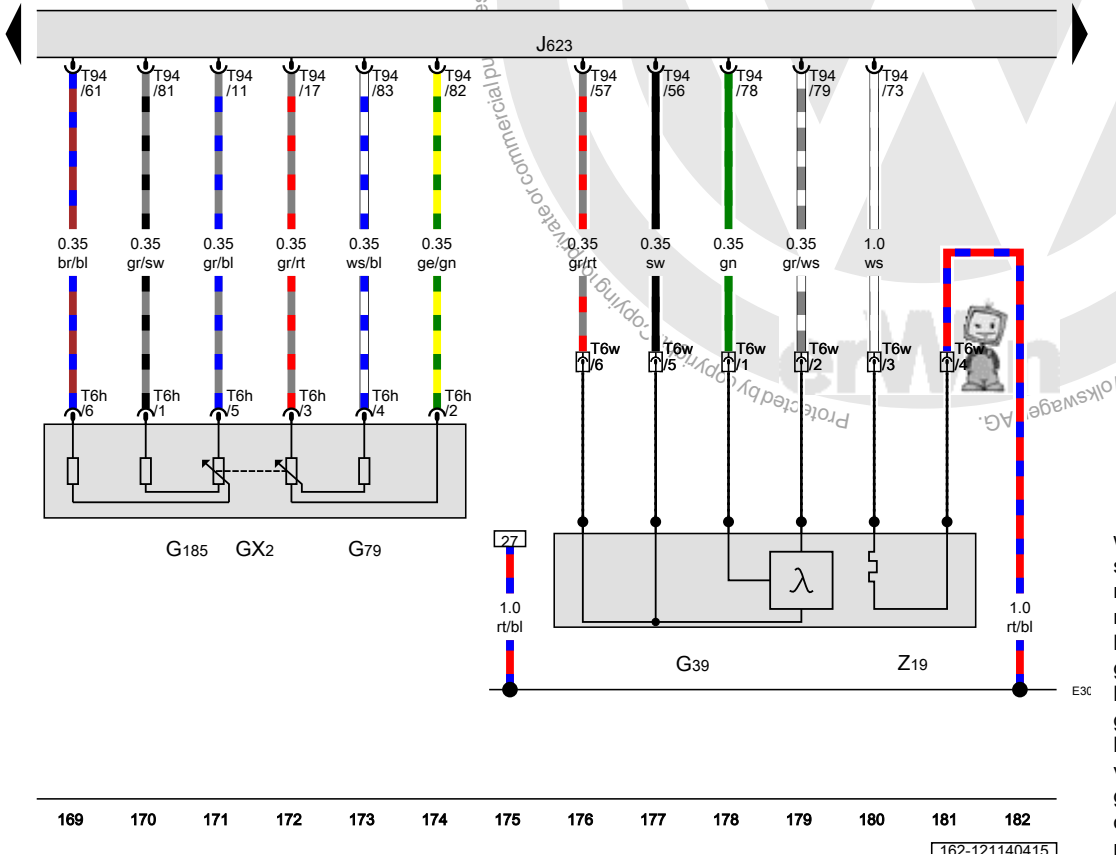

ws	=	white
sw	=	black
ro	=	red
rt	=	red
br	=	brown
gn	=	green
bl	=	blue
gr	=	grey
li	=	lilac
vi	=	lilac
ge	=	yellow
or	=	orange
rs	=	pink

Protected by copyright. Copying for private or commercial purposes, in part or in whole, is not permitted unless authorised by Volkswagen AG. Volkswagen AG does not guarantee or accept any liability with respect to the correctness of information in this document. Copyright by Volkswagen AG.

Oxygen sensor after three way catalytic converter, Engine control module, Heater for oxygen sensor 1 after catalytic converter

G130	Oxygen sensor after three way catalytic converter
J623	Engine control module
T4ao	4-pin connector
T4x	4-pin connector
T94	94-pin connector
Z29	Heater for oxygen sensor 1 after catalytic converter
(E30)	Connection 87a (in engine wiring harness)
*	Coolant fan connection
*2	The color of the wires depends on vehicle equipment

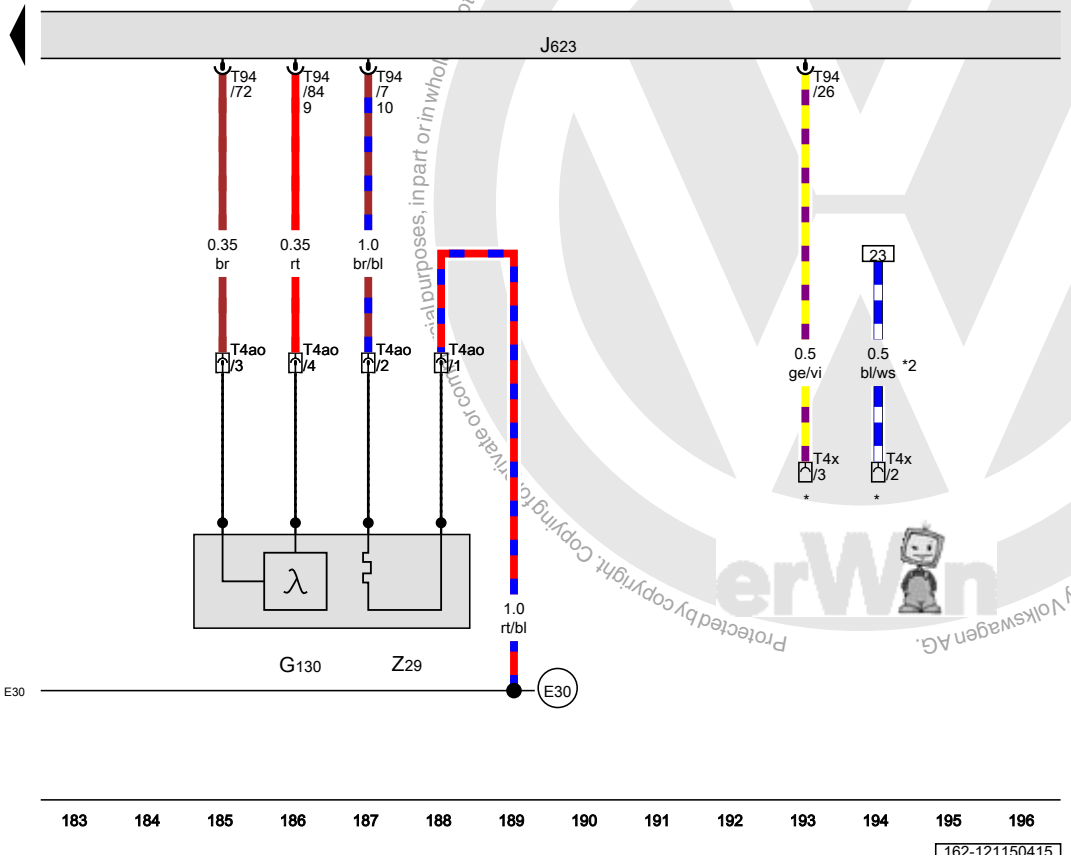

ws	=	white
sw	=	black
ro	=	red
rt	=	red
br	=	brown
gn	=	green
bl	=	blue
gr	=	grey
li	=	lilac
vi	=	lilac
ge	=	yellow
or	=	orange
rs	=	pink

Protected by copyright. Copying for private or commercial purposes, in part or in whole, not permitted unless authorised by Volkswagen AG. Volkswagen AG does not guarantee or accept any liability with respect to the correctness of information in this document. Copyright by Volkswagen AG.

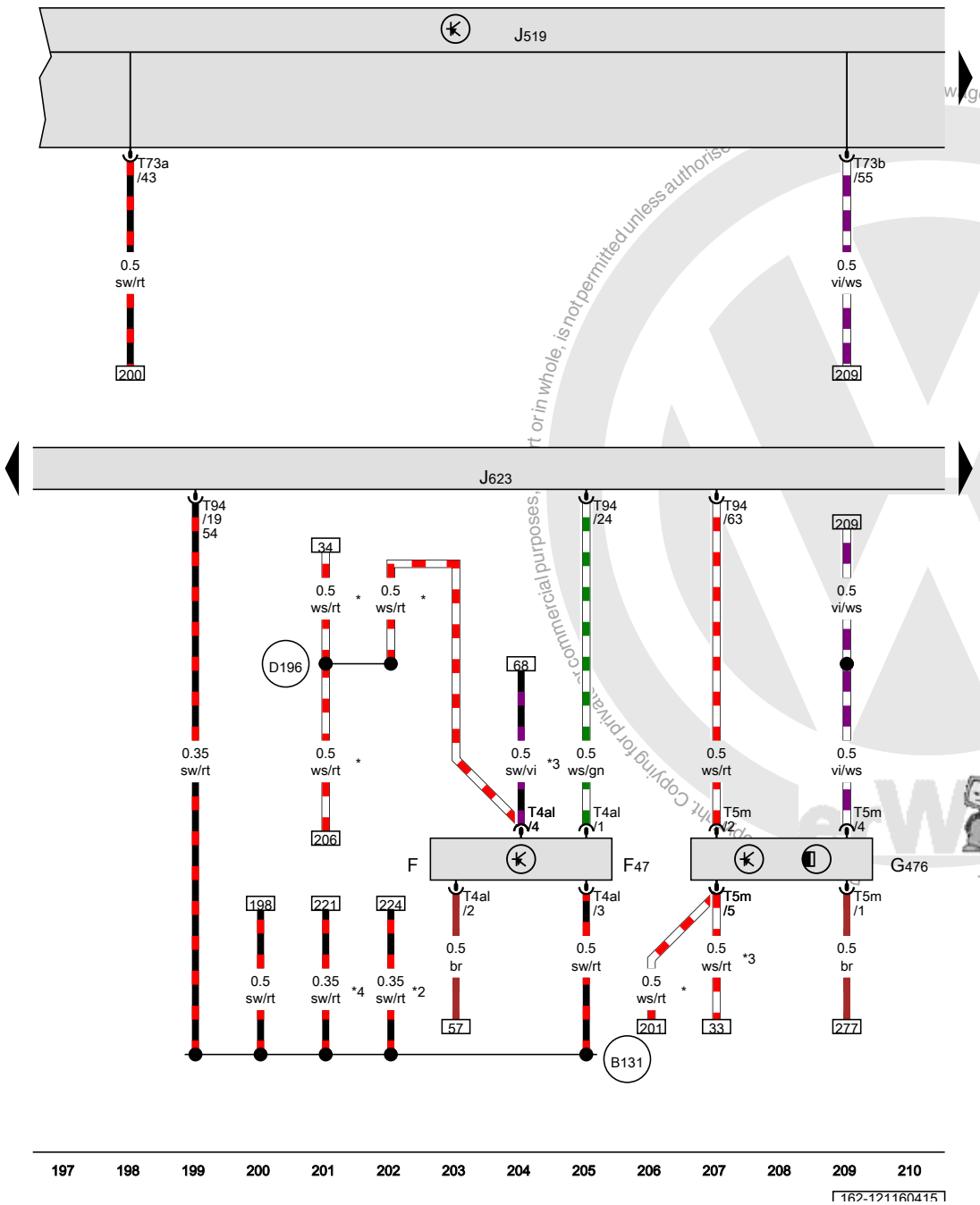

Brake lamp switch, Brake pedal switch, Clutch position sensor, Vehicle electrical control module system, Engine control module

F	Brake lamp switch
F47	Brake pedal switch
G476	Clutch position sensor
J519	Vehicle electrical control module system
J623	Engine control module
T4al	4-pin connector
T5m	5-pin connector
T73a	73-pin connector
T73b	73-pin connector
T94	94-pin connector
B131	Connection 54 (in interior wiring harness)
D196	Connection 87a (in engine pre-wiring harness) 2
*	Running change
*2	Only for vehicles with ABS and ESP
*3	Omitted as a running change
*4	Only for vehicles with ABS without ESP

ws	=	white
sw	=	black
ro	=	red
rt	=	red
br	=	brown
gn	=	green
bl	=	blue
gr	=	grey
li	=	lilac
vi	=	lilac
ge	=	yellow
or	=	orange
rs	=	pink

Copyright by Volkswagen AG. Copying for private or commercial purposes, in part or in whole, is not permitted unless authorised by Volkswagen AG. Volkswagen AG does not guarantee or accept any liability with respect to the correctness of information in this document.

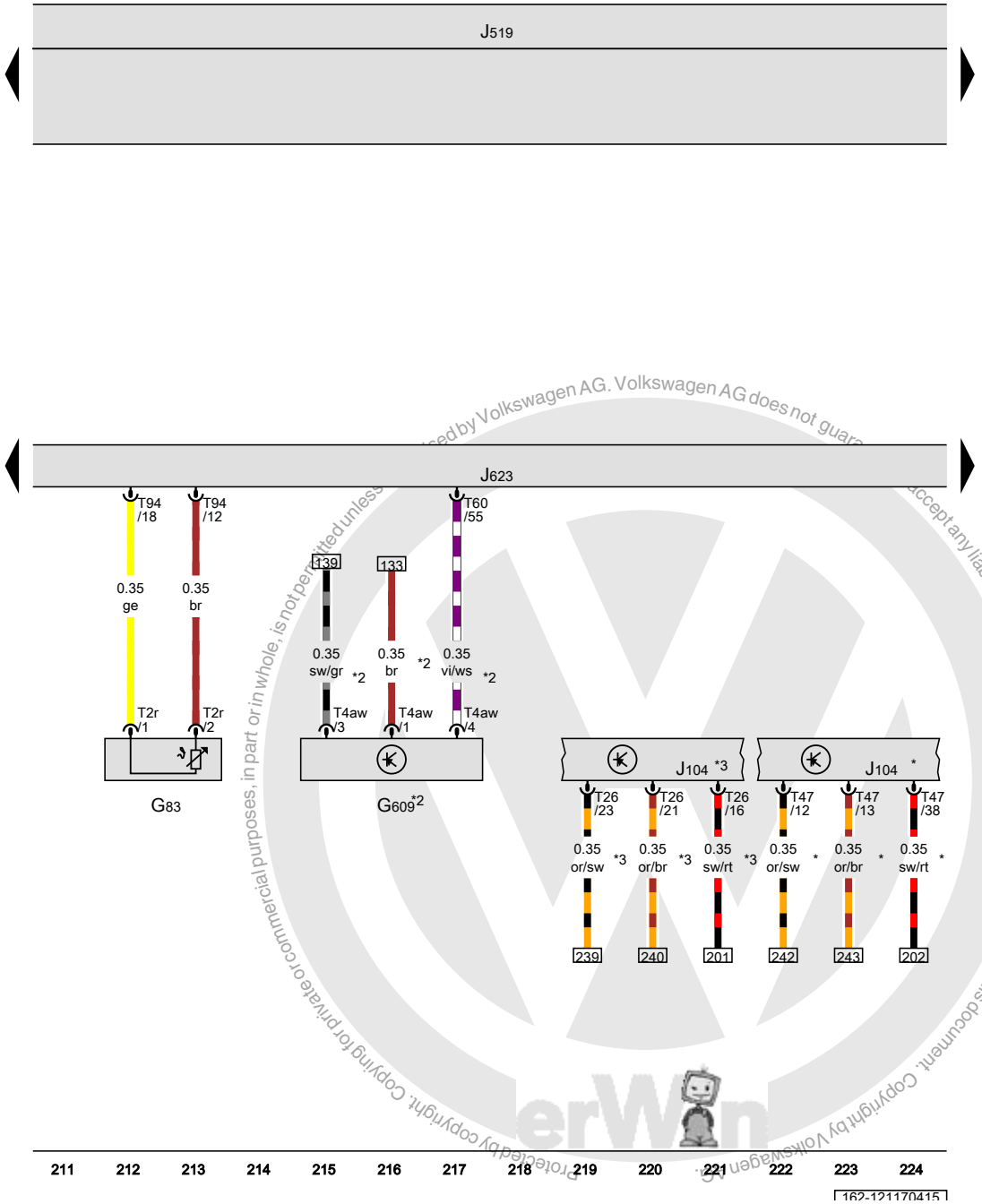

Engine coolant temperature sensor on radiator outlet, Secondary air injection sensor 1, Vehicle electrical control module system, Engine control module

G83	Engine coolant temperature sensor on radiator outlet
G609	Secondary air injection sensor 1
J104	ABS control module
J519	Vehicle electrical control module system
J623	Engine control module
T2r	Double connector
T4aw	4-pin connector
T26	26-pin connector
T47	47-pin connector
T60	60-pin connector
T94	94-pin connector
*	Only for vehicles with ABS and ESP
*2	Depending on equipment
*3	Only for vehicles with ABS without ESP

ws	=	white
sw	=	black
ro	=	red
rt	=	red
br	=	brown
gn	=	green
bl	=	blue
gr	=	grey
li	=	lilac
vi	=	lilac
ge	=	yellow
or	=	orange
rs	=	pink

Protected by copyright. Copying for private or commercial purposes, in part or in whole, is not permitted unless authorised by Volkswagen AG. Volkswagen AG does not guarantee or accept any liability with respect to the correctness of information in this document. Copyright by Volkswagen AG.

Reduced oil pressure switch, Vehicle electrical control module system, Engine control module, Secondary air injection solenoid valve, Leak detection pump

F378	Reduced oil pressure switch
J519	Vehicle electrical control module system
J623	Engine control module
N112	Secondary air injection solenoid valve
T2cl	Double connector
T4dp	4-pin connector
T14	14-pin connector
T60	60-pin connector
T94	94-pin connector
V144	Leak detection pump
B383	Powertrain CAN bus high connection 1 (in main wiring harness)
B390	Powertrain CAN bus low connection 1 (in main wiring harness)
D197	Connection 5 (87a) (in engine compartment wiring harness)
*	If available
*2	Depending on equipment
*3	Omitted as a running change
*4	Running change

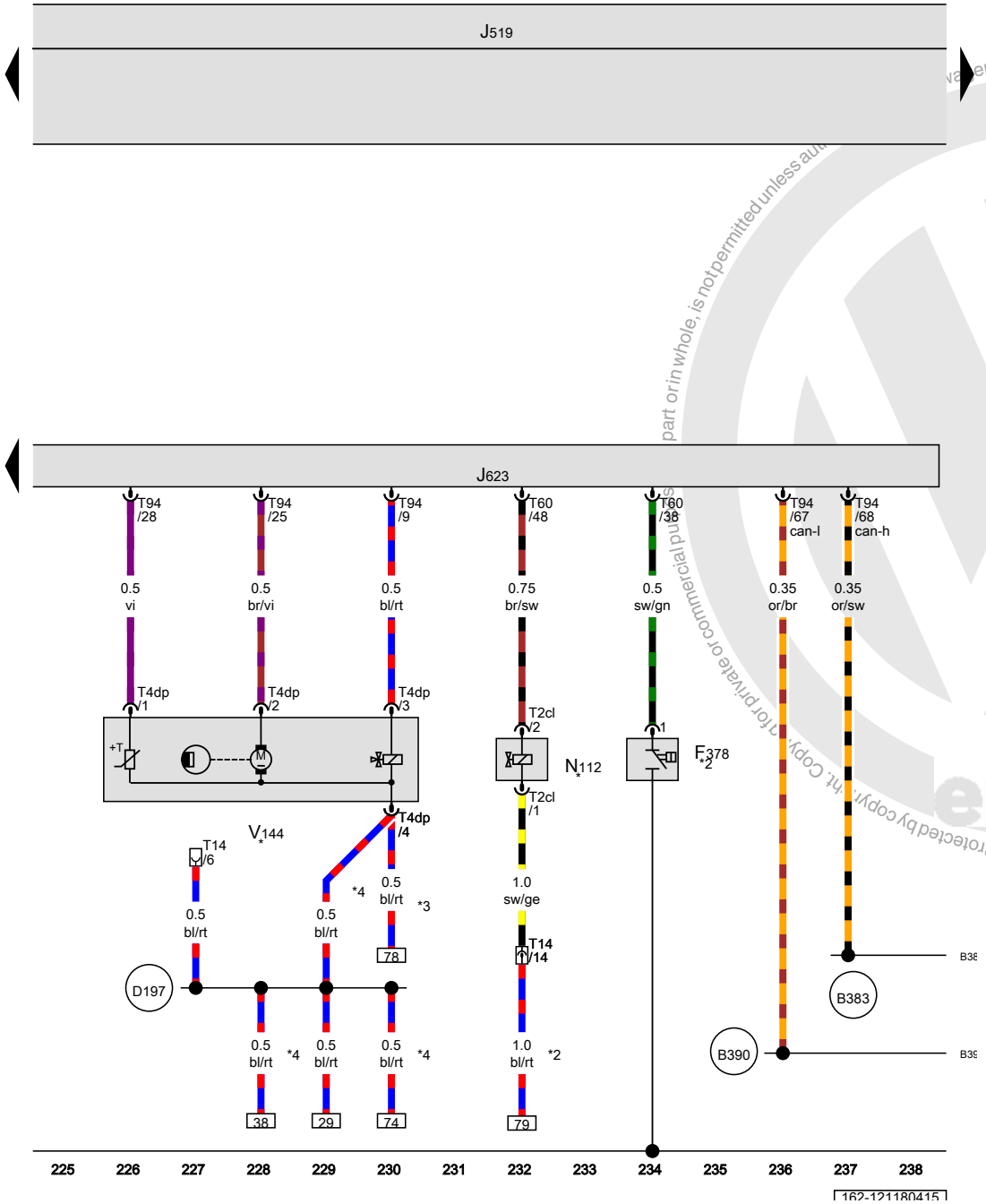

ws	=	white
sw	=	black
ro	=	red
rt	=	red
br	=	brown
gn	=	green
bl	=	blue
gr	=	grey
li	=	lilac
vi	=	lilac
ge	=	yellow
or	=	orange
rs	=	pink

Volkswagen AG. Volkswagen AG does not guarantee or accept any liability with respect to the correctness of information in this document. Copyright by Volkswagen AG. Protected by copyright. Copying for private or commercial purposes, in part or in whole, is not permitted unless authorized.

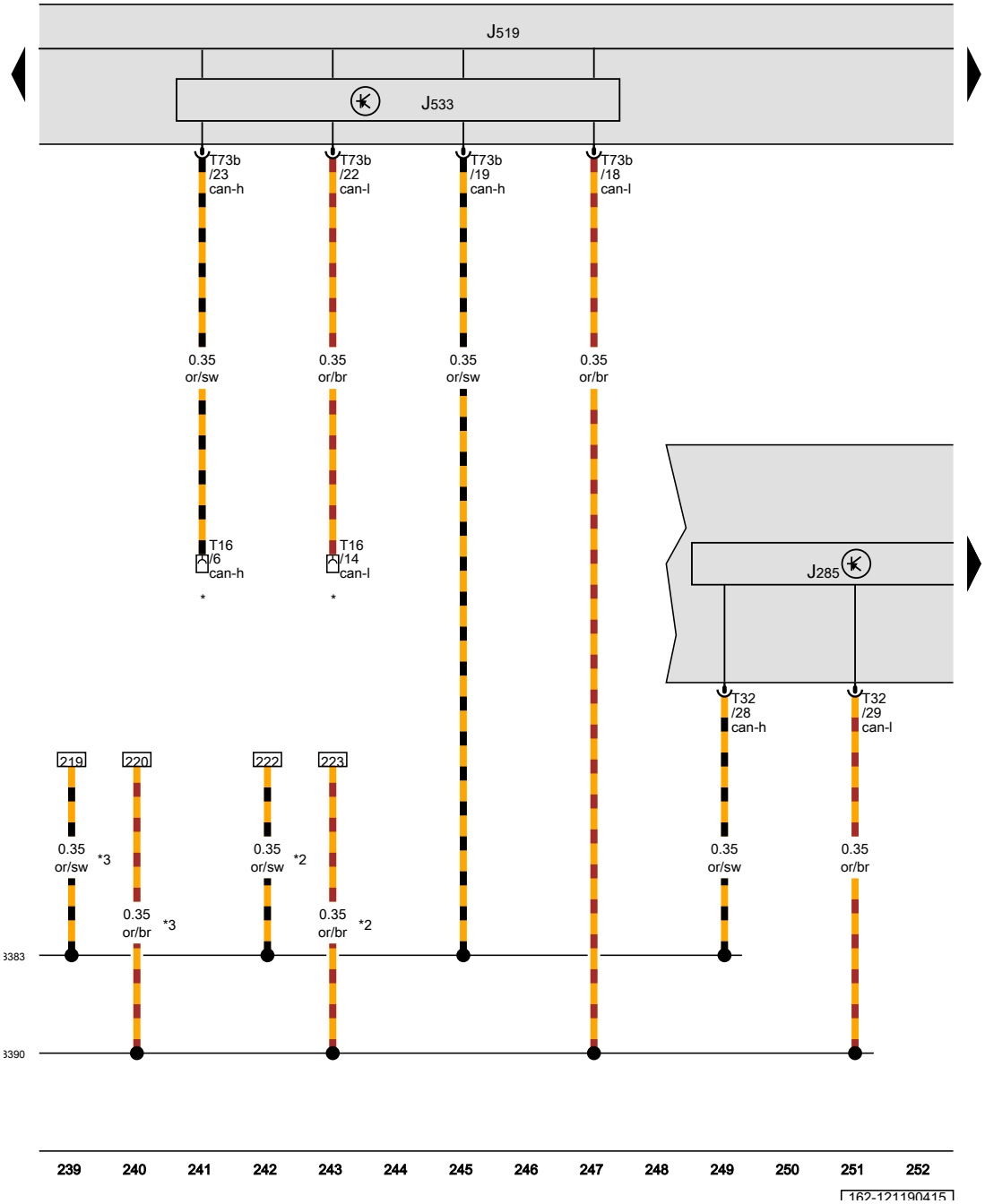

Instrument cluster control module, Vehicle electrical control module system, Data bus on board diagnostic interface

J285	Instrument cluster control module
J519	Vehicle electrical control module system
J533	Data bus on board diagnostic interface
T16	16-pin connector
T32	32-pin connector
T73b	73-pin connector
B383	Powertrain CAN bus high connection 1 (in main wiring harness)
B390	Powertrain CAN bus low connection 1 (in main wiring harness)
*	Diagnostic connector
*2	Only for vehicles with ABS and ESP
*3	Only for vehicles with ABS without ESP

ws	=	white
sw	=	black
ro	=	red
rt	=	red
br	=	brown
gn	=	green
bl	=	blue
gr	=	grey
li	=	lilac
vi	=	lilac
ge	=	yellow
or	=	orange
rs	=	pink

Protected by copyright. Copying for private or commercial purposes, in part or in whole, is not permitted unless authorised by Volkswagen AG. Volkswagen AG does not guarantee or accept any liability with respect to the correctness of information in this document. Copyright by Volkswagen AG.

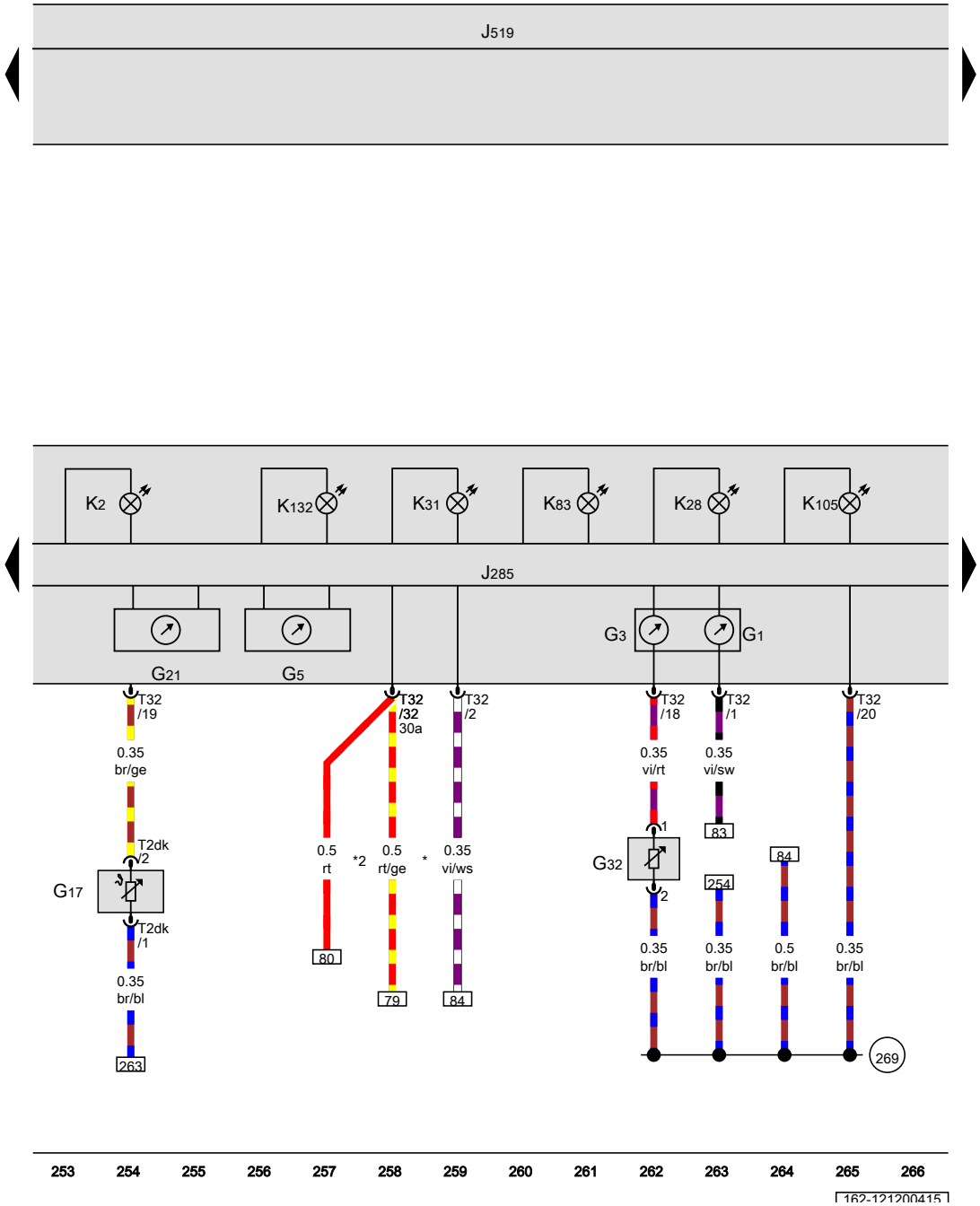

Fuel gauge, Engine coolant temperature gauge, Tachometer, Speedometer, Instrument cluster control module, Vehicle electrical control module system, Generator indicator lamp, Engine coolant level/temperature indicator lamp, Cruise control indicator lamp, Low fuel level indicator lamp, Electronic power control malfunction indicator lamp

G1	Fuel gauge
G3	Engine coolant temperature gauge
G5	Tachometer
G17	Outside air temperature sensor
G21	Speedometer
G32	Engine coolant level sensor
J285	Instrument cluster control module
J519	Vehicle electrical control module system
K2	Generator indicator lamp
K28	Engine coolant level/temperature indicator lamp
K31	Cruise control indicator lamp
K83	Malfunction indicator lamp
K105	Low fuel level indicator lamp
K132	Electronic power control malfunction indicator lamp
T2dk	Double connector
T32	32-pin connector
(269)	Sensor ground connection 1 (in instrument panel wiring harness)
*	Omitted as a running change
*2	Running change

ws	=	white
sw	=	black
ro	=	red
rt	=	red
br	=	brown
gn	=	green
bl	=	blue
gr	=	grey
li	=	lilac
vi	=	lilac
ge	=	yellow
or	=	orange
rs	=	pink

Protected by copyright. Copying for private or commercial purposes, in part or in whole, is not permitted unless authorised by Volkswagen AG. Volkswagen AG does not guarantee or accept any liability with respect to the correctness of information in this document. Copyright by Volkswagen AG.

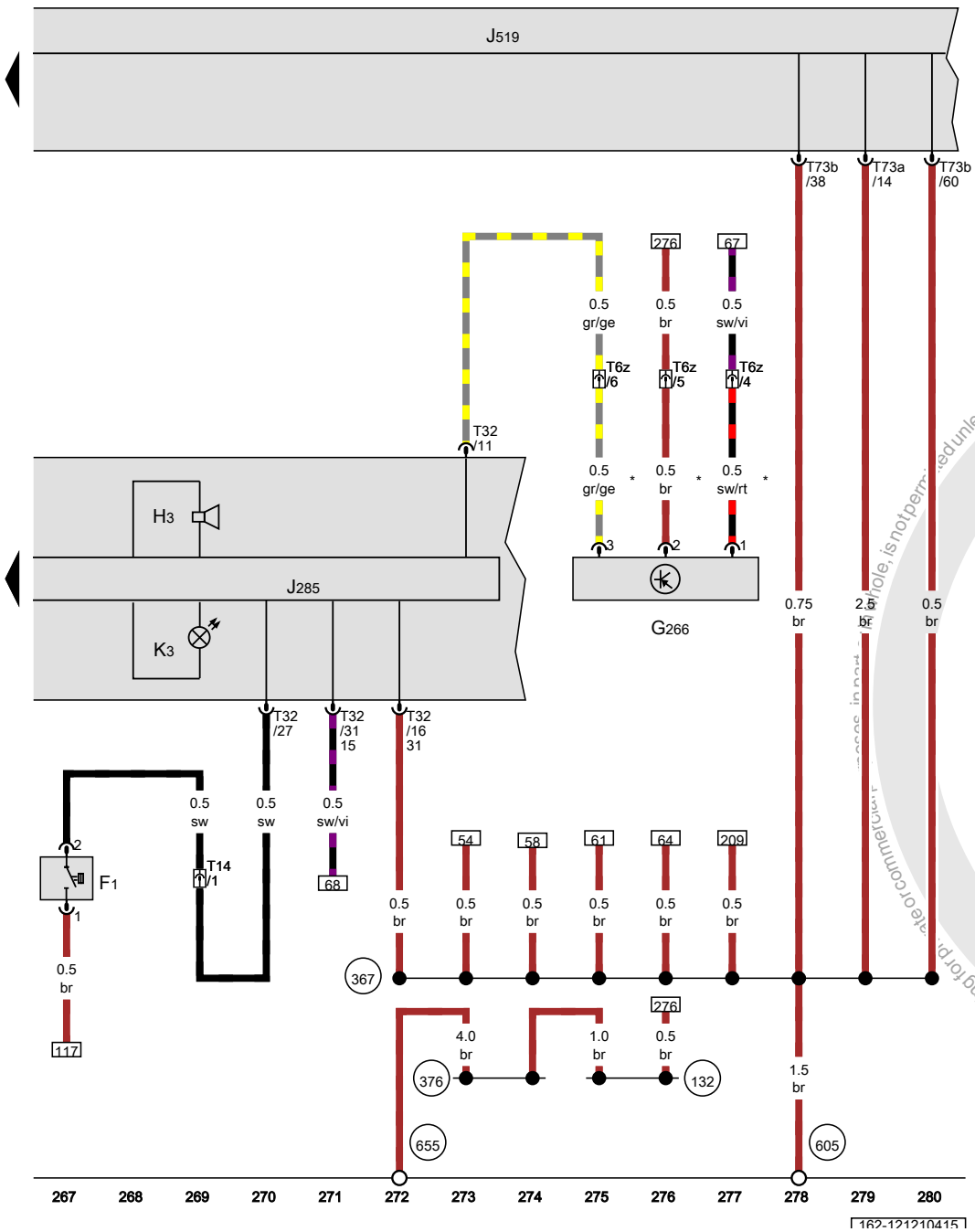

Oil pressure switch, Oil level thermal sensor, Instrument cluster control module, Vehicle electrical control module system

F1	Oil pressure switch
G266	Oil level thermal sensor
H3	Warning buzzer and tone
J285	Instrument cluster control module
J519	Vehicle electrical control module system
K3	Oil pressure indicator lamp
T6z	6-pin connector, near the left headlamp
T14	14-pin connector
T32	32-pin connector
T73a	73-pin connector
T73b	73-pin connector
132	Ground connection 3 (in engine compartment wiring harness)
367	Ground connection 2 (in main wiring harness)
376	Ground connection 11 (in main wiring harness)
605	Ground connection on upper steering column
655	Ground connection on left headlamp
*	Only for vehicles with flexible service interval reminder

ws	=	white
sw	=	black
ro	=	red
rt	=	red
br	=	brown
gn	=	green
bl	=	blue
gr	=	grey
li	=	lilac
vi	=	lilac
ge	=	yellow
or	=	orange
rs	=	pink

Volkswagen AG does not guarantee or accept any liability with respect to the correctness of information in this document. Copyright by Volkswagen AG. Protected by copyright. Copying for private or commercial purposes, in part or in whole, is not permitted unless authorised by Volkswagen AG.

Automatic transmission 6-speed 09G , CPKA,CPRA,(0ER)

from July 2013

Protected by copyright. Copying for private or commercial purposes, in part or in whole, is not permitted unless authorised by Volkswagen AG. Volkswagen AG does not guarantee or accept any liability with respect to the correctness of information in this document. Copyright by Volkswagen AG.

Back-up switch, Multifunction transmission range switch, Transmission control module

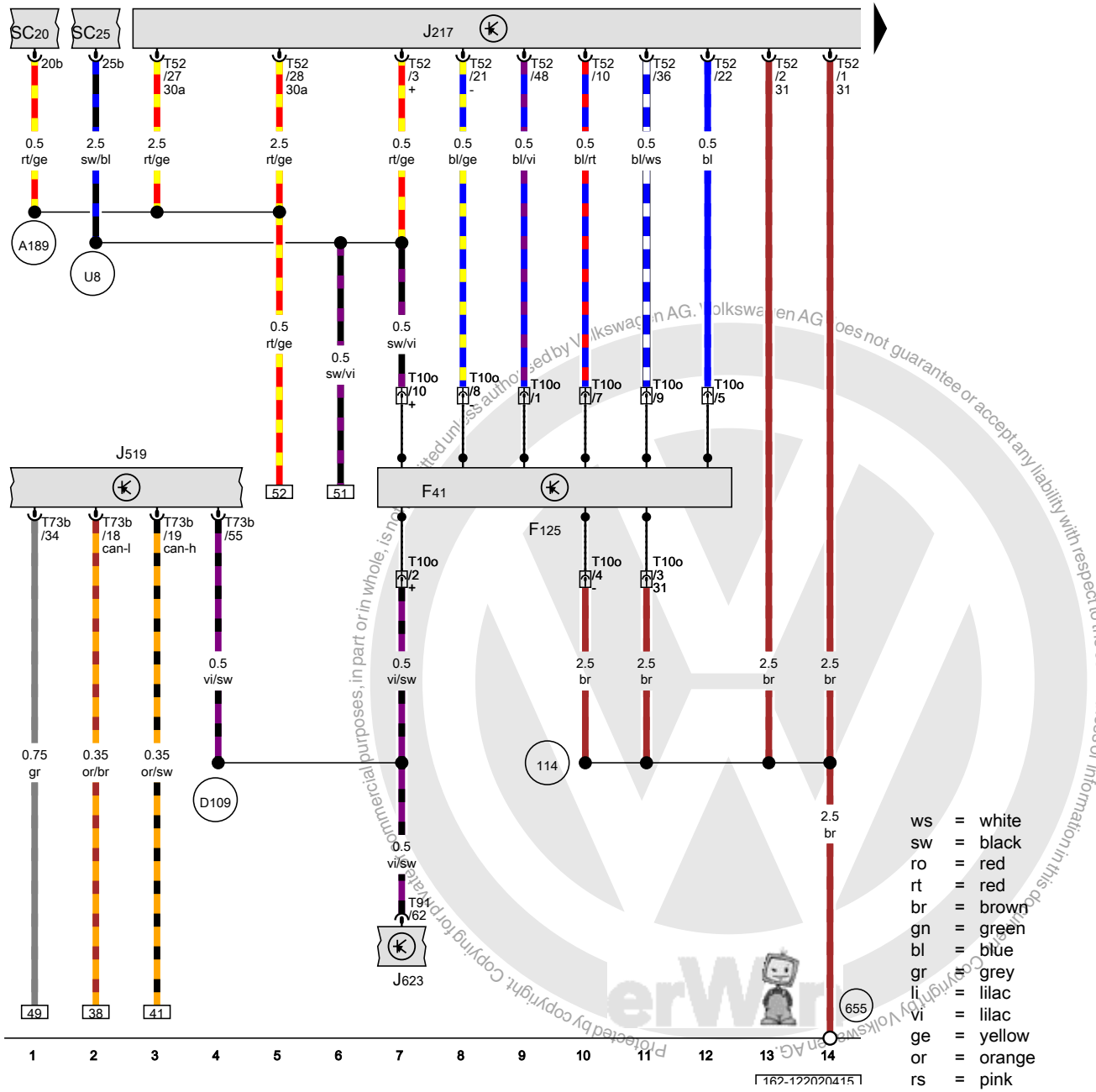

F41	Back-up switch
F125	Multifunction transmission range switch
J217	Transmission control module
J519	Vehicle electrical control module system
J623	Engine control module
SC20	Fuse 20 (on fuse panel C)
SC25	Fuse 25 (on fuse panel C)
T10o	10-pin connector
T52	52-pin connector
T73b	73-pin connector
T91	91-pin connector
114	Ground connection (in automatic transmission wiring harness)
655	Ground connection on left headlamp
A189	Positive connection 5 (30a) (in instrument panel wiring harness)
D109	Connection 7 (in engine compartment wiring harness)
U8	Positive connection (15a) (in automatic transmission wiring harness)

ws	=	white
sw	=	black
ro	=	red
rt	=	red
br	=	brown
gn	=	green
bl	=	blue
gr	=	grey
li	=	lilac
vi	=	lilac
ge	=	yellow
or	=	orange
rs	=	pink

Protected by copyright. Copying for private or commercial purposes, in part or in whole, is not permitted unless authorised by Volkswagen AG. Volkswagen AG does not guarantee or accept any liability with respect to the correctness of information in this document. Copyright by Volkswagen AG.

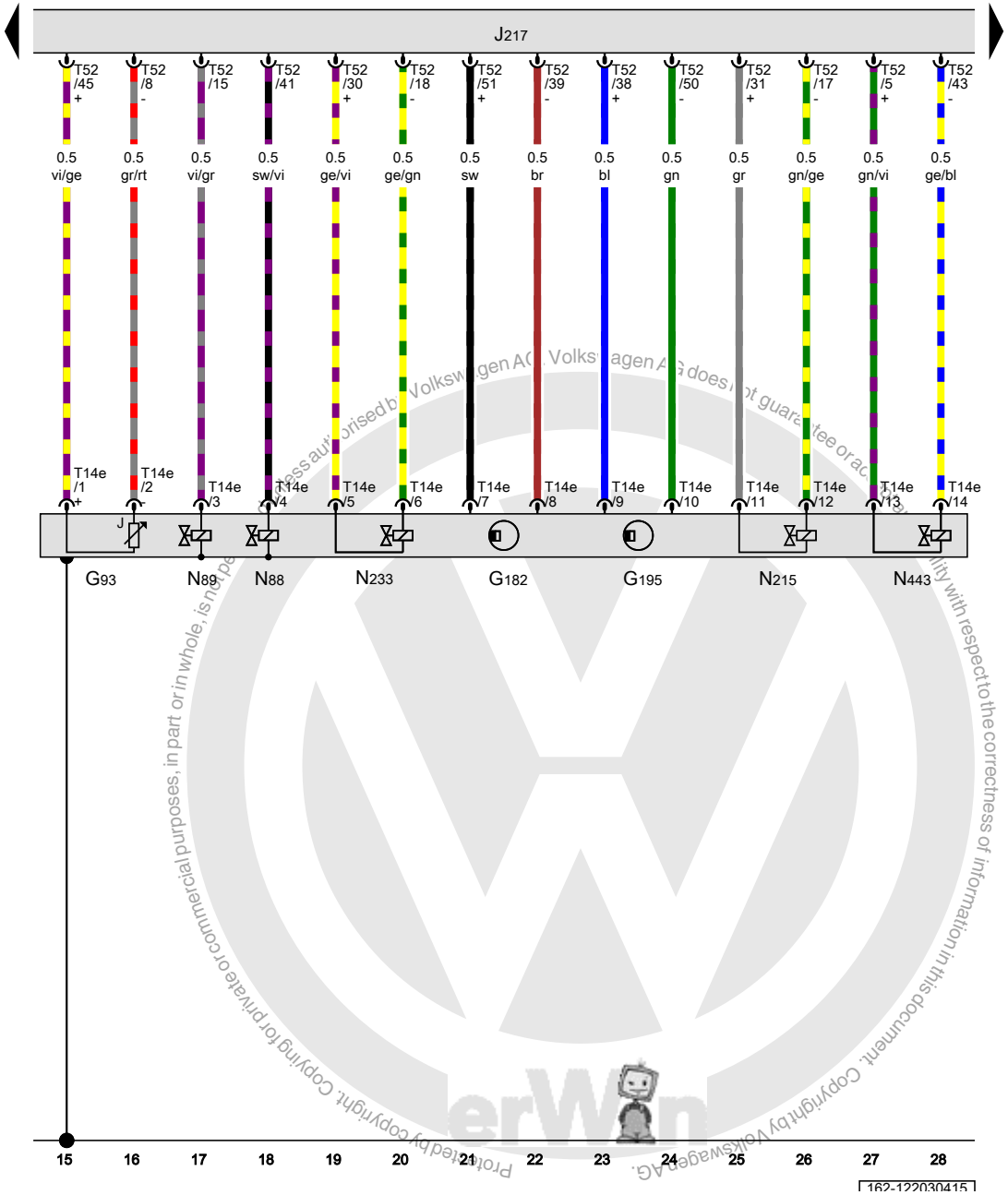

Transmission fluid temperature sensor, Transmission input speed sensor, Transmission output speed sensor, Transmission control module, Solenoid valve 1, Solenoid valve 2, Automatic transmission pressure regulating valve 1, Automatic transmission pressure regulating valve 5, Automatic transmission pressure regulating valve 7

G93	Transmission fluid temperature sensor
G182	Transmission input speed sensor
G195	Transmission output speed sensor
J217	Transmission control module
N88	Solenoid valve 1
N89	Solenoid valve 2
N215	Automatic transmission pressure regulating valve 1
N233	Automatic transmission pressure regulating valve 5
N443	Automatic transmission pressure regulating valve 7
T14e	14-pin connector
T52	52-pin connector

ws	=	white
sw	=	black
ro	=	red
rt	=	red
br	=	brown
gn	=	green
bl	=	blue
gr	=	grey
li	=	lilac
vi	=	lilac
ge	=	yellow
or	=	orange
rs	=	pink

Protected by copyright. Copying for private or commercial purposes, in part or in whole, is not permitted unless authorised by Volkswagen AG. Volkswagen AG does not guarantee or accept any liability with respect to the correctness of information in this document. Copyright by Volkswagen AG.

Transmission control module, Instrument cluster, Automatic transmission pressure regulating valve 2, Automatic transmission pressure regulating valve 3, Automatic transmission pressure regulating valve 4, Transmission electric pump 2

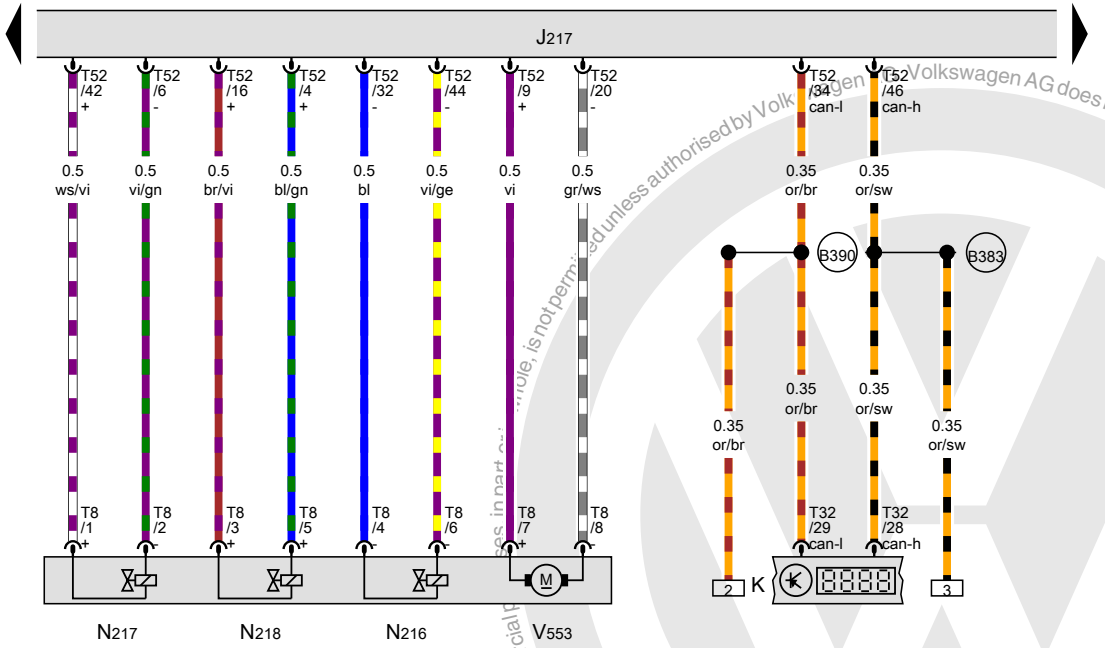

J217	Transmission control module
K	Instrument cluster
N216	Automatic transmission pressure regulating valve 2
N217	Automatic transmission pressure regulating valve 3
N218	Automatic transmission pressure regulating valve 4
T8	8-pin connector
T32	32-pin connector
T52	52-pin connector
V553	Transmission electric pump 2
B383	Powertrain CAN bus high connection 1 (in main wiring harness)
B390	Powertrain CAN bus low connection 1 (in main wiring harness)

ws	=	white
sw	=	black
ro	=	red
rt	=	red
br	=	brown
gn	=	green
bl	=	blue
gr	=	grey
li	=	lilac
vi	=	lilac
ge	=	yellow
or	=	orange
rs	=	pink

29 30 31 32 33 34 35 36 37 38 39 40 41 42

162-122040415

Protected by copyright. Copying for private or commercial purposes, in part or in whole, is not permitted unless authorised by Volkswagen AG. Volkswagen AG does not guarantee or accept any liability with respect to the correctness of information in this document. Copyright by Volkswagen AG.

Selector lever, tiptronic switch, Selector lever park position lock switch, Transmission control module, Selector lever scale illumination bulb, Shift lock solenoid, Transmission range display

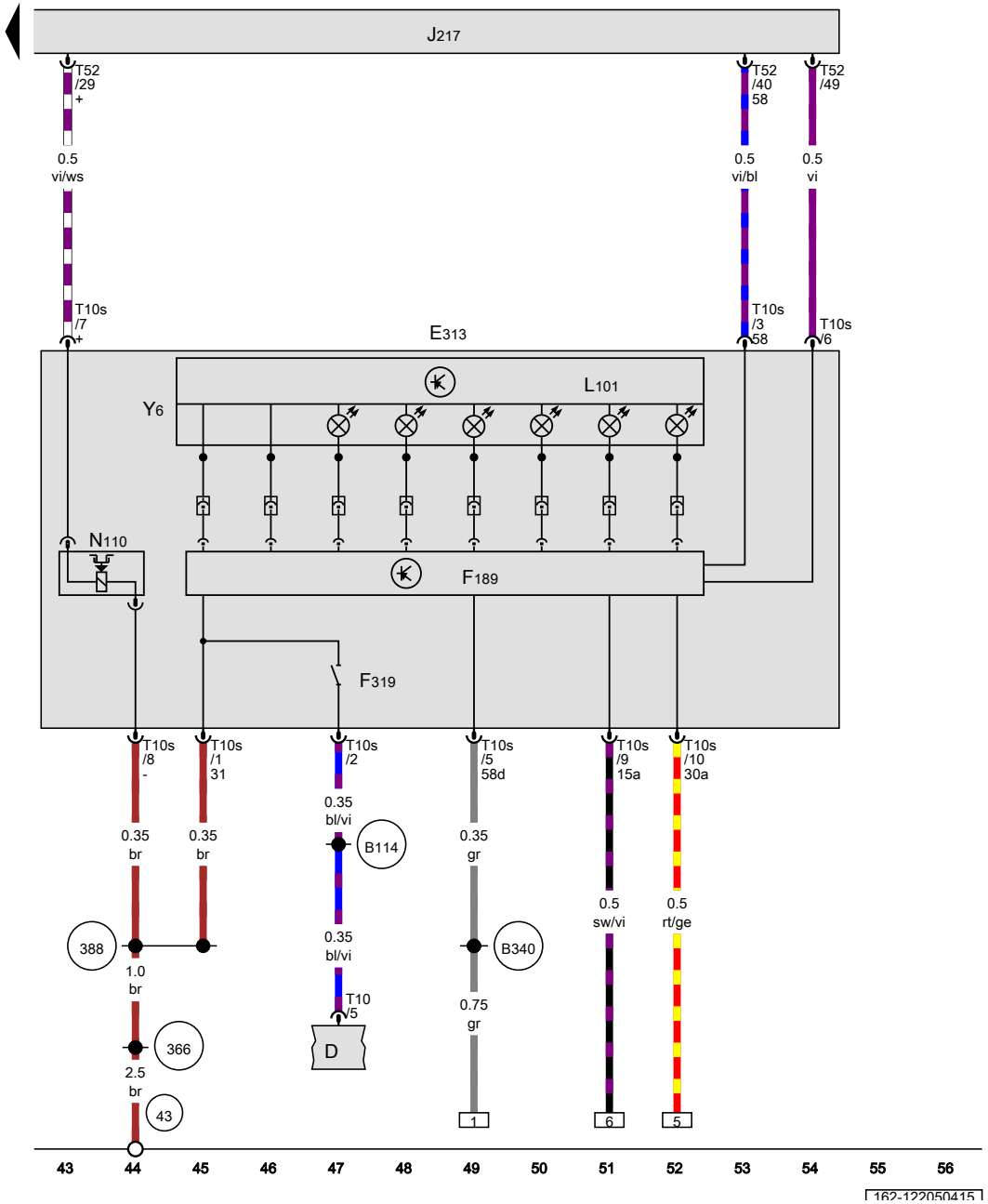

D	Ignition/starter switch
E313	Selector lever
F189	tiptronic switch
F319	Selector lever park position lock switch
J217	Transmission control module
L101	Selector lever scale illumination bulb
N110	Shift lock solenoid
T10	10-pin connector
T10s	10-pin connector
T10v	10-pin connector
T52	52-pin connector
Y6	Transmission range display
43	Ground connection on A-pillar, lower right
366	Ground connection 1 (in main wiring harness)
388	Ground connection 23 (in main wiring harness)
B114	Lock switch connection (in interior wiring harness)
B340	Connection 58d (in main wiring harness) 1

ws	=	white
sw	=	black
ro	=	red
rt	=	red
br	=	brown
gn	=	green
bl	=	blue
gr	=	grey
li	=	lilac
vi	=	lilac
ge	=	yellow
or	=	orange
rs	=	pink

Protected by copyright. Copying for private or commercial purposes, in part or in whole, is not permitted unless authorised by Volkswagen AG. Volkswagen AG does not guarantee or accept any liability with respect to the correctness of information in this document. Copyright by Volkswagen AG.

Comfort system, High (AW1) , (AW1)

from July 2012

Protected by copyright. Copying for private or commercial purposes, in part or in whole, is not permitted unless authorised by Volkswagen AG. Volkswagen AG does not guarantee or accept any liability with respect to the correctness of information in this document. Copyright by Volkswagen AG.

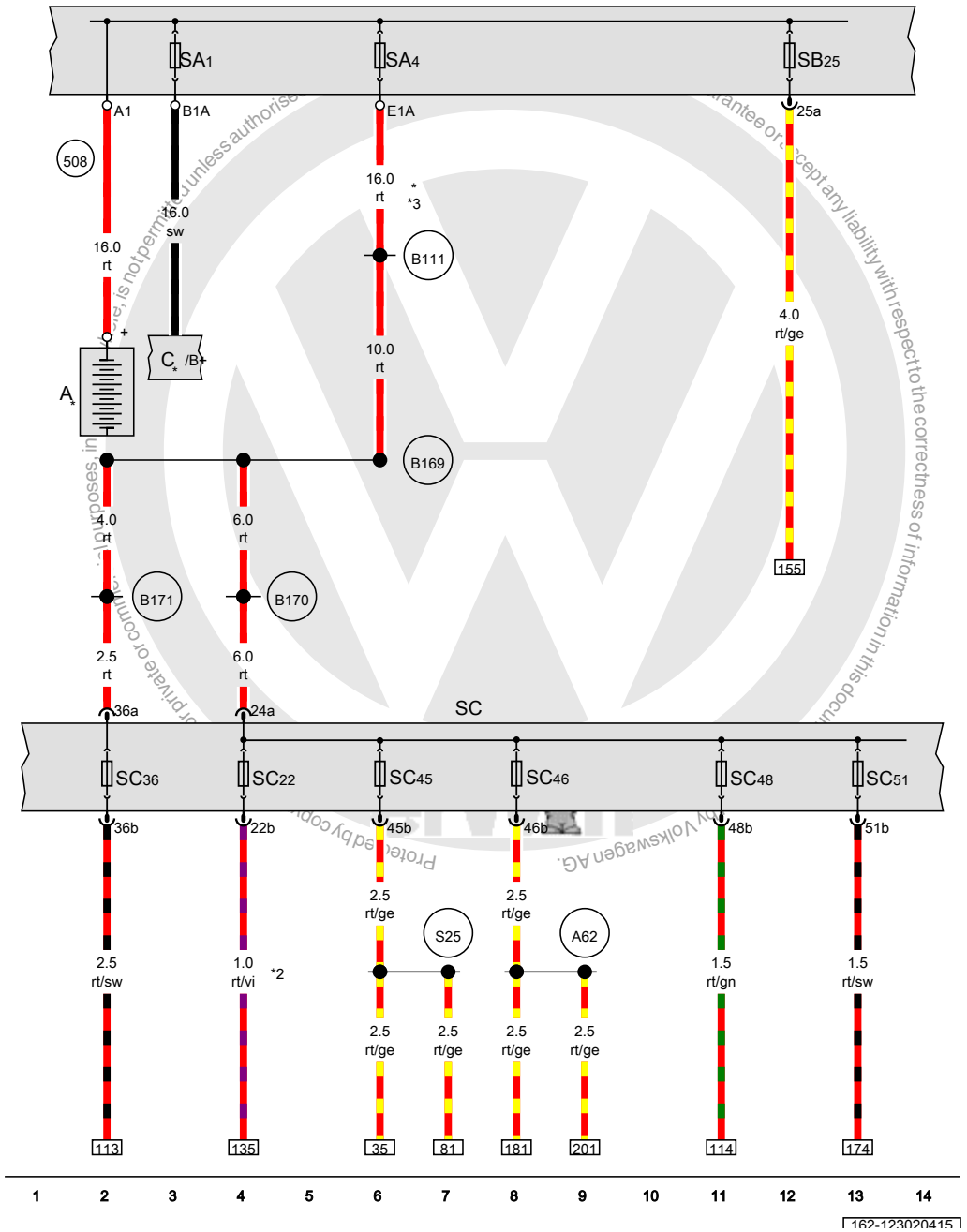

Battery, Fuse 1 (on fuse panel A), Fuse 4 (on fuse panel A), Fuse 25 (on fuse panel B), Fuse panel C

A	Battery
C	Generator
SA1	Fuse 1 (on fuse panel A)
SA4	Fuse 4 (on fuse panel A)
SB25	Fuse 25 (on fuse panel B)
SC	Fuse panel C
SC22	Fuse 22 (on fuse panel C)
SC36	Fuse 36 (on fuse panel C)
SC45	Fuse 45 (on fuse panel C)
SC46	Fuse 46 (on fuse panel C)
SC48	Fuse 48 (on fuse panel C)
SC51	Fuse 51 (on fuse panel C)
508	Terminal 30 threaded connection (on E-box)
A62	Power window connection (in instrument panel wiring harness)
B111	Positive connection 1 (30a) (in interior wiring harness)
B169	Positive connection 1 (30) (in interior wiring harness)
B170	Positive connection 2 (30) (in interior wiring harness)
B171	Positive connection 3 (30) (in interior wiring harness)
S25	Positive connection (30a) (in central locking system wiring harness)
*	Only for vehicles without hybrid drive
*2	Diameter depends on equipment
*3	Refer to applicable high-voltage system wiring diagram

ws	=	white
sw	=	black
ro	=	red
rt	=	red
br	=	brown
gn	=	green
bl	=	blue
gr	=	grey
li	=	lilac
vi	=	lilac
ge	=	yellow
or	=	orange
rs	=	pink

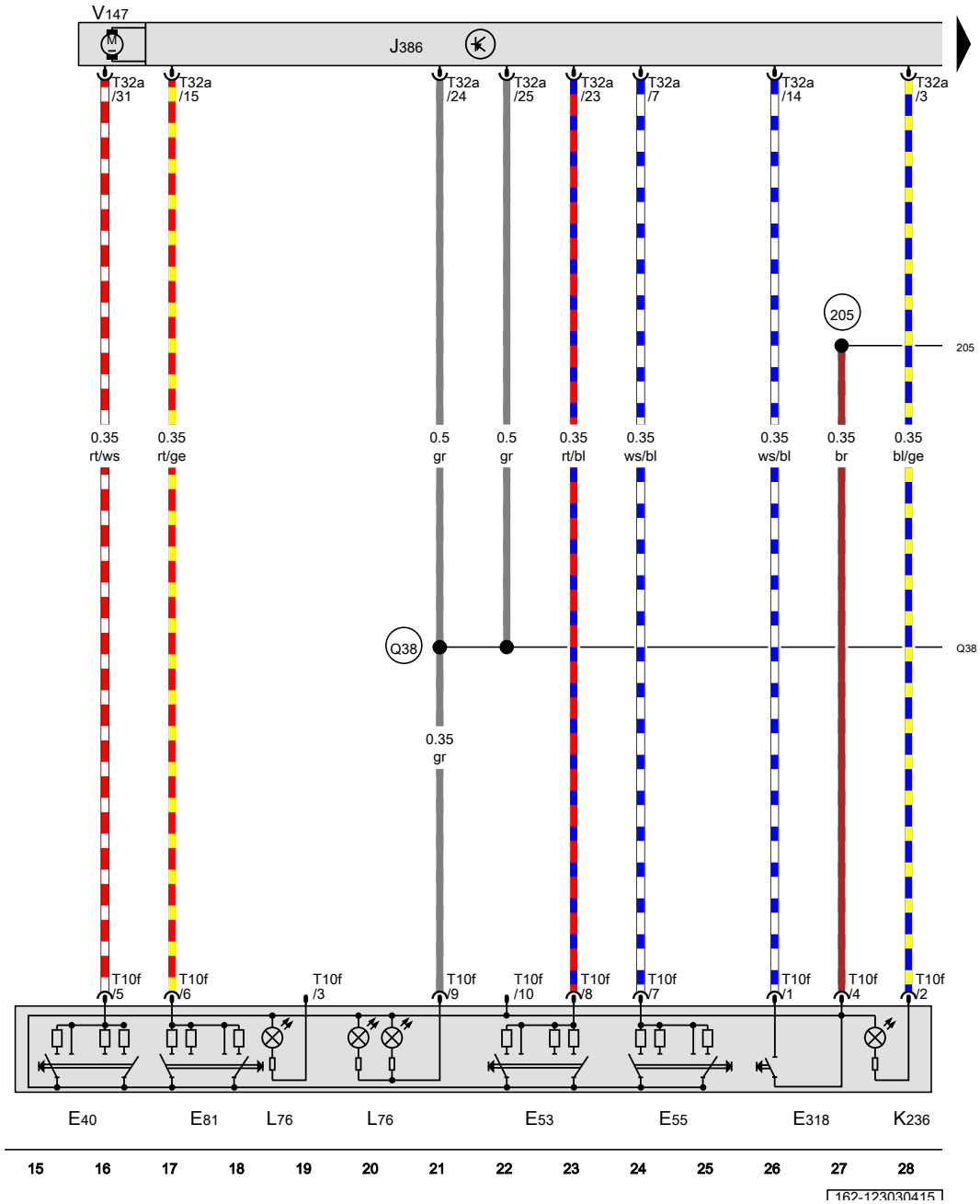

Left front window regulator switch, Left rear window regulator switch in driver door, Right rear window regulator switch in driver door, Right front power window switch in driver door, Child safety lock button, Driver door control module

E40	Left front window regulator switch
E53	Left rear window regulator switch in driver door
E55	Right rear window regulator switch in driver door
E81	Right front power window switch in driver door
E318	Child safety lock button
J386	Driver door control module
K236	Child safety lock -activated- indicator lamp
L76	Push button illumination bulb
T10f	10-pin connector
T32a	32-pin connector
V147	Driver window regulator motor
205	Ground connection (in driver door wiring harness)
Q38	Positive connection 1 (58b) (in power window wiring harness)

ws	=	white
sw	=	black
ro	=	red
rt	=	red
br	=	brown
gn	=	green
bl	=	blue
gr	=	grey
li	=	lilac
vi	=	lilac
ge	=	yellow
or	=	orange
rs	=	pink

Protected by copyright. Copying for private or commercial purposes, in part or in whole, is not permitted unless authorised by Volkswagen AG. Volkswagen AG does not guarantee or accept any liability with respect to the correctness of information in this document. Copyright by Volkswagen AG.

Driver interior locking button, Driver door control module, Central locking -SAFE- indicator lamp

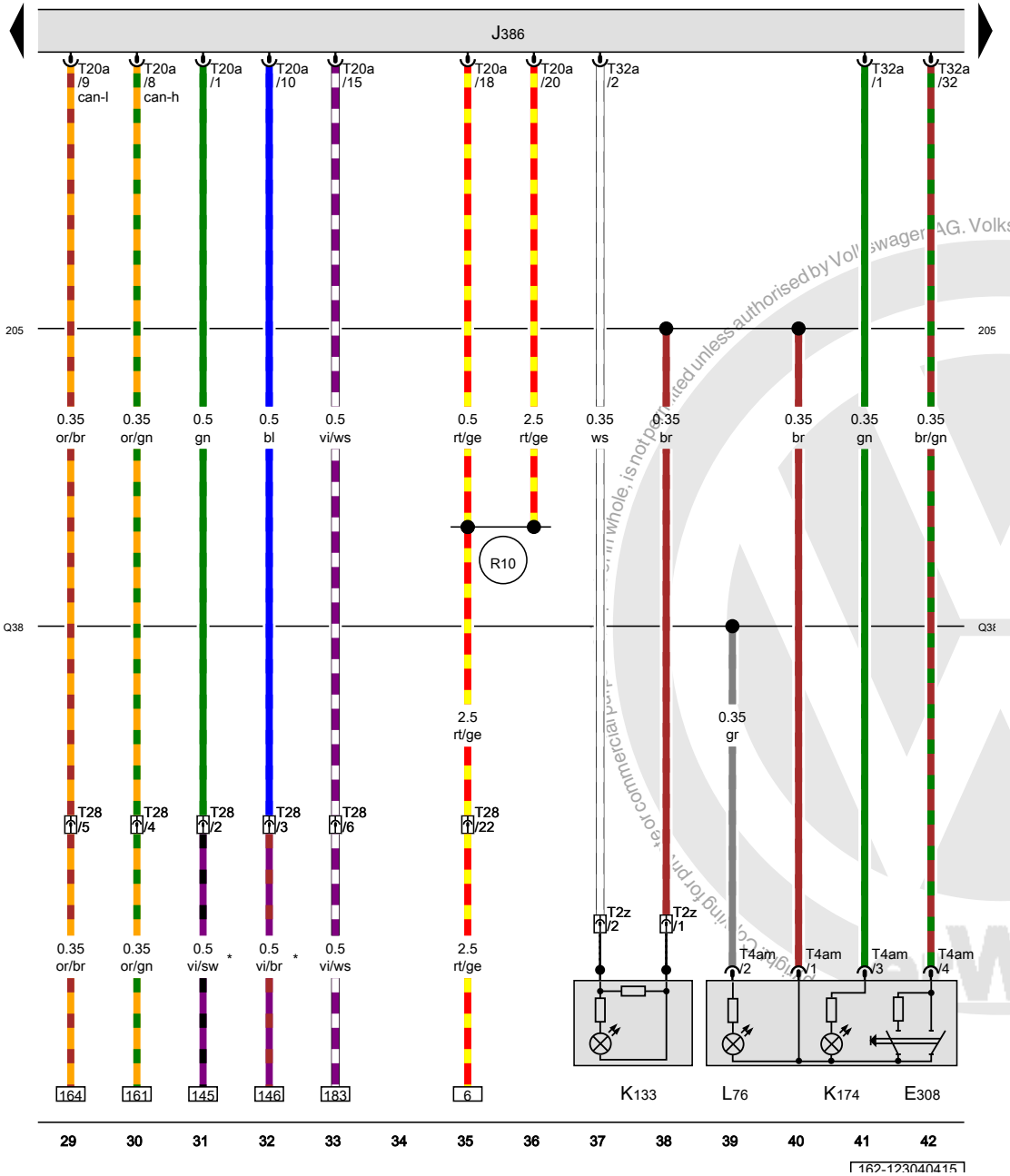

E308	Driver interior locking button
J386	Driver door control module
K133	Central locking -SAFE- indicator lamp
K174	Driver interior locking indicator lamp
L76	Push button illumination bulb
T2z	Double connector
T4am	4-pin connector
T20a	20-pin connector
T28	28-pin connector, Left A-pillar, bottom
T32a	32-pin connector
205	Ground connection (in driver door wiring harness)
Q38	Positive connection 1 (58b) (in power window wiring harness)
R10	Positive connection 1 (30) (in driver door wiring harness)
*	Omitted as a running change

ws	=	white
sw	=	black
ro	=	red
rt	=	red
br	=	brown
gn	=	green
bl	=	blue
gr	=	grey
li	=	lilac
vi	=	lilac
ge	=	yellow
or	=	orange
rs	=	pink

Copyright by Volkswagen AG. Volkswagen AG does not guarantee or accept any liability with respect to the correctness of information in this document. Copyright by Volkswagen AG. Not for commercial use or commercial purposes.

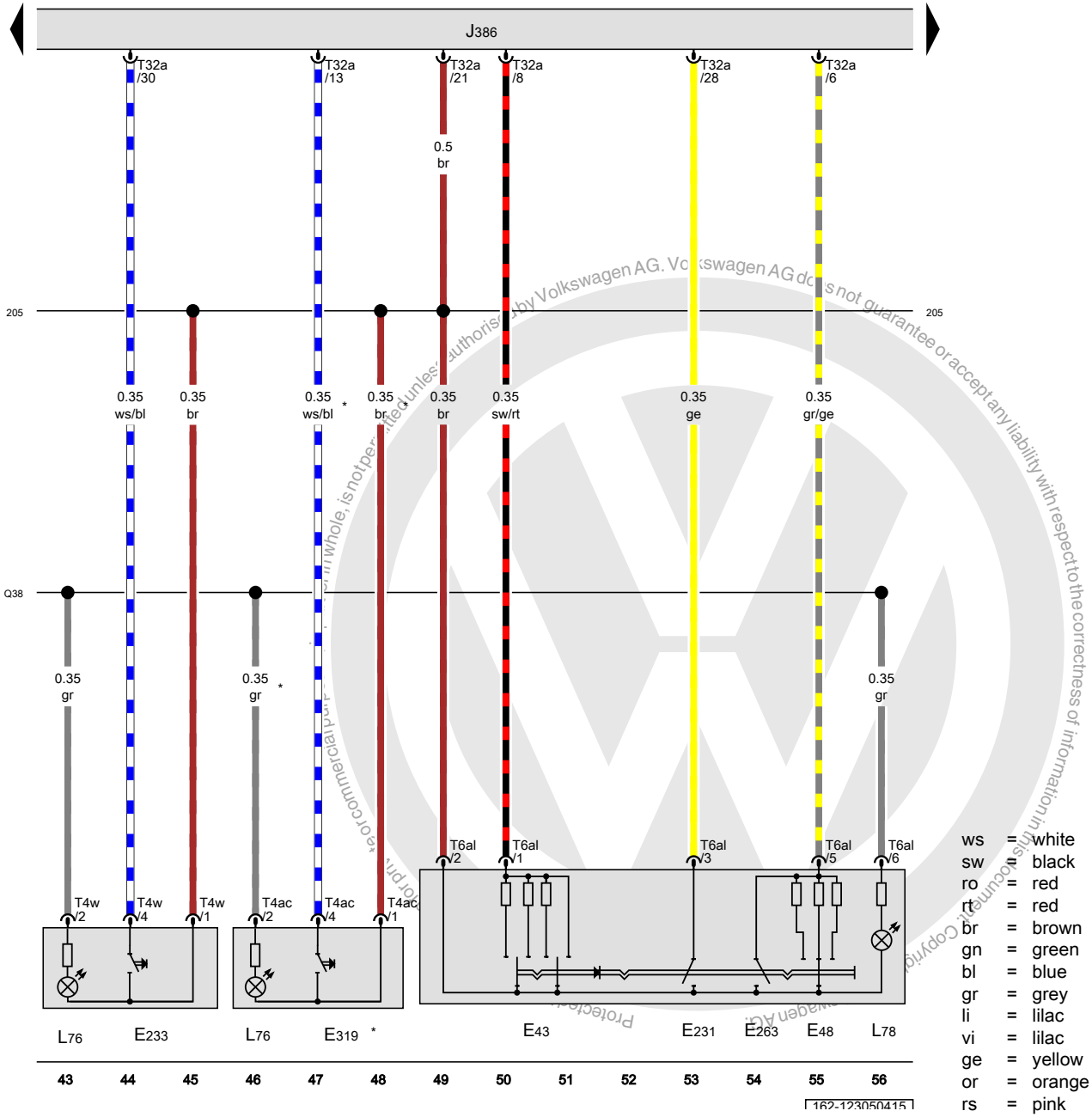

ws = white
sw = black
ro = red
rt = red
br = brown
gn = green
bl = blue
gr = grey
li = lilac
vi = lilac
ge = yellow
or = orange
rs = pink

Mirror adjusting switch, Mirror selector switch, Exterior rearview mirror heating switch, Rear lid remote release button, Mirror folding switch, Fuel filler door release button, Driver door control module, Mirror adjustment switch illumination bulb

E43	Mirror adjusting switch
E48	Mirror selector switch
E231	Exterior rearview mirror heating switch
E233	Rear lid remote release button
E263	Mirror folding switch
E319	Fuel filler door release button
J386	Driver door control module
L76	Push button illumination bulb
L78	Mirror adjustment switch illumination bulb
T4ac	4-pin connector
T4w	4-pin connector
T6al	6-pin connector
T32a	32-pin connector
(205)	Ground connection (in driver door wiring harness)
(Q38)	Positive connection 1 (58b) (in power window wiring harness)
*	USA only

Protected by Volkswagen AG. Volkswagen AG does not guarantee or accept any liability with respect to the correctness of information in this document. Copyright by Volkswagen AG. Protected in whole, is not permitted unless authorised by Volkswagen AG. Volkswagen AG does not guarantee or accept any liability with respect to the correctness of information in this document. Copyright by Volkswagen AG. Protected in whole, is not permitted unless authorised by Volkswagen AG. Volkswagen AG does not guarantee or accept any liability with respect to the correctness of information in this document. Copyright by Volkswagen AG.

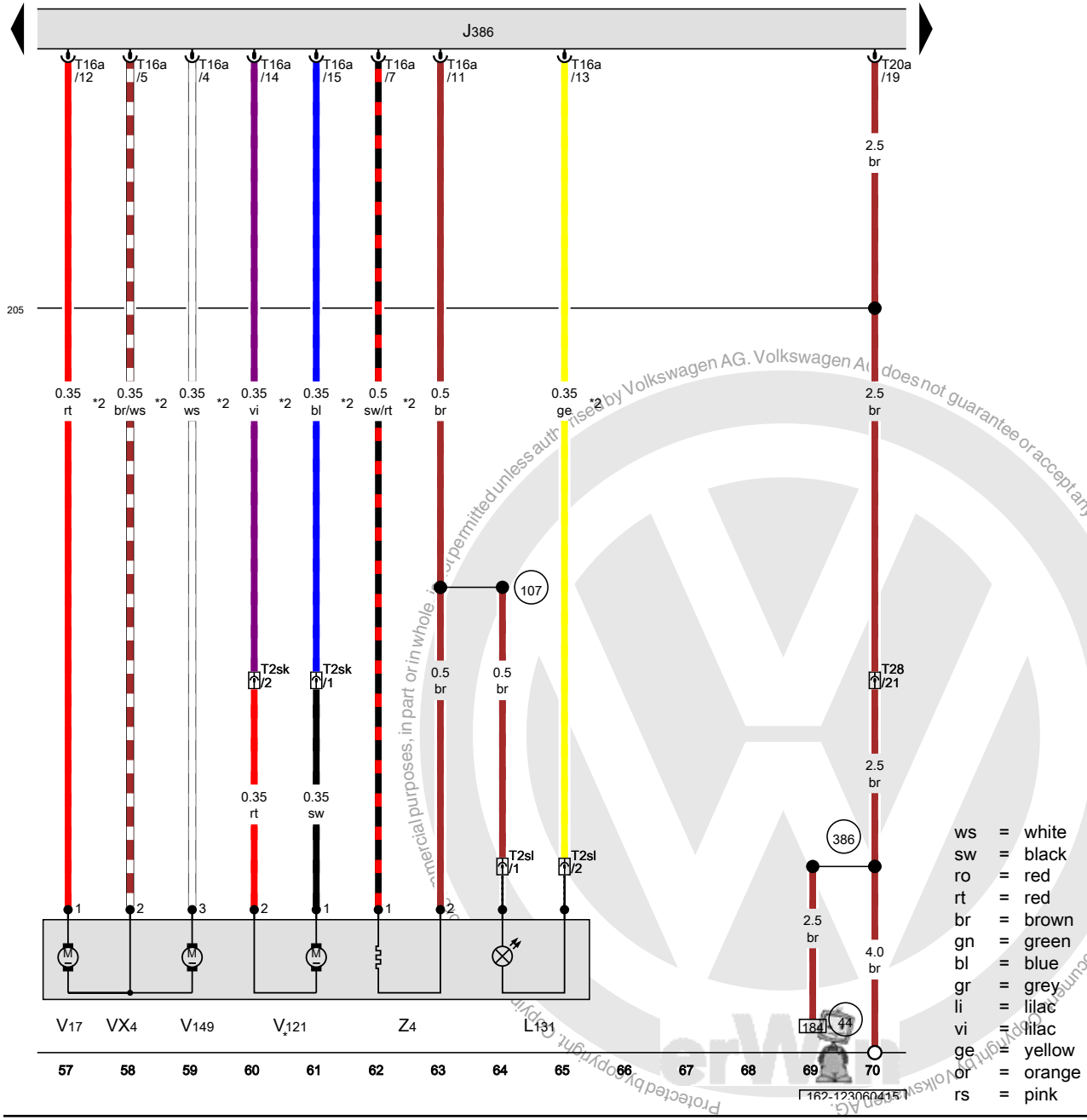

Driver door control module, Driver exterior rearview mirror, Driver exterior rearview mirror folding motor, Driver mirror adjustment motor

J386	Driver door control module
L131	Driver exterior rearview mirror turn signal bulb
T2sk	Double connector
T2sl	Double connector
T16a	16-pin connector
T20a	20-pin connector
T28	28-pin connector, Left A-pillar, bottom
VX4	Driver exterior rearview mirror
V17	Driver mirror adjustment motor 2
V121	Driver exterior rearview mirror folding motor
V149	Driver mirror adjustment motor
Z4	Heated driver exterior rearview mirror
44	Ground connection on A-pillar, lower left
107	Ground connection (in exterior mirror wiring harness)
205	Ground connection (in driver door wiring harness)
386	Ground connection 21 (in main wiring harness)
*	Depending on equipment
*2	The color of the wires depends on vehicle equipment

ws	=	white
sw	=	black
ro	=	red
rt	=	red
br	=	brown
gn	=	green
bl	=	blue
gr	=	grey
li	=	lilac
vi	=	lilac
ge	=	yellow
or	=	orange
rs	=	pink

Protected by copyright. Copying permitted unless authorised by Volkswagen AG. Volkswagen AG does not guarantee or accept any liability with respect to the correctness of information in this document. Copyright by Volkswagen AG.

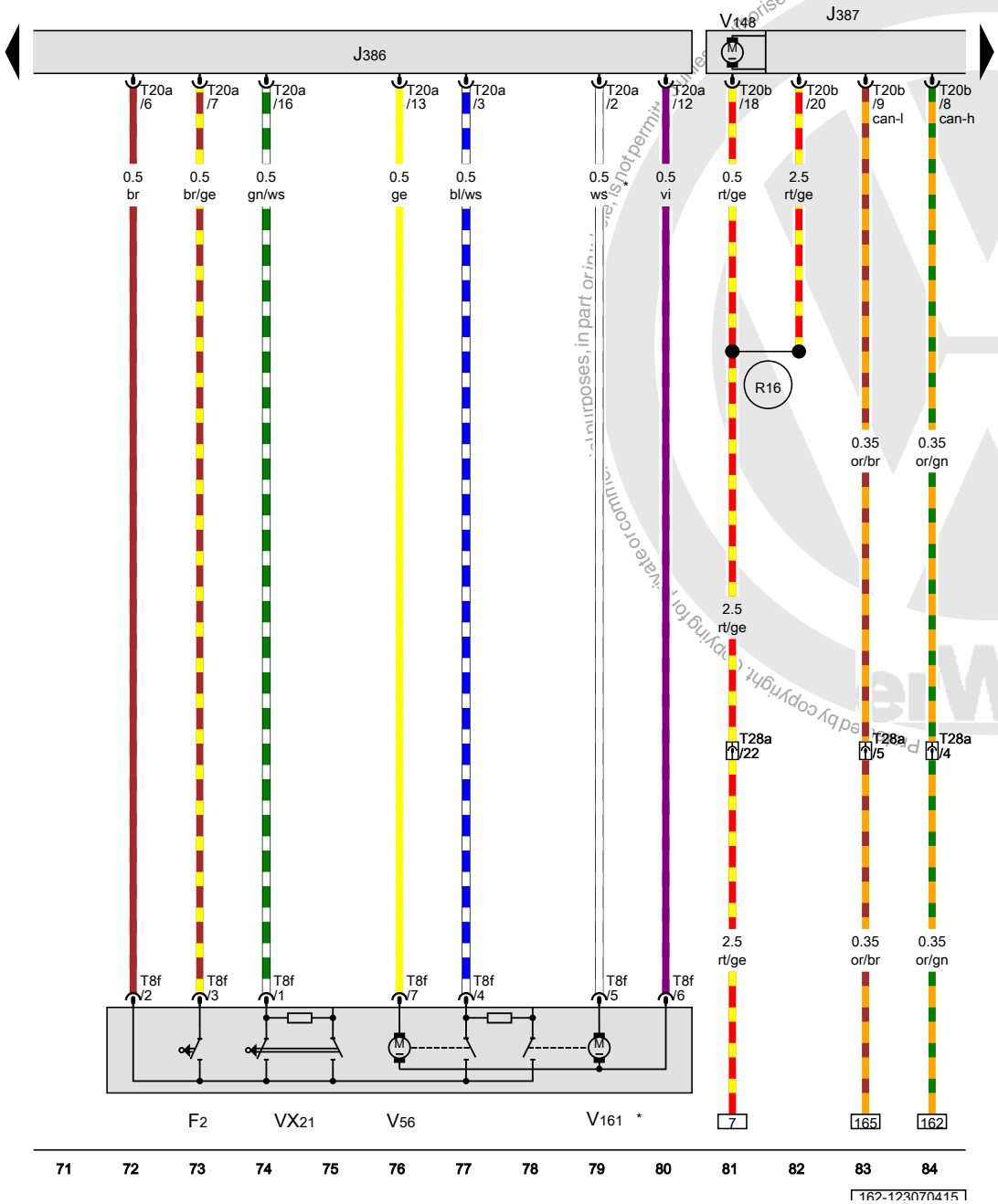

Driver door contact switch, Driver door control module, Front passenger door control module, Driver door lock unit, Driver door central locking system motor, Front passenger window regulator motor

F2	Driver door contact switch
J386	Driver door control module
J387	Front passenger door control module
T8f	8-pin connector
T20a	20-pin connector
T20b	20-pin connector
T28a	28-pin connector, Right A-pillar, bottom
VX21	Driver door lock unit
V56	Driver door central locking system motor
V148	Front passenger window regulator motor
V161	Driver door central locking -SAFE- motor
R16	Positive connection 1 (30) (in front passenger door wiring harness)
*	Not for USA

ws	=	white
sw	=	black
ro	=	red
rt	=	red
br	=	brown
gn	=	green
bl	=	blue
gr	=	grey
li	=	lilac
vi	=	lilac
ge	=	yellow
or	=	orange
rs	=	pink

Copyright by Volkswagen AG. Volkswagen AG does not guarantee or accept any liability with respect to the correctness of information in this document. Copyright by Volkswagen AG. Reproduction, in part or in whole, is not permitted by copyright. Copying for private or commercial purposes, in part or in whole, is not permitted without the consent of Volkswagen AG.

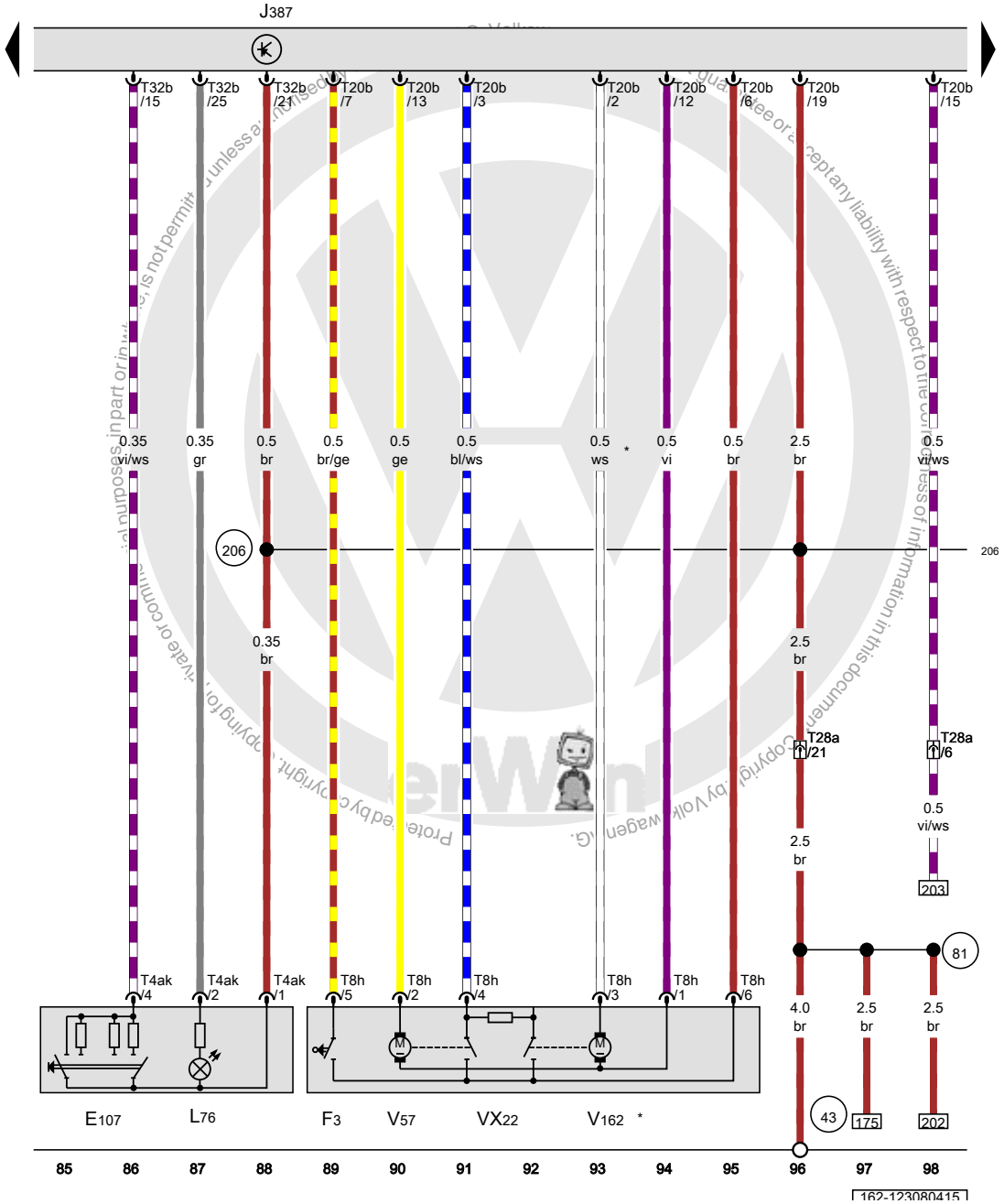

ws = white
sw = black
ro = red
rt = red
br = brown
gn = green
bl = blue
gr = grey
li = lilac
vi = lilac
ge = yellow
or = orange
rs = pink

Front passenger door window regulator switch, Front passenger door contact switch, Front passenger door control module, Front passenger door lock unit, Front passenger door central locking system motor

E107	Front passenger door window regulator switch
F3	Front passenger door contact switch
J387	Front passenger door control module
L76	Push button illumination bulb
T4ak	4-pin connector
T8h	8-pin connector
T20b	20-pin connector
T28a	28-pin connector, Right A-pillar, bottom
T32b	32-pin connector
VX22	Front passenger door lock unit
V57	Front passenger door central locking system motor
V162	Front passenger central locking -SAFE- motor
43	Ground connection on A-pillar, lower right
81	Ground connection 1 (in instrument panel wiring harness)
206	Ground connection (in front passenger door wiring harness)
*	Not for USA

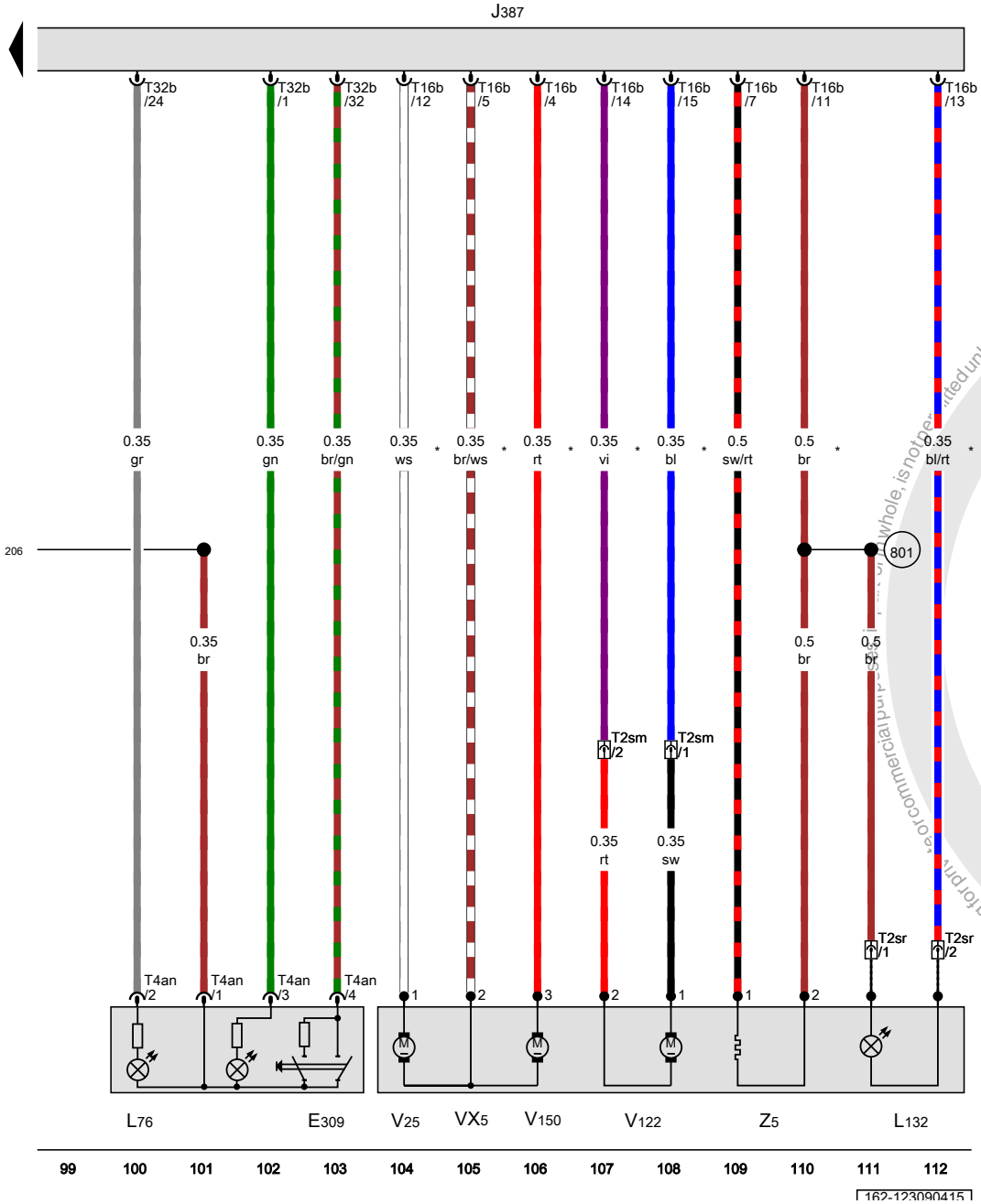

Front passenger interior locking button, Front passenger door control module, Front passenger exterior rearview mirror, Front passenger side mirror adjustment motor 2, Front passenger exterior rearview mirror folding motor, Front passenger mirror adjustment motor

E309	Front passenger interior locking button
J387	Front passenger door control module
L76	Push button illumination bulb
L132	Front passenger exterior rearview mirror turn signal bulb
T2sm	Double connector
T2sr	Double connector
T4an	4-pin connector
T16b	16-pin connector
T32b	32-pin connector
VX5	Front passenger exterior rearview mirror
V25	Front passenger side mirror adjustment motor 2
V122	Front passenger exterior rearview mirror folding motor
V150	Front passenger mirror adjustment motor
Z5	Heated front passenger exterior rearview mirror
206	Ground connection (in front passenger door wiring harness)
801	Ground connection 2 (in exterior rearview mirror wiring harness)
*	The color of the wires depends on vehicle equipment

ws	=	white
sw	=	black
ro	=	red
rt	=	red
br	=	brown
gn	=	green
bl	=	blue
gr	=	grey
li	=	lilac
vi	=	lilac
ge	=	yellow
or	=	orange
rs	=	pink

Protected by copyright. Copying for private or commercial purposes, in whole, is not permitted unless authorised by Volkswagen AG. Volkswagen AG does not guarantee or assume any liability with respect to the correctness of information in this document. Copyright by Volkswagen AG.

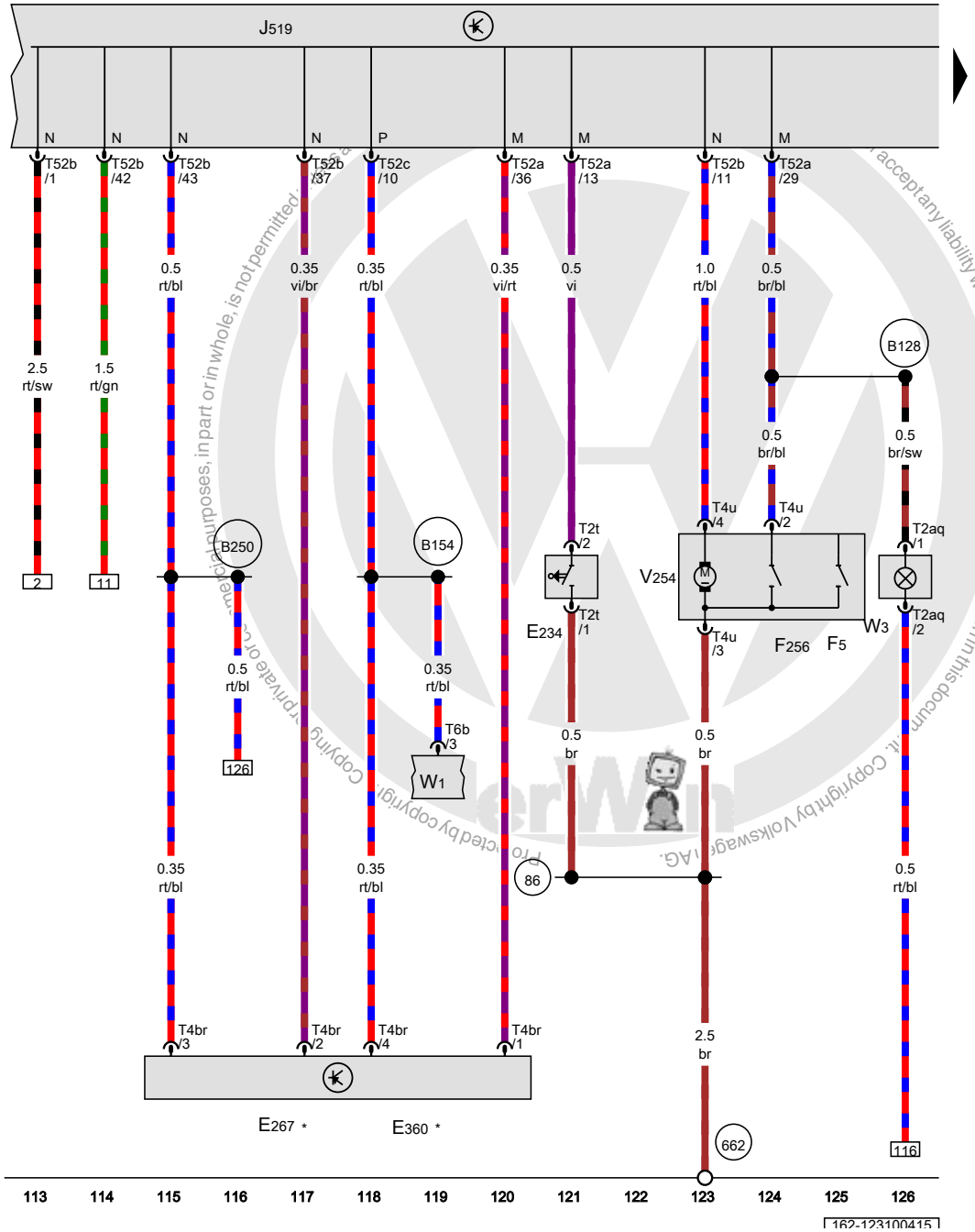

ws	=	white
sw	=	black
ro	=	red
rt	=	red
br	=	brown
gn	=	green
bl	=	blue
gr	=	grey
li	=	lilac
vi	=	lilac
ge	=	yellow
or	=	orange
rs	=	pink

Release button in rear lid handle, Interior monitoring deactivation switch, Vehicle inclination sensor deactivation button, Luggage compartment lamp switch, Rear lid lock unit, Vehicle electrical control module system, Rear lid opening motor, Front interior lamp, Luggage compartment lamp

E234	Release button in rear lid handle
E267	Interior monitoring deactivation switch
E360	Vehicle inclination sensor deactivation button
F5	Luggage compartment lamp switch
F256	Rear lid lock unit
J519	Vehicle electrical control module system
T2aq	Double connector
T2t	Double connector
T4br	4-pin connector
T4u	4-pin connector
T6b	6-pin connector
T52a	52-pin connector
T52b	52-pin connector
T52c	52-pin connector
V254	Rear lid opening motor
W1	Front interior lamp
W3	Luggage compartment lamp
86	Ground connection 1 (in rear wiring harness)
662	Ground connection in left rear side panel
B128	Luggage compartment lamp connection (in interior wiring harness)
B154	Connection TK (in interior wiring harness) 1
B250	Positive connection (in roof wiring harness)
*	Depending on equipment

Protected by copyright. Copying for private or commercial purposes, in part or in whole, is not permitted. Copyright by Volkswagen AG. We accept any liability with respect to the correctness of information in this document.

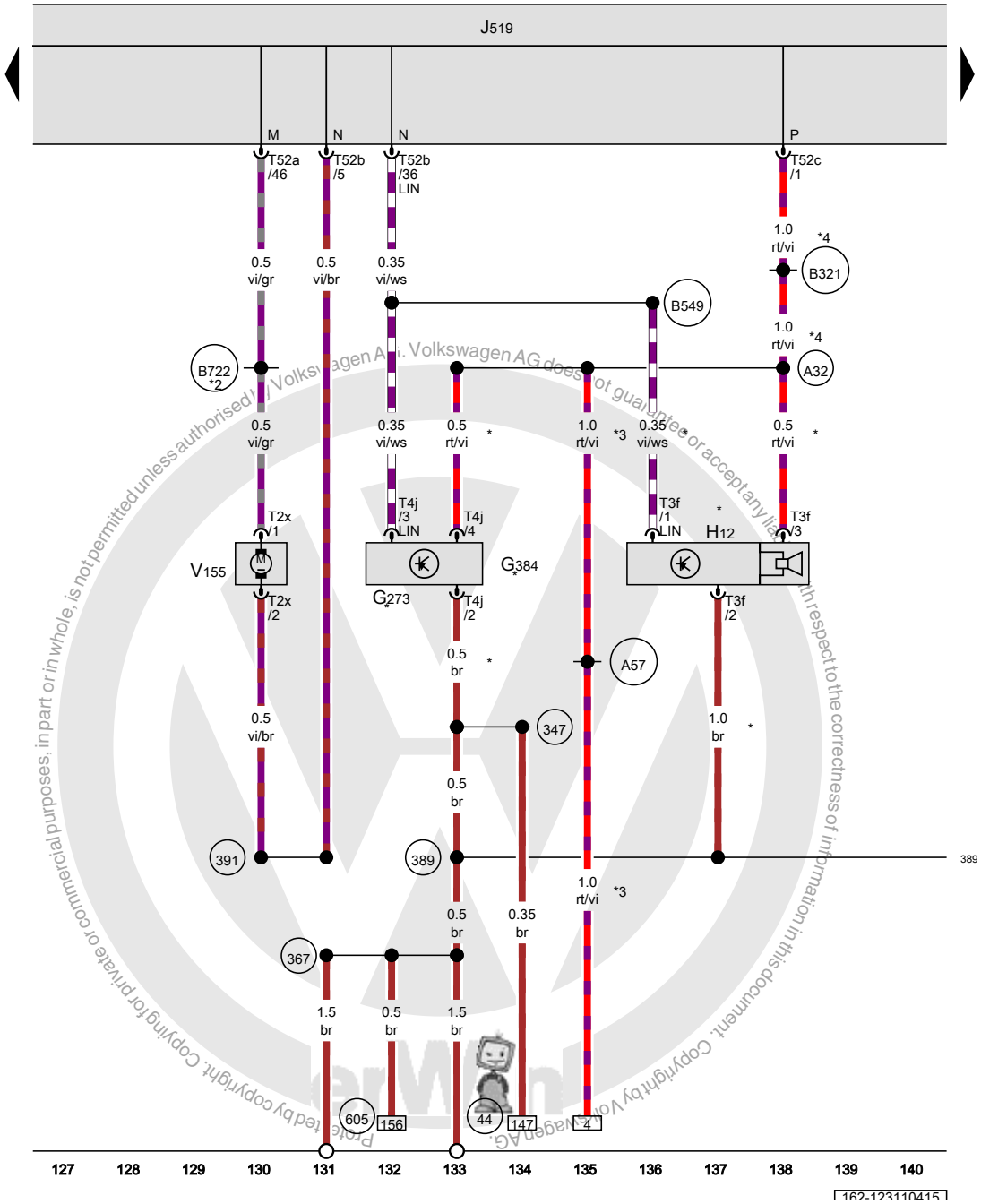

Interior monitoring sensor, Vehicle inclination sensor, Alarm horn, Vehicle electrical control module system, Fuel filler door unlock motor

G273	Interior monitoring sensor
G384	Vehicle inclination sensor
H12	Alarm horn
J519	Vehicle electrical control module system
T2x	Double connector
T3f	3-pin connector
T4j	4-pin connector
T52a	52-pin connector
T52b	52-pin connector
T52c	52-pin connector
V155	Fuel filler door unlock motor
44	Ground connection on A-pillar, lower left
347	Ground connection (in roof wiring harness)
367	Ground connection 2 (in main wiring harness)
389	Ground connection 24 (in main wiring harness)
391	Ground connection 26 (in main wiring harness)
605	Ground connection on upper steering column
A32	Positive connection (30) (in instrument panel wiring harness)
A57	Positive connection 3 (30) (in instrument panel wiring harness)
B321	Positive connection 7 (30a) (in main wiring harness)
B549	LIN bus connection 2 (in main wiring harness)
B722	Central locking connection 3 (in main wiring harness)
*	Not for USA
*2	Running change
*3	Diameter depends on equipment
*4	USA only

ws	=	white
sw	=	black
ro	=	red
rt	=	red
br	=	brown
gn	=	green
bl	=	blue
gr	=	grey
li	=	lilac
vi	=	lilac
ge	=	yellow
or	=	orange
rs	=	pink

Protected by copyright. Copying for private or commercial purposes, in part or in whole, is not permitted unless authorised by Volkswagen AG. Volkswagen AG does not guarantee or accept any liability with respect to the correctness of information in this document. Copyright by Volkswagen AG.

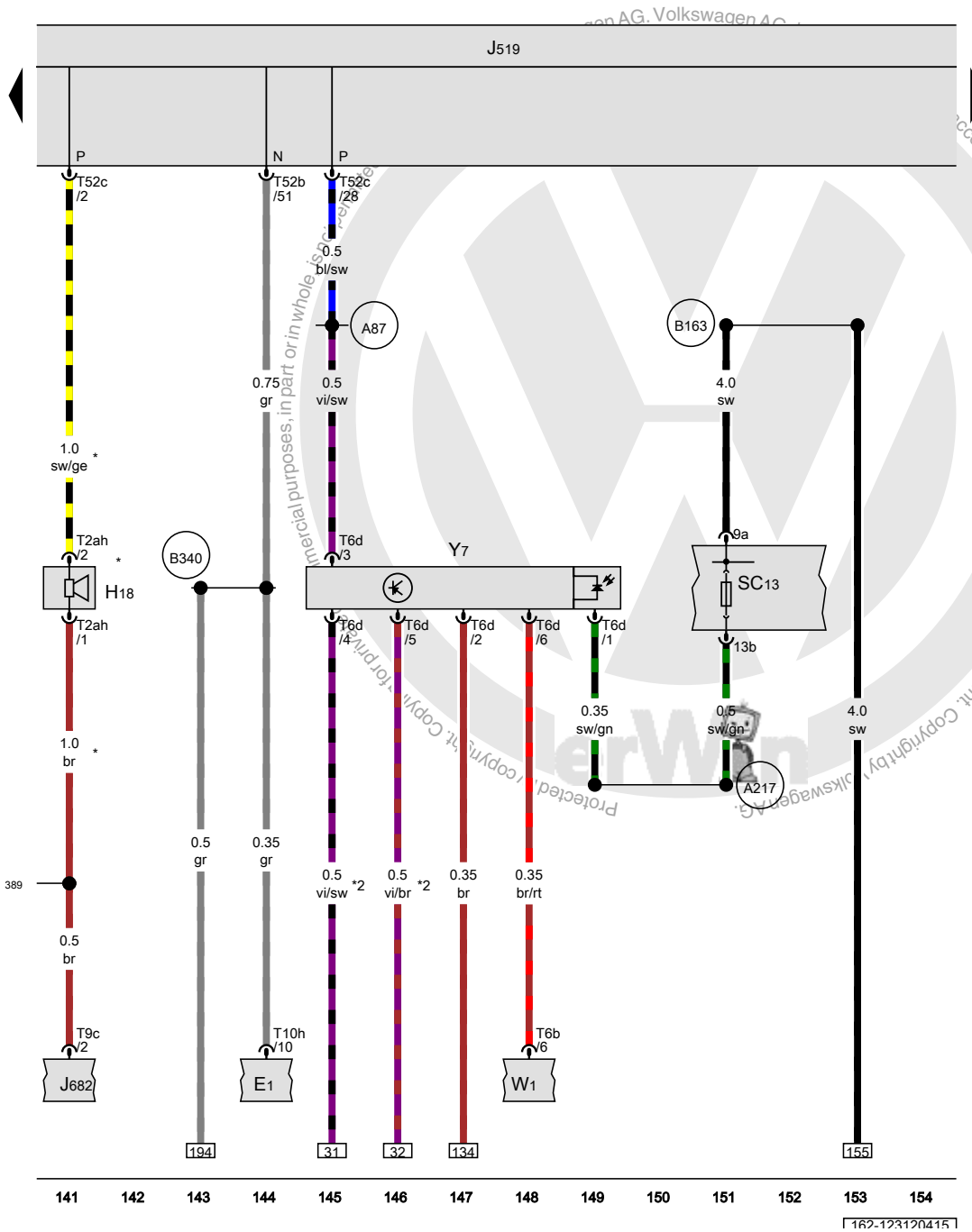

Vehicle electrical control module system, Automatic dimming interior rearview mirror

E1	Light switch
H18	Alarm system horn
J519	Vehicle electrical control module system
J682	Terminal 50 power supply relay
SC13	Fuse 13 (on fuse panel C)
T2ah	Double connector
T6b	6-pin connector
T6d	6-pin connector
T9c	9-pin connector
T10h	10-pin connector
T52b	52-pin connector
T52c	52-pin connector
W1	Front interior lamp
Y7	Automatic dimming interior rearview mirror
389	Ground connection 24 (in main wiring harness)
A87	Back-up lamp connection (in instrument panel wiring harness)
A217	Positive connection 8 (15a) (in instrument panel wiring harness)
B163	Positive connection 1 (15) (in interior wiring harness)
B340	Connection 58d (in main wiring harness) 1
*	USA only
*2	Omitted as a running change

ws	=	white
sw	=	black
ro	=	red
rt	=	red
br	=	brown
gn	=	green
bl	=	blue
gr	=	grey
li	=	lilac
vi	=	lilac
ge	=	yellow
or	=	orange
rs	=	pink

Protected by copyright. Copyright by Volkswagen AG. Volkswagen AG accepts no liability with respect to the correctness of information in this document

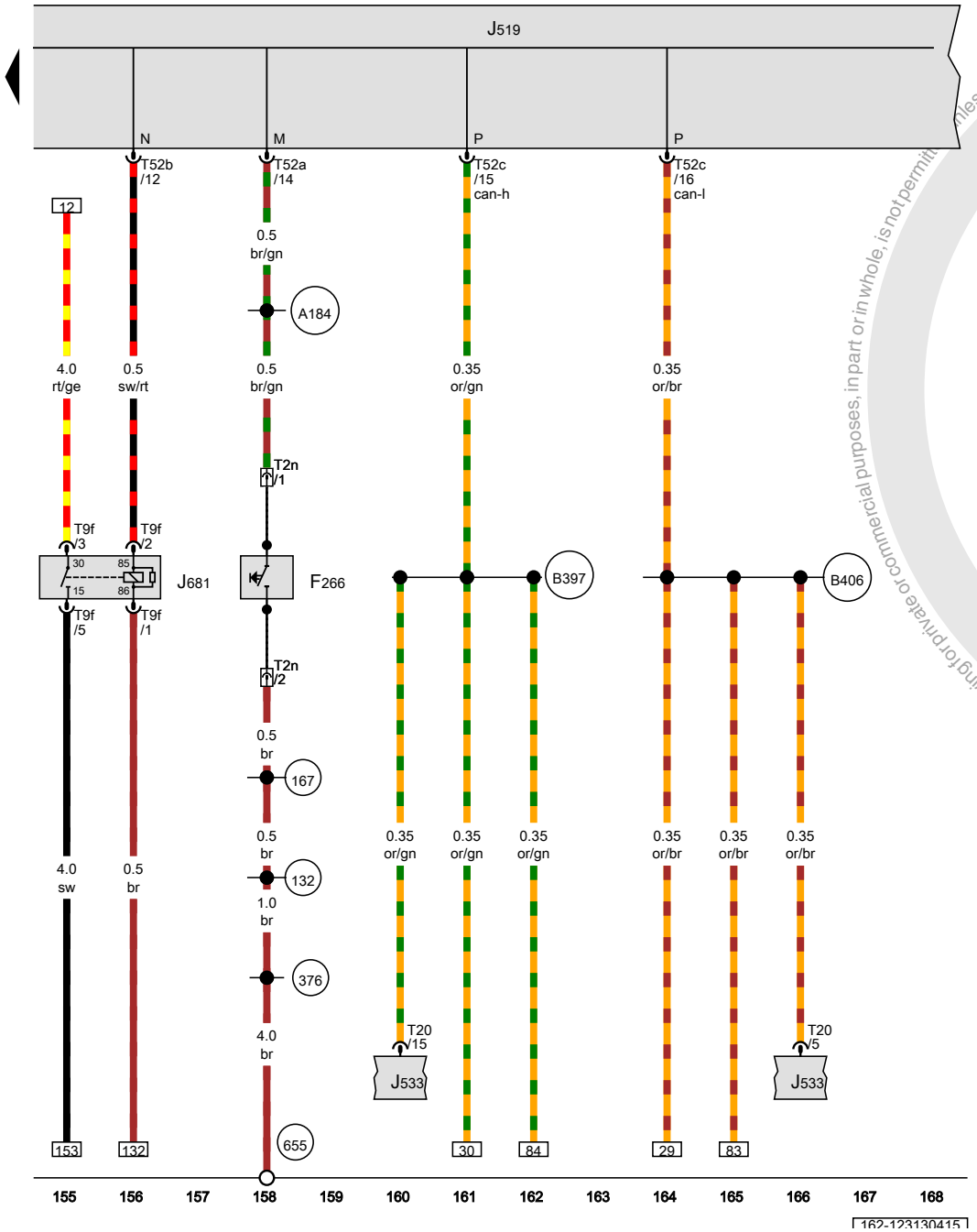

Engine hood contact switch, Vehicle electrical control module system, Terminal 15 power supply relay 2

F266	Engine hood contact switch
J519	Vehicle electrical control module system
J533	Data bus on board diagnostic interface
J681	Terminal 15 power supply relay 2
T2n	Double connector
T9f	9-pin connector
T20	20-pin connector
T52a	52-pin connector
T52b	52-pin connector
T52c	52-pin connector
132	Ground connection 3 (in engine compartment wiring harness)
167	Ground connection 4 (in engine compartment wiring harness)
376	Ground connection 11 (in main wiring harness)
655	Ground connection on left headlamp
A184	Hood contact switch connection (in instrument panel wiring harness)
B397	Comfort system CAN bus high connection 1 (in main wiring harness)
B406	Comfort system CAN bus low connection 1 (in main wiring harness)

ws	=	white
sw	=	black
ro	=	red
rt	=	red
br	=	brown
gn	=	green
bl	=	blue
gr	=	grey
li	=	lilac
vi	=	lilac
ge	=	yellow
or	=	orange
rs	=	pink

Protected by copyright. Copying for private or commercial purposes, in part or in whole, is not permitted unless authorised by Volkswagen AG. Volkswagen AG does not guarantee or accept any liability with respect to the correctness of information in this document. Copyright by Volkswagen AG.

Left rear power window switch in left rear door, Sunroof adjustment regulator, Sunroof tilt button 1, Power sunroof control module, Left rear door control module, Sunroof motor, Left rear window regulator motor

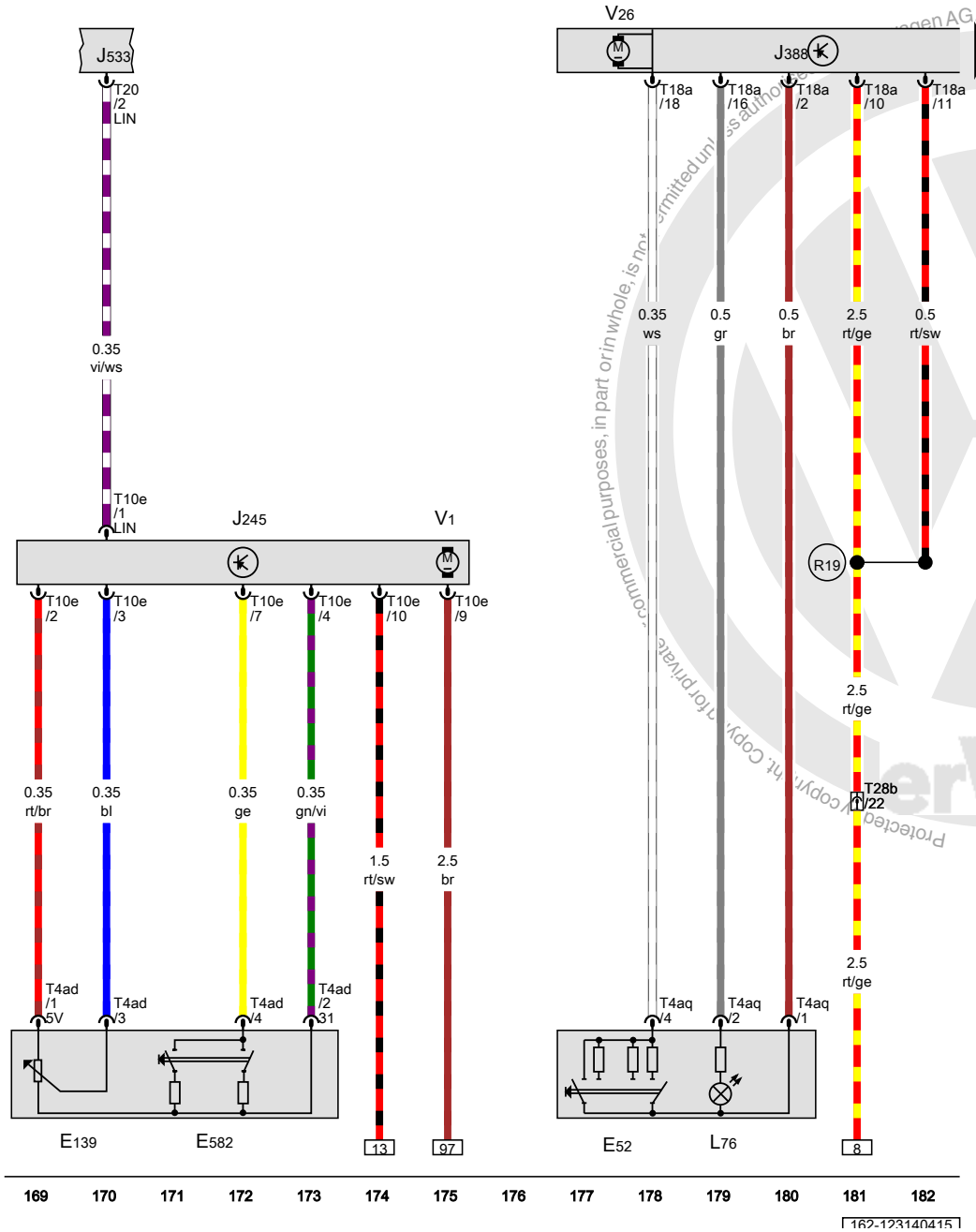

E52	Left rear power window switch in left rear door
E139	Sunroof adjustment regulator
E582	Sunroof tilt button 1
J245	Power sunroof control module
J388	Left rear door control module
J533	Data bus on board diagnostic interface
L76	Push button illumination bulb
T4ad	4-pin connector
T4aq	4-pin connector
T10e	10-pin connector
T18a	18-pin connector
T20	20-pin connector
T28b	28-pin connector, on the left B-pillar
V1	Sunroof motor
V26	Left rear window regulator motor
R19	Positive connection 1 (30) (in left rear door wiring harness)

ws	=	white
sw	=	black
ro	=	red
rt	=	red
br	=	brown
gn	=	green
bl	=	blue
gr	=	grey
li	=	lilac
vi	=	lilac
ge	=	yellow
or	=	orange
rs	=	pink

Volkswagen AG. Volkswagen AG does not guarantee or assume any liability with respect to the correctness of information in this document. Copyright by Volkswagen AG. Protected by copyright. Copying for private, commercial purposes, in part or in whole, is not permitted unless authorized by Volkswagen AG.

Rear center interior locking switch, Left rear door contact switch, Left rear door control module, Left rear door lock unit, Left rear central locking -lock- motor

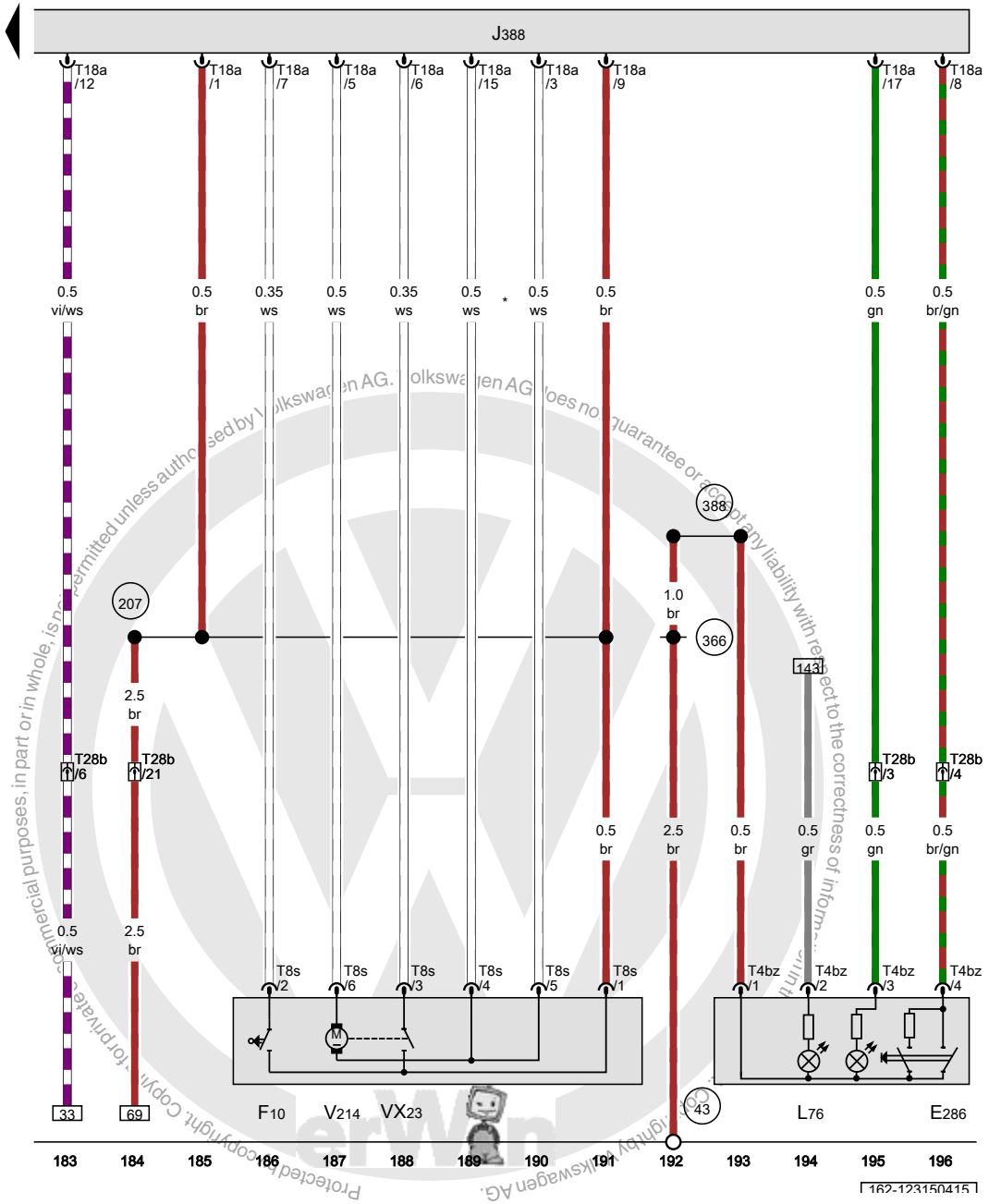

E286	Rear center interior locking switch
F10	Left rear door contact switch
J388	Left rear door control module
L76	Push button illumination bulb
T4bz	4-pin connector
T8s	8-pin connector
T18a	18-pin connector
T28b	28-pin connector, on the left B-pillar
VX23	Left rear door lock unit
V214	Left rear central locking -lock- motor
43	Ground connection on A-pillar, lower right
207	Ground connection (in left rear door wiring harness)
366	Ground connection 1 (in main wiring harness)
388	Ground connection 23 (in main wiring harness)
*	Not for USA

ws	=	white
sw	=	black
ro	=	red
rt	=	red
br	=	brown
gn	=	green
bl	=	blue
gr	=	grey
li	=	lilac
vi	=	lilac
ge	=	yellow
or	=	orange
rs	=	pink

Protected by copyright. Copyright by Volkswagen AG. Volkswagen AG does not guarantee or accept any liability with respect to the correctness of information in this copy for private or commercial purposes, in part or in whole, is not permitted unless authorised by Volkswagen AG.

Right rear window switch in right rear door, Right rear door contact switch, Right rear door control module, Right rear door lock unit, Right rear window regulator motor, Right rear central locking -lock- motor

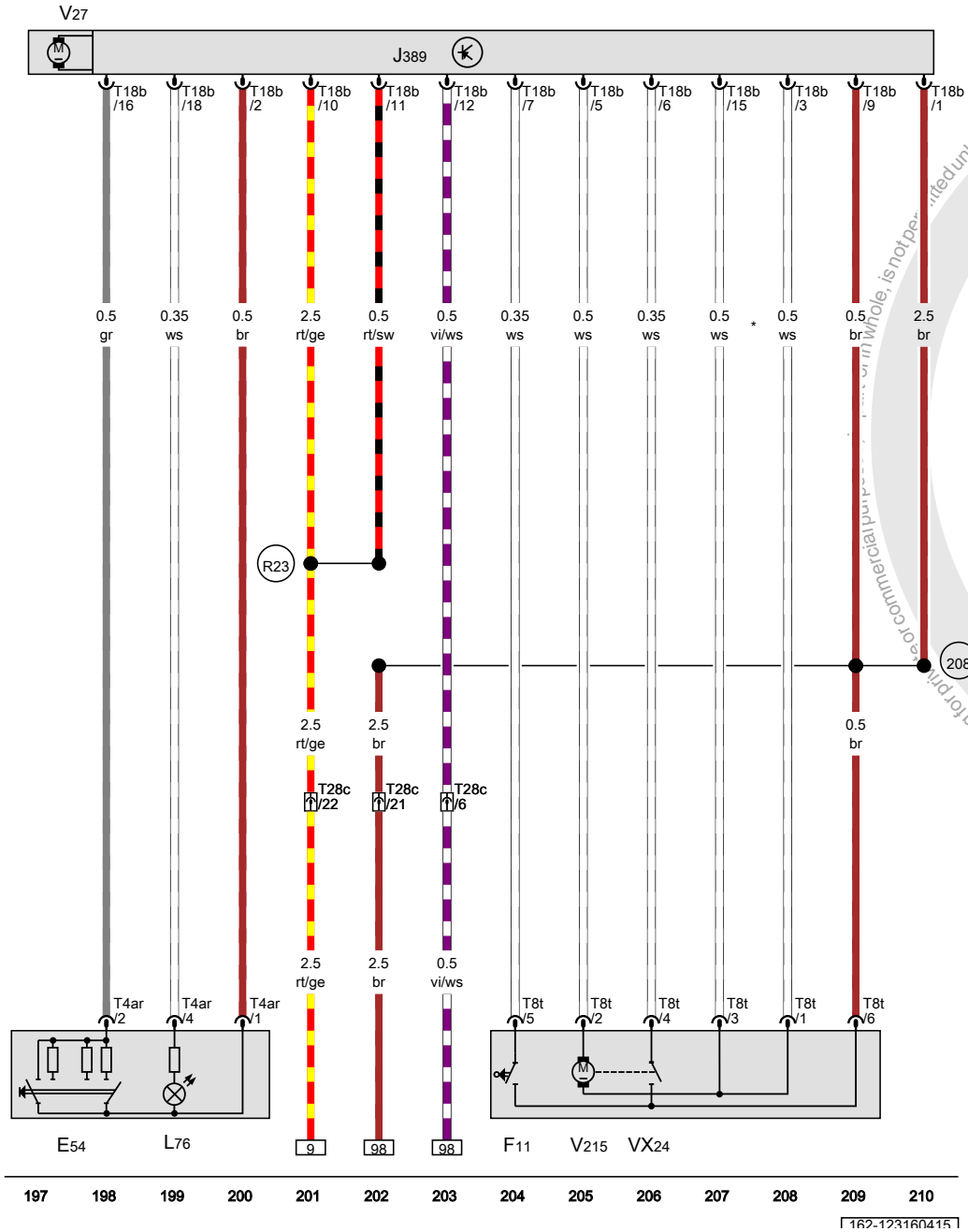

E54	Right rear window switch in right rear door
F11	Right rear door contact switch
J389	Right rear door control module
L76	Push button illumination bulb
T4ar	4-pin connector
T8t	8-pin connector
T18b	18-pin connector
T28c	28-pin connector, on the right B-pillar
VX24	Right rear door lock unit
V27	Right rear window regulator motor
V215	Right rear central locking -lock- motor
208	Ground connection (in right rear door wiring harness)
R23	Positive connection 1 (30) (in right rear door wiring harness)
*	Not for USA

ws	=	white
sw	=	black
ro	=	red
rt	=	red
br	=	brown
gn	=	green
bl	=	blue
gr	=	grey
li	=	lilac
vi	=	lilac
ge	=	yellow
or	=	orange
rs	=	pink

Protected by copyright. Copying for private or commercial purposes, in whole, is not permitted unless authorised by Volkswagen AG. Volkswagen AG does not guarantee or accept any liability with respect to the correctness of information in this document. Copyright by Volkswagen AG.

1 Fuses

1.1 Overview of Fuses (SA), (SB), (SC)

1 - Fuses (SA) on fuse panel A

- ⇒ “1.2 Fuse (SA) on E-box, without hybrid system”, page 2
- ⇒ “1.3 Fuse (SA) on E-box, with hybrid system”, page 3
- ⇒ “1.4 Jump start connection TV32, Hybrid system ”, page 5

2 - Fuses (SB) on fuse panel B

- ⇒ “1.5 Fuse (SB) on E-box, from MY 2011”, page 6
- ⇒ “1.6 Fuse (SB) on E-box, from MY 2012”, page 8
- ⇒ “1.7 Fuse (SB) on E-box, from MY 2013”, page 11
- ⇒ “1.8 Fuse (SB) on E-box, from MY 2014”, page 15

3 - Fuses (SC) on fuse panel C

- ⇒ “1.9 Fuse (SC), from MY 2011 ”, page 19
- ⇒ “1.10 Fuse (SC), from MY 2012”, page 24
- ⇒ “1.11 Fuse (SC), from MY 2013”, page 30
- ⇒ “1.12 Fuse (SC), from MY 2014”, page 36

4 - Driver power seat adjustment circuit breaker 1 -S44-

- Component location above relay carrier, nominal value 20A

5 -
Fuses battery in luggage compartment -S162- , -S163-

- ⇒ “1.13 Fuses battery, Hybrid system ”, page 42

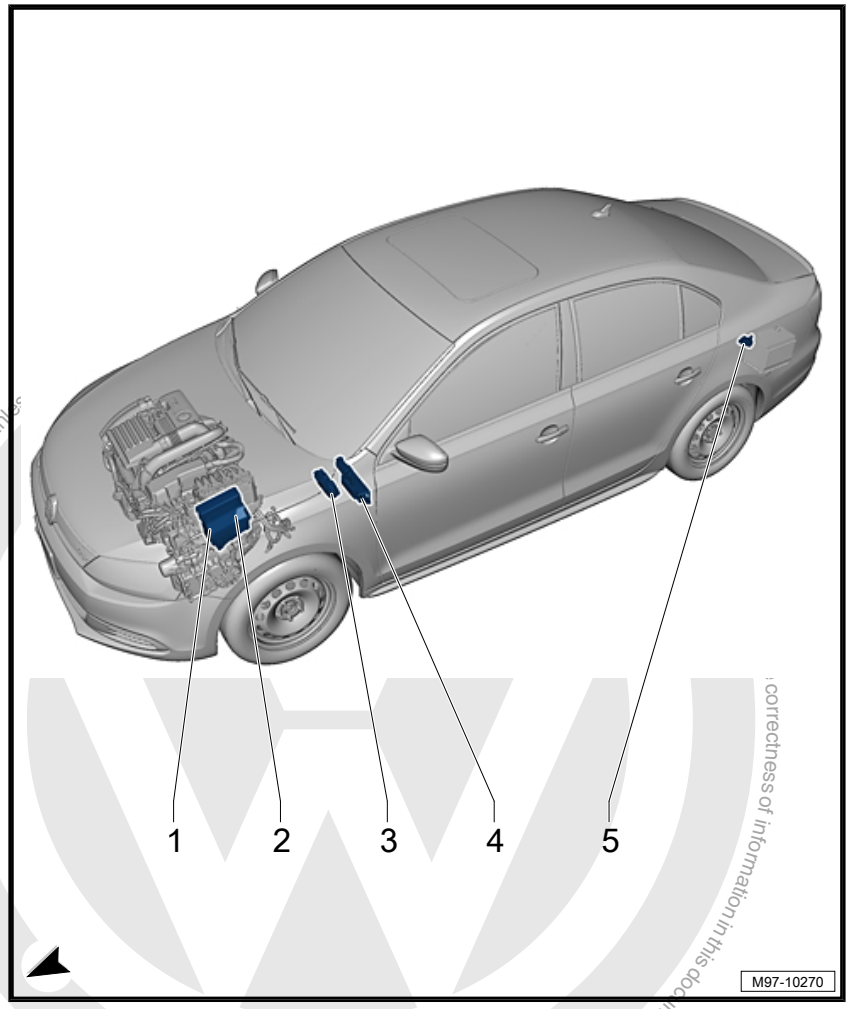

Protected by copyright. Copyright by Volkswagen AG.
Protected by copyright. Copying for private or commercial purposes, in part or in whole, is not permitted unless authorised by Volkswagen AG. Volkswagen AG does not guarantee or accept any liability with respect to the correctness of information in this document.

1.2 Fuse (SA) on E-box, without hybrid system

- Fuse panel A -SA-

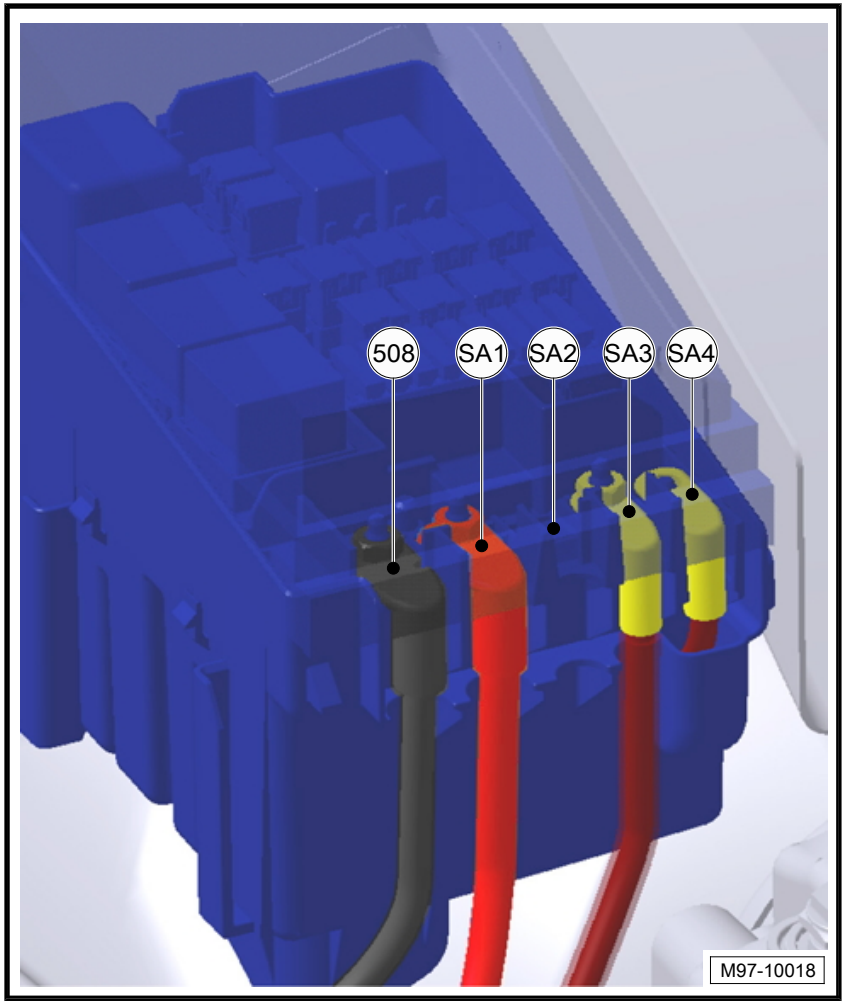

Copyright by Volkswagen AG. Volkswagen AG does not guarantee or accept any liability with respect to the correctness of information in this document. Copyright by Volkswagen AG. Reproduction, distribution, communicating to third parties, commercial purposes, in part or in whole, is not permitted unless authorised by Volkswagen AG.

No.		Designation in Wiring Diagram	Nominal Value		Function/Component	Terminal
508	A	508 Threaded connection (30) on the E-box		-		30a
1	B	Fuse 1 (on fuse panel A) -SA1-	200A	-	Generator -C- (140A)	30a
2	C	Fuse 2 (on fuse panel A) -SA2-		-	Not used	30a

No.		Designation in Wiring Diagram	Nominal Value		Function/Component	Terminal
3	D	Fuse 3 (on fuse panel A) -SA3-	80A	-	Steering	30a
4	E	Fuse 4 (on fuse panel A) -SA4-	80A		Interior terminal 30 power supply SC fuses	30a

Return to overview ⇒ page 1

1.3 Fuse (SA) on E-box, with hybrid system

Protected by copyright. Copying for private or commercial purposes, in part or in whole, is not permitted unless authorised by Volkswagen AG. Volkswagen AG does not guarantee or accept any liability with respect to the correctness of information in this document. Copyright by Volkswagen AG.

- Fuse panel A -SA-

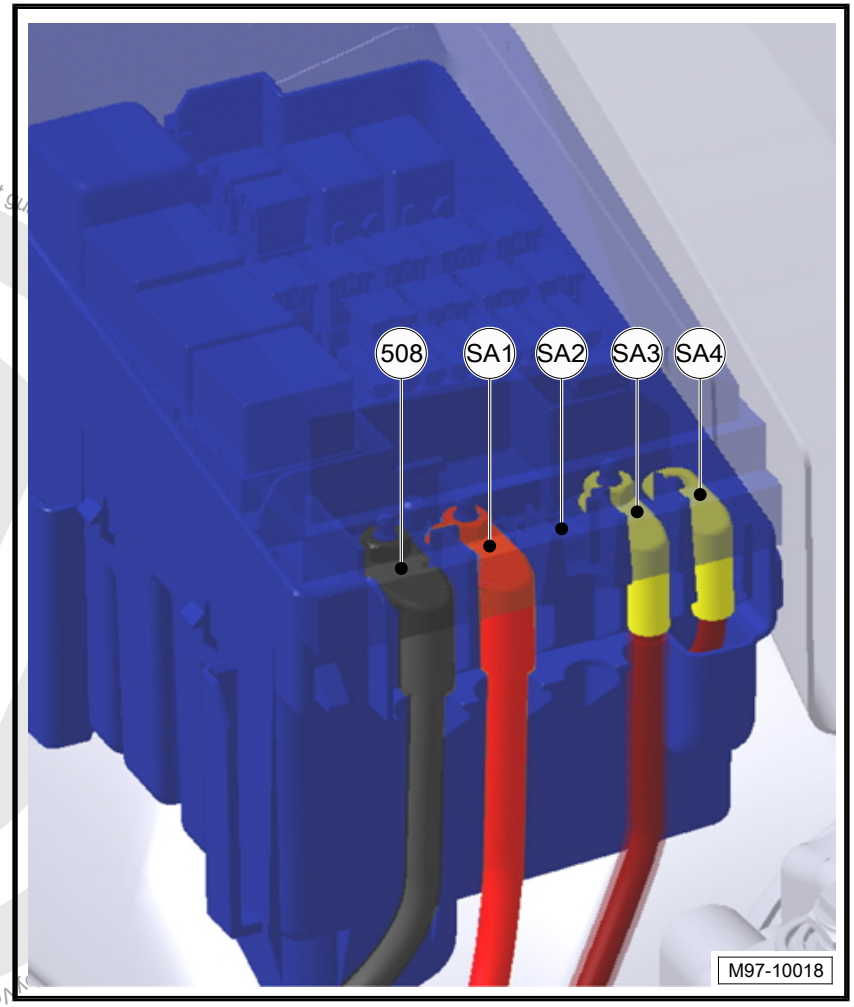

Protected by copyright. Copying for private or commercial purposes, in part or in whole, is not permitted unless authorised by Volkswagen AG. Volkswagen AG does not guarantee the accuracy and completeness of this electronic data. © Volkswagen AG.

No.		Designation in Wiring Diagram	Nominal Value		Function/Component	Terminal
508	A	508 Threaded connection (30) on the E-box		-		30a
1	B	Fuse 1 (on fuse panel A) -SA1-	200A	-	Electric drive power and control electronics -JX1- Voltage converter -A19-	30a
2	C	Fuse 2 (on fuse panel A) -SA2-		-	Not used	30a
3	D	Fuse 3 (on fuse panel A) -SA3-	80A	-	Steering	30a

No.		Designation in Wiring Diagram	Nominal Value		Function/Component	Terminal
4	E	Fuse 4 (on fuse panel A) -SA4-			Not used	

Return to overview ⇒ page 1

1.4 Jump start connection TV32, Hybrid system

1 - Jump start connection -TV32- -Arrow-

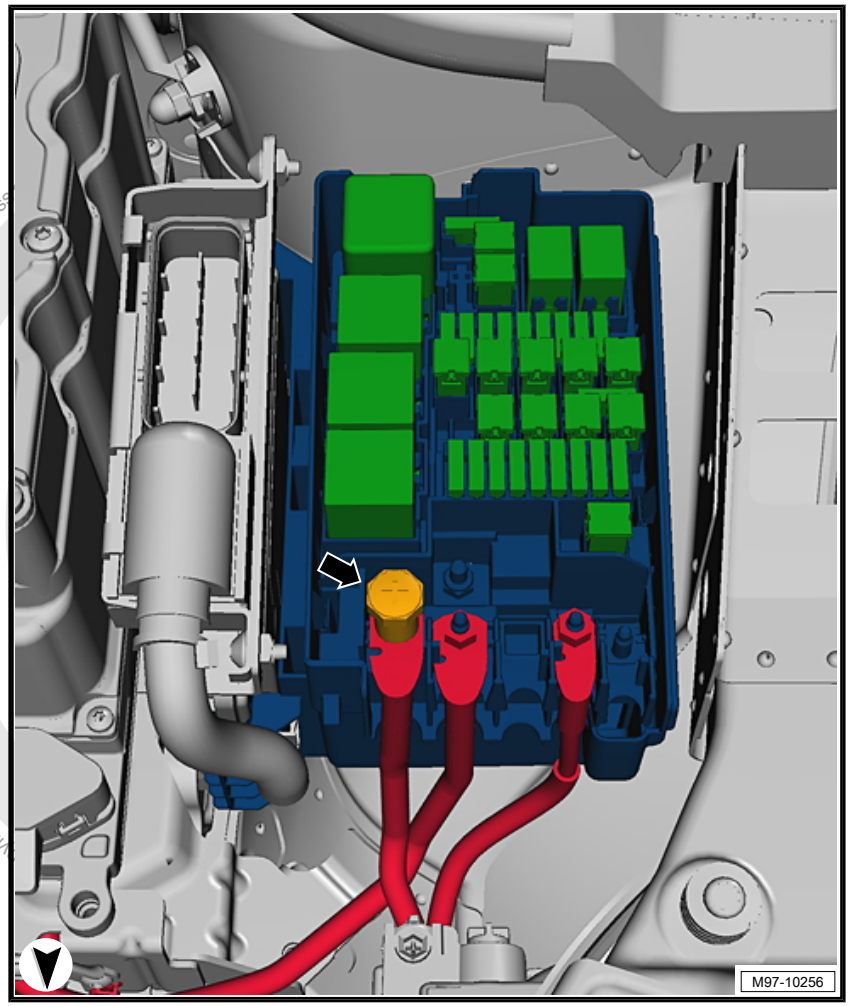

ing for private or commercial purposes, in part or in whole, is not permitted unless

Return to overview ⇒ page 1

1.5 Fuse (SB) on E-box, from MY 2011

1 - Fuse panel B -SB-

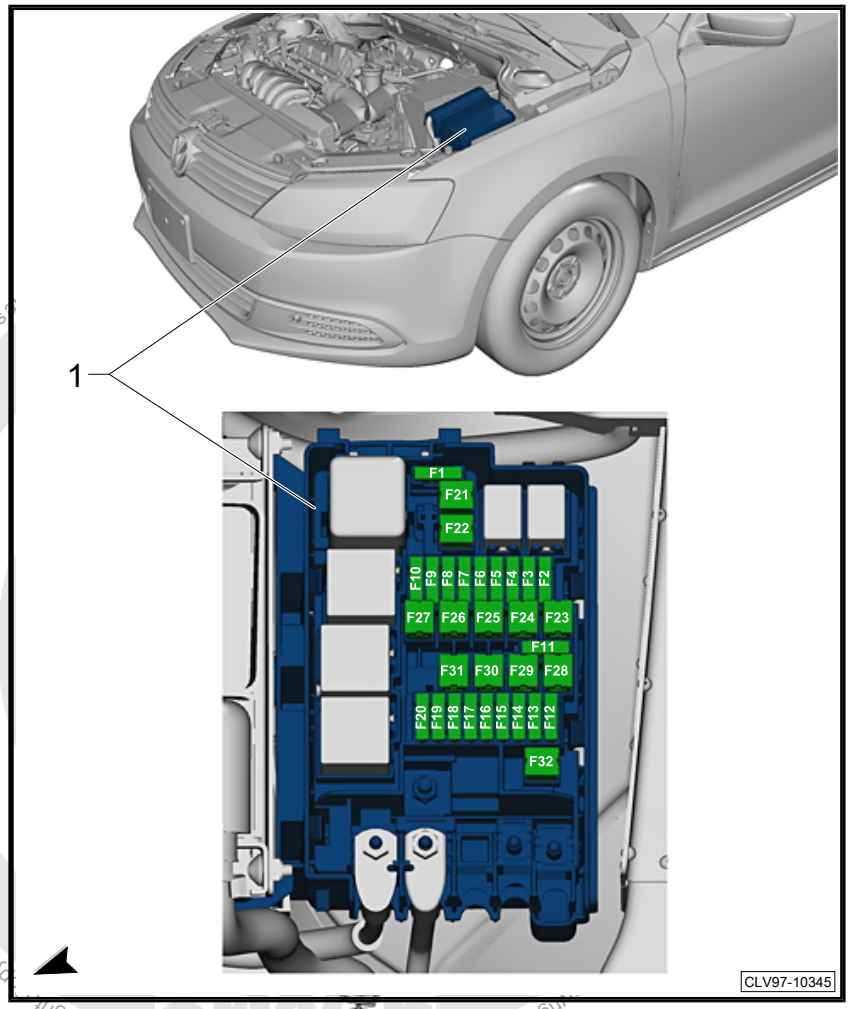

Protected by copyright. Copying for private or commercial purposes, in part or in whole, is not permitted unless authorised by Volkswagen AG.

No.		Designation in Wiring Diagram	Nominal Value		Function/Component	Terminal
F1	-	Fuse 1 (on fuse panel B) -SB1-		-	Not used	-
F2	-	Fuse 2 (on fuse panel B) -SB2-	10/15A	-	Engine control module -J623-	87

No.		Designation in Wiring Diagram	Nominal Value		Function/Component	Terminal
F3	-	Fuse 3 (on fuse panel B) -SB3-	5A	-	Coolant fan control module -J293-	87
F4	-	Fuse 4 (on fuse panel B) -SB4-	5/10/15A	-	Oxygen sensor heater -Z19- Heater for oxygen sensor 1 after catalytic converter -Z29-	87
F5	-	Fuse 5 (on fuse panel B) -SB5-	5A 20A	- -	Oxygen sensor heater -Z19- [1] Heater for oxygen sensor 1 after catalytic converter -Z29- [1] Leak detection pump -V144- Wastegate bypass regulator valve -N75- EGR cooler switch-over valve -N345- Positive crankcase ventilation heating element -N79- Brake system vacuum pump -V192-	87
F6	-	Fuse 6 (on fuse panel B) -SB6-	5A 10A 15A	-	Leak detection pump -V144- Throttle valve control module -J338- EVAP canister purge regulator valve 1 -N80- After-run coolant pump -V51- Auxiliary heater heating element -Z35-	87
F7	-	Fuse 7 (on fuse panel B) -SB7-	20A 5A	- -	Ignition coil -N152- Fuel pressure regulator valve -N276- [2] Fuel metering valve -N290- [2]	87
F8	-	Fuse 8 (on fuse panel B) -SB8-	10A	-	Throttle valve control module -J338- EVAP canister purge regulator valve 1 -N80-	87
F9	-	Fuse 9 (on fuse panel B) -SB9-	5A	-	Automatic glow time control module -J179- Fuel pump relay 2 -J49- Fuel pump relay -J17-	87
F10	-	Fuse 10 (on fuse panel B) -SB10-	5A	-	Speedometer vehicle speed sensor -G22- Brake lamp switch -F- , (T4al/4)[3]	87
F11	-	Fuse 11 (on fuse panel B) -SB11-		-	Not used	
F12	-	Fuse 12 (on fuse panel B) -SB12-	5A	-	After-run coolant pump -V50-	87
F13	-	Fuse 13 (on fuse panel B) -SB13-	5A	-	Water pump -V36-	30a
F14	-	Fuse 14 (on fuse panel B) -SB14-	5A	-	Engine control module -J623-	30a
F15	-	Fuse 15 (on fuse panel B) -SB15-	30A	-	Voltage stabilizer -J532-	30a
F16	-	Fuse 16 (on fuse panel B) -SB16-	30A	-	ABS control module -J104-	30a
F17	-	Fuse 17 (on fuse panel B) -SB17-	30A	-	Automatic transmission control module -J217-	30a
F18	-	Fuse 18 (on fuse panel B) -SB18-	20A	-	Automatic transmission control module -J217-	30a
F19	-	Fuse 19 (on fuse panel B) -SB19-	1A	-	Vehicle electrical system control module -J519-	30a
F20	-	Fuse 20 (on fuse panel B) -SB20-	30A		Vehicle electrical system control module -J519- (AW0) Wiper/washer intermittent relay -J31- (AW1)	30a
F21	-	Fuse 21 (on fuse panel B) -SB21-	50A	-	Secondary air injection pump motor -V101-	30a

Protected by copyright. Copyright by Volkswagen AG. Volkswagen AG does not guarantee or accept any liability with respect to the correctness and completeness of this document. Copyright by Volkswagen AG. Volkswagen AG. Volkswagen AG does not guarantee or accept any liability with respect to the correctness and completeness of this document. Copyright by Volkswagen AG. Protected by copyright

No.		Designation in Wiring Diagram	Nominal Value		Function/Component	Terminal
F22	-	Fuse 22 (on fuse panel B) -SB22-		-	Not used	
F23	-	Fuse 23 (on fuse panel B) -SB23-	40A	-	ABS control module -J104-	30a
F24	-	Fuse 24 (on fuse panel B) -SB24-	50A	-	Towing recognition control module -J345-	
F25	-	Fuse 25 (on fuse panel B) -SB25-	50A	-	Terminal 15 power supply relay 2 -J681-	30a
F26	-	Fuse 26 (on fuse panel B) -SB26-	60A	-	Automatic glow time control module -J179-	30a
F27	-	Fuse 27 (on fuse panel B) -SB27-	60A	-	Coolant fan -V7-	30a
F28	-	Fuse 28 (on fuse panel B) -SB28-	40A	-	Vehicle electrical system control module -J519- (AW1)	30a
F29	-	Fuse 29 (on fuse panel B) -SB29-	40A	-	Vehicle electrical system control module -J519- (AW1)	30a
F30	-	Fuse 30 (on fuse panel B) -SB30-	50A	-	Terminal 75 power supply relay 1 -J680-	30a
F31	-	Fuse 31 (on fuse panel B) -SB31-	30A	-	Amplifier -R12-	30a
F32	-	Fuse 32 (on fuse panel B) -SB32-		-	Not used	
[1] only for ULEV 2 - (7GB) exhaust system						
[2] Only models with diesel engine						
[3] Only for vehicles with DSG transmission						

Return to overview ⇒ page 1

1.6 Fuse (SB) on E-box, from MY 2012

Protected by copyright. Copying for private or commercial purposes, part or in excerpts is not permitted unless authorised by Volkswagen AG. Volkswagen AG does not guarantee or accept any liability with respect to the correctness of information in this document. Copyright by Volkswagen AG.

1 - Fuse panel B -SB-

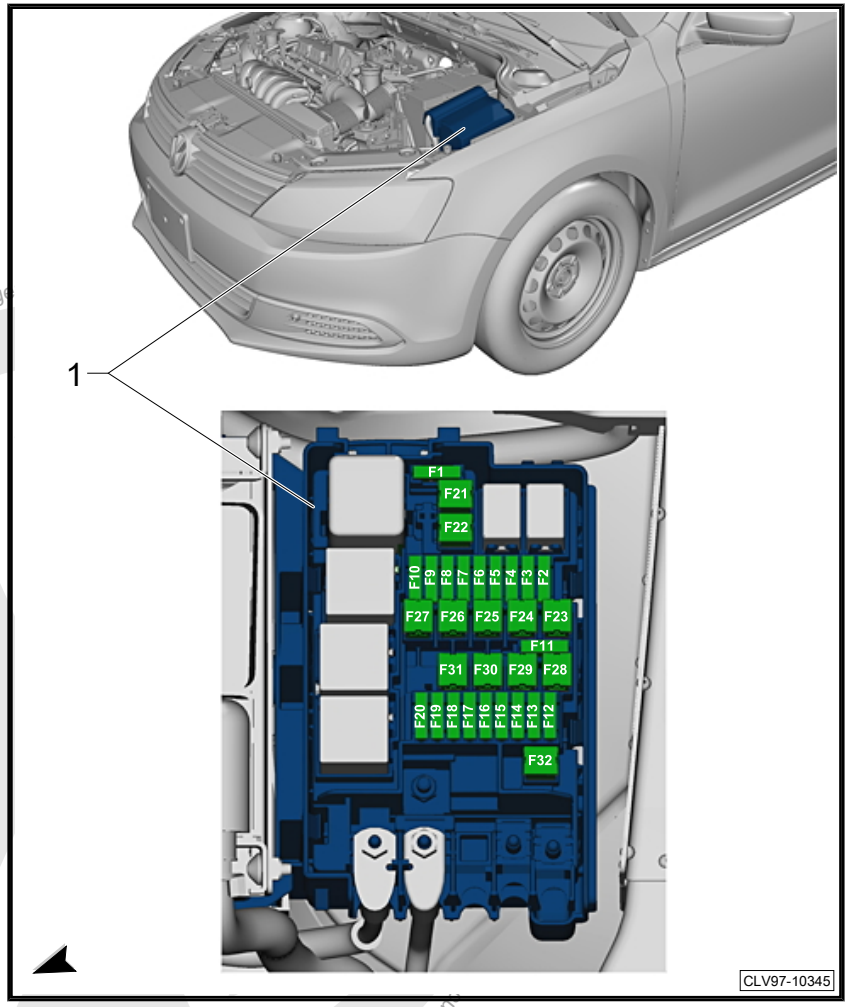

No.		Designation in Wiring Diagram	Nominal Value		Function/Component	Terminal
F1	-	Fuse 1 (on fuse panel B) -SB1-		-	Not used	-
F2	-	Fuse 2 (on fuse panel B) -SB2-	10/15A	-	Engine control module -J623-	87
F3	-	Fuse 3 (on fuse panel B) -SB3-	5A	-	Coolant fan control module -J293-	87
F4	-	Fuse 4 (on fuse panel B) -SB4-	5/10/15 A	-	Oxygen sensor heater -Z19- Heater for oxygen sensor 1 after catalytic converter -Z29-	87

Protected by copyright. Copying for private or commercial purposes, in part or in whole, is not permitted unless authorised by Volkswagen AG. Copyright by Volkswagen AG.

No.		Designation in Wiring Diagram	Nominal Value		Function/Component	Terminal
F5	-	Fuse 5 (on fuse panel B) -SB5-	5A 10A/ 20A	-	Oxygen sensor heater -Z19- [1] Leak detection pump -V144- Wastegate bypass regulator valve -N75- EGR cooler switch-over valve -N345- Positive crankcase ventilation heating element -N79- Brake system vacuum pump -V192-	87
F6	-	Fuse 6 (on fuse panel B) -SB6-	5/10/15 A	-	Leak detection pump -V144- Throttle valve control module -J338- EVAP canister purge regulator valve 1 -N80-	87
F6	-	Fuse 6 (on fuse panel B) -SB6-	10A 15A	-	Water pump -V36- Auxiliary heater heating element -Z35- , low heat output	87
F7	-	Fuse 7 (on fuse panel B) -SB7-	20A	-	Ignition coil 1 with power output stage -N70- Ignition coil 2 with power output stage -N127- Ignition coil 3 with power output stage -N291- Ignition coil 4 with power output stage -N292- Ignition coil -N152-	87
F7	-	Fuse 7 (on fuse panel B) -SB7-	5A		Fuel pressure regulator valve -N276- [2] Fuel metering valve -N290- [2]	87
F8	-	Fuse 8 (on fuse panel B) -SB8-	10A	-	Throttle valve control module -J338- Wastegate bypass regulator valve -N75- EVAP canister purge regulator valve 1 -N80- Camshaft adjustment valve 1 -N205- Turbocharger recirculation valve -N249-	87
F9	-	Fuse 9 (on fuse panel B) -SB9-	5A 15A[1]	-	Automatic glow time control module -J179- Fuel pump relay 2 -J49- Fuel pump relay -J17- Fuel pressure regulator valve -N276-	87
F10	-	Fuse 10 (on fuse panel B) -SB10-	5A	-	Speedometer vehicle speed sensor -G22- Brake lamp switch -F- [3] Clutch position sensor -G476- Auxiliary engine coolant pump relay -J496-	87
F11	-	Fuse 11 (on fuse panel B) -SB11-		-	Not used	
F12	-	Fuse 12 (on fuse panel B) -SB12-	5A	-	After-run coolant pump -V50-	87
F12	-	Fuse 12 (on fuse panel B) -SB12-	20A	-	Vacuum pump relay -J318- Brake system vacuum pump -V192-	87
F13	-	Fuse 13 (on fuse panel B) -SB13-	5A	-	Fuel pump relay -J17- Transfer fuel pump -G6- Water pump -V36-	30a
F14	-	Fuse 14 (on fuse panel B) -SB14-	5A	-	Engine control module -J623-	30a
F15	-	Fuse 15 (on fuse panel B) -SB15-	30A	-	Voltage stabilizer -J532-	30a

Copyright by Volkswagen AG, Volkswagen Aktiengesellschaft. Copying for private or commercial purposes, in part or in whole, is not permitted unless authorised by Volkswagen AG. Volkswagen AG does not guarantee or accept any liability with respect to the correctness of information in this document.

No.		Designation in Wiring Diagram	Nominal Value		Function/Component	Terminal
F16	-	Fuse 16 (on fuse panel B) -SB16-	30A	-	ABS control module -J104-	30a
F17	-	Fuse 17 (on fuse panel B) -SB17-	30A	-	DSG transmission Mechatronic -J743-	30a
F18	-	Fuse 18 (on fuse panel B) -SB18-	20A	-	DSG transmission Mechatronic -J743-	30a
F19	-	Fuse 19 (on fuse panel B) -SB19-	1A	-	Vehicle electrical system control module -J519- (AW0)	30a
F20	-	Fuse 20 (on fuse panel B) -SB20-	30A		Vehicle electrical system control module -J519- (AW0) Wiper/washer intermittent relay -J31- (AW1) Wiper motor change-over relay 1 -J368- (AW1) Wiper motor change-over relay 2 -J369- (AW1)	30a
F21	-	Fuse 21 (on fuse panel B) -SB21-	50A	-	Secondary air injection pump motor -V101-	87
F22	-	Fuse 22 (on fuse panel B) -SB22-		-	Not used	
F23	-	Fuse 23 (on fuse panel B) -SB23-	40A	-	ABS control module -J104-	30a
F24	-	Fuse 24 (on fuse panel B) -SB24-	50A	-	Towing recognition control module -J345-	30a
F25	-	Fuse 25 (on fuse panel B) -SB25-	50A	-	Terminal 15 power supply relay -J329- Terminal 15 power supply relay 2 -J681-	30a
F26	-	Fuse 26 (on fuse panel B) -SB26-	50A	-	Automatic glow time control module -J179-	30a
F27	-	Fuse 27 (on fuse panel B) -SB27-	60A	-	Coolant fan -V7-	30a
F28	-	Fuse 28 (on fuse panel B) -SB28-	40A	-	Vehicle electrical system control module -J519- (AW1)	30a
F29	-	Fuse 29 (on fuse panel B) -SB29-	40A	-	Vehicle electrical system control module -J519- (AW1)	30a
F30	-	Fuse 30 (on fuse panel B) -SB30-	50A	-	Terminal 75 power supply relay 1 -J680-	30a
F31	-	Fuse 31 (on fuse panel B) -SB31-	30A	-	Amplifier -R12-	30a
F32	-	Fuse 32 (on fuse panel B) -SB32-	40A	-	Auxiliary heater heating element -Z35-	87

[1] only for ULEV 2 - (7GB) exhaust system

[2] Only models with diesel engine

[3] Only for vehicles with DSG transmission

Protected by copyright. Copying for private or commercial purposes, in part or in whole, is not permitted unless authorised by Volkswagen AG. Volkswagen AG does not guarantee or accept any liability with respect to the correctness of information in this document. Copyright by Volkswagen AG.

Return to overview ⇒ page 1

1.7 Fuse (SB) on E-box, from MY 2013

1 - Fuse panel B -SB-

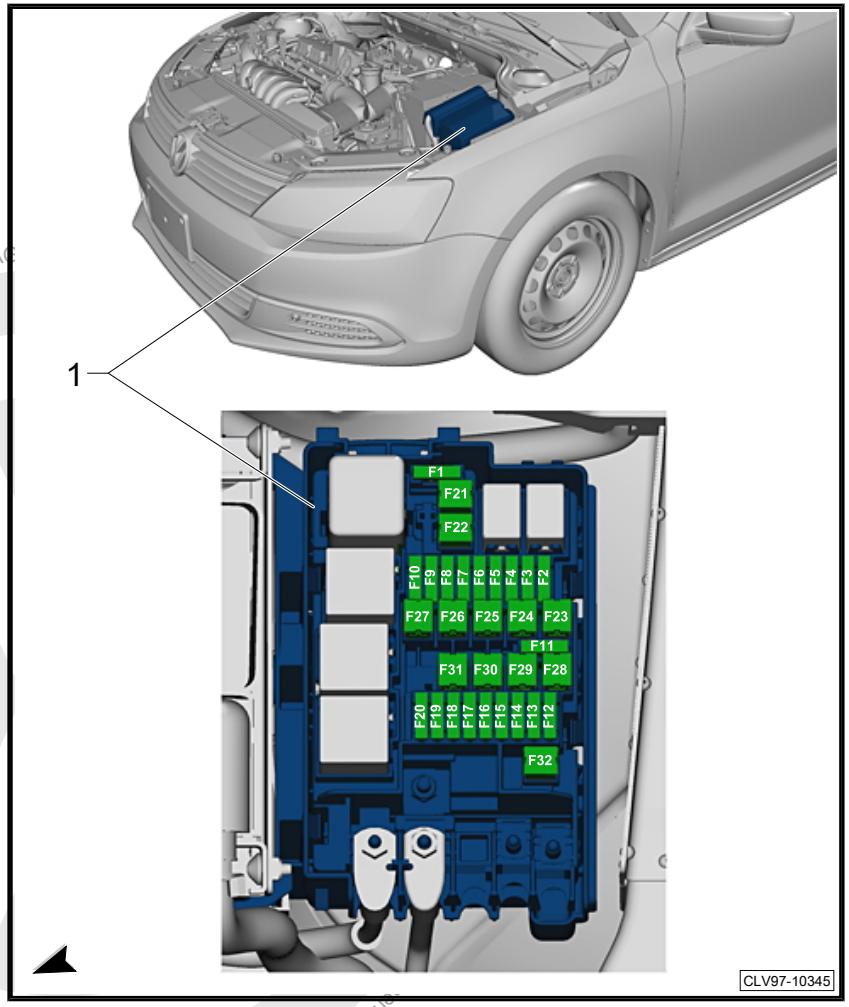

Protected by copyright. Copying for private or commercial purposes, in part or in whole, is not permitted unless authorised by Volkswagen AG.

No.		Designation in Wiring Diagram	Nominal Value		Function/Component	Terminal
F1	-	Fuse 1 (on fuse panel B) -SB1-		-	Not used	-
F2	-	Fuse 2 (on fuse panel B) -SB2-	10/15A	-	Engine control module -J623-	87
F3	-	Fuse 3 (on fuse panel B) -SB3-	5A	-	Coolant fan control module -J293-	87

No.		Designation in Wiring Diagram	Nominal Value		Function/Component	Terminal
F4	-	Fuse 4 (on fuse panel B) -SB4-	5/10/15 A	-	Oxygen sensor heater -Z19- Heater for oxygen sensor 1 after catalytic converter -Z29- High temperature circuit coolant pump -V467- [4] Low temperature circuit coolant pump -V468-	87
F5	-	Fuse 5 (on fuse panel B) -SB5-	5A 10A/ 20A	-	Oxygen sensor heater -Z19- [1] Oxygen sensor 2 heater -Z28- [4] Leak detection pump -V144- Wastegate bypass regulator valve -N75- EGR cooler switch-over valve -N345- Positive crankcase ventilation heating element -N79- Mass airflow sensor -G70- [5] Vacuum pump relay -J318- Brake system vacuum pump -V192-	87
F6	-	Fuse 6 (on fuse panel B) -SB6-	5/10/15 A 20A	-	Leak detection pump -V144- EVAP canister purge regulator valve 1 -N80- Tank switch-off valve -N288- Secondary air injection pump relay -J299- [4]	87
F6	-	Fuse 6 (on fuse panel B) -SB6-	10A 15A	-	Water pump -V36- Auxiliary heater heating element -Z35- Relay for low heat output -J359- Relay for high heat output -J360-	87
F7	-	Fuse 7 (on fuse panel B) -SB7-	20A	-	Ignition coil 1 with power output stage -N70- Ignition coil 2 with power output stage -N127- Ignition coil 3 with power output stage -N291- Ignition coil 4 with power output stage -N292- Ignition coil -N152-	87
F7	-	Fuse 7 (on fuse panel B) -SB7-	5A		Fuel pressure regulator valve -N276- [2] Fuel metering valve -N290- [2]	87
F8	-	Fuse 8 (on fuse panel B) -SB8-	10A	-	Throttle valve control module -J338- Wastegate bypass regulator valve -N75- EVAP canister purge regulator valve 1 -N80- Camshaft adjustment valve 1 -N205- Turbocharger recirculation valve -N249- Intake manifold runner control valve -N316- Exhaust camshaft adjustment valve 1 -N318- [4] Oil pressure regulation valve -N428- [4] Decoupler pressure actuator -N511- [4] Refrigerant cut-off valve -N516- [4]	87

Protected by copyright. Copying for private or commercial purposes, in part or in whole, is not permitted unless authorised by Volkswagen AG. Volkswagen AG does not guarantee or accept any liability with respect to the correctness and completeness of this document.

No.		Designation in Wiring Diagram	Nominal Value		Function/Component	Terminal
F9	-	Fuse 9 (on fuse panel B) -SB9-	5A 15A[1]	-	Automatic glow time control module -J179- Fuel pump relay 2 -J49- Fuel pump relay -J17- Fuel pressure regulator valve -N276- Coolant circulation pump relay -J151- Engine coolant circulation pump 2 -V178-	87
F10	-	Fuse 10 (on fuse panel B) -SB10-	5A	-	Brake lamp switch -F- [3] Clutch position sensor -G476- Auxiliary engine coolant pump relay -J496- Brake booster relay -J569- [4]	87
F11	-	Fuse 11 (on fuse panel B) -SB11-		-	Not used	
F12	-	Fuse 12 (on fuse panel B) -SB12-	5A	-	After-run coolant pump -V50-	87
F13	-	Fuse 13 (on fuse panel B) -SB13-	5A 20A	-	Auxiliary engine coolant pump relay -J496- Water pump -V36- Brake booster relay -J569- [4] Brake system vacuum pump -V192- [4]	30a
F14	-	Fuse 14 (on fuse panel B) -SB14-	5A	-	Engine control module -J623- Main relay -J271-	30a
F15	-	Fuse 15 (on fuse panel B) -SB15-	30A	-	Voltage stabilizer -J532-	30a
F16	-	Fuse 16 (on fuse panel B) -SB16-	30A	-	ABS control module -J104-	30a
F17	-	Fuse 17 (on fuse panel B) -SB17-	30A	-	DSG transmission Mechatronic -J743-	30a
F18	-	Fuse 18 (on fuse panel B) -SB18-	20A	-	DSG transmission Mechatronic -J743-	30a
F19	-	Fuse 19 (on fuse panel B) -SB19-	1A	-	Vehicle electrical system control module -J519- (T52a/24) AW1, (T73b/59) AW0	30a
F20	-	Fuse 20 (on fuse panel B) -SB20-	30A		Vehicle electrical system control module -J519- (AW0) Wiper/washer intermittent relay -J31- (AW1) Wiper motor change-over relay 1 -J368- (AW1) Wiper motor change-over relay 2 -J369- (AW1)	30a
F21	-	Fuse 21 (on fuse panel B) -SB21-	50A	-	Secondary air injection pump motor -V101-	87
F22	-	Fuse 22 (on fuse panel B) -SB22-	40A	-	Auxiliary heater heating element -Z35-	87
F23	-	Fuse 23 (on fuse panel B) -SB23-	40A	-	ABS control module -J104-	30a
F24	-	Fuse 24 (on fuse panel B) -SB24-	50A	-	Towing recognition control module -J345-	30a
F25	-	Fuse 25 (on fuse panel B) -SB25-	50A	-	Terminal 15 power supply relay -J329- Terminal 15 power supply relay 2 -J681-	30a
F26	-	Fuse 26 (on fuse panel B) -SB26-	50A 40A	-	Automatic glow time control module -J179- Secondary air injection pump relay -J299- Secondary air injection pump motor -V101- [4]	30a
F27	-	Fuse 27 (on fuse panel B) -SB27-	50A	-	Coolant fan -V7-	30a

Protected by copyright. Copying for private or commercial purposes, in part or in whole is not permitted unless authorised by Volkswagen AG. Volkswagen AG does not guarantee or accept any liability with respect to the correctness and completeness of this document. © Copyright by Volkswagen AG.

No.		Designation in Wiring Diagram	Nominal Value		Function/Component	Terminal
F28	-	Fuse 28 (on fuse panel B) -SB28-	40A	-	Vehicle electrical system control module -J519- (AW1)	30a
F29	-	Fuse 29 (on fuse panel B) -SB29-	40A	-	Vehicle electrical system control module -J519- (AW1)	30a
F30	-	Fuse 30 (on fuse panel B) -SB30-	50A	-	Terminal 75 power supply relay 1 -J680-	30a
F31	-	Fuse 31 (on fuse panel B) -SB31-	30A	-	Amplifier -R12-	30a
F32	-	Fuse 32 (on fuse panel B) -SB32-	40A	-	Auxiliary heater heating element -Z35-	87
[1] only for ULEV 2 - (7GB) exhaust system						
[2] Only models with diesel engine						
[3] Only for vehicles with DSG transmission						
[4] Engine code CNLA						
[5] Engine code CFFB						

Return to overview ⇒ page 1

1.8 Fuse (SB) on E-box, from MY 2014

Protected by copyright. Copying for private or commercial purposes, in part or in whole, is not permitted unless authorised by Volkswagen AG. Volkswagen AG does not guarantee or accept any liability with respect to the correctness of information in this document. Copyright by Volkswagen AG.

1 - Fuse panel B -SB-

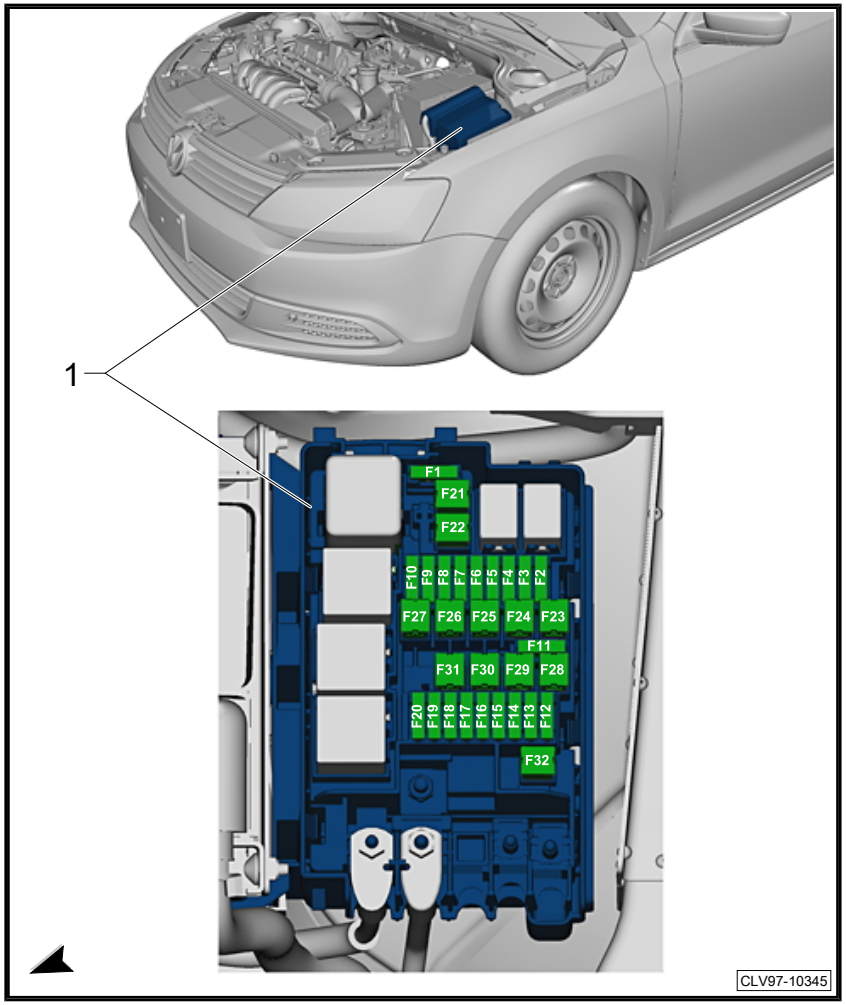

Copyright by Volkswagen AG. Volkswagen AG does not guarantee or accept any liability with respect to the correctness of information in this document. Copying for private or commercial purposes, in part or in whole, is not permitted unless authorised by Volkswagen AG.

No.		Designation in Wiring Diagram	Nominal Value		Function/Component	Terminal
F1	-	Fuse 1 (on fuse panel B) -SB1-		-	Not used	-
F2	-	Fuse 2 (on fuse panel B) -SB2-	10/15A	-	Engine control module -J623- Engine component power supply relay -J757-	87
F3	-	Fuse 3 (on fuse panel B) -SB3-	5A 10A	-	Coolant fan control module -J293- Relay for low heat output -J359- Relay for high heat output -J360-	87

No.		Designation in Wiring Diagram	Nominal Value		Function/Component	Terminal
F4	-	Fuse 4 (on fuse panel B) -SB4-	5/10/15 A	-	Oxygen sensor heater -Z19- Heater for oxygen sensor 1 after catalytic converter -Z29- High temperature circuit coolant pump -V467- [3] Low temperature circuit coolant pump -V468-	87
F5	-	Fuse 5 (on fuse panel B) -SB5-	5A 10A/ 20A	-	Oxygen sensor heater -Z19- [1] Oxygen sensor 2 heater -Z28- [3] Leak detection pump -V144- Wastegate bypass regulator valve -N75- EGR cooler switch-over valve -N345- Positive crankcase ventilation heating element -N79- Mass airflow sensor -G70- [4] Vacuum pump relay -J318- Brake system vacuum pump -V192-	87
F6	-	Fuse 6 (on fuse panel B) -SB6-	5/10/15 A 20A	-	Leak detection pump -V144- EVAP canister purge regulator valve 1 -N80- Tank switch-off valve -N288- Secondary air injection pump relay -J299- [1]	87
F6	-	Fuse 6 (on fuse panel B) -SB6-	10A 15A	-	Water pump -V36- Auxiliary heater heating element -Z35- Relay for low heat output -J359- Relay for high heat output -J360-	87
F7	-	Fuse 7 (on fuse panel B) -SB7-	20A	-	Ignition coil 1 with power output stage -N70- Ignition coil 2 with power output stage -N127- Ignition coil 3 with power output stage -N291- Ignition coil 4 with power output stage -N292- Ignition coil -N152-	87
F7	-	Fuse 7 (on fuse panel B) -SB7-	5A		Fuel pressure regulator valve -N276- [2] Fuel metering valve -N290- [2]	87
F8	-	Fuse 8 (on fuse panel B) -SB8-	10A	-	Throttle valve control module -J338- Wastegate bypass regulator valve -N75- EVAP canister purge regulator valve 1 -N80- Camshaft adjustment valve 1 -N205- Turbocharger recirculation valve -N249- Intake manifold runner control valve -N316- Exhaust camshaft adjustment valve 1 -N318- [3] Oil pressure regulation valve -N428- [3] Decoupler pressure actuator -N511- [3] Refrigerant cut-off valve -N516- [3]	87

Protected by copyright. Copying for private or commercial purposes, in part or in whole, is not permitted unless authorised by Volkswagen AG. Volkswagen AG does not guarantee or accept any liability with respect to the correctness of information in this document. Copyright by Volkswagen AG.

No.		Designation in Wiring Diagram	Nominal Value		Function/Component	Terminal
F9	-	Fuse 9 (on fuse panel B) -SB9-	5A 15A[1]	-	Secondary air injection sensor 1 -G609- Secondary air injection sensor 2 -G610- Automatic glow time control module -J179- Fuel pump relay 2 -J49- Fuel pump relay -J17- EVAP canister purge regulator valve 1 -N80- Camshaft adjustment valve 1 -N205- Fuel pressure regulator valve -N276- After-run coolant pump -V51- Coolant circulation pump relay -J151- Engine coolant circulation pump 2 -V178-	87
F10	-	Fuse 10 (on fuse panel B) -SB10-	5A	-	Brake lamp switch -F- Clutch position sensor -G476- Auxiliary engine coolant pump relay -J496- Brake booster relay -J569- [3]	87
F11	-	Fuse 11 (on fuse panel B) -SB11-		-	Not used	
F12	-	Fuse 12 (on fuse panel B) -SB12-	5A	-	Ignition coil 1 with power output stage -N70- Ignition coil 2 with power output stage -N127- Ignition coil 3 with power output stage -N291- Ignition coil 4 with power output stage -N292- After-run coolant pump -V50-	87
F13	-	Fuse 13 (on fuse panel B) -SB13-	5A 20A	-	Auxiliary engine coolant pump relay -J496- Water pump -V36- Brake booster relay -J569- [3] Brake system vacuum pump -V192- [3]	30a
F14	-	Fuse 14 (on fuse panel B) -SB14-	5A	-	Engine control module -J623- Main relay -J271-	30a
F15	-	Fuse 15 (on fuse panel B) -SB15-	30A	-	Voltage stabilizer -J532-	30a
F16	-	Fuse 16 (on fuse panel B) -SB16-	30A	-	ABS control module -J104-	30a
F17	-	Fuse 17 (on fuse panel B) -SB17-	30A	-	DSG transmission Mechatronic -J743-	30a
F18	-	Fuse 18 (on fuse panel B) -SB18-	20A	-	DSG transmission Mechatronic -J743-	30a
F19	-	Fuse 19 (on fuse panel B) -SB19-	1A	-	Vehicle electrical system control module -J519- (T52a/24) AW1, (T73b/59) AW0	30a
F20	-	Fuse 20 (on fuse panel B) -SB20-	30A		Vehicle electrical system control module -J519- (AW0) Wiper/washer intermittent relay -J31- (AW1) Wiper motor change-over relay 1 -J368- (AW1) Wiper motor change-over relay 2 -J369- (AW1)	30a
F21	-	Fuse 21 (on fuse panel B) -SB21-	50A	-	Secondary air injection pump motor -V101-	87
F22	-	Fuse 22 (on fuse panel B) -SB22-	40A	-	Auxiliary heater heating element -Z35-	87
F23	-	Fuse 23 (on fuse panel B) -SB23-	40A	-	ABS control module -J104-	30a

Protected by copyright. Copying for private or commercial purposes, in part or in whole, is not permitted unless authorized by Volkswagen AG. Volkswagen AG does not guarantee or accept any liability with respect to the suitability and correctness of information in this document. Copyright by Volkswagen AG.

No.		Designation in Wiring Diagram	Nominal Value		Function/Component	Terminal
F24	-	Fuse 24 (on fuse panel B) -SB24-	50A	-	Towing recognition control module -J345-	30a
F25	-	Fuse 25 (on fuse panel B) -SB25-	50A	-	Terminal 15 power supply relay -J329- Terminal 15 power supply relay 2 -J681-	30a
F26	-	Fuse 26 (on fuse panel B) -SB26-	50A 40A	-	Automatic glow time control module -J179- Secondary air injection pump relay -J299- Secondary air injection pump motor -V101- [3]	30a
F27	-	Fuse 27 (on fuse panel B) -SB27-	50A	-	Coolant fan -V7-	30a
F28	-	Fuse 28 (on fuse panel B) -SB28-	40A	-	Vehicle electrical system control module -J519- (AW1)	30a
F29	-	Fuse 29 (on fuse panel B) -SB29-	40A	-	Vehicle electrical system control module -J519- (AW1)	30a
F30	-	Fuse 30 (on fuse panel B) -SB30-	50A	-	Terminal 75 power supply relay 1 -J680-	30a
F31	-	Fuse 31 (on fuse panel B) -SB31-	30A	-	Amplifier -R12-	30a
F32	-	Fuse 32 (on fuse panel B) -SB32-	40A	-	Auxiliary heater heating element -Z35-	87

[1] only for ULEV 2 - (7GB) exhaust system

[2] Only models with diesel engine

[3] Engine codes CNLA, CRJA

[4] Engine code CFFB

Return to overview ⇒ page 1

1.9 Fuse (SC), from MY 2011

Protected by copyright. Copying for private or commercial purposes, in part or in whole, is not permitted unless authorised by Volkswagen AG. Volkswagen AG does not guarantee or accept any liability with respect to the correctness of information in this document. Copyright by Volkswagen AG.

1 - Fuse panel C -SC-

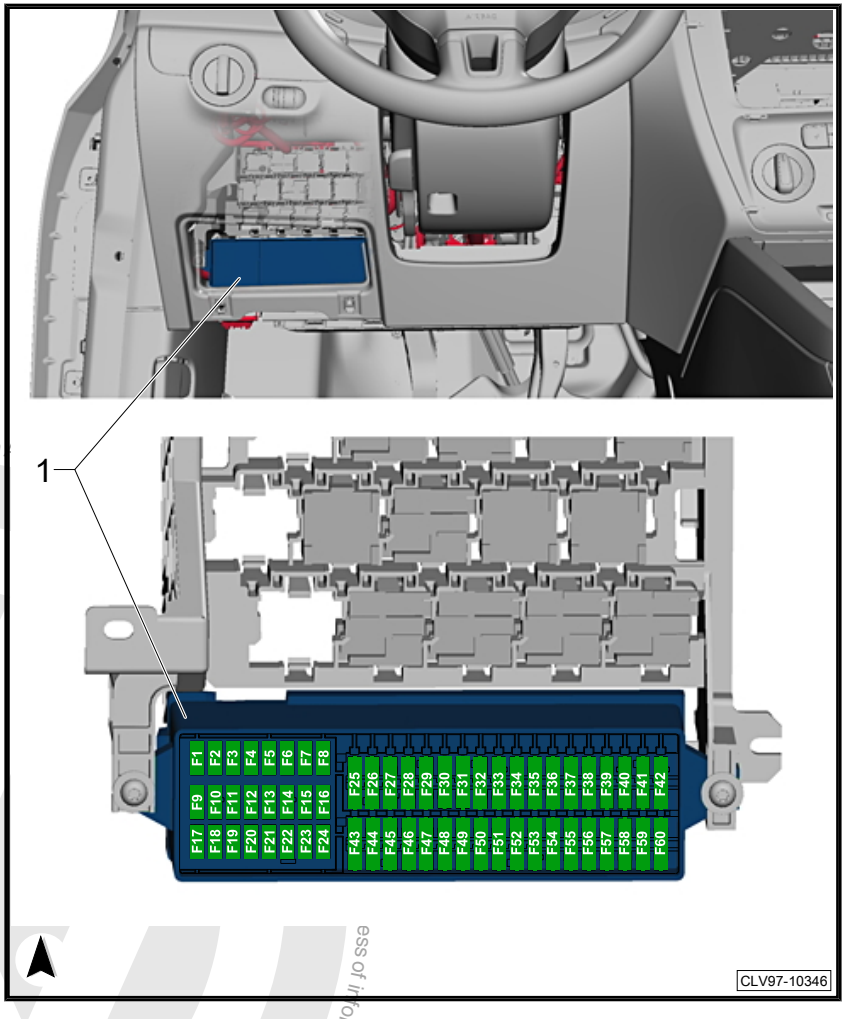

No.		Designation in Wiring Diagram	Nominal Value		Function/Component	Terminal
F1	-	Fuse 1 (on fuse panel C) -SC1-	-	-	Not used	-
F2	-	Fuse 2 (on fuse panel C) -SC2-	5A	-	Electronic steering column lock control module -J764-	30a
F3	-	Fuse 3 (on fuse panel C) -SC3-	10A	-	Instrument cluster control module -J285- , (T32/32)	30a
F4	-	Fuse 4 (on fuse panel C) -SC4-		-	Not used	-
F5	-	Fuse 5 (on fuse panel C) -SC5-	-	-	Not used	-

Protected by copyright. Copying for private or commercial purposes, in part or in whole, is not permitted unless authorised by Volkswagen AG. Volkswagen AG. Protected by copyright by Volkswagen AG. ess of information in this document.

No.		Designation in Wiring Diagram	Nominal Value		Function/Component	Terminal
F6	-	Fuse 6 (on fuse panel C) -SC6-	10A	-	Vehicle electrical system control module -J519- , (T73a/66) (AW0 only)	30a
F7	-	Fuse 7 (on fuse panel C) -SC7-	5A	-	Fog lamp relay -J5- , (AW0 only)[1] Instrument panel and switch illumination dimmer switch -E20- , (AW0 only) License plate lamp -X- Vehicle electrical system control module -J519- , (T52c/27) (AW1 only)	58
F8	-	Fuse 8 (on fuse panel C) -SC8-	7.5A	-	Windshield and headlamp washer pump switch -E44- , (AW0 only) Windshield washer pump -V5- , (AW0 only)	15a
F8	-	Fuse 8 (on fuse panel C) -SC8-	-	-	not used, (AW1 only)	-
F9	-	Fuse 9 (on fuse panel C) -SC9-	5A	-	Airbag control moduleAirbag Control Module -J234-	15a
F10	-	Fuse 10 (on fuse panel C) -SC10-	10A	-	Right steering column switch -EX20- , (AW0 only)	15a
F11	-	Fuse 11 (on fuse panel C) -SC11-	-	-	Not used	-
F12	-	Fuse 12 (on fuse panel C) -SC12-	-	-	Not used	-
F13	-	Fuse 13 (on fuse panel C) -SC13-	5A	-	Automatic dimming interior rearview mirror -Y7- Light recognition sensor -G399- Parking aid control module -J446- Air quality sensor -G238- High pressure sensor -G65- Climatronic control module -J255- Tire pressure monitoring button -E226- Back-up lamp switch -F4- Left washer nozzle heater -Z20- Right washer nozzle heater -Z21- 28-pin connector -T28- , (T28/10)	15a
F14	-	Fuse 14 (on fuse panel C) -SC14-	10A	-	Left steering column switch -EX19- ABS control module -J104- Light switch -E1- , (T10h/4) (AW1 only) Airbag spiral spring/return spring with slip ring -F138- Fuel pump control module -J538- Data bus on board diagnostic interface -J533- , (AW1 only)	15a
F15	-	Fuse 15 (on fuse panel C) -SC15-	10A	-	16-pin connector -T16- , (diagnostic connection) Instrument panel and switch illumination dimmer switch -E20- Headlamp range control adjuster -E102- , (AW1 only) Auxiliary heater operation relay -J485- Mass airflow sensor -G70- Positive crankcase ventilation heating element -N79- Left front headlamp -MX1- Left headlamp beam adjustment motor -V48- Right front headlamp -MX2- Right headlamp beam adjustment motor -V49-	15a
F16	-	Fuse 16 (on fuse panel C) -SC16-	10A	-	Engine control module -J623-	15a
F17	-	Fuse 17 (on fuse panel C) -SC17-	-	-	Not used	

Protected by copyright. Copying or distribution is prohibited unless authorised by Volkswagen AG. Volkswagen AG does not guarantee or accept any liability with respect to the correctness of information in this document. Copyright by Volkswagen AG.

No.		Designation in Wiring Diagram	Nominal Value		Function/Component	Terminal
F18	-	Fuse 18 (on fuse panel C) -SC18-	15A	-	Left front headlamp -MX1-	56b
F19	-	Fuse 19 (on fuse panel C) -SC19-	15A	-	Right front headlamp -MX2-	56b
F20	-	Fuse 20 (on fuse panel C) -SC20-	10A	-	Automatic transmission control module -J217- Selector lever sensor system control module -J587- tiptronic switch -F189- Climatronic control module -J255- Ignition/starter switch -D-	30a
F21	-	Fuse 21 (on fuse panel C) -SC21-	-	-	Not used	-
F22	-	Fuse 22 (on fuse panel C) -SC22-	10A	-	Ignition/starter switch -D- Converter box -J935- Alarm horn -H12- Interior monitoring sensor -G273- Alarm horn relay -J641- Dual tone horn relay -J4-	30a
F23	-	Fuse 23 (on fuse panel C) -SC23-	10A	-	Vehicle electrical system control module -J519- , (T73b/39) (AW0 only) 16-pin connector -T16- , (diagnostic connection) LIght switch -E1- , (AW1 only) Rain/light recognition sensor -G397- Compass magnetic field sensor -G197-	30a
F24	-	Fuse 24 (on fuse panel C) -SC24-	10A	-	Vehicle electrical system control module -J519- , (T73a/64) (AW0 only) Access/start authorization control module -J518-	30a
F25	-	Fuse 25 (on fuse panel C) -SC25-	15A	-	Automatic transmission control module -J217- Selector lever sensor system control module -J587- Multifunction switch -F125-	15a
F26	-	Fuse 26 (on fuse panel C) -SC26-	15A	-	Brake system vacuum pump -V192-	15a
F27	-	Fuse 27 (on fuse panel C) -SC27-	-	-	Not used	-
F28	-	Fuse 28 (on fuse panel C) -SC28-	40A	-	Auxiliary heater operation relay -J485-	75a
F29	-	Fuse 29 (on fuse panel C) -SC29-	1A	-	Vehicle electrical system control module -J519- , (T73b/51) (AW0 only)	-
F30	-	Fuse 30 (on fuse panel C) -SC30-	20A	-	Cigarette lighter -U1- 12 V socket -U5- 12 V socket 2 -U18- Blocking diode -J29-	75a
F31	-	Fuse 31 (on fuse panel C) -SC31-	30A	-	Light switch -E1- , (T17/1) (AW0 only)	75a
F32	-	Fuse 32 (on fuse panel C) -SC32-	20A	-	Light switch -E1- , (T17/2) (AW0 only)	75a
F33	-	Fuse 33 (on fuse panel C) -SC33-	40A	-	Heater/heat output switch -E16- Fresh air blower relay -J13- A/C control module -J301- Fresh air blower switch -E9-	75a
F34	-	Fuse 34 (on fuse panel C) -SC34-	15A	-	Left front headlamp -MX1- Instrument cluster control module -J285-	56a

Protected by copyright. Copyright by Volkswagen AG. Volkswagen AG does not guarantee or accept any liability with respect to the correctness of information in this document. Copyright by Volkswagen AG.

No.		Designation in Wiring Diagram	Nominal Value		Function/Component	Terminal
F35	-	Fuse 35 (on fuse panel C) -SC35-	10A	-	Steering column electronics control module -J527- Instrument cluster control module -J285- Signal horn activation -H- Data bus on board diagnostic interface -J533-	30a
F36	-	Fuse 36 (on fuse panel C) -SC36-	25A	-	Vehicle electrical system control module -J519- , (T73a/16) (AW0 only), (T52b/1) (AW1 only)	30a
F37	-	Fuse 37 (on fuse panel C) -SC37-	15A	-	Left front headlamp -MX1-	TFL
F38	-	Fuse 38 (on fuse panel C) -SC38-	15A	-	Right front headlamp -MX2-	TFL
F39	-	Fuse 39 (on fuse panel C) -SC39-	15A	-	Low beam relay -J331-	56b
F40	-	Fuse 40 (on fuse panel C) -SC40-	15A	-	Towing recognition control module -J345-	30a
F41	-	Fuse 41 (on fuse panel C) -SC41-	15A	-	Towing recognition control module -J345-	30a
F42	-	Fuse 42 (on fuse panel C) -SC42-	20A	-	Towing recognition control module -J345-	30a
F43	-	Fuse 43 (on fuse panel C) -SC43-	30A	-	Front passenger door control module -J387-	30a
F44	-	Fuse 44 (on fuse panel C) -SC44-	25A	-	Rear window defogger relay -J9- , (AW1 only) Vehicle electrical system control module -J519- , (T73b/67) (AW0 only)	30a
F45	-	Fuse 45 (on fuse panel C) -SC45-	25A	-	Driver door control module -J386- Front passenger door control module -J387- [1]	30a
F46	-	Fuse 46 (on fuse panel C) -SC46-	25A	-	Left rear door control module -J388- Right rear door control module -J389-	30a
F47	-	Fuse 47 (on fuse panel C) -SC47-	15A	-	Fuel pump control module -J538- Fuel pump relay -J17- Fuel primer relay -J643-	30a
F48	-	Fuse 48 (on fuse panel C) -SC48-	20A	-	Vehicle electrical system control module -J519- , (T52b/42) (AW1 only) Vehicle electrical system control module -J519- , (T73b/11) (AW0 only) Vehicle electrical system control module -J519- , (T73b/13) (AW0 only)	30a
F49	-	Fuse 49 (on fuse panel C) -SC49-	40A	-	Climatronic control module -J255- A/C control module -J301-	30
F50	-	Fuse 50 (on fuse panel C) -SC50-	30A	-	Front seat heating control module -J774-	30a
F51	-	Fuse 51 (on fuse panel C) -SC51-	20A	-	Sunroof control module -J245-	30a
F52	-	Fuse 52 (on fuse panel C) -SC52-	20A	-	Dual tone horn relay -J4-	30a
F53	-	Fuse 53 (on fuse panel C) -SC53-	15A	-	Front seat heating control module -J774-	30
F54	-	Fuse 54 (on fuse panel C) -SC54-	15A	-	Fog lamp relay -J5-	55
F55	-	Fuse 55 (on fuse panel C) -SC55-	20A	-	Light switch -E1- , (T16ls/10) (AW0 only) Left steering column switch -EX19- , (T17/15) (AW0 only)	30
F56	-	Fuse 56 (on fuse panel C) -SC56-	-	-	Not used	-
F57	-	Fuse 57 (on fuse panel C) -SC57-	15A	-	Radio -R- Radio/Navigation Display Control Module -J503-	30a

Copyright by Volkswagen AG. Volkswagen AG does not guarantee or accept any liability with respect to the correctness of information in this document. Copying for private or commercial purposes, in part or in whole, is not permitted unless authorised by Volkswagen AG. Volkswagen AG does not guarantee or accept any liability with respect to the correctness of information in this document. Copyright by Volkswagen AG.

No.		Designation in Wiring Diagram	Nominal Value		Function/Component	Terminal
F58	-	Fuse 58 (on fuse panel C) -SC58-	1A 30A	-	Telephone Transceiver -R36- [2] Converter with socket, 12 V-230 V -U13-	30a
F59	-	Fuse 59 (on fuse panel C) -SC59-	30A	-	Amplifier -R12-	-
F60	-	Fuse 60 (on fuse panel C) -SC60-	30A	-	Auxiliary heater control module -J364- Auxiliary heater heating element -Z35-	30a
[1] Depending on equipment						
[2] Discontinued as a running change						

Return to overview ⇒ page 1

1.10 Fuse (SC), from MY 2012

Protected by copyright. Copying for private or commercial purposes, in part or in whole, is not permitted unless authorised by Volkswagen AG. Volkswagen AG does not guarantee or accept any liability with respect to the correctness of information in this document. Copyright by Volkswagen AG.

1 - Fuse panel C -SC-

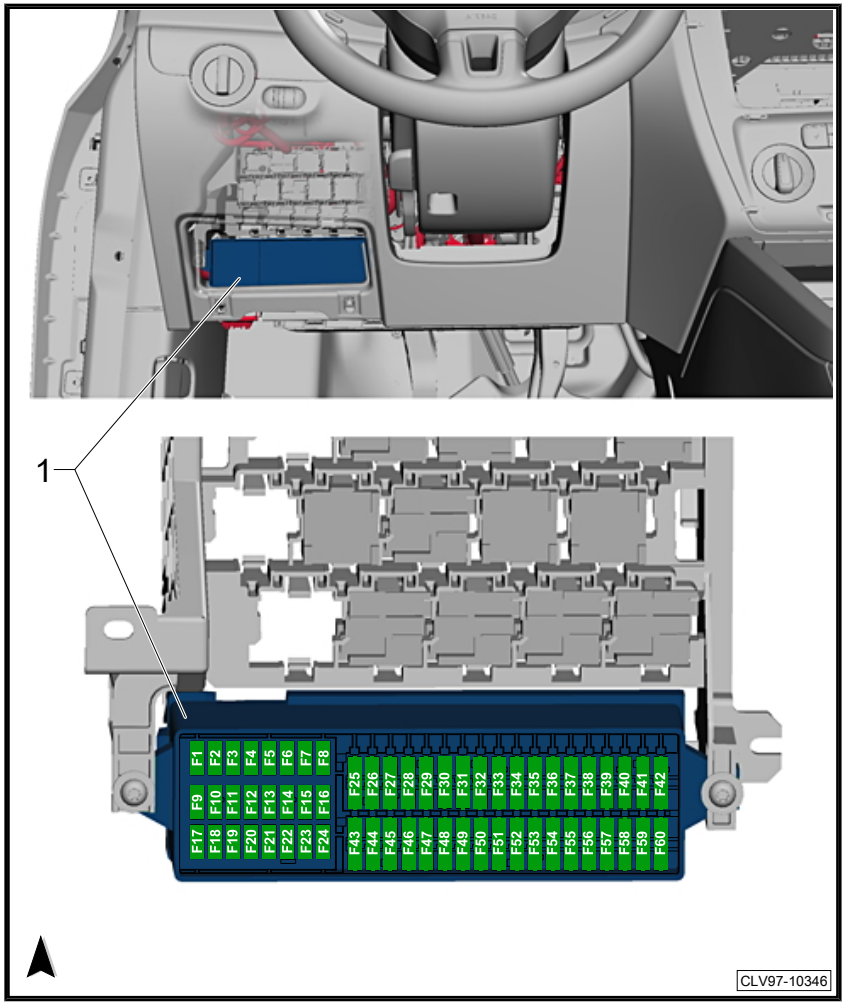

Protected by copyright. Copying for private or commercial purposes, in part or in whole, is not permitted unless authorised by Volkswagen AG. Volkswagen AG does not guarantee or accept any liability with respect to the correctness of information in this document. Copyright by Volkswagen AG.

No.		Designation in Wiring Diagram	Nominal Value		Function/Component	Terminal
F1	-	Fuse 1 (on fuse panel C) -SC1-	-	-	Not used	-
F2	-	Fuse 2 (on fuse panel C) -SC2-	5/ 7,5A	-	Electronic steering column lock control module -J764-	30a
F3	-	Fuse 3 (on fuse panel C) -SC3-	10A	-	Instrument cluster control module -J285- , (T32/32)	30a/ 30 stabilized
F4	-	Fuse 4 (on fuse panel C) -SC4-	2A	-	Telephone Transceiver -R36-	30a

No.		Designation in Wiring Diagram	Nominal Value		Function/Component	Terminal
F4	-	Fuse 4 (on fuse panel C) -SC4-	10A	-	Telephone Transceiver -R36- Compass magnetic field sensor -G197- [4]	30 stabilized
F5	-	Fuse 5 (on fuse panel C) -SC5-	7.5A	-	Left rear fog lamp bulb -L46-	55a
F6	-	Fuse 6 (on fuse panel C) -SC6-	10A	-	Vehicle electrical system control module -J519- , (T73a/66) (interior lamp, AW0 only)	30a
F7	-	Fuse 7 (on fuse panel C) -SC7-	5A	-	Fog lamp relay -J5- , (AW0 only)[1] Instrument panel and switch illumination dimmer switch -E20- , (AW0 only) License plate lamp -X- Vehicle electrical system control module -J519- , (T52c/27), (AW1 only)	58
F8	-	Fuse 8 (on fuse panel C) -SC8-	7.5A	-	Windshield and headlamp washer pump switch -E44- , (AW0 only) Windshield washer pump -V5- , (AW0 only) Vehicle electrical system control module -J519- , (T73b/61), (AW0 only)	53c
F8	-	Fuse 8 (on fuse panel C) -SC8-	-	-	not used, (AW1 only)	-
F9	-	Fuse 9 (on fuse panel C) -SC9-	5A/ 15A	-	Airbag control moduleAirbag Control Module -J234- Passenger occupant detection system control module -J706-	15a
F10	-	Fuse 10 (on fuse panel C) -SC10-	10A	-	Right steering column switch -EX20- , (T10ls/3), (AW0 only)	15a
F11	-	Fuse 11 (on fuse panel C) -SC11-	10A	-	Left front headlamp -MX1- , (HID headlamp)	15a
F12	-	Fuse 12 (on fuse panel C) -SC12-	10A	-	Right front headlamp -MX2- , (HID headlamp)	15a
F13	-	Fuse 13 (on fuse panel C) -SC13-	5A	-	Automatic dimming interior rearview mirror -Y7- Light recognition sensor -G399- Parking aid control module -J446- Air quality sensor -G238- High pressure sensor -G65- Climatronic control module -J255- Tire pressure monitoring button -E226- ASR/ESP button -E256- Back-up lamp switch -F4- Start/Stop mode switch -E262- Left washer nozzle heater -Z20- Right washer nozzle heater -Z21- 28-pin connector -T28- , (T28/10): Mirror adjusting switch -E43- Exterior rearview mirror heating switch -E231- Headlamp range/cornering lamp control module -J745-	15a

Reproduced for private use only. Copyright by Volkswagen AG. Reproduction and distribution only authorised by Volkswagen AG. Volkswagen AG does not guarantee or accept any liability with respect to the correctness of information in this document. Copyright by Volkswagen AG.

No.		Designation in Wiring Diagram	Nominal Value		Function/Component	Terminal
F14	-	Fuse 14 (on fuse panel C) -SC14-	10A	-	Left steering column switch -EX19- , (T16ls/1), (AW0 only) ABS control module -J104- , T26/20 / T47/8) Light switch -E1- , (T10h/4) (AW1 only) Airbag spiral spring/return spring with slip ring -F138- , (T16k/14) Fuel pump control module -J538- Towing recognition control module -J345- , (T12a/2) Voltage stabilizer -J532- Converter with socket, 12 V-230 V -U13- , (T3wr/3) Data bus on board diagnostic interface -J533- , (AW1 only)	15a
F15	-	Fuse 15 (on fuse panel C) -SC15-	10A	-	16-pin connector -T16- , (diagnostic connection) Instrument panel and switch illumination dimmer switch -E20- Headlamp range control adjuster -E102- , (AW1 only) Fresh air blower relay -J13- Mass airflow sensor -G70- Positive crankcase ventilation heating element -N79- Structure borne sound control module -J869- Left front headlamp -MX1- Left headlamp beam adjustment motor -V48- Right front headlamp -MX2- Right headlamp beam adjustment motor -V49-	15a
F16	-	Fuse 16 (on fuse panel C) -SC16-	10A	-	Auxiliary engine coolant pump relay -J496- Engine control module -J623-	15a
F17	-	Fuse 17 (on fuse panel C) -SC17-	10A	-	- Anti-theft alarm system horn [2] - Anti-theft alarm system interior sensor [2] - Anti-theft alarm system alarm [2]	30a
F18	-	Fuse 18 (on fuse panel C) -SC18-	15A	-	Left front headlamp -MX1- Left low beam headlamp bulb -M29- [3]	56b
F19	-	Fuse 19 (on fuse panel C) -SC19-	15A	-	Right front headlamp -MX2- Right low beam headlamp bulb -M31- [3]	56b
F20	-	Fuse 20 (on fuse panel C) -SC20-	10A	-	Ignition/starter switch -D- , (T10/10), (AW0 only) tiptronic switch -F189- Automatic transmission control module -J217- Selector lever sensor system control module -J587- Climatronic control module -J255- Auxiliary engine coolant heater radio frequency receiver -R149-	30a
F21	-	Fuse 21 (on fuse panel C) -SC21-	15/ 20A	-	Vehicle electrical system control module -J519- , (T73a/73), (AW0 only) Dual tone horn relay -J4- , (AW1 only) High tone horn -H2- Low tone horn -H7-	30a

Protected by copyright. Copying for private or commercial purposes, in part or in whole, is not permitted unless authorized by Volkswagen AG. Volkswagen AG does not guarantee or accept any liability with respect to the correctness of information in this document. Copyright by Volkswagen AG.

No.		Designation in Wiring Diagram	Nominal Value		Function/Component	Terminal
F22	-	Fuse 22 (on fuse panel C) -SC22-	20A 7.5A	-	Ignition/starter switch -D- , (AW0 only) Converter box -J935- , (AW0 only) Interior monitoring sensor -G273- Alarm horn relay -J641- Alarm horn -H12-	30a
F23	-	Fuse 23 (on fuse panel C) -SC23-	10A	-	Vehicle electrical system control module -J519- , (T73b/39) (AW0 only) 16-pin connector -T16- , (diagnostic connection) Light switch -E1- , (AW1 only) Rain/light recognition sensor -G397- Compass magnetic field sensor -G197- [5]	30a
F24	-	Fuse 24 (on fuse panel C) -SC24-	10A	-	Vehicle electrical system control module -J519- , (T73a/64) (AW0 only) Access/start authorization control module -J518-	30a
F25	-	Fuse 25 (on fuse panel C) -SC25-	15A	-	Automatic transmission control module -J217- Selector lever sensor system control module -J587- Multifunction switch -F125-	15a
F26	-	Fuse 26 (on fuse panel C) -SC26-	15A	-	Brake system vacuum pump -V192-	15a
F27	-	Fuse 27 (on fuse panel C) -SC27-	1A	-	Airbag spiral spring/return spring with slip ring -F138- , (T16k/1)	15a
F28	-	Fuse 28 (on fuse panel C) -SC28-	40A	-	Auxiliary heater operation relay -J485-	75a
F29	-	Fuse 29 (on fuse panel C) -SC29-	1A	-	Vehicle electrical system control module -J519- , (T73b/51) (AW0 only) Ignition/starter switch -D- , (AW0 only) Converter box -J935- , (AW0 only)	-
F30	-	Fuse 30 (on fuse panel C) -SC30-	20A	-	Cigarette lighter -U1- 12 V socket -U5- 12 V socket 2 -U18- Blocking diode -J29-	75a
F31	-	Fuse 31 (on fuse panel C) -SC31-	30A	-	Light switch -E1- , (T17/1) (AW0 only)	75a
F32	-	Fuse 32 (on fuse panel C) -SC32-	20A	-	Light switch -E1- , (T17/2) (AW0 only)	75a
F33	-	Fuse 33 (on fuse panel C) -SC33-	40A	-	Heater/heat output switch -E16- Fresh air blower relay -J13- A/C control module -J301- Fresh air blower switch -E9-	75a
F34	-	Fuse 34 (on fuse panel C) -SC34-	15A	-	Left high beam headlamp bulb -M30- (AW0 only) Right high beam headlamp bulb -M32- (AW0 only) Instrument cluster control module -J285- (-K1-, AW0 only)	56a
F35	-	Fuse 35 (on fuse panel C) -SC35-	10A	-	Steering column electronics control module -J527- , (AW1 only) Data bus on board diagnostic interface -J533- , (AW1 only) Signal horn activation -H-	30a
F36	-	Fuse 36 (on fuse panel C) -SC36-	25A	-	Vehicle electrical system control module -J519- , (T73a/16)(AW0 only), (T52b/1)(AW1 only) Vehicle electrical system control module -J519- , (T73a/61)(AW0 only)[2]	30a

Protected by copyright. Copying for private or commercial purposes, in part or in whole, is not permitted unless authorised by Volkswagen AG. Volkswagen AG does not guarantee or accept any liability with respect to the correctness of information in this document. Copyright by Volkswagen AG.

No.		Designation in Wiring Diagram	Nominal Value		Function/Component	Terminal
F37	-	Fuse 37 (on fuse panel C) -SC37-	15A	-	Left front headlamp -MX1- Left daytime running lamp bulb -L174-	TFL
F38	-	Fuse 38 (on fuse panel C) -SC38-	15A	-	Right front headlamp -MX2- Right daytime running lamp bulb -L175-	TFL
F39	-	Fuse 39 (on fuse panel C) -SC39-	20A	-	Low beam relay -J331-	56b
F40	-	Fuse 40 (on fuse panel C) -SC40-	15A	-	Towing recognition control module -J345- , (T12a/9)	30a
F41	-	Fuse 41 (on fuse panel C) -SC41-	15A	-	Towing recognition control module -J345- , (T12a/12)	30a
F42	-	Fuse 42 (on fuse panel C) -SC42-	20A	-	Towing recognition control module -J345- . (T12a/11)	30a
F43	-	Fuse 43 (on fuse panel C) -SC43-	30A	-	Front passenger door control module -J387-	30a
F44	-	Fuse 44 (on fuse panel C) -SC44-	30A	-	Rear window defogger relay -J9- , (AW1 only) Rear window defogger -Z1- Vehicle electrical system control module -J519- , (T73b/67) (AW0 only)	30a
F45	-	Fuse 45 (on fuse panel C) -SC45-	30A	-	Driver door control module -J386- Front passenger door control module -J387- [3]	30a
F46	-	Fuse 46 (on fuse panel C) -SC46-	30A	-	Left rear door control module -J388- Right rear door control module -J389-	30a
F47	-	Fuse 47 (on fuse panel C) -SC47-	15A	-	Fuel pump control module -J538- Fuel pump relay -J17- Fuel primer relay -J643-	30a
F48	-	Fuse 48 (on fuse panel C) -SC48-	20A	-	Vehicle electrical system control module -J519- , (T52b/42) (AW1 only) Vehicle electrical system control module -J519- , (T73b/11) (AW0 only) Vehicle electrical system control module -J519- , (T73b/13) (AW0 only)	30a
F49	-	Fuse 49 (on fuse panel C) -SC49-	40A	-	Climatronic control module -J255- A/C control module -J301-	30
F50	-	Fuse 50 (on fuse panel C) -SC50-	30A	-	Front seat heating control module -J774-	30a
F51	-	Fuse 51 (on fuse panel C) -SC51-	20A	-	Sunroof control module -J245-	30a
F52	-	Fuse 52 (on fuse panel C) -SC52-	20A	-	Dual tone horn relay -J4-	30a
F53	-	Fuse 53 (on fuse panel C) -SC53-	15A	-	Front seat heating control module -J774-	30
F54	-	Fuse 54 (on fuse panel C) -SC54-	15A	-	Fog lamp relay -J5-	55
F55	-	Fuse 55 (on fuse panel C) -SC55-	20A	-	Light switch -E1- , (T17/15) (AW0 only) Left steering column switch -EX19- , (T16ls/10) (AW0 only)	30
F56	-	Fuse 56 (on fuse panel C) -SC56-	-	-	Not used	-
F57	-	Fuse 57 (on fuse panel C) -SC57-	15A/ 25A[3]	-	Radio -R- Radio/Navigation Display Control Module -J503-	30a
F58	-	Fuse 58 (on fuse panel C) -SC58-	30A	-	Converter with socket, 12 V-230 V -U13-	30a
F59	-	Fuse 59 (on fuse panel C) -SC59-	30A	-	Amplifier -R12-	30

Protected by copyright. Copying for private or commercial purposes, in part or in whole, is not permitted unless authorised by Volkswagen AG. Volkswagen AG does not guarantee or accept any liability with respect to the correctness of information in this document. Copyright by Volkswagen AG

No.		Designation in Wiring Diagram	Nominal Value		Function/Component	Terminal
F60	-	Fuse 60 (on fuse panel C) -SC60-	30A	-	Auxiliary heater control module -J364-	30a
[1] Depending on equipment						
[2] Running change						
[3] Only for vehicles with China equipment						
[4] only for vehicles equipped with Start/Stop						
[5] only for vehicles without Start/Stop						

Return to overview ⇒ page 1

1.11 Fuse (SC), from MY 2013

Protected by copyright. Copying for private or commercial purposes, in part or in whole is not permitted unless authorised by Volkswagen AG. Volkswagen AG does not guarantee or accept any liability with respect to the correctness of information in this document. Copyright by Volkswagen AG.

1 - Fuse panel C -SC-

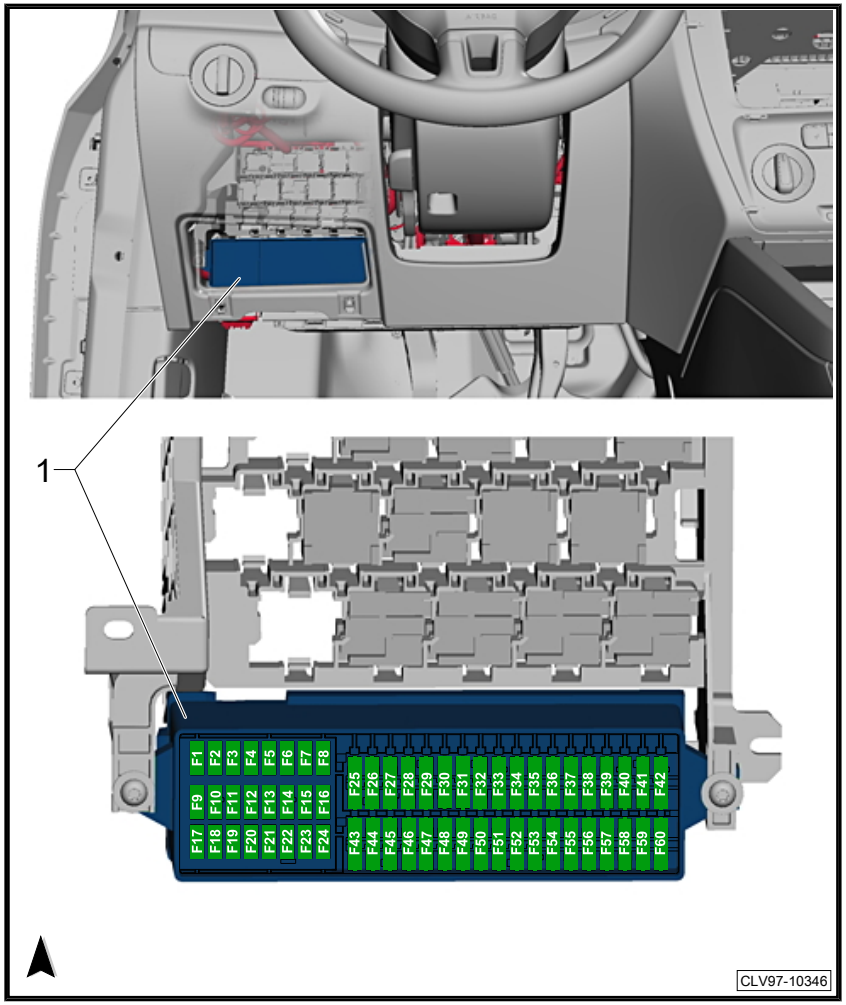

Protected by copyright. Copying for private or commercial purposes, in part or in whole, is not permitted unless authorised by Volkswagen AG. Volkswagen AG does not guarantee or accept any liability with respect to the correctness of information in this document. Copyright by Volkswagen AG.

No.		Designation in Wiring Diagram	Nominal Value		Function/Component	Terminal
F1	-	Fuse 1 (on fuse panel C) -SC1-	-		Not used	-
F2	-	Fuse 2 (on fuse panel C) -SC2-	5/ 7,5A	-	Electronic steering column lock control module -J764- (T16v/2)	30a
F3	-	Fuse 3 (on fuse panel C) -SC3-	10A	-	Instrument cluster control module -J285- , (T32/32)	30a/ 30 stabilized
F4	-	Fuse 4 (on fuse panel C) -SC4-	2A	-	Telephone Transceiver -R36-	30a

No.		Designation in Wiring Diagram	Nominal Value		Function/Component	Terminal
F4	-	Fuse 4 (on fuse panel C) -SC4-	10A	-	Telephone Transceiver -R36- Compass magnetic field sensor -G197- [4]	30 stabilized
F5	-	Fuse 5 (on fuse panel C) -SC5-	7.5A	-	Left rear fog lamp bulb -L46-	55a
F6	-	Fuse 6 (on fuse panel C) -SC6-	10A	-	Vehicle electrical system control module -J519- , (T73a/66) (interior lamp, AW0 only) Rearview camera -R189-	30a
F7	-	Fuse 7 (on fuse panel C) -SC7-	5A	-	Fog lamp relay -J5- , (AW0 only)[1] Instrument panel and switch illumination dimmer switch -E20- , (AW0 only) License plate lamp -X- Vehicle electrical system control module -J519- , (T52c/27), (AW1 only)	58
F8	-	Fuse 8 (on fuse panel C) -SC8-	7.5A	-	Windshield and headlamp washer pump switch -E44- , (AW0 only) Windshield washer pump -V5- , (AW0 only) Vehicle electrical system control module -J519- , (T73b/61), (AW0 only)	53c
F8	-	Fuse 8 (on fuse panel C) -SC8-	-	-	not used, (AW1 only)	-
F9	-	Fuse 9 (on fuse panel C) -SC9-	5A/ 15A	-	Airbag control moduleAirbag Control Module -J234- Front passenger airbag -disabled- indicator lamp -K145- Passenger occupant detection system control module -J706-	15a
F10	-	Fuse 10 (on fuse panel C) -SC10-	10A	-	Right steering column switch -EX20- , (T10ls/3), (AW0 only)	15a
F11	-	Fuse 11 (on fuse panel C) -SC11-	10A	-	Left front headlamp -MX1- , (HID headlamp)	15a
F12	-	Fuse 12 (on fuse panel C) -SC12-	10A	-	Right front headlamp -MX2- , (HID headlamp)	15a
F13		Fuse 13 (on fuse panel C) -SC13-	5A	-	Automatic dimming interior rearview mirror -Y7- Light recognition sensor -G399- Parking aid control module -J446- Air quality sensor -G238- High pressure sensor -G65- Climatronic control module -J255- Tire pressure monitoring button -E226- ASR/ESP button -E256- Back-up lamp switch -F4- Start/Stop mode switch -E262- Left washer nozzle heater -Z20- Right washer nozzle heater -Z21- 28-pin connector -T28- , (T28/10): Mirror adjusting switch -E43- Exterior rearview mirror heating switch -E231- A/C compressor control module -J842- (T14hy/14)[6] Cornering lamp and headlamp range control module -J745-	15a

Protected by copyright. Copying for private or commercial purposes, in part or in whole, is not permitted unless authorised by Volkswagen AG. Volkswagen AG does not guarantee or accept any liability with respect to the correctness of information in this document. Copyright by Volkswagen AG.

No.		Designation in Wiring Diagram	Nominal Value		Function/Component	Terminal
F14	-	Fuse 14 (on fuse panel C) -SC14-	10A	-	Left steering column switch -EX19- , (T16ls/1), (AW0 only) ABS control module -J104- , T26/20 / T47/8) Light switch -E1- , (T10h/4) (AW1 only) Airbag spiral spring/return spring with slip ring -F138- , (T16k/14) Fuel pump control module -J538- Towing recognition control module -J345- , (T12a/2) Voltage stabilizer -J532- Converter with socket, 12 V-230 V -U13- , (T3wr/3) Data bus on board diagnostic interface -J533- , (AW1 only) Instrument cluster control module -J285- Selector lever sensor system control module -J587- tiptronic switch -F189- (T10s/9) Power steering control module -J500- (T6z/1) Oil level thermal sensor -G266- (T6z/4) Hybrid battery unit -AX1- (T14ax/7)[6] Electric drive power and control electronics -JX1- (T28jx/56)[6]	15a
F15	-	Fuse 15 (on fuse panel C) -SC15-	10A	-	16-pin connector -T16- , (diagnostic connection) Instrument panel and switch illumination dimmer switch -E20- Headlamp range control adjuster -E102- , (AW1 only) Fresh air blower relay -J13- Mass airflow sensor -G70- Positive crankcase ventilation heating element -N79- Structure borne sound control module -J869- Left front headlamp -MX1- Left headlamp beam adjustment motor -V48- Right front headlamp -MX2- Right headlamp beam adjustment motor -V49- Vehicle electrical system control module -J519- (T73a/44)	15a
F16	-	Fuse 16 (on fuse panel C) -SC16-	10A	-	Auxiliary engine coolant pump relay -J496- Engine control module -J623- Electric drive button -E656- [6]	15a
F17	-	Fuse 17 (on fuse panel C) -SC17-	10A	-	- Anti-theft alarm system horn [2] - Anti-theft alarm system interior sensor [2] - Anti-theft alarm system alarm [2]	30a
F18	-	Fuse 18 (on fuse panel C) -SC18-	15A	-	Left front headlamp -MX1- Left low beam headlamp bulb -M29- [3]	56b
F19	-	Fuse 19 (on fuse panel C) -SC19-	15A	-	Right front headlamp -MX2- Right low beam headlamp bulb -M31- [3]	56b

Protected by copyright. Copying for private or commercial purposes, in part or in whole, is not permitted unless authorised by Volkswagen AG. Volkswagen AG does not guarantee or accept any liability with respect to the correctness of information in this document. Copyright by Volkswagen AG.

No.		Designation in Wiring Diagram	Nominal Value		Function/Component	Terminal
F20	-	Fuse 20 (on fuse panel C) -SC20-	10A	-	Ignition/starter switch -D- , (T10/10), (AW0 only) tiptronic switch -F189- Automatic transmission control module -J217- Selector lever sensor system control module -J587- Climatronic control module -J255- Auxiliary engine coolant heater radio frequency receiver -R149-	30a
F21	-	Fuse 21 (on fuse panel C) -SC21-	15/ 20A	-	Vehicle electrical system control module -J519- , (T73a/73), (AW0 only) Dual tone horn relay -J4- , (AW1 only) High tone horn -H2- Low tone horn -H7-	30a
F22	-	Fuse 22 (on fuse panel C) -SC22-	20A 7.5A	-	Ignition/starter switch -D- , (AW0 only) Converter box -J935- , (AW0 only) Interior monitoring sensor -G273- Alarm horn relay -J641- Alarm horn -H12-	30a
F23	-	Fuse 23 (on fuse panel C) -SC23-	10A	-	Vehicle electrical system control module -J519- , (T73b/39) (AW0 only) 16-pin connector -T16- , (diagnostic connection) LIght switch -E1- , (AW1 only) Rain/light recognition sensor -G397- Compass magnetic field sensor -G197- [5]	30a
F24	-	Fuse 24 (on fuse panel C) -SC24-	10A	-	Vehicle electrical system control module -J519- , (T73a/64) (AW0 only) Access/start authorization control module -J518-	30a
F25	-	Fuse 25 (on fuse panel C) -SC25-	15A	-	Automatic transmission control module -J217- Selector lever sensor system control module -J587- Multifunction switch -F125-	15a
F26	-	Fuse 26 (on fuse panel C) -SC26-	15A	-	Brake system vacuum pump -V192-	15a
F27	-	Fuse 27 (on fuse panel C) -SC27-	1A	-	Airbag spiral spring/return spring with slip ring -F138- , (T16k/1)	15a
F28	-	Fuse 28 (on fuse panel C) -SC28-	40A	-	Auxiliary heater operation relay -J485-	75a
F29	-	Fuse 29 (on fuse panel C) -SC29-	1A	-	Vehicle electrical system control module -J519- , (T73b/51) (AW0 only) Ignition/starter switch -D- , (AW0 only) Converter box -J935- , (AW0 only)	-
F30	-	Fuse 30 (on fuse panel C) -SC30-	20A	-	Cigarette lighter -U1- 12 V socket -U5- 12 V socket 2 -U18- Blocking diode -J29-	75a
F31	-	Fuse 31 (on fuse panel C) -SC31-	30A	-	Light switch -E1- , (T17/1) (AW0 only)	75a
F32	-	Fuse 32 (on fuse panel C) -SC32-	20A	-	Light switch -E1- , (T17/2) (AW0 only)	75a
F33	-	Fuse 33 (on fuse panel C) -SC33-	40A	-	Heater/heat output switch -E16- Fresh air blower relay -J13- A/C control module -J301- Fresh air blower switch -E9-	75a

Volkswagen AG. Volkswagen AG does not guarantee or accept any liability with respect to the correctness of information in this document. Copyright by Volkswagen AG. Copying for private or commercial purposes, in part or in whole, is not permitted unless authorised by Volkswagen AG. Violators are liable for damages.

No.		Designation in Wiring Diagram	Nominal Value		Function/Component	Terminal
F34	-	Fuse 34 (on fuse panel C) -SC34-	15A	-	Left high beam headlamp bulb -M30- (AW0 only) Right high beam headlamp bulb -M32- (AW0 only) Instrument cluster control module -J285- (-K1-, AW0 only)	56a
F35	-	Fuse 35 (on fuse panel C) -SC35-	10A	-	Steering column electronics control module -J527- , (AW1 only) Data bus on board diagnostic interface -J533- , (AW1 only)	30a
F36	-	Fuse 36 (on fuse panel C) -SC36-	25A	-	Vehicle electrical system control module -J519- , (T73a/16)(AW0 only) (T52b/1)(AW1 only) Vehicle electrical system control module -J519- , (T73a/61)(AW0 only)[2]	30a
F37	-	Fuse 37 (on fuse panel C) -SC37-	15A	-	Left front headlamp -MX1- Left daytime running lamp bulb -L174-	TFL
F38	-	Fuse 38 (on fuse panel C) -SC38-	15A	-	Right front headlamp -MX2- Right daytime running lamp bulb -L175-	TFL
F39	-	Fuse 39 (on fuse panel C) -SC39-	20A	-	Low beam relay -J331-	56b
F40	-	Fuse 40 (on fuse panel C) -SC40-	15A	-	Towing recognition control module -J345- , (T12a/9)	30a
F41	-	Fuse 41 (on fuse panel C) -SC41-	15A	-	Towing recognition control module -J345- , (T12a/12)	30a
F42	-	Fuse 42 (on fuse panel C) -SC42-	20A	-	Towing recognition control module -J345- . (T12a/11)	30a
F43	-	Fuse 43 (on fuse panel C) -SC43-	30A	-	Front passenger door control module -J387-	30a
F44	-	Fuse 44 (on fuse panel C) -SC44-	30A	-	Rear window defogger relay -J9- , (AW1 only) Rear window defogger -Z1- Vehicle electrical system control module -J519- , (T73b/67) (AW0 only)	30a
F45	-	Fuse 45 (on fuse panel C) -SC45-	30A	-	Driver door control module -J386- Front passenger door control module -J387- [3]	30a
F46	-	Fuse 46 (on fuse panel C) -SC46-	30A	-	Left rear door control module -J388- Right rear door control module -J389-	30a
F47	-	Fuse 47 (on fuse panel C) -SC47-	15A	-	Fuel pump control module -J538- Fuel pump relay -J17- Fuel primer relay -J643-	30a
F48	-	Fuse 48 (on fuse panel C) -SC48-	20A	-	Vehicle electrical system control module -J519- , (T52b/42) (AW1 only) Vehicle electrical system control module -J519- , (T73b/11) (AW0 only) Vehicle electrical system control module -J519- , (T73b/13) (AW0 only)	30a
F49	-	Fuse 49 (on fuse panel C) -SC49-	40A	-	Fresh air blower -V2- Climatronic control module -J255- A/C control module -J301-	30
F50	-	Fuse 50 (on fuse panel C) -SC50-	30A	-	Front seat heating control module -J774-	30a
F51	-	Fuse 51 (on fuse panel C) -SC51-	20A	-	Sunroof control module -J245-	30a
F52	-	Fuse 52 (on fuse panel C) -SC52-	20A	-	Headlamp Washer Relay -J39- Headlamp washer pump -V11-	30a
F53	-	Fuse 53 (on fuse panel C) -SC53-	15A	-	Driver seat lumbar support adjustment switch -E176-	30

Volkswagen AG, Volkswagen AG does not guarantee or accept any liability with respect to the correctness of information in this document. Copyright by Volkswagen AG. Protected by copyright. Copying, distribution and utilization is prohibited unless authorized in writing.

No.		Designation in Wiring Diagram	Nominal Value		Function/Component	Terminal
F54	-	Fuse 54 (on fuse panel C) -SC54-	15A	-	Fog lamp relay -J5-	55
F55	-	Fuse 55 (on fuse panel C) -SC55-	20A	-	Light switch -E1- , (T17/15) (AW0 only) Left steering column switch -EX19- , (T16ls/10) (AW0 only)	30
F56	-	Fuse 56 (on fuse panel C) -SC56-	10A	-	Hybrid battery unit -AX1- (T14ax/5)[6] Electric drive power and control electronics -JX1- (T28jx/55)[6]	30a
F57	-	Fuse 57 (on fuse panel C) -SC57-	15A/ 25A[3]	-	Radio -R- Radio/Navigation Display Control Module -J503-	30a
F58	-	Fuse 58 (on fuse panel C) -SC58-	30A	-	Converter with socket, 12 V-230 V -U13-	30a
F59	-	Fuse 59 (on fuse panel C) -SC59-	15A	-	Fan activation relay -J937- [6] Battery fan 1 -V457- [6]	30
F60	-	Fuse 60 (on fuse panel C) -SC60-	30A	-	Auxiliary heater control module -J364-	30a

[1] Depending on equipment

[2] Running change

[3] Only for vehicles with China equipment

[4] only for vehicles equipped with Start/Stop

[5] only for vehicles without Start/Stop

[6] Engine code CNLA

Return to overview ⇒ page 1

1.12 Fuse (SC), from MY 2014

Protected by copyright. Copying for private or commercial purposes, in part or in whole, is not permitted unless authorised by Volkswagen AG. Volkswagen AG does not give any warranty or accept any liability with respect to the correctness of information in this document. Copyright by Volkswagen AG.

1 - Fuse panel C -SC-

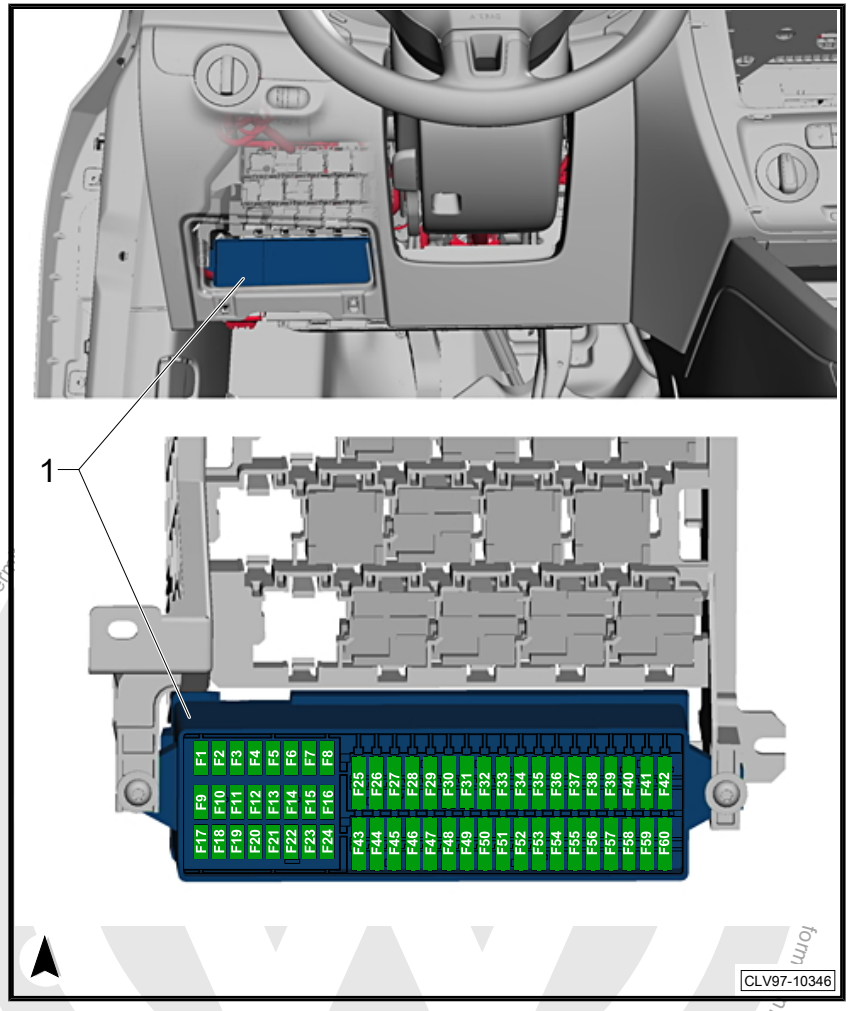

No.		Designation in Wiring Diagram	Nominal Value		Function/Component	Terminal
F1	-	Fuse 1 (on fuse panel C) -SC1-	10A	-	Left washer nozzle heater -Z20- Right washer nozzle heater -Z21-	15a
F2	-	Fuse 2 (on fuse panel C) -SC2-	5/ 7,5A	-	Electronic steering column lock control module -J764- (T16v/2)	30a
F3	-	Fuse 3 (on fuse panel C) -SC3-	10A	-	Instrument cluster control module -J285- ,(T32/32)	30a/ 30 stabilized

Copyright by Volkswagen AG. Copying for commercial purposes, in part or in whole, is not permitted. Copyrighted material protected by this document.

No.		Designation in Wiring Diagram	Nominal Value		Function/Component	Terminal
F4	-	Fuse 4 (on fuse panel C) -SC4-	2A	-	Telephone Transceiver -R36-	30a
F4	-	Fuse 4 (on fuse panel C) -SC4-	10A	-	Telephone Transceiver -R36- Compass magnetic field sensor -G197- [4]	30 stabilized
F5	-	Fuse 5 (on fuse panel C) -SC5-	7.5A	-	Left rear fog lamp bulb -L46-	55a
F6	-	Fuse 6 (on fuse panel C) -SC6-	10A	-	Vehicle electrical system control module -J519- , (T73a/66) (interior lamp, AW0 only) Rearview camera -R189-	30a
F7	-	Fuse 7 (on fuse panel C) -SC7-	5A	-	Fog lamp relay -J5- , (AW0 only)[1] Instrument panel and switch illumination dimmer switch -E20- , (AW0 only) License plate lamp -X- Vehicle electrical system control module -J519- , (T52c/27), (AW1 only)	58
F8	-	Fuse 8 (on fuse panel C) -SC8-	7.5A	-	Windshield and headlamp washer pump switch -E44- , (AW0 only) Windshield washer pump -V5- , (AW0 only) Vehicle electrical system control module -J519- , (T73b/61), (AW0 only)	53c
F8	-	Fuse 8 (on fuse panel C) -SC8-	-	-	not used, (AW1 only)	-
F9	-	Fuse 9 (on fuse panel C) -SC9-	5A/ 15A	-	Airbag control moduleAirbag Control Module -J234- Front passenger airbag -disabled- indicator lamp -K145- Passenger occupant detection system control module -J706-	15a
F10	-	Fuse 10 (on fuse panel C) -SC10-	10A	-	Right steering column switch -EX20- , (T10ls/3), (AW0 only)	15a
F11	-	Fuse 11 (on fuse panel C) -SC11-	10A	-	Left front headlamp -MX1- , (HID headlamp)	15a
F12	-	Fuse 12 (on fuse panel C) -SC12-	10A	-	Right front headlamp -MX2- , (HID headlamp)	15a
F13	-	Fuse 13 (on fuse panel C) -SC13-	5A	-	Automatic dimming interior rearview mirror -Y7- Light recognition sensor -G399- Parking aid control module -J446- Air quality sensor -G238- High pressure sensor -G65- Climatronic control module -J255- Tire pressure monitoring button -E226- ASR/ESP button -E256- Back-up lamp switch -F4- Start/Stop mode switch -E262- 28-pin connector -T28- , (T28/10): Mirror adjusting switch -E43- Exterior rearview mirror heating switch -E231- A/C compressor control module -J842- (T14hy/14)[6] Cornering lamp and headlamp range control module -J745-	15a

Protected by copyright. Copying for private or commercial purposes, in part or whole, is not permitted unless authorised by Volkswagen AG. Volkswagen AG does not guarantee or accept any liability with respect to the correctness and completeness of this document.

No.		Designation in Wiring Diagram	Nominal Value		Function/Component	Terminal
F14	-	Fuse 14 (on fuse panel C) -SC14-	10A	-	Left steering column switch -EX19- , (T16ls/1), (AW0 only) ABS control module -J104- , T26/20 / T47/8) Light switch -E1- , (T10h/4) (AW1 only) Airbag spiral spring/return spring with slip ring -F138- , (T16k/14) Fuel pump control module -J538- Towing recognition control module -J345- , (T12a/2) Voltage stabilizer -J532- Converter with socket, 12 V-230 V -U13- , (T3wr/3) Data bus on board diagnostic interface -J533- , (AW1 only) Instrument cluster control module -J285- Selector lever sensor system control module -J587- tiptronic switch -F189- (T10s/9) Power steering control module -J500- (T6z/1) Oil level thermal sensor -G266- (T6z/4) Hybrid battery unit -AX1- (T14ax/7)[6] Electric drive power and control electronics -JX1- (T28jx/56)[6]	15a
F15	-	Fuse 15 (on fuse panel C) -SC15-	10A	-	16-pin connector -T16- , (diagnostic connection) Instrument panel and switch illumination dimmer switch -E20- Headlamp range control adjuster -E102- , (AW1 only) Fresh air blower relay -J13- Mass airflow sensor -G70- Positive crankcase ventilation heating element -N79- Structure borne sound control module -J869- Left front headlamp -MX1- Left headlamp beam adjustment motor -V48- Right front headlamp -MX2- Right headlamp beam adjustment motor -V49- Vehicle electrical system control module -J519- (T73a/44)	15a
F16	-	Fuse 16 (on fuse panel C) -SC16-	10A	-	Auxiliary engine coolant pump relay -J496- Fuel pump control module -J538- Engine control module -J623- Electric drive button -E656- [6]	15a
F17	-	Fuse 17 (on fuse panel C) -SC17-	10A	-	- Anti-theft alarm system horn [2] - Anti-theft alarm system interior sensor [2] - Anti-theft alarm system alarm [2]	30a
F18	-	Fuse 18 (on fuse panel C) -SC18-	15A	-	Left front headlamp -MX1- Left low beam headlamp bulb -M29- [3]	56b
F19	-	Fuse 19 (on fuse panel C) -SC19-	15A	-	Right front headlamp -MX2- Right low beam headlamp bulb -M31- [3]	56b

Copyright by Volkswagen AG. Volkswagen AG does not guarantee or accept any liability with respect to the correctness of information in this document. Copyright by Volkswagen AG. Reproduction, in whole or in part, for commercial purposes, is prohibited.

No.		Designation in Wiring Diagram	Nominal Value		Function/Component	Terminal
F20	-	Fuse 20 (on fuse panel C) -SC20-	10A	-	Ignition/starter switch -D- , (T10/10), (AW0 only) tiptronic switch -F189- Automatic transmission control module -J217- Selector lever sensor system control module -J587- Climatronic control module -J255- Auxiliary engine coolant heater radio frequency receiver -R149-	30a
F21	-	Fuse 21 (on fuse panel C) -SC21-	15/ 20A	-	Vehicle electrical system control module -J519- , (T73a/73), (AW0 only) Dual tone horn relay -J4- , (AW1 only) High tone horn -H2- , (AW1 only) Low tone horn -H7- , (AW1 only)	30a
F22	-	Fuse 22 (on fuse panel C) -SC22-	20A 7.5A	-	Ignition/starter switch -D- , (AW0 only) Converter box -J935- , (AW0 only) Interior monitoring sensor -G273- Alarm horn relay -J641- Alarm horn -H12-	30a
F23	-	Fuse 23 (on fuse panel C) -SC23-	10A	-	Vehicle electrical system control module -J519- , (T73b/39) (AW0 only) 16-pin connector -T16- , (diagnostic connection) LIght switch -E1- , (AW1 only) Rain/light recognition sensor -G397- Compass magnetic field sensor -G197- [5]	30a
F24	-	Fuse 24 (on fuse panel C) -SC24-	10A	-	Vehicle electrical system control module -J519- , (T73a/64) (AW0 only) Access/start authorization control module -J518-	30a
F25	-	Fuse 25 (on fuse panel C) -SC25-	15A	-	Automatic transmission control module -J217- Selector lever sensor system control module -J587- Multifunction switch -F125-	15a
F26	-	Fuse 26 (on fuse panel C) -SC26-	15A	-	Brake system vacuum pump -V192-	15a
F27	-	Fuse 27 (on fuse panel C) -SC27-	1A	-	Airbag spiral spring/return spring with slip ring -F138- , (T16k/1)	15a
F28	-	Fuse 28 (on fuse panel C) -SC28-	40A	-	Auxiliary heater operation relay -J485-	75a
F29	-	Fuse 29 (on fuse panel C) -SC29-	1A	-	Vehicle electrical system control module -J519- , (T73b/51) (AW0 only) Ignition/starter switch -D- , (AW0 only) Converter box -J935- , (AW0 only)	-
F30	-	Fuse 30 (on fuse panel C) -SC30-	20A	-	Cigarette lighter -U1- 12 V socket -U5- 12 V socket 2 -U18- Blocking diode -J29-	75a
F31	-	Fuse 31 (on fuse panel C) -SC31-	30A	-	Light switch -E1- , (T17/1) (AW0 only)	75a
F32	-	Fuse 32 (on fuse panel C) -SC32-	20A	-	Light switch -E1- , (T17/2) (AW0 only)	75a
F33	-	Fuse 33 (on fuse panel C) -SC33-	40A	-	Heater/heat output switch -E16- Fresh air blower relay -J13- A/C control module -J301- Fresh air blower switch -E9-	75a

Protected by copyright. Copyright by Volkswagen AG. Copyright by Volkswagen AG does not guarantee or accept any liability with respect to the correctness of information in this document.

No.		Designation in Wiring Diagram	Nominal Value		Function/Component	Terminal
F34	-	Fuse 34 (on fuse panel C) -SC34-	15A	-	Left high beam headlamp bulb -M30- (AW0 only) Right high beam headlamp bulb -M32- (AW0 only) Instrument cluster control module -J285- (-K1-, AW0 only)	56a
F35	-	Fuse 35 (on fuse panel C) -SC35-	10A	-	Steering column electronics control module -J527- , (AW1 only) Data bus on board diagnostic interface -J533- , (AW1 only)	30a
F36	-	Fuse 36 (on fuse panel C) -SC36-	25A	-	Vehicle electrical system control module -J519- , (T73a/16)(AW0 only), (T52b/1)(AW1 only) Vehicle electrical system control module -J519- , (T73a/61)(AW0 only)[2]	30a
F37	-	Fuse 37 (on fuse panel C) -SC37-	15A	-	Left front headlamp -MX1- Left daytime running lamp bulb -L174-	TFL
F38	-	Fuse 38 (on fuse panel C) -SC38-	15A	-	Right front headlamp -MX2- Right daytime running lamp bulb -L175-	TFL
F39	-	Fuse 39 (on fuse panel C) -SC39-	20A	-	Low beam relay -J331-	56b
F40	-	Fuse 40 (on fuse panel C) -SC40-	15A	-	Towing recognition control module -J345- , (T12a/9)	30a
F41	-	Fuse 41 (on fuse panel C) -SC41-	15A	-	Towing recognition control module -J345- , (T12a/12)	30a
F42	-	Fuse 42 (on fuse panel C) -SC42-	20A	-	Towing recognition control module -J345- . (T12a/11)	30a
F43	-	Fuse 43 (on fuse panel C) -SC43-	30A	-	Front passenger door control module -J387-	30a
F44	-	Fuse 44 (on fuse panel C) -SC44-	30A	-	Rear window defogger relay -J9- , (AW1 only) Rear window defogger -Z1- Vehicle electrical system control module -J519- (T73b/67) (AW0 only)	30a
F45	-	Fuse 45 (on fuse panel C) -SC45-	30A	-	Driver door control module -J386- Front passenger door control module -J387- [3]	30a
F46	-	Fuse 46 (on fuse panel C) -SC46-	30A	-	Left rear door control module -J388- Right rear door control module -J389-	30a
F47	-	Fuse 47 (on fuse panel C) -SC47-	15A	-	Fuel pump control module -J538- Fuel pump relay -J17- Fuel primer relay -J643-	30a
F48	-	Fuse 48 (on fuse panel C) -SC48-	20A	-	Vehicle electrical system control module -J519- , (T52b/42) (AW1 only) Vehicle electrical system control module -J519- , (T73b/11) (AW0 only) Vehicle electrical system control module -J519- , (T73b/13) (AW0 only)	30a
F49	-	Fuse 49 (on fuse panel C) -SC49-	40A	-	Fresh air blower -V2- Climatronic control module -J255- A/C control module -J301-	30
F50	-	Fuse 50 (on fuse panel C) -SC50-	30A	-	Front seat heating control module -J774-	30a
F51	-	Fuse 51 (on fuse panel C) -SC51-	20A	-	Sunroof control module -J245-	30a
F52	-	Fuse 52 (on fuse panel C) -SC52-	20A	-	Headlamp Washer Relay -J39- Headlamp washer pump -V11-	30a
F53	-	Fuse 53 (on fuse panel C) -SC53-	15A	-	Driver seat lumbar support adjustment switch -E176-	30

Published by copyright. Copying for private or commercial purposes, in part or in whole, is not permitted unless authorised by Volkswagen AG. Volkswagen AG does not guarantee or accept any liability with respect to the correctness of information in this document.

No.		Designation in Wiring Diagram	Nominal Value		Function/Component	Terminal
F54	-	Fuse 54 (on fuse panel C) -SC54-	15A	-	Fog lamp relay -J5-	55
F55	-	Fuse 55 (on fuse panel C) -SC55-	20A	-	Light switch -E1- , (T17/15) (AW0 only) Left steering column switch -EX19- , (T16ls/10) (AW0 only)	30
F56	-	Fuse 56 (on fuse panel C) -SC56-	10A	-	Hybrid battery unit -AX1- (T14ax/5)[6] Electric drive power and control electronics -JX1- (T28jx/55)[6]	30a
F57	-	Fuse 57 (on fuse panel C) -SC57-	15A/ 25A[3]	-	Radio -R- Radio/Navigation Display Control Module -J503-	30a
F58	-	Fuse 58 (on fuse panel C) -SC58-	30A	-	Converter with socket, 12 V-230 V -U13-	30a
F59	-	Fuse 59 (on fuse panel C) -SC59-	15A	-	Fan activation relay -J937- [6] Battery fan 1 -V457- [6]	30
F60	-	Fuse 60 (on fuse panel C) -SC60-	30A	-	Auxiliary heater control module -J364-	30a

[1] Depending on equipment

[2] Running change

[3] Only for vehicles with China equipment

[4] only for vehicles equipped with Start/Stop

[5] only for vehicles without Start/Stop

[6] Engine code CNLA

Return to overview ⇒ page 1

1.13 Fuses battery, Hybrid system

Protected by copyright. Copying for private or commercial purposes, in part or in whole, is not permitted unless authorised by Volkswagen AG. Volkswagen AG does not warrant or accept any liability with respect to the correctness of information in this document. Copyright by Volkswagen AG.

- Fuse 1 (terminal 30) on battery fuse panel -S162- -1-, Nominal value 175 A
- Fuse 2 (terminal 30) on battery fuse panel -S163- -2-, Nominal value 80 A

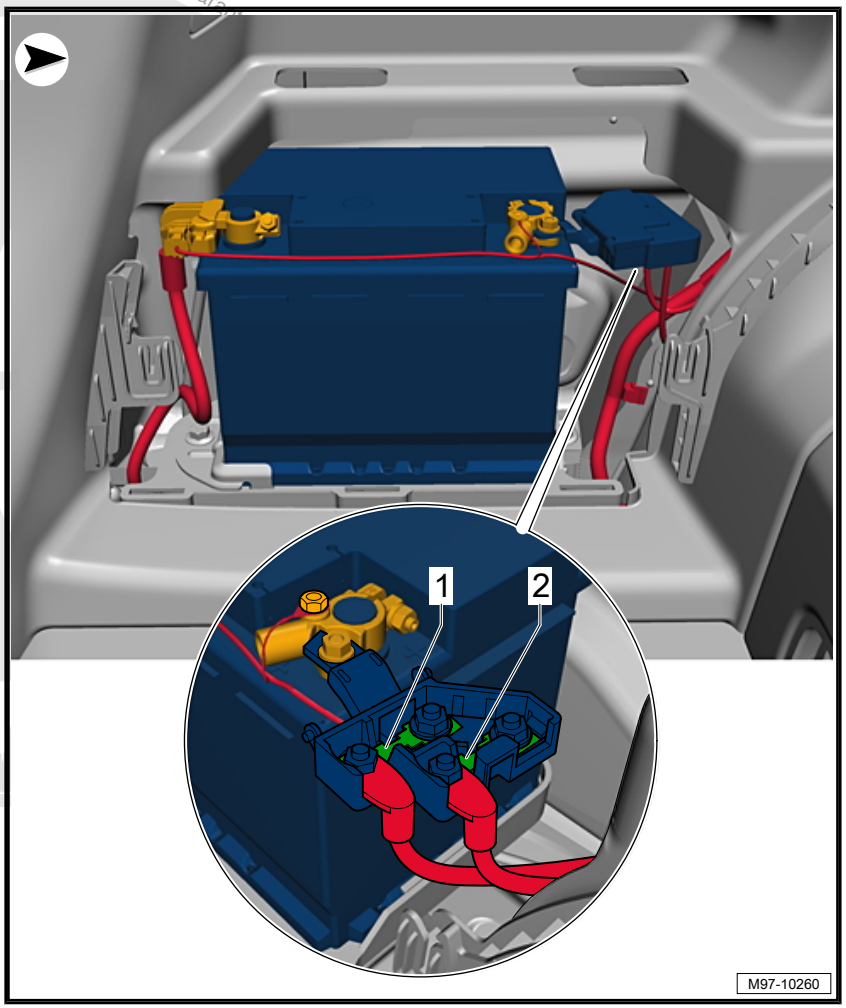

Return to overview ⇒ page 1

Protected by copyright. Copying for private or commercial purposes, in part or in whole, is not permitted unless authorised by Volkswagen AG. Volkswagen AG does not guarantee

1 Relays

1.1 Relay Carriers Overview

Note

The design of the electrical system in the Jetta is recognized based on the arrangement of the E-box. If relay positions R1 and R2 are not used, it is an E-box Low, Low equipment (AW0). If relay positions R1 and R2 are used, it is an E-box High, High equipment (AW1).

Protected by copyright. Copying for private or commercial purposes, in part or in whole, is not permitted unless authorised by Volkswagen AG. Volkswagen AG does not guarantee or accept any liability with respect to the correctness of information in this document. Copyright by Volkswagen AG.

1 - Relay carrier on the E-Box

- ⇒ “1.2 Relay on E-box low”, page 3
- ⇒ “1.3 Relay on E-box High, without hybrid system”, page 4
- ⇒ “1.4 Relay on E-box High, with hybrid system”, page 5

2 - Auxiliary relay carrier near the E-box

- Through October 2010: Automatic glow time control module -J179-
- From November 2010 on the E-box relay carrier position R6

3 - Relay carrier on the vehicle electrical system control module

- ⇒ “1.5 15-pin relay carrier, from MY 2011”, page 6
- ⇒ “1.6 12-pin relay carrier on E-Box Low, from MY 2012 ”, page 7
- ⇒ “1.8 12-pin relay carrier on E-Box Low, from MY 2013 ”, page 10
- ⇒ “1.7 12-pin relay carrier on E-Box High, from MY 2012 ”, page 9
- ⇒ “1.9 12-pin relay carrier on E-Box High, from MY 2013 ”, page 11

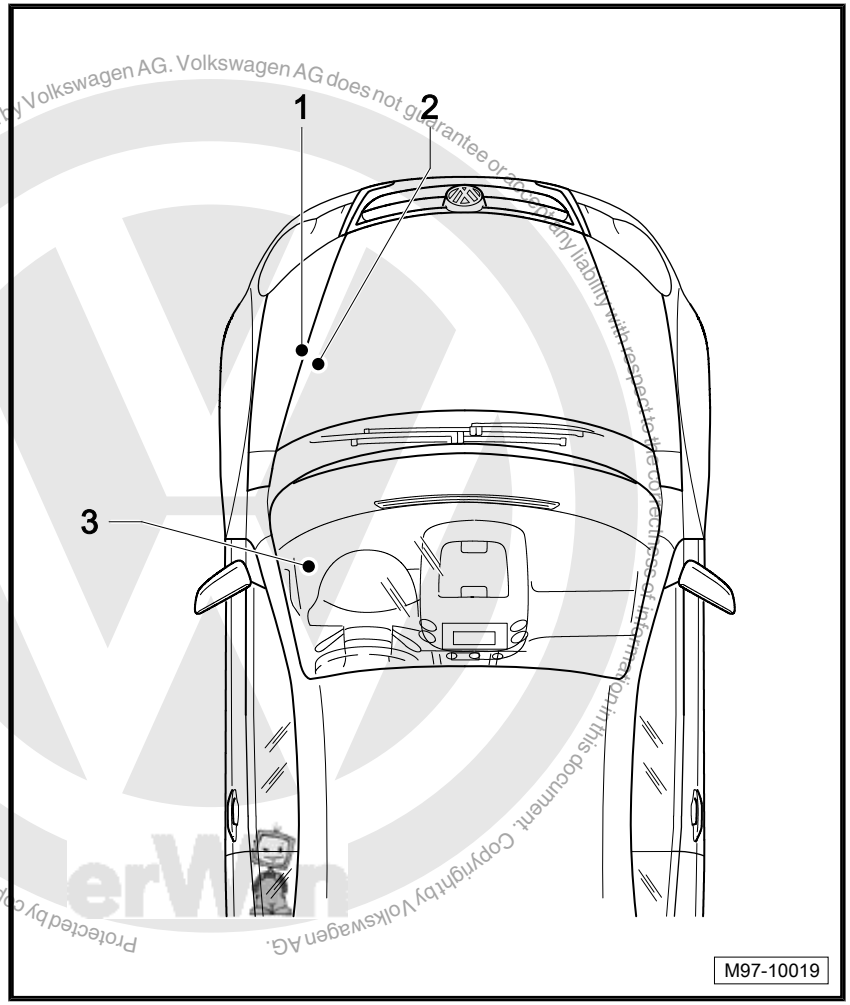

Protected by copyright. Copying for private or commercial purposes, in part or in whole, is not permitted unless authorised by Volkswagen AG. Volkswagen AG does not guarantee or assume any liability with respect to the correctness of information in this document. Copyright by Volkswagen AG.

1.2 Relay on E-box low

Note

E-Box Low, relay positions R1 and R2 are not used : select the wiring diagrams for basic equipment, convenience system in Low (AW0)!

Protected by copyright. Copying for private or commercial purposes, in part or in whole, is not permitted unless authorised by Volkswagen AG. Volkswagen AG does not guarantee or accept any liability

R1 - Not used

R2 - Not used

R3 - Main relay -J271- (100)

R3 - Terminal 30 power supply relay -J317- (644)

R3 - Fuel primer relay -J643- (640)

R4 - Relay for low heat output -J359- (645)

R4 - Coolant circulation pump relay -J151- (645)

- Running change

R4 - Auxiliary engine coolant pump relay -J496- (645)

R5 - Relay for high heat output -J360- (370, 644)

R5 - Secondary air injection pump relay -J299- (100, 644)

- Only for vehicles with gasoline engine

R6 - Automatic glow time control module -J179-

- From November 2010

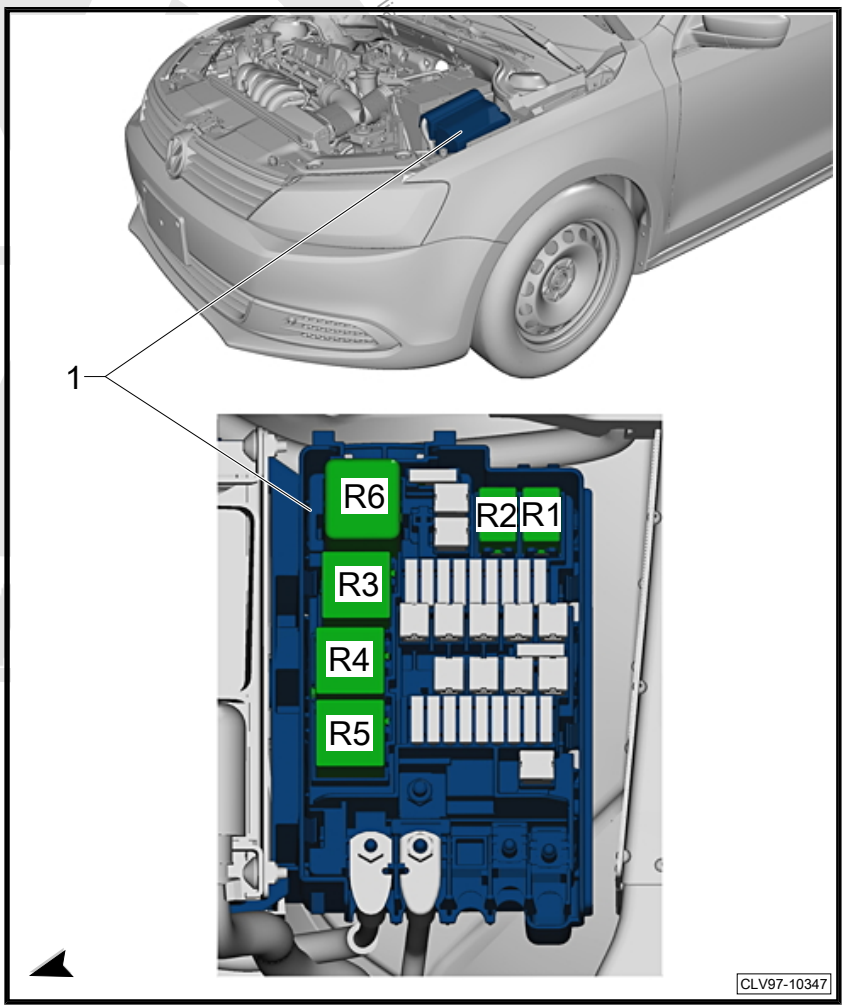

1.3 Relay on E-box High, without hybrid system

Note

E-Box High, relay positions R1 and R2 are used : select the wiring diagrams for basic equipment, convenience system in High (AW1)!

R1 - Wiper motor change-over relay 1 -J368- (404, 650)

R2 - Wiper motor change-over relay 2 -J369- (404, 650)

R3 - Main relay -J271- (100)

R3 - Terminal 30 power supply relay -J317- (644)

R3 - Fuel primer relay -J643- (640)

R4 - Relay for low heat output -J359- (645)

R4 - Coolant circulation pump relay -J151- (645, 498)

- Running change

R4 - Auxiliary engine coolant pump relay -J496- (645)

R5 - Relay for high heat output -J360- (370, 644)

R5 - Secondary air injection pump relay -J299- (100, 644)

- Only for vehicles with gasoline engine

R6 - Automatic glow time control module -J179-

- From November 2010

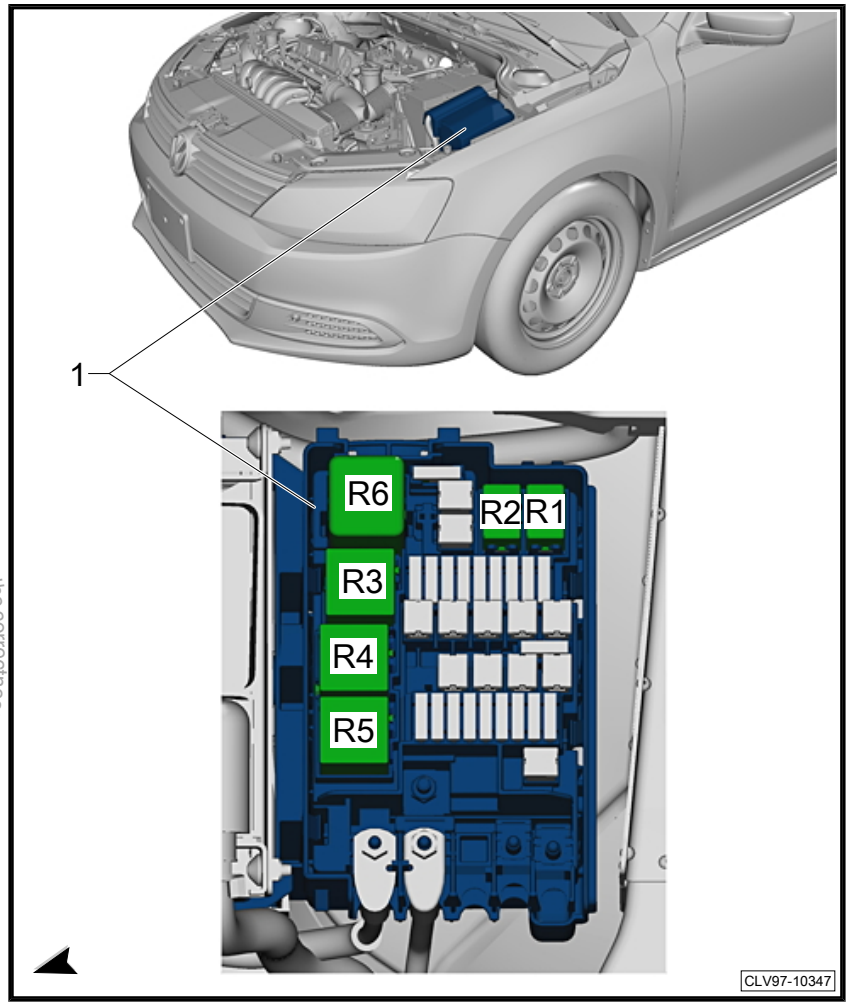

Protected by copyright. Copying for private or commercial purposes, in part or in whole, is not permitted unless authorised by Volkswagen AG. Volkswagen AG does not guarantee or accept any liability with respect to the correctness of information in this document. Copyright by Volkswagen AG.

1.4 Relay on E-box High, with hybrid system

R1 - Wiper motor change-over relay 1 -J368- (650)

R2 - Wiper motor change-over relay 2 -J369- (650)

R3 - Main relay -J271- (644)

R4 - Relay for low heat output -J359- (645)

R5 - Relay for high heat output -J360- (644)

R5 - Brake booster relay -J569- , (645) with auxiliary heater (PTC)

R6 - Brake booster relay -J569- , (645) without auxiliary heater (PTC)

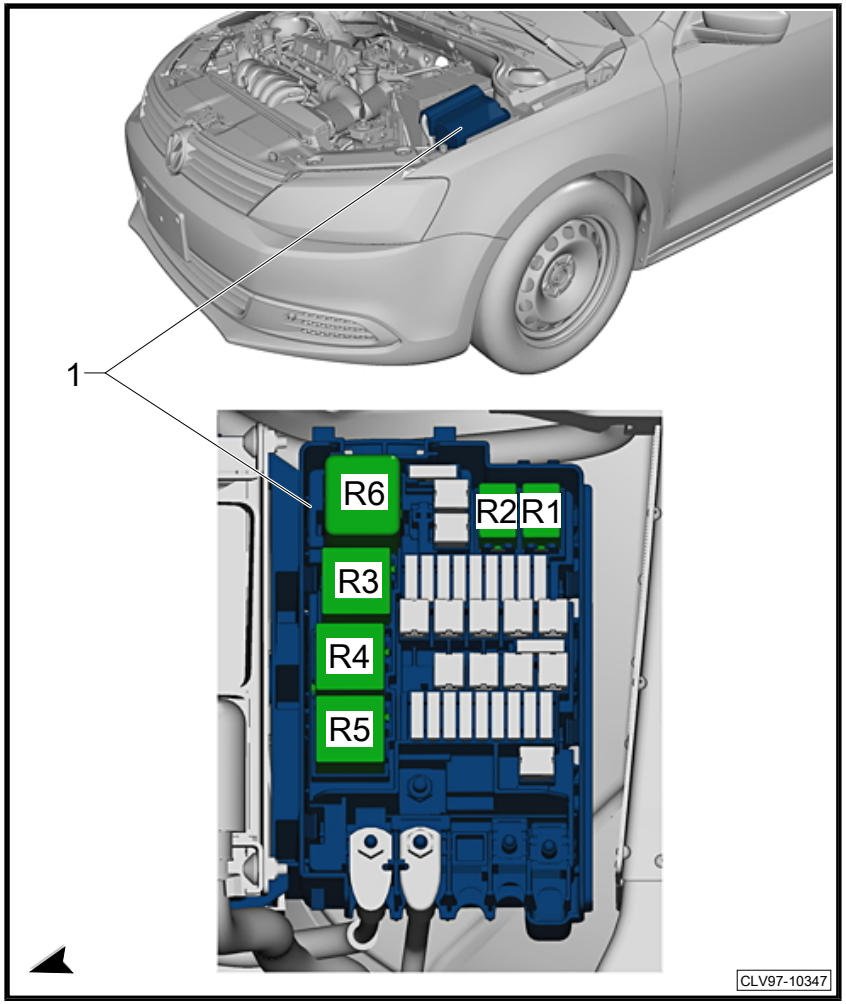

Protected by copyright. Copying for private or commercial purposes, in part or in whole, is not permitted unless authorised by Volkswagen AG. Volkswagen AG does not guarantee or accept any liability with respect to the correctness of information in this document. Copyright by Volkswagen AG.

1.5 15-pin relay carrier, from MY 2011

R1 - Converter box -J935- (499)
- ❑ E-Box Low, (AW0)

R2 - Fresh air blower relay -J13- (449, 645)

R3 - Auxiliary heater operation relay -J485- (449)

R4 - Fuel Pump (FP) Relay -J17- (449)

R4 - Engine Component Power Supply Relay -J757- (498)

R4 - Auxiliary engine coolant pump relay -J496- (449)

R5 - Low beam relay -J331- (53)
- ❑ E-Box Low, (AW0)

R6 - Fresh air blower relay -J13- (53)

R7 - Terminal 75 power supply relay 1 -J680- (53)

R8 - Dual tone horn relay -J4- (449)

R8 - Headlamp washer relay -J39- (449)

R9 - Power Supply Relay (terminal 50) -J682- (643)

R10 - Terminal 15 power supply relay 2 -J681- (643)

R11 - Rear window defogger relay -J9- (449)

R12 - Fuel pump relay 2 -J49- (449, 646)

R12 - Heat resistance relay -J925- (449, 646)

R12 - Cold start injector relay -J41- (645)

R12 - Fuel primer relay -J643- (446)

R13 - Power Supply Relay (terminal 50) -J682- (433, 507)

R14 - Terminal 15 power supply relay -J329- (645)

R15 - Fog lamp relay -J5- (53)

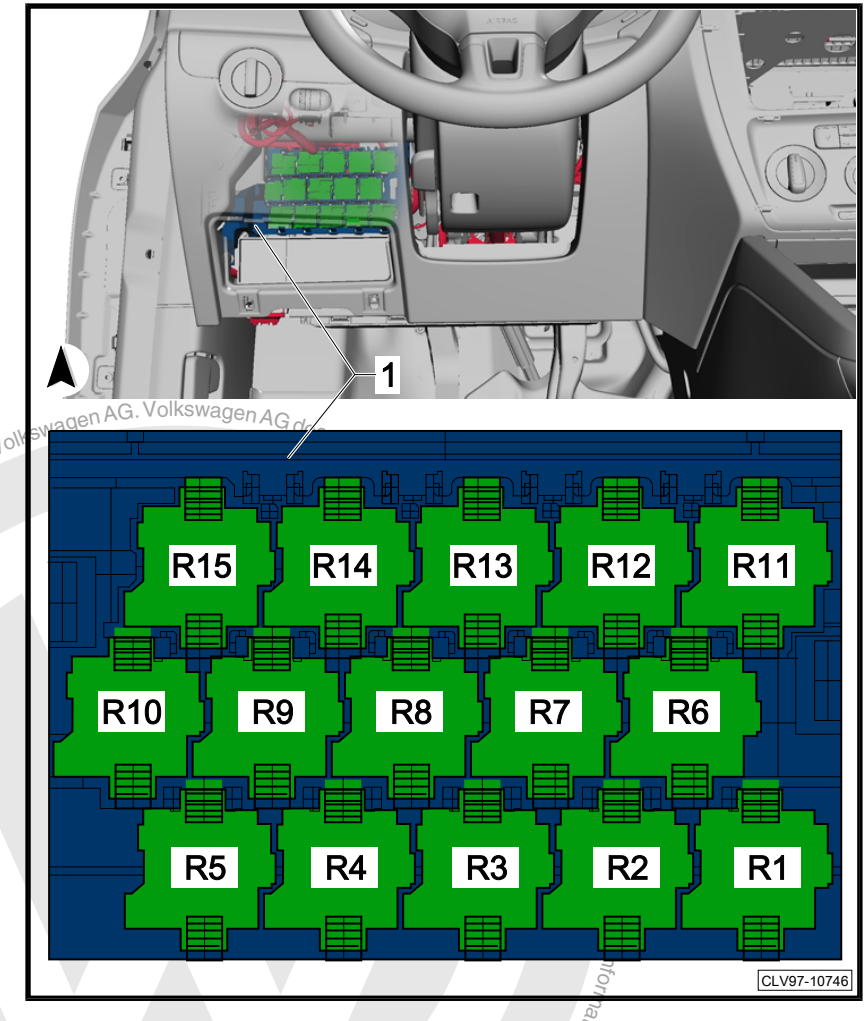

Protected by copyright. Copying for private or commercial purposes, in part or in whole, is not permitted unless authorised by Volkswagen AG. Volkswagen AG d... information in this document. Copyright by Volkswagen AG.

1.6 12-pin relay carrier on E-Box Low, from MY 2012

Protected by copyright. Copying for private or commercial purposes, in part or in whole, is not permitted unless authorised by Volkswagen AG. Volkswagen AG does not guarantee or accept any liability with respect to the correctness of information in this document. Copyright by Volkswagen AG.

R1 - Dual tone horn relay -J4- (446)

R1 - Alarm horn relay -J641- (446)
- ❑ USA, Mexico
- ❑ Relay position 1.2

R1 - Headlamp washer relay -J39- (446)

R2 - Power Supply Relay (terminal 50) -J682- (507)

R2 - Starter relay 2 -J907- (507)

R3 - Fuel pump relay 2 -J49- (646)
- ❑ Relay position 3.1

R3 - Heat resistance relay -J925- (646)
- ❑ Relay position 3.2

R4 - Coolant circulation pump relay -J151- (646)
- ❑ Discontinued as a running change (now relay position 4 on the E-box Low)

R4 - Auxiliary engine coolant pump relay -J496- (646)
- ❑ Relay position 4.1

R4 - Fuel primer relay -J643- (446)

R4 - Fuel Pump (FP) Relay -J17- (446)
- ❑ Relay position 4.2

R5 - Terminal 75 power supply relay 1 -J680- (645)
- ❑ Discontinued as a running change (now relay position 10)

R5 - Not used
- ❑ Running change

R6 - Power Supply Relay (terminal 50) -J682- (645)

R6 - Starter relay 1 -J906- (645)

R7 - Terminal 15 power supply relay -J329- (645)

R8 - Low beam relay -J331- (645)

R9 - Terminal 15 power supply relay 2 -J681- (645)

R10 - Terminal 75 power supply relay 1 -J680- (645), running change

R11 - Fog lamp relay -J5- (645)

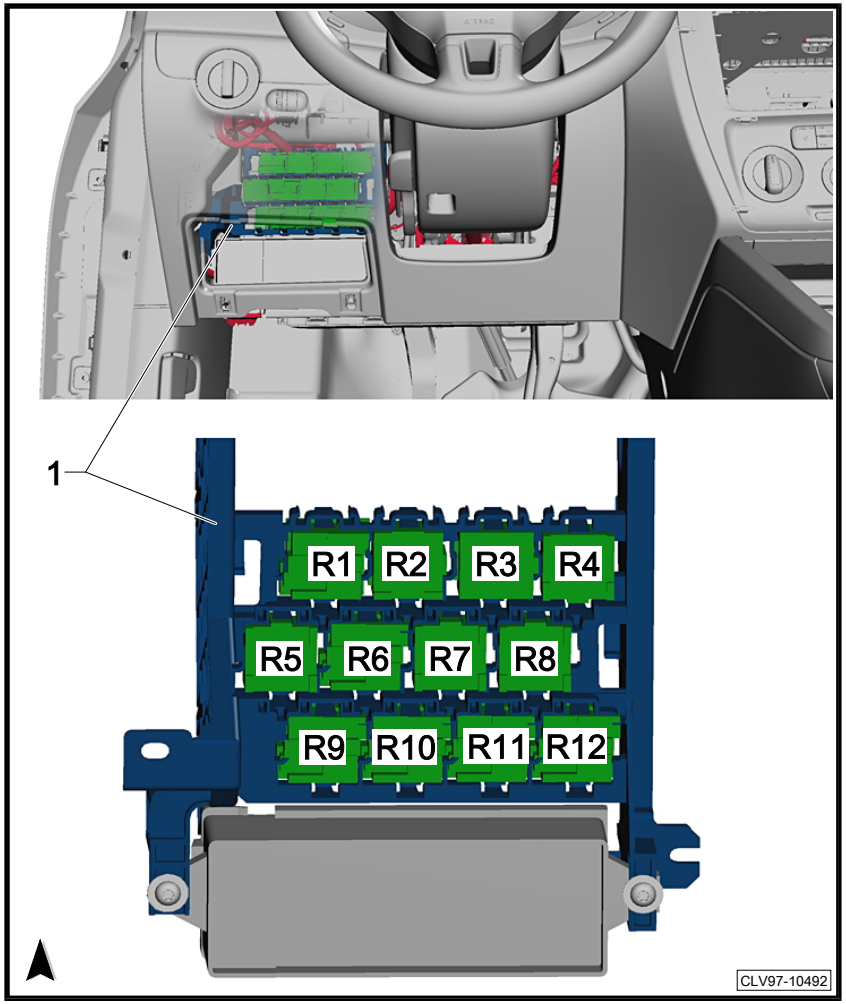

R12 - Converter box -J935- (499)

Protected by copyright. Copying for private or commercial purposes, in part or in whole, is not permitted unless authorised by Volkswagen AG. Volkswagen AG does not guarantee or accept any liability with respect to the correctness of information in this document. Copyright by Volkswagen AG.

1.7 12-pin relay carrier on E-Box High, from MY 2012

R1 - Dual tone horn relay -J4- (446)

R1 - Headlamp washer relay -J39- (446)

- ❑ Relay position 1.1

R2 - Power Supply Relay (terminal 50) -J682- (507)

R2 - Starter relay 2 -J907- (507)

R3 - Cold start injector relay -J41- (645)

R3 - Fuel pump relay 2 -J49- (646)

- ❑ Relay position 3.1

R3 - Heat resistance relay -J925- (646)

- ❑ Relay position 3.2

R4 - Coolant circulation pump relay -J151- (646)

- ❑ Discontinued as a running change (now relay position 4 on the E-box High)

R4 - Auxiliary engine coolant pump relay -J496- (646)

- ❑ Relay position 4.1

R4 - Fuel primer relay -J643- (446)

R4 - Fuel Pump (FP) Relay -J17- (446)

- ❑ Relay position 4.2

R5 - Terminal 75 power supply relay 1 -J680- (645)

- ❑ Discontinued as a running change (now relay position 10)

R5 - Not used

- ❑ Running change

R6 - Power Supply Relay (terminal 50) -J682- (645)

R6 - Starter relay 1 -J906- (645)

R7 - Auxiliary heater operation relay -J485- (646)

R8 - Rear window defogger relay -J9- (646)

R9 - Terminal 15 power supply relay 2 -J681- (645)

R10 - Terminal 75 power supply relay 1 -J680- (645), running change

R11 - Fresh air blower relay -J13- (645)

R12 - Not used

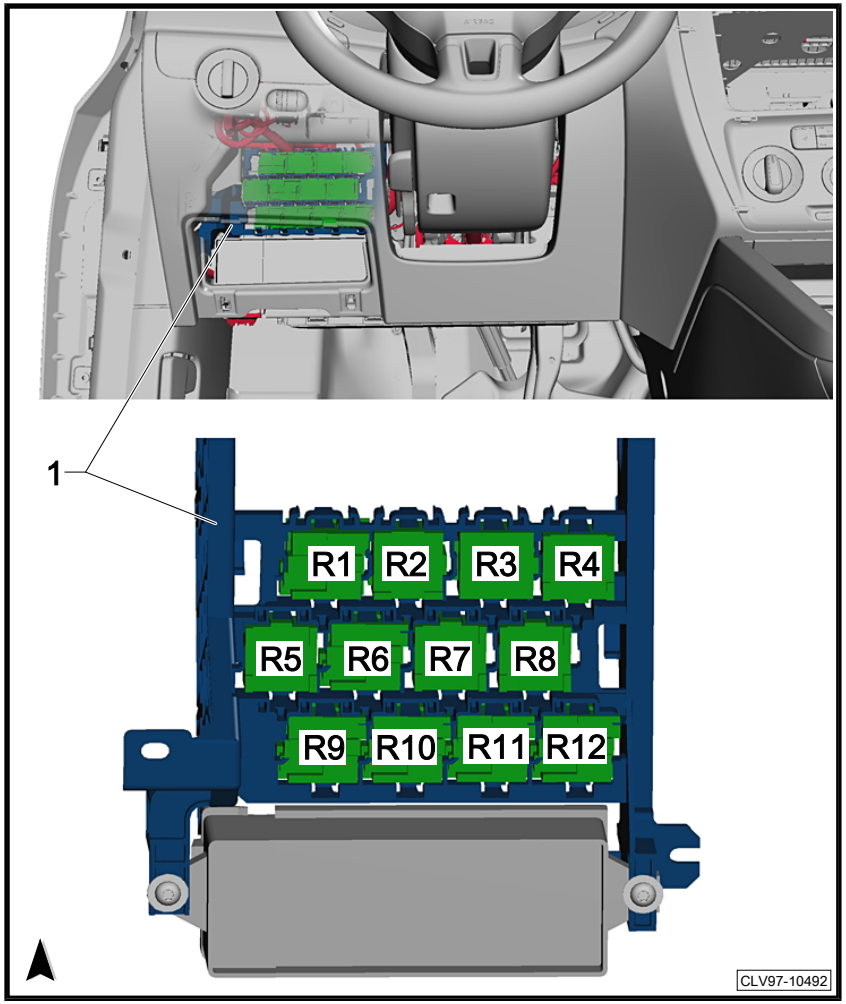

Protected by copyright. Copyright by Volkswagen AG. Volkswagen AG does not guarantee or accept any liability with respect to the correctness of information in this document. Copyright by Volkswagen AG.

1.8 12-pin relay carrier on E-Box Low, from MY 2013

R1 - Dual tone horn relay -J4- (446)

R1 - Alarm horn relay -J641- (446)
- ❑ USA, Mexico
- ❑ Relay position 1.2

R1 - Headlamp washer relay -J39- (446)

R2 - Power Supply Relay (terminal 50) -J682- (507)

R2 - Starter relay 2 -J907- (507)
- ❑ Relay position 2.1

R3 - Cold start injector relay -J41- (645)

R3 - Fuel pump relay 2 -J49- (646)
- ❑ Relay position 3.1

R3 - Heat resistance relay -J925- (646)
- ❑ Relay position 3.2

R4 - Fuel Pump (FP) Relay -J17- (446)

R4 - Auxiliary engine coolant pump relay -J496- (646)

R4 - Fuel primer relay -J643- (446)

R5 - Not used

R6 - Power Supply Relay (terminal 50) -J682- (645)

R6 - Starter relay 1 -J906- (645)

R7 - Terminal 15 power supply relay -J329- (645)

R8 - Low beam relay -J331- (645)

R9 - Terminal 15 power supply relay 2 -J681- (645)

R10 - Terminal 75 power supply relay 1 -J680- (645)

R11 - Fog lamp relay -J5- (645)

R12 - Converter box -J935- (499)

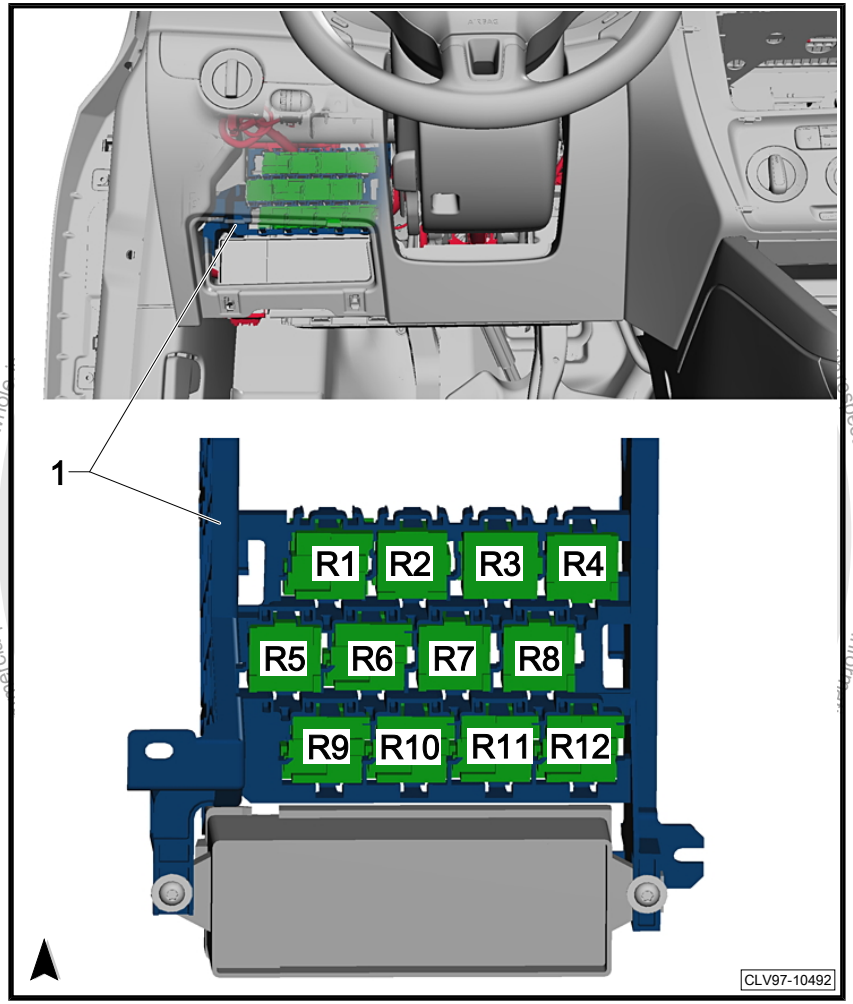

1.9 12-pin relay carrier on E-Box High, from MY 2013

R1 - Dual tone horn relay -J4- (446)

R1 - Headlamp washer relay -J39- (446)

- ❑ Relay position 1.1

R2 - Power Supply Relay (terminal 50) -J682- (507)

R2 - Starter relay 2 -J907- (507)

R2 - Driver power window opening relay -J550- (650)

- ❑ Relay position 2.1

R2 - Driver power window closing relay -J551- (650)

- ❑ Relay position 2.2

R3 - Cold start injector relay -J41- (645)

R3 - Secondary air injection pump relay -J299- (CNLA)

R3 - Fuel pump relay 2 -J49- (646)

R3 - Front passenger power window opening relay -J552- (650)

- ❑ Relay position 3.1

R3 - Heat resistance relay -J925- (646)

R3 - Front passenger power window closing relay -J553- (650)

- ❑ Relay position 3.2

R4 - Fuel Pump (FP) Relay -J17- (446)

R4 - Auxiliary engine coolant pump relay -J496- (646)

R4 - Fuel primer relay -J643- (446)

R4 - Engine Component Power Supply Relay -J757- (449)

- ❑ Relay position 4.2

R5 - Not used

R6 - Power Supply Relay (terminal 50) -J682- (645)

R6 - Starter relay 1 -J906- (645)

R7 - Auxiliary heater operation relay -J485- (646)

R7 - Power window relay -J51- (650)

R8 - Rear window defogger relay -J9- (646)

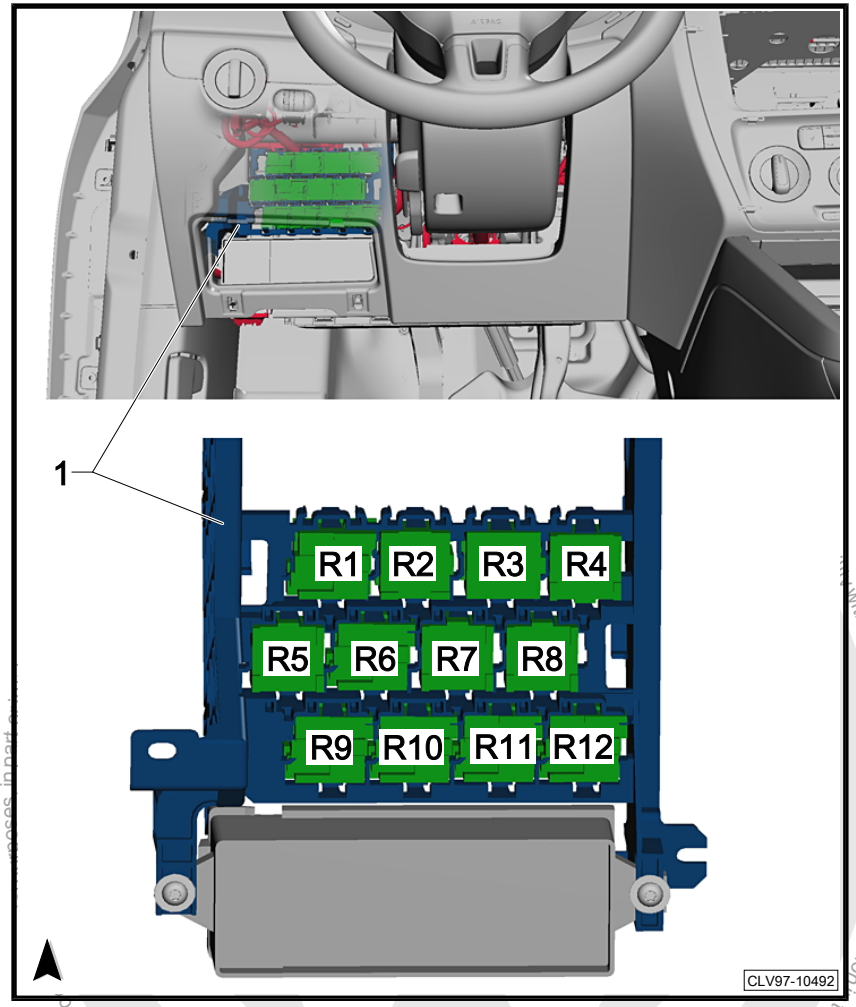

Protected by copyright. Copying for private or commercial purposes, in part or in whole, is not permitted unless authorized by Volkswagen AG. Volkswagen AG does not guarantee or accept any liability with respect to the correctness of information in this document. Copyright by Volkswagen AG.

R9 - Terminal 15 power supply relay 2 -J681- (645)

R10 - Terminal 75 power supply relay 1 -J680- (645)

R11 - Fresh air blower relay -J13- (645)

R11 - Fan activation relay -J937- (646)

- Only for vehicles with high voltage system (hybrid).

R12 - Not used

Protected by copyright. Copying for private or commercial purposes, in part or in whole, is not permitted unless authorised by Volkswagen AG. Volkswagen AG does not guarantee or accept any liability with respect to the correctness of information in this document. Copyright by Volkswagen AG.

1 Component Locations: Vehicle Front

- ⇒ “1.1 Engine ”, page 1
- ⇒ “1.2 Engine Compartment”, page 24
- ⇒ “1.3 Transmission ”, page 30
- ⇒ “1.4 Front Bumper”, page 36
- ⇒ “1.5 Hybrid System”, page 36

1.1 Engine

- ⇒ “1.1.1 1.4L TSI Hybrid, CNLA Top”, page 2
- ⇒ “1.1.2 1.4L TSI Hybrid, CNLA Left”, page 3
- ⇒ “1.1.3 1.4L TSI Hybrid, CNLA Rearview”, page 4
- ⇒ “1.1.4 1.4L TSI Hybrid, CNLA Right ”, page 5
- ⇒ “1.1.5 1.8L TFSI, CPKA/CPRA Top”, page 6
- ⇒ “1.1.6 1.8L TFSI, CPKA/CPRA Right”, page 7
- ⇒ “1.1.7 1.8L TFSI, CPKA/CPRA Left”, page 8
- ⇒ “1.1.8 1.8L TFSI, CPKA/CPRA Rearview ”, page 9
- ⇒ “1.1.9 2.0L TFSI , CPLA/CPPA Top”, page 10
- ⇒ “1.1.10 2.0L TFSI, CPLA/CPPA Right”, page 11
- ⇒ “1.1.11 2.0L TFSI, CPLA/CPPA Left”, page 12
- ⇒ “1.1.12 2.0L TFSI, CPLA/CPPA Rearview ”, page 13
- ⇒ “1.1.13 2.0L TDI, CJAA Top”, page 14
- ⇒ “1.1.14 2.0L TDI, CJAA Rearview ”, page 15
- ⇒ “1.1.15 2.0L TDI, CJAA Left ”, page 16
- ⇒ “1.1.16 2.0L SRE, CBPA Front”, page 17
- ⇒ “1.1.16 2.0L SRE, CBPA Front”, page 17
- ⇒ “1.1.17 2.0L SRE, CBPA Rearview, left ”, page 17
- ⇒ “1.1.18 2.0L TFSI, CCTA/CBFA Front”, page 19

Protected by copyright. Copying for private or commercial purposes, in part or in whole, is not permitted unless authorised by Volkswagen AG. Volkswagen AG does not guarantee or accept any liability with respect to the correctness of information in this document. Copyright by Volkswagen AG.

- ⇒ “1.1.19 2.0L TFSI, CCTA/CBFA Rearview right”, page 20
- ⇒ “1.1.21 2,5l SRE, CBTA/CBUA Top”, page 22
- ⇒ “1.1.22 2.5L FSI, CBTA/CBUA Rearview”, page 23
- ⇒ “1.1.23 2.5L FSI, CBTA/CBUA Front”, page 24

1.1.1 1.4L TSI Hybrid, CNLA Top

1 - Exhaust camshaft adjustment valve 1 - N318-
2 - Camshaft adjustment valve 1 -N205-
3 - Ignition coil 1 with power output stage - N70-
4 - Ignition coil 2 with power output stage - N127-
5 - Ignition coil 3 with power output stage - N291-
6 - Ignition coil 4 with power output stage - N292-
7 - Camshaft position sensor -G40-
7 - Camshaft position sensor 3 -G300- opposite camshaft position sensor
8 - Fuel pressure regulator valve -N276-
9 - Intake manifold sensor -GX9-
9 - Manifold absolute pressure sensor -G71-
9 - Intake air temperature sensor -G42-
10 - Cylinder 1 fuel injector - N30-
11 - Knock sensor 1 -G61-
12 - EVAP canister purge regulator valve 1 -N80-
13 - A/C compressor control module -J842- See Hybrid System ⇒ page 36
13 - Electrical A/C compressor -V470-
14 - Low temperature circuit coolant pump - V468-
15 - Reduced oil pressure switch -F378-
16 - Fuel pressure sensor -G247-
85 - Ground connection 1 (in engine compartment wiring harness)
281 - Ground connection 1 (in engine wiring harness)
D206 - Connection 87a (in engine wiring harness) 4

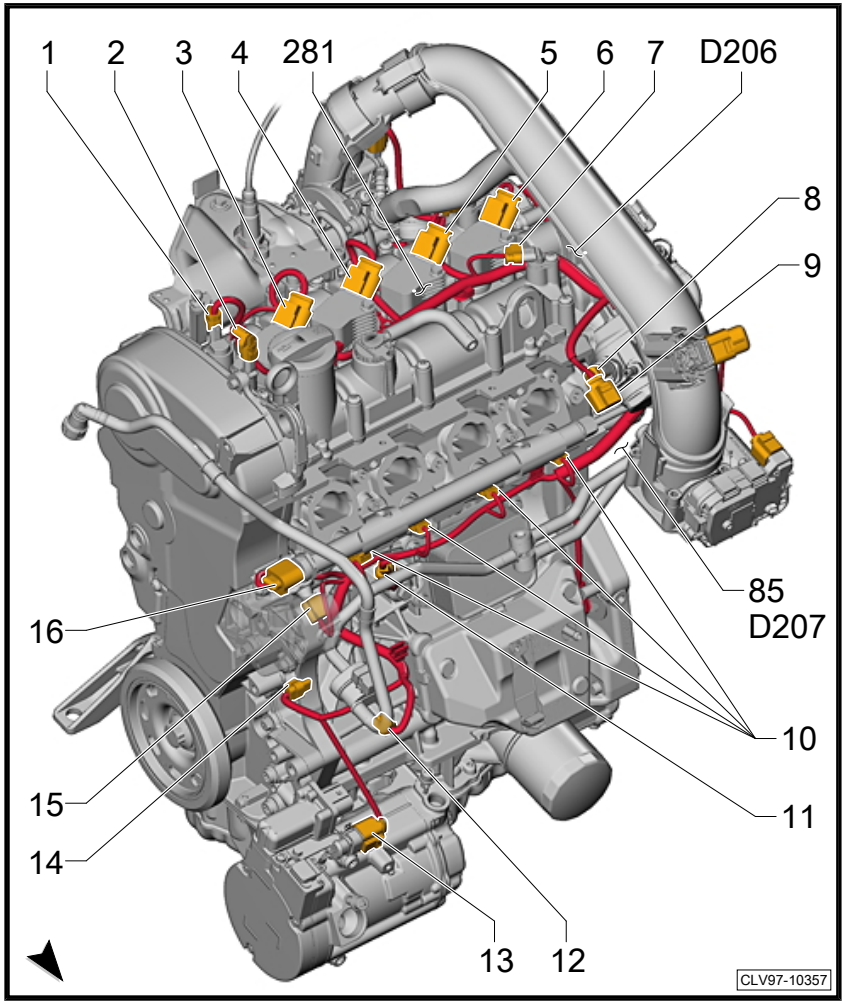

Copyright by Volkswagen AG. Volkswagen AG does not guarantee or accept any liability with respect to the correctness of information in this document. Copyright by Volkswagen AG.

D207 - Connection 87a (in engine compartment wiring harness) 7

1.1.2 1.4L TSI Hybrid, CNLA Left

1 - Throttle valve control module -J338-
1 - EPC throttle drive -G186-
1 - EPC throttle drive angle sensor 1 -G187-
1 - EPC throttle drive angle sensor 2 -G188-
2 - Charge air pressure sensor - GX26-
2 - Intake air temperature sensor 2 - G299-
2 - Manifold absolute pressure sensor 2 -G429-
2 - Charge air pressure sensor -G31-
3 - Positive crankcase ventilation heating element - N79-
4 - 6-pin connector - T6w-
5 - Camshaft position sensor 2 -G163-
6 - Charge pressure actuator position sensor - G581-
6 - Charge pressure actuator - V465-
7 - Secondary air injection pump motor
8 - Brake system vacuum pump
9 - Engine coolant temperature sensor -G62-
10 - Drive motor rotor position sensor 1
11 - Coolant recirculation pump -V50-
12 - Three-phrase current drive
12 - Drive motor temperature sensor -G712-
D189 - Connection 87a (in engine wiring harness)

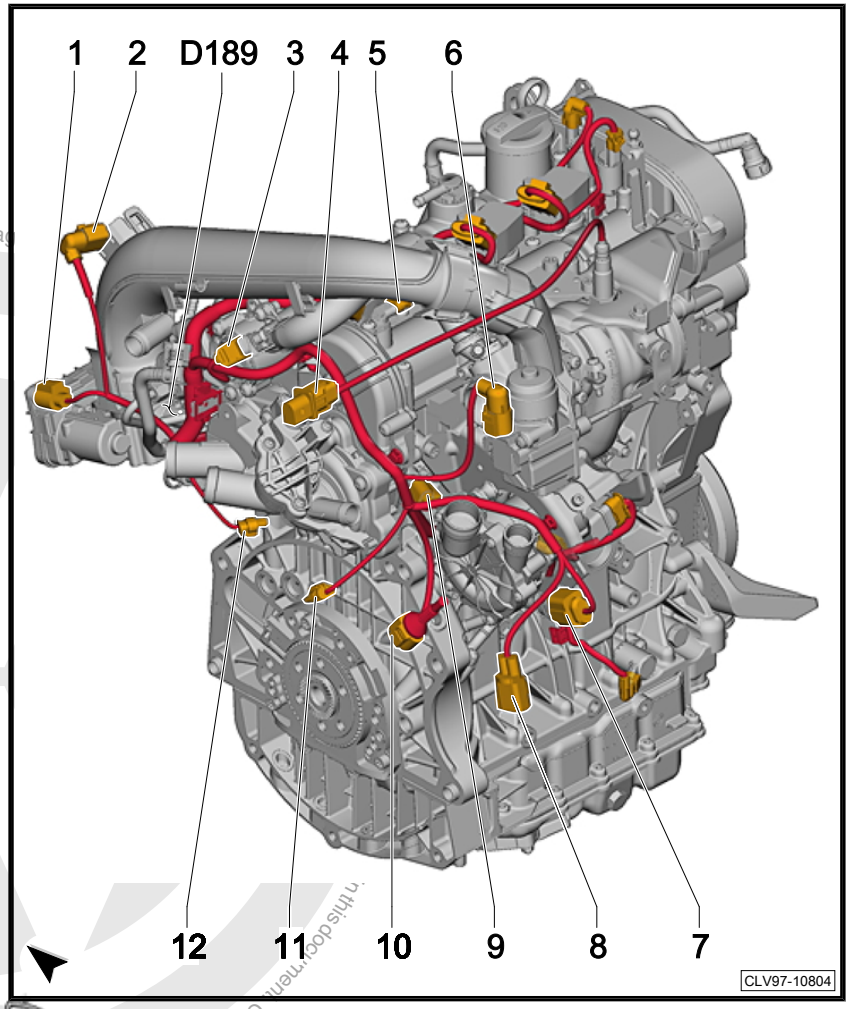

Protected by copyright. Copying for private or commercial purposes, in part or in whole, is not permitted unless authorised by Volkswagen AG. Volkswa
Copyright by Volkswagen AG.

1.1.3 1.4L TSI Hybrid, CNLA Rearview

1 - Secondary air injection pump motor -V101-

2 - Secondary air injection sensor 1 -G609-

2 - Secondary air injection solenoid valve -N112-

3 - Oil pressure switch - F1-

4 - Oil pressure regulation valve - N428-

5 - Oil level thermal sensor -G266-

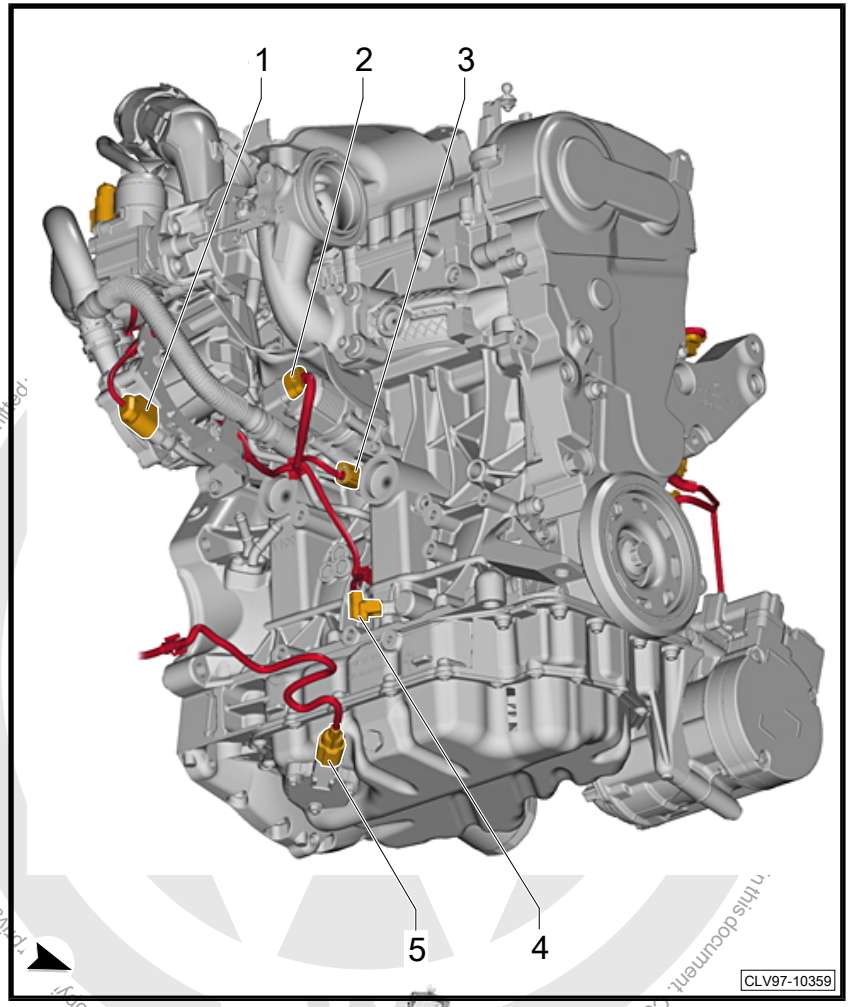

Protected by copyright. Copyright by Volkswagen AG. Private or commercial purposes, in part or in whole, is not permitted. In this document.

1.1.4 1.4L TSI Hybrid, CNLA Right

Protected by copyright. Copying for private or commercial purposes, in part or in whole, is not permitted unless authorised by Volkswagen AG. Volkswagen AG does not guarantee or accept any liability with respect to the correctness of information in this document. Copyright by Volkswagen AG.

1 - Engine control module - J623-

2 - 14-pin connector - T14hy-

3 - 14-pin connector - T14-

220 - Sensor ground connection (in engine compartment wiring harness)

316 - Sensor ground connection 2 (in engine wiring harness)

D101 - Connection 1 (in engine compartment wiring harness)

D107 - Connection 5 (in engine compartment wiring harness)

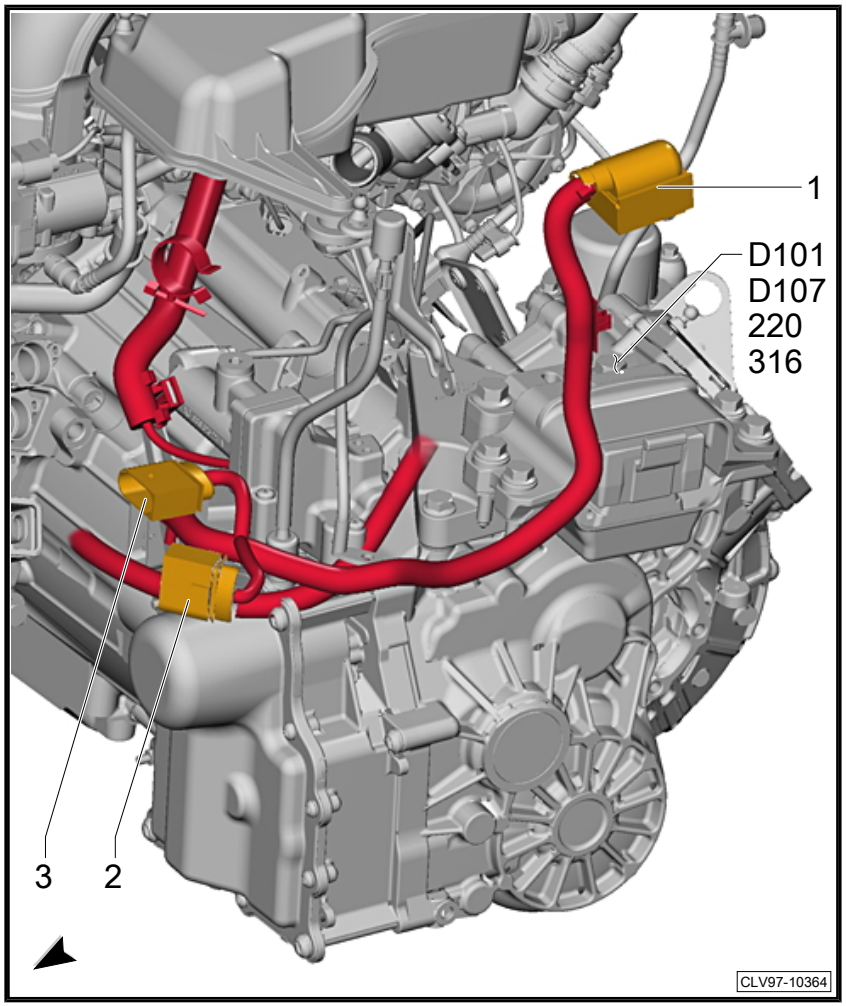

1.1.5 1.8L TFSI, CPKA/CPRA Top

1 - EVAP canister purge regulator valve 1 -N80-
2 - Ignition coil 1 with power output stage -N70-
3 - Ignition coil 2 with power output stage -N127-
4 - Ignition coil 3 with power output stage -N291-
5 - Ignition coil 4 with power output stage -N292-
6 - Camshaft position sensor -G40-
7 - Cylinder 4 fuel injector -N33-
8 - Cylinder 3 fuel injector -N32-
9 - Knock sensor 1 -G61-
10 - Cylinder 2 fuel injector -N31-
11 - Fuel pressure sensor -G247-
12 - Cylinder 1 fuel injector -N30-
13 - Intake manifold runner position sensor -G336-
85 - Ground connection 1 (in engine compartment wiring harness)
D181 - Connection 2 (87a) (in engine compartment wiring harness)
D189 - Connection (87a) (in engine wiring harness)
D206 - Connection 4 (87a) (in engine wiring harness)

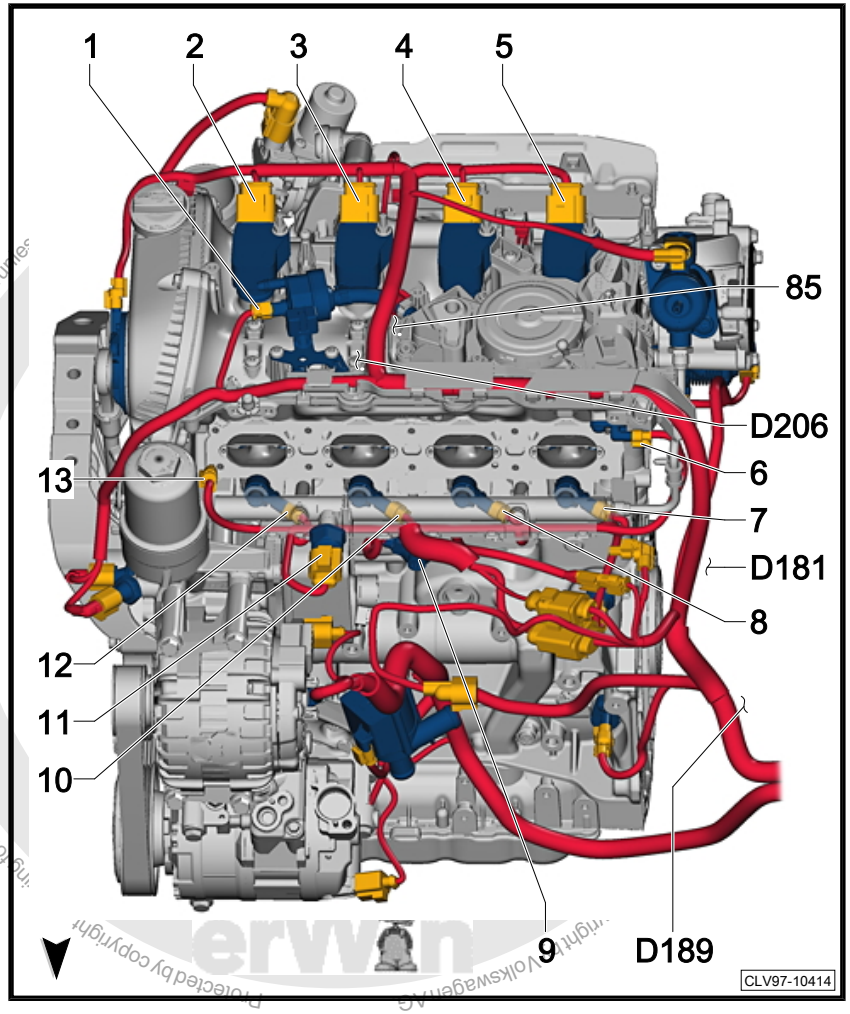

Protected by copyright. Volkswagen AG, for private or commercial purposes, in part or in whole, is not permitted unless

1.1.6 1.8L TFSI, CPKA/CPRA Right

1 - Camshaft adjustment valve 1 -N205-

2 - Reduced oil pressure switch -F378-

3 - Oil pressure switch -F22-

4 - Oil pressure regulation valve -N428-

5 - Oil level thermal sensor -G266-

6 - Turbocharger recirculation valve -N249-

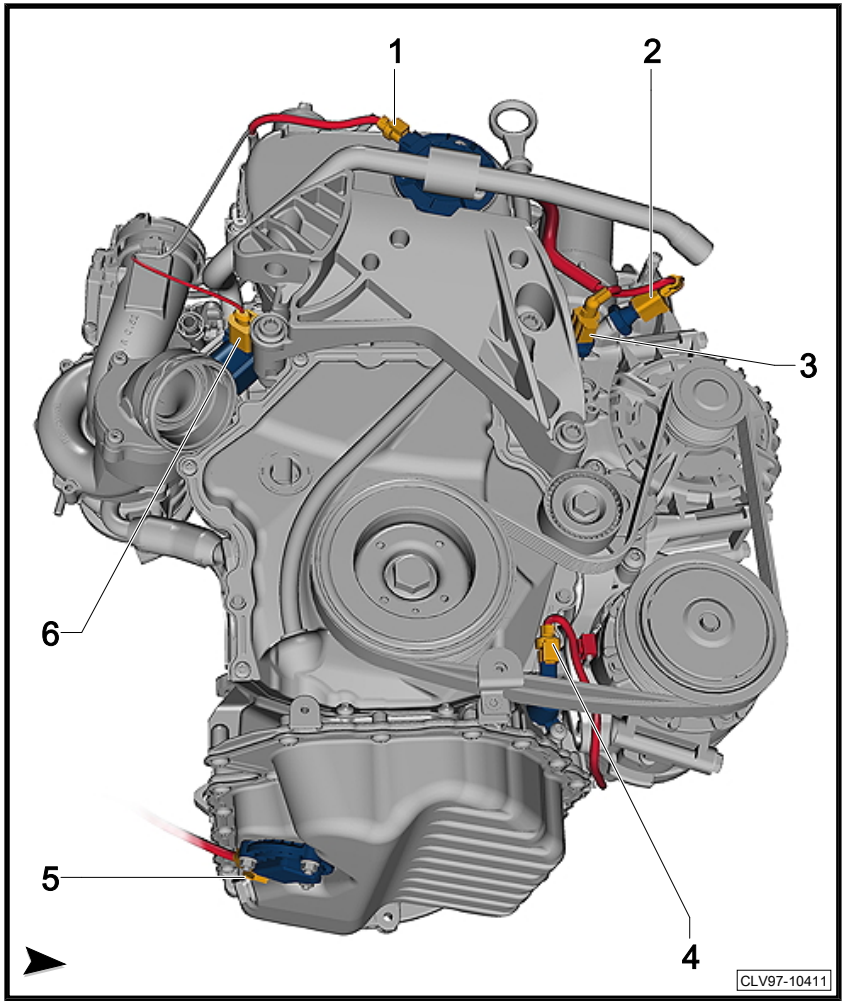

Protected by copyright. Copying for private or commercial purposes, in part or in whole, is not permitted unless authorised by Volkswagen AG. Volkswagen AG does not guarantee or accept any liability with respect to the correctness of information in this document. Copyright by Volkswagen AG.

1.1.7 1.8L TFSI, CPKA/CPRA Left

Protected by copyright. Copying for private or commercial purposes, in part or in whole, is not permitted unless authorised by Volkswagen AG. Volkswagen AG does not guarantee or accepta-

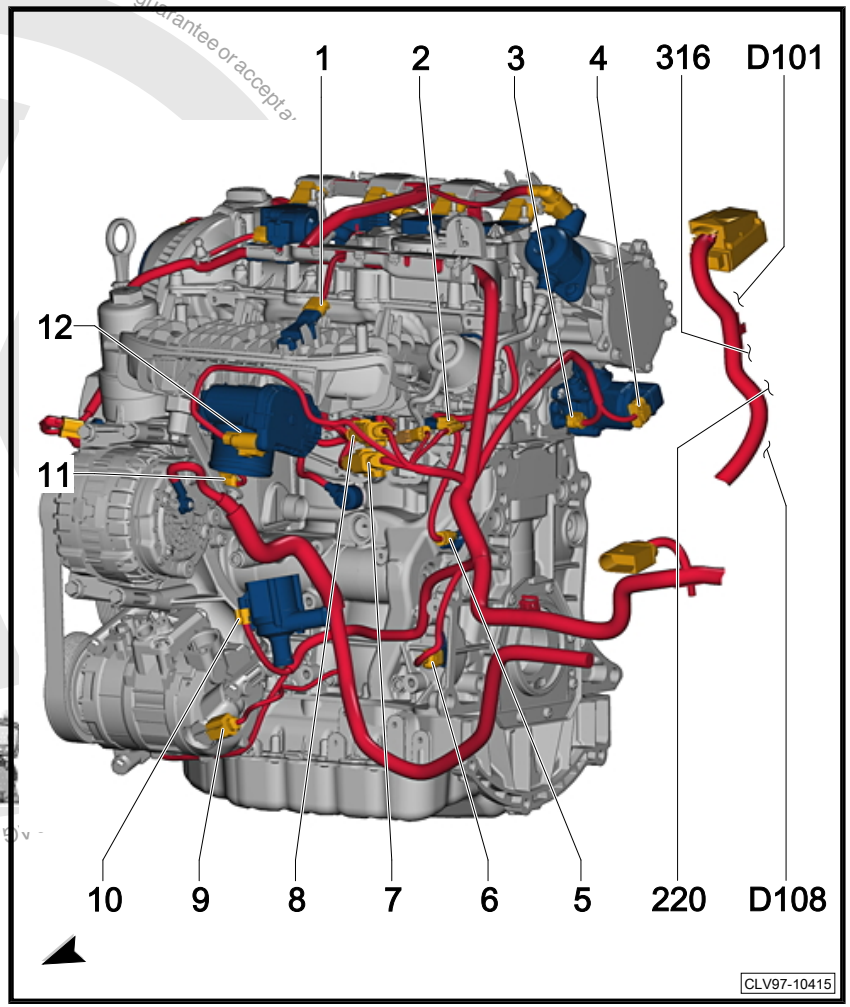

1 - Intake manifold sensor -GX9-
1 - Intake air temperature sensor -G42-
1 - Manifold absolute pressure sensor -G71-
1 - Charge air pressure sensor -G31- on intake breather hose (not shown)
2 - Intake manifold runner control valve -N316-
3 - Engine coolant temperature sensor -G62-
4 - Secondary air system -GX24-
4 - Secondary air injection solenoid valve -N112-
4 - Secondary air injection sensor 1 -G609-
4 - Secondary air injection sensor 2 -G610-
5 - Oil pressure switch, level 3 -F447-
6 - Engine speed sensor -G28-
7 - 14-pin connector -T14a-
8 - 8-pin connector -T8i- fuel injectors connector
9 - A/C compressor regulator valve -N280-
10 - After-run coolant pump -V51-
11 - Generator with voltage regulator -CX1-
12 - Throttle valve control module -GX3-
12 - Throttle valve control module -J338-
12 - EPC throttle drive -G186-
12 - EPC throttle drive angle sensor 1 -G187-
12 - EPC throttle drive angle sensor 2 -G188-
D101 - Connection (1) (in engine compartment wiring harness)
D108 - Connection (6) (in engine compartment wiring harness)
220 - Sensor ground connection (in engine compartment wiring harness)
316 - Sensor ground connection 2 (in engine wiring harness)

1.1.8 1.8L TFSI, CPKA/CPRA Rearview

1 - Fuel pressure regulator valve -N276-

2 - Charge pressure actuator -V465-

3 - Heated oxygen sensor

15 - Ground connection on cylinder head

281 - Ground connection 1 (in engine wiring harness)

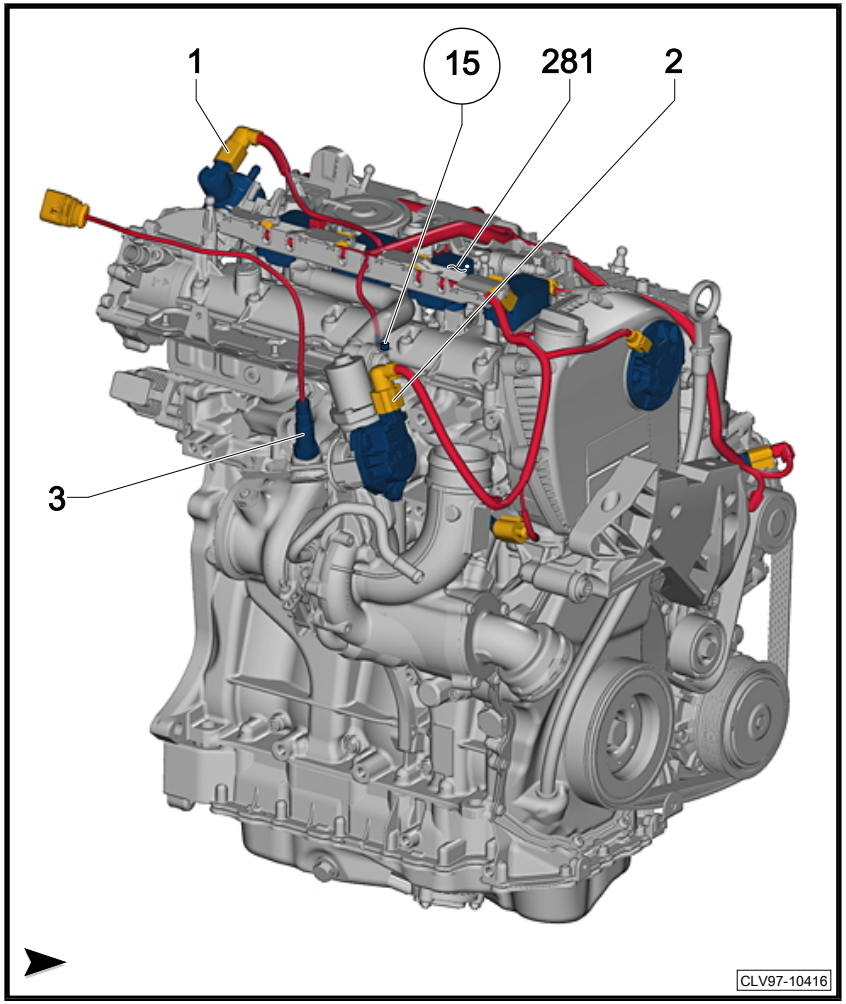

Protected by copyright. Copying for private or commercial purposes, in part or in whole, is not permitted unless authorised by Volkswagen AG. Volkswagen AG does not guarantee or accept any liability with respect to the correctness of information in this document. Copyright by Volkswagen AG.

1.1.9 2.0L TFSI , CPLA/CPPA Top

1 - Ignition coil 1 with power output stage -N70-
2 - Ignition coil 2 with power output stage -N127-
3 - Ignition coil 3 with power output stage -N291-
4 - Ignition coil 4 with power output stage -N292-
5 - Camshaft position sensor -G40-
6 - Cylinder 4 fuel injector -N33-
7 - Cylinder 3 fuel injector -N32-
8 - Cylinder 2 fuel injector -N31-
9 - Knock sensor 1 -G61-
10 - Fuel pressure sensor -G247-
11 - Cylinder 1 fuel injector -N30-
12 - Intake manifold runner position sensor -G336-
13 - EVAP canister purge regulator valve 1 -N80-
85 - Ground connection 1 (in engine compartment wiring harness)
D181 - Connection 2 (87a) (in engine compartment wiring harness)
D189 - Connection (87a) (in engine wiring harness)
D206 - Connection 4 (87a) (in engine wiring harness)

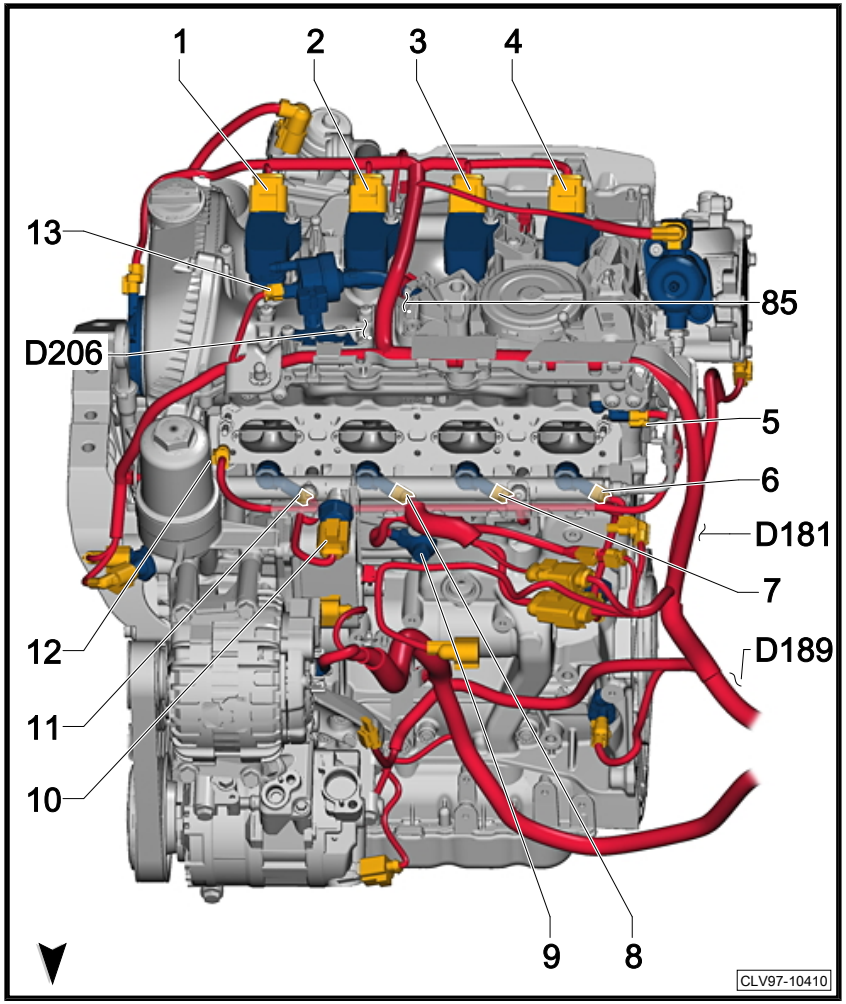

Protected by copyright. Copyright by Volkswagen AG. Volkswagen AG does not guarantee or accept any liability with respect to the correctness of information in this document. Copyright by Volkswagen AG.

1.1.10 2.0L TFSI, CPLA/CPPA Right

1 - Camshaft adjustment valve 1 -N205-
2 - Reduced oil pressure switch -F378-
3 - Oil pressure switch -F22-
4 - Oil pressure regulation valve -N428-
5 - Oil level thermal sensor -G266-
6 - Turbocharger recirculation valve -N249-

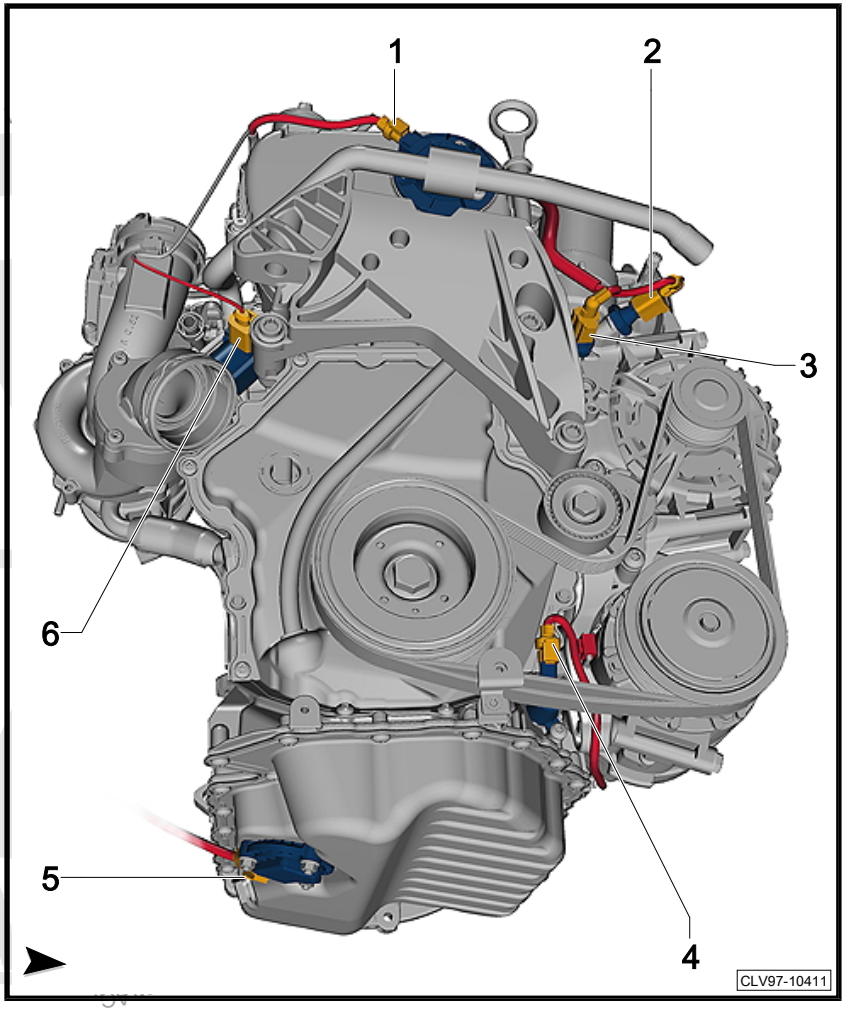

Protected by copyright. Copying for private or commercial purposes, in part or in whole, is not permitted unless authorised by Volkswagen AG.

1.1.11 2.0L TFSI, CPLA/CPPA Left

1 - Intake manifold sensor -GX9-
1 - Intake air temperature sensor -G42-
1 - Manifold absolute pressure sensor -G71-
1 - Charge air pressure sensor -G31- on intake breather hose (not shown)
2 - Intake manifold runner control valve -N316-
3 - Engine coolant temperature sensor -G62-
3 - Secondary air system -GX24- not shown
3 - Secondary air injection solenoid valve -N112- not shown
3 - Secondary air injection sensor 1 -G609- not shown
3 - Secondary air injection sensor 2 -G610- not shown
4 - Oil pressure switch, level 3 -F447-
5 - Engine speed sensor -G28-
6 - 14-pin connector -T14a-
7 - 8-pin connector -T8i- fuel injectors connector
8 - After-run coolant pump -V51-
9 - A/C compressor regulator valve -N280-
10 - Generator with voltage regulator -CX1-
12 - Throttle valve control module -GX3-
12 - Throttle valve control module -J338-
12 - EPC throttle drive -G186-
12 - EPC throttle drive angle sensor 1 -G187-
12 - EPC throttle drive angle sensor 2 -G188-
D101 - Connection (1) (in engine compartment wiring harness)
D108 - Connection (6) (in engine compartment wiring harness)
220 - Sensor ground connection (in engine compartment wiring harness)
316 - Sensor ground connection 2 (in engine wiring harness)

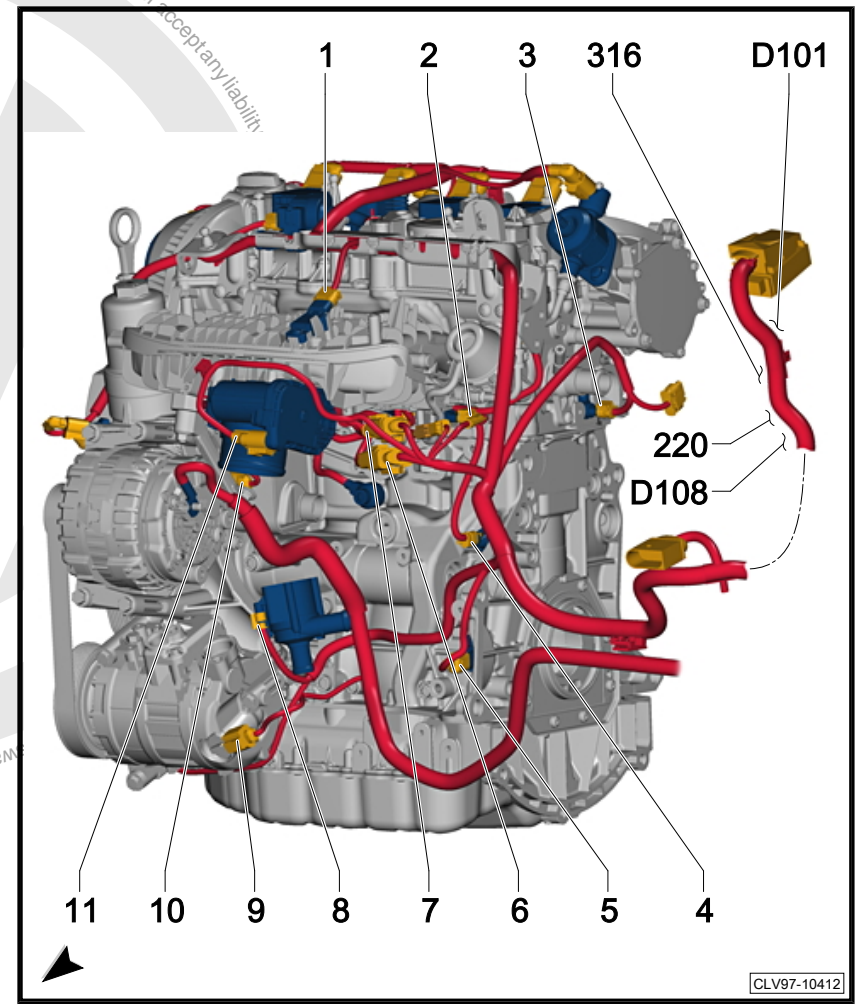

Protected by copyright. Copying for private or commercial purposes, in part or in whole, is not permitted unless authorised by Volkswagen AG. Volkswagen AG does not guarantee or accept any liability

1.1.12 2.0L TFSI, CPLA/CPPA Rearview

1 - Fuel metering valve -N290-

1 - Fuel pressure regulator valve -N276-

2 - Charge pressure actuator -V465-

3 - Heated oxygen sensor -G39-

15 - Ground connection on cylinder head

281 - Ground connection 1 (in engine wiring harness)

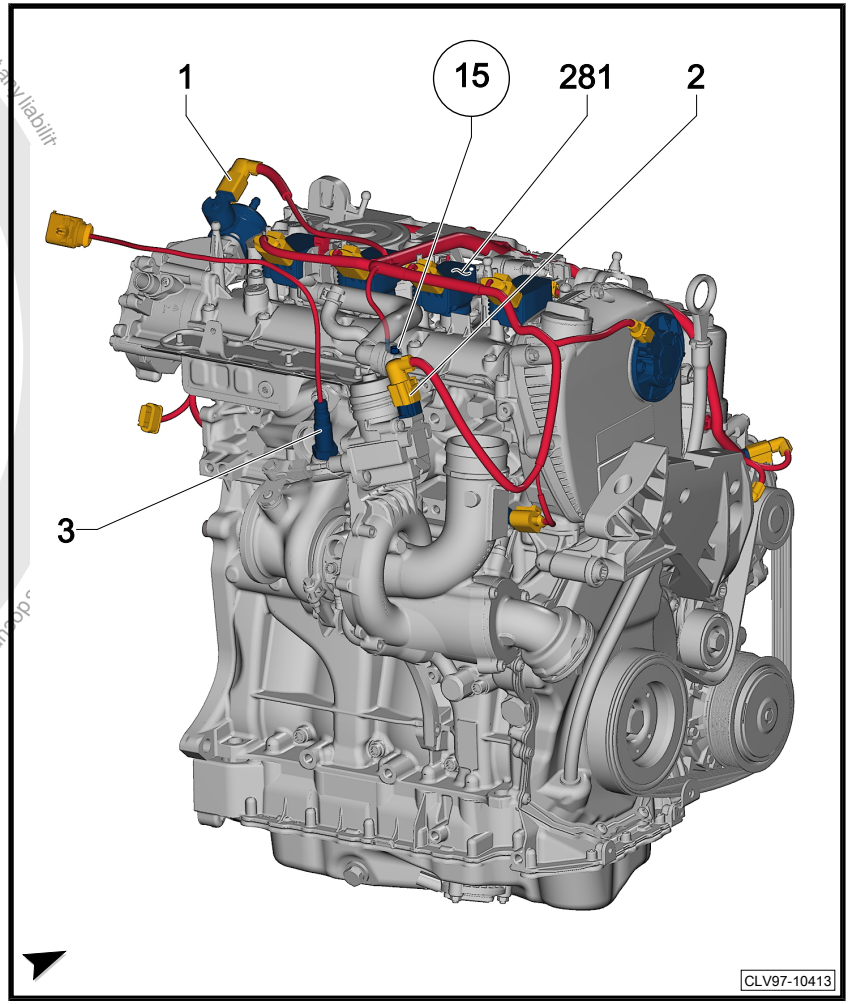

Protected by copyright. Copying for private or commercial purposes, in part or in whole is not permitted unless authorised by Volkswagen AG. Volkswagen AG does not guarantee or accept any liability with respect to the correctness of information in this document. Copyright by Volkswagen AG.

1.1.13 2.0L TDI, CJAA Top

1 - Exhaust pressure sensor 1
2 - Fuel Injectors
3 - Charge pressure actuator position sensor -G581-
4 - Positive crankcase ventilation heating element -N79-
5 - Wastegate bypass regulator valve -N75-
6 - Fuel pressure regulator valve -N276-
7 - Intake manifold runner position sensor -G336-
7 - Intake flap motor -V157-
8 - Oil pressure switch -F1-
9 - Throttle valve control module -J338-
9 - Throttle position sensor -G69-
9 - Charge air pressure sensor -G31- on intake breather hose (not shown)
9 - . Intake air temperature sensor -G42- on intake breather hose (not shown)
10 - Fuel temperature sensor -G81-
11 - EGR potentiometer -G212-
11 - EGR vacuum regulator solenoid valve -N18-
12 - Fuel metering valve -N290-
13 - Cylinder 1 internal pressure sensor -G620-
13 - Glow plug 1 -Q10-
13 - Cylinder 2 internal pressure sensor -G621-
13 - Glow plug 2 -Q11-
13 - Cylinder 3 internal pressure sensor -G622-
13 - Glow plug 3 -Q12-
13 - Cylinder 4 internal pressure sensor -G623-
13 - Glow plug 4 -Q13-
14 - Fuel pump 2 -V277-
15 - Exhaust pressure sensor 2

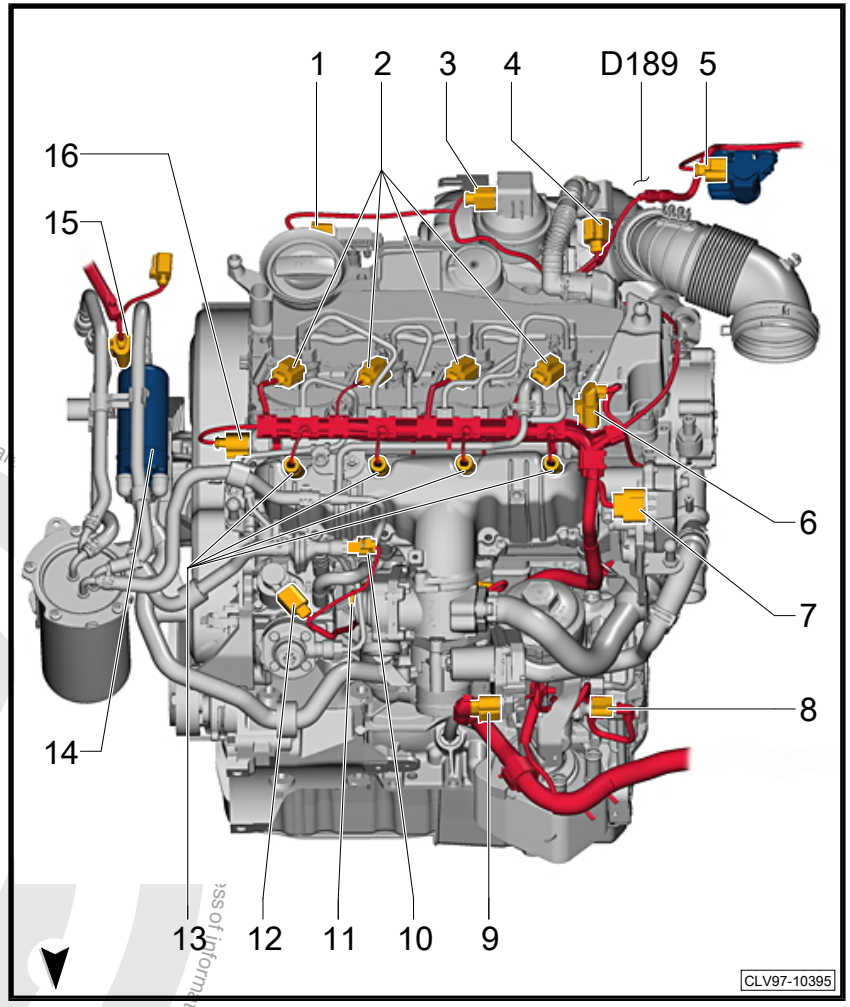

Protected by copyright. Copying for private or commercial purposes, in part or in whole, is not permitted unless authorised by Volkswagen AG. Volkswagen AG does not guarantee the accuracy of information in this document. Copyright by Volkswagen AG.

16 - Fuel pressure sensor -G247-

16 - Camshaft position sensor -G40- located under timing cover

D189 - Connection 87a (in engine wiring harness)

1.1.14 2.0L TDI, CJAA Rearview

1 - Engine coolant temperature sensor -G62-

2 - Mass airflow sensor -G70-

3 - Charge pressure actuator position sensor

4 - Exhaust pressure sensor 1

5 - Positive crankcase ventilation heating element -N79-

6 - Exhaust gas recirculation position sensor 2 -G466-

6 - Valve 2 for EGR -N213-

6 - EGR temperature sensor -G98- located near EGR valve

6 - EGR cooler switch-over valve -N345- located near EGR valve if equipped

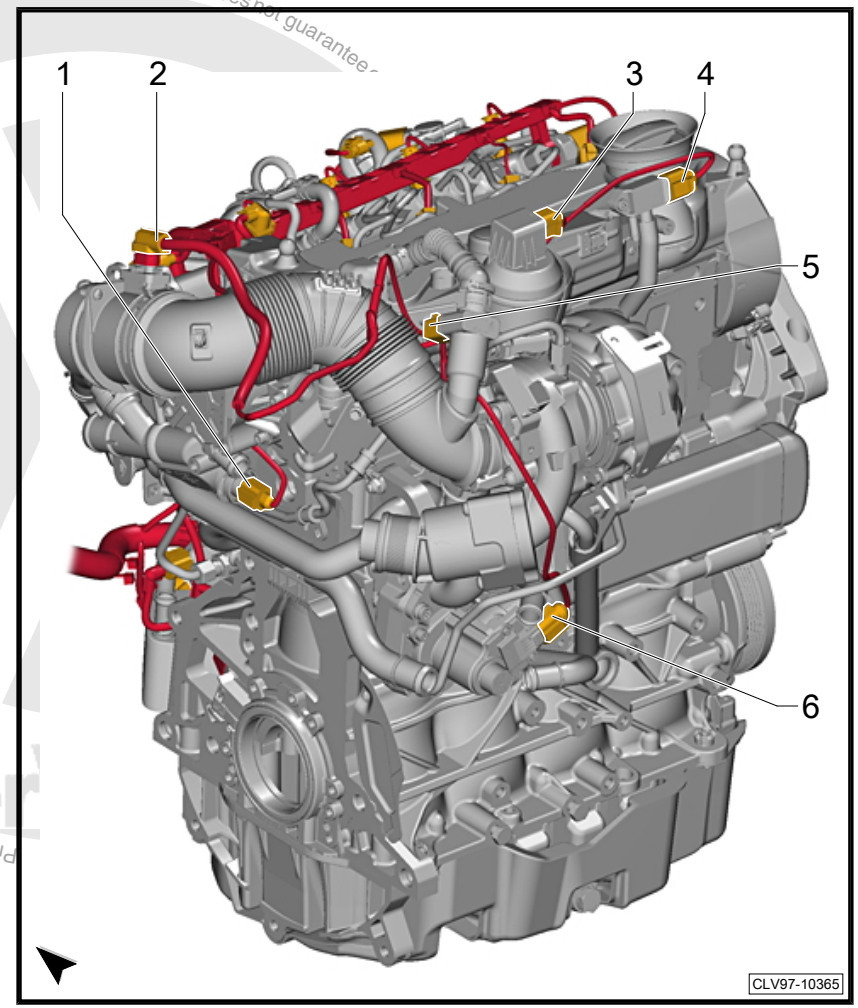

protected by copyright. Copying for private or commercial purposes, in part or in whole, is not permitted unless authorised by Volkswagen AG. Volkswagen AG does not guarantee

1.1.15 2.0L TDI, CJAA Left

1 - Throttle valve control module
1 - Throttle position sensor -G69-
2 - Engine control module -J623-
3 - 14-pin connector -T14-
4 - Oil pressure switch
5 - Engine speed sensor -G28-
220 - Sensor ground connection (in engine compartment wiring harness)
316 - Sensor ground connection 2 (in engine wiring harness)
474 - Sensor ground connection (in engine wiring harness)
492 - Sensor ground connection 2 (in fuel injection system wiring harness)
D128 - Connection 26 (in engine wiring harness)
D141 - Connection 5V (in engine wiring harness)
D174 - Connection 5V (in engine wiring harness) 2

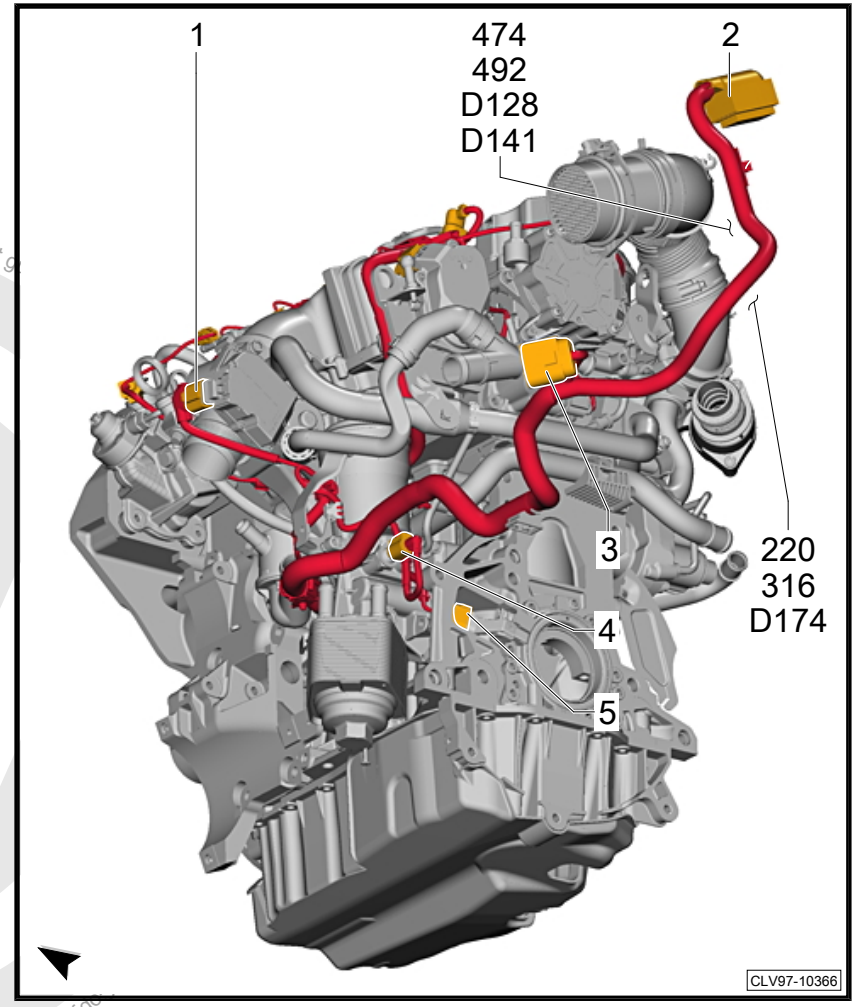

Protected by copyright. Copying for private or commercial purposes, in part or in whole, is not permitted unless authorised by Volkswagen AG. Volkswagen AG does not g
Copyright by Volkswagen AG.

1.1.16 2.0L SRE, CBPA Front

1 - Camshaft position sensor -G40-
2 - Cylinder 1 fuel injector -N30-
3 - EVAP canister purge regulator valve 1 -N80-
4 - Cylinder 2 fuel injector -N31-
5 - Intake air temperature sensor -G42-
5 - Manifold absolute pressure sensor -G71-
6 - Cylinder 3 fuel injector -N32-
7 - Cylinder 4 fuel injector -N33-
8 - Engine coolant temperature sensor -G62-
9 - Engine control module -J623-
10 - Double connector -T2ex-
11 - Knock sensor 1 -G61-
12 - 4-pin connector -T4z-
13 - Ignition coil -N152-
14 - 14-pin connector -T14-
15 - 4-pin connector -T4t-
16 - Engine speed sensor -G28-
17 - Oil pressure switch -F1-
18 - 3-pin connector -T3ag-
19 - A/C compressor regulator valve -N280-
20 - Generator with voltage regulator -CX1-
21 - Generator with voltage regulator -CX1-
220 - Sensor ground connection (in engine compartment wiring harness)
D95 - Injector connection (in engine compartment wiring harness)
D101 - Connection 1 (in engine compartment wiring harness)

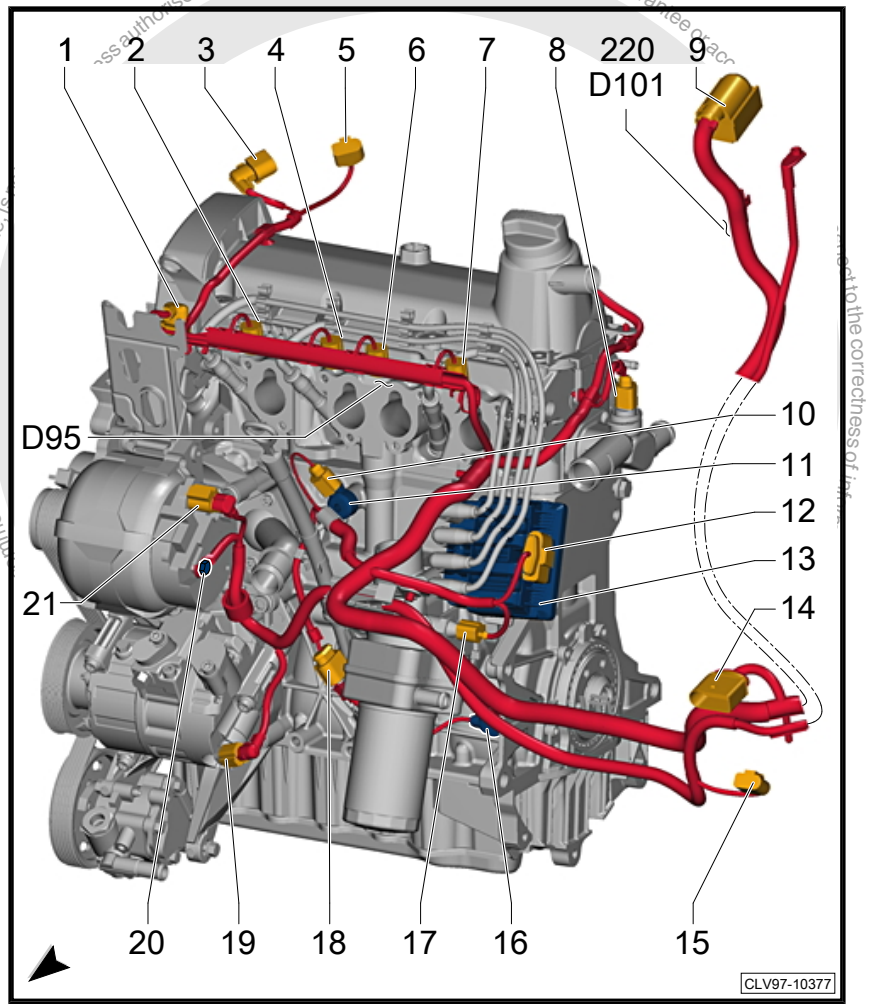

1.1.17 2.0L SRE, CBPA Rearview, left

1 - 4-pin connector -T4z-

2 - Ignition coil -N152-

3 - Double connector -T2dp-

4 - Engine coolant temperature sensor -G62-

5 - Throttle valve control module -J338-

5 - EPC throttle drive -G186-

5 - EPC throttle drive angle sensor 2 -G188-

5 - Throttle position sensor -G69-

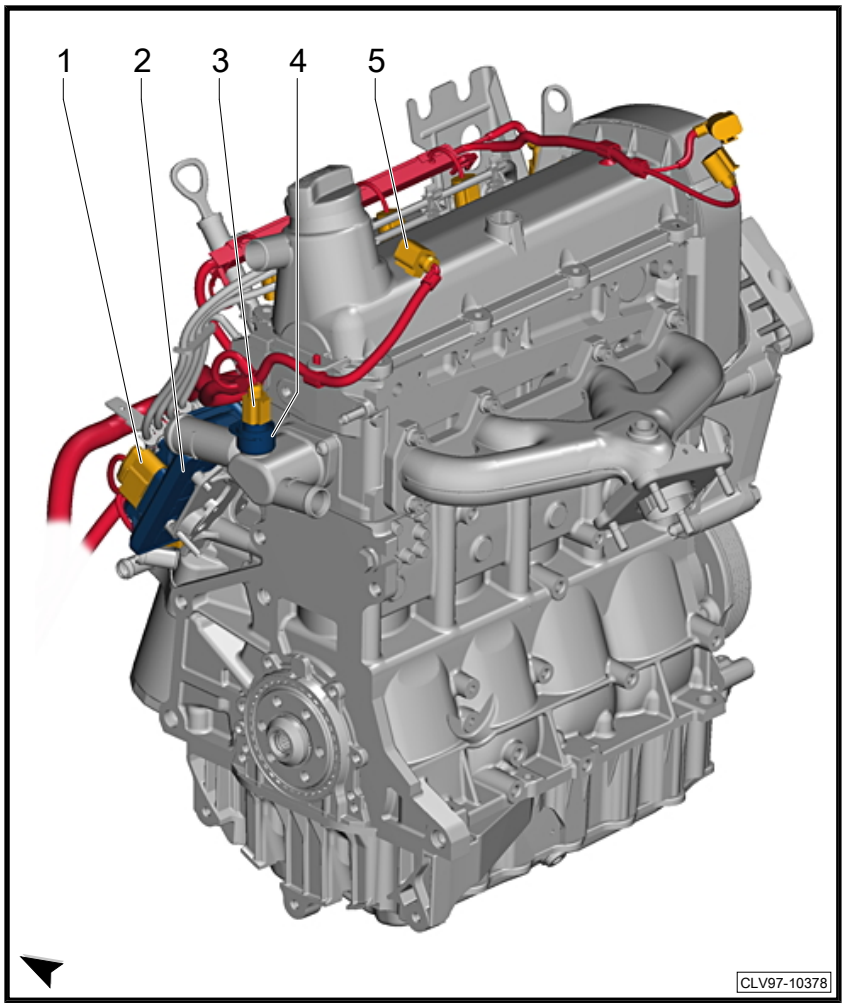

Protected by copyright. Copying for private or commercial purposes, in part or in whole, is not permitted unless authorised by Volkswagen AG. Volkswagen AG does not guarantee or accept any liability with respect to the correctness of information in this document. Copyright by Volkswagen AG.

1.1.18 2.0L TFSI, CCTA/CBFA Front

1 - Fuel pressure regulator valve
2 - Mass airflow sensor -G70-
3 - Engine control module -J623-
4 - Secondary air injection solenoid valve -N112-
5 - Secondary air injection sensor 1 -G609-
6 - 14-pin connector -T14-
7 - Intake manifold runner control valve -N316-
8 - Knock sensor 1 -G61-
9 - Engine speed sensor
10 - 6-pin connector -T6aq-
11 - 8-pin connector -T8i- fuel injectors connector
12 - After-run coolant pump -V51-
13 - Double connector -T2cf-
14 - Engine coolant temperature sensor -G62-
15 - Throttle valve control module -J338-
15 - EPC throttle drive -G186-
15 - EPC throttle drive angle sensor 1 -G187-
15 - EPC throttle drive angle sensor 2 -G188-
16 - Oil pressure switch
17 - Fuel pressure sensor -G247-
18 - Intake air temperature sensor -G42-
19 - EVAP canister purge regulator valve 1
220 - Sensor ground connection (in engine compartment wiring harness)
D101 - Connection 1 (in engine compartment wiring harness)
D108 - Connection 6 (in engine compartment wiring harness)

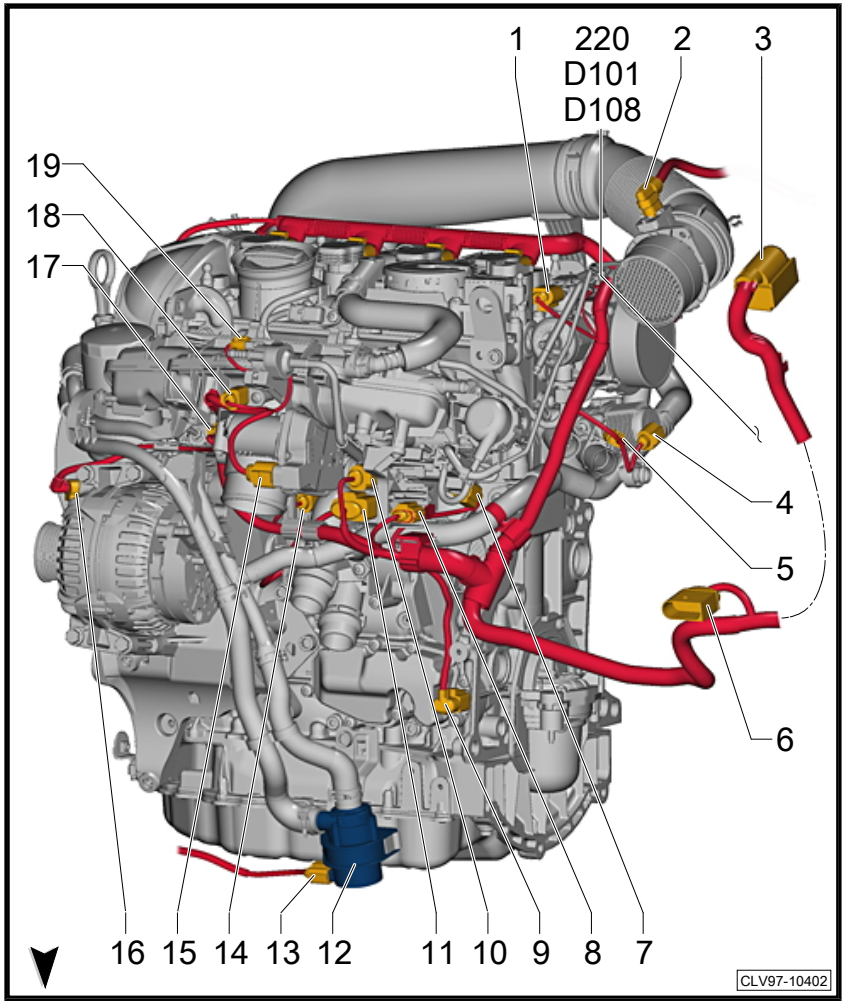

Protected by copyright. Copyright by Volkswagen AG. Volkswagen AG does not guarantee or accept any liability with respect to the correctness of information in this document. Copyright by Volkswagen AG.

1.1.19 2.0L TFSI, CCTA/CBFA Rearview right

1 - Fuel pressure regulator valve
2 - Ignition coil 4 with power output stage -N292-
3 - Ignition coil 3 with power output stage -N291-
4 - Ignition coil 2 with power output stage -N127-
5 - Ignition coil 1 with power output stage -N70-
6 - EVAP canister purge regulator valve 1
7 - Intake air temperature sensor
8 - Camshaft adjustment valve 1 -N205-
9 - Oil pressure switch
10 - Wastegate bypass regulator valve -N75-
11 - Turbocharger recirculation valve -N249-
281 - Ground connection 1 (in engine wiring harness)
D206 - Connection 87a (in engine wiring harness) 4

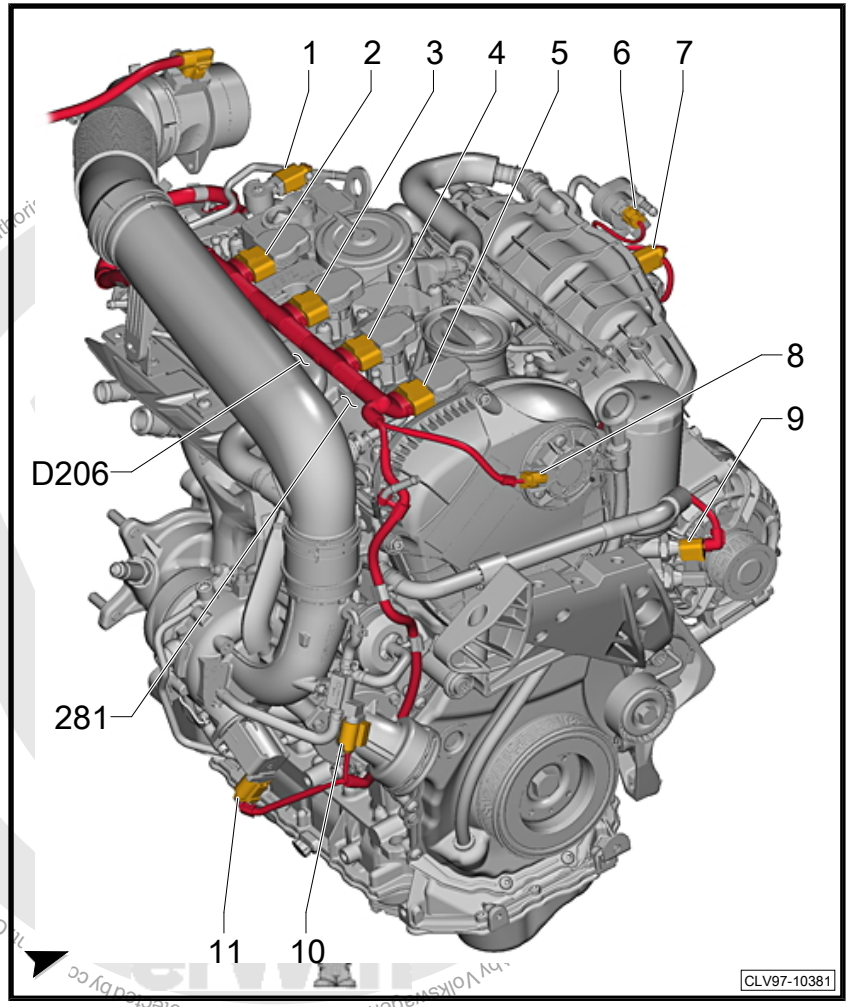

Protected by copyright. Copying for private or commercial purposes, in part or in whole, is not permitted unless authorised by Volkswagen AG.

1.1.20 2.0L TFSI, CCTA/CBFA Top

1 - Camshaft position sensor -G40-

2 - Cylinder 1 fuel injector -N30-

3 - Cylinder 2 fuel injector -N31-

4 - Cylinder 3 fuel injector -N32-

5 - Cylinder 4 fuel injector -N33-

6 - Intake manifold runner position sensor -G336-

6 - Intake flap motor -V157-

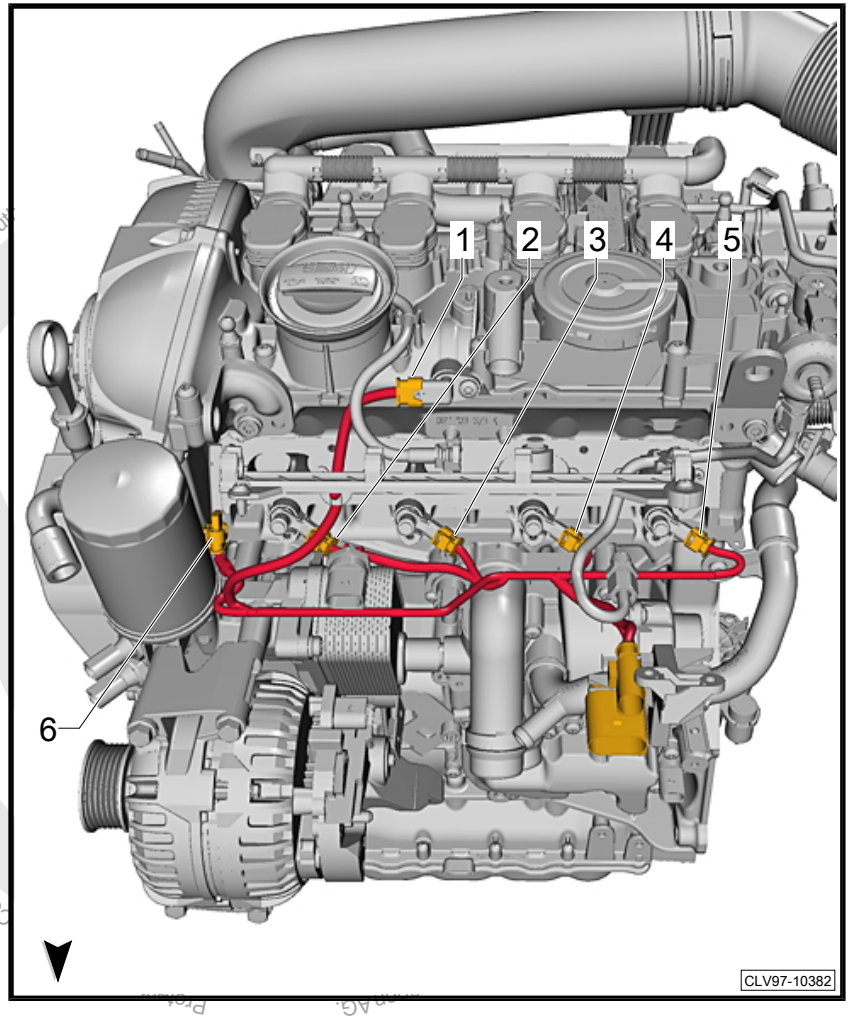

Copying for private or commercial purposes, in part or in whole, is not permitted unless au

1.1.21 2,5l SRE, CBTA/CBUA Top

1 - EVAP canister purge regulator valve 1 -N80-
2 - Camshaft position sensor
3 - Cylinder Fuel Injectors
4 - Ignition Coils
5 - Secondary air injection sensor 1 -G609-
6 - 3-pin connector -T3ak-
7 - Engine coolant temperature sensor -G62-
8 - 3-pin connector -T3y-
9 - Engine speed sensor connector
10 - Oil pressure switch -F22-
11 - Throttle valve control module
12 - Camshaft adjustment valve 1
85 - Ground connection 1 (in engine compartment wiring harness)
281 - Ground connection 1 (in engine wiring harness)
D95 - Injector connection (in engine compartment wiring harness)
D181 - Connection 87a (in engine compartment wiring harness) 2
D206 - Connection 87a (in engine wiring harness) 4

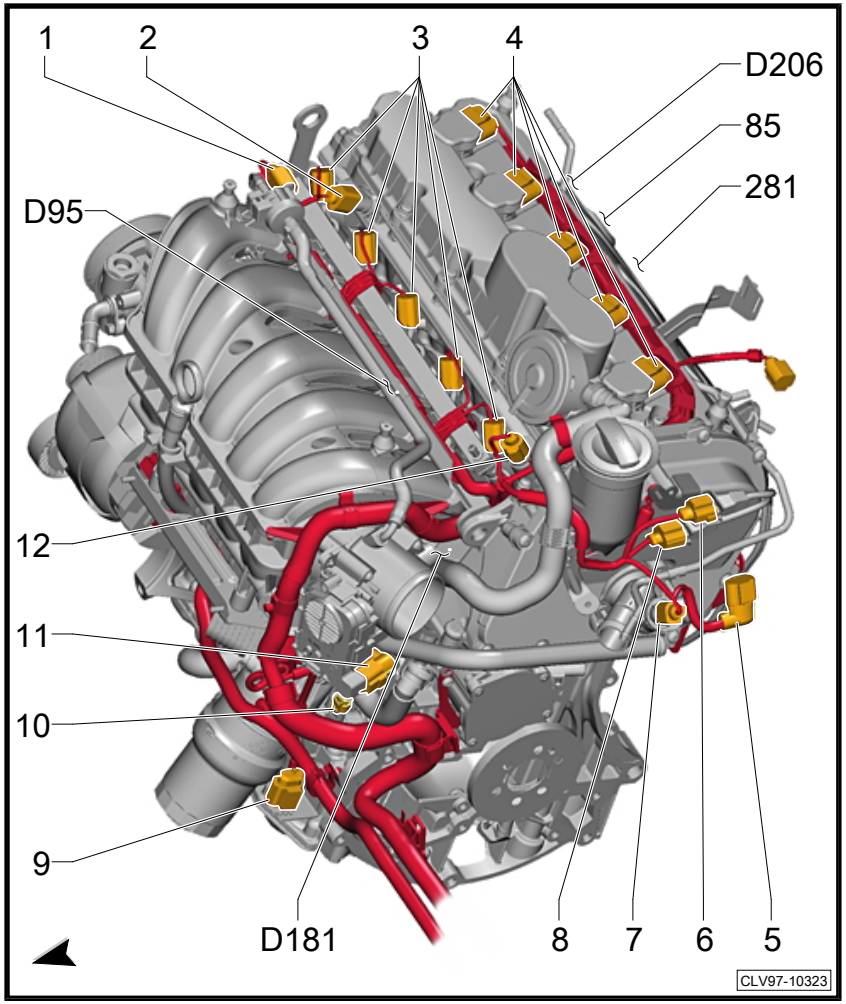

Protected by copyright. Copying for private or commercial purposes, in part or in whole, is not permitted unless authorised by Volkswagen AG. Volkswagen AG does not guarantee or accept any liability with respect to the correctness of information in this document. Copyright by Volkswagen AG.

1.1.22 2.5L FSI, CBTA/CBUA Rearview

1 - Camshaft position sensor -G40-

2 - Knock sensor 1 -G61-

3 - Knock sensor 2 -G66-

4 - Secondary air injection solenoid valve -N112-

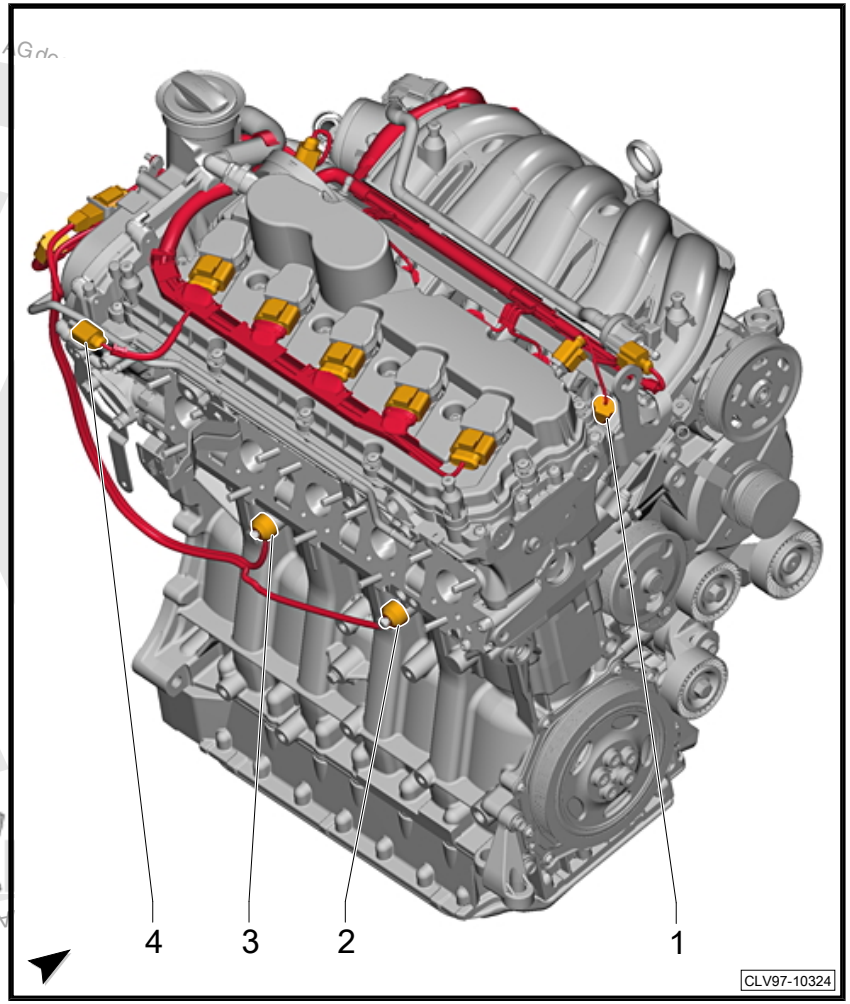

Protected by copyright. Copying for private or commercial purposes, in part or in whole, is not permitted unless authorised by Volkswagen AG. Volkswagen AG do

1.1.23 2.5L FSI, CBTA/CBUA Front

1 - Generator with voltage regulator -CX1-
2 - Intake air temperature sensor -G42-
2 - Manifold absolute pressure sensor -G71-
3 - Throttle valve control module -J338-
3 - EPC throttle drive -G186-
3 - EPC throttle drive angle sensor 2 -G188-
3 - Throttle position sensor -G69-
4 - Camshaft adjustment valve 1 -N205-
5 - 14-pin connector -T14-
6 - Oil pressure switch -F1-
7 - Reduced oil pressure switch -F378-
8 - Oil pressure regulation valve -N428-
9 - Engine speed sensor -G28-
10 - Engine preheating element -Z97-

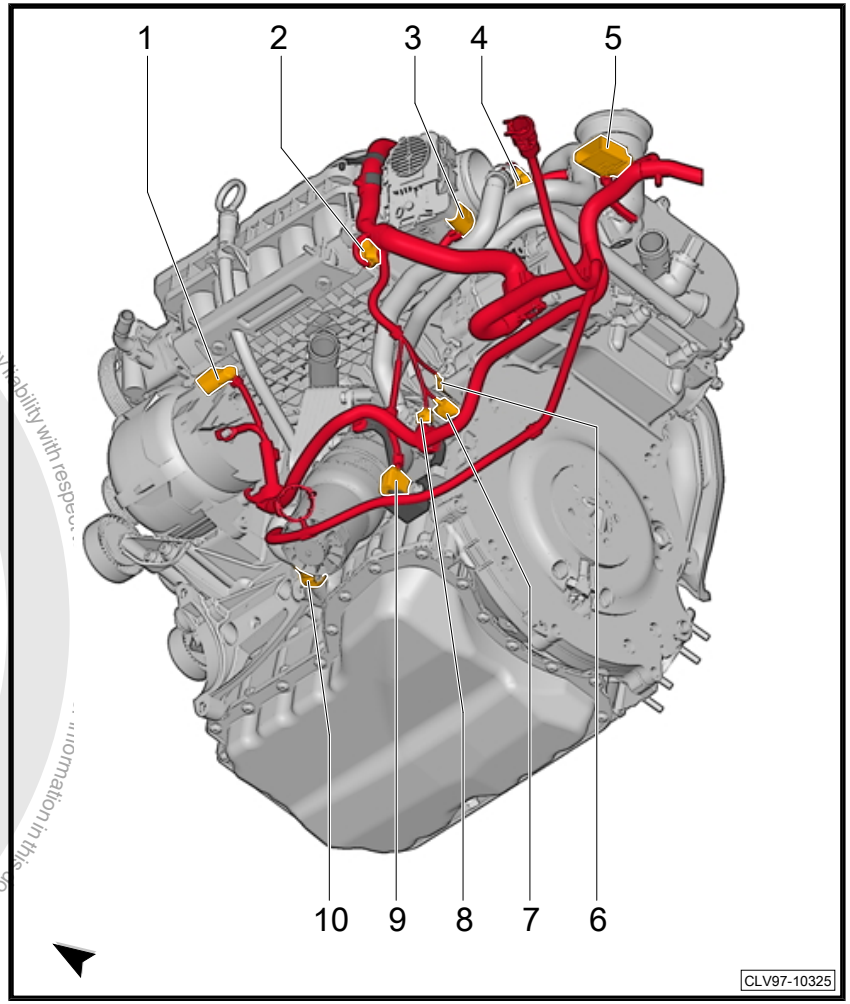

Protected by copyright. Copying for private or commercial purposes, in part or in whole, is not permitted unless authorised by Volkswagen AG. Volkswagen AG does not guarantee or accept any liability with respect to the correctness of information in this document. Copyright by Volkswagen AG.

1.2 Engine Compartment

- ⇒ “1.2.1 Engine compartment, passenger”, page 25
- ⇒ “1.2.2 Engine compartment, driver I”, page 27

Protected by copyright. Copying for private or commercial purposes, in part or in whole, is not permitted unless authorised by Volkswagen AG. Volkswagen AG does not guarantee or accept any liability w

- ⇒ “1.2.3 Engine compartment, driver II”, page 29
- ⇒ “1.2.4 Engine compartment, driver III”, page 30

1.2.1 Engine compartment, passenger

1 - Double connector -T2bu-
2 - Right washer nozzle heater -Z21-
3 - Left washer nozzle heater -Z20-
4 - Double connector -T2bt-
5 - ABS control module -J104-
6 - 47-pin connector -T47- (Optional)
7 - Power steering control module -J500-
7 - Electromechanical power steering motor -V187-
7 - Steering angle sensor -G85-
7 - Steering torque sensor -G269-
8 - 3-pin connector -T3-
9 - Double connector -T2a-
10 - 5-pin connector -T5g-
11 - Passenger side front airbag crash sensor -G284-
12 - Right front headlamp
13 - Windshield washer pump -V5-
13 - Headlamp washer pump -V11- , located in washer reservoir.
14 - Windshield washer fluid level sensor -G33-
15 - High pressure sensor -G65-
16 - 3-pin connector -T3c-
17 - Engine coolant level sensor -G32-
18 - 3-pin connector -T3aw-
19 - Air quality sensor -G238-
13 - Ground connection in engine compartment, right
121 - Ground connection 2 (in right front wiring harness)

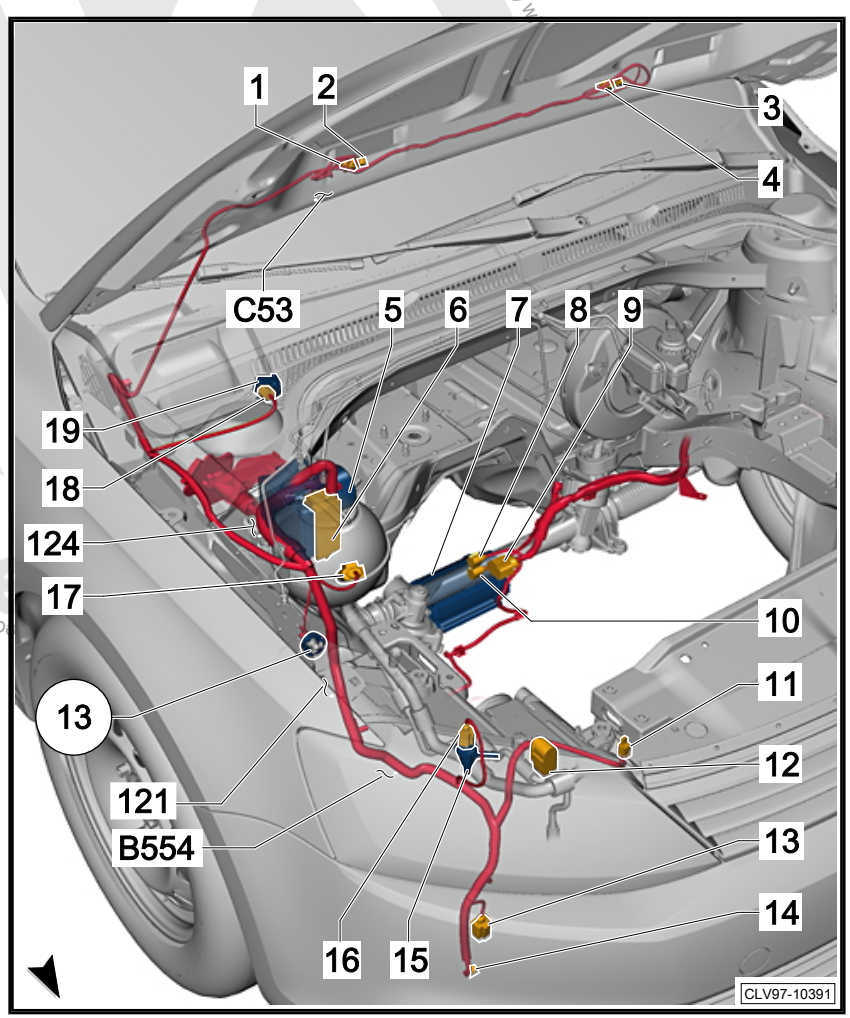

124 - Ground connection (in right engine compartment wiring harness)

B554 - Fog lamp connection (in main wiring harness)

C53 - Positive connection (x) (in heated spray nozzle wiring harness)

Protected by copyright. Copying for private or commercial purposes, in part or in whole, is not permitted unless authorised by Volkswagen AG. Volkswagen AG does not guarantee or accept any liability with respect to the correctness of information in this document. Copyright by Volkswagen AG.

1.2.2 Engine compartment, driver I

- Battery monitoring control module -J367- , not shown. Located on battery positive connection to battery.

1 - Structure-borne sound actuator -R214-

2 - Alarm system horn -H18-

2 - Structure borne sound control module -J869- , not shown. Located on fire wall behind plenum chamber.

3 - 6-pin connector -T6W-

4 - Wiper motor control module -J400-

4 - Driver windshield wiper motor -V216-

5 - Alarm horn -H12-

6 - Engine control module -J623-

7 - Left front headlamp -MX1-

7 - Secondary air injection pump motor -V101- behind wheel noise insulation

- ❑ For CNLA engine, refer to 1.4L CNLA Rearview

8 - Double connector -T2n-

9 - Driver front airbag crash sensor -G283-

10 - Outside air temperature sensor

11 - Coolant fan control module -J293-

11 - Coolant fan -V7-

11 - Coolant fan 2 -V177-

11 - Right coolant fan -V35-

11 - Coolant fan control thermal switch -F18-

12 - Double connector -T2i-

12 - 4-pin connector -T4t-

13 - Engine hood contact switch -F266-

15 - Generator with voltage regulator -CX1-

16 - Starter -B- - Kl.50

17 - Starter -B- - Kl.B+ (30)

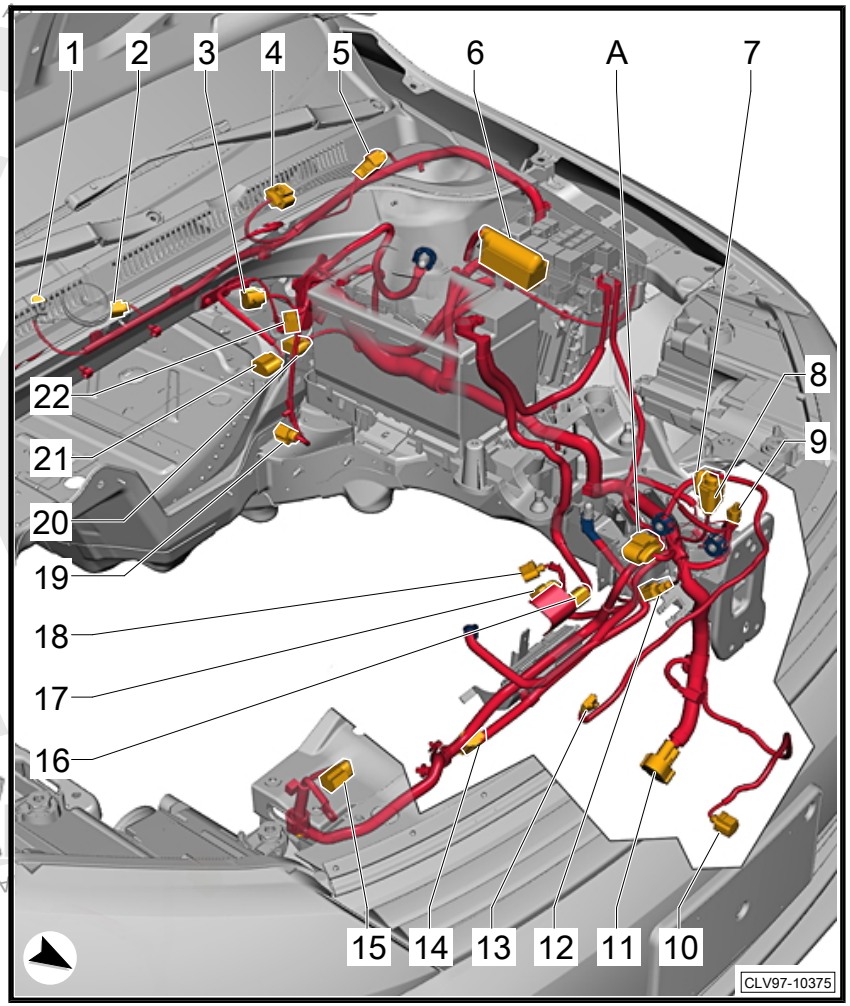

Protected by copyright. Copying for private or commercial purposes, in part or in whole, is not permitted unless authorised by Volkswagen AG. Volkswagen AG.

18 - Back-up lamp switch -F4-

19 - Brake pedal switch -F47-

19 - Brake pedal switch -FX2-

19 - Brake lamp switch -F-

20 - Clutch position sensor -G476-

21 - Brake booster pressure sensor -G294-

21 - Vacuum sensor -G608- not shown.

22 - Brake fluid level warning switch -F34-

A - 14-pin connector -T14-

Protected by copyright. Copying for private or commercial purposes, in part or in whole is not permitted unless authorised by Volkswagen AG. Volkswagen AG does not guarantee or accept any liability with respect to the correctness of information in this document. Copyright by Volkswagen AG.

1.2.3 Engine compartment, driver II

1 - Ground strap, battery to body
12 - Ground connection in engine compartment, left
85 - Ground connection 1 (in engine compartment wiring harness)
108 - Ground connection 2 (in left front wiring harness)
114 - Ground connection (in automatic transmission wiring harness)
131 - Ground connection 2 (in engine compartment wiring harness)
132 - Ground connection 3 (in engine compartment wiring harness)
167 - Ground connection 4 (in engine compartment wiring harness)
179 - Ground connection (in left headlamp wiring harness)
201 - Ground connection 5 (in engine compartment wiring harness)
327 - Sensor ground connection (in engine compartment wiring harness)
328 - Sensor ground connection 2 (in engine compartment wiring harness)
376 - Ground connection 11 (in main wiring harness)
410 - Sensor ground connection 1 (in main wiring harness)
640 - Ground connection 2 in engine compartment, left
652 - Transmission/engine ground connection (not shown) - located on transmission near starter
655 - Ground connection on left headlamp

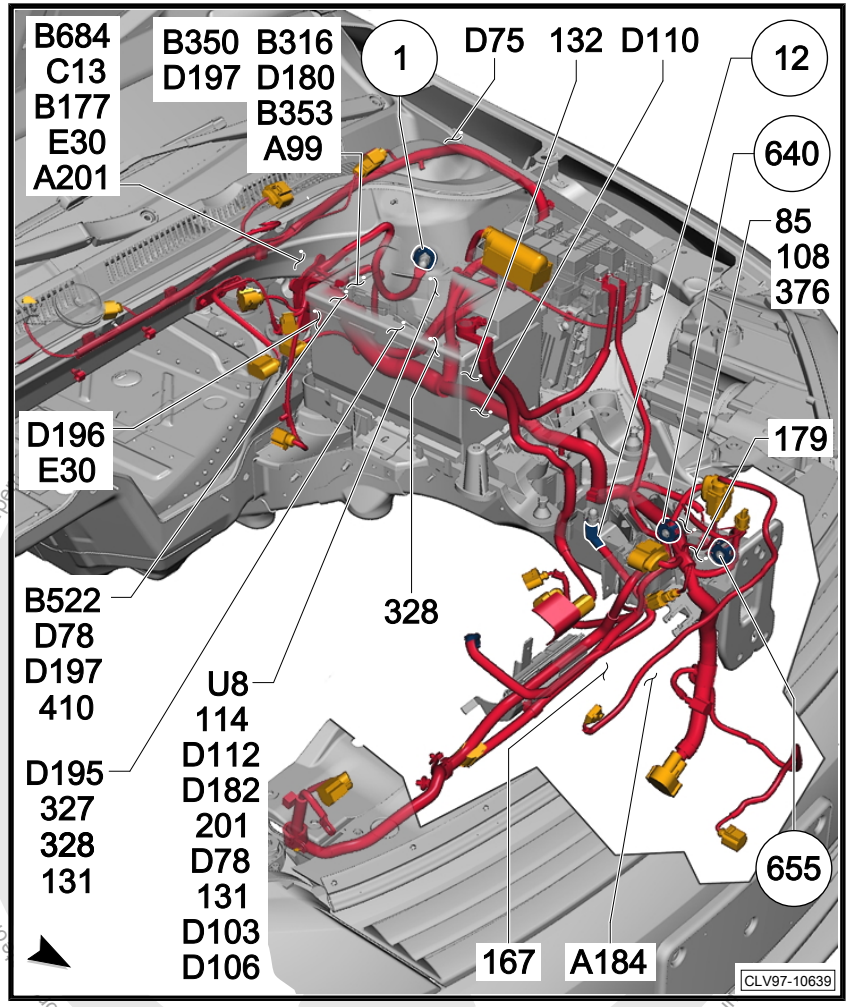

Protected by copyright. Copying for commercial purposes, in part or in whole, is not permitted. Copyright by Volkswagen AG.

1.2.4 Engine compartment, driver III

A99 - Connection 87 (in instrument panel wiring harness) 1
A184 - Hood contact switch connection (in instrument panel wiring harness)
A201 - Positive connection 6 (15a) (in instrument panel wiring harness)
B177 - Connection 61 (in interior wiring harness)
B316 - Positive connection 2 (30a) (in main wiring harness)
B350 - Positive connection 1 (87a) (in main wiring harness)
B353 - Positive connection 4 (87a) (in main wiring harness)
B522 - Fog lamp connection (in main wiring harness)
C13 - Positive connection (in dual tone horn wiring harness)
D75 - Positive connection 2 (30) (in engine compartment wiring harness)
D78 - Positive connection 1 (30a) (in engine compartment wiring harness)
D103 - Connection 3 (in engine compartment wiring harness)
D106 - Connection 4 (in engine compartment wiring harness)
D110 - Connection 8 (in engine compartment wiring harness)
D112 - Connection 10 (in engine compartment wiring harness)
D180 - Connection 87a (in engine compartment wiring harness)
D182 - Connection 87a (in engine compartment wiring harness) 3
D195 - Connection 5V (in engine compartment wiring harness) 1
D196 - Connection 87a (in engine wiring harness) 2
D197 - Connection 87a (in engine compartment wiring harness) 5
E30 - Connection 87a (in engine wiring harness)
U8 - Positive connection (15a) (in automatic transmission wiring harness)

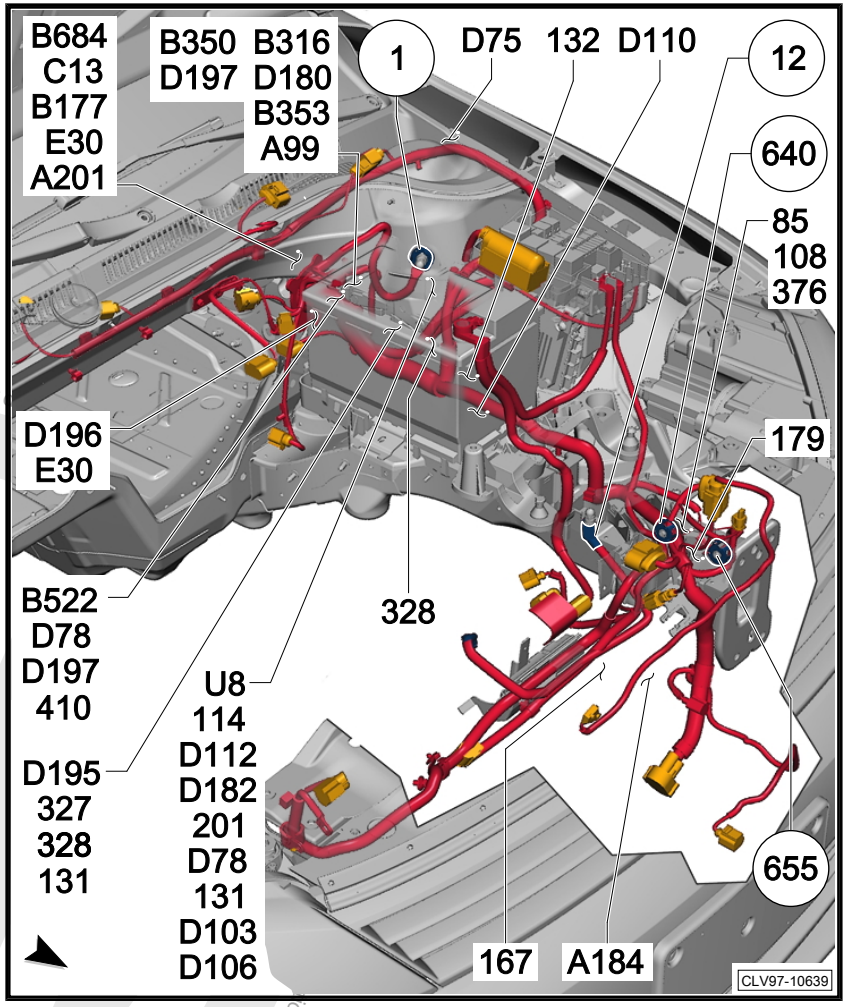

1.3 Transmission

- ⇒ “1.3.1 Manual Transmission 02Q”, page 31
- ⇒ “1.3.2 Manual Transmission 0A4”, page 32

Protected by copyright. Copying for private or commercial purposes, in part or in whole, is not permitted unless authorised by Volkswagen AG. Volkswagen AG does not guarantee or accept any liability with respect to the correctness of information in this document. Copyright by Volkswagen AG.

- ⇒ “1.3.3 Auto. Transmission 02E”, page 33
- ⇒ “1.3.4 Auto. Transmission 0AM/0CG”, page 34
- ⇒ “1.3.5 Auto Transmission 09G”, page 35

1.3.1 Manual Transmission 02Q

1 - Back-up lamp switch -F4-

2 - Starter -B-

12 - Ground connection in engine compartment, left

652 - Transmission/engine ground connection

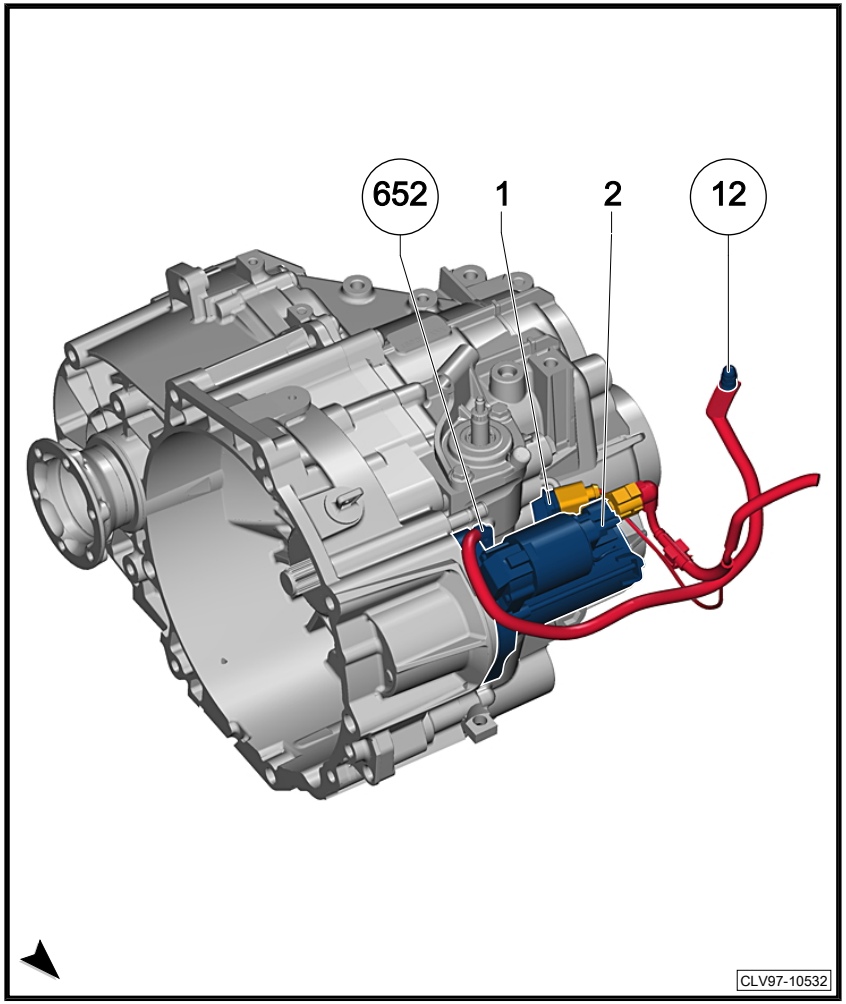

Protected by copyright. Copyright by Volkswagen AG. Volkswagen AG does not guarantee or accept any liability with respect to the correctness of information in this document. Copyright by Volkswagen AG. Protected by copyright. Copying for private or commercial purposes, in part or in whole, is not permitted unless authorised by Volkswagen AG.

1.3.2 Manual Transmission 0A4

1 - Starter -B- - Kl. 50

2 - Back-up lamp switch -F4-

3 - 14-pin connector -T14e-

4 - Starter -B- - Kl. B+ (30)

12 - Ground connection

652 - Transmission/engine ground connection

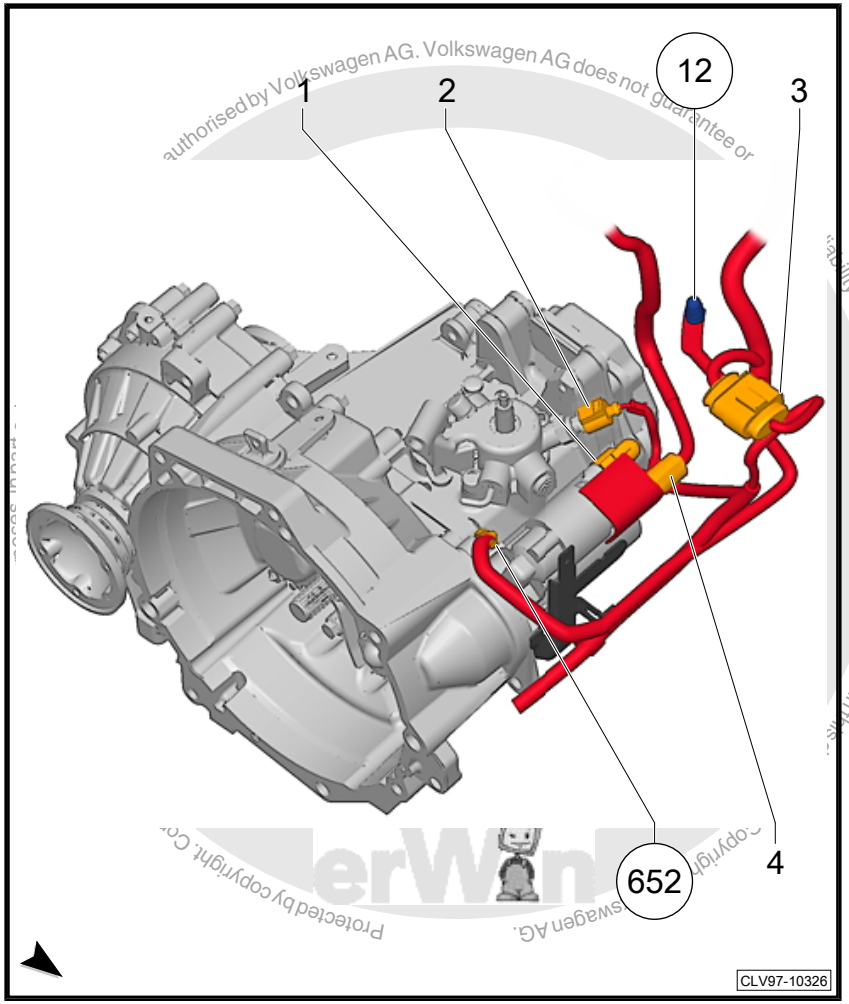

authorised by Volkswagen AG. Volkswagen AG does not guarantee or liability with respect to the correctness of information in this manual.
Protected by copyright. Copyright by Volkswagen AG.

1.3.3 Auto. Transmission 02E

1 - DSG transmission Mechatronic -J743-

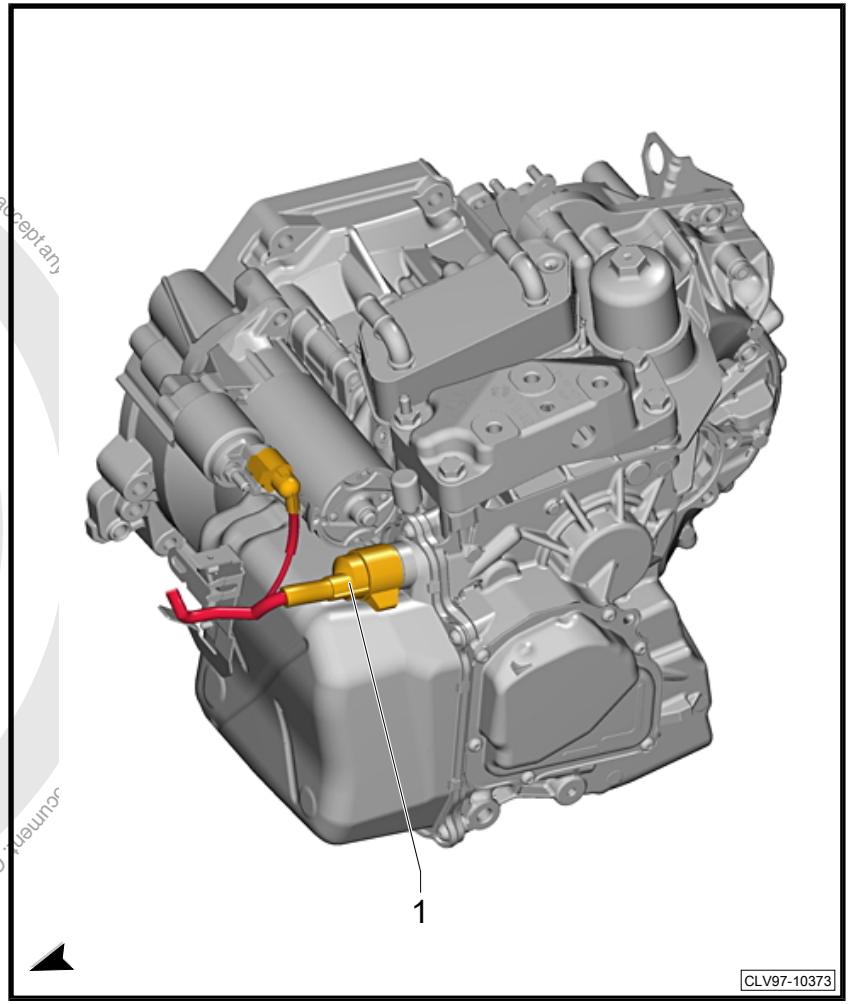

Protected by copyright. Copying for private or commercial purposes, in part or in whole, is not permitted unless authorised by Volkswagen AG. Volkswagen AG does not guarantee or accept any
Copyright by Volkswagen AG.

1.3.4 Auto. Transmission 0AM/0CG

1 - Ground connection
2 - Decoupler pressure actuator -N511-
3 - Double connector -T2ku-
4 - 3-pin connector -T3ht-
5 - Double connector -T2va- for Drive motor temperature sensor -G712-
6 - Drive motor rotor position sensor 1 -G713-
7 - Double connector -T2up-
8 - Brake system vacuum pump -V192-
9 - High temperature circuit coolant pump -V467-

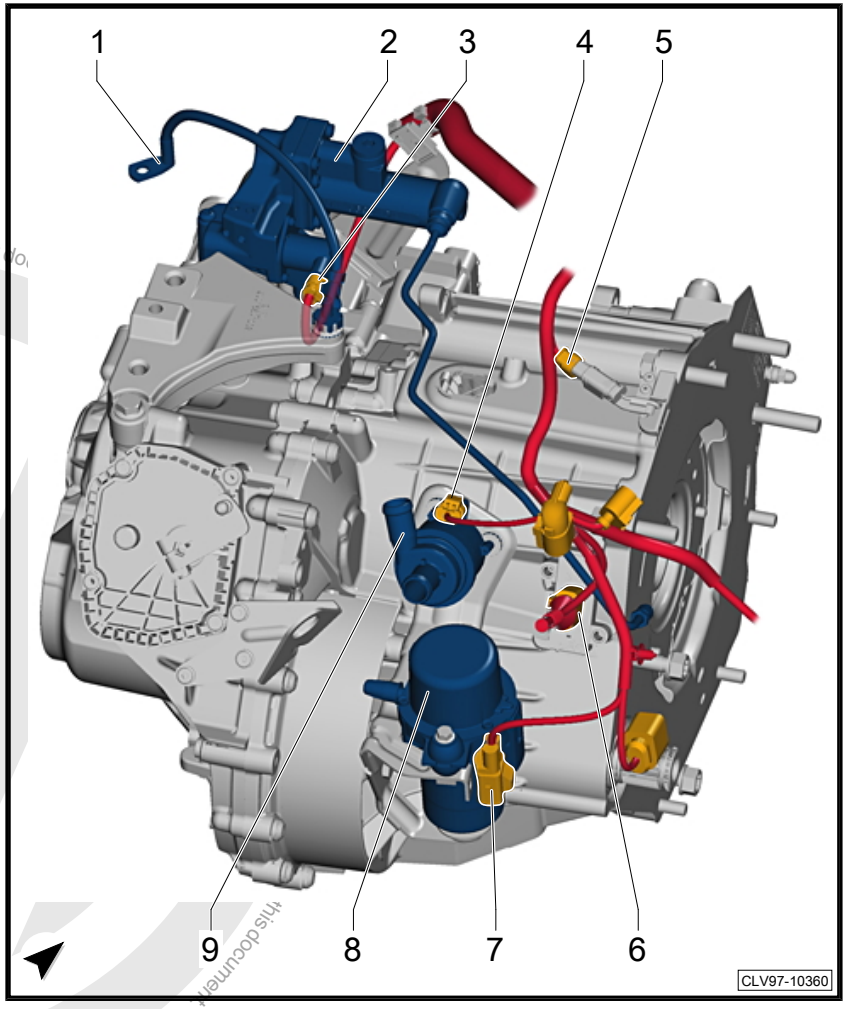

Protected by copyright. Copying for private or commercial purposes, in part or in whole, is not permitted unless authorised by Volkswagen AG. Volkswagen AG do
this document. Copyright by Volkswagen AG.

1.3.5 Auto Transmission 09G

1 - Multifunction transmission range switch -F125-

1 - Brake system vacuum pump -V192-

- located on automatic transmission at front in direction of travel if equipped.

2 - Starter -B-

A - 14-pin connector -T14-

B - 8-pin connector -T8-

B - Transmission input speed sensor -G182- connector

B - Clutch oil temperature sensor -G509- connector

B - Transmission fluid temperature sensor -G93- connector

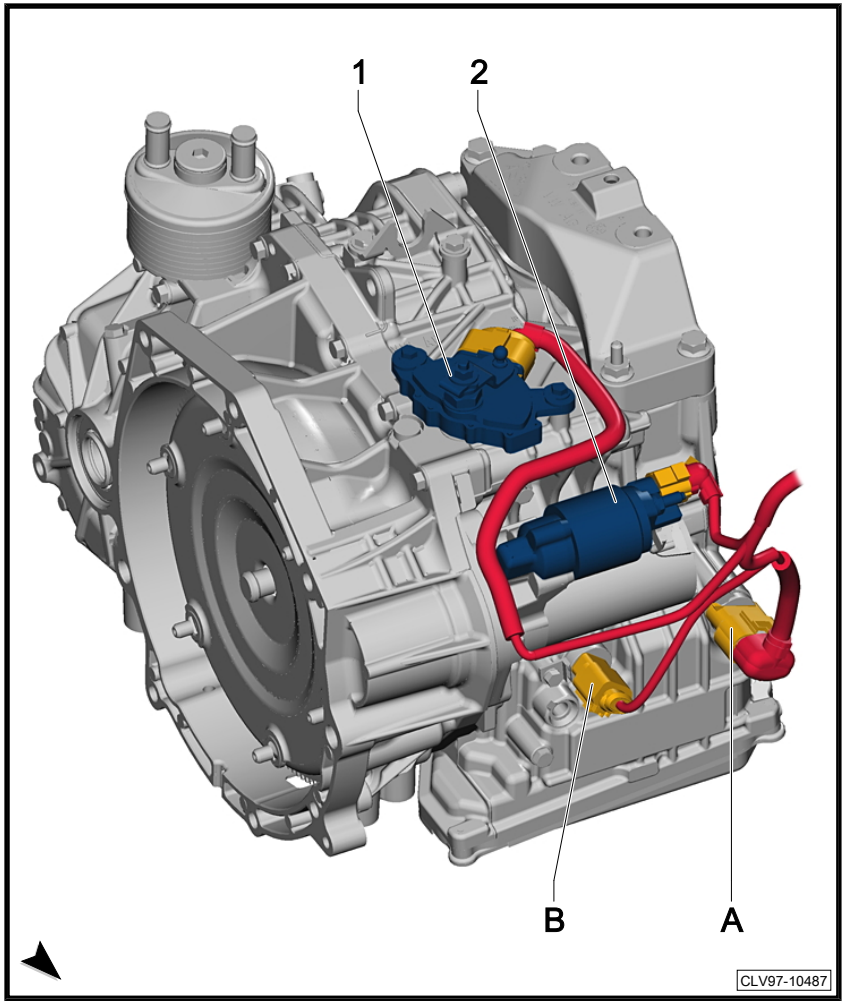

Protected by copyright. Copying for private or commercial purposes, in part or in whole, is not permitted unless authorised by Volkswagen AG. Volkswagen AG does not guarantee or accept any liability with respect to the correctness of information in this document. Copyright by Volkswagen AG.

1.4 Front Bumper

1 - Right front headlamp -MX2-
2 - Engine coolant temperature sensor on radiator outlet -G83-
3 - Converter with socket, 12 V-115 V -U27-
4 - High tone horn -H2-
5 - Outside air temperature sensor -G17-
6 - Windshield washer pump -V5-
7 - Low tone horn -H7-

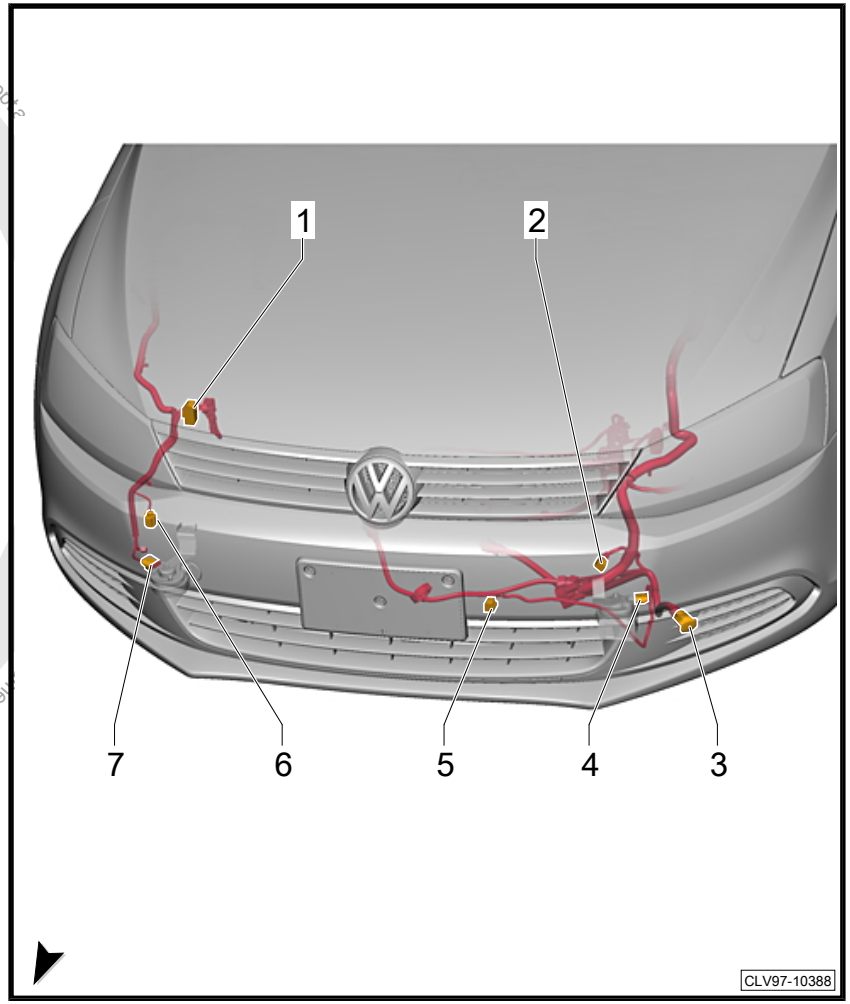

Protected by copyright. Copying for private or commercial purposes, in part or in whole, is not permitted unless authorised by Volkswagen AG. Volkswagen AG does not guarantee or accept any liability with respect to the correctness of information in this document. Copyright by Volkswagen AG.

1.5 Hybrid System

- ⇒ “1.5.1 System Overview”, page 37
- ⇒ “1.5.3 Battery A ”, page 40

- ⇒ “1.5.4 Electric drive power and control electronics ”, page 41
- ⇒ “1.5.5 Remote start connection TV32 ”, page 43
- ⇒ “1.5.6 Electric air conditioner compressor V470 / control unit for air conditioner compressor J842 ”, page 44
- ⇒ “1.5.7 Three-phase current drive ”, page 46

1.5.1 System Overview

DANGER!

High voltage may be deadly!

Note

Read the information before beginning work on the high voltage system (HV) ⇒ Rep. Gr. 93 ; General Information when Working on High Voltage System

Protected by copyright. Copying for private or commercial purposes, in part or in whole, is not permitted unless authorised by Volkswagen AG. Volkswagen AG does not guarantee or accept any liability with respect to the correctness of information in this document. Copyright by Volkswagen AG.

1 - Battery fan 1 -V457-
- ❑ Component location: inside the luggage compartment on the front passenger side

2 - Hybrid battery unit -AX1-
- ❑ Component location: in the luggage compartment

2 - hybrid battery -A38-

2 - battery regulation control unit -J840-

3 - Battery -A- ⇒ page 40

4 - Hybrid battery high voltage wiring harness -PX1-

5 - Electric drive power and control electronics -JX1- ⇒ page 41

6 - Remote start connection -TV32- ⇒ page 43

7 - Drive motor high voltage wiring harness -PX2- ⇒ page 46

8 - Three-phrase current drive -VX54- ⇒ page 46

8 - Electro-drive drive motor -V141-

9 - A/C compressor control module -J842- ⇒ page 44

9 - Electric air conditioner compressor -V470-

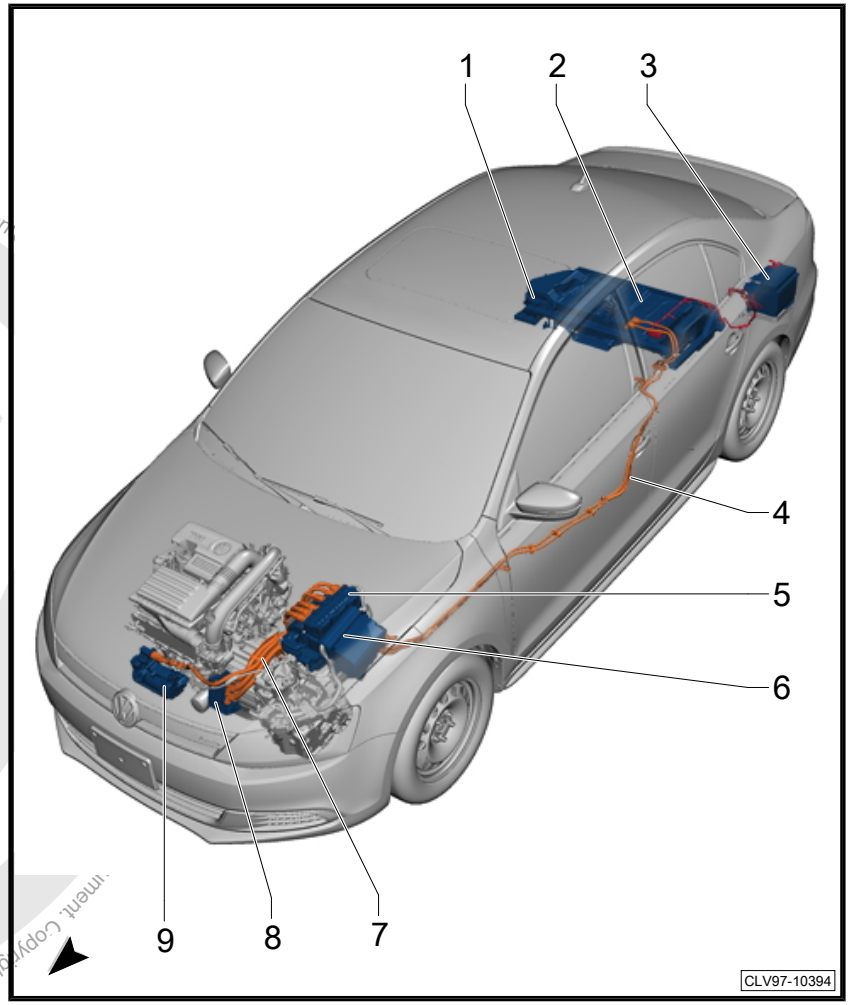

Protected by copyright. Copying for private or commercial purposes, in part or whole, is not permitted unless authorised by Volkswagen AG. Volkswagen AG does not guarantee the accuracy of this information. Copyright by Volkswagen AG.

1.5.2 High Voltage Battery

⚠ DANGER!

High voltage may be deadly!

Note

Read the information before beginning work on the high voltage system (HV) ⇒ Rep. Gr. 93 ; General Information when Working on High Voltage System

For private or commercial purposes, in part or in whole, is not permitted unless authorised by Volkswagen AG. Volkswagen AG does not guarantee or accept

1 - Hybrid battery high voltage cable, positive terminal

1 - Hybrid battery high voltage cable, negative terminal

2 - Pilot line connector 1 -TV44-

3 - High voltage system maintenance connector -TW-

4 - Terminal 30 wire junction -TV2-

5 - 4-pin connector -T4lh-

6 - Hybrid battery unit

701 - Ground connection in luggage compartment

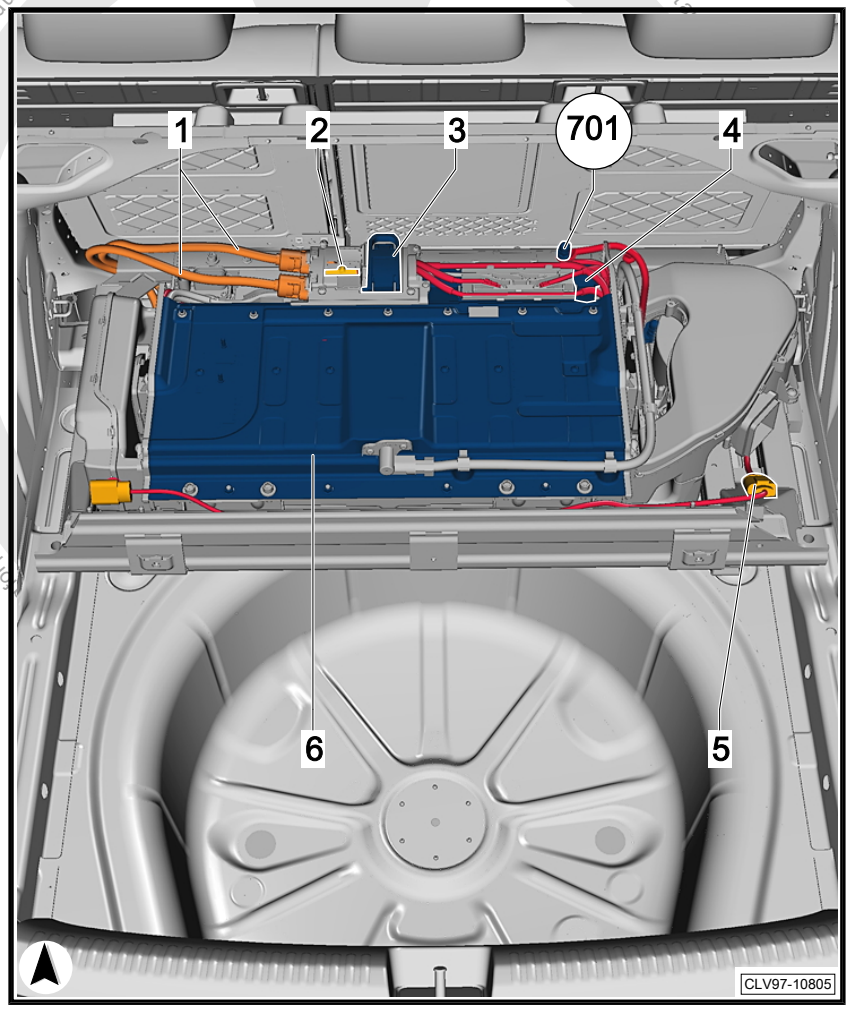

1.5.3 Battery -A-

DANGER!

High voltage may be deadly!

Note

Read the information before beginning work on the high voltage system (HV) ⇒ Rep. Gr. 93 ; General Information when Working on High Voltage System

Only for models with high-voltage system (hybrid).

Protected by copyright. Copying for private or commercial purposes, in part or in whole, is not permitted unless authorised by Volkswagen AG. Volkswagen AG does not guarantee or accept any liability with respect to the correctness of information in this document. Copyright by Volkswagen AG.

1 - Fuse 1 (terminal 30) on battery fuse panel -S162-

2 - Fuse 2 (terminal 30) on battery fuse panel -S163-

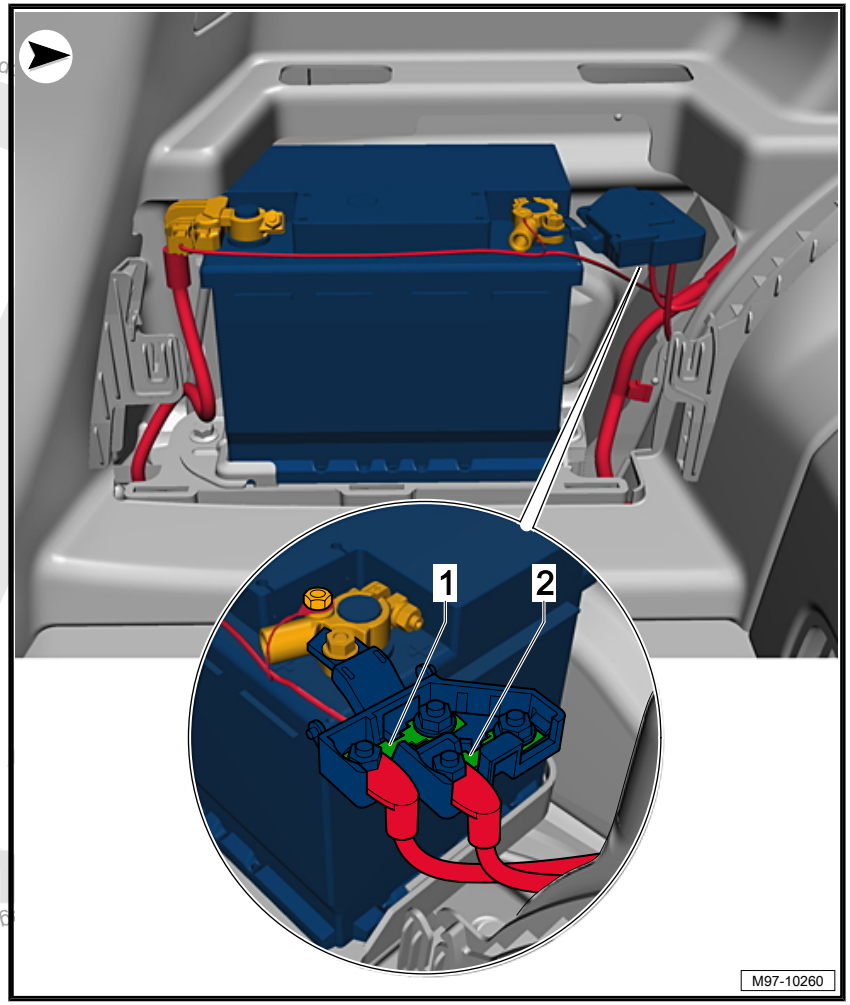

Protected by copyright. Copying for private or commercial purposes, in part or in whole, is not permitted unless authorised by Volkswagen AG. Volkswagen AG

1.5.4 Electric drive power and control electronics

DANGER!

High voltage may be deadly!

Protected by copyright. Copying for private or commercial purposes, in part or in whole, is not permitted unless authorised by Volkswagen AG. Volkswagen AG does not guarantee or accept any liability

Note

Read the information before beginning work on the high voltage system (HV) ⇒ Rep. Gr. 93 ; General Information when Working on High Voltage System

1 - Electric drive power and control electronics

1 - Drive motor inverter -A37-

1 - Electrical drive control module -J841-

1 - Voltage converter -A19-

2 - Hybrid battery high voltage cable, negative terminal -P2-

3 - Hybrid battery high voltage cable, positive terminal -P1-

4 - Electrical A/C compressor high voltage cable -P3-

5 - Drive motor high voltage cable 1 -P4-

6 - drive motor high voltage cable 2 -P5-

7 - drive motor high voltage cable 3 -P6-

8 - Hybrid battery high voltage cable, positive terminal -P1-

9 - B1

10 - 28-pin connector -T28jx-

1 - Ground strap, battery to body

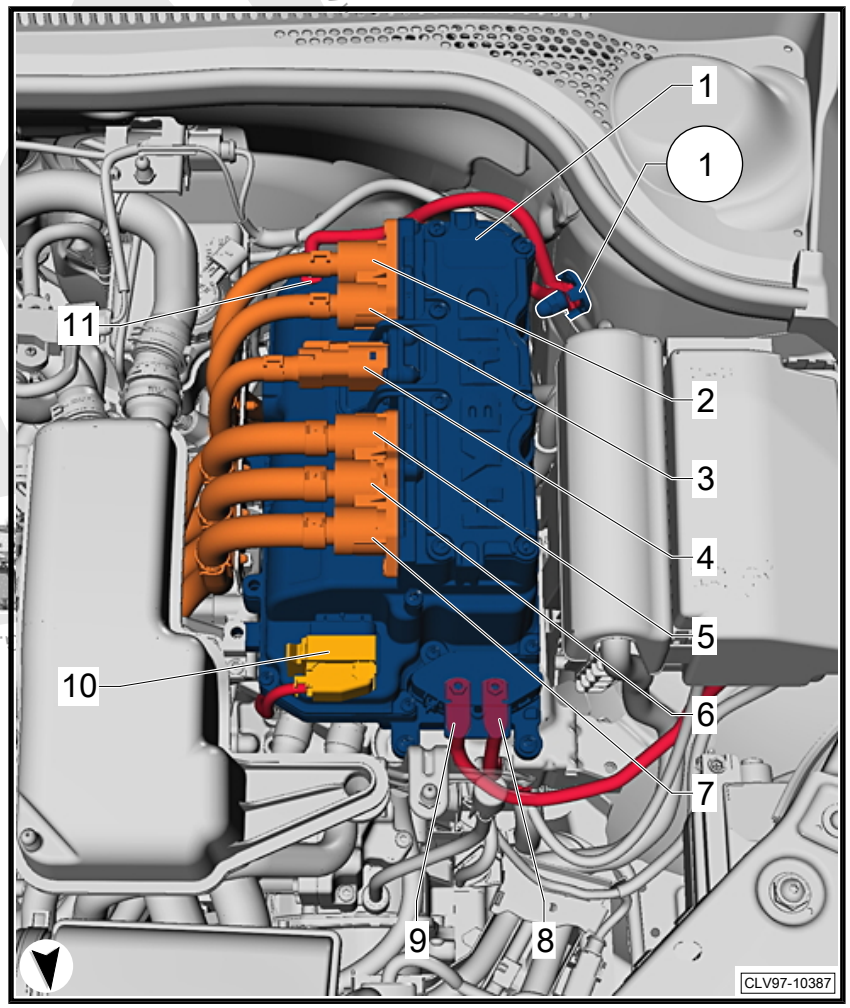

1.5.5 Remote start connection -TV32-

DANGER!

High voltage may be deadly!

Note

Read the information before beginning work on the high voltage system (HV) ⇒ Rep. Gr. 93 ; General Information when Working on High Voltage System

Protected by copyright. Copying for private or commercial purposes, in part or in whole, is not permitted unless authorised by Volkswagen AG. Volkswagen AG does not guarantee or accept any liability with respect to the correctness of information in this document. Copyright by Volkswagen AG.

- Remote start connection -TV32- , on the E-Box, -arrow-

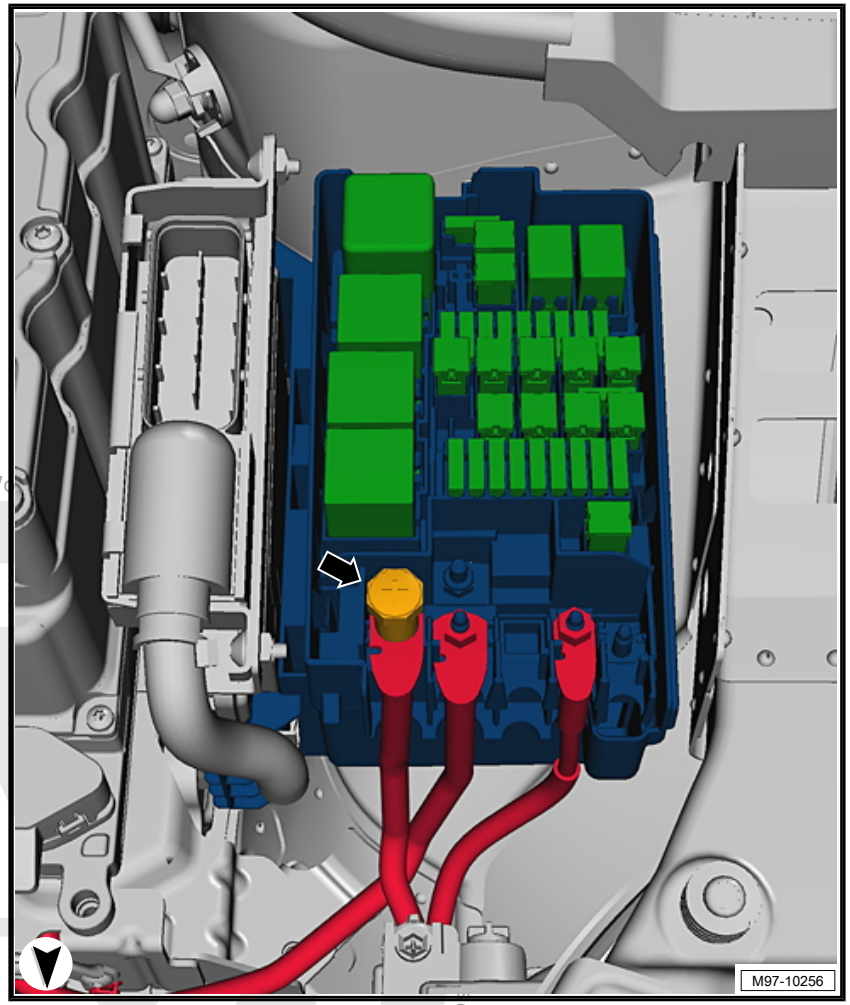

1.5.6 Electric air conditioner compressor -V470- / control unit for air conditioner compressor -J842-

DANGER!

High voltage may be deadly!

Protected by copyright. Copying for private or commercial purposes, in part or in whole, is not permitted unless authorised by Volkswagen AG. Copyright by Volkswagen AG.

Note

Read the information before beginning work on the high voltage system (HV) ⇒ Rep. Gr. 93 ; General Information when Working on High Voltage System

A - Drive motor high voltage wiring harness -PX2-

B - Three-phrase current drive

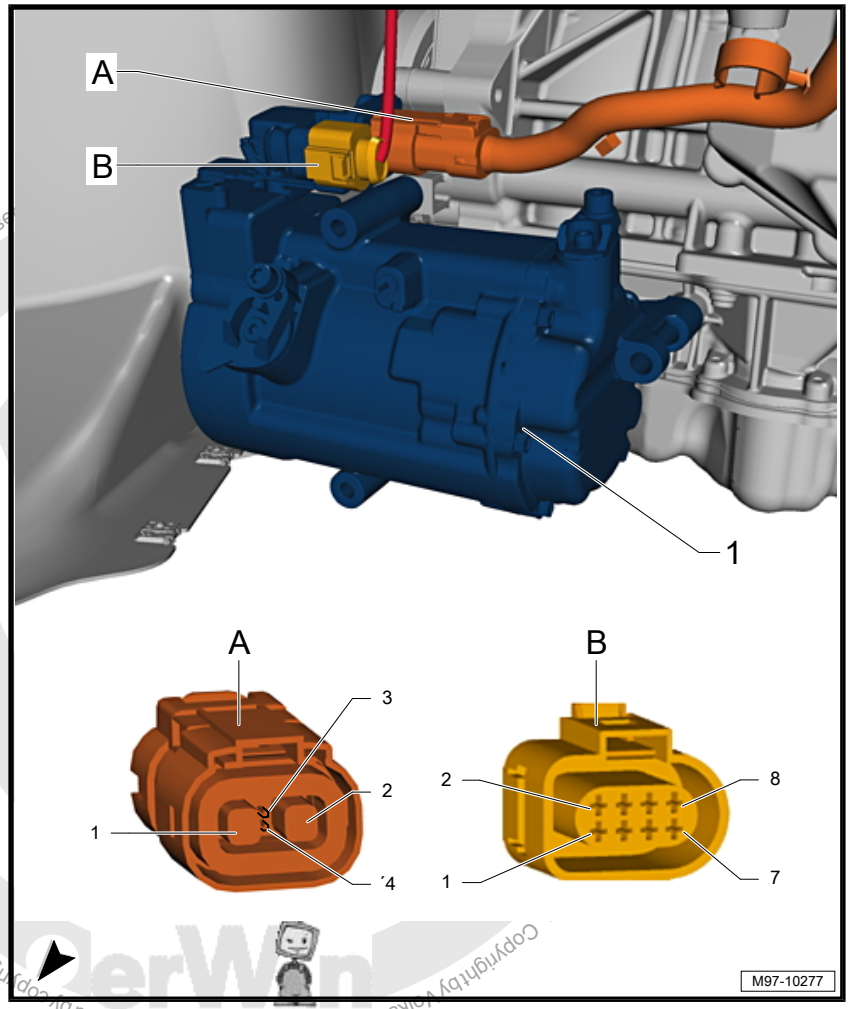

Protected by copyright. Copying for private or commercial purposes, in part or in whole, is not permitted unless authorised by Volkswagen AG.

1.5.7 Three-phase current drive

DANGER!

High voltage may be deadly!

Note

Read the information before beginning work on the high voltage system (HV) ⇒ Rep. Gr. 93 ; General Information when Working on High Voltage System

Protected by copyright. Copying for private or commercial purposes, in part or in whole, is not permitted unless authorised by Volkswagen AG. Volkswagen AG does not guarantee or accept any liability with respect to the correctness of information in this document. Copyright by Volkswagen AG.

1 - Drive motor high voltage cable 1 -P4-

2 - Drive motor high voltage cable 2 -P5-

3 - Drive motor high voltage cable 3 -P6-

4 - Three-phrase current drive

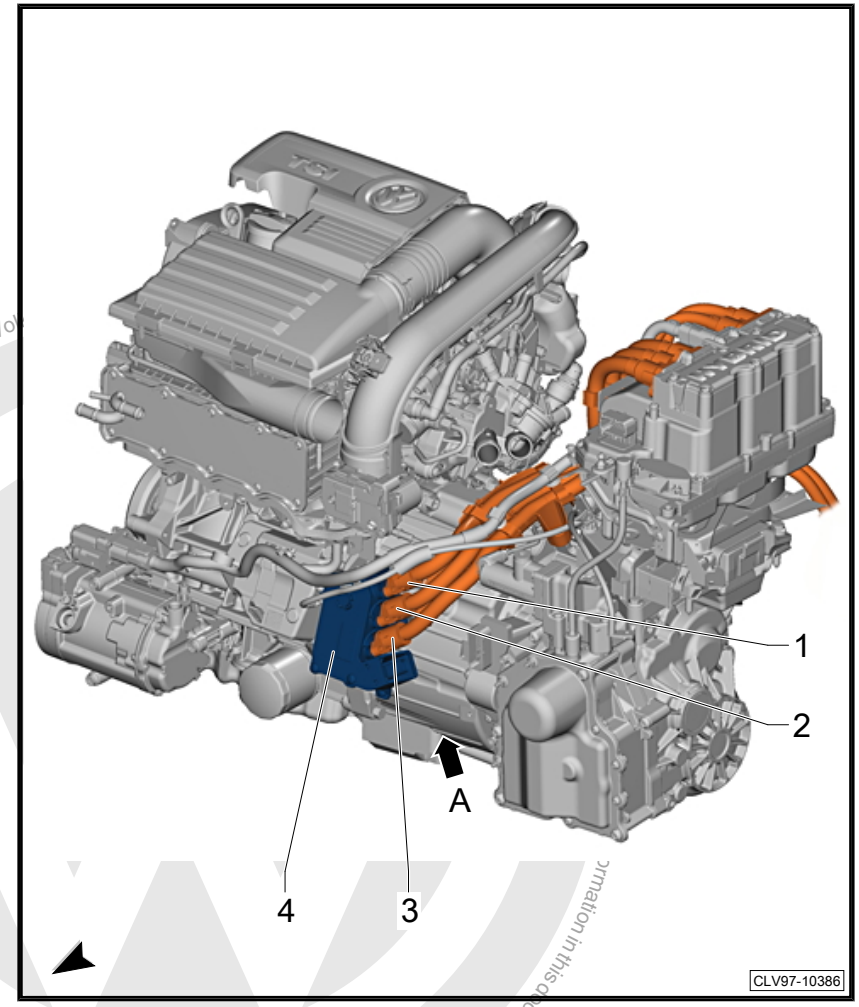

04/1/2014

Protected by copyright. Copying for private or commercial purposes, in part or in whole, is not permitted unless authorised by Volkswagen AG. Copyright by Volkswagen AG.

1 Component Locations: Vehicle Rear

- ⇒ “1.1 Luggage Compartment”, page 1
- ⇒ “1.2 Trunk Lid”, page 4
- ⇒ “1.3 Bumper”, page 5

1.1 Luggage Compartment

- ⇒ “1.1.1 Luggage Compartment - Left Side”, page 1
- ⇒ “1.1.2 Luggage Compartment - Right Side”, page 3

1.1.1 Luggage Compartment - Left Side

Protected by copyright. Copying for private or commercial purposes, in part or in whole, is not permitted unless authorised by Volkswagen AG. Volkswagen AG does not guarantee or accept any liability with respect to the correctness of information in this document. Copyright by Volkswagen AG.

1 - Left tail lamp -MX3-

2 - Auxiliary heater antenna -R182-

2 - Auxiliary engine coolant heater radio frequency receiver -R149-

3 - Driver side rear seat belt tensioner igniter -N196-

4 - 12 V socket 2 -U18-

5 - Vehicle positioning system control module -J895-

6 - Subwoofer -R211-

7 - Towing recognition control module -J345-

8 - 16-pin connector -T16f-

9 - Vehicle GPS antenna 1 -R259- Connection

10 - Vehicle GPS antenna 2 -R260- Connection

11 - Auxiliary engine coolant heater radio frequency receiver -R149-

86 - Ground connection 1 (in rear wiring harness)

430 - Ground connection in trailer hitch wiring harness

431 - Ground connection 2

662 - Ground connection in left rear side panel

624 - Ground connection near starter battery

816 - Ground connection 1 in Hybrid System wiring harness

B180 - Rear window defogger connection

B324 - Positive connection 10 (30a)

X4 - CAN bus Hybrid high connection 1 (in engine compartment wiring harness)

X5 - CAN bus Hybrid low connection 1 (in engine compartment wiring harness)

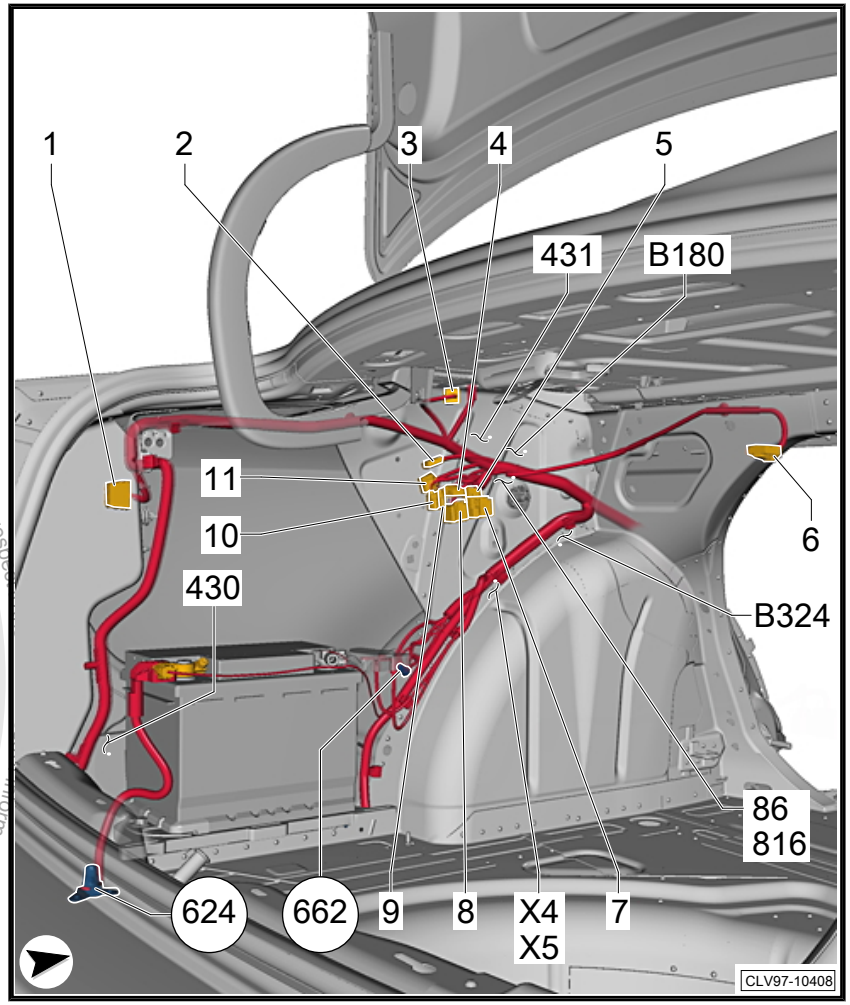

Protected by copyright. Copying prohibited. Copyright by Volkswagen AG.
Information in this document. Copyright by Volkswagen AG. Volkswagen AG does not guarantee or accept any liability with respect to the information in this document. Copyright by Volkswagen AG. Volkswagen AG does not guarantee or accept any liability with respect to the information in this document. Copyright by Volkswagen AG.

1.1.2 Luggage Compartment - Right Side

1 - Passenger side rear seat belt tensioner igniter -N197-
2 - Fuel filler door unlock motor -V155-
2 - Fuel filler cap detection switch -F334-
3 - Right tail lamp -MX4-
4 - Leak detection pump -V144-
4 - EVAP canister purge regulator valve 2 -N115- not shown
87 - Ground connection 2 (in rear wiring harness)
196 - Ground connection 3 (in rear wiring harness)
391 - Ground connection 26 (in main wiring harness)
681 - Ground connection 1 in right rear side panel
682 - Ground connection 2 in right rear side panel
B722 - Central locking connection 3 (in main wiring harness)

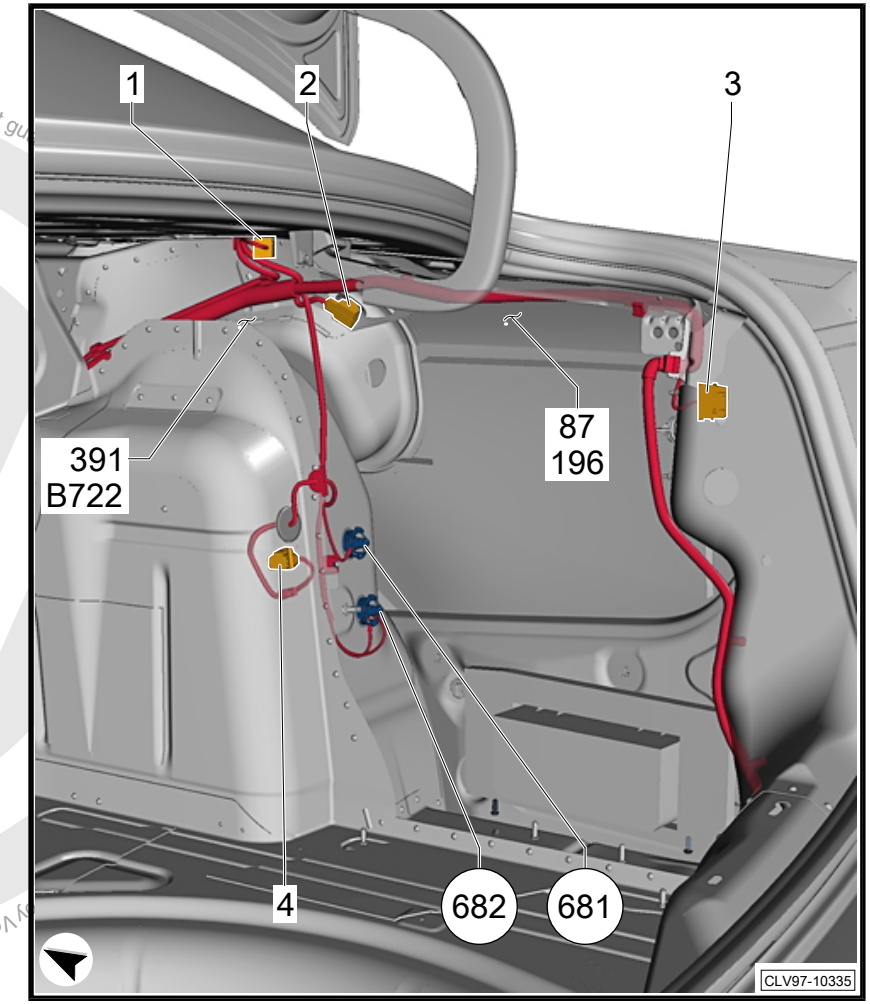

Protected by copyright. Copying for private or commercial purposes, in part or in whole, is not permitted unless authorised by Volkswagen AG. Volkswagen AG does not guarantee the accuracy of the information.

1.2 Trunk Lid

1 - Compass magnetic field sensor -G197-
2 - Right tail lamp 2 -MX6-
3 - Rearview camera -R189-
4 - License plate lamp -X-
5 - Rear lid lock unit -F256-
5 - Rear lid central locking system motor -V53-
5 - Rear lid opening motor -V254-
5 - Luggage compartment lamp switch -F5-
5 - Rear lid lock/alarm/central locking switch -F124-
6 - Left tail lamp 2 -MX5-
437 - Ground connection (in license plate lamp wiring harness)
B128 - Luggage compartment lamp connection
W41 - Positive connection (58)

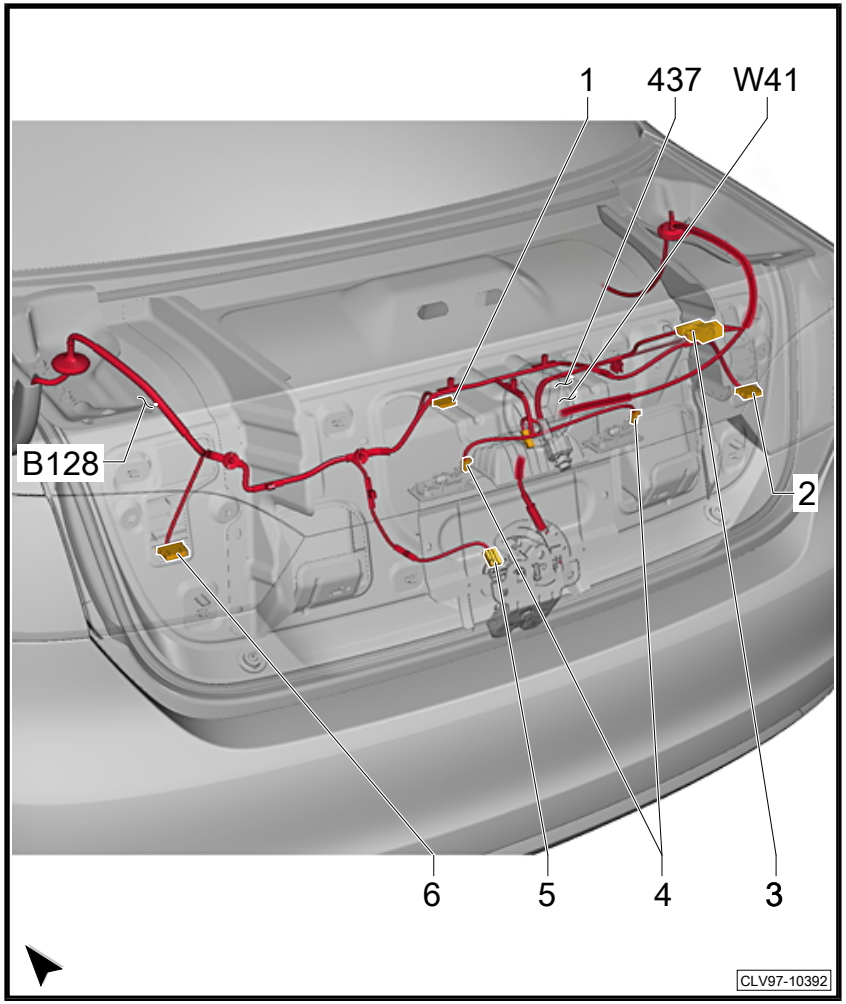

Protected by copyright. Copying for private or commercial purposes, in part or in whole, is not permitted unless authorised by Volkswagen AG. Volkswagen AG does not guarantee or accept any liability with respect to the correctness of information in this document. Copyright by Volkswagen AG.

1.3 Bumper

1 - Vehicle GPS antenna 2 -R260-

2 - Vehicle GPS antenna 1 -R259-

3 - Access/start system antenna in rear bumper -R136-

4 - Trailer socket -U10-

196 - Ground connection 3 (in rear wiring harness)

87 - Ground connection 2 (in rear wiring harness)

A - 6-pin connector -T6af-

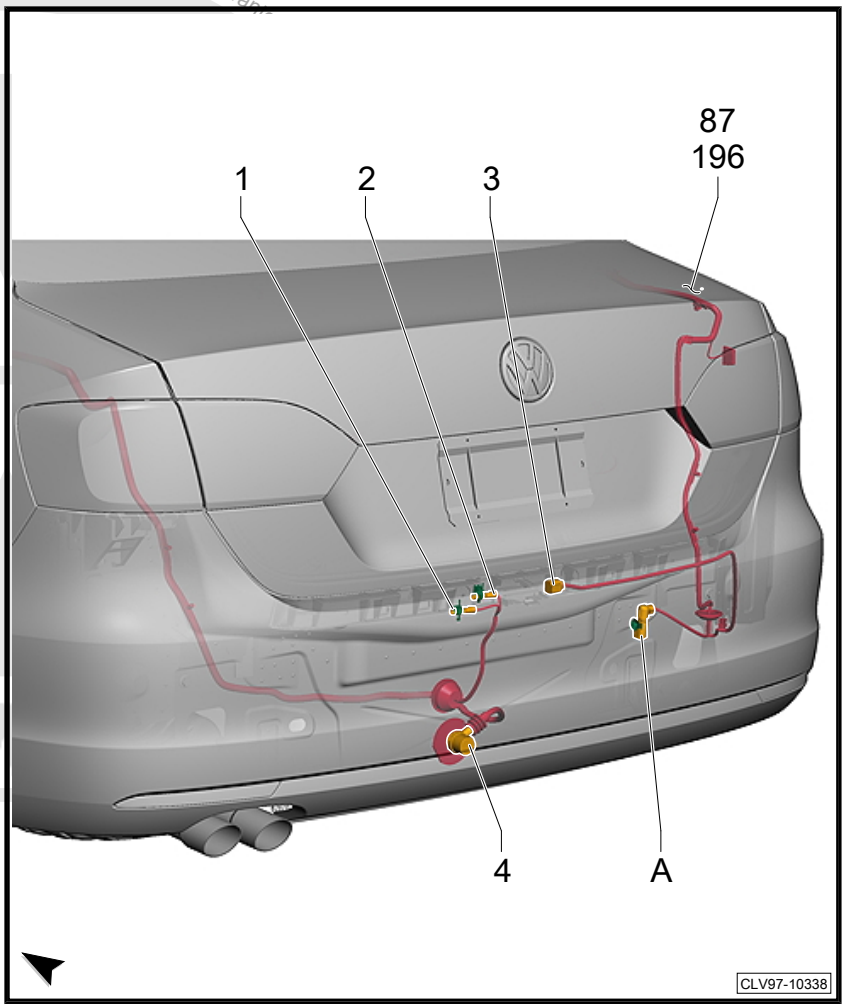

Protected by copyright. Copying for private or commercial purposes, in part or in whole, is not permitted unless authorised by Volkswagen AG. Volkswagen AG does not guarantee

1 Component Locations: Vehicle Cabin

- ⇒ “1.1 Instrumentation”, page 1
- ⇒ “1.2 HVAC ”, page 12
- ⇒ “1.3 A/B Pillar, Left”, page 16
- ⇒ “1.4 A/B Pillar, Right”, page 19
- ⇒ “1.5 C Pillar, Left”, page 20
- ⇒ “1.6 C Pillar, Right”, page 21
- ⇒ “1.7 Floor”, page 22
- ⇒ “1.8 Door, LF”, page 23
- ⇒ “1.9 Door, RF”, page 24
- ⇒ “1.10 Door, LR”, page 25
- ⇒ “1.11 Door, RR”, page 26
- ⇒ “1.12 Roof”, page 26

1.1 Instrumentation

- ⇒ “1.1.1 Instrument Panel, Center”, page 1
- ⇒ “1.1.2 Instrument Panel, Right I”, page 4
- ⇒ “1.1.3 Instrument Panel, Right II”, page 5
- ⇒ “1.1.4 Instrument Panel, Left I”, page 6
- ⇒ “1.1.5 Instrument Panel, Left II”, page 7
- ⇒ “1.1.6 Instrument Panel, Left III”, page 8
- ⇒ “1.1.7 Steering, Part I”, page 10
- ⇒ “1.1.8 Steering, Part II”, page 11
- ⇒ “1.1.9 Steering, Part III”, page 12

1.1.1 Instrument Panel, Center

Protected by copyright. Copying for private or commercial purposes, in part or in whole, is not permitted unless authorised by Volkswagen AG. Volkswagen AG does not guarantee or accept any liability with respect to the correctness of information in this document. Copyright by Volkswagen AG.

1 - Instrument cluster control module -J285-

1 - Anti-theft immobilizer control module -J362-

2 - Left footwell vent temperature sensor connection

3 - Access/start authorization control module -J518-

4 - Data bus on board diagnostic interface -J533-

5 - 16-pin connector -T16d-

5 - Radio -R-

6 - Radio -R-

7 - Radio/navigation display unit control module -J503-

8 - 26-pin connector -T26a-

9 - Antennas connectors

10 - Antennas connectors

11 - Antennas connectors

12 - Antennas connectors

13 - Telephone antenna connection

14 - AM/FM antenna connection (optional)

15 - GPS antenna -R50- connection

16 - Climatronic control module -J255-

16 - A/C control module -J301-

16 - Heater control module -J162-

17 - Front passenger airbag -disabled- indicator lamp -K145-

18 - Climatronic control module -J255-

18 - A/C control module -J301-

370 - Ground connection 5 (in main wiring harness)

371 - Ground connection 6 (in main wiring harness)

388 - Ground connection 23 (in main wiring harness)

A - 10-pin connector -T10m-

A178 - Infotainment CAN bus high connection (in instrument panel wiring harness)

A179 - Infotainment CAN bus low connection (in instrument panel wiring harness)

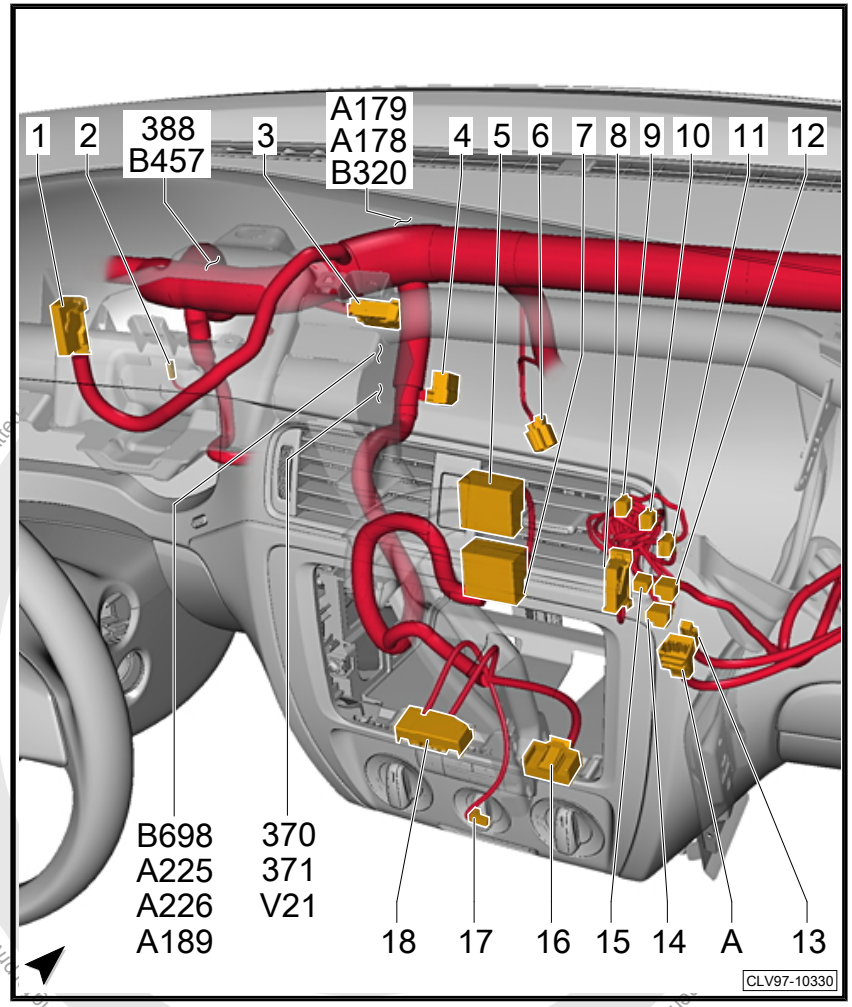

Protected by copyright. Copyright by Volkswagen AG.

A189 - Positive connection 5 (30a) (in instrument panel wiring harness)

A225 - Infotainment CAN bus high connection 2 (in instrument panel wiring harness)

A226 - Infotainment CAN bus low connection 2 (in instrument panel wiring harness)

B320 - Positive connection 6 (30a) (in main wiring harness)

B457 - Position sensor connection 1 (in main wiring harness)

B698 - LIN bus connection 3 (in main wiring harness)

V21 - Positive connection (30) (in wiring radio/amplifier wiring harness)

Protected by copyright. Copying for private or commercial purposes, in part or in whole, is not permitted unless authorised by Volkswagen AG. Volkswagen AG does not guarantee or accept any liability with respect to the correctness of information in this document. Copyright by Volkswagen AG.

1.1.2 Instrument Panel, Right I

1 - Sunlight photo sensor -G107-

1 - Sunlight photo sensor 2 -G134-

2 - Glove compartment lamp switch -E26-

3 - Right vent temperature sensor -G151-

4 - Cornering lamp and headlamp range control module -J745-

5 - Glove compartment lamp -W6-

5 - Cell phone operating electronics control module -J412- , not shown.

- ❑ Alternate location depending on equipment ⇒ Item 10 (page 22)

6 - Front passenger airbag igniter 1 -N131-

6 - Front passenger airbag igniter 2 -N132-

7 - Multimedia system control module -J650-

7 - Telephone baseplate -R126- , not shown. Located near J650.

8 - Voltage stabilizer -J532-

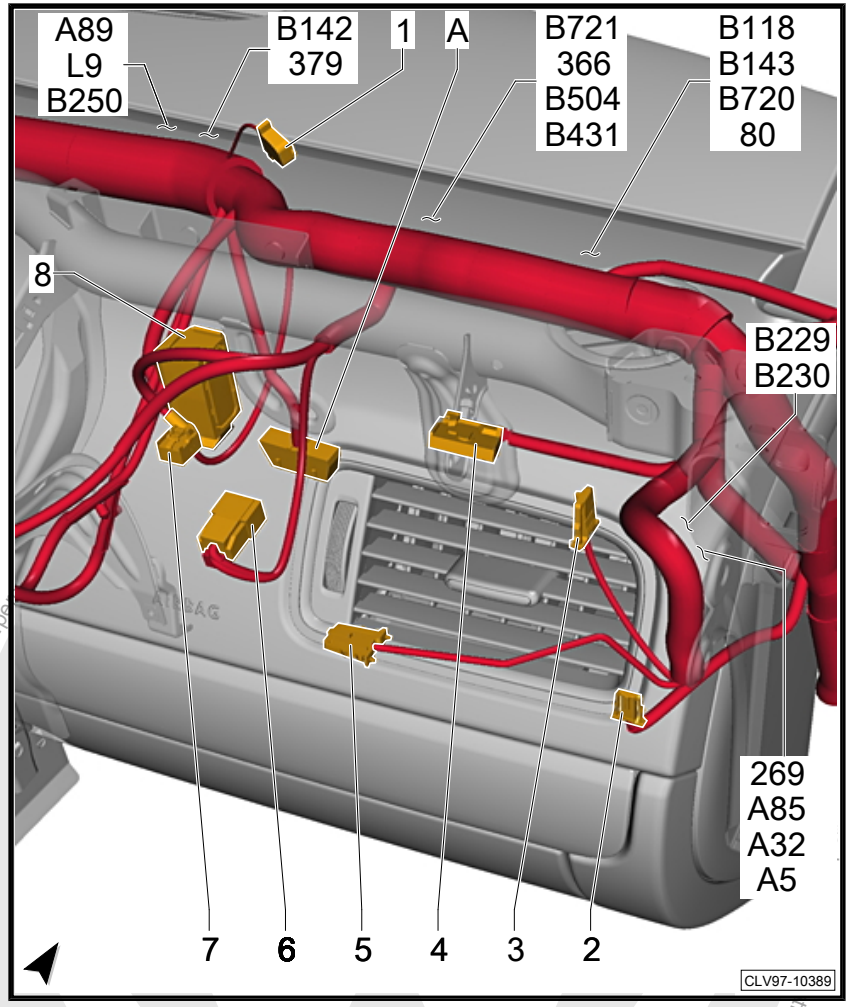

Protected by copyright. Copying for private or commercial purposes, in part or in whole, is not permitted unless authorized by Volkswagen AG. Copyright by Volkswagen AG.

1.1.3 Instrument Panel, Right II

80 - Ground connection 1 (in instrument cluster wiring harness)
269 - Sensor ground connection 1 (in instrument panel wiring harness)
366 - Ground connection 1 (in main wiring harness)
379 - Ground connection 14 (in main wiring harness)
A - 10-pin connector -T10a-
A5 - Right turn signal positive connection (in instrument panel wiring harness)
A32 - Positive connection (30) (in instrument panel wiring harness)
A85 - Connection 58R (in instrument panel wiring harness)
A89 - Connection 54 (in instrument panel wiring harness) 2
B118 - Driver seat adjustment connection (in interior wiring harness)
B142 - Positive connection 2 (56a) (in interior wiring harness)
B143 - Positive connection (58R) (in interior wiring harness)
B229 - High bus connection (in interior wiring harness)
B230 - Low bus connection (in interior wiring harness)
B250 - Positive connection (in roof wiring harness)
B431 - Seat heating connection (in main wiring harness)
B504 - Positive connection 8 (30a) (in interior wiring harness)
B720 - Central locking connection 1 (in main wiring harness)
B721 - Central locking connection 2 (in main wiring harness)
L9 - Connection 1 (in A/C system wiring harness)

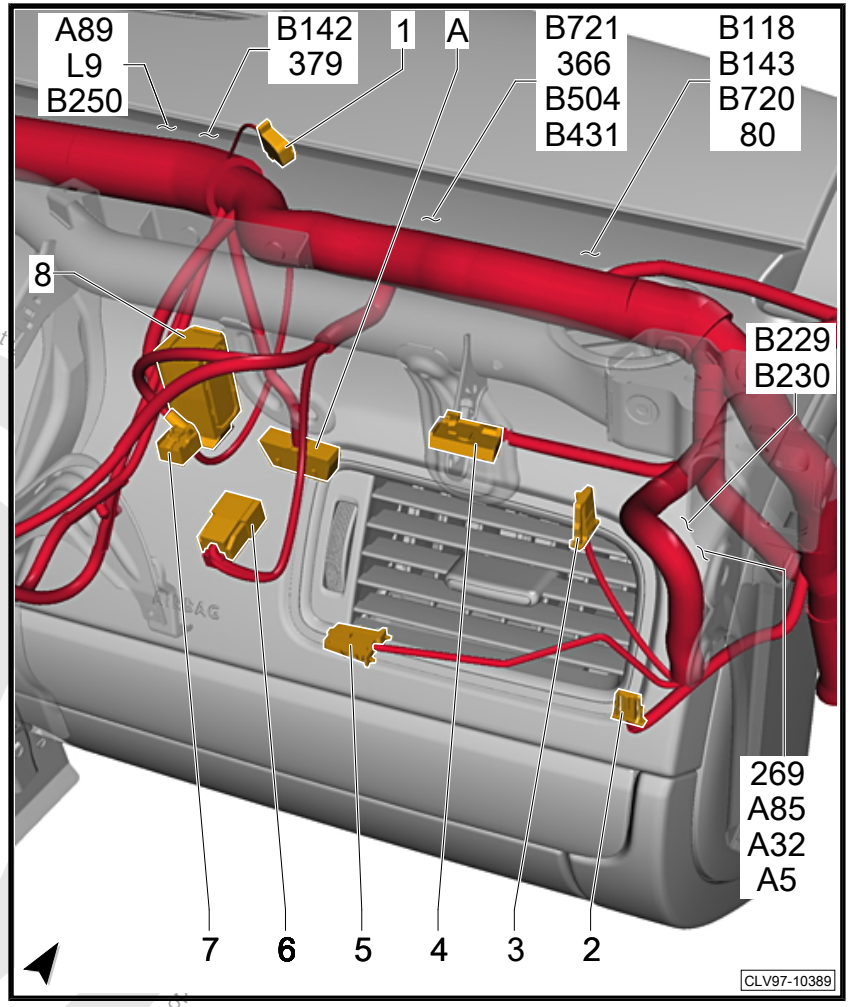

Protected by copyright. Copying for private or commercial purposes, in part or in whole, is not permitted unless authorised by Volkswagen AG. Volkswagen AG does not guarantee the accuracy of this document. Copyright by Volkswagen AG.

1.1.4 Instrument Panel, Left I

1 - Vehicle electrical system control module -J519-
2 - Vehicle electrical system control module -J519-
3 - Vehicle electrical system control module -J519-
4 - Parking aid control module -J446-
5 - Parking aid control module -J446-
6 - Parking aid control module -J446-
7 - Driver power seat adjustment circuit breaker 1 -S44-
8 - Left vent temperature sensor -G150- Climatronic only
8 - Center vent temperature sensor -G191- Climatic only
9 - Relays carrier
9 - Front parking aid warning buzzer -H22- not shown. Located under carrier.
10 - Fuse panel C (SC)
11 - 16-pin connector -T16-
12 - 16-pin connector -T16-

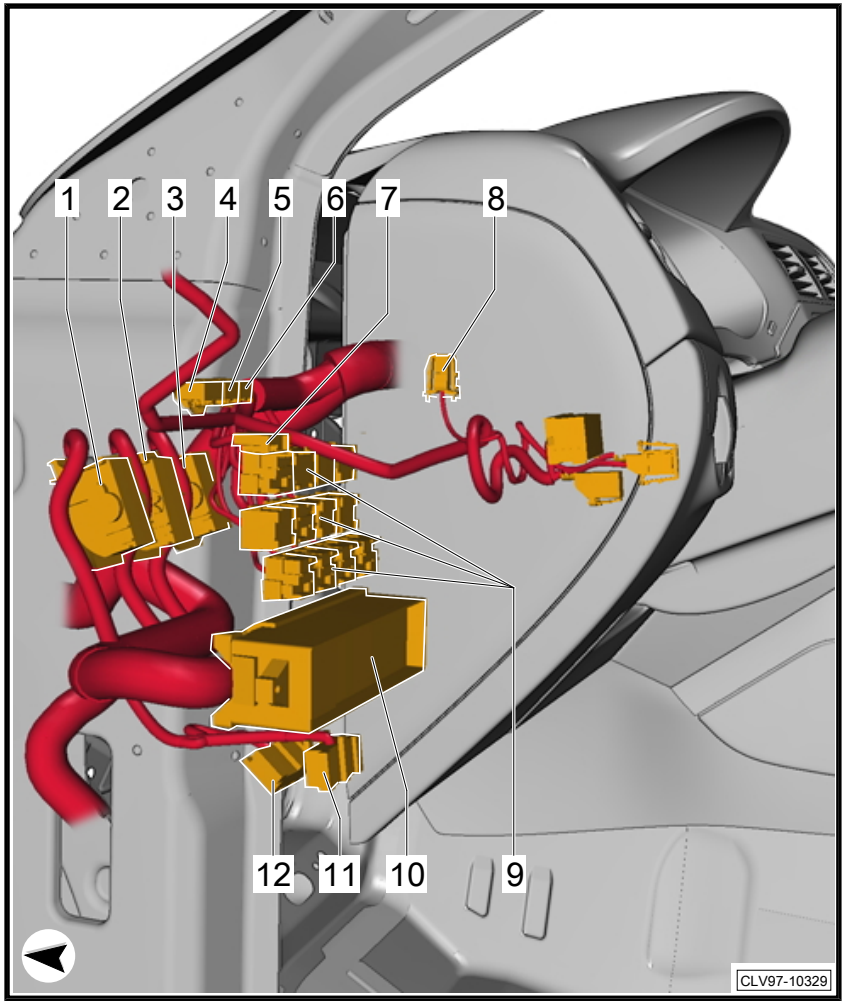

Protected by copyright. Copying for private or commercial purposes, in part or in whole, is not permitted unless authorised by Volkswagen AG. Volkswagen AG does not guarantee or accept any liability with respect to the correctness of information in this document. Copyright by Volkswagen AG.

1.1.5 Instrument Panel, Left II

389 - Ground connection 24 (in main wiring harness)
A1 - Positive connection (30a) (in instrument panel wiring harness)
A3 - Positive connection (58) (in instrument panel wiring harness)
A9 - Positive connection (56b) (in instrument cluster wiring harness)
A33 - Connection 75 (in instrument panel wiring harness)
A41 - Positive connection (50) (in instrument panel wiring harness)
A63 - Mirror adjustment/heating connection (in instrument panel wiring harness)
A76 - KS-diagnostic lead connection (in instrument panel wiring harness)
A83 - Daytime running lamps connection (in instrument panel wiring harness)
A98 - Positive connection 4 (30) (in instrument panel wiring harness)
A126 - Rear lid contact switch connection (in instrument panel wiring harness)
A170 - Connection 58R (in instrument panel wiring harness) 2
A198 - Positive connection 6 (30a) (in instrument panel wiring harness)
A199 - Positive connection 4 (15a) (in instrument panel wiring harness)
A217 - Positive connection 8 (15a) (in instrument panel wiring harness)

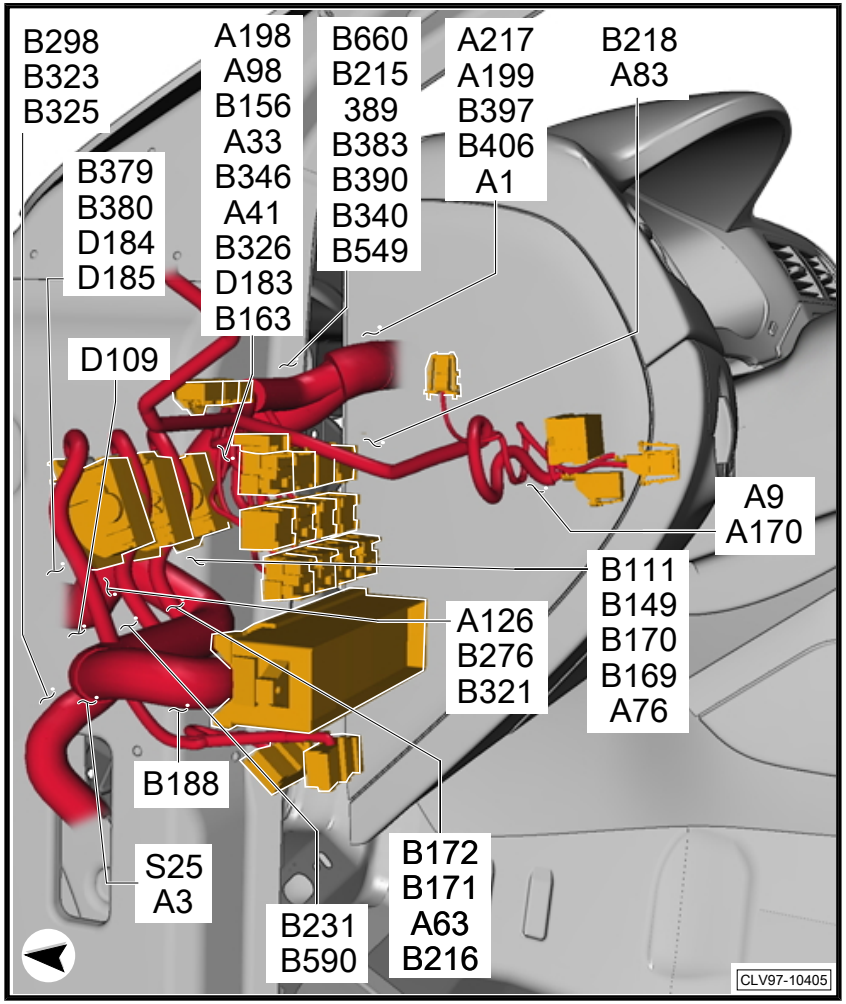

Protected by copyright. Copying for private or commercial purposes, in part or in whole, is not permitted unless authorised by Volkswagen AG. Volkswagen AG does not guarantee or accept any liability with respect to the correctness of information in this document. Copyright by Volkswagen AG.

1.1.6 Instrument Panel, Left III

B111 - Positive connection 1 (30a) (in interior wiring harness)
B149 - Positive connection 2 (15a) (in interior wiring harness)
B156 - Positive connection (30a) (in interior wiring harness)
B163 - Positive connection 1 (15) (in interior wiring harness)
B169 - Positive connection 1 (30) (in interior wiring harness)
B170 - Positive connection 2 (30) (in interior wiring harness)
B171 - Positive connection 3 (30) (in interior wiring harness)
B172 - Positive connection 4 (30) (in interior wiring harness)
B188 - Positive connection 5 (30) (in interior wiring harness)
B215 - Central locking connection 2 (in interior wiring harness)
B216 - Central locking connection 3 (in interior wiring harness)
B218 - Positive connection 6 (30) (in interior wiring harness)
B276 - Positive connection (50) (in main wiring harness)
B298 - Positive connection 2 (30) (in main wiring harness)
B321 - Positive connection 7 (30a) (in main wiring harness)
B323 - Positive connection 9 (30a) (in main wiring harness)
B325 - Positive connection 11 (30a) (in main wiring harness)
B326 - Positive connection 12 (30a) (in main wiring harness)
B231 - Positive connection 5 (30a) (in interior wiring harness)
B340 - Connection 58d (in main wiring harness) 1
B346 - Connection 75 (in main wiring harness) 1
B379 - Brake wear indicator connection 1 (in main wiring harness)
B380 - Brake wear indicator connection 2 (in main wiring harness)
B383 - Powertrain CAN bus high connection 1 (in main wiring harness)
B390 - Powertrain CAN bus low connection 1 (in main wiring harness)
B397 - Comfort system CAN bus high connection 1 (in main wiring harness)
B406 - Comfort system CAN bus low connection 1 (in main wiring harness)

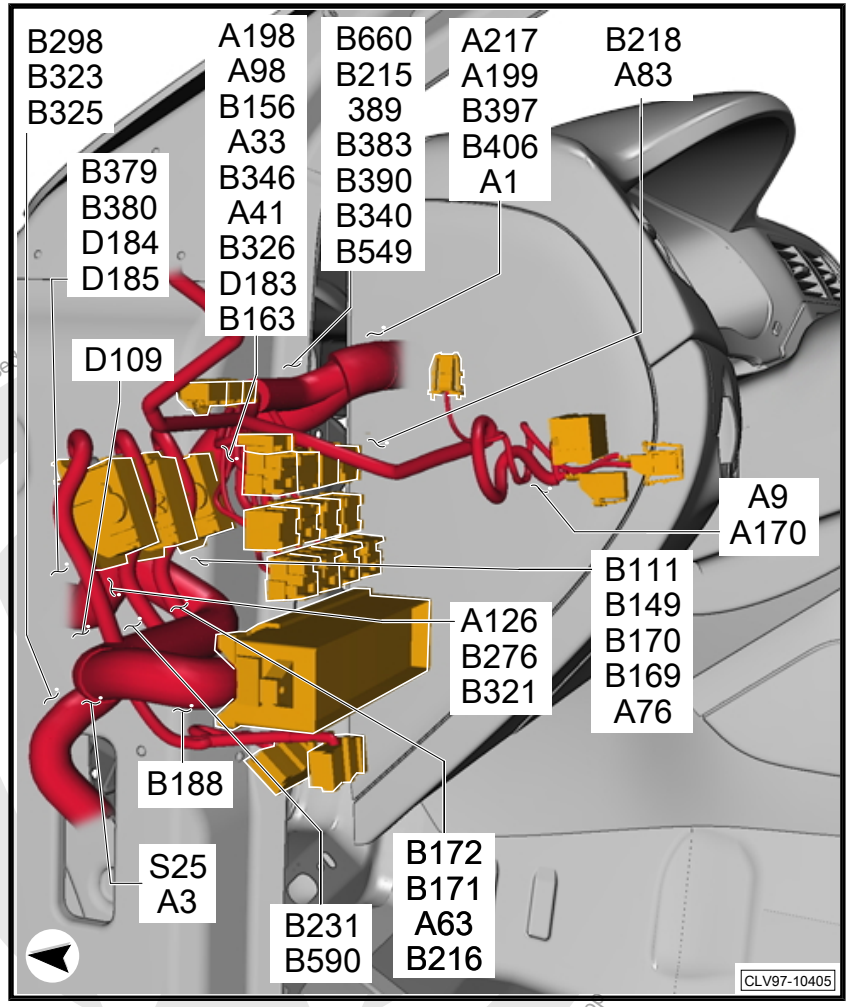

Protected by copyright. Copying for private or commercial purposes, in part or in whole, is not permitted unless authorised. Copyright by Volkswagen AG.

B549 - LIN bus connection 2 (in main wiring harness)

B590 - KS-diagnostic cable connection (in interior wiring harness)

B660 - Diagnostic terminal 50 connection (in main wiring harness)

D109 - Connection 7 (in engine compartment wiring harness)

D183 - Connection 87a (in engine compartment wiring harness) 4

D184 - Left front speed sensor positive connection (in engine compartment wiring harness)

D185 - Left front speed sensor negative connection (in engine compartment wiring harness)

S25 - Positive connection (30a) (in central locking system wiring harness)

Protected by copyright. Copying for private or commercial purposes, in part or in whole, is not permitted unless authorised by Volkswagen AG. Volkswagen AG does not guarantee or accept any liability with respect to the correctness of information in this document. Copyright by Volkswagen AG.

1.1.7 Steering, Part I

1 - Left steering column switch -EX19-
2 - Ignition/starter switch -D-
2 - Ignition switch key lock solenoid -N376-
3 - Airbag spiral spring/return spring with slip ring -F138-
4 - Right steering column switch -EX20-
5 - Electronic steering column lock control module -J764-
5 - Steering column lock actuator -N360-
6 - Anti-theft immobilizer reader coil -D2-
7 - Steering column electronics control module -J527-

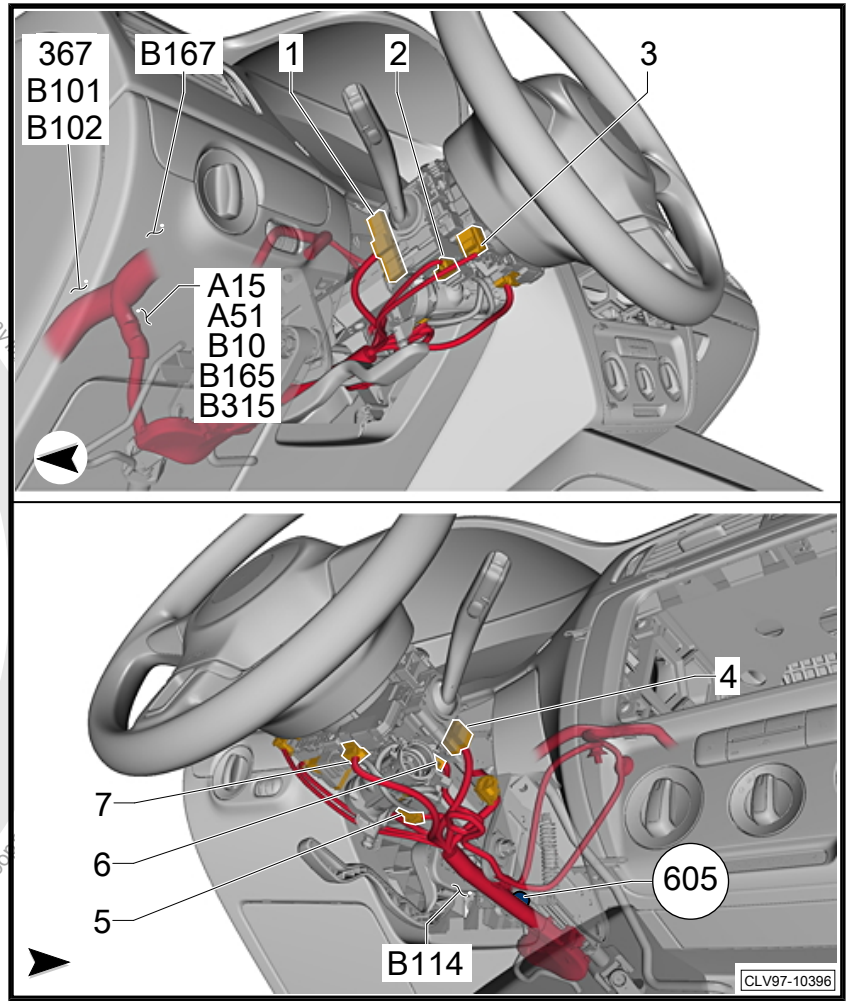

Protected by copyright. Copyright for private or commercial purposes, in part or in whole, is not permitted unless authorised by Volkswagen AG. Volkswagen AG does not guarantee or accept any liability with respect to the correctness of information in this document. Copyright by Volkswagen AG.

1.1.8 Steering, Part II

367 - Ground connection 2 (in main wiring harness)
605 - Ground connection on upper steering column
A15 - Plus connection (15) (in instrument cluster wiring harness)
A51 - Connection 56 (in instrument panel wiring harness)
B10 - Positive connection (30) (in light switch wiring harness)
B101 - Left front speaker positive connection (in main wiring harness)
B102 - Left front speaker negative connection (in main wiring harness)
B114 - Lock switch connection
B165 - Positive connection 2 (15) (in interior wiring harness)
B167 - Connection 56b (in interior wiring harness)
B315 - Positive connection 1 (30a) (in main wiring harness)

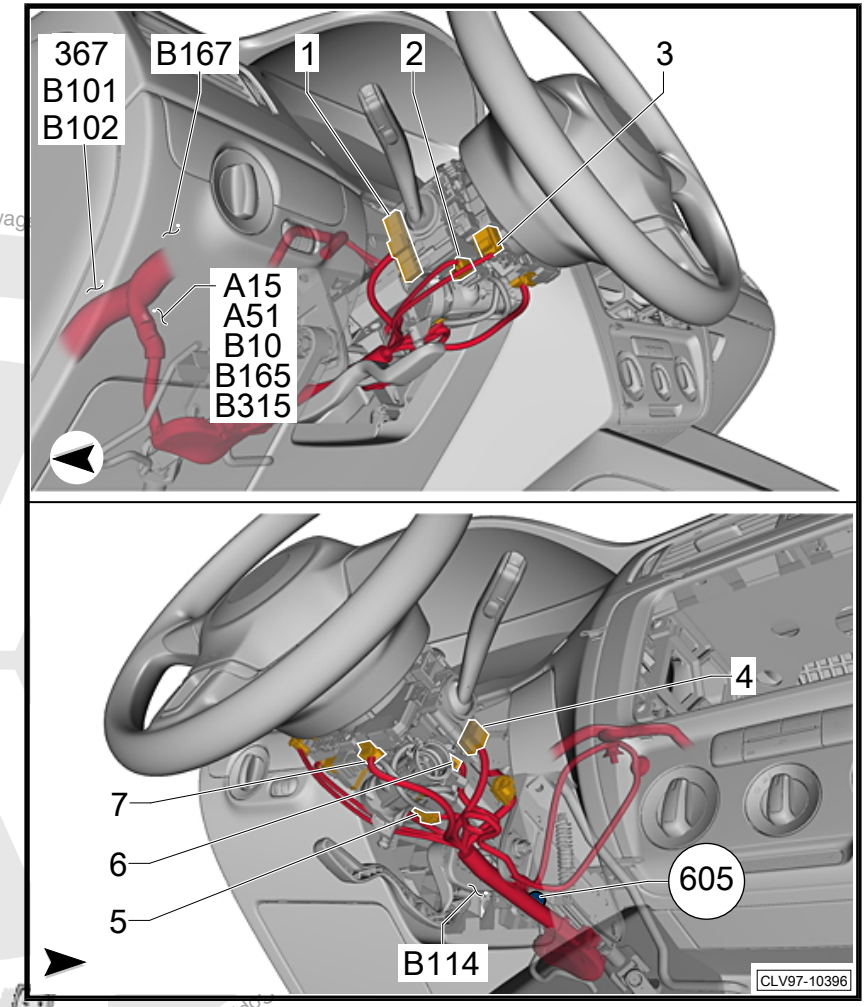

Protected by copyright. Copying for private or commercial purposes, in part or in whole, is not permitted unless authorised by Volkswagen AG. Volkswag
Copyright by Volkswagen AG.

Copyright private or commercial purposes, in part or in whole, is not permitted unless authorised by Volkswagen AG. Volkswagen AG does not guarantee or accept any liability with

1.1.9 Steering, Part III

1 - Driver airbag igniter -N95-

- Multifunction steering wheel control module -J453- , not shown. Located on steering wheel integrated with Left multifunction buttons on steering wheel -E440- .

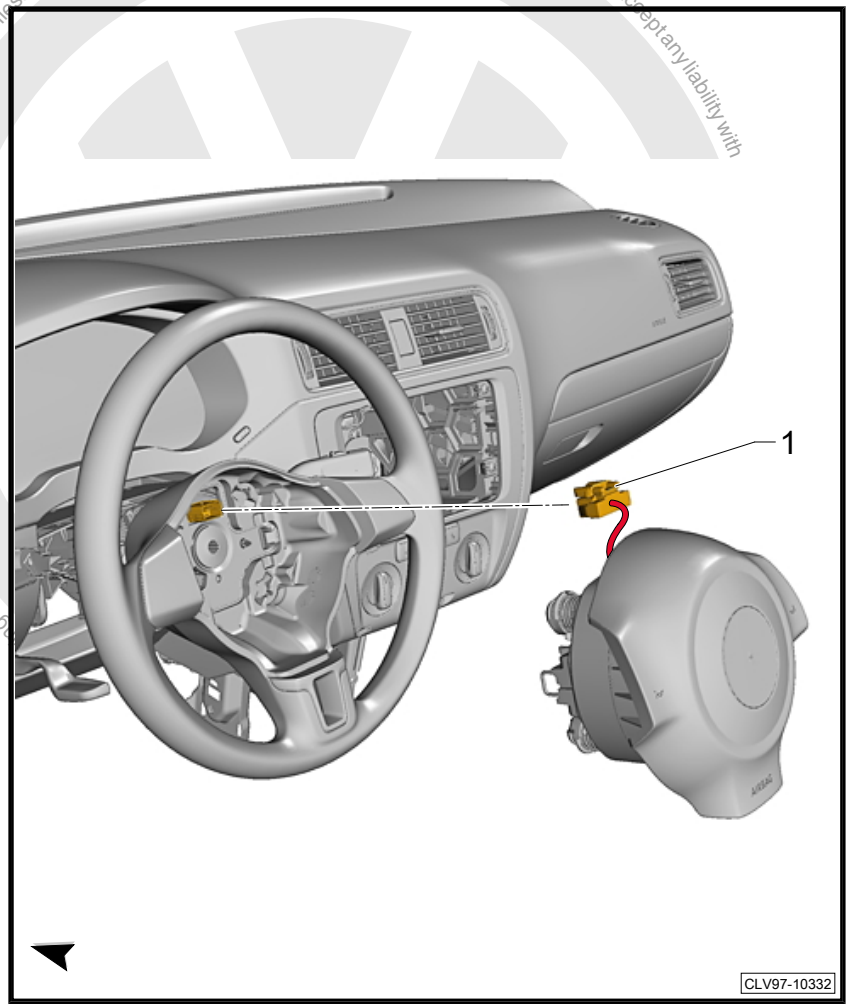

1.2 HVAC

- ⇒ “1.2.1 Climatic, Part I”, page 13
- ⇒ “1.2.2 Climatic, Part II”, page 14

- ⇒ “1.2.3 Climatronic, Part I”, page 15
- ⇒ “1.2.4 Climatronic, Part II”, page 16

1.2.1 Climatic, Part I

1 - 16-pin connector -T16e-
2 - 5-pin connector -T5-
3 - 10-pin connector
5 - Fresh air blower -V2-
6 - Fresh air blower series resistor with fuse -N24-
7 - Evaporator vent temperature sensor -G263-
8 - Evaporator vent temperature sensor connector
9 - Air distribution door motor position sensor -G645-
9 - Air distribution door motor -V428-
10 - 6-pin connector
L2 - Connection (in A/C system wiring harness)
L5 - Connection 1 (in A/C unit wiring harness)
L6 - Connection 2 (in A/C unit wiring harness)
L10 - Connection 2 (in A/C system wiring harness)

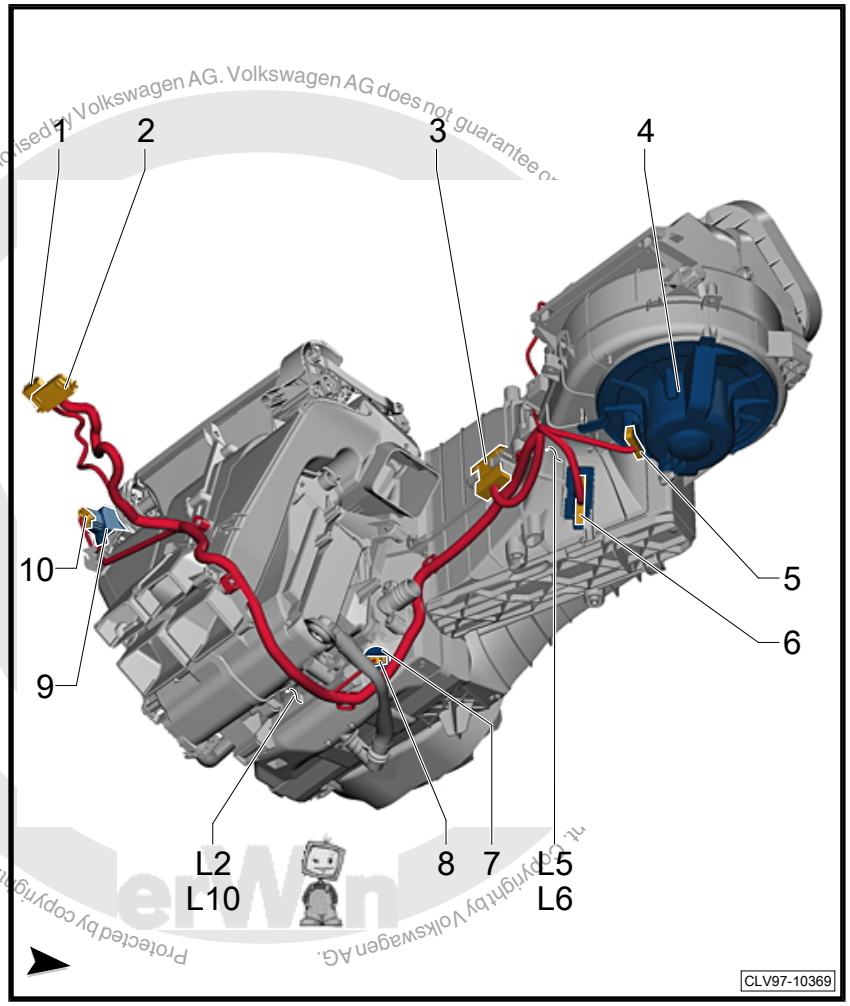

Protected by copyright. Copying for private or commercial purposes, in part or in whole, is not permitted unless authorised by Volkswagen AG. Volkswagen AG does not guarantee or

1.2.2 Climatic, Part II

1 - Recirculation door motor -V113-

1 - Fresh/recirculated air door motor -V154-

1 - Recirculation door motor position sensor -G143-

2 - 6-pin connector -T6k-

3 - Air distribution door motor position sensor -G645-

4 - 6-pin connector -T6aj-

5 - Left temperature door potentiometer/actuator -G220-

5 - Temperature regulator door motor -V68-

5 - Footwell vent temperature sensor -G192- not shown

5 - Auxiliary heater heating element -Z35- (not shown). Located near G220.

6 - 6-pin connector -T6m-

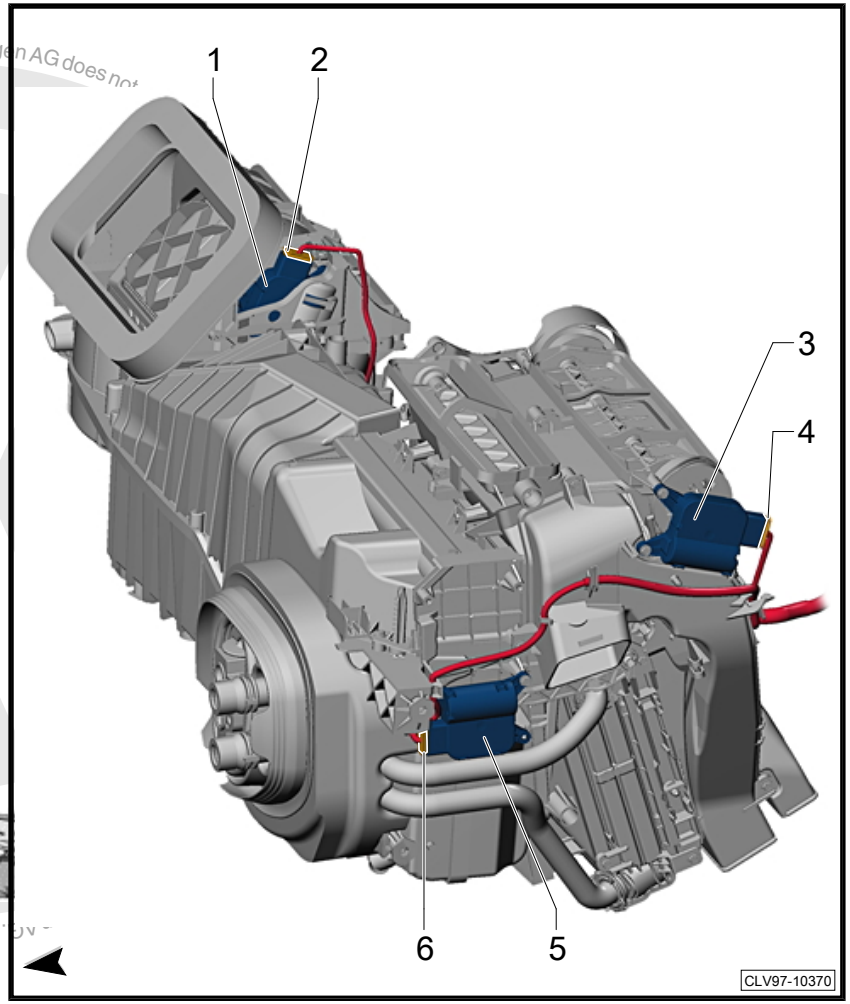

Protected by copyright. Copying for private or commercial purposes, in part or in whole, is not permitted unless authorised by Volkswagen AG. Volkswagen AG does not

1.2.3 Climatronic, Part I

Reproduced for commercial purposes, in part or in whole, is not permitted unless authorised by Volkswagen AG. Volkswagen AG does not guarantee or accept any liability.

1 - 6-pin connector -T6n-
2 - Central door motor position sensor -G112-
2 - Central air door motor -V70-
3 - Double connector -T2db-
4 - Right footwell vent temperature sensor -G262-
5 - 6-pin connector -T6u-
6 - Fresh air blower control module -J126-
7 - 10-pin connector
8 - 6-pin connector -T6l-
9 - Right temperature door potentiometer/actuator -G221-
9 - Right temperature door motor -V159-
10 - Evaporator temperature sensor -G308-
11 - Double connector -T2j-
L7 - Connection 3 (in A/C unit wiring harness)
L8 - Connection 4 (in A/C unit wiring harness)

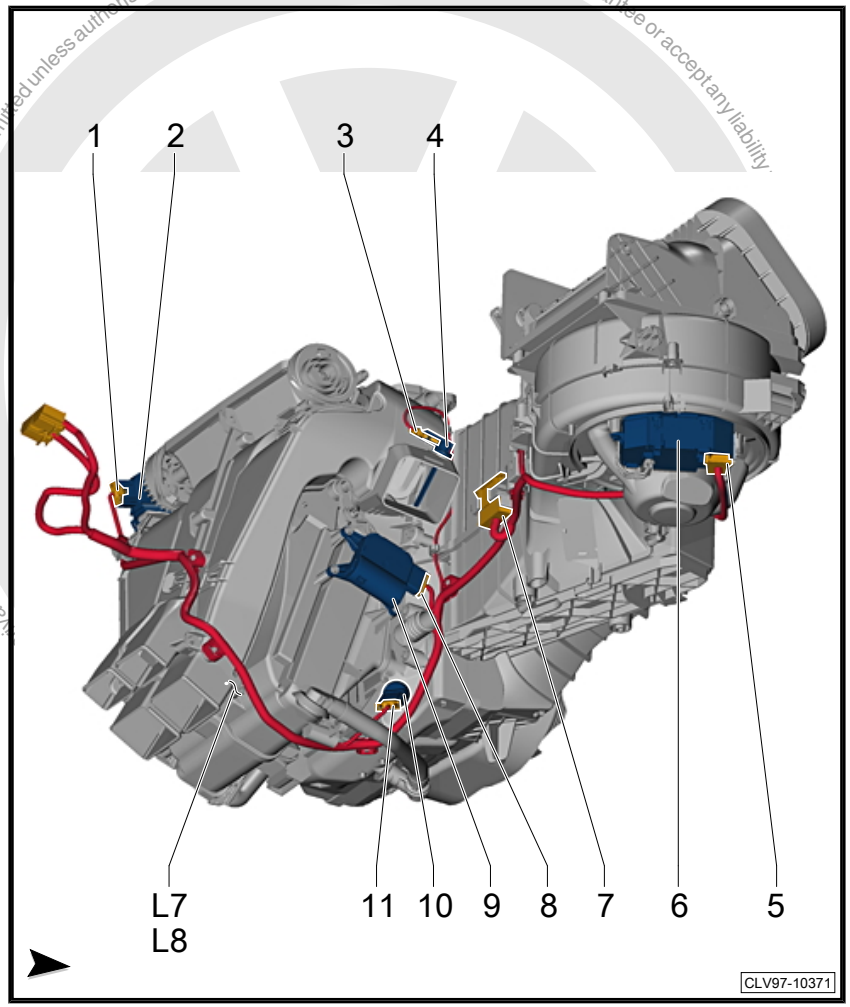

1.2.4 Climatronic, Part II

1 - 6-pin connector -T6r-
2 - Fresh air/recirculating air/back pressure door motor position sensor -G644-
2 - Fresh air/recirculating air/back pressure door motor -V425-
3 - Central door motor position sensor -G112-
4 - 6-pin connector -T6n-
5 - 16-pin connector -T16g-
6 - 16-pin connector -T16e-
7 - Double connector -T2da-
7 - Auxiliary heater heating element -Z35- (not shown). Located near T2da.
8 - Left footwell vent temperature sensor -G261-
9 - Left temperature door motor -V158-
9 - Left temperature door potentiometer/actuator -G220-
10 - 6-pin connector -T6p-
11 - Defroster door motor position sensor -G135-
11 - Defroster door motor -V107-
12 - 6-pin connector -T6q-

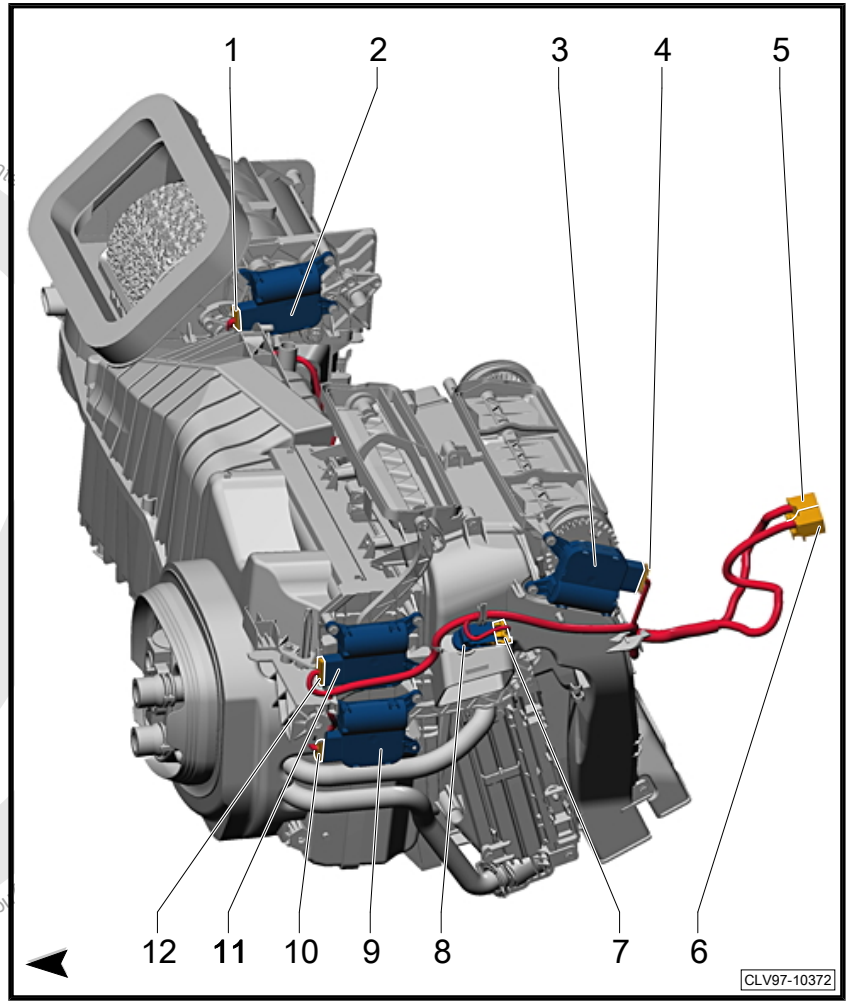

Protected by copyright. Copying for private or commercial purposes, in part or in whole is not permitted unless authorised by Volkswagen AG. Volkswagen AG does not guarantee

1.3 A/B Pillar, Left

- ⇒ “1.3.1 A/B Pillar Area, Left I”, page 17
- ⇒ “1.3.2 A/B Pillar, Left II”, page 18

1.3.1 A/B Pillar Area, Left I

1 - Driver head curtain airbag igniter -N251-

2 - Left front treble speaker -R20-

3 - Driver seat belt tensioner igniter 1 -N153-

4 - Driver belt force limiter -G551-

4 - Driver thorax airbag igniter -N199- not shown. Located in side of seat back.

A - 28-pin connector -T28b-

B - 28-pin connector -T28-

B - 32-pin connector -T32f-

C - 10-pin connector -T10c-

C - Driver seat position sensor -G553- connection

D - 3-pin connector -T3k-

E - 3-pin connector -T3ar-

F - Double connector -T2q-

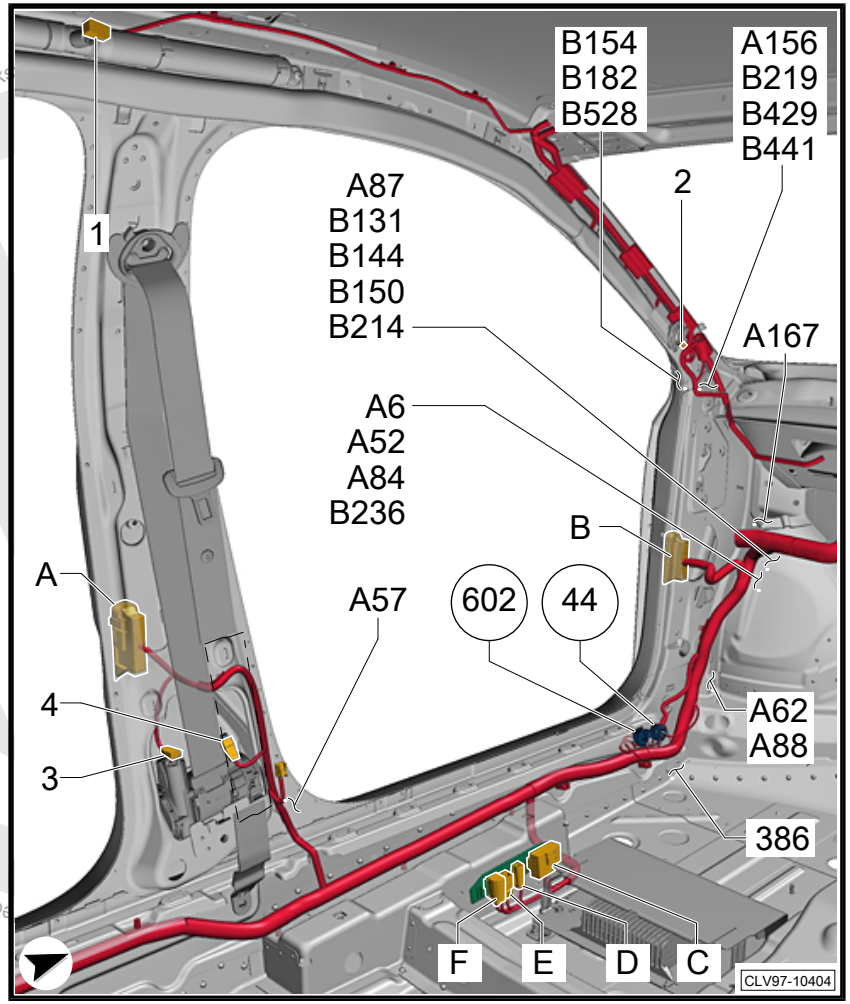

Protected by copyright. Copying for private or commercial purposes, in part or in whole, is not permitted unless authorised by Volks

1.3.2 A/B Pillar, Left II

44 - Ground connection on A-pillar, lower left
386 - Ground connection 21
602 - Ground connection in left front footwell
A57 - Positive connection 3 (30)
A62 - Power window connection
A87 - Back-up lamp connection (in instrument panel wiring harness)
A88 - Fog lamp connection
A156 - Sensor ground connection (53c) (in instrument panel wiring harness)
A167 - Positive connection 3 (30a) (in instrument panel wiring harness)
B131 - Connection 54 (in interior wiring harness)
B144 - Positive connection (58L) (in interior wiring harness)
B150 - Positive connection 2 (30a) (in interior wiring harness)
B154 - Connection TK (in interior wiring harness) 1
B182 - Connection RF (in interior wiring harness)
B214 - Central locking connection 1 (in interior wiring harness)
B219 - Positive connection 4 (30a) (in interior wiring harness)
B429 - Fuel pump relay connection (in main wiring harness)
B441 - Cruise control connection (in main wiring harness)
B528 - LIN bus connection 1 (in main wiring harness)

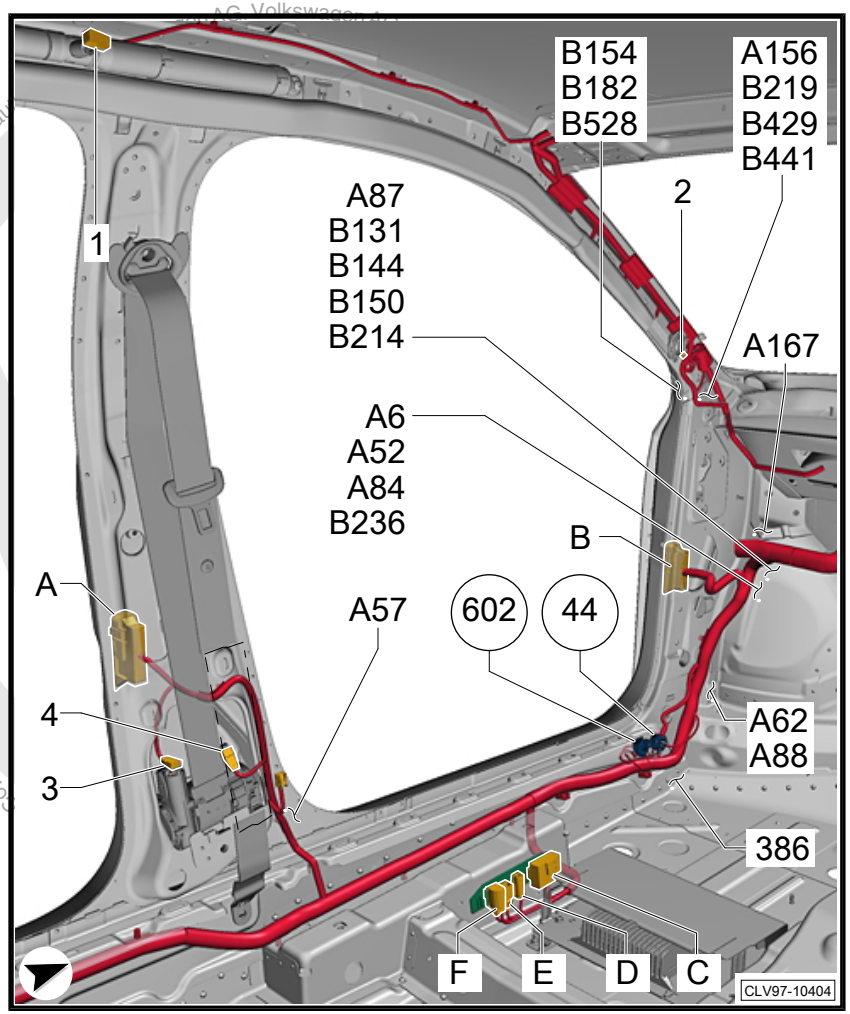

Copying for private or commercial purposes, in part or in whole, is not permitted unless a

1.4 A/B Pillar, Right

1 - Right front treble speaker -R22-

2 - Front passenger seat belt tensioner igniter 1 -N154-

3 - Front passenger belt force limiter -G552-

4 - Front passenger head curtain airbag igniter -N252-

4 - Front passenger thorax airbag igniter -N200- not shown. Located in side of seat back.

5 - Telephone transceiver -R36-

- ❑ GSM Antenna

43 - Ground connection on A-pillar, lower right

638 - Ground connection on right A-pillar

A - 28-pin connector -T28a-

B - 28-pin connector -T28c-

B103 - Right front speaker positive connection

B104 - Right front speaker negative connection

C - Front passenger seat belt switch -E25-

D - 10-pin connector -T10b-

D - Front passenger seat position sensor -G554- connection

D - Passenger occupant detection system control module -J706- connection

D - Passenger occupant detection system pressure sensor -G452- connection

E - 3-pin connector -T3l-

F - 10-pin connector -T10d-

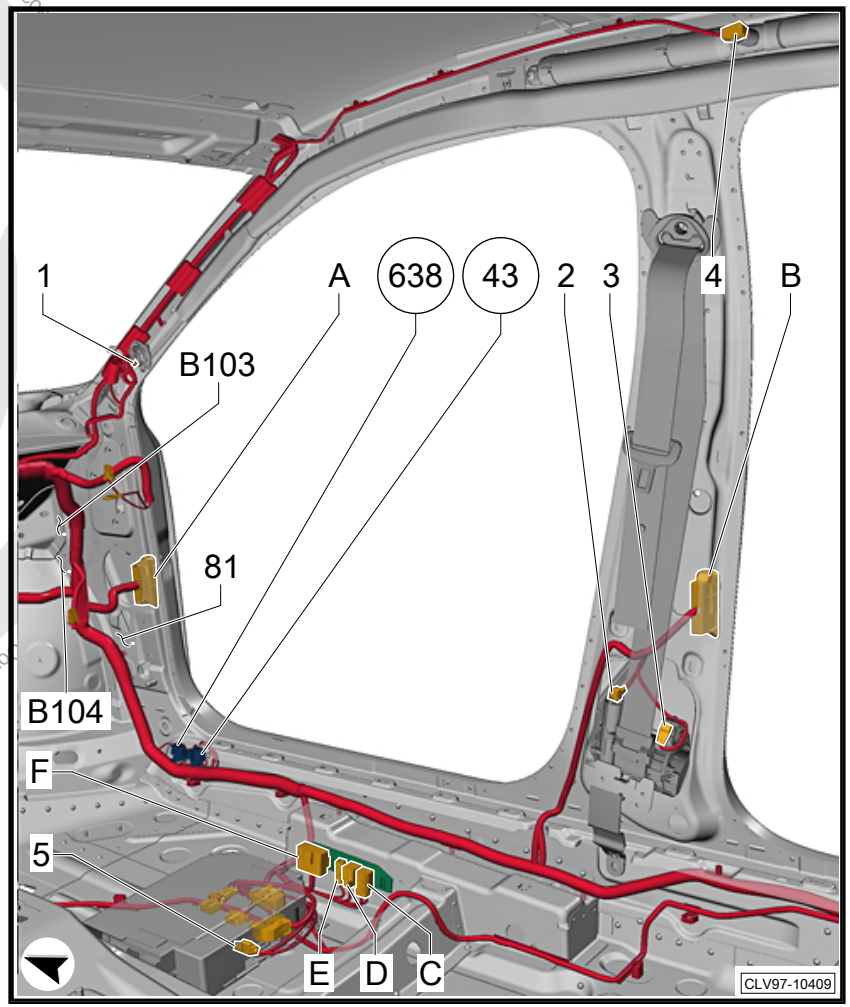

Protected by copyright. Copying for private or commercial purposes, in part or in whole, is not permitted unless authorised by Volkswagen AG. Volkswagen AG does not guarantee or accept any guarantee or liability with respect to the correctness of information in this document. Copyright by Volkswagen AG.

1.5 C Pillar, Left

1 - Left rear ABS wheel speed sensor -G46-

2 - Driver side rear thorax airbag igniter -N201-

3 - Driver side rear side airbag crash sensor -G256-

D146 - Left rear speed sensor positive connection

D147 - Left rear speed sensor negative connection

N5 - Connection 4 (in body wiring harness)

N6 - Connection 5 (in body wiring harness)

N7 - Connection 6 (in body wiring harness)

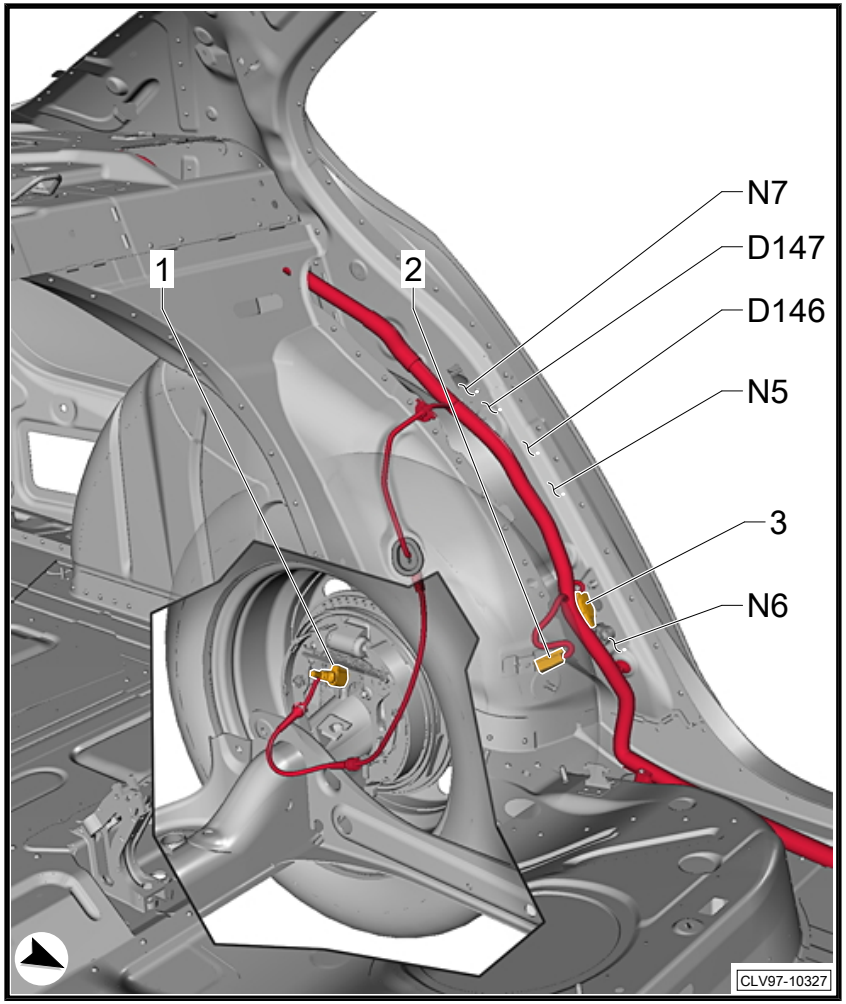

Protected by copyright. Copying for private or commercial purposes, in part or in whole, is not permitted unless authorised by Volkswagen AG. Copyright by Volkswagen AG. Volkswagen AG does not guarantee or accept any liability with respect to the correctness of information in this document.

1.6 C Pillar, Right

1 - Passenger side rear side airbag crash sensor -G257-

2 - Passenger side rear thorax airbag igniter -N202-

3 - Right rear ABS wheel speed sensor -G44-

4 - Access/start system antenna 2 in vehicle interior -R139- - Optional

5 - Fuel tank pressure sensor -G400-

6 - Transfer fuel pump -G6-

6 - Fuel level sensor -G-

7 - Fuel delivery unit -GX1-

7 - Fuel pump control module -J538-

D148 - Right rear speed sensor positive connection

D149 - Right rear speed sensor negative connection

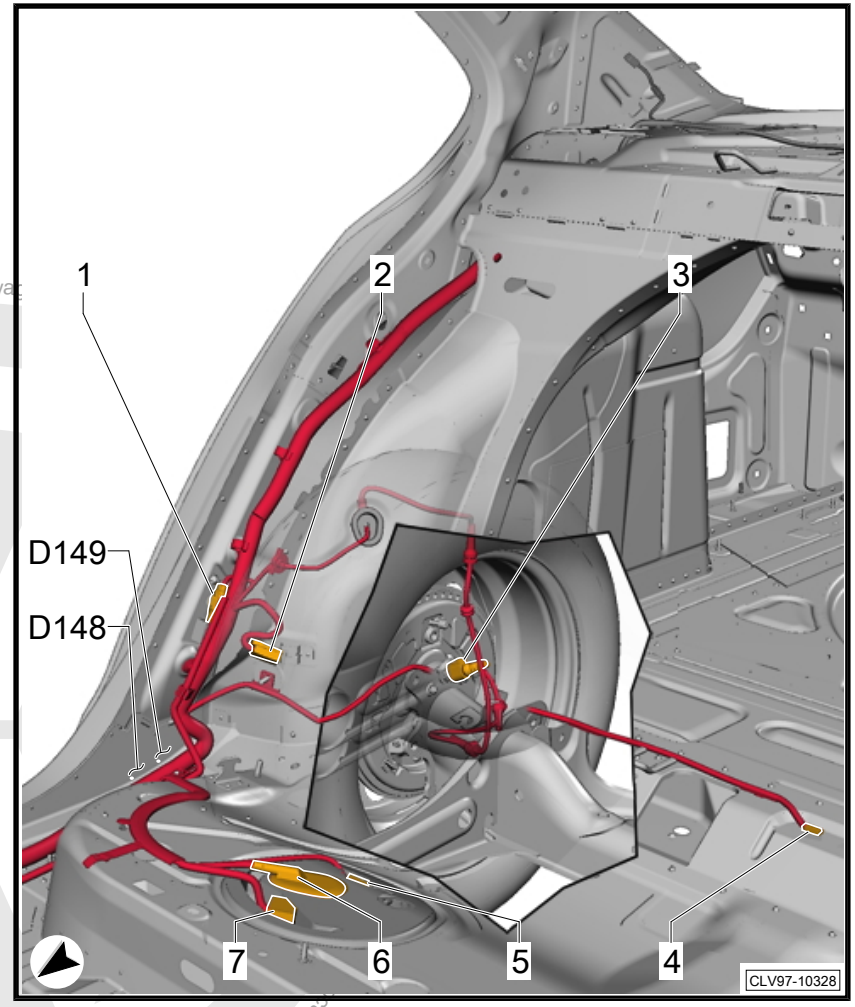

Protected by copyright. Copying for private or commercial purposes, in part or in whole, is not permitted unless authorised by Volkswagen AG. Volkswagen AG. Copyright by Volkswagen AG.

Volkswagen AG. Volkswagen AG does not guarantee or accep
Protected by copyright. Copying for private or commercial purposes, in part or in whole, is not permitted unless authorised by Volkswagen AG.

1.7 Floor

1 - Blocking diode -J29-

2 - Airbag control module -J234-

3 - External audio source connection -R199-

4 - Selector lever sensor system control module -J587-

4 - tiptronic switch -F189-

5 - Access/start system antenna 1 in vehicle interior -R138-

6 - 54-pin connector -T54-

6 - Control module for emergency call module and communication unit -J949- , not shown. Located under passenger seat.

7 - Telephone transceiver

8 - 12 V socket -U5-

9 - Converter with socket, 12 V-230 V -U13-

9 - Interior socket, 230 V, 110 V -U11-

10 - 3-pin connector -T3j-

10 - Cell phone operating electronics control module -J412- , not shown. Located in center console.

- Alternate location above glove box depending on equipment. ⇒ Item 5 (page 4)

11 - Amplifier -R12-

12 - Parking brake indicator lamp switch -F9-

13 - Multifunction transmission range switch -F125-

13 - Shift lock solenoid -N110-

14 - Cigarette lighter -U1-

109 - Ground connection (in airbag wiring harness)

374 - Ground connection 9 (in main wiring harness)

387 - Ground connection 22 (in main wiring harness)

610 - Audio ground connection under front center console

816 - Ground connection 1 in Hybrid System wiring harness - Hybrid vehicle option

A200 - Positive connection 5 (15a) (in instrument panel wiring harness)

B348 - Connection 75a (in main wiring harness) 1

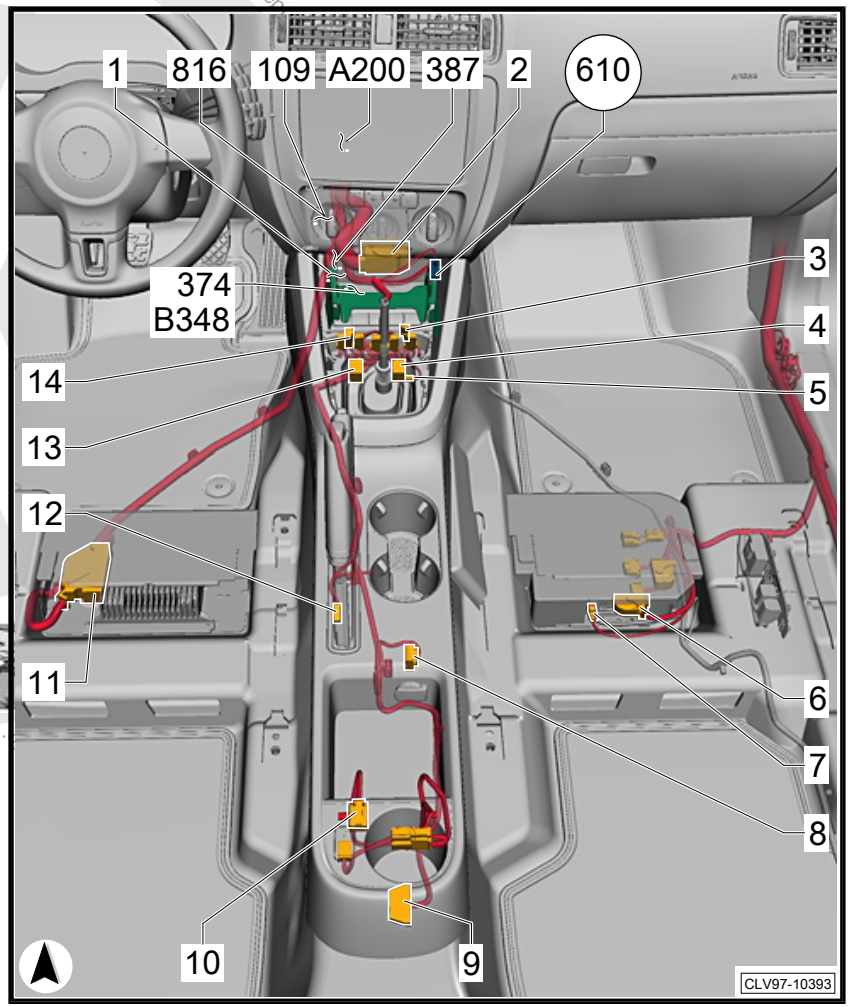

1.8 Door, LF

1 - Driver central locking lock unit -F220-

1 - Driver door contact switch -F2-

1 - Driver door central locking system motor -V56-

1 - Driver access/start system antenna -R134- in door handle.

2 - Central locking -SAFE- indicator lamp -K133-

3 - Driver side airbag crash sensor -G179-

4 - Driver exterior rearview mirror -VX4- - connector

5 - Left front bass speaker -R21-

5 - Left front midrange speaker -R103- , not shown. Located in door.

6 - Driver door control module -J386-

6 - Driver window regulator motor -V147-

7 - 32-pin connector -T32a- - for highline (AW1)

A - 28-pin connector -T28-

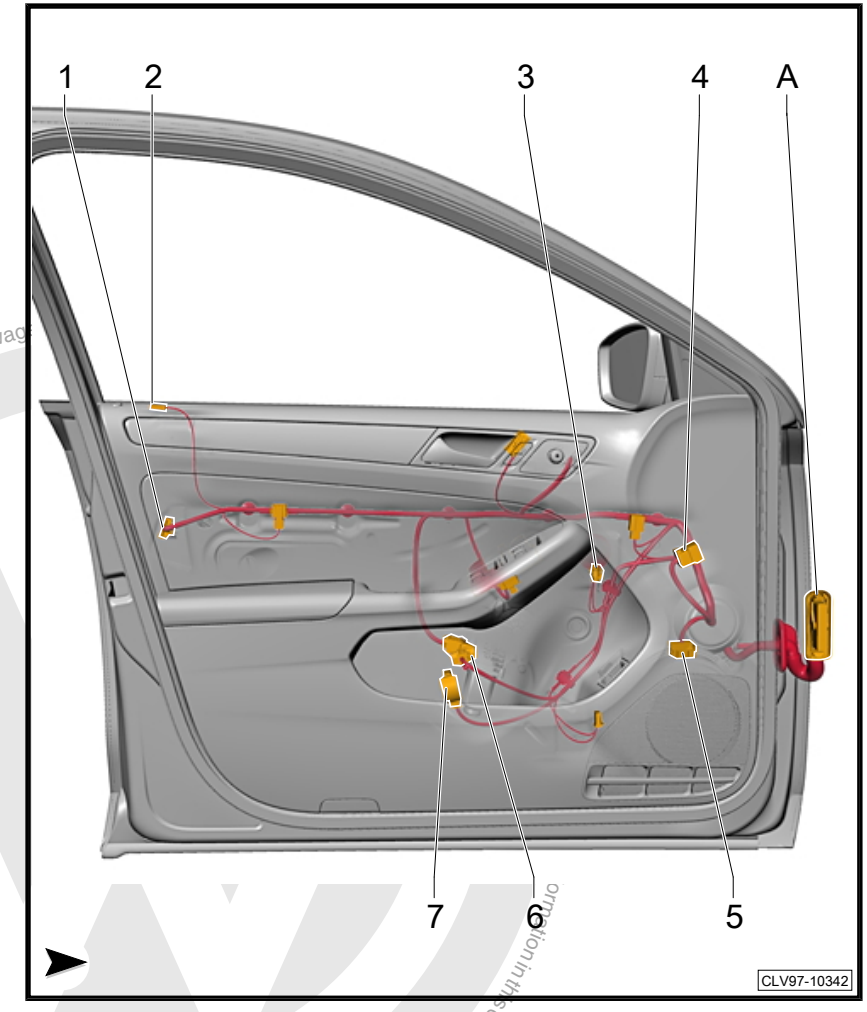

Protected by copyright. Copying for private or commercial purposes, in part or in whole, is not permitted unless authorised by Volkswagen AG. Copyright by Volkswagen AG.

1.9 Door, RF

1 - Front passenger exterior rearview mirror -VX5- connector take off

2 - Front passenger side airbag crash sensor -G180-

3 - Front passenger central locking lock unit -F221-

3 - Front passenger door contact switch -F3-

3 - Front passenger door central locking system motor -V57-

3 - Front passenger exterior door handle touch sensor -G416- in door handle.

3 - Front passenger access/start system antenna -R135- in door handle.

4 - Front passenger door control module -J387-

5 - Front passenger window regulator motor -V148-

6 - Right front bass speaker -R23-

6 - Right front midrange speaker -R104- , not shown. Located in door.

A - 28-pin connector

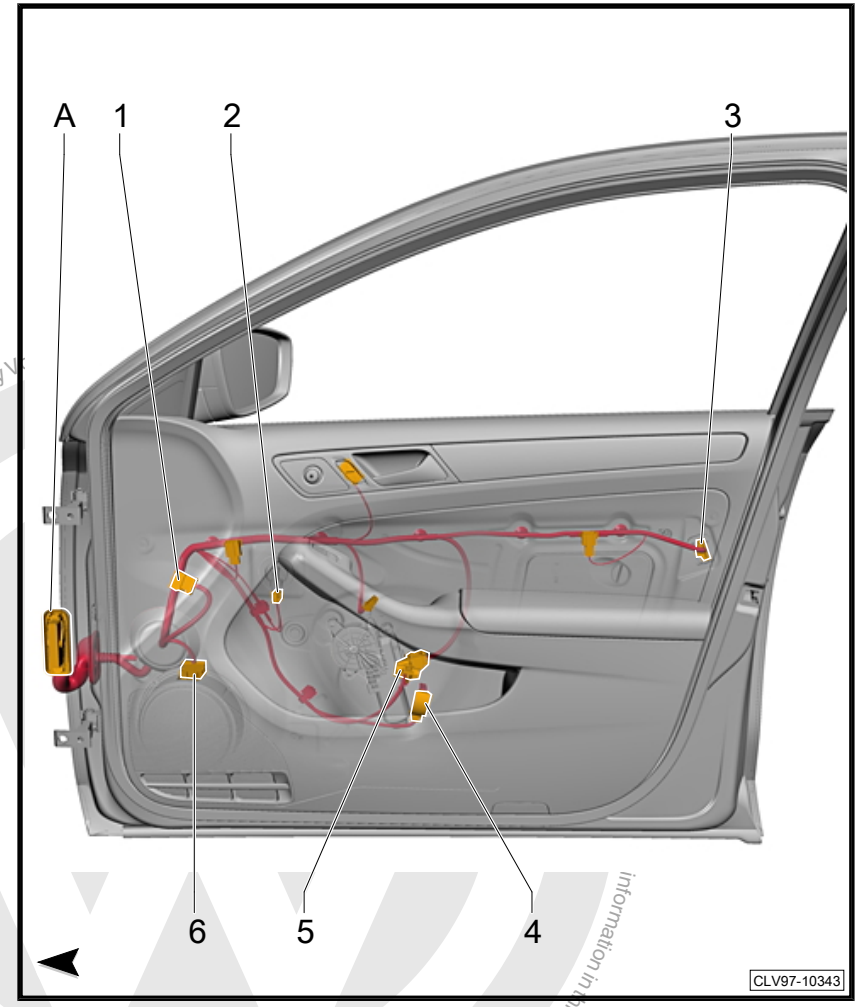

Protected by copyright. Copying for private or commercial purposes, in part or in whole, is not permitted unless authorised by Volkswagen AG. Information in this document. Copyright by Volkswagen AG.

1.10 Door, LR

1 - Left rear central locking lock unit -F222-

1 - Left rear door contact switch -F10-

1 - Left rear central locking -lock- motor -V214-

2 - Left rear treble speaker -R14-

3 - Left rear door control module -J388-

3 - Left rear window regulator motor -V26-

3 - 16-pin connector -T16h- - for lowline (AW0)

3 - 18-pin connector -T18b- - for highline (AW1)

4 - Left rear bass speaker -R15-

A - 28-pin connector -T28b-

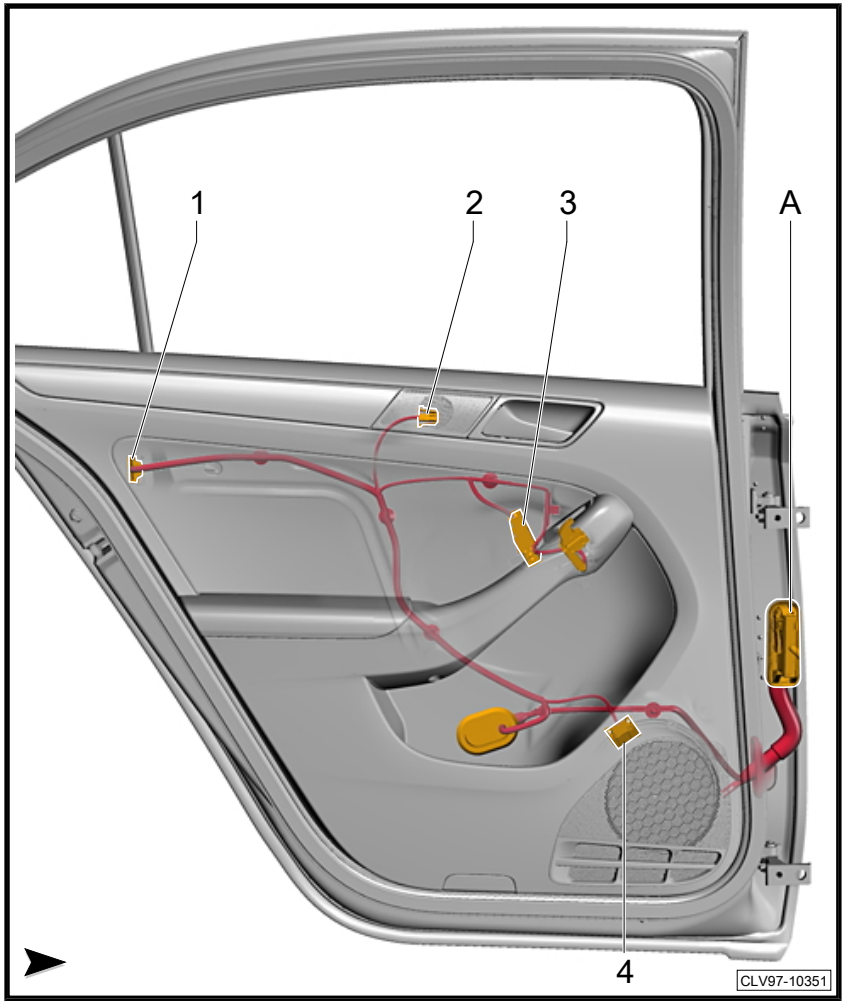

Protected by copyright. Copyright by Volkswagen AG. Volkswagen AG does not guarantee or accept any liability with respect to the correctness of information in this document. Copyright by Volkswagen AG. Copying for private or commercial purposes, in part or in whole, is not permitted unless authorised by Volkswagen AG.

1.11 Door, RR

1 - Right rear door control module -J389-

1 - Right rear window regulator motor -V27-

2 - Right rear treble speaker -R16-

3 - Right rear central locking lock unit -F223-

3 - Right rear door contact switch -F11-

3 - Right rear central locking -lock- motor -V215-

4 - Right rear bass speaker -R17-

A - 28-pin connector

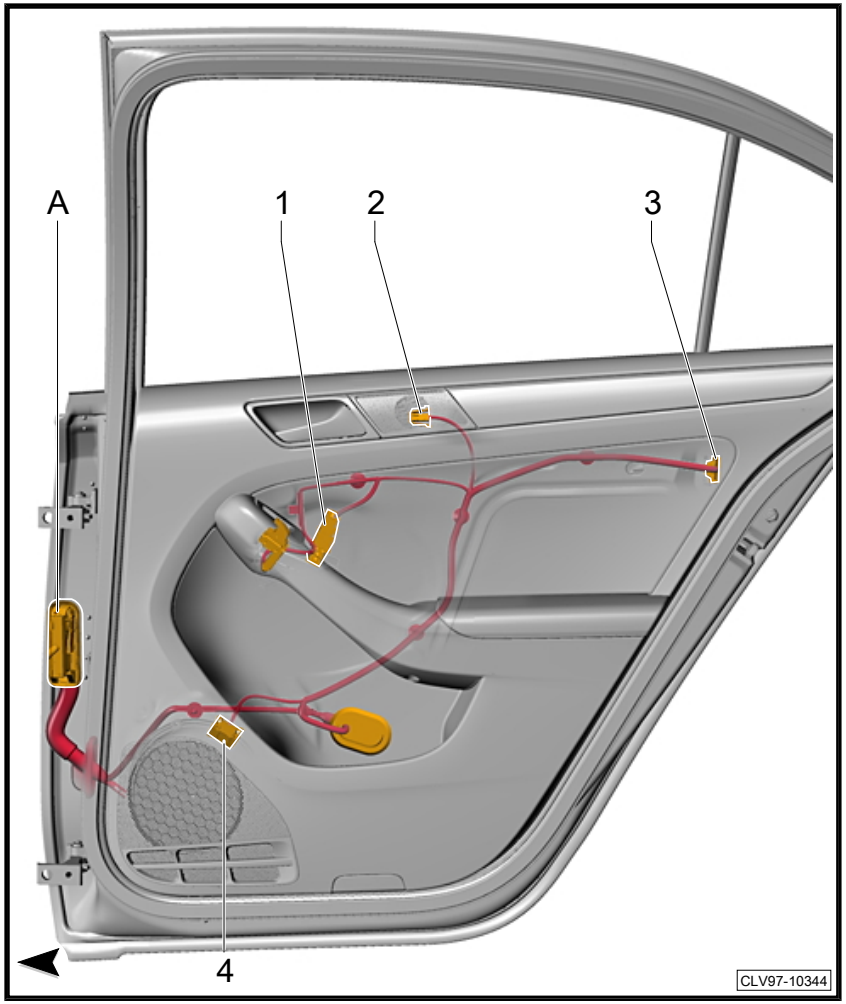

Protected by copyright. Copying for private or commercial purposes, in part or in whole, is not permitted unless authorised by Volkswagen AG. Volkswagen AG does not guarantee or accept any liability with respect to the correctness of information in this document. Copyright by Volkswagen AG.

1.12 Roof

- ⇒ “1.12.1 Roof, Part I”, page 27
- ⇒ “1.12.2 Roof, Part II”, page 28

1.12.1 Roof, Part I

1 - Front passenger vanity mirror lamp -W14-
2 - Sunroof motor -V1-
3 - Telephone microphone -R38-
4 - 10-pin connector -T10e-
5 - Interior lamp with delay switch -W15- Lowline (AW0)
6 - Power sunroof control module -J245-
6 - Interior monitoring sensor -G273-
7 - Driver vanity mirror lamp -W20-
8 - Front interior lamp -W1- - Highline (AW1)
8 - Cellular telephone preparation control head -E508-
9 - Rain/light recognition sensor -G397-
10 - Automatic dimming interior rearview mirror -Y7-
B552 - Positive connection 2 (in roof wiring harness)

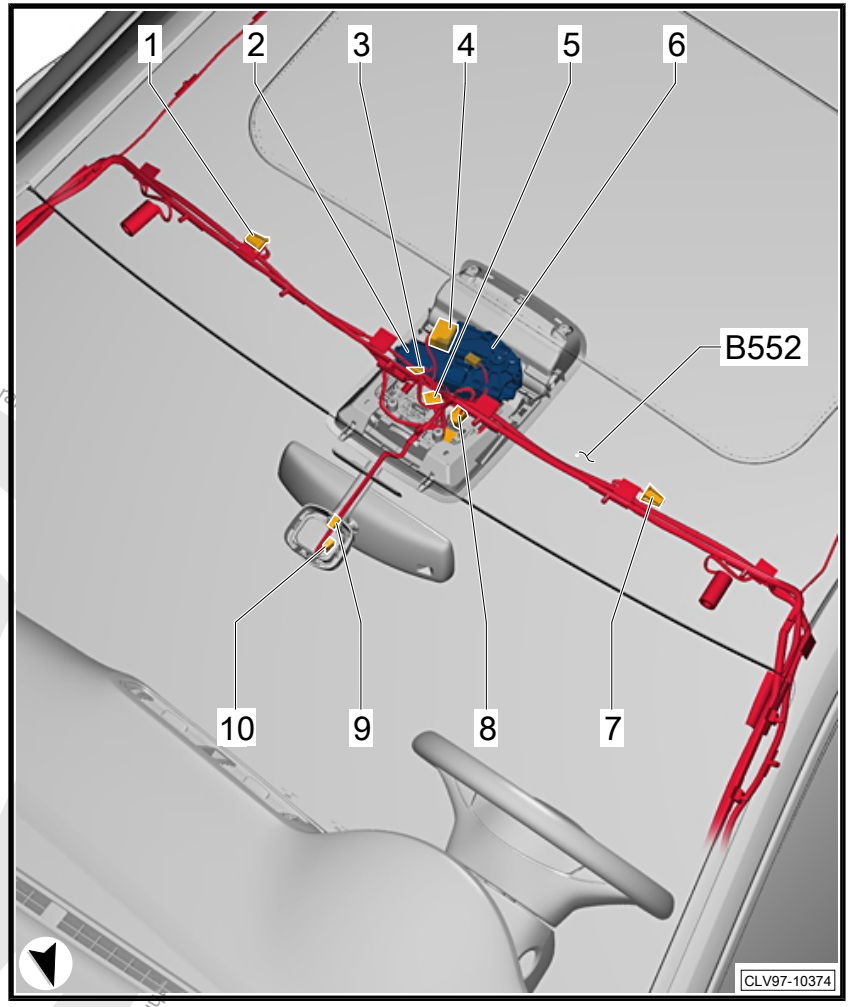

Protected by copyright. Copying for private or commercial purposes, in part or in whole, is not permitted unless authorised by Volkswagen AG. Volkswagen AG does not guarantee the accuracy of this document. Copyright by Volkswagen AG.

1.12.2 Roof, Part II

1, 2 - Rear interior lamp -W43-
3 - Antenna -R11-
4 - Satellite antenna -R170-
5 - GPS antenna -R50-
6 - Telephone antenna -R65-
7 - Rear window defogger -Z1-
7 - Digital radio antenna -R183-
8 - Rear parking aid warning buzzer -H15-
9 - FM frequency filter in negative wire -R178-
9 - Right antenna module -R109-
10 - High-mounted brake lamp bulb -M25-
11 - Luggage compartment lamp -W3-
12 - Access/start system antenna in luggage compartment -R137-
13 - FM frequency filter in positive wire -R179-
13 - Left antenna module -R108-
14 - Radio antenna 2 -R93-

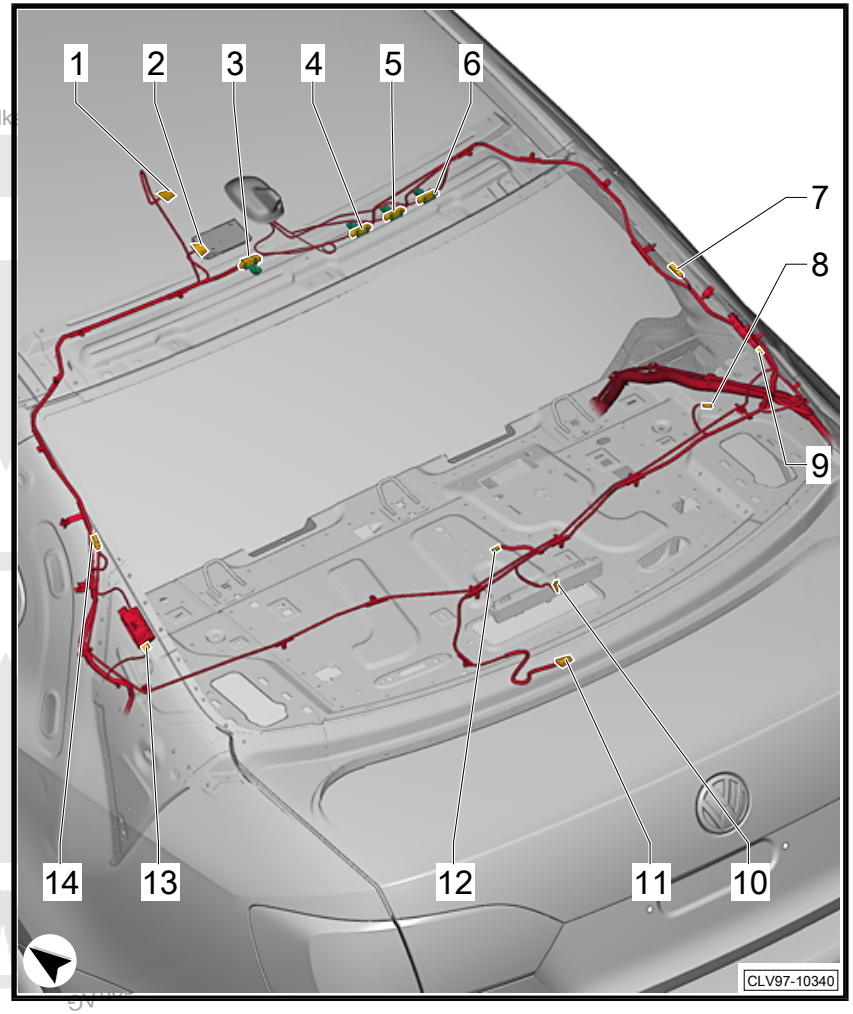

Protected by copyright. Copying for private or commercial purposes, in part or in whole, is not permitted unless authorised by Volkswagen AG. Volk

1 Component Locations: Vehicle Under Body

- ⇒ “1.1 Exhaust System”, page 1

1.1 Exhaust System

- ⇒ “1.2 1.4L TFSI, CNLA”, page 1
- ⇒ “1.7 1.8L TFSI, CPKA/CPRA”, page 8
- ⇒ “1.8 2.0L TFSI, CPLA/CPPA”, page 9
- ⇒ “1.3 2.0L TDI, CJAA”, page 2
- ⇒ “1.4 2.0L MPI, CBPA”, page 5
- ⇒ “1.5 2.0L TFSI, CCTA/CBFA”, page 6
- ⇒ “1.6 2.5L SRE, CBTA/CBUA”, page 7

1.2 1.4L TFSI, CNLA

Protected by copyright. Copying for private or commercial purposes, in part or in whole, is not permitted unless authorised by Volkswagen AG. Volkswagen AG does not guarantee or accept any liability with respect to the correctness of information in this document. Copyright by Volkswagen AG.

1 - 6-pin connector -T6w-

2 - Oxygen sensor 1 before catalytic converter -GX10-

2 - Heated oxygen sensor -G39-

2 - Oxygen sensor heater -Z19-

3 - Oxygen sensor 2 before catalytic converter -GX11-

3 - Oxygen sensor 2 heater -Z28-

3 - Heated oxygen sensor 2 -G108-

4 - Oxygen sensor 1 after catalytic converter -GX7-

4 - Heater for oxygen sensor 1 after catalytic converter -Z29-

4 - Oxygen sensor after three way catalytic converter -G130-

5 - 4-pin connector -T4ao-

6 - 4-pin connector -T4ap-

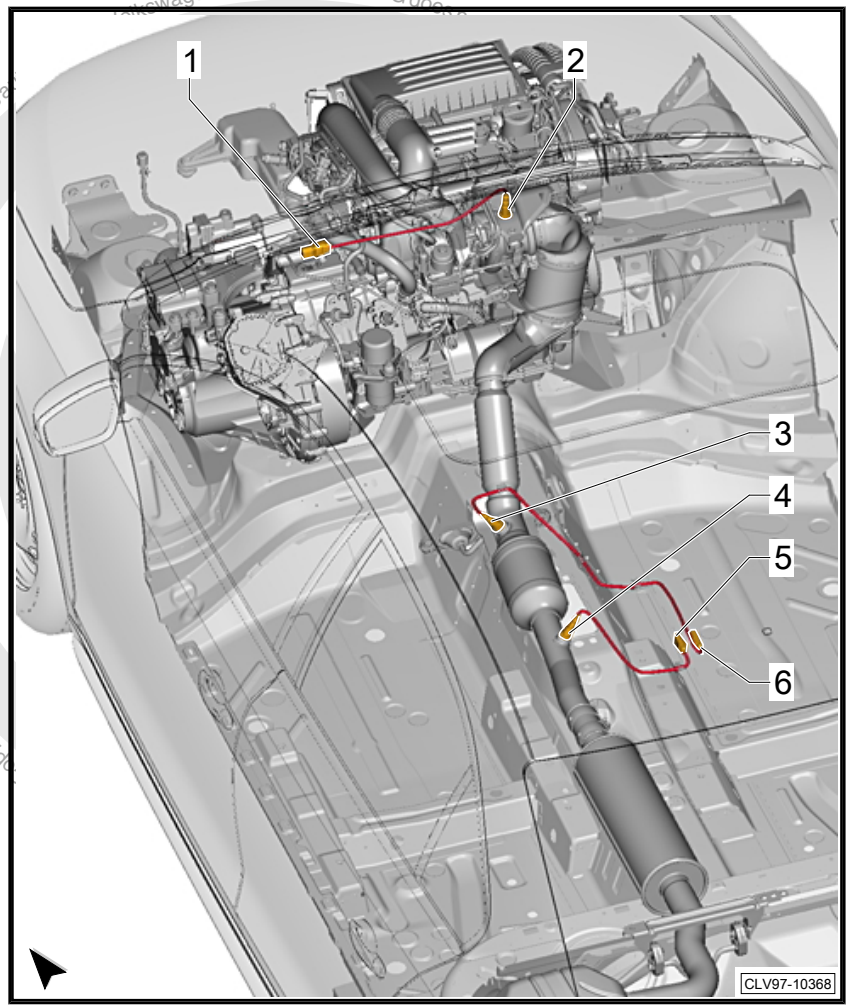

Volkswagen AG. Volkswagen AG does not ... copying for private or commercial purposes, in part or in whole, is not permitted unless a

1.3 2.0L TDI, CJAA

- ⇒ “1.3.1 2.0L TDI, CJAA, Part I”, page 3
- ⇒ “1.3.2 2.0L TDI, CJAA, Part II”, page 4

1.3.1 2.0L TDI, CJAA, Part I

1 - 6-pin connector -T6W-
2 - Double connector -T2eq-
3 - Heated oxygen sensor -G39-
3 - Oxygen sensor heater -Z19-
4 - Exhaust pressure sensor 1 -G450-
5 - 4-pin connector -T4ao-
6 - 3-pin connector -T3n-
7 - Exhaust pressure sensor 2 -G451-
7 - Differential pressure sensor -G505-
8 - Exhaust gas temperature sensor 4 -G648-
9 - Double connector -T2ez-
10 - 6-pin connector -T6ao-
11 - Exhaust door control unit -J883-
12 - Oxygen sensor after three way catalytic converter -G130- connector
12 - Heater for oxygen sensor 1 after catalytic converter -Z29- connector

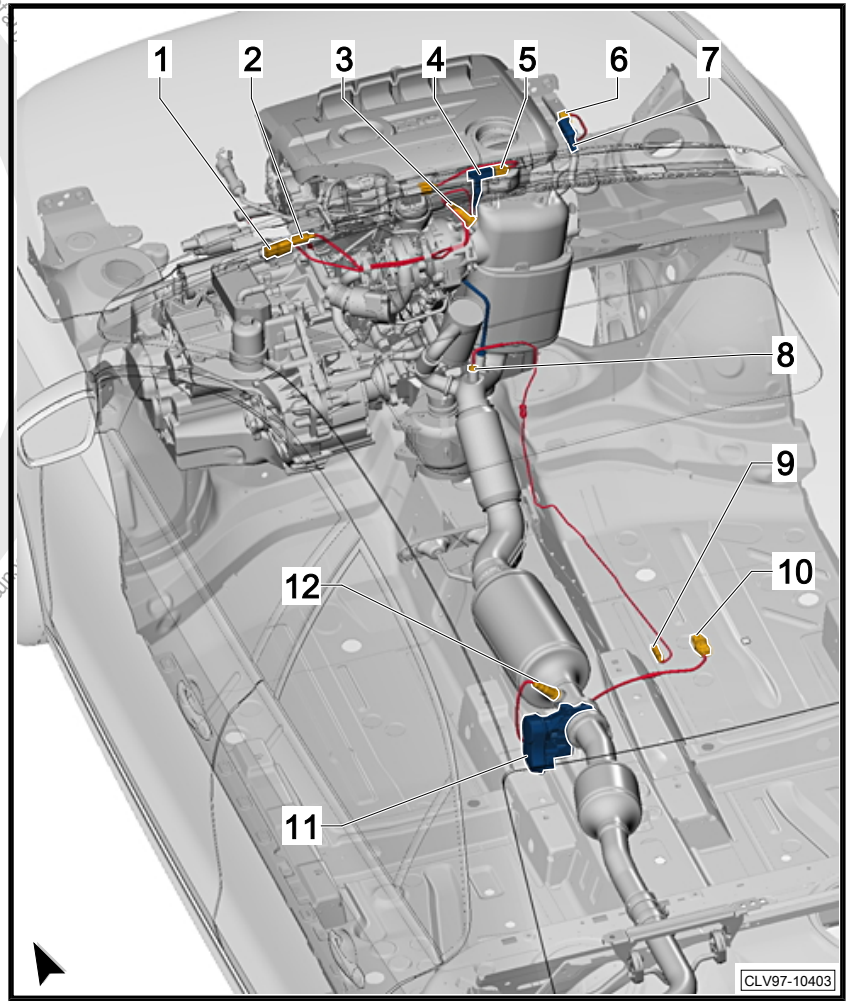

Protected by copyright. Copyright by Volkswagen AG. Volkswagen AG. Volkswagen AG does not guarantee or accept any guarantee or warranty for the accuracy, in part or in whole, is not permitted unless authorised by Volkswagen AG. Volkswagen AG. Volkswagen AG.

1.3.2 2.0L TDI, CJAA, Part II

1 - Exhaust gas temperature sensor 2 -G448-
2 - Double connector -T2eq-
3 - Double connector -T2fe-
4 - Double connector -T2fk-
5 - Exhaust gas temperature sensor 1 -G235-
6 - Exhaust gas temperature sensor 3 -G495-

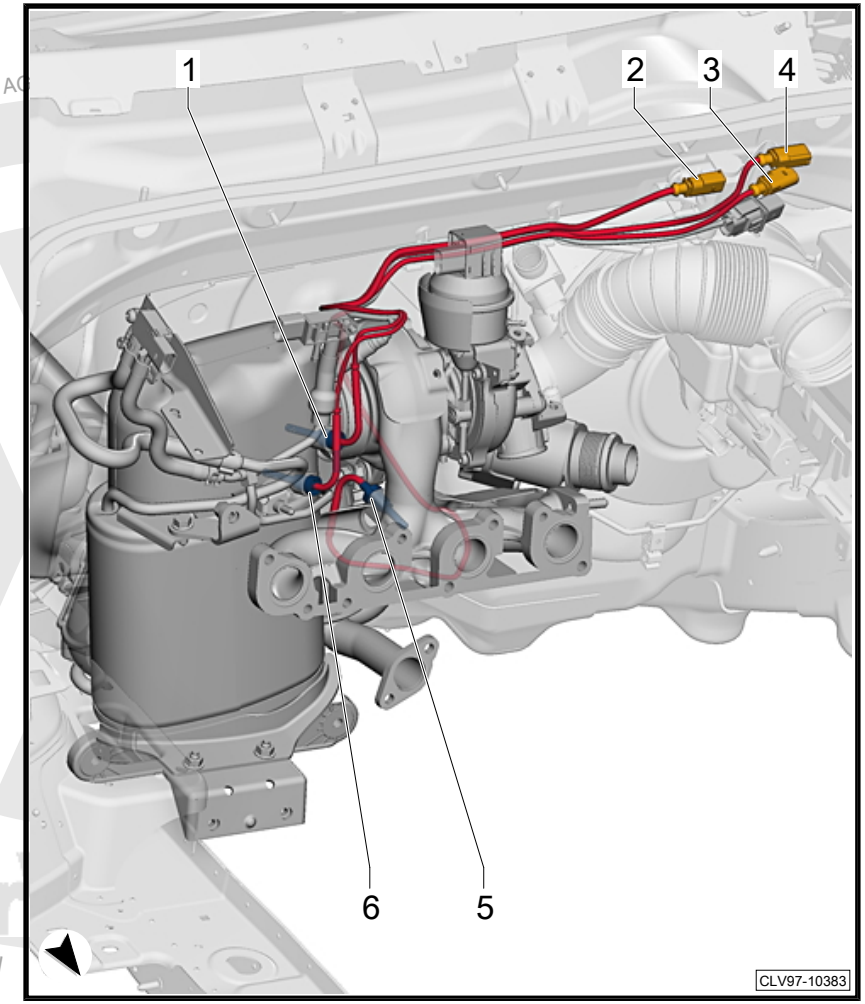

Protected by copyright. Copying for private or commercial purposes, in part or in whole, is not permitted unless authorised by Volkswagen AG

1.4 2.0L MPI, CBPA

1 - 6-pin connector -T6w-

2 - Heated oxygen sensor -G39-

2 - Oxygen sensor heater -Z19-

3 - Oxygen sensor after three way catalytic converter -G130-

3 - Heater for oxygen sensor 1 after catalytic converter -Z29-

4 - 4-pin connector -T4ao-

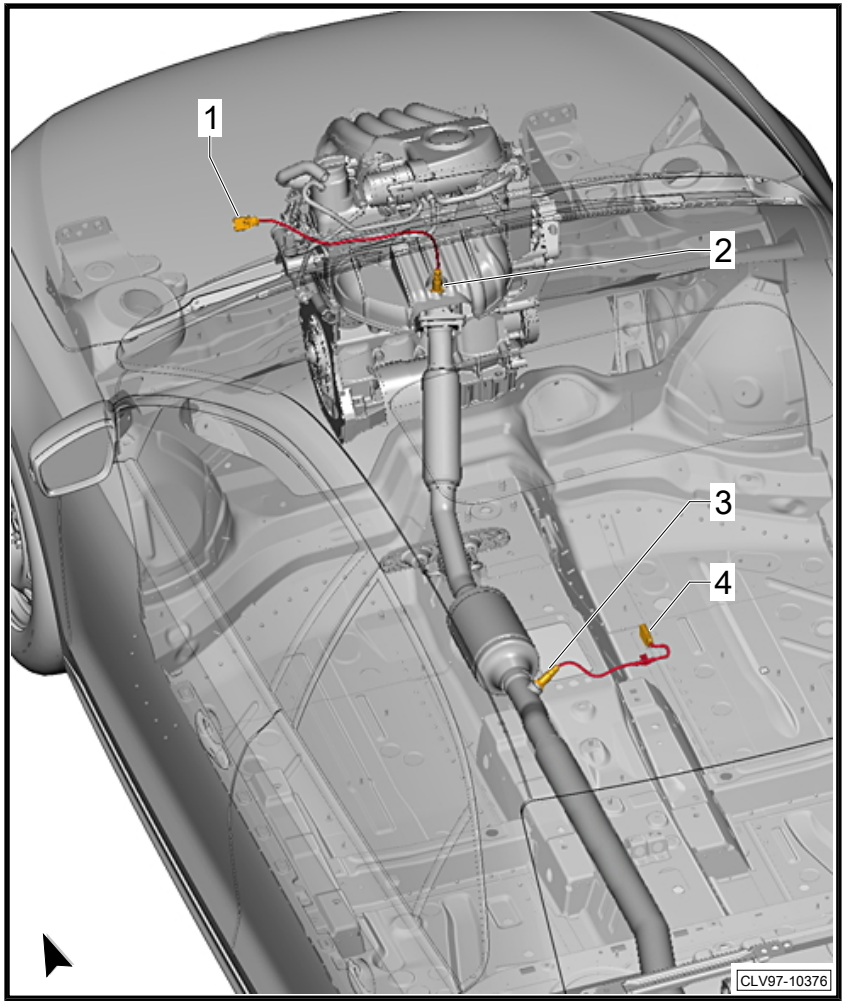

Protected by copyright. Copying for private or commercial purposes, in part or in whole, is not permitted unless authorised by Volkswagen AG. Volkswagen AG does not guarantee or accept any liability with respect to the correctness of information in this document. Copyright by Volkswagen AG.

1.5 2.0L TFSI, CCTA/CBFA

1 - 6-pin connector -T6w-

2 - Heated oxygen sensor -G39-

2 - Oxygen sensor heater -Z19-

3 - Heated oxygen sensor 2 -G108-

3 - Oxygen sensor 2 heater -Z28-

4 - 4-pin connector -T4ab-

5 - 4-pin connector -T4ao-

6 - Oxygen sensor after three way catalytic converter -G130-

6 - Heater for oxygen sensor 1 after catalytic converter -Z29-

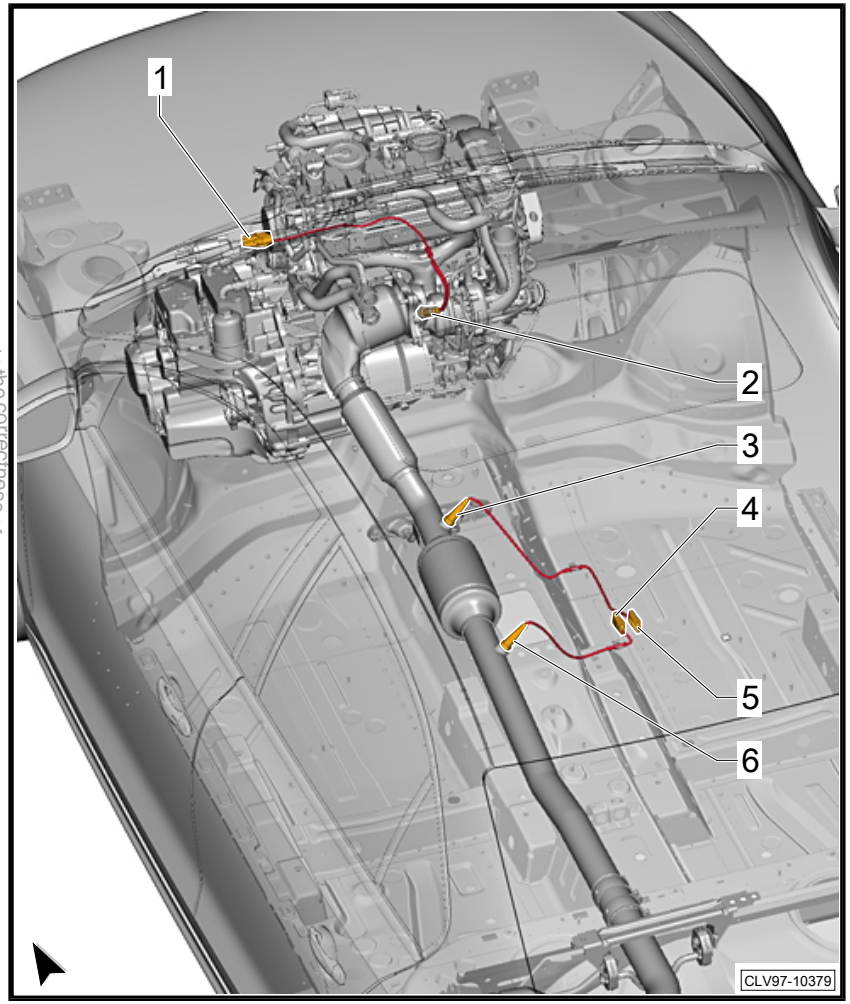

Protected by copyright. Copying for private or commercial purposes, in part or in whole, is not permitted unless authorised by Volkswagen AG. Volkswagen AG does not guarantee or accept any liability with respect to the correctness of information in this document. Copyright by Volkswagen AG.

1.6 2.5L SRE, CBTA/CBUA

1 - 6-pin connector -T6w-

2 - Heated oxygen sensor -G39-

2 - Oxygen sensor heater -Z19-

3 - Oxygen sensor in bank 1 center three way catalytic converter -G465-

3 - Heater for oxygen sensor center catalytic converter -Z59-

4 - Oxygen sensor after three way catalytic converter -G130-

4 - Heater for oxygen sensor 1 after catalytic converter -Z29-

5 - 4-pin connector -T4ao-

6 - 4-pin connector -T4ap-

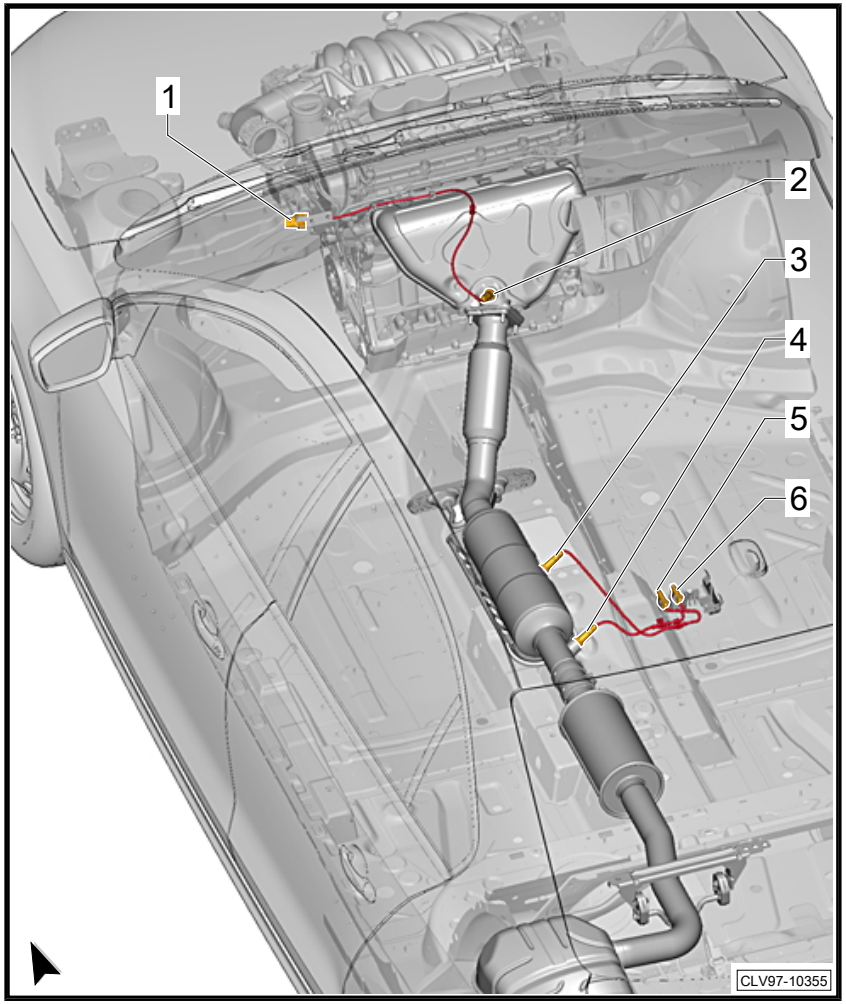

Protected by copyright. Copying for private or commercial purposes, in part or in whole, is not permitted unless authorised by Volkswagen AG. Volkswagen AG does not guarantee or accept any liability with respect to the correctness of information in this document. Copyright by Volkswagen AG.

1.7 1.8L TFSI, CPKA/CPRA

1 - 6-pin connector -T6w-

2 - Oxygen sensor 1 before catalytic converter -GX10-

2 - Heated oxygen sensor -G39-

2 - Oxygen sensor heater -Z19-

3 - 4-pin connector -T4ao-

4 - Oxygen sensor 1 after catalytic converter -GX7-

4 - Heater for oxygen sensor 1 after catalytic converter -Z29-

4 - Oxygen sensor after three way catalytic converter -G130-

5 - 4-pin connector -T4ap-

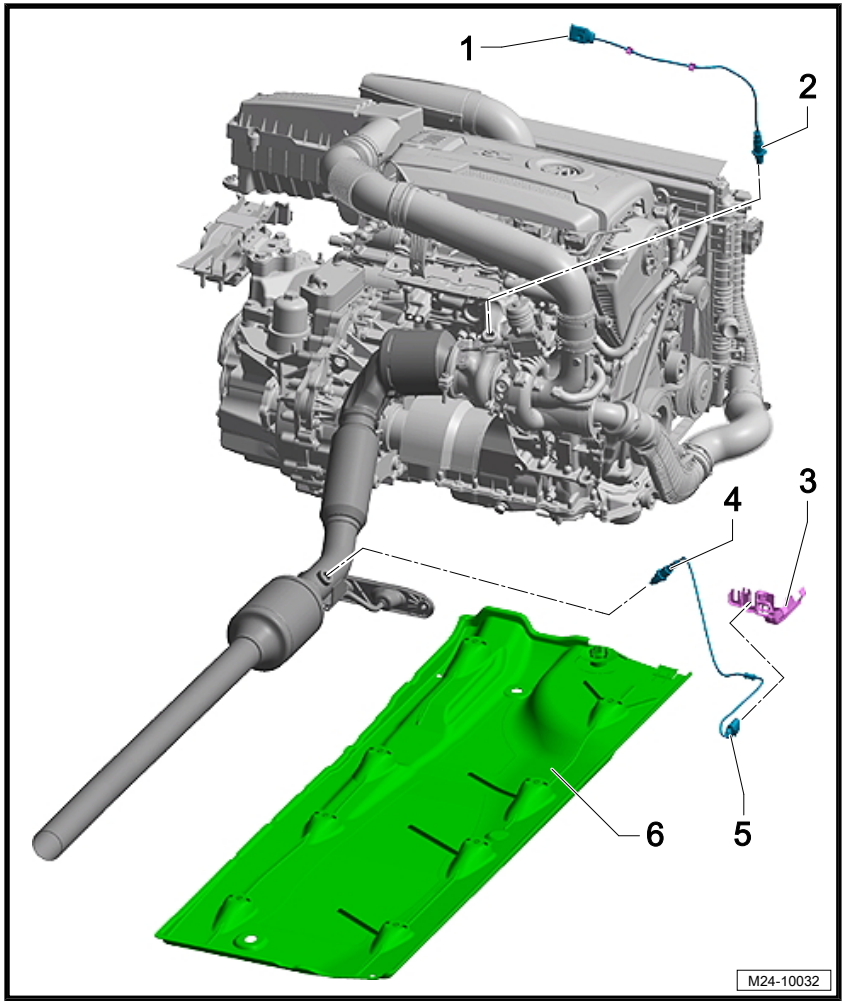

Protected by copyright. Copying for private or commercial purposes, in part or in whole, is not permitted unless authorised by Volkswagen AG. Volkswagen AG does not guarantee or accept any liability with respect to the correctness of information in this document. Copyright by Volkswagen AG.

1.8 2.0L TFSI, CPLA/CPPA

1 - 6-pin connector -T6w-

2 - Oxygen sensor 1 before catalytic converter -GX10-

2 - Heated oxygen sensor -G39-

2 - Oxygen sensor heater -Z19-

3 - 4-pin connector -T4ao-

4 - Oxygen sensor 1 after catalytic converter -GX7-

4 - Heater for oxygen sensor 1 after catalytic converter -Z29-

4 - Oxygen sensor after three way catalytic converter -G130-

5 - 4-pin connector -T4ap-

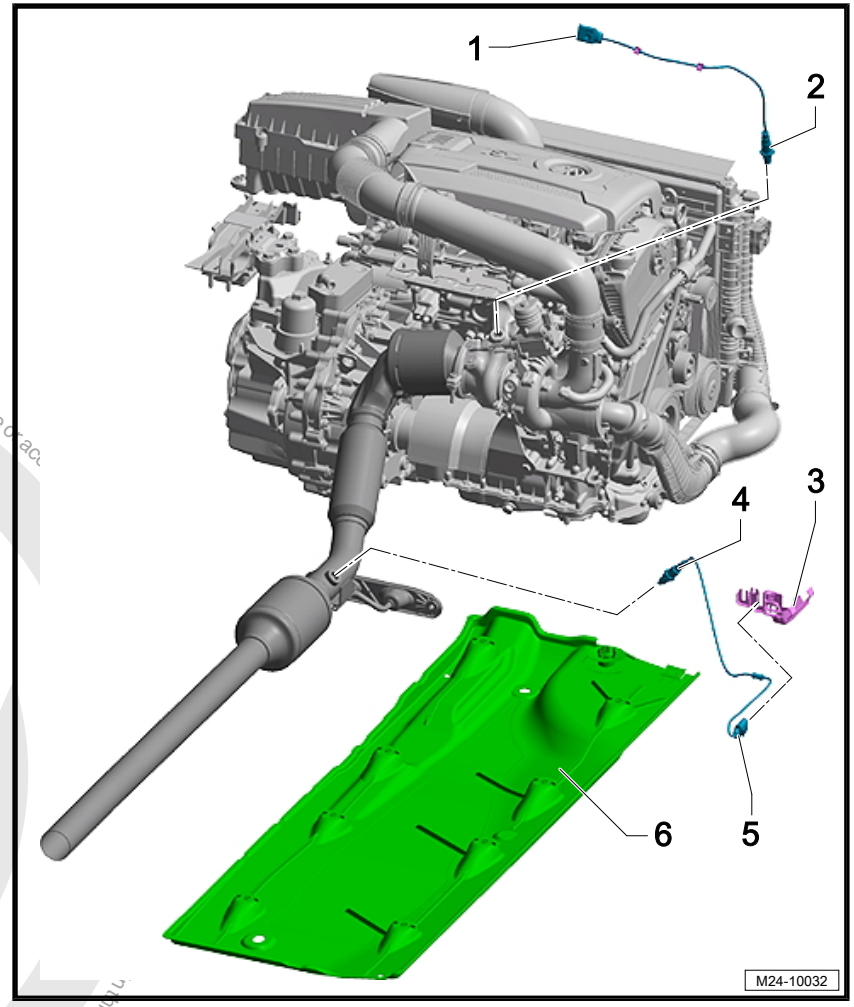

Protected by copyright. Copying for private or commercial purposes, in part or in whole, is not permitted unless authorised by Volkswagen AG. Volkswagen AG does not guarantee or ac
n this document. Copyright by Volkswagen AG.

1 Understanding Wiring Diagrams Terminology and Symbols

1.1 Capacitor

Capacitors are a passive electronic component that holds a charge in the form of an electrostatic field. They are often used in combination with transistors in DRAM, acting as storage cells to hold bits. Capacitors typically consist of conducting plates separated by thin layers of dielectric material, such as dry air or mica. The plates on opposite sides of the dielectric material are oppositely charged and the electrical energy of the charged system is stored in the polarized dielectric.

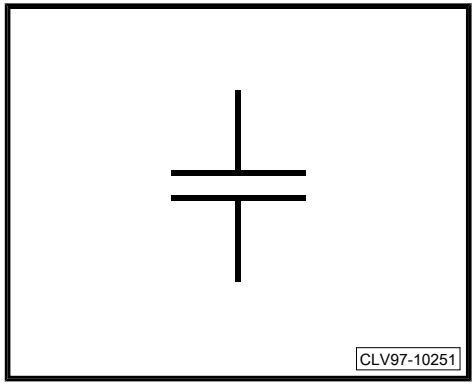

1.2 Connector

Connectors are the part of a cable that plugs into a port or interface to connect one device to another. Most connectors are either male (containing one or more exposed pins) or female (containing holes in which the male connector can be inserted).

Given a relatively fixed voltage in an automotive electrical system (12.6 volts), the current in the circuit is determined by the amount of resistance in the load and in the conductors and connections in the circuit.

Terminals, connectors and splices are used throughout the electrical wiring harness to aid in vehicle assembly and service. Any connection in a circuit creates a place where problems can occur.

Typical connector problems include:

- Disconnected connector
- Terminal backed out
- Terminal corrosion
- Terminal spread too wide
- Improperly made splice

Copyright by Volkswagen AG. Volkswagen AG does not guarantee or accept any liability with respect to the correctness of information in this document. Copying for private or commercial purposes, in part or in whole, is not permitted unless authorised by Volkswagen AG.

Connector pin numbers are always shown from the mating side of the connector, not the harness side of the connector. If you are back-probing the connector for a voltage check, remember the pin numbering becomes the mirror of what is pictured in the diagram.

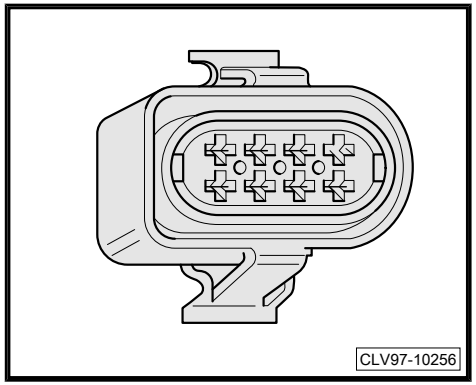

Push-on/multi-pin connectors use the “T” designation, and are identified in the legend. For example, T8a/5 designates an 8-pin connector, with the specified wire located in terminal 5 of the connector housing.

Most pin assignments are labeled on the plastic hardshell connector housing and/or the corresponding component. On larger connectors, pin assignments are labeled at either end of a row. For example, the Engine Control Module (ECM) plug often has 2 or 3 rows of 12 or more terminals. Each row will be marked on each end to facilitate diagnosis.

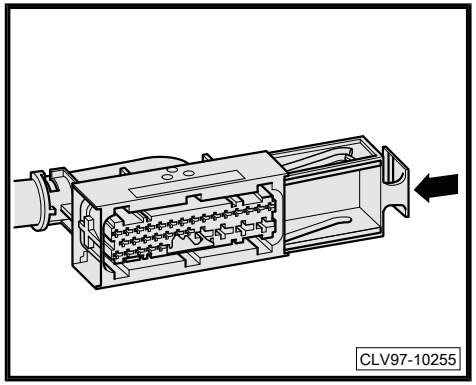

1.3 Component Code Prefixes

- A - Battery
- B - Starter
- C - Alternator/generator
- D - Ignition/starter switch
- E - Switches — these are usually more complex switches: A/C control head, sunroof regulator
- F - Switches — door, hood, brake, clutch, trunk, multifunction, etc.
- G - Gauges and sensors

Protected by copyright. Copying for private or commercial purposes, in part or in whole, is not permitted unless authorised by Volkswagen AG. Volkswagen AG does not guarantee or accept any liability with respect to the correctness of information in this document. Copyright by Volkswagen AG.

- H - Horn
- J - Control modules, relays, electronic relays
- K - Indicator/warning lights
- L - Lights
- M - Lights
- N - Solenoids/inductors/ignition — fuel injectors, purge, ignition coil, ignition module, etc.
- P - Spark plug connector
- Q - Spark plugs
- R - Radio, CD, telephone, navigation
- S - Fuse, circuit breaker, protection device
- T - Wire connector V Motor — window motors, vacuum pumps, etc.
- W - Lights — interior, trunk
- Z - Heating elements — O2 sensor heater, heated seats, heated mirrors, etc

1.4 DIN Standard 72 552

German institute for standards that establishes guidelines for manufacturing and nomenclature.

This standard applies to the terminal designations for circuits. The purpose of the terminal designation system is to enable accurate connection identification from conductors (wires) to various components when diagnosis and repair is necessary. DIN standards for terminal designations are shown below:

- 1 - Ignition coil, ignition distributor — low voltage
- 1a - To contact breaker I (ignition distributor with two separate circuits)
- 1b - To contact breaker II (ignition distributor with two separate circuits)
- 4 - Ignition coil, ignition distributor — high voltage
- 4a - From ignition coil I (ignition distributor with two separate circuits)
- 4b - From ignition coil II (ignition distributor with two separate circuits)
- 15 - Switched (+) downstream of battery (output of ignition/driving switch)
- 15a - Output at ballast resistor to ignition coil and starter

Protected by copyright. Copyright by Volkswagen AG.
Copying for private or commercial purposes, in part or in whole, is not permitted unless authorised by Volkswagen AG. Volkswagen AG does not guarantee or accept any liability with respect to the correctness of information in this document.

- 17 - Glow plug and starter switch — start
- 19 - Glow plug and starter switch — preheat
- 30 - Input from battery (+) term., direct 12/24 V seriesparallel battery switch
- 30a - Input from (+) terminal of battery II
- 31 - Battery negative terminal, or ground, direct
- 31a - Return line to battery II, negative (12/24 V seriesparallel battery switch)
- 31b - Return line to battery negative terminal, or ground via switch or relay (switched negative)
- 31c - Return line to battery I, negative (12/24 V seriesparallel battery switch)
- 50 - Starter control (direct)
-

Protected by copyright. Copying for private or commercial purposes, in part or in whole, is not permitted unless authorised by Volkswagen AG. Volkswagen AG does not guarantee or accept any liability with respect to the correctness of information in this document. Copyright by Volkswagen AG.

Electric Motors

- 32 - Return line
- 33 - Main terminal connection
- 33a - Self-parking switch-off
- 33b - Shunt fi eld
- 33f - For second lower-speed range
- 33g - For third lower-speed range
- 33h - For fourth lower-speed range
- 33L - Counter-clockwise rotation
- 33R - Clockwise rotation

Starters

- 45 - Separate starter relay, output; starter, input (main current) Two-starter parallel operation C — starting relay for engagement current
- 45a - Output, starter I, input, starters I and II

- 45b - Output, starter II
- 48 - Terminal ON starter and ON start-repeating relay for monitoring starting

Turn-Signal Flashers (Pulse Generators)

- 49 - Input
- 49a - Output
- 49b - Output, second circuit
- 49c - Output, third circuit

Starter Control

- 50 - Starter control (direct)
- 50a - Series-parallel battery switch — output for starter control
- 50b - With parallel operation of two starters with sequential control Starting relay for sequential control of the engagement current during parallel operation of two starters
- 50c - Input at starting relay for starter I
- 50d - Input at starting relay for starter II
- 50e - Start-locking relay input
- 50f - Start-locking relay output
- 50g - Start-repeating relay input
- 50h - Start-repeating relay output

Wiper Motors

- 53 - Wiper motor, input (+)
- 53a - Wiper (+), self-parking switch-off
- 53b - Wiper (shunt winding)

Protected by copyright. Copying for private or commercial purposes, in part or in whole, is not permitted unless authorised by Volkswagen AG. Volkswagen AG does not guarantee or accept any liability with respect to the correctness of information in this document. Copyright by Volkswagen AG.

- 53c - Electric windshield-washer pump
- 53e - Wiper (brake winding)
- 53l - Wiper motor with permanent magnet and third brush (for higher speed)

Lighting

- 55 - Fog lamp
- 56 - Headlamp
- 56a - High beam, high-beam indicator lamp
- 56b - Low beam
- 56d - Headlamp-fl asher contact
- 57a - Parking lamp
- 57L - Parking lamp, left
- 57R - Parking lamp, right
- 58 - Side-marker, tail, license plate, and instrument panel lamps
- 58b - Dimmer
- 58d - Dimmer
- 58L - License-plate lamp, left
- 58R - License-plate lamp, right

Alternators and Voltage Regulators

- 61 - Alternator charge-indicator lamp
- B+ - Battery positive
- B- - Battery negative
- D+ - Dynamo positive
- D- - Dynamo negative

Protected by copyright. Copying for private or commercial purposes, in part or in whole, is not permitted unless authorised by Volkswagen AG. Volkswagen AG does not guarantee or accept any liability with respect to the correctness of information in this document. Copyright by Volkswagen AG.

- DF - Dynamo fi eld DF1 Dynamo fi eld 1
- DF2 - Dynamo fi eld 2
- U,V,W - Alternator terminals
- 75 - Radio, cigarette lighter
- 76 - Speakers

Switches

Break Contact (NC) and Changeover Switches

- 81 - Input
- 81a - Output 1, NC side
- 81b - Output 2, NC side

Multiple-Position Switches

- 83 - Input
- 83a - Output, position 1
- 83b - Output, position 2
- 83L - Output, left-hand position
- 83R - Output, right-hand position

Relays/Current Relays

- 84 - Input, actuator and relay contact
- 84a - Output, actuator
- 84b - Output, relay contact

Protected by copyright. Copying for private or commercial purposes, in part or in whole, is not permitted unless authorised by Volkswagen AG. Volkswagen AG does not guarantee or accept any liability with respect to the correctness of information in this document. Copyright by Volkswagen AG.

Alternators and Voltage Regulators

- 85 - Output, actuator (end of winding to ground or negative)
- 86 - Input, actuator (start of winding)
- 86a - Start of winding or 1st winding
- 86b - Winding tap or 2nd winding

Relay Contact for Break (NC) and Changeover Contacts

- 87 - Input
- 87a - Output 1 (NC side)
- 87b - Output 2 87c Output 3
- 87z - Input 1
- 87y - Input 2
- 87x - Input 3

Relay Contact for Make (NO) Contact and Changeover Contacts

- 88 - Input
- 88a - Output 1
- 88b - Output 2
- 88c - Output 3
- 88z - Input 1
- 88y - Input 2
- 88x - Input 3

Directional Signals (Turn Signal Flashers)

- C - Indicator lamp 1
- C2 - Indicator lamp 2

Protected by copyright. Copying for private or commercial purposes, in part or in whole, is not permitted unless authorised by Volkswagen AG. Volkswagen AG does not guarantee or accept any liability with respect to the correctness of information in this document. Copyright by Volkswagen AG.

- C0 - Main terminal connection for separate indicator circuits actuated by the turn signal switch
- C3 - Indicator lamp 3 (e.g., when towing two trailers)
- L - Turn-signal lamps, left
- R - Turn-signal lamps, right

1.5 Diode

Normal Diode

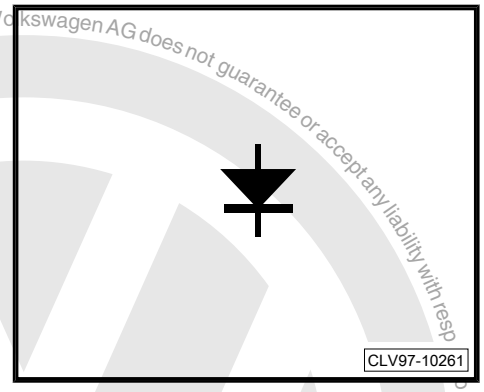

Zener Diode

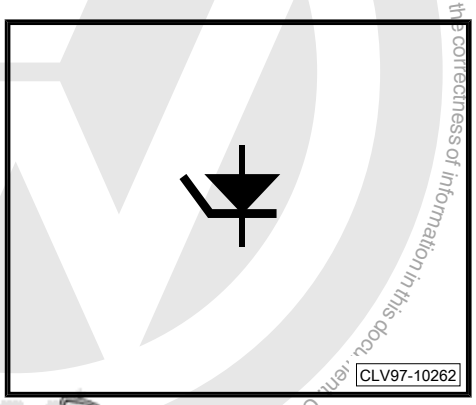

Protected by copyright. Copying for private or commercial purposes, in part or in whole, is not permitted unless authorised by Volkswagen AG. Volkswagen AG does not guarantee or accept any liability with respect to the correctness of information in this document. Copyright by Volkswagen AG.

Light Sensitive Diode

Diodes are an electric component that conducts electric current in only one direction, functioning as a one-way valve. Diodes typically are made from semiconductor materials such as silicon, germanium or selenium and are uses as voltage regulators, signal rectifiers, oscillators and signal modulators/demodulators.

The arrow of the circuit symbol shows the direction in which the current can flow. Diodes are the electrical version of a valve and early diodes were actually called valves.

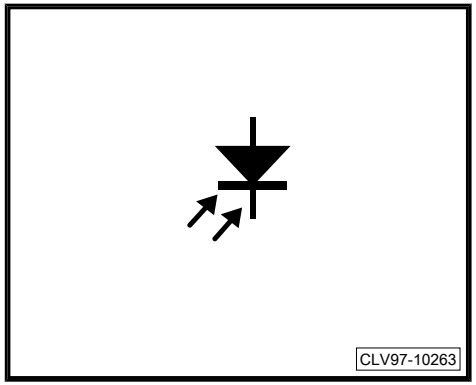

1.6 Fuse

Normal Fuse

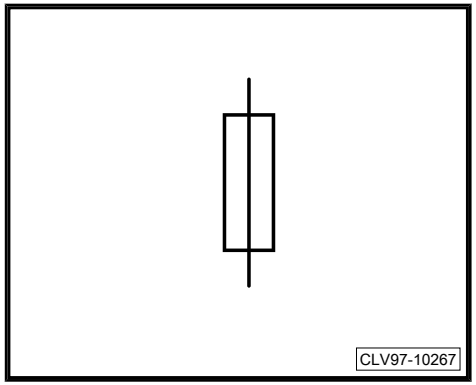

Thermal Fuse

A component installed in series with a circuit, designed to disrupt the circuit when carrying more than its specified amperage. Fuses are placed in circuits to protect other components in the circuit from damage.

Fuses are used to prevent excessive current from damaging other components in a circuit. There are various types including standard fuses, thermal fuses (circuit breakers) and strip fuses. Fuses use the component designation S .

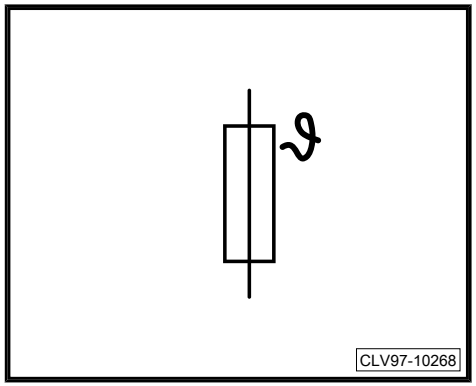

Protected by copyright. Copying for commercial purposes, in part or in whole, is not permitted unless authorised by Volkswagen AG. Volkswagen AG does not guarantee or accept any liability with respect to the correctness of information in this document. Copyright by Volkswagen AG.

1.7 LED (Light-emitting Diode)

An LED is a light-emitting diode semiconductor device used to transmit light into a fiber in response to an electrical signal. It typically has a broad spectral width.

The diode is created such that light emitted at a p-n junction is proportional to the bias current; color output depends on the material used.

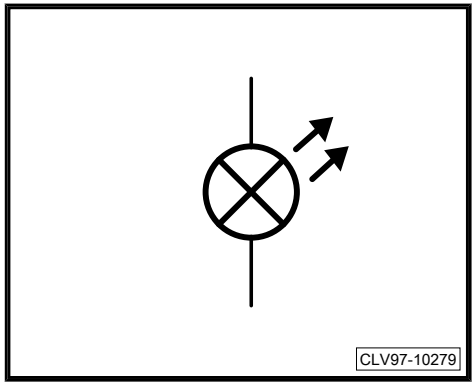

1.8 Module

A transistorized, rather than analog, switching circuit that relies on one or inputs to control the switching of a logic circuit.

Control Modules can make the task of reading and interpreting wiring diagrams more difficult because multiple signals enter and/ or exit, but the internal schematic is not always shown.

Some control modules may be integrated with other components. Take, for example, the window motor with control module. Both the motor and the control module are combined to make a single component.

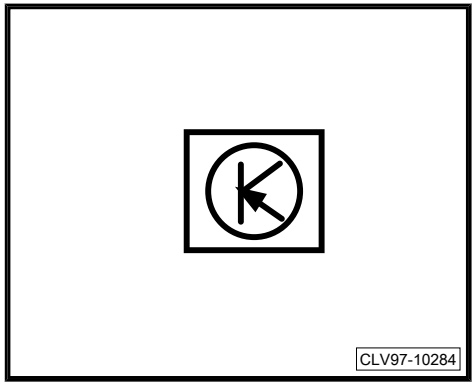

The symbol below represents the combined components.

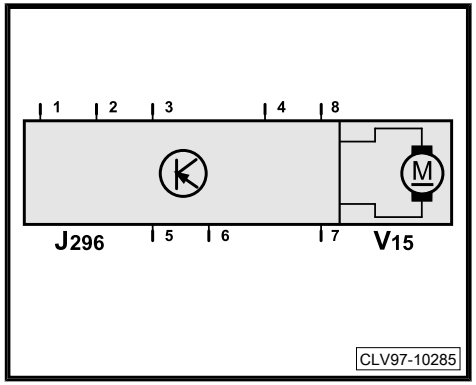

Protected by copyright. Copying for private or commercial purposes, in part or in whole, is not permitted unless authorised by Volkswagen AG. Volkswagen AG does not guarantee or accept any liability with respect to the correctness of information in this document. Copyright by Volkswagen AG.

Protected by copyright. Copyright by Volkswagen AG. Volkswagen AG does not guarantee or accept any liability with respect to the correctness of information in this document. Copyright by Volkswagen AG. Volkswagen AG. Copyright. Copying for private or commercial purposes, in part or in whole, is not permitted unless authorised by Volkswagen AG.

1.9 Motor

Single Speed Motor

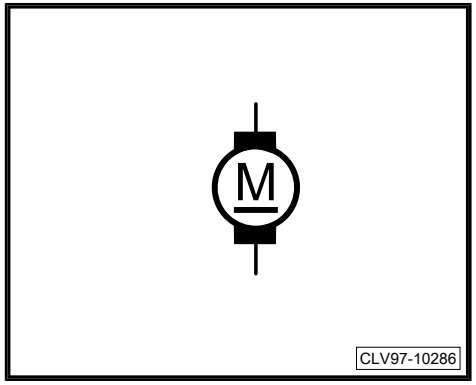

Two Speed Motor

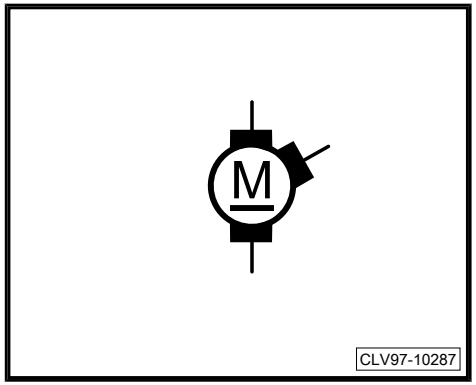

A motor is driven by electromotive force.

A device that converts electrical energy into rotational motion. On late model vehicles, the speed of most motors is controlled using PWM circuits. If a motor has low output, checking the motor amperage can determine if the problem is electrical or mechanical. Increasing the electrical resistance in a motor circuit will decrease the amperage in the circuit, while increasing the mechanical load on the motor shaft will increase the amperage in the circuit.

The direction of motor rotation can be changed by reversing the polarity of the signals to the motor.

1.10 Potentiometer or Rheostat

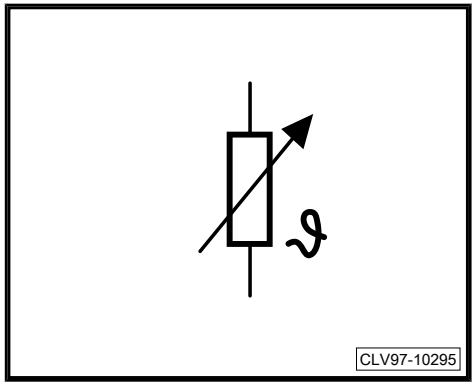

A resistor that varies its resistance based on a mechanical input.

A three wire variable resistor that is used as a voltage divider. A reference voltage (usually 5 volts or battery voltage) and ground are placed across a resistance element. A wiper is moved across the element to produce an infinitely variable voltage signal from zero up to the reference voltage, which is measured on the third wire. In automotive applications, potentiometers are commonly used as position sensors for motors or measuring throttle plate position.

A rheostat, or potentiometer, varies its resistance based on mechanical input. An example of this is the Throttle Position Sensor (TPS) on a Motronic equipped car.

Protected by copyright. Copying for private or commercial purposes, in part or in whole, is not permitted unless authorised by Volkswagen AG. Volkswagen AG does not guarantee or accept any liability with respect to the correctness of information in this document. Copyright by Volkswagen AG.

1.11 Relay

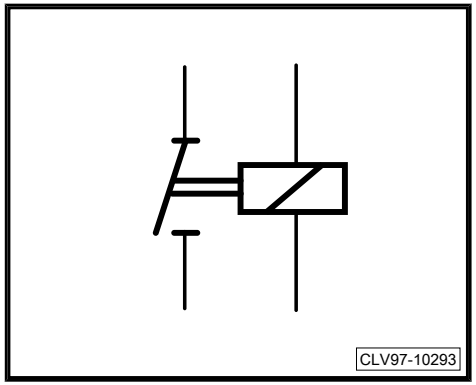

Component that uses a low current to switch a high current circuit.

It contains a winding that is used to magnetically move a set of points (switch), similar to the operation of a solenoid. When an on/off signal is supplied to the winding, a magnetic field is generated which changes the position of the switch. Depending on the design of the relay, the switch may be normally open or normally closed in its rest state. The most common type of relay is a four wire relay, which uses two wires for the control circuit and two wires for the switched circuit. Relays that use more than four wires are usually variations of this design, usually containing multiple control and switched circuits. If a relay contains logic circuits, it is generally considered a control unit although it may still be called a relay.

Like solenoids, relays also produce an inductive kick. Volkswagen relays have a built in suppression circuit consisting of a resistor placed parallel to the winding.

Although there are numerous types of relays used in VW and Audi vehicles, two major distinctions might be made, conventional mechanical relays and solid state relays.

Solid state relays are actually transistors– miniaturized electronic components that have a purpose similar to mechanical relays. Transistors, like relays, allow a circuit with low current to control a circuit with high current.

- Mechanical relays are always shown with the coil de-energized.
- Solid state relays may be part of a Relay Box/Junction Block. If they are a transistor and they fail, the entire relay box/ Junction Block must be replaced.

Protected by copyright. Copying for private or commercial purposes, in part or in whole, is not permitted unless authorised by Volkswagen AG. Volkswagen AG does not guarantee or accept any liability with respect to the correctness of information in this document. Copyright by Volkswagen AG.

1.12 Resistor

Normal Resistor

A commonly used symbol is the resistor, used to create a voltage drop in a circuit.

A component that creates a voltage drop in a circuit. Resistors can be used for measurement of current flow, as well as to drop the applied voltage for certain consumers.

Resistors are an electronic component that resists, limits or regulates the flow of electrical current in an electronic circuit. Since the device has resistance it is used in a circuit for protection and current control.

A standard resistor has a fixed resistance.

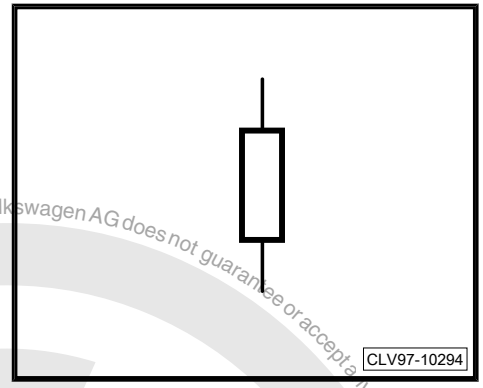

Temperature Dependent Resistor

A temperature dependent resistor or thermistor is a two wire sensor that utilizes a resistor whose resistance varies with temperature. The thermistors used in most automotive applications have a Negative Temperature Coefficient (NTC), where the resistance of the thermistor decreases as the temperature increases. In a Positive Temperature Coefficient (PTC) thermistor, the resistance of the thermistor increases as the temperature increases. NTC thermistors are commonly used as temperature sensors. The temperature value is not obtained by reading the sensor resistance directly, but instead by placing a reference voltage (usually 5 volts) and ground across the sensor and then reading the resulting voltage drop.

A temperature dependent resistor varies its resistance based on temperature. This type of resistor is used as the Engine Coolant Temperature (ECT) sensor on an engine management system, or the Interior Temperature sensor on models with climate control

When a resistor is used as a sensor, it generally carries a component designator “G.”

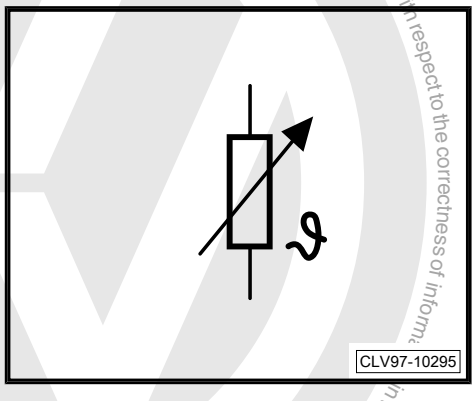

Protected by copyright. Copying for private or commercial purposes, in part or in whole, is not permitted unless authorised by Volkswagen AG. Volkswagen AG does not guarantee or accept any liability with respect to the correctness of information in this document. Copyright by Volkswagen AG.

1.13 Sensors

1.13.1 Analog Sensors

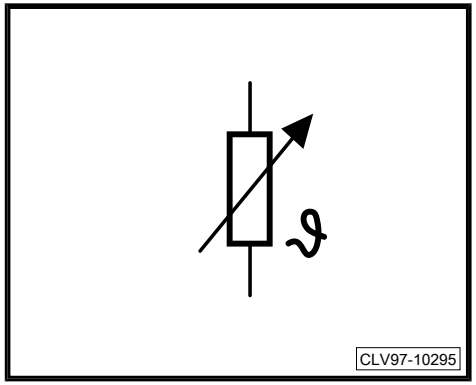

Thermistor

A two wire sensor that utilizes a resistor whose resistance varies with temperature. The thermistors used in most automotive applications have a Negative Temperature Coefficient (NTC), where the resistance of the thermistor decreases as the temperature increases. In a Positive Temperature Coefficient (PTC) thermistor, the resistance of the thermistor increases as the temperature increases. NTC thermistors are commonly used as temperature sensors. The temperature value is not obtained by reading the sensor resistance directly, but instead by placing a reference voltage (usually 5 volts) and ground across the sensor and then reading the resulting voltage drop.

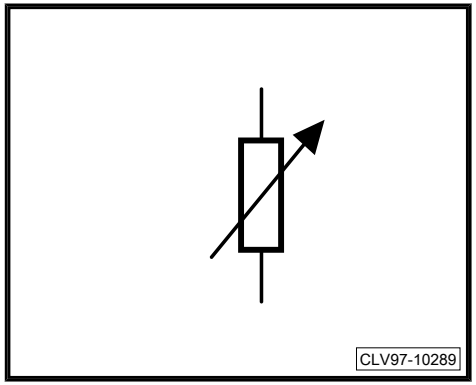

Potentiometer

A three wire variable resistor that is used as a voltage divider. A reference voltage (usually 5 volts or battery voltage) and ground are placed across a resistance element. A wiper is moved across the element to produce an infinitely variable voltage signal from zero up to the reference voltage, which is measured on the third wire. In automotive applications, potentiometers are commonly used as position sensors for motors or measuring throttle plate position.

Inductive Sensor: A two wire sensor that measures the rotation of a shaft. Unlike other sensors, this sensor does not have an external power supply. Instead, it contains a permanent magnet that creates a magnetic field which collapses and expands when a sensor wheel is rotated through it, generating an AC sine wave signal. The frequency of the signal varies with changes in the RPM of the sensor wheel. Many crankshaft position (RPM) sensors and older ABS wheel speed sensors are inductive sensors.

Knock Sensor: A two wire sensor that is used to measure spark knock in an engine. This sensor uses a crystal material that generates an AC voltage when mechanical stress is applied to it (piezoelectric effect) when spark knock occurs. During installation, a knock sensor must be properly torqued to read spark knock correctly.

Protected by copyright. Copying for private or commercial purposes, in part or in whole, is not permitted unless authorised by Volkswagen AG. Volkswagen AG does not guarantee or accept any liability with respect to the correctness of information in this document. Copyright by Volkswagen AG.

Analog Signal

An electrical signal whose amplitude can be measured at an infinite number of positions along the waveform.

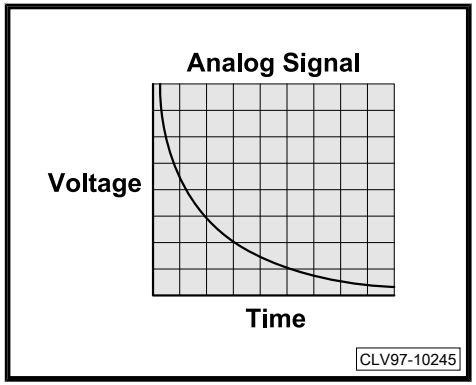

1.13.2 Digital Sensors

Hall Sensors and Switches

A two or three wire electronic sensor that produces a variable frequency square wave signal. Power and ground are supplied to a Hall Effect Transistor which is located in a magnetic field generated by a permanent magnet. As the magnet field is altered by moving the magnet in relation to the transistor or by moving a shutter wheel through the magnetic field, the reference voltage is alternately pulled high or low resulting in a square wave signal. Hall Sensors are often used to measure the position of rotating components such as camshaft position sensors.

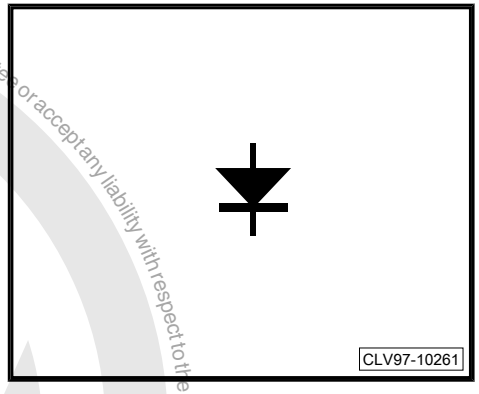

Digital Signal

An electrical signal with an instantaneous change in amplitude (called a pulse) from low to high and high to low. Since the change in state is instantaneous, the amplitude can only be measured in two positions, high or low.

The pulse shown is a positive pulse, because the normal state of the waveform is low and the pulse goes high. However, with a negative pulse, the normal state of the waveform is high and the pulse goes low.

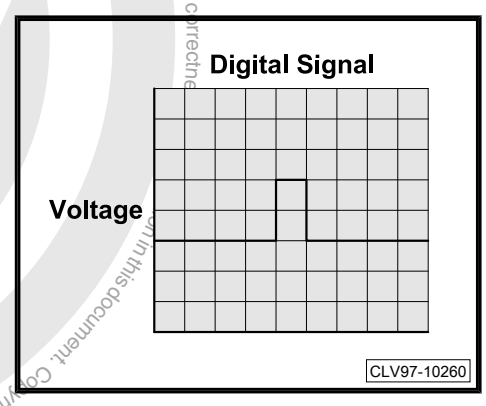

Protected by copyright. Copying for private or commercial purposes, in part or in whole, is not permitted unless authorised by Volkswagen AG. Volkswagen AG does not guarantee or accept any liability with respect to the correctness of information in this document. Copyright by Volkswagen AG.

1.14 Solenoid

Used to actuate other components, a solenoid consists of a coil of wire wrapped around an iron core. When a current is passed through a wire, a magnetic field is induced. This magnetic "pull" is used to operate other components.

Solenoids are used to actuate many different components, including fuel injectors and relays.

A solenoid is a coil of wire wrapped around an iron core. When current is passed through the wire, a magnetic field is induced. This pulls a set of contacts in the relay closed, either opening or closing the circuit.

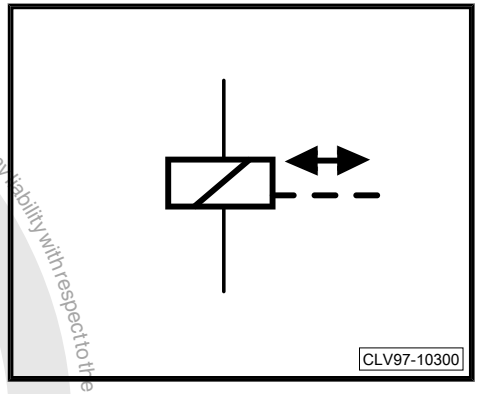

1.15 Switch

Normally Closed Switch

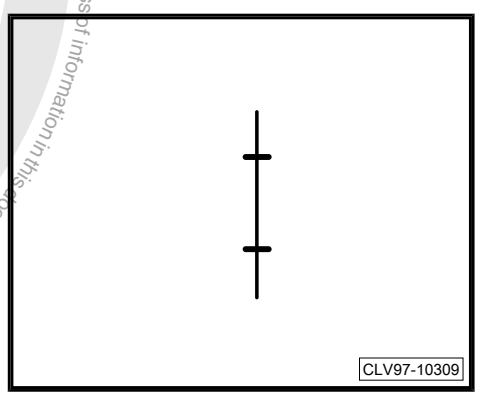

Protected by copyright. Copying for private or commercial purposes, in part or in whole, is not permitted unless authorised by Volkswagen AG. Volkswagen AG does not guarantee or accept any liability with respect to the correctness of information in this document. Copyright by Volkswagen AG.

Normally Open Switch

The switch is another component used to control current flow. The basic symbols for an open and closed switch are shown in illustration SSP 8730/22. An example of this simple two-position switch would be a glove compartment light switch. A simple switch uses the component designation “F.” There are many types of designs, including mechanically actuated, pressure actuated, temperature actuated and momentary.

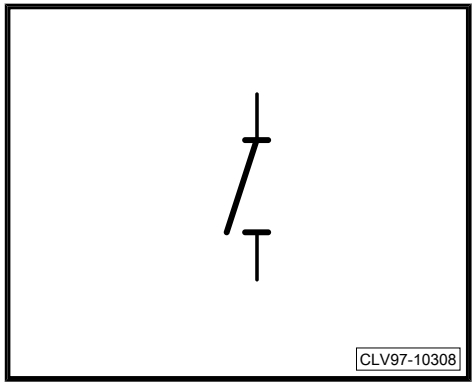

Manually Operated Switch

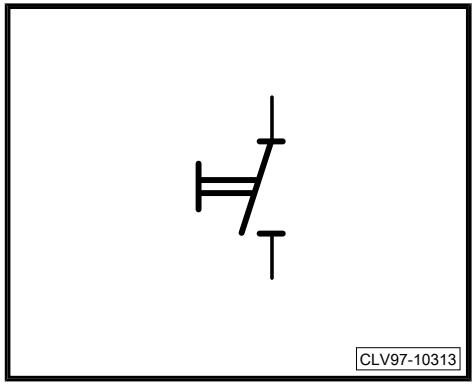

Pressure Operated Switch

Oil pressure switch (pressure actuated)

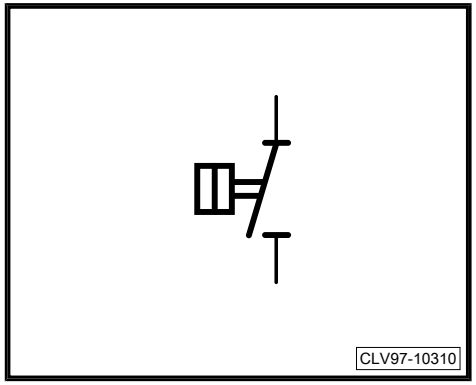

Protected by copyright. Copying for private or commercial purposes, in part or in whole, is not permitted unless authorised by Volkswagen AG. Volkswagen AG does not guarantee or accept any liability with respect to the correctness of information in this document. Copyright by Volkswagen AG.

Thermally Operated Switch

Cooling fan thermo-switch (temperature actuated)

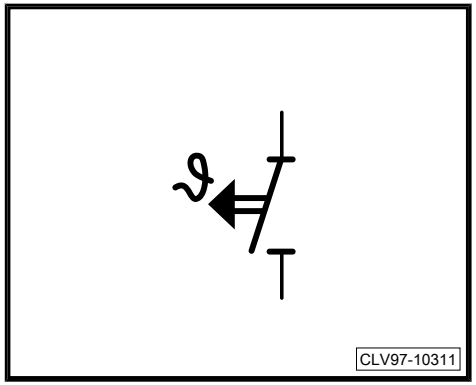

Mechanically Operated Switch

Brake Switch -F- (mechanically operated)

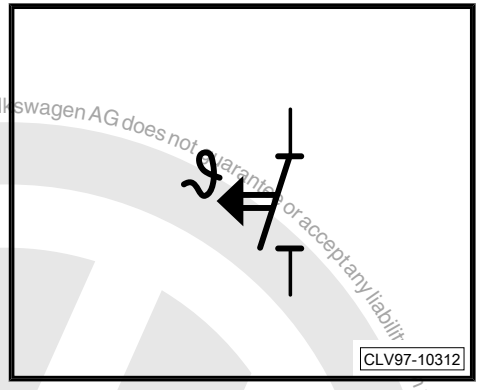

Complex Circuit with Multiple Switches

More complex circuits may require a switch with multiple sets of contacts. An example of this would be the cruise control switch.

As you can see in illustration above, there are multiple sets of contacts within the assembly. Depending on the position of the switch, various sets of contacts are open or closed. Careful study of the symbols allows the technician to follow the circuit through the switch under any condition.

A complex switch uses the component designation “E”

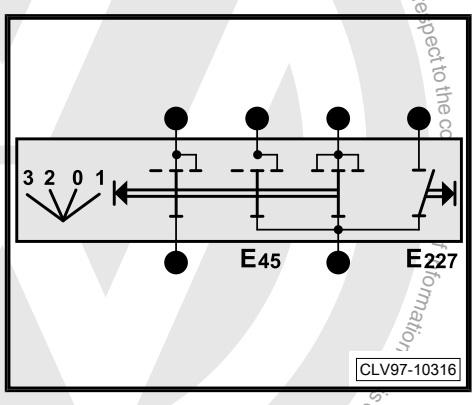

Protected by copyright. Copying for private or commercial purposes, in part or in whole, is not permitted unless authorised by Volkswagen AG. Volkswagen AG does not guarantee or accept any liability with respect to the correctness of information in this document. Copyright by Volkswagen AG

1.16 Solenoid

A two wire electromechanical device used to control the flow of liquids, gasses or the operation of mechanical components. To operate the solenoid, an on/off, PWM or variable frequency signal (commonly a switched ground) is supplied to a winding inside the solenoid, which in turn generates a magnetic field that moves a plunger. Depending on the design of the solenoid, the plunger may be normally open or normally closed in its rest state. A fuel injector is an example of a solenoid.

When the signal to the solenoid is switched off and the magnetic field around the winding collapses, the winding produces a phenomenon called “inductive kick”. Inductive kick is a high voltage pulse that is injected back into the control circuit and is similar in principal to the pulse produced by an ignition coil, although the voltage is much lower (generally around 30 to 60 volts).

Protected by copyright. Copying for private or commercial purposes, in part or in whole, is not permitted unless authorised by Volkswagen AG. Volkswagen AG does not guarantee or accept any liability with respect to the correctness of information in this document. Copyright by Volkswagen AG.

1.17 Symbols

Airbag Spiral Spring

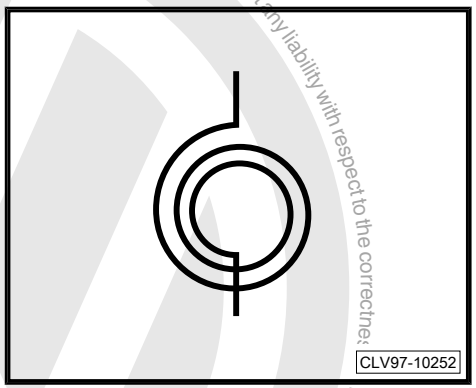

Antenna With Amplifier

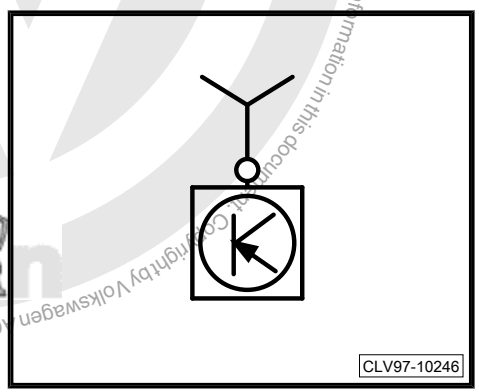

Battery

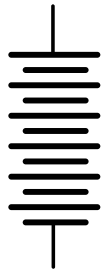

Camshaft Sensor

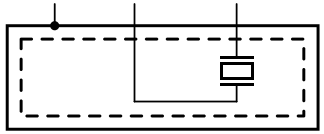

Cigarette Lighter

Protected by copyright. Copying for private or commercial purposes, in part or in whole, is not permitted unless authorised by Volkswagen AG. Volkswagen AG does not guarantee or accept any liability with respect to the correctness of information in this document. Copyright by Volkswagen AG.

Clock, Analog

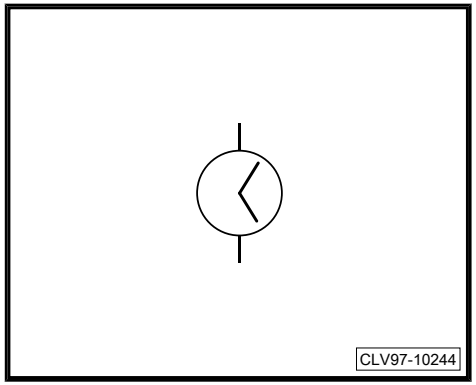

Clock, Digital

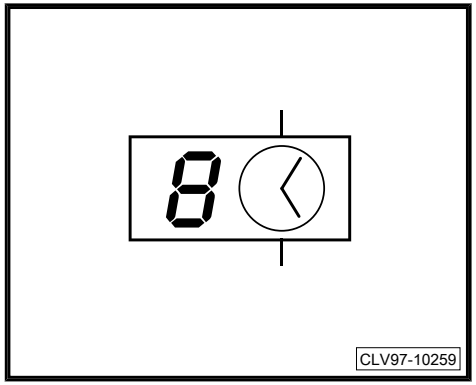

Control Motor

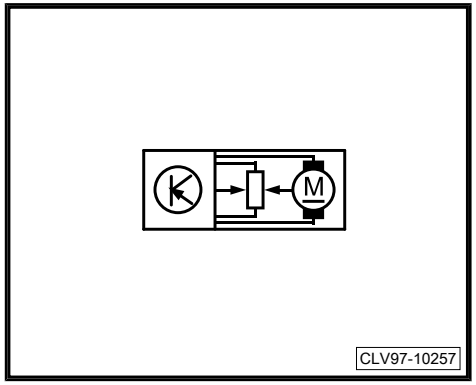

Protected by copyright. Copying for private or commercial purposes, in part or in whole, is not permitted unless authorised by Volkswagen AG. Volkswagen AG does not guarantee or accept any liability with respect to the correctness of information in this document. Copyright by Volkswagen AG.

Crankshaft Sensor

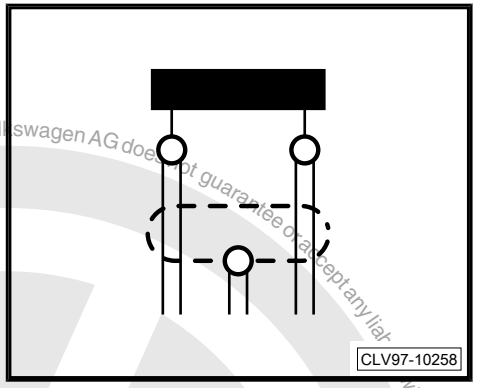

Distributor

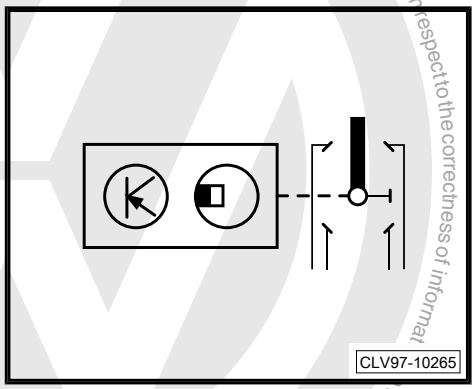

Generator

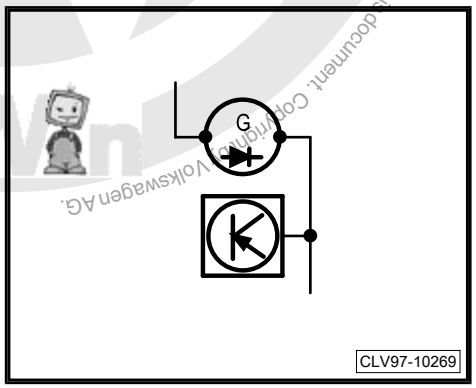

Protected by copyright. Copying for private or commercial purposes, in part or in whole, is not permitted unless authorised by Volkswagen AG. Volkswagen AG does not guarantee or accept any liab with respect to the correctness of information in this document. Copyright by Volkswagen AG.

Glow Plug

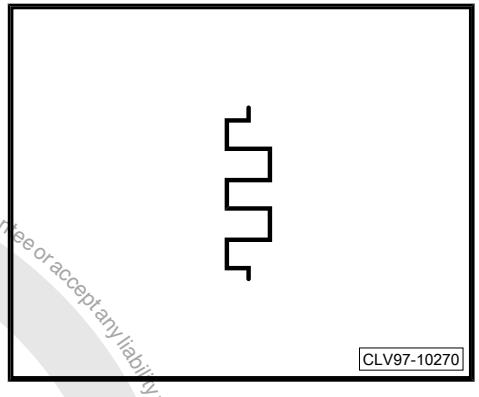

Heated O2 Sensor

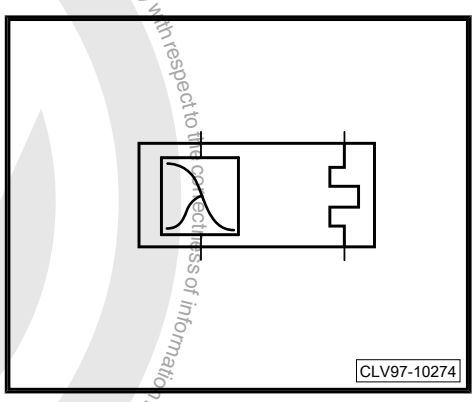

Heater Element

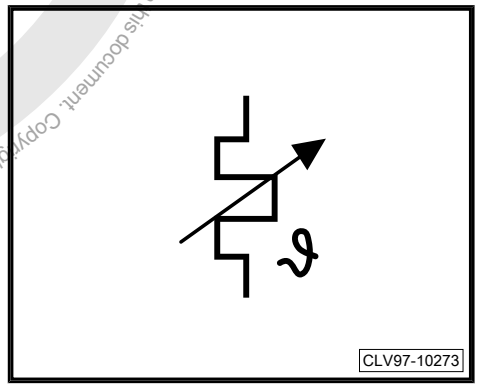

Protected by copyright. Copying for private or commercial purposes, in part or in whole, is not permitted unless authorised by Volkswagen AG. Volkswagen AG does not guarantee or accept any liability with respect to the correctness of information in this document. Copyright by Volkswagen AG.

Horn

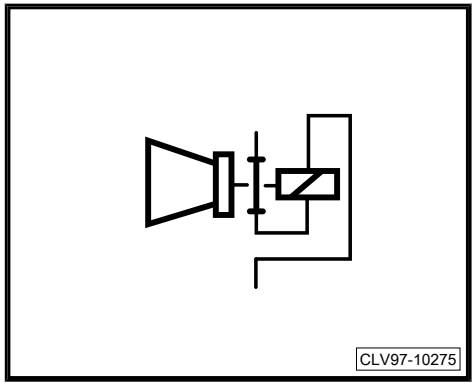

Ignition Coil

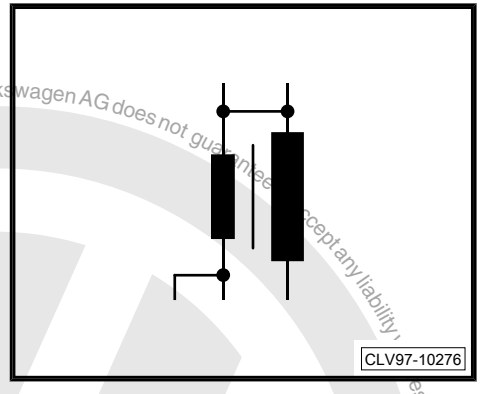

Instrument Gauge

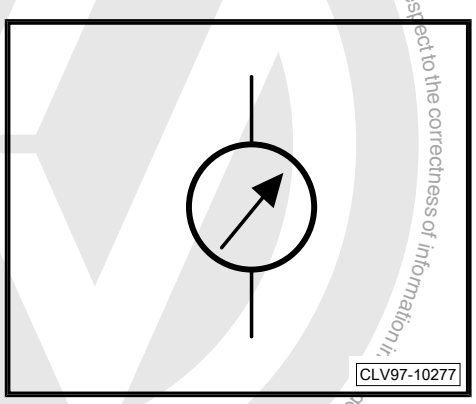

Protected by copyright. Copying for private or commercial purposes, in part or in whole, is not permitted unless authorised by Volkswagen AG. Volkswagen AG does not guarantee or accept any liability with respect to the correctness of information in this document. Copyright by Volkswagen AG.

Interior Light

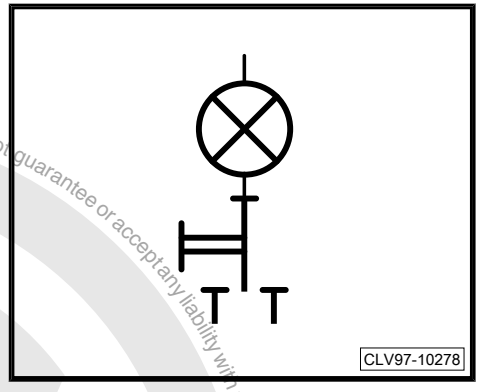

Light Bulb, Single Filament

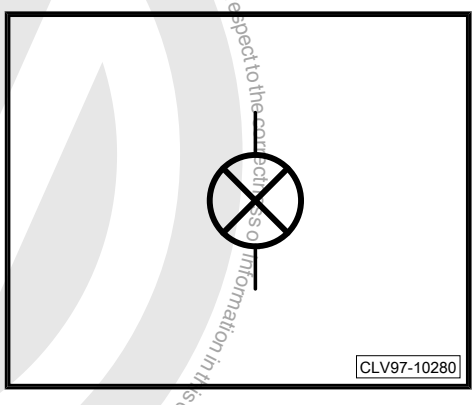

Light Bulb, Dual Filament

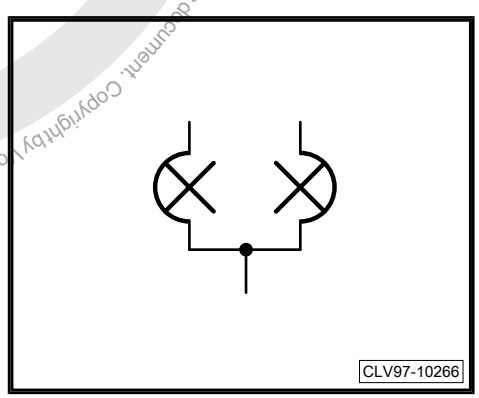

Protected by copyright. Copying for private or commercial purposes, in part or in whole, is not permitted unless authorised by Volkswagen AG. Volkswagen AG does not guarantee or accept any liability with respect to the correctness of information in this document. Copyright by Volkswagen AG.

Magnetic Clutch

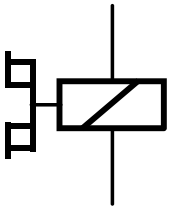

Malfunction Indicator

Radio

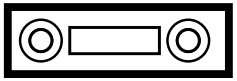

Protected by copyright. Copying for private or commercial purposes, in part or in whole, is not permitted unless authorised by Volkswagen AG. Copyright by Volkswagen AG. Volkswagen AG does not guarantee or accept any liability with respect to the correctness of information in this document.

Rear Window Defogger

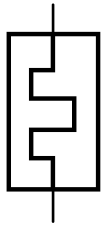

CLV97-10292

Slip Contact

CLV97-10298

Solenoid Valve

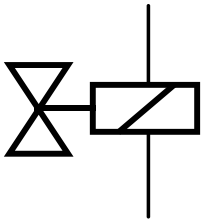

CLV97-10299

Protected by copyright. Copying for private or commercial purposes, in part or in whole, is not permitted unless authorised by Volkswagen AG. Volkswagen AG does not guarantee or accept any liability with respect to the correctness of information in this document. Copyright by Volkswagen AG.

Speaker

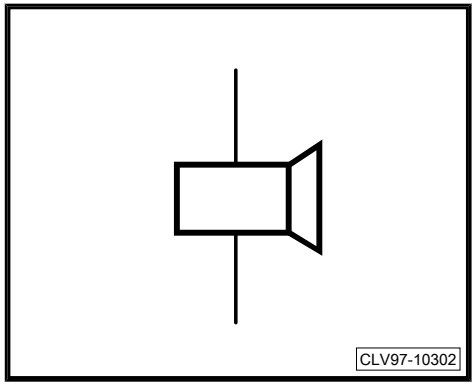

Speed Sensor

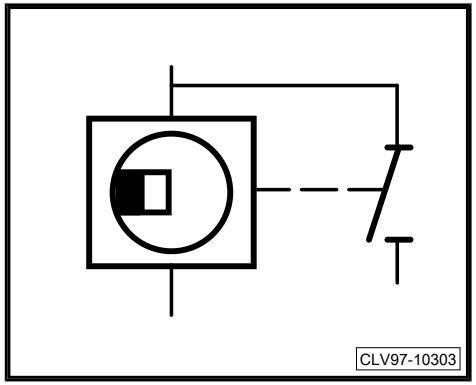

Starter

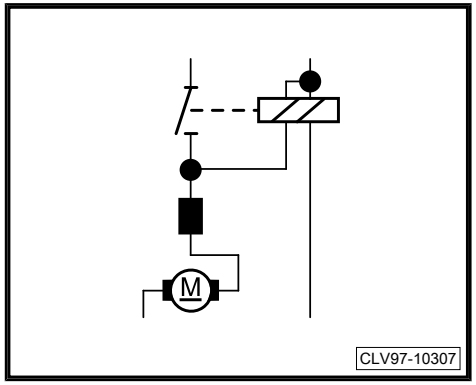

Protected by copyright. Copying for private or commercial purposes, in part or in whole, is not permitted unless authorised by Volkswagen AG. Volkswagen AG does not guarantee or accept any liability with respect to the correctness of information in this document. Copyright by Volkswagen AG.

Spark Plug

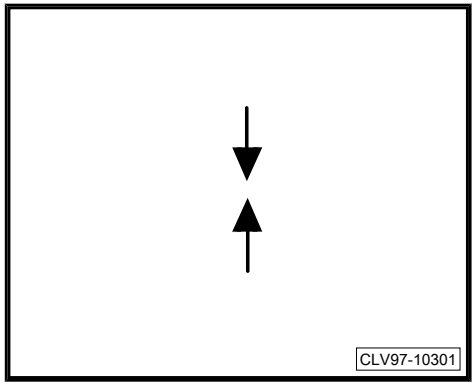

Transistor

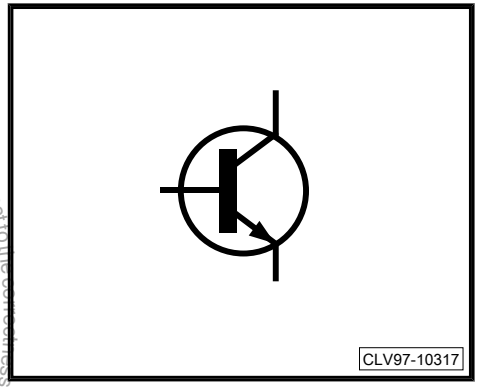

Wiper Motor

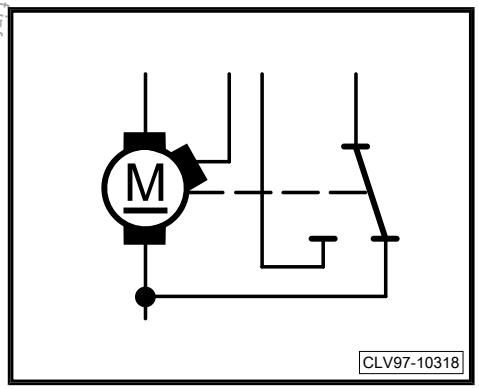

Protected by copyright. Copying for private or commercial purposes, in part or in whole, is not permitted unless authorised by Volkswagen AG. Volkswagen AG does not guarantee or accept any liability with respect to the correctness of information in this document. Copyright by Volkswagen AG.

1.17.1 Diodes

Diode

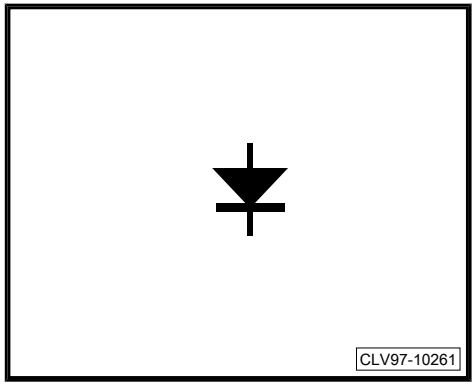

Zener Diode

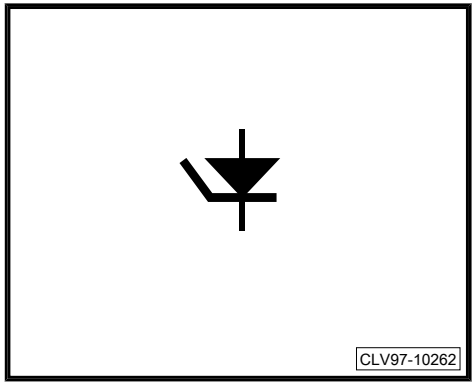

Light Sensitive Diode

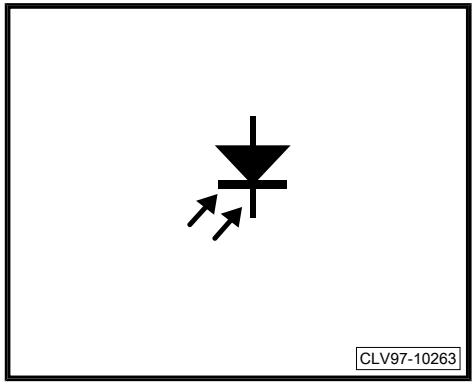

Protected by copyright. Copying for private or commercial purposes, in part or in whole, is not permitted unless authorised by Volkswagen AG. Volkswagen AG does not guarantee or accept any liability with respect to the correctness of information in this document. Copyright by Volkswagen AG.

LED (Light Emitting Diode)

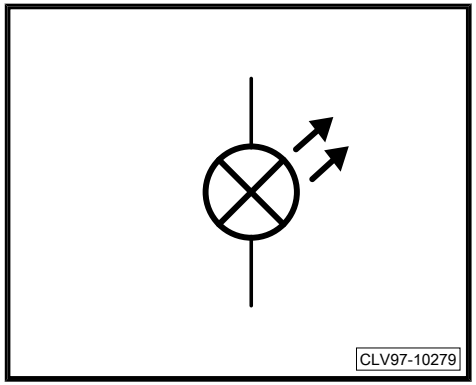

1.17.2 Switches

Normally Open Switch

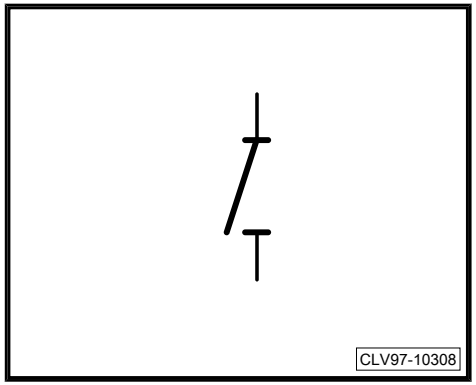

Normally Closed Switch

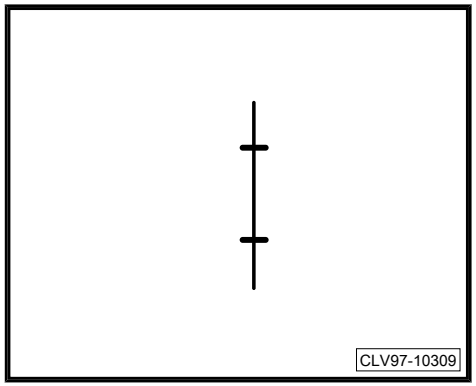

Protected by copyright. Copying for private or commercial purposes, in part or in whole, is not permitted unless authorised by Volkswagen AG. Volkswagen AG does not guarantee or accept any liability with respect to the correctness of information in this document. Copyright by Volkswagen AG.

Manually Operated Switch

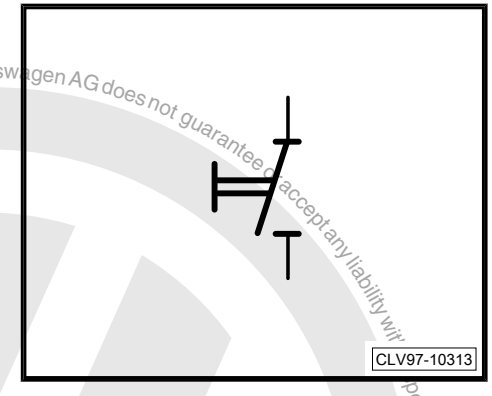

Push Button Switch

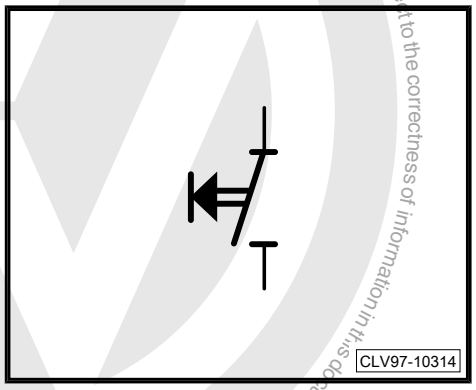

Mechanically Operated Switch

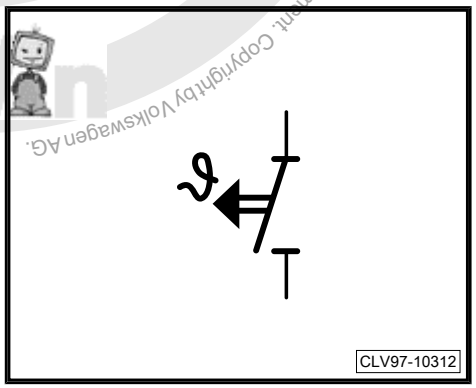

Protected by copyright. Copying for private or commercial purposes, in part or in whole, is not permitted unless authorised by Volkswagen AG. Volkswagen AG does not guarantee or accept any liability with respect to the correctness of information in this document. Copyright by Volkswagen AG.

Pressure Operated Switch

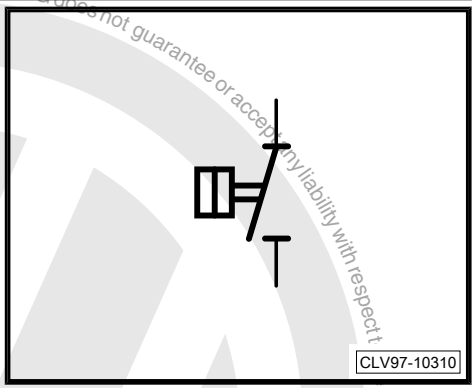

Thermally Operated Switch

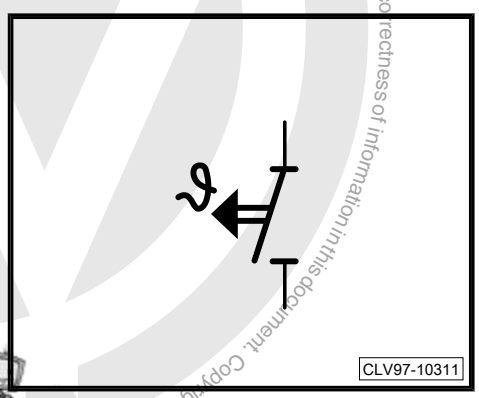

Multiple Switch

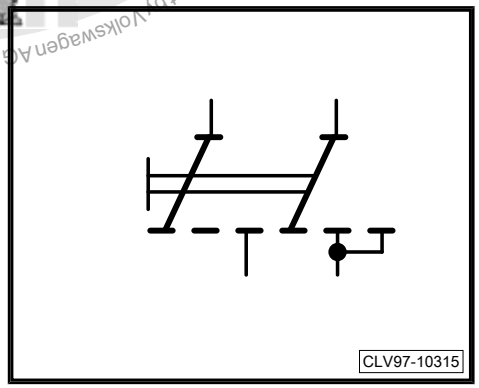

Protected by copyright. Copying for private or commercial purposes, in part or in whole, is not permitted unless authorised by Volkswagen AG. Volkswagen AG does not guarantee or accept any liability with respect to the correctness of information in this document. Copyright by Volkswagen AG.

1.17.3 Wiring

Wire Junction

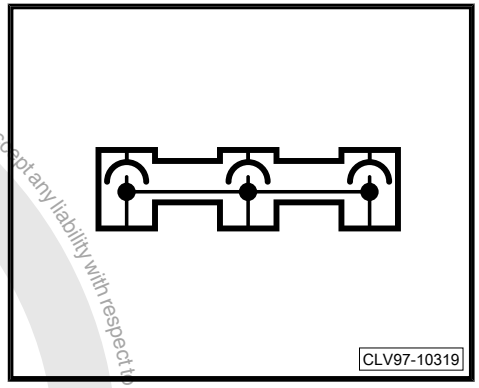

Disconnected Wire Terminal

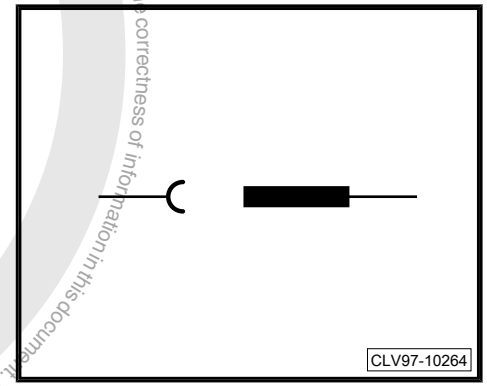

Multi Point Connection

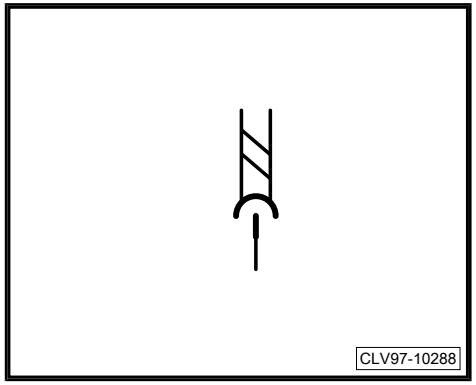

Protected by copyright. Copying for private or commercial purposes, in part or in whole, is not permitted unless authorised by Volkswagen AG. Volkswagen AG does not guarantee or accept any liability with respect to the correctness of information in this document. Copyright by Volkswagen AG.

Push On Connector

CLV97-10290

Connected Wire Terminal

CLV97-10254

1.18 Transistor

Transistor is a device composed of semiconductor material that amplifies a signal or opens or closes a circuit.

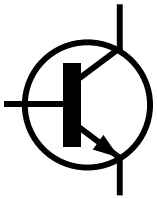

CLV97-10317

Protected by copyright. Copyright © Volkswagen AG. Volkswagen AG does not guarantee or accept any liability with respect to the correctness of information in this document. Copying for private or commercial purposes, in part or in whole, is not permitted unless authorised by Volkswagen AG.

1.19 Wire

- A wire is a single conductor which usually has an outer layer of insulation

1.19.1 Wire Type

Single core wire

Single core wire: It consists of a solid wire with a plastic coating.

A - Strand

B - Insulating materials

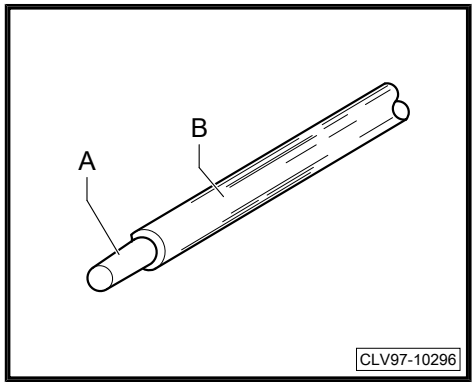

Stranded wire

Stranded wire: It consists of many fine strands of wire covered with an outer plastic coating.

A - Strand

B - Insulating materials

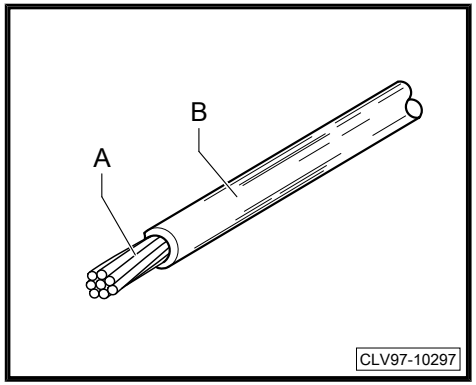

Protected by copyright. Copying for private or commercial purposes, in part or in whole, is not permitted unless authorised by Volkswagen AG. Volkswagen AG does not guarantee or accept any liability with respect to the correctness of information in this document. Copyright by Volkswagen AG.

Co-axial wire (cable)

- Co-axial wire (cable): It consists of insulated central wire which is used for signal, screen wires which are connected to 0 Volt to shield any electrical interference, and an outer sheath.

A - Signal wire

B - Insulation wire

C - Screen fine wires

D - Sheath

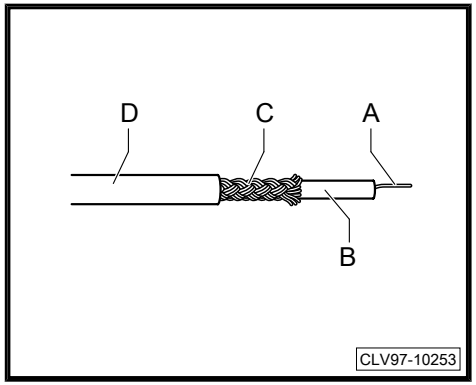

1.19.2 Wire color

Wire color is used to assist identify different circuit. It usually consists of one of two color: Base and Tracer. The base color is the dominant wire color whereas the tracer is thin color line.

Note

The brown colored wire - whether is solid brown or traced brown - is typically used for ground or controlled ground.

Circuit color abbreviation summary

German Abbreviation	English Abbreviation	Explanation
bl	bl/lb	Blue
br	br	Brown
ge	yl	Yellow
gn	dg	Green
ro	rd	Red
sw	bk	Black
li	vi	Violet
ws	wt	White

Protected by copyright. Copying for private or commercial purposes, in part or in whole, is not permitted unless authorized by Volkswagen AG. Volkswagen AG does not guarantee or accept any liability with respect to the correctness of information in this document. Copyright by Volkswagen AG.

Protected by copyright. Copying for private or commercial purposes, in part or in whole, is not permitted unless authorised by Volkswagen AG. Volkswagen AG does not guarantee or accept any liability with respect to the correctness of information in this document. Copyright by Volkswagen AG.

1.19.3 Wire Gauge

- Wire gauge: The term gague is essentially a standard measure of thickness. A rule of thumb when understanding wire gauge : the lower the gauge number, the higher the bead.

Metric Gauge Size in mm2	America Wire Gauge (AWG) Size
.35	22
.50	20
.75	18
1.00	16
1.50	14
2.50	12
4.00	10
6.00	8
16.0	4
25.0	2
35.0	2

1.19.4 Wire Layout

In this example we will identify a basic wire layout.

1 - Wire connection

2 - Circuit color - base circuit color covers 60%

3 - Harness inline connector

4 - Wire gauge

5 - Wire color

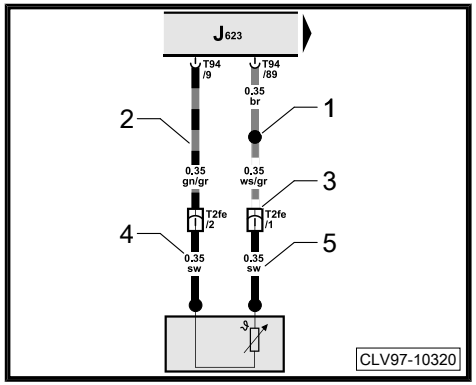

1.19.5 Wire Connection

Wire connection: it is two or more spliced wires together of the same circuit function. There are two types of spliced wires: negative connection or positive connection wires.

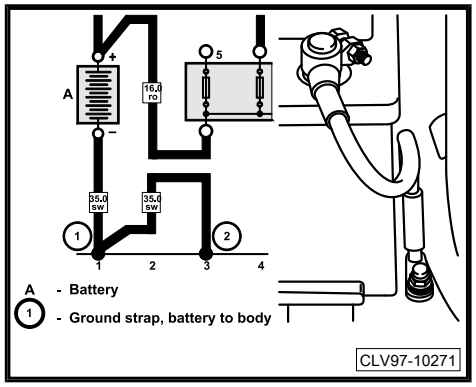

The vehicle chassis acts as a common Ground conductor throughout the vehicle, and is identified by the line at the bottom of the wiring diagram above the current track numbers. This Ground line will also show Grounds that are welded connections in the harness. The number in the circle will be repeated in the legend with a description of the Ground connection.

Ground connections are represented as a line at the bottom of the wiring diagram page, directly above the current track numbers. All ground connections, whether they occur as a splice in a harness, or the final ground source, are numbered and identified in the wiring diagram.

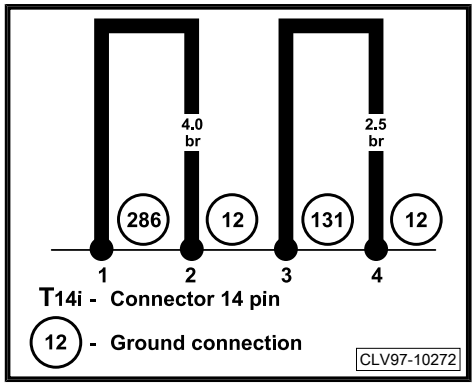

Some components, such as the starter or generator, may receive Ground where they are bolted to the engine or transmission. This is also shown as a thin black line.

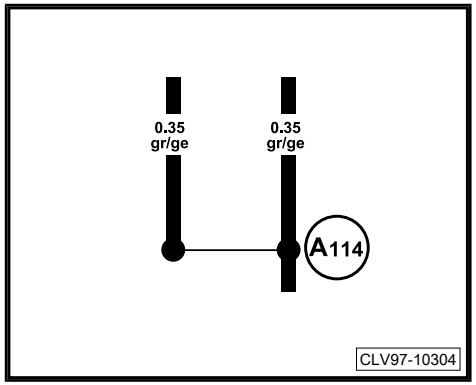

Protected by copyright. Copying for private or commercial purposes, in part or in whole, is not permitted unless authorised by Volkswagen AG. Volkswagen AG does not guarantee or accept any liability with respect to the correctness of information in this document. Copyright by Volkswagen AG.

Welded connections are used in wiring harnesses to join multiple, smaller gauge wires to a single larger wire which terminates at the fuse relay panel or chassis ground.

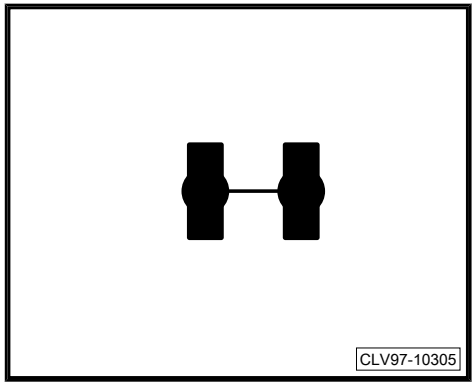

Sometimes a welded connection is shown with the thin line not terminating at another wire. This symbolizes that this welded connection is used in other diagrams for the car. The technician may need to reference other diagrams to locate components or Grounds related to this connection.

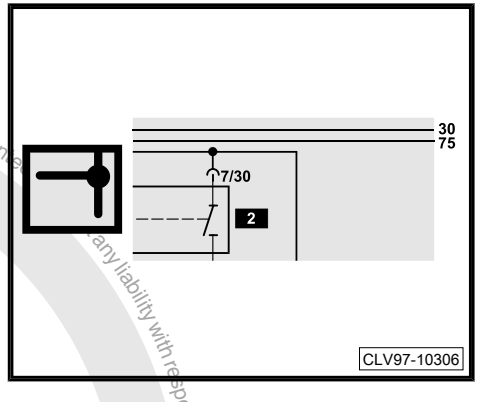

Internal conductors exist inside components, acting as bridges between the wiring harness and the final consumer. In some components these conductors are labeled in the component. An example would be the 30 circuit (Battery +) in the central/relay panel. In other components the conductor is not labeled. Internal conductors are shown as thin, black lines.

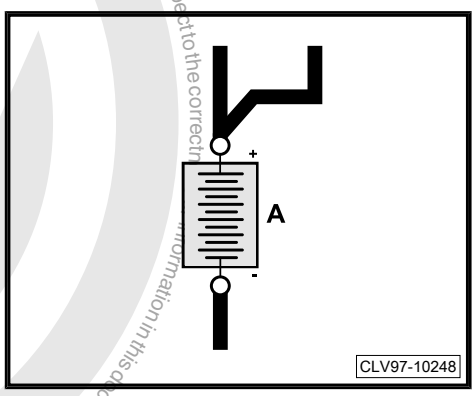

Protected by copyright. Copying for private or commercial purposes, in part or in whole, is not permitted unless authorised by Volkswagen AG. Volkswagen AG does not guarantee or accept any liability with respect to the correctness of information in this document. Copyright by Volkswagen AG.

Threaded connectors are commonly used on the bottom of the fuse relay plate to distribute power and ground to components. The common connectors include battery power, ground, and load reduction (X).

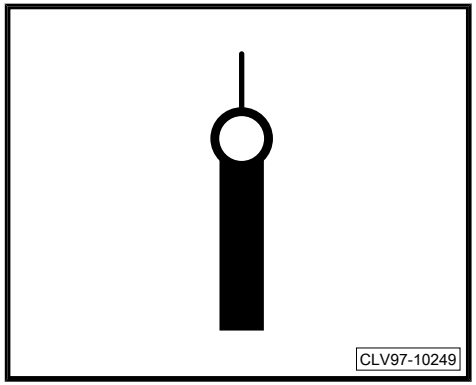

Protected by copyright. Copying for private or commercial purposes, in part or in whole, is not permitted unless authorised by Volkswagen AG. Volkswagen AG does not guarantee or accept any liability with respect to the correctness of information in this document. Copyright by Volkswagen AG.

1 Door Control Units - Connector Views

1.1 Front passenger door window regulator switch -E107-

4-pin connector -T4ak-

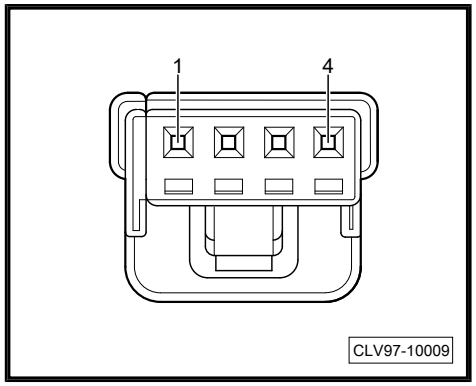

Cavity	Function	Cavity	Function
1	Ground (31)	3	----
2	Input, lighting/dimmer	4	Signal, switch

1.2 Rear lid remote release button -E233-

4-pin connector -T4w-

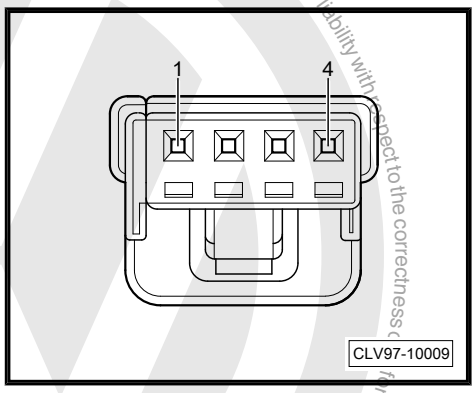

Cavity	Function	Cavity	Function
1	Ground (31)	3	----
2	Input, lighting/dimmer	4	Signal, rear lid remote release button

Protected by copyright. Copying for private or commercial purposes, in part or in whole, is not permitted unless authorised by Volkswagen AG. Volkswagen AG does not guarantee or accept any liability with respect to the correctness of information in this document. Copyright by Volkswagen AG.

1.3 Automatic dimming interior rearview mirror -Y7-

- ⇒ “1.3.1 High Line”, page 2
- ⇒ “1.3.2 Low Line”, page 2

1.3.1 High Line

6-pin connector -T6d-

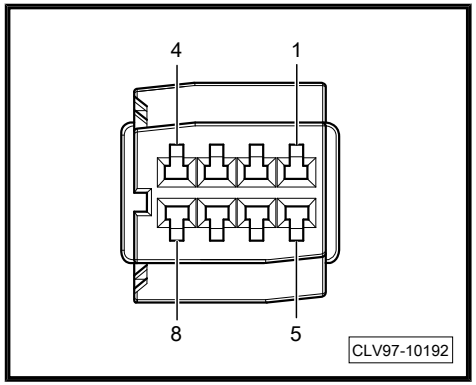

Cavity	Function	Cavity	
1	Power (15), 12 volts	5	Mirror, EC (-)
2	Ground (31)	6	Input, lighting/dimmer
3	CAN High	7	----
4	Mirror, EC (+)	8	CAN Low

1.3.2 Low Line

6-pin connector -T6d-

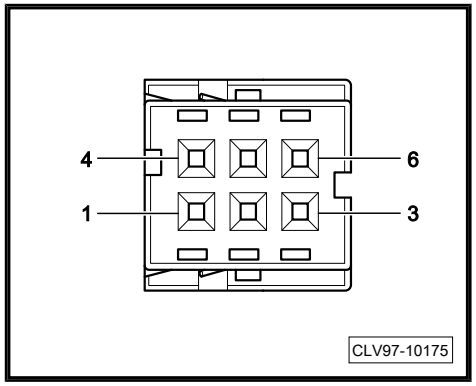

Cavity	Function	Cavity	
1	Power (15), 12 volts	4	----

Protected by copyright. Copying for private or commercial purposes, in part or in whole, is not permitted unless authorised by Volkswagen AG. Volkswagen AG does not guarantee or accept any liability with respect to the correctness of information in this document. Copyright by Volkswagen AG.

Cavity	Function	Cavity	
2	Ground (31)	5	----
3	Input, reverse gear	6	Input, front reading light

1.4 Driver interior locking button -E308-

4-pin connector -T4am-

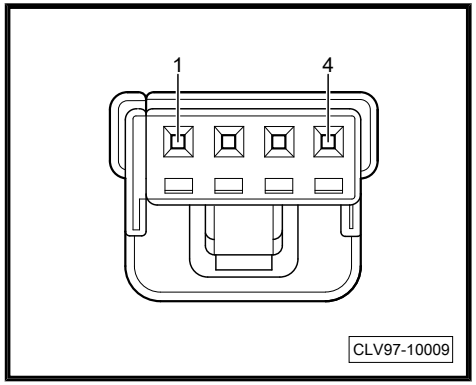

Cavity	Function	Cavity	Function
1	Ground (31)	3	Signal, status LED Lock
2	Input, lighting/dimmer	4	Signal, switch

1.5 Front passenger interior locking button -E309-

4-pin connector -T4an-

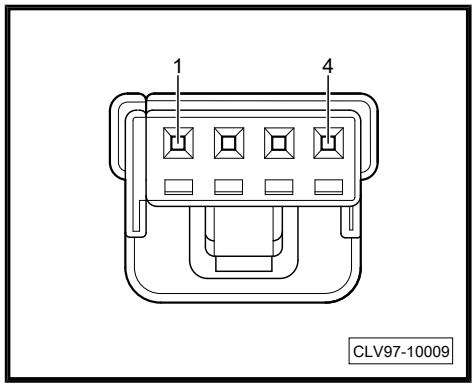

Cavity	Function	Cavity	Function
1	Ground (31)	3	Signal, status LED Lock
2	Input, lighting/dimmer	4	Signal, switch

Protected by copyright. Copying for private or commercial purposes, in part or in whole, is not permitted unless authorised by Volkswagen AG. Volkswagen AG does not guarantee or accept any liability with respect to the correctness of information in this document. Copyright by Volkswagen AG.

1.6 Mirror adjusting switch -E43-

Mirror selector switch -E48-

Exterior rearview mirror heating switch -E231-

Mirror folding switch -E263-

- ⇒ “1.6.1 High Line”, page 4
- ⇒ “1.6.2 Low Line”, page 5

1.6.1 High Line

6-pin connector -T6al-

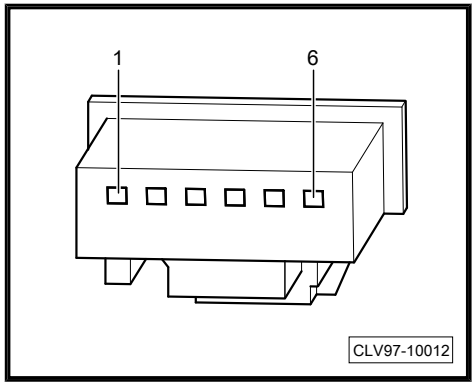

Cavity	Function	Cavity	Function
1	Signal, mirror adjustment	4	----
2	Ground (31)	5	Signal, mirror selection
3	Signal, heat	6	Input, lighting/dimmer

Protected by copyright. Copying for private or commercial purposes, in part or in whole, is not permitted unless authorised by Volkswagen AG. Volkswagen AG does not guarantee or accept any liability with respect to the correctness of information in this document. Copyright by Volkswagen AG.

1.6.2 Low Line

10-pin connector -T10p-

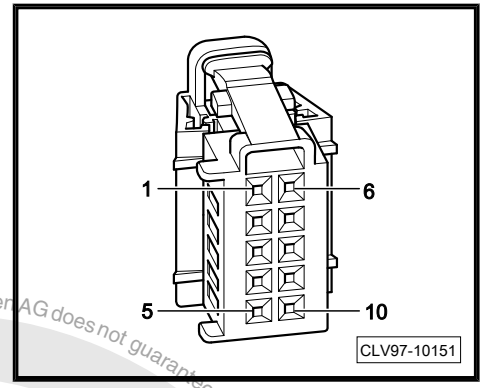

Cavity	Function	Cavity	
1	Signal, heating switch mirror, horizontal position	6	Signal, right mirror, up/down/left/right
2	Signal, right and left mirrors, up and down	7	Signal, left mirror, down/left/right
3	Ground (31)	8	Signal, mirror fold
4	Input, lighting	9	Signal, right mirror down/left/right
5	Power (15)	10	Signal, left mirror up/down/left/right

1.7 Driver passenger door control module -J386-

Driver window regulator motor -V147-

- ⇒ “1.7.1 16-pin (AW1) ”, page 6
- ⇒ “1.7.2 16-pin (AW0)”, page 6
- ⇒ “1.7.3 32-pin”, page 7
- ⇒ “1.7.4 20-pin (AW1)”, page 8

Protected by copyright. Copying for private or commercial purposes, in part or in whole, is not permitted unless authorised by Volkswagen AG. Volkswagen AG does not guarantee or accept any liability with respect to the correctness of information in this document. Copyright by Volkswagen AG.

1.7.1 16-pin (AW1)

16-pin connector -T16a-

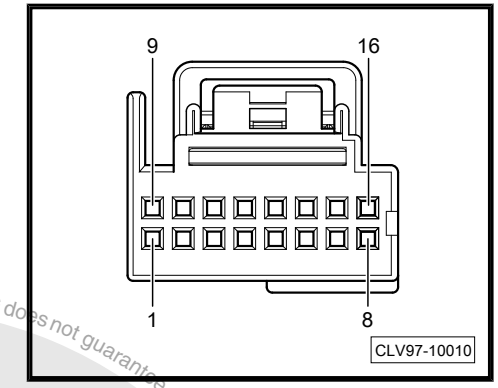

Cavity	Function	Cavity	
1	Signal, mirror, horizontal position	9	Signal, mirror vertical position
2	Return, mirror horizontal and vertical position sensors	10	Signal, entry lamp in exterior rearview mirror
3	Supply, mirror horizontal and vertical position sensors	11	Ground (31)
4	Supply, mirror vertical adjustment motor	12	Supply, mirror horizontal adjustment motor
5	Return, mirror adjustment motors	13	Signal, exterior rearview mirror turn signal bulb
6	----	14	Supply, exterior rearview mirror folding motor, out
7	Signal, mirror heater	15	Supply, exterior rearview mirror folding motor, in
8	Return, automatic dimming exterior rearview mirror	16	Supply, automatic dimming exterior review mirror

1.7.2 16-pin (AW0)

16-pin connector -T16a-

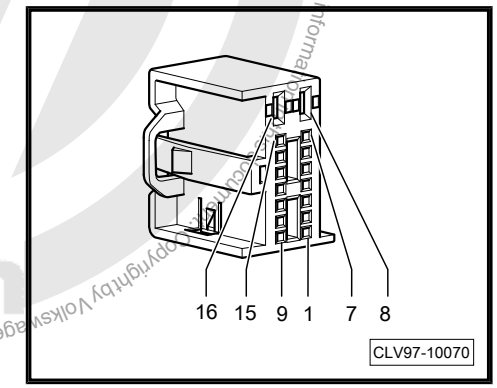

Cavity	Function	Cavity	
1	----	9	----

Protected by copyright. Copying for private or commercial purposes, in part or in whole, is not permitted unless authorised by Volkswagen AG. Volkswagen AG does not guarantee or accept any liability with respect to the correctness of information. Copyright by Volkswagen AG.

Cavity	Function	Cavity	
2	Supply, right rear window switch (driver module)	10	Signal, left rear window (driver module)
3	Signal, child safety lock -activated- indicator lamp (driver module)	11	Signal, child safety lock switch (driver module)
4	Signal, right front power window (driver module)	12	Signal, mirror folding switch (driver module)
5	LIN Bus	13	----
6	Signal, front window switch	14	Signal 2, folding mirror motor
7	Ground (31), door switches	15	Input, lock cylinder contact switch (driver module)
8	Ground (31), module	16	Power fused

1.7.3 32-pin

32-pin connector -T32a-

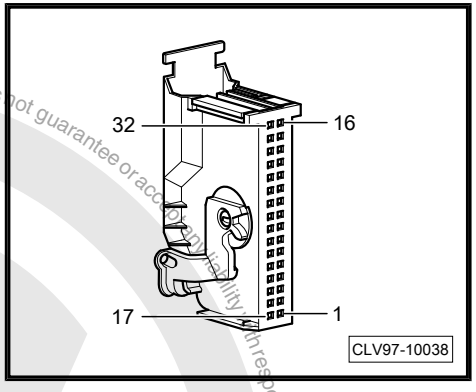

Cavity	Function	Cavity	
1	Signal, interior locking indicator lamp	17	Signal, door ambient lighting bulb (optional)
2	Signal, central locking -SAFE- indicator lamp (driver module)	18	Signal, front entry lamp (optional)
3	Signal, child safety lock -activated- indicator lamp (driver module)	19	----
4	----	20	----
5	----	21	Ground (31)
6	Signal, mirror selector switch (driver module)	22	----
7	Signal, right rear power window button (driver module)	23	Signal, driver side rear power window button (driver module)
8	Signal, mirror adjusting switch (driver module)	24	Input, lighting/dimmer signal
9	----	25	Input, lighting/dimmer signal
10	----	26	----
11	----	27	----
12	----	28	Signal, exterior rearview mirror heating switch (driver module)
13	Signal, Fuel filler door release button (driver module)	29	----

Protected by copyright. Copying for private or commercial purposes, in part or in whole, is not permitted unless authorised by Volkswagen AG. Volkswagen AG does not guarantee or accept any liability with respect to the correctness of information in this document. Copyright by Volkswagen AG.

Cavity	Function	Cavity	
14	Signal, Child safety lock button (driver module)	30	Signal, Rear lid remote release button (driver module)
15	Signal, right front power window switch	31	Signal, Left front window regulator switch (driver module)
16	----	32	Signal, interior locking button

1.7.4 20-pin (AW1)

20-pin connector -T20a-

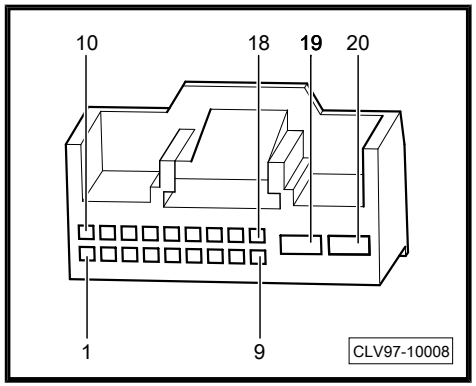

Cavity	Function	Cavity	
1	Signal 1 (+), mirror dimming (driver module)	11	----
2	----	12	Ground, central locking system motor
3	Supply, driver door central locking system motor	13	Signal, central locking system motor
4	----	14	----
5	----	15	LIN Bus
6	Ground (31), door switches	16	Input, lock cylinder contact switch (driver module)
7	Signal, door contact switch	17	----
8	CAN High	18	Power (30)
9	CAN Low	19	Ground (31)
10	Signal 2 (-), mirror dimming (driver module)	20	Power (30)

1.8 Left front window regulator switch -E40-

Right front power window switch in driver door -E81-

Left rear window regulator switch in driver door -E53-

Right rear window regulator switch in driver door -E55-

Copyright by Volkswagen AG. Volkswagen AG does not guarantee or accept any liability with respect to the correctness of information in this document. Copyright by Volkswagen AG. Copyright by Volkswagen AG. Reproduction, in part or in whole, is not permitted unless authorised by Volkswagen AG.

Child safety lock button -E318-

- ⇒ “1.8.1 W/ Front and Rear Power Windows”, page 9
- ⇒ “1.8.2 W/O Rear Power Windows”, page 9

1.8.1 W/ Front and Rear Power Windows

10-pin connector -T10f-

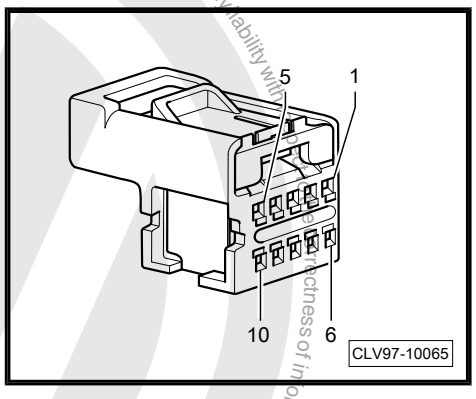

Cavity	Function	Cavity	
1	Signal, child safety lock button, E318	6	Signal, Front passenger power window switch, E81
2	Signal, left child safety lock -activated- indicator lamp, K236	7	Signal, Right rear power window switch, E55
3	----	8	Signal, Left rear power window switch, E53
4	Ground (31)	9	Input, lighting/dimmer
5	Signal, driver power window switch, E40	10	----

1.8.2 W/O Rear Power Windows

4-pin connector -T4fs-

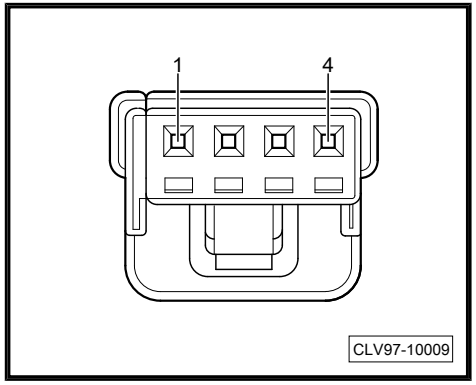

Cavity	Function	Cavity	Function
1	Ground (31)	3	Signal, driver power window switch, E40

Protected by copyright. Copyright by Volkswagen AG. Volkswagen AG does not guarantee or accept any liability with respect to the correctness of information in this document. Copyright by Volkswagen AG. Protected by copyright. Copying for private or commercial purposes, in part or in whole, is not permitted unless authorised by Volkswagen AG.

Cavity	Function	Cavity	Function
2	Input, lighting/dimmer	4	Signal, front passenger power window switch, E81

1.9 Driver central locking lock unit -F220-

Driver door contact switch -F2-

Driver door central locking system motor -V56-

8-pin connector -T8f-

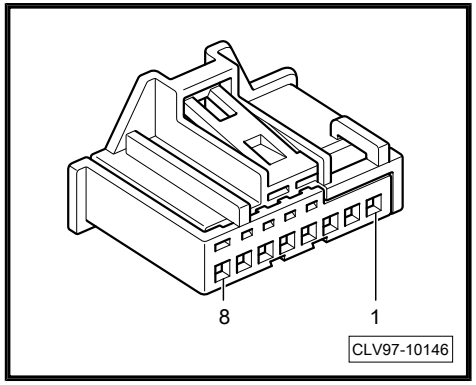

Cavity	Function	Cavity	
1	Signal, Driver central locking lock unit	5	Signal, driver door contact switch, F3
2	Ground (31), switch	6	Ground, motor
3	----	7	Signal, driver door central locking system motor
4	Supply, driver door central locking system motor	8	----

1.10 Front passenger central locking lock unit -F221-

Front passenger door contact switch -F3-

Protected by copyright. Copyright by Volkswagen AG. Volkswagen AG does not guarantee or accept any liability with respect to the correctness of information in this document. Copyright by Volkswagen AG. Volkswagen AG. Copying for private or commercial purposes, in part or in whole, is not permitted unless authorised by Volkswagen AG.

Front passenger door central locking system motor -V57-

8-pin connector -T8h-

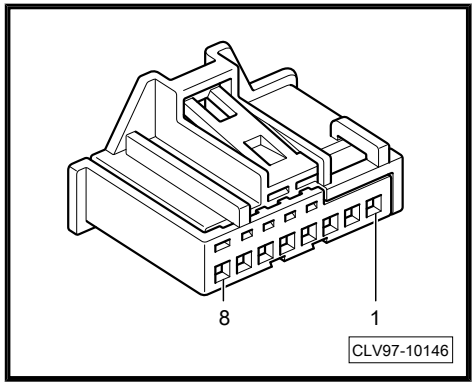

Cavity	Function	Cavity	
1	Ground, motor	5	Signal, driver door contact switch, F2
2	Signal, driver door central locking system motor	6	Ground (31), switch
3	----	7	----
4	Supply, driver door central locking system motor	8	----

1.11 Driver interior locking indicator lamp -K174-

Double connector -T2z-

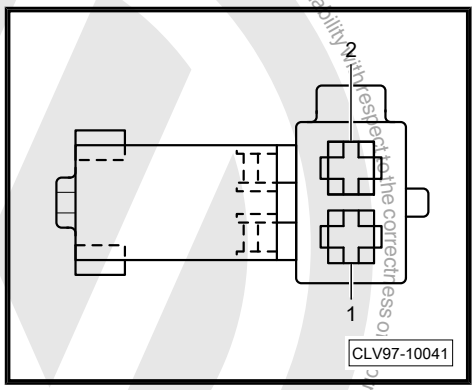

Cavity	Function
1	Ground (31)
2	Power (30)

Protected by copyright. Copying for private or commercial purposes, in part or in whole, is not permitted unless authorised by Volkswagen AG. Volkswagen AG does not guarantee or accept any liability with respect to the correctness of information in this document. Copyright by Volkswagen AG.

1.12 Left rear power window switch in left rear door -E52-

4-pin connector -T4aq-

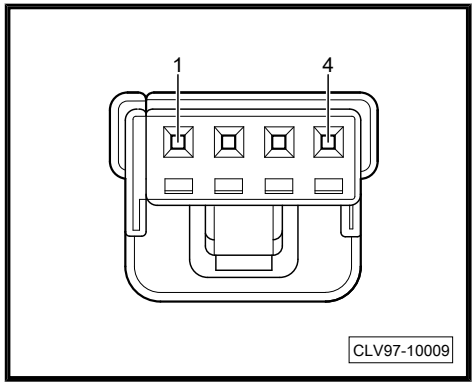

Cavity	Function	Cavity	Function
1	Ground (31)	3	----
2	Input, lighting/dimmer	4	Signal, switch

1.13 Right rear window switch in right rear door -E54-

4-pin connector -T4ar-

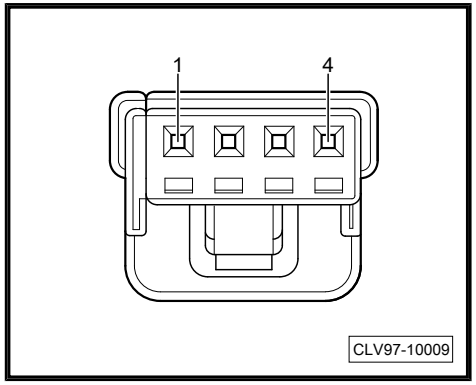

Cavity	Function	Cavity	Function
1	Ground (31)	3	----
2	Input, lighting/dimmer	4	Signal, switch

1.14 Left rear central locking lock unit -F222-

Left rear door contact switch -F10-

Protected by copyright. Copying for private or commercial purposes, in part or in whole, is not permitted unless authorised by Volkswagen AG. Volkswagen AG does not guarantee or accept any liability with respect to the correctness of information in this document. Copyright by Volkswagen AG.

Left rear central locking -lock- motor -V214-

8-pin connector -T8s-

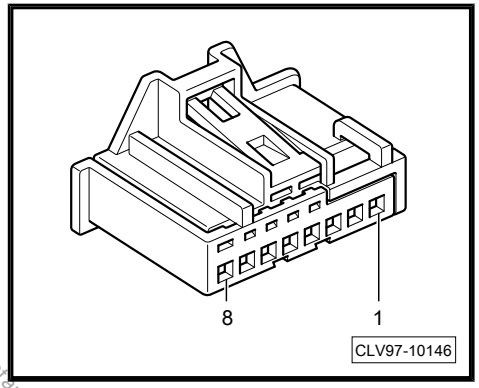

Cavity	Function	Cavity	
1	Ground (31), switch	5	Supply, driver door central locking system motor
2	Signal, door contact switch, F10	6	Ground, motor
3	Signal, driver door central locking system motor, if equipped	7	----
4	----	8	----

1.15 Right rear central locking lock unit -F223-

Right rear door contact switch -F11-

Right rear central locking -lock- motor -V215-

8-pin connector -T8t-

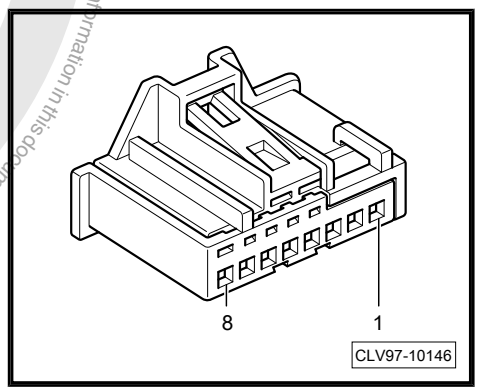

Cavity	Function	Cavity	
1	Ground (31), switch	5	Supply, driver door central locking system motor
2	Signal, door contact switch, F11	6	Ground, motor
3	Signal, driver door central locking system motor, if equipped	7	----

Protected by copyright. Copying for private or commercial purposes, in part or in whole, is not permitted unless authorised by Volkswagen AG. Volkswagen AG does not guarantee or accept any liability with respect to the correctness of information in this document. Copyright by Volkswagen AG.

Cavity	Function	Cavity	
4	----	8	----

1.16 Left rear door control module -J388-

- ⇒ “1.16.1 High Line”, page 14
- ⇒ “1.16.2 Low Line”, page 15

1.16.1 High Line

18-pin connector -T18a-

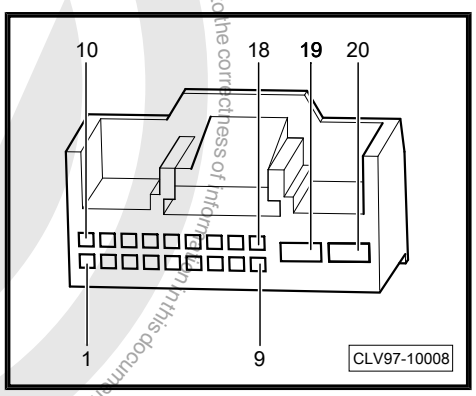

Cavity	Function	Cavity	
1	Ground (31), switch	10	Power (30), window motor
2	Ground (31)	11	Power (30), lock motor
3	Ground, Left rear central locking -lock- motor	12	LIN Bus
4	----	13	----
5	Supply, central locking motor	14	----
6	Signal, driver door central locking system motor	15	----
7	Signal, rear door contact switch	16	Input, lighting/dimmer
8	Rear center interior locking switch (left side)	17	Status, LED lock (left side)
9	Ground (31), module	18	Signal, rear power window switch

Copyright by Volkswagen AG. Volkswagen AG does not guarantee or accept any liability with respect to the correctness of information in this document. Copying for private or commercial purposes, in part or in whole, is not permitted unless authorised by Volkswagen AG.

1.16.2 Low Line

16-pin connector -T16h-

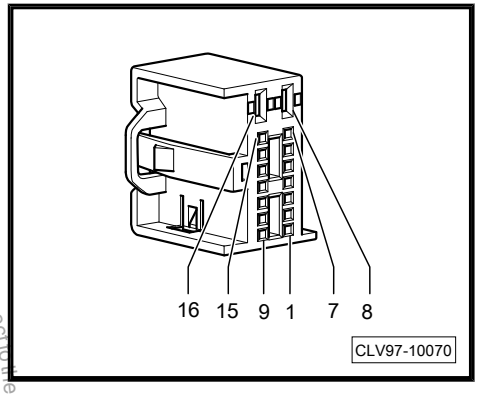

Cavity	Function	Cavity	
1	----	9	----
2	----	10	----
3	----	11	----
4	----	12	----
5	LIN Bus	13	----
6	Signal, window motor	14	----
7	Ground (31), switch	15	---
8	Ground (31), module	16	Power (30), module

1.17 Right rear door control module -J389-

- ⇒ “1.17.1 High line”, page 16
- ⇒ “1.17.2 Low line”, page 16

Protected by copyright. Copying for private or commercial purposes, in part or in whole, is not permitted unless authorised by Volkswagen AG. Volkswagen AG does not guarantee or accept any liability with respect to the correctness of information in this document. Copyright by Volkswagen AG.

1.17.1 High line

18-pin connector -T18b-

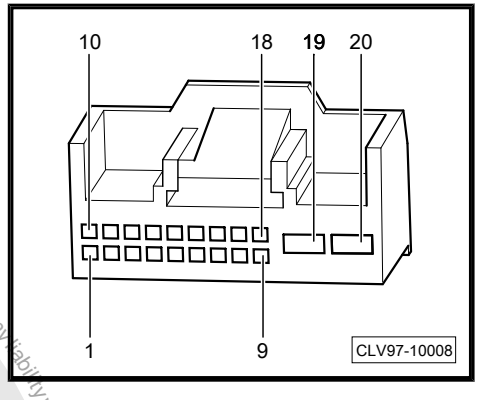

Cavity	Function	Cavity	
1	Ground (31), switch	10	Power (30), window motor
2	Ground (31)	11	Power (30), lock motor
3	Ground, Left rear central locking -lock- motor	12	LIN Bus
4	----	13	----
5	Supply, central locking motor	14	----
6	Signal, driver door central locking system motor	15	----
7	Signal, rear door contact switch	16	Input, lighting/dimmer
8	Rear center interior locking switch (left side)	17	Status, LED lock (left side)
9	Ground (31), module	18	Signal, rear power window switch

1.17.2 Low line

16-pin connector -T16i-

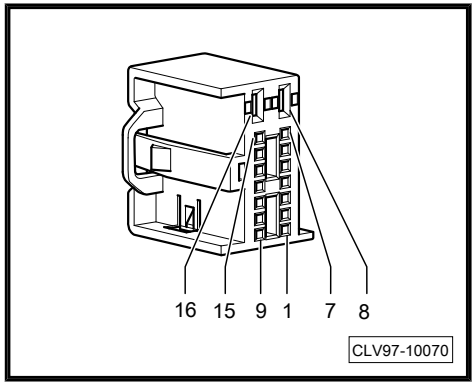

Protected by copyright. Copying for private or commercial purposes, in part or in whole, is not permitted unless authorised by Volkswagen AG. Volkswagen AG does not guarantee or accept any liability with respect to the correctness of information in this document. Copyright by Volkswagen AG.

Cavity	Function	Cavity	
1	----	9	----
2	----	10	----
3	----	11	----
4	----	12	----
5	LIN Bus	13	----
6	Signal, window motor	14	----
7	Ground (31), switch	15	----
8	Ground (31), module	16	Power (30), module

1.18 Rear center interior locking switch -E286-

4-pin connector -T4bz-

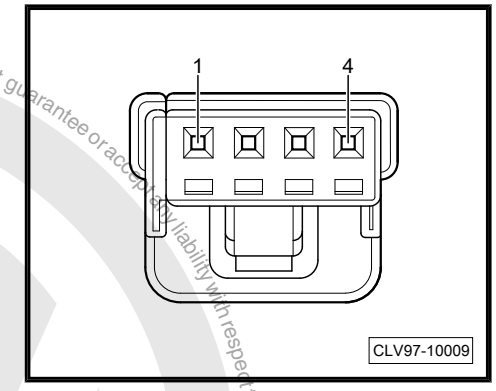

Cavity	Function	Cavity	Function
1	Ground (31)	3	Status, LED lock
2	Input, lighting/dimmer	4	Signal, switch

Protected by copyright. Copying for private or commercial purposes, in part or in whole, is not permitted unless authorised by Volkswagen AG. Volkswagen AG does not guarantee or accept any liability with respect to the correctness of information in this document. Copyright by Volkswagen AG.

1 A/C Systems Connector Views

1.1 Fresh air blower -V2-

- For Climatronic refer to J126 ⇒ page 1

Double connector -T2v-

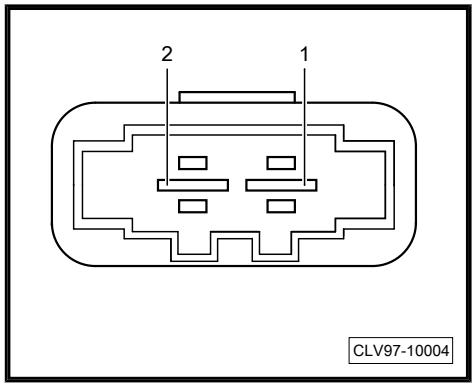

Cavity	Function
1	Power, motor
2	Ground, motor

1.1.1 Fresh air blower control module -J126-

6-pin connector -T6t-

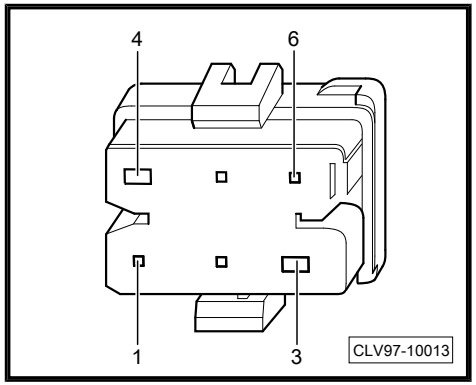

Cavity	Function	Cavity	Function
1	Diagnosis signal, output	4	Power, module
2	PWM signal, input	5	. . .
3	Ground, module	6	. . .

Protected by copyright. Copying for private or commercial purposes, in part or in whole, is not permitted unless authorised by Volkswagen AG. Volkswagen AG does not guarantee or accept any liability with respect to the correctness of information in this document. Copyright by Volkswagen AG.

1.2 High pressure sensor -G65-

3-pin connector -T3c-

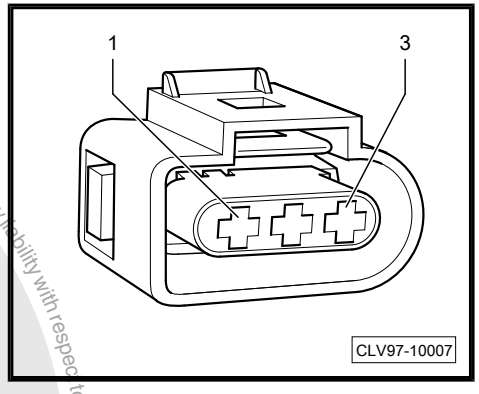

Cavity	Function
1	Ground, sensor
2	PWM signal, sensor
3	Power, sensor

1.3 A/C compressor regulator valve -N280-

Double connector -T2m-

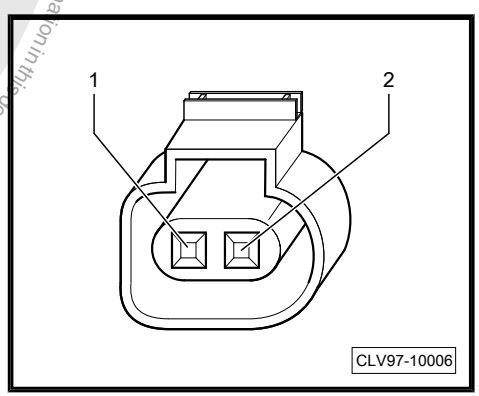

Cavity	Function
1	Ground, sensor
2	Signal, sensor

Protected by copyright. Copying for private or commercial purposes, in part or in whole, is not permitted unless authorised by Volkswagen AG. Volkswagen AG does not guarantee or accept any liability with respect to the correctness of information in this document. Copyright by Volkswagen AG.

1.4 A/C control module -J301-

- ⇒ “1.4.1 20-Pin”, page 3
- ⇒ “1.4.2 16-Pin”, page 4
- ⇒ “1.4.3 5-Pin”, page 4

1.4.1 20-Pin

20-pin connector -T20c-

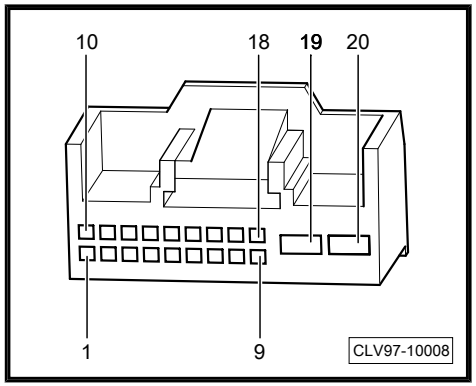

Cavity	Function	Cavity	Function
1	. . .	11	. . .
2	. . .	12	Front seat heating control module, right
3	Center vent temperature sensor, signal	13	Front seat heating control module, left
4	. . .	14	. . .
5	High pressure sensor	15	. . .
6	. . .	16	A/C compressor regulator valve
7	CAN Low	17	. . .
8	CAN High	18	Center vent temperature sensor, ground
9	. . .	19	Battery power, module
10	. . .	20	Ground, module

Protected by copyright. Copying for private or commercial purposes, in part or in whole, is not permitted unless authorised by Volkswagen AG. Volkswagen AG does not guarantee or accept any liability with respect to the correctness of information in this document. Copyright by Volkswagen AG

1.4.2 16-Pin

16-pin connector -T16e-

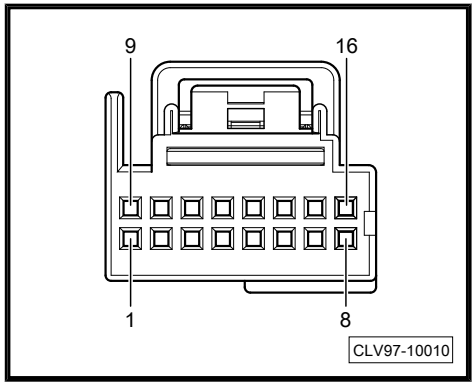

Cavity	Function	Cavity	Function
1	Temperature regulator door motor, hot	9	Recirculation door motor, open
2	Evaporator vent temperature sensor, signal	10	Recirculation door motor, close
3	Air distribution door motor position sensor, signal	11	Temperature regulator door motor, cold
4	Footwell vent temperature sensor, signal	12	Air distribution door motor, mode 1
5	Left temperature door potentiometer/actuator, signal	13	Air distribution door motor, mode 2
6	. . .	14	. . .
7	5 Volt, output	15	. . .
8	Ground, sensor	16	. . .

1.4.3 5-Pin

5-pin connector -T5-

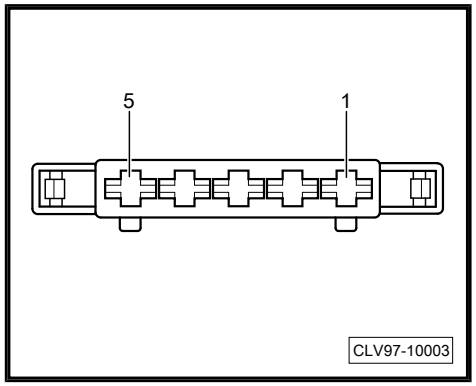

Cavity	Function	Cavity	Function
1	Fresh air blower resistor, step 3	4	Fresh air blower resistor, step 4

Protected by copyright. Copying for private or commercial purposes, in part or in whole, is not permitted unless authorised by Volkswagen AG. Volkswagen AG does not guarantee or accept any liability with respect to the correctness of information in this document. Copyright by Volkswagen AG.

Cavity	Function	Cavity	Function
2	Fresh air blower resistor, step 2	5	Power, fresh air blower
3	Fresh air blower resistor, step 1		

1.5 Air distribution door motor -V428-

Air distribution door motor position sensor -G645-

6-pin connector -T6aj-

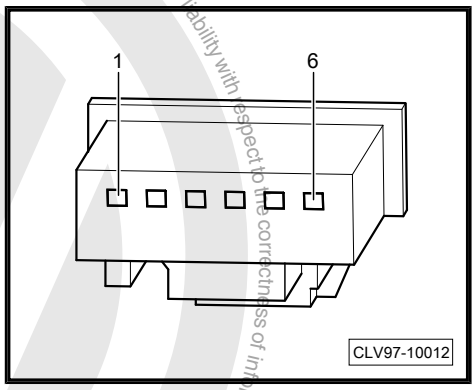

Cavity	Function	Cavity	Function
1	Ground, sensor	4	. . .
2	Signal, sensor	5	Motor, mode 1
3	5 volt, sensor	6	Motor, mode 2

1.6 Recirculation door motor -V113-

6-pin connector -T6k-

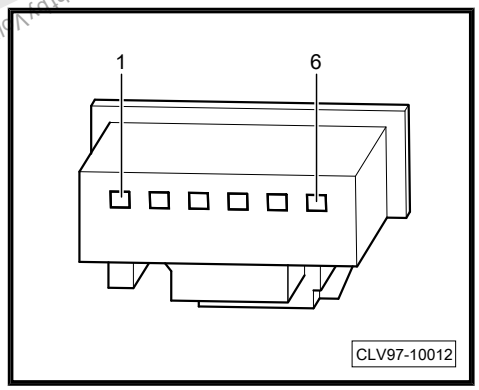

Protected by copyright. Copying for private or commercial purposes, in part or in whole, is not permitted unless authorised by Volkswagen AG. Copyright by Volkswagen AG. Volkswagen AG does not guarantee or accept any liability with respect to the correctness of information in this document.

Cavity	Function	Cavity	Function
1	. . .	4	. . .
2	. . .	5	Motor, open
3	. . .	6	Motor, closed

1.7 Temperature regulator door motor -V68-

Left temperature door potentiometer/actuator -G220-

6-pin connector -T6m-

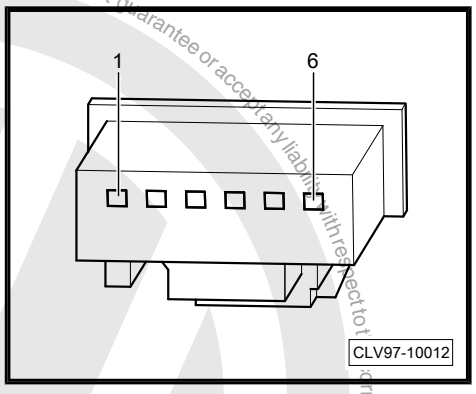

Cavity	Function	Cavity	Function
1	Ground, sensor	4	. . .
2	Signal, sensor	5	Motor, hot
3	5 volt, sensor	6	Motor, cold

1.8 Evaporator vent temperature sensor -G263-

Double connector -T2zb-

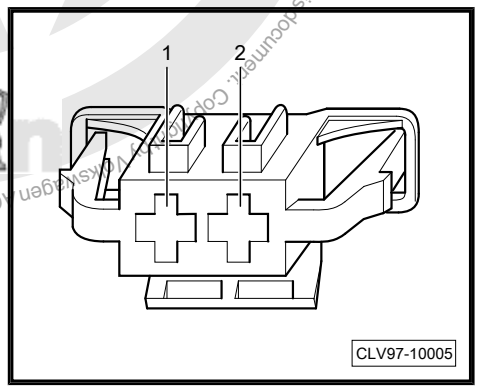

Protected by copyright. Copying for private or commercial purposes, in part or in whole, is not permitted unless authorised by Volkswagen AG. Volkswagen AG does not guarantee or accept any liability with respect to the correctness of information in this document. Copyright by Volkswagen AG.

Cavity	Function
1	Ground, sensor
2	Signal, sensor

1.9 Footwell vent temperature sensor -G192-

Double connector -T2za-

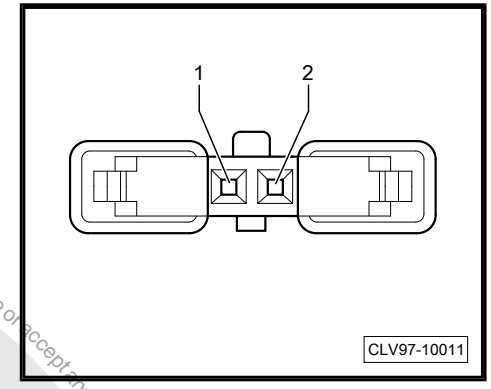

Cavity	Function
1	Ground, sensor
2	Signal, sensor

1.10 Center vent temperature sensor -G191-

Double connector -T2zc-

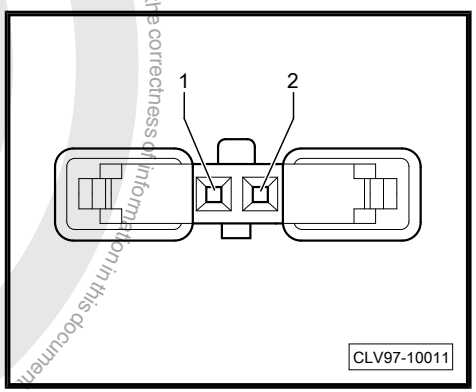

Cavity	Function
1	Ground, sensor
2	Signal, sensor

Protected by copyright. Copying for private or commercial purposes, in part or in whole, is not permitted unless authorised by Volkswagen AG. Volkswagen AG does not guarantee or accept any liability with respect to the correctness of information in this document. Copyright by Volkswagen AG.

1.11 Fresh air blower series resistor with fuse -N24-

4-pin connector -T4f-

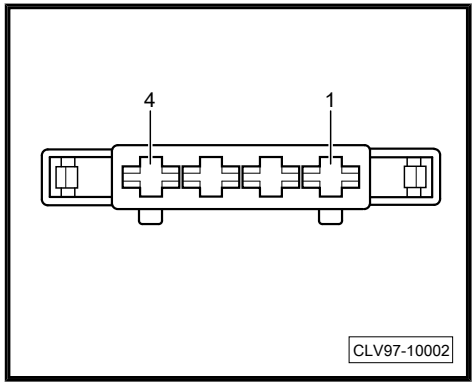

Cavity	Function	Cavity	Function
1	Fresh air blower resistor, step 4	3	Fresh air blower resistor, step 1
2	Fresh air blower resistor, step 2	4	Fresh air blower resistor, step 3

1.12 Air quality sensor -G238-

3-pin connector -T3aw-

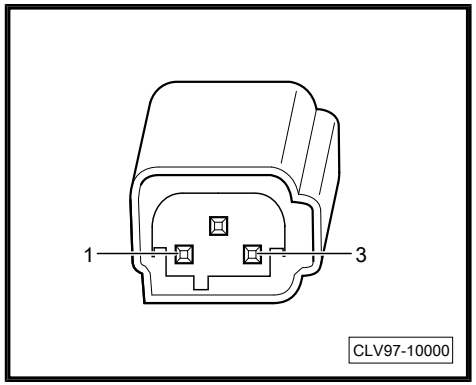

Cavity	Function
1	Switched battery, sensor
2	Ground, sensor
3	PWM signal, output

Protected by copyright. Copying for private or commercial purposes, in part or in whole, is not permitted unless authorised by Volkswagen AG. Volkswagen AG does not guarantee or accept any liability with respect to the correctness of information in this document. Copyright by Volkswagen AG.

1.13 Climatronic control module -J255-

- ⇒ “1.13.1 20-Pin (c)”, page 9
- ⇒ “1.13.2 16-Pin (g)”, page 10
- ⇒ “1.13.3 16-Pin (e)”, page 10

1.13.1 20-Pin (c)

20-pin connector -T20c-

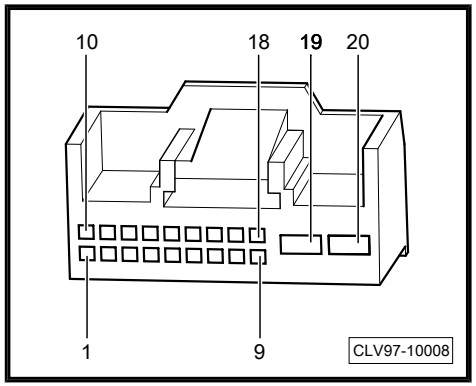

Cavity	Function	Cavity	Function
1	Sunlight photo sensor signal, right	11	Front seat heating control module, right
2	High pressure sensor, PWM signal	12	. . .
3	Sunlight photo sensor signal, left	13	Left vent temperature sensor
4	Air quality sensor, PWM signal	14	Right vent temperature sensor
5	CAN High	15	. . .
6	CAN Low	16	. . .
7	. . .	17	Signal ground
8	. . .	18	A/C compressor regulator valve, PWM signal
9	Output, 5 volt sensor	19	Ground, module
10	Front seat heating control module, left	20	Battery power, module

Protected by Copyright. Copyright by Volkswagen AG. Volkswagen AG does not guarantee or accept any liability with respect to the correctness of information in this document. Copyright by Volkswagen AG. Protected by Copyright. Copying for private or commercial purposes, in part or in whole, is not permitted unless authorised by Volkswagen AG.

Protected by copyright. Copying for private or commercial purposes, in part or in whole, is not permitted unless authorised by Volkswagen AG. Volkswagen AG does not guarantee or accept any liability with respect to the correctness of information in this document. Copyright by Volkswagen AG.

1.13.2 16-Pin (g)

16-pin connector -T16g-

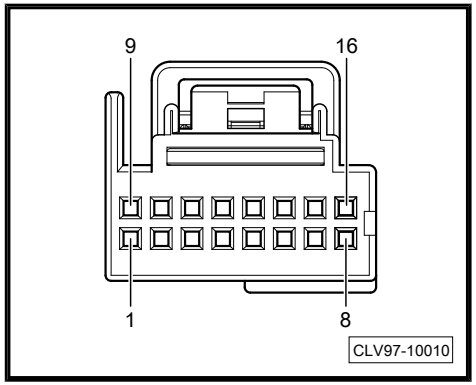

Cavity	Function	Cavity	Function
1	5 volt sensor, output	9	Right footwell vent temperature sensor, input
2	Left temperature door potentiometer/actuator, sensor input (5v = warm)	10	. . .
3	Right temperature door potentiometer/actuator, sensor input (5v = warm)	11	Evaporator temperature sensor, input
4	Defroster door motor position sensor, sensor input (5v = defrost)	12	. . .
5	Central door motor position sensor, sensor input (5v = instrument panel)	13	. . .
6	. . .	14	Signal ground
7	Fresh air/recirculating air/back pressure door motor position sensor, input	15	. . .
8	Left footwell vent temperature sensor, input	16	. . .

1.13.3 16-Pin (e)

16-pin connector -T16e-

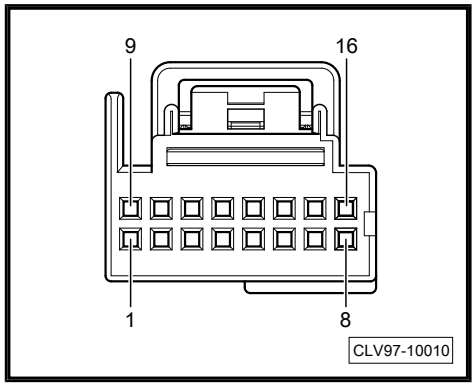

Cavity	Function	Cavity	Function
1	Left temperature door motor, cold	9	Fresh air/recirculating air/back pressure door motor, recirculation

Cavity	Function	Cavity	Function
2	Left temperature door motor, hot	10	Fresh air/recirculating air/back pressure door motor, fresh air
3	Defroster door motor, no defrost	11	Right temperature door motor, cold
4	Defroster door motor, defrost	12	Right temperature door motor, hot
5	Central air door motor, instrument panel	13	. . .
6	Central air door motor, footwell	14	. . .
7	. . .	15	Fresh air blower control module, PWM signal
8	. . .	16	Fresh air blower control module diagnosis signal, input

1.14 Sunlight photo sensor -G107-

Sunlight photo sensor 2 -G134-

4-pin connector -T4n-

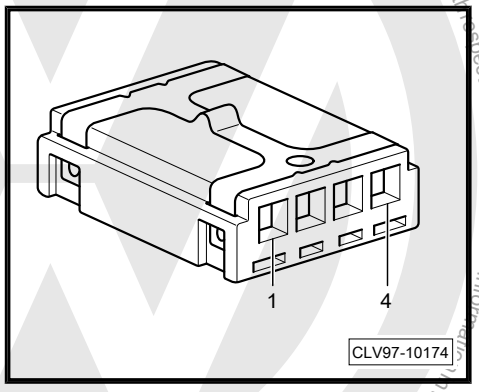

Cavity	Function	Cavity	Function
1	Right sensor, signal	3	Ground, sensor
2	5 Volt, sensor	4	Left sensor, signal

1.15 Left temperature door motor -V158-

Left temperature door potentiometer/actuator -G220-

Protected by copyright. Copying for private or commercial purposes, in part or in whole, is not permitted unless authorised by Volkswagen AG. Volkswagen AG does not guarantee or accept any liability with respect to the correctness of information in this document. Copyright by Volkswagen AG.

For Climatic refer to ⇒ page 6

6-pin connector -T6p-

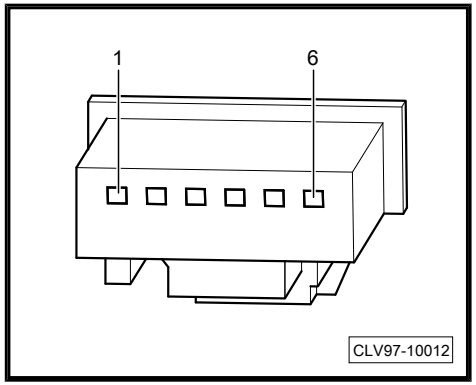

Cavity	Function	Cavity	Function
1	Ground, sensor	4	. . .
2	Signal, sensor	5	Motor, hot
3	5 volt, sensor	6	Motor, cold

1.16 Right temperature door motor -V159-

Right temperature door potentiometer/actuator -G221-

6-pin connector -T6t-

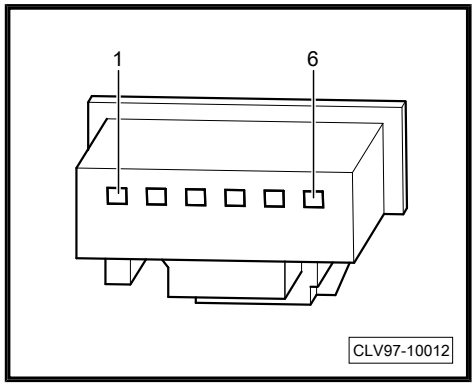

Cavity	Function	Cavity	Function
1	5 volt, sensor	4	. . .
2	Signal, sensor	5	Motor, cold
3	Ground, sensor	6	Motor, hot

Protected by copyright. Copying or distribution, in whole or in part, is not permitted without authorised by Volkswagen AG. Volkswagen AG does not guarantee or accept any liability with respect to the correctness of information in this document. Copyright by Volkswagen AG.

1.17 Defroster door motor -V107-

Defroster door motor position sensor -G135-

6-pin connector -T6q-

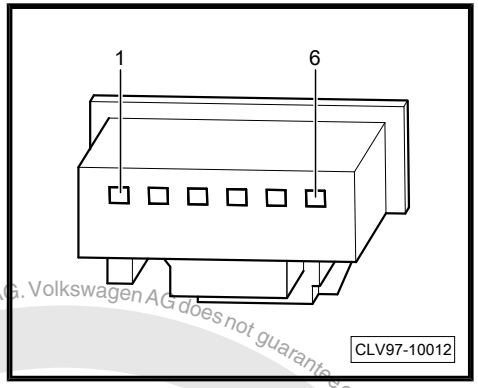

Cavity	Function	Cavity	Function
1	5 volt, sensor	4	. . .
2	Signal, sensor	5	Motor, no defrost
3	Ground, sensor	6	Motor, full defrost

1.18 Fresh air/recirculating air/back pressure door motor -V425-

Fresh air/recirculating air/back pressure door motor position sensor -G644-

6-pin connector -T6r-

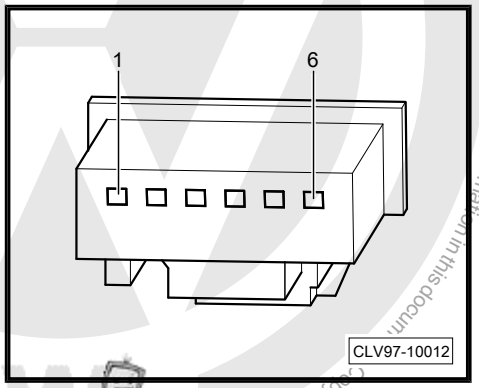

Cavity	Function	Cavity	Function
1	Ground, sensor	4	. . .
2	Signal, sensor	5	Motor, recirculation
3	5 volt, sensor	6	Motor, fresh air

Protected by copyright. Copying for private or commercial purposes, in part or in whole, is not permitted unless authorised by Volkswagen AG. Volkswagen AG does not guarantee or accept any liability with respect to the correctness of information in this document. Copyright by Volkswagen AG.

1.19 Central air door motor -V70-

Central door motor position sensor -G112-

6-pin connector -T6n-

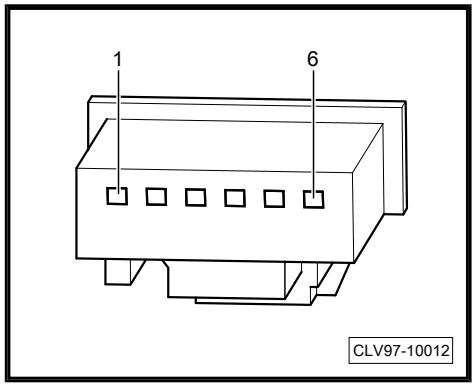

Cavity	Function	Cavity	Function
1	Ground, sensor	4	. . .
2	Signal, sensor	5	Motor, vent
3	5 volt, sensor	6	Motor, foot

1.20 Left footwell vent temperature sensor -G261-

Double connector -T2da-

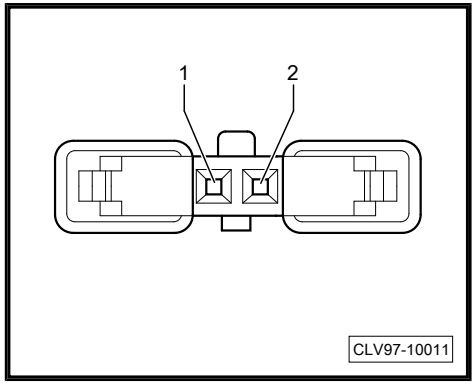

Cavity	Function
1	Ground, sensor
2	Signal, sensor

Protected by copyright. Copyright by Volkswagen AG. Volkswagen AG does not guarantee or accept any liability with respect to the correctness of information in this document. Copyright by Volkswagen AG. Reproduction for commercial purposes, in part or in whole, not permitted unless authorised by Volkswagen AG.

1.21 Right footwell vent temperature sensor -G262-

Double connector -T2db-

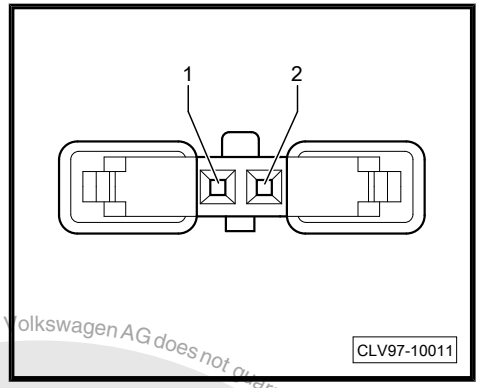

Cavity	Function
1	Ground, sensor
2	Signal, sensor

1.22 Left vent temperature sensor -G150-

Double connector -T2bh-

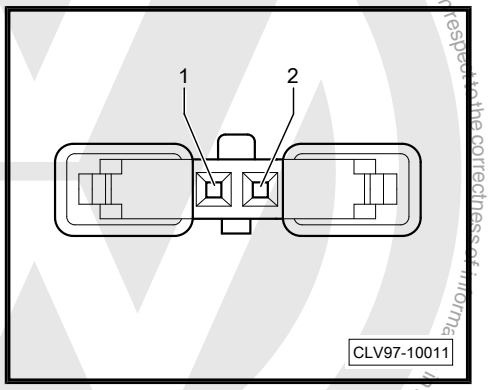

Cavity	Function
1	Ground, sensor
2	Signal, sensor

Protected by copyright. Copying for private or commercial purposes, in part or in whole, is not permitted unless authorised by Volkswagen AG. Volkswagen AG does not guarantee or accept any liability with respect to the correctness of information in this document. Copyright by Volkswagen AG.

1.23 Right vent temperature sensor -G151-

Double connector -T2bq-

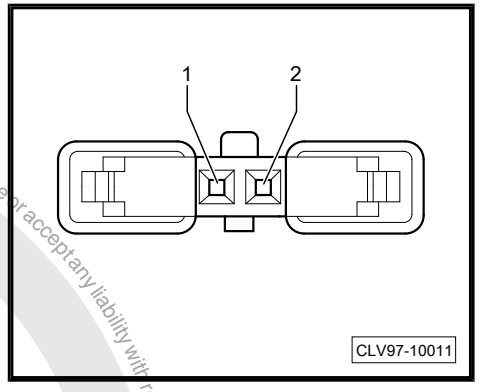

Cavity	Function
1	Ground, sensor
2	Signal, sensor

1.24 Evaporator temperature sensor -G308-

Double connector -T2j-

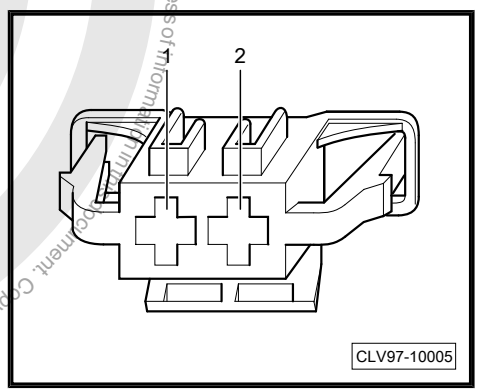

Cavity	Function
1	Ground, sensor
2	Signal, sensor

Protected by copyright. Copying for private or commercial purposes, in part or in whole, is not permitted unless authorised by Volkswagen AG. Volkswagen AG does not guarantee or accept any liability with respect to the correctness of information in this document. Copyright by Volkswagen AG.

1 ABS Connector Views

1.1 ABS control module -J104-

- ⇒ “1.1.1 W/O ESP”, page 1
- ⇒ “1.1.2 W/ ESP”, page 2

1.1.1 W/O ESP

26-pin connector -T26-

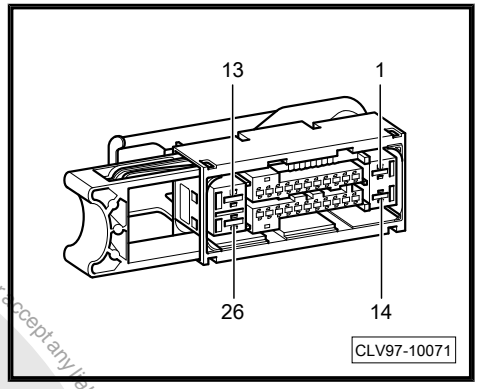

Cavity	Function	Cavity	Function
1	Power fuse , module	14	.....
2	Rear left sensor ground	15	Module self check - (coupling steering type option)
3	Rear left sensor signal	16	Brake light switch (BLS) signal
4	ASR signal (Optional for certain vehicles)	17	Module self check - (coupling steering type option)
5	Front right sensor signal	18	.....
6	Front right sensor ground	19	.....
7	TPMS signal (optional)	20	Power ignition, module
8	Front left sensor ground	21	CAN-L signal
9	Front left sensor signal	22	Module self check - (coupling steering type option)
10	ASR off (optional)	23	CAN-H signal
11	Right rear sensor signal	24	Module self check - (coupling steering type option)
12	Right rear sensor ground	25	----
13	.....	26	Ground (31), module

Protected by copyright. Copying for private or commercial purposes, in part or in whole, is not permitted unless authorised by Volkswagen AG. Volkswagen AG does not guarantee or accept any liability with respect to the correctness of information in this document. Copyright by Volkswagen AG.

1.1.2 W/ ESP

47-pin connector -T47-

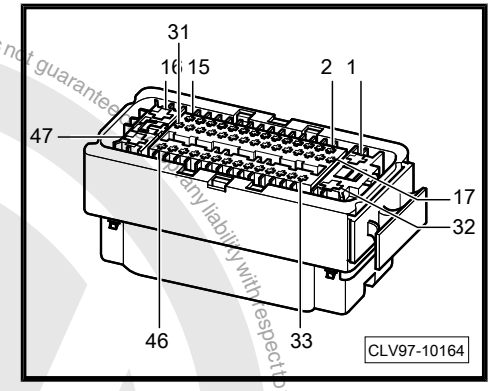

Cavity	Function	Cavity	Function
1	Power fuse, module	25	..... (PDC2 optional)
2	.....	26	.....
3	Auto Hold signal	27	.....
4	.....	28	..... (PDC3 optional)
5	5 volts - Vacuum sensor	29	.....
6	.....	30	..... (Vacuum sensor 2 signal , optinal)
7	..... (RR_ out optional)	31	.....
8	Power ignition, module	32	Power ignition, module
9	----- (RL_out optional)	33	Front right speed sensor ground
10	----- (ISO_K optional)	34	Front right speed sensor signal
11	----- (FR_out optional)	35	TPMS (RKA) signal - if equipped
12	CAN-H signal	36	Left rear wheel speed sensor signal
13	CAN-L signal	37	Left rear wheel speed sensor ground
14	..... (L_out optional)	38	Brake light switch (BLS) signal
15	Auto Hold lamp input	39	ESP sensor signal
16	---- (Ground VS optional)	40	Vacuum sensor ground
17	.....	41	Vacuum sensor signal
18	.....	42	Right rear wheel speed sensor ground
19	.....	43	Right rear wheel speed sensor signal
20	..... (PDC1 optional)	44	..... (ESP_LED optional)
21	.....	45	Front left wheel speed sensor signal
22	.....	46	Front left wheel speed sensor ground
23	.....	47	Ground, module

Copyright by Volkswagen AG. Volkswagen AG does not guarantee or assume any liability with respect to the correctness of information in this document. Copying for private or commercial purposes, in part or in whole, is not permitted unless authorised by Volkswagen AG.

Cavity	Function	Cavity	Function
24	.....		

1.2 Vacuum sensor -G608-

4-pin connector -T4bn-

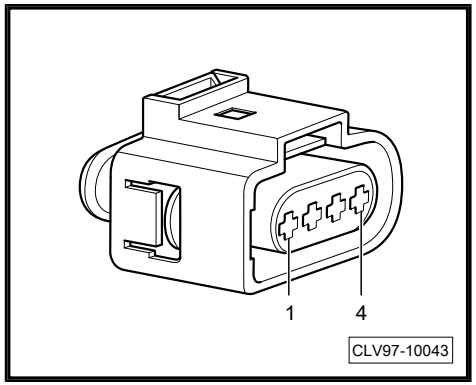

Cavity	Function	Cavity	Function
1	Ground, sensor	3	5 V, sensor
2	.....	4	Signal, sensor

1.3 Right rear ABS wheel speed sensor -G44-

Double connector -T2au-

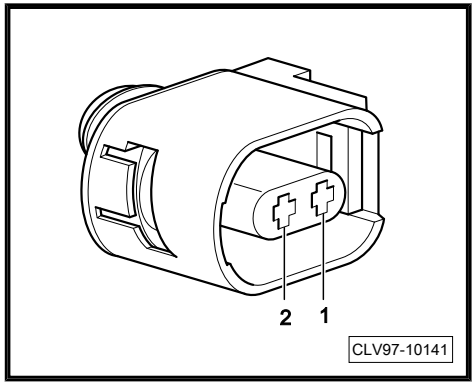

Cavity	Function
1	Signal (+), sensor
2	Signal (-), sensor

Protected by copyright. Copying for private or commercial purposes, in part or in whole, is not permitted unless authorised by Volkswagen AG. Volkswagen AG does not guarantee or accept any liability with respect to the correctness of information in this document. Copyright by Volkswagen AG.

1.4 Right front ABS wheel speed sensor -G45-

-T2as-

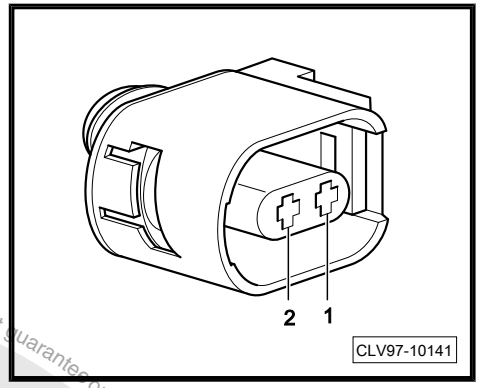

Cavity	Function
1	Signal (+), sensor
2	Signal (-), sensor

1.5 Left rear ABS wheel speed sensor -G46-

-T2at-

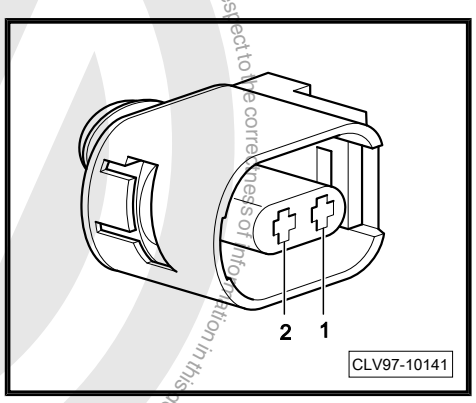

Cavity	Function
1	Signal (+), sensor
2	Signal (-), sensor

Protected by copyright. Copying for private or commercial purposes, in part or in whole, is not permitted unless authorised by Volkswagen AG. Volkswagen AG does not guarantee or accept any liability with respect to the correctness of information in this document. Copyright by Volkswagen AG.

1.6 Left front ABS wheel speed sensor -G47-

-T2ar-

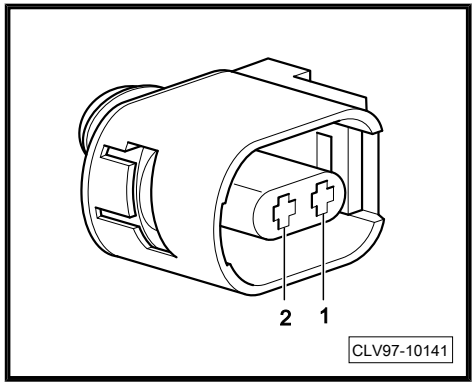

Cavity	Function
1	Signal (+), sensor
2	Signal (-), sensor

1.7 Tire pressure monitoring display button -E492-

6-pin connector -T6ak-

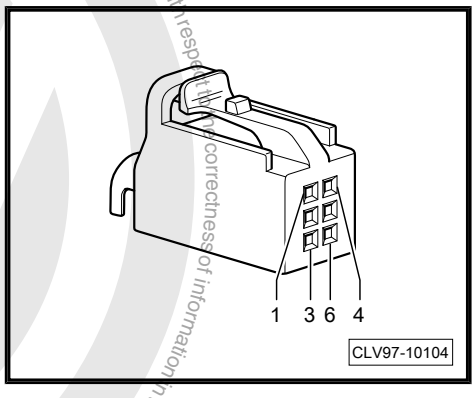

Cavity	Function	Cavity	Function
1	.....	4	5 V, sensor
2	.....	5	Signal, sensor
3	Power (58d), LED	6	Ground

Protected by copyright. Copying for private or commercial purposes, in part or in whole, is not permitted unless authorised by Volkswagen AG. Volkswagen AG does not guarantee or accept any liability with respect to the correctness of information in this document. Copyright by Volkswagen AG.

1.8 ASR switch -E132-

6-pin connector -T6ad-

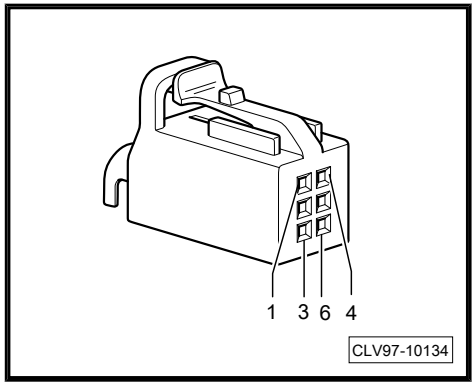

Cavity	Function	Cavity	Function
1	.....	4	Power (15), sensor
2	.....	5	Signal, sensor
3	Power (58d)	6	Ground (31)

1.9 Brake booster pressure sensor -G294-

4-pin connector -T4db-

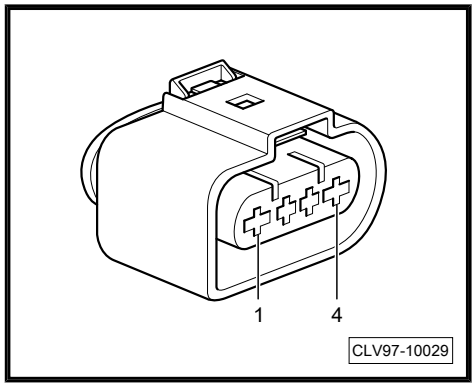

Cavity	Function	Cavity	Function
1	Ground, sensor	3	5 V, sensor
2	.....	4	Signal, sensor

Protected by copyright. Copying for private or commercial purposes, in part or in whole, is not permitted unless authorised by Volkswagen AG. Volkswagen AG does not guarantee or accept any liability with respect to the correctness of information in this document. Copyright by Volkswagen AG.

1 ACCESS Connector Views

1.1 Access/start authorization antenna in rear bumper -R136-

Double connector -T2fv-

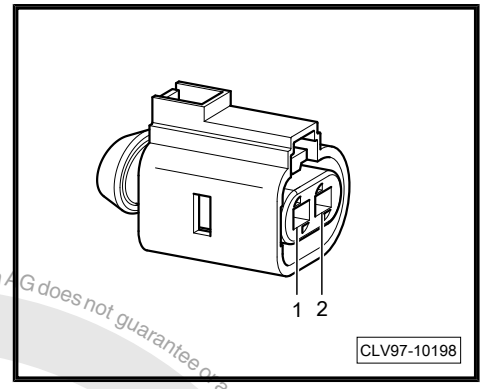

Cavity	Function
1	Antenna +
2	Antenna -

1.2 Access/start authorization antenna in luggage compartment -R137-

Double connector -T2fu-

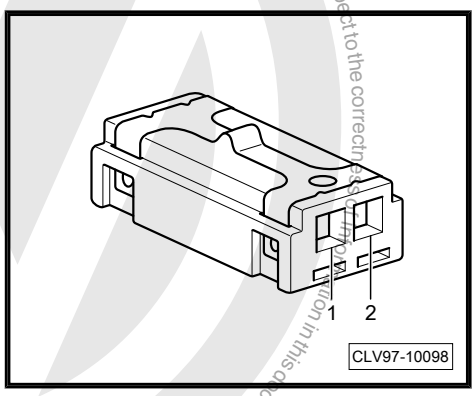

Cavity	Function
1	Antenna +
2	Antenna -

Protected by copyright. Copying for private or commercial purposes, in part or in whole, is not permitted unless authorised by Volkswagen AG. Volkswagen AG does not guarantee or accept any liability with respect to the correctness of information in this document. Copyright by Volkswagen AG.

1.3 Access/start authorization antenna 1 in vehicle interior -R138-

Double connector -T2fs-

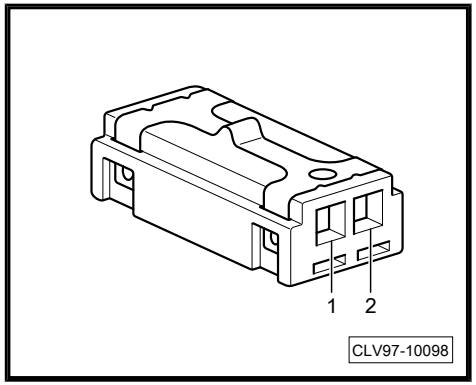

Cavity	Function
1	Antenna +
2	Antenna -

1.4 Access/start authorization antenna 2 in vehicle interior -R139-

Double connector -T2ft-

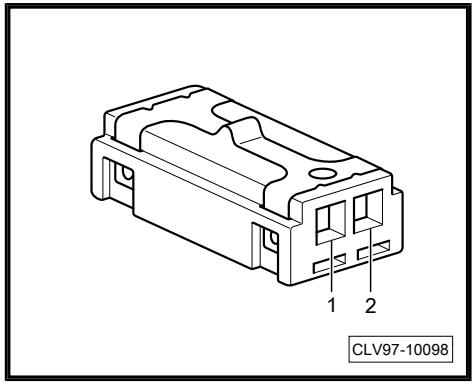

Cavity	Function
1	Antenna +
2	Antenna -

Protected by copyright. Copying for private or commercial purposes, in part or in whole, is not permitted unless authorised by Volkswagen AG. Volkswagen AG does not guarantee or accept any liability with respect to the correctness of information in this document. Copyright by Volkswagen AG.

1.5 Access/start authorization control module -J518-

32-pin connector -T32e-

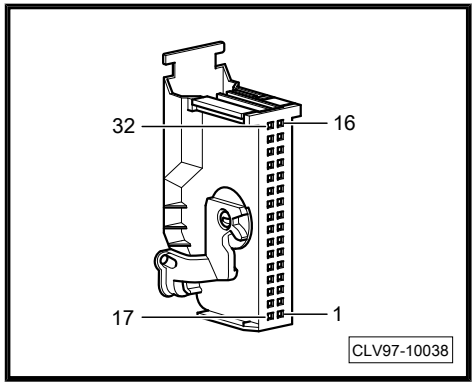

Cavity	Function	Cavity	Function
1	. . .	17	Ground, module
2	. . .	18	Antenna, interior 2 +
3	Battery, module	19	Antenna, interior 1+
4	. . .	20	Antenna, rear bumper +
5	Passenger door touch sensor input	21	Antenna, passenger door +
6	. . .	22	Antenna, luggage compartment +
7	. . .	23	Antenna, driver door +
8	. . .	24	Antenna, driver door -
9	Driver door touch sensor input	25	Antenna, luggage compartment -
10	Output to Vehicle electrical system control module (J519)	26	Antenna, passenger door -
11	. . .	27	Antenna, rear bumper -
12	. . .	28	Antenna, interior 1 -
13	. . .	29	Antenna, interior 2 -
14	. . .	30	Start system button (E378) input
15	. . .	31	. . .
16	CAN Low	32	CAN High

Protected by copyright. Copying for private or commercial purposes, in part or in whole, is not permitted unless authorised by Volkswagen AG. Volkswagen AG does not guarantee or accept any liability with respect to the correctness of information in this document. Copyright by Volkswagen AG.

1.6 Driver exterior door handle touch sensor -G415-

Driver access/start authorization antenna -R134-

4-pin connector -T4ka-

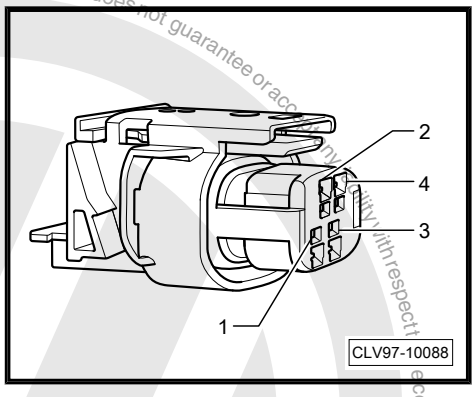

Cavity	Function	Cavity	Function
1	Antenna -	3	Signal, sensor
2	Ground, sensor	4	Antenna +

1.7 Front passenger exterior door handle touch sensor -G416-

Front passenger access/start authorization antenna -R135-

4-pin connector -T4kb-

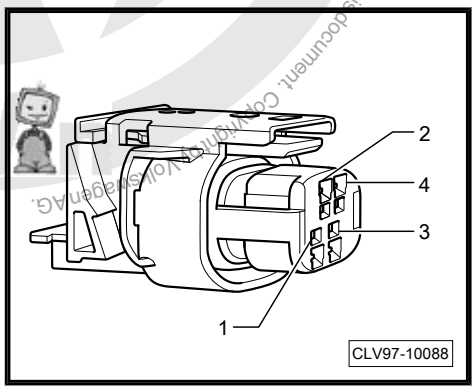

Cavity	Function	Cavity	Function
1	Antenna -	3	Signal, sensor
2	Ground, sensor	4	Antenna +

Protected by copyright. Copying for private or commercial purposes, in part or in whole, is not permitted unless authorised by Volkswagen AG. Volkswagen AG does not guarantee or accept any liability with respect to the correctness of information in this document. Copyright by Volkswagen AG.

1 Airbag Connector Views

1.1 Airbag control module -J234-

- ⇒ “1.1.1 75-pin”, page 1
- ⇒ “1.1.2 100-pin”, page 3

1.1.1 75-pin

75-pin connector -T75-

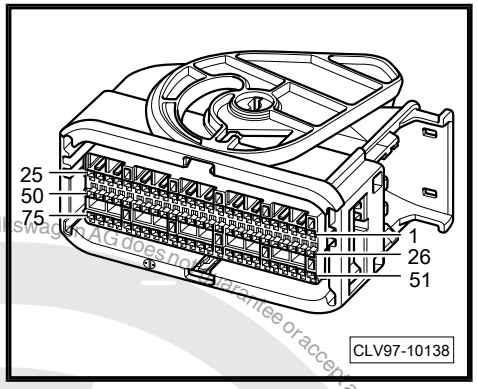

Cavity	Function	Cavity	Function
1	Power supply 15	39	Front airbag stage 2, passenger (+)
2	....	40	Front airbag stage 2, passenger (-)
3	Key pin (if equipped)	41	Early crash satellite, passenger (-), if equipped
4	....	42	Knee airbag, passenger (-)
5	Key pin (if equipped)	43	Knee airbag, passenger (+)
6	....	44	Side airbag, passenger (+)
7	Head airbag, passenger (-)	45	Side airbag, passenger(-)
8	Head airbag, passenger (+)	46	Early crash satellite, driver (-) (if equipped)
9	Belt pretensioner, passenger rear (+)	47	Belt pretensioner, driver (-)
10	Belt pretensioner, passenger rear (-)	48	Belt pretensioner, driver (+)
11	....	49	Belt pretensioner, passenger (+)
12	Belt pretensioner, driver rear (-)	50	Belt pretensioner, passenger (-)
13	Belt pretensioner, driver rear (+)	51	Ground 31
14	Head airbag, driver (+)	52	Battery disconnect
15	Head airbag, driver (-)	53	Crash output (if equipped)
16	....	54	....

Protected by copyright. Copying for private or commercial purposes, in part or in whole, is not permitted unless authorised by Volkswagen AG. Volkswagen AG does not guarantee or accept any liability with respect to the correctness of information in this document. Copyright by Volkswagen AG.

Cavity	Function	Cavity	Function
17	Front airbag stage 1, passenger (-)	55	Buckle switch, driver
18	Front airbag stage 1, passenger (+)	56	Occupant classification, passenger
19	Side airbag, driver (+)	57	Buckle switch, passenger
20	Side airbag, driver (-)	58	.....
21	....	59	Deactivation switch, passenger
22	Front airbag stage 1, driver (-)	60	Deactivation switch LED, passenger
23	Front airbag stage 1, driver (+)	61	Seat position sensor, driver
24	Knee airbag, driver (+)	62	Side airbag satellite, passenger rear (-) if equipped
25	Knee airbag, driver (-)	63	Battery interruption
26	Power supply 15	64	Side airbag satellite, passenger (+) if equipped
27	Belt force limiter driver (+)	65	Side airbag satellite, driver (+) if equipped
28	Belt force limiter driver (-)	66	Side airbag satellite, driver rear (-)
29	....	67	Early crash satellite, passenger (+), if equipped
30	.....	68	Early crash satellite, driver (+) if equipped
31	.....	69	Side airbag satellite, driver front (-) if equipped
32	Side airbag, driver rear (-)	70	Side airbag satellite, driver front (+) if equipped
33	Side airbag, driver rear (+)	71	Side airbag satellite, passenger front (+) if equipped
34	Side airbag, passenger rear (+)	72	Side airbag satellite, passenger front (-), if equipped
35	Side airbag, passenger rear (-)	73	CAN shielding
36	.....	74	CAN-BUS high
37	Front airbag stage 2, driver (-)	75	CAN-BUS low
38	Front airbag stage 2, driver (+)		

Protected by copyright. Copying for private or commercial purposes, in whole or in part, is not permitted unless authorised by Volkswagen AG. Volkswagen AG does not guarantee or accept any liability with respect to the correctness of information in this document. Copyright by Volkswagen AG.

1.1.2 100-pin

100-pin connector -T100-

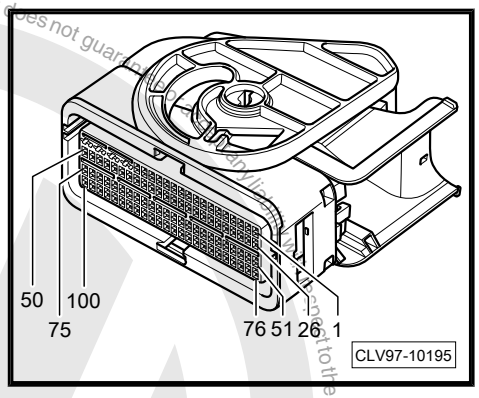

Cavity	Function	Cavity	Function	Cavity	Function	Cavity	Function
1	. . .	26	. . .	51	Battery (+) (15)	76	Battery (+) (15)
2	Signal SPP	27	. . .	52	. . .	77	. . .
3	. . .	28	Signal, BSwD	53	LIN Bus Diag	78	Ground (31)
4		29	. . .	54	Power	79	. . .
5	. . .	30	. . .	55	. . .	80	LIN Bus
6		31	Signal (-), driver airbag igniter 1	56	. . .	81	Passenger occupant lamp off
7	. . .	32	Signal (+), driver airbag igniter 1	57	. . .	82	. . .
8	. . .	33	Signal (+), front passenger airbag igniter 1	58	. . .	83	. . .
9	. . .	34	Signal (-), front passenger airbag igniter 1	59	. . .	84	. . .
10	Signal BFLfP (-)	35	Signal (-), driver airbag igniter 2	60	Battery (-), hybrid only	85	. . .
11	Signal BFLfP (+)	36	Signal (+), driver airbag igniter 2	61	Battery (+), hybrid only	86	Signal (-), driver front airbag crash sensor
12	Signal BFLfD (-)	37	Signal (+), front passenger airbag igniter 2	62	. . .	87	Signal (+), driver front airbag crash sensor
13	Signal BFLfD (+)	38	Signal (-), front passenger airbag igniter 2	63	. . .	88	Signal (-), front passenger side airbag crash sensor
14	. . .	39	Signal (-) driver seat belt tensioner igniter 1	64	. . .	89	Signal (+), front passenger side airbag crash sensor
15	. . .	40	Signal (+) driver seat belt tensioner igniter 1	65	. . .	90	Signal (-), front passenger side rear side airbag crash sensor
16	. . .	41	Signal (+), front passenger seat belt tensioner igniter 1	66	. . .	91	Signal (+), front passenger side rear side airbag crash sensor

Protected by copyright. Copying for private or commercial purposes, in part or in whole, is not permitted unless authorised by Volkswagen AG. Volkswagen AG does not guarantee or accept any liability with respect to the correctness of information in this document. Copyright by Volkswagen AG.

Cavity	Function	Cavity	Function	Cavity	Function	Cavity	Function
17	. . .	42	Signal (-), front passenger seat belt tensioner igniter 1	67	. . .	92	Signal (-), driver side airbag crash sensor
18	. . .	43	. . .	68	Signal (-), driver airbag igniter 1	93	Signal (+), driver side airbag crash sensor
19	. . .	44	. . .	69	Signal (+), driver airbag igniter 1	94	Signal, ECSD (-)
20	. . .	45	. . .	70	Signal (-), front passenger belt force limiter	95	Signal, ECSD (+)
21	. . .	46	. . .	71	Signal (+), front passenger belt force limiter	96	Signal, ECSP (-)
22	. . .	47	Signal (-), driver knee airbag igniter	72	Signal (-), driver belt force limiter	97	Signal, ECSP (+)
23	. . .	48	Signal (+), driver knee airbag igniter	73	Signal (+), driver belt force limiter	98	. . .
24	. . .	49	Signal (-), passenger airbag	74	PAaV+	99	Signal, CAN-H
25	. . .	50	Signal (+), passenger airbag	75	PAaV-	100	Signal, CAN-L

1.2 Front passenger airbag igniter 1 -N131-

Front passenger airbag igniter 2 -N132-

- ⇒ “1.2.1 From June 2010”, page 4
- ⇒ “1.2.2 From March 2010”, page 5

1.2.1 From June 2010

5-pin connector -T5x-

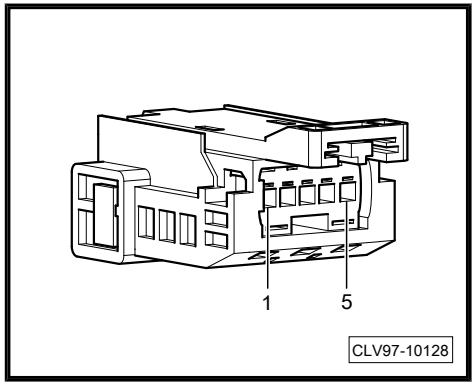

Cavity	Function	Cavity	Function
1	Signal (-), sensor 1	4	Signal (-), sensor 2
2	Signal (+), sensor 1	5	Signal (+), sensor 2

Protected by copyright. Copying for private or commercial purposes, in any form or medium, is not permitted unless authorised by Volkswagen AG. Volkswagen AG does not guarantee or accept any liability with respect to the correctness of information in this document. Copyright by Volkswagen AG.

Cavity	Function	Cavity	Function
3	Ground, sensor (optional)		

1.2.2 From March 2010

3-pin connector -T3q-

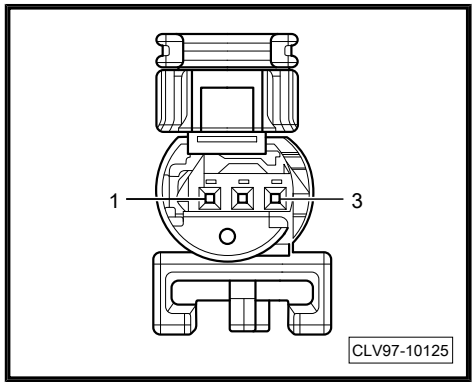

Cavity	Function
1	Signal (-), sensor
2	Signal (+), sensor
3	Ground, sensor

1.3 Driver head curtain airbag igniter -N251-

Double connector -T2ej-

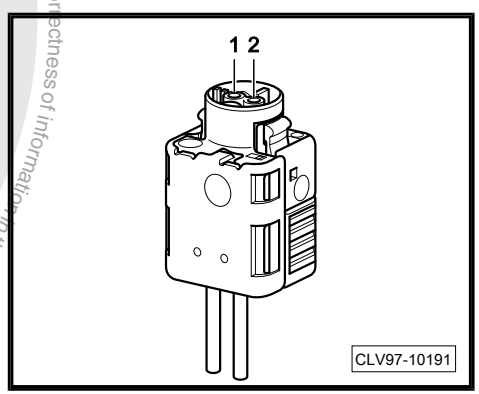

Cavity	Function
1	Signal (-), sensor
2	Signal (+), sensor

Protected by copyright. Copying for private or commercial purposes, in part or in whole, is not permitted unless authorised by Volkswagen AG. Volkswagen AG does not guarantee or accept any liability with respect to the correctness of information in this document. Copyright by Volkswagen AG.

1.4 Front passenger head curtain airbag igniter -N252-

Double connector -T2ek-

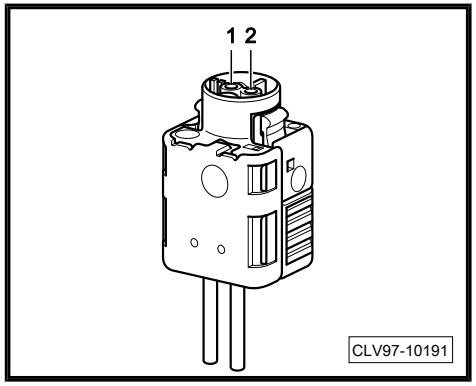

Cavity	Function
1	Signal (-), sensor
2	Signal (+), sensor

1.5 Left rear thorax airbag igniter -N201-

3-pin connector -T3s-

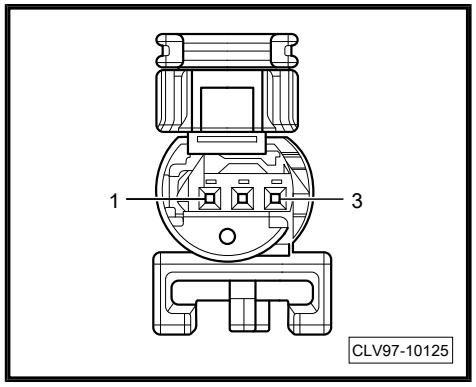

Cavity	Function
1	Signal (-), sensor
2	Signal (+), sensor
3	Ground, sensor

Protected by copyright. Copying for private or commercial purposes, in part or in whole, is not permitted unless authorised by Volkswagen AG. Volkswagen AG does not guarantee or accept any liability with respect to the correctness of information in this document. Copyright by Volkswagen AG.

1.6 Right rear thorax airbag igniter -N202-

3-pin connector -T3u-

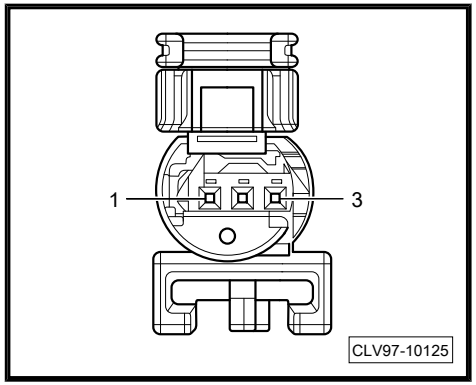

Cavity	Function
1	Signal (-), sensor
2	Signal (+), sensor
3	Ground, sensor

1.7 Front passenger airbag -disabled- indicator lamp -K145-

Double connector -T2be-

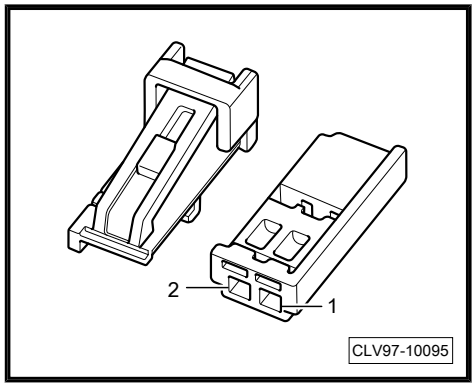

Cavity	Function
1	Power (15), sensor
2	Signal (-), sensor

Protected by copyright. Copying for private or commercial purposes, in part or in whole, is not permitted unless authorised by Volkswagen AG. Volkswagen AG does not guarantee or accept any liability with respect to the correctness of information in this document. Copyright by Volkswagen AG.

1.8 Left rear thorax airbag crash sensor -G256-

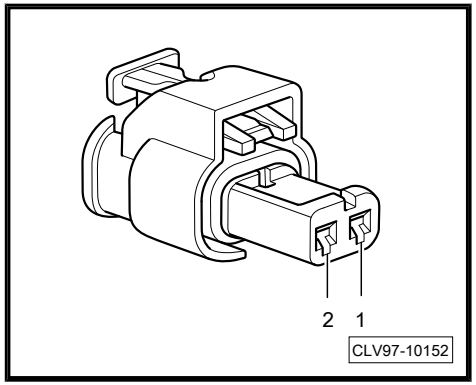

Cavity	Function
1	Signal (+), sensor
2	Signal (-), sensor

1.9 Right rear thorax airbag crash sensor -G257-

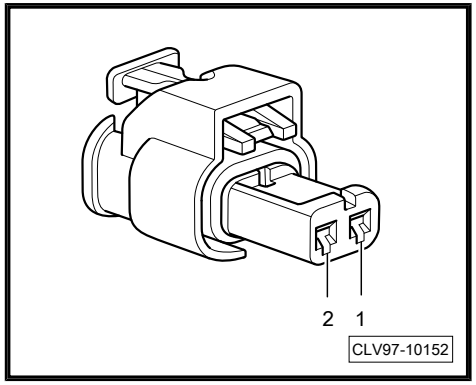

Cavity	Function
1	Signal (+), sensor
2	Signal (-), sensor

Protected by copyright. Copying for private or commercial purposes, in part or in whole, is not permitted unless authorised by Volkswagen AG. Volkswagen AG does not guarantee or accept any liability with respect to the correctness of information in this document. Copyright by Volkswagen AG.

1.10 Driver front airbag crash sensor -G283-

Double connector -T2fg-

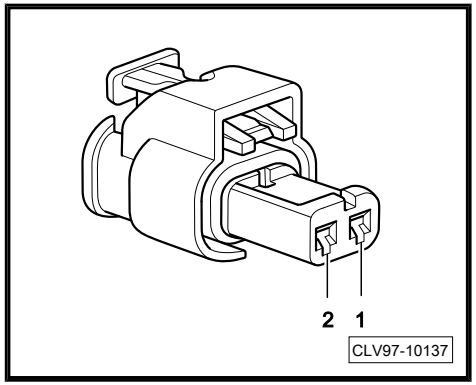

Cavity	Function
1	Signal (+), sensor
2	Signal (-), sensor

1.11 Front passenger front airbag crash sensor -G284-

Double connector -T2fh-

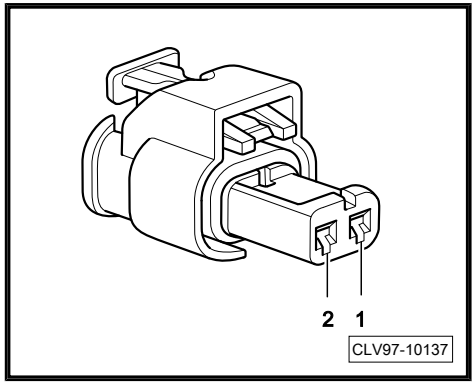

Cavity	Function
1	Signal (+), sensor
2	Signal (-), sensor

Protected by copyright. Copying for private or commercial purposes, in part or in whole, is not permitted unless authorised by Volkswagen AG. Volkswagen AG does not guarantee or accept any liability with respect to the correctness of information in this document. Copyright by Volkswagen AG.

1.12 Driver seat belt switch -E24-

Double connector -T2q-

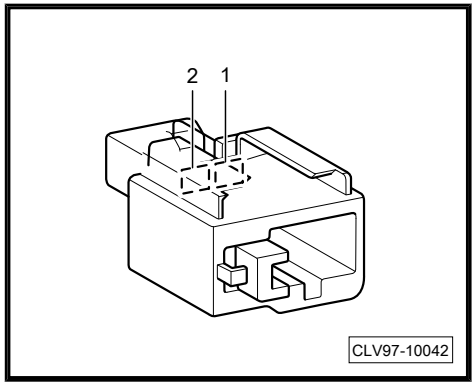

Cavity	Function
1	Signal (+), sensor
2	Ground, sensor

1.13 Passenger occupant detection system control module -J706-

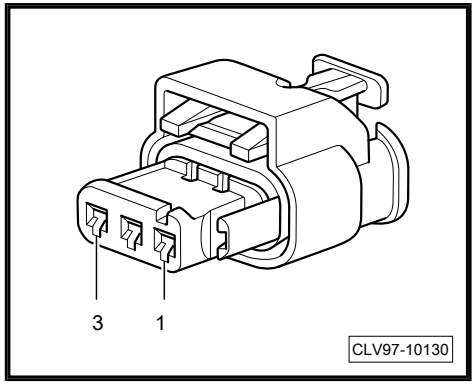

Cavity	Function
1	Power (15), sensor
2	Signal (+), sensor
3	Signal (-), sensor

Protected by copyright. Copying for private or commercial purposes, in part or in whole, is not permitted unless authorised by Volkswagen AG. Volkswagen AG does not guarantee or accept any liability with respect to the correctness of information in this document. Copyright by Volkswagen AG.

1.14 Front passenger seat belt switch -E25-

Double connector -T2be-

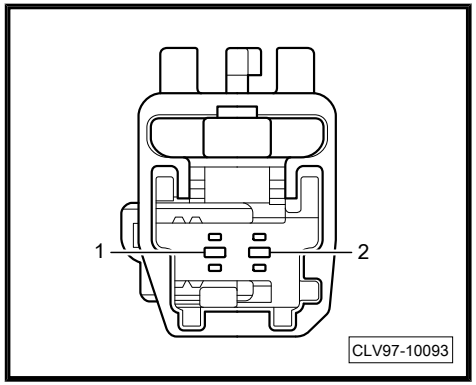

Cavity	Function
1	Signal (+), sensor
2	Ground, sensor

1.15 Front passenger thorax airbag igniter -N200-

3-pin connector -T3l-

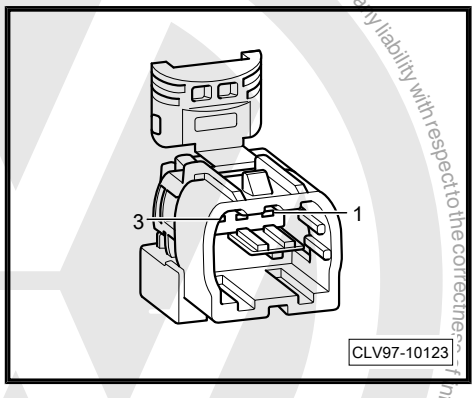

Cavity	Function
1	Signal (-), sensor
2	Signal (+), sensor
3	Ground (31), sensor

Protected by copyright. Copying for private or commercial purposes, in part or in whole, is not permitted unless authorised by Volkswagen AG. Volkswagen AG does not guarantee or accept any liability with respect to the correctness of information in this document. Copyright by Volkswagen AG.

1.16 Driver thorax airbag igniter -N199-

3-pin connector -T3k-

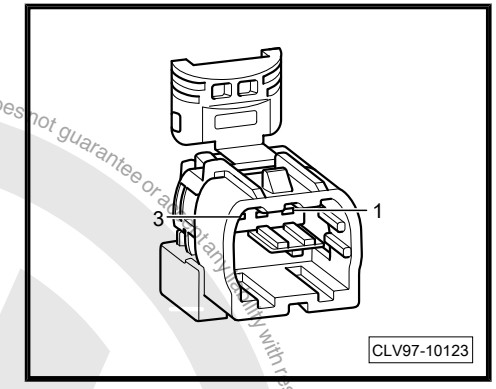

Cavity	Function
1	Signal (-), sensor
2	Signal (+), sensor
3	Ground (31), sensor

1.17 Driver seat position sensor -G553-

Front passenger seat position sensor -G554-

3-pin connector -T3ar-

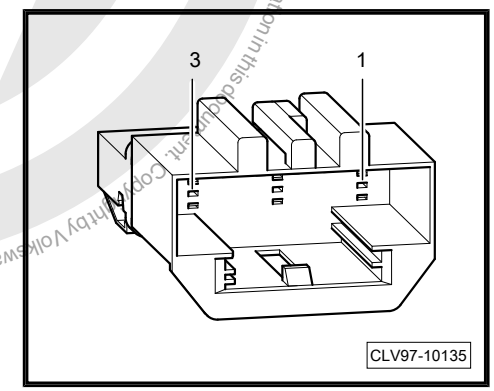

Cavity	Function
1	Ground (31), sensor
2	Signal (+), sensor
3	----

Protected by copyright. Copying for private or commercial purposes, in part or in whole, is not permitted unless authorised by Volkswagen AG. Volkswagen AG does not guarantee or accept any liability with respect to the correctness of information in this document. Copyright by Volkswagen AG.

1.18 Driver side airbag crash sensor -G179-

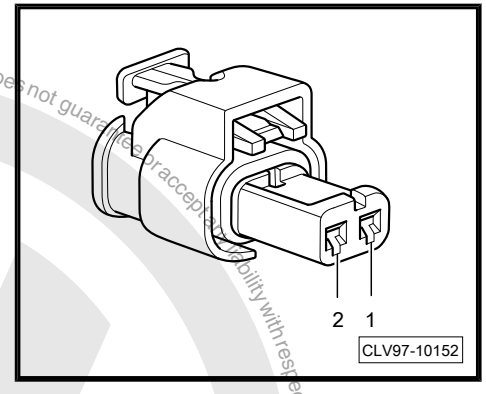

Cavity	Function
1	Signal (+), sensor
2	Signal (-), sensor

1.19 Front passenger side airbag crash sensor -G180-

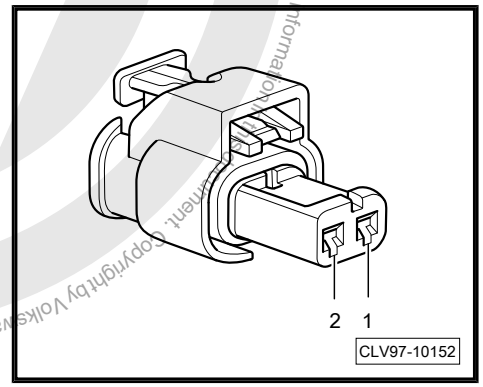

Cavity	Function
1	Signal (+), sensor
2	Signal (-), sensor

Protected by copyright. Copying for private or commercial purposes, in part or in whole, is not permitted unless authorised by Volkswagen AG. Volkswagen AG does not guarantee or accept any liability with respect to the correctness of information. Copyright by Volkswagen AG.

1.20 Left rear seat belt tensioner igniter -N196-

3-pin connector -T3r-

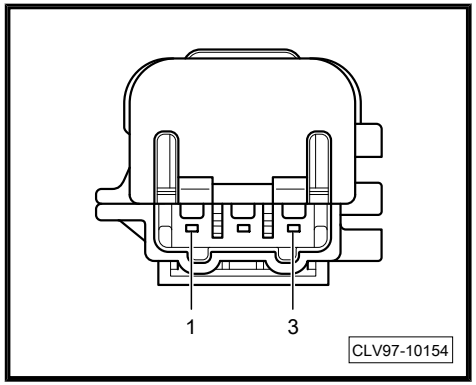

Cavity	Function
1	Ground (31), sensor
2	Signal (+), sensor
3	----

1.21 Right rear seat belt tensioner igniter -N197-

3-pin connector -T3t-

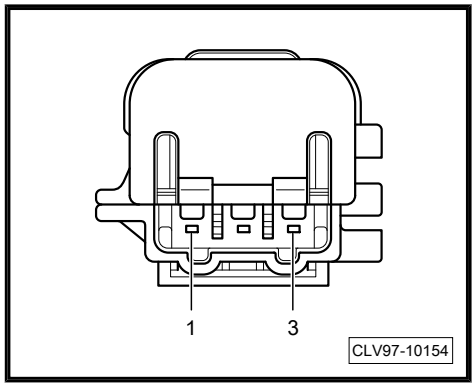

Cavity	Function
1	Ground (31), sensor
2	Signal (+), sensor
3	----

Protected by copyright. Copying for private or commercial purposes, in part or in whole, is not permitted unless authorised by Volkswagen AG. Volkswagen AG does not guarantee or accept any liability with respect to the correctness of information in this document. Copyright by Volkswagen AG.

1.22 Front passenger seat belt tensioner igniter 1 -N154-

Double connector -T2gb-

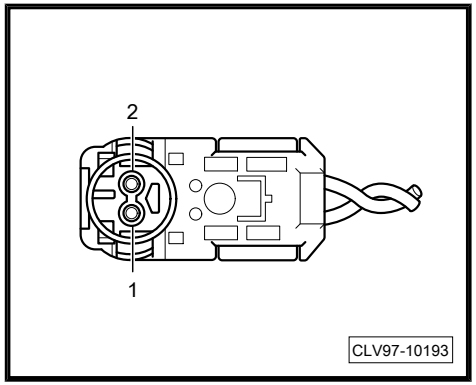

Cavity	Function
1	Signal (-), sensor
2	Signal (+), sensor

1.23 Driver seat belt tensioner igniter 1 -N153-

Double connector -T2gf-

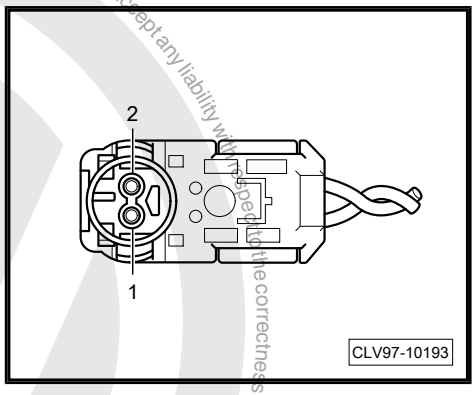

Cavity	Function
1	Signal (-), sensor
2	Signal (+), sensor

Protected by copyright. Copying for private or commercial purposes, in part or in whole, is not permitted unless authorised by Volkswagen AG. Volkswagen AG does not guarantee or accept any liability with respect to the correctness of information in this document. Copyright by Volkswagen AG.

1 Engine Connector Views

1.1 EVAP canister purge regulator valve 1 -N80-

All engines

Double connector -T2dt-

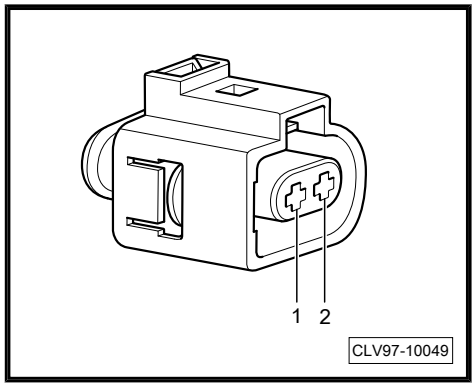

Cavity	Function
1	Power, sensor
2	Ground, sensor

1.2 Brake lamp switch -F-

All engines

4-pin connector -T4al-

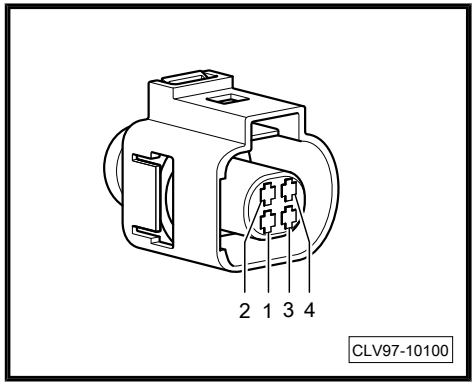

Cavity	Function	Cavity	Function
1	Signal, output	3	Signal, output

Protected by copyright. Copying for private or commercial purposes, in part or in whole, is not permitted unless authorised by Volkswagen AG. Volkswagen AG does not guarantee or accept any liability with respect to the correctness of information in this document. Copyright by Volkswagen AG.

Cavity	Function	Cavity	Function
2	Ground, sensor	4	Power, sensor

1.3 Intake manifold sensor -GX9-

Manifold absolute pressure sensor -G71-

Intake air temperature sensor -G42-

Gasoline engines

4-pin connector -T4bf-

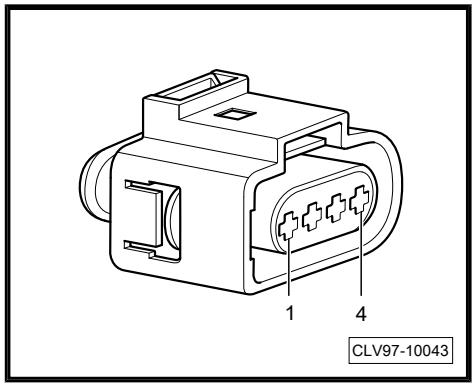

Cavity	Function	Cavity	Function
1	Ground	3	Power, sensor
2	Signal, temperature sensor	4	Signal, sensor

1.4 Throttle valve control module -GX3-

Includes:

Throttle valve control module -J338-

Throttle position sensor -G69-

EPC throttle drive -G186-

EPC throttle drive angle sensor 1 -G187-

EPC throttle drive angle sensor 2 -G188-

- ⇒ “1.4.1 Gasoline engines”, page 3
- ⇒ “1.4.2 TDI engine”, page 3

Protected by copyright. Copying for private or commercial purposes, in part or in whole, is not permitted unless authorised by Volkswagen AG. Volkswagen AG does not guarantee or accept any liability with respect to the correctness of information in this document. Copyright by Volkswagen AG.

1.4.1 Gasoline engines

6-pin connector -T6x-

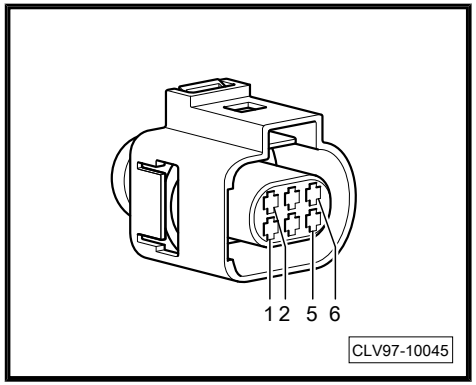

Cavity	Function	Cavity	Function
1	Signal monitor, sensor 1	4	Signal monitor, sensor 2
2	Signal (+), sensor 1+2	5	Voltage Supply, motor
3	Ground, motor	6	Signal (-), sensor 1+2

1.4.2 TDI engine

4-pin connector -T4r-

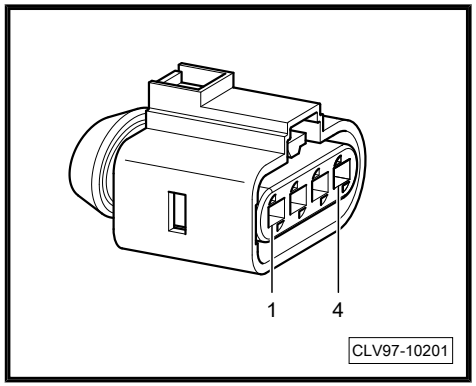

Cavity	Function	Cavity	Function
1	Ground, sensor	3	PWM signal, sensor
2	Voltage supply, sensor	4	Signal status, sensor

Protected by copyright. Copying for private or commercial purposes, in part or in whole, is not permitted unless authorised by Volkswagen AG. Volkswagen AG does not guarantee or accept any liability with respect to the correctness of information in this document. Copyright by Volkswagen AG.

1.5 Camshaft position sensor -G40-

All engines

3-pin connector -T3b-

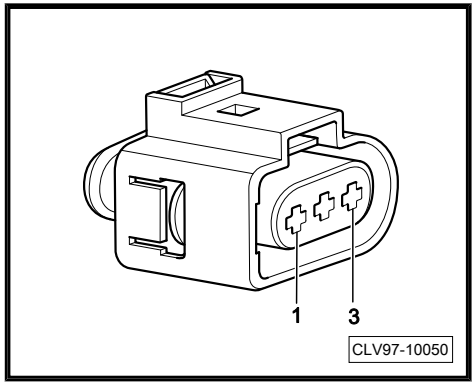

Cavity	Function
1	5 Volt, Sensor
2	Signal, Sensor
3	Ground, sensor

1.6 Cylinder 1 fuel injector -N30-

- ⇒ “1.6.1 Gasoline engines”, page 4
- ⇒ “1.6.2 TDI engine”, page 5

1.6.1 Gasoline engines

Double connector -T2cg-

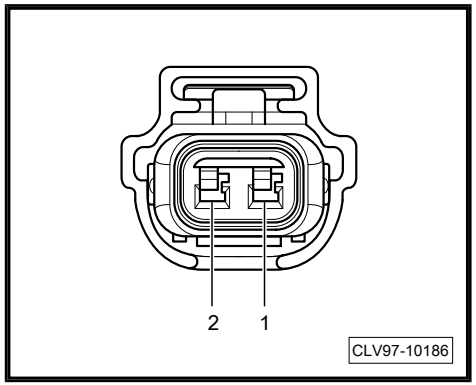

Cavity	Function
1	Power

Protected by copyright. Copying for private or commercial purposes, in part or in whole, is not permitted unless authorised by Volkswagen AG. Volkswagen AG does not guarantee or accept any liability with respect to the correctness of information in this document. Copyright by Volkswagen AG.

Cavity	Function
2	Ground

1.6.2 TDI engine

Double connector -T2cg-

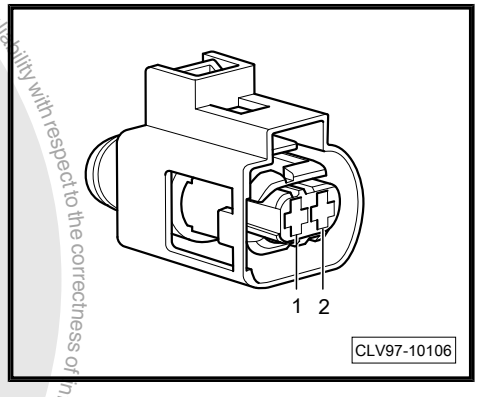

Cavity	Function
1	Ground
2	Power

1.7 Cylinder 2 fuel injector -N31-

- ⇒ “1.7.1 Gasoline engines”, page 5
- ⇒ “1.7.2 TDI engine”, page 6

1.7.1 Gasoline engines

Double connector -T2ch-

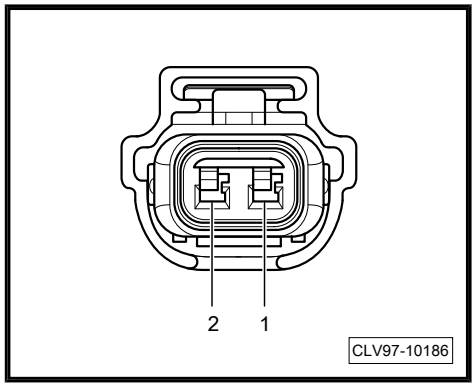

Protected by copyright. Copying for private or commercial purposes, in part or in whole, is not permitted unless authorised by Volkswagen AG. Volkswagen AG does not guarantee or accept any liability with respect to the correctness of information in this document. Copyright by Volkswagen AG.

Cavity	Function
1	Power
2	Ground

1.7.2 TDI engine

Double connector -T2ch-

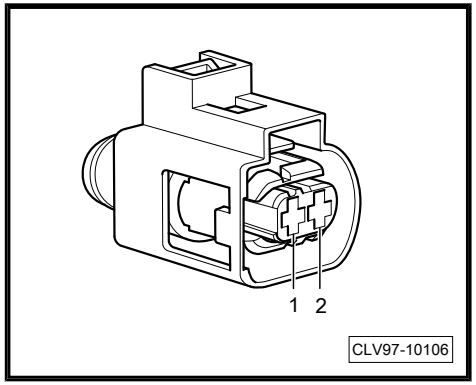

Cavity	Function
1	Ground
2	Power

1.8 Cylinder 3 fuel injector -N32-

- ⇒ “1.8.1 Gasoline engines”, page 7
- ⇒ “1.8.2 TDI engine”, page 7

Protected by copyright. Copying for private or commercial purposes, in part or in whole, is not permitted unless authorised by Volkswagen AG. Volkswagen AG does not guarantee or accept any liability with respect to the correctness of information in this document. Copyright by Volkswagen AG.

Protected by copyright. Copyright for private or commercial purposes, in part or in whole, is not permitted unless authorised by Volkswagen AG. Volkswagen AG does not guarantee or accept any liability with respect to the correctness of information in this document. Copyright by Volkswagen AG.

1.8.1 Gasoline engines

Double connector -T2ci-

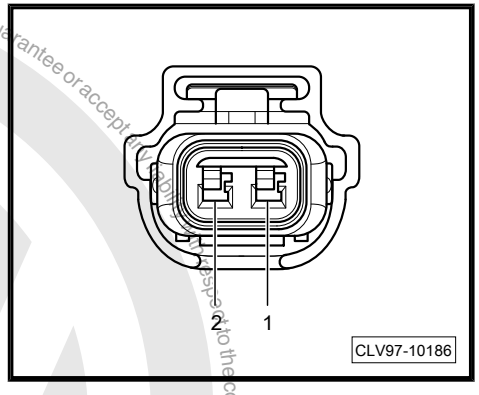

Cavity	Function
1	Power
2	Ground

1.8.2 TDI engine

Double connector -T2ci-

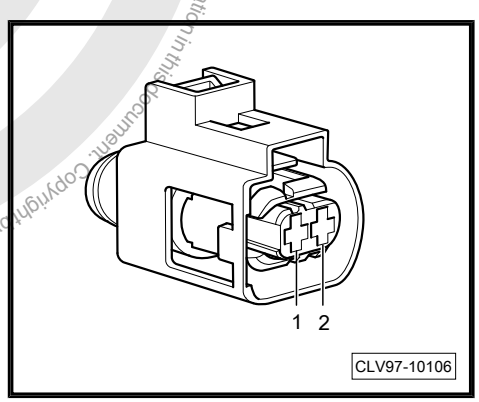

Cavity	Function
1	Ground
2	Power

1.9 Cylinder 4 fuel injector -N33-

- ⇒ “1.9.1 Gasoline engines”, page 8

◆ ⇒ “1.9.2 TDI engine”, page 8

1.9.1 Gasoline engines

Double connector -T2cj-

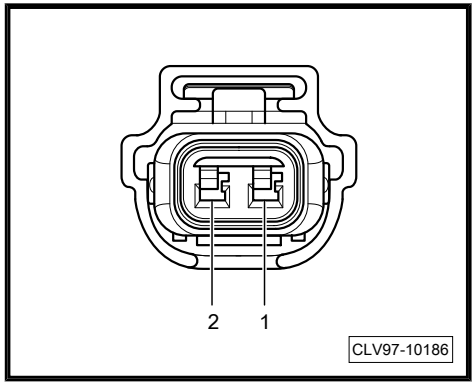

Cavity	Function
1	Power
2	Ground

1.9.2 TDI engine

Double connector -T2cj-

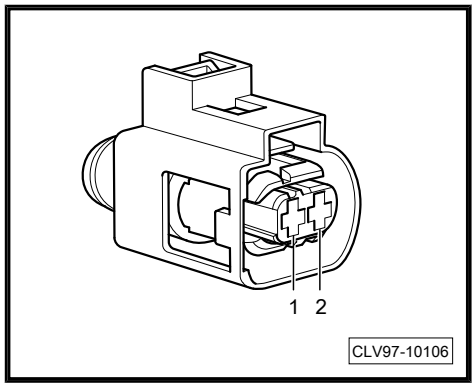

Cavity	Function
1	Ground
2	Power

Copyright by Volkswagen AG. Volkswagen AG does not guarantee or accept any liability with respect to the correctness of information in this document. Copying for private or commercial purposes, in part or in whole, is not permitted unless authorised by Volkswagen AG.

1.10 Cylinder 5 fuel injector -N83-

Double connector -T2ck-

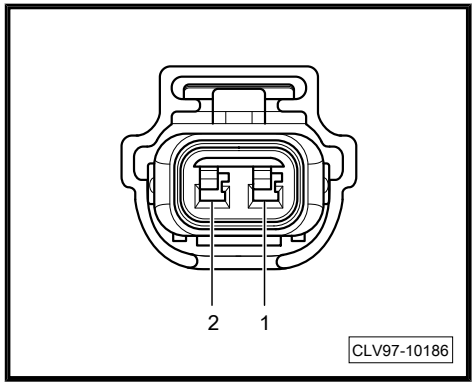

Cavity	Function
1	Power
2	Ground

1.11 Engine speed sensor -G28-

- ⇒ “1.11.1 2.0L CCTA/CBFA TFSI only”, page 9
- ⇒ “1.11.2 All other engines”, page 10

1.11.1 2.0L CCTA/CBFA TFSI only

Double connector -T2h-

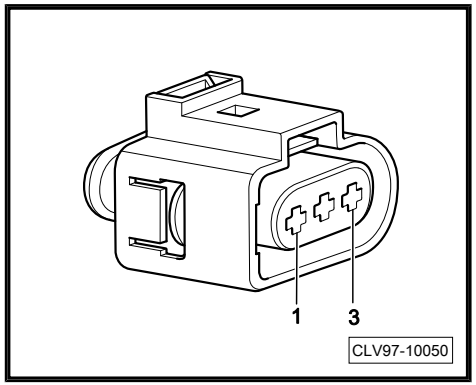

Cavity	Function
1	5 volt, sensor
2	Signal, sensor

Protected by copyright. Copying for private or commercial purposes, in part or in whole, is not permitted unless authorised by Volkswagen AG. Volkswagen AG does not guarantee or accept any liability with respect to the correctness of information in this document. Copyright by Volkswagen AG.

1.11.2 All other engines

3-pin connector -T3ag- / 3-pin connector -T3v-

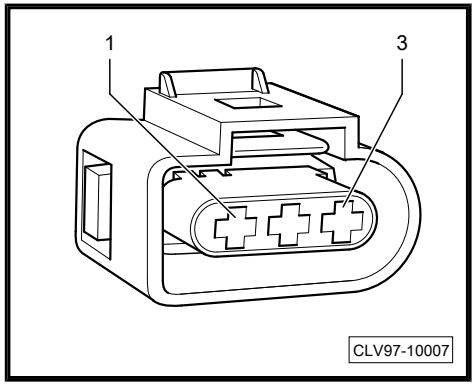

Cavity	Function
1	5 volt, sensor
2	Signal, sensor
3	Ground, sensor

1.12 Positive crankcase ventilation heating element -N79-

- ⇒ “1.12.1 TDI and 2.0L gasoline engines”, page 10
- ⇒ “1.12.2 1.4L engine”, page 11

1.12.1 TDI and 2.0L gasoline engines

2-pin connector -T2fc-

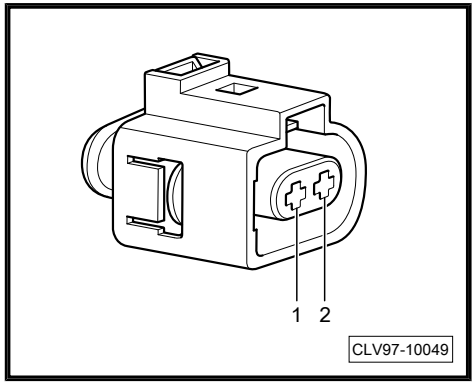

Protected by copyright. Copying for private or commercial purposes, in part or in whole, is not permitted unless authorised by Volkswagen AG. Volkswagen AG does not guarantee or accept any liability with respect to the correctness of information in this document. Copyright by Volkswagen AG.

Cavity	Function
1	Power
2	Ground

1.12.2 1.4L engine

2-pin connector -T2kge-

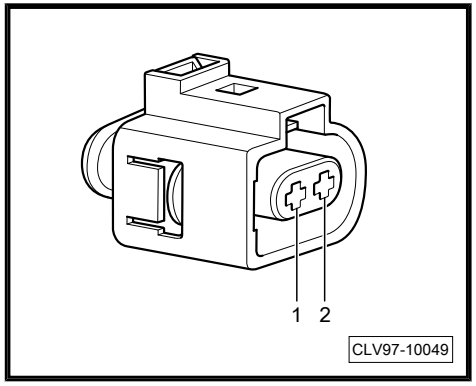

Cavity	Function
1	Power
2	Ground

1.13 Accelerator pedal module -GX2-

Accelerator pedal position sensor 2 -G185-

Accelerator pedal position sensor -G79-

6-pin connector -T6h-

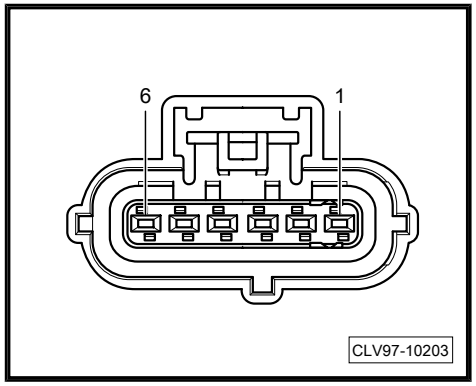

Protected by copyright. Copying for private or commercial purposes, in part or in whole, is not permitted unless authorised by Volkswagen AG. Volkswagen AG does not guarantee or accept any liability with respect to the correctness of information in this document. Copyright by Volkswagen AG.

Cavity	Function	Cavity	Function
1	5 volt, sensor 2	4	Signal, sensor 1
2	5 volt, sensor 1	5	Ground, sensor 2
3	Ground, sensor 1	6	Signal, sensor 2

1.14 Knock sensor 1 -G61-

- ⇒ “1.14.1 1.4L/ 1.8L/ 2.0L gasoline engines”, page 12
- ⇒ “1.14.2 2.5L engine”, page 13

1.14.1 1.4L/ 1.8L/ 2.0L gasoline engines

Double connector -T2ex-

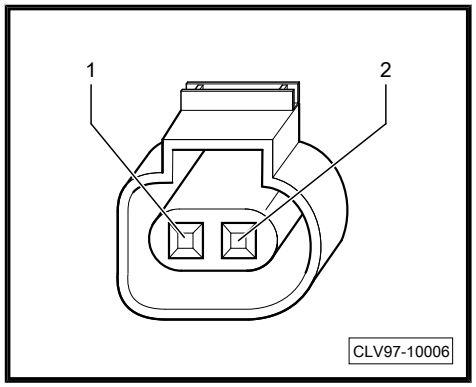

Cavity	Function
1	Signal (+), sensor
2	Signal (-), sensor

Protected by copyright. Copying for private or commercial purposes, in part or in whole, is not permitted unless authorised by Volkswagen AG. Volkswagen AG does not guarantee or accept any liability with respect to the correctness of information in this document. Copyright by Volkswagen AG.

1.14.2 2.5L engine

3-pin connector -T3ak-

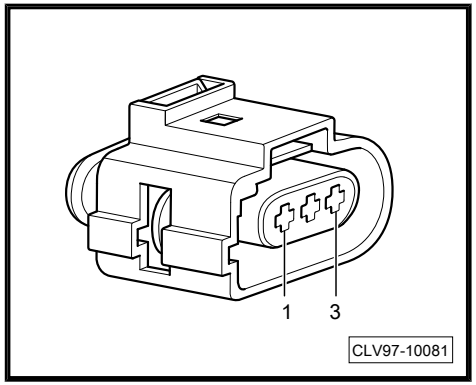

Cavity	Function
1	Signal (+), sensor
2	Signal (-), sensor
3	Shield ground, sensor

1.15 Knock sensor 2 -G66-

2.5L engine only

3-pin connector -T3y-

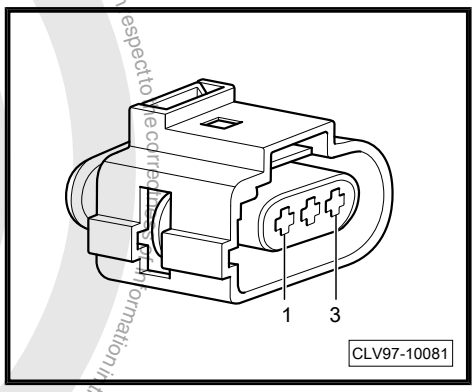

Cavity	Function
1	Signal (+), sensor
2	Signal (-), sensor
3	Shield ground, sensor

Protected by copyright. Copying for private or commercial purposes, in part or in whole, is not permitted unless authorised by Volkswagen AG. Volkswagen AG does not guarantee or accept any liability with respect to the correctness of information in this document. Copyright by Volkswagen AG.

1.16 Oxygen sensor 1 after catalytic converter -GX7-

Includes Oxygen sensor after three way catalytic converter -G130-

Heater for oxygen sensor 1 after catalytic converter -Z29-

- ⇒ “1.16.1 All gasoline engines”, page 14
- ⇒ “1.16.2 TDI engine”, page 14

1.16.1 All gasoline engines

6-pin connector -T4ao-

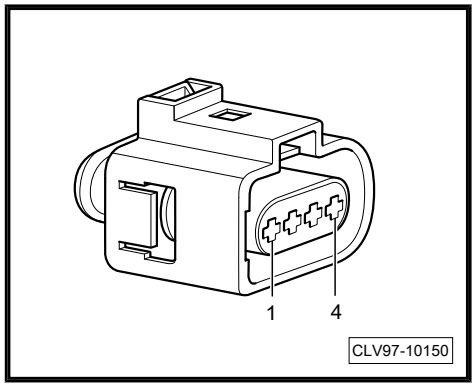

Cavity	Function	Cavity	Function
1	Heater, Voltage (+)	3	Ground, Sensor
2	Heater, Ground (-)	4	Signal, Sensor

1.16.2 TDI engine

6-pin connector -T6ao-

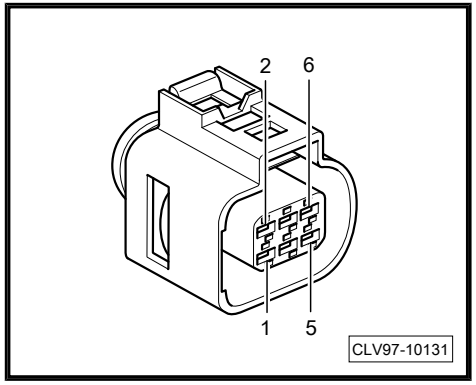

Cavity	Function	Cavity	Function
1	Voltage Supply	4	Heater, Voltage (H+)

Protected by copyright. Copying for private or commercial purposes, in part or in whole, is not permitted unless authorised by Volkswagen AG. Volkswagen AG does not guarantee or accept any liability with respect to the correctness of information in this document. Copyright by Volkswagen AG.

Cavity	Function	Cavity	Function
2	Ground, Sensor	5	Trim Current (RT)
3	Heater, Ground (H -)	6	Voltage, sensor (RE+)

1.17 Oxygen sensor 1 before catalytic converter -GX10-

Heated oxygen sensor -G39- and

Oxygen sensor heater -Z19-

All engines

6-pin connector -T6w-

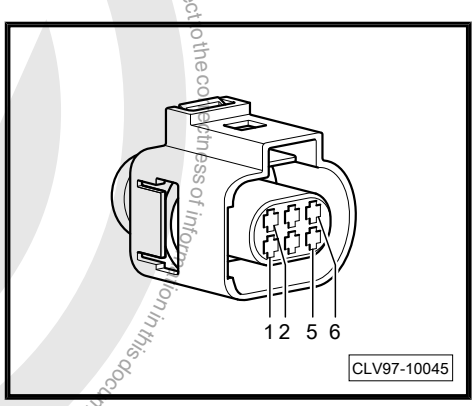

Cavity	Function	Cavity	Function
1	Voltage Supply	4	Heater, Voltage (H+)
2	Ground, Sensor	5	Trim Current (RT)
3	Heater, Ground (H -)	6	Voltage, sensor (RE+)

Protected by copyright. Copyright by Volkswagen AG. Volkswagen AG does not guarantee or accept any liability with respect to the correctness of information in this document. Copying for private or commercial purposes, in part or in whole, is not permitted unless authorised by Volkswagen AG.

1.18 Oxygen sensor in bank 1 center three way catalytic converter -G465-

2.5L Gas engine

4-pin connector -T4v-

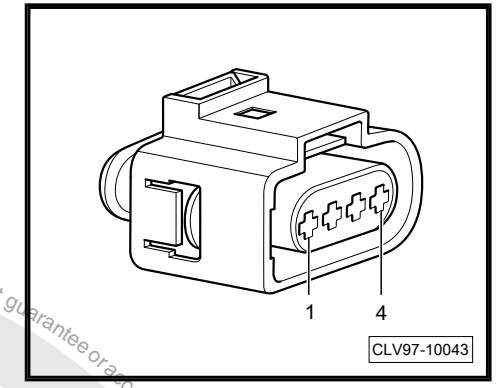

Cavity	Function	Cavity	Function
1	Heater, Voltage (+)	3	Ground, Sensor
2	Heater, Ground (-)	4	Signal, Sensor

1.19 Ignition coil 1 with power output stage -N70-

- ⇒ “1.19.1 Engine GEN II”, page 16
- ⇒ “1.19.2 Engine GEN III”, page 17

1.19.1 Engine GEN II

4-pin connector -T4af-

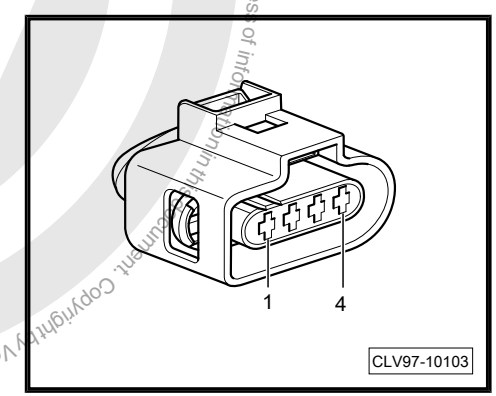

Cavity	Function	Cavity	Function
1	Power	3	Ground, module

Protected by copyright. Copying for private or commercial purposes, in part or in whole, is not permitted unless authorised by Volkswagen AG. Volkswagen AG does not guarantee or accept any liability with respect to the correctness of information in this document. Copyright by Volkswagen AG.

Cavity	Function	Cavity	Function
2	Ground, chassis	4	Ground, coil

1.19.2 Engine GEN III

4-pin connector -T4af-

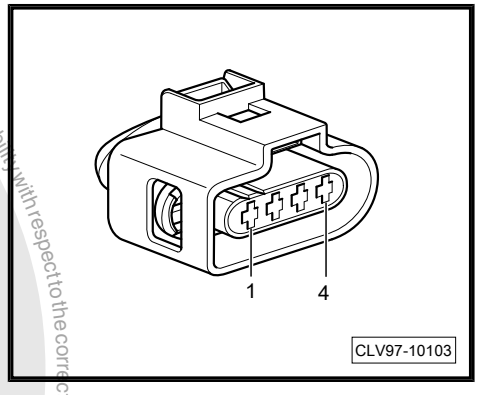

Cavity	Function	Cavity	Function
1	Ground	3	Ground, module
2	Signal, module	4	Power (15)

1.20 Ignition coil 2 with power output stage -N127-

- ⇒ “1.20.1 Engine GEN II”, page 17
- ⇒ “1.20.2 Engine GEN III”, page 18

1.20.1 Engine GEN II

4-pin connector -T4ag-

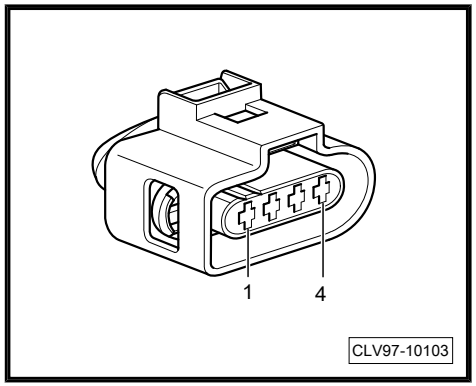

Protected by copyright. Copying for private or commercial purposes, in part or in whole, is not permitted unless authorised by Volkswagen AG. Volkswagen AG does not guarantee or accept any liability with respect to the correctness of information in this document. Copyright by Volkswagen AG.

Cavity	Function	Cavity	Function
1	Power	3	Ground, module
2	Ground, chassis	4	Ground, coil

1.20.2 Engine GEN III

4-pin connector -T4ag-

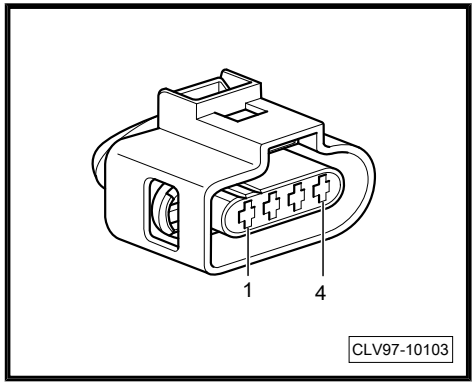

Cavity	Function	Cavity	Function
1	Ground	3	Ground, module
2	Signal, module	4	Power (15)

1.21 Ignition coil 3 with power output stage -N291-

- ⇒ “1.21.1 Engine GEN II”, page 19
- ⇒ “1.21.2 Engine GEN III”, page 19

Protected by copyright. Copying for private or commercial purposes, in part or in whole, is not permitted unless authorised by Volkswagen AG. Volkswagen AG does not guarantee or accept any liability with respect to the correctness of information in this document. Copyright by Volkswagen AG.

1.21.1 Engine GEN II

4-pin connector -T4ah-

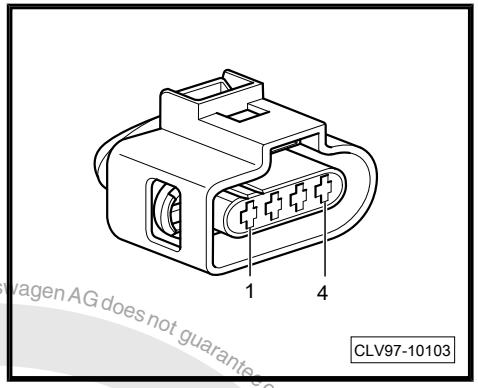

Cavity	Function	Cavity	Function
1	Power	3	Ground, module
2	Ground, chassis	4	Ground, coil

1.21.2 Engine GEN III

4-pin connector -T4ah-

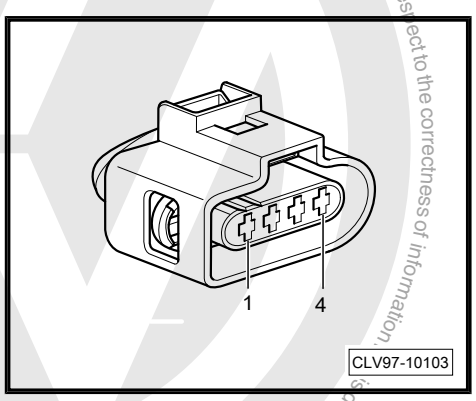

Cavity	Function	Cavity	Function
1	Ground	3	Ground, module
2	Signal, module	4	Power (15)

Protected by copyright. Copying for private or commercial purposes, in part or in whole, is not permitted unless authorised by Volkswagen AG. Volkswagen AG does not guarantee or accept any liability with respect to the correctness of information in this document. Copyright by Volkswagen AG.

1.22 Ignition coil 4 with power output stage -N292-

1.22.1 Engine GEN II

4-pin connector -T4ai-

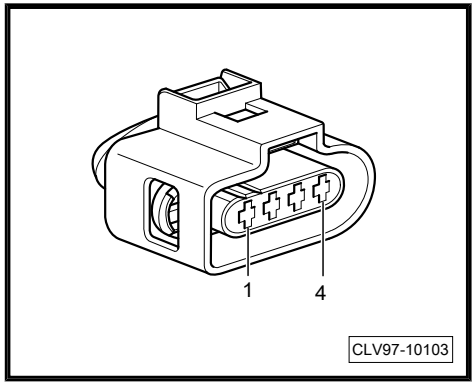

Cavity	Function	Cavity	Function
1	Power	3	Ground, module
2	Ground, chassis	4	Ground, coil

1.22.2 Engine GEN III

4-pin connector -T4ai-

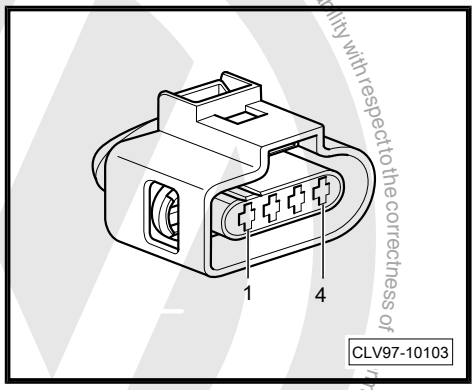

Cavity	Function	Cavity	Function
1	Ground	3	Ground, module
2	Signal, module	4	Power (15)

Protected by copyright. Copying for private and commercial purposes, in part or in whole, is not permitted unless authorised by Volkswagen AG. Volkswagen AG does not guarantee or accept any liability with respect to the correctness of information in this document. Copyright by Volkswagen AG.

1.23 Ignition coil 5 with power output stage -N323-

4-pin connector -T4aj-

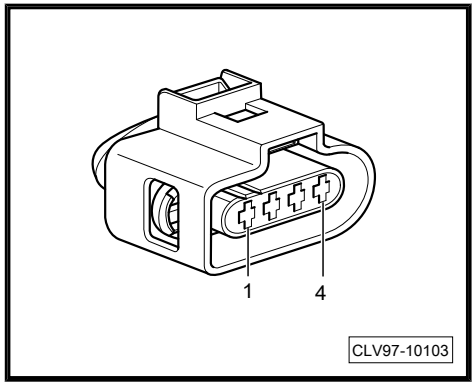

Cavity	Function	Cavity	Function
1	Power	3	Ground, module
2	Ground, chassis	4	Ground, coil

1.24 Ignition coil -N152-

2.0L CBPA engine

4-pin connector -T4z-

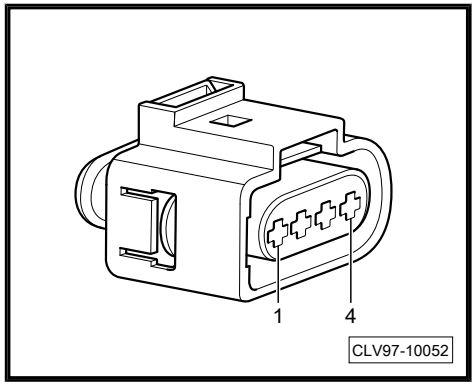

Cavity	Function	Cavity	Function
1	Signal 1, coil	3	Signal 2, coil
2	Module power	4	Module ground

Protected by copyright. Copying for private or commercial purposes, in part or in whole, is not permitted unless authorised by Volkswagen AG. Volkswagen AG does not guarantee or accept any liability with respect to the correctness of information in this document. Copyright by Volkswagen AG.

1.25 Leak detection pump -V144-

Gasoline engines

4-pin connector -T4dp-

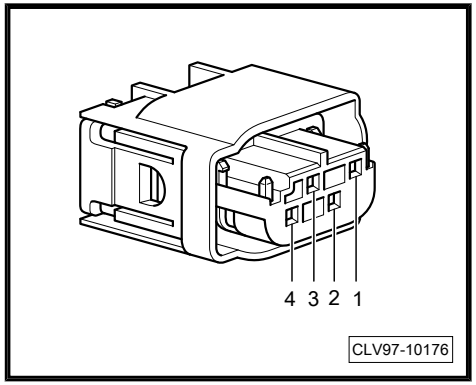

Cavity	Function	Cavity	Function
1	Signal, Sensor	3	Signal, Solenoid
2	Signal, pump	4	Power supply

1.26 Engine coolant temperature sensor -G62-

All engines

Double connector -T2dp-

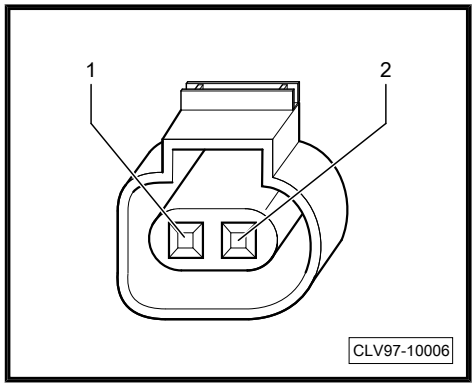

Cavity	Function
1	Signal input, sensor
2	Signal output, sensor

Protected by copyright. Copying for private or commercial purposes, in part or in whole, is not permitted unless authorised by Volkswagen AG. Volkswagen AG does not guarantee or assume any liability with respect to the correctness of information in this document. Copyright by Volkswagen AG.

1.27 Engine coolant temperature sensor -G83-

All engines

Double connector -T2r-

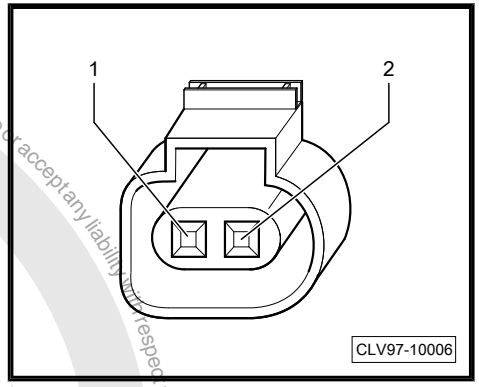

Cavity	Function
1	Signal input, sensor
2	Signal output, sensor

1.28 Clutch position sensor -G476-

All engines

5-pin connector -T5m-

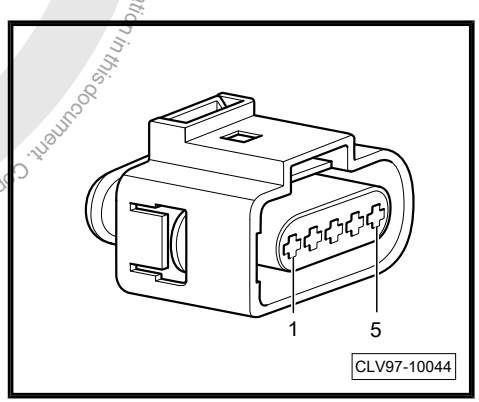

Cavity	Function	Cavity	Function
1	Ground, sensor	4	Signal, Interlock
2	Signal, GRA	5	Power, sensor
3	. . .		

Protected by copyright. Copying for private or commercial purposes, in part or in whole, is not permitted unless authorised by Volkswagen AG. Volkswagen AG does not guarantee or accept any liability with respect to the correctness of information in this document. Copyright by Volkswagen AG.

Protected by copyright. Copying for private or commercial purposes, in part or in whole, is not permitted unless authorised by Volkswagen AG. Volkswagen AG does not guarantee or accept any liability with respect to the correctness of information in this document. Copyright by Volkswagen AG.

1.29 Oil pressure switch -F1-

All engines

Single connector -T1o-

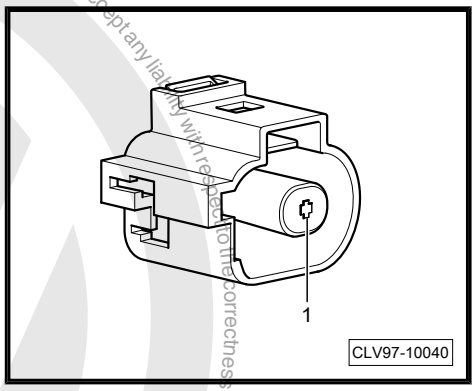

Cavity	Function
1	Power Supply, Sensor

1.30 Oil pressure regulation valve -N428-

Double connector -T2dw-

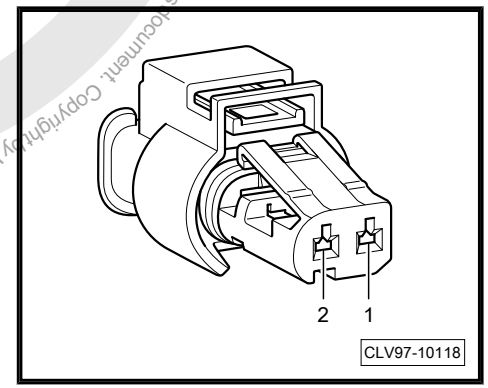

Cavity	Function
1	Ground, sensor
2	Power Supply, sensor

Protected copyright. Copyright by Volkswagen AG. Volkswagen AG does not guarantee or accept any liability with respect to the correctness of information in this document. Copying for private or commercial purposes, in part or in whole, is not permitted unless authorised by Volkswagen AG.

1.31 Camshaft adjustment valve 1 -N205-

Gasoline engines

Double connector -T2du-

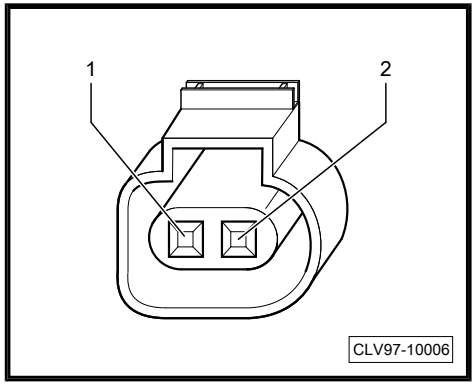

Cavity	Function
1	Ground
2	Power

1.32 Secondary air system -GX24-

Includes:

Secondary air injection solenoid valve -N112- For 2.0L CBFA, 2.5L CBTA and CBUA engines, refer to ⇒ page 26

Secondary air injection sensor 1 -G609- For 2.0L CBFA, 2.5L CBTA and CBUA engines, refer to ⇒ page 26

Secondary air injection sensor 2 -G610-

5-pin connector -T5d-

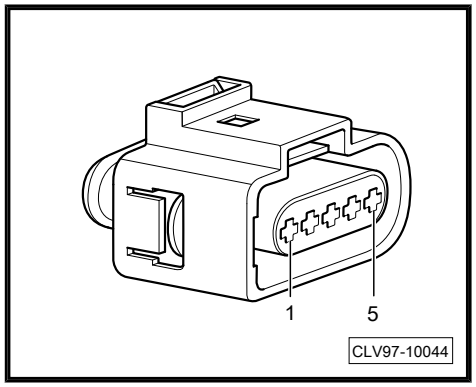

Cavity	Function	Cavity	Function
1	Power	4	Ground, sensor

Cavity	Function	Cavity	Function
2	5 Volts, power	5	Ground, valve
3	Return		

1.33 Secondary air injection solenoid valve -N112-

For 2.5L CBTA, CBUA and 2.0L CBFA only. For all other engines refer to ⇒ page 25

Double connector -T2cl-

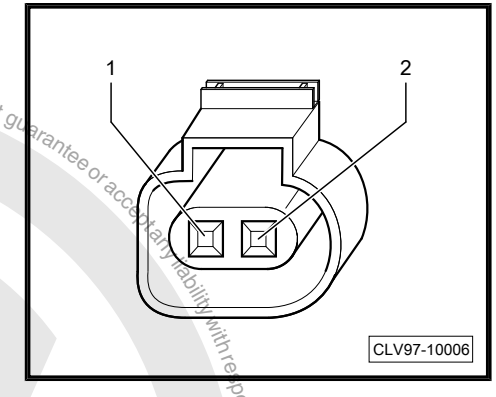

Cavity	Function
1	Power
2	Ground

1.34 Secondary air injection sensor 1 -G609-

For 2.5L CBTA, CBUA and 2.0L CBFA only. For all others refer to ⇒ page 25

- ⇒ “1.34.1 4-Pin Connector”, page 27
- ⇒ “1.34.2 3-Pin Connector”, page 27

Protected by copyright. Copying for private or commercial purposes, in part or in whole, is not permitted unless authorised by Volkswagen AG. Volkswagen AG does not guarantee or accept any liability with respect to the correctness of information in this document. Copyright by Volkswagen AG.

Protected by copyright. Copyright by Volkswagen AG. Volkswagen AG does not guarantee or accept any liability with respect to the correctness of information in this document. Copyright by Volkswagen AG. Volkswagen AG. Volkswagen AG.

1.35 Secondary air injection pump motor -V101-

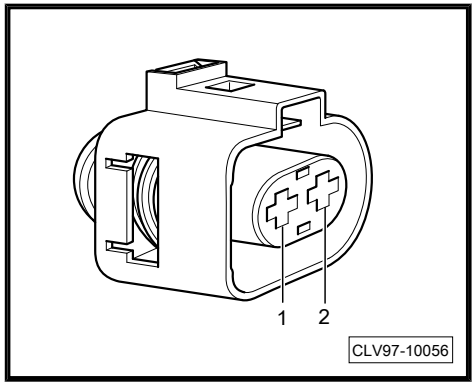

Cavity	Function
1	Ground
2	Power

1.36 EGR vacuum regulator solenoid valve -N18-

EGR potentiometer -G212-

TDI engine

6-pin connector -T6y-

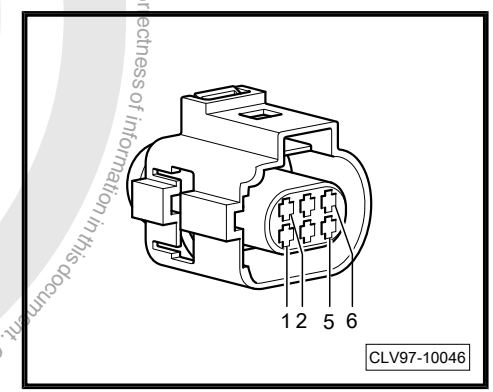

Cavity	Function	Cavity	Function
1	5 Volts, power	4	. . .
2	Solenoid valve, ground	5	Potentiometer, signal
3	Potentiometer, ground	6	Solenoid valve, power

Please by copyright. Copying for private or commercial purposes, in part or whole, is not permitted unless authorised by Volkswagen AG. Volkswagen AG does not guarantee or accept any liability with respect to the correctness of information in this document. Copyright by Volkswagen AG.

1.37 Valve 2 for EGR -N213-

Exhaust gas recirculation position sensor 2 -G466-

TDI engine

6-pin connector -T6x-

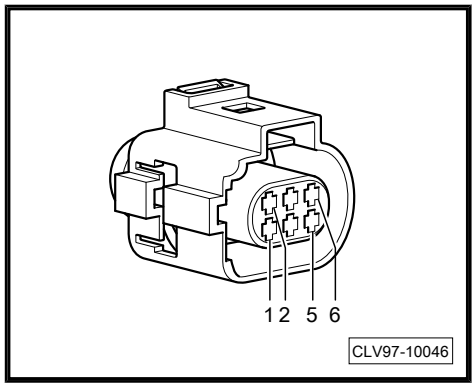

Cavity	Function	Cavity	Function
1	5 Volts, power	4	. . .
2	Solenoid valve, ground	5	Potentiometer, signal
3	Potentiometer, ground	6	Solenoid valve, power

1.38 Intake flap motor -V157-

Intake manifold runner position sensor -G336-

TDI engine

5-pin connector -T5l-

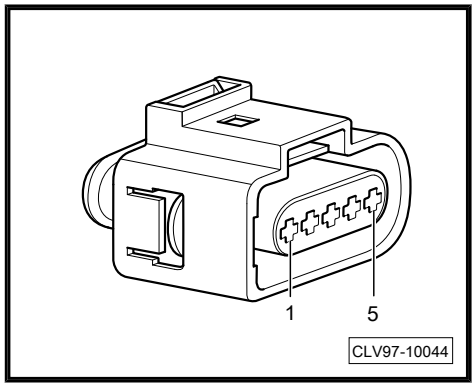

Cavity	Function	Cavity	Function
1	5 Volts, power	4	Solenoid valve, ground

Protected by copyright. Copying for private or commercial purposes, in part or in whole, is not permitted unless authorised by Volkswagen AG. Volkswagen AG does not guarantee or accept any liability with respect to the correctness of information in this document. Copyright by Volkswagen AG.

Cavity	Function	Cavity	Function
2	Potentiometer, signal	5	Solenoid valve, power
3	Potentiometer, ground		

1.39 EGR temperature sensor -G98-

TDI engine

Double connector -T2ef-

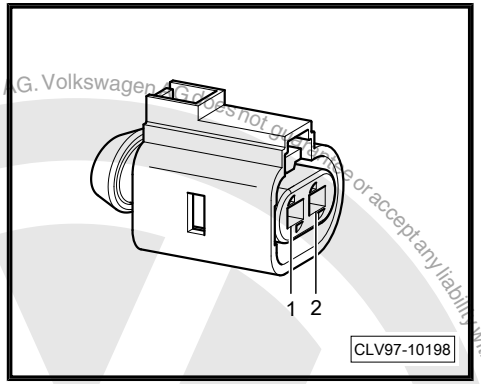

Cavity	Function
1	Ground
2	Signal +

1.40 Exhaust gas temperature sensor 1 -G235-

TDI engine

Double connector -T2fe-

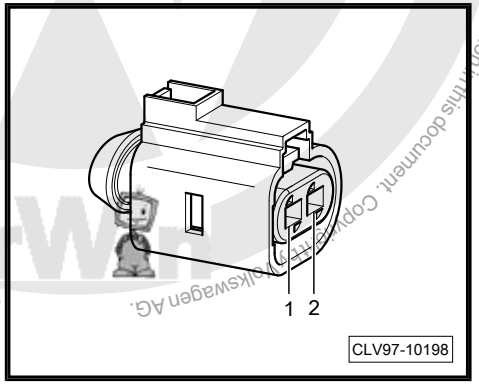

Protected by copyright. Copying for private or commercial purposes, in part or in whole, is not permitted unless authorised by Volkswagen AG. Volkswagen AG does not guarantee or accept any liability with respect to the correctness of information in this document. Copyright by Volkswagen AG.

Cavity	Function
1	Ground
2	Signal power

1.41 Exhaust gas temperature sensor 2 -G448-

TDI engine

Double connector -T2fk-

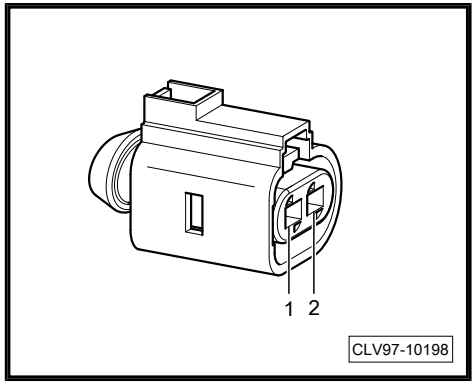

Cavity	Function
1	Ground, sensor
2	Signal, sensor

1.42 Exhaust gas temperature sensor 3 -G495-

TDI engine

Double connector -T2eq-

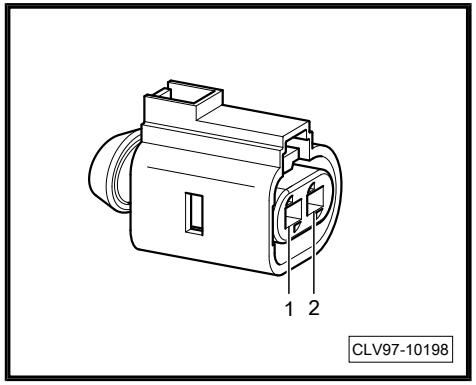

Protected by copyright. Copyright by Volkswagen AG. Volkswagen AG does not guarantee or accept any liability with respect to the correctness of information in this document. Copyright by Volkswagen AG. Reproduced or published unless authorised by Volkswagen AG. Volkswagen AG does not guarantee or accept any liability with respect to the correctness of information in this document. Copyright by Volkswagen AG. Protected by copyright. Copying for private or commercial purposes, in part or in whole, is not permitted unless authorised by Volkswagen AG. Volkswagen AG does not guarantee or accept any liability with respect to the correctness of information in this document. Copyright by Volkswagen AG.

Cavity	Function
1	Ground, sensor
2	Signal, sensor

1.43 Exhaust gas temperature sensor 4 -G648-

TDI engine

Double connector -T2ez-

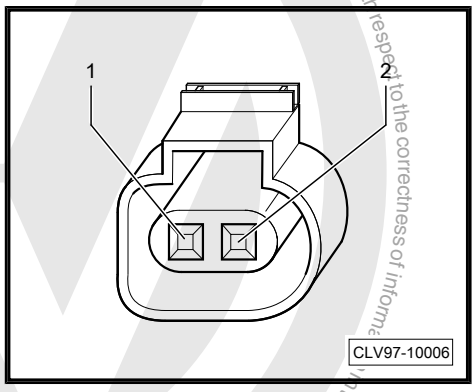

Cavity	Function
1	Ground
2	Signal +

1.44 Fuel temperature sensor -G81-

TDI engine

Double connector -T2ey-

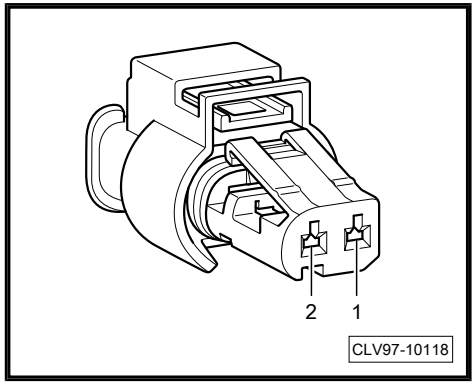

Protected by copyright. Copying for private or commercial purposes, in part or in whole, is not permitted unless authorised by Volkswagen AG. Volkswagen AG does not guarantee or accept any liability with respect to the correctness of information in this document. Copyright by Volkswagen AG.

Cavity	Function
1	Ground, sensor
2	Signal, sensor

1.45 Exhaust pressure sensor 1 -G450-

TDI engine

3-pin connector -T3n-

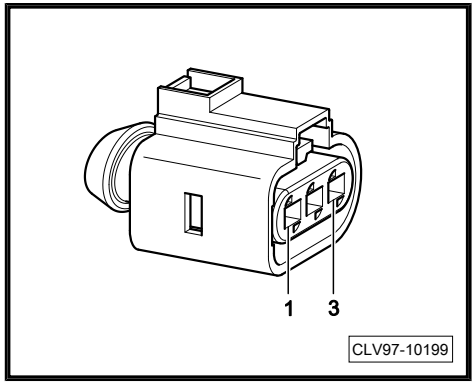

Cavity	Function
1	5 volt, sensor
2	Ground, sensor
3	Signal, sensor

1.46 Differential pressure sensor -G505-

TDI engine

3-pin connector -T3m-

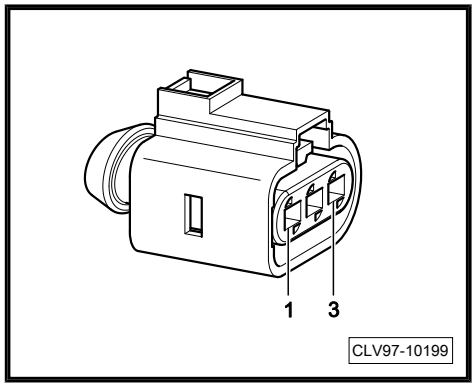

Protected by copyright. Copying for private or commercial purposes, in part or in whole, is not permitted unless authorised by Volkswagen AG. Volkswagen AG does not guarantee or accept any liability with respect to the correctness of information in this document. Copyright by Volkswagen AG.

Cavity	Function
1	5 volt, sensor
2	Ground, sensor
3	Signal, sensor

1.47 Charge air pressure sensor -GX26-

Intake air temperature sensor -G42-

Charge air pressure sensor -G31-

Intake air temperature sensor 2 -G299-

- ⇒ “1.47.1 TDI engine”, page 34
- ⇒ “1.47.2 1.4L gasoline engine”, page 35
- ⇒ “1.47.3 All other engines”, page 35

1.47.1 TDI engine

4-pin connector -T4bt-

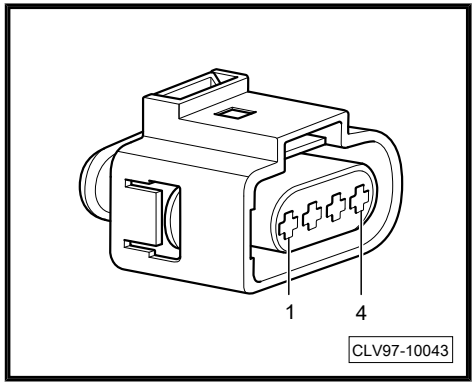

Cavity	Function	Cavity	Function
1	Ground	3	5 volt
2	Signal, temperature sensor	4	Signal, sensor

Protected by copyright. Copying for private or commercial purposes, in part or in whole, is not permitted unless authorised by Volkswagen AG. Volkswagen AG does not guarantee or accept any liability with respect to the correctness of information in this document. Copyright by Volkswagen AG.

1.47.2 1.4L gasoline engine

4-pin connector -T4df-

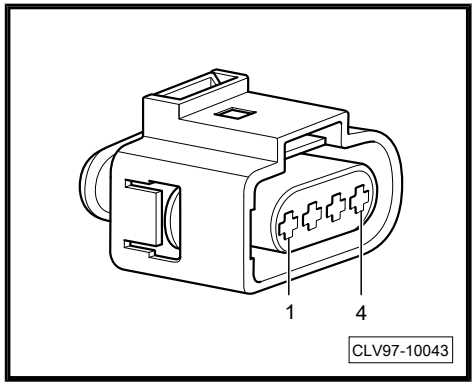

Cavity	Function	Cavity	Function
1	Ground	3	5 volt
2	Signal, temperature sensor	4	Signal, sensor

1.47.3 All other engines

4-pin connector -T4aj-

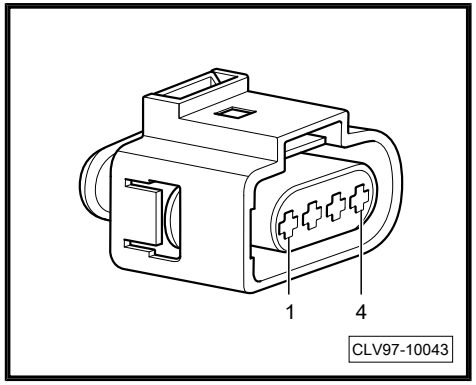

Cavity	Function	Cavity	Function
1	Ground	3	5 volt
2	...	4	Signal, sensor

Protected by copyright. Copying for private or commercial purposes, in part or in whole, is not permitted unless authorised by Volkswagen AG. Volkswagen AG does not guarantee or accept any liability with respect to the correctness of information in this document. Copyright by Volkswagen AG.

1.48 Fuel pressure sensor -G247-

3-pin connector -T3z- / 3-pin connector -T3al-

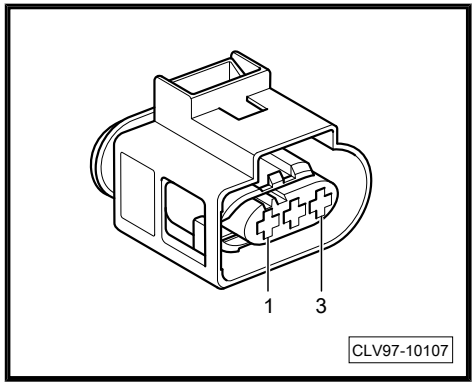

Cavity	Function
1	Ground, sensor
2	Signal, sensor
3	5 volt, sensor

1.49 Wastegate bypass regulator valve -N75-

TDI, and 2.0L gasoline engines

Double connector -T2ed-

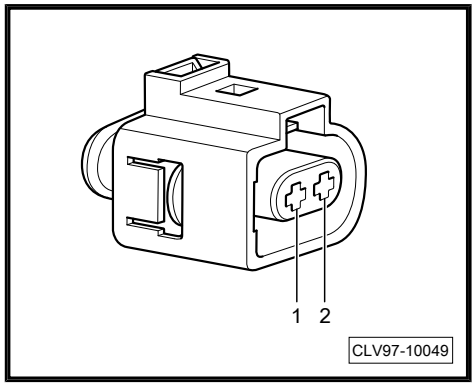

Cavity	Function
1	Power
2	Ground

Protected by copyright. Copying for private or commercial purposes, in part or in whole, is not permitted unless authorised by Volkswagen AG. Volkswagen AG does not guarantee or accept any liability with respect to the correctness of information in this document. Copyright by Volkswagen AG.

1.50 Transfer fuel pump -G6-

All engines

5-pin connector -T5b-

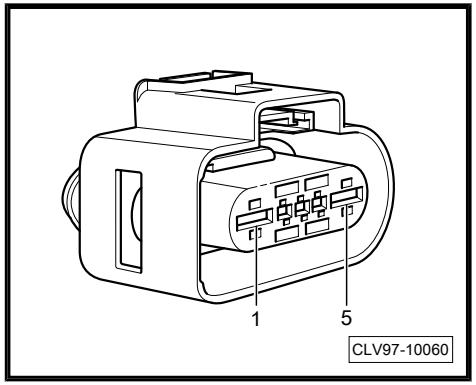

Cavity	Function	Cavity	Function
1	Fuel pump, power	4	Signal, sensor (EMPTY)
2	Signal Monitor, sensor (Wiper)	5	Fuel pump, ground
3	Signal, sensor (FULL)		

1.51 Fuel pump 2 -V277-

TDI engine

Double connector -T2fl-

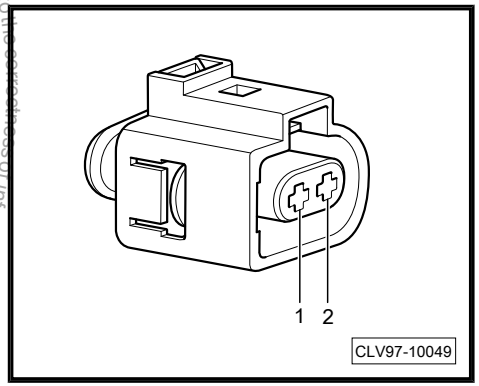

Cavity	Function
1	Fuel pump, ground
2	Fuel pump, power

Protected by copyright. Copying for private or commercial purposes, in part or in whole, is not permitted unless authorised by Volkswagen AG. Volkswagen AG does not guarantee or assume any liability with respect to the correctness of information in this document. Copyright by Volkswagen AG.

1.52 Cylinder 1 internal pressure sensor -G620-

4-pin connector -T4cb-

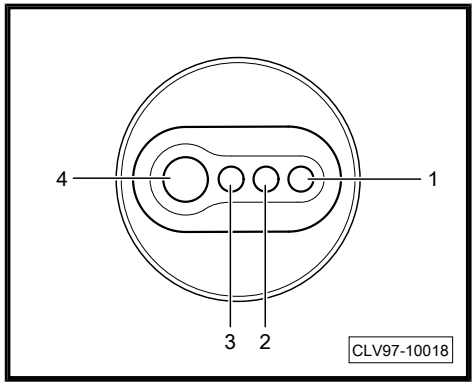

Cavity	Function	Cavity	Function
1	Voltage, sensor	3	Ground, sensor
2	Signal, sensor	4	Glow Plug

1.53 Cylinder 2 internal pressure sensor -G621-

4-pin connector -T4cc-

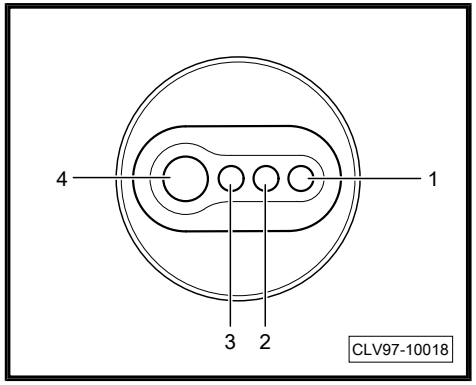

Cavity	Function	Cavity	Function
1	Voltage, sensor	3	Ground, sensor
2	Signal, sensor	4	Glow Plug

Protected by copyright. Copying for private or commercial purposes, in part or in whole, is not permitted unless authorised by Volkswagen AG. Volkswagen AG does not guarantee or accept any liability with respect to the correctness of information in this document. Copyright by Volkswagen AG.

1.54 Cylinder 3 internal pressure sensor -G622-

4-pin connector -T4cd-

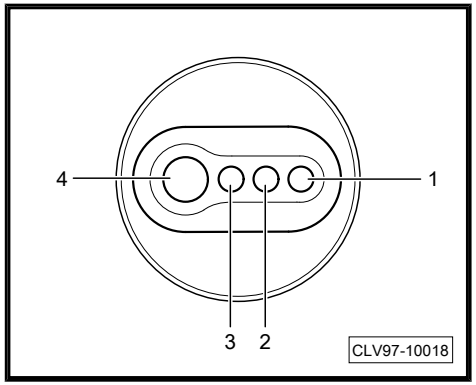

Cavity	Function	Cavity	Function
1	Voltage, sensor	3	Ground, sensor
2	Signal, sensor	4	Glow Plug

1.55 . Cylinder 4 internal pressure sensor -G623-

4-pin connector -T4ce-

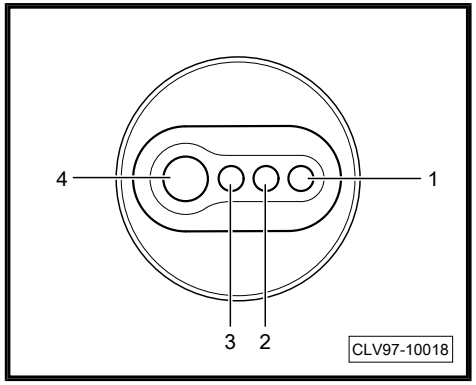

Cavity	Function	Cavity	Function
1	Voltage, sensor	3	Ground, sensor
2	Signal, sensor	4	Glow Plug

Protected by copyright. Copying for private or commercial purposes, in part or in whole, is not permitted unless authorised by Volkswagen AG. Volkswagen AG does not guarantee or accept any liability with respect to the correctness of information in this document. Copyright by Volkswagen AG.

1.56 Automatic glow time control module -J179-

TDI engine

11-pin connector -T11a-

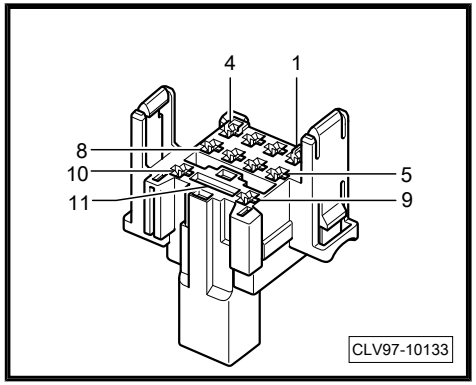

Cavity	Function	Cavity	Function
1	Glow plug 1, power	7	Ground
2	Glow plug 2, power	8	. . .
3	Glow plug 3, power	9	Signal, Diagnoses
4	Glow plug 4, power	10	Signal, Control
5	. . .	11	Voltage Supply
6	Signal (+)		

1.57 Mass airflow sensor -G70-

- ⇒ “1.57.1 TDI engine ”, page 41
- ⇒ “1.57.2 2.0L CCTA/CBFA TFSI ”, page 41

Protected by copyright. Copying for private or commercial purposes, in part or in whole, is not permitted unless authorised by Volkswagen AG. Volkswagen AG does not guarantee or accept any liability with respect to the correctness of information in this document. Copyright by Volkswagen AG.

1.57.1 TDI engine

5-pin connector -T5d-

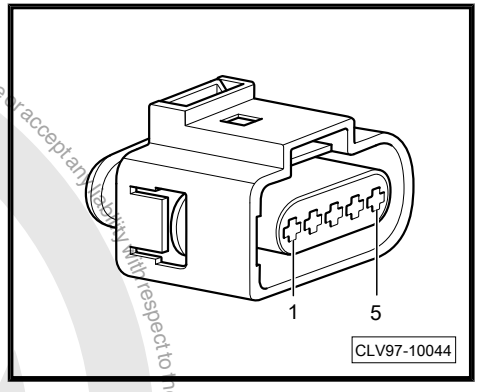

Cavity	Function	Cavity	Function
1	Signal, sensor (Air-mass)	4	Ground, Sensor
2	Signal, sensor (temperature)	5	Voltage Supply
3	. . .		

1.57.2 2.0L CCTA/CBFA TFSI

5-pin connector -T5d-

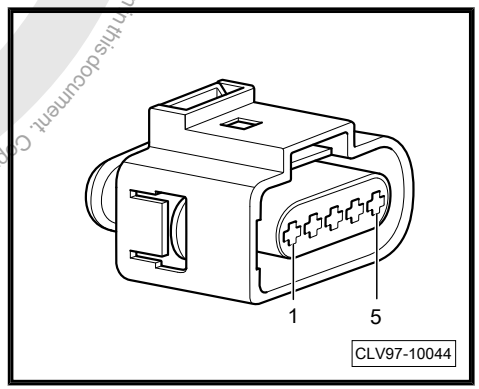

Cavity	Function	Cavity	Function
1	Signal, sensor (in)	4	....
2	Signal, sensor (out)	5	...
3	Voltage Supply		

Protected by copyright. Copying for private or commercial purposes, in part or in whole, is not permitted unless authorised by Volkswagen AG. Volkswagen AG does not guarantee or accept any liability with respect to the correctness of information in this document. Copyright by Volkswagen AG.

1.58 Fuel pressure regulator valve -N276-

Double connector -T2dv-

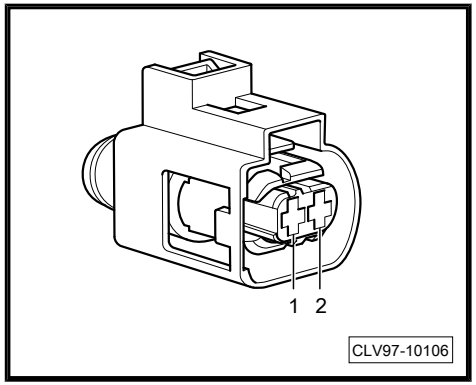

Cavity	Function
1	Ground
2	Power

1.59 Charge pressure actuator position sensor -G581-

- ⇒ “1.59.1 TDI engine”, page 42
- for 1.4L, 1.8L and 2.0L refer to ⇒ “1.63 Charge pressure actuator V465 ”, page 45

1.59.1 TDI engine

3-pin connector -T3o-

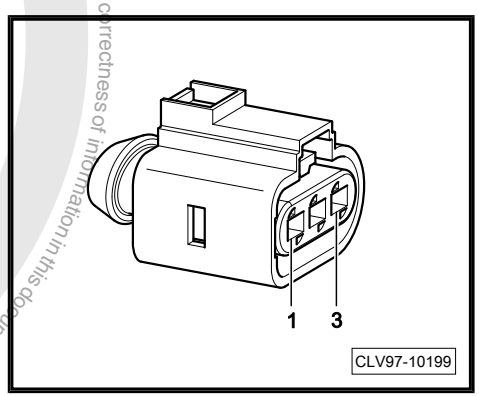

Cavity	Function
1	Ground, sensor
2	Signal, Sensor
3	5 Volt, Sensor

Protected by copyright. Copying for private or commercial purposes, in part or in whole, is not permitted unless authorised by Volkswagen AG. Volkswagen AG does not guarantee or accept any liability with respect to the correctness of information in this document. Copyright by Volkswagen AG.

1.60 Fuel metering valve -N290-

TDI engine, 1.8L/2.0L gas GEN 3

Double connector -T2ec-

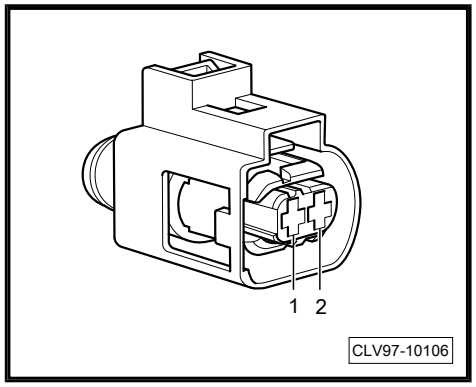

Cavity	Function
1	Ground
2	Power

1.61 Exhaust door control unit -J883-

TDI engine

5-pin connector -T5k-

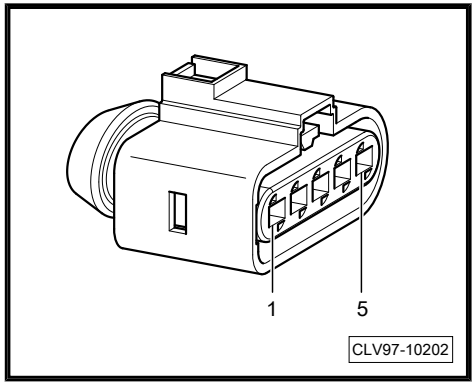

Cavity	Function	Cavity	Function
1	5 volt, power	4	Motor, ground
2	Sensor, signal	5	Motor, power
3	Ground		

Protected by copyright. Copying for private or commercial purposes, in part or in whole, is not permitted unless authorised by Volkswagen AG. Volkswagen AG does not guarantee or accept any liability with respect to the correctness of information in this document. Copyright by Volkswagen AG.

1.62 Coolant fan control module -J293-

Coolant fan -V7-

Right coolant fan -V35-

Coolant fan 2 -V177-

- ⇒ “1.62.1 4-pin”, page 44
- ⇒ “1.62.1 4-pin”, page 44

1.62.1 4-pin

4-pin connector -T4x-

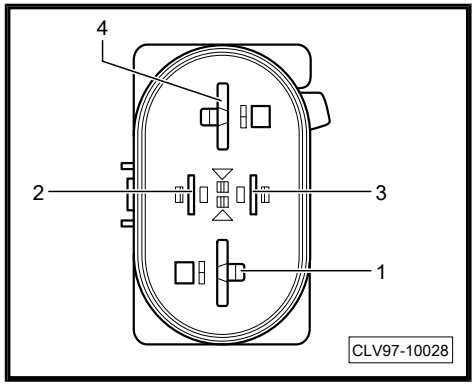

Cavity	Function	Cavity	Function
1	Power, fan	3	PWM signal, module
2	Power, module	4	Ground, module

1.62.2 2-pin

Double connector -T2ah-

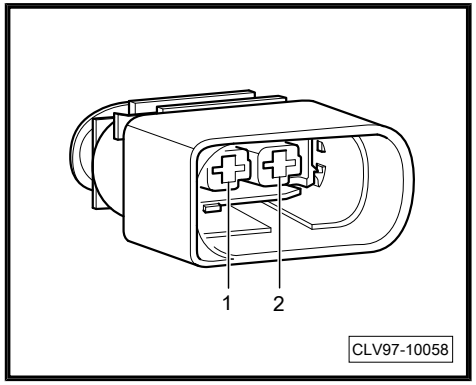

Protected by copyright. Copying for private or commercial purposes, in part or in whole is not permitted unless authorised by Volkswagen AG. Volkswagen AG does not guarantee or accept any liability with respect to the correctness of information in this document. Copyright by Volkswagen AG.

Cavity	Function
1	Power
2	Ground

1.63 Charge pressure actuator -V465-

Charge pressure actuator position sensor -G581-

6-pin connector -T6bm-

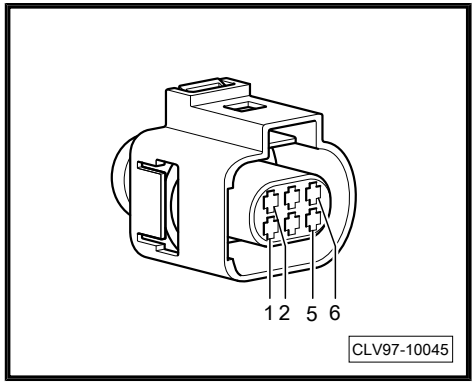

Cavity	Function	Cavity	Function
1	5V, sensor	4	. . .
2	Ground, motor	5	Signal, sensor
3	Ground, sensor	6	Power, motor

Protected by copyright. Copying for private or commercial purposes, in part or in whole, is not permitted unless authorised by Volkswagen AG. Volkswagen AG does not guarantee or accept any liability with respect to the correctness of information in this document. Copyright by Volkswagen AG.

1 Parking Aid Connector Views

1.1 Rear parking aid warning buzzer -H15-

Double connector -T2ca-

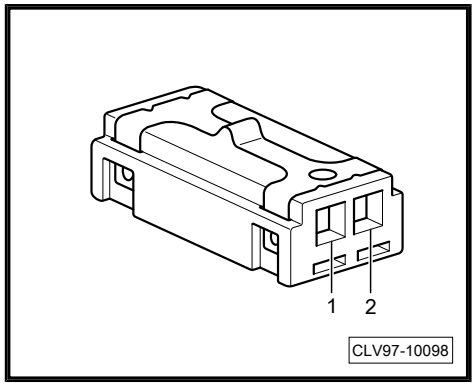

Cavity	Function
1	Signal (+), sensor
2	Signal (-), sensor

1.2 Front parking aid warning buzzer -H22-

Double connector

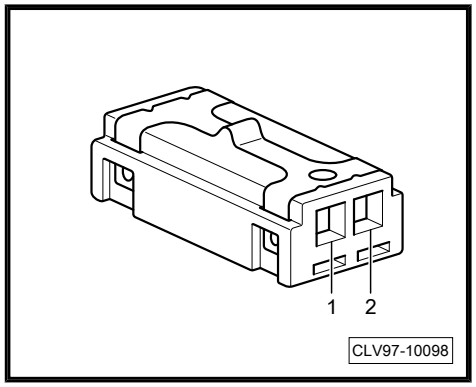

Cavity	Function
1	Signal (+), sensor
2	Signal (-), sensor

Protected by copyright. Copyright by Volkswagen AG. Copyright by Volkswagen AG. Volkswagen AG does not guarantee or accept any liability with respect to the correctness of information in this document. Copying for private or commercial purposes, in part or in whole, is not permitted unless authorised by Volkswagen AG.

1.3 Right front parking aid sensor -G252-

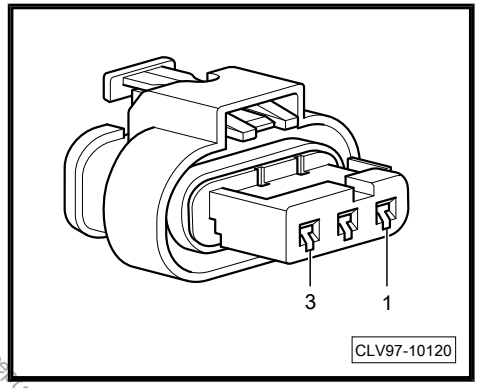

Cavity	Function
1	Signal return, sensor
2	Signal, sensor
3	Ground, Sensor

1.4 Right front center parking aid sensor -G253-

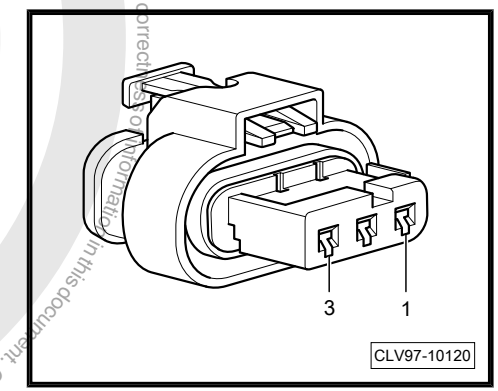

Cavity	Function
1	Signal return, sensor
2	Signal, sensor
3	Ground, Sensor

Protected by copyright. Copying for private or commercial purposes, in part or in whole, is not permitted unless authorised by Volkswagen AG. Volkswagen AG does not guarantee or accept any liability with respect to the correctness of information in this document. Copyright by Volkswagen AG.

1.5 Left front center parking aid sensor -G254-

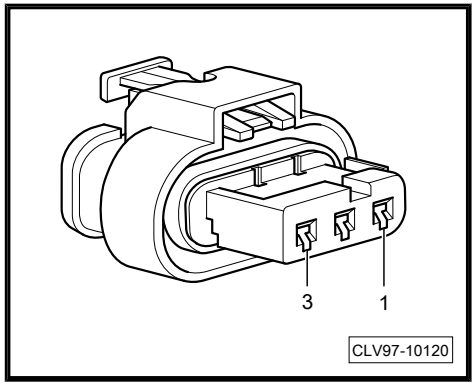

Cavity	Function
1	Signal return, sensor
2	Signal, sensor
3	Ground, Sensor

1.6 Left front parking aid sensor -G255-

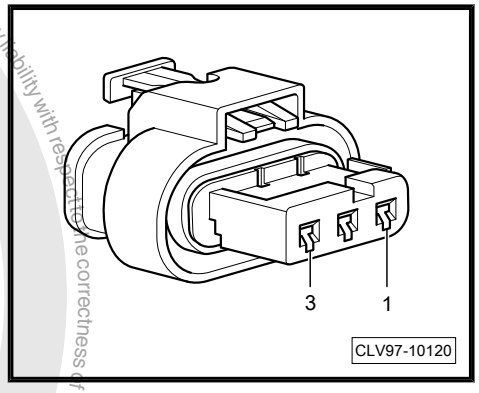

Cavity	Function
1	Signal return, sensor
2	Signal, sensor
3	Ground, Sensor

Protected by copyright. Copying for private or commercial purposes, in part or in whole, is not permitted unless authorised by Volkswagen AG. Volkswagen AG does not guarantee or accept any liability with respect to the correctness of information in this document. Copyright by Volkswagen AG.

1.7 Left rear parking aid sensor -G203-

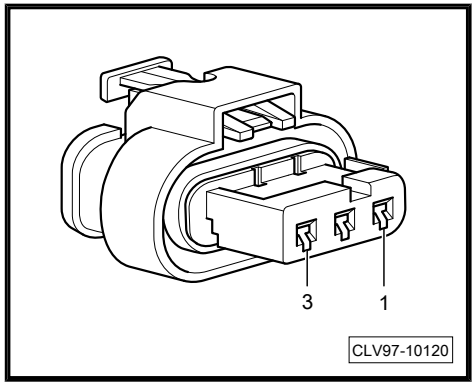

Cavity	Function
1	Signal return, sensor
2	Signal, sensor
3	Ground, Sensor

1.8 Left rear center parking aid sensor -G204-

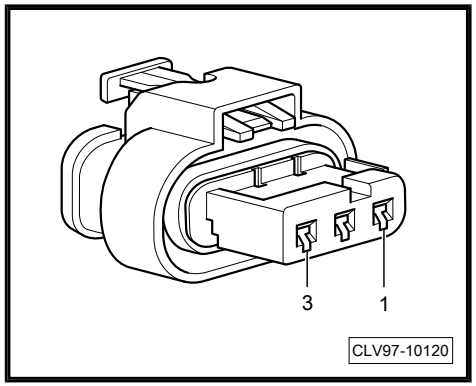

Cavity	Function
1	Signal return, sensor
2	Signal, sensor
3	Ground, Sensor

Protected by copyright. Copying for private or commercial purposes, in part or in whole, is not permitted unless authorised by Volkswagen AG. Volkswagen AG does not guarantee or accept any liability with respect to the correctness of information in this document. Copyright by Volkswagen AG.

1.9 Right rear center parking aid sensor -G205-

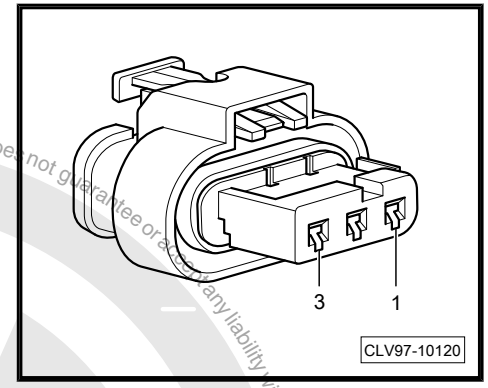

Cavity	Function
1	Signal return, sensor
2	Signal, sensor
3	Ground, Sensor

1.10 Right rear parking aid sensor -G206-

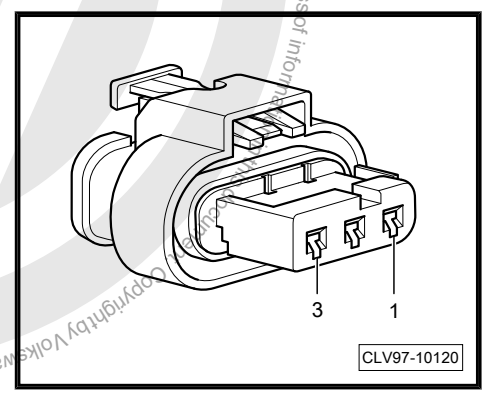

Cavity	Function
1	Signal return, sensor
2	Signal, sensor
3	Ground, Sensor

Protected by copyright. Copying for private or commercial purposes, in part or in whole, is not permitted unless authorised by Volkswagen AG. Volkswagen AG does not guarantee or accept any liability with respect to the correctness of information. Copyright by Volkswagen AG.

1.11 Parking aid button -E266-

6-pin connector -T6-

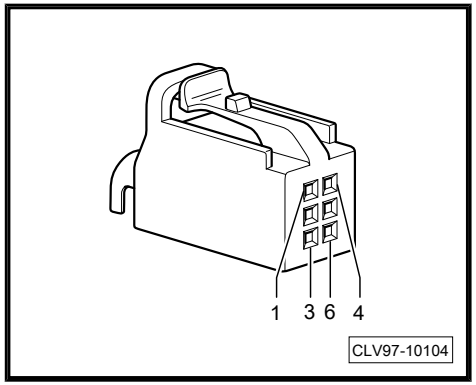

Cavity	Function	Cavity	Function
1	Ground (31), LED	4	Ground (31), sensor
2	Power LED	5	On/off LED
3	Dimmer signal (58d), Sensor	6	Dimmer ground (31), sensor

1.12 Parking aid control module -J446-

- ⇒ “1.12.1 16-pin”, page 6
- ⇒ “1.12.2 12-pin (l)”, page 7
- ⇒ “1.12.3 12-pin (m)”, page 8

1.12.1 16-pin

16-pin connector -T16c-

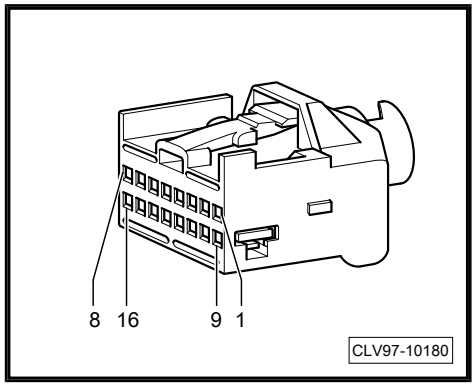

Cavity	Function	Cavity	Function
1	Ignition power (15)	9	Signal, LED

Protected by copyright. Copying for private or commercial purposes, in part or in whole, is not permitted unless authorised by Volkswagen AG. Volkswagen AG does not guarantee or accept any liability with respect to the correctness of information in this document. Copyright by Volkswagen AG.

Cavity	Function	Cavity	Function
2	Signal, sensor	10	Power, module
3	…	11	…
4	On/off	12	…
5	Not used	13	Signal, LED
6	CAN-H	14	…
7	…	15	CAN-L
8	Ground (31), Module	16	Switch input

1.12.2 12-pin (I)

12-pin connector -T12I-

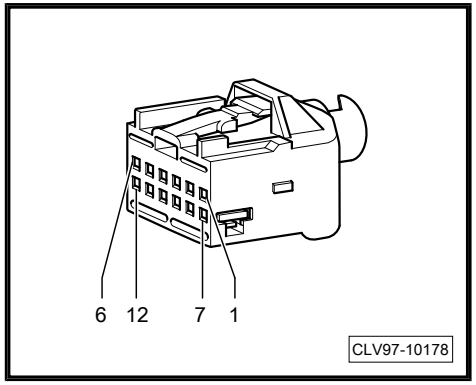

Cavity	Function	Cavity	Function
1	Ground, sensor	7	Signal, sensor
2	Signal return, sensor	8	Signal, sensor
3	Signal (-), sensor	9	Signal, sensor
4	Signal (+), sensor	10	Signal, sensor
5	Signal, sensor	11	…
6	Signal, sensor	12	…

Protected by copyright. Copying for private or commercial purposes, in part or in whole, is not permitted unless authorised by Volkswagen AG. Volkswagen AG does not guarantee or accept any liability with respect to the correctness of information in this document. Copyright by Volkswagen AG.

1.12.3 12-pin (m)

12-pin connector -T12m-

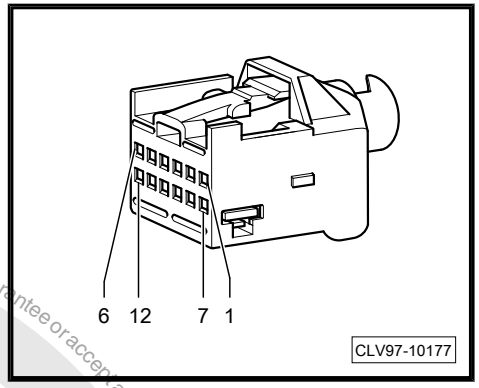

Cavity	Function	Cavity	Function
1	…	7	…
2	Signal, sensor	8	Ground, sensor
3	Signal, sensor	9	…
4	Signal, sensor	10	…
5	Signal, sensor	11	Signal return, sensor
6	…	12	…

Protected by copyright. Copying for private or commercial purposes, in part or in whole, is not permitted unless authorised by Volkswagen AG. Volkswagen AG does not guarantee or accept any liability with respect to the correctness of information in this document. Copyright by Volkswagen AG.

1 Transmission Connector Views

1.1 Tiptronic switch -F189-

Selector lever -E313-

Selector lever park position lock switch -F319-

- ⇒ “1.1.1 10-pin (s)”, page 1
- ⇒ “1.1.2 10-pin (v)”, page 2
- ⇒ “1.1.3 2-pin”, page 2

1.1.1 10-pin (s)

10-pin connector -T10s-

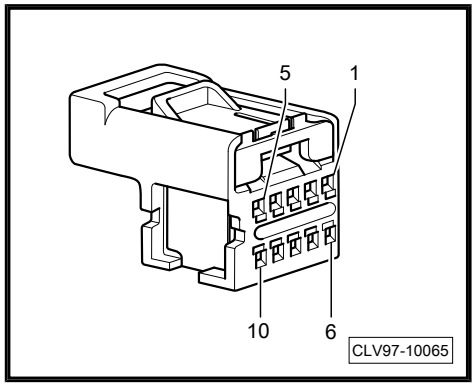

Cavity	Function	Cavity	Function
1	Ground, park switch	6	Tiptronic Info
2	Park switch, output	7	Power, shift lock solenoid
3	PWM to Transmission Controller	8	Ground, shift lock solenoid
4	. . .	9	Power, switched
5	Output to Transmission Range Switch	10	Power, battery

Protected by copyright. Copyright by Volkswagen AG. Volkswagen AG does not guarantee or accept any liability with respect to the correctness of information in this document. Copyright by Volkswagen AG. Reproduction in part or in whole, is not permitted unless authorised by Volkswagen AG.

1.1.2 10-pin (v)

10-pin connector -T10v-

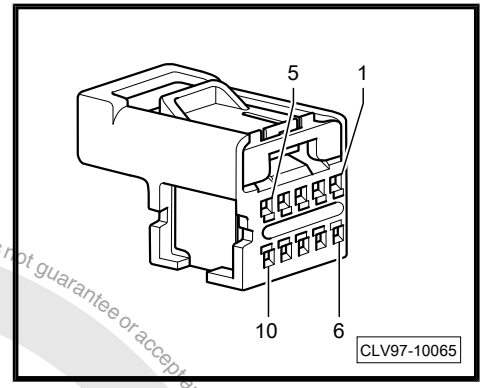

Cavity	Function	Cavity	Function
1	Ground, park switch	6	Output to Transmission Range Display
2	Park switch, output	7	Output to Transmission Range Display
3	Output to Transmission Range Display	8	Output to Transmission Range Display
4	Output to Transmission Range Display	9	...
5	Output to Transmission Range Display	10	...

1.1.3 2-pin

Double connector -T2p-

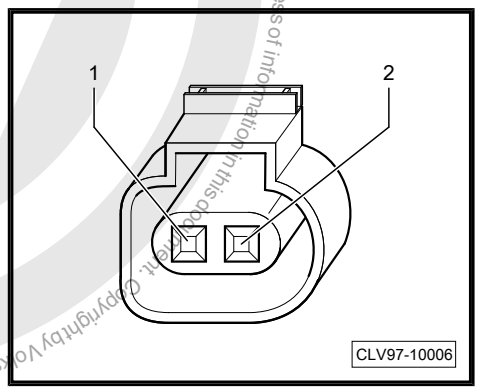

Cavity	Function
1	Shift lock solenoid signal
2	Shift lock solenoid ground

Protected by copyright. Copying for private or commercial purposes, in part or in whole, is not permitted unless authorised by Volkswagen AG. Volkswagen AG does not guarantee or accept any liability with respect to the correctness of information in this document. Copyright by Volkswagen AG.

1.2 Selector lever sensor system control module -J587-

Selector lever -E313-

Selector lever park position lock switch -F319-

- ⇒ “1.2.1 10-pin (s)”, page 3
- ⇒ “1.2.2 10-pin (v)”, page 4
- ⇒ “1.2.3 2-pin”, page 4

1.2.1 10-pin (s)

10-pin connector -T10s-

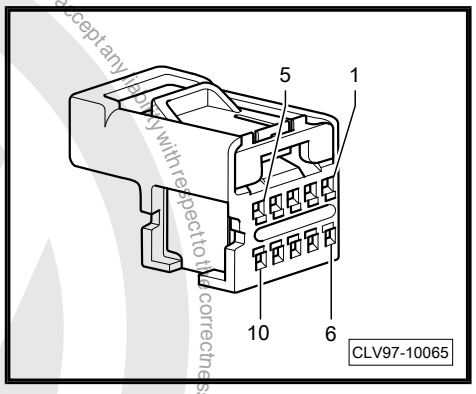

Cavity	Function	Cavity	Function
1	Ground, park switch	6	. . .
2	Park switch, output	7	CAN H
3	. . .	8	CAN L
4	. . .	9	Power, switched
5	Output to Vehicle electrical system control module	10	Power, battery

Protected by copyright. Copying for private or commercial purposes, in part or in whole, is not permitted unless authorised by Volkswagen AG. Volkswagen AG does not guarantee or accept any liability with respect to the correctness of information in this document. Copyright by Volkswagen AG.

1.2.2 10-pin (v)

10-pin connector -T10v-

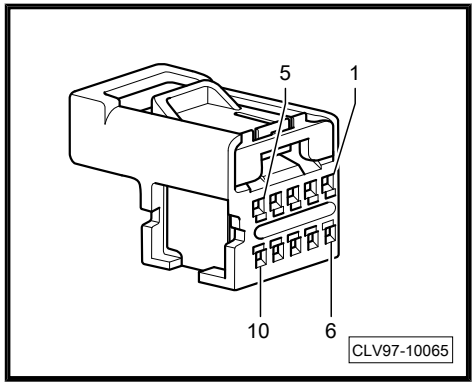

Cavity	Function	Cavity	Function
1	Ground, park switch	6	Output to Transmission Range Display
2	Park switch, output	7	Output to Transmission Range Display
3	Output to Transmission Range Display	8	Output to Transmission Range Display
4	Output to Transmission Range Display	9	...
5	Output to Transmission Range Display	10	...

1.2.3 2-pin

Double connector -T2p-

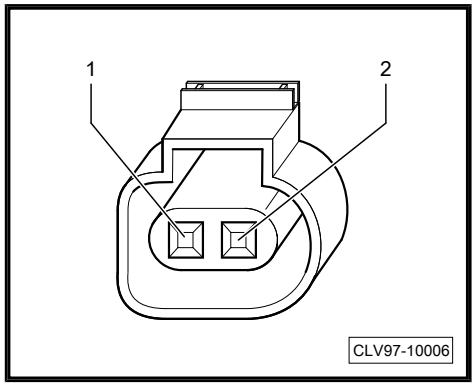

Cavity	Function
1	Shift lock solenoid signal
2	Shift lock solenoid ground

Protected by copyright. Copying for private or commercial purposes, in part or in whole, is not permitted unless authorised by Volkswagen AG. Volkswagen AG does not guarantee or accept any liability with respect to the correctness of information in this document. Copyright by Volkswagen AG.

1.3 Transmission fluid temperature sensor -G93-

Transmission input speed sensor -G182-

Transmission output speed sensor -G195-

8-pin connector -T8-

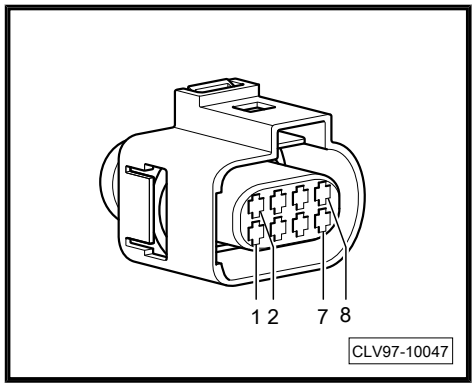

Cavity	Function	Cavity	Function
1	Signal, transmission fluid temperature sensor	5	Signal (+), output speed sensor
2	Signal (-), transmission fluid temperature sensor	6	Signal (-), output speed sensor
3	Signal (+), input speed sensor	7	. . .
4	Signal (-), input speed sensor	8	. . .

1.4 Multifunction transmission range switch -F125-

10-pin connector -T10o-

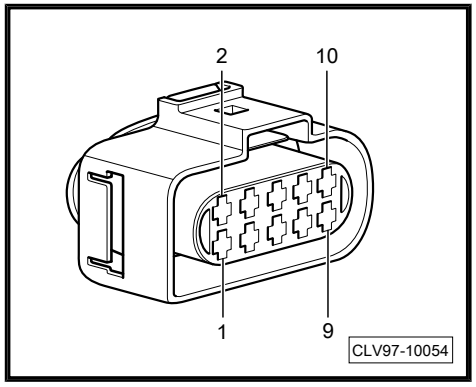

Cavity	Function	Cavity	Function
1	Signal, (A)	6	. . .
2	Signal, (ST+) Park Neutral	7	Signal, (B)
3	Ground	8	Signal, (BK)

Protected by copyright. Copyright by Volkswagen AG. Volkswagen AG does not guarantee or accept any liability with respect to the correctness of information in this document. Copying for private or commercial purposes, in part or in whole, is not permitted unless authorised by Volkswagen AG.

Cavity	Function	Cavity	Function
4	Ground, (ST-)	9	Signal, (C)
5	Signal, (PA)	10	Power, battery

1.5 Transmission -NX1-

Solenoid valve 1 -N88-

Solenoid valve 2 -N89-

Solenoid valve 3 -N90-

Solenoid valve 4 -N91-

Solenoid valve 5 -N92-

Solenoid valve 6 -N93-

Solenoid valve 9 -N282-

Solenoid valve 10 -N283-

14-pin connector -T14e-

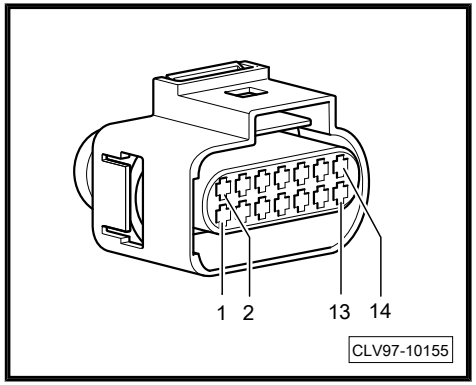

Cavity	Function	Cavity	Function
1	Signal, Solenoid valve 1 -N88-	8	Signal (-), Solenoid valve 3 -N90-
2	Signal, Solenoid valve 2 -N89-	9	Signal (+), Solenoid valve 10 -N283-
3	Signal (+), Solenoid valve 5 -N92-	10	Signal (-), Solenoid valve 10 -N283-
4	Signal (-), Solenoid valve 5 -N92-	11	Signal (+), Solenoid valve 4 -N91-
5	Signal (+), Solenoid valve 9 -N282-	12	Signal (-), Solenoid valve 4 -N91-
6	Signal (-), Solenoid valve 9 -N282-	13	Signal (+), Solenoid valve 6 -N93-
7	Signal (+), Solenoid valve 3 -N90-	14	Signal (-), Solenoid valve 6 -N93-

Protected by copyright. Copying or distribution for commercial purposes, in part or in whole, is not permitted unless authorised by Volkswagen AG. Volkswagen AG does not guarantee or accept any liability with respect to the correctness of information in this document. Copyright by Volkswagen AG.

1.6 Transmission control module -J217-

52-pin connector -T52-

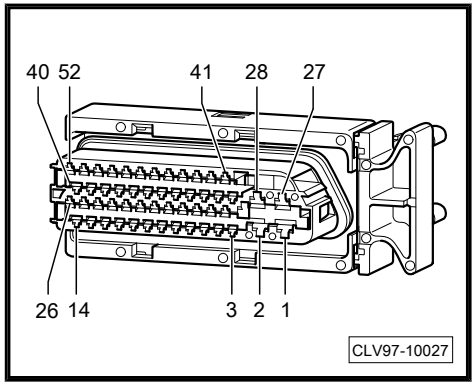

Cavity	Function	Cavity	Function
1	Ground	16	Signal (+), Solenoid valve 9 -N282-
2	Ground	17	Signal (-), Solenoid valve 6 -N93-
3	Power, battery	18	Signal (-), Solenoid valve 3 -N90-
4	Signal (+), Solenoid valve 10 -N283-	19	. . .
5	Signal (+), Solenoid valve 4 -N91-	20	. . .
6	Signal (-), Solenoid valve 5 -N92-	21	Signal, (BK)
7	. . .	22	Signal, (PA)
8	Signal (-), transmission fluid temperature sensor	23	. . .
9	K Line, diagnostic	24	. . .
10	Signal, (B)	25	. . .
11	. . .	26	. . .
12	. . .	27	Power, switched
13	. . .	28	Power, switched
14	. . .	29	Power, shift lock solenoid
15	Signal, Solenoid valve 2 -N89-		
30	Signal (+), Solenoid valve 3 -N90-	42	Signal (+), Solenoid valve 5 -N92-
31	Signal (+), Solenoid valve 6 -N93-	43	Signal (-), Solenoid valve 4 -N91-
32	Signal (-), Solenoid valve 9 -N282-	44	Signal (-), Solenoid valve 10 -N283-
33	. . .	45	Signal, transmission fluid temperature sensor
34	CAN L	46	CAN H
35	. . .	47	Signal, (A)

Protected by copyright. Copying for private or commercial purposes, in part or in whole, is not permitted unless authorised by Volkswagen AG. Volkswagen AG does not guarantee or accept any liability with respect to the correctness of information in this document. Copyright by Volkswagen AG.

Cavity	Function	Cavity	Function
36	Signal, (C)	48	Tiptronic Info
37	. . .	49	. . .
38	Signal (+), output speed sensor	50	Signal (-), output speed sensor
39	Signal (-), input speed sensor	51	Signal (+), input speed sensor
40	PWM to Tiptronic switch	52	. . .
41	Signal, Solenoid valve 1 -N88-		

1.7 DSG Transmission Mechatronic -J743-

- ⇒ “1.7.1 DSG, 02E DQ250”, page 8
- ⇒ “1.7.2 DSG, 0AM/0CG DQ200”, page 9

1.7.1 DSG, 02E DQ250

20-pin connector -T20e-

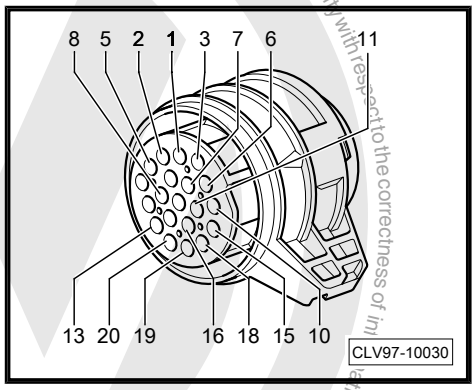

Cavity	Function	Cavity	Function
1	K Line, diagnostic	11	Power, battery
2	. . .	12	. . .
3	. . .	13	Power, switched
4	. . .	14	. . .
5	. . .	15	CAN L
6	. . .	16	Ground
7	. . .	17	Output to Vehicle electrical system control module
8	. . .	18	Power, battery
9	. . .	19	Ground

Protected by copyright. Copying for private or commercial purposes, in part or in whole, is not permitted unless authorised by Volkswagen AG. Volkswagen AG does not guarantee or accept any liability with respect to the correctness of information in this document. Copyright by Volkswagen AG.

Cavity	Function	Cavity	Function
10	CAN H	20	. . .

1.7.2 DSG, 0AM/0CG DQ200

25-pin connector -T25-

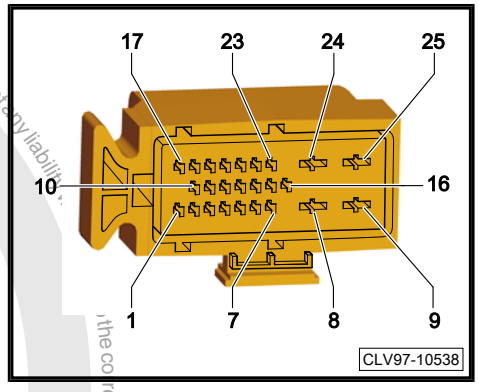

Cavity	Function	Cavity	Function
1	. . .	14	. . .
2	. . .	15	. . .
3	. . .	16	Output to Vehicle Engine control module From June 2012
4	. . .	17	. . .
5	. . .	18	. . .
6	. . .	19	. . .
7	. . .	20	. . .
8	Ground	21	. . .
9	Power, battery	22	. . .
10	Power, switched	23	. . .
11	Output to Vehicle electrical system control module From November 2010	24	Ground
12	CAN H	25	Power, battery
13	CAN L		

Protected by copyright. Copying for private or commercial purposes, in part or in whole, is not permitted unless authorised by Volkswagen AG. Volkswagen AG does not guarantee or accept any liability with respect to the correctness of information in this document. Copyright by Volkswagen AG.

1 Comfort Connector Views

1.1 Driver seat height adjustment motor -V138-

4-pin connector -T4o-

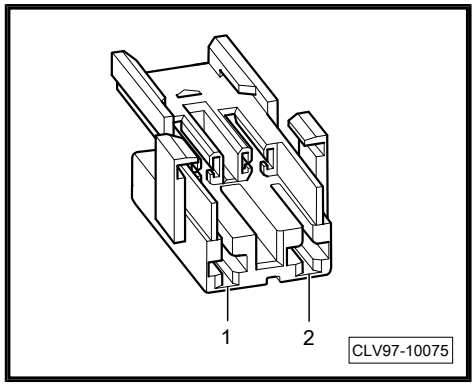

Cavity	Function	Cavity	Function
1	Down	3	. . .
2	Up	4	. . .

1.2 Driver seat forward/back adjustment motor -V28-

4-pin connector -T4s-

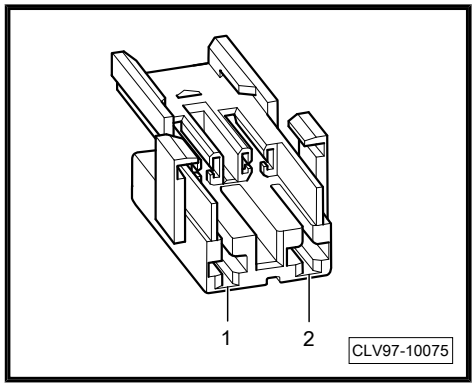

Cavity	Function	Cavity	Function
1	Forward	3	. . .
2	Back	4	. . .

Protected by copyright. Copying for private or commercial purposes, in part or in whole, is not permitted unless authorised by Volkswagen AG. Volkswagen AG does not guarantee or accept any liability with respect to the correctness of information in this document. Copyright by Volkswagen AG.

1.3 Seat angle adjustment motor -V231-

4-pin connector -T4i-

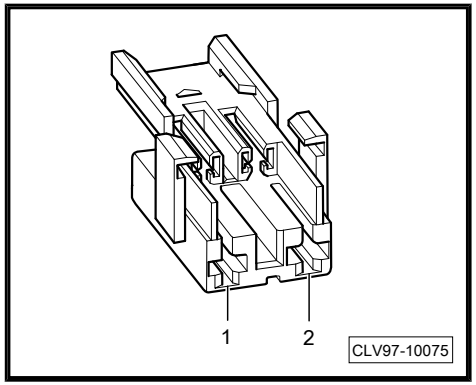

Cavity	Function	Cavity	Function
1	Up	3	. . .
2	Down	4	. . .

1.4 Driver backrest adjustment motor -V45-

4-pin connector -T4q-

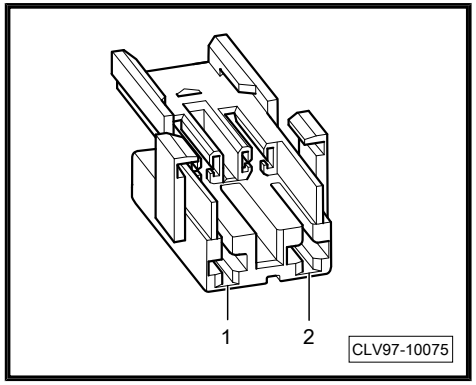

Cavity	Function	Cavity	Function
1	Back	3	. . .
2	Forward	4	. . .

Protected by copyright. Copying for private or commercial purposes, in part or in whole, is not permitted unless authorised by Volkswagen AG. Volkswagen AG does not guarantee or accept any liability with respect to the correctness of information in this document. Copyright by Volkswagen AG.

1.5 Driver seat lumbar support adjustment switch -E176-

6-pin connector -T6ah-

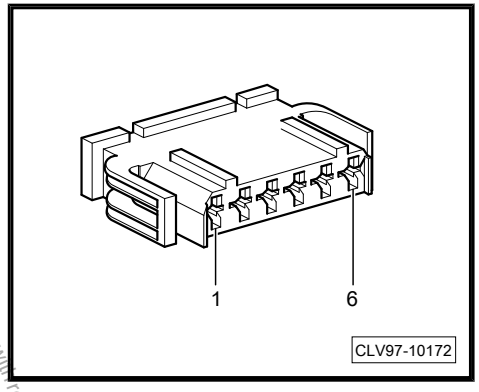

Cavity	Function	Cavity	Function
1	Lumbar support curvature adjustment motor - Forward	4	Power
2	Lumbar support curvature adjustment motor - Back	5	Lumbar support height adjustment motor - Up
3	Ground	6	Lumbar support height adjustment motor - Down

1.6 Driver seat lumbar support curvature adjustment motor -V125-

4-pin connector -T4bg-

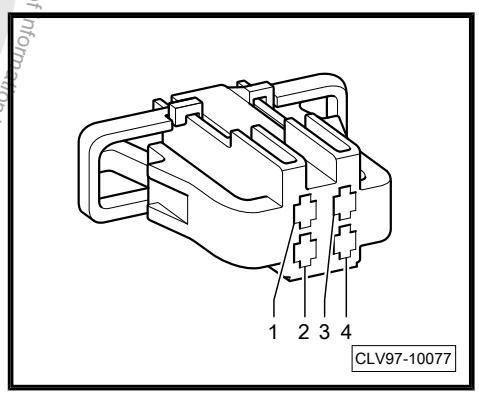

Cavity	Function	Cavity	Function
1	Forward	3	. . .
2	Back	4	. . .

Protected by copyright. Copying for private or commercial purposes, in part or in whole, is not permitted unless authorised by Volkswagen AG. Volkswagen AG does not guarantee or accept any liability with respect to the correctness of information in this document. Copyright by Volkswagen AG.

1.7 Driver seat lumbar support height adjustment motor -V129-

4-pin connector -T4bh-

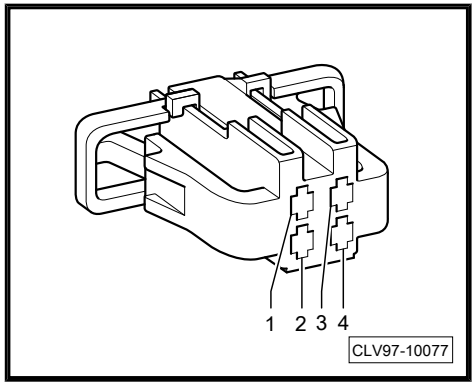

Cavity	Function	Cavity	Function
1	Down	3	. . .
2	Up	4	. . .

1.8 Seat forward/back adjustment button -E418-

Seat forward/back adjustment button -E418-

Angle adjustment button -E421-

Seat height adjustment button -E424-

Backrest adjustment button -E425-

- ⇒ “1.8.1 6-pin (g)”, page 4
- ⇒ “1.8.2 10-pin (t)”, page 5

1.8.1 6-pin (g)

6-pin connector -T6g-

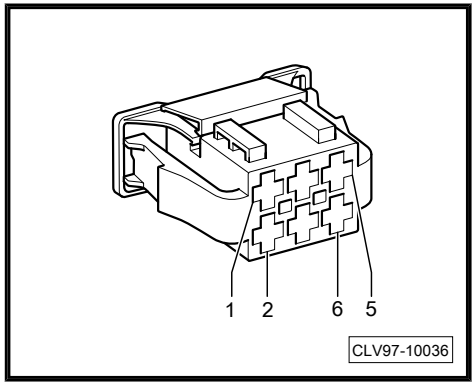

Protected by copyright. Copying for private or commercial purposes, in part or in whole, is not permitted unless authorised by Volkswagen AG. Volkswagen AG does not guarantee or accept any liability with respect to the correctness of information in this document. Copyright by Volkswagen AG.

Cavity	Function	Cavity	Function
1	Ground, Seat Tilt	4	Power, Backrest Tilt
2	Power, Seat Tilt	5	Ground, Up/Down/Forward/Back
3	Ground, Backrest Tilt	6	Power, Up/Down/Forward/Back

1.8.2 10-pin (t)

10-pin connector -T10t-

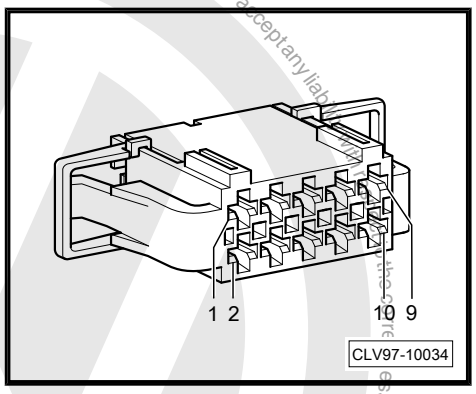

Cavity	Function	Cavity	Function
1	Seat angle - Down	6	Seat - Forward
2	Seat angle - Up	7	Seat height - Down
3	. . .	8	. .
4	Seat height - Up	9	Backrest - Forward
5	Seat - Back	10	Backrest - Back

1.9 Heated driver seat temperature sensor -G59-

Heated driver seat temperature sensor -G59-

Driver seat heating element -Z6-

Protected by copyright. Copying for private or commercial purposes, in part or in whole, is not permitted unless authorised by Volkswagen AG. Volkswagen AG does not guarantee or accept any liability with respect to the correctness of information in this document. Copyright by Volkswagen AG.

Driver seat bolster heater -Z31-

4-pin connector -T4l-

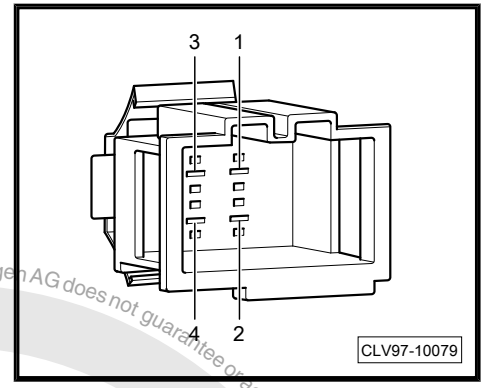

Cavity	Function	Cavity	Function
1	Power, heaters	3	Power, temperature sensor
2	Ground, temperature sensor	4	Ground, heaters

1.10 Driver backrest heating element -Z7-

Double connector -T2d-

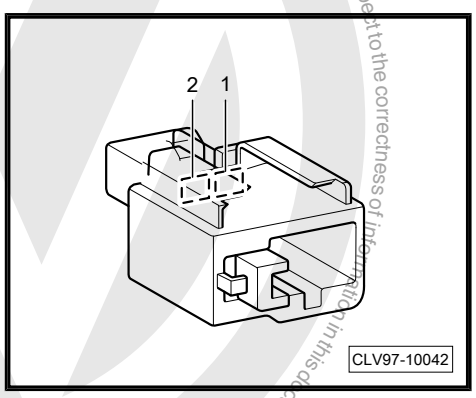

Cavity	Function
1	Power
2	Ground

1.11 Front passenger heated seat temperature sensor -G60-

Front passenger heated seat temperature sensor -G60-

Front passenger seat heating element -Z8-

Protected by copyright. Copying for private or commercial purposes, in part or in whole, is not permitted unless authorised by Volkswagen AG. Volkswagen AG does not guarantee or accept any liability with respect to the correctness of information in this document. Copyright by Volkswagen AG.

Front passenger seat bolster heater -Z33-

4-pin connector -T4m-

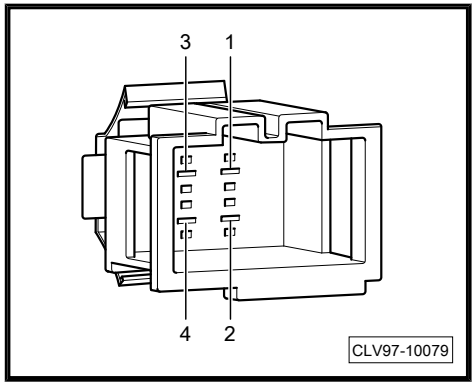

Cavity	Function	Cavity	Function
1	Power, heaters	3	Power, temperature sensor
2	Ground, temperature sensor	4	Ground, heaters

1.12 Front passenger backrest heating element -Z9-

Double connector -T2e-

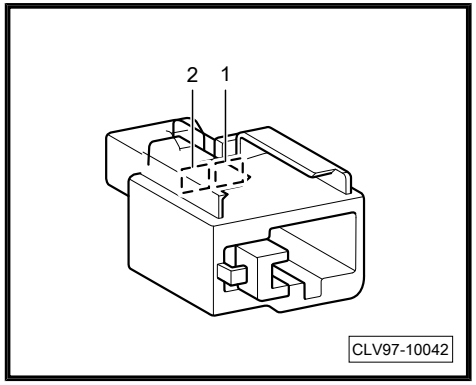

Cavity	Function
1	Power
2	Ground

Protected by copyright. Copying for private or commercial purposes, in part or in whole, is not permitted unless authorised by Volkswagen AG. Volkswagen AG does not guarantee or accept any liability with respect to the correctness of information in this document. Copyright by Volkswagen AG.

1.13 Front seat heating control module -J774-

8-pin connector -T8z-

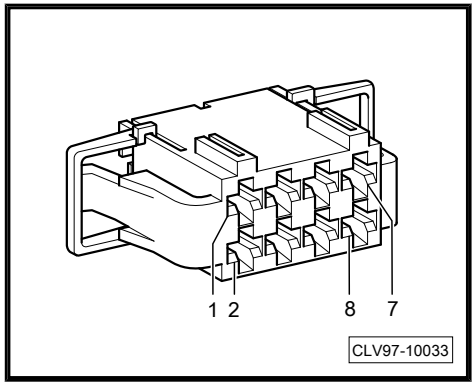

Cavity	Function	Cavity	Function
1	Power, passenger seat heaters	5	Power, driver seat heaters
2	Ground, module	6	Power, module
3	Power, module	7	Ground, module
4	Signal, passenger seat temperature sensor	8	Signal, driver seat temperature sensor

1.14 Vehicle electrical control module system -J519-

- ⇒ “1.14.1 52-pin (a), AW1”, page 9
- ⇒ “1.14.2 52-pin (b), AW1”, page 10
- ⇒ “1.14.3 52-pin (c), AW1”, page 11
- ⇒ “1.14.4 73-pin (a), AW0”, page 13
- ⇒ “1.14.5 73-pin (b), AW0”, page 14

Protected by copyright. Copying for private or commercial purposes, in part or in whole, is not permitted unless authorised by Volkswagen AG. Volkswagen AG does not guarantee or accept any liability with respect to the correctness of information in this document. Copyright by Volkswagen AG.

1.14.1 52-pin (a), AW1

Black connector

52-pin connector -T52a-

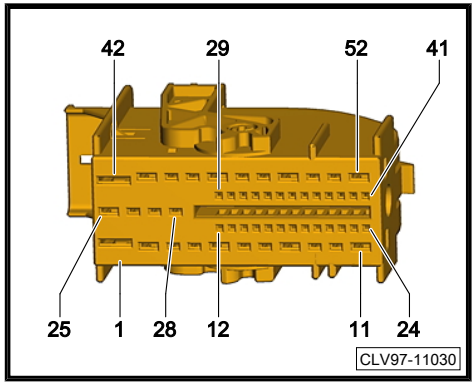

Cavity	Function	Cavity	Function
1	Fuse 26 on fuse holder B -SB26-	27	Left tail light bulb -M4- Rear left side light
2	. . .	28	Left reversing light bulb -M16-
3	. . .	29	Rear lid lock unit -F256-
4	Right washer jet heater element -Z21-	30	Rear right door contact switch -F11-
5	Left headlight main beam bulb -M30-	31	. . .
6	. . .	32	. . .
7	Left daytime running light bulb -L174-	33	. . .
8	Right daytime running light bulb -L175-	34	. . .
9	Rear right turn signal bulb -M8-	35	Heater/heat output switch -E16-
10	Front left turn signal bulb -M5-	36	Interior monitoring deactivation switch -E267- / deactivation button for vehicle inclination sender -E360-
11	Left headlight dipped beam bulb -M29-	37	Rear left door central locking motor, lock -V214-
12	. . .	38	Rear left door control unit -J388-
13	Rear lid handle release button -E234-	39	Rear right door control unit -J389-
14	Hood contact switch -F266-	40	Rear left door control unit -J388-
15	. . .	41	Rear left door contact switch -F10-
16	Reversing light switch -F4-	42	Earth connection 2, in main wiring harness -367-
17	Rear fog light switch -E18-	43	Washer pump -V5-
18	Light switch -E1- Zero position	44	Right side light bulb -M3-
19	Light switch -E1- Side lights	45	Additional brake light bulb -M25-
20	Light switch -E1- Driving light assist	46	Tank filler flap locking motor -V155-

Protected by copyright. Copying for private or commercial purposes, in part or in whole, is not permitted unless authorised by Volkswagen AG. Volkswagen AG does not guarantee or accept any liability with respect to the correctness of information in this document. Copyright by Volkswagen AG

Cavity	Function	Cavity	Function
21	Fog light switch -E7-	47	. . .
22	Light switch -E1- Headlight dipped beam	48	Rear left central locking lock unit -F222-
23	367 - Ground connection 2, in main wiring harness	49	Rear right door central locking motor, lock -V215-
24	Positive connection 24 (30a) in main wiring harness -B684- Terminal 30ref	50	. . .
25	Left fog light bulb -L22-	51	Button illumination bulb -L76- Connection 1 (58d), in main wiring harness -B340-
26	Right brake and tail light bulb -M22-	52	. . .

1.14.2 52-pin (b), AW1

White connector

52-pin connector -T52b-

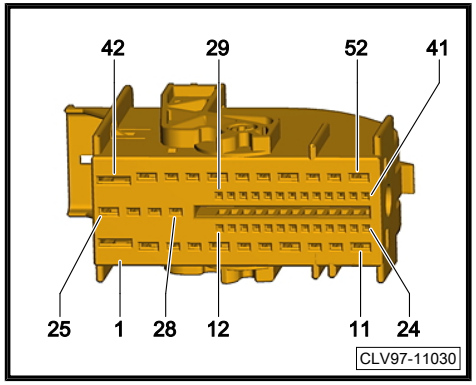

Cavity	Function	Cavity	Function
1	Fuse 36 on fuse holder C -SC36- Central locking	27	Rear right door central locking SAFE function locking motor -V164-
2	Tank filler flap locking motor -V155-	28	X-contact relief relay -J59-
3	. . .	29	Terminal 50 voltage supply relay -J682-
4	. . .	30	Switch and instrument illumination regulator -E20-
5	Tank filler flap locking motor -V155- / fuel tank cap detection switch -F334-	31	. . .
6	. . .	32	. . .
7	Rear left door central locking motor, lock -V214-	33	Rain and light sensor -G397- LIN bus
8	Rear right central locking lock unit -F223-	34	. . .
9	. . .	35	. . .
10	. . .	36	Alarm horn -H12- Interior monitoring sensor -G273-
11	Rear lid release motor -V139-	37	Interior monitoring deactivation switch -E267- / deactivation button for vehicle inclination sender -E360-

Protected by copyright. Copying for private or commercial purposes, in part or in whole, is not permitted unless authorised by Volkswagen AG. Volkswagen AG does not guarantee or accept any liability with respect to the correctness of information in this document. Copyright by Volkswagen AG.

Cavity	Function	Cavity	Function
12	Terminal 15 voltage supply relay 2 -J681-	38	Fuel supply relay -J643-
13	. . .	39	. . .
14	Heater/heat output switch -E16- Heated rear window warning lamp -K10-	40	Headlight washer system relay -J39-
15	Switch and instrument illumination regulator -E20-	41	Dual tone horn relay -J4-
16	Sliding sunroof adjustment control unit -J245	42	Fuse 48 on fuse holder C -SC48-
17	Sliding sunroof adjustment control unit -J245- Convenience closing	43	Positive connection, in roof wiring harness -B250-
18	Wiper motor relay 1 -J368-	44	. . .
19	. . .	45	. . .
20	Windshield wiper motor -V-	46	. . .
21	Heated front seats control unit -J774-	47	. . .
22	Heated rear window relay -J9-	48	. . .
23	Wiper motor relay 2 -J369-	49	. . .
24	Hazard warning lights button -E229-	50	. . .
25	. . .	51	B340 - Connection 1 (58d), in main wiring harness/ A19 - Connection (58d), in dash panel wiring harness
26	Rear left door central locking SAFE function locking motor -V163-	52	367 - ground connection 2, in main wiring harness

Protected by copyright. Copying for private or commercial purposes, in part or in whole is not permitted unless authorised by Volkswagen AG. Volkswagen AG does not guarantee or accept any liability with respect to the correctness of information in this document. Copyright by Volkswagen AG.

1.14.3 52-pin (c), AW1

Brown connector

52-pin connector -T52c-

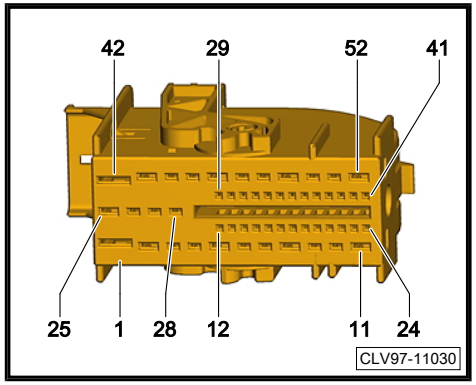

Cavity	Function	Cavity	Function
1	Positive connection (30), in dash panel wiring harness -A32-	27	Positive connection (58), in number plate lights wiring harness -W41-
2	Alarm system horn -H18-	28	Connection (RL), in dash panel wiring harness -A87-

Cavity	Function	Cavity	Function
3	Connection (58R), in dash panel wiring harness -A85-	29	. . .
4	Left brake light bulb -M9- , Left tail light -MX3-	30	Mechatronic unit for dual clutch gearbox -J743- P-N / Earth connection 3, in main wiring harness -368- Start/stop
5	367 - ground connection 2, in main wiring harness	31	Steering column electronics control unit -J527-
6	. . .	32	Connection (61), in interior light wiring harness -B177- / heater control unit -J162-
7	Hazard warning lights button -E229-	33	. . .
8	. . .	34	. . .
9	. . .	35	Switch and instrument illumination regulator -E20-
10	B154 - Connection 1 (DCt), in interior wiring harness	36	. . .
11	. . .	37	. . .
12	. . .	38	. . .
13	Steering column electronics control unit -J527- Ignition/starter switch -D- Terminal S, Electronic steering column lock control unit -J764-	39	. . .
14	Positive connection (50), in main wiring harness -B276- Steering column electronics control unit -J527-	40	Central locking and anti-theft alarm system aerial -R47- Aerial screening
15	Data bus diagnostic interface -J533- Connection 2 (convenience CAN bus, high), in main wiring harness -B407-	41	Central locking and anti-theft alarm system aerial -R47-
16	Data bus diagnostic interface -J533- Connection 2 (convenience CAN bus, low), in main wiring harness -B407-	42	Fuse 29 on fuse holder B -SB29-
17	Brake light switch -F-	43	. . .
18	. . .	44	. . .
19	. . .	45	. . .
20	. . .	46	Right headlight main beam bulb -M32
21	. . .	47	Rear left fog light bulb -L46-
22	. . .	48	. . .
23	. . .	49	. . .
24	Entry and start authorisation control unit -J518-	50	Front right turn signal bulb -M7-
25	Connection (fog light), in main wiring harness -B554-	51	Rear left turn signal bulb -M6-
26	Left side light bulb -M1-	52	Right headlight dipped beam bulb -M31-

Protected by copyright. Copyright by Volkswagen AG. Volkswagen AG does not guarantee or accept any liability with respect to the correctness of information in this document. Copyright by Volkswagen AG, unless authorised by Volkswagen AG, is not permitted, in part or in whole, for commercial purposes.

1.14.4 73-pin (a), AW0

Black connector

73-pin connector -T73a-

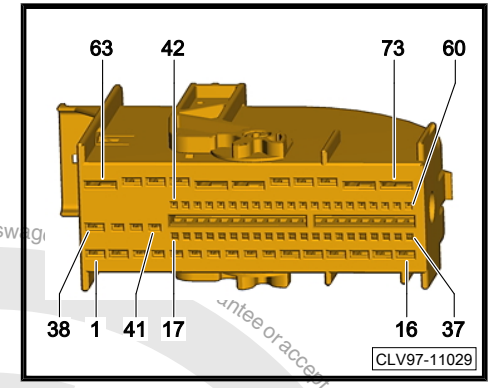

Cavity	Function	Cavity	Function
1	. . .	38	Z1 - Connection 1, in mirror adjustment/heating wiring harness
2	Left dipped beam output signal	39	Terminal 31
3	. . .	40	Rear right side light bulb output signal
4	Interior lighting out put signal, door contact switch	41	Rear left side light bulb output signal
5	. . .	42	Supply input signal (86s) for ignition/starter switch
6	Rear fog lamp output signal	43	Brake pedal position sender input signal
7	Fog light switch input signal	44	Supply input signal (15) for ignition/starter switch
8	. . .	45	Side light switch input signal
9	. . .	46	. . .
10	Rear lid release motor output signal	47	. . .
11	Central locking motor "lock" output signal for all doors	48	. . .
12	Central locking motor output signal for driver's door	49	Headlight washer system relay output signal
13	Central locking motor "Safe" output signal for all doors	50	. . .
14	Terminal 31	51	. . .
15	Central locking motor output signal for front passenger door and rear doors	52	Fuel supply relay output signal
16	Terminal 30	53	Alarm horn relay -J641-
17	Rear left central locking lock unit -F222-	54	Supply input signal (75a) for ignition/starter switch
18	Rear right central locking lock unit -F223-	55	Starter inhibitor relay output signal (only models with automatic gearbox)
19	Driver door contact switch -F2-	56	Hazard warning lights button -E229-
20	Front passenger door contact switch -F3-	57	Interior monitoring "off" warning lamp output signal
21	Front passenger side central locking lock unit -F221-	58	Central locking SAFELOCK function warning lamp -K133-

Copyright by Volkswagen AG. Volkswagen AG does not guarantee or accept any liability with respect to the correctness of information in this document. Copying for private or commercial purposes, in part or in whole, is not permitted unless authorised by Volkswagen AG. Volkswagen AG

Cavity	Function	Cavity	Function
22	Driver door central locking motor -V56-	59	Interior locking warning lamp output signal
23	Rear lid handle release button input signal	60	Heated rear window warning lamp output signal
24	Central locking input signal, driver door	61	. . .
25	Interior locking button input signal	62	Main beam output signal
26	Door contact switch input signal for rear right door	63	. . .
27	Hood contact switch -F266-	64	Supply input signal (30), heated exterior mirrors
28	Hazard warning lights button -E229- Front passenger side central locking lock unit -F221- 1)	65	Supply input signal (30), interior lights
29	Horn plate input signal	66	Supply input signal (30), interior lights
30	Rear lid lock position 2 input signal	67	. . .
31	Rear lid lock position 1 input signal	68	Supply input signal (30), window wiper
32	Right turn signal switch input signal	69	Window wiper position 1 output signal
33	Left turn signal switch input signal	70	Terminal 31
34	Rear left door contact switch -F10-	71	Window wiper position 2 output signal
35	. . .	72	Horn output signal
36	Heated front seats control unit -J774-	73	Horn supply input signal (30)
37	. . .		

1.14.5 73-pin (b), AW0

White connector

73-pin connector -T73b-

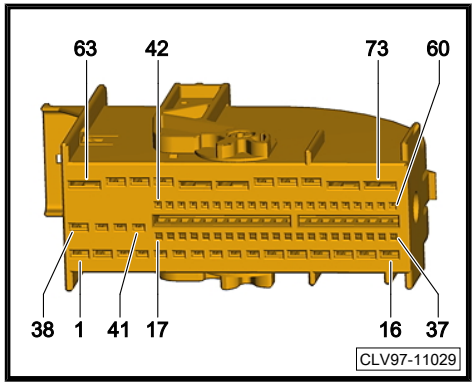

Cavity	Function	Cavity	Function
1	. . .	38	Terminal 31

Protected by copyright. Copying for private or commercial purposes, in part or in whole, is not permitted unless authorised by Volkswagen AG. Volkswagen AG does not guarantee or accept any liability with respect to the correctness of information in this document. Copyright by Volkswagen AG.

Cavity	Function	Cavity	Function
2	Right dip beam output signal	39	Supply input signal (30) for electronics
3	. . .	40	. . .
4	. . .	41	. . .
5	. . .	42	Brake contact switch input signal
6	. . .	43	. . .
7	. . .	44	Cruise control system "Set" input signal
8	. . .	45	Cruise control system "On/Off" input signal
9	Front left connection (fog light), in main wiring harness	46	Cruise control system "Reset" input signal
10	Front right connection (fog light), in main wiring harness	47	Cruise control system "Cancel" input signal
11	Terminal 30 (fog light)	48	Reversing light switch input signal
12	Reversing light output signal (only models with automatic gearbox)	49	Signal (L) alternator
13	Terminal 30 (turn signal, brake lamp)	50	Starter relay input signal
14	Connection (left turn signal), in headlight wiring harness	51	Supply input signal (75a) for ignition/starter switch
15	Connection 2 (right turn signal), in headlight wiring harness	52	Window washer pump supply input signal
16	Brake lights output signal	53	Window wiper position 2 input signal
17	LIN bus, door control unit and switches in steering wheel	54	. . .
18	Connection 1 (powertrain CAN bus, low), in main wiring harness	55	Starter inhibitor signal (only models with automatic gearbox)
19	Connection 1 (powertrain CAN bus, high), in main wiring harness	56	. . .
20	Connection 1 (convenience CAN bus, high), in main wiring harness	57	. . .
21	Connection 1 (convenience CAN bus, low), in main wiring harness	58	Exterior mirror heater button -E231-
22	Diagnostic connection -U31	59	Terminal 30
23	Diagnostic connection -U31	60	Terminal 31
24	LIN bus, sliding sunroof adjustment control unit, rain and light detector sensor, interior monitoring sensor	61	Washer pump motor and rear window wiper motor output signal
25	. . .	62	Windscreen wiper intermittent operation input signal
26	. . .	63	Heated rear window output signal
27	Window wiper position 1 input signal	64	. . .
28	Front passenger side central locking lock unit -F221-	65	. . .
29	. . .	66	. . .
30	Interior monitoring deactivation switch input signal	67	Heated rear window supply input signal (30)
31	Heated rear window button input signal	68	Supply input signal (30), right headlight
32	Windscreen wiper motor -V-	69	. . .
33	. . .	70	. . .

Protected by copyright. Copyright by Volkswagen AG. Volkswagen AG does not guarantee or assume any liability with respect to the correctness of information in this document. Copying for private or commercial purposes, in part or in whole, is not permitted unless authorised by Volkswagen AG.

Cavity	Function	Cavity	Function
34	Connection (58d), in dash panel wiring harness	71	. . .
35	. . .	72	. . .
36	LIN bus, alarm horn	73	. . .
37	Signal (K), diagnosis		

Protected by copyright. Copying for private or commercial purposes, in part or in whole, is not permitted unless authorised by Volkswagen AG. Volkswagen AG does not guarantee or accept any liability with respect to the correctness of information in this document. Copyright by Volkswagen AG.

1 Sunroof Connector Views

1.1 Power sunroof control module -J245-

Sunroof motor -V1-

10-pin connector -T10e-

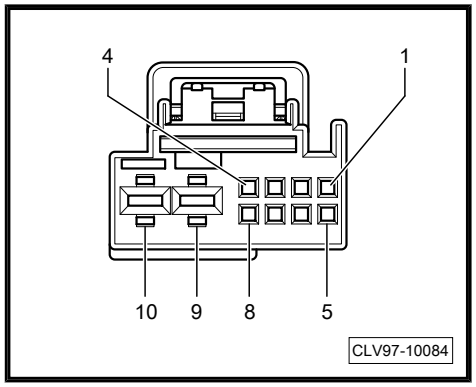

Cavity	Function	Cavity	Function
1	LIN	6	. . .
2	5 Volt, output	7	Signal Out, Tilt Button
3	Signal Out, Adjustment Regulator	8	. . .
4	Ground, Module	9	Ground, battery
5	. . .	10	Power, battery

1.2 Sunroof adjustment regulator -E139-

Sunroof tilt button 1 -E582-

4-pin connector -T4ad-

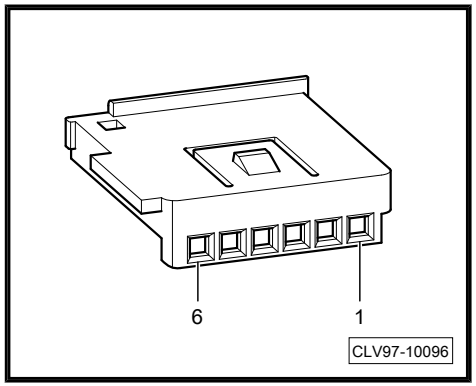

Protected by copyright. Copyright for private or commercial purposes, in part or in whole, is not permitted unless authorised by Volkswagen AG. Volkswagen AG does not guarantee or accept any liability with respect to the correctness of information in this document. Copyright by Volkswagen AG.

Cavity	Function	Cavity	Function
1	5 Volt	4	Signal Input, Tilt Button
2	Ground	5	. . .
3	Signal Input, Adjustment Regulator	6	. . .

Protected by copyright. Copying for private or commercial purposes, in part or in whole, is not permitted unless authorised by Volkswagen AG. Volkswagen AG does not guarantee or accept any liability with respect to the correctness of information in this document. Copyright by Volkswagen AG.

1 Steering Connector Views

1.1 Power steering control module -J500-

Steering angle sensor -G85-

Steering torque sensor -G269-

Electromechanical power steering motor -V187-

- ⇒ “1.1.1 2-pin ”, page 1
- ⇒ “1.1.2 3-pin ”, page 2
- ⇒ “1.1.3 5-pin (ag)”, page 2
- ⇒ “1.1.4 5-pin (al)”, page 3

1.1.1 2-pin

Double connector -T2a-

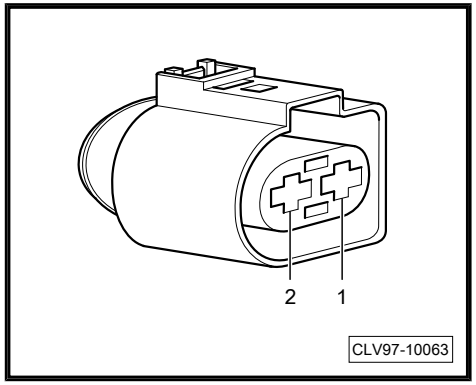

Cavity	Function
1	Ground, motor
2	Power, motor

Volkswagen AG does not guarantee or accept any liability with respect to the correctness of information in this document. Copyright by Volkswagen AG. Reproduced by copying for private or commercial purposes, in part or in whole, is not permitted unless authorised by Volkswagen AG.

1.1.2 3-pin

3-pin connector -T3-

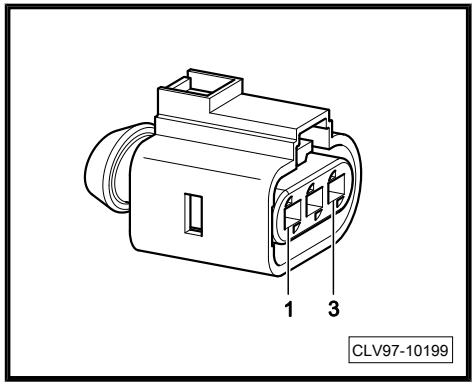

Cavity	Function
1	CAN Low
2	CAN High
3	Power (15)

1.1.3 5-pin (ag)

5-pin connector -T5g-

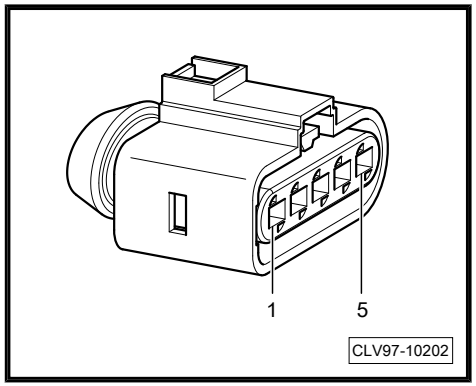

Cavity	Function	Cavity	Function
1	Part of assembly, internal circuit	4	Part of assembly, internal circuit
2	Part of assembly, internal circuit	5	Part of assembly, internal circuit
3	Part of assembly, internal circuit		

Protected by copyright. Copyright by Volkswagen AG. Copying for private or commercial purposes, in part or in whole, is not permitted unless authorised by Volkswagen AG. Volkswagen AG does not guarantee or accept any liability with respect to the correctness of information in this document.

1.1.4 5-pin (al)

5-pin connector -T5al-

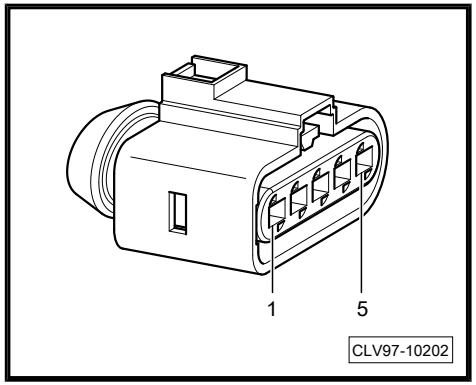

Cavity	Function	Cavity	Function
1	Part of assembly, internal circuit	4	Part of assembly, internal circuit
2	Part of assembly, internal circuit	5	Part of assembly, internal circuit
3	Part of assembly, internal circuit		

1.2 Steering column electronics control module -J527-

- ⇒ “1.2.1 4-pin”, page 3
- ⇒ “1.2.2 12-pin ”, page 4
- ⇒ “1.2.3 16-pin ”, page 4

1.2.1 4-pin

4-pin connector -T4k-

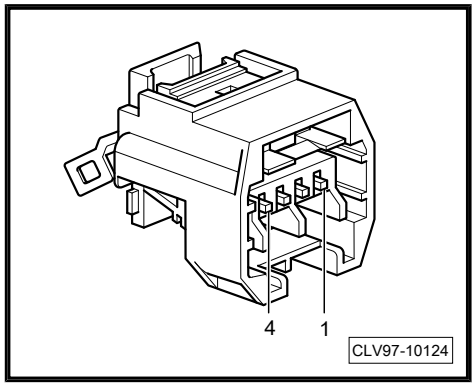

Cavity	Function	Cavity	Function
1	Airbag (+)	3	. . .

Protected by copyright. Copying for private or commercial purposes, in part or whole, is not permitted unless authorised by Volkswagen AG. Volkswagen AG does not guarantee or assume any liability with respect to the correctness of information in this document. Copyright by Volkswagen AG.

Cavity	Function	Cavity	Function
2	Airbag (-)	4	. . .

1.2.2 12-pin

12-pin connector -T12k-

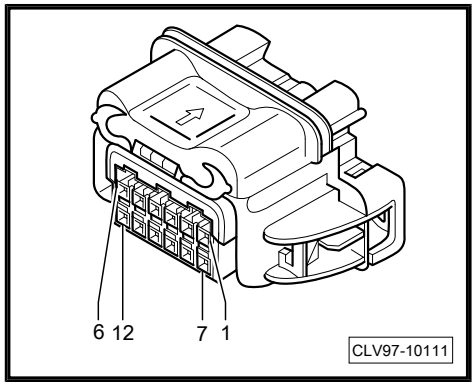

Cavity	Function	Cavity	Function
1	. . .	7	Ground, horn
2	. . .	8	Signal, horn
3	Airbag (+)	9	LIN, network
4	Airbag (-)	10	Power (15)
5	. . .	11	. . .
6	. . .	12	. . .

1.2.3 16-pin

16-pin connector -T16l-

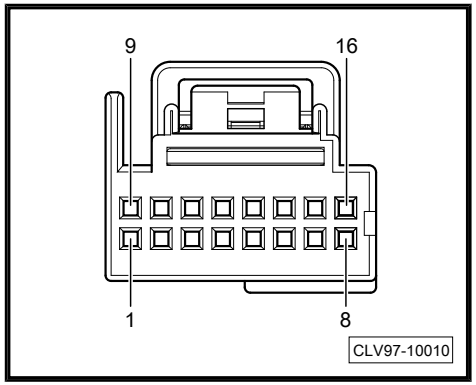

Protected by copyright. Copying for private or commercial purposes, in part or in whole, is not permitted unless authorised by Volkswagen AG. Volkswagen AG does not guarantee or accept any liability with respect to the correctness of information in this document. Copyright by Volkswagen AG.

Cavity	Function	Cavity	Function
1	Power, module	9	. . .
2	Ground, module	10	. . .
3	Comfort CAN Low	11	Tiptronic switch (if equipped)
4	Comfort CAN High	12	Powertrain CAN Low
5	ECM, input	13	Powertrain CAN High
6	Power, 50 Starter, (if equipped)	14	Power 15 (if equipped)
7	Remote start, (if equipped)	15	. . .
8	. . .	16	. . .

1.3 Electronic steering column lock control module -J764-

16-pin connector -T16v-

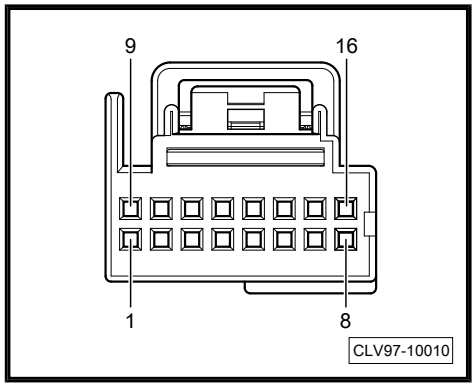

Cavity	Function	Cavity	Function
1	. . .	9	. . .
2	Power, module	10	Ground
3	Power (50)	11	. . .
4	Start system button, input	12	Power (50)
5	. . .	13	Start system button, input
6	Power (15)	14	Tiptronic switch
7	Input, module	15	CAN Low
8	Power (15)	16	CAN High

Protected by copyright. Copying for private or commercial purposes, in part or in whole, is not permitted unless authorised by Volkswagen AG. Volkswagen AG does not guarantee or accept any liability with respect to the correctness of information in this document. Copyright by Volkswagen AG.

Cautions & Warnings

Please read these WARNINGS and CAUTIONS before proceeding with maintenance and repair work. You must answer that you have read and you understand these WARNINGS and CAUTIONS before you will be allowed to view this information.

- If you lack the skills, tools and equipment, or a suitable workshop for any procedure described in this manual, we suggest you leave such repairs to an authorized Volkswagen retailer or other qualified shop. We especially urge you to consult an authorized Volkswagen retailer before beginning repairs on any vehicle that may still be covered wholly or in part by any of the extensive warranties issued by Volkswagen.

- Disconnect the battery negative terminal (ground strap) whenever you work on the fuel system or the electrical system. Do not smoke or work near heaters or other fire hazards. Keep an approved fire extinguisher handy.

- Volkswagen is constantly improving its vehicles and sometimes these changes, both in parts and specifications, are made applicable to earlier models. Therefore, part numbers listed in this manual are for reference only. Always check with your authorized Volkswagen retailer parts department for the latest information.

- Any time the battery has been disconnected on an automatic transmission vehicle, it will be necessary to reestablish Transmission Control Module (TCM) basic settings using the VAG 1551 Scan Tool (ST).

- Never work under a lifted vehicle unless it is solidly supported on stands designed for the purpose. Do not support a vehicle on cinder blocks, hollow tiles or other props that may crumble under continuous load. Never work under a vehicle that is supported solely by a jack. Never work under the vehicle while the engine is running.

- For vehicles equipped with an anti-theft radio, be sure of the correct radio activation code before disconnecting the battery or removing the radio. If the wrong code is entered when the power is restored, the radio may lock up and become inoperable, even if the correct code is used in a later attempt.

- If you are going to work under a vehicle on the ground, make sure that the ground is level. Block the wheels to keep the vehicle from rolling. Disconnect the battery negative terminal (ground strap) to prevent others from starting the vehicle while you are under it.

- Do not attempt to work on your vehicle if you do not feel well. You increase the danger of injury to yourself and others if you are tired, upset or have taken medicine or any other substances that may impair you or keep you from being fully alert.

- Never run the engine unless the work area is well ventilated. Carbon monoxide (CO) kills.

- Always observe good workshop practices. Wear goggles when you operate machine tools or work with acid. Wear goggles, gloves and other protective clothing whenever the job requires working with harmful substances.

- Tie long hair behind your head. Do not wear a necktie, a scarf, loose clothing, or a necklace when you work near machine tools or running engines. If your hair, clothing, or jewelry were to get caught in the machinery, severe injury could result.

- Do not re-use any fasteners that are worn or deformed in normal use. Some fasteners are designed to be used only once and are unreliable and may fail if used a second time. This includes, but is not limited to, nuts, bolts, washers, circlips and cotter pins. Always follow the recommendations in this manual - replace these fasteners with new parts where indicated, and any other time it is deemed necessary by inspection.

next

© 2002 Volkswagen of America, Inc.
All rights reserved. Information contained in this document is based on the latest information available at the time of printing and is subject to the copyright and other intellectual property rights of Volkswagen of America, Inc., its affiliated companies and its licensors. All rights are reserved to make changes at any time without notice. No part of this document may be reproduced, stored in a retrieval system, or transmitted in any form or by any means, electronic, mechanical, photocopying, recording, or otherwise, nor may these materials be modified or reposted to other sites, without the prior expressed written permission of the publisher.
Version 1.0

Cautions & Warnings

- Illuminate the work area adequately but safely. Use a portable safety light for working inside or under the vehicle. Make sure the bulb is enclosed by a wire cage. The hot filament of an accidentally broken bulb can ignite spilled fuel or oil.

- Friction materials such as brake pads and clutch discs may contain asbestos fibers. Do not create dust by grinding, sanding, or by cleaning with compressed air. Avoid breathing asbestos fibers and asbestos dust. Breathing asbestos can cause serious diseases such as asbestosis or cancer, and may result in death.

- Finger rings should be removed so that they cannot cause electrical shorts, get caught in running machinery, or be crushed by heavy parts.

- Before starting a job, make certain that you have all the necessary tools and parts on hand. Read all the instructions thoroughly; do not attempt shortcuts. Use tools that are appropriate to the work and use only replacement parts meeting Volkswagen specifications. Makeshift tools, parts and procedures will not make good repairs.

- Catch draining fuel, oil or brake fluid in suitable containers. Do not use empty food or beverage containers that might mislead someone into drinking from them. Store flammable fluids away from fire hazards. Wipe up spills at once, but do not store the oily rags, which can ignite and burn spontaneously.

- Use pneumatic and electric tools only to loosen threaded parts and fasteners. Never use these tools to tighten fasteners, especially on light alloy parts. Always use a torque wrench to tighten fasteners to the tightening torque listed.

- Keep sparks, lighted matches, and open flame away from the top of the battery. If escaping hydrogen gas is ignited, it will ignite gas trapped in the cells and cause the battery to explode.

- Be mindful of the environment and ecology. Before you drain the crankcase, find out the proper way to dispose of the oil. Do not pour oil onto the ground, down a drain, or into a stream, pond, or lake. Consult local ordinances that govern the disposal of wastes.

- The air-conditioning (A/C) system is filled with a chemical refrigerant that is hazardous. The A/C system should be serviced only by trained automotive service technicians using approved refrigerant recovery/recycling equipment, trained in related safety precautions, and familiar with regulations governing the discharging and disposal of automotive chemical refrigerants.

- Before doing any electrical welding on vehicles equipped with anti-lock brakes (ABS), disconnect the battery negative terminal (ground strap) and the ABS control module connector.

- Do not expose any part of the A/C system to high temperatures such as open flame. Excessive heat will increase system pressure and may cause the system to burst.

- When boost-charging the battery, first remove the fuses for the Engine Control Module (ECM), the Transmission Control Module (TCM), the ABS control module, and the trip computer. In cases where one or more of these components is not separately fused, disconnect the control module connector(s).

- Some of the vehicles covered by this manual are equipped with a supplemental restraint system (SRS), that automatically deploys an airbag in the event of a frontal impact. The airbag is operated by an explosive device. Handled improperly or without adequate safeguards, it can be accidentally activated and cause serious personal injury. To guard against personal injury or airbag system failure, only trained Volkswagen Service technicians should test, disassemble or service the airbag system.

© 2002 Volkswagen of America, Inc.
All rights reserved. Information contained in this document is based on the latest information available at the time of printing and is subject to the copyright and other intellectual property rights of Volkswagen of America, Inc., its affiliated companies and its licensors. All rights are reserved to make changes at any time without notice. No part of this document may be reproduced, stored in a retrieval system, or transmitted in any form or by any means, electronic, mechanical, photocopying, recording, or otherwise, nor may these materials be modified or reposted to other sites, without the prior expressed written permission of the publisher.
Version 1.0

Cautions & Warnings

- Do not quick-charge the battery (for boost starting) for longer than one minute, and do not exceed 16.5 volts at the battery with the boosting cables attached. Wait at least one minute before boosting the battery a second time.

- Never use a test light to conduct electrical tests of the airbag system. The system must only be tested by trained Volkswagen Service technicians using the VAG 1551 Scan Tool (ST) or an approved equivalent. The airbag unit must never be electrically tested while it is not installed in the vehicle.

- Some aerosol tire inflators are highly flammable. Be extremely cautious when repairing a tire that may have been inflated using an aerosol tire inflator. Keep sparks, open flame or other sources of ignition away from the tire repair area. Inflate and deflate the tire at least four times before breaking the bead from the rim. Completely remove the tire from the rim before attempting any repair.

- When driving or riding in an airbag-equipped vehicle, never hold test equipment in your hands or lap while the vehicle is in motion. Objects between you and the airbag can increase the risk of injury in an accident.

I have read and I understand these Cautions and Warnings.

back OK

Protected by copyright. Copying for private or commercial purposes, in part or in whole, is not permitted unless authorised by Volkswagen AG. Volkswagen AG does not guarantee or accept any liability with respect to the correctness of information in this document. Copyright by Volkswagen AG.

© 2002 Volkswagen of America, Inc.
All rights reserved. Information contained in this document is based on the latest information available at the time of printing and is subject to the copyright and other intellectual property rights of Volkswagen of America, Inc., its affiliated companies and its licensors. All rights are reserved to make changes at any time without notice. No part of this document may be reproduced, stored in a retrieval system, or transmitted in any form or by any means, electronic, mechanical, photocopying, recording, or otherwise, nor may these materials be modified or reposted to other sites, without the prior expressed written permission of the publisher.
Version 1.0